ABBREVIATIONS

A	
AB	ANCHOR BOLT
AC, A/C	AIR CONDITIONER
ADJ	ADJACENT
AFF	ABOVE FINISHED FLOOR
AHU	AIR HANDLING UNIT
AP	ACCESS PANEL
APPROX	APPROXIMATE
AUX	AUXILIARY
B	
BCW	BARE COPPER WIRE
BD	BOARD
BLDG	BUILDING
BLK	BLOCK
C	
CERT	CERTIFIED
CI	CAST IRON
CJ	CONTROL JOINT
CKT	CIRCUIT
CL	CENTER LINE
CLG	CEILING
CO	CLEANOUT
CMU	CONCRETE MASONRY UNIT
CONC	CONCRETE
CONST	CONSTRUCTION
COR	CONTRACTING OFFICER'S REPRESENTATIVE
COTF	CLEANOUT THRU FLOOR
COTW	CLEANOUT THRU WALL
CR	CURB RETURN
CTR	CENTER
Cu	COPPER
CW	COLD WATER
D	
DBL	DOUBLE
DED	DEDICATED
DEG	DEGREE
DEMO	DEMOLISH, DEMOLITION
DTL	DETAIL
DIA	DIAMETER
DIM	DIMENSION
DN	DOWN
DS	DOWN SPOUT
DWG	DRAWING
E	
EA	EACH
EC	EVAPORATIVE COOLER
ELECT	ELECTRICAL
EMERG	EMERGENCY
(E)	EXISTING
EXIST	EXISTING
EJ	EXPANSION JOINT
EXT	EXTERIOR
F	
FACP	FIRE ALARM CONTROL PANEL
FC	FACE OF CURB
FD	FLOOR DRAIN
FF	FINISHED FLOOR
FRP	FIBERGLASS REINFORCED PANEL
FT	FEET
FTG	FOOTING
G	
GA	GAUGE
GALV	GALVANIZED
GFCI	GROUND FAULT CIRCUIT INTERRUPTER
GFE	GOVERNMENT FURNISHED EQUIPMENT
GWB	GYPSUM WALL BOARD
H	
H.C.M.	HOLLOW CORE METAL
HT	HEIGHT
HTG	HEATING
HVAC	HEATING/ VENTILATING AIR CONDITIONING
HW	HOT WATER
I	
IN	INCHES
INSUL	INSULATION
INT	INTERIOR
K	
KV	KILO VOLT
KVA	KILO VOLT AMPERE
L	
LAV	LAVATORY
LB	POUND
M	
MAS	MASONRY
MAX	MAXIMUM
MECH	MECHANICAL
MFG	MANUFACTURER
MIN	MINIMUM
MUA	MAKE-UP AIR
N	
(N)	NEW
N.C.	NORMALLY CLOSED
NIC	NOT IN CONTRACT
N.O.	NORMALLY OPEN
NSP	NEW STANDARD PLAN
NTS	NOT TO SCALE
O	
OC	ON CENTER
OH	OVERHEAD
O.S.A.	OUTSIDE AIR
P	
PMF	PRESSED METAL FRAME
PNL	PANEL
P.O.C.	POINT OF CONNECTION
PSF	
PSI	POUNDS PER SQUARE INCH
Q	
QTY	QUANTITY
R	
RAD	RADIUS
RD	ROOF DRAIN
RECPT	RECEPTACLE
REQ'D	REQUIRED
REV	REVISION (REVISED)
RGS	RIGID GALVANIZED STEEL
RSP	REVISED STANDARD PLAN
S	
SS	SANITARY SEWER / SERVICE SINK
SA	SUPPLY AIR
SC	SOLID CORE
SCHED	SCHEDULE
SECT	SECTION
SHR	SHOWER
SHT	SHEET
SIM	SIMILAR
SPEC	SPECIFICATION
SS	STAINLESS STEEL
T	
TBC	TOP BACK OF CURB
TBD	TO BE DETERMINED
TEL	TELEPHONE
THK	THICK
TP	TRAP PRIMER
TS	TIMER SWITCH
TYP	TYPICAL
U	
UNO	UNLESS NOTED OTHERWISE
UR	URINAL
UTIL	UTILITY
V	
VAR	VARIABLE, VARIES
VB	VAPOR BARRIER
V	VENT OR VOLT
VERT	VERTICAL
VR	VERTICAL RISER
VTR	VENT THRU ROOF
W	
WC	WATER CLOSET
WD	WOOD
WHA	WATER HAMMER ARRESTOR
WP (WP)	WEATHER PROOF
WT	WEIGHT
X	
XFMR	TRANSFORMER
Y	
YD	YARD

BUILDING CODE INFORMATION

BUILDING CONSTRUCTION TYPE:	TYPE V-B
OCCUPANCY CLASSIFICATION:	R-2
S.F. / OCCUPANCY	5,160
NUMBER OF STORIES:	2
ACTUAL BUILDING HEIGHT:	23'-6"
BUILDING AREA (S.F.):	5,160
AREA OF PROJECT (S.F.):	5,160 S.F.
ALLOWABLE AREA PER CBC:	N/A
AREA / HEIGHT INCREASE:	N/A
FIRE SPRINKLERED:	NONE
FIRE ALARM:	YES
FIRE PROTECTION SYSTEMS:	NONE
SMOKE CONTROL SYSTEM:	NONE
BUILDING CODES:	• 2015 INTERNATIONAL BUILDING CODE • 2017 NATIONAL ELECTRICAL CODE • 2015 INTERNATIONAL MECHANICAL CODE • 2015 INTERNATIONAL PLUMBING CODE • 2015 INTERNATIONAL FIRE CODE ☐ 2016 NAPA 13- INSTALLATION OF FIRE SPRINKLERS* ☐ 2016 NAPA 72- NATIONAL FIRE ALARM AND SIGNALING CODE* ☐ 2016 NAPA 17A

GENERAL NOTES

1. CONTRACTOR SHALL VISIT SITE AND VERIFY ALL DIMENSIONS AND CONDITIONS OF WORK AREA PRIOR TO ORDERING OR FABRICATING ANY MATERIALS.
2. CONTRACTOR SHALL BE RESPONSIBLE FOR ALL DAMAGE TO UTILITIES INCURRED DURING THE PROGRESS OF THE WORK OF THIS PROJECT. THIS DAMAGE INCLUDES, BUT IS NOT LIMITED TO DAMAGE TO ELECTRICAL RUNS, SEWER, GAS OR WATER PIPING AND CABLE TV WIRES/CABLES. INSPECT ALL SURFACES OF ALL AREAS OF THE WORK PRIOR TO INITIATING ANY TASKS WHICH MAY RESULT IN SUCH DAMAGE.
3. CONTRACTOR SHALL REVIEW THE PLANS AND SPECIFICATIONS PRIOR TO STARTING ANY WORK ON THIS PROJECT. ANY ERRORS AND / OR OMISSIONS, ERRORS IN DIMENSIONS OR ANY CONDITION WHICH WILL NOT PERMIT CONSTRUCTION OF THE WORK SHOWN ON THESE DRAWINGS SHALL BE BROUGHT TO THE ATTENTION OF THE PROJECT MANAGER. CONTRACTOR SHALL NOT BEGIN WORK UNTIL PROJECT MANAGER HAS CLARIFIED ALL SUCH CONCERNS TO THE SATISFACTION OF ALL PARTIES.
4. ALL MATERIALS DEMOLISHED AS PART OF THE WORK OF THIS PROJECT SHALL BE REMOVED FROM SITE AND RECYCLED OR DISPOSED OF IN ACCORDANCE WITH PROJECT SPECIFICATIONS AND ALL STATE AND FEDERAL REGULATIONS.
5. CONTRACTOR IS RESPONSIBLE TO PROVIDE ADEQUATE PUBLIC SAFETY & TRAFFICE CONTROL. SAFE VEHICULAR & PEDESTRIAN ACCESS SHALL BE PROVIDED AT ALL TIMES DURING TIMES DURING CONSTRUCTION.
6. CONTRACTOR IS HEREBY NOTIFIED THAT PRIOR TO COMMENCING CONSTRUCTION HE OR SHE IS RESPONSIBLE FOR CONTACTING ALL UTILITY COMPANIES FOR VERIFICATION AT THE CONSTRUCTION SITE OF THE LOCATION OF ALL UNDERGROUND FACILITIES WHERE SUCH FACILITIES MAY POSSIBLY CONFLICT WITH THE PLACEMENT OF THE IMPROVEMENTS SHOWN ON THESE PLANS. CONTACT "UNDERGROUND SERVICE ALERT" AT 800-227-2600 TWO (2) DAYS MINIMUM TO FOURTEEN (14) DAYS MAXIMUM BEFORE ANY EXCAVATION IS STARTED.
7. CONTRACTOR SHALL OBTAIN AND PAY FOR ALL LICENSES, PERMITS, INSPECTIONS, AND FEES REQUIRED OR RELATED TO THIS WORK.
8. CONTRACTOR SHALL VERIFY ALL OPENINGS IN THE FIELD PRIOR TO FABRICATION OF ALL DOORS AND FRAMES.
9. UNLESS OTHERWISE NOTED, ALL SEALANT OR FILLING MATERIALS TO MATCH ADJACENT SURFACES.
10. INSTALL ALL METAL CORNER BEADS AT THE EXPOSED WALLBOARD EDGES. INSTALL CASING BEADS WHEVER WALLBOARD, PLASTER, ETC, ABUTS A DISSIMILAR FINISH MATERIALS.
11. ALL PENETRATIONS THROUGH EXTERIOR WALL SHALL BE SEALED TO PREVENT AIR INFILTRATION.
12. IN CASE OF CONFLICT BETWEEN THE WORKING DRAWINGS & SPECIFICATIONS, SPECIFICATIONS SHALL GOVERN.
13. ALL MATERIALS MUST BE ASBESTOS FREE.
14. DETAILS MARKED "TYPICAL", SHALL APPLY IN ALL CASES UNLESS SPECIFICALLY INDICATED OTHERWISE.
15. WRITTEN DIMENSIONS ON DRAWINGS SHALL GOVERN. DO NOT SCALE THE DRAWINGS.

LEGEND

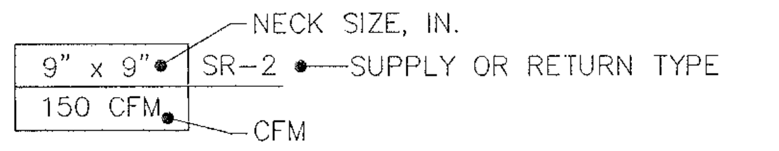

▨	RETURN REGISTER
☒ OR ⊗	SUPPLY REGISTER / DIFFUSER
☒	EXHAUST FAN OR GRILLE
~	FLEX DUCT
┼	RIGID DUCT W/ BALANCE DAMPER
⇝	AIR FLOW
----G----	GAS
———	HOT WATER
———	COLD WATER
A-# IN 3/4"C	NEW EXPOSED HOMERUN W/ DESTINATION INDICATED
———	EXPOSED CONDUIT
-·-·-·-	UNDER SLAB CONDUIT
-··-··-	UNDERGROUND/DUCT BANK CONDUIT
- - - -	CONCEALED CONDUIT

DETAIL SYMBOL	DETAIL NUMBER SHEET NUMBER WHERE DETAIL APPEARS
DOOR SYMBOL	DOOR TYPE DOOR NUMBER
SECTION OR ELEVATION SYMBOL (OR COMBINATION)	SECTION OR ELEVATION NUMBER SHEET NUMBER WHERE SECTION OR ELEVATION APPEARS

⊡	WALL MOUNTED MOTION SENSOR
⊗	GROUND ROD
☐ OR ⌇	DISCONNECT SWITCH
⊖	DUPLEX RECEPTACLE
Ⓙ	JUNCTION BOX
☒	CEILING MOUNTED EXHAUST FAN
⁾	CIRCUIT BREAKER
⌇⌇	TRANSFORMER

$	SINGLE POLE SWITCH
$₃	3-WAY SWITCH
$ᵀ	TIMER SWITCH
▬	ELECTRICAL PANEL
Ⓢ	TEMPERATURE SENSOR
Ⓣ	THERMOSTAT
▽	TELEPHONE JACK / DATA PORT
▭	FLUORESCENT LIGHT FIXTURE
⊹	WALL MOUNT FIXTURE
⊗	EXIT LIGHT
◈	COMBINATION EXIT & EMERGENCY LIGHT
◆	EMERGENCY EXIT
▶	TELEPHONE JACK
ⓈⒹ	FIRE DAMPER DETECTOR

SCOPE OF WORK

THE SCOPE OF WORK FOR THIS PROJECT IS TO RENOVATE (E) 24 BARRACKS (BUILDINGS 4212-4219, 4302-4309, AND 4312-4319). SEE PLANS & SPECIFICATIONS.

SHEET INDEX

Sheet List Table

Sheet Number	Sheet Title
T1	TITLE SHEET
ARCH	
A1	TYPICAL BARRACKS DEMOLITION FLOOR PLANS
A2	TYPICAL BARRACKS MODIFED FLOOR PLANS
A3	TYPICAL ENLARGED LATRINE FLOOR PLAN & NOTES
A4	TYPICAL LATRAIN ELEVATIONS AND NOTES
A5	TYPICAL BUILDING SECTION, DETAILS & NOTES
A6	TYPICAL DETAILS
A7	TYPICAL BARRACKS DOOR, FINISH SCHEDULES & DETAIL
MECHANICAL	
M1	TYPICAL MECHANICAL DEMOLITION FLOOR PLANS
M2	TYPICAL MECHANICAL MODIFIED FLOOR PLANS
M3	TYPICAL MECHANICAL ROOM LAYOUT AND DETAILS
PLUMBING	
P1	TYPICAL PLUMBING DEMOLITION FLOOR PLANS
P2	TYPICAL PLUMBING ISOMETRIC VIEWS
P3	TYPICAL WATER HEATER REPLACEMENT
ELECTRICAL	
E1	TYPICALBARRACKS LIGHTING PLANS
E2	TYPICAL BARRACKS POWER PLANS & DETAIL
E3	TYP. ENLARGED FLOOR PLAN, DETAIL & FIXTURE SCHEDULES
E4	TYP. FIRE ALARM SYMBOLS, LEGEND, ABBREVS & DIAGRAM
E5	TYPICAL FIRE ALARM PLANS

CALIFORNIA ARMORY MAP

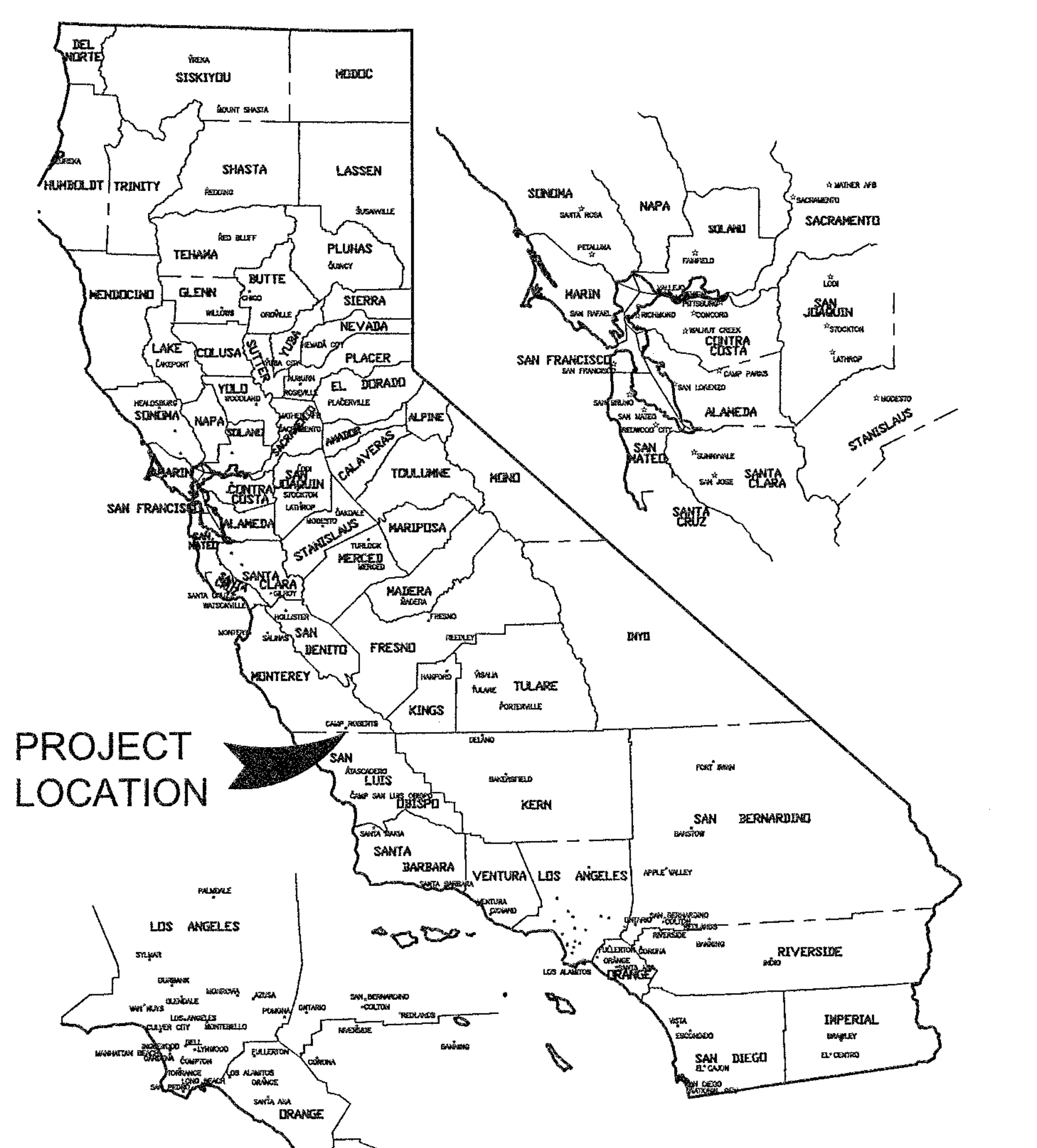

LOCATION MAP

SCALE: NONE

N

California Military Department

BARRACKS RENOVATION

CAMP ROBERTS, SAN MIGUEL, CA 93451-5000

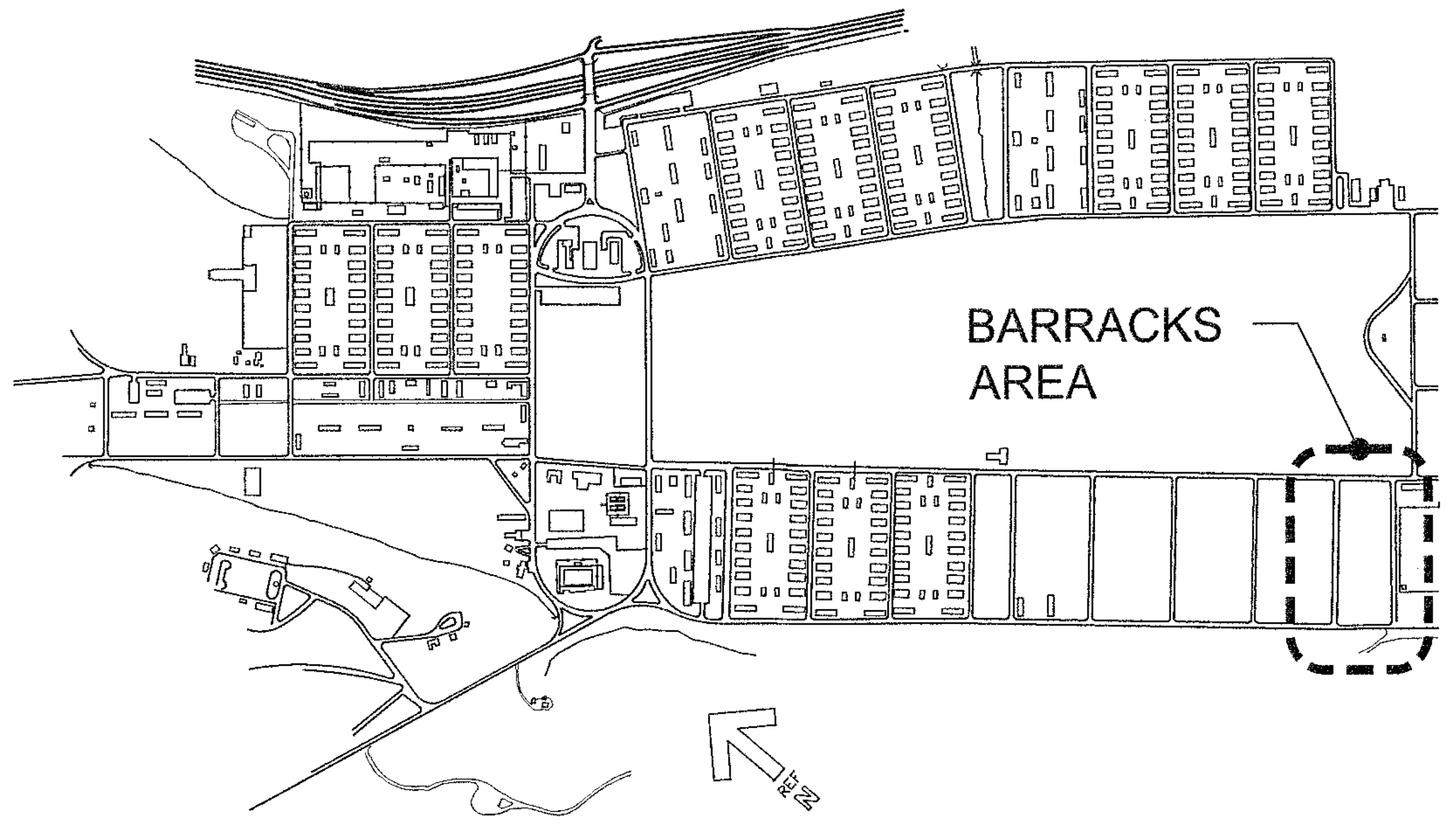

SITE PLAN

SCALE: NONE

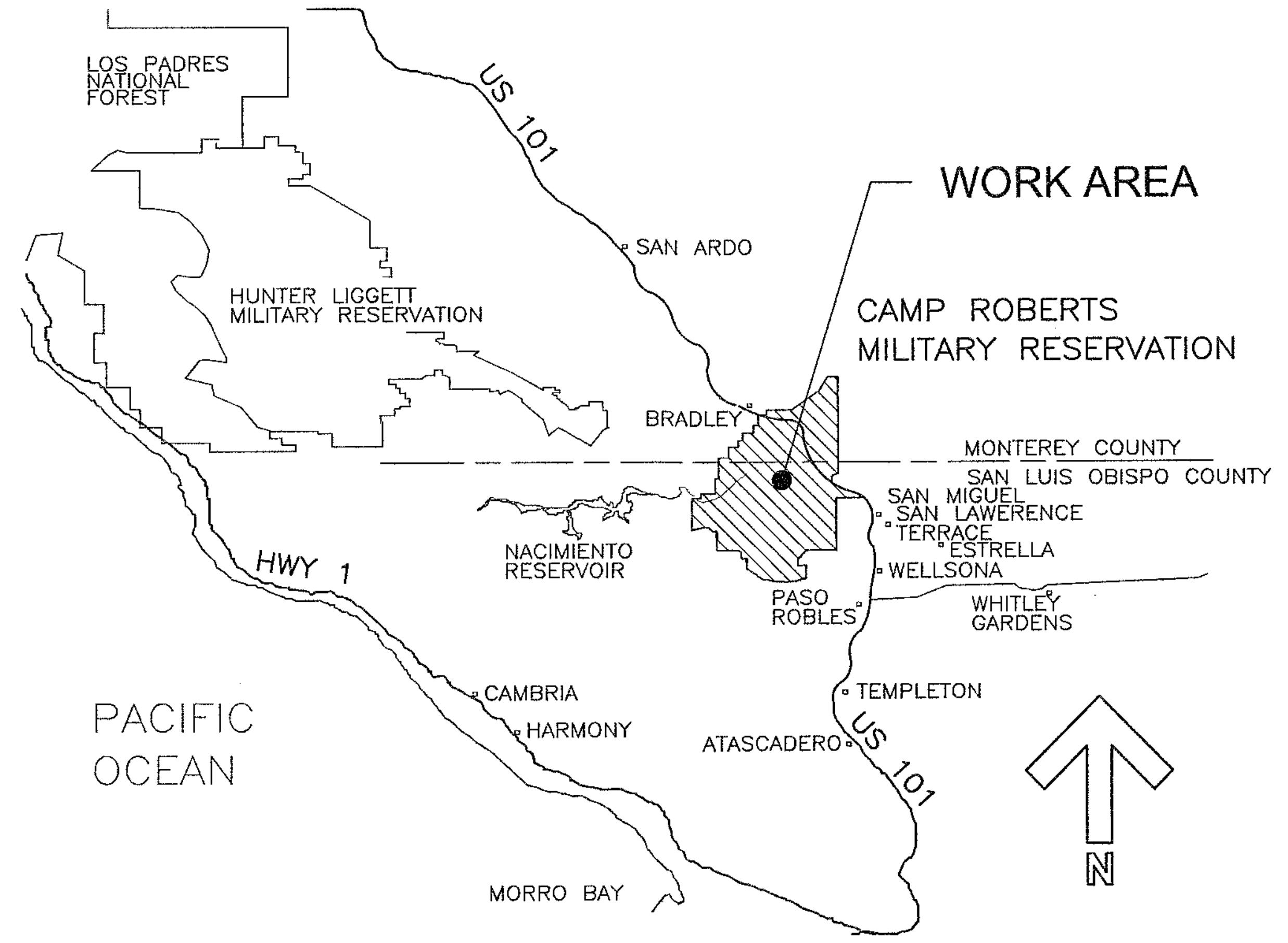

VICINITY MAP

SCALE: NONE

NICK M. GIANNINI
No. 24997
Exp. 7-19

REVISIONS	SYMBOL	DATE	REMARKS	BY:
	△	.	.	.
	△	.	.	.
	△	.	.	.
	△	.	.	.

DRAWN BY:	MC
DESIGNED BY:	NG
CHECKED BY:	NG
APPROVED BY:	NG

PROJECT NUMBER: 06R1904-27
DATE: APR 11, 2019

SHEET TITLE TITLE SHEET
PROJECT CAMP ROBERTS - BARRACKS RENOVATION
LOCATION CAMP ROBERTS, CALIFORNIA
STATE OF CALIFORNIA MILITARY DEPARTMENT

SHEET NUMBER
T1

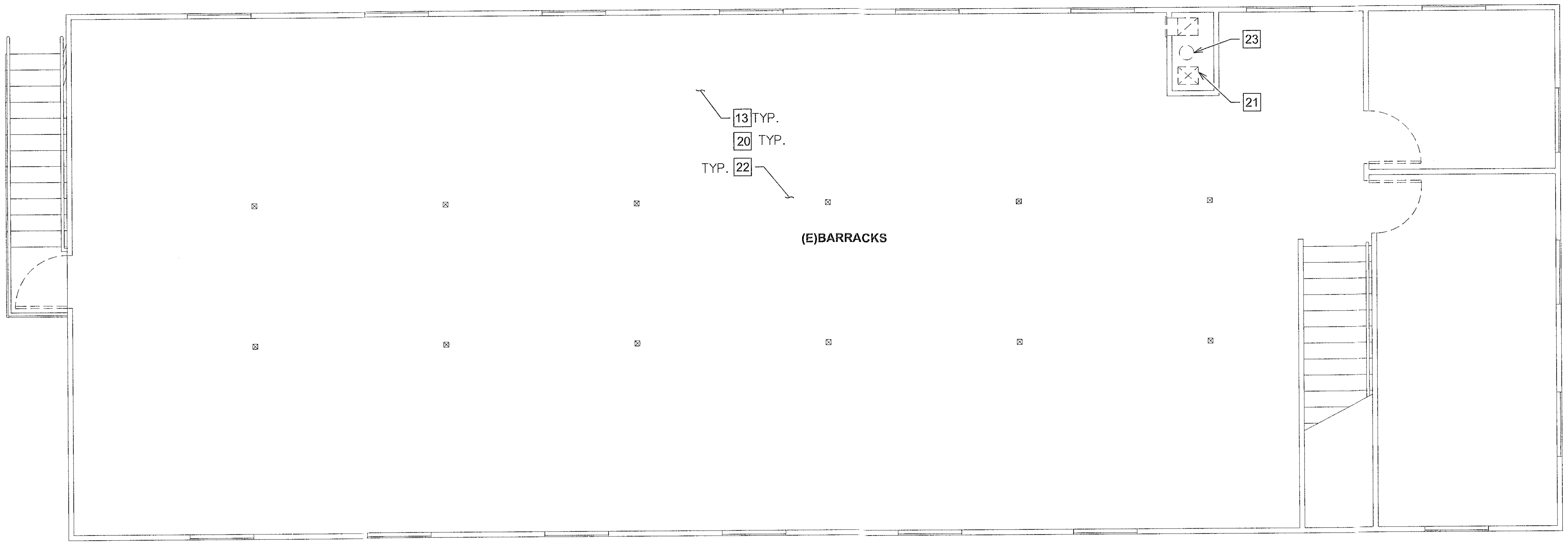

TYPICAL DEMOLITION BARRACKS SECOND FLOOR PLAN
Scale: 1/4"=1'-0"

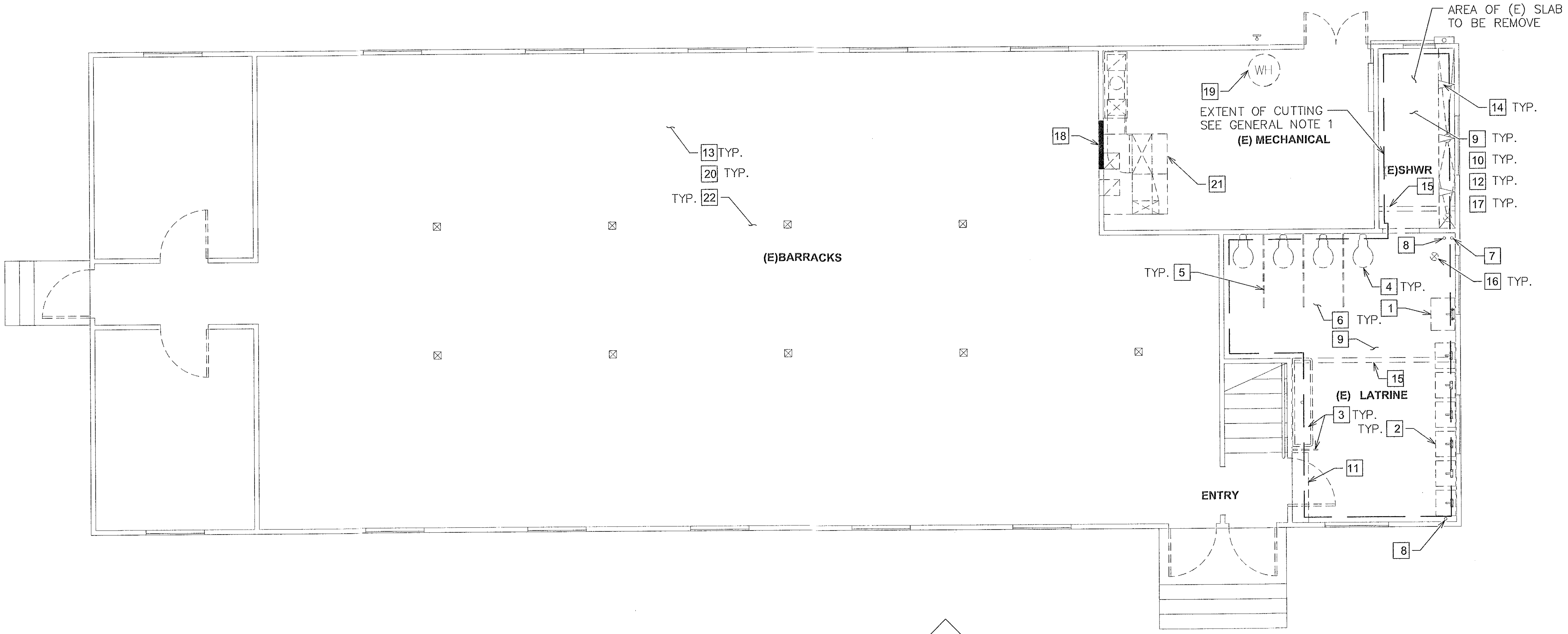

TYPICAL DEMOLITION BARRACKS FIRST FLOOR PLAN
Scale: 1/4"=1'-0"

REF
N

KEYNOTES:

1	REMOVE (E) WASH BASIN, FIXTURES AND PLUMBING. SEE PLUMBING.
2	REMOVE (E) LAVATORIES, FIXTURES, AND PLUMBING BACK TO POINTS OF CONNECTION AT VENT/DRAIN LINE & WATER LINE.
3	REMOVE (E) URINAL, FIXTURES. PLUMBING AND PARTITION. SEE PLUMBING.
4	REMOVE (E) WATER CLOSETS, FIXTURES AND PLUMBING. SEE PLUMBING.
5	REMOVE (E) TOILET PARTITIONS, ANCHORS AND FASTENERS.
6	REMOVE ENTIRE CONCRETE SLAB IN LATRINE INCLUDING SHOWER AREA AND ENCASED PIPING.
7	CHIP EXTERIOR STEM WALL TO REMOVE (E) WATER SUPPLY PIPING. SEE PLUMBING.
8	REMOVE (E) VENT PIPES. SEE PLUMBING.
9	REMOVE ALL (E) 1x SIDING FROM INTERIOR OF LATRINE AND SHOWER.
10	GROUT (E) JOINT AT PERIMETER OF SHOWER AREA AT THE FLOOR / STEM WALL JUNCTURE, TYP.
11	REMOVE (E) CONC STEP(S).
12	REMOVE ALL (E) METAL SIDING FROM INTERIOR OF SHOWER AREA, INCLUDING CEILING AND OPENING EXPOSING THE (E) STUD FRAMING.
13	REMOVE (E) FLOOR TILE, MASTIC, WOOD UNDERLAYMENT AND (E) BASEBOARD (FOR TILE REMOVAL UNDER BASEBOARD). DOWN TO ORIGINAL LINOLEUM ON STRIP WOOD FLOOR.
14	REMOVE (E) SHOWER FIXTURES AND ASSOCIATED WATER LINES. SEE PLUMBING.
15	(E) OVERHEAD WOOD BEAM.
16	REMOVE (E) FLOOR DRAINS. SEE PLUMBING.
17	VERIFY (E) CONSTRUCTION CONDITIONS PRIOR TO REMOVING WOOD SHEATHING FROM THE INTERIOR OF EXTERIOR WALLS IN SHOWER. COORDINATE DEMO WITH C.O.R.
18	CUT AN OPENING IN (E) WALL TO ACCOMMODATE A NEW DOOR. SEE DOOR SCHEDULE.
19	REMOVE (E) WATER HEATER. SEE PLUMBING.
20	REMOVE (E) CEILING FOR ENTIRE BUILDING.
21	REMOVE (E) HVAC. SEE MECHANICAL.
22	REMOVE (E) PERIMETER BASEBOARD, TILE & UNDERLAYMENT.
23	REMOVE (E) CLAY/METAL VENT PIPE, SEE PLUMBING.

NOTES:

1. CUT (E) FLOOR SLAB AS SHOWN. CUT SHALL BE 4" AWAY FROM WALLS TO AVOID (E) FOOTING.
2. REMOVE ALL (E) INTERIOR FINISHES FOR THE ENTIRE BUILDING, INCLUDING WALL, FLOORING & CEILING UNLESS OTHERWISE NOTED.
3. REMOVE ALL (E) BATHROOM ACCESSORIES & FIXTURES UON.
4. SEE MECHANICAL/PLUMPING DRAWINGS FOR DEMOLITION.
5. SEE NOTES ON ELECTRICAL DRAWINGS FOR DEMOLITION.

LEGENDS

═══	(E) WALLS
------	OBJECTS TO BE REMOVED

LICENSED ARCHITECT
NICK M. GIANNINI
No. 24997
Exp. 7-19
STATE OF CALIFORNIA

REVISIONS	SYMBOL	DATE	REMARKS	BY:
	△	.	.	.
	△	.	.	.
	△	.	.	.
	△	.	.	.

DRAWN BY:	MC
DESIGNED BY:	NG
CHECKED BY:	NG
APPROVED BY:	NG

PROJECT NUMBER: 06R1904-27
DATE: APR 11, 2019

SHEET TITLE TYPICAL BARRACKS DEMOLITION FLOOR PLANS
PROJECT CAMP ROBERTS – BARRACKS RENOVATION
LOCATION CAMP ROBERTS, CALIFORNIA
STATE OF CALIFORNIA MILITARY DEPARTMENT

SHEET NUMBER
A1

2 OF 19

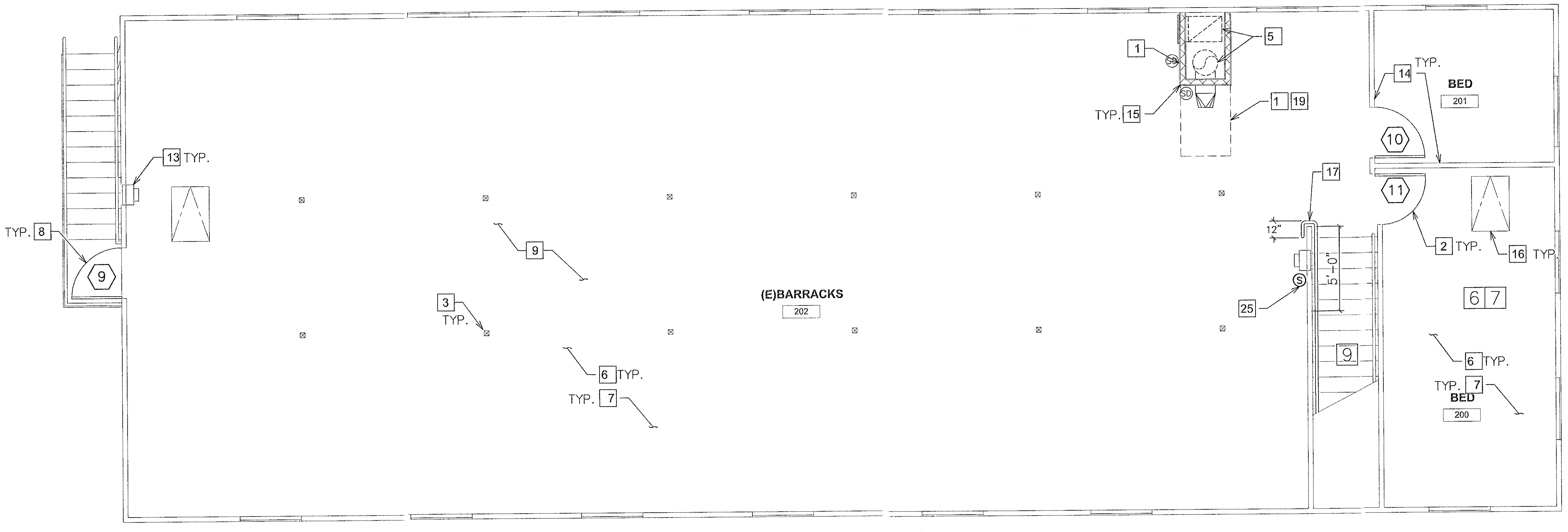

1
5
TYP. 15
1 19
TYP.
14
BED
201
10
13 TYP.
TYP. 8
9
17
11
12"
2 TYP.
16 TYP.
9
5'-0"
(E)BARRACKS
202
3
TYP.
25
6 7
6 TYP.
TYP. 7
9
6 TYP.
TYP. 7
BED
200

TYPICAL MODIFIED BARRACKS SECOND FLOOR PLAN
Scale: 1/4"=1'-0"

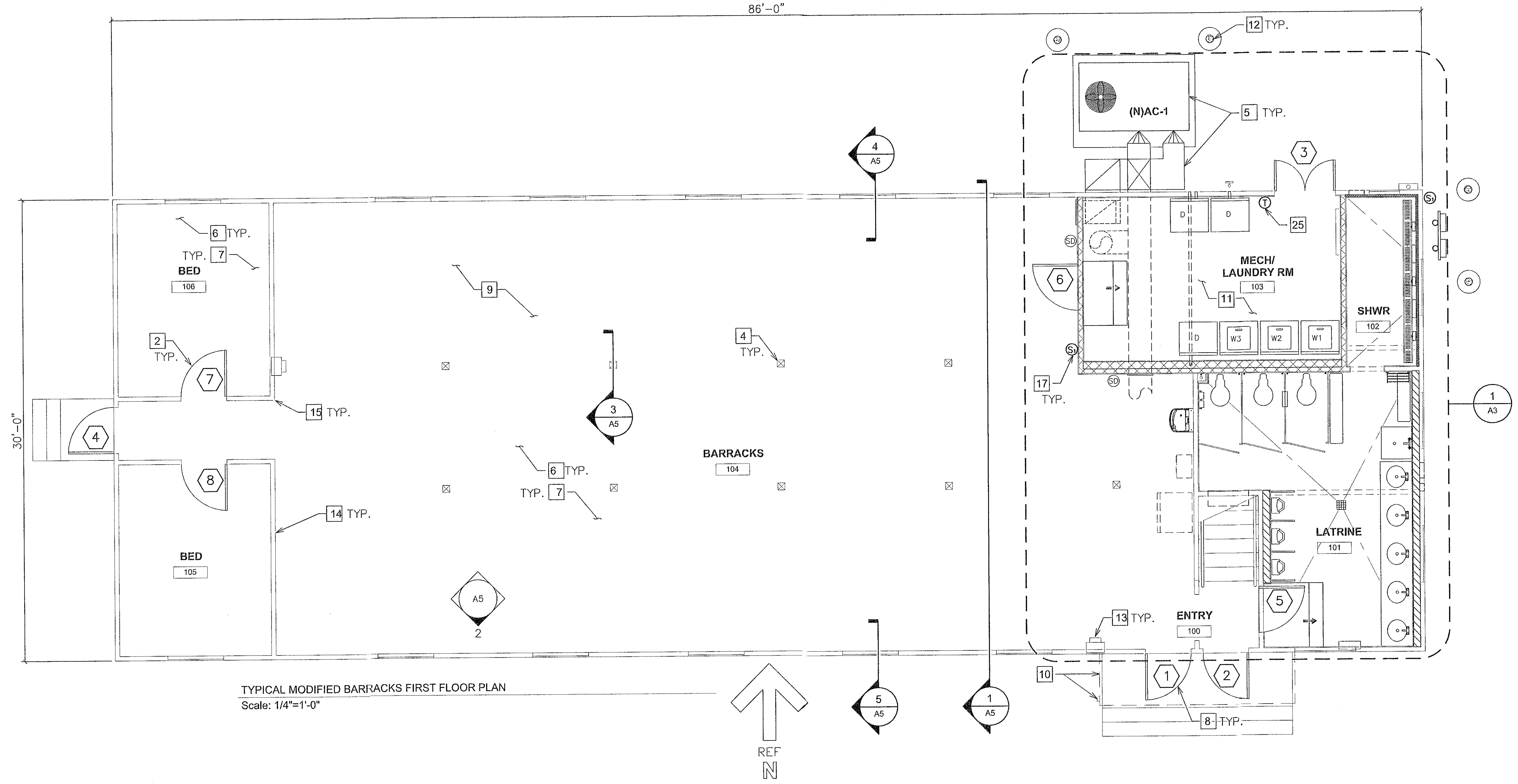

86'-0"
12 TYP.
(N)AC-1
5 TYP.
4
A5
3
25
6 TYP.
TYP. 7
BED
106
9
6
MECH/
LAUNDRY RM
103
11
SHWR
102
D
D
W3
W2
W1
2
TYP.
4
TYP.
7
15 TYP.
17
TYP.
1
A3
30'-0"
4
3
A5
6 TYP.
TYP. 7
BARRACKS
104
8
14 TYP.
BED
105
LATRINE
101
A5
2
5
13 TYP.
ENTRY
100
10
1
2
8 TYP.
5
A5
1
A5
REF
N

TYPICAL MODIFIED BARRACKS FIRST FLOOR PLAN
Scale: 1/4"=1'-0"

KEYNOTES:

1 INSTALL 5/8" TYPE X GYP. BD. ON ALL SURFACES OF DUCT ENCLOSURE.

2 REPLACE ALL (E) INTERIOR DOORS AND FRAMES W/ KNOCK-DOWN FRAME AND ASSOCIATED HARDWARE. DOORS SHALL LEAVE 3/4" SPACE AT BOTTOM OF DOOR FOR RETURN AIR. BEST LOCKS TO INCLUDE CORE.

3 (E) 4x4 POSTS – TYP. INSTALL 1x BASEBOARD AROUND (E) POST IF NO (E) BASEBOARD IS PRESENT.

4 (E) 6x6 POSTS – TYP. INSTALL 1x BASEBOARD AROUND (E) POST IF NO (E) BASEBOARD IS PRESENT.

5 INSTALL HVAC, SEE MECHANICAL.

6 INSTALL 5/8" STURD-I-FLOOR UNDERLAYMENT BASE T&G PLYWOOD, PLUGGED & SANDED OVER (E) WOOD 2x FLOOR SHEATHING. USE RING SHANK NAILS AT 6 & 12 PATTERN.

7 INSTALL POLYUREA COATING SYSTEM (PRIMER, POLYUREA COAT AND PIGMENTED TOP COAT) OVER PREPARED STURDI-FLOOR SUBSTRATE. EXTEND COATING TO TOP OF BASEBOARD.

8 REPLACE ALL (E) EXTERIOR DOOR AND FRAMES. BEST LOCKS TO INCLUDE CORES. ALL EXTERIOR DOORS TO BE REFRAMED TO NEW WIDTHS AND TO ALLOW INSTALLATION OF TRIMMERS UNDER 4x HEADERS. ALSO GLAZING, THRESHOLD WITH SWEEP, FLASHING, WEATHER STRIPPING. PROVIDE SHOP DRAWING OF FRAMING/FLASHING DETAIL.

9 INSTALL CEILING FOR ENTIRE BUILDING. SEE A5.

10 REPAIR (E) CANOPY AS NECESSARY TO ENSURE (E) DOWNSPOUT PROVIDES ADEQUATE CLEARANCE FOR DOOR SWING.

11 1 HR RATED CEILING W/ 2 LAYERS OF 5/8" TYPE X GYP BD ATTACHED TO (E) CEILING FRAMING IN MECH/LAUNDARY ROOM.

12 BOLLARD, SEE DETAIL 3/M3.

13 FRAME FOR AND INSTALL SEMI-RECESSED 20 LBS FIRE EXTINGUISHER CABINETS. CABINETS TO BE AMBASSADOR OR EQUAL.

14 INSTALL INTERIOR WALLS WITH R-11 ACOUSTICAL INSULATION.

15 INSTALL CORNER GUARD, HEIGHT OF WAINSCOTING, PAINTED GALVANIZED AT ALL OUTSIDE CORNERS.

16 24"x36" ATTIC ACCESS FRAME, DOOR, WITH LOCK, NON-FIRE RATED.

17 THERMOSTAT SENSORS & THERMOSTAT, SEE ELECTRICAL.

19 INSTALL SOFFIT TO ACCOMMODATE SUPPLY DUCT. SEE MECHANICAL.

LEGENDS

═	(E) WOOD FRAMED WALLS
2x6 (E) 2x	1 HR RATED WALL – (E) WOOD STUD WALL W/ FURRED WALL W/ 2x6 STUDS @ 16" O.C. W/ 5/8" TYPE X GYP BD ON EACH SIDE W/ R-13 INSULATION.
(E) 2x	1 HR RATED WALL – (E) WOOD STUD WALL W/ 5/8" TYPE X GYP BD ON EACH SIDE W/ R-13 INSULATION
2x	WOOD FRAMED FURRED WALL W/ 2x6 STUDS @ 16" O.C. FULL HEIGHT UON. 5/8" WATER RESISTANT GYP BD OVER 5/8" CDX STRUCT 1 PLYWOOD IN LATRINE
▨ 2x	WOOD FRAMED FURRED WALL W/ 2x FLAT STUDS @ 16" O.C. SHEATH WITH 5/8" CCX STRUCT 1 PLYWOOD W/ POLYUREA COATING OVER AT EXTERIOR WALLS IN SHOWER
⬡X	DOOR TAG, SEE DOOR SCHEDULE.

NICK M. GIANNINI
No. 24997
Exp. 7-19

REVISIONS	SYMBOL	DATE	REMARKS	BY:
	△	.	.	.
	△	.	.	.
	△	.	.	.
	△	.	.	.

DRAWN BY:	MC
DESIGNED BY:	NG
CHECKED BY:	NG
APPROVED BY:	NG

SHEET TITLE TYPICAL BARRACKS MODIFED FLOOR PLANS
PROJECT CAMP ROBERTS – BARRACKS RENOVATION
PROJECT NUMBER: 06R1904-27
LOCATION CAMP ROBERTS, CALIFORNIA
DATE: APR 11, 2019
STATE OF CALIFORNIA **MILITARY DEPARTMENT**

SHEET NUMBER
A2

3 OF 19

KEYNOTES:

1 WALL MOUNTED URINALS AND ASSOCIATED PLUMBING FIXTURES.

2 WATER CLOSETS AND ASSOCIATED PLUMBING FIXTURES.

3 CORIAN OR EQUAL COUNTERTOP W/ INTEGRAL UNDER MOUNT LAVATORIES (OVER 3/4" PLYWOOD BASE) AND ASSOCIATED PLUMBING FIXTURES AND 18"x30" MIRRORS.

4 CONTINUOUS 6" DEEP SOLID SURFACE SHELF, WIDTH TO MATCH LAV COUNTERTOP.

5 H.D.P.E. TOILET PARTITIONS W/ ASSOCIATED HARDWARE.

6 16 Ga. STAINLESS STEEL TROUGH LINER W/ REMOVABLE GRATE. SECURE LINER TO (E) CONC TROUGH W/ SIKAFLEX 1-A OR SONNEBORN NP-1 SEALANT. COORDINATE DRAIN LOCATION IN SHOWER. SEE DETAIL 2 & 3/A6.

7 FLOOR MOUNTED MOP SINK AND ASSOCIATED PLUMBING FIXTURES.

8 HF, WALL HYDRANT, SEE PLUMBING.

9 WOOD FRAMED FURRED WALL W/ 0.09" WHITE FRP, SEE ELEVATIONS FOR HEIGHT. TRIM SHALL BE BRUSHED ANODIZED ALUMINUM TRIM. SEE WALL LEGEND.

10 WOOD FRAMED FURRED WALL, SEE WALL LEGEND.

11 5/8" WATER RESISTANT GYP BD OVER 5/8" CDX STRUCT 1 PLYWOOD OVER (E) WOOD STUDS. COVER W/ 0.09" WHITE FRP, SEE ELEVATIONS FOR HEIGHT.

12 10" WIDE x 4'-6" LONG H.D.P.E. BENCH @ 17" AFF., USE ALUM. SUPPORT LEGS.

13 10" WIDE x 38" LONG H.D.P.E. BENCH @ 17" AFF. USE ALUM. SUPPORT LEGS. BENCH SHALL BE 1" SET BACK FROM MOP SINK.

14 14" WIDE H.D.P.E. SHELVES W/ HEAVY DUTY SHELF SUPPORTS.

15 SURFACE MOUNTED SHOWER PANEL.

16 CONC. LANDING AND RISER(S) W/ 3,000 PSI MIX SACKS.

17 SURFACE MOUNTED TOILET TISSUE DISPENSER FOR TWO ROLLS. BOBRICK B-686 OR EQUAL.

18 PARTITION MOUNTED TOILET TISSUE DISPENSER FOR TWO ROLLS. BOBRICK B-386 OR EQUAL.

19 2x4 BLOCKING @ 16" O.C. BETWEEN (E) CEILING JOISTS IN LATRINE & SHOWER. SEE SHEET A4.

20 INSTALL POLYUREA COATING SYSTEM ON (E) EXPOSED CONCRETE SURFACES IN LATRINE AND SHOWER AREA.

21 (E) OVERHEAD WOOD BEAM. WRAP IN DRYWALL AND FINISH TO MATCH.

22 SHEATH SHOWER INTERIOR WALLS W/ 5/8" CCX STRUCT 1 PLYWOOD W/ POLYUREA COATING. SEE SHEET A4.

23 INSTALL 4" CONC SLAB IN LATRINE AND SHOWER AREA. SEE SHEET A4.

24 CORNER GUARDS TO BE USED TO EDGE FRP SURROUND WALL AND CEILING. TRANSITION BETWEEN FRP & POLYUREA.

25 REFRAMED TO ALLOW INSTALLATION OF JANITORIAL STORAGE SHELVES FLUSH MOUNT RECESSED, 24 GA, 304 S.S. WITH 2 ADJUSTABLE SHELVES, CENTERED ON WALL. ADJUST FRAMING TO SUPPORT SHELF UNIT. 4x6 HEADER. SEE DETAIL 5/A6.

26 FUTURE MICROWAVE, NIC.

27 FUTURE REFRIGERATOR, NIC.

28 THRESHOLD/JAMB/HEADER TO BE COATED WITH POLYUREA AT SHOWER ENTRY.

29 FRAMED CHASE FOR EXPOSED VENT.

30 FIRE EXTINGUISHER CABINET. SEE SHEET A2 FOR MORE INFO AND LOCATIONS.

31 FABRICATE AND INSTALL METAL HANDRAIL W/ POWER COAT FINISH. PROVIDE 2x BACKING AT ALL MOUNTS. SEE DETAIL 7/A6.

32 GROUT (E) CURB/FLOOR JUNCTURE IN SHOWER AREA. SEAL W/ WATERPROOF SHOWER SEALANT.

33 FRAMED OPENING FOR A DOOR. SEE DOOR SCHEDULE.

34 SOLID PLASTIC (HDPE) PRIVACY PARTITION

35 TOWEL SHELVES W/ TOWEL BARS.

36 EXHAUST FANS, SEE MECHANICAL.

37 PRIVACY FILM ON LATRINE WINDOW SOLYX SX-3146 OR EQL.

38 5/8" WATER RESISTANT GYP BD OVER 5/8" CDX STRUCT 1 PLYWOOD OVER (E) WOOD STUDS. COVER W/ 0.09" WHITE FULL HEIGHT FRP.

39 FLOOR DRAIN, SEE PLUMBING.

40 BOTTLE FILLING STATION & COOLER, SEE PLUMBING.

41 DRYER VENT DUCT, 4" ABOVE CEILING.

42 DRYER WALL VENTS

43 RECESSED WASTE RECEPTACLE

44 REPLACE ALL STRINGERS AND DAMAGED STAIRWAY FRAMING. EXTENT OF DAMAGE TO BE DETERMINED UPON DEMO OF TREADS & RISERS. REPLACE (E) TREADS AND RISERS W/ 5/8" STURD-I-FLOOR. ALL PORTIONS OF THE STAIR SHALL BE COATED W/ POLYUREA. THE UPPER APPROACH TO THE STAIRS AND THE BOTTOM TREAD SHALL BE MARKED BY A STRIPE PROVIDING CLEAR VISUAL CONTRAST PER CBC 2010. EDGE STAIRS WITH 1"x WOOD BASEBOARD FLOOR TO TOP OF BASEBOARD. SEE DETAIL 6/A6.

45 1 HR RATED WALL W/ FURRED WALL, SEE WALL LEGEND. INSTALL 0.09" WHITE FRP @5'-0" AFF ON ALL WALLS IN LAUNDRY ROOM.

46 1 HR RATED WALL, SEE WALL LEGEND. INSTALL 0.09" WHITE FRP @ 5'-0" AFF.

NOTES:

1. FOR ADDITIONAL LATRINE/SHOWER INFORMATION, SEE SHEET A4.
2. PROVIDE 2x BLOCKING AT ALL MOUNTS. SEE DETAIL 7/A6 SIM.
3. WALL LEGEND, SEE SHEET A2.
4. DOOR SCHEDULE, SEE SHEET A7.

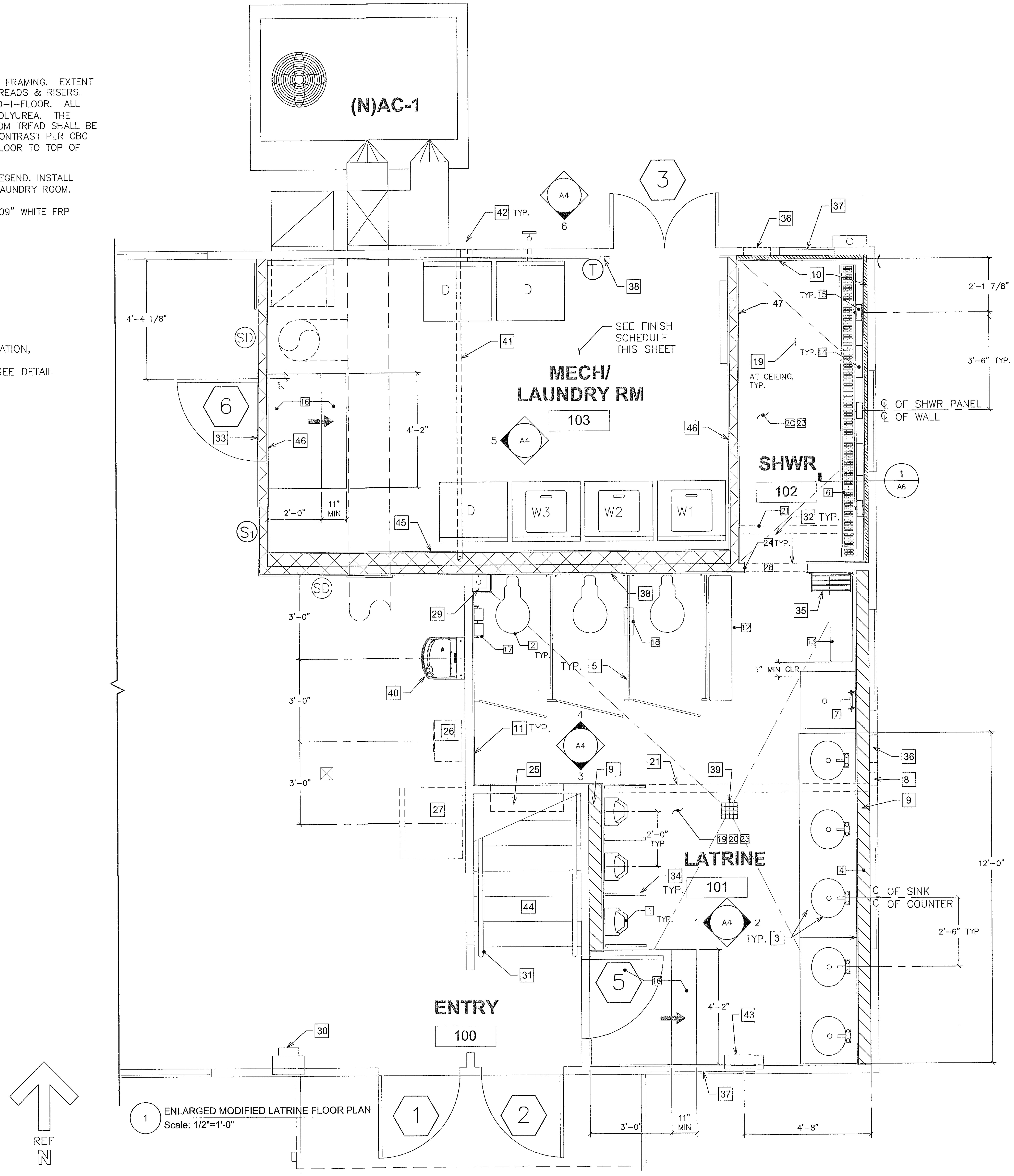

1 ENLARGED MODIFIED LATRINE FLOOR PLAN
Scale: 1/2"=1'-0"

No.24997
Exp.7-19

REVISIONS	SYMBOL	DATE	REMARKS	BY:
	△	.		.
	△	.		.
	△	.		.
	△	.		.

DRAWN BY: MC
DESIGNED BY: NG
CHECKED BY: NG
APPROVED BY: NG

SHEET TITLE TYPICAL ENLARGED LATRINE FLOOR PLAN & NOTES
PROJECT CAMP ROBERTS - BARRACKS RENOVATION
PROJECT NUMBER: 06R1904-27
LOCATION CAMP ROBERTS, CALIFORNIA
DATE: APR 11, 2019
STATE OF CALIFORNIA MILITARY DEPARTMENT

SHEET NUMBER
A3

4 OF 19

KEYNOTES:

1	WALL MOUNTED URINALS AND ASSOCIATED PLUMBING FIXTURES. PROVIDE WOOD BACKING NAILERS AT ALL URINAL LOCATIONS.
2	WATER CLOSETS AND ASSOCIATED PLUMBING FIXTURES.
3	CORIAN OR EQUAL COUNTERTOP W/ BACKSPLASH AND INTEGRAL LAVATORIES (OVER 3/4" PLYWOOD BASE) AND ASSOCIATED PLUMBING FIXTURES.
4	6" WIDE SINGLE PIECE SOLID SURFACE SHELF (TO MATCH COUNTERTOP) ON TOP OF TOP PLATE OF 2x WALL.
5	H.D.P.E. TOILET PARTITIONS W/ ASSOCIATED HARDWARE. DOORS SHALL HAVE 2 COAT HOOKS (HIGH & LOW) INSTALLED ON INTERIOR.
6	PAPER TOWEL DISPENSER, SINGLE FOLD WITH KEY GLUED IN UNIT. BOBRICK MODEL B-263 OR EQUAL.
7	FLOOR MOUNTED MOP SINK AND ASSOCIATED PLUMBING FIXTURES.
8	WOOD FRAMED FURRED WALL, SEE WALL LEGEND.
9	5/8" WATER RESISTANT GYP BD OVER 5/8" CDX STRUCT 1 PLYWOOD OVER (E) WOOD STUDS. COVER W/ 0.09" WHITE FRP. SEE ELEVATIONS FOR HEIGHT. TRIM SHALL BE BRUSHED ANODIZED ALUMINUM TRIM.
10	WOOD FURRED W/ 2x4 STUDS INSTALLED FLAT HORIZONTALLY AT 16" O.C. ON EXTERIOR WALLS. R-13 INSULATION IS TYPICAL AT ALL EXTERIOR WALLS. SEE DETAIL 1/A6.
11	SHEATH WALLS W/ 5/8" CDX STRUCT 1 PLYWOOD OVER (E) WOOD STUDS. COVER W/ FRP FULL HEIGHT.
12	EXHAUST FAN, SEE MECHANICAL.
13	2x4 NAILERS BETWEEN (E) CEILING JOISTS @ 12" O.C. FOR GYP. BD. ATTACHMENT. IN LATRINE & SHOWER.
14	18"x30" FRAMED MIRRORS.
15	SHEATH SHOWER INTERIOR W/ 5/8" CCX PLYWOOD (KNOTS FILLED AND SANDED ONE SIDE) ON WALLS AND CEILING. TAPE JOINTS AND COAT W/ POLYUREA COATING ON WALLS ONLY.
16	12" X 42" SOLID PLASTIC (HDPE) URINAL PARTITION W/ 24" LONG STAINLESS STEEL BRACKETS HARDWARE ON EACH SIDE. MOUNT @12" AFF. UON.
17	SURFACE MOUNTED SHOWER PANEL. SEE PLUMBING.
18	18" WIDE WALL MOUNT TOWEL SHELF W/ TOWEL BAR. TAYMOR OR EQUAL, HIGH & LOW.
19	WALL MOUNTED HOOK - BOBRICK B6827 OR EQUAL.
20	14" WIDE HDPE SHELVES W/ HEAVY DUTY SHELF SUPPORTS. MOUNT SHELVES, CENTERED BETWEEN SHOWER HEADS. PITCH OUT FOR WATER RUN OFF.
21	BENCHES, SEE SHEET A3.
22	CONC. LANDING W/ STEPS.
23	L3" x 3" x 1/4" x 24"x18" LONG (EACH LEG) BRACKET. PROVIDE 5 EACH. ONE BRACKET AT EACH END OF COUNTERTOP AND 3 INTERMEDIATE LOCATIONS BETWEEN SINKS. SECURE TO FRAMING W/ 1/4" MACHINE BOLTS @ 6" O.C. MAX AND WITHIN 2" OF END OF EACH LEG. BOLTED TO (E) FRAMING WALL. PAINT OR POWER COAT WHITE.
24	4" CONC. SLAB W/ DOWELS IN (E) STEM WALL AND EPOXY INTO PLACE IN LATRINE & SHOWER. DOWELS SHALL EXTEND INTO CONC. SLAB 6". TIE DOWELS TO 6"X6"X16 GA. WELDED WIRE FABRIC.
25	APPROVED POLYUREA COATING ON EXPOSED CONC FLOOR AND CURB SURFACES, PLYWOOD WALL SURFACES AND WOOD BASEBOARD SURFACES IN ACCORDANCE WITH THE APPROVED MANUFACTURER'S WRITTEN INSTRUCTIONS.
26	6" WIDE STAINLESS STEEL SHELF ABOVE URINALS. IN A WAY THAT THE JOINT BETWEEN THE GYP. BD. AND THE FRP IS COVERED WITH THE SHELF MOUNTING. (MOUNTING HARDWARE FLUSH ON GYP BD ABOVE FRP).
27	5/8" WATER RESISTANT GYP. BD. OVER (E) OR WOOD FRAMED WALL AND CEILING. USE MOISTURE RESISTANT TAPE AND SETTING COMPOUND.
28	STAINLESS STEEL SOAP DISPENSER (BOBRICK MODEL 2112 OR EQUAL).
29	(E) WINDOWS
30	RECESSED JANITORIAL STORAGE SHELVING, SEE DETAIL 5/A6. COORDINATE W/ C.O.R. FOR MOUNTING HEIGHT.
31	RECESSED WASTE RECEPTACLE
32	1 HR RATED WALL, SEE WALL LEGEND.
33	5/8" WATER RESISTANT GYP BD OVER (E) WOOD STUDS. COVER W/ 0.09" WHITE FRP. TRIM SHALL BE BRUSHED ANODIZED ALUMINUM TRIM.
34	PRIVACY FILM ON LATRINE WINDOW SOLYX SX-3146 OR EQL.
35	HF, WALL HYDRANT, SEE PLUMBING.
36	CLEANOUT TO WALL, SEE PLUMBING.
37	WALL HYDRANT, HF-2, SEE PLUMBING.
38	DRYER WALL VENTS, SEE PLUMBING.
39	WASHER BOXES, TYP. 3, SEE PLUMBING.
40	INSTALL MOLD RESISTANT GYP BD ON SHOWER CEILING.

NOTES:

1. PROVIDE STAINLESS STEEL TRIM RINGS AROUND PLUMBING PENETRATIONS IN WALLS THAT ARE EXPOSED. IN CASES WHERE A RING WON'T WORK, GAPS BETWEEN PIPES & FRP SHALL BE CAULKED.
2. RUN WATER AND VENT LINE FROM FURRED WALL SPACE INTO SHOWER CHASE TO DESTINATIONS. SEE PLUMBING.
3. FRAMED (E) EXPOSED PIPING WITH GYP. BD. IN LATRINE.
4. FOR ADDITIONAL LATRINE/SHOWER INFORMATION, SEE SHEET A3.
5. WALL LEGEND, SEE SHEET A2.

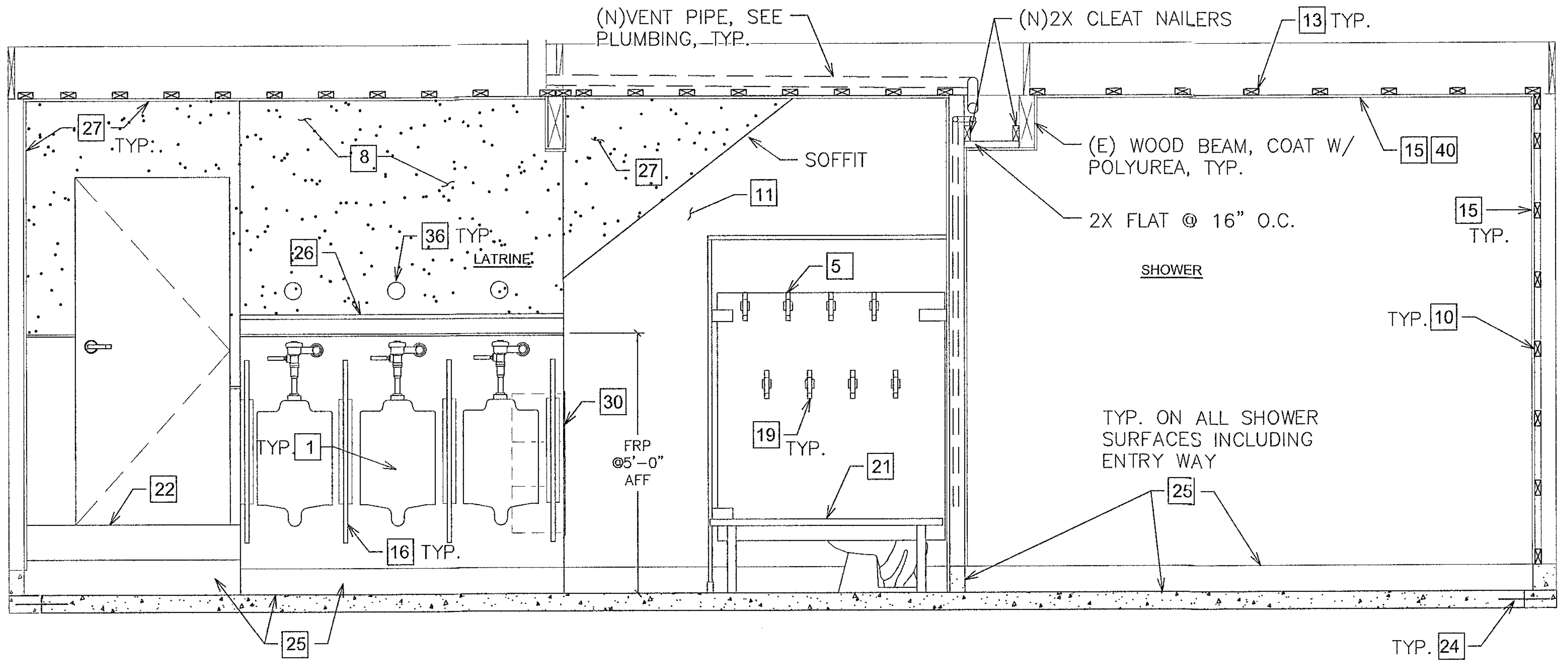
(N)VENT PIPE, SEE PLUMBING, TYP.
(N)2X CLEAT NAILERS
13 TYP.
27 TYP.
8
27
SOFFIT
11
26
36 TYP.
LATRINE
(E) WOOD BEAM, COAT W/ POLYUREA, TYP.
15 40
2X FLAT @ 16" O.C.
SHOWER
15 TYP.
TYP. 10
5
19 TYP.
30
FRP @5'-0" AFF
TYP. 1
22
21
16 TYP.
TYP. ON ALL SHOWER SURFACES INCLUDING ENTRY WAY
25
25
TYP. 24

ELEVATION - 1

SCALE: 1/2" = 1'-0"

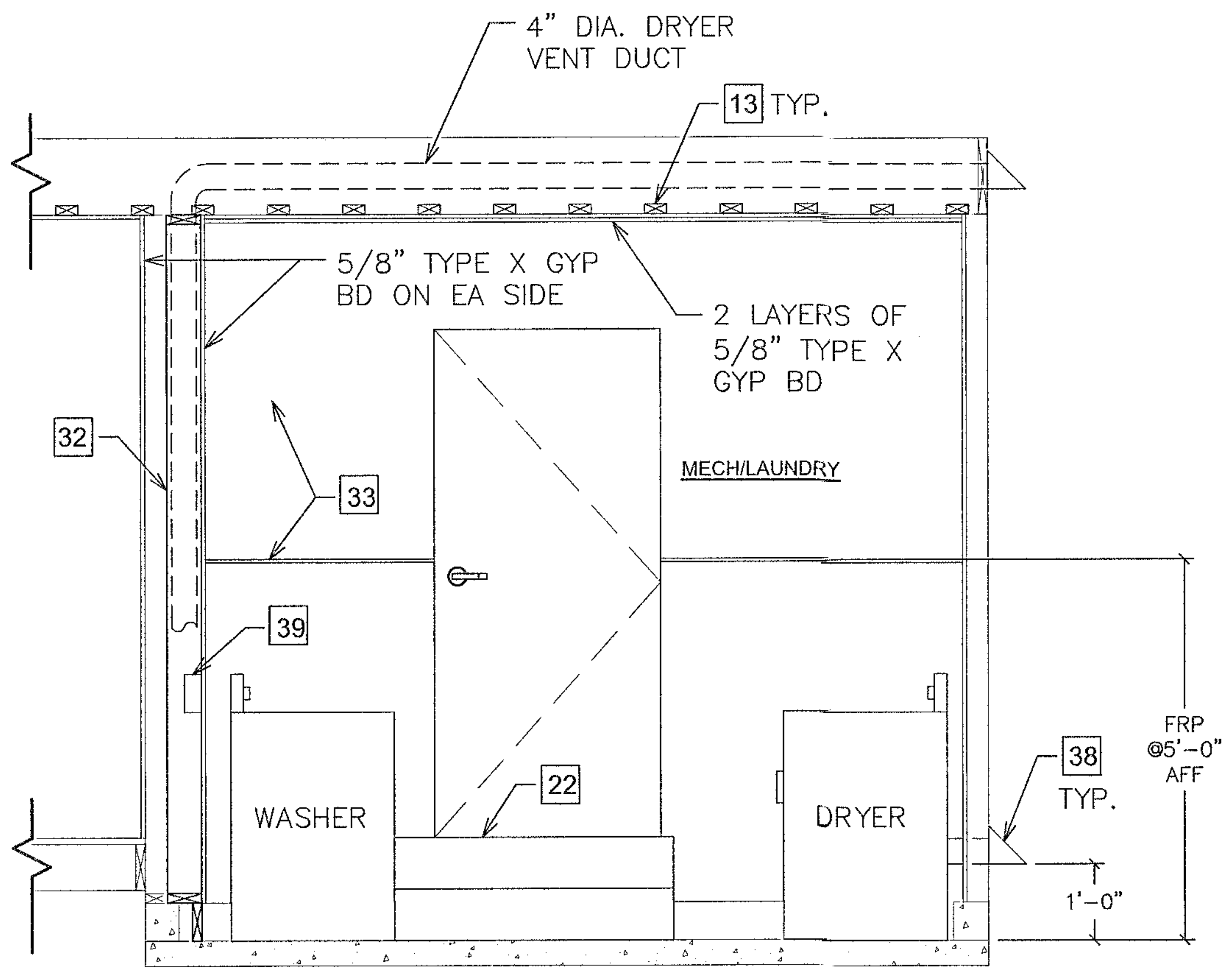
4" DIA. DRYER VENT DUCT
13 TYP.
5/8" TYPE X GYP BD ON EA SIDE
2 LAYERS OF 5/8" TYPE X GYP BD
32
33
MECH/LAUNDRY
39
WASHER
22
DRYER
38 TYP.
FRP @5'-0" AFF
1'-0"

ELEVATION - 5

SCALE: 1/2" = 1'-0"

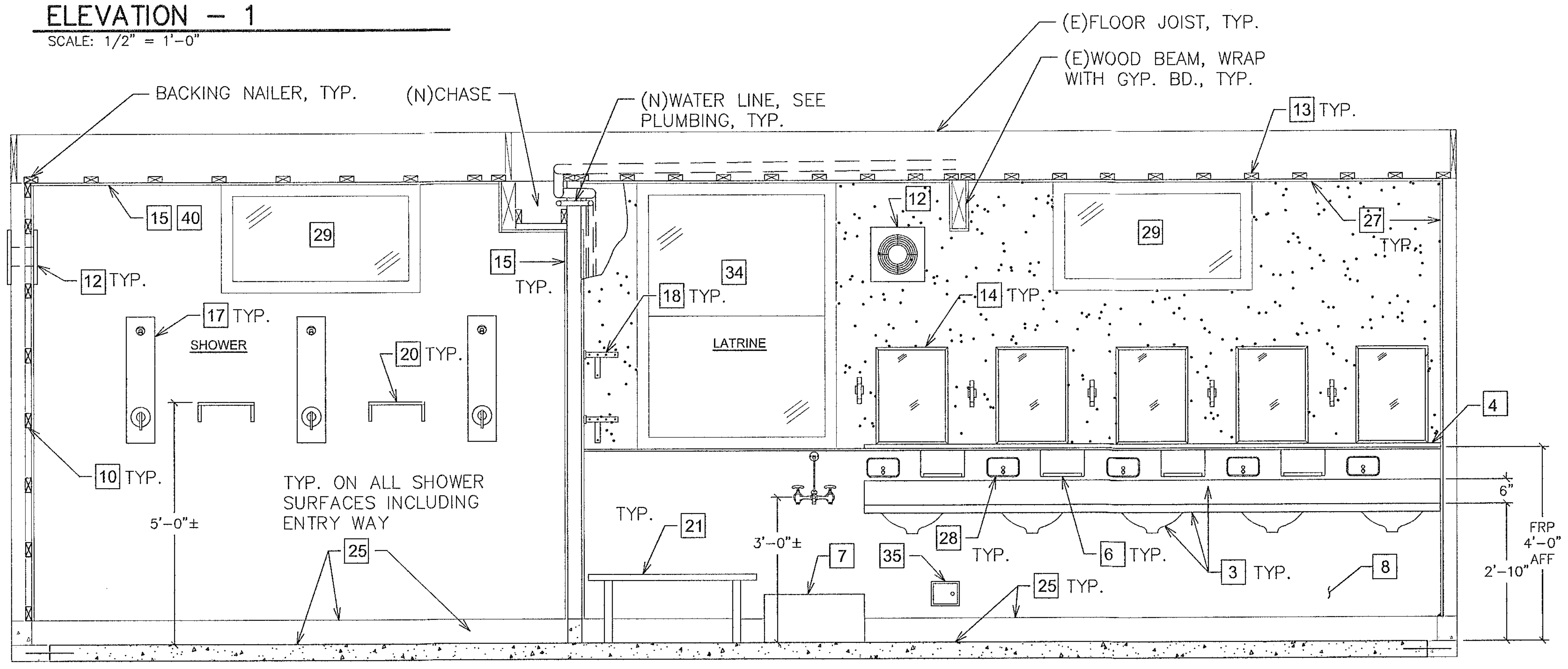
(E)FLOOR JOIST, TYP.
(E)WOOD BEAM, WRAP WITH GYP. BD., TYP.
BACKING NAILER, TYP.
(N)CHASE
(N)WATER LINE, SEE PLUMBING, TYP.
13 TYP.
15 40
29
12 TYP.
15 TYP.
12
34
29
27 TYR.
17 TYP.
SHOWER
18 TYP.
LATRINE
14 TYP.
20 TYP.
4
10 TYP.
TYP. ON ALL SHOWER SURFACES INCLUDING ENTRY WAY
5'-0"±
25
TYP. 21
3'-0"±
7
35
28 TYP.
6 TYP.
3 TYP.
8
25 TYP.
6"
FRP 4'-0" AFF
2'-10"

ELEVATION - 2

SCALE: 1/2" = 1'-0"

NOTES:

1. HVAC & DUCT ARE NOT SHOWN FOR CLARITY.

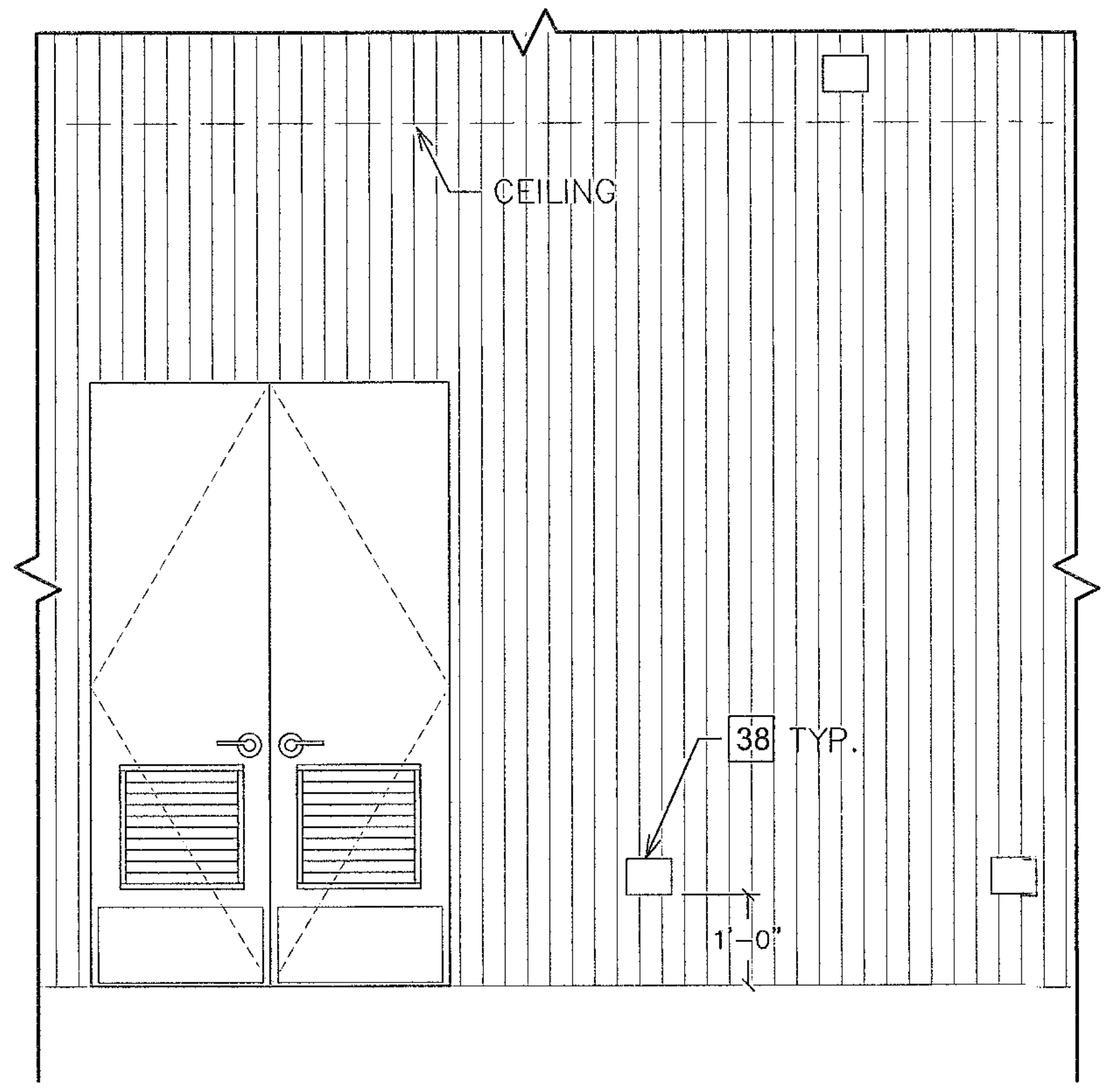
CEILING
38 TYP.
1'-0"

ELEVATION - 6

SCALE: 1/2" = 1'-0"

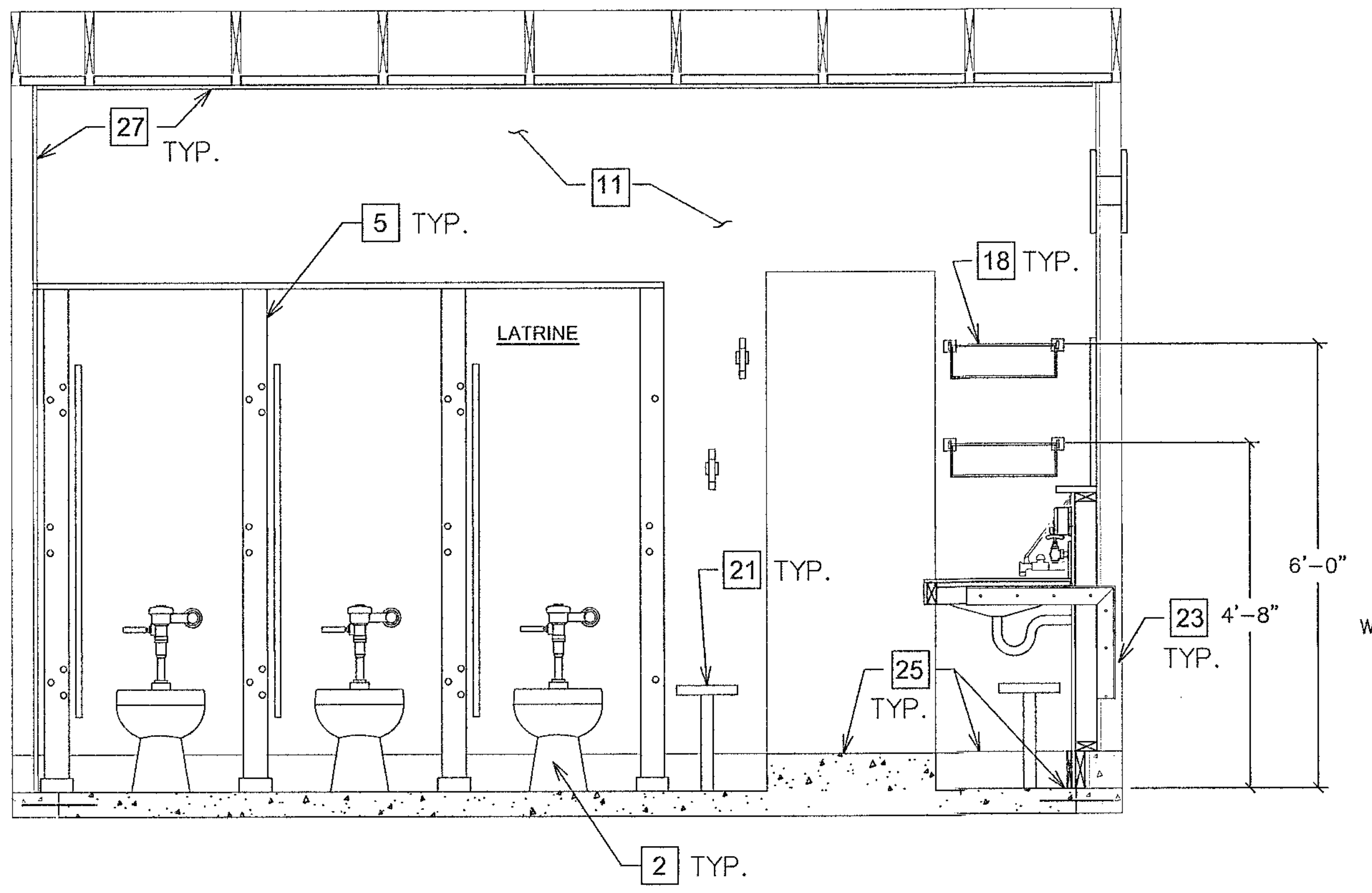
27 TYP.
11
5 TYP.
18 TYP.
LATRINE
21 TYP.
6'-0"
25 TYP.
23 4'-8" TYP.
2 TYP.

ELEVATION - 4

SCALE: 1/2" = 1'-0"

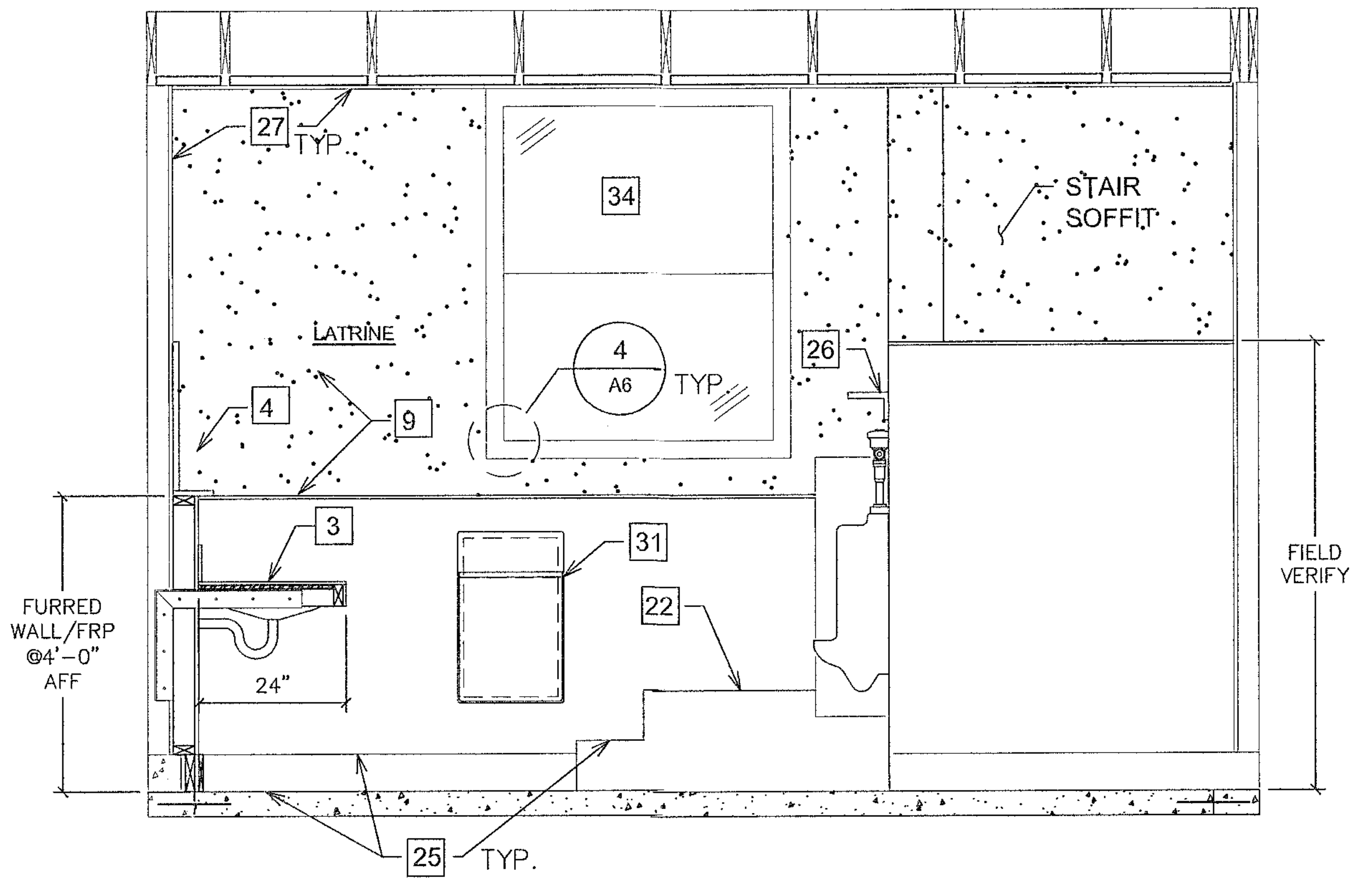
27 TYP.
34
STAIR SOFFIT
LATRINE
4
9
4 A6 TYP.
26
3
31
22
FURRED WALL/FRP @4'-0" AFF
24"
FIELD VERIFY
25 TYP.

ELEVATION - 3

SCALE: 1/2" = 1'-0"

LICENSED ARCHITECT NICK M. GIANNINI No.24997 Exp.7-19 STATE OF CALIFORNIA

REVISIONS	SYMBOL	DATE	REMARKS	BY:
	△	.		.
	△	.		.
	△	.		.
	△	.	A4	.

DRAWN BY: MC
DESIGNED BY: NG
CHECKED BY: NG
APPROVED BY: NG

SHEET TITLE TYPICAL LATRINE ELEVATIONS AND NOTES
PROJECT CAMP ROBERTS - BARRACKS RENOVATION
PROJECT NUMBER: 06R1904-27
LOCATION CAMP ROBERTS, CALIFORNIA
STATE OF CALIFORNIA MILITARY DEPARTMENT
DATE: APR 11, 2019

SHEET NUMBER
A4

5 OF 19

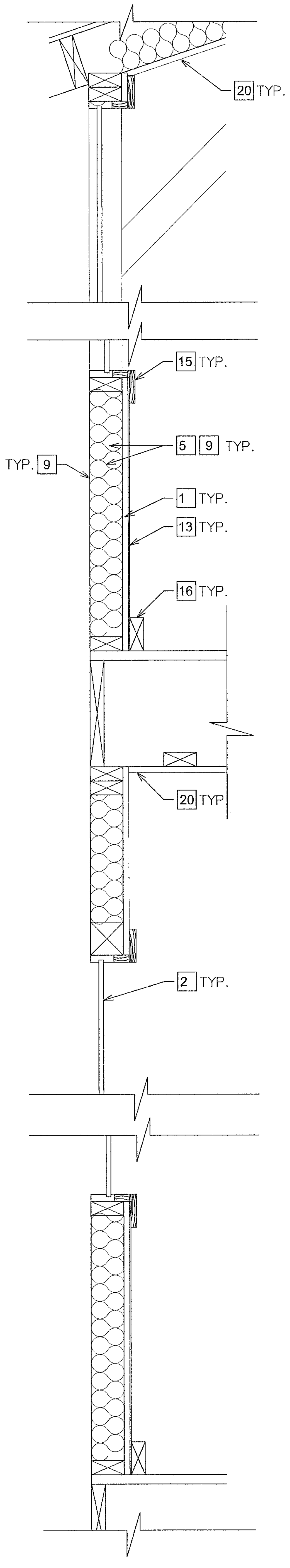

5 TYP WINDOW SECTION
SCALE: 1-1/2"= 1'-0"

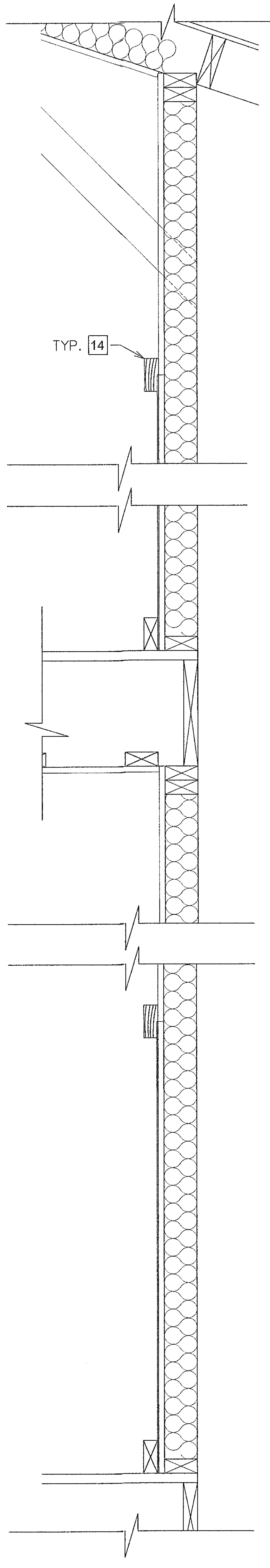

4 TYP WALL SECTION
SCALE: 1-1/2"= 1'-0"

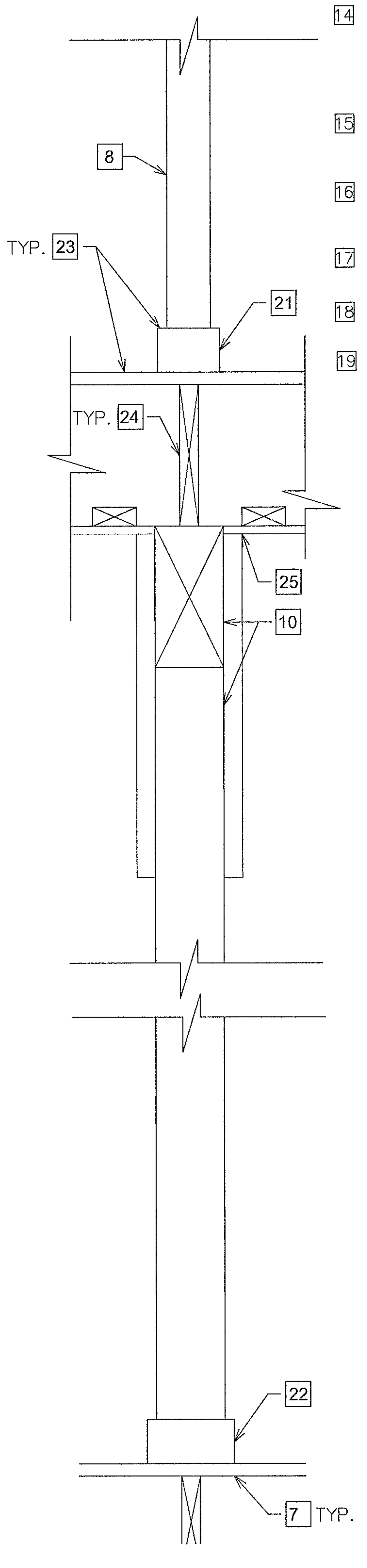

3 TYP WALL SECTION
SCALE: 1-1/2"= 1'-0"

KEYNOTES:

1 5/8" GYP. BD. OVER (E) 2x FRAMING
2 (E) DUAL PANE WINDOW – N.I.C.
3 (R-38 FOIL BACKED INSULATION IN CEILING.
4 HVAC DUCT, SEE MECHANICAL.
5 R-13 FOIL BACKED INSULATION
6 R-15 HIGH DENSITY INSULATION
7 (E) DIAGONAL SUBFLOOR.
8 (E) 4x4 POSTS
9 (E) 2x4 STUDS @ 24" O.C.
10 (E) 6x6 POST & BEAM.
11 1" AIR GAP MIN. CORRUGATED POLYSTYRENE RIGID FOAM, MAINTAINED WITH 10 MIL VISQUEEN OR EQUAL. TO EXTEND FROM EAVE TO ABOVE ATTIC INSULATION.
12 (E) GRADE
13 0.09" THK. FRP OVER 5/8" CCX STRUCT 1 PLYWOOD OVER (E) 2x WOOD FRAMING. COLOR TO BE IVORY.
14 2x4 FASTEN WITH #8 x 3" COARSE DRYWALL SCREWS CENTERED ON FRP/GYP BD JUNCTURE. RABBET 2x4 TO FIT OVER FRP. PAINT PRIOR TO INSTALLATION. BOTTOM PORTION TO PLYWOOD BACKING AND TOP PORTION TO INTERMEDIATE STUDS. SEE DETAIL 8/A6.
15 1x4 SELECT CLEAR PINE WINDOW TRIM. REMOVE (E) QUARTER-ROUND TRIM PRIOR TO TRIM INSTALLATION PAINT TRIMS.
16 2x4 DOUGLAS FIR BASEBOARD. USE SAME PATTERN FOR FASTENING CHAIR RAIL. USE 16d TO NAIL BASEBOARD.
17 INSTALL POLYUREA FLOOR COATING OVER 5/8" STURD-I-FLOOR UNDERLAYMENT BASE T&G PLYWOOD.
18 2x NAILERS BETWEEN (E) CEILING JOISTS @ 12" O.C. FOR GYP. BD. ATTACHMENT, UON.
19 1/2" LIGHTWEIGHT GYP. BD. ON ALL SURFACES OF DUCT ENCLOSURE.
20 1/2" LIGHTWEIGHT GYPSUM BOARD OVER (E) WOOD FRAMING.
21 (E) 4x4 POSTS – TYP. INSTALL 1x4 BASEBOARD AROUND (E) POST IF NO (E) BASEBOARD IS PRESENT, USE FINISH NAILS.
22 (E) 6x6 POSTS, TYP. INSTALL 1x BASEBOARD AROUND (E) POSTS.
23 POLYUREA COATING SYSTEM (PRIMER, POLYUREA COAT AND PIGMENTED TOP COAT) OVER PREPARED STURDI-FLOOR SUBSTRATE. EXTEND COATING TO TOP OF BASEBOARD.
24 (E) FLOOR JOIST BLOCKING.
25 SHAPE BRACE AS NECESSARY FOR DRYWALL.
26 (HVAC DUCTING IN ATTIC, SEE MECHANICAL.

NOTES:

1. FOR ADDITIONAL INFORMATION, SEE SHEET A2.

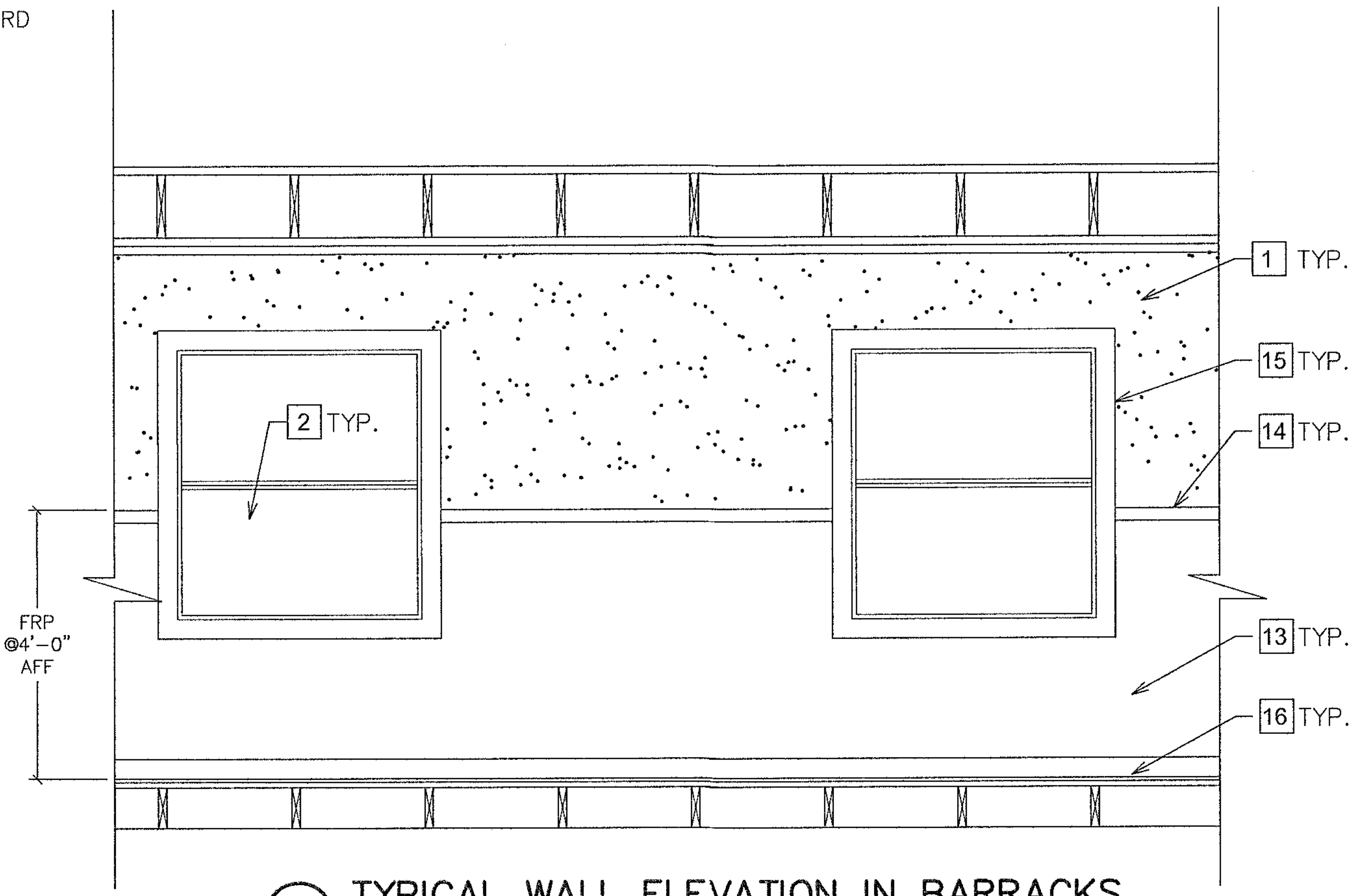

2 TYPICAL WALL ELEVATION IN BARRACKS
SCALE: 1/2"= 1'-0"

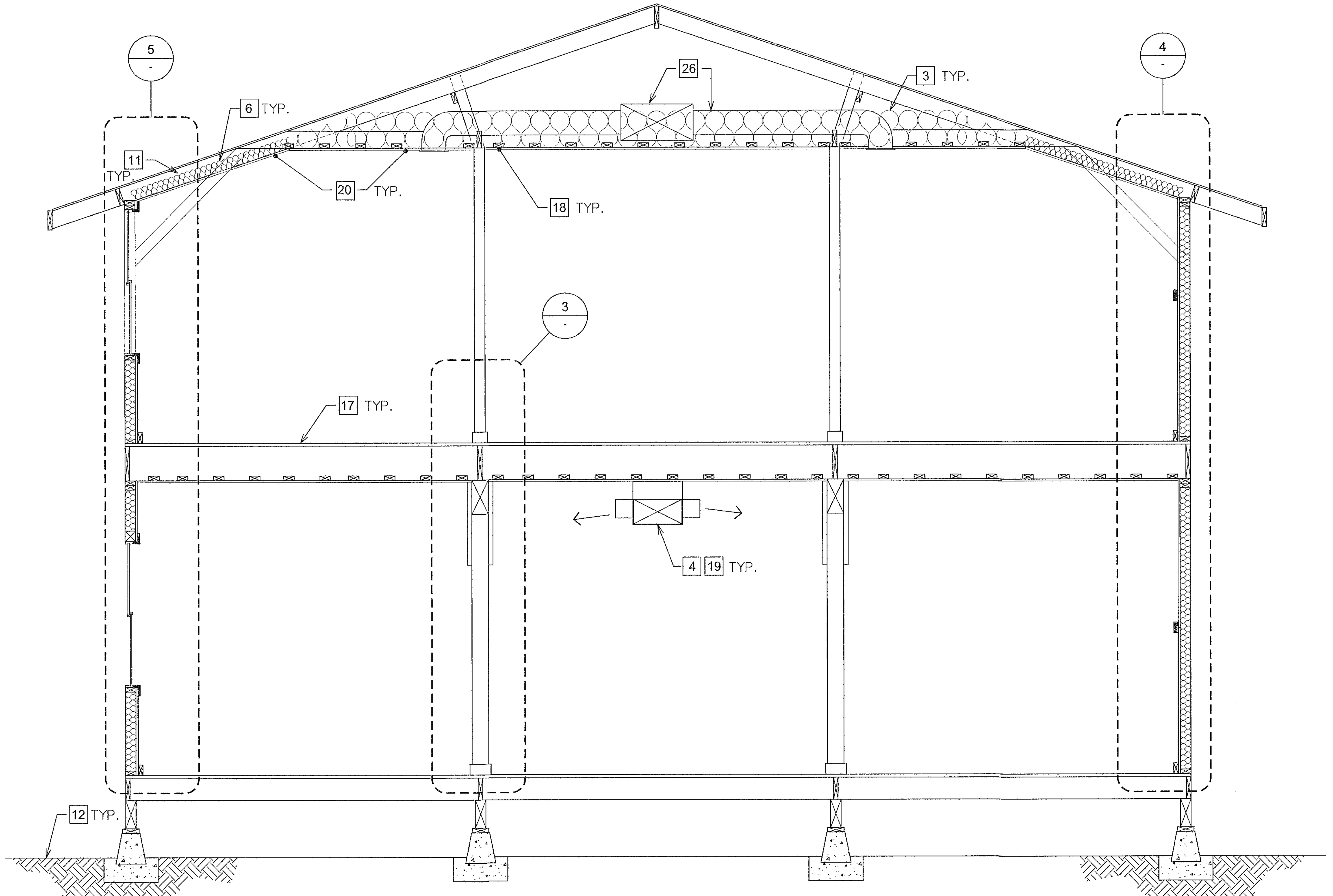

1 TYPICAL BUILDING SECTION
SCALE: 1/2"= 1'-0"

LICENSED ARCHITECT NICK M. GIANNINI No. 24997 Exp. 7-19 STATE OF CALIFORNIA

REVISIONS	SYMBOL	DATE	REMARKS	BY:
	△	.		.
	△	.		.
	△	.		.
	△	.		.

DRAWN BY: MC
DESIGNED BY: NG
CHECKED BY: NG
APPROVED BY: NG

SHEET TITLE TYPICAL BUILDING SECTION, DETAILS & NOTES
PROJECT CAMP ROBERTS – BARRACKS RENOVATION
LOCATION CAMP ROBERTS, CALIFORNIA
PROJECT NUMBER: 06R1904-27
DATE: APR 11, 2019
STATE OF CALIFORNIA MILITARY DEPARTMENT

SHEET NUMBER
A5
6 OF 19

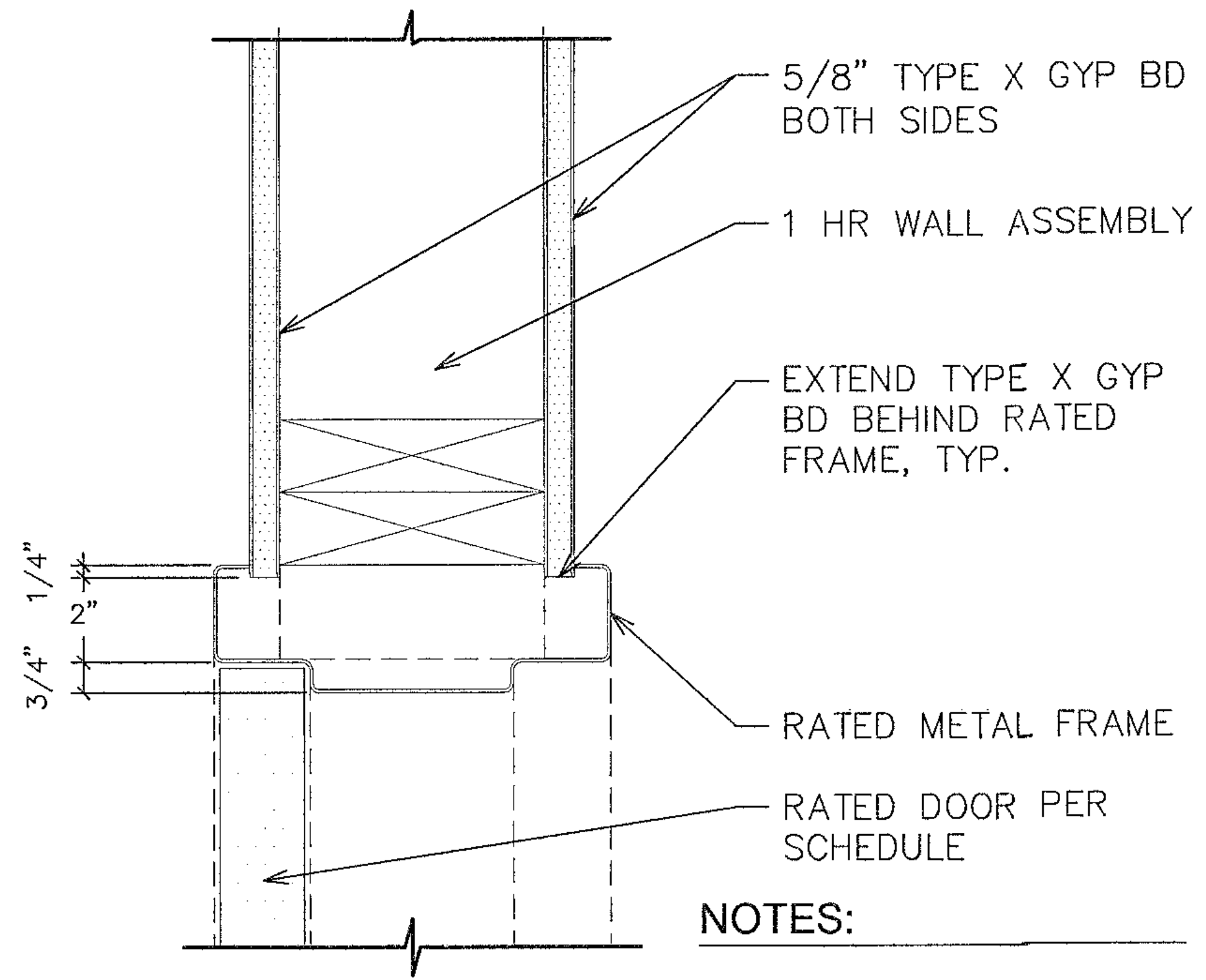
5/8" TYPE X GYP BD BOTH SIDES
1 HR WALL ASSEMBLY
EXTEND TYPE X GYP BD BEHIND RATED FRAME, TYP.
1/4"
2"
3/4"
RATED METAL FRAME
RATED DOOR PER SCHEDULE

NOTES:

1. HEAD DETAIL SIMILAR

⑩ RATED DOOR JAMB, HEAD SIMILAR
SCALE: 3"=1'-0"

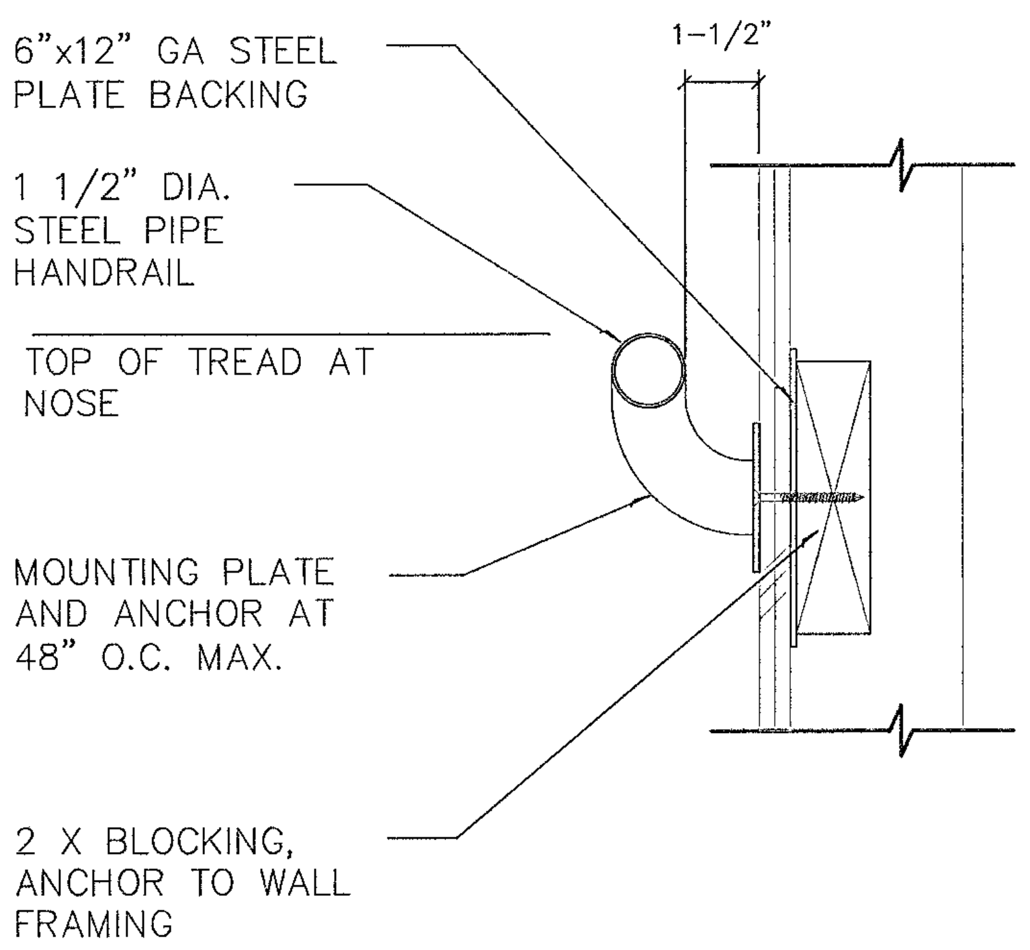
6"x12" GA STEEL PLATE BACKING
1-1/2"
1 1/2" DIA. STEEL PIPE HANDRAIL
TOP OF TREAD AT NOSE
MOUNTING PLATE AND ANCHOR AT 48" O.C. MAX.
2 X BLOCKING, ANCHOR TO WALL FRAMING

⑦ HANDRAIL SUPPORT
SCALE: 3"=1'-0"

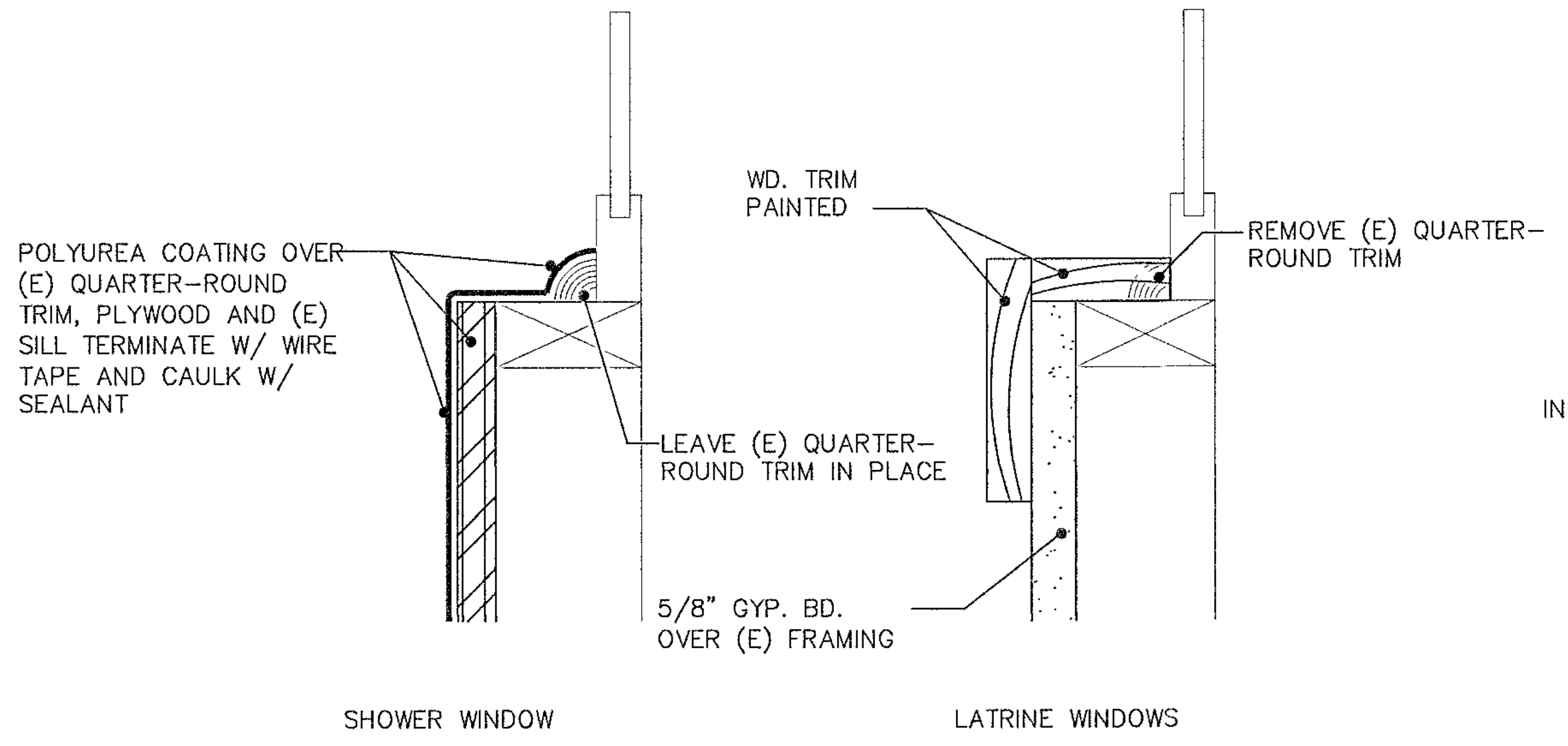
POLYUREA COATING OVER (E) QUARTER-ROUND TRIM, PLYWOOD AND (E) SILL TERMINATE W/ WIRE TAPE AND CAULK W/ SEALANT
WD. TRIM PAINTED
LEAVE (E) QUARTER-ROUND TRIM IN PLACE
REMOVE (E) QUARTER-ROUND TRIM
5/8" GYP. BD. OVER (E) FRAMING
SHOWER WINDOW
LATRINE WINDOWS

④ WINDOW SILL TREATMENT
SCALE: NONE

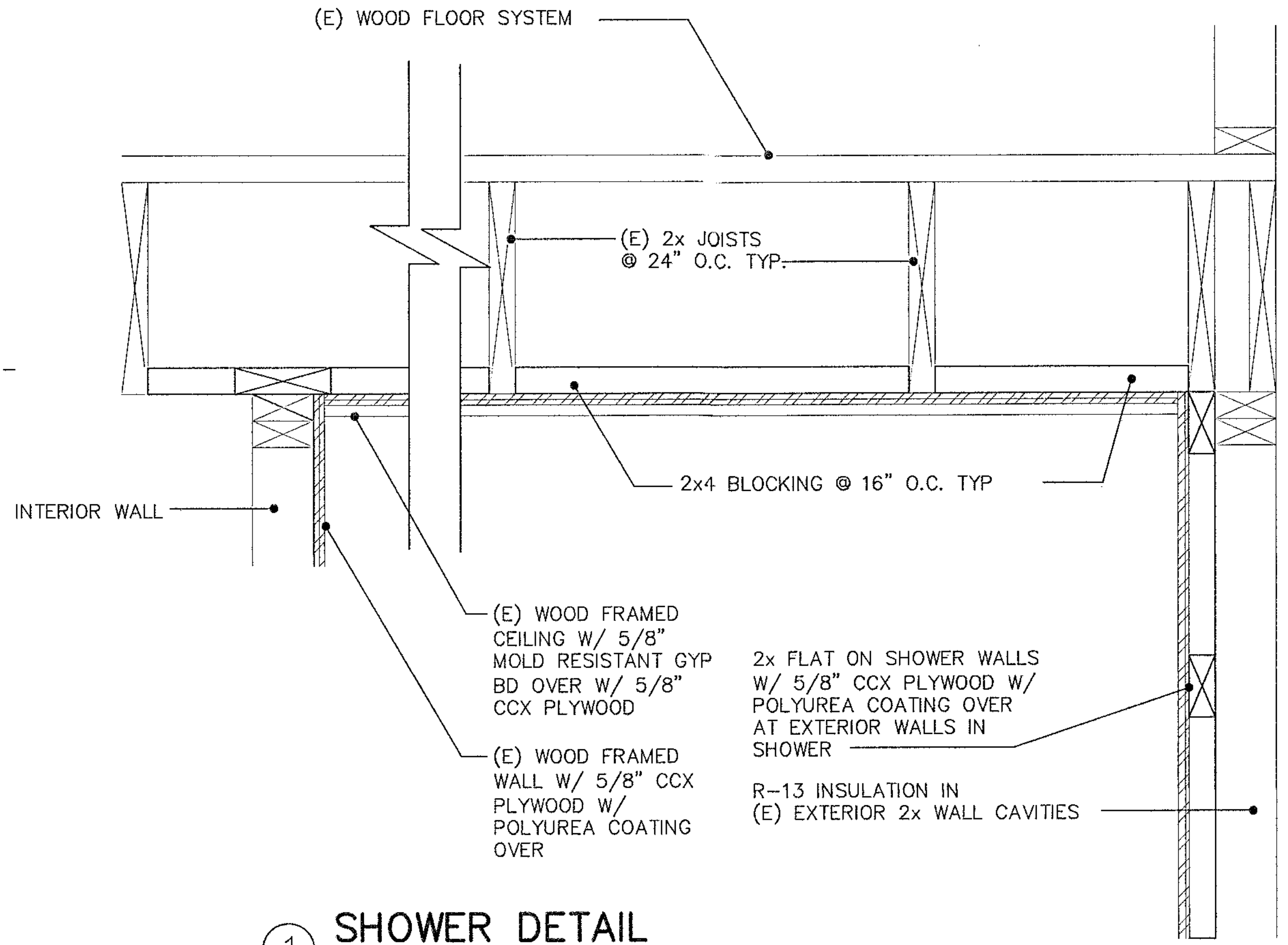
(E) WOOD FLOOR SYSTEM
(E) 2x JOISTS @ 24" O.C. TYP.
INTERIOR WALL
2x4 BLOCKING @ 16" O.C. TYP
(E) WOOD FRAMED CEILING W/ 5/8" MOLD RESISTANT GYP BD OVER W/ 5/8" CCX PLYWOOD
(E) WOOD FRAMED WALL W/ 5/8" CCX PLYWOOD W/ POLYUREA COATING OVER
2x FLAT ON SHOWER WALLS W/ 5/8" CCX PLYWOOD W/ POLYUREA COATING OVER AT EXTERIOR WALLS IN SHOWER
R-13 INSULATION IN (E) EXTERIOR 2x WALL CAVITIES

① SHOWER DETAIL
SCALE: 1/2" = 1'-0"

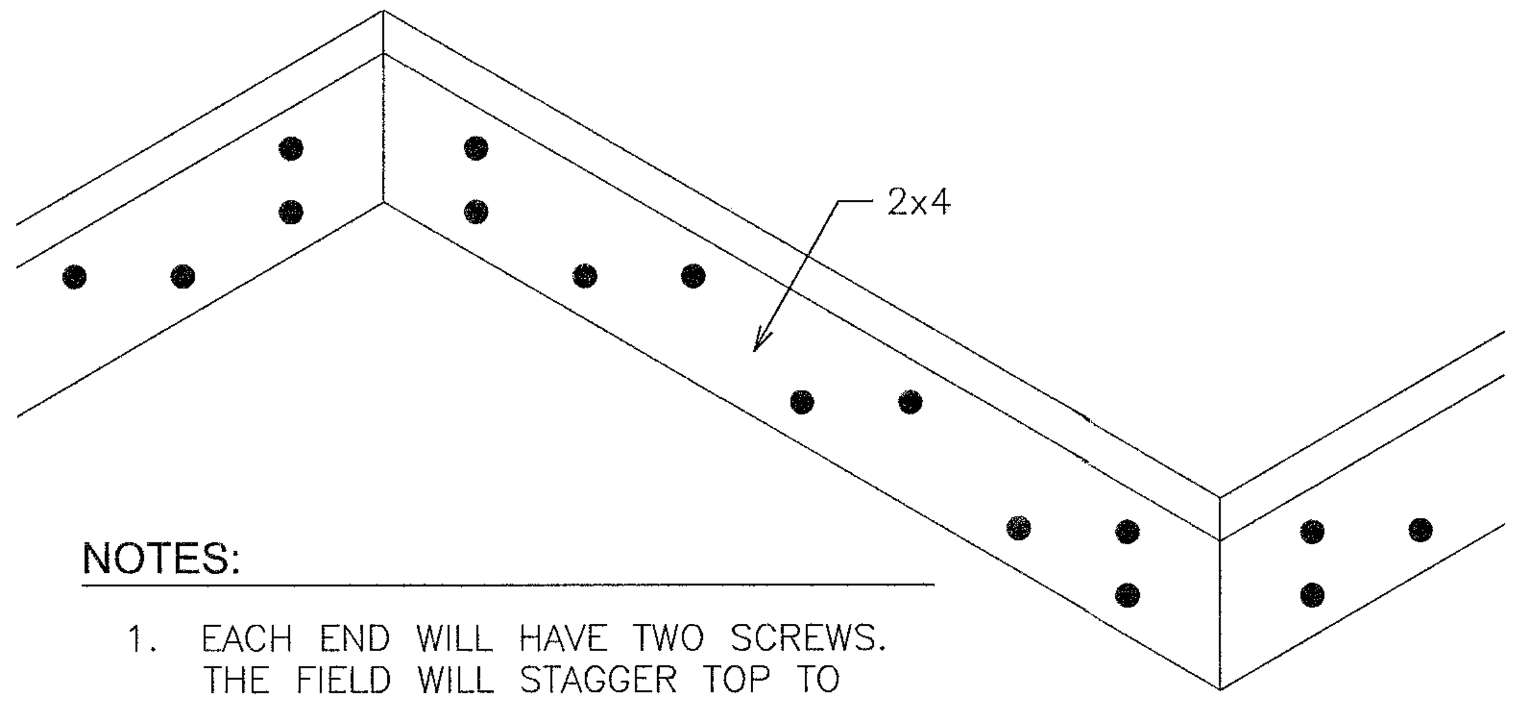

NOTES:

1. EACH END WILL HAVE TWO SCREWS. THE FIELD WILL STAGGER TOP TO BOTTOM EVERY 24" O.C. & BE FASTENED TO STUDS. RECESS CREW & FILL WITH CAULK

⑧ DETAIL
SCALE: NONE

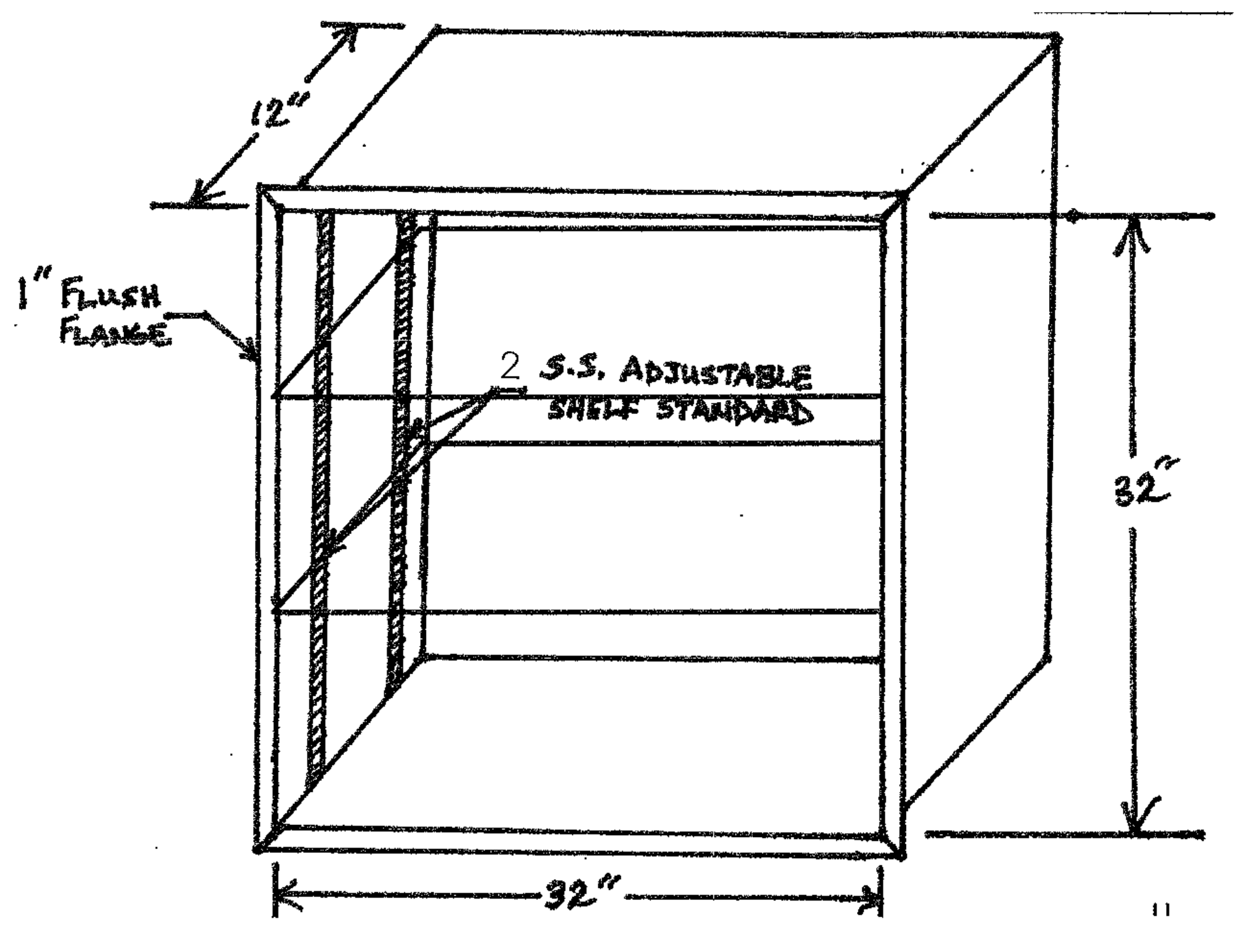
12"
1" FLUSH FLANGE
2 S.S. ADJUSTABLE SHELF STANDARD
32"
32"

⑤ RECESSED JANITORIAL STORAGE SHELVING
SCALE: NONE

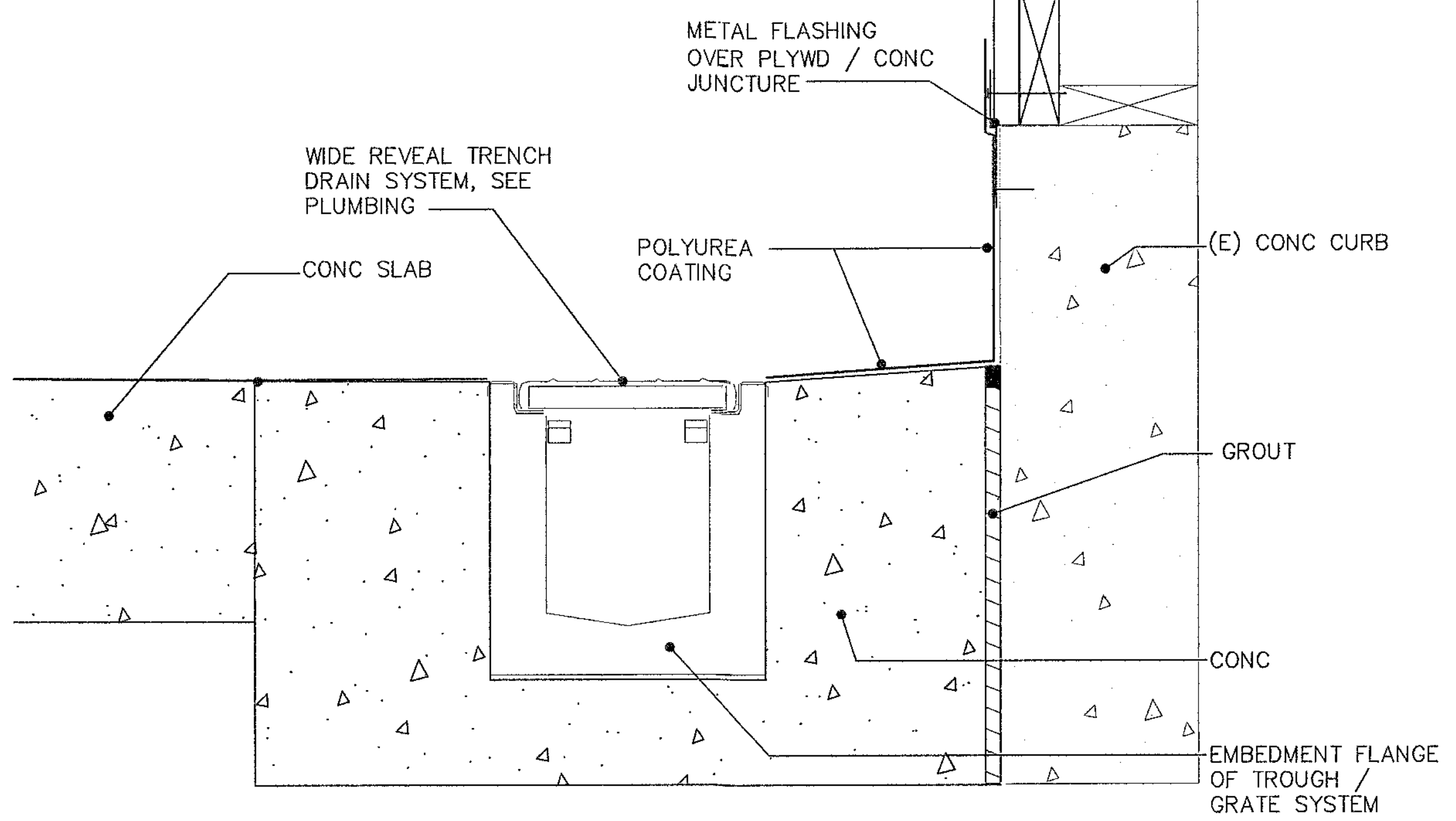
METAL FLASHING OVER PLYWD / CONC JUNCTURE
WIDE REVEAL TRENCH DRAIN SYSTEM, SEE PLUMBING
CONC SLAB
POLYUREA COATING
(E) CONC CURB
GROUT
CONC
EMBEDMENT FLANGE OF TROUGH / GRATE SYSTEM

② TROUGH DETAIL
SCALE: 1/2" = 1'-0"

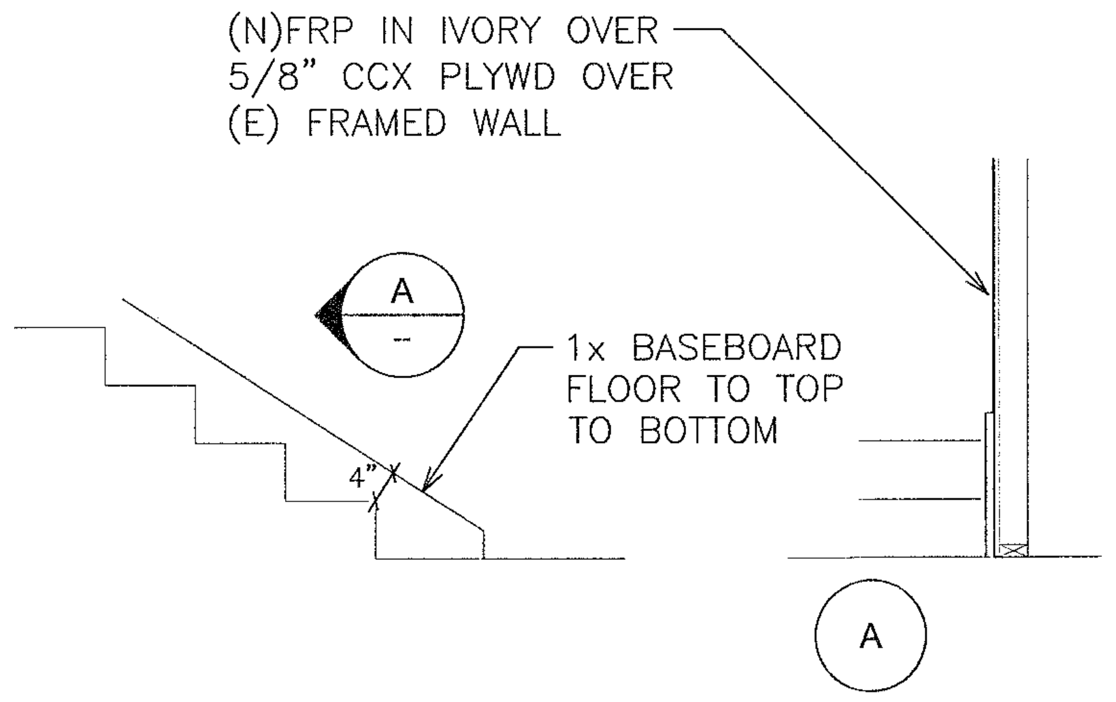
(N)FRP IN IVORY OVER 5/8" CCX PLYWD OVER (E) FRAMED WALL
A
--
1x BASEBOARD FLOOR TO TOP TO BOTTOM
4"
A

NOTES:

1. STAIR BASEBOARD TRIM FOR EXTENT OF POLYUREA/POLYASPARTIC FLOORING.

⑥ STAIR SECTION
SCALE: NONE

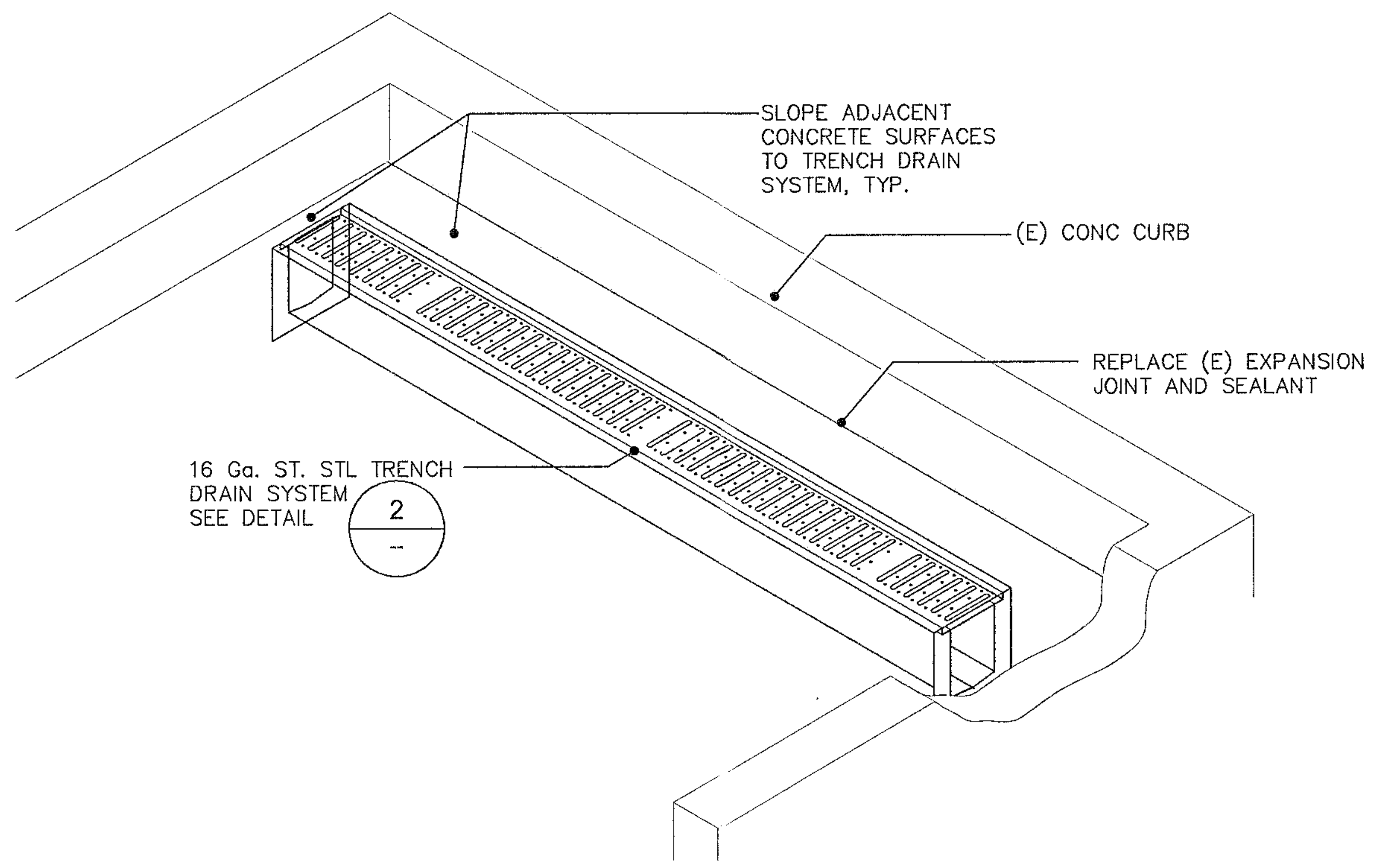
SLOPE ADJACENT CONCRETE SURFACES TO TRENCH DRAIN SYSTEM, TYP.
(E) CONC CURB
REPLACE (E) EXPANSION JOINT AND SEALANT
16 Ga. ST. STL TRENCH DRAIN SYSTEM SEE DETAIL
2
--

③ TROUGH ISO
SCALE: NONE

No. 24997
Exp. 7-19

REVISIONS	SYMBOL	DATE	REMARKS	BY:
	△	.	.	.
	△	.	.	.
	△	.	.	.
	△	.	A5	.

DRAWN BY:	NG		
PROJECT NUMBER: 06R1904-27	DESIGNED BY:	MC	
	CHECKED BY:	NG	
DATE: APR 11, 2019	APPROVED BY:	NG	

SHEET TITLE TYPICAL DETAILS
PROJECT CAMP ROBERTS - BARRACKS RENOVATION
LOCATION CAMP ROBERTS, CALIFORNIA
STATE OF CALIFORNIA MILITARY DEPARTMENT

SHEET NUMBER
A6

DOOR TYPES

1/4"=1'-0"

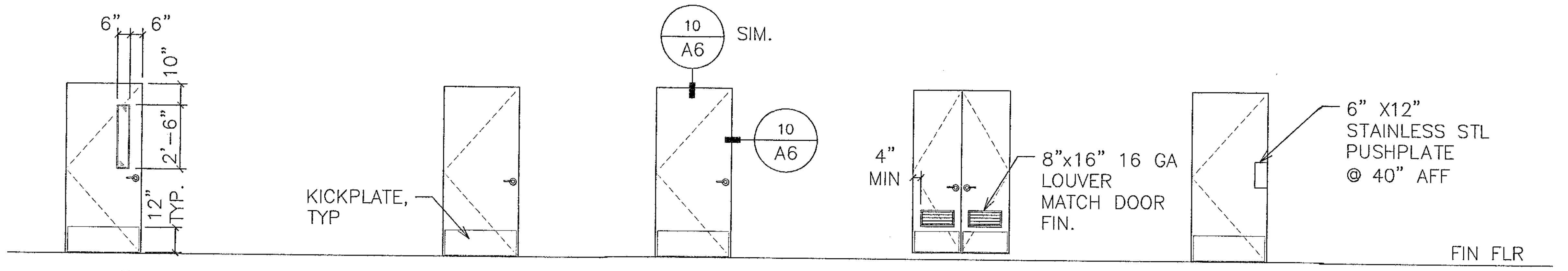
6"
6"
10"
2'-6"
12" TYP.
KICKPLATE, TYP
10
A6
SIM.
10
A6
4" MIN
8"x16" 16 GA LOUVER MATCH DOOR FIN.
6" X12" STAINLESS STL PUSHPLATE @ 40" AFF
FIN FLR

TYPE A
DOOR WITH VISION PANEL
TEMPERED WIRE GLASS

TYPE B
FLUSH DOOR

TYPE C
RATED DOOR

TYPE D
DOOR WITH LOUVER
SEE NOTE 1

TYPE E
FLUSH DOOR

RATED DOOR NOTES:

ALL RATED DOORS ARE TO BE POSITIVE LATCHING & SELF-CLOSING 2016 CBC SECTION 716.5.9

"LABEL" SHALL MEAN "FIRE ASSEMBLY" AS DEFINED IN 2016 CBC SECTION 716.5.8.3

FIRE DOORS AND FIRE WINDOWSSHALL HAVE AN APPROVED LABEL OR LISTING MARK INDICATING THE FIRE PROTECTION RATING, WHICH IS PERMAMNENTLY AFFIXED AT THE FACTORY WHERE FABRICATION ASSEMBLY ARE DONE. 2016 CBC SECTION 716.5.7.1 AND 716.5..8.3.

ALL 20 MINUTE RATED SHALL ASSEMBLIES BE PROVIDED WITH APPROVED GASKETING MATERIAL SO INSTALLED TO PROVIDE A SEAL WHERE THE DOOR MEETS THE STOP ON BOTH SIDES AND ACROSS THE TOP. THE DOOR AND FRAME SHALL BEAR AN APPROVED LABEL OR OTHER IDENTIFICATION SHOWING THE RATING THEREOF, FOLLOWED BY THE LETTER "S" 2016 CBC SECTION 716.5.3.

FIRE RATED DOOR FRAMES SHALL BE INSTALLED STRICTLY PER MANUFACTURER'S PRINTED INSTRUCTIONS. MANUFACTURER'S PRINTED INSTRUCTIONS SHALL BE MADE AVAILABLE TO THE INSPECTING AUTHORITIES 2016 CBC SECTION 716.5.7.

NOTES:

1. PROVIDE INSECT, WEATHERPROOF, FLAME AND EMBER INTRUSION PREVENTION SCREENING ON ALL DOOR LOUVERS, UON.
2. CONTRACTOR SHALL VERIFY ALL DOOR OPENING SIZES AND CONDITIONS PRIOR TO ORDERING OR FABRICATING ANY MATERIALS.

DOOR AND FRAME SCHEDULE

DOOR NUMBER	ROOM	DOOR											REMARKS & ABBREVATIONS
		TYPE	WIDTH (W)*	HEIGHT (H)*	THICKNESS	MATERIAL	FIRE RATING	FRAME TYPE	FINISH	PAIR	VISION PANEL	HARDWARE	HM HOLLOW METAL, CECO FRAME, SERIES SU STEEL FRAME PT PAINTED
1	ENTRY	A	3'-0"	6'-8"	1¾"	16 GA HM	–	HM	PT	–	X	1	PANIC HARDWARE
2	ENTRY	A	3'-0"	6'-8"	1¾"	16 GA HM	–	HM	PT	–	X	1	PANIC HARDWARE
3	MECH/LAUNDRY	D	2'-0"	6'-8"	1¾"	16 GA HM	–	HM	PT	X	–	5	–
4	BARRACKS (EXIT)	A	3'-0"	6'-8"	1¾"	16 GA HM	–	HM	PT	–	X	1	PANIC HARDWARE
5	LATRINE	E	3'-0"	6'-8"	1¾"	16 GA HM	–	HM	PT	–	–	4	–
6	BARRACKS TO LAUNDRY	C	3'-0"	6'-8"	1¾"	16 GA HM	60 MIN	HM	PT	–	–	3	–
7	BARRACKS	B	3'-0"	6'-8"	1¾"	16 GA HM	–	HM	PT	–	–	2	–
8	BARRACKS	B	3'-0"	6'-8"	1¾"	16 GA HM	–	HM	PT	–	–	2	–
9	BARRACKS (2ND FLR EXIT)	A	3'-0"	6'-8"	1¾"	16 GA HM	–	HM	PT	–	X	1	–
10	BARRACKS (2ND FLR)	B	3'-0"	6'-8"	1¾"	16 GA HM	–	HM	PT	–	–	2	–
11	BARRACKS (2ND FLR)	B	3'-0"	6'-8"	1¾"	16 GA HM	–	HM	PT	–	–	2	–

FINISH SCHEDULE

ROOM NAME	FLOOR	BASE	WALLS				CEILING	NOTES
			NORTH	EAST	SOUTH	WEST		
ENTRY 100	F1	B1	–	W2/W5/WA1	W2/W5/WA1	–	C1	–
LATRINE 101	F2	B2	W1/W2/WA1	W2/W4/WA1	W2/W4/WA1	W2/W4/WA1	C2	SEE ELEVATIONS
SHOWER 102	F2	B2	W3	W3	W3	W3	C4	SEE ELEVATIONS
MECH/LAUNDRY ROOM 103	F2	B2	W2/W4/WA1	W1/W2/W4/WA1	W1/W2/W4/WA1	W1/W2/W4/WA1	C3	SEE ELEVATIONS
BARRACKS 104	F1	B1	W1/W2/W5/WA1 (AT LAUNDRY WALL ONLY) W2/W5/WA1	W1/W2/W5/WA1 (AT LAUNDRY WALL ONLY) W2/W5/WA1	W2/W5/WA1	W2/W5/WA1	C1	–
BED 105	F1	B1	W2/W5/WA1	W2/W5/WA1	W2/W5/WA1	W2/W5/WA1	C1	–
BED 106	F1	B1	W2/W5/WA1	W2/W5/WA1	W2/W5/WA1	W2/W5/WA1	C1	–
HALLWAY 107	F1	B1	W2/W5/WA1	–	W2/W5/WA1	W2/W5/WA1	C1	–
BED 200	F1	B1	W2/W5/WA1	W2/W5/WA1	W2/W5/WA1	W2/W5/WA1	C1	–
BED 201	F1	B1	W2/W5/WA1	W2/W5/WA1	W2/W5/WA1	W2/W5/WA1	C1	–
BARRACKS 202	F1	B1	W2/W5/WA1	W2/W5/WA1	W2/W5/WA1	W2/W5/WA1	C1	SEE KEYNOTE 1/A2 FOR DUCT ENCLOSURE

NOTES:

FOR PAINTING SEE SECTION 09 90 00 OF THE SPECIFICATIONS.

COLOR SELECTIONS:

WALLS:	KELLY MOORE (ARIZONA HEAT) SEMI-GLOSS IN LATRINE & MECH/LAUNDRY ROOM WHERE ELSE EGG SHELL
DOORS/FRAMES:	KELLY MOORE (ARIZONA HEAT)
CEILING:	KELLY MOORE (WHITE SHADOW) SEMI-GLOSS IN LATRINE, SHOWER & MECH/LAUNDRY ROOM WHERE ELSE EGG SHELL

KEY TO FINISHES:

FLOORING

F1	POLYUREA COATING OVER STURD-I-FLOOR SUBSTRATE
F2	POLYUREA COATING OVER CONCRETE SLAB

WALLS

W1	5/8" TYPE X GYP. BD.
W2	5/8" CDX STRUCT 1 PLYWOOD
W3	POLYUREA COATING OVER 5/8" CCX PLYWOOD
W4	5/8" WATER RESISTANT GYP. BD. TAPED & TEXTURED W/ SEMI-GLOSS, LEVEL 4 FINISH
W5	5/8" GYP BD, TAPED & TEXTURED (SMOOTH FINISH)

BASE

B1	2x4 DOUGLAS FIR BASE BOARD
B2	POLYUREA COATING OVER EXPOSED CONCRETE CURB

CEILING PAINT:

C1	1/2" LIGHTWEIGHT GYPSUM BOARD
C2	5/8" WATER RESISTANT GYP BD TAPED & TEXTURED W/ SEMI-GLOSS, LEVEL 4 FINISH
C3	2 LAYERS 5/8" TYPE X GYP BD
C4	5/8" MOLD RESISTANT GYP BD OVER 5/8" CCX PLYWOOD

WAINSCOT:

WA1	FIBERGLASS REINFORCED PANELS (FRP), SEE ELEVATIONS FOR HEIGHT.

HARDWARE

GROUP 1
1 MORTISE LOCKET VON DUPRIN 99L SERIES SET W/ LEVER TRIM
1-1/2 PAIR BUTT HINGES HAGER OR EQL.
1 SPRING PIVOT HINGE
2 STAINLESS STL. KICKPLATES TRIMCO OR EQL
1 DOOR STOP TRIMCO #1211 OR EQL.
1 DOOR SWEEP PEMKO #293100VNB OR EQL.

GROUP 2
1 LEVER LOCKSET KEYED BEST 9K SERIES OR EQL (POSITIVE LATCHING)
1-1/2 PAIR BUTT HINGES HAGER OR EQL.
2 STAINLESS STL. KICKPLATES TRIMCO OR EQL
1 DOOR STOP TRIMCO #1211 OR EQL.

GROUP 3
1 LEVER LOCKSET BEST 9K SERIES OR EQL. (POSITIVE LATCHING)
1-1/2 PAIR BUTT HINGES HAGER OR EQL.
2 STAINLESS STL. KICKPLATES TRIMCO OR EQL.
1 PEMKO S88D SMOKE GASKET OR EQL.
1 LCN SURFACE MOUNT CLOSER 5010 OR EQL.

GROUP 4
1 PUSH PLATE ROCKWOOD 107x73BL_BSP OR EQL.
1 PULL PLATE ROCKWOOD 107x73B_BSPOR EQL
1-1/2 PAIR BUTT HINGES HAGER OR EQL.
2 STAINLESS STL. KICKPLATES TRIMCO OR EQL
1 DOOR STOP TRIMCO #1211 OR EQL.
1 LCN SURFACE MOUNT CLOSER 5010 OR EQL.

GROUP 5
1 LEVER LOCKSET BEST 9K SERIES OR EQL.
1 DUMMY TRIM W/LATCH RECIEVER
3 PAIR BUTT HINGES HAGER OR EQL.
2 STAINLESS STL. KICKPLATES (EXT. SIDE)
2 DOOR STOP TRIMCO #1211 OR EQL.
1 DOOR SWEEP PEMKO #293100VNB OR EQL.
1 HEAD & FOOT BOLT
1 ASTRAGAL

NICK M. GIANNINI
No. 24997
Exp. 7-19

REVISIONS	SYMBOL	DATE	REMARKS	BY:
	△	.	.	.
	△	.	.	.
	△	.	.	.
	△	.	.	.

DRAWN BY: NG
DESIGNED BY: MC
CHECKED BY: NG
APPROVED BY: NG

SHEET TITLE TYPICAL BARRACKS DOOR, FINISH SCHEDULES & DETAIL
PROJECT NUMBER: 06R1904-27
PROJECT CAMP ROBERTS - BARRACKS RENOVATION
LOCATION CAMP ROBERTS, CALIFORNIA
DATE: APR 11, 2019
STATE OF CALIFORNIA MILITARY DEPARTMENT

SHEET NUMBER
A7

NOTES:

1. REMOVE ALL EXISTING DUCT WORK, FLUES AND DISPOSE, AS DIRECTED BY COR.
2. REMOVE EXISTING THERMOSTATS, WIRING AND DISPOSE, AS DIRECTED BY COR.
3. REMOVE EXISTING MECHANICAL EQUIPMENT IN MECHANICAL ROOM AND CONTACT CONTACT THE DEPT. OF PUBLIC WORKS FOR RE-USE OR DISPOSE.
4. REPAIR ALL INCIDENTAL DAMAGE TO WALLS, CEILINGS OR FLOORS AS A RESULT OF DEMOLITION WORK.

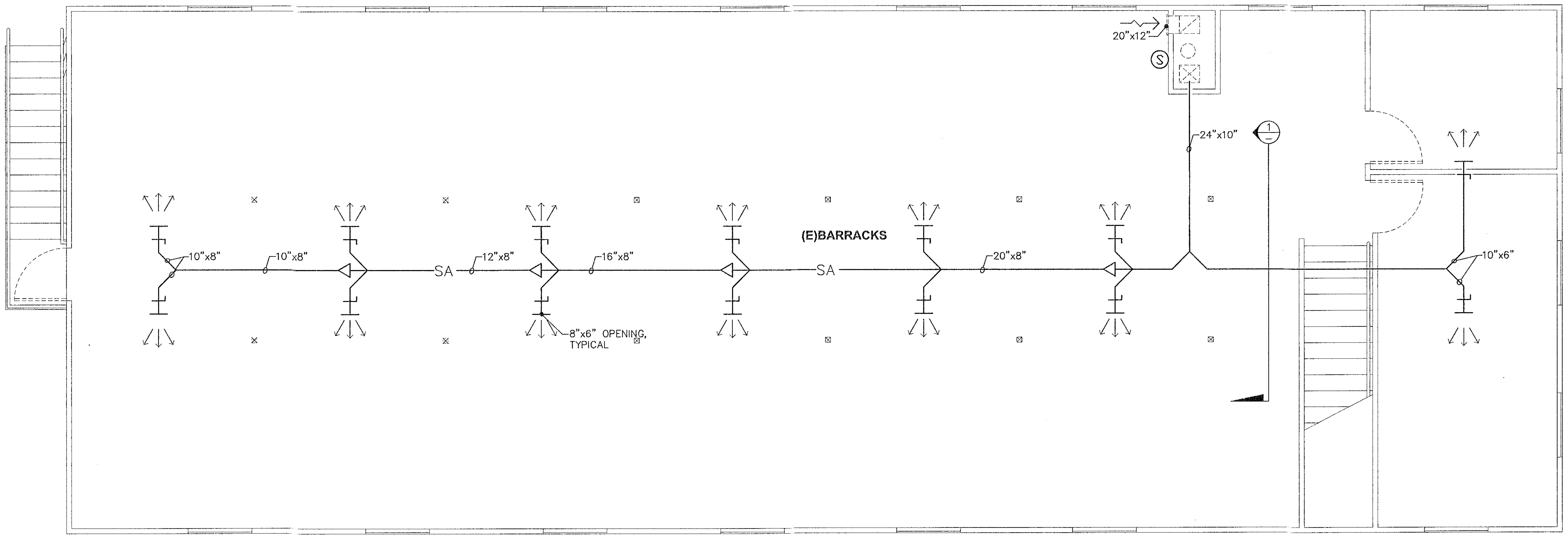
20"x12"
S
24"x10"
1
(E)BARRACKS
10"x8"
10"x8"
SA
12"x8"
16"x8"
SA
20"x8"
10"x6"
8"x6" OPENING, TYPICAL

2nd FLOOR MECHANICAL DEMOLITION PLAN

SCALE: 1/4"= 1'-0"

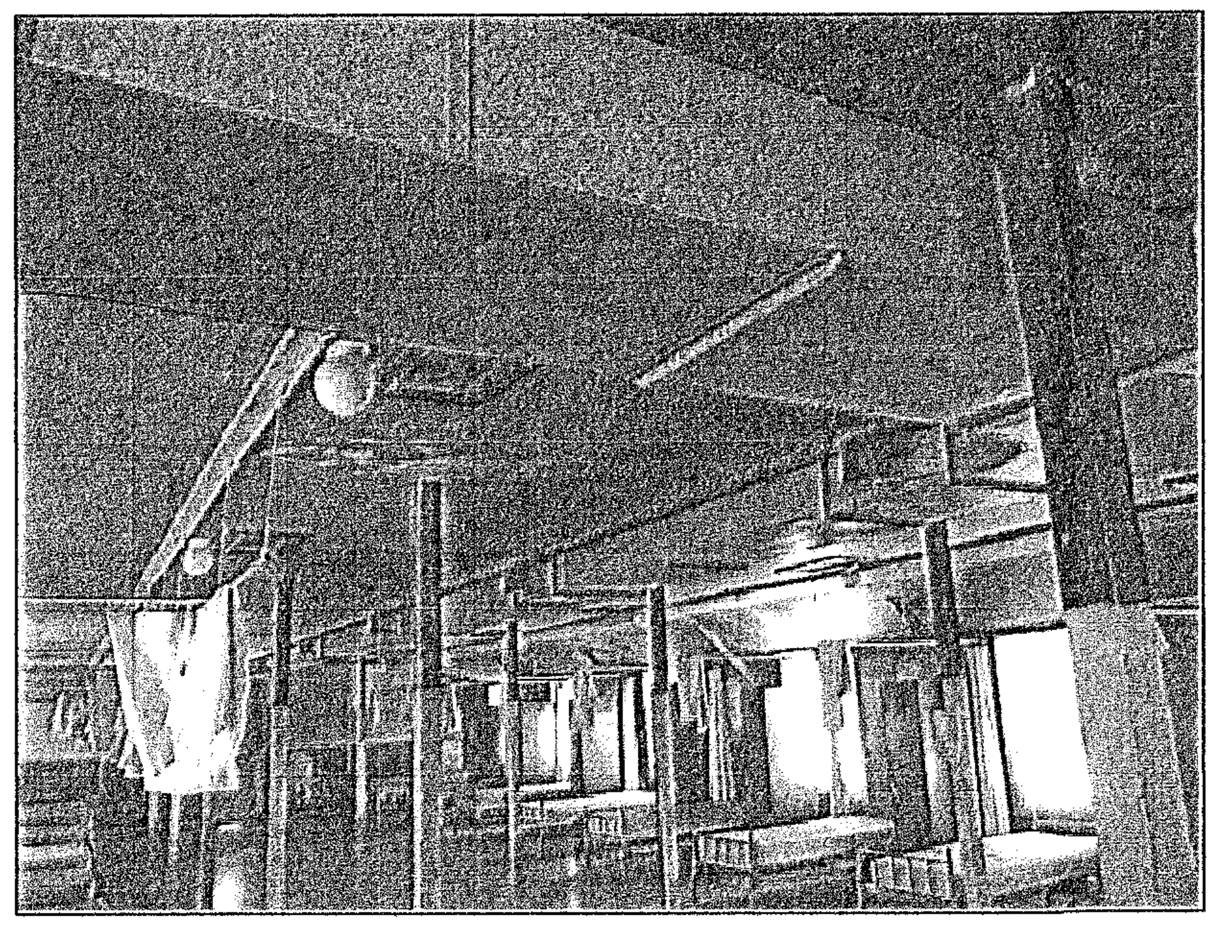

① TYPICAL DUCTING (2nd FLOOR)

SCALE: NONE

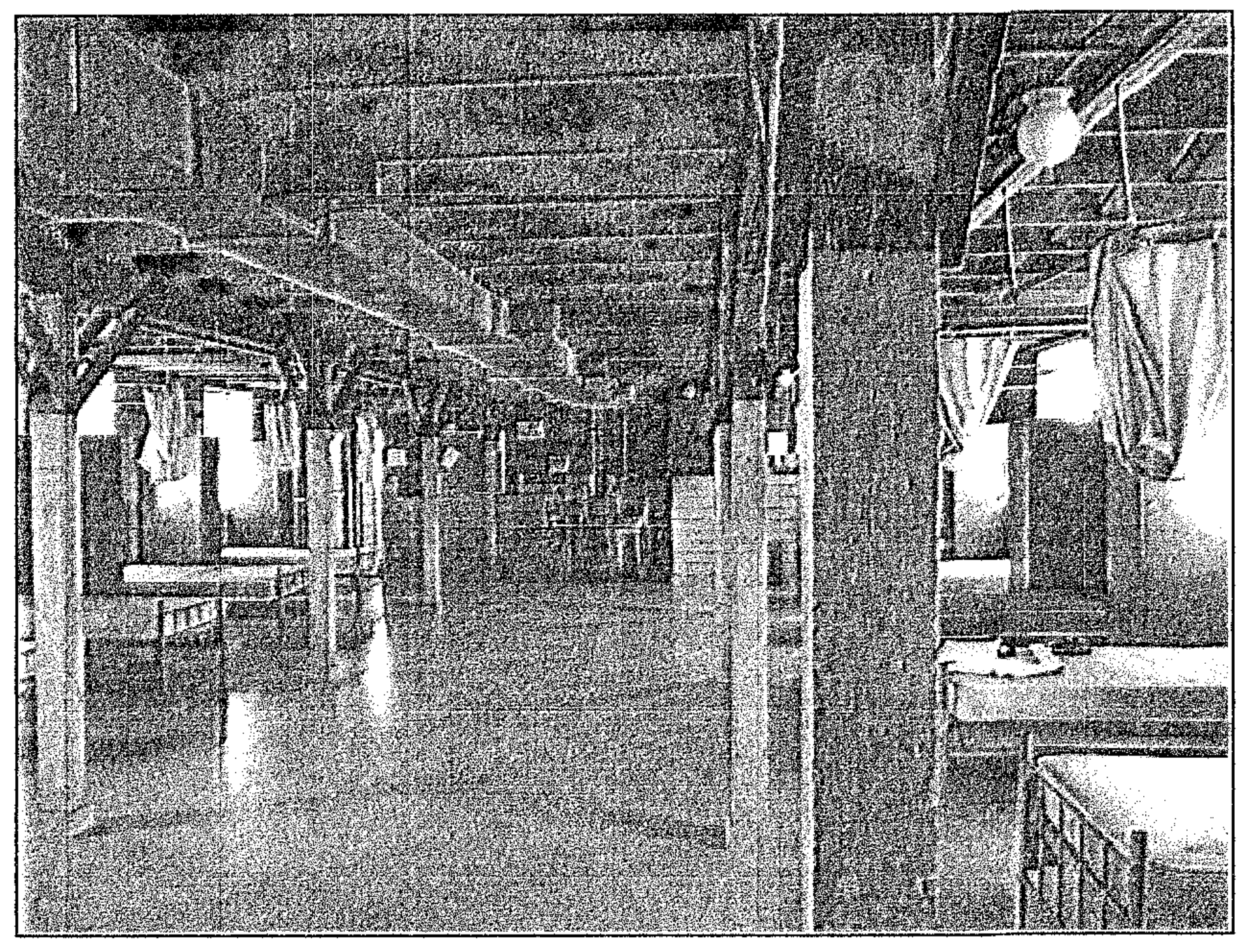

② TYPICAL DUCTING (1st FLOOR)

SCALE: NONE

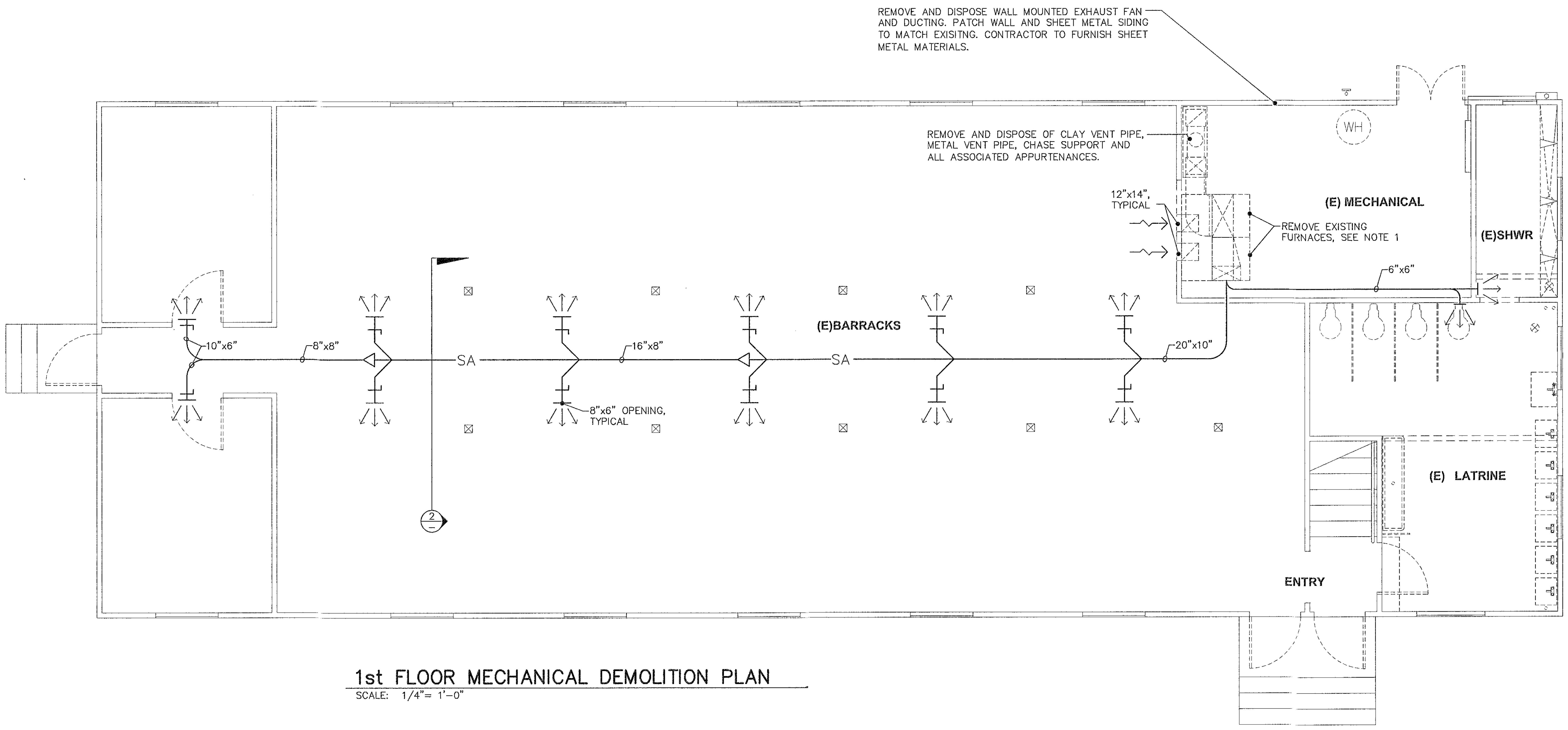
REMOVE AND DISPOSE WALL MOUNTED EXHAUST FAN AND DUCTING. PATCH WALL AND SHEET METAL SIDING TO MATCH EXISITNG. CONTRACTOR TO FURNISH SHEET METAL MATERIALS.
REMOVE AND DISPOSE OF CLAY VENT PIPE, METAL VENT PIPE, CHASE SUPPORT AND ALL ASSOCIATED APPURTENANCES.
WH
12"x14", TYPICAL
(E) MECHANICAL
REMOVE EXISTING FURNACES, SEE NOTE 1
(E)SHWR
6"x6"
(E)BARRACKS
10"x6"
8"x8"
SA
16"x8"
SA
20"x10"
8"x6" OPENING, TYPICAL
2
(E) LATRINE
ENTRY

1st FLOOR MECHANICAL DEMOLITION PLAN

SCALE: 1/4"= 1'-0"

MICHAEL S. SLAVENSKY 28530 Exp. 6/30/2019

REVISIONS	SYMBOL	DATE	REMARKS	BY:
	△	.		.
	△	.		.
	△	.		.
	△	.		.

DRAWN BY:	MS
DESIGNED BY:	MS
CHECKED BY:	NG
APPROVED BY:	NG

SHEET TITLE TYPICAL MECHANICAL DEMOLITION FLOOR PLANS

PROJECT CAMP ROBERTS – BARRACKS RENOVATION

PROJECT NUMBER: 06R1904-27

LOCATION CAMP ROBERTS, CALIFORNIA

STATE OF CALIFORNIA **MILITARY DEPARTMENT**

DATE: APR 11, 2019

SHEET NUMBER

M1

NOTES:

1. VERIFY EXISTING BUILDING DIMENSIONS AND LOCATION OF OBSTRUCTIONS BEFORE SIZING OR INSTALLATION OF EQUIPMENT OR DUCTING.
2. VERIFY ADEQUATE SUPPORT FOR DUCTING, SUBMIT FOR APPROVAL.
3. ROUTE DUCTING AS SHOWN, REROUTE TO AVOID ALL OBSTRUCTIONS. MOUNT ROOM DIFFUSERS FLUSH TO WALL.
4. ALL NEW RIGID DUCTING IS GALVANIZED, ALL FLEX-DUCT IS R6 MIN. RATED, ALL INTERIOR RIGID DUCTING SHALL HAVE INSULATION INSIDE THE DUCTING. FLEXIBLE DUCTING SHALL NOT EXCEED 10 FEET.
5. INSTALL UPSTAIRS RETURN GRILLE SUCH THAT TOP OF GRILLE IS 2" BELOW THE CEILING. IN ADDITION, INSTALL A PLENUM BOX BETWEEN ALL DUCTS AND GRILLES OR DIFFUSERS. SEE DETAIL 2 SHEET M3 FOR PLENUM BOX DETAIL.
6. ALL EXTERIOR AND ATTIC DUCT SHALL BE INSULATED.
7. CONTRACTOR SHALL BALANCE SYSTEM UPON COMPLETION.
8. PROVIDE AND INSTALL ACCESS DOORS TO ALL ABOVE CEILING DAMPERS.
9. INSTALL THERMOSTAT AND SENSORS TO CONTROL THE FIRST AND SECOND FLOOR TEMPERATURES SIMULTANEOUSLY USING DAMPERS ON THE SUPPLY DUCTS TO EACH FLOOR.
10. PROVIDE AND INSTALL COMBINATION FIRE/ SMOKE DAMPERS AT ALL DUCT PENETRATIONS OF THE MECHANICAL ROOM WALLS. PROVIDE AND INSTALL ALL ELECTRICAL REQUIRED TO CONNECT THE FIRE DAMPERS TO THE FIRE ALARM CONTROL PANEL AND THE AIR CONDITIONER TO ENSURE THAT THE AIR CONDITIONER WILL SHUT-OFF UPON ACTIVATION OF THE COMBINATION FIRE/ SMOKE DAMPER. SEE SHEET M3 FOR ADDITIONAL DETAILS.
11. MECHANICAL ROOM DOORS SHALL BE LOUVERED TO PROVIDE COMBUSTION AIR AND AND MAKE UP AIR FOR DRYERS.

SCHEDULE OF EQUIPMENT

AC-1	HIGH EFFICIENCY PACKAGED AIR CONDITIONER, 103,000 BTUH NOMINAL COOLING 93,000 BTUH SENSIBLE COOLING AT 105^ F AMBIENT, 80^ F DB, 67^ F WB, 150,000 BTUH INPUT HEATING, 3,400 CFM @ 0.6" S.P., NATURAL GAS, 12.6 EER MIN., HORIZONTAL DISCHARGE, SCROLL COMPRESSORS, MANUAL OUTSIDE AIR DAMPER, SET AT 400 CFM AND ECONOMIZER WITH DRY BULB SENSING, HINGED ACCESS PANEL WITH 2" PLEATED FILTERS, UNIT MOUNTED DISCONNECT, POWERED CONVENIENCE OUTLET AND RETURN AIR SMOKE DETECTOR. SHALL BE 208V-3PH-60 Hz. "TRANE", YHC 102 E3 OR APPROVED EQUAL. SHALL INCLUDE CONDENSER HAIL GUARD.
SG-1	SUPPLY GRILLE, WALL TYPE, DOUBLE DEFLECTION 3/4" BLADE SPACING STEEL CONSTRUCTION, ADJUSTABLE HORIZONTAL FRONT BLADES AND WHITE FINISH. SHALL BE "HART AND COOLEY", MODEL 831, OR APPROVED EQUAL.
SG-2	CEILING SUPPLY DIFFUSER, 4-WAY, EXTRUDED ALUMINUM BRIGHT WHITE FINISH, STEP DOWN BEVELED MARGIN, OPPOSED BLADE DAMPER, MODULAR CORE. SHALL BE HART AND COOLEY, MODEL MCDSD OR APPROVED EQUAL.
BD-1	BALANCE DAMPER, MANUAL TYPE, SINGLE BLADE, HEAVY DUTY GALVANIZED METAL FOR RECTANGULAR DUCTS, DAMPER SHALL HAVE LOCKING QUADRANT. SHALL BE "DAYTON", OR APPROVED EQUAL.
RG-1	RETURN GRILLE, WALL TYPE, BLADES PARALLEL TO LONG DIMENSION, 1/2" SPACING, 45 DEG. DEFLECTION, NON-FILTER, STEEL CONSTRUCTION, SHALL BE HART AND COOLEY, MODEL RG-1 OR APPROVED EQUAL.
T -	THERMOSTAT SHALL BE 7- DAY PROGRAMMABLE WITH AUTO CHANGEOVER, CONTROL TO, OR MONITOR A SECOND REMOTE SENSOR, CAN AVERAGE UP TO 8 WIRED OR WIRELESS REMOTE SENSORS, DISPLAY BOTH HEATING AND COOLING SET POINTS AND ROOM TEMPERATURE SIMULTANEOUSLY, SERVICE FILTER AND SERVICE LAMP INDICATORS, BACKLIT DISPLAY AND KEYS. PROVIDE AND INSTALL THERMOSTAT IN A RECESSED WALL BOX WITH LOCKING COVER. SHALL BE VENSTAR, MODEL T2900, TRANE OR APPROVED EQUAL.
EF-1	THROUGH WALL EXHAUST FAN, 180 CFM @ 0.0" S.P., SHALL FIT WALL WIDTH FROM 4-1/2" TO 9-1/2" THICK, POLYMERIC FAN BLADE, BUILT-IN BACKDRAFT DAMPER. SHALL BE BROAN, MODEL 509 OR APPROVED EQUAL. FAN SHALL BE CONTROLLED BY A 1-HOUR SPRING WOUND TIMER SWITCH. SHALL BE INTERMATIC OR APPROVED EQUAL.
EF-2	THROUGH WALL EXHAUST FAN, 270 CFM @ 0.0" S.P., SHALL FIT WALL WIDTH FROM 4-1/2" TO 9-1/2" THICK, POLYMERIC FAN BLADE, BUILT-IN BACKDRAFT DAMPER. SHALL BE BROAN, MODEL 508 OR APPROVED EQUAL. FAN SHALL BE CONTROLLED BY A 1-HOUR SPRING WOUND TIMER SWITCH. SHALL BE INTERMATIC OR APPROVED EQUAL.

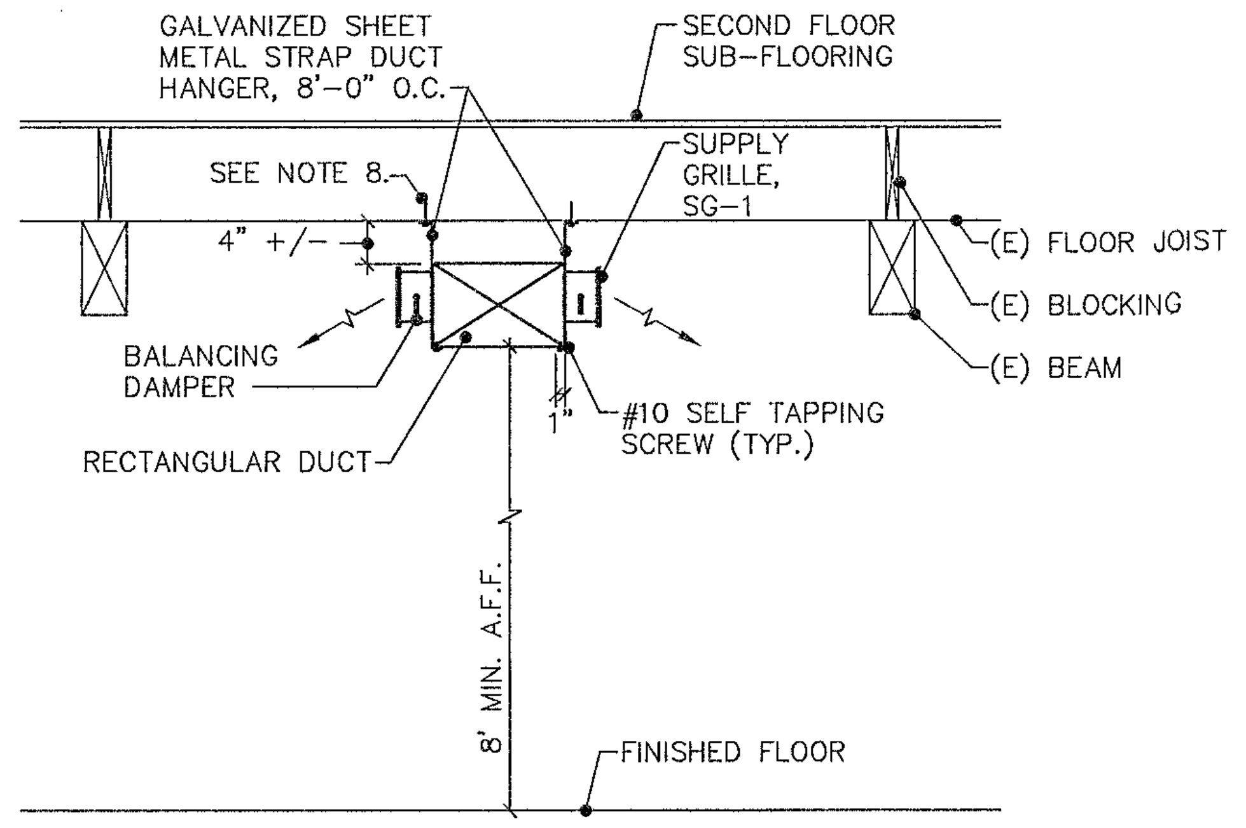
GALVANIZED SHEET METAL STRAP DUCT HANGER, 8'-0" O.C.
SECOND FLOOR SUB-FLOORING
SEE NOTE 8.
SUPPLY GRILLE, SG-1
4" +/-
(E) FLOOR JOIST
(E) BLOCKING
(E) BEAM
BALANCING DAMPER
RECTANGULAR DUCT
1"
#10 SELF TAPPING SCREW (TYP.)
8' MIN. A.F.F.
FINISHED FLOOR

FIRST FLOOR DUCT DETAIL "A"

NOT TO SCALE:

NOTES:

1. INSTALL 4" FROM CEILING AT FIRST FLOOR.
2. ADDITIONAL BRACING MAY BE REQUIRED PER SMACNA
3. STRAP DUCT HANGER SHALL BE 1" x 16 GA., PAIRED STRAPS.

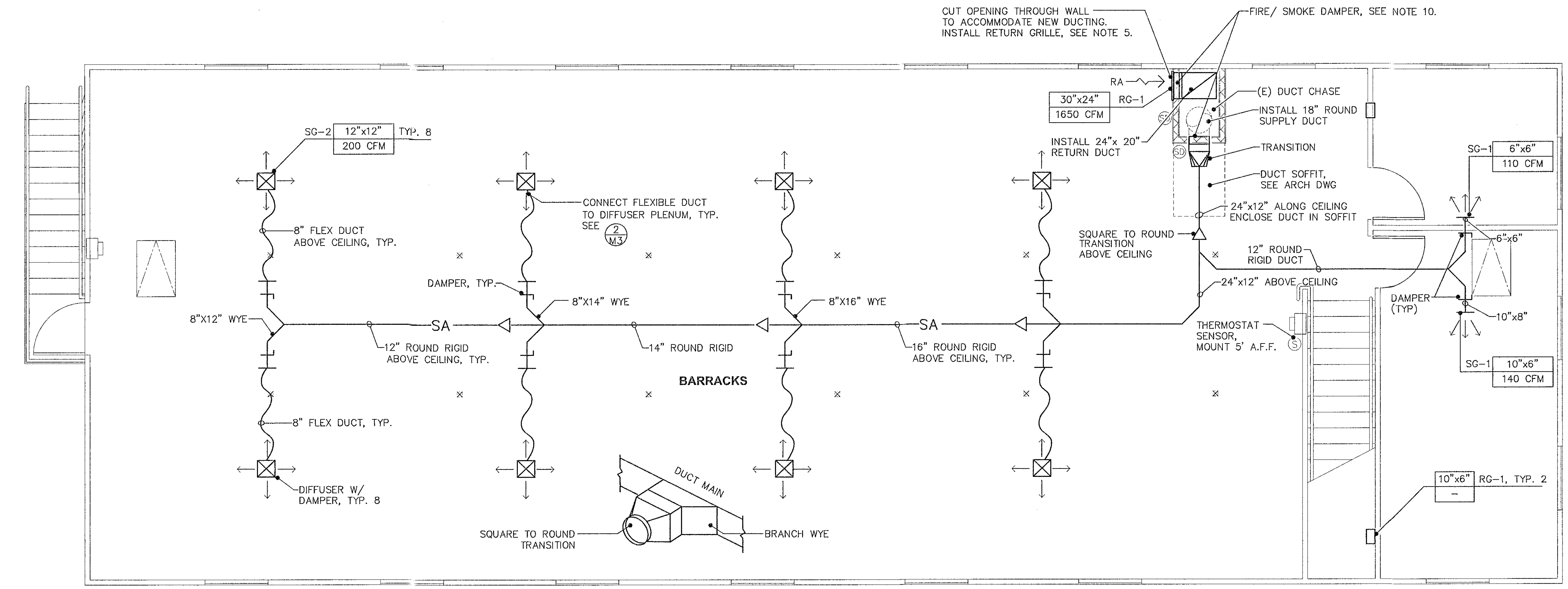
CUT OPENING THROUGH WALL TO ACCOMMODATE NEW DUCTING. INSTALL RETURN GRILLE, SEE NOTE 5.
FIRE/ SMOKE DAMPER, SEE NOTE 10.
RA
30"x24" 1650 CFM RG-1
(E) DUCT CHASE
INSTALL 18" ROUND SUPPLY DUCT
INSTALL 24"x 20" RETURN DUCT
TRANSITION
DUCT SOFFIT, SEE ARCH DWG
24"x12" ALONG CEILING ENCLOSE DUCT IN SOFFIT
SQUARE TO ROUND TRANSITION ABOVE CEILING
12" ROUND RIGID DUCT
24"x12" ABOVE CEILING
SG-1 6"x6" 110 CFM
6"x6"
DAMPER (TYP)
10"x8"
SG-1 10"x6" 140 CFM
THERMOSTAT SENSOR, MOUNT 5' A.F.F.
10"x6" – RG-1, TYP. 2
SG-2 12"x12" 200 CFM TYP. 8
8" FLEX DUCT ABOVE CEILING, TYP.
CONNECT FLEXIBLE DUCT TO DIFFUSER PLENUM, TYP. SEE 2/M3
DAMPER, TYP.
8"X14" WYE
8"X16" WYE
8"X12" WYE
SA
12" ROUND RIGID ABOVE CEILING, TYP.
14" ROUND RIGID
16" ROUND RIGID ABOVE CEILING, TYP.
BARRACKS
8" FLEX DUCT, TYP.
DIFFUSER W/ DAMPER, TYP. 8
DUCT MAIN
SQUARE TO ROUND TRANSITION
BRANCH WYE

SECOND FLOOR MECHANICAL PLAN (ZONE2)

SCALE: 1/4"= 1'-0"

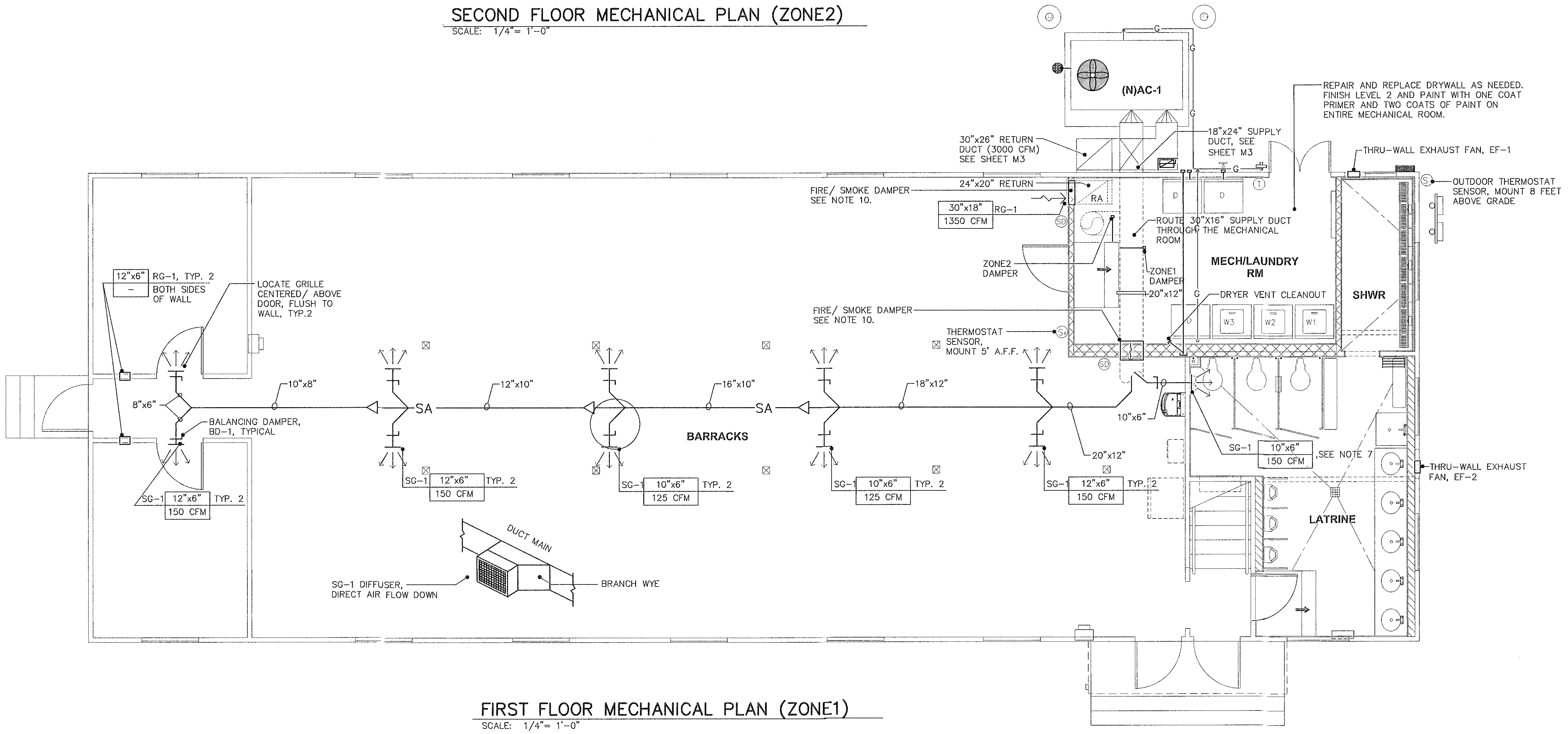
(N)AC-1
G
30"x26" RETURN DUCT (3000 CFM) SEE SHEET M3
18"x24" SUPPLY DUCT, SEE SHEET M3
REPAIR AND REPLACE DRYWALL AS NEEDED. FINISH LEVEL 2 AND PAINT WITH ONE COAT PRIMER AND TWO COATS OF PAINT ON ENTIRE MECHANICAL ROOM.
THRU-WALL EXHAUST FAN, EF-1
OUTDOOR THERMOSTAT SENSOR, MOUNT 8 FEET ABOVE GRADE
24"x20" RETURN
FIRE/ SMOKE DAMPER SEE NOTE 10.
30"x18" 1350 CFM RG-1
RA
ROUTE 30"X16" SUPPLY DUCT THROUGH THE MECHANICAL ROOM
ZONE2 DAMPER
ZONE1 DAMPER
20"x12"
MECH/LAUNDRY RM
SHWR
DRYER VENT CLEANOUT
D
W3
W2
W1
THERMOSTAT SENSOR, MOUNT 5' A.F.F.
12"x6" – RG-1, TYP. 2 BOTH SIDES OF WALL
LOCATE GRILLE CENTERED/ ABOVE DOOR, FLUSH TO WALL, TYP.2
8"x6"
BALANCING DAMPER, BD-1, TYPICAL
10"x8"
12"x10"
16"x10"
18"x12"
SA
BARRACKS
10"x6"
20"x12"
SG-1 12"x6" 150 CFM TYP. 2
SG-1 10"x6" 125 CFM TYP. 2
SG-1 10"x6" 150 CFM, SEE NOTE 7
THRU-WALL EXHAUST FAN, EF-2
LATRINE
DUCT MAIN
SG-1 DIFFUSER, DIRECT AIR FLOW DOWN
BRANCH WYE

FIRST FLOOR MECHANICAL PLAN (ZONE1)

SCALE: 1/4"= 1'-0"

MICHAEL S. SLAVENSKY
Exp. 6/30/2019

REVISIONS	SYMBOL	DATE	REMARKS	BY:
	△	.	.	.
	△	.	.	.
	△	.	.	.
	△	.	.	.

DRAWN BY:		MS
DESIGNED BY:		MS
CHECKED BY:		NG
APPROVED BY:		NG

SHEET TITLE TYPICAL MECHANICAL MODIFIED FLOOR PLANS

PROJECT CAMP ROBERTS – BARRACKS RENOVATION

PROJECT NUMBER: 06R1904-27

LOCATION CAMP ROBERTS, CALIFORNIA

STATE OF CALIFORNIA MILITARY DEPARTMENT

DATE: APR 29, 2019

SHEET NUMBER

M2

10 OF 19

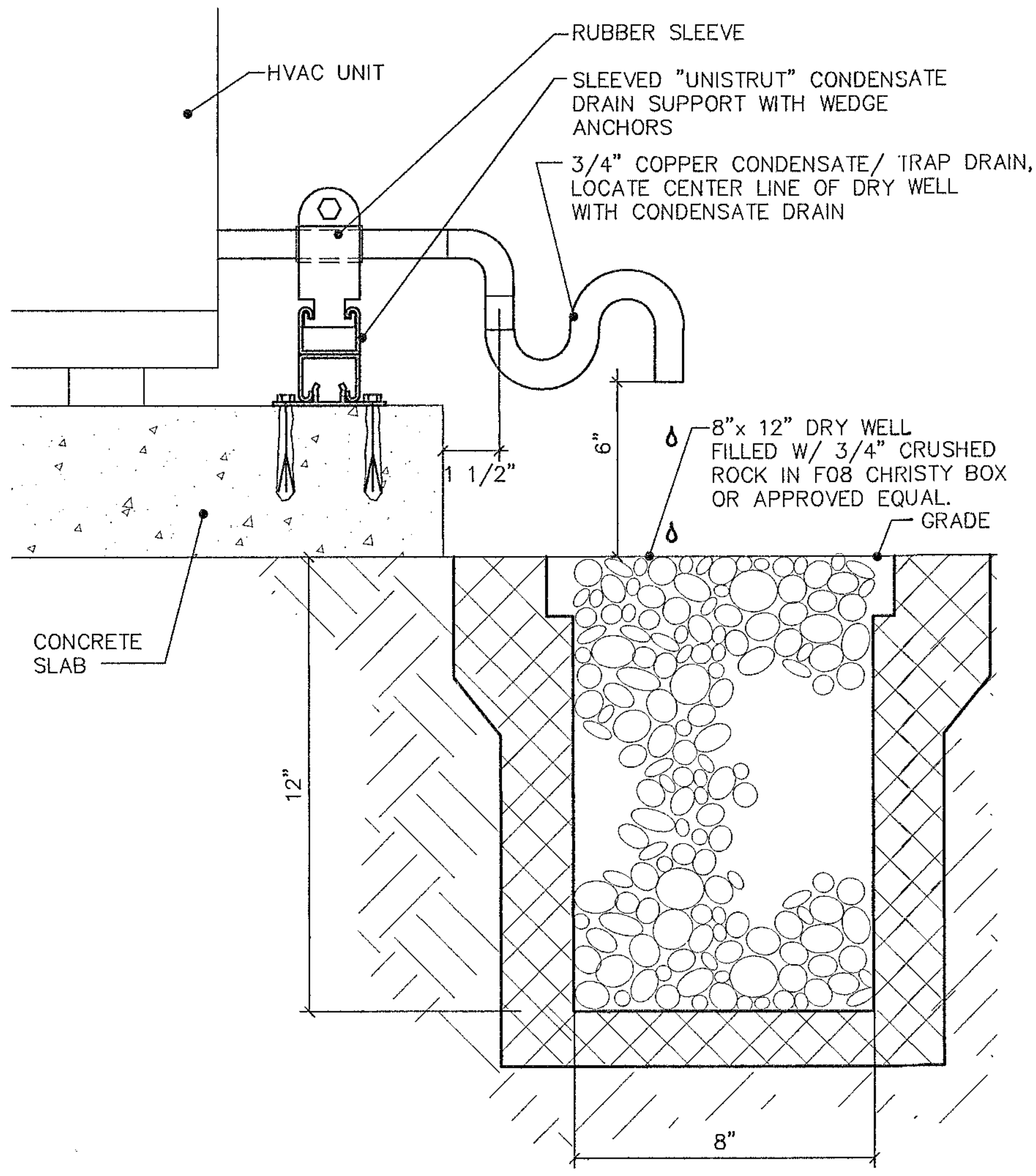
HVAC UNIT
RUBBER SLEEVE
SLEEVED "UNISTRUT" CONDENSATE DRAIN SUPPORT WITH WEDGE ANCHORS
3/4" COPPER CONDENSATE/ TRAP DRAIN, LOCATE CENTER LINE OF DRY WELL WITH CONDENSATE DRAIN
8"x 12" DRY WELL FILLED W/ 3/4" CRUSHED ROCK IN F08 CHRISTY BOX OR APPROVED EQUAL.
GRADE
CONCRETE SLAB
1 1/2"
6"
12"
8"

5 DRY WELL DETAIL
SCALE: 3"= 1'–0"

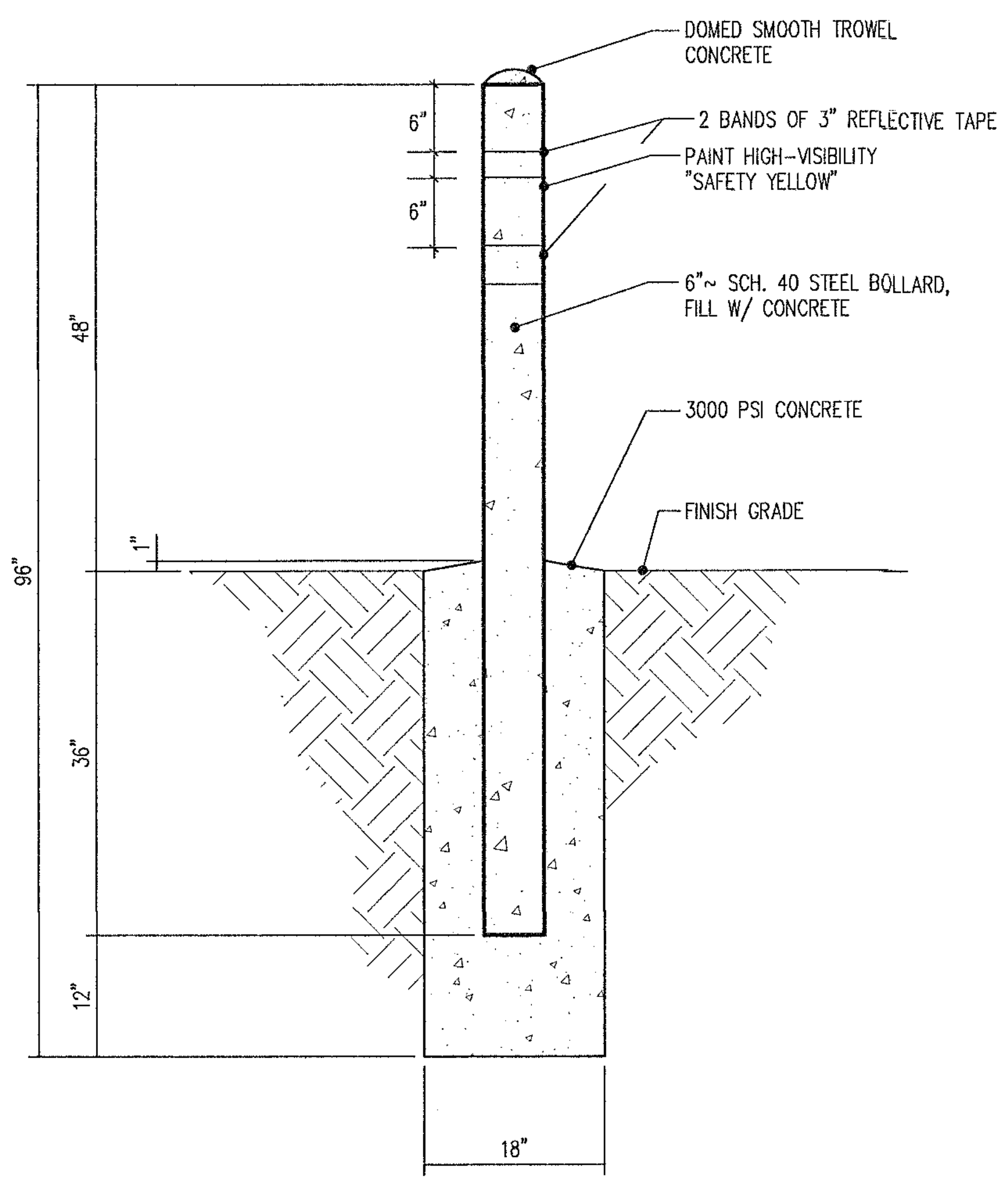
DOMED SMOOTH TROWEL CONCRETE
2 BANDS OF 3" REFLECTIVE TAPE
PAINT HIGH–VISIBILITY "SAFETY YELLOW"
6"~ SCH. 40 STEEL BOLLARD, FILL W/ CONCRETE
3000 PSI CONCRETE
FINISH GRADE
6"
6"
48"
96"
1"
36"
12"
18"

3 BOLLARD DETAIL
SCALE: 3/4"= 1'–0"

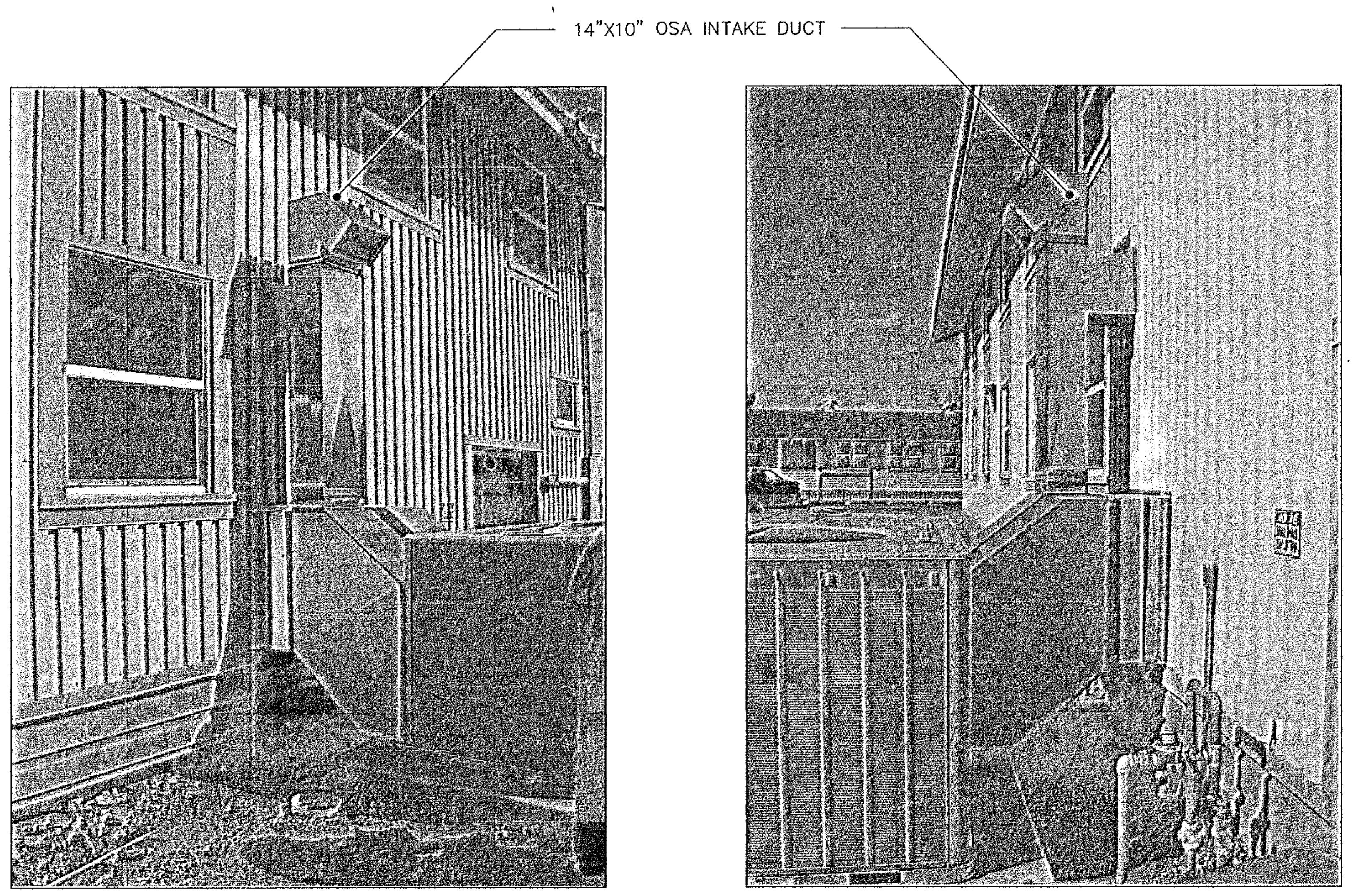
14"X10" OSA INTAKE DUCT

OUTSIDE AIR INTAKE

OUTSIDE AIR INTAKE

4 DUCTING DETAILS
SCALE: NONE

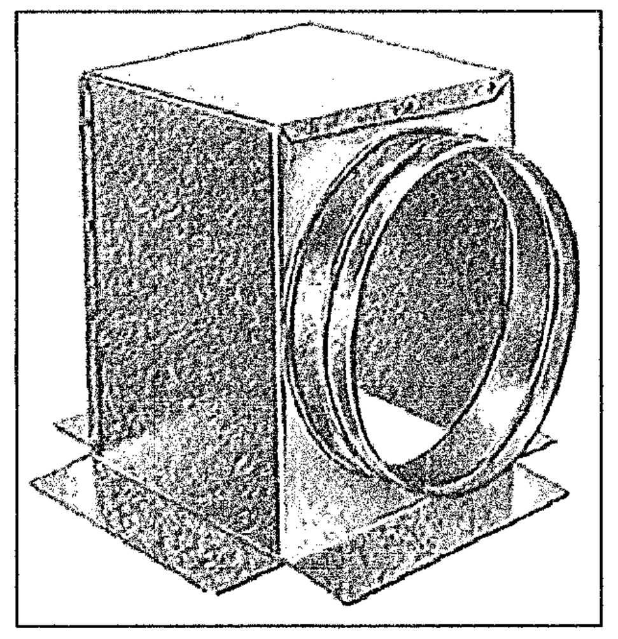

2 SECOND FLOOR DIFFUSER PLENUM
NO SCALE

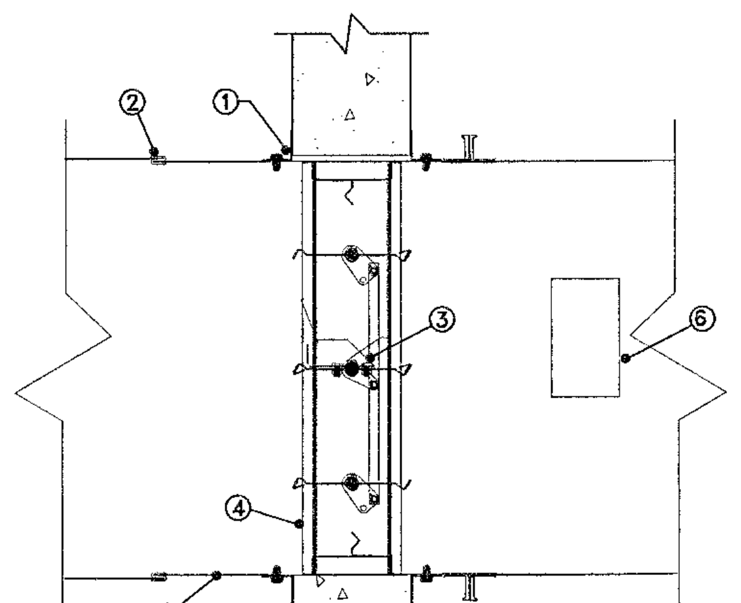

4 FIRE/ SMOKE DAMPER
NO SCALE

FIRE DAMPER NOTES:

1. 1–1/2" x 1–1/2" GA. RETAINING ANGLE ALL SIDES.
2. SLEEVE OR DUCT CONNECTION.
3. RESETABLE LINK.
4. COMBINATION FIRE SMOKE DAMPER.
5. DAMPER SLEEVE.
6. DAMPER ACTUATOR

THERMOSTAT_CONTROL_DESCRIPTION

THE THERMOSTAT SHALL CONTROL BOTH THE SECOND FLOOR, (ZONE 2) AND FIRST FLOOR, (ZONE 1) USING DAMPERS ON THE SUPPLY AIR DUCTING AND SENSORS LOCATED IN EACH ZONE. THE TOTAL AIR FLOW TO EACH ZONE SHALL TOTAL 100 PERCENT OF AIR SUPPLY CFM, IN ADDITION, THE AIR FLOW TO EACH ZONE SHALL NOT EXCEED 20 PERCENT OF DESIGN AIRFLOW.

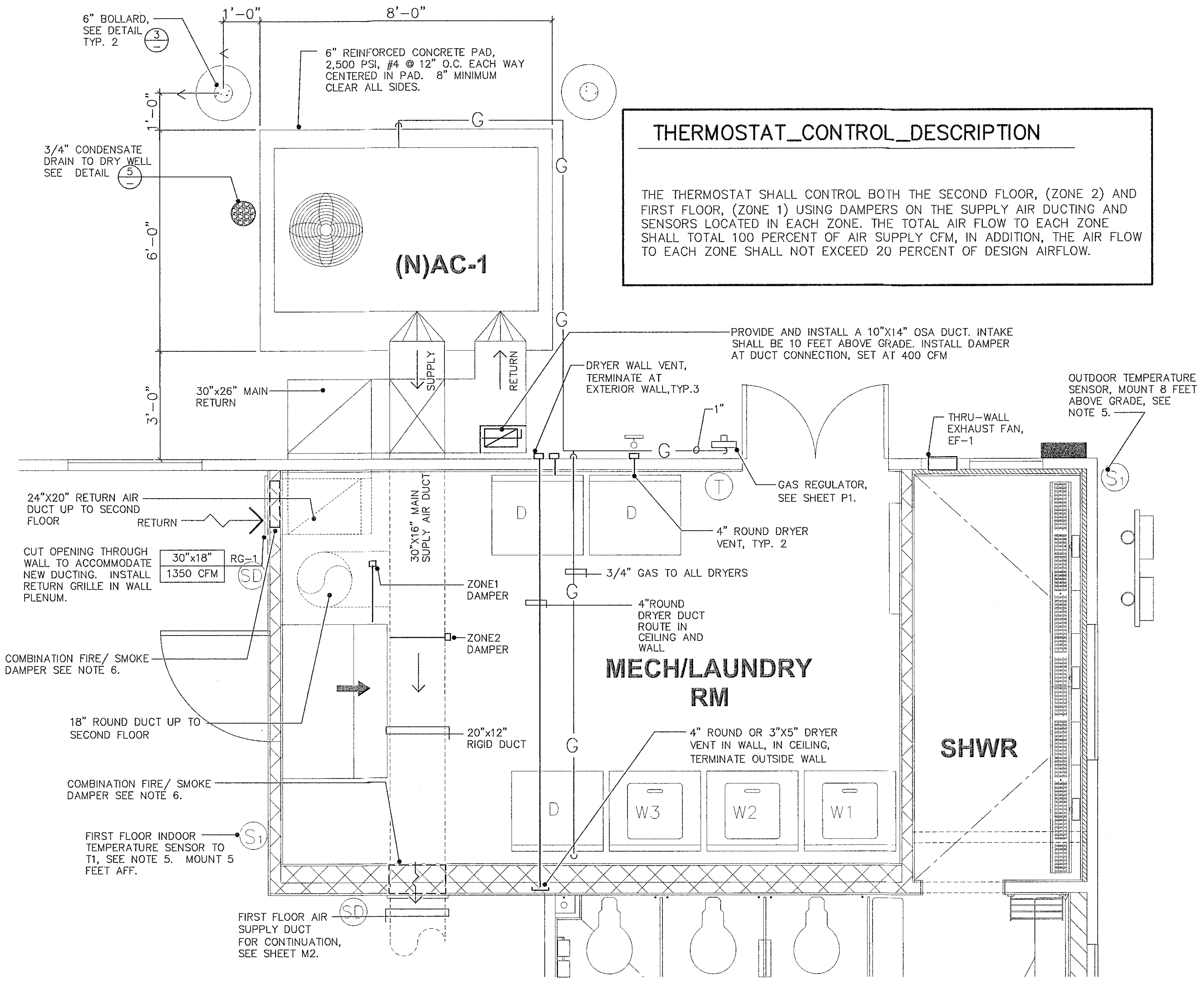
6" BOLLARD, SEE DETAIL 3 TYP. 2
1'–0"
8'–0"
6" REINFORCED CONCRETE PAD, 2,500 PSI, #4 @ 12" O.C. EACH WAY CENTERED IN PAD. 8" MINIMUM CLEAR ALL SIDES.
1'–0"
3/4" CONDENSATE DRAIN TO DRY WELL SEE DETAIL 5
6'–0"
(N)AC-1
G
SUPPLY
RETURN
3'–0"
30"x26" MAIN RETURN
PROVIDE AND INSTALL A 10"X14" OSA DUCT. INTAKE SHALL BE 10 FEET ABOVE GRADE. INSTALL DAMPER AT DUCT CONNECTION, SET AT 400 CFM
DRYER WALL VENT, TERMINATE AT EXTERIOR WALL,TYP.3
1"
OUTDOOR TEMPERATURE SENSOR, MOUNT 8 FEET ABOVE GRADE, SEE NOTE 5.
THRU–WALL EXHAUST FAN, EF–1
24"X20" RETURN AIR DUCT UP TO SECOND FLOOR
RETURN
30"X16" MAIN SUPLY AIR DUCT
GAS REGULATOR, SEE SHEET P1.
T
D
D
4" ROUND DRYER VENT, TYP. 2
CUT OPENING THROUGH WALL TO ACCOMMODATE NEW DUCTING. INSTALL RETURN GRILLE IN WALL PLENUM.
30"x18"
1350 CFM
RG–1
SD
ZONE1 DAMPER
3/4" GAS TO ALL DRYERS
4"ROUND DRYER DUCT ROUTE IN CEILING AND WALL
ZONE2 DAMPER
COMBINATION FIRE/ SMOKE DAMPER SEE NOTE 6.
MECH/LAUNDRY RM
18" ROUND DUCT UP TO SECOND FLOOR
20"x12" RIGID DUCT
4" ROUND OR 3"X5" DRYER VENT IN WALL, IN CEILING, TERMINATE OUTSIDE WALL
SHWR
COMBINATION FIRE/ SMOKE DAMPER SEE NOTE 6.
D
W3
W2
W1
FIRST FLOOR INDOOR TEMPERATURE SENSOR TO T1, SEE NOTE 5. MOUNT 5 FEET AFF.
S_1
FIRST FLOOR AIR SUPPLY DUCT FOR CONTINUATION, SEE SHEET M2.
SD

1 (N) MECHANICAL ROOM LAYOUT
SCALE: 1/2"= 1'–0"

NOTES:

1. REMOVE ALL EXISTING DUCT WORK AND DISPOSE, AS DIRECTED BY COR.
2. REMOVE EXISTING THERMOSTATS, WIRING AND DISPOSE, AS DIRECTED BY COR.
3. FIELD VERIFY EXISTING CONDITIONS AND DIMENSIONS BEFORE STARTING WORK, ORDERING OR FABRICATING MATERIALS.
4. SEISMIC GAS SHUT–OFF VALVE SHALL BE HORIZONTAL TYPE AND RE–SETTABLE. SHALL BE CALIFORNIA SEISMIC SHUT–OFF VALVE, MODEL 302 OR APPROVED EQUAL. ENSURE GAS DIRT LEG IS INSTALL PRIOR TO HVAC UNIT.
5. INDOOR SENSORS ARE TO BE LOCATED AS SHOWN, 5 FEET AFF. OUTDOOR SENSOR SHALL BE LOCATED AS SHOWN, 8 FEET ABOVE GRADE. SENSORS ARE INCLUDED AS PART OF THE THERMOSTAT.
6. PROVIDE AND INSTALL COMBINATION FIRE/ SMOKE DAMPERS AT ALL DUCT PENETRATIONS OF THE FIRE RATED WALLS, SHALL INCLUDE ALL ELECTRICAL, DAMPER ACCESS AND ACCESS DOORS, ACTUATORS, SMOKE SENSORS AND CONNECTION TO FIRE CONTROL PANEL AND ALL ASSOCIATED APPURTENANCES REQUIRED FOR A FULLY OPERATIONAL SYSTEM. UPON ACTIVATION THE AC–1 SHALL SHUT–OFF COMPLETELY. SHALL MEET ALL NFPA CODE REQUIREMENTS.
7. DUCT FIRE DAMPER SHALL BE A FIRE/SMOKE DAMPER, 1.5–HOUR RATING, TRIPLE–V BLADE, 16 GA. GALVANIZED STEEL, CLOSURE TEMPERATURE 165 F, RRL CLOSURE DEVICE, STEEL BLADES. SHALL HAVE UL 555 FIRE RESISTANCE RATING AND SHALL MEET THE REQUIREMENTS OF THE CSFM. SHALL INCLUDE MANUALLY RESETTABLE FIRE CLOSURE DEVICE, 120VAC CIRCUIT. SHALL BE POTTORFF, MODEL FSD–172 OR APPROVED EQUAL. PROVIDE AND INSTALL ACCESS OPENING IN DUCT AND WALL AS REQUIRED TO PROVIDE ACCESS TO MANUALLY RESET DAMPER.

MICHAEL SLAVENSKY
28530

REVISIONS	SYMBOL	DATE	REMARKS	BY:
	△	.	.	.
	△	.	.	.
	△	.	.	.
	△	.	.	.

DRAWN BY: MS
DESIGNED BY: MS
CHECKED BY: NG
APPROVED BY: NG

SHEET TITLE TYPICAL MECHANICAL ROOM LAYOUT AND DETAILS
PROJECT CAMP ROBERTS – BARRACKS RENOVATION
PROJECT NUMBER: 06R1904–27
LOCATION CAMP ROBERTS, CALIFORNIA
DATE: APR 11, 2019
STATE OF CALIFORNIA MILITARY DEPARTMENT

SHEET NUMBER
M3

11 OF 19

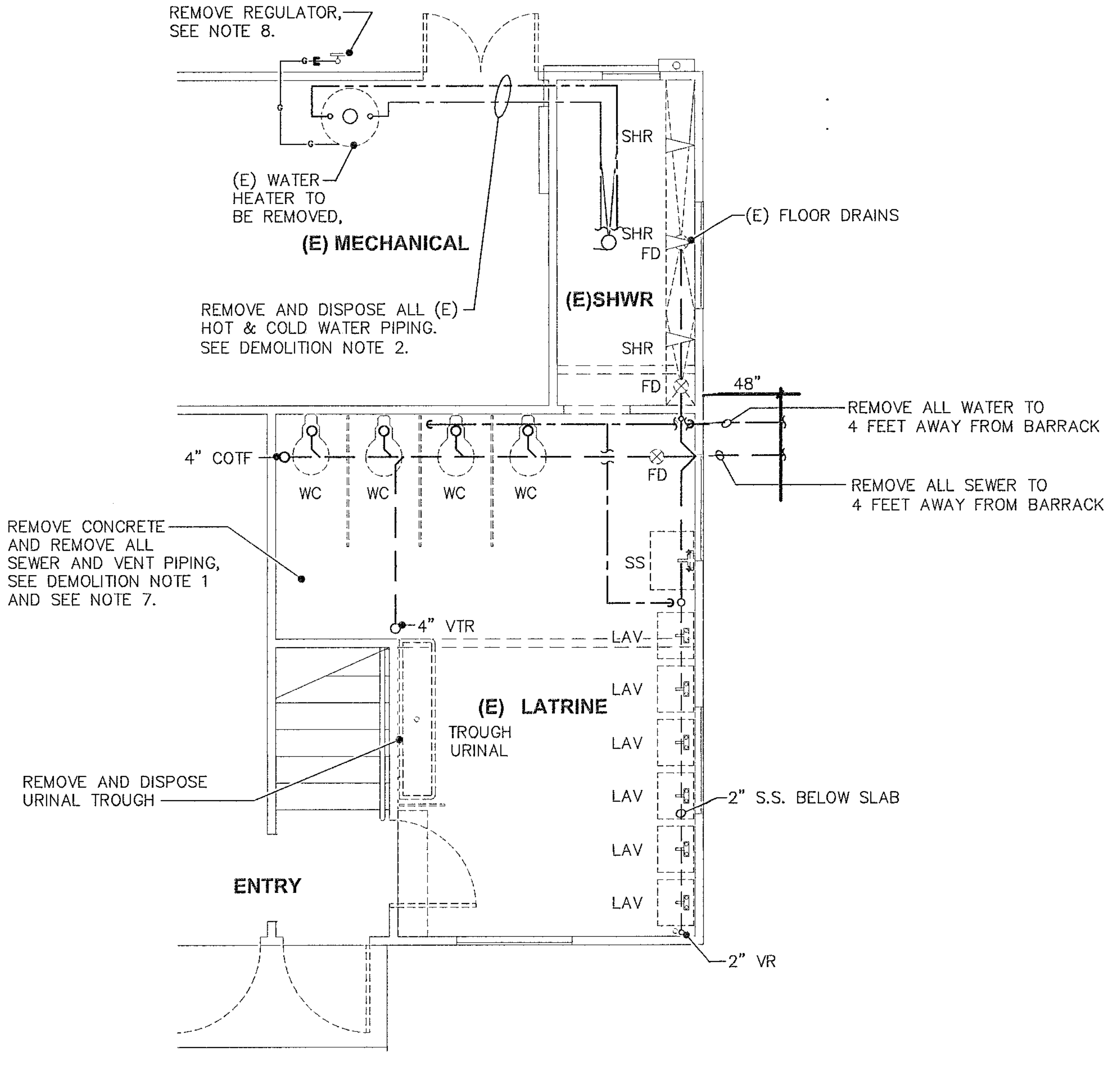
REMOVE REGULATOR, SEE NOTE 8.
(E) WATER HEATER TO BE REMOVED.
(E) MECHANICAL
REMOVE AND DISPOSE ALL (E) HOT & COLD WATER PIPING. SEE DEMOLITION NOTE 2.
SHR
SHR
FD
(E)SHWR
SHR
FD
(E) FLOOR DRAINS
48"
REMOVE ALL WATER TO 4 FEET AWAY FROM BARRACK
REMOVE ALL SEWER TO 4 FEET AWAY FROM BARRACK
4" COTF
WC
WC
WC
WC
FD
REMOVE CONCRETE AND REMOVE ALL SEWER AND VENT PIPING, SEE DEMOLITION NOTE 1 AND SEE NOTE 7.
SS
4" VTR
LAV
(E) LATRINE
TROUGH URINAL
LAV
LAV
LAV
LAV
LAV
REMOVE AND DISPOSE URINAL TROUGH
2" S.S. BELOW SLAB
ENTRY
2" VR

① (E) LATRINE DEMOLITION PLAN
SCALE: 1/4"= 1'-0"

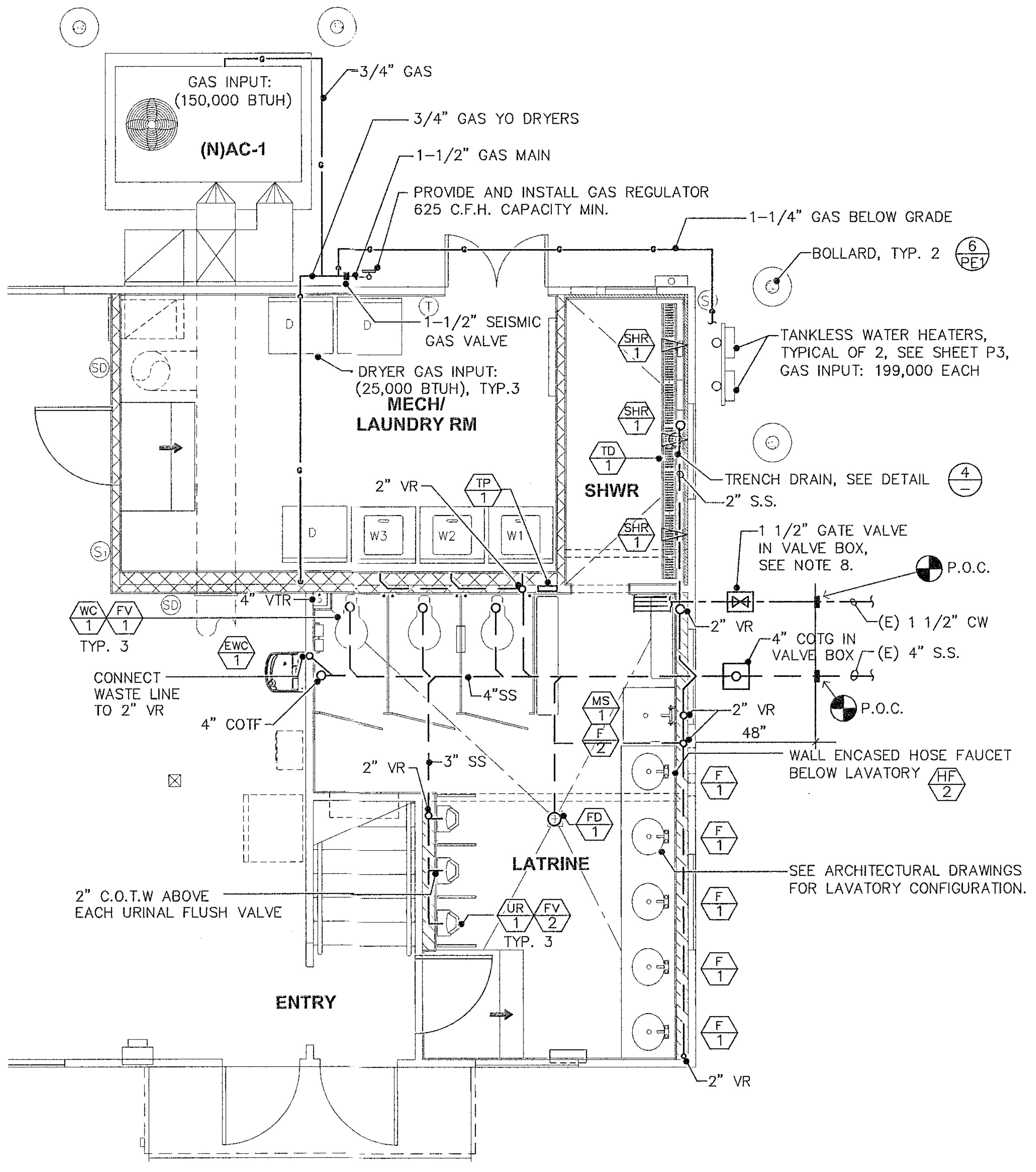
GAS INPUT: (150,000 BTUH)
(N)AC-1
3/4" GAS
3/4" GAS YO DRYERS
1-1/2" GAS MAIN
PROVIDE AND INSTALL GAS REGULATOR 625 C.F.H. CAPACITY MIN.
1-1/4" GAS BELOW GRADE
BOLLARD, TYP. 2 6/PET
T
1-1/2" SEISMIC GAS VALVE
D
D
SD
DRYER GAS INPUT: (25,000 BTUH), TYP.3
MECH/ LAUNDRY RM
TANKLESS WATER HEATERS, TYPICAL OF 2, SEE SHEET P3, GAS INPUT: 199,000 EACH
SHR 1
SHR 1
TD 1
SHWR
SHR 1
2" VR
TP 1
D
W3
W2
W1
TRENCH DRAIN, SEE DETAIL 4/-
2" S.S.
1 1/2" GATE VALVE IN VALVE BOX, SEE NOTE 8.
P.O.C.
(E) 1 1/2" CW
4" VTR
WC 1
FV 1
TYP. 3
SD
EWC 1
CONNECT WASTE LINE TO 2" VR
4" COTF
4"SS
2" VR
4" COTG IN VALVE BOX
(E) 4" S.S.
P.O.C.
MS 1
F 2
2" VR
48"
WALL ENCASED HOSE FAUCET BELOW LAVATORY HF 2
2" VR
3" SS
F 1
F 1
FD 1
LATRINE
SEE ARCHITECTURAL DRAWINGS FOR LAVATORY CONFIGURATION.
F 1
2" C.O.T.W ABOVE EACH URINAL FLUSH VALVE
UR 1
FV 2
TYP. 3
F 1
F 1
ENTRY
2" VR

② PLUMBING PLAN (1st FLOOR)
SCALE: 1/4"= 1'-0"

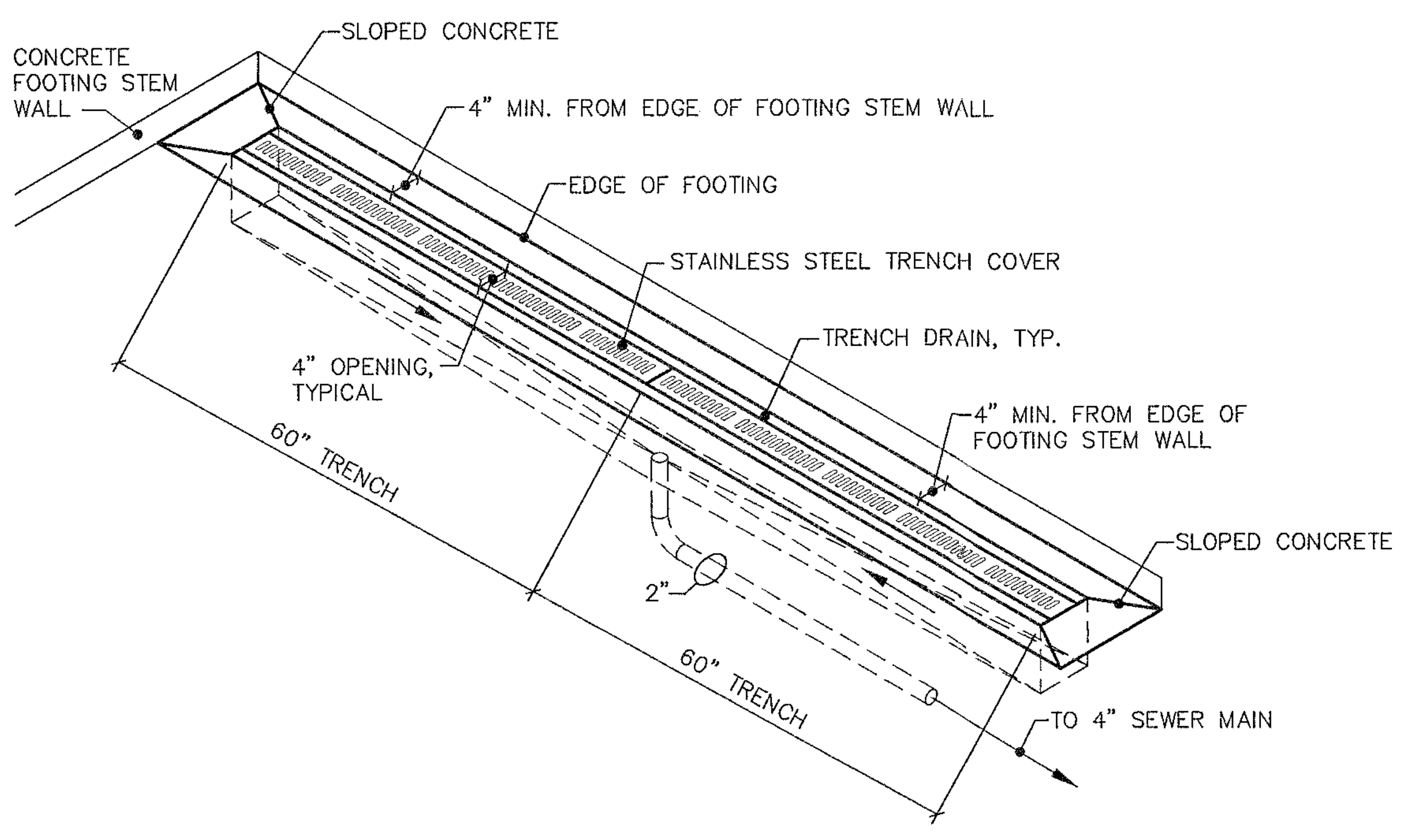
CONCRETE FOOTING STEM WALL
SLOPED CONCRETE
4" MIN. FROM EDGE OF FOOTING STEM WALL
EDGE OF FOOTING
STAINLESS STEEL TRENCH COVER
TRENCH DRAIN, TYP.
4" OPENING, TYPICAL
60" TRENCH
4" MIN. FROM EDGE OF FOOTING STEM WALL
SLOPED CONCRETE
2"
60" TRENCH
TO 4" SEWER MAIN

④ TRENCH DRAIN DETAIL
SCALE: NONE

7. ROUTE WATER LINE FROM TRAP PRIMER TO FLOOR DRAIN(S) AND TRENCH DRAIN TRAPS.

DEMOLITION NOTES:

1. REMOVE AND DISPOSE OF ALL PLUMBING FIXTURES INCLUDING FLOOR DRAINS, CLEANOUTS AND WATER HEATER FROM 48" OUTSIDE EDGE BARRACKS TO ALL VENTS PIPE THROUGH ROOF, EXCEPT WHERE NOTED. SALVAGE WATER HEATER PER C.O.R.
2. REMOVE AND DISPOSE OF ALL HOT AND COLD WATER PIPING INCLUDING VALVES AND ALL ASSOCIATED APPURTENANCES FROM ALL LATRINE FIXTURES TO 48" BEYOND BARRACKS EXTERIOR.
3. REMOVE AND DISPOSE OF ALL SEWER AND VENT PIPING, INCLUDING ALL FLOOR DRAINS AND CLEAN OUTS FROM ALL LATRINE FIXTURES TO 48" BEYOND BARRACKS EXTERIOR.
4. CONTRACTOR IS RESPONSIBLE FOR THE FIELD VERIFICATION OF UTILITY RUNS, UNDER GROUND AND ABOVE GROUND PIPING. CONTRACTOR IS RESPONSIBLE FOR COSTS RELATING TO THE RELOCATION OF, DAMAGE TO OR REPAIR OF EXISTING UTILITY RUNS WHICH ARE DAMAGED AS A RESULT OF WORK IN OR AROUND THE PREMISES.
5. CONTRACTOR IS RESPONSIBLE FOR FIELD VERIFICATION OF ALL EXISTING CONDITIONS PRIOR TO SUBMITTING THEIR BID. NO ADDITIONAL COMPENSATION WILL BE MADE FOR ANY EXTRAS DUE TO CONTRACTORS FAILURE TO VISIT THE JOBSITE AND/OR PREDETERMINE EXISTING CONDITIONS. ANY DISCREPANCIES MUST BE IMMEDIATELY REPORTED TO THE ARCHITECT OF RECORD FOR RESOLUTION, NO EXCEPTIONS.
6. MAINTAIN THE EXISTING VENT THROUGH ROOF OPENINGS WHERE NEW VENTS MAY BE ROUTED.
7. SAW CUT CONCRETE FLOOR AND BLOCK WALLS AS REQUIRED TO REMOVE FLOOR DRAINS, CLEANOUTS, WATER, SEWER AND VENT PIPING. WHERE FOOTING PENETRATIONS OCCUR, SLOPE SEWER AWAY OR RE-ROUTE PIPING TO AVOID RE-BAR.
8. REMOVE ALL EXISTING GAS FROM EQUIPMENT TO MAIN INCLUDING REGULATOR.

REMODEL NOTES:

1. THE CONTRACTOR IS TO PROVIDE AND INSTALL ALL NEW PLUMBING FIXTURES AS SHOWN ON THE NEW PLUMBING PLAN. IN ADDITION, PROVIDE AND INSTALL ALL NEW SEWER AND VENT PIPING, NEW HOT AND COLD WATER SUPPLY PIPING AND ALL ASSOCIATED APPURTENANCES TO ALL THE PLUMBING FIXTURES WITHIN THE PROJECT AREA. IN ADDITION, PROVIDE AND INSTALL NEW ELECTRIC WATER COOLERS WHERE SHOWN ON THE PLANS.
2. CONTRACTOR SHALL VERIFY EXISTING CONDITIONS BEFORE SUBMITTING BID.
3. PROVIDE AND INSTALL ALL NEW SEWER AND VENT PIPING SHALL FROM 48" BEYOND THE EXTERIOR OF THE BARRACKS TO EACH FIXTURE, INCLUDING FLOOR DRAINS AND CLEANOUTS AND EXTEND TO ALL VENTING THROUGH THE ROOF. UTILIZE (E) ROOF PENETRATIONS WHERE FEASIBLE.
4. ALL COLD WATER SUPPLY PIPING SHALL EXTEND FROM THE EXTERIOR OF THE BUILDING TO ALL FIXTURES. ALL HOT WATER SUPPLY PIPING SHALL EXTEND FROM THE TANKLESS HOT WATER HEATERS TO ALL FIXTURES REQUIRING HOT WATER. NEW COLD WATER PIPING SHALL CONNECT TO (E) WHERE SHOWN.
5. INSULATE ALL WATER LINES, BOTH COLD AND HOT WATER.
6. SAW CUT CONCRETE FLOORS AND CMU BLOCK WALLS AS REQUIRED TO INSTALL HOT AND COLD WATER SUPPLY PIPING, SEWER AND VENT PIPING INCLUDING FLOOR DRAINS, FLOOR SINKS AND CLEANOUTS.
7. PROVIDE AND INSTALL PROPERLY SIZED WATER HAMMER ARRESTORS AT THE END OF EACH MAIN BRANCH OF HOT AND COLD WATER SUPPLY TO THE FIXTURES. PROVIDE AND INSTALL ACCESS DOORS FOR WATER HAMMER ARRESTORS IN WALLS AND CEILINGS.
8. PROVIDE AND INSTALL NEW GAS PIPING FROM GAS MAIN TO ALL BUILDING GAS FIRED EQUIPMENT. PROVIDE AND INSTALL NEW GAS REGULATOR, 625 C.F.H. CAPACITY MINIMUM. SIZE GAS PIPING AS SHOWN ON THE PLANS. SEE MECHANICAL PLANS FOR ADDITIONAL GAS LOADS.
9. PROVIDE AND INSTALL NEW TRAP PRIMERS FOR EACH FLOOR SINK, SHOWER AND FLOOR DRAIN INCLUDING WATER SUPPLY PIPING TO THE TRAP PRIMERS AND WATER SUPPLY PIPING TO THE FLOOR DRAIN, SHOWER AND FLOOR SINK. PROVIDE AND INSTALL ACCESS DOORS AT EACH TRAP PRIMER AS REQUIRED.
10. PROVIDE AND INSTALL NEW TANKLESS WATER HEATERS. ENSURE A 10 FOOT RADIUS FROM ALL FRESH AIR INTAKES. ROUTE TPV AND CONDENSATE TO 6" ABOVE GRADE.
11. INSTALL VALVE BOX, 9"x12" WITH CAST IRON COVER STAMPED "WATER" OR "SEWER" AS APPLICABLE. SHALL BE "CHRISTY BOX" OR APPROVED EQUAL
12. CHECK (E) SANITARY SEWER FOR OBSTRUCTIONS USING VIDEO LINE INSPECTION OR OTHER CAMERA SYSTEM.
13. ALL WALL PENETRATIONS OF THE MECHANICAL ROOM SHALL HAVE FIRE RATED CAULKING.

MICHAEL S. SLAVENSKY
M 28530
Exp. 6/30/2019

REVISIONS	SYMBOL	DATE	REMARKS	BY:
	△	.	.	.
	△	.	.	.
	△	.	.	.
	△	.	.	.

DRAWN BY: MS
DESIGNED BY: MS
CHECKED BY: NG
APPROVED BY: NG

SHEET TITLE TYPICAL PLUMBING DEMOLITION FLOOR PLANS
PROJECT CAMP ROBERTS - BARRACKS RENOVATION
PROJECT NUMBER: 06R1904-27
LOCATION CAMP ROBERTS, CALIFORNIA
STATE OF CALIFORNIA MILITARY DEPARTMENT
DATE: APR 11, 2019

SHEET NUMBER
P1

12 OF 19

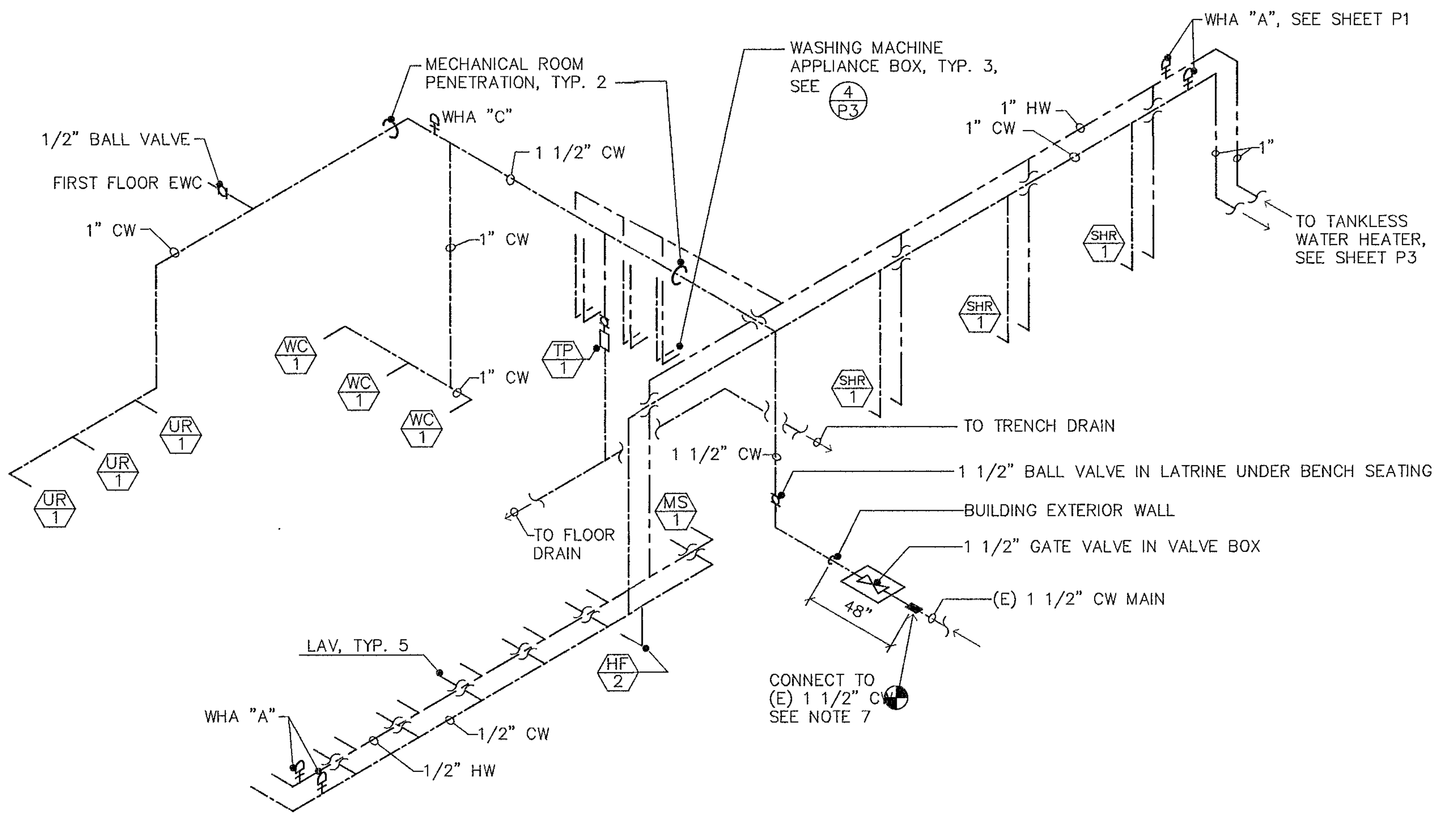
MECHANICAL ROOM PENETRATION, TYP. 2
WASHING MACHINE APPLIANCE BOX, TYP. 3, SEE 4/P3
WHA "A", SEE SHEET P1
1/2" BALL VALVE
FIRST FLOOR EWC
WHA "C"
1 1/2" CW
1" HW
1" CW
1"
1" CW
TO TANKLESS WATER HEATER, SEE SHEET P3
1" CW
SHR 1
SHR 1
WC 1
WC 1
TP 1
1" CW
WC 1
SHR 1
UR 1
UR 1
UR 1
TO TRENCH DRAIN
1 1/2" CW
1 1/2" BALL VALVE IN LATRINE UNDER BENCH SEATING
MS 1
TO FLOOR DRAIN
BUILDING EXTERIOR WALL
1 1/2" GATE VALVE IN VALVE BOX
48"
(E) 1 1/2" CW MAIN
LAV, TYP. 5
HF 2
CONNECT TO (E) 1 1/2" CW SEE NOTE 7
WHA "A"
1/2" CW
1/2" HW

2 WATER ISOMETRIC

SCALE: NONE

NOTE:

1. SEE ARCHITECTURAL DRAWING FOR PREFERRED ROUTING OF SEWER, VENT AND WATER PIPING.
2. PROVIDE SHUT-OFF VALVE AND ACCESS DOOR AT TRAP PRIMER.
3. ISOMETRIC VIEWS ARE APPROXIMATE, VERIFY BEFORE MAKING, MANUFACTURING OR ORDERING MATERIAL.
4. CONSULT WITH C.O.R BEFORE ABANDONING ANY SEWER PIPING IN PLACE.

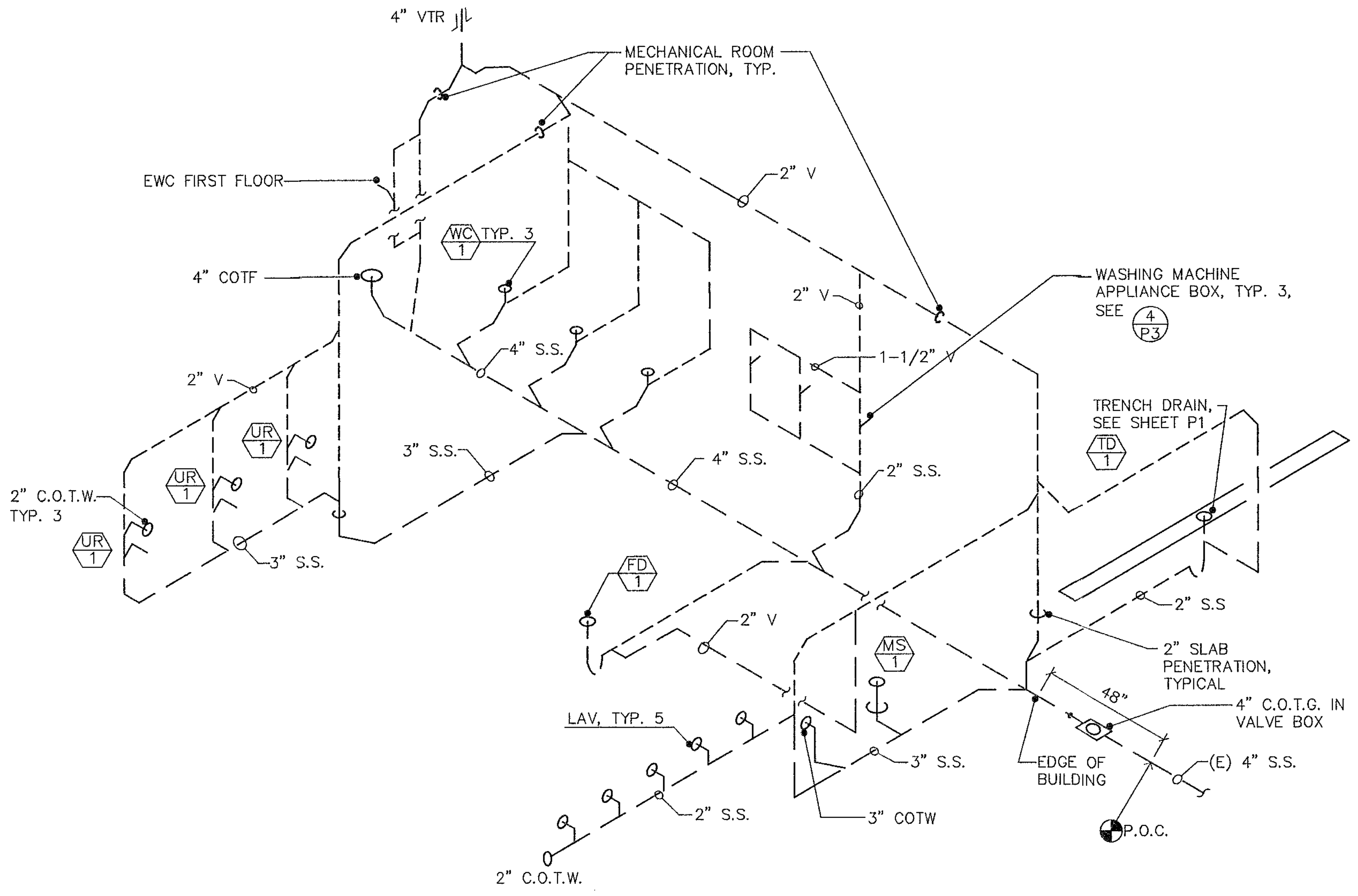
4" VTR
MECHANICAL ROOM PENETRATION, TYP.
EWC FIRST FLOOR
2" V
WC 1 TYP. 3
4" COTF
2" V
WASHING MACHINE APPLIANCE BOX, TYP. 3, SEE 4/P3
4" S.S.
1-1/2" V
2" V
TRENCH DRAIN, SEE SHEET P1
TD 1
UR 1
3" S.S.
4" S.S.
2" S.S.
2" C.O.T.W. TYP. 3
UR 1
UR 1
3" S.S.
FD 1
2" V
2" S.S
2" SLAB PENETRATION, TYPICAL
MS 1
48"
4" C.O.T.G. IN VALVE BOX
LAV, TYP. 5
3" S.S.
EDGE OF BUILDING
(E) 4" S.S.
2" S.S.
3" COTW
P.O.C.
2" C.O.T.W.

1 SEWER ISOMETRIC

SCALE: NONE

PLUMBING FIXTURE SCHEDULE

TAG #	TYPE NUMBER	SS	V	CW	HW	GAS	REMARKS	
EWC 1	ELECTRIC WATER COOLER	2"	1-1/2"	1/2"	–	–		SINGLE STATION, WALL MOUNTED, 8.0 GPH, ELECTRIC WATER COOLER WITH BOTTLE FILLING STATION WITH TOUCHLESS ACTIVATION, LED LIGHT AT WATER DISPENSER. SHALL BE "ELKAY", MODEL LZS8WSLP OR APPROVED EQUAL. PROVIDE AND INSTALL WITH NEW WATER FILTER.SEE ARCHITECTURAL DRAWINGS.
TD 1	TRENCH DRAIN	2"	2"	–	–	–	2, 6	TRENCH DRAIN SHALL BE 4 INCH OPENING, CAST IN PLACE, STAINLESS STEEL, STAINLESS STEEL SLOTTED TRENCH COVER, MODULAR CHANNEL SECTIONS. SHALL BE "ZURN", MODEL Z890 OR APPROVED EQUAL.
FD 1	FLOOR DRAIN	2"	1-1/2"	–	–	–	2, 6	5-3/16" SQUARE NICKEL PLATED STRAINER, CAST IRON BODY, TRAP PRIMER CONNECTION. SHALL BE SQUARE. SHALL BE "ZURN" MODEL FD2322-NH2 OR APPROVED EQUAL.
F 1	LAVATORY FAUCET	2"	1-1/4"	1/2"	1/2"	–	1, 5	SINGLE LEVER FAUCET, 4" ON CENTER, CHROME FINISH, WASHER-LESS CERAMIC DISC VALVE CARTRIDGE, A.D.A. COMPLIANT. SHALL BE "AMERICAN STANDARD", MODEL 23385.500 OR APPROVED EQUAL.
WHA 1	WATER HAMMER ARRESTOR	–	–	TBD	–	–	7, 8	WATER HAMMER ARRESTOR SHALL BE STAINLESS STEEL BODY WITH BELLOWS OR PISTON. ARRESTOR COMPRESSION CHAMBERS SHALL BE PNEUMATICALLY CHARGED. SHALL BE WATTS, OR APPROVED EQUAL AND SIZED PER 2013 C.P.C. 609.10..
SHR 1	SHOWER (VALVES)	–	–	1/2"	1/2"	–		SHOWER SHALL BE CONCEALED SHOWER TYPE, STAINLESS STEEL PANELS, SWIVEL SHOWER HEAD AND SOAP DISH. PARTS SHALL BE CHROME PLATED. VALVE SHALL BE PRESSURE-BALANCING LEVER STYLE HANDLE. SHALL BE "POWERS", HYDRO PANEL II, MODEL 450-4002.
UR 1	URINAL	2"	1-1/2"	1/2"	–	–	1, 4	AMERICAN STANDARD, "WASH BROOK", 6590.503, OR APPROVED EQUAL. FLUSH VALVE SHALL BE EXPOSED TYPE, 0.125 GPF, 3/4" TOP SPUD. SHALL BE MOEN 186-0.125 OR APPROVED EQUAL.
WC 1	WATER CLOSET FLOOR MOUNTED	4"	2"	1-1/4"	–	–	1, 3, 4	AMERICAN STANDARD, MADERA, 3043.001, 16 1/2" HEIGHT OR APPROVED EQUAL. FLUSH VALVE SHALL BE EXPOSED TYPE, 1.28 GPF, SHALL BE "ZURN", Z6000AV-HET OR APPROVED EQUAL. PROVIDE AND INSTALL OPEN FRONT SEAT.
TP 1	TRAP PRIMER	–	–	1/2"	–	–	8	AUTOMATIC TRAP PRIMER, PISTON TYPE, 1/2" INLET AND OUTLET, SOLDER PIPE CONNECTION. SHALL BE "ZURN", MODEL Z1022 OR APPROVED EQUAL.
WHA –	WATER HAMMER ARRESTOR	–	–	TBD	–	–	7, 8	WATER HAMMER ARRESTOR SHALL BE COPPER BODY WITH BELLOWS OR PISTON. ARRESTOR COMPRESSION CHAMBERS SHALL BE PNEUMATICALLY CHARGED. SHALL BE WATTS, OR APPROVED EQUAL AND SIZED PER 2013 C.P.C. 609.10..
HF 1	HOSE FAUCET	–	–	1/2"	–	–		SHALL BE BRASS HOSE BIBB, 1/2" WITH BACK FLOW PREVENTER.
HF 2	HOSE FAUCET	–	–	1/2"	–	–		SHALL BE ENCASED HOSE FAUCET, SELF DRAINING FOR INTERIOR WALL INSTALLATION. SHALL BE "ZURN", MODEL EL Z1350-C OR APPROVED EQUAL.
MS 1		2"	1-1/2"	–	–	–	2	MOP SINK, STAINLESS STEEL, FLOOR MOUNTED. SHALL BE "ADVANCE TABCO, MODEL 9-OP-20 OR APPROVED EQUAL. SHALL INCLUDE 3" P-TRAP AND STRAINER FOR MOP SINK, EXPOSED YOKE WALL WALL-MOUNTED UTILITY FAUCET. SHALL BE "AMERICAN STANDARD", MODEL 8340.235 OR APPROVED EQUAL.

REMARKS:

1. NOT USED.
2. WITH TRAP PRIMER CONNECTION.
3. INCLUDE OPEN FRONT SEAT.
4. INCLUDE FLUSH VALVE.
5. INCLUDE A.D.A. LOW FLOW FILTER(S).
6. INSTALL TRAP PRIMERS AT ALL FLOOR DRAINS AND WASTE RECEPTOR.
7. INSTALL WATER HAMMER ARRESTORS AT THE END OF EACH WATER SUPPLY BRANCH. PROVIDE & INSTALL ACCESS DOOR AS REQUIRED.
8. PROVIDE & INSTALL ACCESS DOOR AT EACH WATER HAMMER ARRESTOR AND AT EACH TRAP PRIMER FOR ACCESS.

MICHAEL S. SLAVENSKY
28539
Exp. 6/30/2019

REVISIONS	SYMBOL	DATE	REMARKS	BY:
	△	.	.	.
	△	.	.	.
	△	.	.	.
	△	.	.	.

DRAWN BY: MS
DESIGNED BY: MS
CHECKED BY: NG
APPROVED BY: NG
PROJECT NUMBER: 06R1904-27
DATE: APR 11, 2019

SHEET TITLE TYPICAL PLUMBING ISOMETRIC VIEWS
PROJECT CAMP ROBERTS - BARRACKS RENOVATION
LOCATION CAMP ROBERTS, CALIFORNIA
STATE OF CALIFORNIA MILITARY DEPARTMENT

SHEET NUMBER
P2

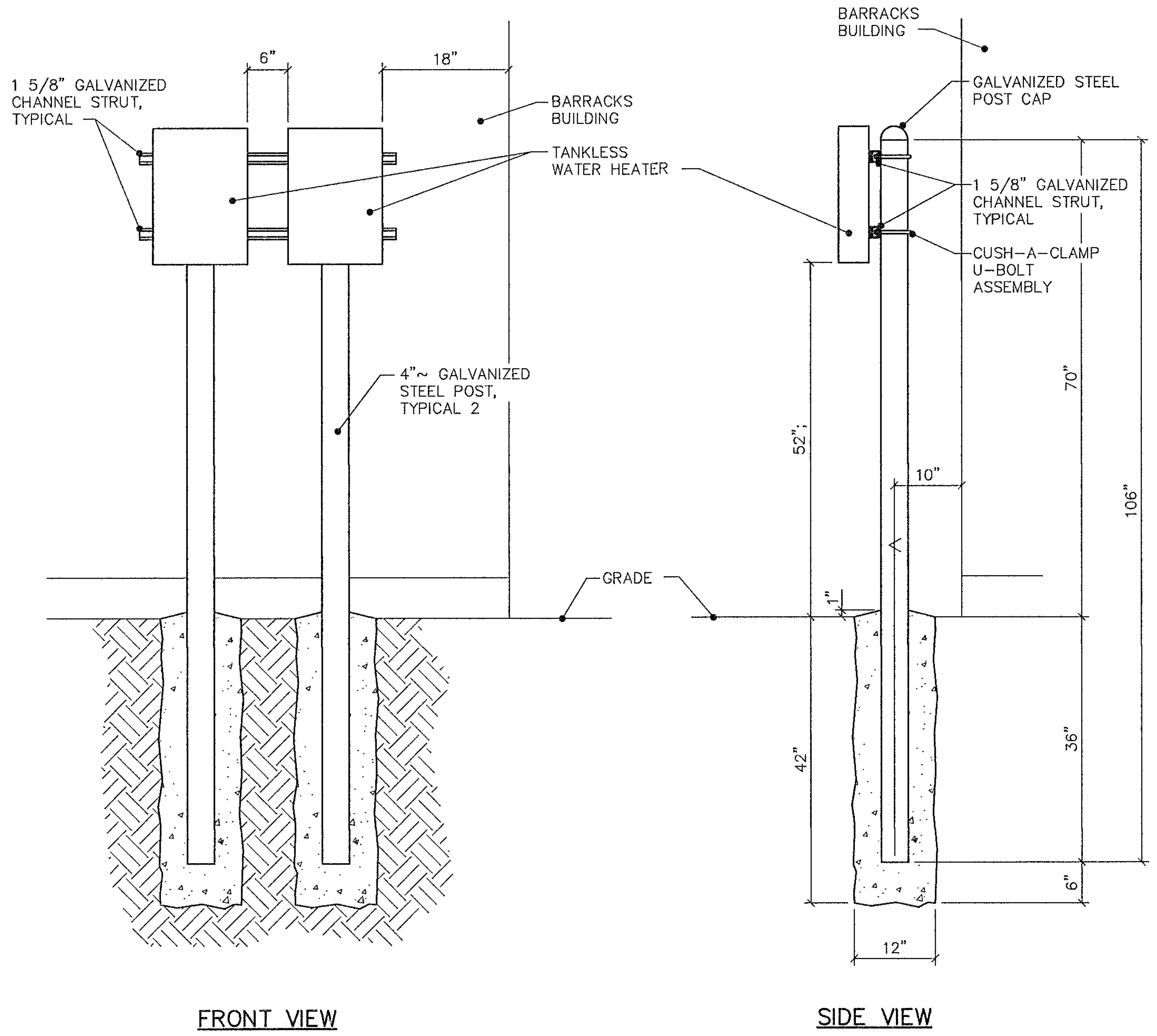
1 5/8" GALVANIZED CHANNEL STRUT, TYPICAL
6"
18"
BARRACKS BUILDING
TANKLESS WATER HEATER
4"⌀ GALVANIZED STEEL POST, TYPICAL 2
GRADE
BARRACKS BUILDING
GALVANIZED STEEL POST CAP
1 5/8" GALVANIZED CHANNEL STRUT, TYPICAL
CUSH-A-CLAMP U-BOLT ASSEMBLY
52"
10"
70"
106"
1"
42"
36"
6"
12"

FRONT VIEW

SIDE VIEW

5 TANKLESS WATER HEATER SUPPORT
SCALE: 3/4"= 1'-0"

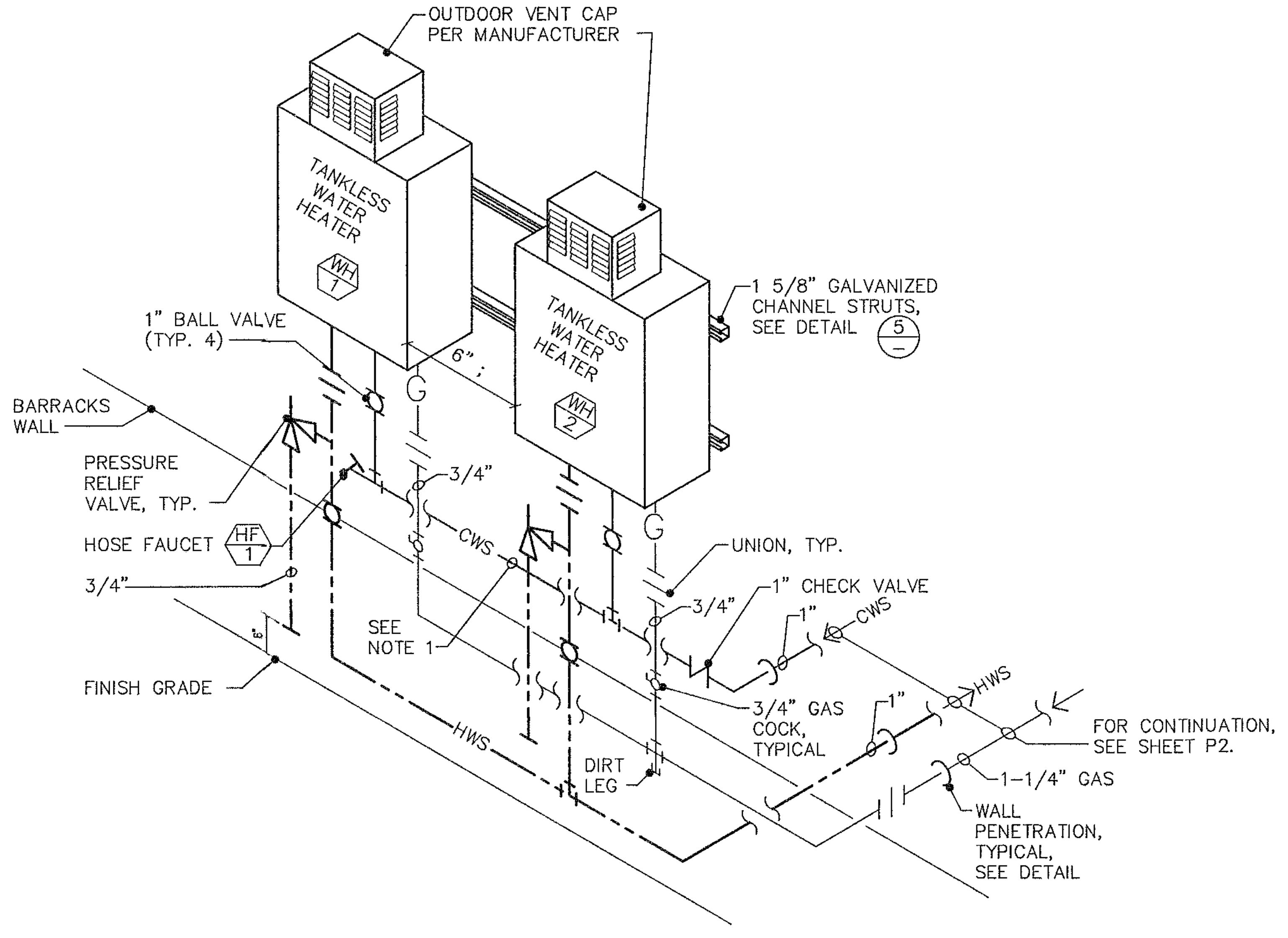
OUTDOOR VENT CAP PER MANUFACTURER
TANKLESS WATER HEATER
WH 1
TANKLESS WATER HEATER
WH 2
1 5/8" GALVANIZED CHANNEL STRUTS, SEE DETAIL 5/—
1" BALL VALVE (TYP. 4)
6"
BARRACKS WALL
PRESSURE RELIEF VALVE, TYP.
HOSE FAUCET HF 1
3/4"
3/4"
CWS
UNION, TYP.
1" CHECK VALVE
3/4"
1"
CWS
SEE NOTE 1
FINISH GRADE
6"
HWS
3/4" GAS COCK, TYPICAL
HWS
1"
DIRT LEG
FOR CONTINUATION, SEE SHEET P2.
1-1/4" GAS
WALL PENETRATION, TYPICAL, SEE DETAIL

1 TANKLESS WATER HEATER DETAIL & (N) WATER ISOMETRIC
SCALE: NONE
SEE NOTE 2

EQUIPMENT SCHEDULE:

WH 1 WH 2	TANKLESS GAS WATER HEATER, 199,000 BTUH MAXIMUM, 16,000 BTUH MINIMUM, 8.4 GAL/MIN. @ 45F TEMPERATURE RISE, CONDENSING, OUT DOOR INSTALLATION. INSTALL COMPLETE WITH ALL REQUIRED ACCESSORIES, FOR DE-SCALING, INCLUDING BUT NOT LIMITED TO PRESSURE RELIEF VALVE, ISOLATION VALVES, AIR INTAKE CONTROLS, VENT PIPING DRAIN, WATER AND GAS SUPPLY VALVES. INSTALLATION AND CLEARANCES SHALL BE IN STRICT ACCORDANCE WITH MANUFACTURER'S REQUIREMENTS AND SHALL COMPLY WITH 2015 IPC. PLUMB IN PARALLEL, TANK-LESS WATER HEATERS SHALL BE "NORITZ", MODEL NCC1991 OR APPROVED EQUAL.
HF 1	HOSE FAUCET, SHALL BE COMPRESSION TYPE, ANGLE PATTERN, WHEEL HANDLE, 3/4 - INCH FEMALE THREAD WITH HOSE BEND. BRONZE BODY ROUGH FINISH, NON-REMOVABLE THREADED OUTLET VACUUM BREAKER. SHALL BE "NIBCO", MODEL No. 63-CL OR APPROVED EQUAL.

NOTE:

1. INSULATE ALL EXTERIOR WATER LINES WITH WRAPPED FLEXIBLE ELASTOMERIC INSULATION.

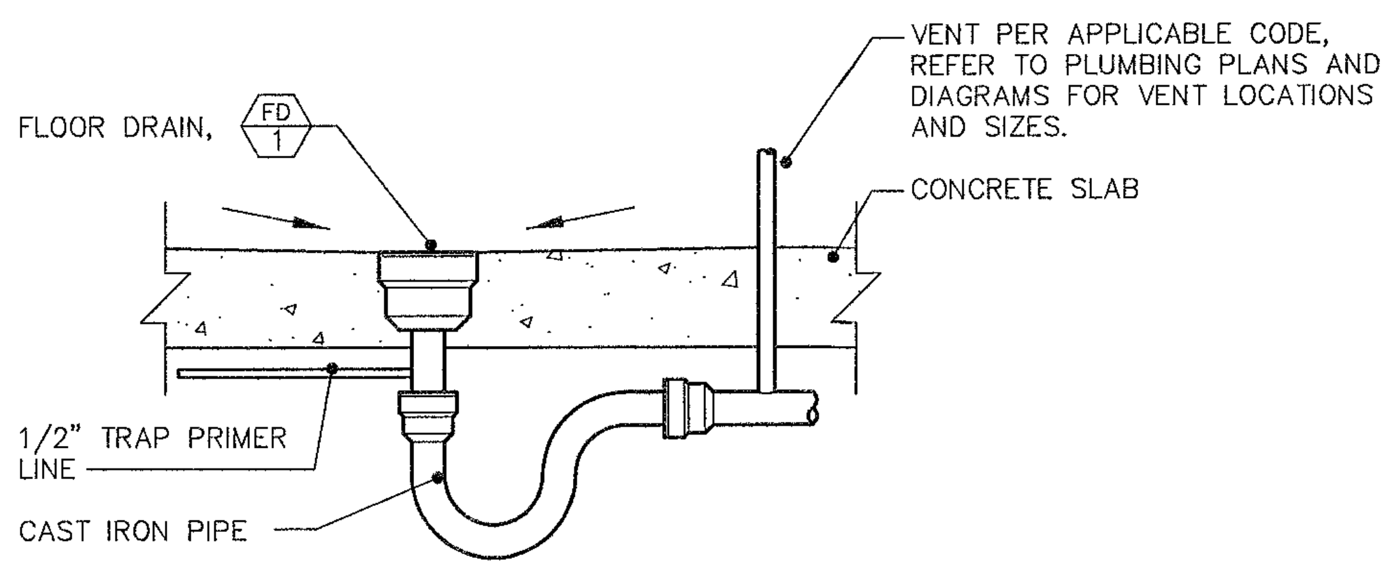
FLOOR DRAIN, FD 1
VENT PER APPLICABLE CODE, REFER TO PLUMBING PLANS AND DIAGRAMS FOR VENT LOCATIONS AND SIZES.
CONCRETE SLAB
1/2" TRAP PRIMER LINE
CAST IRON PIPE

3 FLOOR DRAIN DETAIL
SCALE: NONE

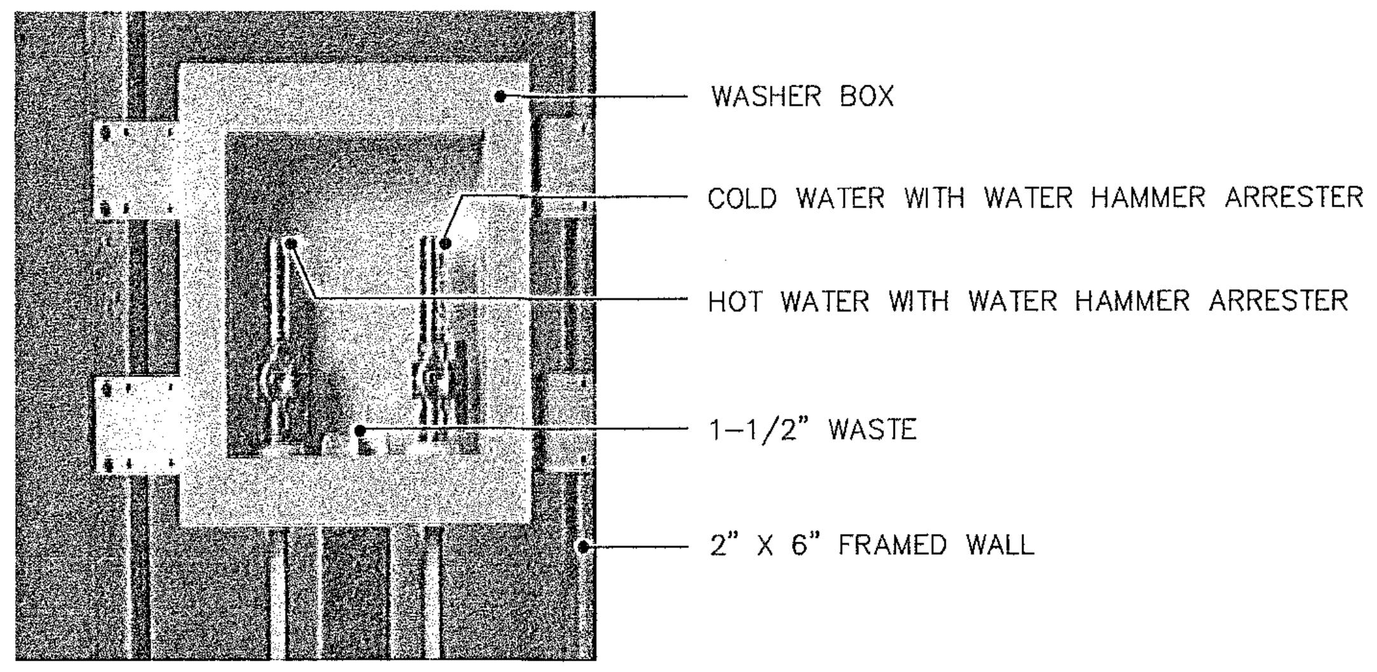
WASHER BOX
COLD WATER WITH WATER HAMMER ARRESTER
HOT WATER WITH WATER HAMMER ARRESTER
1-1/2" WASTE
2" X 6" FRAMED WALL

4 WASHER BOX
SCALE: NONE

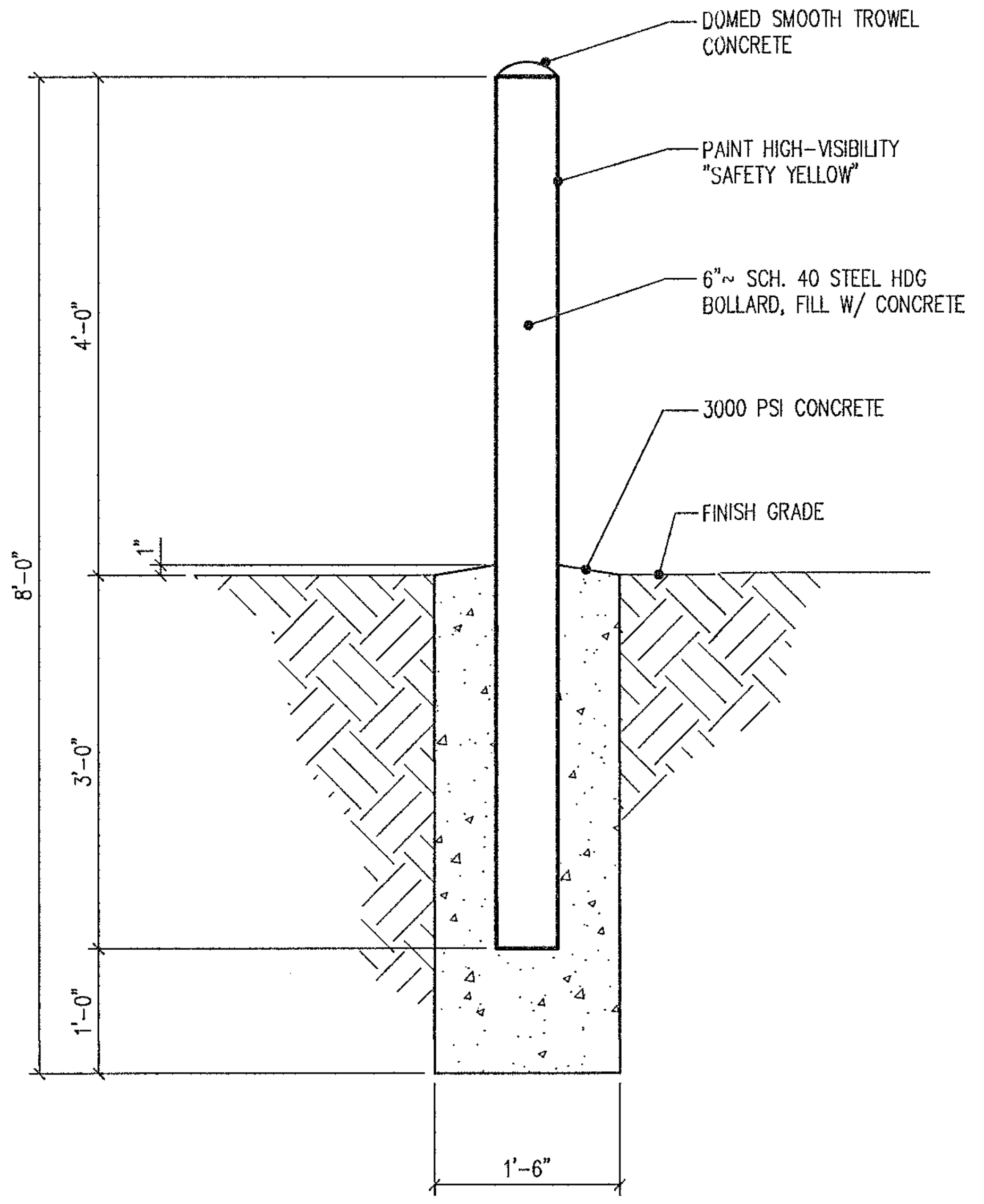
DOMED SMOOTH TROWEL CONCRETE
PAINT HIGH-VISIBILITY "SAFETY YELLOW"
6"⌀ SCH. 40 STEEL HDG BOLLARD, FILL W/ CONCRETE
3000 PSI CONCRETE
FINISH GRADE
4'-0"
8'-0"
1"
3'-0"
1'-0"
1'-6"

2 BOLLARD DETAIL
SCALE: 3/4"= 1'-0"

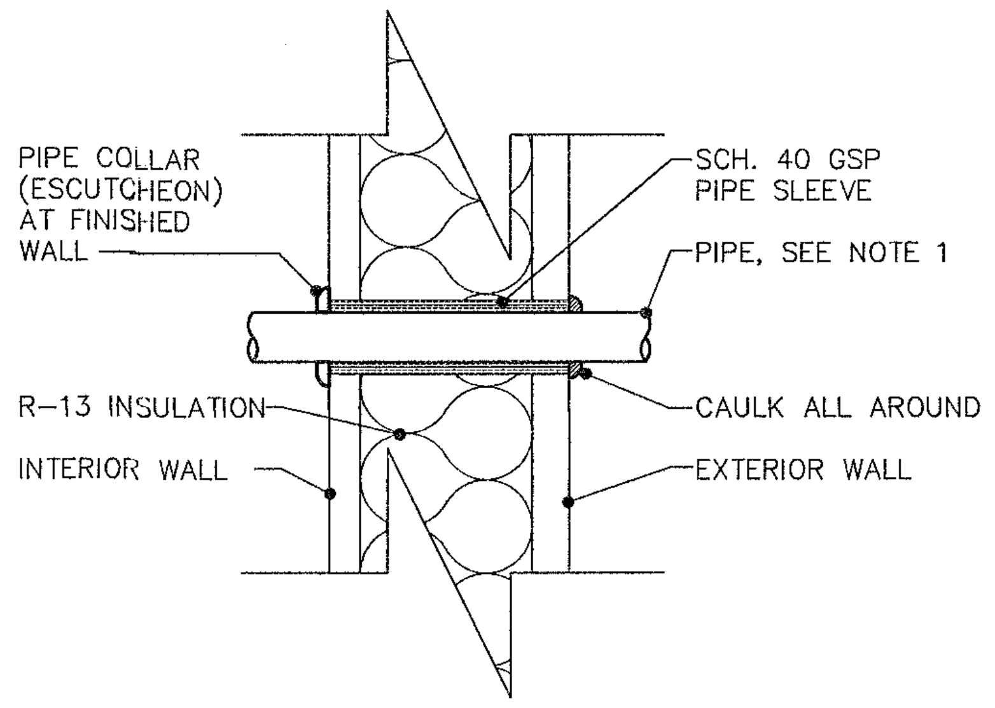
PIPE COLLAR (ESCUTCHEON) AT FINISHED WALL
SCH. 40 GSP PIPE SLEEVE
PIPE, SEE NOTE 1
R-13 INSULATION
CAULK ALL AROUND
INTERIOR WALL
EXTERIOR WALL

7 PIPE WALL PENETRATION DETAIL
SCALE: 3"= 1'-0"

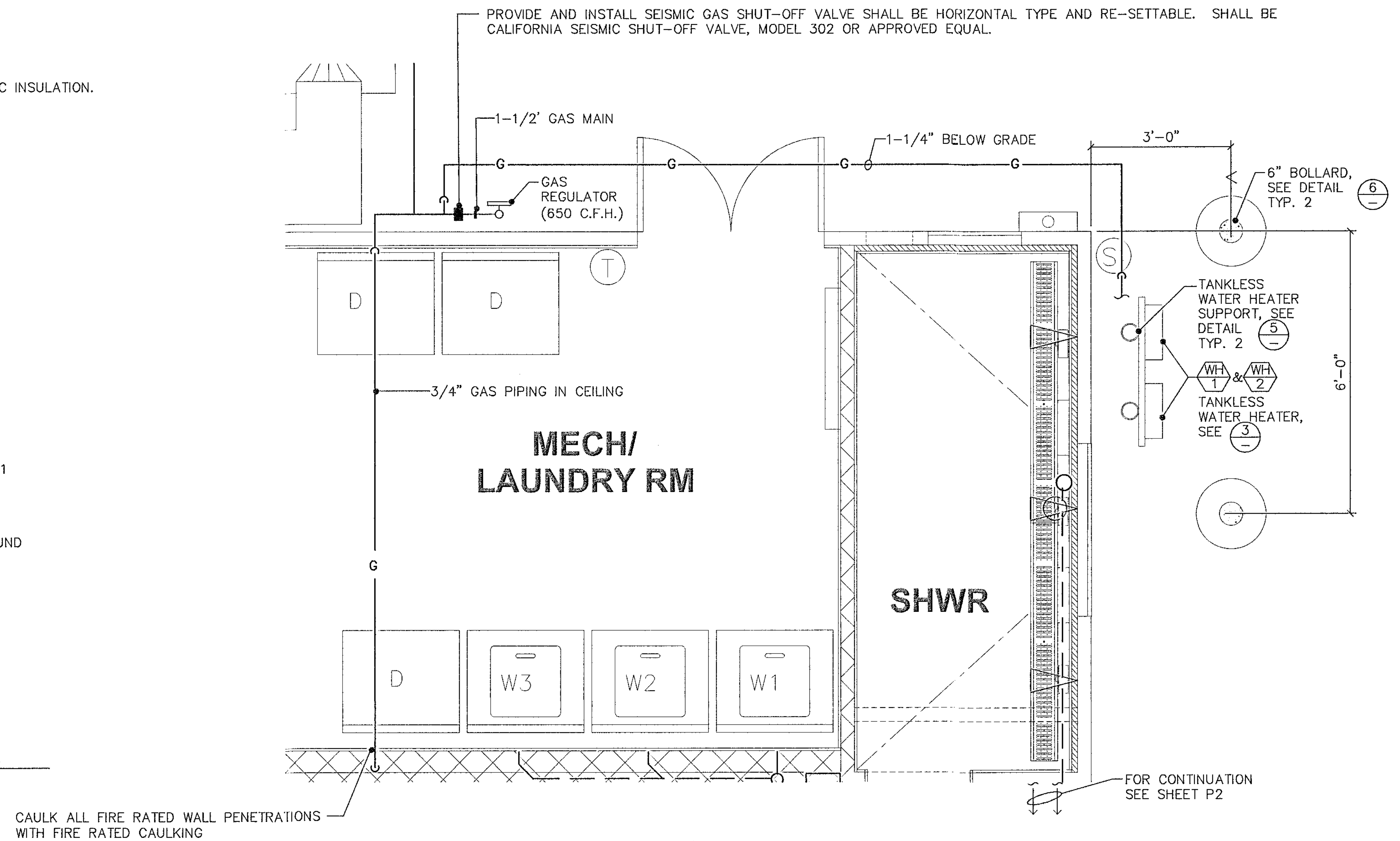
PROVIDE AND INSTALL SEISMIC GAS SHUT-OFF VALVE SHALL BE HORIZONTAL TYPE AND RE-SETTABLE. SHALL BE CALIFORNIA SEISMIC SHUT-OFF VALVE, MODEL 302 OR APPROVED EQUAL.
1-1/2' GAS MAIN
G
G
1-1/4" BELOW GRADE
G
G
3'-0"
6" BOLLARD, SEE DETAIL 6, TYP. 2
GAS REGULATOR (650 C.F.H.)
T
S
D
D
3/4" GAS PIPING IN CEILING
TANKLESS WATER HEATER SUPPORT, SEE DETAIL 5, TYP. 2
WH 1 & WH 2 TANKLESS WATER HEATER, SEE 3
6'-0"
MECH/ LAUNDRY RM
SHWR
G
D
W3
W2
W1
CAULK ALL FIRE RATED WALL PENETRATIONS WITH FIRE RATED CAULKING
FOR CONTINUATION SEE SHEET P2

2 (N) PLUMBING PLAN
SCALE: 1/2"= 1'-0"

REVISIONS	SYMBOL	DATE	REMARKS	BY:
	△	.	.	.
	△	.	.	.
	△	.	.	.
	△	.	.	.

DRAWN BY: MS
DESIGNED BY: MS
CHECKED BY: NG
APPROVED BY: NG

SHEET TITLE TYPICAL WATER HEATER REPLACEMENT
PROJECT CAMP ROBERTS - BARRACKS RENOVATION
PROJECT NUMBER: 06R1904-27
LOCATION CAMP ROBERTS, CALIFORNIA
DATE: APR 11, 2019
STATE OF CALIFORNIA MILITARY DEPARTMENT

REGISTERED PROFESSIONAL ENGINEER MICHAEL S. SLAVENSKY 28530 Exp. 6/30/2019 MECHANICAL STATE OF CALIFORNIA

SHEET NUMBER
P3

NOTES:

1. RUN 3/4"C, FOR CKT #A27 AND A32 TO (E) PANEL BOARD "A" VIA (E) PULL BOX AND 3" CONDUIT IN THE MECHANICAL ROOM.
2. RUN 3/4"C, FOR CKT #A30 & A32 DOWN TO (E) PANEL BOARD "A" VIA (E) PULL BOX AND 3" CONDUIT IN MECHANICAL ROOM.
3. FOR PANEL AND FIXTURE SCHEDULE, SEE SHEET E3.
4. CONTRACTOR SHALL DISCONNECT & REMOVE ALL (E) LIGHT FIXTURES, SWITCHES AND RECEPTACLES WITH ALL ASSOCIATED WIRES & CONDUITS. REPLACE AS SHOWN ON THIS DRAWING.

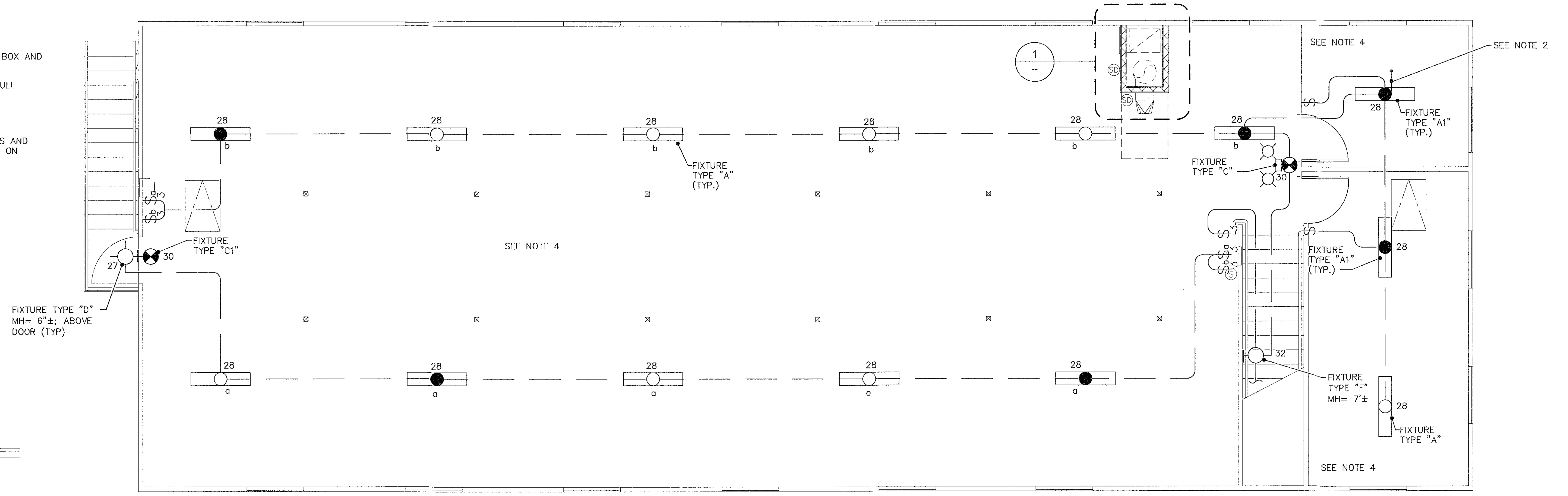
1
SEE NOTE 4
SEE NOTE 2
28
b
a
FIXTURE TYPE "A" (TYP.)
FIXTURE TYPE "A1" (TYP.)
FIXTURE TYPE "C"
30
FIXTURE TYPE "C1"
27
FIXTURE TYPE "D" MH= 6"±; ABOVE DOOR (TYP)
SEE NOTE 4
32
FIXTURE TYPE "F" MH= 7'±
FIXTURE TYPE "A"
SEE NOTE 4

2ND FLOOR LIGHTING PLAN
SCALE: 1/4"= 1'-0"

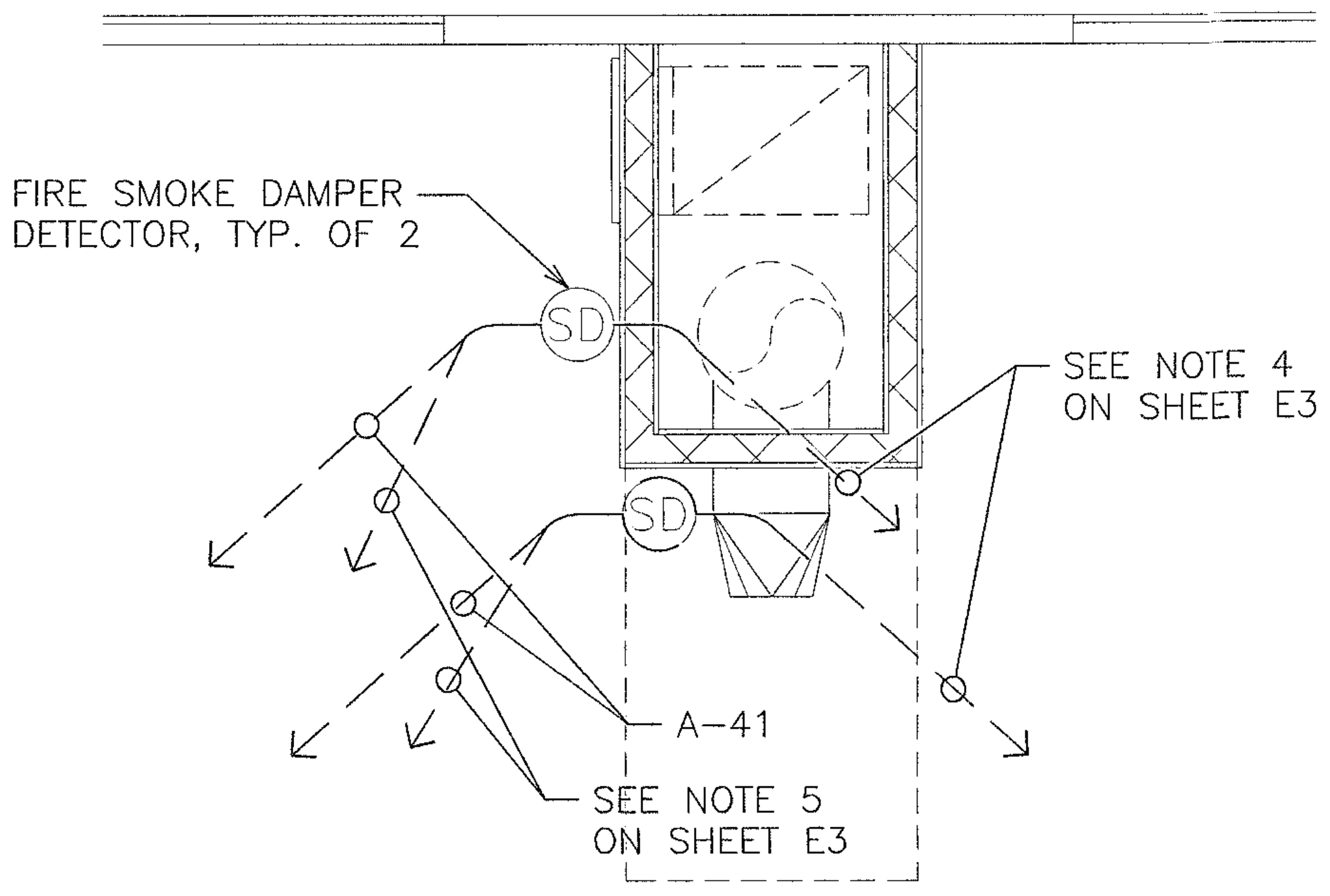
FIRE SMOKE DAMPER DETECTOR, TYP. OF 2
SD
SEE NOTE 4 ON SHEET E3
A-41
SEE NOTE 5 ON SHEET E3

1 FIRE SMOKE DAMPER DETECTOR @ 2ND FLOOR
Scale: 1/2"=1'-0"

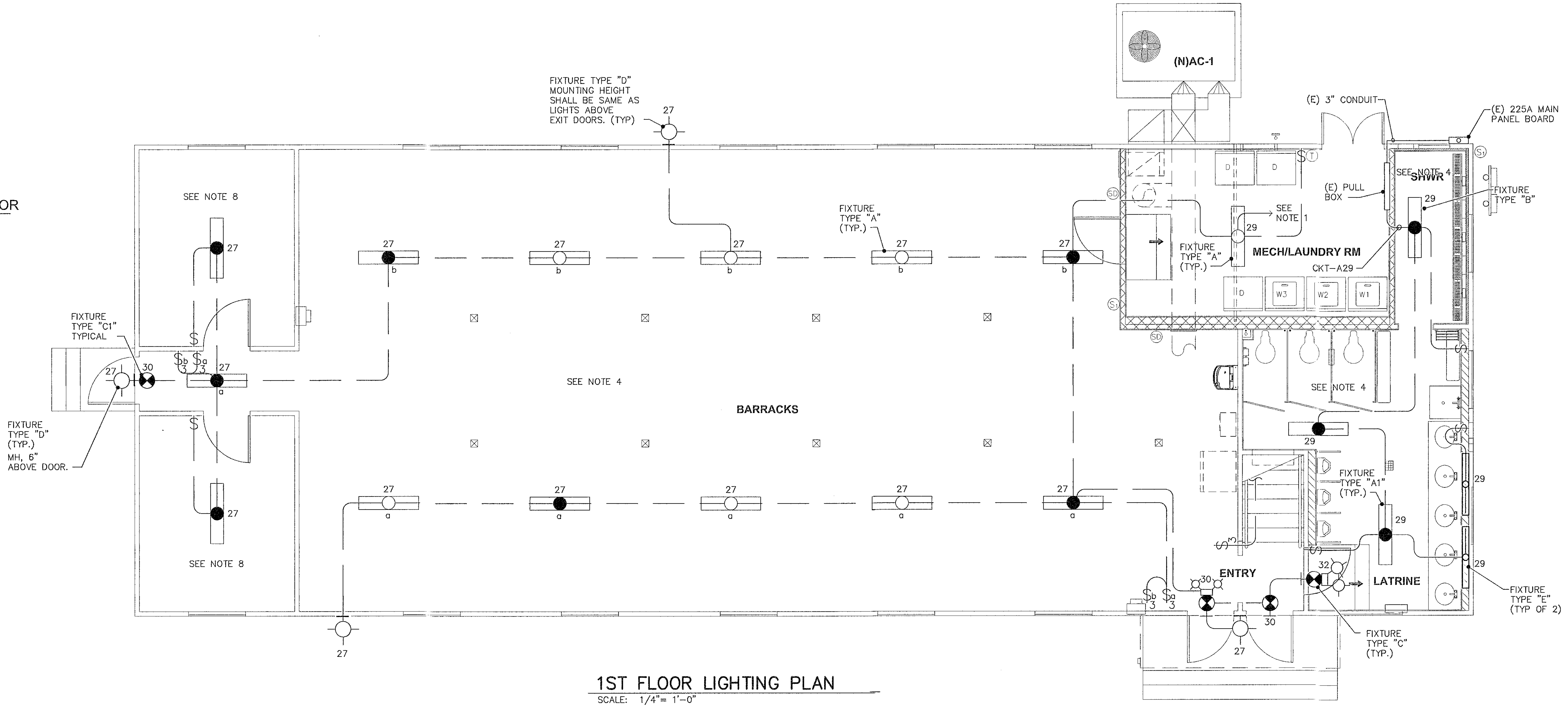
(N)AC-1
FIXTURE TYPE "D" MOUNTING HEIGHT SHALL BE SAME AS LIGHTS ABOVE EXIT DOORS. (TYP)
27
(E) 3" CONDUIT
(E) 225A MAIN PANEL BOARD
SHWR
SEE NOTE 4
(E) PULL BOX
FIXTURE TYPE "B"
SEE NOTE 1
29
MECH/LAUNDRY RM
FIXTURE TYPE "A" (TYP.)
CKT-A29
W3
W2
W1
SEE NOTE 8
FIXTURE TYPE "A" (TYP.)
b
a
FIXTURE TYPE "C1" TYPICAL
30
FIXTURE TYPE "D" (TYP.) MH, 6" ABOVE DOOR.
SEE NOTE 4
BARRACKS
SEE NOTE 4
FIXTURE TYPE "A1" (TYP.)
SEE NOTE 8
ENTRY
LATRINE
32
FIXTURE TYPE "C" (TYP.)
FIXTURE TYPE "E" (TYP OF 2)

1ST FLOOR LIGHTING PLAN
SCALE: 1/4"= 1'-0"

LICENSED ARCHITECT
NICK M. GIANNINI
No.24997
Exp.7-19
STATE OF CALIFORNIA

REVISIONS	SYMBOL	DATE	REMARKS	BY:
	△	.	.	.
	△	.	.	.
	△	.	.	.
	△	.	.	.

DRAWN BY:	PK
DESIGNED BY:	PK
CHECKED BY:	NG
APPROVED BY:	NG

SHEET TITLE TYPICAL BARRACKS LIGHTING PLANS
PROJECT CAMP ROBERTS – BARRACKS RENOVATION
PROJECT NUMBER: 06R1904-27
LOCATION CAMP ROBERTS, CALIFORNIA
STATE OF CALIFORNIA **MILITARY DEPARTMENT**
DATE: APR 11, 2019

SHEET NUMBER
E1

15 OF 19

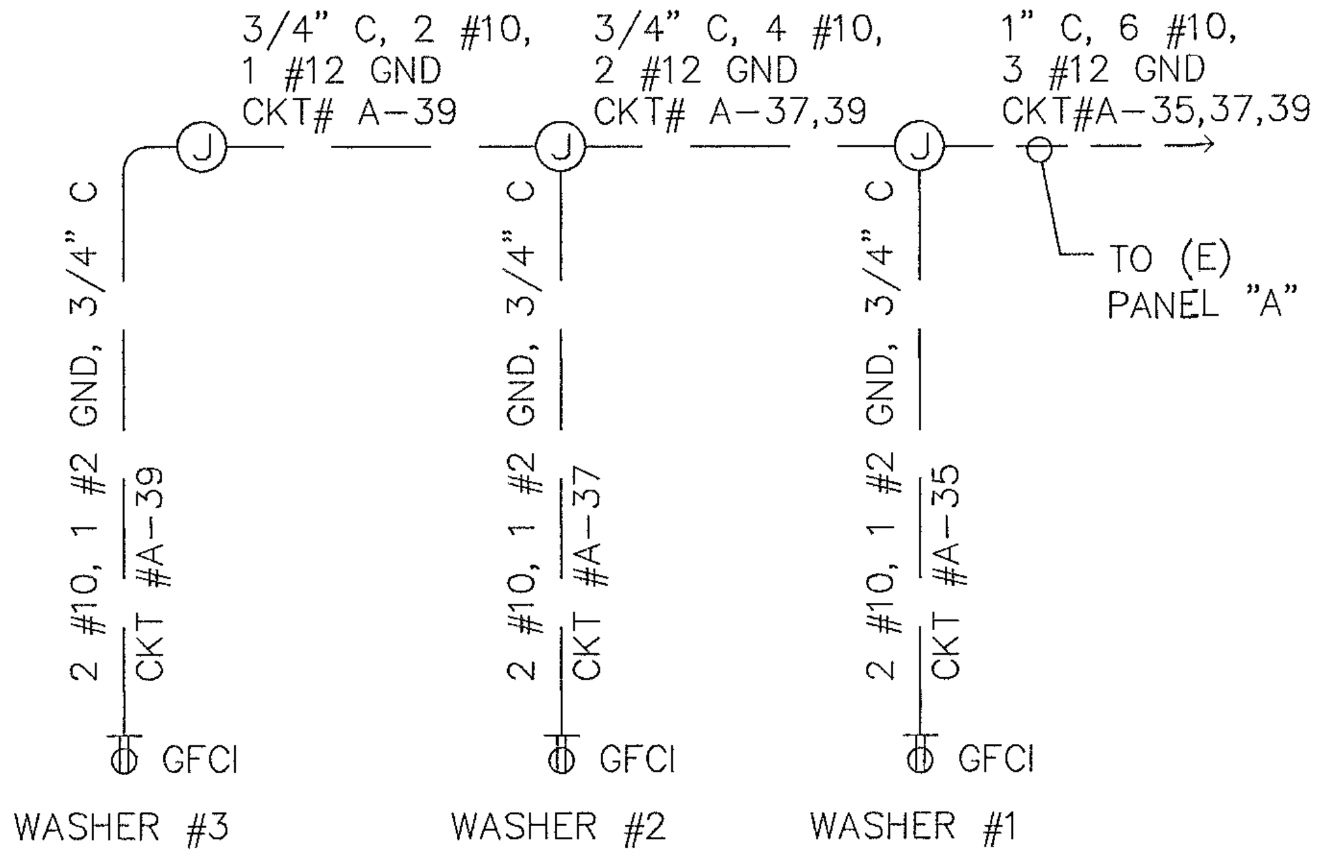
3/4" C, 2 #10, 1 #12 GND CKT# A-39
3/4" C, 4 #10, 2 #12 GND CKT# A-37,39
1" C, 6 #10, 3 #12 GND CKT#A-35,37,39
TO (E) PANEL "A"
2 #10, 1 #2 GND, 3/4" C CKT #A-39
2 #10, 1 #2 GND, 3/4" C CKT #A-37
2 #10, 1 #2 GND, 3/4" C CKT #A-35
GFCI
WASHER #3
GFCI
WASHER #2
GFCI
WASHER #1

1 DETAIL
Scale: NTS

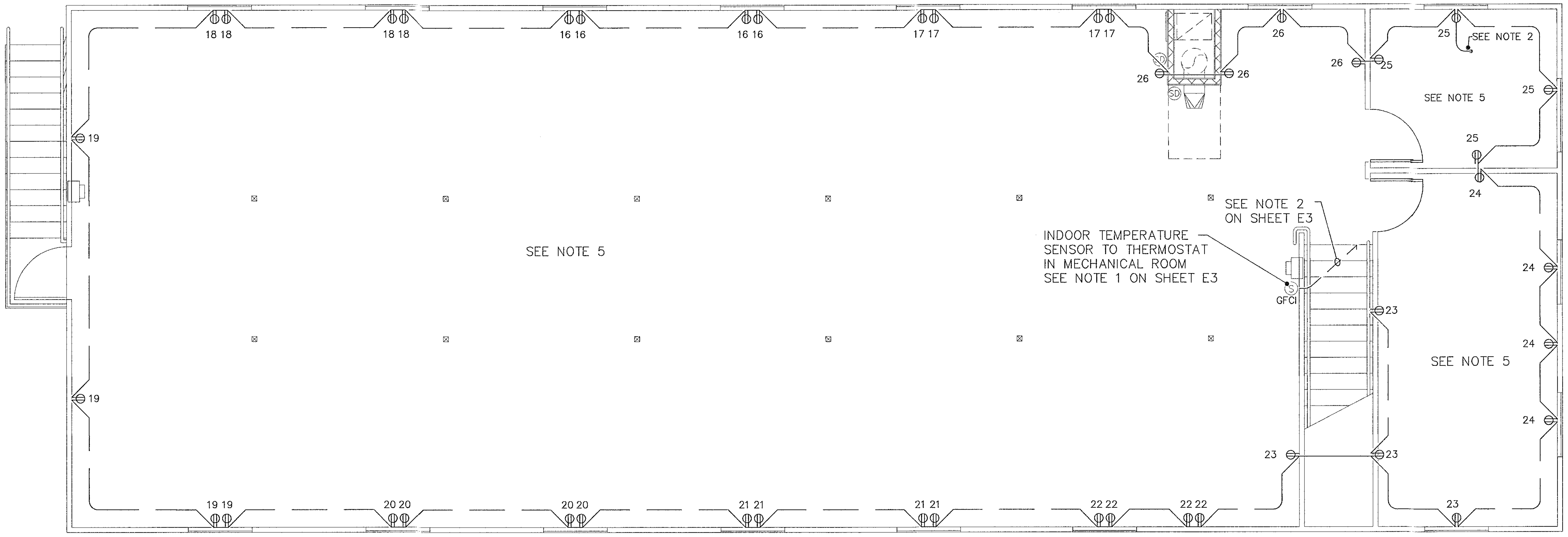
18 18
18 18
16 16
16 16
17 17
17 17
26
26
26
25
25
SEE NOTE 2
SEE NOTE 5
25
25
24
19
SEE NOTE 5
SEE NOTE 2 ON SHEET E3
INDOOR TEMPERATURE SENSOR TO THERMOSTAT IN MECHANICAL ROOM SEE NOTE 1 ON SHEET E3
GFCI
24
23
24
SEE NOTE 5
24
19
23
23
19 19
20 20
20 20
21 21
21 21
22 22
22 22
23

2ND FLOOR POWER PLAN
SCALE: 1/4"= 1'-0"

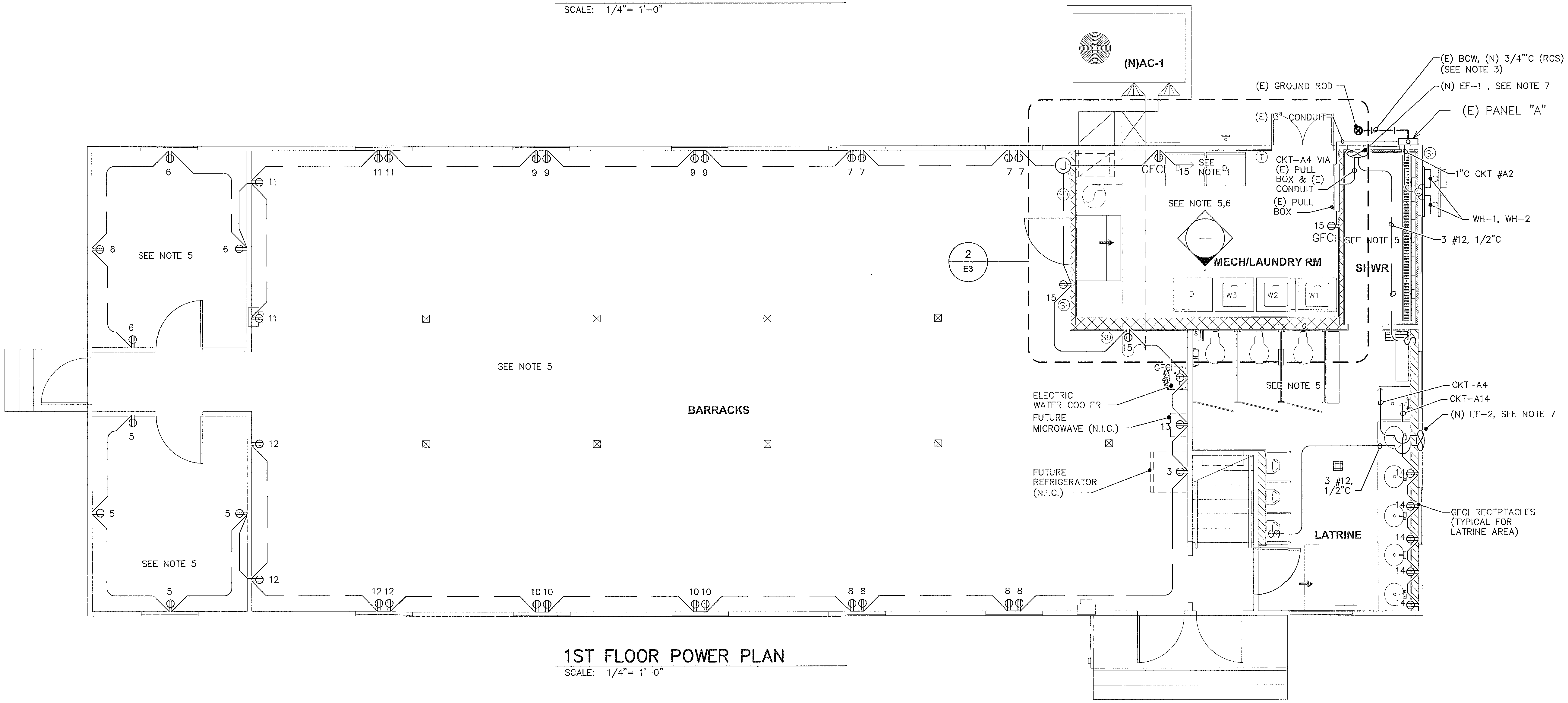
(N)AC-1
(E) BCW, (N) 3/4"C (RGS) (SEE NOTE 3)
(N) EF-1 , SEE NOTE 7
(E) GROUND ROD
(E) PANEL "A"
(E) 3" CONDUIT
6
11 11
9 9
9 9
7 7
7 7
11
GFCI
15
SEE NOTE 1
CKT-A4 VIA (E) PULL BOX & (E) CONDUIT
1"C CKT #A2
SEE NOTE 5,6
(E) PULL BOX
WH-1, WH-2
6
SEE NOTE 5
6
15
GFCI
SEE NOTE 5
3 #12, 1/2"C
2
E3
MECH/LAUNDRY RM
SHWR
D
W3
W2
W1
15
6
11
15
SEE NOTE 5
BARRACKS
GFCI
SEE NOTE 5
CKT-A4
CKT-A14
(N) EF-2, SEE NOTE 7
ELECTRIC WATER COOLER
FUTURE MICROWAVE (N.I.C.)
13
5
12
FUTURE REFRIGERATOR (N.I.C.)
3
3 #12, 1/2"C
14
14
GFCI RECEPTACLES (TYPICAL FOR LATRINE AREA)
5
5
LATRINE
14
14
SEE NOTE 5
12
5
12 12
10 10
10 10
8 8
8 8
14

1ST FLOOR POWER PLAN
SCALE: 1/4"= 1'-0"

PLAN NOTES:

1. RUN 1 1/2"C FOR CKT #A3, A5 THRU A15 & A31 TO (E) PANEL BOARD "A" VIA (E) PULL BOX AND 3" CONDUIT IN MECHANICAL ROOM.
2. RUN 1 1/2"C, FOR CKT #A16 THRU A26 & A33 DOWN TO (E) PANEL BOARD "A" VIA (E) PULL BOX AND 3" CONDUIT IN MECHANICAL ROOM.
3. REPLACE (E) EMT CONDUIT WITH NEW RIGID GALVANIZED CONDUIT (RGS). REUSE BARE COPPER WIRE GROUNDING.
4. FOR PANEL AND FIXTURE SCHEDULE, SEE SHEET E3.
5. CONTRACTOR SHALL DISCONNECT & REMOVE ALL (E) LIGHT FIXTURES, SWITCHES AND RECEPTACLES WITH ALL ASSOCIATED WIRES & CONDUITS. REPLACE AS SHOWN ON THIS DRAWING.
6. DISCONNECT, REPLACE AND RECONNECT (E) PULL BOX WITH NEW ONE. SIZE AS REQUIRED.
7 PROVIDE TIMER SWITCHES FOR EF-1 AND EF-2. SEE MECHANICAL DRAWINGS FOR TIMER SWITCH INFORMATION.

No. 24997
Exp. 7-19

REVISIONS	SYMBOL	DATE	REMARKS	BY:
	△	.	.	.
	△	.	.	.
	△	.	.	.
	△	.	.	.

DRAWN BY:	PK
DESIGNED BY:	PK
CHECKED BY:	NG
APPROVED BY:	NG

SHEET TITLE TYPICAL BARRACKS POWER PLANS & DETAIL
PROJECT CAMP ROBERTS – BARRACKS RENOVATION
LOCATION CAMP ROBERTS, CALIFORNIA
PROJECT NUMBER: 06R1904-27
STATE OF CALIFORNIA **MILITARY DEPARTMENT**
DATE: APR 11, 2019

SHEET NUMBER
E2

NOTES:

1. INDOOR SENSORS ARE TO BE LOCATED AS SHOWN, 5 FEET ABOVE FINISHED FLOOR. OUTDOOR SENSORS SHALL BE LOCATED AS SHOWN, 8 FEET ABOVE GRADE. SENSORS ARE INCLUDED AS PART OF THE THERMOSTAT.
2. 1/2" C, TO THERMOSTAT INSIDE MECHANICAL ROOM, WIRES PER MANUFACTURER'S RECOMMENDATIONS.
3. SEE MECHANICAL DRAWINGS FOR DISCONNECT SWITCH AND SMOKE SENSOR REQUIREMENTS.
4. 3/4" C, 2 #12 TO AC-1.
5. 3/4" C TO FACP, SEE FIRE ALARM PANEL FOR WIRES REQUIREMENTS.

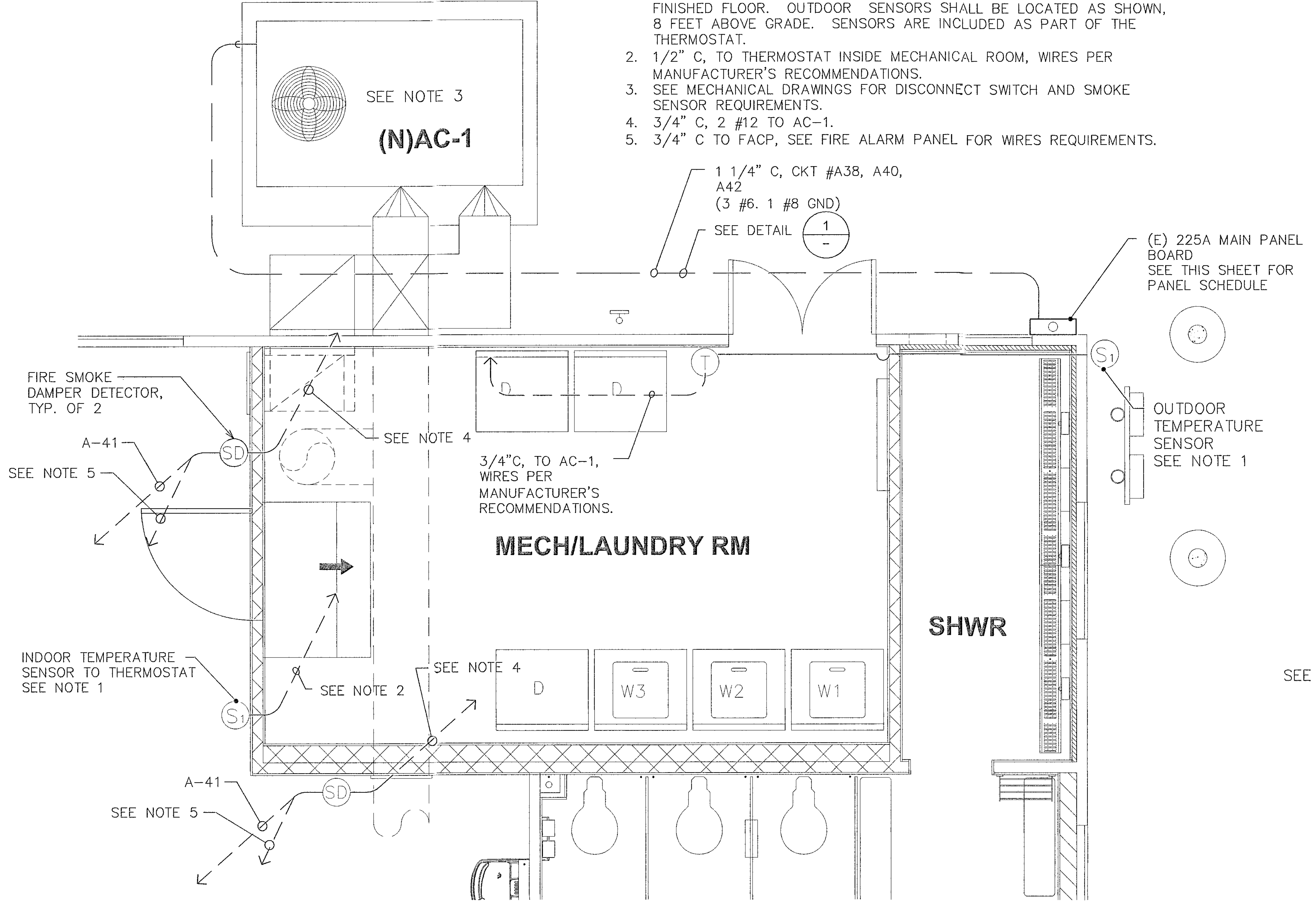
SEE NOTE 3
(N)AC-1
1 1/4" C, CKT #A38, A40, A42
(3 #6. 1 #8 GND)
SEE DETAIL
1
—
(E) 225A MAIN PANEL BOARD
SEE THIS SHEET FOR PANEL SCHEDULE
S1
OUTDOOR TEMPERATURE SENSOR
SEE NOTE 1
FIRE SMOKE DAMPER DETECTOR, TYP. OF 2
A-41
SEE NOTE 5
SD
SEE NOTE 4
T
D
3/4"C, TO AC-1, WIRES PER MANUFACTURER'S RECOMMENDATIONS.
MECH/LAUNDRY RM
SHWR
INDOOR TEMPERATURE SENSOR TO THERMOSTAT
SEE NOTE 1
SEE NOTE 2
SEE NOTE 4
D
W3
W2
W1
S1
A-41
SEE NOTE 5
SD

② ENLARGED MECHANICAL ROOM FLOOR PLAN
Scale: 1/2"=1'-0"

MAIN: 225 AMP
VOLTS: 120/208, 3 PHASE
(E) PANEL "A"
LOCATION: BARRACKS BLDG. (EXTERIOR)

DESCRIPTION	AMPS ØA	AMPS ØB	AMPS ØC	BRK	CKT	ABC	CKT	BRK	AMPS ØA	AMPS ØB	AMPS ØC	DESCRIPTION
FACP	6			20/1	1		2	20/1	2			WATER HEATERS 1 & 2
REFRIGERATOR		7		20/1	3		4	20/1		4		EF-1 & EF-2
RECEPT'S. 1st FLR. OFFICE			6	20/1	5		6	20/1			6	RECEPT'S. 1st FLR. OFFICE
RECEPTACLES 1st FLOOR	12			20/1	7		8	20/1	12			RECEPTACLES 1st FLOOR
RECEPTACLES 1st FLOOR		12		20/1	9		10	20/1		12		RECEPTACLES 1st FLOOR
RECEPTACLES 1st FLOOR			12	20/1	11		12	20/1			12	RECEPTACLES 1st FLOOR
MICRO-WAVE	5			20/1	13		14	20/1	7.5			RECEPTACLES LATRINE
RECEPTACLES MECH. ROOM		6		20/1	15		16	20/1		12		RECEPTACLES 2nd FLOOR
RECEPTACLES 2nd FLOOR			12	20/1	17		18	20/1			12	RECEPTACLES 2nd FLOOR
RECEPTACLES 2nd FLOOR	12			20/1	19		20	20/1	12			RECEPTACLES 2nd FLOOR
RECEPTACLES 2nd FLOOR		12		20/1	21		22	20/1		12		RECEPTACLES 2nd FLOOR
RECEPTACLES 2nd FLOOR			6	20/1	23		24	20/1			6	RECPTS. 2nd FLOOR OFFICE
RECEPT'S. 2nd FLR. BEDRM.	6			20/1	25		26	20/1	6			RECEPTACLES 2nd FLOOR
LIGHTS 1st FLOOR		11		20/1	27		28	20/1		10		LIGHTS 2nd FLOOR
LIGHTS LATRINE & MECH. RM.			6	20/1	29		30	20/1			6	LIGHTS STAIRS & EMERGENCY
ELECTRIC WATER COOLER 1st FLOOR (EWC)	5			20/1	31		32	20/1				SPARE
SPARE				20/1	33		34	20/1				SPARE
WASHER # 1			15	20/1	35		36	20/1				SPARE
WASHER # 2	15			20/1	37		38	50/3	41			AC-1
WASHER # 3		15		20/1	39		40			41		
FIRE SMOKE DAMPERS			2	20/1	41		42				41	

SEE NOTE 2 (WASHER # 1, WASHER # 2, WASHER # 3)

ØA	ØB	ØC	
141.5	154	142	TOTAL AMPS/Ø

(E) PANEL SCHEDULE "A"

SCALE: NONE

NOTES:

1. MINIMUM WIRE SIZE SHALL BE 2# 12, 1# 12 GND, 3/4" C FOR . EACH 20 A CIRCUIT UNLESS OTHER WISE NOTED.
2. PROVIDE 3-20A, 1P CIRCUIT BREAKER FOR CIRCUIT 35, 37, 39.

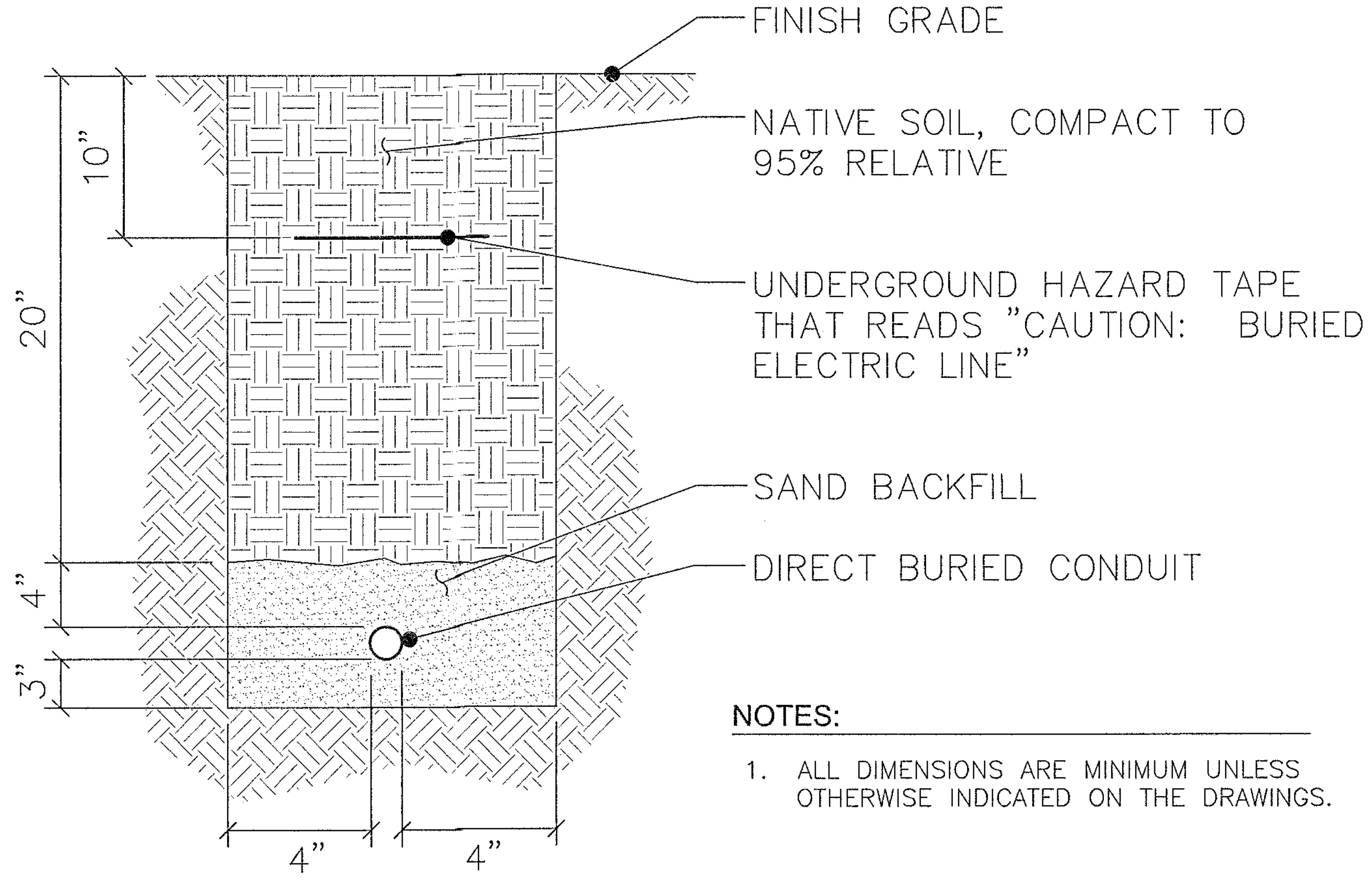
FINISH GRADE
NATIVE SOIL, COMPACT TO 95% RELATIVE
UNDERGROUND HAZARD TAPE THAT READS "CAUTION: BURIED ELECTRIC LINE"
SAND BACKFILL
DIRECT BURIED CONDUIT
10"
20"
4"
3"
4"
4"

NOTES:

1. ALL DIMENSIONS ARE MINIMUM UNLESS OTHERWISE INDICATED ON THE DRAWINGS.

① DIRECT BURIED CONDUIT
Scale: NONE

LIGHTING FIXTURE SCHEDULE

TYPE	VOLTAGE	DESCRIPTION	CATALOG NUMBER
A	MVOLT	12"x48" SURFACE MOUNTED LED WRAPAROUND, WHITE ENAMEL END PLATES.	LITHONIA- LBL4-4800LM-80CR1-40K-MINI 1 ZT-MVOLT-USPOM OR APPROVED EQUAL
A1	MVOLT	12"x48" SURFACE MOUNTED LED WRAPAROUND, EMERGENCY POWER PACK, WHITE ENAMEL END PLATES.	LITHONIA- LBL4-4800LM-80CR1-40K-MINI 1 ZT-MVOLT-EL14L-USPOM OR APPROVED EQUAL
B	MVOLT	48" SURFACE MOUNTED LED WITH EMERGENCY POWER PACK, GASKET, FIBERGLASS HOUSING, FIXTURE SHALL BE SUITABLE FOR WET LOCATION	LITHONIA- FEM-L48-6000LM-LPPFL-WD-MVOLT-GZ10-50K-80CR1-E15WCP-WLFEND2 OR APPROVE EQUAL.
C	120	THERMOPLASTIC EXIT/ UNIT COMBINATION LIGHT TYPE WITH SELF-DIAGNOSTIC SEALED MAINTENANCE-FREE NICKEL-CADMIUM BATTERY.	LITHONIA- LHQM-LED-P-W-1-R-120-N OR APPROVED EQUAL
C1	120	THERMOPLASTIC EXIT/ UNIT COMBINATION LIGHT TYPE WITH SELF-DIAGNOSTIC SEALED MAINTENANCE-FREE NICKEL-CADMIUM BATTERY.	LITHONIA- LQM-LED-S-W-3-R-120-EL-N-SD-M6 OR APPROVED EQUAL
D	120	WALL PACK LED	LITHONIA- TWH-LED-30C-1000-50K-T3M-120-PE-DDBXD-USPOM OR APPROVED EQUAL
E	MVOLT	LINEAR T8 FLUORESCENT WITH ONE-PIECE WHITR DIFFUSER, WALL MOUNTED. SUITABLE FOR BATHROOMS, 3-FOOT UNIT WITH TWO LAMPS.	LITHONIA- 11935-RE-MVOLT-GEB10RS. OR APPROVED EQUAL.
F	MVOLT	WALL MOUNTED LED W/ SEALED & GASKETED OPTICAL SYSTEM. FINISH SHALL BE BLACK CORROSION-RESISTANT POLYESTER ENAMEL.	LITHONIA- TWS-LED-P1-50K-MVOLT-PE. OR APPROVED EQUAL.

LICENSED ARCHITECT NICK M. GIANNINI No.24997 Exp.7-19 STATE OF CALIFORNIA

REVISIONS	SYMBOL	DATE	REMARKS	BY:
	△	.	.	.
	△	.	.	.
	△	.	.	.
	△	.	.	.

DRAWN BY:	PK
DESIGNED BY:	PK
CHECKED BY:	NG
APPROVED BY:	NG

SHEET TITLE TYP. ENLARGED FLOOR PLAN, DETAIL & FIXTURE SCHEDULES
PROJECT CAMP ROBERTS - BARRACKS RENOVATION
PROJECT NUMBER: 06R1904-27
LOCATION CAMP ROBERTS, CALIFORNIA
DATE: APR 11, 2019
STATE OF CALIFORNIA MILITARY DEPARTMENT

SHEET NUMBER
E3

17 OF 19

SHEET NOTES:

1. WIRING / RACEWAY ARE SHOWN DIAGRAMMATICALLY, PROVIDE CONDUIT AS NECESSARY TO SUIT FIELD CONDITION, PROVIDE SEPARATE WIRING LOOPS (ZONE) PER GROUP OF PULL STATIONS, SMOKE DETECTORS AND HORN / STROBES.
2. A. THE FIRE ALARM SYSTEM SHALL CONFORM TO THE 2016 CEC ARTICLE 760 AND THE 2016 CFC 105.7, AND CBC 907.
   B. ALL PLANS AND SHOP DRAWINGS SHALL USE THE SYMBOLS IDENTIFIED IN NFPA 170 2012 EDITION STANDARD FOR FIRE SAFETY AND EMERGENCY SYMBOLS CFC 907.1.2(14).
   C. AUDIBILITY AND VISIBILITY OF NOTIFICATION APPLIANCES TO BE FIELD VERIFIED. RELOCATION OF APPLIANCES AND / OR REQUIREMENT OF ADDITIONAL APPLIANCES MAY BE BASED ON FIELD TESTING.
3. PROVIDE CABLE SUPPORT IN FIRE ALARM TERMINAL CABINETS PER N.E.C.
4. FACP AND OTHER PANELS SHALL BE MOUNTED WITH CLEARANCE FOR OBSERVATION AND TESTING, AND ALL FIRE ALARM JUNCTION BOXES SHALL BE MARKED FOR IDENTIFICATION.
5. NO WIRING OTHER THAN DIRECTLY ASSOCIATED WITH FIRE ALARM DETECTION ALARM OR AUXILIARY FIRE PROTECTION FUNCTIONS SHALL BE PERMITTED IN THE ALARM CONDUITS.
6. ALL WIRING SHALL BE CHECKED AND TESTED TO ENSURE THAT THERE ARE NO GROUNDS, OPEN OR SHORTS.
7. WIRING SHALL NOT BE LOOPED THROUGH DEVICES. WIRE SHALL BE CUT FOR IN AND OUT.
8. WHENEVER TWO OR MORE STROBE APPLIANCES ARE VISIBLE FROM ANY GIVEN LOCATION, THOSE STROBES SHALL BE SYNCHRONIZED.
9. ALL DEVICES IN THE ALARM SYSTEM SHALL BE COMPATIBLE AND INSTALLED TO MANUFACTURES SPECIFICATION.
10. AT COMPLETION OF THE PROJECT, A COPY OF "AS BUILT" DRAWINGS SHALL BE PROVIDED TO THE OWNER ALONG WITH WRITTEN OPERATION INSTRUCTION AND MAINTENANCE/TESTING INFORMATION.

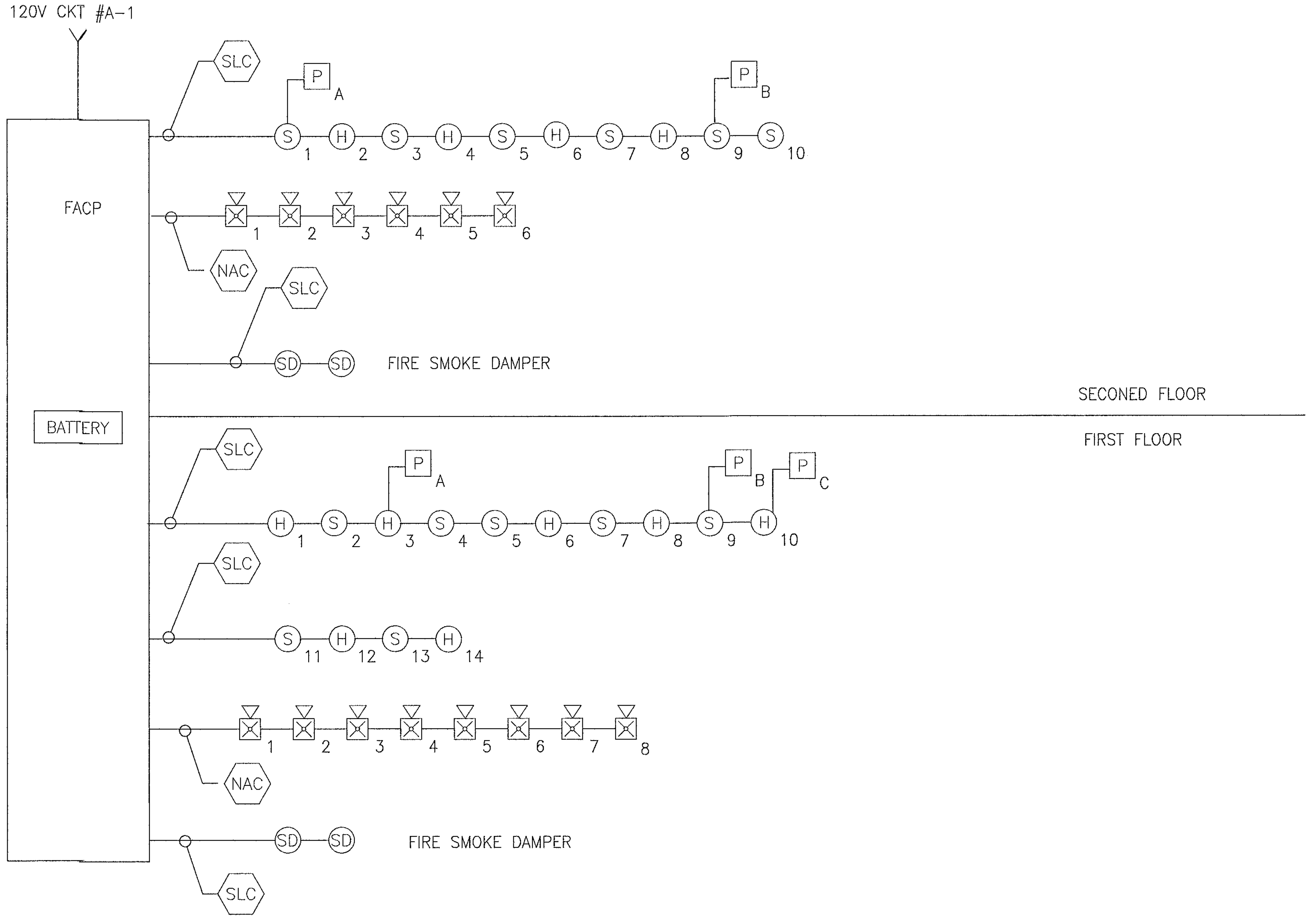
120V CKT #A-1
FACP
BATTERY
SLC
P
A
B
C
S
H
1
2
3
4
5
6
7
8
9
10
11
12
13
14
NAC
SD
FIRE SMOKE DAMPER
SECONED FLOOR
FIRST FLOOR

1 FIRE ALARM RISER DIAGRAM
Scale: NONE

NOTES:

1. SEE FLOOR PLAN FOR TOTAL QUANTITY OF FIRE ALARM DEVICES.

REQUIREMENTS FOR FIRE ALARM PLAN REVIEW

A. BUILDING DATA INFORMATION.
B. SCOPE OF PROJECT.
C. CURRENT CALIFORNIA STATE FIRE MARSHAL (CSFM) LISTING SHEETS FOR ALL COMPONENTS.
D. MANUFACTURER'S SPECIFICATION SHEET ON ALL FIRE ALARM EQUIPMENT.
E. SYMBOL OF ALL FIRE ALARM DEVICES BEING INSTALLED.
F. FLOOR PLAN SHOWING FIRE ALARM DEVICES 1/8 INCH SCALE.
G. FLOOR PLAN SHOWING ROOM IDENTIFICATION 1/8 INCH SCALE.
I. LOCATION OF ALL FIRE RATED WALLS ON FLOOR PLAN WITH A CORRESPONDING WALL LEGEND.
J. SEQUENCE OF OPERATION MATRIX TABLE.
K. SINGLE LINE RISER DIAGRAM.
L. POINT TO POINT WIRING DIAGRAM.
M. BATTERY CALCULATION.
N. VOLTAGE DROP CALCULATION.
O. IDENTIFICATION OF TYPE OF WIRING USED.
P. ELEVATION DETAIL OF MANUAL FIRE ALARM BOX AND VISUAL DEVICES.
Q. DESIGN NUMBER AND DETAIL FOR THROUGH PENETRATION FIRESTOP SYSTEM.

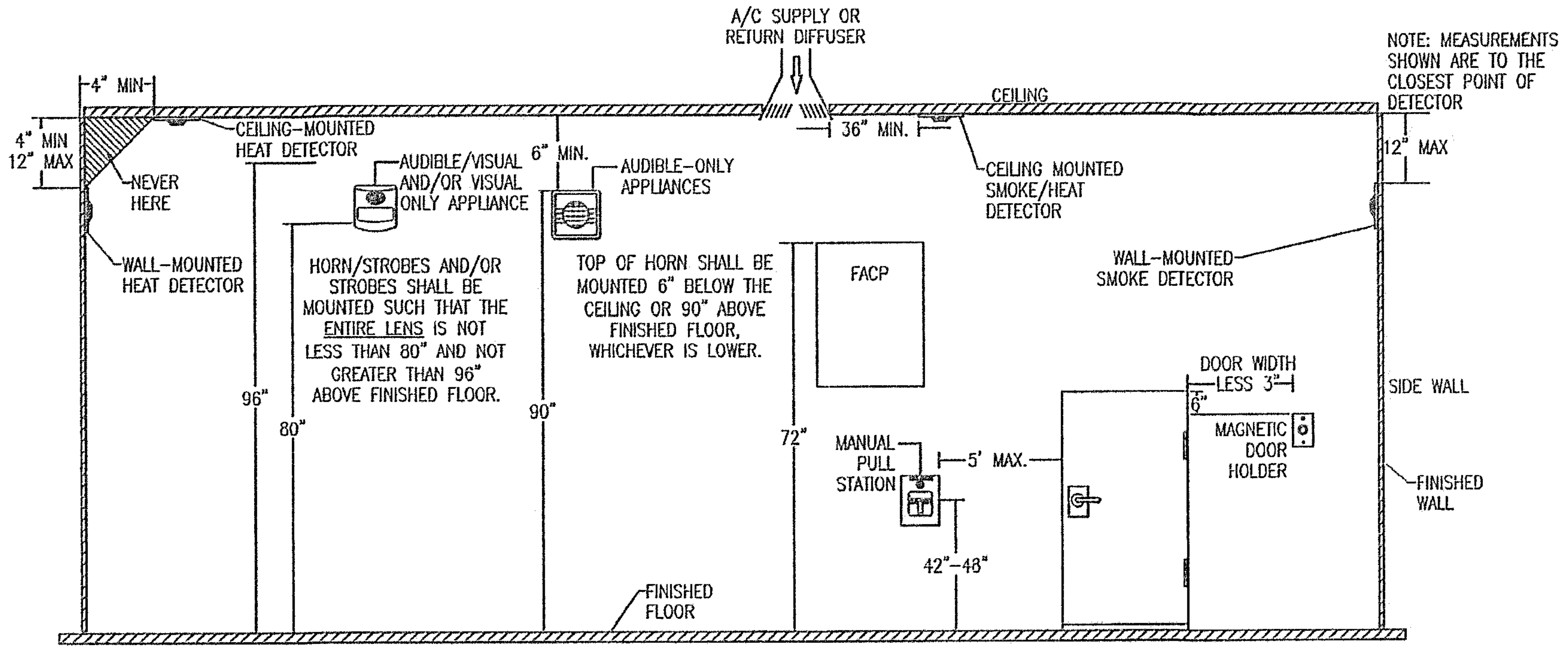
A/C SUPPLY OR RETURN DIFFUSER
NOTE: MEASUREMENTS SHOWN ARE TO THE CLOSEST POINT OF DETECTOR
4" MIN
CEILING
4" MIN
12" MAX
CEILING-MOUNTED HEAT DETECTOR
AUDIBLE/VISUAL AND/OR VISUAL ONLY APPLIANCE
6" MIN.
AUDIBLE-ONLY APPLIANCES
36" MIN.
CEILING MOUNTED SMOKE/HEAT DETECTOR
12" MAX
NEVER HERE
WALL-MOUNTED HEAT DETECTOR
HORN/STROBES AND/OR STROBES SHALL BE MOUNTED SUCH THAT THE ENTIRE LENS IS NOT LESS THAN 80" AND NOT GREATER THAN 96" ABOVE FINISHED FLOOR.
TOP OF HORN SHALL BE MOUNTED 6" BELOW THE CEILING OR 90" ABOVE FINISHED FLOOR, WHICHEVER IS LOWER.
FACP
WALL-MOUNTED SMOKE DETECTOR
DOOR WIDTH
LESS 3"
6"
SIDE WALL
MAGNETIC DOOR HOLDER
96"
80"
90"
72"
MANUAL PULL STATION
5' MAX.
42"-48"
FINISHED FLOOR
FINISHED WALL

FIRE ALARM DEVICE MOUNTING HEIGHTS
SCALE: NOT TO SCALE

No. 24997
Exp. 7-19

REVISIONS	SYMBOL	DATE	REMARKS	BY:
	△			
	△			
	△			
	△			

DRAWN BY: PK
DESIGNED BY: PK
CHECKED BY: NG
APPROVED BY: NG

SHEET TITLE TYP. FIRE ALARM SYMBOLS, LEGEND, ABBREVS & DIAGRAM
PROJECT CAMP ROBERTS - BARRACKS RENOVATION
PROJECT NUMBER: 06R1904-27
LOCATION CAMP ROBERTS, CALIFORNIA
STATE OF CALIFORNIA MILITARY DEPARTMENT
DATE: APR 11, 2019

SHEET NUMBER
E4

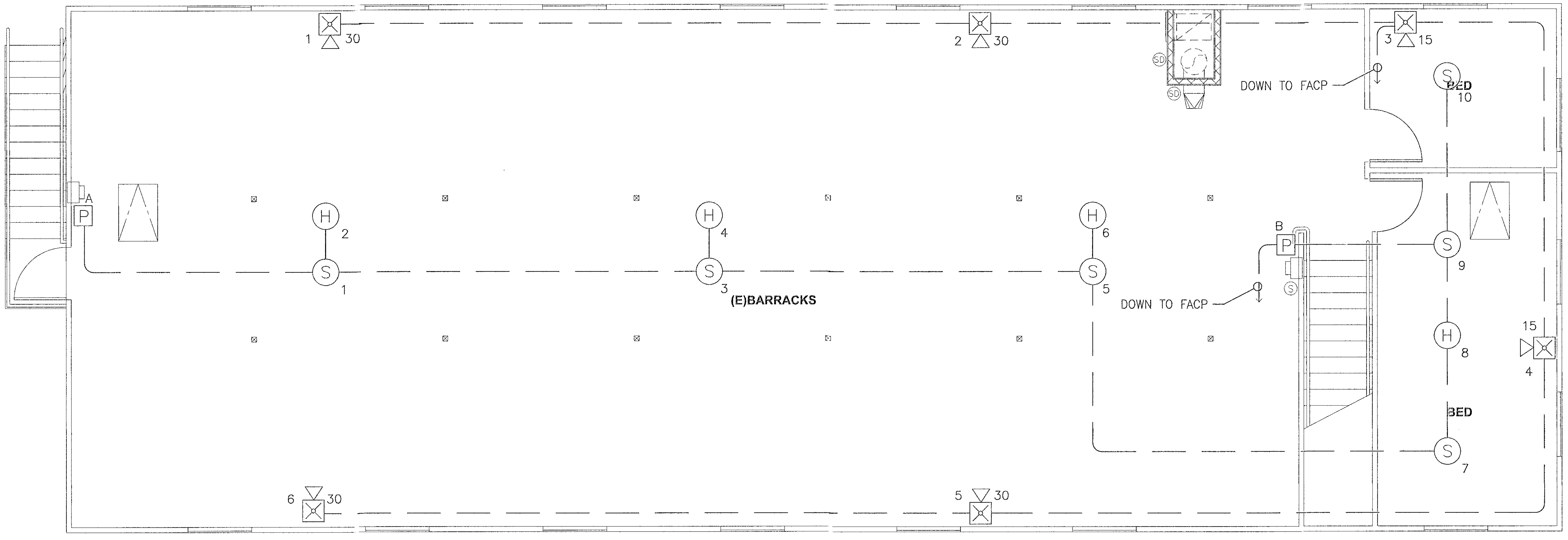
1 30
2 30
3 15
DOWN TO FACP
BED 10
A
P
H 2
S 1
H 4
S 3
(E)BARRACKS
H 6
S 5
B
P
DOWN TO FACP
S 9
H 8
15
4
BED
S 7
6 30
5 30

2ND FLOOR FIRE ALARM PLAN
Scale: 1/4"=1'-0"

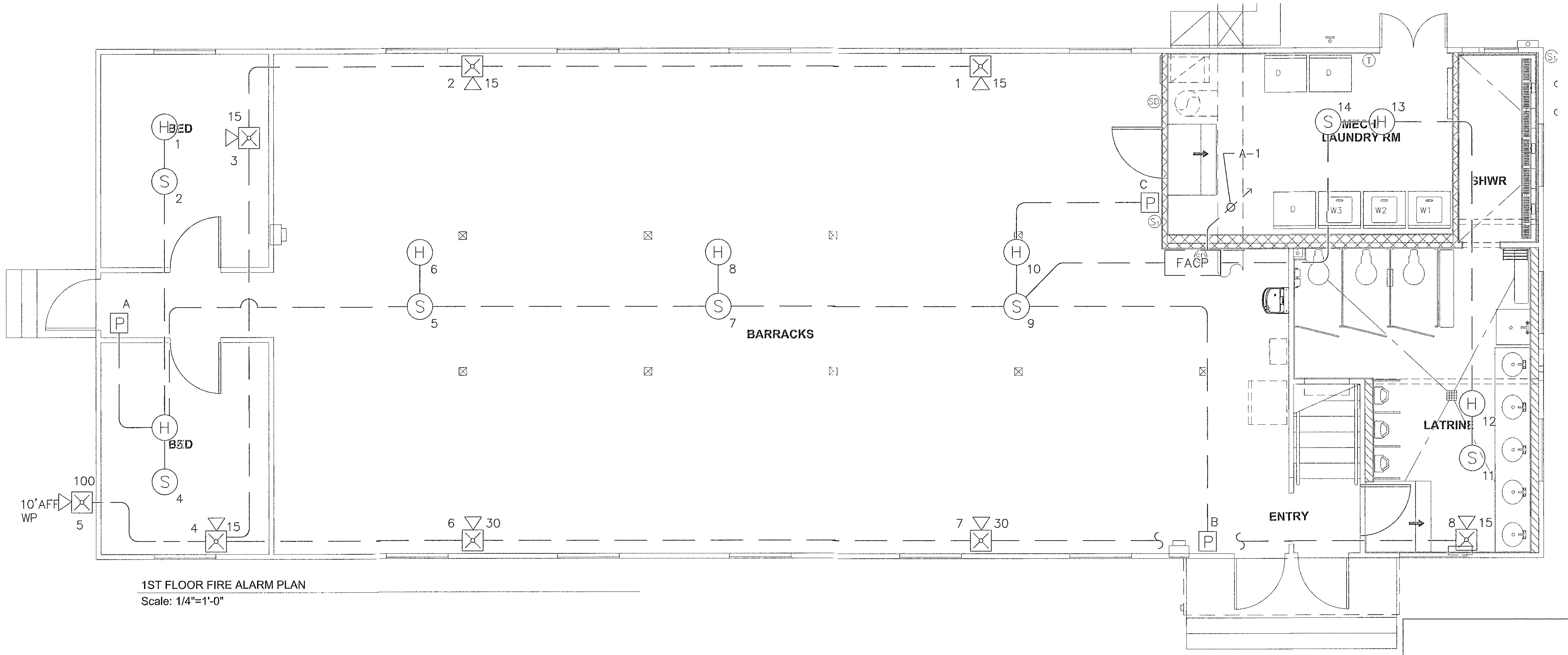
2 15
1 15
14
13
MECH
LAUNDRY RM
SHWR
D
W3
W2
W1
A-1
C
P
FACP
15
3
H BED 1
S 2
A
P
H 6
S 5
H 8
S 7
BARRACKS
H 10
S 9
H
BED
S 4
100
10'AFF WP
5
4 15
6 30
7 30
B
P
ENTRY
H 12
LATRINE
S 11
8 15

1ST FLOOR FIRE ALARM PLAN
Scale: 1/4"=1'-0"

FIRE ALARM SYMBOL LEGEND:

FACP	FIRE ALARM CONTROL PANEL
H	INTELLIGENT HEAT DETECTOR
S	INTELLIGENT AREA TYPE SMOKE DETECTOR – PHOTO
P	INTELLIGENT MANUAL PULL STATION – NON CODED
☒◁	WALL MOUNTED HORN/STROBE

X 30 dB
STROBE CANDELA
DEVICE NUMBER

1–#18/2 TWP
WIRE TYPE ABBREVIATED
CONDUCTOR COUNT
WIRE SIZE
#OF CABLES (IF OMITTED ONLY 1 CABLE NEEDED)

ABBREVIATION	DESCRIPTION
AWG	AMERICAN WIRE GAUGE
TWP	TWISTED PAIR
TWSP	TWISTED SHIELDED PAIR
FPLP	FIRE POWER LIMITED PLENUM
FPLR	FIRE POWER LIMITED RISER

CIRCUIT LEGEND

CALLOUT	PRODUCT DESCRIPTION	CIRCUIT TYPE	WIRE TYPE & QTY	CLASS
SLC	FPLP, 300V, INSULATED 105°C	SIGNALING LINE CIRCUIT	1–#16/2 TWP FPLP	CLASS A
NAC	THHN, 600V, INSULATED 90°C	NOTIFICATION CIRCUIT	2–#14–THHN	CLASS B

LICENSED ARCHITECT
NICK M. GIANNINI
No.24997
Exp.7–19
STATE OF CALIFORNIA

REVISIONS	SYMBOL	DATE	REMARKS	BY:
	△	.	.	.
	△	.	.	.
	△	.	.	.
	△	.	.	.

DRAWN BY:	PK
DESIGNED BY:	PK
CHECKED BY:	NG
APPROVED BY:	NG

SHEET TITLE TYPICAL FIRE ALARM PLANS
PROJECT CAMP ROBERTS – BARRACKS RENOVATION
LOCATION CAMP ROBERTS, CALIFORNIA
PROJECT NUMBER: 06R1904-27
STATE OF CALIFORNIA MILITARY DEPARTMENT
DATE: APR 11, 2019

SHEET NUMBER
E5

19 OF 19

SEISMIC NOTES

1. SWAY BRACES SHALL BE DESIGN AND INSTALLED IN COMPLIANCE WITH NFPA 13, 2016 EDITION. CALCULATION BASED ON ZONE OF INFLUENCE. (SEE DETAIL SHEET FOR SEISMIC BRACING CALCULATION)

HANGER NOTES - STEEL PIPE

1. 3/8" A.T.R. ROD SHALL BE USED ON PIPES 1 TO 4 INCHES. ½" ATR FOR 5, 6 & 8 INCHES PIPE, AND 5/8" ATR FOR 10 & 12 INCHES PIPE.
2. THE MAX. UNSUPPORTED LENGTH FROM THE END OF A LINE TO HANGER SHALL BE 36" FOR 1", 48" FOR 1¼, 60" FOR 1½" PIPE AND ABOVE.
3. THE MAXIMUM HANGER SPACING SHALL BE 12 FT. FOR 1" TO 1¼" PIPE, 15 FT. FOR 1½" PIPE AND ABOVE EXCEPT THREADED LIGHT WALL. FOR THREADED LIGHT WALL MAXIMUM SPACING IS 12 FT. FOR PIPE UP TO 3 IN.(UNLESS NOTED OTHERWISE).
4. HANGERS ARE REQUIRED ON ARM-OVER EXCEEDING 2 FT. FROM CENTER TO CENTER
5. ALL HANGERS SHALL BE IN ACCORDANCE WITH NFPA-13, 2016 EDITION. TABLE 9.2.2.1(a). ALL ARM-OVER MORE THAN 2'-0 SHALL HAVE HANGER. IF STATIC PRESSURE EXCEEDS 100 PSI, HANGER IS REQUIRED ON ARM-OVER MORE THAN 1'-0".
6. RESTRAINT OF BRANCH LINES SHALL NOT APPLY TO PIPES INDIVIDUALLY SUPPORTED BY RODS LESS THAN 6 IN. LONG MEASURED BETWEEN THE TOP OF THE PIPE AND THE POINT OF ATTACHMENT TO THE BUILDING STRUCTURE. (NFPA 13, 2016, SEC. 9.3.6.5)

FOR CPVC HANGER NOTES SEE DETAIL SHEET.

GENERAL NOTES:

1. THIS FIRE SPRINKLER SYSTEM SHALL BE DESIGNED AND INSTALLED PER NFPA 13, 2016 EDITION, UFC 3-600-01.
2. THE SPRINKLER CONTRACTOR WILL PROVIDE THE OWNER WITH THE NECESSARY INSTRUCTION MANUALS FOR THE UPKEEP OF THE SYSTEM.
3. THE SYSTEM SHALL ONLY EMPLOY THE USE OF U.L. LISTED MATERIALS AND DEVISES.
4. PROVIDE ALL EQUIPMENT, I.E., CONTROL VALVES, BACKFLOW PREVENTER, CHECK VALVES, FLOOR CONTROL VALVE ASSEMBLIES WITH A MINIMUM CLEARANCE OF 3 FEET.
5. A SET OF APPROVED PLANS SHALL BE MAINTAINED AT ALL TIMES ON THE JOB SITE.
6. AN APPOINTMENT SHALL BE MADE A MINIMUM OF TWO (2) WORKING DAYS IN ADVANCE WITH THE APPROPRIATE FIRE PREVENTION OFFICE FOR ALL INSPECTIONS AND TEST.
7. ALL SYSTEM PIPING SHALL BE HYDROSTATICALLY TESTED AT 200 PSI FOR TWO HOURS, OR AT 50 PSI ABOVE THE SYSTEM OPERATING PRESSURE, WHICHEVER IS GREATER.
8. FIRE DEPARTMENT CONNECTIONS SHALL BE VISIBLE, ACCESSIBLE, HAVE NST FEMALE OUTLETS & PROTECTIVE CAPS, AND AN APPROVED CHECK VALVE IN THE MAIN LINE (AS CLOSE TO THE FDC AS POSSIBLE).
9. ALL VALVES SHALL HAVE A PERMANENTLY AFFIXED SIGN INDICATING ITS FUNCTION.
10. A STOCK OF TWELVE (12) SPARE SPRINKLERS OF EACH STYLE, TYPE, AND TEMPERATURE RATING, ALONG WITH A SPRINKLER WRENCH, SHALL BE LOCATED AT EACH RISER, PER NFPA 13, 6.2.9.5
11. AUTOMATIC SPRINKLER SYSTEM SHALL BE SUPERVISED BY AN APPROVED, PROPRIETARY OR REMOTE STATION SERVICE OR A LOCAL ALARM WHICH WILL GIVE AN AUDIBLE SIGNAL AT A CONSTANTLY ATTENDED LOCATION.
12. OVERHEAD PIPING SHALL NOT BE COVERED OR CONNECTED UNTIL A HYDROSTATIC TEST HAS BEEN COMPLETED.
13. ALL DIMENSIONS ARE CENTER TO CENTER.
14. ONLY NEW SPRINKLERS SHALL BE EMPLOYED IN THE INSTALLATION OF THE SPRINKLER SYSTEM.
15. ALL NEW SPRINKLERS TO BE QUICK RESPONSE.
16. ALL PIPING SHALL BE IDENTIFIED IN ACCORDANCE WITH UFC 3-600-01 (SECTION 9-6.8).
17. PROVIDE SCHEDULE 40 STEEL PIPING FOR SIZES LESS THAN 2-INCHES IN DIAMETER. PROVIDE NO LESS THAN SCHEDULE 10 STEEL PIPING FOR SIZES 2-INCHES AND LARGER. ON FIRST FLOOR AND EXPOSED PIPE AREAS.
18. PROVIDE UL LISTED SCHEDULE 40 CPVC PIPE AT THE 2ND FLOOR.
19. PLAIN END FITTINGS WITH MECHANICAL COUPLINGS AND FITTINGS THAT USE STEEL GRIPPING DEVICES TO BIT INTO THE PIPE ARE PROHIBITED. STEEL PIPING WITH WALL THICKNESS LESS THAN SCHEDULE 40 MUST NOT BE THREADED.
20. FERROUS PIPING: WELDED OR SEAMLESS STEEL, ASTM A-53 WITH WELDING PERFORMED BY A CERTIFIED WELDER.
21. A METAL CALCULATION PLATE INDICATING THE HIGHEST RESIDUAL PRESSURE REQUIRED FOR THE SYSTEM OPERATION SHALL BE PERMANENTLY ATTACHED TO THE RISER.
22. A FINAL INSPECTION IS REQUIRED ON ALL SYSTEMS.

CONTRACTOR NOTES:

1. ALL PIPE DIMENSIONS ARE CENTER TO CENTER.
2. PIPING IS SHOWN AS NEAR AS POSSIBLE. HOWEVER EXACT LOCATIONS WITH REGARDS TO THE BUILDING STRUCTURE SHALL BE VERIFIED AND DETERMINED IN THE FIELD PRIOR TO FABRICATION AND INSTALLATION.
3. CONTRACTOR TO BE RESPONSIBLE FOR INSTALLING COMPLETE INSTALLATION AND SHALL CONFIRM AS-BUILT CONDITIONS PRIOR TO ANY WORK.
4. CONTRACTOR SHALL VERIFY EXACT LOCATION OF ALL POSSIBLY INTERFERING PIPING, STRUCTURAL AND MISCELLANEOUS ITEMS BEFORE INSTALLATION OF SPRINKLER SYSTEMS TO AVOID INTERFERENCE.
5. PROVIDE EXTENDED ESCUTCHEON WHEN SURFACE MOUNTED FIXTURES PLACE ON THE CEILING CREATING AN OBSTRUCTION TO FIRE SPRINKLERS COVERAGE, SHALL COMPLY WITH NFPA 13 REQUIREMENTS.
6. FIRE STOPPING TO BE PROVIDED AT ALL FIRE SPRINKLER PIPE PENETRATIONS OF RATED CONSTRUCTION.

BUILDING CODE INFORMATION

BUILDING CONSTRUCTION TYPE:	TYPE V-B
OCCUPANCY CLASSIFICATION:	R-1
S.F. / OCCUPANCY	5,160
NUMBER OF STORIES:	2
ACTUAL BUILDING HEIGHT:	23'-6"
BUILDING AREA (S.F.):	5,160
AREA OF PROJECT (S.F.):	5,160 S.F.

SCOPE OF WORK

PROVIDE NEW, WET-PIPE AUTOMATIC FIRE SPRINKLER SYSTEM THROUGHOUT (E) 24 BARRACKS (BUILDINGS 4212-4219, 4302-4309, AND 4312-4319) AS A PART OF THE RENOVATION PROJECT.

NEW FIRE SPRINKLER SYSTEM POINT OF CONNECTION WILL BE 6 IN. ABOVE GRADE AT EACH BUILDING . ALL UNDERGROUND PIPING INSTALLATIONS TO BE BY OTHERS.

UNDERGROUND FIRE SERVICE PIPING AND COMPONENTS REFLECTED ON THESE PLANS IS SHOWN FOR REFERENCE AND HYDRAULIC CALCULATIONS PURPOSES ONLY. THE UNDERGROUND PIPE LENGTH SHOWN, AND UTILIZED FOR THE HYDRAULIC CALCULATIONS, HAS BEEN PROVIDED BY THE PROJECT CIVIL ENGINEER AND IS TO BE THE "WORST CASE" SCENARIO FOR THE ENTIRE PROJECT. COMPLETE SITE PLAN SHOWING ALL FIRE SERVICE CONNECTIONS AND UNDERGROUND PIPING INSTALLATION IS TO BE PROVIDED, AND CAN BE REFERENCED, ON THE PROJECT CIVIL DRAWINGS.

WALL LEGENDS

▭	(E) WOOD FRAMED WALLS
2x6 (E) 2x	1 HR RATED WALL - (E) WOOD STUD WALL W/ FURRED WALL W/ 2x6 STUDS @ 16" O.C. W/ 5/8" TYPE X GYP BD ON EACH SIDE W/ R-13 INSULATION.
(E) 2x	1 HR RATED WALL - (E) WOOD STUD WALL W/ 5/8" TYPE X GYP BD ON EACH SIDE W/ R-13 INSULATION
2x	WOOD FRAMED FURRED WALL W/ 2x6 STUDS @ 16" O.C. FULL HEIGHT UON. 5/8" WATER RESISTANT GYP BD OVER 5/8" CDX STRUCT 1 PLYWOOD IN LATRINE
2x	WOOD FRAMED FURRED WALL W/ 2x FLAT STUDS @ 16" O.C. SHEATH WITH 5/8" CCX STRUCT 1 PLYWOOD W/ POLYUREA COATING OVER AT EXTERIOR WALLS IN SHOWER

SHEET INDEX:

FS00 - SITE PLAN, GENERAL NOTES, FIRE HYDRANT TEST DATA
FS10 - TYPICAL FLOOR PLANS
FS20 - TYPICAL DETAILS
FS30 - SEISMIC BRACING DETAILS

SYMBOLS + LEGENDS

⊕	SPRINKLER RISER		
◉	NEW SPRINKLER CONCEALED PENDENT - 155°		
⊗	NEW SPRINKLER PENDENT - 155°	⊗CR	NEW SPRINKLER PENDENT 155° CORROSION RESISTANT (SHOWER AREA)
⊗	NEW SPRINKLER PENDENT - 200°		
○ ●	PIPE UP OR DOWN		
⟨00⟩	HYDRAULIC REFERENCE NODE		
━	NEW SPRINKLER PIPE		
━/━	TYP. HANGER LOCATION		
	SPRINKLER BELL		
— — —	NEW UNDERGROUND PIPE		
	FDC		
	FIRE HYDRANT		
BFP	BACKFLOW PREVENTER ASSEMBLY		
	LATERAL SWAY BRACE		
	LONGITUDINAL SWAY BRACE		
	4-WAY EARTHQUAKE BRACE		

SPRINKLER HEAD INFO.:

SYM.	MANUFACTURER	SIN	NPT	K	TEMP	DESCRIPTION	QTY.
◉	VIKING	VK494	½	4.9	155	Q.R. RESIDENTIAL CONCEALED PENDENT	19
⊗	VIKING	VK494	½	4.9	200	Q.R. RESIDENTIAL CONCEALED PENDENT	3
⊗	VIKING	VK468	½	4.9	155	Q.R. RESIDENTIAL RECESSED PENDENT	24
CR⊗	VIKING	VK468	½	4.9	155	Q.R. RESIDENTIAL RECESSED PENDENT, CORROSION RESISTANCE (ENT)	1
						TOTAL	47

NEW LIGHT FIXTURES TO BE SURFACE MOUNT AND WITH 2¾" HEIGHT PER MANUFACTURER. (SPRINKLER HEADS SHALL BE MINIMUM OF 2'-6" AWAY TO AVOID THE OBSTRUCTION, OTHERWISE, ADDITIONAL HEAD SHALL BE PROVIDED)

APPLICABLE CODES

- UFC 3-600-01, FIRE PROTECTION ENGINEERING FOR FACILITIES, CHANGE 4, FEB 7 2020
- UFC 3-301-01, STRUCTURAL ENGINEERING , 10-01-2019
- NFPA 13R, AUTOMATIC SPRINKLER SYSTEMS FOR RESIDENTIAL OCCUPANCIES 2016 EDITION

FIRE FLOW TEST DATA

TESTS PERFORMED AND WITNESSED BY:
ALPHA FIRE UNLIMITED
DANNY LAMBERT AND JOSH BROWN
650 SWEENEY LANE
SAN LUIS OBISPO, CA 93401

HYDRANT SET 1, 10:30 AM, 11/08/2019:
STATIC: 80 PSIG
RESIDUAL: 75 PSIG
FLOW: 1218 GPM

HYDRANT SET 2, 9:45 AM, 11/08/2019:
STATIC: 80 PSIG
RESIDUAL: 75 PSIG
FLOW: 1195 GPM

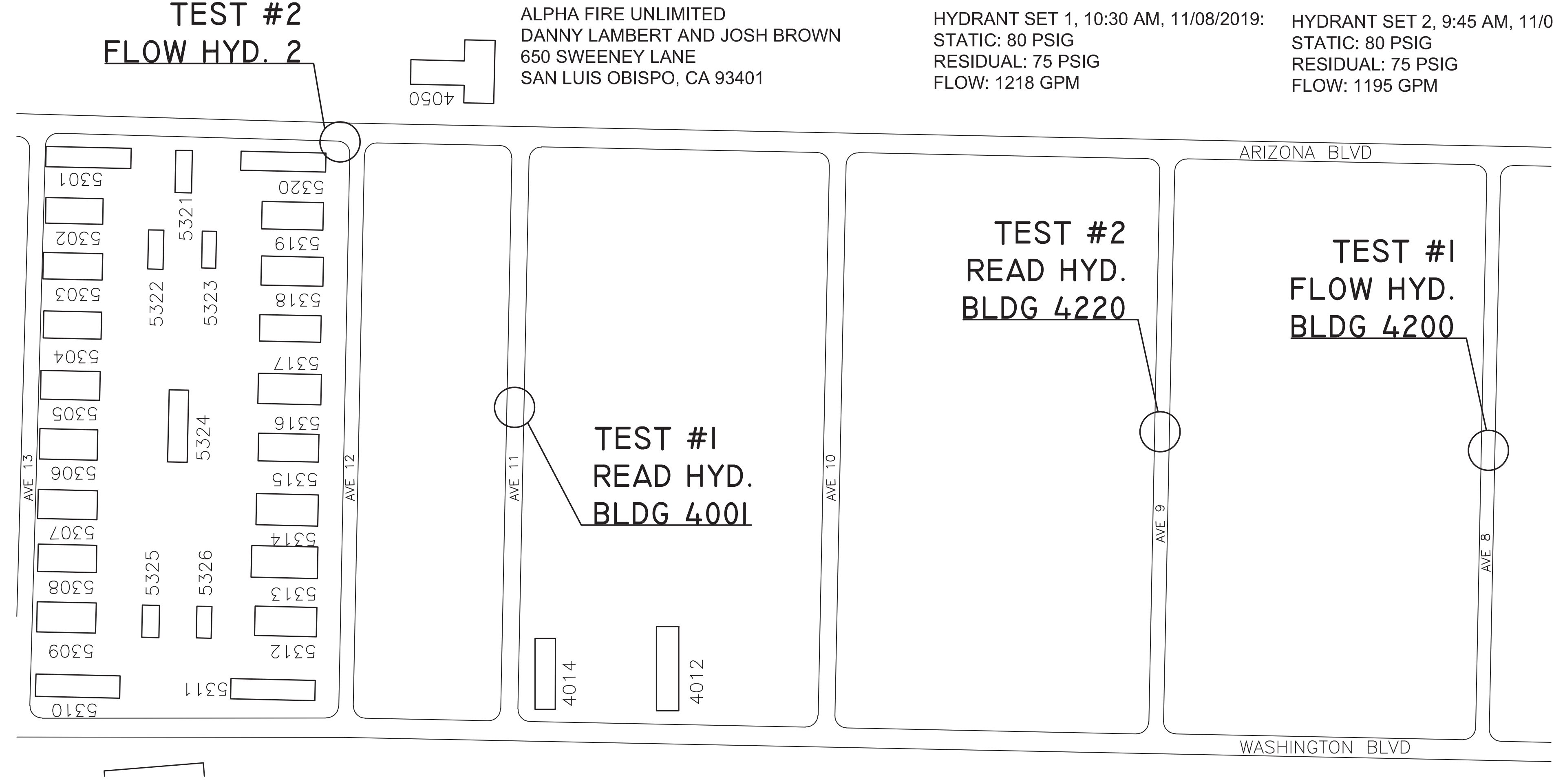

FIRE FLOW TEST MAP

SCALE: NONE

California Military Department

BARRACKS RENOVATION

CAMP ROBERTS, SAN MIGUEL, CA 93451-5000

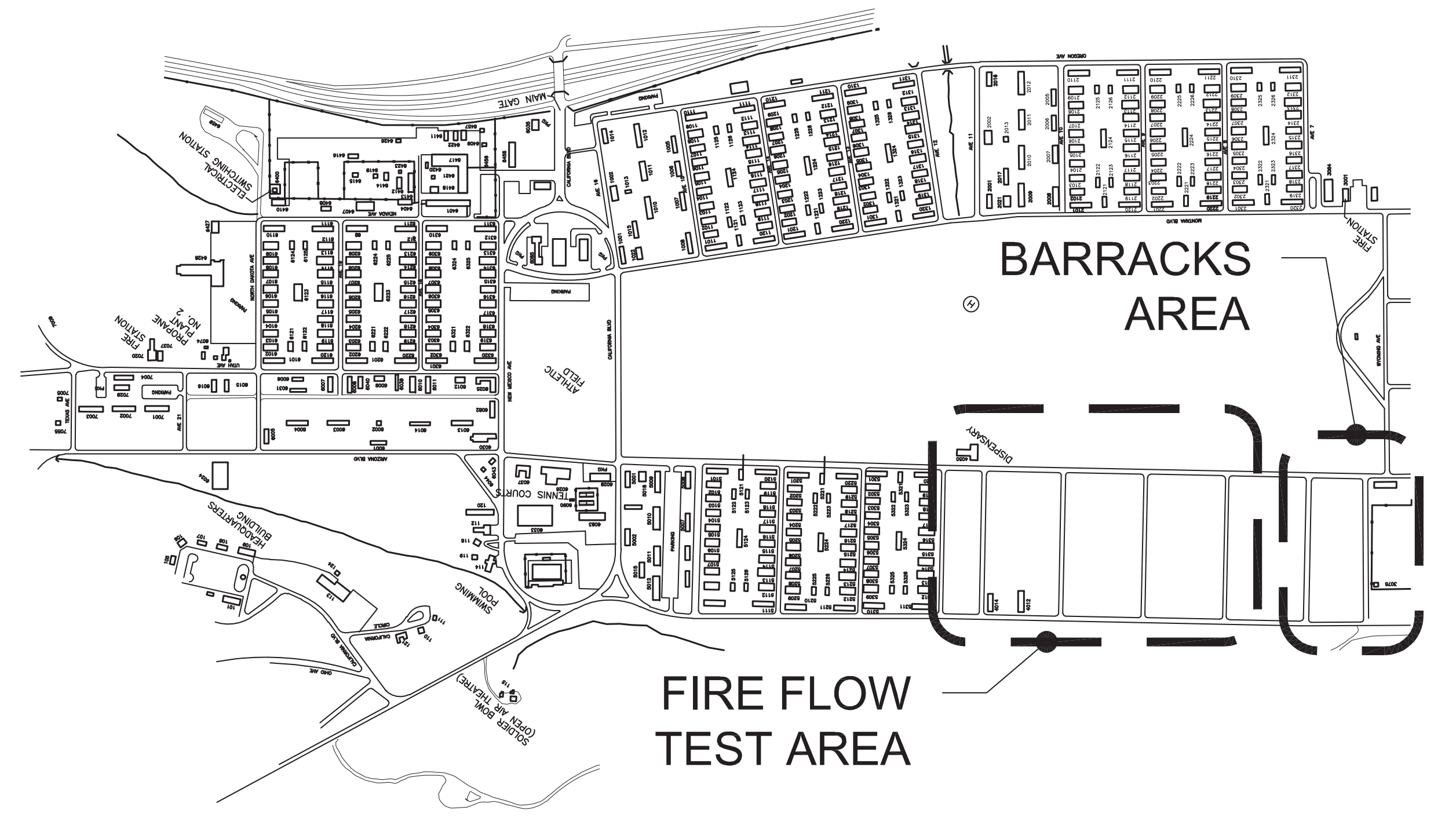

SITE PLAN

SCALE: NONE

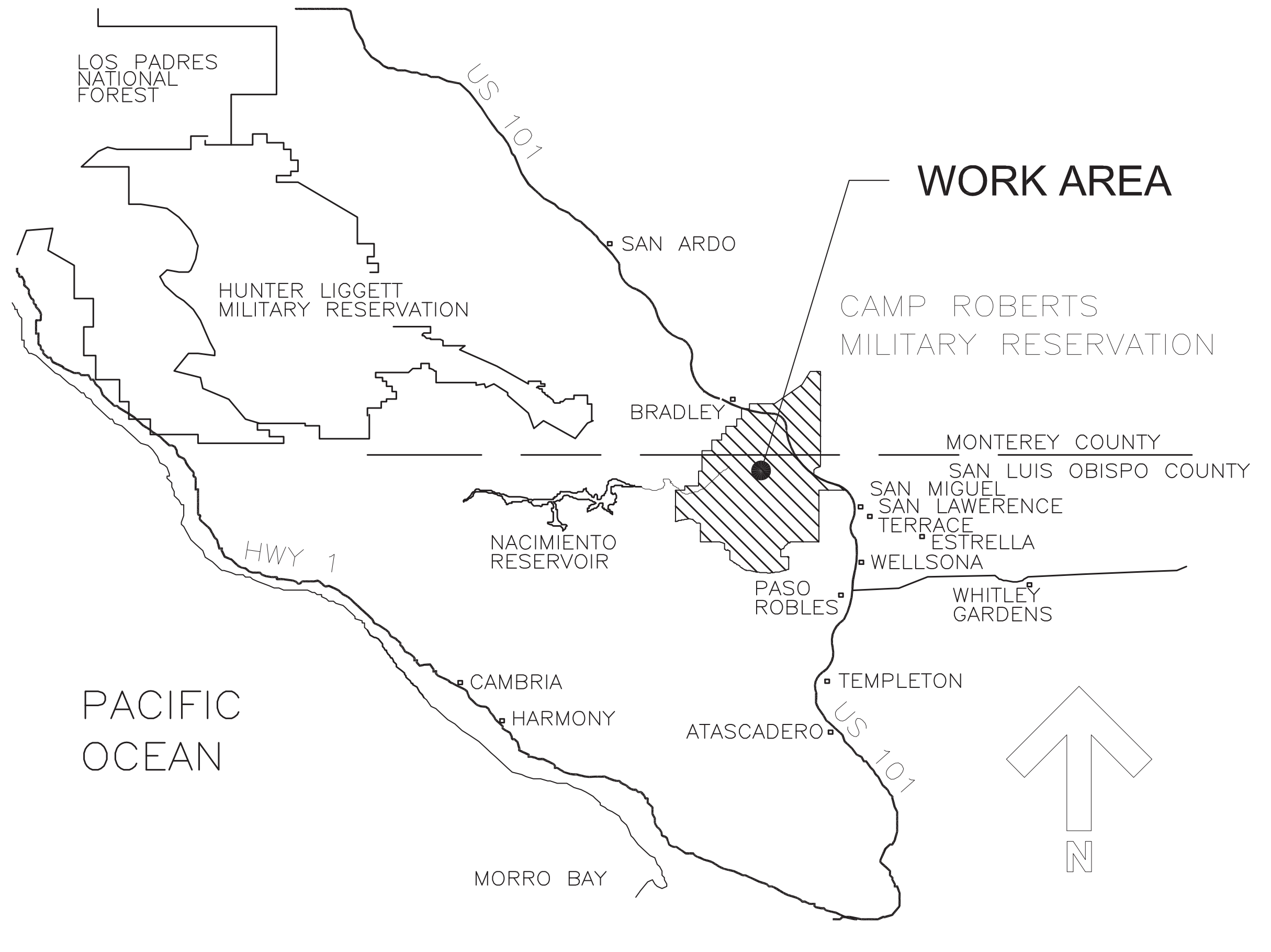

VICINITY MAP

SCALE: NONE

CAL GUARD
CALIFORNIA MILITARY DEPARTMENT
EST 1850

STATE OF CALIFORNIA
MILITARY DEPARTMENT

CALIFORNIA ARMY
NATIONAL GUARD

CAMP ROBERTS
SAN MIGUEL, CA

Revisions

Sym.	Descrip.	Date	By
	100 % CONSTRUCTION DOCUMENT	4/2/2020	

LICENSED FIRE PROTECTION ENGINEER
PAUL J. TRUTNER
No. 1934
Exp. 03/31/21
STATE OF CALIFORNIA

COLLINGS & ASSOCIATES
Fire Protection Engineering
260 Maple Court, Suite 241, Ventura, Ca 93003
Phone: (805) 658-0003 Fax: (805) 658-0044
www.collingsandassociates.com

Chkd. ______ Date ______

Sht Title: GENERAL NOTES

Project: CAMP ROBERTS
BARRACKS RENOVATION
FIRE SPRINKLER SYSTEM
(E) 24 BARRACKS (BUILDINGS 4212-4219, 4302-4309, AND 4312-4319)

Sheet
FS00

Plot By: Felipe Moreno   Plot Date: 4/28/2020   File Name:P:\Clients\Engineers\Yamabe & Horn\Camp Roberts Barracks\C&A Drawings\CAD\FS\06R1904-27_FS_100%_4-27-2020.dwg

95% CD

REMOTE AREA 1 :

BARRACKS 2ND FLOOR - 4 SPRINKLER HEADS CALCULATION WITHIN A COMPARTMENT, MINIMUM DENSITY OF 0.05 GPM/FT², PER SECTIONS 7.1.1.1 AND 7.1.1.3.1 OF THE NFPA 13R, 2016 EDITION.

EXISTING ROOF SLOPE < 2 TO 12 PER NFPA 13, 2016 EDITION SECTION 11.2.3.2.4. INCREASE AREA OF OPERATION IS NOT REQUIRED.

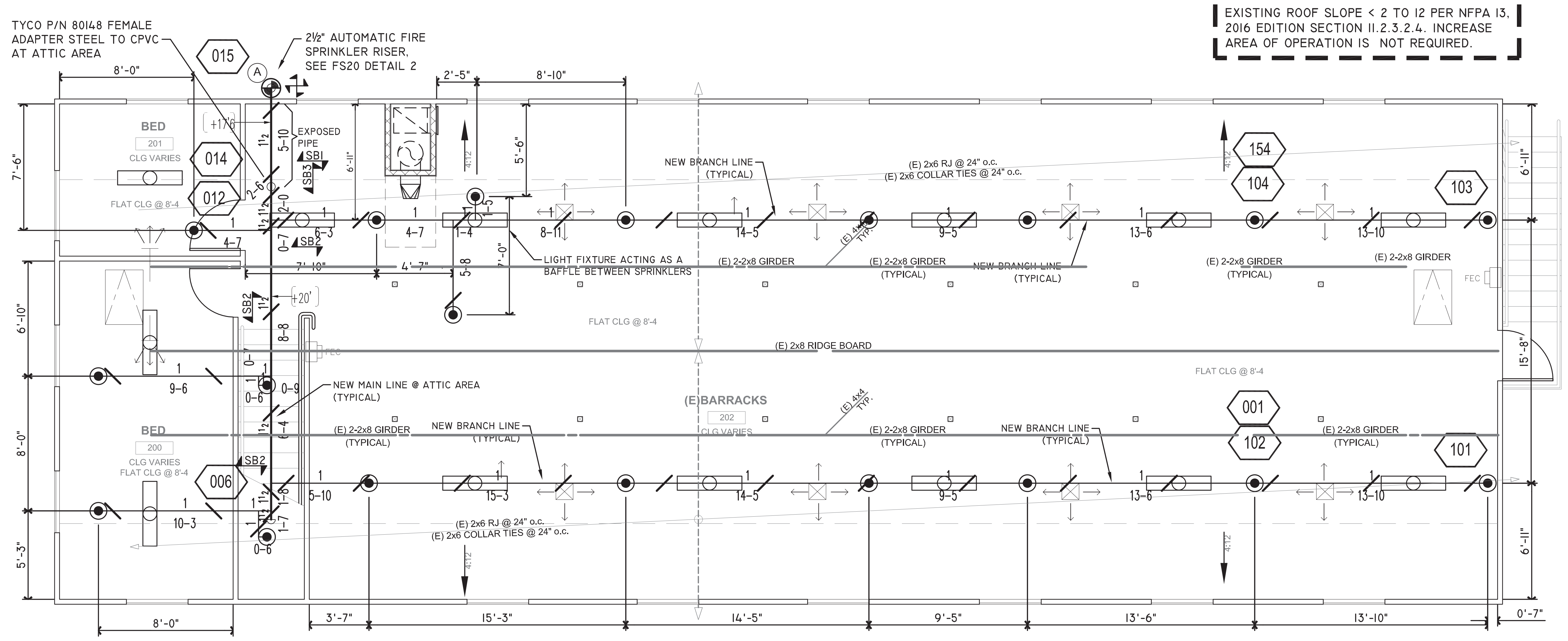
TYCO P/N 80148 FEMALE ADAPTER STEEL TO CPVC AT ATTIC AREA
2½" AUTOMATIC FIRE SPRINKLER RISER, SEE FS20 DETAIL 2
015
014
012
006
154
104
103
001
102
101
BED
201
CLG VARIES
FLAT CLG @ 8'-4
BED
200
EXPOSED PIPE
SB1
SB2
SB3
NEW BRANCH LINE (TYPICAL)
(E) 2x6 RJ @ 24" o.c.
(E) 2x6 COLLAR TIES @ 24" o.c.
LIGHT FIXTURE ACTING AS A BAFFLE BETWEEN SPRINKLERS
(E) 2-2x8 GIRDER (TYPICAL)
(E) 2x8 RIDGE BOARD
NEW MAIN LINE @ ATTIC AREA (TYPICAL)
(E) BARRACKS
202
FLAT CLG @ 8'-4
8'-0"
2'-5"
8'-10"
5'-6"
7'-6"
6'-10"
8'-0"
5'-3"
3'-7"
15'-3"
14'-5"
9'-5"
13'-6"
13'-10"
0'-7"
6'-11"
15'-8"

TYPICAL 2ND FLOOR FIRE SPRINKLER PLAN

SCALE : 3/16" = 1'-0"

0 4' 8' 16'

- 1st FLOOR FIRE SPRINKLER PIPE AND 2nd FLOOR EXPOSED PIPE TO BE STEEL SCHEDULE 40 STEEL.
- 2ND FLOOR FIRE SPRINKLER PIPE TO BE UL LISTED CPVC PIPE

REMOTE AREA 2 :

BARRACKS 1ST FLOOR - 4 SPRINKLER HEADS CALCULATION WITHIN A COMPARTMENT, MINIMUM DENSITY OF 0.05 GPM/FT², PER SECTIONS 7.1.1.1 AND 7.1.1.3.1 OF THE NFPA 13R, 2016 EDITION.

EXISTING ROOF SLOPE < 2 TO 12 PER NFPA 13, 2016 EDITION SECTION 11.2.3.2.4. INCREASE AREA OF OPERATION IS NOT REQUIRED.

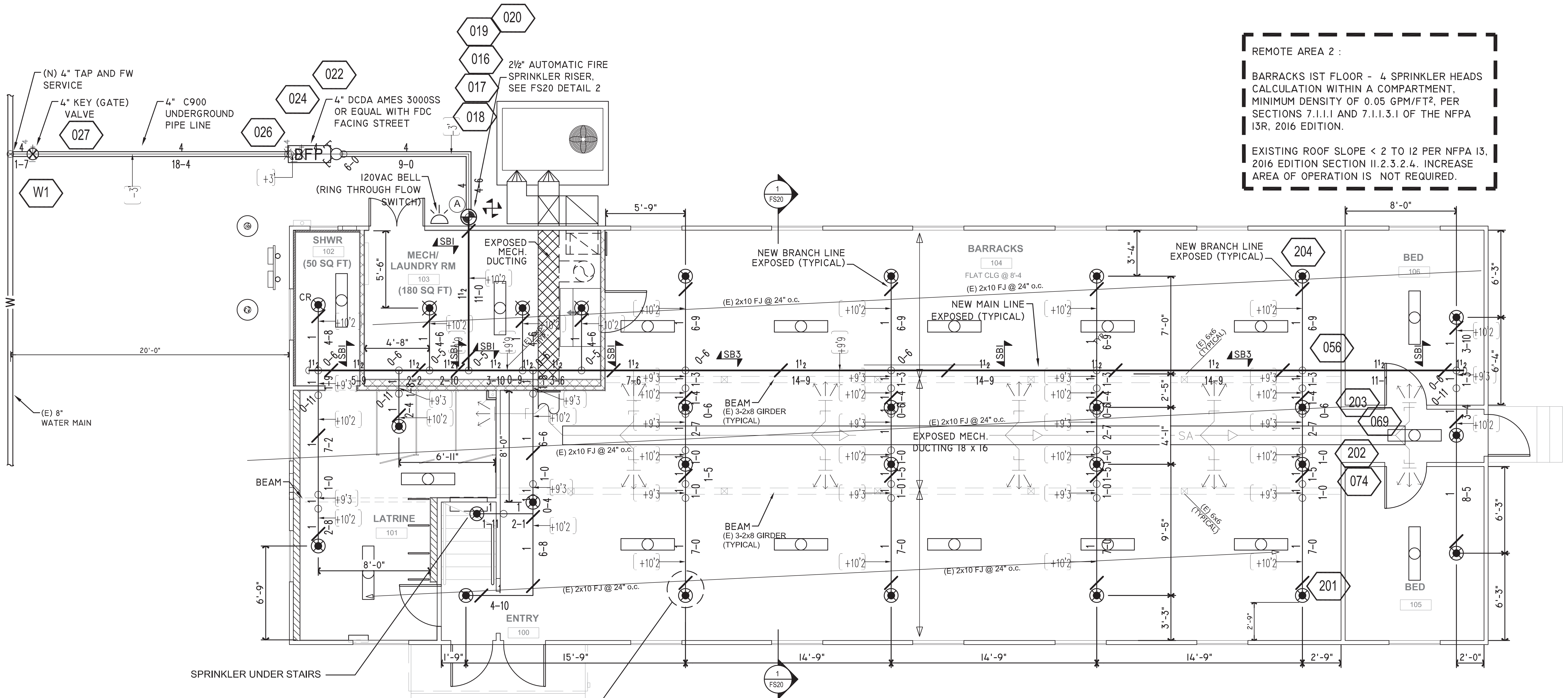
(N) 4" TAP AND FW SERVICE
4" KEY (GATE) VALVE
4" C900 UNDERGROUND PIPE LINE
4" DCDA AMES 3000SS OR EQUAL WITH FDC FACING STREET
120VAC BELL (RING THROUGH FLOW SWITCH)
2½" AUTOMATIC FIRE SPRINKLER RISER, SEE FS20 DETAIL 2
019
020
016
017
018
022
024
026
027
W1
BFP
(E) 8" WATER MAIN
20'-0"
18-4
9-0
SHWR
102
(50 SQ FT)
MECH/ LAUNDRY RM
103
(180 SQ FT)
EXPOSED MECH DUCTING
LATRINE
101
ENTRY
100
BARRACKS
104
FLAT CLG @ 8'-4
BED
106
BED
105
BEAM
BEAM (E) 3-2x8 GIRDER (TYPICAL)
(E) 2x10 FJ @ 24" o.c.
NEW BRANCH LINE EXPOSED (TYPICAL)
NEW MAIN LINE EXPOSED (TYPICAL)
EXPOSED MECH. DUCTING 18 X 16
204
056
203
069
202
074
201
SB1
SB3
CR
1 FS20
SPRINKLER UNDER STAIRS
5'-9"
8'-0"
6'-9"
1'-9"
15'-9"
14'-9"
14'-9"
14'-9"
2'-9"
2'-0"

SEE FS30 DETAILS #5 & #7 FOR TYPICAL HANGER DETAIL

TYPICAL 1ST FLOOR FIRE SPRINKLER PLAN

SCALE : 3/16" = 1'-0"

0 4' 8' 16'

- 1st FLOOR FIRE SPRINKLER PIPE AND 2nd FLOOR EXPOSED PIPE TO BE STEEL SCHEDULE 40 STEEL.
- 2ND FLOOR FIRE SPRINKLER PIPE TO BE UL LISTED CPVC PIPE

HYDRAULIC INFORMATION DESIGN AREA #1

DATE:	04/27/2020
OCCUPANCY:	RESIDENTIAL
LOCATION:	2ND FLOOR - BARRACKS
DENSITY:	0.05/1024 FT²
SPRINKLER TYPE(S):	PENDENT
SPRINK. RESPONSE TYPE:	Q.R.
MAXIMUM COVERAGE AREA: (PER SPRINKLER)	16 FT x 16 FT MAX 256 FT²
NO. SPRINKLER FLOWING:	4
SPRINKLER ORIFICE:	½"
K-FACTOR:	4.9
SPRINKLER TEMP:	155°
MIN. FLOW REQUIRED: (@ MOST DEMANDING SPRINKLER)	13.0 GPM
MIN. PRESSURE REQUIRED: (@ MOST DEMANDING SPRINKLER)	7 PSI
TOTAL HOSE STREAM:	100 GPM
WATER REQUIRED: (@ BASE OF RISER)	52.9 GPM
PRESSURE REQUIRED: (@ BASE OF RISER)	24.4 PSI
SAFETY MARGIN - PSI:	+46.2 PSI
DESIGNED & INSTALLED:	PER NFPA 13R, 2016 EDITION

HYDRAULIC INFORMATION DESIGN AREA #2

DATE:	04/27/2020
OCCUPANCY:	RESIDENTIAL
LOCATION:	1ST FLOOR - BARRACKS
DENSITY:	0.05/1024 FT²
SPRINKLER TYPE(S):	PENDENT
SPRINK. RESPONSE TYPE:	Q.R.
MAXIMUM COVERAGE AREA: (PER SPRINKLER)	16 FT x 16 FT MAX 256 FT²
NO. SPRINKLER FLOWING:	4
SPRINKLER ORIFICE:	½"
K-FACTOR:	4.9
SPRINKLER TEMP:	155°
MIN. FLOW REQUIRED: (@ MOST DEMANDING SPRINKLER)	13.0 GPM
MIN. PRESSURE REQUIRED: (@ MOST DEMANDING SPRINKLER)	7 PSI
TOTAL HOSE STREAM:	100 GPM
WATER REQUIRED: (@ BASE OF RISER)	63.2 GPM
PRESSURE REQUIRED: (@ BASE OF RISER)	34.6 PSI
SAFETY MARGIN - PSI:	+36.7 PSI
DESIGNED & INSTALLED:	PER NFPA 13R, 2016 EDITION

SEISMIC NOTES

1. SWAY BRACES SHALL BE DESIGN AND INSTALLED IN COMPLIANCE WITH NFPA 13, 2016 EDITION. CALCULATION BASED ON ZONE OF INFLUENCE.(SEE DETAIL SHEET FOR SEISMIC BRACING CALCULATION)

HANGER NOTES - STEEL PIPE

1. 3/8" A.T.R. ROD SHALL BE USED ON PIPES 1 TO 4 INCHES. ½" ATR FOR 5, 6 & 8 INCHES PIPE, AND 5/8" ATR FOR 10 & 12 INCHES PIPE.
2. THE MAX. UNSUPPORTED LENGTH FROM THE END OF A LINE TO HANGER SHALL BE 36" FOR 1", 48" FOR 1¼, 60" FOR 1½" PIPE AND ABOVE.
3. THE MAXIMUM HANGER SPACING SHALL BE 12 FT. FOR 1" TO 1¼" PIPE, 15 FT. FOR 1½" PIPE AND ABOVE EXCEPT THREADED LIGHT WALL. FOR THREADED LIGHT WALL MAXIMUM SPACING IS 12 FT. FOR PIPE UP TO 3 IN.(UNLESS NOTED OTHERWISE).
4. HANGERS ARE REQUIRED ON ARM-OVER EXCEEDING 2 FT. FROM CENTER TO CENTER
5. ALL HANGERS SHALL BE IN ACCORDANCE WITH NFPA-13, 2016 EDITION. TABLE 9.2.2.1(a). ALL ARM-OVER MORE THAN 2'-0 SHALL HAVE HANGER. IF STATIC PRESSURE EXCEEDS 100 PSI, HANGER IS REQUIRED ON ARM-OVER MORE THAN 1'-0".
6. RESTRAINT OF BRANCH LINES SHALL NOT APPLY TO PIPES INDIVIDUALLY SUPPORTED BY RODS LESS THAN 6 IN. LONG MEASURED BETWEEN THE TOP OF THE PIPE AND THE POINT OF ATTACHMENT TO THE BUILDING STRUCTURE. (NFPA 13, 2016, SEC. 9.3.6.5)

FOR CPVC HANGER NOTES SEE DETAIL SHEET.

SPRINKLER HEAD INFO.:

SYM.	MANUFACTURER	SIN	NPT	K	TEMP	DESCRIPTION	QTY.
◉	VIKING	VK494	½	4.9	155	Q.R. RESIDENTIAL CONCEALED PENDENT	19
⊗	VIKING	VK494	½	4.9	200	Q.R. RESIDENTIAL CONCEALED PENDENT	3
⊗	VIKING	VK468	½	4.9	155	Q.R. RESIDENTIAL RECESSED PENDENT	24
CR ⊗	VIKING	VK468	½	4.9	155	Q.R. RESIDENTIAL RECESSED PENDENT, CORROSION RESISTANCE (ENT)	1
						TOTAL	47

NEW LIGHT FIXTURES TO BE SURFACE MOUNT AND WITH 2¾" HEIGHT PER MANUFACTURER. (SPRINKLER HEADS SHALL BE MINIMUM OF 2'-6" AWAY TO AVOID THE OBSTRUCTION, OTHERWISE, ADDITIONAL HEAD SHALL BE PROVIDED)

CONTRACTOR NOTES:

1. ALL PIPE DIMENSIONS ARE CENTER TO CENTER.
2. PIPING IS SHOWN AS NEAR AS POSSIBLE. HOWEVER EXACT LOCATIONS WITH REGARDS TO THE BUILDING STRUCTURE SHALL BE VERIFIED AND DETERMINED IN THE FIELD PRIOR TO FABRICATION AND INSTALLATION.
3. CONTRACTOR TO BE RESPONSIBLE FOR INSTALLING COMPLETE INSTALLATION AND SHALL CONFIRM AS-BUILT CONDITIONS PRIOR TO ANY WORK.
4. CONTRACTOR SHALL VERIFY EXACT LOCATION OF ALL POSSIBLY INTERFERING PIPING, STRUCTURAL AND MISCELLANEOUS ITEMS BEFORE INSTALLATION OF SPRINKLER SYSTEMS TO AVOID INTERFERENCE.
5. PROVIDE EXTENDED ESCUTCHEON WHEN SURFACE MOUNTED FIXTURES PLACE ON THE CEILING CREATING AN OBSTRUCTION TO FIRE SPRINKLERS COVERAGE, SHALL COMPLY WITH NFPA 13 REQUIREMENTS.
6. FIRE STOPPING TO BE PROVIDED AT ALL FIRE SPRINKLER PIPE PENETRATIONS OF RATED CONSTRUCTION.

UNDERGROUND NOTES:

1. UNDERGROUND FIRE SERVICE PIPING AND COMPONENTS REFLECTED ON THESE PLANS IS SHOWN FOR REFERENCE AND HYDRAULIC CALCULATIONS PURPOSES ONLY. THE UNDERGROUND PIPE LENGTH SHOWN, AND UTILIZED FOR THE HYDRAULIC CALCULATIONS, HAS BEEN PROVIDED BY THE PROJECT CIVIL ENGINEER AND IS TO BE THE "WORST CASE" SCENARIO FOR THE ENTIRE PROJECT. COMPLETE SITE PLAN SHOWING ALL FIRE SERVICE CONNECTIONS AND UNDERGROUND PIPING INSTALLATION IS TO BE PROVIDED, AND CAN BE REFERENCED, ON THE PROJECT CIVIL DRAWINGS.

CAL GUARD
CALIFORNIA MILITARY DEPARTMENT
EST 1850

STATE OF CALIFORNIA
MILITARY DEPARTMENT

CALIFORNIA ARMY
NATIONAL GUARD

CAMP ROBERTS
SAN MIGUEL, CA

Revisions			
Sym.	Descrip.	Date	By

LICENSED FIRE PROTECTION ENGINEER
PAUL J. TRUTNER
No. 1934
Exp. 03/31/21
STATE OF CALIFORNIA

COLLINGS & ASSOCIATES
Fire Protection Engineering
260 Maple Court, Suite 241, Ventura, Ca 93003
Phone: (805) 658-0003 Fax: (805) 658-0044
www.collingsandassociates.com

Chkd. ____________ Date ____________

Sht Title TYPICAL FLOOR PLANS

Project CAMP ROBERTS
BARRACKS RENOVATION
FIRE SPRINKLER SYSTEM
(E) 24 BARRACKS (BUILDINGS 4212-4219, 4302-4309, AND 4312-4319)

Sheet FS10

Plot By: Felipe Moreno Plot Date: 4/29/2020 File Name:P:\Clients\Engineers\Yamabe & Horn\Camp Roberts Barracks\C&A Drawings\CAD\FS\06R1904-27_FS_100%_4-27-2020.dwg

95% CD

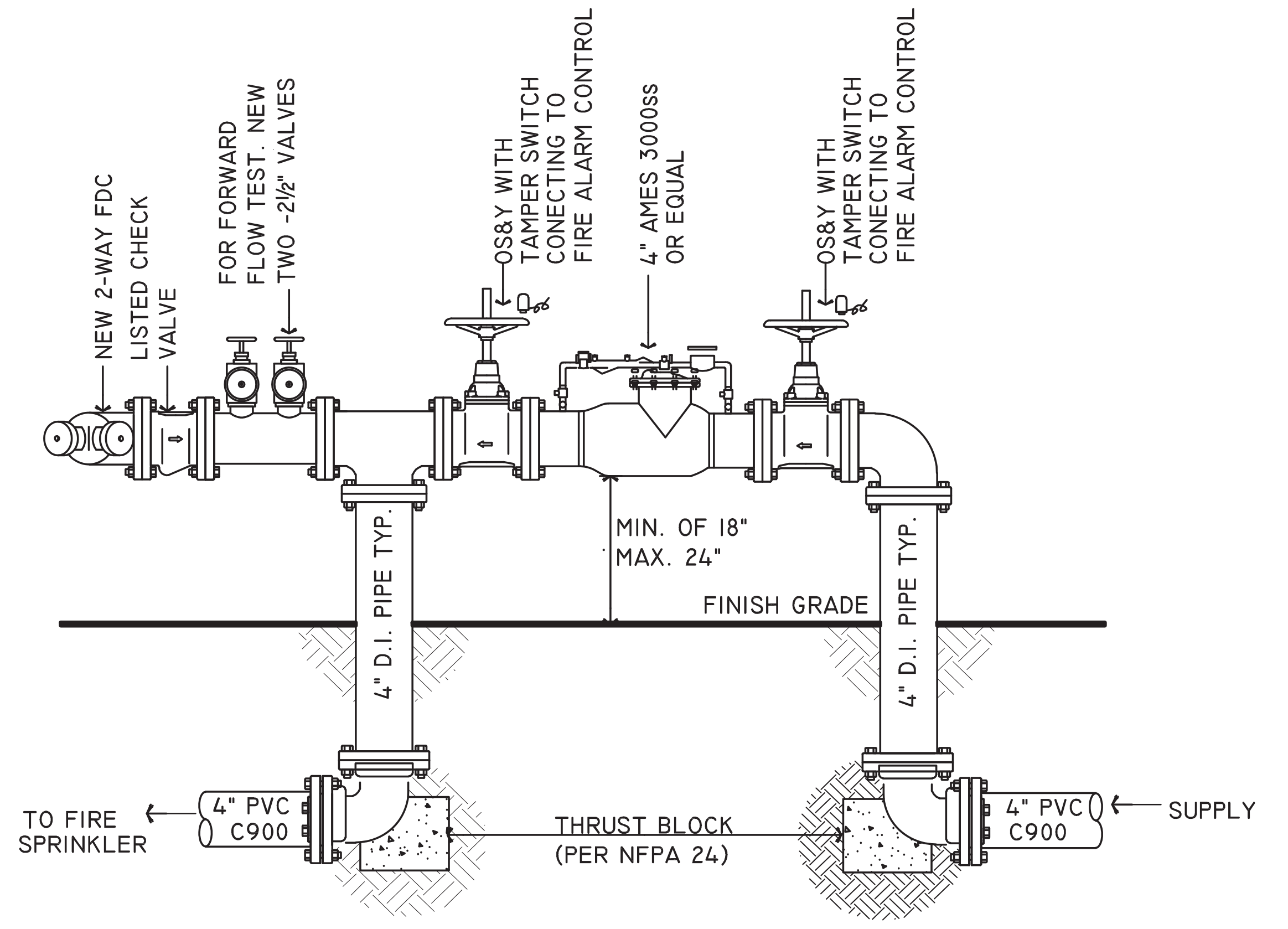
NEW 2-WAY FDC
LISTED CHECK VALVE
FOR FORWARD FLOW TEST. NEW TWO -2½" VALVES
OS&Y WITH TAMPER SWITCH CONECTING TO FIRE ALARM CONTROL
4" AMES 3000ss OR EQUAL
OS&Y WITH TAMPER SWITCH CONECTING TO FIRE ALARM CONTROL
MIN. OF 18" MAX. 24"
FINISH GRADE
4" D.I. PIPE TYP.
4" D.I. PIPE TYP.
TO FIRE SPRINKLER
4" PVC C900
THRUST BLOCK (PER NFPA 24)
4" PVC C900
SUPPLY

11 TYPICAL BFP DETAIL WITH FDC (REFERENCE ONLY)

WHEN NONMETALLIC PIPE IS USED IN COMBINATION SYSTEMS UTILIZING STEEL PIPE, CUTTING OILS AND LUBRICANTS USED FOR FABRICATION OF THE STEEL PIPING SHALL BE COMPATIBLE WITH THE NONMETALLIC PIPE MATERIALS. (NFPA 13R, SECTION 5.2.3.4)

ALL STEEL PIPE CUTTING OILS TO BE COMPATIBLE WITH CPVC PIPING PER MANUFACTURER'S LISTING AND SPECIFICATION. ALL CPVC GLUE'S TO BE PER MANUFACTURER'S SPECIFICATION.

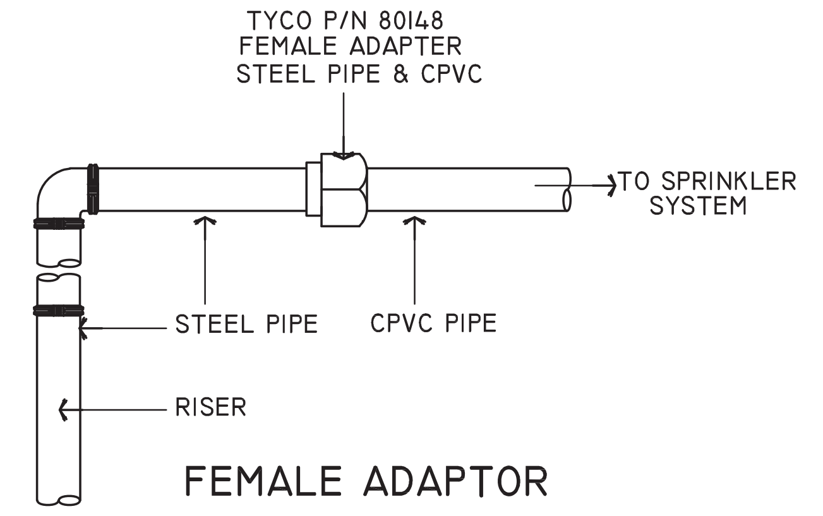
TYCO P/N 80148 FEMALE ADAPTER STEEL PIPE & CPVC
TO SPRINKLER SYSTEM
STEEL PIPE
CPVC PIPE
RISER

FEMALE ADAPTOR

NOT TO SCALE

10 CPVC TRANSITION

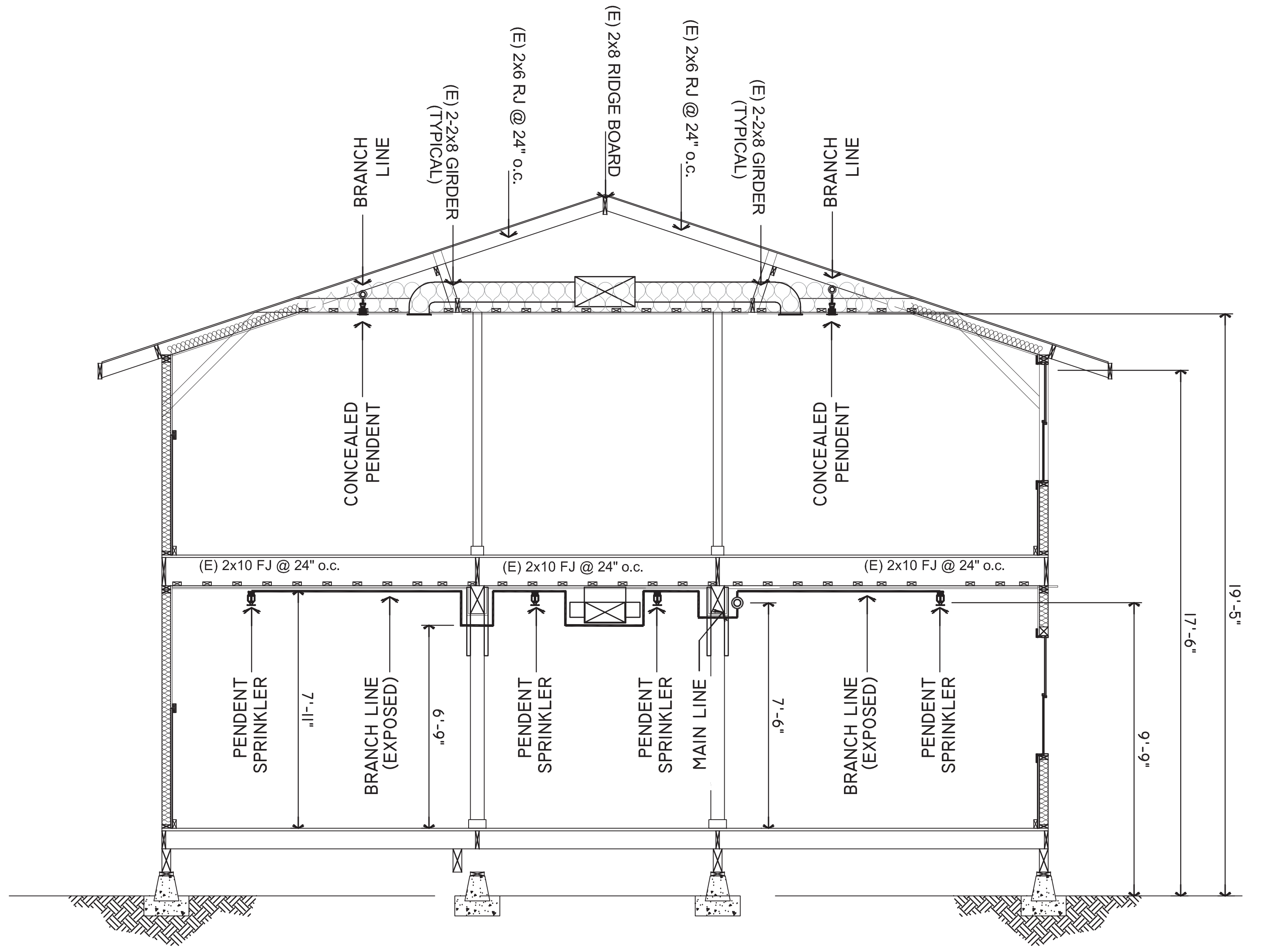
BRANCH LINE
(E) 2-2x8 GIRDER (TYPICAL)
(E) 2x6 RJ @ 24" o.c.
(E) 2x8 RIDGE BOARD
(E) 2x6 RJ @ 24" o.c.
(E) 2-2x8 GIRDER (TYPICAL)
BRANCH LINE
CONCEALED PENDENT
CONCEALED PENDENT
(E) 2x10 FJ @ 24" o.c.
(E) 2x10 FJ @ 24" o.c.
(E) 2x10 FJ @ 24" o.c.
PENDENT SPRINKLER
7'-11"
BRANCH LINE (EXPOSED)
6'-9"
PENDENT SPRINKLER
PENDENT SPRINKLER
MAIN LINE
7'-6"
BRANCH LINE (EXPOSED)
PENDENT SPRINKLER
6'-9"
17'-6"
19'-5"

BUILDING SECTION

SCALE : 1/4" = 1'-0"

0 2' 4' 8'

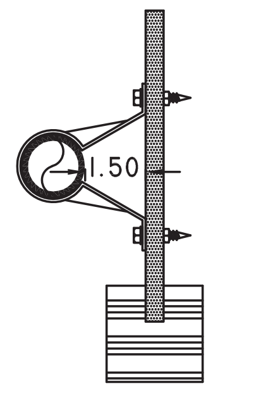

Installation - Backing Nut
Hanger = 1 - at top fastener
Restraint = 2 - on each fastener

Per NFPA-13D and NFPA-13R

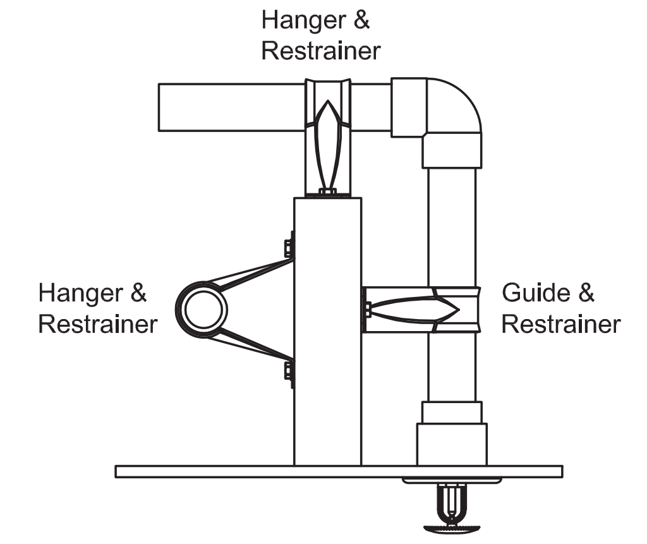
Hanger & Restrainer
Hanger & Restrainer
Guide & Restrainer

ANVIL - FIG. 188R:LISTED FASTENERS		
Pipe	**Wood and Composite Beams**	**Steel (18ga. Minimum)**
CPVC	Screw Supplied or #10 x 1" TEK Screw	#14 x 1" TEK Screw or 1⁄4" x 1" TEK Screw
Steel & Copper	#14 x 1" TEK Screw or 1⁄4" x 11⁄2" Lag Screw	#14 x 1" TEK Screw or 1⁄4" x 1" TEK Screw

9 OFFSET HANGER

1. Wall Assembly — The 1 or 2 hr fire-rated gypsum wallboard/stud wall assembly shall be constructed of the materials and in the manner specified in the individual U300 or U400 Series Wall and Partition Designs in the UL Fire Resistance Directory and shall include the following construction features:
   A. Studs — Wall framing may consist of either wood studs or steel channel studs. Wood studs to consist of nom 2 by 4 in. (51 by 102 mm) lumber spaced 16 in. (406 mm) OC. Steel studs to be min 2-1/2 in. (64 mm) wide and spaced max 24 in. (610 mm) OC. When steel studs are used and the diam of opening exceeds the width of stud cavity, the opening shall be framed on all sides using lengths of steel stud installed between the vertical studs and screw-attached to the steel studs at each end. The framed opening in the wall shall be 4 to 6 in. (102 to 152 mm) wider and 4 to 6 in. (102 to 152 mm) higher than the diam of the penetrating item such that, when the penetrating item is installed in the opening, a 2 to 3 in. (51 to 76 mm) clearance is present between the penetrating item and the framing on all four sides.
   B. Gypsum Board* — 5/8 in. (16 mm) thick, 4 ft (122 cm) wide with square or tapered edges. The gypsum board type, thickness, number of layers, fastener type and sheet orientation shall be as specified in the individual U300 or U400 Series Design in the UL Fire Resistance Directory. Max diam of opening is 32-1/4 in. (819 mm) for steel stud walls. Max diam of opening is 14-1/2 in. (368 mm) for wood stud walls.

   The F and FH Ratings of the firestop system are equal to the fire rating of the wall assembly.

2. Through-Penetrants — One metallic pipe, conduit or tubing to be installed either concentrically or eccentrically within the firestop system. The annular space shall be min 0 in. to max 2-1/4 in. (57 mm). Pipe may be installed with continuous point contact. Pipe, conduit or tubing to be rigidly supported on both sides of wall assembly. The following types and sizes of metallic pipes, conduits or tubing may be used:
   A. Steel Pipe — Nom 30 in. (762 mm) diam (or smaller) Schedule 10 (or heavier) steel pipe.
   B. Iron Pipe — Nom 30 in. (762 mm) diam (or smaller) cast or ductile iron pipe.
   C. Conduit — Nom 4 in. (102 mm) diam (or smaller) steel electrical metallic tubing or 6 in. (152 mm) . diam steel conduit.
   D. Copper Tubing — Nom 6 in. (152 mm) diam (or smaller) Type L (or heavier) copper tubing.
   E. Copper Pipe — Nom 6 in. (152 mm) diam (or smaller) regular (or heavier) copper pipe.
3. Fill, Void or Cavity Material* — Sealant — Min 5/8 in. (16 mm) thickness of fill material applied within the annulus, flush with both surfaces of wall. At the point or continuous contact locations between pipe and wall, a min 1/2 in. (13 mm) diam bead of fill material shall be applied at the pipe wall interface on both surfaces of wall.
   HILTI CONSTRUCTION CHEMICALS, DIV OF HILTI INC — FS-One Sealant or FS-ONE MAX Intumescent Sealant

* Indicates such products shall bear the UL or cUL Certification Mark for jurisdictions employing the UL or cUL Certification (such as Canada), respectively.

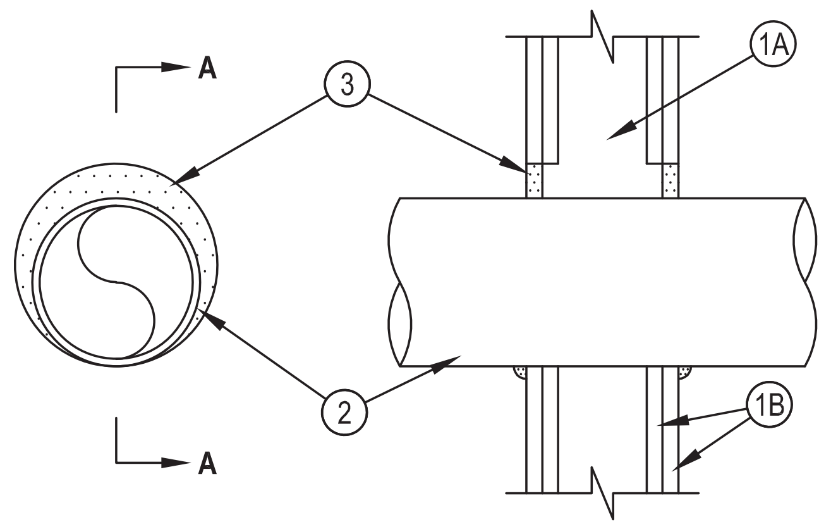

SECTION A-A

System No. W-L-1054

Hilti Firestop Systems

HILTI CONSTRUCTION CHEMICALS, DIV OF HILTI INC -
FS-ONE MAX FIRESTOP INTUMESCENT SEALANT

CLASSIFIED C UL US
Classified by
Underwriters Laboratories, Inc.
to UL 1479 and CAN/ULC-S115

Reproduced by HILTI, Inc. Courtesy of
Underwriters Laboratories, Inc.
October 14, 2015

CSFM LISTING NO.
4485-1200:0108

8 FIRESTOP DETAIL

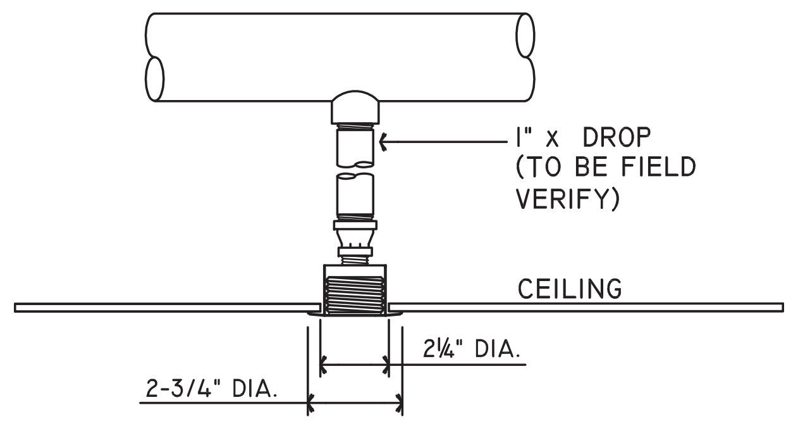
1" x DROP (TO BE FIELD VERIFY)
CEILING
2¼" DIA.
2-3/4" DIA.

PLAN SYM.

NOT TO SCALE

7 TYPICAL CONCEALED

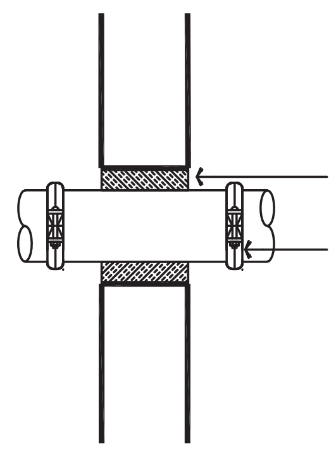

PROVIDE CLEARANCE PER NFPA 13, NOMINALLY 2" LARGER THAN THE PIPE 1" TO 3½" NOMINAL AND 4" LARGER THAN THE PIPE FOR PIPE 4 AND LARGER. SEC. 9.3.4.2

FILLED WITH FLEXIBLE CAULK WATERTIGHT

NO CLEARANCE SHALL BE REQUIRED IF FLEXIBLE COUPLINGS ARE LOCATED WITHIN 1-FT OF EACH SIDE OF A WALL, FLOOR, PLATFORM, OR FOUNDATION. SEC. 9.3.4..5

NOT TO SCALE

6 CLEARANCE

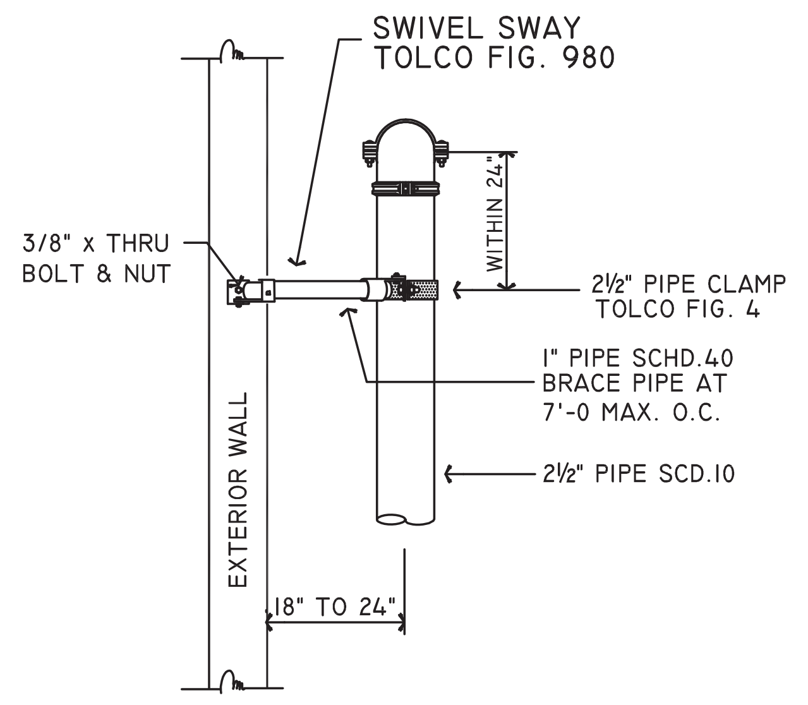
SWIVEL SWAY TOLCO FIG. 980
3/8" x THRU BOLT & NUT
WITHIN 24"
2½" PIPE CLAMP TOLCO FIG. 4
1" PIPE SCHD.40 BRACE PIPE AT 7'-0 MAX. O.C.
2½" PIPE SCD.10
EXTERIOR WALL
18" TO 24"

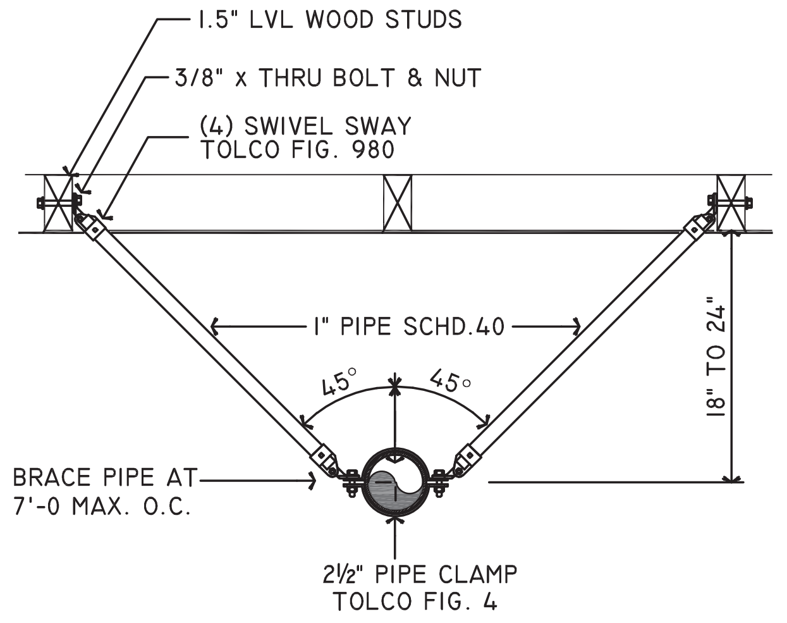
1.5" LVL WOOD STUDS
3/8" x THRU BOLT & NUT
(4) SWIVEL SWAY TOLCO FIG. 980
1" PIPE SCHD.40
45°
45°
18" TO 24"
BRACE PIPE AT 7'-0 MAX. O.C.
2½" PIPE CLAMP TOLCO FIG. 4

PLAN SYM.

NOT TO SCALE

5 4-WAY SWAY BRACE

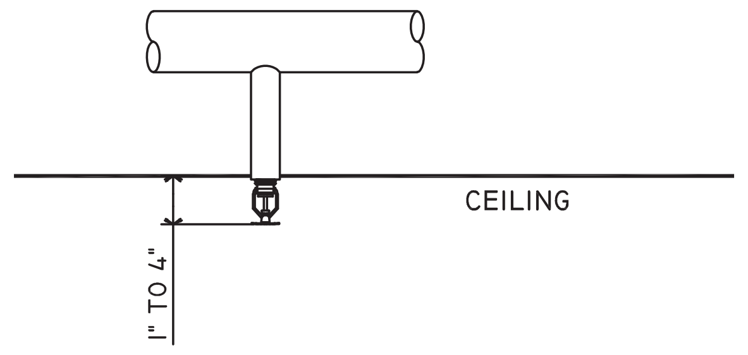
CEILING
1" TO 4"

PER NFPA 13R SECTION 6.4.6.1

PLAN SYM.

NOT TO SCALE

4 TYPICAL RECESSED PENDENT

DIMENSIONS - WEIGHTS		
CPVC PIPE SIZE	MAX. HANGER SPACING (FT.)	FASTENER HEX HEAD SIZE
¾"	5½	5/16"
1"	6	5/16"
1¼"	6½	5/16"
1½"	7	5/16"
2"	8	5/16"
2½"	CONSULT FACTORY	5/16"
3"		5/16"

FIG. 23 - HANGER FOR CPVC PLASTIC PIPE DOUBLE FASTENER STRAP TYPE

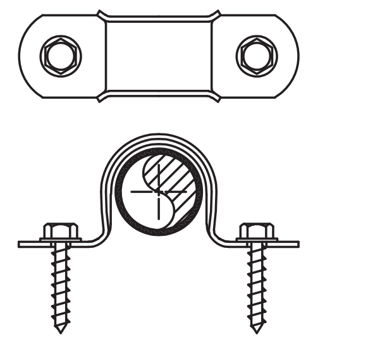

NOT TO SCALE

3 FIG. 23 DOUBLE FASTENER STRAP

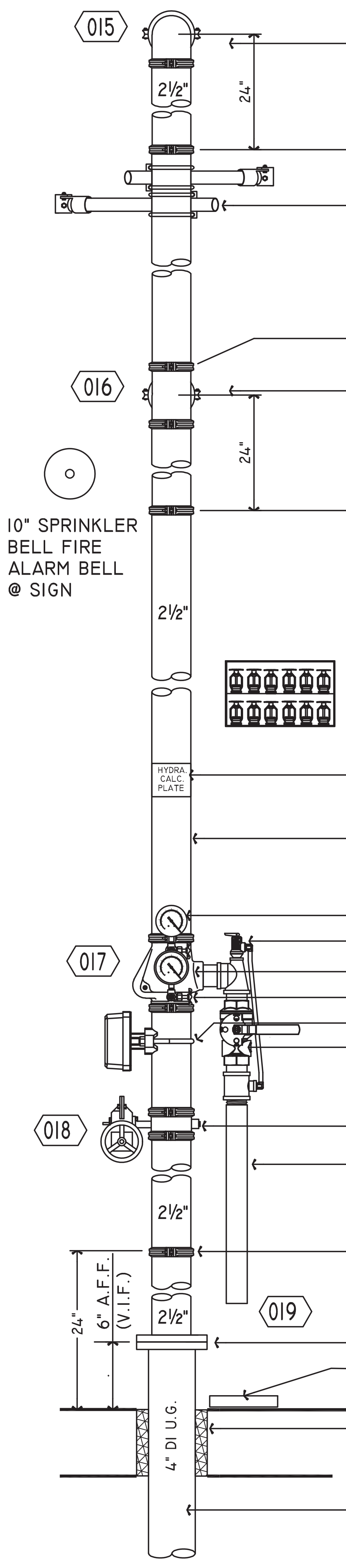
015
2½"
24"
016
24"
10" SPRINKLER BELL FIRE ALARM BELL @ SIGN
2½"
HYDRA. CALC. PLATE
017
018
2½"
24"
6" A.F.F. (V.I.F.)
2½"
019
4" DI U.G.

TO 2ND FLOOR FP SYSTEM

FLEXIBLE GROOVED COUPLING WITHIN 24"

4-WAY BRACE SEE DETAILS

FLEXIBLE GROOVED COUPLING WITHIN 24"

TO 1ST FLOOR FP SYSTEM

FLEXIBLE GROOVED COUPLING WITHIN 24"

PROVIDE SPARE SPRINKLERS AND WRENCH IN THE SPARE BOX PER SEC. 6.2.9.5

HYDRAULIC CALCULATION DESIGN INFORMATION

2½" RISER SCHD. 10

DOWNSTREAM GAUGE

PRESSURE RELIEF VALVE

2½" RISER CHECK VALVE

UPSTREAM GAUGE

FLOW SWITCH

DRAIN AND TEST

2½" BUTTERFLY VALVE WITH TAMPER SWITCH TO BE SUPERVISED PER NFPA 13 & NFPA 72

1¼" DRAIN TO BE PIPED TO EXTERIOR LOCATION.

FLEXIBLE GROOVED COUPLING WITHIN 24"

POINT OF CONNECTION

CONC. SPLASH BLOCKS

FINISH FLOOR

PROVIDE 2" CLEARANCE AROUND PIPE PER NFPA 13, FILLED WITH FLEXIBLE CAULK WATERTIGHT

SEE SITE PLAN FOR CONT.

NOT TO SCALE

2 TYPICAL SPRINKLER RISER

DIMENSIONS - WEIGHTS		
CPVC PIPE SIZE	MAX. HANGER SPACING (FT.)	FASTENER HEX HEAD SIZE
¾"	5½	5/16"
1"	6	5/16"
1¼"	6½	5/16"
1½"	7	5/16"
2"	8	5/16"

FIG. 22 - HANGER FOR CPVC PLASTIC PIPE SINGLE FASTENER STRAP TYPE

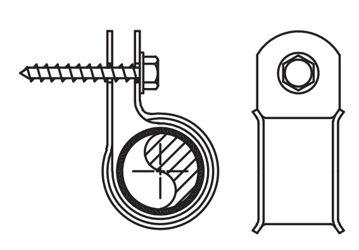

NOT TO SCALE

1 FIG. 22 SINGLE FASTENER STRAP TYPE

CAL GUARD
CALIFORNIA MILITARY DEPARTMENT
EST 1850

STATE OF CALIFORNIA
MILITARY DEPARTMENT

CALIFORNIA ARMY
NATIONAL GUARD

CAMP ROBERTS
SAN MIGUEL, CA

Sym.	Descrip.	Date	By
Revisions			

LICENSED FIRE PROTECTION ENGINEER
PAUL J. TRUTNER
No. 1934
Exp. 03/31/21
STATE OF CALIFORNIA

COLLINGS & ASSOCIATES
Fire Protection Engineering
260 Maple Court, Suite 241, Ventura, Ca 93003
Phone: (805) 658-0003 Fax: (805) 658-0044
www.collingsandassociates.com

Chkd. ________ Date ________

Sht Title TYPICAL DETAILS

Project CAMP ROBERTS
BARRACKS RENOVATION
FIRE SPRINKLER SYSTEM
(E) 24 BARRACKS (BUILDINGS 4212-4219, 4302-4309, AND 4312-4319)

Sheet
FS20

Plot By: Felipe Moreno Plot Date: 4/29/2020 File Name:P:\Clients\Engineers\Yamabe & Horn\Camp Roberts Barracks\C&A Drawings\CAD\FS\06R1904-27_FS_100%_4-27-2020.dwg

95% CD