NOTE: CONTRACTOR IS ADVISED THAT ISSUANCE OF THIS DRAWING DOES NOT NECESSARILY INCLUDE REVISIONS MADE TO PREVIOUS ADDENDA, BULLETINS, REVISIONS TO DRAWINGS, OR APPROVED SHOP DRAWINGS.

℄ ALLEY

STREET
FOR PLAN & PROFILE SEE SHEET C-G.1

REFERENCE LINE

NEW CURB & GUTTER

EXISTING LOS ANGELES COUNTY PROBATION BUILDING

POLICE BUILDING
123.00 FINISHED FLOOR ELEVATION - FIRST LEVEL

FOR GRADING IN THIS AREA SEE SHEET C2.4

SALLY PORT
119.00 INV.
122.60

123.00
122.90

4'x6' CONC. STOOP

JOIN EXISTING DRAINS
G.V.C.P. A= CL'2B FACE

121.50 T.C.B. (2B C5.1)
119.80 INV.

CLEANOUT (3 C5.1)
117.15 INV.

121.60 T.C.B. (B C5.1)
120.10 INV.

G.V.C.P. @ S=0.085

P.A.

MATCH LINE AT CURB FACE
SEE SHEET C2.4

116.75 T.C.P. (2B C5.1)
117.75 INV.

CLEANOUT (3 C5.1)
118.50 INV.

EXISTING PLANTER

EXISTING PLANTER

JOIN EX. G.V.C.P.

8"V.C.P.

G.V.C.P. @ S=0.010

PLANTER

G.V.C.P. @ S=0.053

G.V.C.P. @ S=0.020

122.00 T.C.B. (2A C5.1)
120.50 INV.

122.25 T.C.B. (2A C5.1)
121.25 INV.

120.50 T.C.B. (2A C5.1)
119.50 INV.

FOR RAMP GRADES SEE SHT A-7.1

5'x12" OPENING IN WALL FOR DRAINAGE

POOL

DRINKING FOUNTAIN

2"C.I.P. @ S=0.020

CONCRETE GUTTER (4 C5.1)

GUTTER DRAIN: ALHAMBRA FDRY. CO. A-332-4 OR EQUAL
121.17 - TOP - TYPICAL

12"V.C.P. @ S=0.010

2"C.I.P. @ S=0.030

117.50 T.C.B.

LAMP HOLE (5 C5.1)

4"V.C.P.

6"V.C.P.

PLANTER

P.A. (TYP)

6'C.F. (TYP)

GUTTER DRAIN
121.17 T.D.

G.V.C.P. @ S=0.096

111.60-18" INV.

REFERENCE LINE

J.S. N℄4 PER L.A.C.F.C.D. STD. PLAN N℄2-D-193

118.50 T.C.B. (2A C5.1)
115.45 INV.

℄ 18"C.P. STORM DRAIN
FOR PLAN & PROFILE SEE SHEET C-4.2

118.50 T.C.B. (2A C5.1)
117.50 INV.

118.50 T.C.B. (2A C5.1)
117.10 INV.

OUTLINE OF PARKING GARAGE BELOW

POOL

8"C.I.P. - SEE SHT P-2.1

5"C.I.P. SEE SHT. P-2.1

118.50 T.C.B. (2A C5.1)
117.50 INV.

118.50 T.C.B. (2B C5.1)
117.50 INV.

122.50 T.C.B. (2A C5.1)
121.00 INV.

PLANTER

LAWN

118.50 T.C.B. (2A C5.1)

PLANTER

CITY HALL
119.50 FINISHED FLOOR ELEVATION - FIRST LEVEL

3'x12" OPENING IN WALL FOR DRAINAGE

OVERFLOW POINT

118.25 T.C.B. (2A C5.1)
116.60 INV.

5"C.I.P. SEE SHT. P-2.1

119.95 JOIN INV. 8"C.I.P.

4"V.C.P.

PLANTER

2"C.I.P. @ S=0.0968

8"SEWER SEE SHEET C-4.9

FOR DETAILS OF STORM DRAIN LINES, SEE APPROPRIATE PLUMBING DRAWING P2.1

℄ 21"E.C.P. STORM DRAIN

℄ GREVILLEA

℄ 10"C.I.P. SEWER SEE SHEET C-4.2

J.S. N℄4 PER L.A.C.F.C.D. STD. PLAN N℄2-D-193

AVENUE

J.S. N℄4 PER L.A.C.F.C.D. STD. PLAN N℄2-D-193

J.S. N℄4 PER L.A.C.F.C.D. STD. PLAN N℄2-D-193

AREA DRAIN: ALHAMBRA FDRY. CO. A-350-4 OR EQUAL
117.00 TOP

2" CONCRETE GUTTER - SEE C-4.1

TYPICAL SLOPE 2.5%

MATCH LINE, SEE SHEET C-2.2

FOR PLAN & PROFILE SEE SHT C4.1

NEW CONC. CURB AND GUTTER

REGENT

℄

EXISTING CONDITION - FIELD VERIFY
FOR INFORMATION ONLY

CS-4505

NO.	DATE	REVISION	BY	CHK
4	7-8-71	MISCELLANEOUS REVISIONS	JZ	AH
3	5-4	MODIFICATIONS ISSUED AS BULLETIN N℄1	LH	AH
2	2-22	MODIFICATIONS ISSUED AS ADDENDA 2	EL	AH
1	1-15	MODIFICATIONS ISSUED AS ADDENDA 1	RL	AH

CONSULTANT
SHUIRMAN · ROSOWAY & ASSOCIATES
CONSULTING CIVIL ENGINEERS
5627 WILSHIRE BLVD. · LOS ANGELES, CALIF. 90036
213: 937-2600

PROJECT GROUP	APPROVED BY
DESIGNER L.W.	PRODUCTION
PROJECT CAPTAIN A.H.	PROJECT ARCHITECT
DRAFTSMAN L.H. & EL	
CHECKER	

THIS DRAWING IS NOT TO BE CONSIDERED FINAL UNTIL ALL THE REQUIRED SIGNATURES OF APPROVAL HAVE BEEN AFFIXED

PROJECT
CITY OF INGLEWOOD
CIVIC CENTER
INGLEWOOD · CALIFORNIA

SHEET TITLE
NORTH PLAZA GRADING AND DRAINAGE PLAN
SCALE: 1/16" = 1'-0"

Charles Luckman Associates
Planning Architecture Engineering
9220 Sunset Boulevard Los Angeles, California 90069

SHEET NO C-2.3
JOB NO 2000.00.05
DATE 1-29-71

NOTE: CONTRACTOR IS ADVISED THAT ISSUANCE OF THIS DRAWING DOES NOT NECESSARILY INCLUDE REVISIONS MADE BY PREVIOUS ADDENDA, BULLETINS, REVISIONS TO DRAWINGS, OR APPROVED SHOP DRAWINGS.

AVE.

FIR

FLORENCE AVENUE

43' N/O N ℄

19' S/O ℄

36"ϕ R.C.P. STORM DR.

C.B.

109.24 INV. 36"ϕ R.C.P.

109.35 INV. 24"ϕ R.C.P.

8"ϕ A.C.

2"ϕ M

4"ϕ M

8"ϕ

8"ϕ C.I.

110.94 INV. 8"ϕ PIPE

110.53 INV. 24"ϕ R.C.P.

111.04 INV. C.B.

F.H.

114.55 T.M.H. 108.57 INV.

117.97 T.M.H. 110.54 INV.

M.H.

3' W/O E ℄

8' W/O E ℄

27' W/O E ℄

28' W/O E ℄

32.75' E/O W ℄

18'

9'

VA.

6"ϕ C.I.

6"ϕ M

14.21 T.M.H. 106.13 INV.

114.39 T.M.H. 106.76 INV.

115.20 T.M.H. 107.28 INV.

116.46 T.M.H. 107.80 INV.

115.34 T.M.H. 110.39 INV.

124.37 T.M.H. 115.18 INV.

127.56 T.M.H. INV.

21'

12'

15'

14'

3'

6"ϕ M

REGENT STREET

8'ϕ N/O S ℄

72.5' N/O S ℄

15' S/O N ℄

16.5' S/O N ℄

19' S/O N ℄

23' S/O N ℄

3.5'

18'

GREVILLEA AVE.

27' N/O S ℄

15' S/O N ℄

7.5' S/O N ℄

20' W/O E ℄

8"ϕ A.C.

18' N/O S ℄

17' S/O N ℄

8' E/O W ℄

17' E/O W ℄

62.5' E/O W ℄

3'

8"ϕ C.I.

16' W/O E ℄

8'ϕ 13' W/O E ℄

10' W/O E ℄

5.5' W/O E ℄

7.5' W/O E ℄

ALLEY

LA BREA AVENUE

132.25 T.M.H. INV.

LEGEND

——W——	WATER LINE
——S——	SANITARY SEWER LINE
----SD----	STORM DRAIN LINE
——T——	TELEPHONE CONDUIT
——E——	EDISON CONDUIT
——G——	GAS LINE
T.M.H.	TOP OF MANHOLE ELEV.
INV.	INVERT ELEVATION
C.B.	CATCH BASIN
F.H.	FIRE HYDRANT
M.H.	MANHOLE
VA.	VAULT
℄	PROPERTY LINE

NOTES:

INFORMATION PERTAINING TO UTILITIES SHOWN ON THIS PLAN HAS BEEN OBTAINED FROM THE FOLLOWING AGENCIES AND COMPANIES:

CITY OF INGLEWOOD
- PUBLIC WORKS DEPT. : SAN. SEWERS & STORM DRAINS
- WATER DEPARTMENT : WATER MAINS

LOS ANGELES COUNTY SANITATION DISTRICT
- " " FLOOD CONTROL DISTRICT
- " " ROAD DEPARTMENT

METROPOLITAN WATER DISTRICT
SOUTHERN CALIFORNIA GAS COMPANY
" " EDISON COMPANY
THE PACIFIC TELEPHONE & TELEGRAPH COMPANY

OIL COMPANIES
- GOLDEN EAGLE REFINERY CO. INC.
- HUMBLE OIL & REFINING CO.
- MOBIL OIL CORPORATION
- RICHFIELD (ATLANTIC RICHFIELD CO.)
- SHELL OIL CO.
- SIGNAL OIL & GAS CO.
- STANDARD OIL CO.
- TEXACO INC.
- UNION OIL CO. OF CALIF.

DATUM: U.S. COAST & GEODETIC SURVEY

MATCH LINE

MATCH LINE

EXISTING CONDITION - FIELD VERIFY FOR INFORMATION ONLY

CS-4505

NO.	DATE	REVISION	BY	CHK	NO.	DATE	REVISION	BY	CHK
△					△				
△					△				
△					△				
△					△				

CONSULTANT

SHUIRMAN · ROGOWAY & ASSOCIATES
CONSULTING CIVIL ENGINEERS
8687 WILSHIRE BLVD. · LOS ANGELES, CALIF. 90035
213: 837-2600

PROJECT GROUP	APPROVED BY
DESIGNER C.KEG.	PRODUCTION
PROJECT CAPTAIN A.H	PROJECT ARCHITECT
DRAFTSMAN C.K	ENGINEER
CHECKER	

THIS DRAWING IS NOT TO BE CONSIDERED FINAL UNTIL ALL THE REQUIRED SIGNATURES OF APPROVAL HAVE BEEN AFFIXED.

PROJECT
CITY OF INGLEWOOD
CIVIC CENTER
INGLEWOOD CALIFORNIA

SHEET TITLE
NORTH PORTION PLOT PLAN OF EXISTING UNDERGROUND UTILITIES

SCALE: 1/32"=1'-0"

Charles Luckman Associates
Planning Architecture Engineering
9220 Sunset Boulevard Los Angeles, California 90069

SHEET NO C-3.1

JOB NO. 2000.00.C5

DATE 1-29-71

NOTE: CONTRACTOR IS ADVISED THAT ISSUANCE OF THIS DRAWING DOES NOT NECESSARILY INCLUDE REVISIONS MADE BY PREVIOUS ADDENDA, BULLETINS, REVISIONS TO DRAWINGS, OR APPROVED SHOP DRAWINGS.

MATCH LINE

NOTE :
FOR LEGEND & NOTES SEE SHEET NO. 2

QUEEN STREET

AVE.

FIR

GREVILLEA

ALLEY

LA BREA

AVE.

MANCHESTER BLVD.

C.B.
M.H.
T.M.H.
F.H.
VA.
SEALED END
ABANDON IN PLACE
TRANSITION STRUCTURE
16"± TEMPORARY STORM DRAIN TO BLEED ABANDON 42" S.D.

4"ϕ C.I.
8"ϕ
42"ϕ R.C.P.
2"ϕ M
8"ϕ A.C.
6"ϕ A.C.
24"ϕ RCP
18"ϕ R.C.P. SD
39"ϕ R.C.P.
42"ϕ ECP
24"ϕ ECP
2"ϕ S.C.M.
4"ϕ M
6"ϕ M
8"ϕ C.I.
12"ϕ C.I.

114.17 T.M.H. 106.29 INV.
114.60 T.M.H. 107.50 INV.
114.99 T.M.H. 107.33 INV.
113.88 T.M.H. 105.72 INV.
106.38 INV.
106.33 INV.
115.78 T.M.H. 107.85 INV.
116.12 T.M.H. 109.85 INV.
121.05 T.M.H. 114.28 INV.
124.21 T.M.H. 108.36 INV.
124.59 T.M.H. 108.23 INV.
122.53 T.M.H. 107.22 INV.
113.08 T.M.H. 103.88 INV.
116.07 T.M.H. 106.58 INV.

17.5'S/O N ℄
13'S/O N ℄
55'S/O N ℄
64'S/O N ℄
67.5'S/O N ℄
15'S/O N ℄
17.5'S/O N ℄
50'S/O N ℄
58'S/O N ℄
2'S/O N ℄
4.5'S/O N ℄
8'S/O N ℄
56'N/O S ℄
34'N/O S ℄
8'N/O S ℄
13.5'N/O S ℄
14.5'N/O S ℄
24'N/O S ℄
70'N/O S ℄
82'N/O S ℄
92'N/O S ℄

5.5'W/O E ℄
7.5'W/O E ℄
10'W/O E ℄
13'W/O E ℄
16'W/O E ℄
8'E/O W ℄
17'E/O W ℄
62.5'E/O W ℄
10'W/O E ℄
20'W/O E ℄
29.5'W/O E ℄
36"ϕ R.C.P.
9'W/O ℄
25'W/O ℄
24'W/O ℄
23'E/O W ℄
14'E/O W ℄
8'E/O W ℄
5.5'E/O W ℄
34'E/O W ℄
5'W/O E ℄
3'W/O E ℄
6'W/O E ℄
13'W/O E ℄
16'W/O E ℄
62.5'E/O W ℄
17'E/O W ℄
8'E/O W ℄

EXISTING CONDITION - FIELD VERIFY FOR INFORMATION ONLY

NO.	DATE	REVISION	BY	CHK
1		ADDENDA 2 MODIFICATIONS ISSUED AS ADDENDA 2	EL	AH

CONSULTANT
SHUIRMAN - ROSOWAY & ASSOCIATES
CONSULTING CIVIL ENGINEERS
6087 WILSHIRE BLVD. • LOS ANGELES, CALIF. 90048
(213) 937-2600

PROJECT GROUP	APPROVED BY
DESIGNER C.KEG.	PRODUCTION
PROJECT CAPTAIN A.H.	PROJECT ARCHITECT
DRAFTSMAN C.K.	ENGINEER
CHECKER	

THIS DRAWING IS NOT TO BE CONSIDERED FINAL UNTIL ALL THE REQUIRED SIGNATURES OF APPROVAL HAVE BEEN AFFIXED.

PROJECT
CITY OF INGLEWOOD
CIVIC CENTER
INGLEWOOD CALIFORNIA

SHEET TITLE
SOUTH PORTION PLOT PLAN OF EXISTING UNDERGROUND UTILITIES

SCALE 1/32"=1'-0"

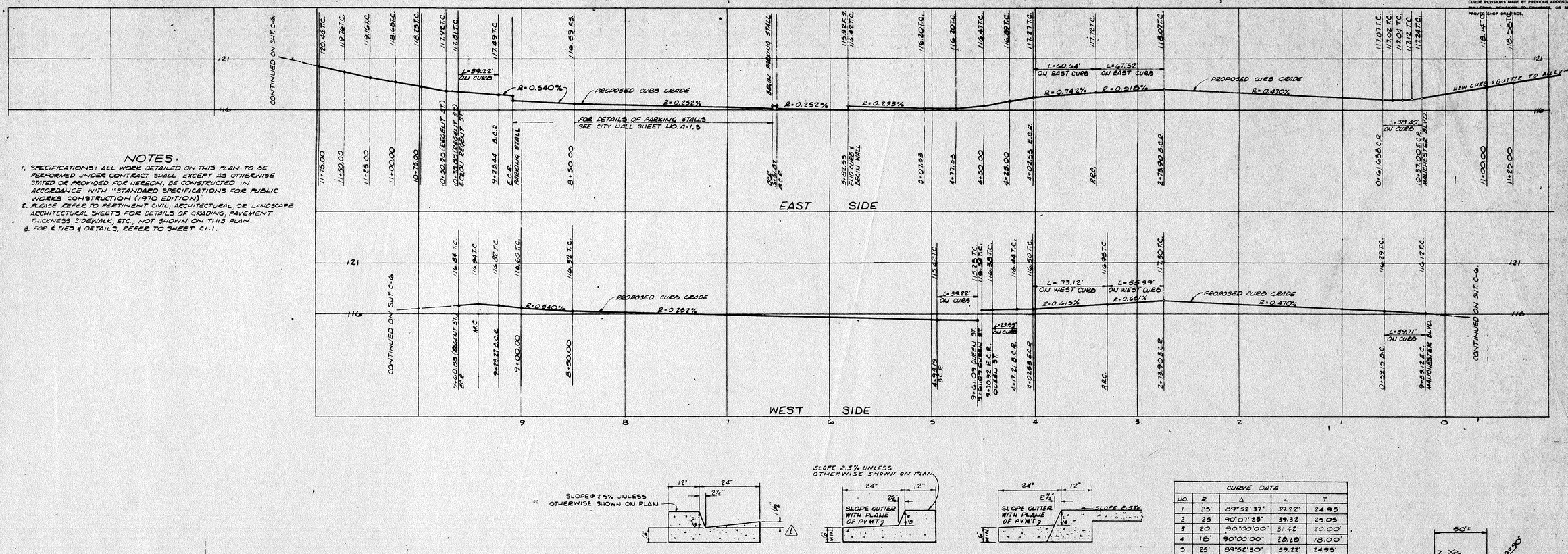
Charles Luckman Associates
Planning Architecture Engineering
9220 Sunset Boulevard Los Angeles, California 90069

SHEET NO. C-3.2
JOB NO. 6000.00.05
DATE 1-29-71

NOTE: CONTRACTOR IS ADVISED THAT ISSUANCE OF THIS DRAWING DOES NOT NECESSARILY INCLUDE REVISIONS MADE BY PREVIOUS ADDENDA, BULLETINS, REVISIONS TO DRAWINGS, OR A/E APPROVED SHOP DRAWINGS.

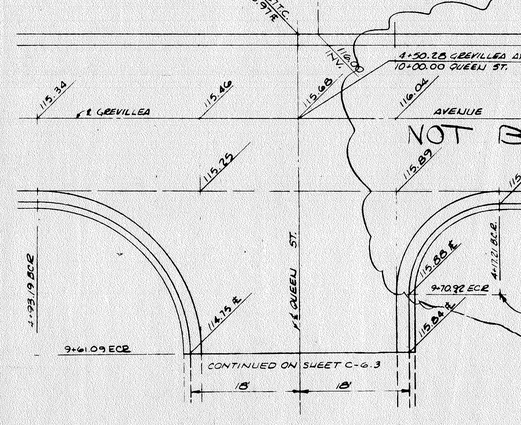
NOTES.

1. SPECIFICATIONS: ALL WORK DETAILED ON THIS PLAN TO BE PERFORMED UNDER CONTRACT SHALL, EXCEPT AS OTHERWISE STATED OR PROVIDED FOR HEREON, BE CONSTRUCTED IN ACCORDANCE WITH "STANDARD SPECIFICATIONS FOR PUBLIC WORKS CONSTRUCTION (1970 EDITION)"
2. PLEASE REFER TO PERTINENT CIVIL, ARCHITECTURAL, OR LANDSCAPE ARCHITECTURAL SHEETS FOR DETAILS OF GRADING, PAVEMENT THICKNESS SIDEWALK, ETC., NOT SHOWN ON THIS PLAN.
3. FOR ℄ TIES # DETAILS, REFER TO SHEET C1.1.

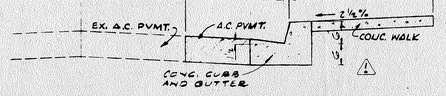


GREVILLEA AVE. CURB DETAILS
NO SCALE

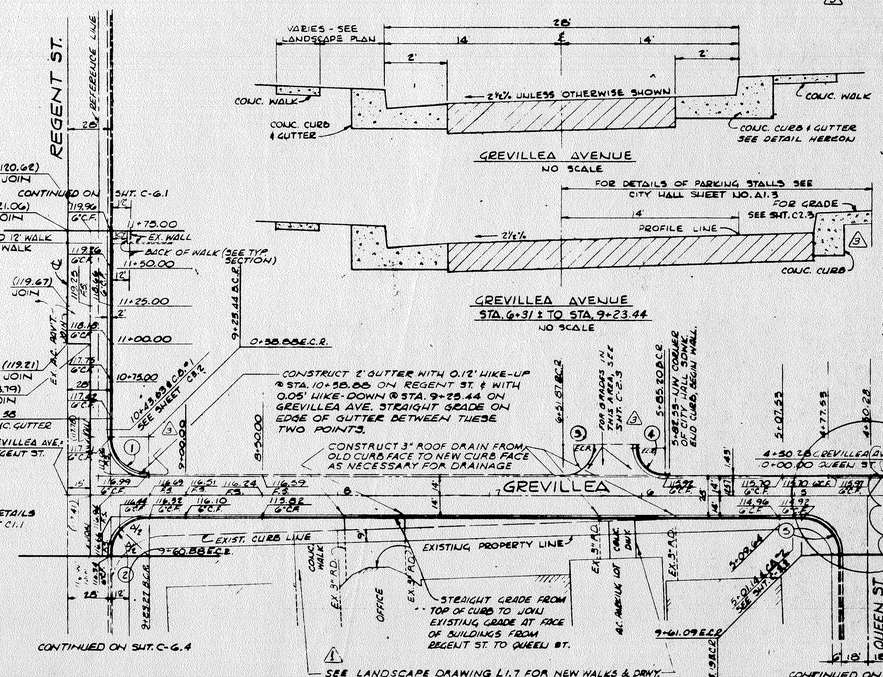
CURVE DATA				
NO.	R	Δ	L	T
1	25'	89°52'37"	39.22'	24.95'
2	25'	90°07'23"	39.32	25.05'
3	20'	90°00'00"	31.42'	20.00
4	18'	90°00'00"	28.28'	18.00'
5	25'	89°52'30"	39.22'	24.95'
6	15'	90°07'30"	23.59	15.03
7	164'	25°32'45"	73.12'	37.18'
8	150'	25°32'45"	66.88'	34.00
9	136	25°32'45"	60.64'	30.85'
10	164'	23°35'15"	67.52'	34.24'
11	150'	23°35'15"	61.75'	31.32'
12	136	23°35'15"	55.99'	28.40
13	25'	91°50'00"	39.71'	25.81'
14	25'	88°10'00"	38.40	24.21'



DETAIL A



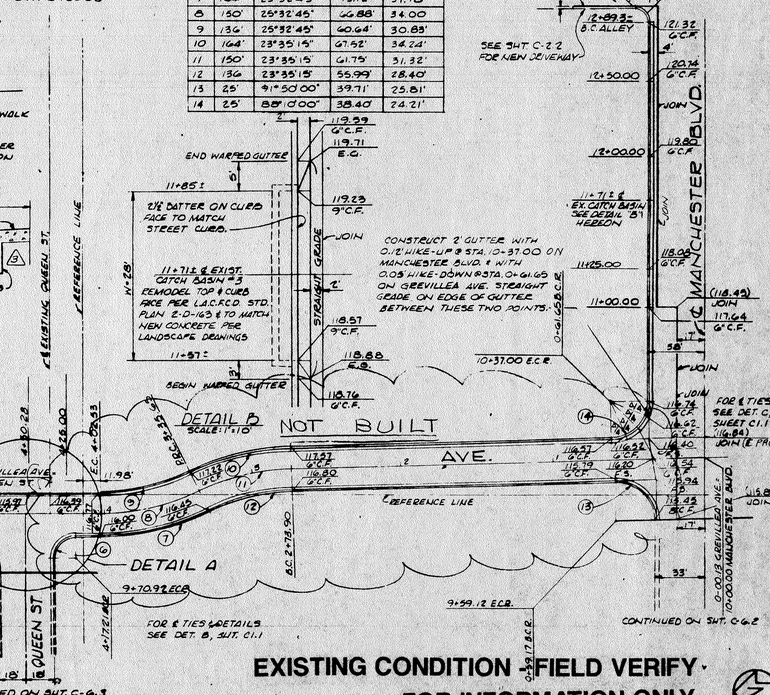
REGENT STREET
NO SCALE



GREVILLEA AVENUE
NO SCALE

GREVILLEA AVENUE
NO SCALE

GREVILLEA AVENUE
STA. 6+31 ± TO STA. 9+23.44
NO SCALE



EXISTING CONDITION - FIELD VERIFY - FOR INFORMATION ONLY

CS-4505

NO.	DATE	REVISION	BY	CHK
3	7-8-71	MISCELLANEOUS REVISIONS	JZ	AH
2	6-22	MODIFICATIONS ISSUED AS ADDENDA 2	EL	AH
1	2-15	MODIFICATIONS ISSUED AS ADDENDA 1	EL	AH

CONSULTANT
S-R ASSOCIATES
SHUIRMAN • ROSOWAY & ASSOCIATES
CONSULTING CIVIL ENGINEERS
8687 WILSHIRE BLVD. • LOS ANGELES 90211
213-837-2600

PROJECT GROUP	APPROVED BY
DESIGNER C.N.L.	PRODUCTION
PROJECT CAPTAIN A.H.	PROJECT ARCHITECT
DRAFTSMAN E.L.	ENGINEER
CHECKER	

THIS DRAWING IS NOT TO BE CONSIDERED FINAL UNTIL ALL THE REQUIRED SIGNATURES OF APPROVAL HAVE BEEN AFFIXED.

PROJECT
CITY OF INGLEWOOD
CIVIC CENTER
INGLEWOOD CALIFORNIA

SHEET TITLE
GREVILLEA AVENUE
PLAN AND PROFILE
SCALE: 1"= 40'

Charles Luckman Associates
Planning Architecture Engineering
9220 Sunset Boulevard Los Angeles, California 90069

SHEET NO. C-4.1
JOB NO. 2000.00.05
DATE 1-29-71

NOTE: CONTRACTOR IS ADVISED THAT ISSUANCE OF THIS DRAWING DOES NOT NECESSARILY INCLUDE REVISIONS MADE BY PREVIOUS ADDENDA, BULLETINS, REVISIONS TO DRAWINGS, OR APPROVED SHOP DRAWINGS.

BURIED TELEPHONE CABLE

M.H.#1

EXISTING TO BE RELOCATED BY CONTRACTOR AS NECESSARY

ELECTRICAL CABLE BURIED

T.S.=3

M.H.#1

PROPOSED FINISHED SURFACE OVER STORM DRAIN

S=0.0025

INV. 104.13

S=0.0060

INV. 111.73 18" CONN. PIPE

INV. 111.73 MAIN LINE

S=0.004

INV. 111.23 12" INLET EAST, PER SHT. C-2.3

INV. 110.91 IN. 108TH

INV. 110.91 OUT SOUTH

65' CONCRETE BACKFILL

42'-18" R.C.P. 1500 D

40'-18" R.C.P. 500 D

153.5' 18" R.C.P. 1500 D

312.2' 21" R.C.P. 1250 D

39± 21" R.C.P. 1250 D

40.2'-18" R.C.P. 1500 D

M.H.#1

EX. M.H.#2

T.S.=3

S=0.004

20.68'

103.37 18" CONN. PIPE

INV. 109.55 MAIN LINE

INV. 109.80 IN. 108TH

INV. 109.15 IN. 108TH

INV. 109.65 OUT SW.

100.0 INV. 99.5±

(102.45) EX. 42" INLET EAST

(103.41) EX. 42" OUTLET WEST

S=0.0035

INV. 115.24 OUT SW.

INV. 111.60 IN. NE

#4466

T.S.=3

PROFILE SCALES
VERTICAL: 1"=2'
HORIZONTAL: 1"=20'

LACFCD M.H.#1

LACFCD T.S.=3

REFERENCE LINE

LACFCD C.B.#1

DETAIL A

12" V.C.P. PER SHT. C-2.3

6' V.C.P. SEE SHT. C-2.3

18" R.C.P. 153.5'

PROP. SEWER SEE SHT. C-4.3

8' V.C.P. SEE SHT. C-2.3

8' V.C.P. SEE SHT. C-2.3

21" R.C.P. 312.2'

PROP. SEWER, SEE SHEET NO. C-4.3

GREVILLEA AVENUE

PROPOSED CURB LINE

REGENT ST.

10+00.00 REGENT ST.

BURIED TELEPHONE CABLE

E. REGENT ST. (EXIST.)

E. GREVILLEA AVE. (NEW)

117.42 G.C.F.

117.51 E.G.

117.12 G.C.F.

117.09 G.C.F.

117.43 E.G.

END WARPED GUTTER

BEGIN WARPED GUTTER

117.31 G.C.F.

E.L.A.C.F.C.D. C.B.#1

B.C.R.

E.C.R.

1.50'

40.2'

LACFCD T.S.=3

PROPOSED CURB LINE

REFERENCE LINES

82'-18" R.C.P.

54.55'

DETAIL A
SCALE: 1"=10'

A=60°, D=15°, C=53'
D=D=21°, ELEV. R=110.15
ELEV. 3=109.97

8' V.C.P. SEE SHT. C-2.3

LACFCD T.S.=3

LACFCD M.H.#1

INV. 109.84

PROP. CURB LINE

REFERENCE LINE

8' V.C.P. SEE SHT. C-4.3

6.00'

GUTTER LINE

21" R.C.P.

INV. 109.84

PROP. SEWER

42.91'

GREVILLEA AVE.

115.04 E.G.

114.92 G.C.F.

114.90 G.C.F.

115.05 E.G.

114.70 G.C.F.

STR. GEAGE

PROP. GUTTER LINE

PROP. CURB LINE

END WARPED GUTTER

LACFCD C.B.#1

DRAIN WARPED GUTTER

B.C.R.

E.C.R.

PROP. SEWER

E. REGENT ST.

DETAIL B
SCALE: 1"=10'

LACFCD M.H.#1

LACFCD T.S.=3

8' V.C.P. SEE SHT. C-4.3

EX. 15ST. 42" R.C.P. ABANDONED IN PLACE BY CITY OF INGLEWOOD PLAN #3552

STREET NOT BUILT

E.C.

6.00'

REFERENCE LINE

RELOCATED 42" STORM DRAIN PER CITY OF INGLEWOOD PLAN #3552

2-42" R.C.P.

TEMP. BLEED LINE TO BE REMOVED AS NECESSARY ⚠ 4 PLUG 18" HOLE IN 42" DRAIN AS DIRECTED BY CITY ENGINEER ⚠

B.C. RELOCATED 5.0

EX. M.H.#2 PER CITY OF INGLEWOOD PLAN #3552

REMOVE PLUG IN EXISTING STUB AND CONNECT NEW S.D. ⚠

DETAIL B

LACFCD C.B.#2

103.37

LACFCD M.H.#1

E. QUEEN ST.

OLD E. QUEEN ST.?

EXIST. 42" R.C.P.

REFERENCE LINE

16'

15'

LOS ANGELES COUNTY FLOOD CONTROL DISTRICT STANDARD PLANS

CATCH BASIN #1	2-D-160
CATCH BASIN #2	2-D-162
MANHOLE #1	2-D-102
STANDARD NON-ROCKING MANHOLE FRAME & COVER	2-D-181
PIPE BEDDING IN TRENCHES.	2-D-117
TRANSITION STRUCTURE #5	2-D-188
JUNCTION STRUCTURE #4	2-D-193

1. SPECIFICATIONS: ALL WORK DETAILED ON THIS PLAN TO BE PERFORMED UNDER CONTRACT SHALL, EXCEPT AS OTHERWISE STATED OR PROVIDED FOR HEREON, BE CONSTRUCTED IN ACCORDANCE WITH "STANDARD SPECIFICATIONS FOR PUBLIC WORKS CONSTRUCTION (1970 EDITION)"
2. PLEASE REFER TO PERTINENT CIVIL, ARCHITECTURAL OR LANDSCAPE ARCHITECTURAL SHEETS FOR DETAILS OF GRADING, PAVEMENT THICKNESS, SIDEWALK, ETC. NOT SHOWN ON THIS PLAN.
3. FOR ⚠ TIES & DETAILS, REFER TO SHEET C-1.1.

EXISTING CONDITION - FIELD VERIFY FOR INFORMATION ONLY

NO.	DATE	REVISION	BY	CHK
2	2-22	MODIFICATIONS ISSUED AS ADDENDA 2	RL	AH
1	2-15	MODIFICATIONS ISSUED AS ADDENDA 1	RL	AH

CONSULTANT
SHUBIRMAN • ROSOWAY & ASSOCIATES
CONSULTING CIVIL ENGINEERS
3007 WILSHIRE BLVD. • LOS ANGELES, CALIF. 90005
213) 937-2600

PROJECT GROUP	APPROVED BY
DESIGNER JKZ.	PRODUCTION
PROJECT CAPTAIN AH	PROJECT ARCHITECT
DRAFTSMAN RL	ENGINEER
CHECKER	

THIS DRAWING IS NOT TO BE CONSIDERED FINAL UNTIL ALL THE REQUIRED SIGNATURES OF APPROVAL HAVE BEEN AFFIXED.

PROJECT
CITY OF INGLEWOOD
CIVIC CENTER
INGLEWOOD CALIFORNIA

SHEET TITLE
GREVILLEA AVENUE STORM DRAIN
PLAN AND PROFILE
SCALE: 1"=20'

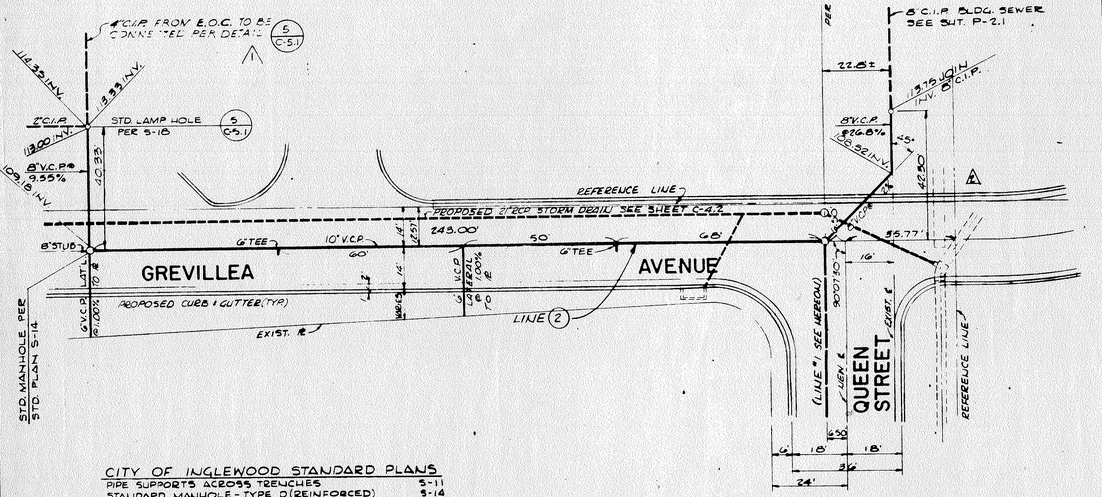
Charles Luckman Associates
Planning Architecture Engineering
9220 Sunset Boulevard Los Angeles, California 90069

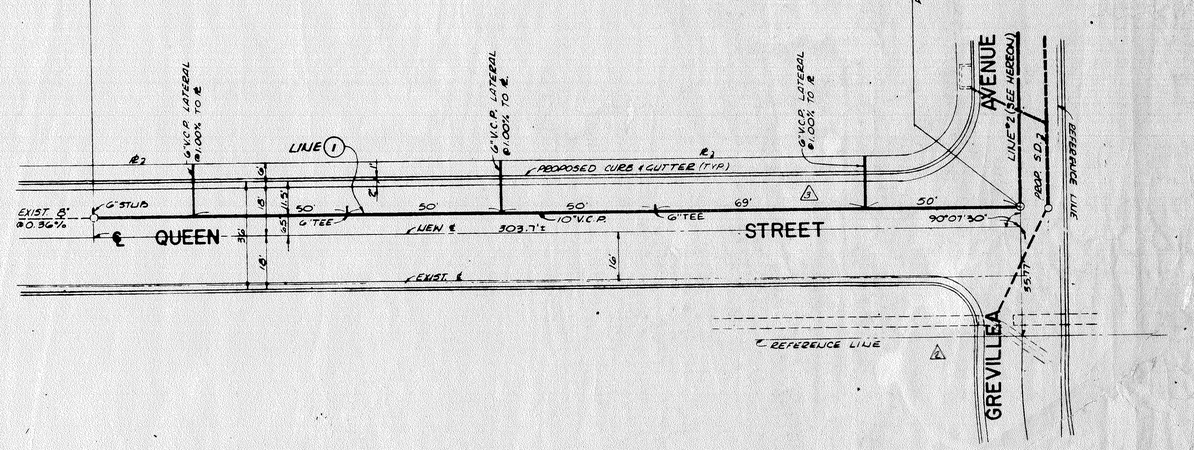
SHEET NO. C-4.2
JOB NO. 2000.00 03
DATE 1-29-71

C5-4505

NOTE: CONTRACTOR IS ADVISED THAT ISSUANCE OF THIS DRAWING DOES NOT NECESSARILY INCLUDE REVISIONS MADE BY PREVIOUS ADDENDA, BULLETINS, REVISIONS TO DRAWINGS, OR APPROVED SHOP DRAWINGS.







CITY OF INGLEWOOD STANDARD PLANS

PIPE SUPPORTS ACROSS TRENCHES	S-11
STANDARD MANHOLE - TYPE D (REINFORCED)	S-14
STANDARD MANHOLE FRAME & COVER	S-20
STANDARD METHOD FOR ADJUSTING MANHOLES	S-24
STANDARD LAMP HOLE	S-18

NOTES

1. SPECIFICATIONS: ALL WORK DETAILED ON THIS PLAN TO BE PERFORMED UNDER CONTRACT SHALL, EXCEPT AS OTHERWISE STATED OR PROVIDED FOR HEREON, BE CONSTRUCTED IN ACCORDANCE WITH "STANDARD SPECIFICATIONS FOR PUBLIC WORKS CONSTRUCTION (1970 EDITION)".
2. PLEASE REFER TO PERTINENT CIVIL, ARCHITECTURAL, OR LANDSCAPE ARCHITECTURAL SHEETS FOR DETAILS OF GRADING, PAVEMENT THICKNESS, SIDEWALK, ETC. NOT SHOWN ON THIS PLAN.
3. FOR ℄ TIES & DETAILS, REFER TO SHEET C1.1.

EXISTING CONDITION - FIELD VERIFY FOR INFORMATION ONLY

NO.	DATE	REVISION	BY	CHK
3	11-10	CHANGED LOCATION OF SEWER LAT.	JZ	
2	2-22	MODIFICATIONS ISSUED AS ADDENDA 2	CL	AH
1	2-15	MODIFICATIONS ISSUED AS ADDENDA 1	RL	AH

CONSULTANT
S-R ASSOCIATES
SHUIRMAN · ROSOWAY & ASSOCIATES
CONSULTING CIVIL ENGINEERS
8687 WILSHIRE BLVD. · LOS ANGELES, CALIF. 90211
213: 657-2600

PROJECT GROUP	APPROVED BY
DESIGNER J.M.Z.	PRODUCTION
PROJECT CAPTAIN A.H.	PROJECT ARCHITECT
DRAFTSMAN R.L.	ENGINEER
CHECKER	

THIS DRAWING IS NOT TO BE CONSIDERED FINAL UNTIL ALL THE REQUIRED SIGNATURES OF APPROVAL HAVE BEEN AFFIXED.

PROJECT
CITY OF INGLEWOOD
CIVIC CENTER
INGLEWOOD CALIFORNIA

SHEET TITLE
GREVILLA AVENUE AND QUEEN STREET SANITARY SEWER PLAN AND PROFILE
SCALE 1" = 20'

Charles Luckman Associates
Planning Architecture Engineering
9220 Sunset Boulevard Los Angeles, California 90069

SHEET NO. C-4.3
JOB NO. 70000.00.03
DATE 1-29-71

TANK SCHEDULE

SYMBOL	SERVICE	LOCATION	RELATED EQUIPMENT	SIZE (IN)	REMARKS
T 1	POTABLE WATER STORAGE	BELOW GRADE IN GREVILLEA ST	-	114 DIA. x 336 LONG	EXISTING 15,000 GAL STORAGE CAP.
T 2	DIESEL OIL STORAGE TANK	BELOW GRADE IN GREVILLEA ST	FUEL OIL TRANSFER PUMPS DP-1 DP-2 & DP-3	95 DIA. x 336 LONG	NEW DOUBLE WALL 10,000 GAL STORAGE TANK
T 3	DIESEL OIL DAY TANK	EXIST. E.O.C. EMERGENCY ROOM	PUMP DP-4	2"	NEW 75 GAL CAPACITY
T 4	DIESEL OIL DAY TANK	NEW BASEMENT GENERATOR ROOM	PUMP DP-5	2"	NEW 75 GAL CAPACITY
T 5	DIESEL OIL DAY TANK	EXIST. CITY HALL EMERGENCY ROOM	PUMP DP-6	2"	NEW 100 GAL CAPACITY

GENERAL NOTES

1. CONTRACTOR SHALL VERIFY CONDITIONS ON THE SITE PRIOR TO BID.
2. EXISTING WORK DAMAGED OR CUT INTO DURING CONSTRUCTION SHALL BE PATCHED OR REPAIRED, PAINTED OR FINISHED TO MATCH EXISTING ADJACENT SURFACES IN TEXTURE, FINISH AND COLOR.
3. EXISTING PIPING SHOWN ARE THOSE REQUIRED TO INDICATE APPROXIMATE LOCATION OF NEW SERVICES AND SHOULD NOT BE CONSIDERED AS A COMPLETE SURVEY OF EXISTING PIPING.
4. LOCATION AND ELEVATION OF EXISTING PIPING ARE FROM BEST AVAILABLE RECORDS AND SHALL BE CONSIDERED AS APPROXIMATE AND INCOMPLETE. BEFORE ANY WORK IS STARTED, THE CONTRACTOR SHALL VERIFY COORDINATES, ELEVATION AND SIZE OF NOTED EXISTING PIPING. DISCREPANCIES BETWEEN FIELD DATA AND DATA ON PLANS AND SPECIFICATIONS SHALL BE REPORTED TO THE ARCHITECT. DO NOT PROCEED WITH INSTALLATION IN AREAS OF DISCREPANCY UNTIL DISCREPANCIES HAVE BEEN RESOLVED.
5. VALVES SHALL BE LINE SIZE UNLESS OTHERWISE NOTED.
6. NO HOLES SHALL BE DRILLED OR CUT IN OR THROUGH ANY STRUCTURAL ELEMENT WITHOUT APPROVAL OF THE ARCHITECT.
7. SLEEVE, GROUT OR SEAL ANNULAR SPACE BETWEEN PIPE AND SLEEVE WITH A MECHANICAL WATER PROOF SEAL FOR ALL PIPE PENETRATIONS THROUGH FLOOR OR WALLS. FOR PENETRATION THROUGH FIRE RATED WALLS, USE DOW-CORNING " FIRE STOP" # 2000 SEALANT.
8. VERIFY ELECTRICAL CHARACTERISTICS WITH ELECTRICAL PLANS PRIOR TO BID AND MATERIAL PURCHASE.

PIPING LEGEND

SYMBOL	ABBREV.	IDENTIFICATION
---- OR [ ]		EXISTING PIPING OR EQUIPMENT
x x x x OR [/]		EXISTING PIPING OR EQUIPMENT TO BE REMOVED
—FOS—	FOS	FUEL OIL SUPPLY PIPING
—FOR—	FOR	FUEL OIL RETURN PIPING
--FOS---	FOS	FUEL OIL SUPPLY PIPING BELOW GRADE/FLOOR.
--FOR---	FOR	FUEL OIL RETURN PIPING BELOW GRADE/FLOOR
		GATE VALVE
		BALL VALVE
		UNION
		RISER UP
		RISER DOWN
		VALVE IN RISER
		FLOW IN DIRECTION OF ARROW
	POC	POINT OF CONNECTION
	POD	POINT OF DISCONNECT

ABV	ABOVE
AP	ACCESS PANEL
BEL	BELOW
BOP	BOTTOM OF PIPE
D	DRAIN
DN	DOWN
EA	EACH
EXIST	EXISTING
F	FIRE
FT	FEET
GAL	GALLON(S)
GPM	GALLONS PER MINUTE
HP	HORSEPOWER
HZ	HERTZ
MAX	MAXIMUM
MIN	MINIMUM
OC	ON CENTER
PH	PHASE
SOV	SHUT OFF VALVE
TYP	TYPICAL
V	VOLTS

DEPARTMENT OF BUILDING & SAFETY
CITY OF INGLEWOOD
APPROVED
By _____
Date 9-30-93
This set of plans & specifications MUST be kept on the job at all times and it is unlawful to make any changes or alterations on same without written permission from the Dir. of Building & Safety, City of Inglewood. The stamping of this plan and ... does NOT be held to permit or to be an approval of ... any provisions of any Ord. Ordinance, State or Federal Law.

d'AUTREMONT-HELMS & ASSOCIATES
CONSULTING ENGINEERS
5311 N. FIGUEROA STREET
LOS ANGELES, CALIF. 90042-2763
TEL: (213) 255-7121
FAX: (213) 258-6238

91804

ARCHITECTS
LEIDENFROST/HOROWITZ & ASSOCIATES
1933 VICTORY BOULEVARD
GLENDALE, CALIFORNIA 91201
(818) 246-6050
OSCAR F. LEIDENFROST, A.I.A.
HERBERT H. HOROWITZ, A.I.A.

Job No.: 91088-24
Drawn: A. ORSAN
Checked:
Approved:
Approved:
Date: 9-15-93
Scale: NONE

Date: Revisions:

04557
C44478

DATE:

SUBMITTED BY:

APPROVED BY:

ENGINEERING DIRECTOR R.C.E. NO. 17167

PIPING LEGEND, GENERAL NOTES AND EQUIPMENT SCHEDULE

CIVIC CENTER COMPLEX RENOVATION
EMERGENCY GENERATOR ADDITION

CITY OF INGLEWOOD
ONE MANCHESTER BOULEVARD
INGLEWOOD, CALIFORNIA 90301

DP-1

CS-4505

CAD INFORMATION:

LA BREA AVENUE

ALLEY

ALLEY

REGENT STREET

POLICE BUILDING

EXISTING GARAGE

EVAPORATIVE CONDENSER IN PLANTER AREA. (UNDER SEPARATE CONTRACT).

NEW TES SYSTEM IN PARKING GARAGE BASEMENT. (UNDER SEPARATE CONTRACT)

FOR HORIZONTAL ROUTING OF FOS & FOR PIPING SEE DWG. DP-4

FOR VERTICAL ROUTING OF FOS & FOR PIPING SEE DWG. DP-4

CITY HALL

FOR HORZONTAL ROUTING OF PIPING SEE DWG. DP-4

EXIST. CITY HALL EMERGENCY GENERATOR LOCATED IN PENTHOUSE SEE DWG. DP-4

EXIST. E.O.C. EMERGENCY GENERATOR LOCATED IN SUB-BASEMENT E.O.C. CENTER. SEE DWG. DP-4

NEW EMERGENCY GENERATOR LOCATED IN PARKING GARAGE BASEMENT. SEE DWG. DP-4

GREVILLEA AVENUE

GREVILLEA AVENUE

MANCHESTER BOULEVARD

NEW REPLACEMENT DIESEL FUEL TANK LOCATED BELOW GRADE. SEE DWG. DP-3

GEORGE CROZIER SCHOOL

QUEEN STREET

LIBRARY

DEPARTMENT OF BUILDING & SAFETY
CITY OF INGLEWOOD
APPROVED

By _____

Date 8-26-93

This set of plans & specifications MUST be kept on the job at all times. It is unlawful to make any changes or alterations on same without written permission from the Dir. of Building & Safety, City of Inglewood. The stamping of this plan and specifications SHALL NOT be held to permit or to be an approval of the violation of any provisions of any City Ordinance, State or Federal Law.

ID INFORMATION:
FILE:91804-4\DP-2
PLOT: 08/26/93
PLOT SCALE=1.00'/IN
REMARKS:

0.5mm 0.7mm 1.00mm 0.13mm 1.40mm 0.18mm 2.00mm 0.25mm 0.35mm 0.5mm 0.7mm 1.00mm 1.4mm 2.0mm

91804

d'AUTREMONT-HELMS & ASSOCIATES
CONSULTING ENGINEERS
6311 N. FIGUEROA STREET
LOS ANGELES, CALIF. 90042-2763
TEL: (213) 255-7121
FAX: (213) 258-6238
FILE: 91804-4\DP-2 (7-30-93)

ARCHITECTS
LEIDENFROST/HOROWITZ & ASSOCIATES
9233 VICTORY BOULEVARD
SUITE 210
VAN NUYS, CALIFORNIA 91401
(818) 342-5050

OSCAR E. LEIDENFROST, A.I.A.
HERBERT H. HOROWITZ, A.I.A.

C4557
C4476

Date: Revision:

Job No.: 91085-24
Drawn: B.C.
Checked:
Approved:
Date: 8-5-93
Scale: 1"=30'-0"

DATE:

SUBMITTED BY:

APPROVED BY:
ENGINEERING DIRECTOR R.C.E. NO. 17167

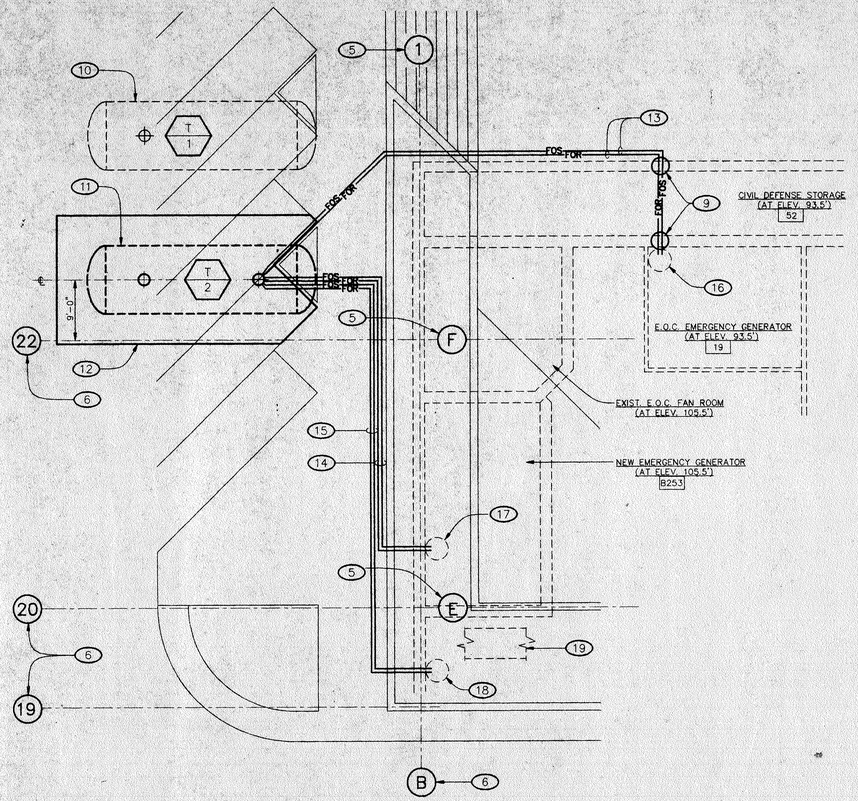
SITE PLAN

CIVIC CENTER COMPLEX RENOVATION
EMERGENCY GENERATOR ADDITION

CITY OF INGLEWOOD
ONE MANCHESTER BOULEVARD
INGLEWOOD, CALIFORNIA 90301

DP-2

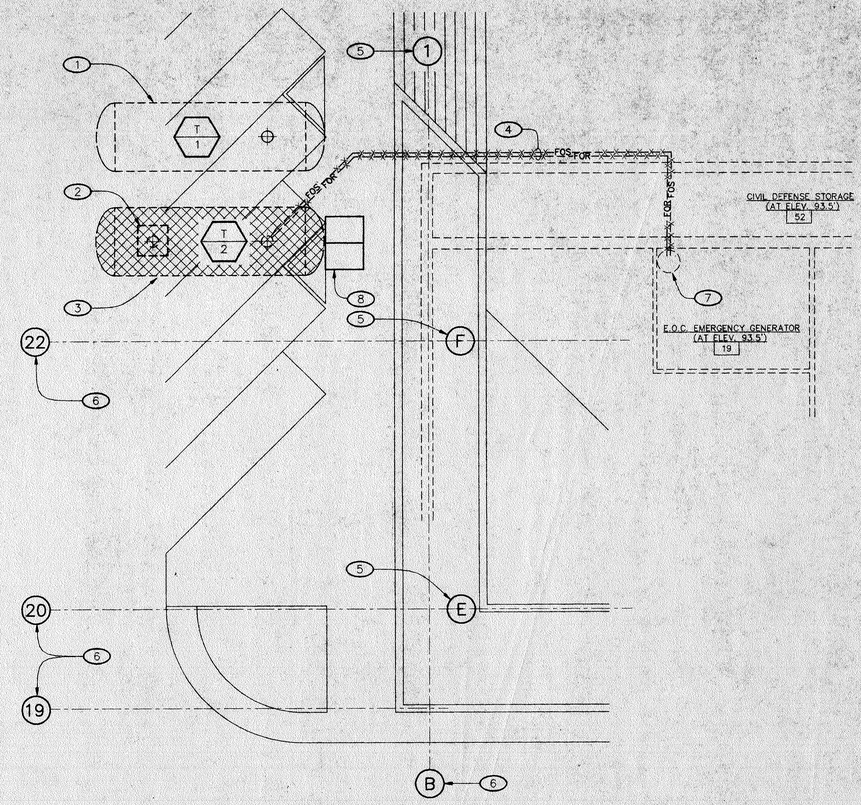
CS-4505



NEW WORK PLAN

SCALE: 1/8"=1'-0"

2 / DP-3



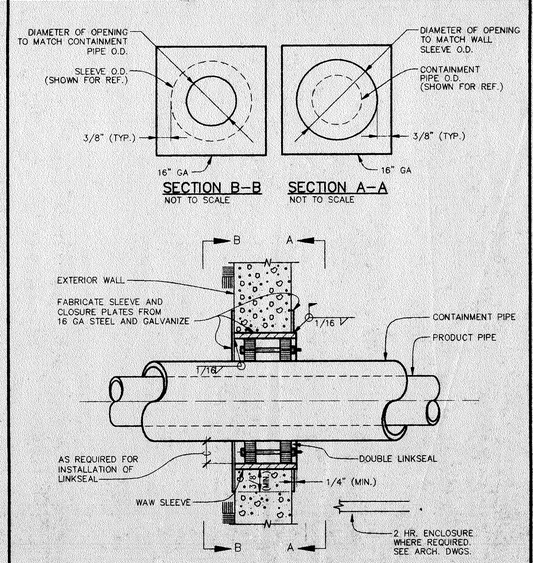
DEMOLITION PLAN

SCALE: 1/8"=1'-0"

1 / DP-3

SHEET NOTES

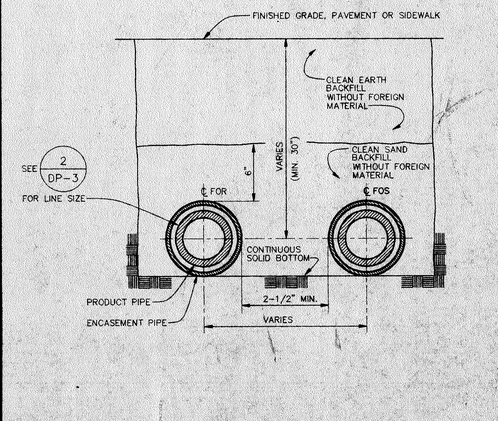
1. EXISTING EMERGENCY POTABLE WATER TANK TO REMAIN
2. EXISTING FUEL OIL FILL CONNECTION TO BE REMOVED
3. EXISTING 10,000 GAL. CAPACITY DIESEL FUEL STORAGE TANK, PUMP, CONCRETE PAD AND PIPING TO BE REMOVED
4. EXIST. 3/4" FOS & FOR LOCATED BELOW GRADE TO BE REMOVED
5. COORDINATES TO E.O.C.
6. COORDINATES TO CITY HALL
7. FOR REPLACEMENT OF EXISTING DIESEL FUEL OIL DAY TANK, AUXILIARY PUMP, AND PIPING LOCATED IN THIS AREA, SEE DWG. DP-4. FOR CONTROLS SEE DWG. DP-5.
8. EXIST. WATER METERS TO REMAIN.
9. ENLARGE WALL PENETRATIONS TO ALLOW FOR NEW PIPING W/CONTAINMENT PIPING TO PASS THROUGH WALL. EXISTING WATER METERS TO REMAIN.
10. EXISTING EMERGENCY POTABLE WATER TANK
11. NEW 10,000 GAL. CAPACITY DIESEL FUEL STORAGE TANK. SEE 1/DP-5
12. NEW CONCRETE TOP SLAB. SEE 1/DP-5
13. NEW 3/4" FOS & FOR PIPING WITH 1-1/4" OUTER CONTAINMENT PIPING.
14. NEW 1" FOS & FOR PIPING WITH 1-1/2" OUTER CONTAINMENT PIPING.
15. NEW 1-1/2" FOS & FOR PIPING WITH 2-1/2" OUTER CONTAINMENT PIPING.
16. FOR DETAIL HOOK-UP OF NEW DAY TANK (T/3) FOR EXIST. E.O.C. EMERGENCY GENERATOR SEE 1/DP-4
17. FOR DETAIL HOOK-UP OF NEW DAY TANK (T/4) FOR NEW EMERGENCY GENERATOR SEE 2/DP-4
18. FOR CONTINUATION OF PIPING TO NEW DAY TANK (T/5) FOR EXIST. CITY HALL EMERGENCY GENERATOR SEE 3/DP-4, 4/DP-4 AND 5/DP-4
19. RELOCATED 48x20 DUCT. SEE GM-1



DETAIL - WALL PENETRATION

NOT TO SCALE

4 / DP-3



DETAIL - BURIED FUEL OIL LINES

NOT TO SCALE

3 / DP-3

CAD INFORMATION:
FILE: 91804-4\DP-3
DATE: 3-30-93
PLOT SCALE: 1.00=1'
PENWIDTHS:
1 0.0mm
2 0.1mm
3 0.2mm
4 0.3mm
5 0.4mm
6 0.5mm
7 0.6mm
8 0.7mm
9 0.8mm
10 0.9mm
11 1.0mm
12 1.1mm
13 1.2mm
14 1.3mm
15 1.4mm
16 1.5mm

DEPARTMENT OF BUILDING & SAFETY
CITY OF INGLEWOOD
APPROVED
By
Date 5-20-93
This set of plans & specifications MUST be kept on the job at all times and it is unlawful to make any changes or alterations on same without written permission from the Div. of Building & Safety, City of Inglewood. The stamping of this plan and specifications SHALL NOT be held to permit or to be an approval of the violation of any provisions of any City Ordinance, State or Federal Law.

d'AUTREMONT-HELMS & ASSOCIATES
CONSULTING ENGINEERS
6311 N. FIGUEROA STREET
LOS ANGELES, CALIF. 90042-2763
TEL: (213) 255-7121
FAX: (213) 258-6238

91804-4

Job No.: 91088-24
Drawn: A. ORSAN
Checked:
Approved:
Approved:
Date: 3-5-93
Scale: AS NOTED

Dates: Revision:

ARCHITECTS
LEIDENFROST/HOROWITZ & ASSOCIATES
1833 VICTORY BOULEVARD
GLENDALE, CALIFORNIA 91201
(818) 246-6056
OSCAR E. LEIDENFROST, A.I.A.
HERBERT H. HOROWITZ, A.I.A.

C4457
C4478

SUBMITTED BY:

APPROVED BY:

ENGINEERING DIRECTOR R.C.E. NO. 17167

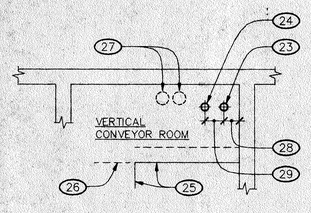
FUEL TANK PLAN AND PIPING DETAILS

CIVIC CENTER COMPLEX RENOVATION
EMERGENCY GENERATOR ADDITION

CITY OF INGLEWOOD
ONE MANCHESTER BOULEVARD
INGLEWOOD, CALIFORNIA 90301

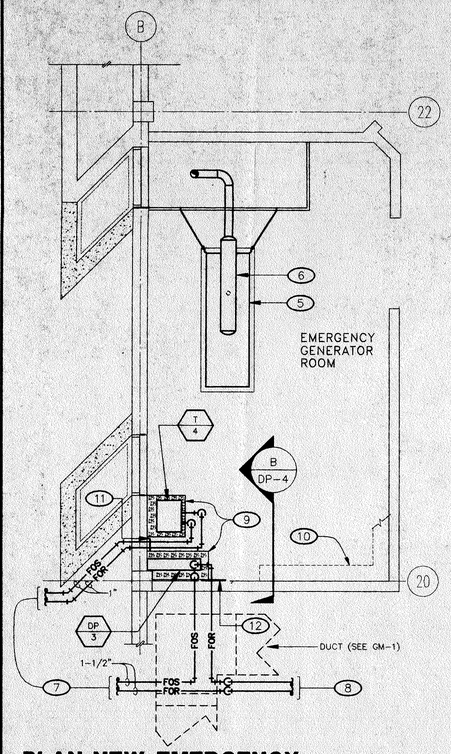
DP-3

CS-4605



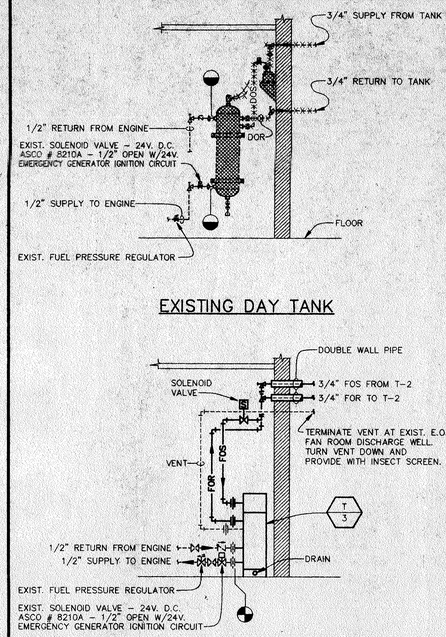
TYPICAL ROUTING OF FOS & FOR THRU VERTICAL CONVEYOR ROOM 5 / DP-4

NOT TO SCALE



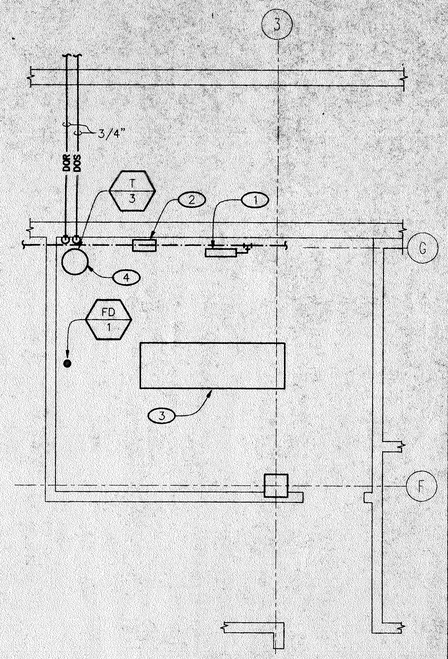
PLAN-NEW EMERGENCY GENERATOR ROOM 2 / DP-4

SCALE: 1/4"=1'-0"



DETAIL - DAY TANK T-3 A / DP-4

NOT TO SCALE

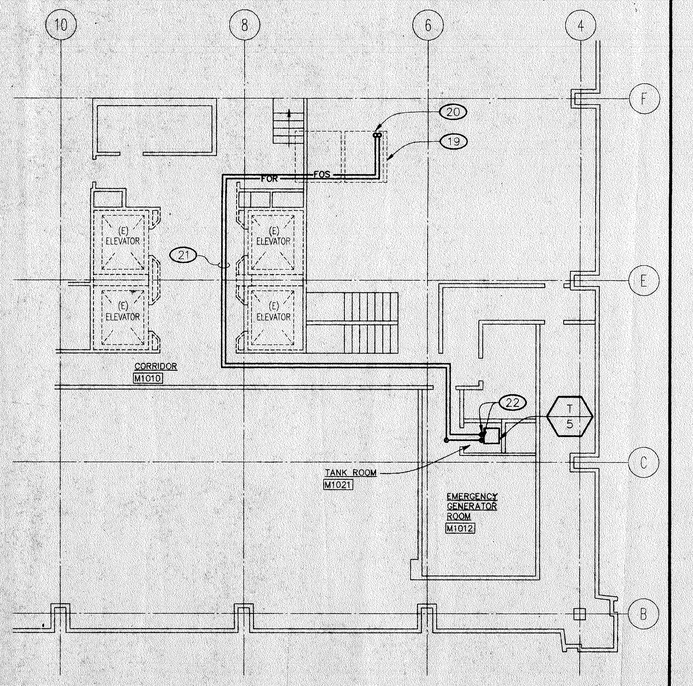


PLAN-EXISTING E.O.C. GENERATOR ROOM 1 / DP-4

SCALE: 1/4"=1'-0"

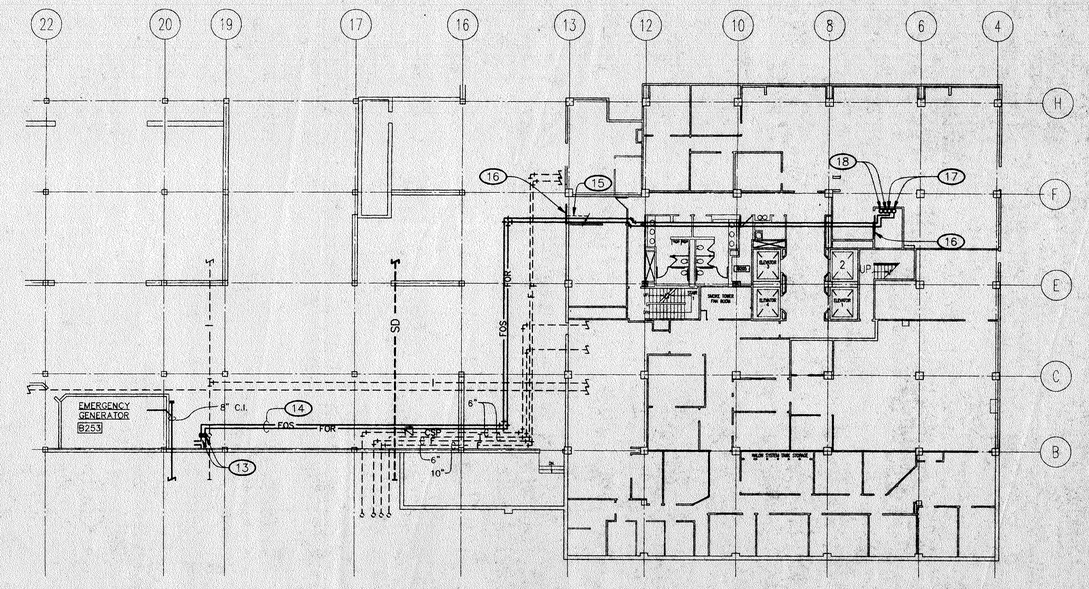
SHEET NOTES

1. 3/4" CW TO EMERGENCY GENERATOR, W/ BFP
2. DIESEL OIL LEVEL GAUGE
3. EXISTING XXX KVA EMERGENCY GENERATOR
4. SEE A / DP-4 FOR BOTH REMOVAL OF EXISTING DAY TANK AND HOOK-UP OF NEW DAY TANK.
5. NEW XXX KVA EMERGENCY GENERATOR
6. EMERGENCY GENERATOR EXHAUST PIPING. SEE 1 / GM-1
7. FOR CONTINUATION SEE DRAWING DP-2
8. FOR CONTINUATION SEE 3 / DP-4
9. 4" HIGH EQUIPMENT PAD. SEE ARCHITECTURAL DRAWING A 1.1
10. ELECTRICAL PANELS. SEE ELECTRICAL DRAWINGS.
11. LIMIT OF DOUBLE WALL PIPING. SIMILAR TO WALL PENETRATION. 4 / DP-3
12. LIMIT OF DOUBLE WALL PIPING. SIMILAR TO WALL PENETRATION. 4 / DP-3
13. FOR CONTINUATION SEE 2 / DP-4
14. 1-1/2" FOS & FOR (DOUBLE WALL PIPING). RUN AS HIGH AS POSSIBLE THRU BEAMS @ COLUMN LINES.
15. SEE ARCHITECTURAL DRAWINGS FOR 2 HR. ENCLOSURE.
16. LIMIT OF 2 HR. ENCLOSURE.
17. 1-1/2" FOS & FOR TO RISE IN CORNER OF VERTICAL CONVEYOR ROOM.
18. EXISTING ELECTRICAL CONDUITS.
19. OUTLINE OF VERTICAL CONVEYOR ROOM BELOW
20. FOS & FOR PIPING TO PENETRATE FLOOR AND BE ENCLOSED IN A 2 HR. RATED ENCLOSURE FROM THIS POINT TO TANK ROOM. SEE ARCHITECTURAL DRAWINGS FOR DETAIL.
21. RUN 1-1/2" FOS & FOR DOUBLE WALL PIPING AS HIGH AS POSSIBLE.
22. DROP TO T / 5
23. FOS
24. FOR
25. EDGE OF FLOOR OPENING IN VERTICAL CONVEYOR ROOM.
26. CONCRETE BEAM BELOW FLOOR
27. EXISTING ELECTRICAL CONDUITS
28. LOCATE NEW FLOOR PENETRATION AS CLOSE TO WALL AS POSSIBLE.
29. MINIMUM DISTANCE WHICH WILL ALLOW 3" BETWEEN CONTAINMENT PIPING O.D.'S.



PARTIAL PENTHOUSE FLOOR PLAN 4 / DP-3

SCALE: 1/8"=1'-0"



PARTIAL BASEMENT PLAN 3 / DP-4

1/16"=1'-0"

DEPARTMENT OF BUILDING & SAFETY
CITY OF INGLEWOOD
APPROVED

By _____

Date 5-2-23

This set of plans & specifications MUST be kept on the job at all times and it is unlawful to make any changes or alterations on same without written permission from the Div. of Building & Safety, City of Inglewood. The stamping of this plan and specifications SHALL NOT be held to permit or to be an approval of the violation of any provisions of any City Ordinance, State or Federal L...

d'AUTREMONT–HELMS & ASSOCIATES
CONSULTING ENGINEERS
6311 N. FIGUEROA STREET
LOS ANGELES, CALIF. 90042-2763
TEL: (213) 255-7121
FAX: (213) 258-6238
91804

FILE: 91804-4\DP-4\8-2-93

Job No.: 91008-24
Drawn: A. CRISAN
Checked:
Approval:
Approval:
Date: 8-5-93
Scale: AS NOTED

Date: Revision:

ARCHITECTS
LEIDENFROST/HOROWITZ & ASSOCIATES
1833 VICTORY BOULEVARD
GLENDALE, CALIFORNIA 91201
(818) 246-6050
OSCAR E. LEIDENFROST, A.I.A.
HERBERT H. HOROWITZ, A.I.A.

C4557
C4478

SUBMITTED BY:

APPROVED BY:

ENGINEERING DIRECTOR R.C.E. NO. 17167

DATE:

EMERGENCY GENERATOR ROOM

CIVIC CENTER COMPLEX RENOVATION
EMERGENCY GENERATOR ADDITION

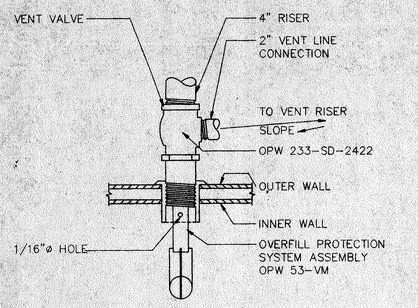
CITY OF INGLEWOOD
ONE MANCHESTER BOULEVARD
INGLEWOOD, CALIFORNIA 90301

DP-4

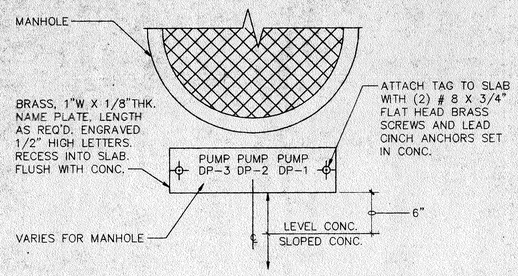
CS-4505

"D" INFORMATION:
FILE:91804-4\DP-4
CREATED:8-2-93
PLOT SCALE:1.05=1
REMARKS:

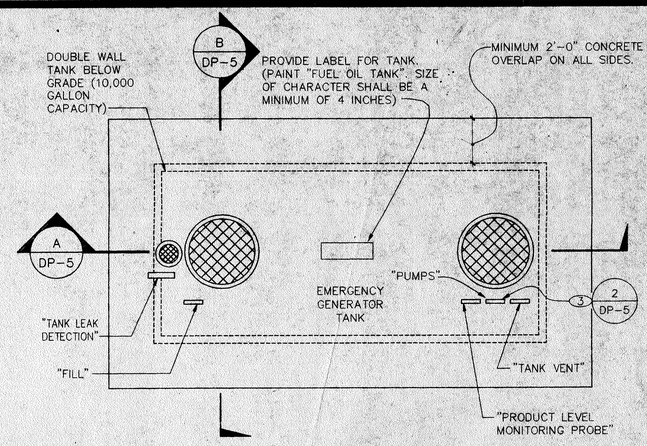
0.9mm
0.7mm
0.5mm
0.4mm
0.3mm
0.25mm
0.2mm
0.18mm
0.15mm
0.13mm



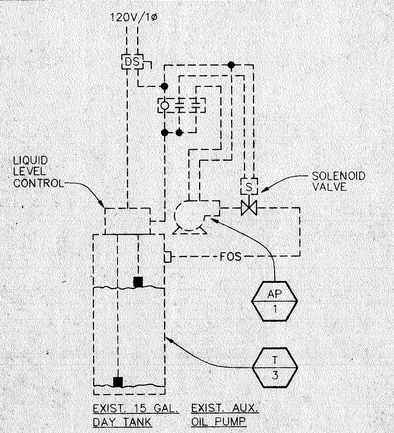
OVERFILL PROTECTION AND VENT VALVE DETAIL (3 / DP-5)
NOT TO SCALE



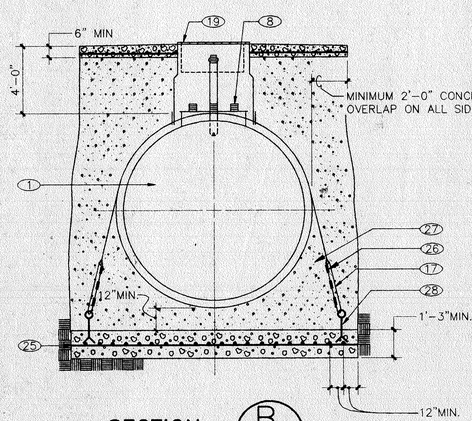
IDENTIFICATION TAG DETAIL (2 / DP-5)
NOT TO SCALE



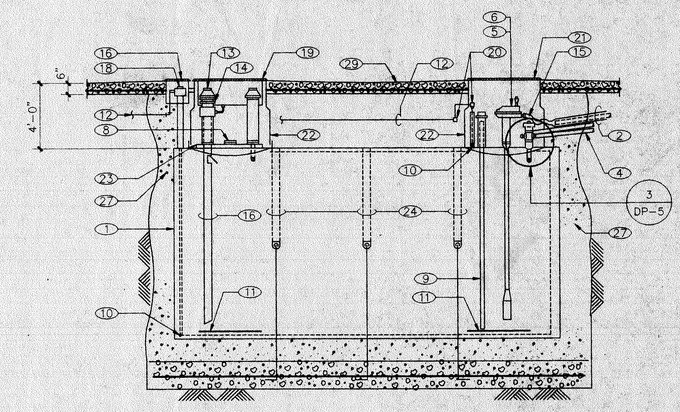
UNDERGROUND TANK PLAN ABOVE GRADE (1 / DP-5)
NOT TO SCALE



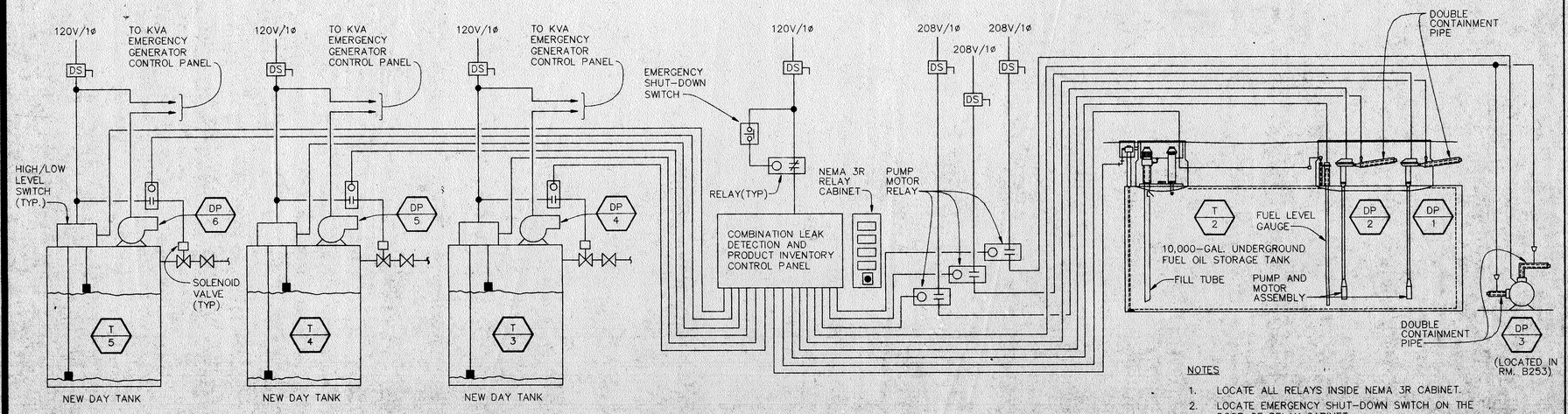
EXISTING E.O.C. TANK MONITORING SYSTEM WIRING DIAGRAM
NOT TO SCALE



SECTION (B / DP-5)
NOT TO SCALE



SECTION (A / DP-5)
NOT TO SCALE



REMOTE LEAK DETECTION AND MONITORING WIRING DIAGRAM
NOT TO SCALE.

NOTES
1. LOCATE ALL RELAYS INSIDE NEMA 3R CABINET.
2. LOCATE EMERGENCY SHUT-DOWN SWITCH ON THE DOOR OF RELAY CABINET.
3. PROVIDE ALL ELECTRICAL WIRING FOR LEAK DETECTION SENSORS UNDER DIVISION 15.

SHEET NOTES

1. UNDERGROUND TANK, DOUBLE-WALL TYPE, SIZE AS INDICATED ON DRAWINGS.
2. PRODUCT PIPING: FOR DIAMETER OF PRODUCT LINE WITH OUTER CONTAINMENT PIPE SEE PIPING PLAN BP-4. "A.O.SMITH-INLAND" RED THREAD II, FIBERGLASS REINFORCED PLASTIC. UL LISTED FOR DIESEL SERVICE. (3 REQUIRED)
3. IDENTIFICATION TAG
4. TANK VENT PIPING: 2" DIAMETER "A.O. SMITH - INLAND" RED THREAD II, FIBERGLASS REINFORCED PLASTIC. UL LISTED FOR DIESEL SERVICE.
5. DIESEL PUMP: SUBMERSIBLE, TURBINE TYPE. UL LISTED. 1/3 HP, 208-230V/1PH/60HZ.,40 GPM @ 10 FT. W.G. HEAD.
6. DIESEL PUMP: SUBMERSIBLE, TURBINE TYPE. UL LISTED. 1/3 HP, 208-230V/1PH/60HZ.,38 GPM @ 20 FT. W.G. HEAD.
7. DIESEL PUMP: HORIZONTAL ROTARY GEAR TYPE. UL LISTED. 3 HP, 208-230V/1PH/60HZ.,30 GPM @ 200 FT. W.G. HEAD.(LOCATED IN NEW EMERGENCY GENERATOR ROOM B253)
8. PLUG UNUSED 4" DIAMETER TANK FITTING.
9. PRODUCT MONITORING SYSTEM PROBE ASSEMBLY.
10. LIQUID SENSING LEAK DETECTION SENSOR.
11. TANK BOTTOM PROTECTOR PAD, 1/2" THICK STEEL PLATE UNDER EACH TANK OPENING.
12. RIGID ELECTRICAL CONDUIT.
13. TIGHT FILL CAP: 4" DIAMETER, SELF-ALIGNING TOGGLE ACTION WITH STAINLESS STEEL TOGGLE PINS, BUNA-N SEAL, FOR USE WITH PADLOCK. "OPW" NO. 634-TT-4"
14. 4" DIAMETER FILL ADAPTOR FOR TRUCK FILL HOSE CONNECTION. RECESSED THREADS AND SET SCREW LOCK. "OPW" NO. 633-T.
15. ALL PIPING CONNECTIONS TO TANK SHALL BE DONE WITH APPROVED FLEXIBLE HOSE.
16. 4" DIAMETER FILL DROP TUBE, ALUMINUM WITH VITON SEAL. "OPW" NO. 61-SO.
17. WIRE ROPE
18. 12" DIAMETER CAST IRON MANHOLE, WATER-TIGHT, TRAFFIC WEIGHT COVER. "CNI" MODEL 209-12 MW. PROVIDE WRENCH FOR OPENING THE MANHOLE COVER.
19. 36" DIAMETER ROUND FIL-SPILL CONTAINMENT BOX WITH 10 GALLON SPILL CONTAINMENT, POPPET VALVE, SCREWS, GASKET, REINFORCED COVER AND PULL HANDLE. "CNI" MODEL 239.
20. JUNCTION BOX.
21. 36" DIAMETER ROUND MANHOLE WITH SCREWS, GASKET, REINFORCED COVER AND PULL HANDLE. "CNI" MODEL 236RSG.
22. FIBERGLASS RISER.
23. 30" DIAMETER MANWAY BOLTED TO TANK WITH FITTINGS LOCATED ON TOP.
24. 3" X 1/2" FLAT IRON STRAP, HOT-DIP GALVANIZED. COVER ENTIRE STRAP WITH TWO COATS OF COAL TAR MASTIC. "KOPPERS" BITUMASTIC NO. 505 OR EQUAL. APPLY COATING IN ACCORDANCE WITH MANUFACTURER'S RECOMMENDATIONS.
25. CONCRETE ANCHOR PAD, 15" MINIMUM THICKNESS, 24" LARGER THAN TANK ON ALL SIDES, 3,000 PSI STRENGTH AT 28 DAYS, #6 REBAR AT 12" O.C. EACH WAY.
26. TRIPLE CABLE CLAMPS.
27. GRAVEL OR CRUSHED STONE BACKFILL PER MANUFACTURER'S SPECIFICATIONS.
28. ANCHOR.
29. CONCRETE TOP SLAB, 6" MINIMUM THICKNESS, 3,000 PSI STRENGTH AT 28 DAYS, #6 REBAR AT 12" O.C. EACH WAY.

DEPARTMENT OF BUILDING & SAFETY
CITY OF INGLEWOOD
APPROVED
By [signature]
Date 5-20-93
This set of plans & specifications MUST be kept on the job at all times and it is unlawful to make any changes or alterations on same without written permission from the Dir. of Building & Safety, City of Inglewood. The stamping of this plan and specifications SHALL NOT be held to permit or to be an approval of the violations of any provisions of any City Ordinance, State or Federal Law.

CAD INFORMATION:
FILE:91804-4\DP-5
DRAWING SCALE:1"=1'
PLOT SCALE:1"=1'
PLOTTED:
0.0mm
0.25mm
0.35mm
0.50mm
0.70mm
1.00mm
1.40mm
2.00mm
0.18mm
0.13mm
0.9mm

91804-4

d'AUTREMONT-HELMS & ASSOCIATES
CONSULTING ENGINEERS
6311 N. FIGUEROA STREET
LOS ANGELES, CALIF. 90042-2763
TEL: (213) 255-7121
FAX: (213) 258-6238
FILE: 91804-4\DP-5\8-1-93

FUEL TANK DETAILS AND CONTROL DIAGRAM

CIVIC CENTER COMPLEX RENOVATION
EMERGENCY GENERATOR ADDITION

CITY OF INGLEWOOD
ONE MANCHESTER BOULEVARD
INGLEWOOD, CALIFORNIA 90301

DP-5

Job No.: 91108-24
Drawn: A. ORSAN
Checked:
Approved:
Date: 07-93
Scale: NONE

Date: Revision:

SUBMITTED BY:

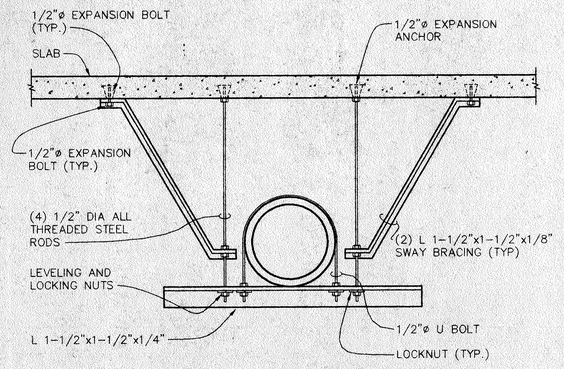
APPROVED BY:
ENGINEERING DIRECTOR R.C.E. NO. 17167

DATE:

ARCHITECTS
LEIDENFROST/HOROWITZ & ASSOCIATES
1835 VICTORY BOULEVARD
GLENDALE, CALIFORNIA 91201
(818) 246-6050
OSCAR F. LEIDENFROST, A.I.A.
HERBERT H. HOROWITZ, A.I.A.

C4557
C4478

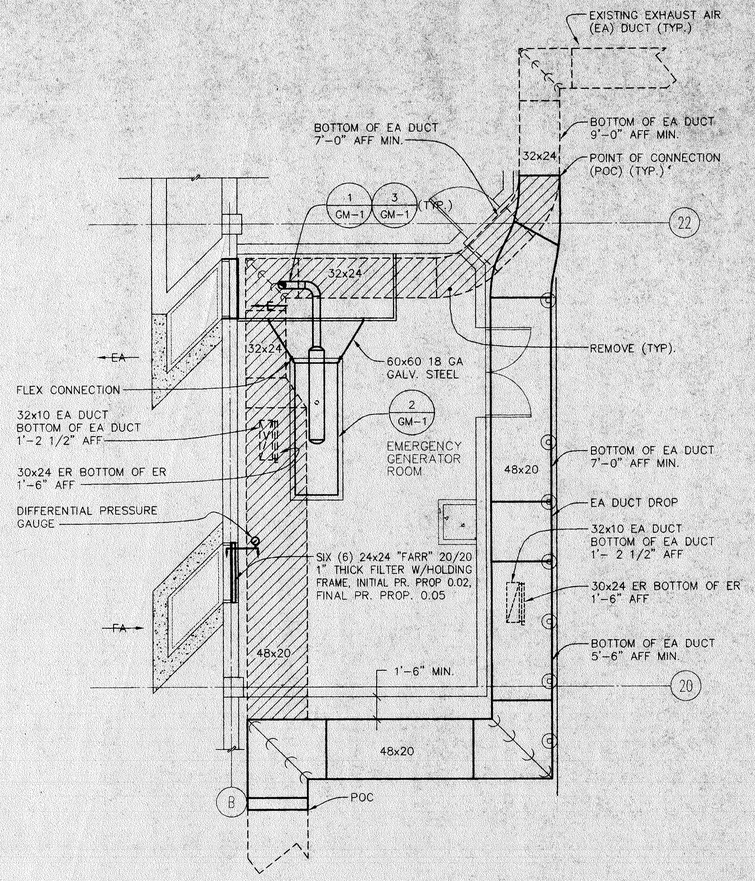
CS-4505



SILENCER SUPPORT

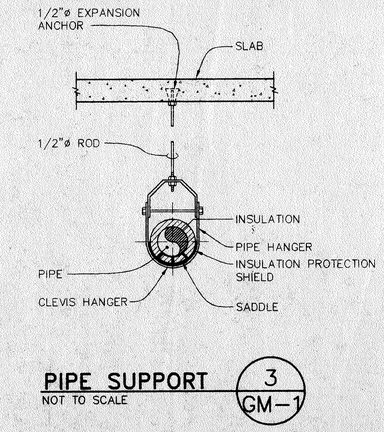
NOT TO SCALE

2 / GM-1



PARTIAL FLOOR PLAN – UPPER LEVEL BASEMENT

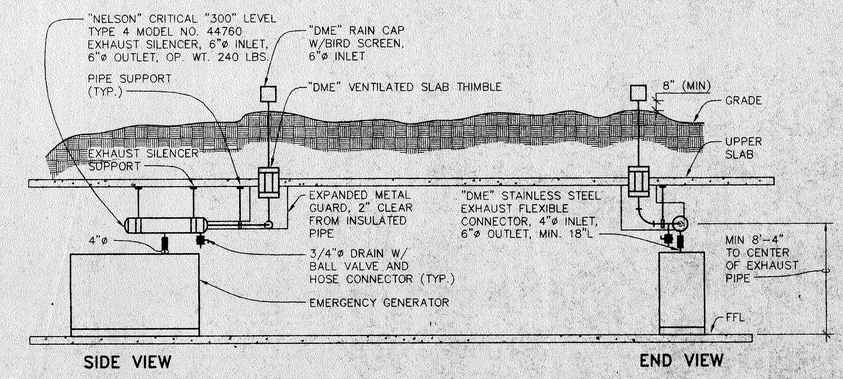
SCALE" 1/4" = 1'-0"



PIPE SUPPORT

NOT TO SCALE

3 / GM-1



ENGINE EXHAUST PIPING

NOT TO SCALE

1 / GM-1

DEPARTMENT OF BUILDING & SAFETY
CITY OF INGLEWOOD
APPROVED
By AK
Date 8-20-93
This set of plans & specifications MUST be kept on this job at all times and it is unlawful to make any changes or alterations on same without written permission from the Div. of Building & Safety, City of Inglewood. The stamping of this plan and specifications SHALL NOT be held to permit or to be an approval of the violation of any provisions of any City Ordinance, State or Federal Law.

AD INFORMATION:
FILE:91804-EGM-1
PLOT: 30-JUL-93
SCALE:

0.5mm
0.4mm
0.3mm
0.25mm
0.2mm
0.18mm
0.15mm
0.13mm
0.1mm
0.09mm
0.08mm
0.07mm
0.05mm

d'AUTREMONT–HELMS & ASSOCIATES
CONSULTING ENGINEERS
6311 N. FIGUEROA STREET
LOS ANGELES, CALIF. 90042-2763
TEL: (213) 255-7121
FAX: (213) 258-6238
FILE: 91804-A\GM-1\7-30-93

91804

Job No.: 91088-24
Drawn: AW/BC
Checked:
Approved:
Approved:
Date: 8-25-93
Scale: AS NOTED

Date: Revision:

ARCHITECTS-
LEIDENFROST/HOROWITZ & ASSOCIATES
1833 VICTORY BLVD.
GLENDALE, CALIFORNIA 91201
(818) 246-6050

OSCAR E. LEIDENFROST, A.I.A.
HERBERT H. HOROWITZ, A.I.A.

04557
08478

DATE:

SUBMITTED BY:

APPROVED BY:

ENGINEERING DIRECTOR R.C.E. NO. 17167

EMERGENCY GENERATOR

CIVIC CENTER COMPLEX RENOVATION
EMERGENCY GENERATOR ADDITION

CITY OF INGLEWOOD
ONE MANCHESTER BOULEVARD
INGLEWOOD, CALIFORNIA 90301

GM-1

CS-4505