NEW PRESCHOOL AND TK/KINDERGARTEN CLASSROOMS AT SANTA FE ELEMENTARY SCHOOL

286 E ORANGE AVE, PORTERVILLE, CA

PORTERVILLE UNIFIED SCHOOL DISTRICT

600 WEST GRAND AVE., PORTERVILLE, CA 93257

PROJECT TRACKING NUMBER: 75523-119

ABBREVIATIONS

ABBREVIATIONS WHEN USED IN THESE DOCUMENTS SHALL CONFORM TO THE FOLLOWING LIST UNLESS OTHERWISE NOTED. INDIVIDUAL DRAWINGS (SUCH AS CIVIL, STRUCTURAL, MECHANICAL, PLUMBING, AND ELECTRICAL) MAY CONTAIN SPECIFIC REFERENCES AND LEGENDS WITH INTERPRETATIONS INTENDED ONLY FOR THOSE DRAWINGS.

&	AND
L.	ANGLE
@	AT
C	CENTERLINE
ø	DIAMETER
#	POUND OR NUMBER
(E)	EXISTING
(N)	NEW
A.B.	ANCHOR BOLT
A/C	AIR CONDITIONING
A.C.	ASPHALT CONCRETE
ACOUST.	ACOUSTICAL
A.D.	AREA DRAIN
ADJ.	ADJUSTABLE
AGG.	AGGREGATE
ALUM.	ALUMINUM
ALT.	ALTERNATE
APPROX.	APPROXIMATE
ARCH.	ARCHITECTURAL (OR ARCHITECT)
ASPH.	ASPHALT
AUTO.	AUTOMATIC
BEL.	BELOW
BET.	BETWEEN
BD.	BOARD
BLDG.	BUILDING
BLK.	BLOCKING
BM.	BEAM
B.O.	BOTTOM OF
BOT.	BOTTOM
B.U.R.	BUILT-UP ROOF
BRD.	BOARD
CAB.	CABINET
C.B.	CATCH BASIN
C.G.	CORNER GUARD
C.I.	CAST IRON
C.J.	CONTROL JOINT
CLG.	CEILING
CLO.	CLOSET
CLR.	CLEAR
CNTR.	COUNTER
COL.	COLUMN
C.M.U.	CONCRETE MASONRY UNIT
CONC.	CONCRETE
CONN.	CONNECTION
CONSTR.	CONSTRUCTION
CONT.	CONTINUOUS
CONTR.	CONTRACTOR
CORR.	CORRIDOR
CTR.	CENTER
CTSK.	COUNTERSUNK
C.Y.	CUBIC YARD
DBL.	DOUBLE
DEPT.	DEPARTMENT
DET.	DETAIL
D.F.	DRINKING FOUNTAIN
D.I.	DROP INLET
DIA	DIAMETER
DIAG.	DIAGONAL
DIM.	DIMENSION
DISP.	DISPENSER
DN.	DOWN
D.O.	DOOR OPENING
DP.	DEEP
DR.	DOOR
DS.	DOWNSPOUT
DW.	DOMESTIC WATER
DWG.	DRAWING
DWR.	DRAWER
E.	EAST
EA.	EACH
E.J.	EXPANSION JOINT
ELEV.	ELEVATION
ELEC.	ELECTRICAL
EMBED.	EMBEDMENT
ENCL.	ENCLOSURE
ENGR.	ENGINEER
E.P.B.	ELECTRICAL PANEL BOARD
EQ.	EQUAL
EQUIP.	EQUIPMENT
E.W.C.	ELECTRIC WATER COOLER
EXP.	EXPANSION
EXIST.	EXISTING
EXT	EXTERIOR
F.A.	FIRE ALARM
F.B.	FLAT BAR
F.D.	FLOOR DRAIN
FDN.	FOUNDATION
F.E.	FIRE EXTINGUISHER
F.E.C.	FIRE EXTINGUISHER AND CABINET
F.F.E.	FINISH FLOOR ELEVATION
F.H.C.	FIRE HOSE CABINET
F.H.M.S.	FLAT HEAD MACHINE SCREW
F.H.W.S.	FLAT HEAD WOOD SCREW

FIN.	FINISH
FL.	FLOOR
FLASH.	FLASHING
F.O.C.	FACE OF CONCRETE
F.O.F.	FACE OF FINISH
F.O.M.	FACE OF MASONRY
F.O.P.	FACE OF PLYWOOD
F.O.S.	FACE OF STUDS
FRPF.	FIRE PROOF
F.R.P.	FIBER REINFORCED PANEL
F.R.T.	FIRE RETARDANT TREATED
FT.	FOOT OR FEET
FTG.	FOOTING
FURR.	FURRING
FUT.	FUTURE
G.	GAS
GA.	GAGE
GALV.	GALVANIZED
G.B.	GRAB BAR
G.I.	GALVANIZED IRON
GND.	GROUND
GR.	GRADE
GYP.	GYPSUM
H.	HIGH
H.B.	HOSE BIB
H.C.	HOLLOW CORE
HD.	HEAD
HDWD.	HARDWOOD
HGT.	HEIGHT
H.M.	HOLLOW METAL
HORIZ.	HORIZONTAL
HR.	HOUR
H.V.A.C.	HEATING VENTILATING, AND AIR CONDITIONING
H.W.H.	HOT WATER HEATER
I.D.	INSIDE DIAMETER
IN.	INCHES
INCL.	INCLUDING, INCLUDES
INSUL.	INSULATION
INT.	INTERIOR
INV.	INVERT
I.P.S.	IRON PIPE SIZE
JAN.	JANITOR
JB.	JAMB
JT.	JOINT
JST	JOIST
K.	KITCHEN
L.	LONG
LAB.	LABORATORY
LAM.	LAMINATE
LAV.	LAVATORY
LKR.	LOCKER
LT.	LIGHT
MAX.	MAXIMUM
M.B.	MACHINE BOLT
M.C.	MEDICINE CABINET
MATL.	MATERIAL
MECH.	MECHANICAL
MET.	METAL
MFR.	MANUFACTURER
MH.	MANHOLE
MIN.	MINIMUM
MISC.	MISCELLANEOUS
M.O.	MASONRY OPENING
MOD.	MODULE, MODULAR
MTD.	MOUNTED
MUL.	MULLION
N.	NORTH
N.I.C.	NOT IN CONTRACT (N.I.C. ITEMS NOT PART OF THIS APPROVAL)
NO. OR #	NUMBER
NOM.	NOMINAL
N.T.S.	NOT TO SCALE
O/	OVER
O.A.	OVERALL
OBS.	OBSCURE
O.C.	ON CENTER
O.D.	OUTSIDE DIAMETER
OFF.	OFFICE
O.H.	OPPOSITE HAND
O.H.M.S.	OVAL HEAD MACHINE SCREW
O.H.W.S.	OVAL HEAD WOOD SCREW
OPNG.	OPENING.
OPP.	OPPOSITE
P.E.N.	PLYWOOD EDGE NAILING
PL.	PLATE
P. LAM.	PLASTIC LAMINATE
PL.	PLATE
PLAS.	PLASTER
PLUMB.	PLUMBING
PLWD.	PLYWOOD

P.O.C.	POINT OF CONNECTION
PR.	PAIR
PRCST.	PRECAST
PREFIN.	PREFINISHED
PROJ.	PROJECT
PT.	POINT
P.T.D.	PAPER TOWEL DISPENSER
P.D.T.R.	COMBINATION PAPER TOWEL DISPENSER AND RECEPTACLE
PTN.	PARTITION
P.T.R.	PAPER TOWEL RECEPTACLE
Q.T.	QUARRY TILE
R.	RADIUS
R.A.	RETURN AIR
R.B.	RUBBER BASE
R.D.	ROOF DRAIN
REF.	REFERENCE
REFR.	REFRIGERATOR
REINF.	REINFORCED
REQ.	REQUIRED
RESIL.	RESILIENT
RM.	ROOM
R.O.	ROUGH OPENING
R.O.W.	RIGHT-OF-WAY
RDWD.	REDWOOD
RWL.	RAIN WATER LEADER
S.	SOUTH
S.A.	SUPPLY AIR
S.C.	SOLID CORE
S.C.D.	SEAT COVER DISPENSER
SCHED.	SCHEDULE
S.D.	STORM DRAIN
S.DISP.	SOAP DISPENSER
SECT.	SECTION
S.F.	SQUARE FOOT (FEET)
SH.	SHELF
SHR.	SHOWER
SHT.	SHEET
SHTG.	SHEATHING
SIM.	SIMILAR
S.M.S.	SHEET METAL SCREW
S.N.D.	SANITARY NAPKIN DISPOSAL
S.N.V.	SANITARY NAPKIN VENDOR
S.O.V.	SHUT OFF VALVE
SPEC.	SPECIFICATIONS
SQ.	SQUARE
ST.STL.	STAINLESS STEEL
S.S.	SERVICE SINK
S.T.	SELF TAPPING
STA.	STATION
STD.	STANDARD
STL.	STEEL
STOR.	STORAGE
STRUCT.	STRUCTURAL
SUSP.	SUSPENDED
S.V.	SHEET VINYL
S.Y.	SQUARE YARD
SYM.	SYMMETRICAL
T.B.	TOWEL BAR
T.C.	TERMINAL CABINET
TEL.	TELEPHONE
TEMP.	TEMPERED
TERR.	TERRAZO
T&G	TONGUE AND GROOVE
THK.	THICK
T.P.D.	TOILET PAPER DISPENSER
T.O.M.	TOP OF MASONRY
T.PL.	TOP OF PLATE
T.O.S.	TOP OF STEEL
TRD.	TREAD
T.S.R.	TOP SET RUBBER
T.V.	TELEVISION
T.W.	TOP OF WALL
TYP.	TYPICAL
UNF.	UNFINISHED
U.O.N.	UNLESS OTHERWISE NOTED
UR.	URINAL
V.B.	VINYL BASE
V.C.T.	VINYL COMPOSITION TILE
VCTB	VINYL COVERED TACKBOARD
VWC	VINYL WALLCOVERING
VERT.	VERTICAL
VEST.	VESTIBULE
W.	WEST
W/	WITH
W.C.	WATER CLOSET
WWF	WELDED WIRE FABRIC
WD.	WOOD
W/O	WITHOUT
WP.	WATERPROOF
W.R.	WATER RESISTANT
W.S.	WOOD SCREW
WSCT.	WAINSCOT
WT.	WEIGHT

CONSULTANTS

ARCHITECT
MICHAEL SCOTT — C-34290
MANGINI ASSOCIATES, INC.
4320 W. MINERAL KING AVE., VISALIA, CA 93291
PHONE: 559.627.0530 FAX: 559.627.1926

CIVIL ENGINEER
WA VANG — RCE-73146
LANE ENGINEERS INC.
979 NORTH BLACKSTONE STREET, TULARE, CA 93274
PHONE: 559.688.5263 FAX: 559.688.8893

STRUCTURAL ENGINEER
JACK D. BREWER — S-5792
ADVANCED STRUCTURAL DESIGN, INC.
7112 N. FRESNO STREET, SUITE 311, FRESNO, CA 93720
PHONE: 559.432.4151 FAX: 559.432.9315

MECHANICAL ENGINEER
RYAN CARLSON — M-34846
LAWRENCE ENGINEERING GROUP
4910 E. CLINTON WAY, SUITE 101, FRESNO, CA 93727
PHONE: 559.431.0101 FAX: 559.733.1362

ELECTRICAL ENGINEER
STEVEN K. EASTHAM — E-18786
ROSE SING EASTHAM & ASSOCIATES
131 S. DUNWORTH ST., VISALIA, CA 93292
PHONE: 559.733.2671 FAX: 559.733.0372

PROJECT SCOPE

TWO NEW SINGLE-STORY, WOOD FRAME, SLAB ON GRADE BUILDINGS 700 AND 800, AND RELATED SITE DEVELOPMENT INCLUDING A NEW PARKING LOT AND ALTERATIONS TO EXISTING BUILDING 100 AND AN EXISTING PARKING LOT.

DEFERRED APPROVALS

INSTALLATION OF DEFERRED APPROVAL ITEMS SHALL NOT BE STARTED UNTIL THE CONTRACTOR'S DRAWINGS SPECIFICATIONS, AND ENGINEERING CALCULATIONS FOR THE ACTUAL SYSTEMS HAVE BEEN ACCEPTED AND SIGNED BY THE ARCHITECT OR STRUCTURAL ENGINEER AND APPROVED BY THE DIVISION OF THE STATE ARCHITECT.

1. NONE

APPLICABLE CODES

ALL WORK SHALL BE PERFORMED IN ACCORDANCE WITH THE PLANS, SPECIFICATIONS AND THE FOLLOWING REGULATIONS :

1. 2022 BUILDING STANDARDS ADMINISTRATIVE CODE, PART 1, TITLE 24 CCR.
2. 2022 CALIFORNIA BUILDING CODE (CBC), PART 2, TITLE 24 CCR.
3. 2022 CALIFORNIA ELECTRICAL CODE (CEC), PART 3, TITLE 24 CCR.
4. 2022 CALIFORNIA MECHANICAL CODE (CMC) PART 4, TITLE 24 CCR.
5. 2022 CALIFORNIA PLUMBING CODE (CPC), PART 5, TITLE 24 CCR.
6. 2022 CALIFORNIA ENERGY CODE (CEC), PART 6, TITLE 24 CCR.
7. 2022 CALIFORNIA FIRE CODE, PART 9, TITLE 24 CCR.
8. 2022 CALIFORNIA GREEN BUILDING STANDARDS CODE (CALGREEN), PART 11, TITLE 24 CCR.
9. 2022 CALIFORNIA REFERENCED STANDARDS, PART 12, TITLE 24 CCR.
10. TITLE 19 CCR, PUBLIC SAFETY, STATE FIRE MARSHAL REGULATIONS.
11. 2022 NFPA 72 NATIONAL FIRE ALARM AND SIGNALING CODE, (CA AMENDED)
12. 2019 NFPA 80 STANDARD FOR FIRE DOORS AND OTHER OPENING PROTECTIVES.
13. 2022 NFPA 13 STANDARD FOR THE INSTALLATION OF SPRINKLER SYSTEMS, (CA AMENDED)
14. 2021 NFPA 17A STANDARD FOR WET CHEMICAL EXTINGUISHING SYSTEMS.
15. 2019 NFPA 14 STANDARD FOR THE INSTALLATION OF STANDPIPE AND HOSE SYSTEMS, (CA AMENDED)
16. 2019 NFPA 20 STANDARD FOR THE INSTALLATION OF STATIONARY PUMPS FOR FIRE PROTECTION.
17. 2019 NFPA 24 STANDARD FOR THE INSTALLATION OF PRIVATE FIRE SERVICE MAINS AND THEIR APPURTENANCES, (CA AMENDED)
18. 2018 NFPA 2001 STANDARD ON CLEAN AGENT FIRE EXTINGUISHING SYSTEMS, (CA AMENDED)

REFERENCE CODE SECTION FOR NFPA STANDARDS - 2022 CBC (SFM) CHAPTER 35, SEE CHAPTER 35 FOR STATE OF CALIFORNIA AMENDMENTS TO NFPA STANDARDS.

SYMBOL LEGEND

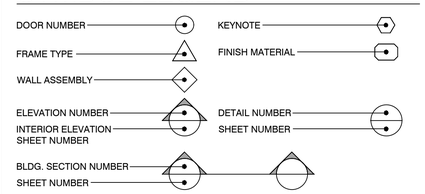

GENERAL NOTES

1. CUTTING, BORING, SAW CUTTING, OR DRILLING THROUGH NEW OR EXISTING STRUCTURAL MEMBERS WILL BE PERMITTED ONLY WHERE INDICATED ON THE DRAWINGS, OR WHEN ACCEPTED BY THE ARCHITECT.
2. CHANGES TO THE APPROVED DRAWINGS AND SPECIFICATIONS AND SUBSTITUTIONS AFFECTING DSA REGULATED ITEMS SHALL BE MADE BY ADDENDUM OR A CONSTRUCTION CHANGE DOCUMENT (CCD) APPROVED BY THE DIVISION OF THE STATE ARCHITECT, AS REQUIRED BY SECTION 4-338, PART 1, TITLE 24, CCR.
3. A "DSA CERTIFIED" CLASS 2 PROJECT INSPECTOR EMPLOYED BY THE DISTRICT (OWNER) AND APPROVED BY THE DSA SHALL PROVIDE CONTINUOUS INSPECTION OF THE WORK. THE DUTIES OF THE INSPECTOR ARE DEFINED IN SECTION 4-342, PART 1, TITLE 24, CCR.
4. A DSA ACCEPTED TESTING LABORATORY DIRECTLY EMPLOYED BY THE DISTRICT (OWNER) SHALL CONDUCT ALL THE REQUIRED TESTS AND INSPECTIONS FOR THE PROJECT.
5. GRADING PLANS, DRAINAGE IMPROVEMENTS, ROAD AND ACCESS REQUIREMENTS, AND ENVIRONMENTAL HEALTH CONSIDERATIONS SHALL COMPLY WITH ALL LOCAL ORDINANCES.
6. THE INTENT OF THESE DRAWINGS AND SPECIFICATIONS IS THAT THE WORK OF THE ALTERATION, REHABILITATION OR RECONSTRUCTION IS TO BE IN ACCORDANCE WITH TITLE 24, CCR. SHOULD ANY EXISTING CONDITIONS SUCH AS DETERIORATION OR NON-COMPLYING CONSTRUCTION BE DISCOVERED WHICH IS NOT COVERED BY THE CONTRACT DOCUMENTS WHEREIN THE FINISHED WORK WILL NOT COMPLY WITH TITLE 24, CCR, A CONSTRUCTION CHANGE DOCUMENT (CCD), OR A SEPARATE SET OF PLANS AND SPECIFICATIONS, DETAILING AND SPECIFYING THE REQUIRED WORK SHALL BE SUBMITTED TO AND APPROVED BY DSA BEFORE PROCEEDING WITH THE WORK. (SECTION 4-317 (c), PART 1, TITLE 24, CCR).
7. THE DRAWINGS AND SPECIFICATIONS ARE BASED ON LIMITED FIELD INVESTIGATION. CONTRACTOR SHALL FIELD VERIFY THE EXISTING CONDITIONS PRIOR TO THE BID NECESSARY TO ACCOMPLISH THE WORK WHETHER SPECIFICALLY INDICATED OR NOT.
8. THE STORAGE OF MATERIAL AND EFFECTS OF WORK SHALL BE APPROVED BY LOCAL FIRE AUTHORITY. COMPLY WITH CALIF. FIRE CODE CHAPTER 33 - FIRE SAFETY DURING CONSTRUCTION AND DEMOLITION. COMPLY WITH CBC CHAPTER 33, SAFETY DURING CONSTRUCTION.
9. THE CALIFORNIA ENERGY CODE SECTION 10-103 REQUIRES ACCEPTANCE TESTING ON ALL NEWLY INSTALLED LIGHTING CONTROLS, MECHANICAL SYSTEMS, ENVELOPES, AND PROCESS EQUIPMENT AFTER INSTALLATION AND BEFORE PROJECT COMPLETION. AN ACCEPTANCE TEST IS A FUNCTIONAL PERFORMANCE TEST TO HELP ENSURE THAT NEWLY INSTALLED EQUIPMENT IS OPERATING AND IN COMPLIANCE WITH THE ENERGY CODE. LIGHTING CONTROLS ACCEPTANCE TESTS MUST BE PERFORMED BY A CERTIFIED LIGHTING CONTROLS ACCEPTANCE TEST TECHNICIAN (ATT). MECHANICAL SYSTEM ACCEPTANCE TESTS MUST BE PER FORMED BY A CERTIFIED MECHANICAL ATT FOR PROJECTS SUBMITTED ON OR AFTER OCTOBER 1, 2021. ENVELOPE AND PROCESS EQUIPMENT ACCEPTANCE TESTS SHALL BE PERFORMED BY THE INSTALLING CONTRACTOR, ENGINEER/ ARCHITECT OF RECORD OF THE OWNER'S AGENT. A LISTING OF CERTIFIED ATT CAN BE FOUND AT: https://www.energy.ca.gov/programs-and-topics/programs -and- topics /programs/acceptance-test-technician-certification- provider-program/acceptance. THE ACCEPTANCE TESTING PROCEDURES MUST BE REPEATED, AND DEFICIENCIES MUST BE CORRECTED BY THE BUILDER OR INSTALLING CONTRACTOR UNTIL THE CONSTRUCTION/INSTALLATION OF THE SPECIFIED SYSTEMS CONFORM AND PASS THE REQUIRED ACCEPTANCE CRITERIA. PROJECT INSPECTORS WILL COLLECT THE FORMS TO CONFIRM THAT THE REQUIRED ACCEPTANCE TESTS HAVE BEEN COMPLETED.

VICINITY MAP

SANTA FE ELEMENTARY SCHOOL — N.T.S.
286 E ORANGE AVE., PORTERVILLE, CA 93257

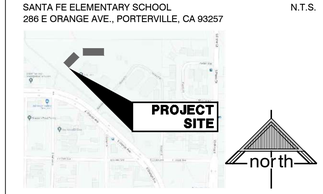

SHEET INDEX (177 SHEETS TOTAL)

GENERAL INFORMATION

G1	COVER SHEET, SHEET INDEX, & VICINITY MAP
FC1	FIRE CODE, BUILDING CODE SUMMARY

CIVIL

C0.1	CIVIL COVER SHEET
C0.2	CIVIL INDEX SHEET
C1.1	PARTIAL TOPOGRAPHIC SURVEY
C1.2	PARTIAL TOPOGRAPHIC SURVEY
C1.3	PARTIAL TOPOGRAPHIC SURVEY
C1.4	PARTIAL TOPOGRAPHIC SURVEY
C1.5	PARTIAL TOPOGRAPHIC SURVEY
C2.1	PAVING PLAN
C2.2	PAVING PLAN
C2.3	PAVING PLAN
C3.1	GRADING AND DRAINAGE PLAN
C3.2	GRADING AND DRAINAGE PLAN
C3.3	GRADING AND DRAINAGE PLAN
C3.4	ENLARGED GRADING DETAILS
C4.1	STORM DRAIN PLAN
C4.2	STORM DRAIN PLAN
C5.1	OFFSITE DEMOLITION PLAN
C5.2	OFFSITE IMPROVEMENT PLAN
C7.1	CIVIL DETAILS
C7.2	CIVIL DETAILS
C7.3	OFFSITE CIVIL DETAILS

LANDSCAPE

LA1	PARTIAL PLANTING PLAN
LA2	PARTIAL PLANTING PLAN
LA3	PARTIAL PLANTING PLAN
LA4	PARTIAL PLANTING PLAN
LA5	PLANTING DETAILS
IR1	PARTIAL IRRIGATION PLAN
IR2	PARTIAL IRRIGATION PLAN
IR3	PARTIAL IRRIGATION PLAN
IR4	IRRIGATION LEGEND
IR5	IRRIGATION DETAILS
IR6	IRRIGATION DETAILS

SITE DEVELOPMENT

SD1	OVERALL SITE PLAN
SD2	ENLARGED DEMO SITE PLAN
SD3	ENLARGED SITE PLAN
SD4	ENLARGED DEMO SITE PLAN
SD5	ENLARGED SITE PLAN
SD6	ENLARGED DEMO SITE PLAN
SD7	ENLARGED SITE PLAN
SD8	ENLARGED SITE PLANS
SD9	SITE DETAILS
SD10	SITE DETAILS
SD11	SITE DETAILS

ARCHITECTURAL

A1	BLDG. 700 FLOOR PLAN
A2	BLDG. 700 ENLARGED FLOOR PLAN
A3	BLDG. 700 EXTERIOR ELEVATIONS
A4	BLDG. 700 REFLECTED CEILING PLAN
A5	BLDG. 700 ROOF PLAN
A6	BLDG. 700 SECTIONS AND AIR BARRIER SECTIONS
A7	BLDG. 700 SECTIONS AND AIR BARRIER SECTIONS
A8	BLDG. 700 INTERIOR ELEVATIONS
A9	BLDG. 700 INTERIOR ELEVATIONS
A10	BLDG. 800 OVERALL FLOOR PLAN AND PARTIAL FLOOR PLAN
A11	BLDG. 800 PARTIAL FLOOR PLAN
A12	BLDG. 800 ENLARGED FLOOR PLANS, EXIT ANALYSIS
A13	BLDG. 800 EXTERIOR ELEVATIONS
A14	BLDG. 800 OVERALL REFLECTED CEILING PLAN AND PARTIAL CEILING PLAN
A15	BLDG. 800 PARTIAL REFLECTED CEILING PLAN
A16	BLDG. 800 OVERALL ROOF PLAN AND PARTIAL ROOF PLAN
A17	BLDG. 800 PARTIAL ROOF PLAN
A18	BLDG. 800 SECTIONS
A19	BLDG. 800 SECTIONS
A20	BLDG. 800 AIR BARRIER SECTIONS
A21	BLDG. 800 INTERIOR ELEVATIONS
A22	BLDG. 800 INTERIOR ELEVATIONS
A23	BLDG. 800 INTERIOR ELEVATIONS
A24	BLDG. 700 FINISH SCHEDULE
A25	BLDG. 800 FINISH SCHEDULE
A26	WALL ASSEMBLIES
A27	DOOR SCHEDULE
A28	FRAME TYPE SCHEDULE
A29	FRAME DETAILS
A30	MILLWORK DETAILS
A31	TYPICAL DETAILS
A32	DETAILS
A33	DETAILS
A34	DETAILS

STRUCTURAL

S1.1	TYPICAL NOTES AND DETAILS
S1.2	TYPICAL NOTES AND DETAILS
S1.3	TYPICAL NOTES AND DETAILS
S1.4	TYPICAL NOTES AND DETAILS
S1.5	TYPICAL NOTES AND DETAILS
S1.6	TYPICAL NOTES AND DETAILS
S2.1	BUILDING 700 FOUNDATION PLAN
S2.2	BUILDINGS 800 FOUNDATION PLAN
S2.3	BUILDINGS 800 FOUNDATION PLAN
S2.4	FOOTING DETAILS
S3.1	BUILDING 700 ROOF FRAMING PLAN
S3.2	BUILDINGS 800 ROOF FRAMING PLAN
S3.3	BUILDING 800 ROOF FRAMING PLAN
S4.1	BUILDING 700 CEILING FRAMING PLAN
S4.2	BUILDINGS 800 CEILING FRAMING PLAN
S4.3	BUILDINGS 800 CEILING FRAMING PLAN

STRUCTURAL (CONT.)

S5.1	BUILDING 700 & 800 SECTIONS
S5.2	BUILDING 700 SECTIONS
S5.3	BUILDINGS 800 SECTIONS
S6.1	BUILDING 700 SHEAR WALL ELEVATIONS
S6.2	BUILDINGS 800 SHEAR WALL ELEVATIONS
S7.1	FRAMING DETAILS
S7.2	FRAMING DETAILS

PLUMBING

P1	OVERALL PLUMBING SITE PLAN, LEGEND, AND NOTES
P2	ENLARGED PLUMBING SITE PLAN
P3	BLDG. 700 PLUMBING PLAN
P4	BLDG. 700 ENLARGED PLUMBING PLANS
P5	BLDG. 800 PLUMBING PLAN WEST
P6	BLDG. 800 PLUMBING PLAN EAST
P7	BLDG. 800 ENLARGED PLUMBING PLANS
P8	PLUMBING DETAILS
P9	PLUMBING SCHEDULES AND DETAILS

FIRE PROTECTION

F1	FIRE PROTECTION SITE PLAN
F2	BUILDING 800 FIRE PROTECTION PLANS (WEST)
F3	BUILDING 800 FIRE PROTECTION PLANS (EAST)
F4	BUILDING 800 SECTION DRAWINGS
F5	RISER & PIPING DETAILS
F6	INSTALLATION DETAILS
F7	SITE DETAILS
F8	STRUCTURAL DETAILS
F9	STRUCTURAL DETAILS
F10	BUILDING 700 FIRE PROTECTION PLANS
F11	BUILDING 700 RISER DETAIL AND SECTION DRAWINGS

MECHANICAL

M1.1	BLDG. 700 MECHANICAL FLOOR PLAN
M1.2	BLDG. 700 MECHANICAL FLOOR PLAN
M1.3	BLDG. 700 MECHANICAL ROOF PLAN
M2.1	BLDG. 800 MECHANICAL FLOOR PLAN
M2.2	BLDG. 800 MECHANICAL FLOOR PLAN
M2.3	BLDG. 800 MECHANICAL FLOOR PLAN
M2.4	BLDG. 800 MECHANICAL FLOOR PLAN
M3.1	MECHANICAL SCHEDULES GENERAL NOTES & LEGENDS
M3.2	MECHANICAL SCHEDULES GENERAL NOTES & LEGENDS
M4.1	MECHANICAL DETAILS
M4.2	MECHANICAL DETAILS
M5.1	TITLE 24 DOCUMENTS
M5.2	TITLE 24 DOCUMENTS
M5.3	TITLE 24 DOCUMENTS
M5.4	TITLE 24 DOCUMENTS
M5.5	TITLE 24 DOCUMENTS
M5.6	TITLE 24 DOCUMENTS
M5.7	COMMISSIONING DOCUMENTS
M5.8	COMMISSIONING DOCUMENTS

ELECTRICAL

EG1.1	ELEC. CODES, NOTES SYMBOLS AND FIXTURE SCHEDULE
EG1.2	BUILDING 700 INDOOR LIGHTING COMPLIANCE
EG1.3	BUILDING 800 INDOOR LIGHTING COMPLIANCE
EG1.4	OUTDOOR LIGHTING COMPLIANCE
EG1.5	POWER COMPLIANCE
EG1.6	SOLAR AND BATTERY COMPLIANCE
ES1.1	OVERALL SITE ELECTRICAL PLAN
ES1.2	PARTIAL ENLARGED SITE ELECTRICAL PLAN - DEMO
ES1.3	PARTIAL ENLARGED SITE ELECTRICAL PLAN - NEW
E1.1	BUILDING 700 OVERALL LIGHTING PLAN
E1.2	BUILDING 700 PARTIAL ENLARGED LIGHTING PLAN
E1.3	BUILDING 700 PARTIAL ENLARGED LIGHTING PLAN
E1.4	OVERALL LIGHTING PLAN
E1.5	BUILDING 800 PARTIAL ENLARGED LIGHTING PLAN
E1.6	BUILDING 800 PARTIAL ENLARGED LIGHTING PLAN
E1.7	BUILDING 800 PARTIAL ENLARGED LIGHTING PLAN
E2.1	BUILDING 700 POWER PLANS
E2.2	BUILDING 800 POWER PLAN
E2.3	BUILDING 800 ROOF ELECTRICAL PLAN
E3.1	BUILDING 700 FIRE ALARM PLANS
E3.2	BUILDING 800 FIRE ALARM PLAN - INITIATION
E3.3	BUILDING 800 FIRE ALARM PLAN - NOTIFICATION
E4.1	FIRE ALARM SPECIFICATIONS, CODES AND NOTES
E4.2	FIRE ALARM SYSTEM RISER DIAGRAM
E4.3	FIRE ALARM CALCULATIONS
E4.4	FIRE ALARM DETAILS
E5.1	ONE LINE DIAGRAM
E5.2	DETAILS
E5.3	DETAILS
E5.4	DETAILS
E5.5	SOLAR DETAILS AND NOTES
E6.1	PANEL SCHEDULES

TELECOM

TG1.1	SIGNALS SYMBOLS, CODES AND NOTES
TS1.1	PARTIAL ENLARGED SITE ELECTRICAL PLAN
T1.1	BUILDING 700 OVERALL SIGNALS PLAN
T2.1	BUILDING 800 OVERALL SIGNALS PLAN

APPROVALS

FILE # 54-76 — APPLICATION # 02-121996

IDENTIFICATION STAMP
DIV. OF THE STATE ARCHITECT
APP: 02-121996 INC:
REVIEWED FOR
SS ☑ FLS ☑ ACS ☑
DATE: 8/14/2024

LICENSED ARCHITECT — MICHAEL J. SCOTT — No. C-34290 — REN. 05-31-25 — STATE OF CALIFORNIA

DATE: DECEMBER 31, 2023

STATEMENT OF GENERAL CONFORMANCE

FOR ARCHITECTS/ENGINEERS WHO UTILIZE PLANS, INCLUDING BUT NOT LIMITED TO SHOP DRAWINGS, PREPARED BY OTHER LICENSED DESIGN PROFESSIONALS AND/OR CONSULTANTS

☒ The drawings or sheets listed on the cover or index sheet
☐ This drawing, page of specifications/calculations

have been prepared by other design professionals or consultants who are licensed and/or authorized to prepare such drawings in this state. It has been examined by me for:

1) design intent and appear to meet the appropriate requirements of Title 24, California Code of Regulations and the project specifications prepared by me, and
2) coordination with my plans and specifications and is acceptable for incorporation into the construction of this project.

THE STATEMENT OF GENERAL CONFORMANCE "SHALL NOT BE CONSTRUED AS RELIEVING ME OF MY RIGHTS, DUTIES, AND RESPONSIBILITIES UNDER SECTIONS 17302 AND 81138 OF THE EDUCATION CODE AND SECTIONS 4-336, 4-341 AND 4-344" OF TITLE 24, PART 1 (TITLE 24, PART 1, SECTION 4-317 (b)).

I find that: ☒ All drawings or sheets listed on the cover or index sheet ☐ This drawing or page

☒ is/are in general conformance with the project design intent, and
☒ has/have been coordinated with the project plans and specifications

SIGNATURE OF THE ARCHITECT/ ENGINEER — DATE 7.2.24

ARCHITECT OR ENGINEER DESIGNATED TO BE IN GENERAL RESPONSIBLE CHARGE

MICHAEL SCOTT
PRINT NAME

C-34290 — LICENSE NUMBER — 05.31.2025 EXPIRATION DATE

NEW PRESCHOOL AND TK/KINDERGARTEN CLASSROOMS AT SANTA FE ELEMENTARY SCHOOL
PORTERVILLE UNIFIED SCHOOL DISTRICT
286 E ORANGE AVENUE, PORTERVILLE, CA 93257

REVISIONS

MANGINI ARCHITECTURE INGENUITY
BARENG MORRELLI SCOTT
MANGINI ASSOCIATES INC.
4320 West Mineral King Avenue
Visalia, California 93291
www.mangini.us
(559) 627.0530 Office
(559) 627.1926 Fax

TITLE
COVER SHEET, SHEET INDEX, VICINITY MAP

G1

PROJECT 23076

APPROVALS

FILE # 54-76 | APPLICATION # 02-121996

IDENTIFICATION STAMP
DIV. OF THE STATE ARCHITECT
APP: 02-121996 INC:
REVIEWED FOR
SS ☑ FLS ☑ ACS ☑
DATE: 8/14/2024

LICENSED ARCHITECT
MICHAEL J. SCOTT
No. C-34290
REN. 05-31-25
STATE OF CALIFORNIA

DATE: DECEMBER 31, 2023

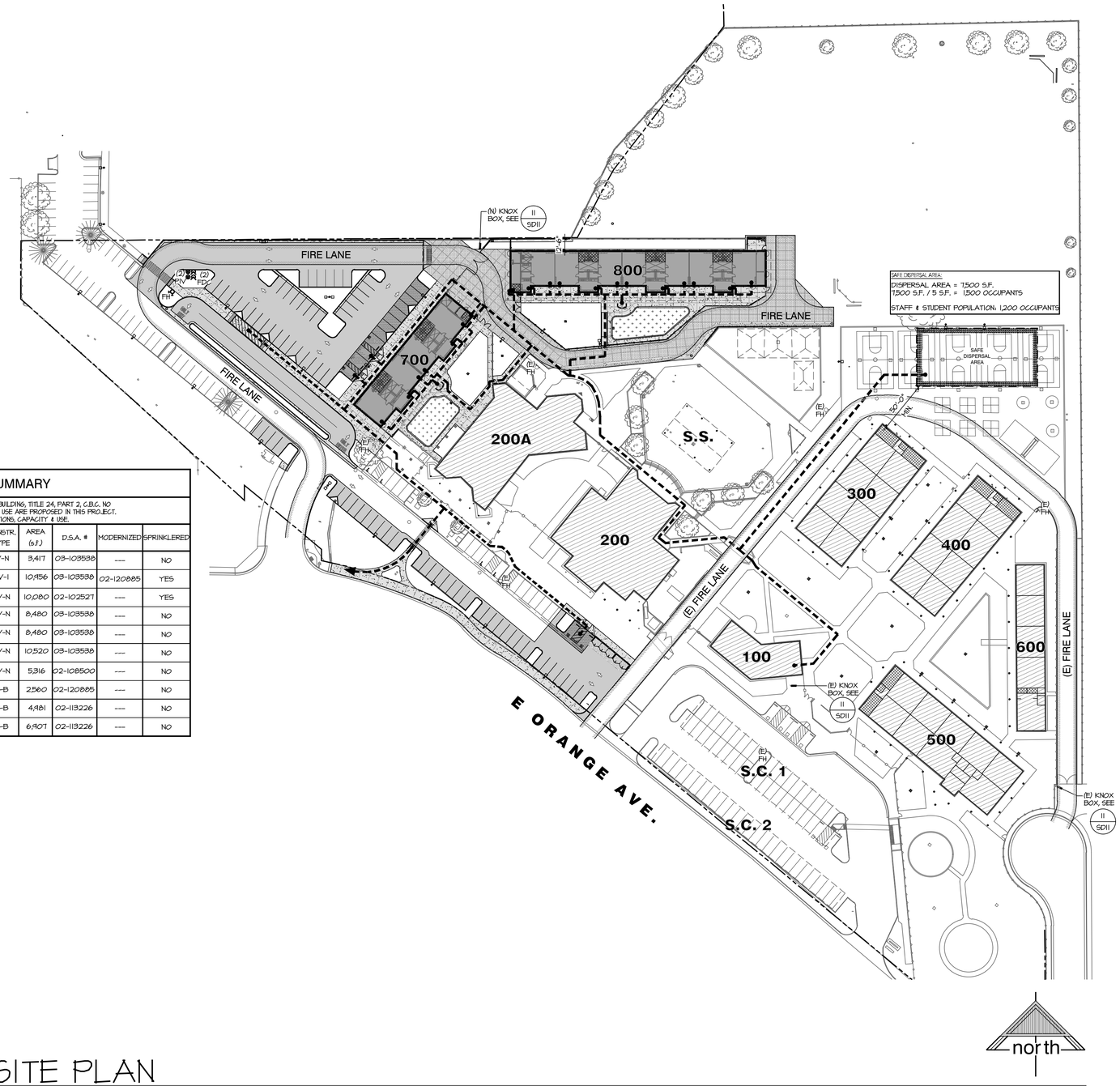

NOTES AND LEGEND :

- NEW BUILDING
- EXIST. BUILDING
- ACCESSIBLE RESTROOMS
- 20' WIDE FIRE LANE
- PROPERTY LINE
- PAINT CURB RED AS INDICATED W/ DASHED LINE AT FIRE LANE. PAINT THE WORDS "FIRE LANE NO PARKING" USING 5" HIGH WHITE LETTERS AT 30'-0" O.C. TYP.
- ACCESSIBLE PATH OF TRAVEL
- FH FIRE HYDRANT/ SHUT-OFF VALVE
- FDC FIRE DEPARTMENT CONNECTION
- PIV POST INDICATOR VALVE

HYDRANT FLOW TEST

Test Hydrant		Hydrant Number	1516
		Test Date	10/30/2023
		Time of Test	9:00 AM
System ID	No: 2304737		
Address	Orange X Wallace		
Hydrant Location	In Cul de Sac Fire Lane, West of Heritage Center		
HYDRANT UID 09		Map Page	
Static Pressure	53	Residual Press	42
Test Code	PASS_FLOW	Needs Main?	No
Test Performed by	Bill Colson	Test Company	

Flow Hydrant(s)

Hydrant #	Diameter	Coefficient	Pitot PSI	Flush Time (Min)	Flow (GPM)	Water Used (Gal)
1515	2.50	0.90	28.00	5.00	888	4,440
Pressure Zone				Totals:	888	4,440
				Flow at 20 PSI	1,607	
Inspection Cycle	1/2			Test Cycle	2/7	
Inspection Group	Station 1 Cycle 1			Test Group	Station 1 Cycle 1	
Test Comments						

Flushing Information

Time to Clear	0	Temperature	0
Initial Color		pH Level	0
Initial CL2	0	Initial Turbidity	0
Final CL2	0	Final Turbidity	0

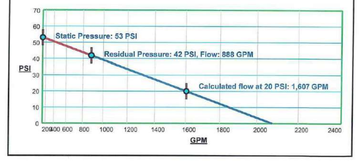

DSA 810

FIRE & LIFE SAFETY SITE CONDITIONS SUBMITTAL

To facilitate the Division of the State Architect's (DSA) fire and life safety plan review of project site conditions, DSA requires the design professional to provide the following information at time of project submittal for projects consisting of construction of a new campus, construction of new building(s), additions to existing buildings, and for site alternate design means for fire department emergency vehicle access, and fire suppression water supply.

Information associated with compliance items 1–3 below is to be provided for all project types indicated above. Information associated with items 4–7 is to be completed when an alternate means is utilized. Acknowledgement by the school district and signature from the local fire authority (LFA) is only required when an alternate design means is being requested.

Page 1 of the completed form must be imaged onto the fire access site plan. When an alternate design/means is proposed, completed pages 1 and 2 are to be imaged on the fire access site plan.

For additional information refer to the instructions at the end of this form and DSA Policy 09-03.

PROJECT INFORMATION	
School District/Owner	PORTERVILLE UNIFIED SCHOOL DISTRICT
Project Name/School	SANTA FE ELEMENTARY SCHOOL
Project Address	286 E ORANGE AVE., PORTERVILLE, TULARE COUNTY, CA 93257

FIRE & LIFE SAFETY INFOMATION				
1.	Has a fire hydrant flow test been performed within the past 12 months? *(If yes, provide a copy of the test data.)*	Yes ☒		No ☐
2.	Was the fire hydrant water flow test performed as part of this LFA review?	Yes ☒		No ☐
3.	Is the project located within a designated fire hazard severity zone as established by Cal-Fire? *(If yes, indicate fire hazard zone classification below)*	Yes ☐		No ☒
	Refer to the following for fire hazard zone locations: www.fire.ca.gov/fire_prevention/fire_prevention_wildland_zones_maps	Moderate ☐	High ☐	Very High ☐
	Wildland Interface Area (WIFA) *(If any designations are checked, project design must meet the requirements of CBC Chapter 7A.)*			WIFA ☐

CONDITION MEANS AND METHODS RESOLUTION		ALTERNATE ACCEPTED			
		Yes	No	N/A	N/R
4.	Emergency vehicle access roadways do not meet CFC requirements.			X	
4a.	**Acceptable Alternate:** Emergency vehicle and personnel access as proposed by the project architect is acceptable for providing fire suppression and protection of life and property.				
5.	**Fire Hydrants:** Number and spacing does not meet CFC requirements.			X	
5a.	**Acceptable Alternate:** Number of fire hydrants and spacing as proposed by the project architect is acceptable for fire suppression and protection of life and property.				
6.	**Fire Hydrants:** Water flow and pressure are less than CFC minimum.			X	
6a.	**Acceptable Alternate:** The available flow and pressure is acceptable for providing fire suppression and protection of life and property.				
7.	Location of fire department connection(s) serving fire sprinkler systems or standpipe systems does not meet CFC requirements.			X	
7a.	**Acceptable Alternate:** The location of fire department connection serving the fire sprinkler system and/or standpipe system is acceptable for providing fire suppression and protection of life and property.				

DSA 810 (rev 10-22-19) DIVISION OF THE STATE ARCHITECT | DEPARTMENT OF GENERAL SERVICES | Page 1 of 4 STATE OF CALIFORNIA

BUILDING SUMMARY

NOTE: SUMMARY BASED ON CONFORMANCE TO STATE BUILDING, TITLE 24, PART 2, C.B.C. NO MAJOR RE-CONSTRUCTION, ADDITIONS OR CHANGES IN USE ARE PROPOSED IN THIS PROJECT. THESE BUILDINGS WILL MAINTAIN THEIR CURRENT FUNCTIONS, CAPACITY & USE.

BLDG.	DESCRIPTION	OCCUPANCY TYPE	CONSTR. TYPE	AREA (s.f.)	D.S.A. #	MODERNIZED	SPRINKLERED
100	ADMINISTRATION	B	V-N	3,417	03-103538	----	NO
200	GYMNASIUM/ MULTI-USE	A2, B, S2	V-I	10,956	03-103538	02-120885	YES
200A	LIBRARY/CLASSROOMS	A3, E1	V-N	10,080	02-102527	----	YES
300	CLASSROOMS	E1	V-N	8,480	03-103538	----	NO
400	CLASSROOMS	E1	V-N	8,480	03-103538	----	NO
500	KINDERGARTEN	E1	V-N	10,520	03-103538	----	NO
600	KINDERGARTEN	E1	V-N	5,316	02-108500	----	NO
S.S.	SHADE STUCTURE	A-3	II-B	2,560	02-120885	----	NO
S.C.1	PARKING SOLAR CANOPY	S-2	II-B	4,981	02-113226	----	NO
S.C.2	PARKING SOLAR CANOPY	S-2	II-B	6,907	02-113226	----	NO

FIRE CODE SITE PLAN

SCALE: 1" = 60'-0"

BUILDING CODE SUMMARY

BUILDING DESIGNATION	BUILDING NAME	OCCUPANCY CLASSIFICATION CBC CHAPTER 3	ALLOWABLE BUILDING AREA CBC 506	ACTUAL BUILDING AREA CBC 202: BUILDING AREA	OVERHANG AREA	(BLDG + OH) TOTAL AREA	CONSTRUCTION TYPE CBC CHAPTER 6	SEPARATION OF OCCUPANCIES CBC 508.3	ACTUAL BUILDING HEIGHT	ALLOWABLE BUILDING HEIGHT CBC TABLE 504.3	ACTUAL # OF STORIES	ALLOWABLE # OF STORIES CBC TABLE 504.4	BUILDING SEPARATION (FIRE WALLS) CBC 705.1	AUTOMATIC FIRE SPRINKLER SYSTEM CBC 903	FRONTAGE INCREASE If = [F/P - 0.25] W / 30 CBC 506.3	TOTAL ALLOWABLE AREA CALCULATION	OCCUPANCY E	SUM OF RATIO CBC 508.4.2	MINIMUM REQUIRED FIRE FLOW CFC TABLE B105.1	FIRE RESISTANCE RATINGS FOR EXTERIOR WALLS BASED ON FIRE SEPARATION DISTANCE CBC TABLE 602	FIRE RESISTANCE RATINGS REQUIREMENTS CBC TABLE 601: CONSTRUCTION TYPE	VB
BLDG. 700	CLASSROOM BUILDING	E	38,000 SF	5,823 SF	1,860 SF	7,683 SF	VB	N/A	18-4"	40-0"	1	2	N/A	YES CBC 903.2.1.3	N/A	TOTAL ALLOWABLE AREA	38,000	N/A	CONSTRUCTION TYPE: VB TOTAL AREA: 7,683 SF FLOW: 2,250 GPM REDUCTION: 1,500 GPM DURATION: 2 HOURS	CONSTRUCTION TYPE: VB SEPARATION DISTANCE: 10' ≤ X < 30' E OCC. NO RATING	INTERIOR BEARING WALLS	0
BLDG. 800	CLASSROOM BUILDING	E	38,000 SF	10,357 SF	3,683 SF	14,040 SF	VB	N/A	18-4"	40-0"	1	2	N/A	YES CBC 903.2.1.3	N/A	TOTAL ALLOWABLE AREA	38,000		CONSTRUCTION TYPE: VB TOTAL AREA: 14,040 SF FLOW: 3,250 GPM REDUCTION: 1,500 GPM DURATION: 3 HOURS		INTERIOR NON-BEARING WALLS	0

REVISIONS

MANGINI ARCHITECTURE INGENUITY
BARENG MORRELLI SCOTT
MANGINI ASSOCIATES INC.
4320 West Mineral King Avenue
Visalia, California 93291
www.mangini.us
(559) 627.0530 Office
(559) 627.1926 fax

TITLE
FIRE CODE, BUILDING CODE SUMMARY

FC1

PROJECT 23076

NEW PRESCHOOL AND TK/KINDERGARTEN CLASSROOMS AT SANTA FE ELEMENTARY SCHOOL

PORTERVILLE UNIFIED SCHOOL DISTRICT
286 E ORANGE AVENUE, PORTERVILLE, CA 93257

F:\01 Projects\23076\Drawings\01 Architectural\03 Sheets\23076_FC1-Fire Code.dwg Jun 26 2024 9:06am

	FIRE HYDRANT
	WATER VALVE
	EXISTING LIGHT POLE
	SIGN
	CHAIN LINK FENCE
	FLOW ARRROW AS NOTED ON PLANS
	MANHOLE
	GUY WIRE
0.00	PROPOSED ELEVATION
(0.00) 0.00 0.00	EXISTING ELEVATION

UTILITIES

E	UNDERGROUND ELECTRIC
F	FIRE LINE (WATER)
FO	UNDERGROUND FIBER OPTIC LINE
G	UNDERGROUND GAS LINE
IRR	UNDERGROUND IRRIGATION LINE
SD	STORM DRAIN
SS	SANITARY SEWER
T	UNDERGROUND TELEPHONE LINE
TV	UNDERGROUND CABLE TELEVISION LINE
W	WATER

LEGEND: WHEN USED IN THESE CIVIL DRAWINGS SHALL CONFORM TO THE ABOVE LIST, UNLESS NOTED OTHERWISE. OTHER SHEETS WITHIN THESE PLANS MAY CONTAIN SPECIFIC REFERENCES AND LEGENDS WITH INTERPRETATIONS INTENDED ONLY FOR THOSE SHEETS.

SYMBOL LEGEND

BASIS OF BEARINGS

THE BASIS OF BEARINGS FOR THIS SURVEY IS THE CALIFORNIA COORDINATE SYSTEM, ZONE 4, NAD 83, AS DETERMINED BY GPS OBSERVATIONS RELATIVE TO THE CALIFORNIA SURVEYING AND DRAFTING, INC. VIRTUAL SURVEY NETWORK, EPOCH DATE 2011.

BENCHMARKS:

CITY BENCHMARK NO. 59: N1/4 COR. SEC. 36-21-27, BRASS DISK IN HIGHWAY WELL STAMPED RCE 24673.

ELEV = 461.441 (NAVD 1988).

TBM NO. 1: CHISELED PLUS IN TOP OF CURB AT THE SOUTHEASTERLY END OF THE TURN-AROUND BETWEEN PARKING LOTS.

ELEV =463.58 (NAVD 1988).

TBM NO. 2: CHISELED PLUS IN TOP OF CURB AT THE NORTHEAST CORNER OF HARDCOURTS.

ELEV = 460.15 (NAVD 1988).

VERTICAL DATUM NOTE:

1. ADD 400.00 FEET TO ELEVATIONS SHOWN ON PLAN TO OBTAIN DATUM BASED ON NORTH AMERICAN VERTICAL DATUM 1988.

BENCHMARK

CONSTRUCTION STAKING LIABILITY WAIVER

THESE IMPROVEMENT PLANS HAVE BEEN PREPARED WITH THE INTENT THAT THE FIRM OF LANE ENGINEERS, INC. WILL BE PERFORMING THE CONSTRUCTION STAKING FOR THE COMPLETE PROJECT. IF ANYONE OTHER THAN THE DESIGN ENGINEER IS EMPLOYED TO USE THESE PLANS FOR THE PURPOSE OF CONSTRUCTION STAKING, NOTICE IS HEREBY GIVEN THAT LANE ENGINEERS, INC. WILL NOT ASSUME ANY RESPONSIBILITY FOR ERRORS OR OMISSIONS, IF ANY, WHICH MIGHT OCCUR AND COULD HAVE BEEN AVOIDED, CORRECTED, OR MITIGATED IF THE FIRM OF LANE ENGINEERS, INC. HAD PERFORMED THE CONSTRUCTION STAKING WORK.

CONSTRUCTION STAKING

STANDARD GENERAL NOTES

1. THE CONTRACTOR AGREES THAT, IN ACCORDANCE WITH GENERALLY ACCEPTED CONSTRUCTION PRACTICES, THE CONTRACTOR WILL BE REQUIRED TO ASSUME SOLE AND COMPLETE RESPONSIBILITY FOR JOB SITE CONDITIONS DURING THE COURSE OF CONSTRUCTION OF THE PROJECT, INCLUDING SAFETY OF ALL PERSONS AND PROPERTY. THIS REQUIREMENT SHALL BE MADE TO APPLY CONTINUOUSLY AND NOT BE LIMITED TO NORMAL WORKING HOURS. THE CONTRACTOR FURTHER AGREES TO DEFEND, INDEMNIFY AND HOLD OWNER AND ENGINEER HARMLESS FROM ANY AND ALL LIABILITY, REAL OR ALLEGED, IN CONNECTION WITH THE PERFORMANCE OF WORK ON THIS PROJECT, EXEMPTING LIABILITY ARISING FROM THE SOLE NEGLIGENCE OF ENGINEER.
2. THE CONTRACTOR SHALL ACCEPT THE SITE IN ITS PRESENT CONDITION AND DEMOLISH AND/OR REMOVE FROM THE AREA OF DESIGNATED PROJECT EARTHWORK ALL STRUCTURES, BOTH SURFACE AND SUBSURFACE, TREES, BRUSH, ROOTS, DEBRIS, ORGANIC MATTER, AND ALL OTHER MATTER DETERMINED BY THE INSPECTOR TO BE DELETERIOUS, SUCH MATERIAL SHALL BE REMOVED FROM THE SITE BY THE CONTRACTOR.
3. EXCAVATIONS SHALL BE ADEQUATELY SHORED, BRACED AND SHEETED SO THAT THE EARTH WILL NOT SLIDE OR SETTLE AND SO THAT ALL EXISTING IMPROVEMENTS OF ANY KIND WILL BE FULLY PROTECTED FROM DAMAGE. ANY DAMAGE RESULTING FROM A LACK OF ADEQUATE SHORING, BRACING AND SHEETING, SHALL BE THE RESPONSIBILITY OF THE CONTRACTOR AND HE SHALL EFFECT NECESSARY REPAIRS OR RECONSTRUCTION AT HIS OWN EXPENSE. WHERE THE EXCAVATION FOR A CONDUIT TRENCH, AND/OR STRUCTURE IS FIVE FEET OR MORE IN DEPTH, THE CONTRACTOR SHALL PROVIDE ADEQUATE SHEETING, WHICH SHALL CONFORM TO THE APPLICABLE CONSTRUCTION SAFETY ORDERS OF THE DIVISION OF INDUSTRIAL SAFETY OF THE STATE OF CALIFORNIA. THE CONTRACTOR SHALL ALWAYS COMPLY WITH OSHA REQUIREMENTS.
4. IT IS THE RESPONSIBILITY OF THE CONTRACTOR TO OBTAIN PERMITS NECESSARY TO PERFORM THE WORK SHOWN IN THESE PLANS FROM THE APPROPRIATE AGENCIES.
5. THE CONTRACTOR SHALL TAKE EFFECTIVE ACTION TO PREVENT THE FORMATION OF AN AIRBORNE DUST NUISANCE AND SHALL BE RESPONSIBLE FOR ANY DAMAGE RESULTING FROM HIS FAILURE TO DO SO.
6. THE CONTRACTOR SHALL PROVIDE FOR INGRESS AND EGRESS FOR PRIVATE PROPERTY ADJACENT TO WORK THROUGHOUT THE PERIOD OF CONSTRUCTION.
7. THE CONTRACTOR SHALL PROVIDE ALL LIGHTS, SIGNS, BARRICADES, FLAGMEN OR OTHER DEVICES NECESSARY TO PROVIDE FOR SAFETY. TRAFFIC CONTROL AND ALL TRAFFIC CONTROL DEVICES SHALL BE IN CONFORMANCE WITH THE "MANUAL OF TRAFFIC CONTROLS FOR CONSTRUCTION AND MAINTENANCE ZONES", LATEST EDITION AS PUBLISHED BY THE STATE OF CALIFORNIA, DEPARTMENT OF TRANSPORTATION.
8. THE CONTRACTOR SHALL POST EMERGENCY TELEPHONE NUMBERS FOR POLICE, FIRE, AMBULANCE, AND THOSE AGENCIES RESPONSIBLE FOR MAINTENANCE OF UTILITIES IN THE VICINITY OF JOBSITE.
9. ALL RETURN RADII AND CURB DATA ARE TO FACE OF CURB UNLESS SHOWN OR NOTED OTHERWISE.
10. ALL QUANTITIES AND PAY ITEMS ARE AND WILL BE BASED ON HORIZONTAL MEASUREMENTS.
11. LENGTHS OF SANITARY SEWERS AND STORM DRAINS ARE HORIZONTAL DISTANCES FROM CENTER TO CENTER OF STRUCTURES, ROUNDED OFF TO THE NEAREST FOOT.
12. EXISTING UNDERGROUND UTILITIES AND IMPROVEMENTS ARE SHOWN IN THEIR APPROXIMATE LOCATIONS BASED UPON RECORD INFORMATION AVAILABLE TO THE ENGINEER AT THE TIME OF PREPARATION OF THESE PLANS. LOCATIONS MAY NOT HAVE BEEN VERIFIED IN THE FIELD AND NO GUARANTEE IS MADE AS TO THE ACCURACY OR COMPLETENESS OF THE INFORMATION SHOWN. THE CONTRACTOR SHALL NOTIFY UTILITY COMPANIES AT LEAST 2 WORKING DAYS IN ADVANCE OF CONSTRUCTION TO FIELD LOCATE UTILITIES. CALL UNDERGROUND SERVICE ALERT (U.S.A.), AT 1-800-227-2600. IT SHALL BE THE RESPONSIBILITY OF THE CONTRACTOR TO DETERMINE THE EXISTENCE AND LOCATION OF THOSE UTILITIES SHOWN ON THESE PLANS OR INDICATED IN THE FIELD BY LOCATING SERVICES. ANY ADDITIONAL COSTS INCURRED AS A RESULT OF CONTRACTOR'S FAILURE TO VERIFY LOCATIONS OF EXISTING UTILITIES PRIOR TO BEGINNING OF CONSTRUCTION IN THEIR VICINITY SHALL BE BORNE BY THE CONTRACTOR AND ASSUMED INCLUDED AND MERGED IN THE CONTRACT UNIT PRICE.
13. ALL EXISTING UTILITIES AND IMPROVEMENTS THAT BECOME DAMAGED DURING CONSTRUCTION SHALL BE COMPLETELY RESTORED TO THE SATISFACTION OF THE LOCAL AGENCY ENGINEER, AT THE CONTRACTOR'S SOLE EXPENSE.
14. ANY RELOCATION OF PUBLIC UTILITIES SHALL BE CONDUCTED IN ACCORDANCE WITH ANY AND ALL REQUIREMENTS OF THE UTILITY COMPANY, INCLUDING FEES, BONDS, PERMITS AND WORKING CONDITIONS, ETC.
15. IF ARCHAEOLOGICAL MATERIALS ARE UNCOVERED DURING GRADING, TRENCHING OR OTHER EXCAVATION, EARTHWORK WITHIN 100 FEET OF THESE MATERIALS SHALL BE STOPPED UNTIL A PROFESSIONAL ARCHAEOLOGIST WHO IS CERTIFIED BY THE SOCIETY OF CALIFORNIA ARCHAEOLOGY (SCA) AND/OR THE SOCIETY OF PROFESSIONAL ARCHAEOLOGY (SOPA) HAS HAD AN OPPORTUNITY TO EVALUATE THE SIGNIFICANCE OF THE FIND AND SUGGEST APPROPRIATE MITIGATION MEASURES, IF THEY ARE DEEMED NECESSARY.
16. LANE ENGINEERS, INC, DOES NOT SPECIFY NOR RECOMMEND THE USE OR INSTALLATION OF ANY MATERIAL OR EQUIPMENT WHICH IS MADE FROM, OR WHICH CONTAINS ASBESTOS FOR USE IN THE CONSTRUCTION OF THESE IMPROVEMENTS. ANY PARTY INSTALLING OR USING SUCH MATERIALS OR EQUIPMENT SHALL BE SOLELY RESPONSIBLE FOR ALL INJURIES, DAMAGES, OR LIABILITIES, OF ANY KIND, CAUSED BY THE USE OF SUCH MATERIALS OR EQUIPMENT. THE PROVISIONS OF THIS NOTE SHALL APPLY UNLESS THEY ARE EXPRESSLY WAIVED IN WRITING BY LANE ENGINEERS, INC..
17. SHOULD IT APPEAR THAT THE WORK TO BE DONE OR ANY MATTER RELATIVE THERETO IS NOT SUFFICIENTLY DETAILED OR EXPLAINED ON THESE PLANS, THE CONTRACTOR SHALL CONTACT MANGINI ASSOCIATES, INC. (559) 627-0530 FOR SUCH FURTHER EXPLANATIONS AS MAY BE NECESSARY.
18. THE CONTRACTOR SHALL MEET AND FOLLOW ALL NPDES REQUIREMENTS IN EFFECT AT THE TIME OF CONSTRUCTION.
19. CONTRACTOR SHALL COMPLY WITH SAN JOAQUIN VALLEY AIR POLLUTION CONTROL DISTRICT (SJVAPCD) REGULATION VIII TO LIMIT FUGITIVE DUST.
20. APPROPRIATE APPROVAL SHALL BE OBTAINED PRIOR TO PROCEEDING WITH ANY WORK IN THE VICINITY OF IRRIGATION DITCHES, CREEKS AND ASSOCIATED IRRIGATION FACILITIES WHETHER OR NOT SHOWN ON THESE PLANS.

&	AND	M	METER(S)
@	AT	MAS	MASONRY
℄	CENTERLINE	MAX	MAXIMUM
Ø	DIAMETER OR ROUND	MECH	MECHANICAL
⊥	PERPENDICULAR	MED	MEDIUM
#	POUND OR NUMBER	MET	METAL
( )	EXISTING DATA	MFR	MANUFACTURER
N	NORTH	MH	MAN HOLE
S	SOUTH	MIN	MINIMUM
W	WEST	MISC	MISCELLANEOUS
E	EAST	MM	MILLIMETER(S)
AB	AGGREGATE BASE	MTL	MATERIAL
ABV	ABOVE	MTR	METER
AC	ASPHALT CONCRETE	N	NORTH
ACC	ACCESSIBLE	NE	NORTH EAST
ACP	ASBESTOS CEMENT PIPE	NAT	NATURAL
AD	AREA DRAIN	NIC	NOT IN CONTRACT
ADJ	ADJUSTABLE	NTS	NOT TO SCALE
ADJT	ADJACENT	OC	ON CENTER
ALT	ALTERNATE	OD	OUTSIDE DIAMETER
APPROX	APPROXIMATE	OG	ORIGINAL GROUND
ARCH	ARCHITECTURAL)	OH	OPPOSITE HAND
BC	BEGINNING OF CURVE	OPNG	OPENING
BCR	BEGINNING OF CURB RETURN	OPP	OPPOSITE
BLDG	BUILDING	P	TOP OF PAVING
BM	BENCH MARK	PAR	PARALLEL
BO	BLOW OFF	PC	PROPERTY CORNER
BOT	BOTTOM	PCC	POINT OF COMPOUND CURVATURE
BTWN	BETWEEN	PERI	PERIMETER
BW	BOTH WAYS	PK	PARKING
C	TOP OF CONCRETE	P/L	PROPERTY LINE
CB	CATCH BASIN	POC	POINT OF CONNECTION
CEM	CEMENT	PP	POWER POLE
CF	CUBIC FOOT	PRC	POINT OF REVERSE CURVATURE
CI	CAST IRON	PRKG	PARKING
CIP	CAST IRON PIPE	PROP	PROPERTY
CIPC	CAST-IN-PLACE CONCRETE	PT	POINT
CIR	CIRCLE	PVC	POLYVINYL CHLORIDE
CJ	CONTROL JOINT	PVMT	PAVEMENT
CAP	CORRUGATED ALUMINUM PIPE	R	RIDGE
CMP	CORRUGATED METAL PIPE	RAD	RADIUS
CSP	CORRUGATED STEEL PIPE	RCP	REINFORCED CONCRETE PIPE
CMU	CONCRETE MASONRY UNIT	RDR	ROOF DRAIN
CO	CLEAN OUT	REF	REFERENCE
COL	COLUMN	REQD	REQUIRED
CONC	CONCRETE	RET	RETURN
CONST	CONSTRUCTION	RETG	RETAINING
CONT	CONTINUOUS	REV	REVISION
CONTR	CONTRACTOR	RP	RADIUS POINT
COR	CORNER	RR	RAILROAD
CR	CROWN	RT	RIGHT
CY	CUBIC YARD	R/W	RIGHT OF WAY
D	DRAIN	RWC	RAINWATER CONDUCTOR
DA	DRIVE APPROACH	RWL	RAINWATER LEADER
DEM	DEMOLISH, DEMOLITION	S	SOUTH
DET	DETAIL	SCHED	SCHEDULE
DI	DRAIN OR DROP INLET	SD	STORM DRAIN
DIA	DIAMETER	SDMH	STORM DRAIN MANHOLE
DIAG	DIAGONAL	SEC	SECTION
DIM	DIMENSION	SERV	SERVICE
DIP	DUCTILE IRON PIPE	SF	SQUARE FOOT
DN	DOWN	SG	FINISHED SUBGRADE
DWG	DRAWING	SHT	SHEET
E	EAST	SIM	SIMILAR
EA	EACH	SPEC	SPECIFICATION
EC	END OF CURVE	SPECS	SPECIFICATIONS
ECR	END OF CURB RETURN	SQ	SQUARE
EJ	EXPANSION JOINT	SS	SANITARY SEWER
ELEV	ELEVATION	SSMH	SANITARY SEWER MANHOLE
ENCL	ENCLOSURE	SSDMH	SANITARY SEWER DROP MANHOLE
EP	EDGE OF PAVEMENT	SSTL	STAINLESS STEEL
EQ	EQUAL	STA	STATION
EQUIP	EQUIPMENT	STD	STANDARD
EST	ESTIMATE	STL	STEEL
ETW	EDGE OF TRAVEL WAY	STRUCT	STRUCTURAL
EXCA	EXCAVATE	SW	SWALE
EXIST	EXISTING	SYM	SYMETRICAL
FD	FOUND	T&B	TOP AND BOTTOM
FES	FLARED END SECTION	TB	TOP OF BERM
FF	FINISHED FLOOR ELEVATION	TBM	TEMPORARY BENCH MARK
FG	FINISHED GRADE	TC	TOP OF CURB
FH	FIRE HYDRANT	TD	TOP OF DIKE
FL	FLOW LINE	TEL	TELEPHONE
FNC	FENCE	TEMP	TEMPORARY
FOC	FACE OF CONCRETE	TER	TOP OF EAST RAIL
FOF	FACE OF FINISH	TF	TOP OF FOOTING
FOM	FACE OF MASONRY	TH	TOP OF REDWOOD HEADER
FOS	FACE OF STUDS	THK	THICK(NESS)
FTG	FOOTING	TM	TOP OF MOW STRIP
GA	GAUGE	TOM	TOP OF MASONRY
GALV	GALVANIZED	TOS	TOP OF STEEL
GB	GRADE BREAK	TNR	TOP OF NORTH RAIL
GC	GRADE CHANGE	TR	TOP OF RAIL
GI	GALVANIZED IRON	TRK	TOP OF ROCK
GR	TOP OF GRATE	TSL	TOP OF SLAB
GRD	GRADE, GRADING	TSR	TOP OF SOUTH RAIL
GV	GATE VALVE	TW	TOP OF WALL
HORIZ	HORIZONTAL	TWR	TOP OF WEST RAIL
HP	HINGE POINT	TYP	TYPICAL
HPT	HIGH POINT	UGD	UNDERGROUND
HW	HEADWALL	UNO	UNLESS NOTED OTHERWISE
HWL	HIGH WATER LINE	VCP	VITRIFIED CLAY PIPE
ID	INSIDE DIAMETER	VERT	VERTICAL
INCL	INCLUDE(D), INCLUDING	VIF	VERIFY IN FIELD
INV	INVERT	W	WEST
JB	JUNCTION BOX	W/	WITH
JT	JOINT	W/O	WITHOUT
L	LEFT	WD	WOOD
LP	LOW POINT	WHB	WHEEL BUMPER
LT	LIGHT	WM	WATER METER
		WP	WORKING POINT
		WTR	WATER
		WV	WATER VALVE

ABBREVIATIONS: WHEN USED IN THESE CIVIL DRAWINGS SHALL CONFORM TO THE ABOVE LIST, UNLESS NOTED OTHERWISE. OTHER SECTIONS (SUCH AS ARCHITECTURAL, STRUCTURAL, MECHANICAL, PLUMBING AND ELECTRICAL PLANS) MAY CONTAINSPECIFIC REFERENCES AND LEGENDS WITH INTERPRETATIONS INTENDED ONLY FOR THOSE SECTIONS.

CIVIL ABBREVIATIONS

REGISTERED PROFESSIONAL ENGINEER
NA VANG
R.C.E. 73146
06/26/2024
CIVIL
STATE OF CALIFORNIA

CONSULTANT

LANE ENGINEERS INC.
CIVIL• STRUCTURAL• SURVEYING
979 N. BLACKSTONE
TULARE, CALIFORNIA 93274
(559) 688-5263

APPROVALS

FILE #	APPLICATION #
54-76	02-121996

IDENTIFICATION STAMP
DIV. OF THE STATE ARCHITECT
APP: 02-121996 INC: A
REVIEWED FOR
SS ☑ FLS ☑ ACS ☑
DATE: 8/14/2024

LICENSED ARCHITECT
MICHAEL J. SCOTT
No. C-34290
REN. 05-31-19
STATE OF CALIFORNIA

DATE: DECEMBER 31, 2023

NEW PRESCHOOL, TK, AND KINDERGARTEN CLASSROOMS AT SANTA FE ELEMENTARY SCHOOL

PORTERVILLE UNIFIED SCHOOL DISTRICT
286 E ORANGE AVENUE, PORTERVILLE, CA 93257

REVISIONS

MANGINI ARCHITECTURE INGENUITY
BARENG MORRELLI SCOTT
MANGINI ASSOCIATES INC.
4320 West Mineral King Avenue
Visalia, California 93291
www.mangini.us
(559) 627.0530 Office
(559) 627.1926 Fax

TITLE
CIVIL COVERSHEET

C0.1

PROJECT 23076

LANE PROJ. NO. 23242.1

J:\Jobs\2023\23242.1\Dwg\Production Drawings\Coversheet_23076.dwg 6/26/2024 10:42:44 AM
F:\Jobs\2023\23242.1\Dwg\Production Drawings\Coversheet_23076.dwg Jun 26 2024 10:42am

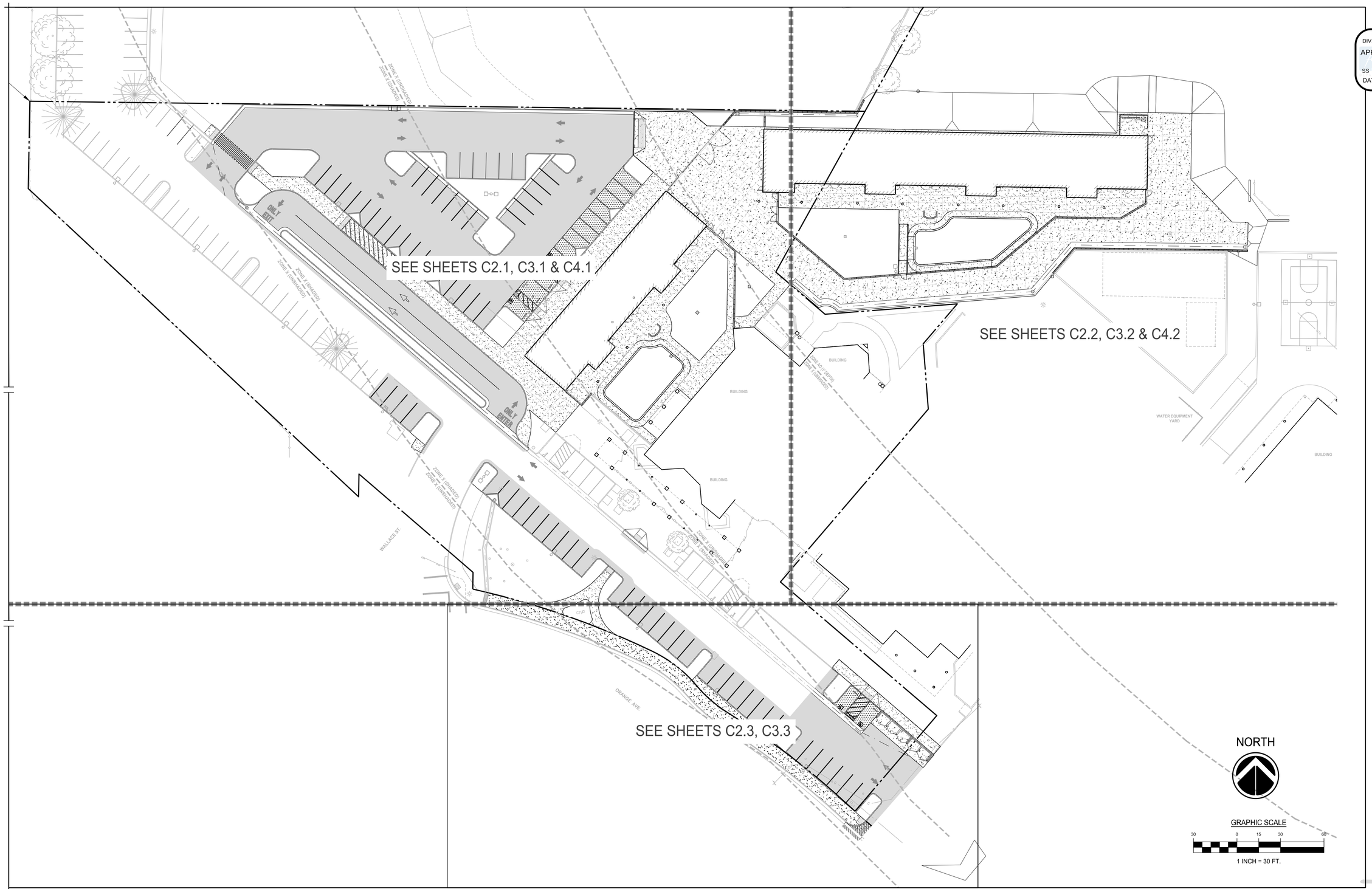

CIVIL INDEX SHEET

CIVIL INDEX SHEET

APPROVALS

FILE # 54-76 | APPLICATION # 02-121996

IDENTIFICATION STAMP
DIV. OF THE STATE ARCHITECT
APP: 02-121996 INC:
REVIEWED FOR
SS ☑ FLS ☑ ACS ☑
DATE: 8/14/2024

LICENSED ARCHITECT
MICHAEL J. SCOTT
No. C-34290
REN. 05-31-19
STATE OF CALIFORNIA

DATE: DECEMBER 31, 2023

NEW PRESCHOOL, TK, AND KINDERGARTEN CLASSROOMS AT SANTA FE ELEMENTARY SCHOOL

PORTERVILLE UNIFIED SCHOOL DISTRICT

286 E ORANGE AVENUE, PORTERVILLE, CA 93257

REVISIONS

MANGINI ARCHITECTURE INGENUITY
BARENG MORRELLI SCOTT
MANGINI ASSOCIATES INC.
4320 West Mineral King Avenue
Visalia, California 93291
www.mangini.us
(559) 627.0530 Office
(559) 627.1926 Fax

TITLE
CIVIL INDEX SHEET

C0.2

PROJECT 23076

REGISTERED PROFESSIONAL ENGINEER
NA VANG
R.C.E. 73146
06/26/2024
CIVIL
STATE OF CALIFORNIA

CONSULTANT
LANE ENGINEERS INC.
CIVIL • STRUCTURAL • SURVEYING
979 N. BLACKSTONE
TULARE, CALIFORNIA 93274
(559) 688-5263

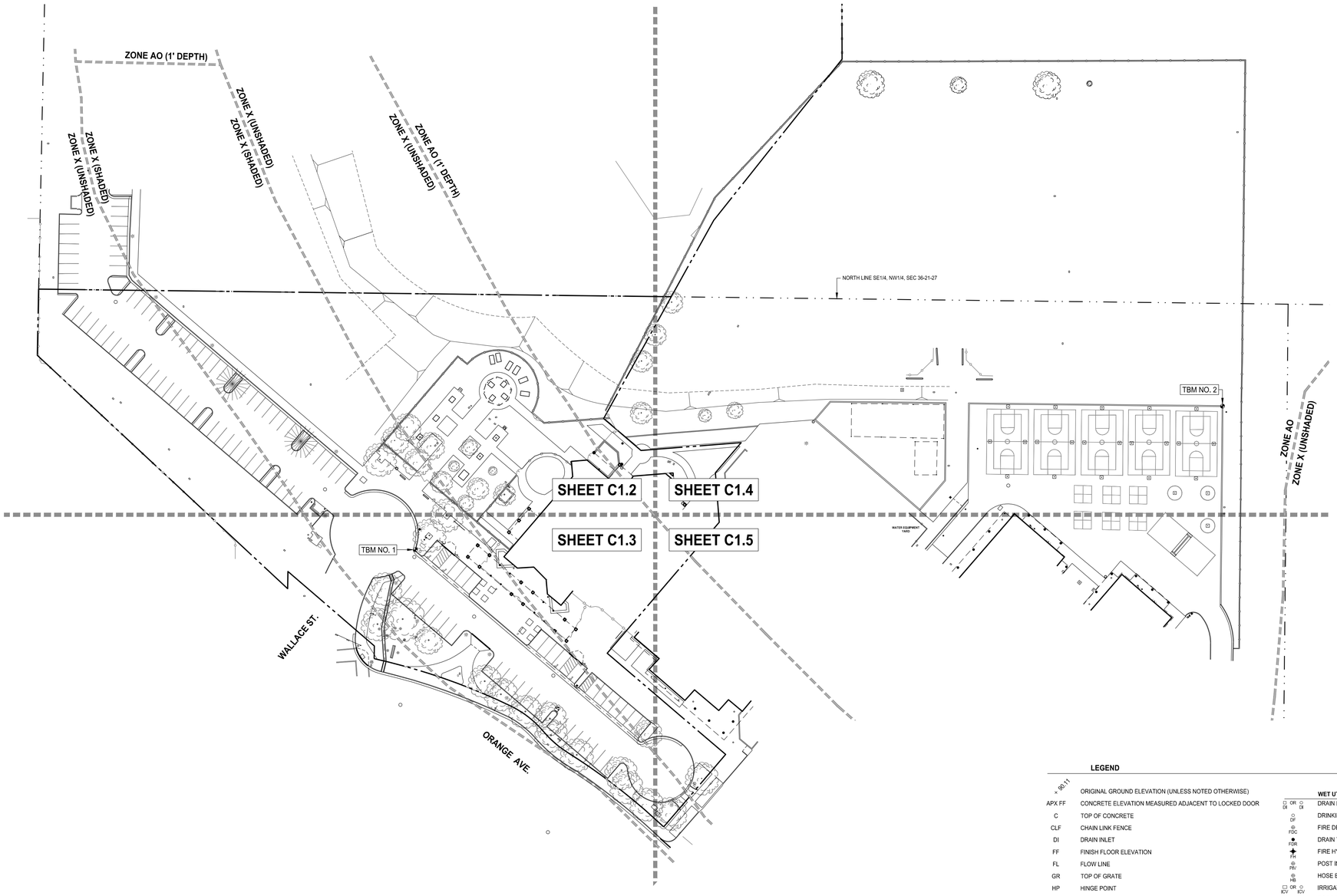

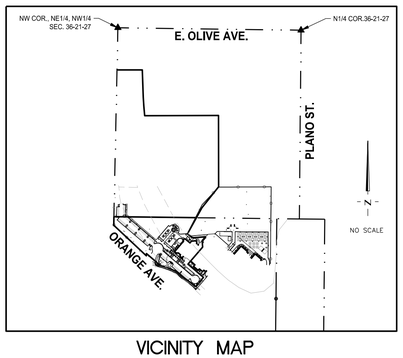

VICINITY MAP

UNDERGROUND UTILITY NOTE:

THE EXISTING UNDERGROUND UTILITY LINES SHOWN ARE BASED ON THE LOCATION OF VISIBLE SURFACE IMPROVEMENTS, CITY OR COUNTY RECORD DRAWINGS, UTILITY COMPANY RECORD DRAWINGS AND PAINT MARKINGS PROVIDED BY 'MDR UTILITY LOCATING SPECIALISTS'. IN SOME CASES IT HAS NOT BEEN POSSIBLE TO OBTAIN PERTINENT INFORMATION FROM THESE COMPANIES. ALTHOUGH EVERY EFFORT HAS BEEN MADE TO ACCURATELY SHOW THE UNDERGROUND UTILITY LINES. IT WILL BE NECESSARY TO CONFIRM THE LOCATIONS BY NOTIFYING UNDERGROUND SERVICE ALERT.

TELEPHONE U.S.A. AT 811 PRIOR TO DIGGING. THE DEPTHS OF ALL LINES MUST BE DETERMINED BY CAREFULLY PROBING OR POTHOLING UNDER UTILITY COMPANY SUPERVISION.

DRY UTILITY INFORMATION WAS REQUESTED FROM SOUTHERN CALIFORNIA EDISON COMPANY, AT&T, THE GAS COMPANY, CVIN AND CHARTER COMMUNICATIONS ON AUGUST 8, 2023.

SOUTHERN CALIFORNIA EDISON COMPANY RECORD DRAWINGS WERE RECEIVED ON AUGUST 25, 2023.

AT&T RECORD DRAWINGS WERE RECEIVED ON AUGUST 23, 2023.

THE GAS COMPANY RECORD DRAWINGS WERE NOT RECEIVED AS OF OCTOBER 16, 2023.

CVIN RECORD DRAWINGS WERE NOT RECEIVED AS OF OCTOBER 16, 2023.

CHARTER COMMUNICATIONS RECORD DRAWINGS WERE NOT RECEIVED AS OF OCTOBER 16, 2023.

CITY UTILITY INFORMATION WAS REQUESTED FROM THE CITY OF PORTERVILLE ON AUGUST 8, 2023.

CITY RECORD DRAWINGS WERE NOT RECEIVED AS OF OCTOBER 16, 2023.

LEGEND

× 98.11	ORIGINAL GROUND ELEVATION (UNLESS NOTED OTHERWISE)
APX FF	CONCRETE ELEVATION MEASURED ADJACENT TO LOCKED DOOR
C	TOP OF CONCRETE
CLF	CHAIN LINK FENCE
DI	DRAIN INLET
FF	FINISH FLOOR ELEVATION
FL	FLOW LINE
GR	TOP OF GRATE
HP	HINGE POINT
P	TOP OF PAVEMENT
TOE	TOE OF SLOPE
TC	TOP OF CURB
TW	TOP OF WALL

SIGNS

SIGN	SIGN AS NOTED
HC	HANDICAP SIGN
R-TURN	RIGHT TURN SIGN

GENERAL SYMBOLS

▲	MONUMENT FOUND AS DESCRIBED
TBM	TEMPORARY BENCH MARK
•	GUARD POST TO SCALE
	AREA LIGHT
	FLOOD LIGHT
	DECIDUOUS TREE TRUNK AND CANOPY DRAWN TO SCALE
OAK	OAK TREE TRUNK AND CANOPY DRAWN TO SCALE
	FEMA FLOOD HAZARD ZONE LINE

WET UTILITIES

DI OR DI	DRAIN INLET
DF	DRINKING FOUNTAIN
FDC	FIRE DEPARTMENT CONNECTION
FDB	DRAIN THRU FACE OF CURB
FH	FIRE HYDRANT
PIV	POST INDICATOR VALVE
HB	HOSE BIBB
ICV OR ICV	IRRIGATION CONTROL VALVE
RD	ROOF DRAIN
SSCO	SANITARY SEWER CLEAN OUT
WM	WATER METER
WV	WATER VALVE
MH	MANHOLE

DRY UTILITIES

ELEC OR ELEC	ELECTRICAL BOX
GAS	GAS VALVE
TS	TRAFFIC SIGNAL BOX

UTILITY LINETYPES

COMM	COMMUNICATION
E	ELECTRICAL
FO	FIBER OPTIC
G	GAS
SD	STORM DRAIN
SS	SANITARY SEWER
T	TELEPHONE
UTIL	UNLABELED UTILITY PAINT
W	WATER

NORTH

GRAPHIC SCALE

50 0 25 50 100

1 INCH = 50 FT.

BASIS OF BEARINGS

THE BASIS OF BEARINGS FOR THIS SURVEY IS THE CALIFORNIA COORDINATE SYSTEM, ZONE 4, NAD 83, AS DETERMINED BY GPS OBSERVATIONS RELATIVE TO THE CALIFORNIA SURVEYING AND DRAFTING, INC. VIRTUAL SURVEY NETWORK, EPOCH DATE 2011.

LEGAL DESCRIPTION:

SITUATED IN THE NW1/4 OF SECTION 36, TOWNSHIP 21 SOUTH, RANGE 27 EAST, MOUNT DIABLO BASE AND MERIDIAN, CITY OF PORTERVILLE, COUNTY OF TULARE, STATE OF CALIFORNIA.
A.P.N. 261-150-056, 057 & 058

BOUNDARY NOTE:

PROPERTY LINES SHOWN ARE BASED ON RECORD DATA AND FOUND MONUMENTS.

BENCHMARKS:

CITY BENCHMARK NO. 59: N1/4 COR. SEC. 36-21-27, BRASS DISK IN HIGHWAY WELL STAMPED RCE 24673.

ELEV = 461.441 (NAVD 1988).

TBM NO. 1: CHISELED PLUS IN TOP OF CURB AT THE SOUTHEASTERLY END OF THE TURN-AROUND BETWEEN PARKING LOTS.

ELEV =463.58 (NAVD 1988).

TBM NO. 2: CHISELED PLUS IN TOP OF CURB AT THE NORTHEAST CORNER OF HARDCOURTS.

ELEV = 460.15 (NAVD 1988).

VERTICAL DATUM NOTE:

1. ADD 400.00 FEET TO ELEVATIONS SHOWN ON PLAN TO OBTAIN DATUM BASED ON NORTH AMERICAN VERTICAL DATUM 1988.

DATE OF SURVEY NOTE:

FIELD WORK FOR THIS TOPOGRAPHIC SURVEY WAS COMPLETED ON AUGUST 28, 2023.

FLOOD HAZARD ZONE NOTE:

AS DELINEATED ON THE FEDERAL EMERGENCY MANAGEMENT AGENCY'S FLOOD INSURANCE RATE MAP (MAP NUMBERS 06107C1634E & 06107C1642E) FOR COMMUNITY NO. 060407, CITY OF PORTERVILLE, TULARE COUNTY, CALIFORNIA, EFFECTIVE JUNE 16, 2009, THE PROPERTY SHOWN ON THIS MAP LIES WITHIN MULTIPLE ZONES AS NOTED BELOW:

ZONE A
SPECIAL FLOOD HAZARD AREAS SUBJECT TO INUNDATION BY THE 1% ANNUAL CHANCE FLOOD WITH NO BASE FLOOD ELEVATIONS DETERMINED.

ZONE AO
RIVER OR STREAM FLOOD HAZARD AREAS, AND AREAS WITH A 1% OR GREATER CHANCE OF SHALLOW FLOODING EACH YEAR, USUALLY IN THE FORM OF SHEET FLOW, WITH A DEPTH OF 1 FT.

ZONE X (UNSHADED)
AREAS OUTSIDE OF 0.2% ANNUAL CHANCE FLOODING.

IDENTIFICATION STAMP
DIV. OF THE STATE ARCHITECT
APP: 02-121996 INC:
REVIEWED FOR
SS ☑ FLS ☑ ACS ☑
DATE: 8/14/2024

Project
SANTA FE ELEMENTARY SCHOOL

286 E. ORANGE AVE.
PORTERVILLE, CA. 93257

Prepared For
PORTERVILLE UNIFIED SCHOOL DISTRICT

LANE ENGINEERS, INC.
CIVIL • STRUCTURAL • SURVEYING

979 North Blackstone Street
Tulare, California 93274
559.688.5263
www.laneengineers.com

All reproduction & intellectual property rights reserved © 2024

Professional Seal

LICENSED LAND SURVEYOR
Ronald D. Snow
No. 6859
STATE OF CALIFORNIA

Description	Release Date

No.	Revision	Date

Drawn by: DRD

Reviewed by: RDS

Sheet Title
PARTIAL TOPOGRAPHIC SURVEY

Original drawing is 24 x 36. Do not scale contents of this drawing.

Sheet Number
C1.1

OF 5

Project No: 23242

6/26/2024 10:43:27 AM J:\Jobs2023\23242\Dwg\Topo.dwg

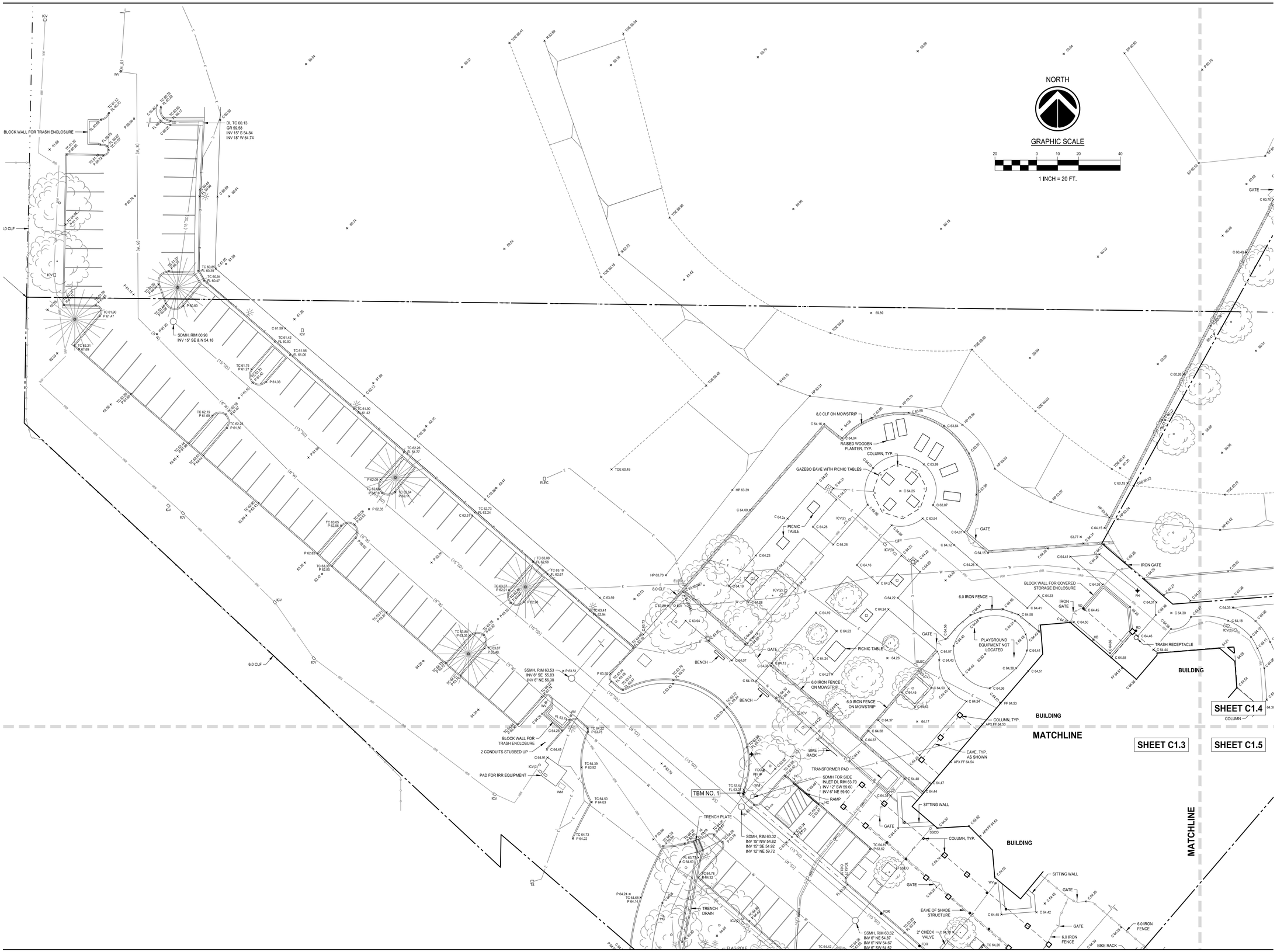

IDENTIFICATION STAMP
DIV. OF THE STATE ARCHITECT
APP: 02-121996 INC:
REVIEWED FOR
SS ☑ FLS ☑ ACS ☑
DATE: 8/14/2024

Project
SANTA FE ELEMENTARY SCHOOL

286 E. ORANGE AVE.
PORTERVILLE, CA. 93257

Prepared For
PORTERVILLE UNIFIED SCHOOL DISTRICT

LANE ENGINEERS, INC.
CIVIL • STRUCTURAL • SURVEYING

979 North Blackstone Street
Tulare, California 93274
559.688.5263
www.laneengineers.com

All reproduction & intellectual property rights reserved © 2024

Professional Seal

LICENSED LAND SURVEYOR
Ronald D. Snow
No. 6859
STATE OF CALIFORNIA

Description	Release Date

No.	Revision	Date

Drawn by: DRD
Reviewed by: RDS

Sheet Title
PARTIAL TOPOGRAPHIC SURVEY

Original drawing is 24 x 36. Do not scale contents of this drawing.

Sheet Number
C1.2

OF 5

Project No: 23242

J:\Jobs\2023\23242\Dwg\Topo.dwg
6/26/2024 10:43:36 AM

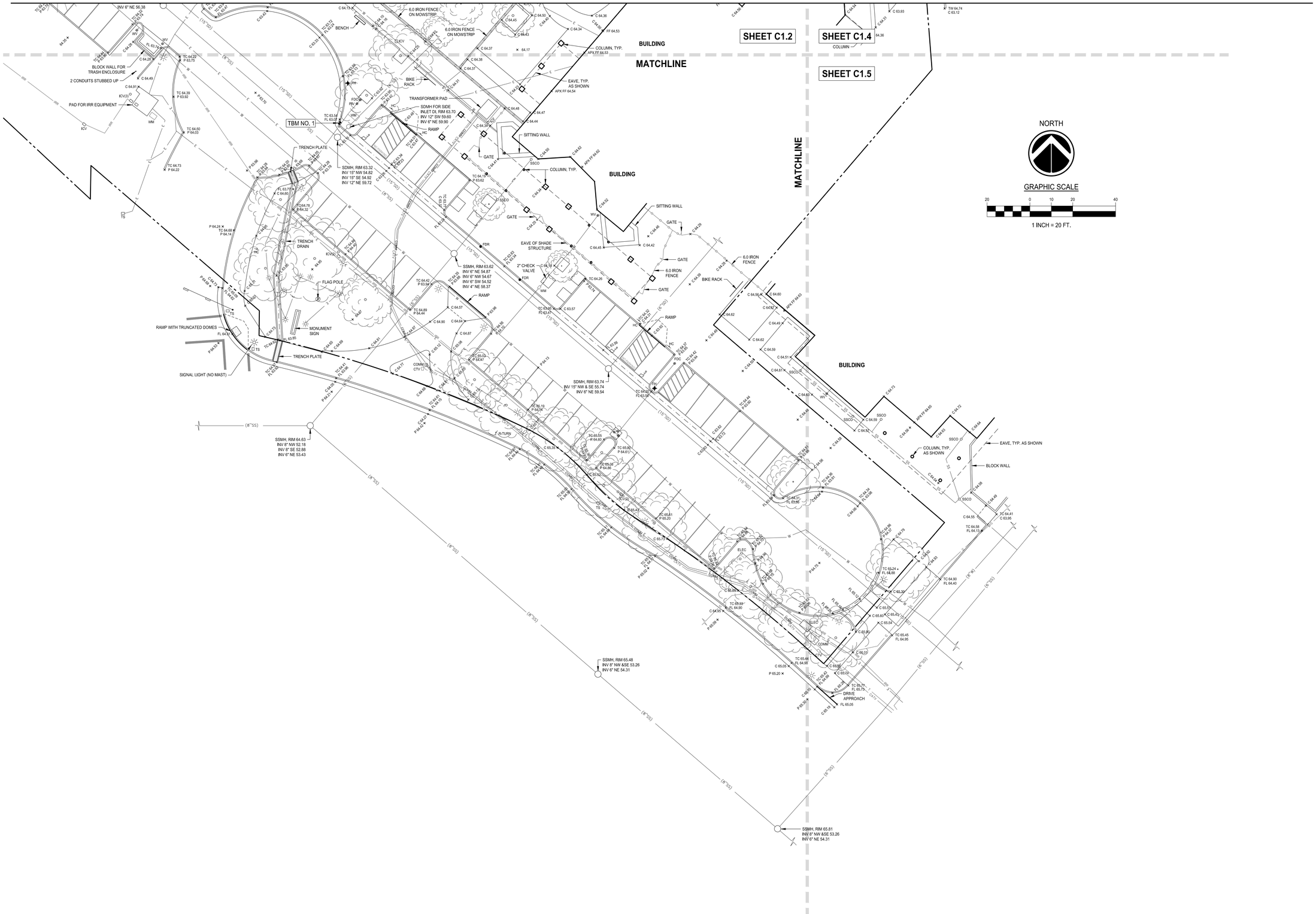

IDENTIFICATION STAMP
DIV. OF THE STATE ARCHITECT
APP: 02-121996 INC:
REVIEWED FOR
SS ☑ FLS ☑ ACS ☑
DATE: 8/14/2024

Project
SANTA FE ELEMENTARY SCHOOL

286 E. ORANGE AVE.
PORTERVILLE, CA. 93257

Prepared For
PORTERVILLE UNIFIED SCHOOL DISTRICT

LANE ENGINEERS, INC.
CIVIL • STRUCTURAL • SURVEYING

979 North Blackstone Street
Tulare, California 93274
559.688.5263
www.laneengineers.com

All reproduction & intellectual property rights reserved © 2024

Professional Seal

LICENSED LAND SURVEYOR
Ronald D. Snow
No. 6859
STATE OF CALIFORNIA

Description	Release Date

No.	Revision	Date

Drawn by: DRD

Reviewed by: RDS

Sheet Title
PARTIAL TOPOGRAPHIC SURVEY

Original drawing is 24 x 36. Do not scale contents of this drawing.

Sheet Number
C1.3

OF 5

Project No: 23242

J:\Jobs\2023\23242\Dwg\Topo.dwg

6/26/2024 10:43:48 AM

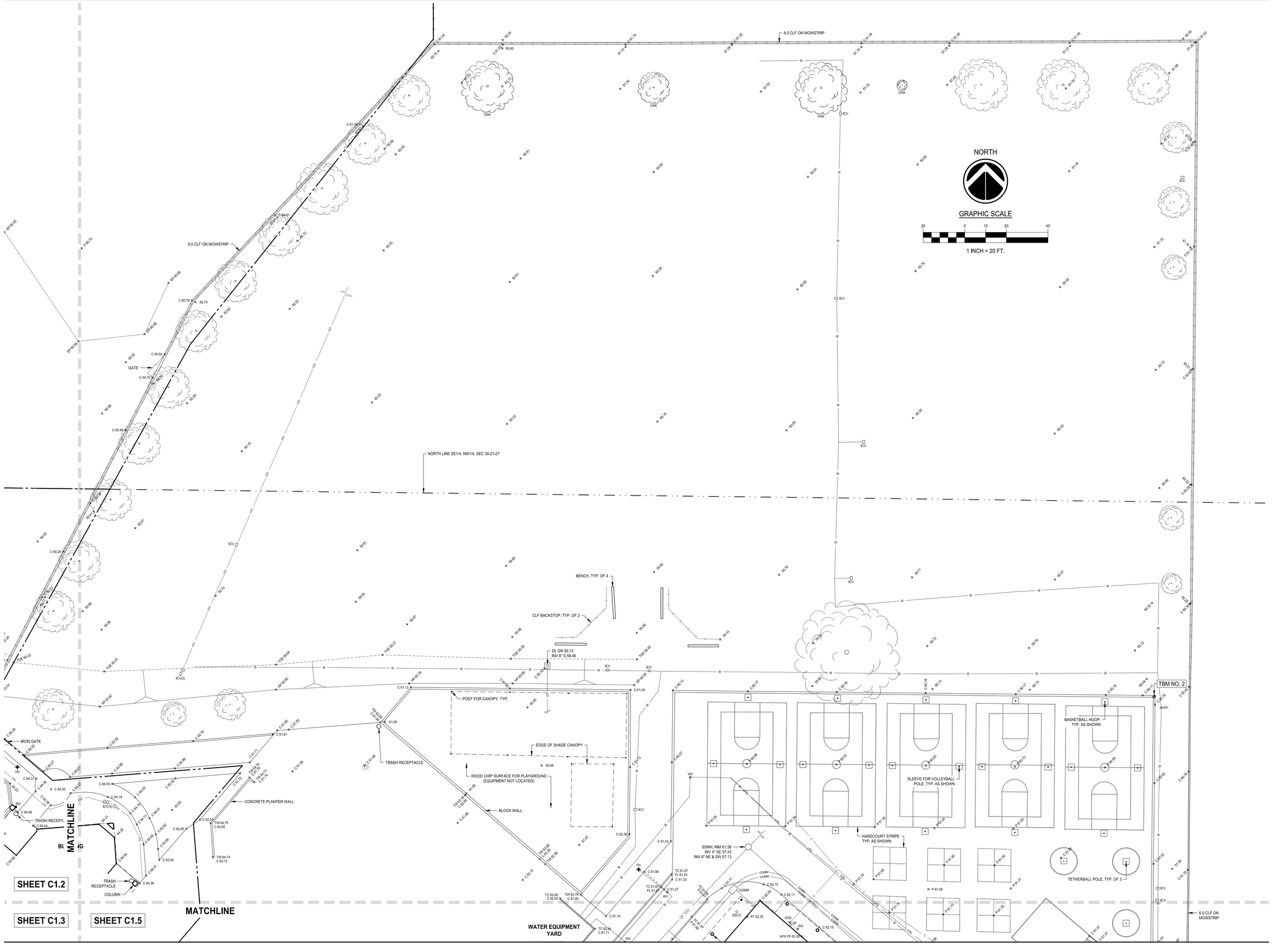

IDENTIFICATION STAMP
DIV. OF THE STATE ARCHITECT
APP: 02-121996 INC:
REVIEWED FOR
SS ☑ FLS ☑ ACS ☑
DATE: 8/14/2024

Project
SANTA FE ELEMENTARY SCHOOL

286 E. ORANGE AVE.
PORTERVILLE, CA. 93257

Prepared For
PORTERILLE UNIFIED SCHOOL DISTRICT

LANE ENGINEERS, INC.
CIVIL • STRUCTURAL • SURVEYING

979 North Blackstone Street
Tulare, California 93274
559.688.5263
www.laneengineers.com

All reproduction & intellectual property rights reserved © 2024

Professional Seal

LICENSED LAND SURVEYOR
Ronald D. Snow
No. 6859
STATE OF CALIFORNIA

Description	Release Date

No.	Revision	Date

Drawn by: DRD
Reviewed by: RDS

Sheet Title
PARTIAL TOPOGRAPHIC SURVEY

Original drawing is 24 x 36. Do not scale contents of this drawing.

Sheet Number
C1.4

OF 5

Project No: 23242

J:\sites\2023\23242\Dwg\Topo.dwg
6/28/2024 10:43:55 AM

IDENTIFICATION STAMP
DIV. OF THE STATE ARCHITECT
APP: 02-121996 INC:
REVIEWED FOR
SS ☑ FLS ☑ ACS ☑
DATE: 8/14/2024

Project
SANTA FE ELEMENTARY SCHOOL

286 E. ORANGE AVE.
PORTERVILLE, CA. 93257

Prepared For
PORTERVILLE UNIFIED SCHOOL DISTRICT

LANE ENGINEERS, INC.
CIVIL • STRUCTURAL • SURVEYING

979 North Blackstone Street
Tulare, California 93274
559.688.5263
www.laneengineers.com

All reproduction & intellectual property rights reserved © 2024

Professional Seal

LICENSED LAND SURVEYOR
Ronald D. Snow
No. 6859
STATE OF CALIFORNIA

Description	Release Date

No.	Revision	Date

Drawn by: DRD

Reviewed by: RDS

Sheet Title
PARTIAL TOPOGRAPHIC SURVEY

Original drawing is 24 x 36. Do not scale contents of this drawing.

Sheet Number
C1.5

OF 5

Project No: 23242

J:\Jobs\2023\23242\23242Topo.dwg

6/26/2024 10:44:08 AM

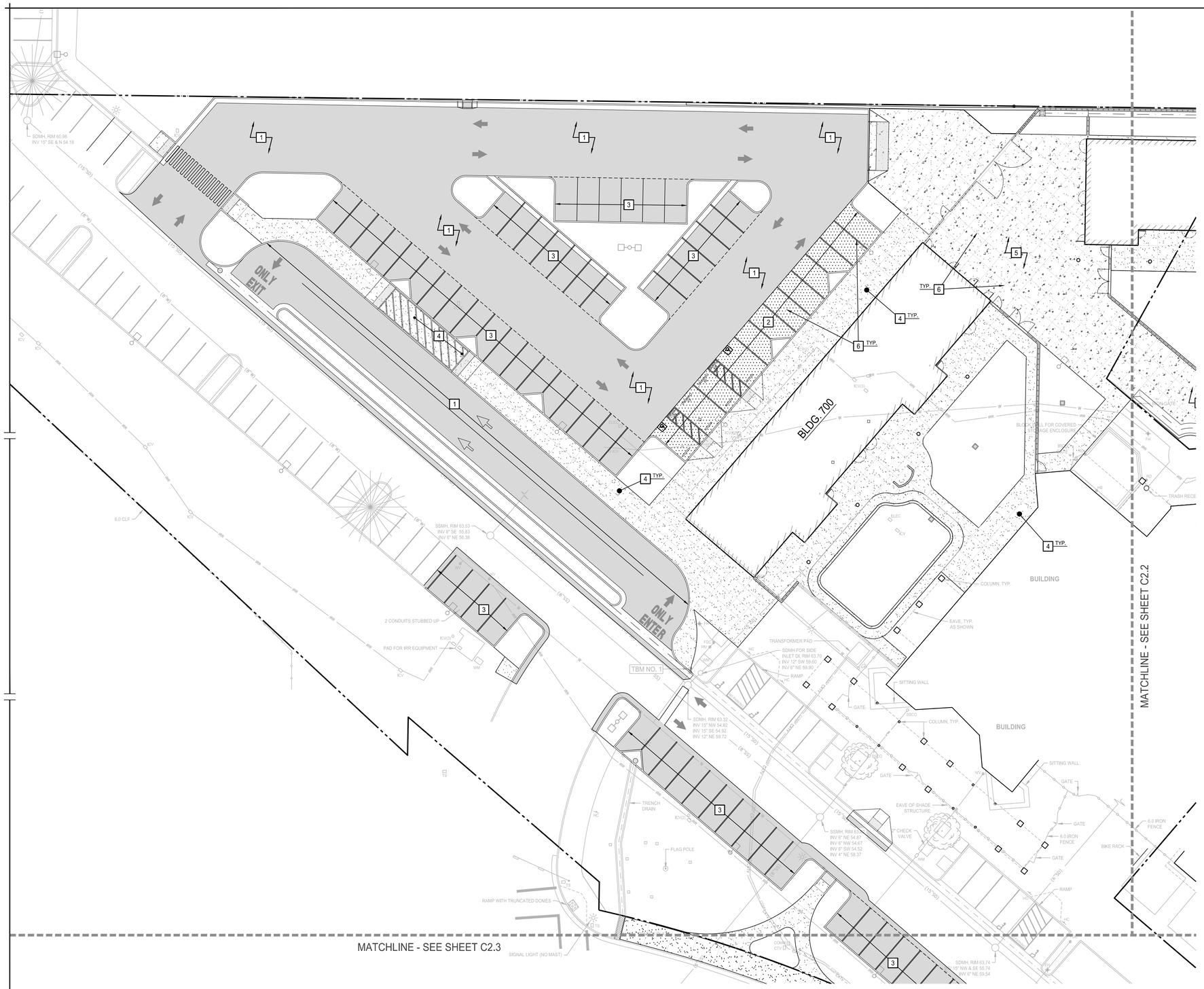

NOTES

1. REFER TO SHEETS C0.1 FOR BENCHMARKS, GENERAL NOTES & INFORMATION.
2. REFER TO ARCHITECTURAL DRAWINGS FOR ADDITIONAL SITE INFORMATION DETAILS

CONSTRUCTION KEYNOTES

THIS SHEET ONLY

1. DRIVE AISLES: 3" A.C. OVER 6" CLASS 2 A.B. OVER 12" COMPACTED SUBGRADE. SEE DETAIL 33/C7.1.
2. ACCESSIBLE PARKING SPACES AND ACCESS AISLES: 5" PORTLAND CEMENT CONCRETE PAVEMENT OVER 4" CLASS 2 A.B. OVER 12" C.S.G. SEE DETAIL 34/C7.1.
3. PARKING SPACES: 2.5 A.C. OVER 4" CLASS 2 AGGREGATE BASE OVER 12" COMPACTED SUBGRADE. SEE DETAIL 33/C7.1.
4. CONCRETE SIDEWALK AND WALKWAYS. SEE ARCHITECTURAL DRAWINGS FOR ADDITIONAL DETAILS
5. PORTLAND CEMENT CONCRETE PAVING (FIRE LANE): 6.5" REINFORCED CONCRETE PAVEMENT WITH #4 EA. WAY AT 24" O.C. OVER 4" CLASS 2 A.B. OVER 12" COMPACTED SUBGRADE. SEE DETAIL
6. CRACK CONTROL/CONSTRUCTION JOINT LINES. SEE ARCHITECTURAL DETAILS 3/SD9 & 4/SD9 FOR JOINT DETAILS. SPACING OF CONSTRUCTION CONTROL JOINTS SHALL NOT EXCEED 10' SQUARE GRID.

LEGEND

- NEW ASPHALT CONCRETE PAVEMENT
- NEW CONCRETE WALKWAY & OTHER CONCRETE SURFACE IMPROVEMENTS - SEE ARCHITECTURAL DRAWINGS
- NEW CONCRETE PAVEMENT
- REINFORCED CONCRETE PAVEMENT
- RIGHT OF WAY/PROPERTY LINE

NORTH

GRAPHIC SCALE

20 0 10 20 40

1 INCH = 20 FT.

PAVING PLAN

REGISTERED PROFESSIONAL ENGINEER
RA VANG
R.C.E. 73146
06/26/2024
CIVIL
STATE OF CALIFORNIA

CONSULTANT

LANE ENGINEERS INC.
CIVIL• STRUCTURAL• SURVEYING
979 N. BLACKSTONE
TULARE, CALIFORNIA 93274
(559) 688-5263

APPROVALS

FILE #	APPLICATION #
54-76	02-121996

IDENTIFICATION STAMP
DIV. OF THE STATE ARCHITECT
APP: 02-121996 INC:
REVIEWED FOR
SS ☑ FLS ☑ ACS ☑
DATE: 8/14/2024

LICENSED ARCHITECT
MICHAEL J. SCOTT
No. C-34290
REN. 05-31-19
STATE OF CALIFORNIA

DATE: DECEMBER 31, 2023

NEW PRESCHOOL, TK, AND KINDERGARTEN CLASSROOMS AT SANTA FE ELEMENTARY SCHOOL

PORTERVILLE UNIFIED SCHOOL DISTRICT

286 E ORANGE AVENUE, PORTERVILLE, CA 93257

REVISIONS

MANGINI ARCHITECTURE INGENUITY
BARENG MORRELLI SCOTT
MANGINI ASSOCIATES INC.
4320 West Mineral King Avenue
Visalia, California 93291
www.mangini.us
(559) 627.0530 Office
(559) 627.1926 Fax

TITLE
PAVING PLAN

C2.1

PROJECT 23076

LANE PROJ. NO. 23242.1

I:\Jobs\2023\23242.1\Dwg\Production Drawings\Paving Plan_23076.dwg Jun 26 2024 10:44am

APPROVALS

FILE # 54-76 | APPLICATION # 02-121996

IDENTIFICATION STAMP
DIV. OF THE STATE ARCHITECT
APP: 02-121996 INC:
REVIEWED FOR
SS ☑ FLS ☑ ACS ☑
DATE: 8/14/2024

LICENSED ARCHITECT
MICHAEL J. SCOTT
No. C-34290
REN. 05-31-19
STATE OF CALIFORNIA

DATE: DECEMBER 31, 2023

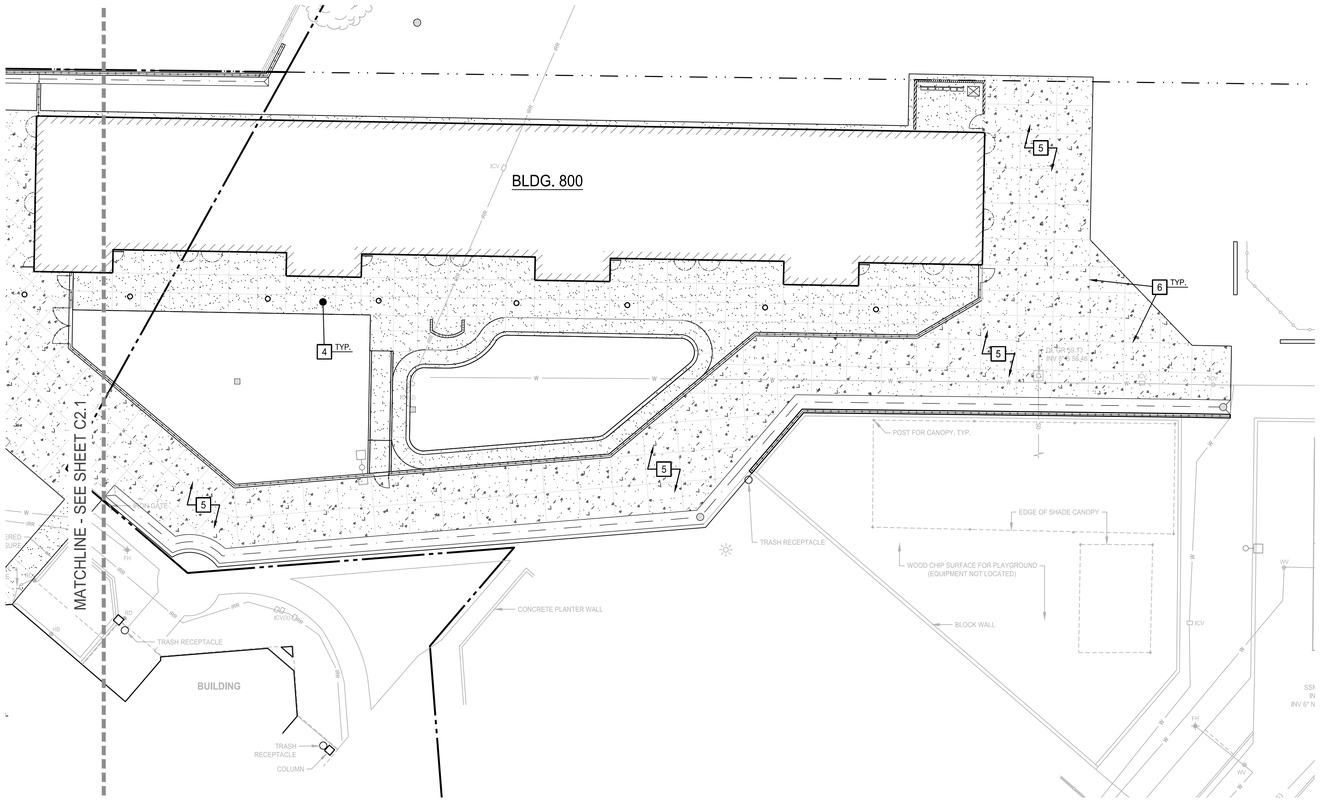

NOTES

1. REFER TO SHEETS C0.1 FOR BENCHMARKS, GENERAL NOTES & INFORMATION.
2. REFER TO ARCHITECTURAL DRAWINGS FOR ADDITIONAL SITE INFORMATION DETAILS

CONSTRUCTION KEYNOTES

THIS SHEET ONLY

1. DRIVE AISLES: 3" A.C. OVER 6" CLASS 2 A.B. OVER 12" COMPACTED SUBGRADE. SEE DETAIL 33/C7.1.
2. ACCESSIBLE PARKING SPACES AND ACCESS AISLES: 5" PORTLAND CEMENT CONCRETE PAVEMENT OVER 4" CLASS 2 A.B. OVER 12" C.S.G. SEE DETAIL 34/C7.1.
3. PARKING SPACES: 2.5 A.C. OVER 4" CLASS 2 AGGREGATE BASE OVER 12" COMPACTED SUBGRADE. SEE DETAIL 33/C7.1.
4. CONCRETE SIDEWALK AND WALKWAYS. SEE ARCHITECTURAL DRAWINGS FOR ADDITIONAL DETAILS
5. PORTLAND CEMENT CONCRETE PAVING (FIRE LANE): 6.5" REINFORCED CONCRETE PAVEMENT WITH #4 EA. WAY AT 24" O.C. OVER 4" CLASS 2 A.B. OVER 12" COMPACTED SUBGRADE. SEE DETAIL
6. CRACK CONTROL/CONSTRUCTION JOINT LINES. SEE ARCHITECTURAL DETAILS 3/SD9 & 4/SD9 FOR JOINT DETAILS. SPACING OF CONSTRUCTION CONTROL JOINTS SHALL NOT EXCEED 10' SQUARE GRID.

LEGEND

- NEW ASPHALT CONCRETE PAVEMENT
- NEW CONCRETE WALKWAY & OTHER CONCRETE SURFACE IMPROVEMENTS - SEE ARCHITECTURAL DRAWINGS
- NEW CONCRETE PAVEMENT
- REINFORCED CONCRETE PAVEMENT
- RIGHT OF WAY/PROPERTY LINE

NORTH

GRAPHIC SCALE

20 0 10 20 40

1 INCH = 20 FT.

PAVING PLAN

REGISTERED PROFESSIONAL ENGINEER
HA VANG
R.C.E. 73146
06/26/2024
CIVIL
STATE OF CALIFORNIA

CONSULTANT

LANE ENGINEERS INC.
CIVIL• STRUCTURAL• SURVEYING
979 N. BLACKSTONE
TULARE, CALIFORNIA 93274
(559) 688-5263

NEW PRESCHOOL, TK, AND KINDERGARTEN CLASSROOMS AT SANTA FE ELEMENTARY SCHOOL

PORTERVILLE UNIFIED SCHOOL DISTRICT

286 E ORANGE AVENUE, PORTERVILLE, CA 93257

REVISIONS

MANGINI ARCHITECTURE INGENUITY
BARENG MORRELLI SCOTT
MANGINI ASSOCIATES INC.
4320 West Mineral King Avenue
Visalia, California 93291
www.mangini.us
(559) 627.0530 Office
(559) 627.1926 Fax

TITLE
PAVING PLAN

C2.2

PROJECT 23076

LANE PROJ. NO. 23242.1

APPROVALS

FILE # 54-76 | APPLICATION # 02-121996

IDENTIFICATION STAMP
DIV. OF THE STATE ARCHITECT
APP: 02-121996 INC:
REVIEWED FOR
SS ☑ FLS ☑ ACS ☑
DATE: 8/14/2024

LICENSED ARCHITECT
MICHAEL J. SCOTT
No. C-34290
REN. 05-31-19
STATE OF CALIFORNIA

DATE: DECEMBER 31, 2023

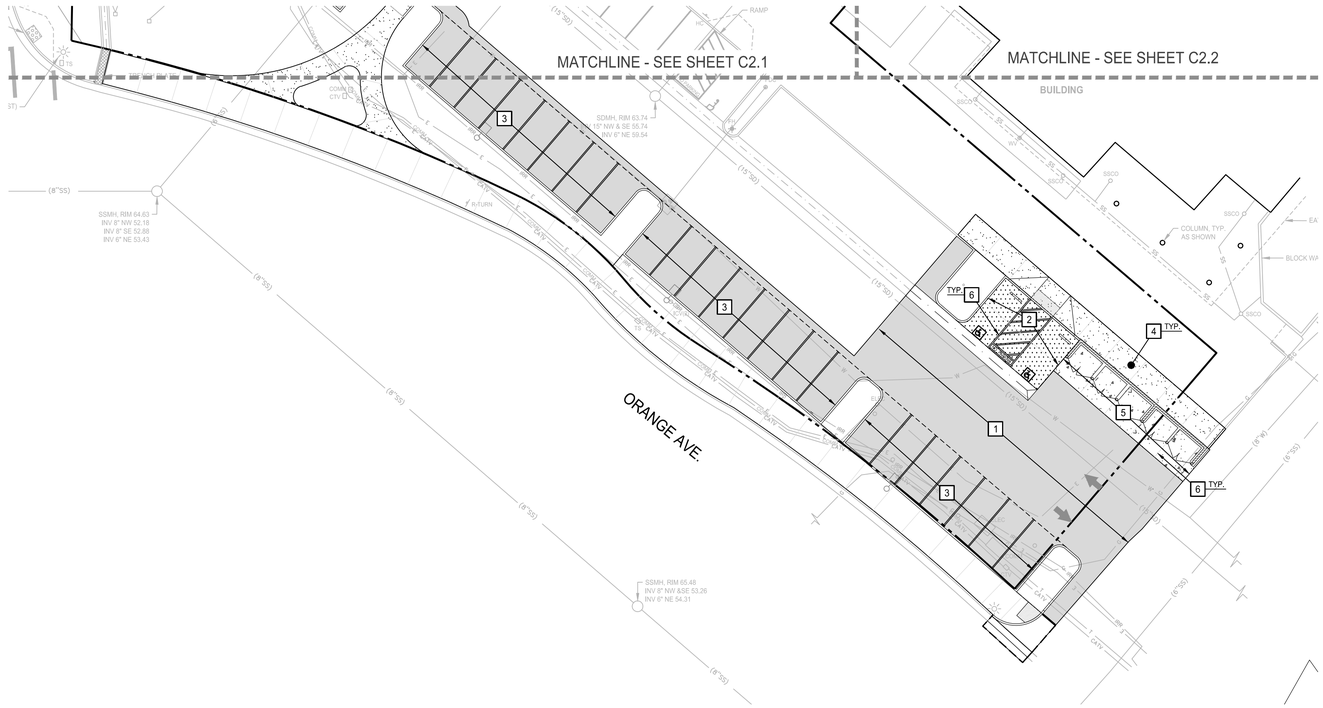

NOTES

1. REFER TO SHEETS C0.1 FOR BENCHMARKS, GENERAL NOTES & INFORMATION.
2. REFER TO ARCHITECTURAL DRAWINGS FOR ADDITIONAL SITE INFORMATION DETAILS

CONSTRUCTION KEYNOTES

THIS SHEET ONLY

1. DRIVE AISLES: 3" A.C. OVER 6" CLASS 2 A.B. OVER 12" COMPACTED SUBGRADE. SEE DETAIL 33/C7.1.
2. ACCESSIBLE PARKING SPACES AND ACCESS AISLES: 5" PORTLAND CEMENT CONCRETE PAVEMENT OVER 4" CLASS 2 A.B. OVER 12" C.S.G. SEE DETAIL 34/C7.1.
3. PARKING SPACES: 2.5 A.C. OVER 4" CLASS 2 AGGREGATE BASE OVER 12" COMPACTED SUBGRADE. SEE DETAIL 33/C7.1.
4. CONCRETE SIDEWALK AND WALKWAYS. SEE ARCHITECTURAL DRAWINGS FOR ADDITIONAL DETAILS
5. PORTLAND CEMENT CONCRETE PAVING (FIRE LANE): 6.5" REINFORCED CONCRETE PAVEMENT WITH #4 EA. WAY AT 24" O.C. OVER 4" CLASS 2 A.B. OVER 12" COMPACTED SUBGRADE. SEE DETAIL
6. CRACK CONTROL/CONSTRUCTION JOINT LINES. SEE ARCHITECTURAL DETAILS 3/SD9 & 4/SD9 FOR JOINT DETAILS. SPACING OF CONSTRUCTION CONTROL JOINTS SHALL NOT EXCEED 10' SQUARE GRID.

LEGEND

- NEW ASPHALT CONCRETE PAVEMENT
- NEW CONCRETE WALKWAY & OTHER CONCRETE SURFACE IMPROVEMENTS - SEE ARCHITECTURAL DRAWINGS
- NEW CONCRETE PAVEMENT
- REINFORCED CONCRETE PAVEMENT
- RIGHT OF WAY/PROPERTY LINE

NORTH

GRAPHIC SCALE

20 0 10 20 40

1 INCH = 20 FT.

PAVING PLAN

REGISTERED PROFESSIONAL ENGINEER
NIA VANG
R.C.E. 73146
06/26/2024
CIVIL
STATE OF CALIFORNIA

CONSULTANT

LANE ENGINEERS INC.
CIVIL• STRUCTURAL• SURVEYING
979 N. BLACKSTONE
TULARE, CALIFORNIA 93274
(559) 688-5263

NEW PRESCHOOL, TK, AND KINDERGARTEN CLASSROOMS AT SANTA FE ELEMENTARY SCHOOL

PORTERVILLE UNIFIED SCHOOL DISTRICT

286 E ORANGE AVENUE, PORTERVILLE, CA 93257

REVISIONS

MANGINI | ARCHITECTURE INGENUITY
BARENG MORRELLI SCOTT
MANGINI ASSOCIATES INC.
4320 West Mineral king Avenue
Visalia, California 93291
www.mangini.us
(559) 627.0530 Office
(559) 627.1928 Fax

TITLE
PAVING PLAN

C2.3

PROJECT 23076

LANE PROJ. NO. 23242.1

F:\Jobs\2023\23242.1\Dwg\Production Drawings\Paving Plan_23076.dwg Jun 26 2024 10:44am

APPROVALS

FILE # 54-76 | APPLICATION # 02-121996

IDENTIFICATION STAMP
DIV. OF THE STATE ARCHITECT
APP: 02-121996 INC:
REVIEWED FOR
SS ☑ FLS ☑ ACS ☑
DATE: 8/14/2024

LICENSED ARCHITECT
MICHAEL J. SCOTT
No. C-34290
REN. 05-31-19
STATE OF CALIFORNIA

DATE: DECEMBER 31, 2023

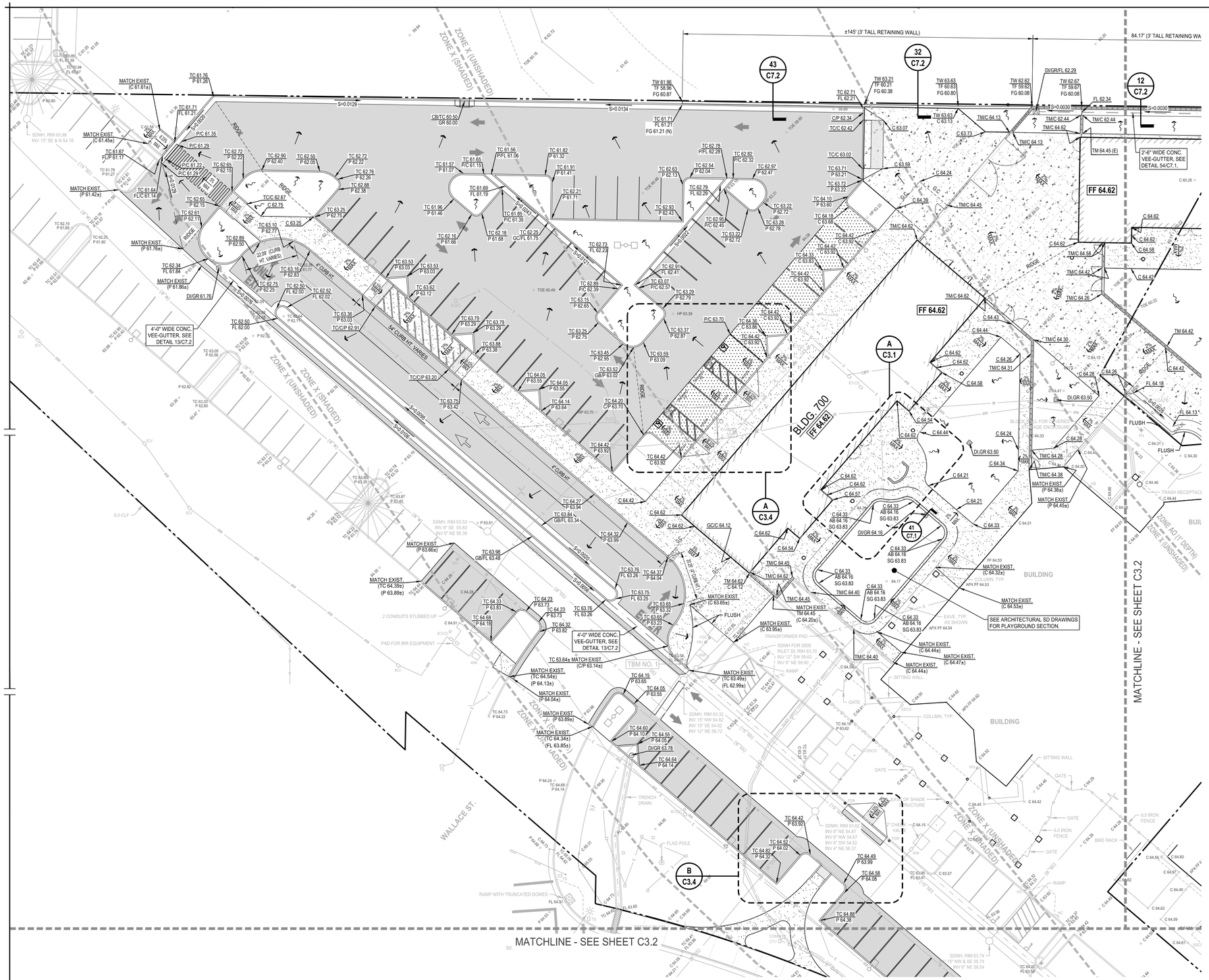

NOTES

1. REFER TO SHEETS C0.1 FOR BENCHMARKS, GENERAL NOTES & INFORMATION.
2. UNLESS SHOWN OR NOTED OTHERWISE, WHERE FINISH GRADE ABUTS CONCRETE PAVEMENTS/BACK OF CURBS, FINISH GRADE ELEVATION SHALL BE 1 INCH LOWER THAN ADJACENT CONCRETE ELEVATION IN SHRUB AREAS AND ½ INCH LOWER IN TURF AREAS.
3. CROSS SLOPE AT ALL PEDESTRIAN WALKS AND SIDEWALKS SHALL BE 1% MIN., BUT SHALL NOT EXCEED 2.0%.
4. FINISHED PAVEMENT SLOPES AT ALL ACCESSIBLE PARKING SPACES AND ACCESS AISLES SHALL NOT EXCEED 2.0% IN ANY DIRECTION.
5. EXTERIOR CONCRETE SHALL BE FLUSH WITH FINISHED FLOOR AT ALL EXTERIOR DOORS.
6. FIELD VERIFY ALL ELEVATIONS SHOWN WHERE PROPOSED IMPROVEMENTS ABUT EXISTING IMPROVEMENTS. IMMEDIATELY NOTIFY PROJECT ARCHITECT OF ANY DISCREPANCIES.
7. REFER TO ARCHITECTURAL DRAWINGS FOR ADDITIONAL SITE INFORMATION AND DETAILS.
8. ALL EXISTING VALVE BOXES AND MANHOLES TO REMAIN SHALL BE ADJUSTED AS REQUIRED SO THAT THE TOP OF COVERS ARE FLUSH WITH FINISH GRADES.
9. SEE PROJECT SPECIFICATIONS FOR SITE PREPARATIOON OVER-EXCAVATION REQUIREMENTS.

LEGEND

- NEW ASPHALT CONCRETE PAVEMENT
- NEW CONCRETE WALKWAY & OTHER CONCRETE SURFACE IMPROVEMENTS - SEE ARCHITECTURAL DRAWINGS
- NEW CONCRETE PAVEMENT
- REINFORCED CONCRETE PAVEMENT
- RIGHT OF WAY/PROPERTY LINE

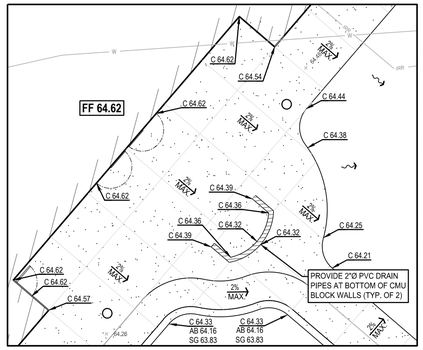

(A) ENLARGED GRADING

SCALE: 1"=10'

NORTH

NEW PRESCHOOL, TK, AND KINDERGARTEN CLASSROOMS AT SANTA FE ELEMENTARY SCHOOL

PORTERVILLE UNIFIED SCHOOL DISTRICT
286 E ORANGE AVENUE, PORTERVILLE, CA 93257

REVISIONS

MANGINI ARCHITECTURE INGENUITY
BARENG MORRELLI SCOTT
MANGINI ASSOCIATES INC.
4320 West Mineral King Avenue
Visalia, California 93291
www.mangini.us
(559) 627-9530 Office
(559) 627-1926 Fax

TITLE
GRADING AND DRAINAGE PLAN

C3.1

PROJECT 23076

GRADING AND DRAINAGE PLAN

NORTH

GRAPHIC SCALE
20 0 10 20 40
1 INCH = 20 FT.

REGISTERED PROFESSIONAL ENGINEER
NA VANG
R.C.E. 73146
06/26/2024
CIVIL
STATE OF CALIFORNIA

CONSULTANT
LANE ENGINEERS INC.
CIVIL • STRUCTURAL • SURVEYING
979 N. BLACKSTONE
TULARE, CALIFORNIA 93274
(559) 688-5263

LANE PROJ. NO. 23242.1

R:\Jobs\2023\23242.1\Dwg\Production Drawings\Grading Plan_23076.dwg Jun 26 2024 10:44am

APPROVALS

FILE # 54-76 | APPLICATION # 02-121996

IDENTIFICATION STAMP
DIV. OF THE STATE ARCHITECT
APP: 02-121996 INC:
REVIEWED FOR
SS ☑ FLS ☑ ACS ☑
DATE: 8/14/2024

LICENSED ARCHITECT
MICHAEL J. SCOTT
No. C-34290
REN. 05-31-19
STATE OF CALIFORNIA

DATE: DECEMBER 31, 2023

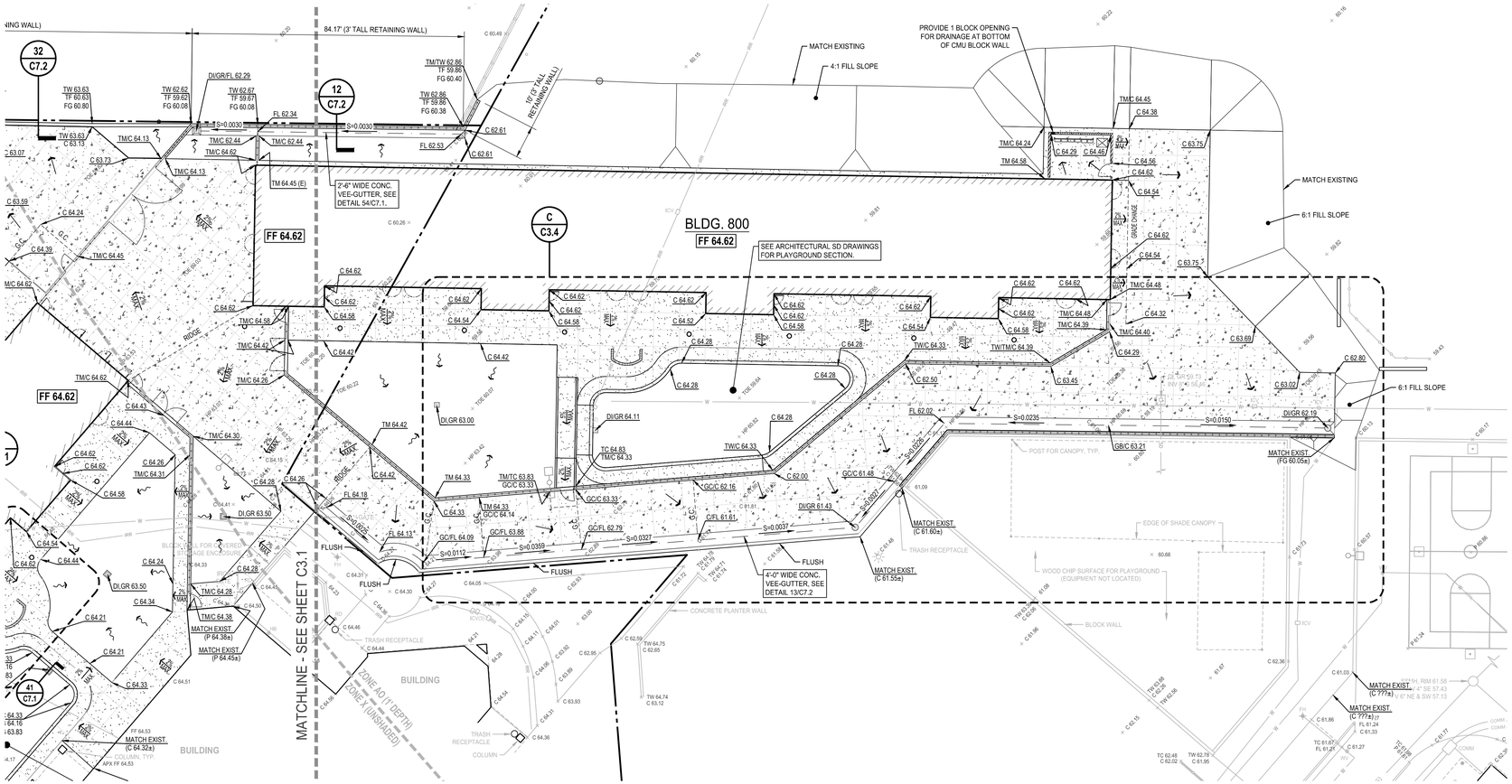

NOTES

1. REFER TO SHEETS C0.1 FOR BENCHMARKS, GENERAL NOTES & INFORMATION.
2. UNLESS SHOWN OR NOTED OTHERWISE, WHERE FINISH GRADE ABUTS CONCRETE PAVEMENTS/BACK OF CURBS, FINISH GRADE ELEVATION SHALL BE 1 INCH LOWER THAN ADJACENT CONCRETE ELEVATION IN SHRUB AREAS AND ½ INCH LOWER IN TURF AREAS.
3. CROSS SLOPE AT ALL PEDESTRIAN WALKS AND SIDEWALKS SHALL BE 1% MIN., BUT SHALL NOT EXCEED 2.0%.
4. FINISHED PAVEMENT SLOPES AT ALL ACCESSIBLE PARKING SPACES AND ACCESS AISLES SHALL NOT EXCEED 2.0% IN ANY DIRECTION.
5. EXTERIOR CONCRETE SHALL BE FLUSH WITH FINISHED FLOOR AT ALL EXTERIOR DOORS.
6. FIELD VERIFY ALL ELEVATIONS SHOWN WHERE PROPOSED IMPROVEMENTS ABUT EXISTING IMPROVEMENTS. IMMEDIATELY NOTIFY PROJECT ARCHITECT OF ANY DISCREPANCIES.
7. REFER TO ARCHITECTURAL DRAWINGS FOR ADDITIONAL SITE INFORMATION AND DETAILS.
8. ALL EXISTING VALVE BOXES AND MANHOLES TO REMAIN SHALL BE ADJUSTED AS REQUIRED SO THAT THE TOP OF COVERS ARE FLUSH WITH FINISH GRADES.
9. SEE PROJECT SPECIFICATIONS FOR SITE PREPARATIOON OVER-EXCAVATION REQUIREMENTS.

LEGEND

- NEW ASPHALT CONCRETE PAVEMENT
- NEW CONCRETE WALKWAY & OTHER CONCRETE SURFACE IMPROVEMENTS - SEE ARCHITECTURAL DRAWINGS
- NEW CONCRETE PAVEMENT
- REINFORCED CONCRETE PAVEMENT
- RIGHT OF WAY/PROPERTY LINE

NEW PRESCHOOL, TK, AND KINDERGARTEN CLASSROOMS AT SANTA FE ELEMENTARY SCHOOL

PORTERVILLE UNIFIED SCHOOL DISTRICT
286 E ORANGE AVENUE, PORTERVILLE, CA 93257

REVISIONS

NORTH

GRAPHIC SCALE
20 0 10 20 40
1 INCH = 20 FT.

GRADING AND DRAINAGE PLAN

REGISTERED PROFESSIONAL ENGINEER
WA VANG
R.C.E. 73146
06/26/2024
CIVIL
STATE OF CALIFORNIA

CONSULTANT
LANE ENGINEERS INC.
CIVIL • STRUCTURAL • SURVEYING
979 N. BLACKSTONE
TULARE, CALIFORNIA 93274
(559) 688-5263

MANGINI ARCHITECTURE INGENUITY
BARENG MORRELLI SCOTT
MANGINI ASSOCIATES INC.
4320 West Mineral King Avenue
Visalia, California 93291
www.mangini.us
(559) 627-0530 Office
(559) 627-1926 Fax

TITLE
GRADING AND DRAINAGE PLAN

C3.2

PROJECT 23076

APPROVALS

FILE #	APPLICATION #
54-76	02-121996

IDENTIFICATION STAMP
DIV. OF THE STATE ARCHITECT
APP: 02-121996 INC:
REVIEWED FOR
SS ☑ FLS ☑ ACS ☑
DATE: 8/14/2024

LICENSED ARCHITECT
MICHAEL J. SCOTT
No. C-34290
REN. 05-31-19
STATE OF CALIFORNIA

DATE: DECEMBER 31, 2023

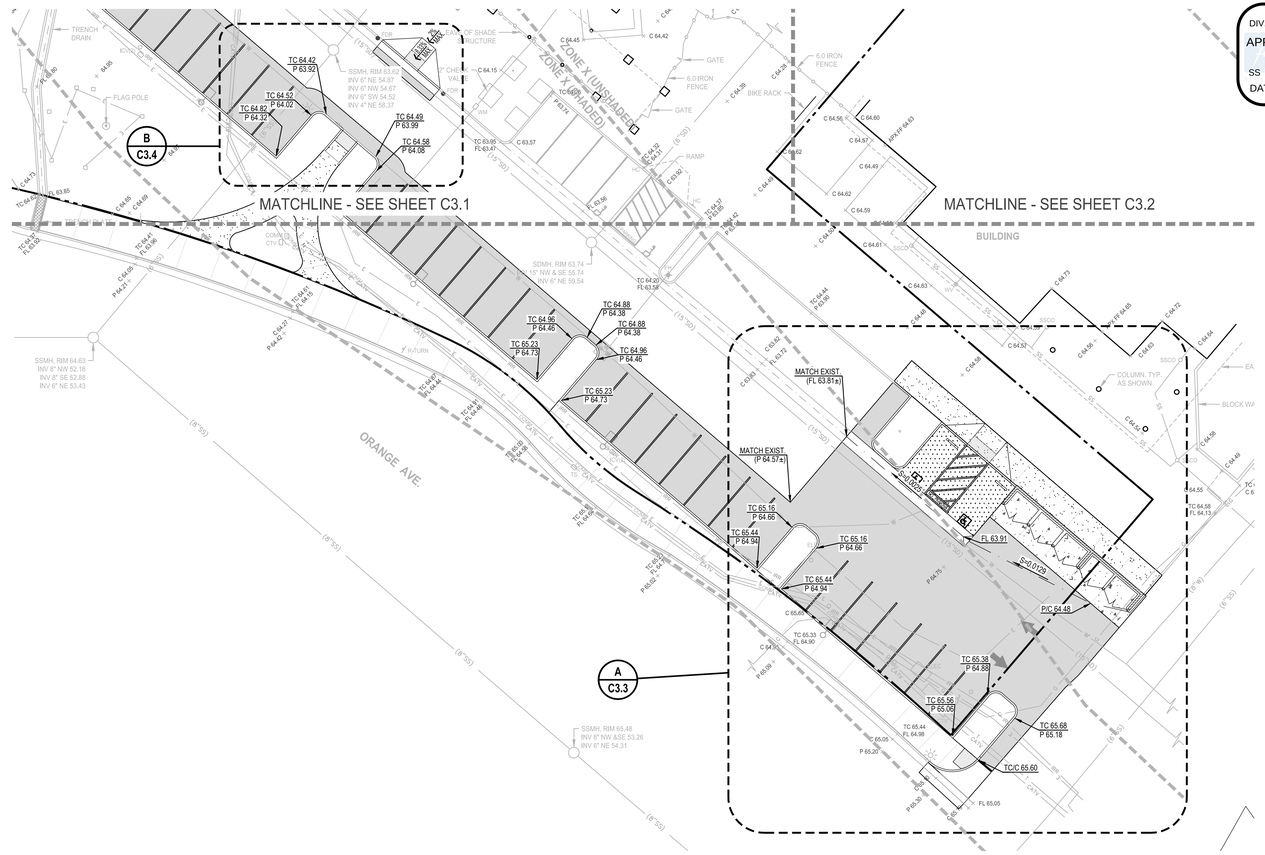

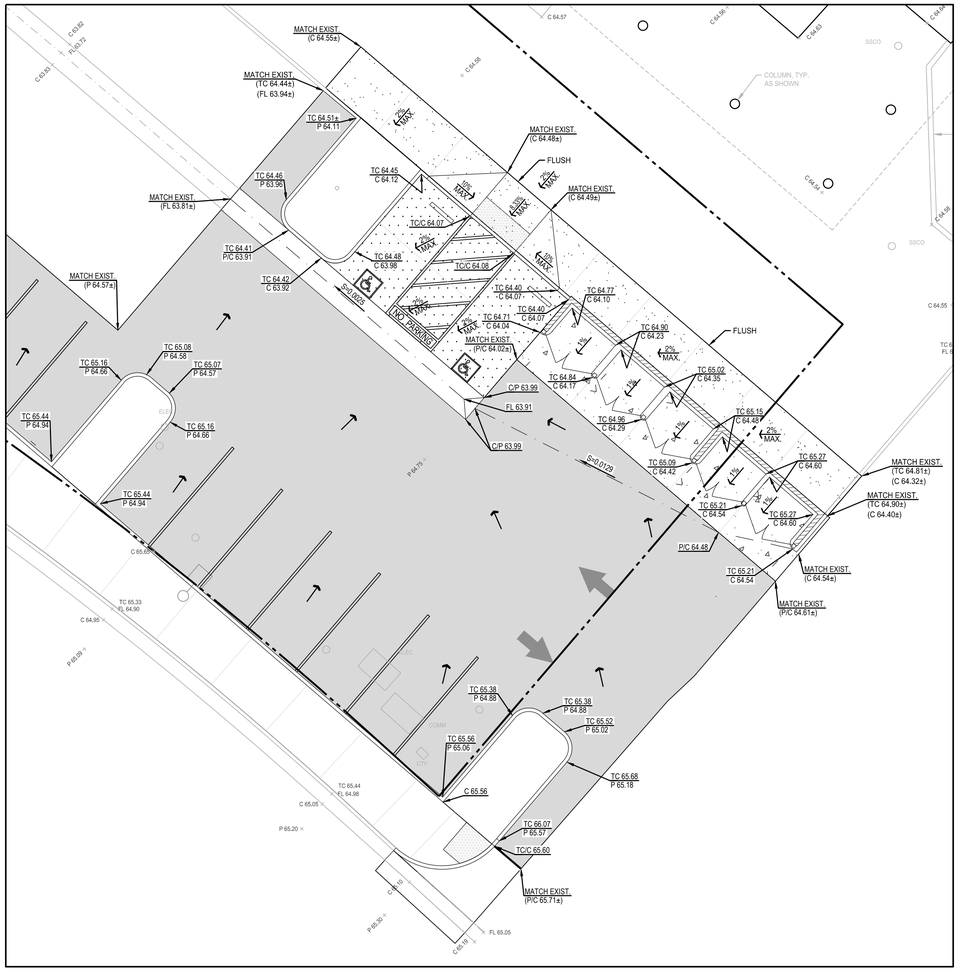

A ENLARGED GRADING

SCALE: 1"=10'

NORTH

NOTES

1. REFER TO SHEETS C0.1 FOR BENCHMARKS, GENERAL NOTES & INFORMATION.
2. UNLESS SHOWN OR NOTED OTHERWISE, WHERE FINISH GRADE ABUTS CONCRETE PAVEMENTS/BACK OF CURBS, FINISH GRADE ELEVATION SHALL BE 1 INCH LOWER THAN ADJACENT CONCRETE ELEVATION IN SHRUB AREAS AND ½ INCH LOWER IN TURF AREAS.
3. CROSS SLOPE AT ALL PEDESTRIAN WALKS AND SIDEWALKS SHALL BE 1% MIN., BUT SHALL NOT EXCEED 2.0%.
4. FINISHED PAVEMENT SLOPES AT ALL ACCESSIBLE PARKING SPACES AND ACCESS AISLES SHALL NOT EXCEED 2.0% IN ANY DIRECTION.
5. EXTERIOR CONCRETE SHALL BE FLUSH WITH FINISHED FLOOR AT ALL EXTERIOR DOORS.
6. FIELD VERIFY ALL ELEVATIONS SHOWN WHERE PROPOSED IMPROVEMENTS ABUT EXISTING IMPROVEMENTS. IMMEDIATELY NOTIFY PROJECT ARCHITECT OF ANY DISCREPANCIES.
7. REFER TO ARCHITECTURAL DRAWINGS FOR ADDITIONAL SITE INFORMATION AND DETAILS.
8. ALL EXISTING VALVE BOXES AND MANHOLES TO REMAIN SHALL BE ADJUSTED AS REQUIRED SO THAT THE TOP OF COVERS ARE FLUSH WITH FINISH GRADES.
9. SEE PROJECT SPECIFICATIONS FOR SITE PREPARATIOON OVER-EXCAVATION REQUIREMENTS.

LEGEND

- NEW ASPHALT CONCRETE PAVEMENT
- NEW CONCRETE WALKWAY & OTHER CONCRETE SURFACE IMPROVEMENTS - SEE ARCHITECTURAL DRAWINGS
- NEW CONCRETE PAVEMENT
- REINFORCED CONCRETE PAVEMENT
- RIGHT OF WAY/PROPERTY LINE

NORTH

GRAPHIC SCALE

20 0 10 20 40

1 INCH = 20 FT.

GRADING AND DRAINAGE PLAN

REGISTERED PROFESSIONAL ENGINEER
NA VANG
R.C.E. 73146
06/26/2024
CIVIL
STATE OF CALIFORNIA

CONSULTANT

LANE ENGINEERS INC.
CIVIL• STRUCTURAL• SURVEYING
979 N. BLACKSTONE
TULARE, CALIFORNIA 93274
(559) 688-5263

NEW PRESCHOOL, TK, AND KINDERGARTEN CLASSROOMS AT SANTA FE ELEMENTARY SCHOOL

PORTERVILLE UNIFIED SCHOOL DISTRICT
286 E ORANGE AVENUE, PORTERVILLE, CA 93257

REVISIONS

MANGINI ARCHITECTURE INGENUITY
BARENG MORRELLI SCOTT
MANGINI ASSOCIATES INC.
4320 West Mineral King Avenue
Visalia, California 93291
www.mangini.us
(559) 627.0530 Office
(559) 627.1926 fax

TITLE
GRADING AND DRAINAGE PLAN

C3.3

PROJECT 23076

LANE PROJ. NO. 23242.1

APPROVALS

FILE # 54-76 | APPLICATION # 02-121996

IDENTIFICATION STAMP
DIV. OF THE STATE ARCHITECT
APP: 02-121996 INC:
REVIEWED FOR
SS ☑ FLS ☑ ACS ☑
DATE: 8/14/2024

LICENSED ARCHITECT
MICHAEL J. SCOTT
No. C-34290
REN. 05-31-19
STATE OF CALIFORNIA

DATE: DECEMBER 31, 2023

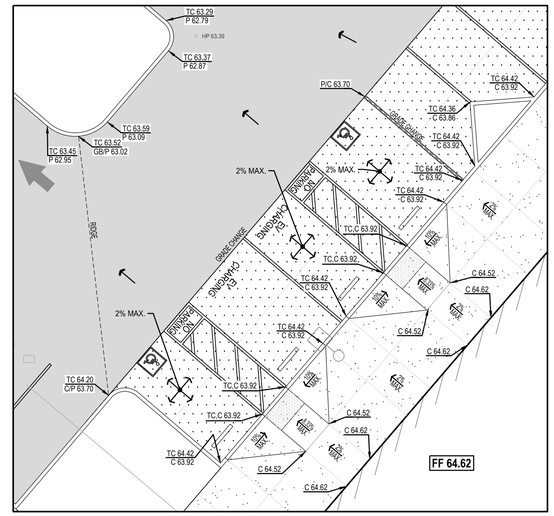

A ENLARGED GRADING
SCALE: 1"=10'

NORTH

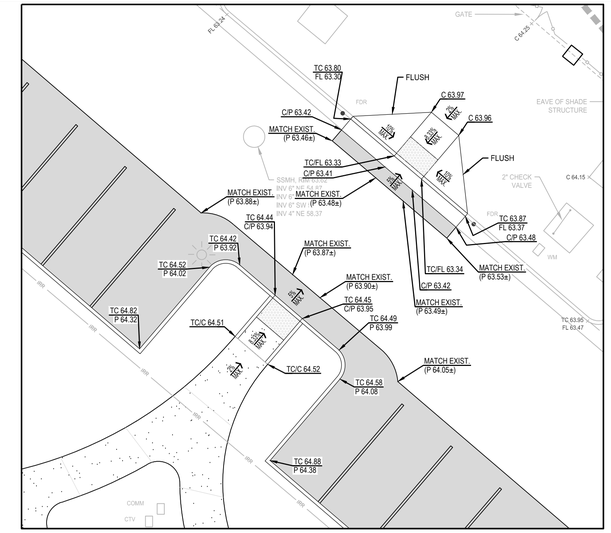

B ENLARGED GRADING
SCALE: 1"=10'

NORTH

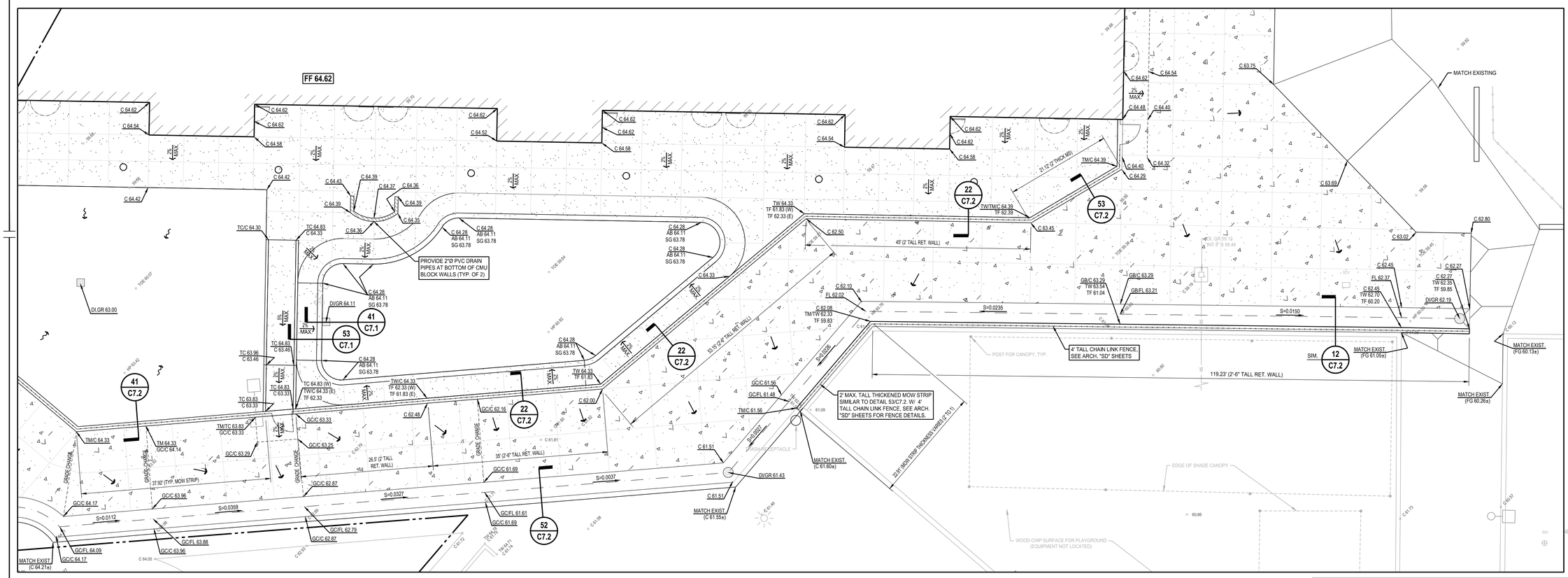

C ENLARGED GRADING
SCALE: 1"=10'

NORTH

NEW PRESCHOOL, TK, AND KINDERGARTEN CLASSROOMS AT SANTA FE ELEMENTARY SCHOOL

PORTERVILLE UNIFIED SCHOOL DISTRICT
286 E ORANGE AVENUE, PORTERVILLE, CA 93257

REVISIONS

MANGINI ARCHITECTURE INGENUITY
BARENG MORRELLI SCOTT
MANGINI ASSOCIATES INC.
4320 West Mineral King Avenue
Visalia, California 93291
www.mangini.us
(559) 627-0530 Office
(559) 627-1926 Fax

TITLE
ENLARGED GRADING DETAILS

C3.4

PROJECT 23076

REGISTERED PROFESSIONAL ENGINEER
WA VANG
C.E.E. 73146
06/26/2024
CIVIL
STATE OF CALIFORNIA

CONSULTANT
LANE ENGINEERS INC.
CIVIL • STRUCTURAL • SURVEYING
979 N. BLACKSTONE
TULARE, CALIFORNIA 93274
(559) 688-5263

LANE PROJ. NO. 23242.1

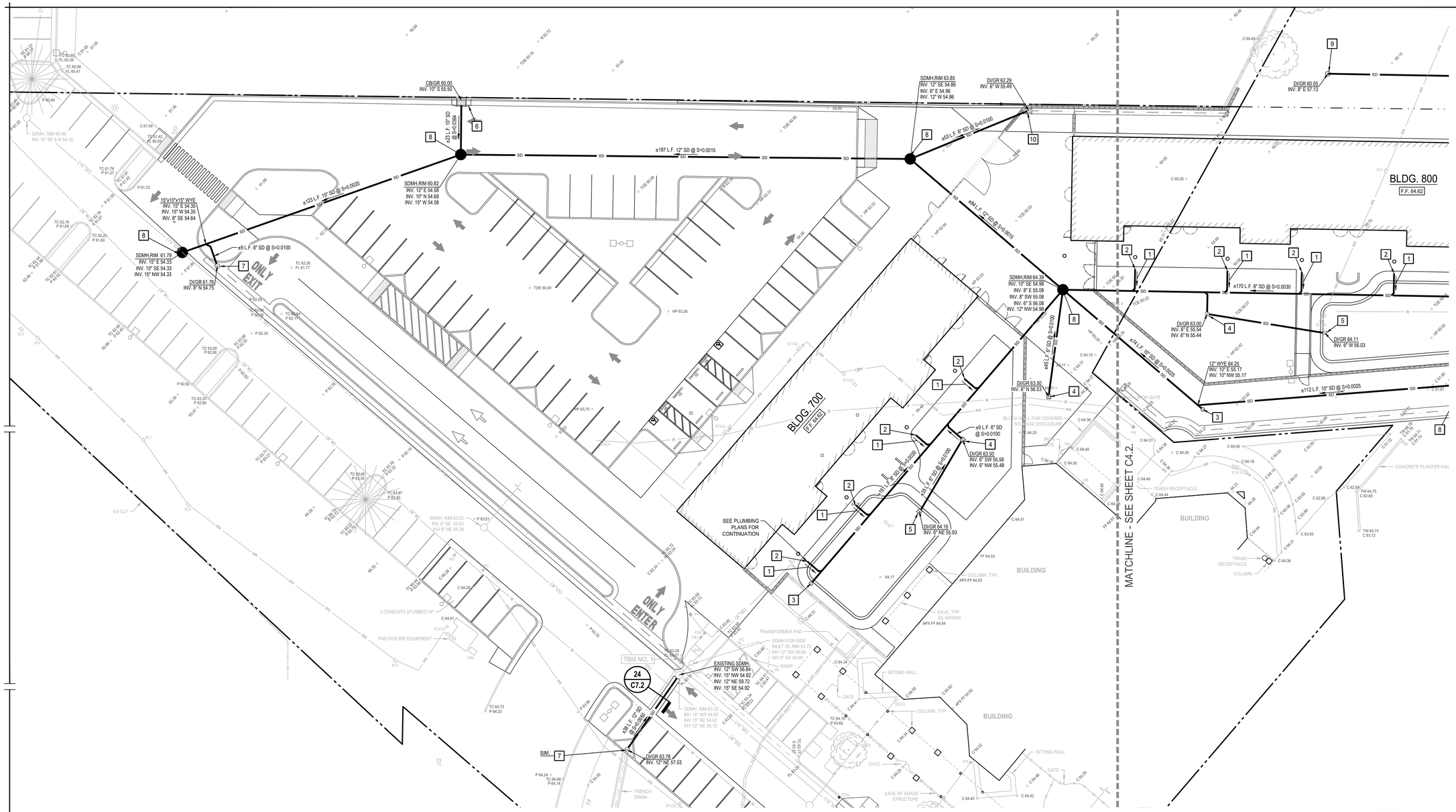

NOTES

1. REFER TO SHEETS C0.1 FOR BENCHMARKS, GENERAL NOTES & INFORMATION.
2. SEE ARCHITECTURAL DWGS. FOR ADDITIONAL SITE INFORMATION AND DETAILS. SEE PLUMBING DRAWINGS FOR ADDITIONAL WET UTILITY PIPING.
3. ALL STORM DRAIN PIPING AND LATERALS SHALL HAVE A MINIMUM OF 3' OF COVER.
4. EXTEND STORM DRAIN LATERAL PIPING TO BUILDING DOWNSPOUTS, UNLESS NOTED OTHERWISE. CONTRACTOR SHALL VERIFY ALL ROOF DOWNSPOUT LOCATIONS WITH ARCHITECTURAL DRAWINGS.
5. ALL TRENCHES ON-SITE SHALL BE BACKFILLED IN ACCORDANCE WITH DETAIL 11/C7.1.
6. ANY EXISTING IRRIGATION SYSTEMS THAT ARE DAMAGED OR REMOVED DUE TO NEW STORM DRAIN PIPE INSTALLATION SHALL BE REPAIR/REPLACED AS REQUIRED.
7. CONTRACTOR SHALL VERIFY THAT NO CONFLICTS OCCUR BETWEEN STORM DRAIN PIPE ALIGNMENTS AND CANOPY FOOTINGS.
8. DUE TO THE SCALE OF THE DRAWINGS, IT IS NOT POSSIBLE TO INDICATE ALL OFFSETS, PIPE SLOPES, FITTINGS, ETC., WHICH MAY BE REQUIRED. IT SHALL BE THE RESPONSIBILITY OF THE CONTRACTOR TO REVIEW THESE DRAWINGS AND FURNISH ALL FITTINGS, ETC. NECESSARY TO COMPLETE A FULLY FUNCTIONAL PIPING SYSTEM AND AVOID ANY CONFLICTS WITH OTHER UTILITIES.

CONSTRUCTION KEYNOTES

THIS SHEET ONLY

1. FURNISH & INSTALL 4"Ø STORM DRAIN LATERALS TO ROOF DRAIN LEADER. ALL LATERALS SLOPE TO DRAIN AWAY FROM STRUCTURES AND SHALL HAVE A MIN. SLOPE OF 2.0%.
2. REFER TO PLUMBING PLANS FOR CONTINUATION. CONTRACTOR SHALL VERIFY LOCATION OF ROOD DRAIN LEADERS WITH ARCHITECTURAL DRAWINGS.
3. CONSTRUCT SURFACE CLEAN OUT (COTG) - SEE DETAIL 12/C7.1.
4. CONSTRUCT SMALL DRAIN INLET WITH CAST IRON GRATE - SEE DETAIL 23/C7.2.
5. CONSTRUCT SMALL DRAIN INLET WITH CAST IRON GRATE UNDER PLAY SURFACE - SEE DETAIL 41/C7.1.
6. CONSTRUCT CURB INLET CATCH BASIN - SEE DETAIL 32/C7.1
7. CONSTRUCT VEE-GUTTER DRAIN INLET. SEE DETAIL 44/C7.1.
8. CONSTRUCT STORM DRAIN MANHOLE WITH SOLID LID COVER - SEE DETAILS 22/C7.1, 24/C7.1 & 13/C7.1.
9. CONSTRUCT LARGE DRAIN INLET - SEE DETAIL 34/C7.2.
10. CONSTRUCT SMALL VEE-GUTTER DRAIN INLET. SEE DETAIL 52/C7.2.
11. REMOVE EXISTING DRAIN INLET TO ALLOW FOR NEW STORM DRAIN MANHOLE PER CONSTRUCTION KEYNOTE NO. 8. RECONNECT EXISTING STORM DRAIN PIPING TO NEW SDMH.

LEGEND

- RIGHT OF WAY/PROPERTY LINE
- SD — NEW STORM DRAIN PIPING

NORTH

GRAPHIC SCALE

20 0 10 20 40

1 INCH = 20 FT.

STORM DRAIN PLAN

REGISTERED PROFESSIONAL ENGINEER
NA VANG
C.E.E. 73146
06/26/2024
CIVIL
STATE OF CALIFORNIA

CONSULTANT

LANE ENGINEERS INC.
CIVIL• STRUCTURAL• SURVEYING
979 N. BLACKSTONE
TULARE, CALIFORNIA 93274
(559) 688-5263

APPROVALS

FILE # 54-76 APPLICATION # 02-121996

IDENTIFICATION STAMP
DIV. OF THE STATE ARCHITECT
APP: 02-121996 INC:
REVIEWED FOR
SS ☑ FLS ☑ ACS ☑
DATE: 8/14/2024

LICENSED ARCHITECT
MICHAEL J. SCOTT
No. C-34290
REN. 05-31-19
STATE OF CALIFORNIA

DATE: DECEMBER 31, 2023

NEW PRESCHOOL, TK, AND KINDERGARTEN CLASSROOMS AT SANTA FE ELEMENTARY SCHOOL

PORTERVILLE UNIFIED SCHOOL DISTRICT
286 E ORANGE AVENUE, PORTERVILLE, CA 93257

REVISIONS

MANGINI ARCHITECTURE INGENUITY
BARENG MORRELLI SCOTT
MANGINI ASSOCIATES INC.
4320 West Mineral king Avenue
Visalia, California 93291
www.mangini.us
(559) 627.0530 Office
(559) 627.1928 Fax

TITLE
STORM DRAIN PLAN

C4.1

PROJECT 23076

LANE PROJ. NO. 23242.1

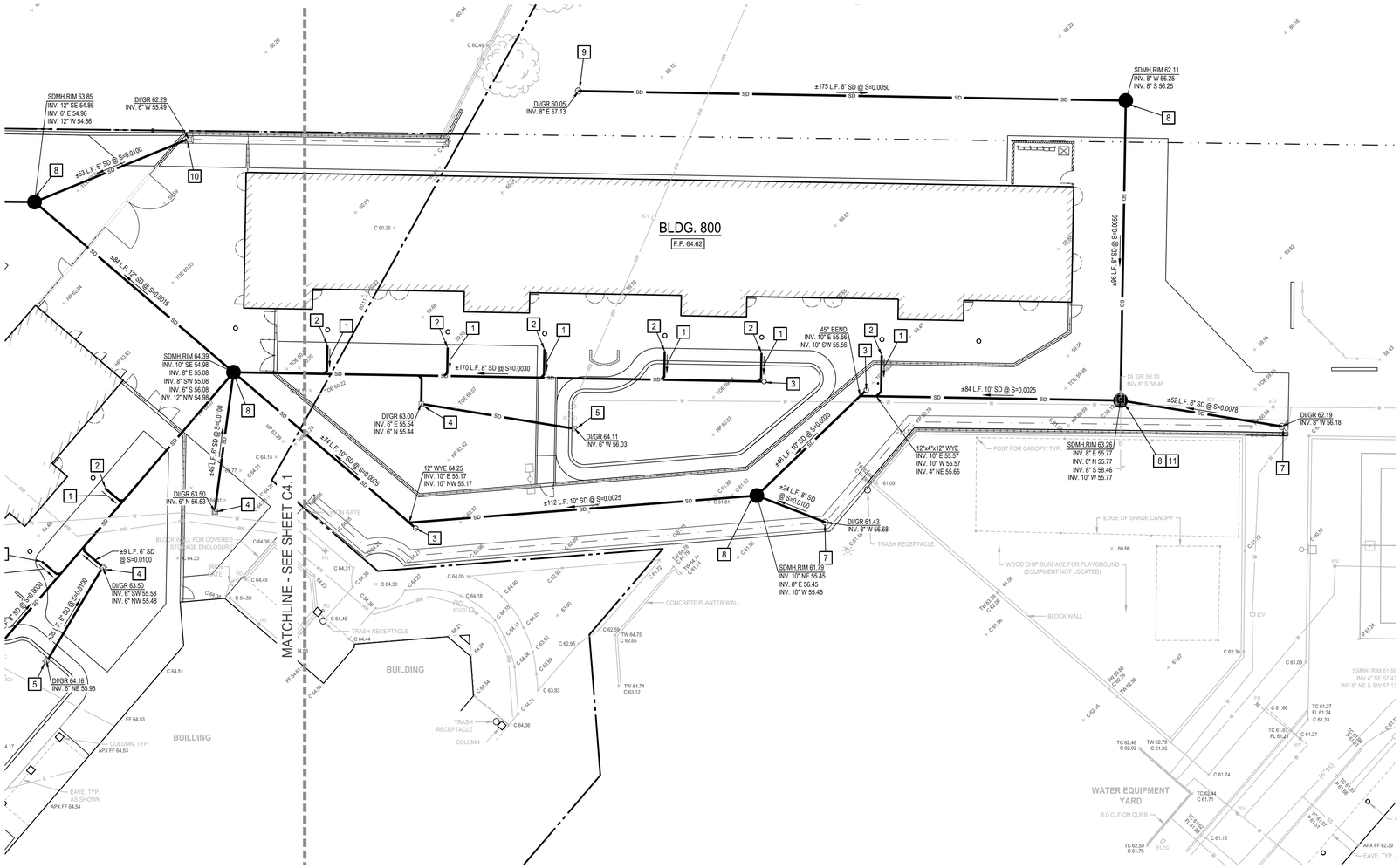

NOTES

1. REFER TO SHEETS C0.1 FOR BENCHMARKS, GENERAL NOTES & INFORMATION.
2. SEE ARCHITECTURAL DWGS. FOR ADDITIONAL SITE INFORMATION AND DETAILS. SEE PLUMBING DRAWINGS FOR ADDITIONAL WET UTILITY PIPING.
3. ALL STORM DRAIN PIPING AND LATERALS SHALL HAVE A MINIMUM OF 3' OF COVER.
4. EXTEND STORM DRAIN LATERAL PIPING TO BUILDING DOWNSPOUTS, UNLESS NOTED OTHERWISE. CONTRACTOR SHALL VERIFY ALL ROOF DOWNSPOUT LOCATIONS WITH ARCHITECTURAL DRAWINGS.
5. ALL TRENCHES ON-SITE SHALL BE BACKFILLED IN ACCORDANCE WITH DETAIL 11/C7.1.
6. ANY EXISTING IRRIGATION SYSTEMS THAT ARE DAMAGED OR REMOVED DUE TO NEW STORM DRAIN PIPE INSTALLATION SHALL BE REPAIR/REPLACED AS REQUIRED.
7. CONTRACTOR SHALL VERIFY THAT NO CONFLICTS OCCUR BETWEEN STORM DRAIN PIPE ALIGNMENTS AND CANOPY FOOTINGS.
8. DUE TO THE SCALE OF THE DRAWINGS, IT IS NOT POSSIBLE TO INDICATE ALL OFFSETS, PIPE SLOPES, FITTINGS, ETC., WHICH MAY BE REQUIRED. IT SHALL BE THE RESPONSIBILITY OF THE CONTRACTOR TO REVIEW THESE DRAWINGS AND FURNISH ALL FITTINGS, ETC. NECESSARY TO COMPLETE A FULLY FUNCTIONAL PIPING SYSTEM AND AVOID ANY CONFLICTS WITH OTHER UTILITIES.

CONSTRUCTION KEYNOTES

THIS SHEET ONLY

1. FURNISH & INSTALL 4"Ø STORM DRAIN LATERALS TO ROOF DRAIN LEADER. ALL LATERALS SLOPE TO DRAIN AWAY FROM STRUCTURES AND SHALL HAVE A MIN. SLOPE OF 2.0%.
2. REFER TO PLUMBING PLANS FOR CONTINUATION. CONTRACTOR SHALL VERIFY LOCATION OF ROOD DRAIN LEADERS WITH ARCHITECTURAL DRAWINGS.
3. CONSTRUCT SURFACE CLEAN OUT (COTG) - SEE DETAIL 12/C7.1.
4. CONSTRUCT SMALL DRAIN INLET WITH CAST IRON GRATE - SEE DETAIL 23/C7.2.
5. CONSTRUCT SMALL DRAIN INLET WITH CAST IRON GRATE UNDER PLAY SURFACE - SEE DETAIL 41/C7.1.
6. CONSTRUCT CURB INLET CATCH BASIN - SEE DETAIL 32/C7.1
7. CONSTRUCT VEE-GUTTER DRAIN INLET. SEE DETAIL 44/C7.1.
8. CONSTRUCT STORM DRAIN MANHOLE WITH SOLID LID COVER - SEE DETAILS 22/C7.1, 24/C7.1 & 13/C7.1.
9. CONSTRUCT LARGE DRAIN INLET - SEE DETAIL 34/C7.2.
10. CONSTRUCT SMALL VEE-GUTTER DRAIN INLET. SEE DETAIL 52/C7.2.
11. REMOVE EXISTING DRAIN INLET TO ALLOW FOR NEW STORM DRAIN MANHOLE PER CONSTRUCTION KEYNOTE NO. 8. RECONNECT EXISTING STORM DRAIN PIPING TO NEW SDMH.

LEGEND

RIGHT OF WAY/PROPERTY LINE

SD — NEW STORM DRAIN PIPING

NORTH

GRAPHIC SCALE

20 0 10 20 40

1 INCH = 20 FT.

STORM DRAIN PLAN

REGISTERED PROFESSIONAL ENGINEER
NA VANG
R.C.E. 73146
06/26/2024
CIVIL
STATE OF CALIFORNIA

CONSULTANT

LANE ENGINEERS INC.
CIVIL• STRUCTURAL• SURVEYING
979 N. BLACKSTONE
TULARE, CALIFORNIA 93274
(559) 688-5263

APPROVALS

FILE #	APPLICATION #
54-76	02-121996

IDENTIFICATION STAMP
DIV. OF THE STATE ARCHITECT
APP: 02-121996 INC:
REVIEWED FOR
SS ☑ FLS ☑ ACS ☑
DATE: 8/14/2024

LICENSED ARCHITECT
MICHAEL J. SCOTT
No. C-34290
REN. 05-31-19
STATE OF CALIFORNIA

DATE: DECEMBER 31, 2023

NEW PRESCHOOL, TK, AND KINDERGARTEN CLASSROOMS AT SANTA FE ELEMENTARY SCHOOL

PORTERVILLE UNIFIED SCHOOL DISTRICT

286 E ORANGE AVENUE, PORTERVILLE, CA 93257

REVISIONS

MANGINI ARCHITECTURE INGENUITY
BARENG MORRELLI SCOTT
MANGINI ASSOCIATES INC.
4320 West Mineral King Avenue
Visalia, California 93291
www.mangini.us
(559) 627-0530 Office
(559) 627-1926 Fax

TITLE
STORM DRAIN PLAN

C4.2

PROJECT 23076

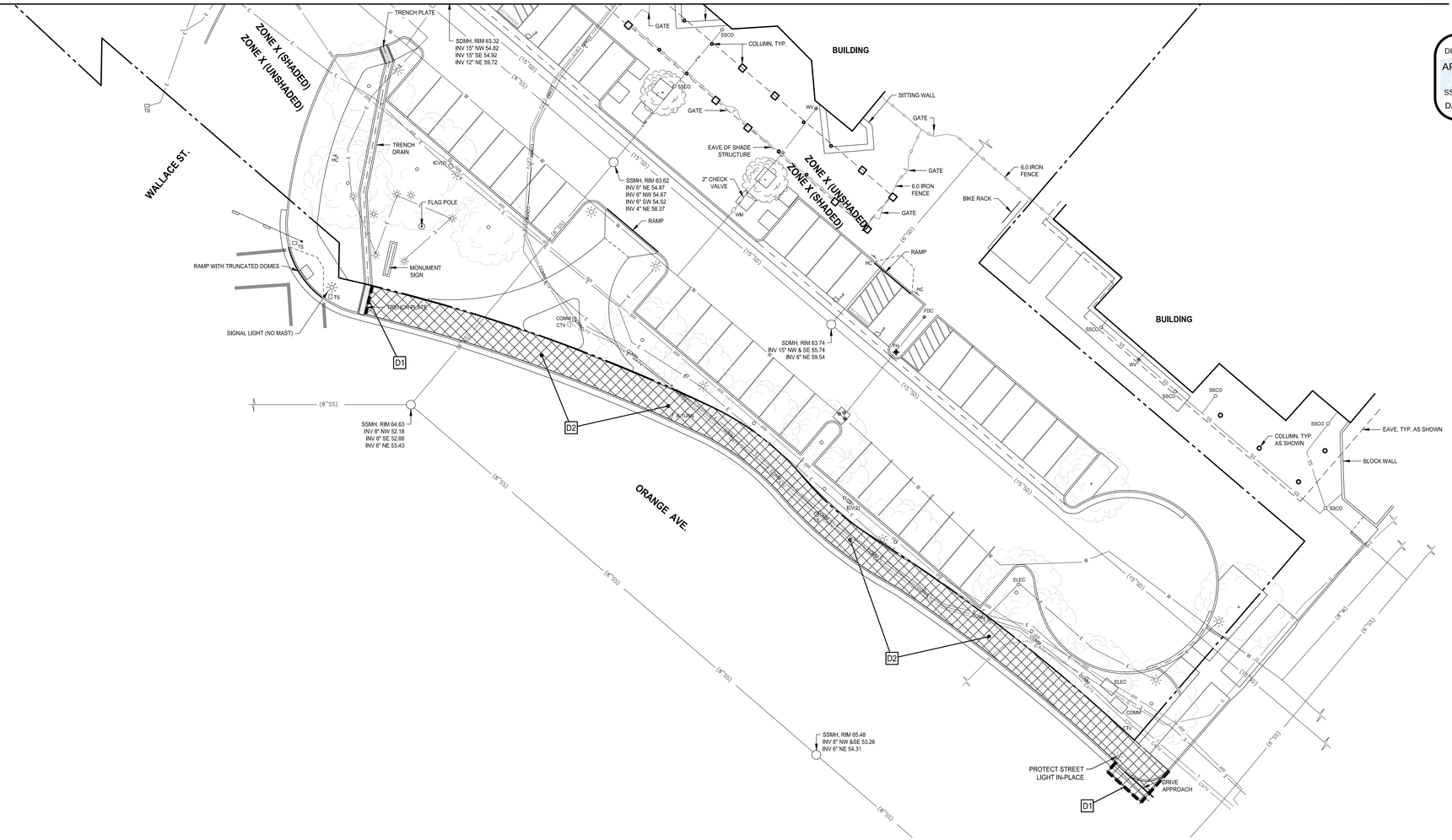

OFFSITE DEMOLITION NOTES

1. REFER TO SHEET C0.1 FOR BENCHMARKS, GENERAL NOTES, INFORMATION, AND SPECIFICATIONS.
2. ALL WORK AND MATERIALS WITHIN CITY RIGHT-OF-WAY SHALL BE IN ACCORDANCE WITH THE CITY OF PORTERVILLE IMPROVEMENT STANDARDS. AN ENCROACHMENT PERMIT SHALL BE OBTAINED BY THE CONTRACTOR PRIOR TO DOING ANY WORK WITHIN THE CITY RIGHT-OF-WAY. SIGNING AND FLAGGING SHALL BE IN ACCORDANCE WITH THE REQUIREMENTS SET FORTH IN THE CURRENT AMENDED VERSION OF THE MANUAL ON UNIFORM TRAFFIC CONTROL DEVICES FOR USE IN CALIFORNIA.
3. TEXT FROM THE TOPOGRAPHIC SURVEY ARE SHOWN FADED ON THIS DRAWING.
4. ALL IMPROVEMENTS NOT NOTED FOR SALVAGE, REMOVAL, OR RELOCATION SHALL BE PROTECTED IN PLACE.
5. ALL ITEMS NOTED TO BE SALVAGED SHALL BE REMOVED WITHOUT DAMAGING AND STORED ON THE OWNER'S PROPERTY IN A LOCATION DESIGNATED BY THE OWNER UNTIL THEY ARE RE-INSTALLED AS SHOWN ON THE PLANS.
6. ALL HOLES AND TRENCHES CREATED FROM DEMOLITION AND REMOVAL SHALL BE BACKFILLED AND COMPACTED IN ACCORDANCE WITH THE REQUIREMENTS NOTED ON THESE PLANS.
7. IT SHALL BE THE CONTRACTOR'S RESPONSIBILITY TO FIELD VERIFY ALL ITEMS NOTED FOR REMOVAL WITH THE OWNER. PRIOR TO CONSTRUCTION, THE CONTRACTOR SHALL VERIFY DIMENSIONS FOR DEMOLITION.
8. ANY EXISTING SURFACE STRUCTURES OR IMPROVEMENTS (E.G. UTILITY BOXES, METER BOXES, WATER VALVES, TRASH BINS, BENCHES, SIGNS, PAVEMENT STRIPING, STREET LIGHTS, IRRIGATION SYSTEMS ETC.) THAT ARE DAMAGED OR TEMPORARILY REMOVED DURING DEMOLITION SHALL BE REPLACED IN KIND, U.N.O.
9. ANY UTILITY BOXES, VALVES AND MANHOLES NOT NOTED TO BE REMOVED SHALL BE ADJUSTED AS REQUIRED TO FINISHED GRADES, TYP.
10. ANY EXISTING REGULATORY OR WARNING SIGNS REMOVED FOR CONSTRUCTION SHALL BE REPLACED WITH TEMPORARY SIGNS AS NECESSARY TO SAFELY DIRECT TRAFFIC UNTIL THE NEW PERMANENT SIGNS ARE INSTALLED IN THEIR PERMANENT LOCATIONS PER THESE PLANS. TEMPORARY SIGNAGE MUST BE APPROVED BY THE PROJECT ARCHITECT.
11. CONTRACTOR SHALL VERIFY WITH OWNER PRIOR TO REMOVING OR RELOCATING ANY EXISTING STRUCTURES SHOWN ON THIS PLAN.
12. REMOVAL OF ANY IMPROVEMENTS FROM THE SITE SHALL BE DISPOSED OF IN A PROPER MANNER PER FEDERAL, STATE, AND OR LOCAL LAWS AND ORDINANCES.
13. ANY STRIPING BEING REMOVED SHALL BE COMPLETELY REMOVED BY WET SANDBLASTING. COATING PATCHES OVER EXISTING STRIPING IS NOT PERMITED.
14. SEE ARCHITECTURAL "SD" DRAWINGS FOR ON-SITE DEMOLITION REQUIREMENTS.
15. COORDINATES SHOWN ARE BASED ON THE CALIFORNIA COORDINATE SYSTEM, ZONE 4 NAD 83, AS DETERMINED BY GPS OBSERVATIONS RELATIVE TO THE CALIFORNIA SURVEYING AND DRAFTING, INC. VIRTUAL SURVEY NETWORK, EPOCH DATE 2011.

LEGEND

RIGHT OF WAY

DEMOLITION KEYNOTES (THIS SHEET ONLY)

D1 SAWCUT EDGE CONCRETE/ASPHALT TO A NEAT VERTICAL EDGE FOR CONCRETE REMOVAL.

SAWCUT LINE SHOWN THUS:

D2 UNLESS NOTED OTHERWISE, DEMOLISH AND REMOVE ALL EXISTING SURFACE SITE IMPROVEMENTS (CONCRETE, ASPHALT PAVEMENT, CURBS, GUTTERS ETC...) WITHIN DEMOLITION LIMITS.

SHOWN THUS:

NORTH

GRAPHIC SCALE

20 0 10 20 40

1 INCH = 20 FT.

OFFSITE DEMOLITION PLAN

REGISTERED PROFESSIONAL ENGINEER
NA VANG
C.E.E. 73146
06/26/2024
CIVIL
STATE OF CALIFORNIA

CONSULTANT

LANE ENGINEERS INC.
CIVIL• STRUCTURAL• SURVEYING
979 N. BLACKSTONE
TULARE, CALIFORNIA 93274
(559) 688-5263

APPROVALS

FILE # 54-76 APPLICATION # 02-121996

IDENTIFICATION STAMP
DIV. OF THE STATE ARCHITECT
APP: 02-121996 INC:
REVIEWED FOR
SS ☑ FLS ☑ ACS ☑
DATE: 8/14/2024

LICENSED ARCHITECT
MICHAEL J. SCOTT
No. C-34290
REN. 05-31-19
STATE OF CALIFORNIA

DATE: DECEMBER 31, 2023

NEW PRESCHOOL, TK, AND KINDERGARTEN CLASSROOMS AT SANTA FE ELEMENTARY SCHOOL

PORTERVILLE UNIFIED SCHOOL DISTRICT

286 E ORANGE AVENUE, PORTERVILLE, CA 93257

REVISIONS

MANGINI ARCHITECTURE INGENUITY
BARENG MORRELLI SCOTT
MANGINI ASSOCIATES INC.
4320 West Mineral King Avenue
Visalia, California 93291
www.mangini.us
(559) 627-0530 Office
(559) 627-1926 Fax

TITLE
OFFSITE DEMOLITION PLAN

C5.1

PROJECT 23076

APPROVALS

FILE # 54-76 | APPLICATION # 02-121996

IDENTIFICATION STAMP
DIV. OF THE STATE ARCHITECT
APP: 02-121996 INC:
REVIEWED FOR
SS ☑ FLS ☑ ACS ☑
DATE: 8/14/2024

LICENSED ARCHITECT
MICHAEL J. SCOTT
No. C-34290
REN. 05-31-19
STATE OF CALIFORNIA

DATE: DECEMBER 31, 2023

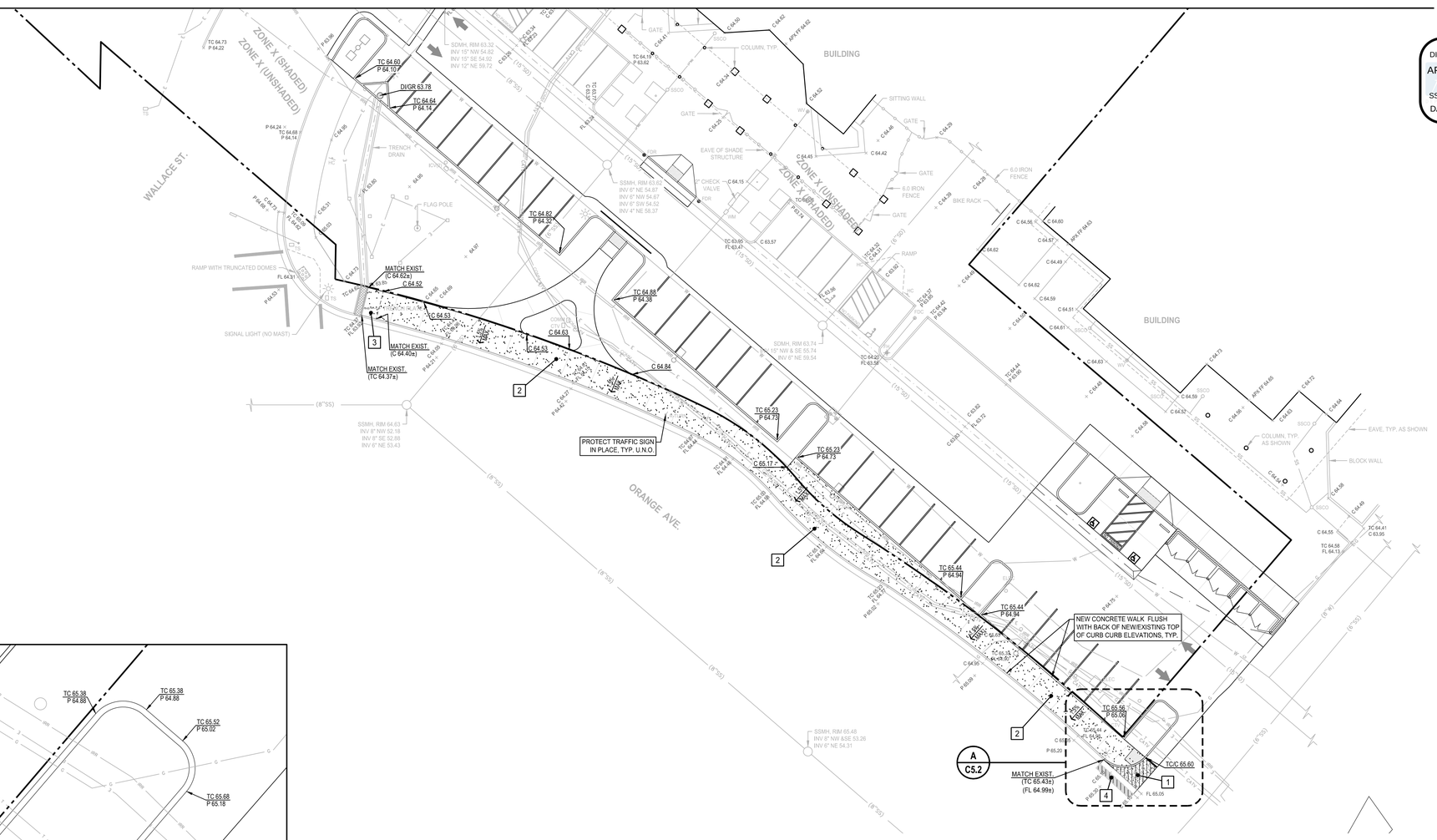

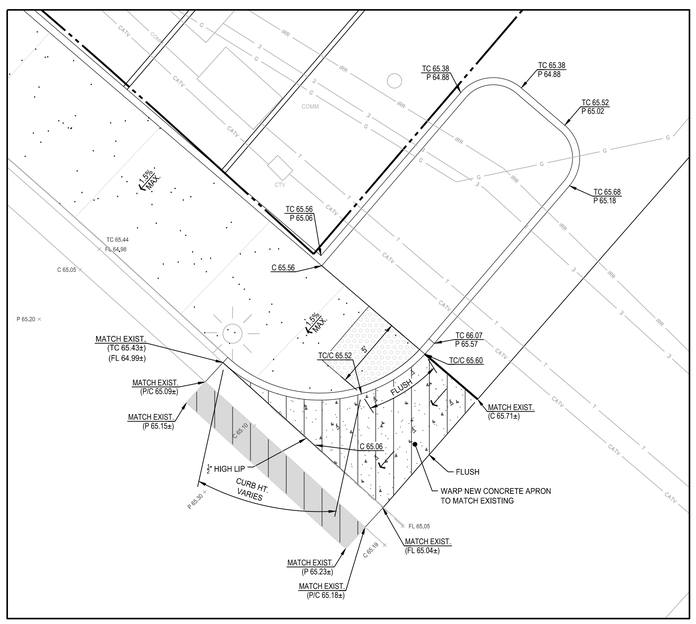

(A) ENLARGED GRADING

SCALE: 1"=5'

NORTH

OFFSITE NOTES

1. REFER TO SHEET C0.1 FOR BENCHMARKS, GENERAL NOTES & INFORMATION.
2. FIELD VERIFY ALL ELEVATIONS SHOWN WHERE PROPOSED IMPROVEMENTS ABUT EXISTING IMPROVEMENTS. IMMEDIATELY NOTIFY PROJECT ARCHITECT OF ANY DISCREPANCIES.
3. SEE SHEET C5.1 FOR OFF-SITE DEMOLITION PLAN.
4. ADJUST ALL EXISTING MANHOLES, GATE VALVES, UTILITY BOXES, AND WATER METERS TO BE FLUSH WITH FINISH GRADES.
5. ALL WORK AND MATERIALS WITHIN THE STREET RIGHTS OF WAY SHALL CONFORM TO CITY OF PORTERVILLE STANDARDS AND SPECIFICATIONS.
6. COORDINATES SHOWN ARE BASED ON THE CALIFORNIA COORDINATE SYSTEM, ZONE 4, NAD 83, AS DETERMINED BY GPS OBSERVATIONS RELATIVE TO THE CALIFORNIA SURVEYING AND DRAFTING, INC. VIRTUAL SURVEY NETWORK, EPOCH DATE 2011.

LEGEND

- RIGHT OF WAY
- CONCRETE DRIVEWAY REPAIR
- NEW CONCRETE SIDEWALK/FLATWORK
- ASPHALT PAVEMENT REPAIR

CONSTRUCTION KEYNOTES (THIS SHEET ONLY)

1. REPAIR DRIVEWAY WITH SECTION AND REINFORCEMENT SIMILAR TO CITY STANDARD C-20. SEE SHEET C7.3.
   DRIVEWAY REPAIR SHOWN THUS:
2. CONSTRUCT CONCRETE SIDEWALK. SEE CITY STANDARD DETAIL C-7 & C-8 ON SHEET C7.3.
   NEW SIDEWALK SHOWN THUS:
3. CONFORM NEW SIDEWALK FROM 1.5% MAX. CROSS SLOPE TO MATCH SLOPE AT EXISTING CONCRETE SIDEWALK. SEE DETAIL 11/C7.3.
4. ASPHALT PAVEMENT REPAIR AT DRIVE APPROACH. SEE DETAIL 21/C7.3.

NORTH

GRAPHIC SCALE

20 0 10 20 40

1 INCH = 20 FT.

OFFSITE IMPROVEMENT PLAN

REGISTERED PROFESSIONAL ENGINEER
NA VANG
C.E.E 73146
06/26/2024
CIVIL
STATE OF CALIFORNIA

CONSULTANT

LANE ENGINEERS INC.
CIVIL • STRUCTURAL • SURVEYING
979 N. BLACKSTONE
TULARE, CALIFORNIA 93274
(559) 688-5263

NEW PRESCHOOL, TK, AND KINDERGARTEN CLASSROOMS AT SANTA FE ELEMENTARY SCHOOL

PORTERVILLE UNIFIED SCHOOL DISTRICT

286 E ORANGE AVENUE, PORTERVILLE, CA 93257

REVISIONS

MANGINI ARCHITECTURE INGENUITY
BARENG MORRELLI SCOTT
MANGINI ASSOCIATES INC.
4320 West Mineral King Avenue
Visalia, California 93291
www.mangini.us
(559) 627.0530 Office
(559) 627.1926 Fax

TITLE
OFFSITE IMPROVEMENT PLAN

C5.2

PROJECT 23076

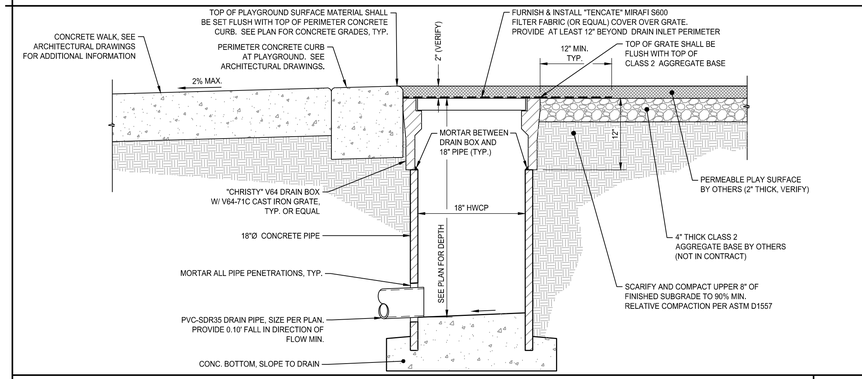

DRAIN INLET BELOW PERMEABLE PLAY SURFACE

NO SCALE | 41

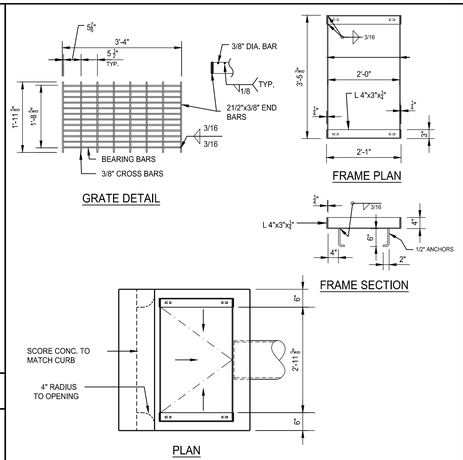

NOTES

1. BEARING BARS SHALL BE 3-1/2" x 3/8" ON 1-7/8" CENTERS.
2. 3/8" DIA. CROSS BARS MAY BE FILLET WELDED, RESISTANCE WELDED, OR ELECTROFORGED TO BEARING BARS.
3. FRAME AND GRATE SHALL BE HOT DIPPED GALVANIZED AFTER FABRICATION.
4. CONCRETE SHALL BE 2500 PSI MINIMUM AT 28 DAYS.

CURB INLET

NO SCALE | 32

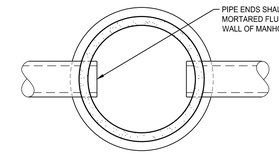

NOTES

1. ALL CONCRETE SHALL BE 2500 PSI MIN. AT 28 DAYS.
2. MANHOLE PIPE, CONE AND GRADE RINGS SHALL BE PRECAST REINFORCED CONCRETE AS PER ASTM C-478.
3. MORTAR AND BAND ALL PIPE JOINTS. MORTAR MIXTURE SHALL BE ONE PART CEMENT PER TWO PARTS SAND.
4. MASTIC (KENT SEAL NO. 2 OR EQUAL) MAY BE SUBSTITUTED AT JOINTS. MASTIC SHALL COVER A MIN. OF ONE-HALF THE COMPRESSED SURFACE. INSIDE OF MANHOLE JOINT SHALL BE MORTARTED TO A SMOOTH SURFACE.
5. MAXIMUM DISTANCE BETWEEN MANHOLES SHALL BE 500 FEET OR AS REQUIRED BY THE CITY ENGINEER.
6. SUMP BOTTOM MANHOLES ARE REQUIRED ON ALL STORM DRAIN SYSTEMS WITH PUMPS.
7. 48" MANHOLES ARE REQUIRED FOR STORM DRAIN PIPE SIZES FROM 12" TO 24", 60" MANHOLES ARE REQUIRED FOR STORM DRAIN PIPE SIZES FROM 27" TO 36", 72" MANHOLES ARE REQUIRED FOR STORM DRAIN PIPE SIZES 39" AND LARGER.

STORMDRAIN MANHOLE

NO SCALE | 22

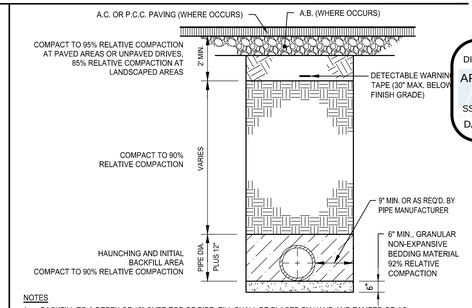

NOTES

1. BACKFILL TO A DEPTH OF 12" OVER TOP OF PIPE, FILL SHALL BE PLACED BY HAND AND TAMPED OR AS PER PIPE MANUFACTURER'S SPECIFICATIONS. FOR PLASTIC PIPE INSTALLATIONS, BEDDING SHALL BE IN ACCORDANCE W/PIPE MANUFACTURER SPECIFICATIONS.
2. BACKFILL MATERIAL WITHIN THE HAUNCHING, INITIAL BACKFILL, AND OUTER BEDDING AREAS SHALL BE CATEGORY I, II, OR III MATERIAL (ASTM D2321) PLACED TO 90% REL. COMPACTION.

(ON SITE)

TRENCH BACKFILL AND PAVING

NO SCALE | 11

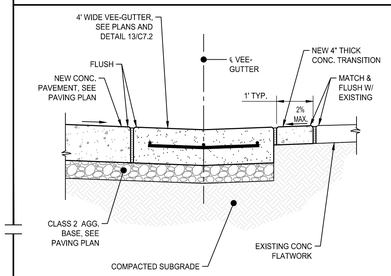

NOTES:

1. ALL CONCRETE SHALL BE 6-SACK MIX AND HAVE A LIGHT BROOM FINISH.

SECTION AT VEE-GUTTER

NO SCALE | 52

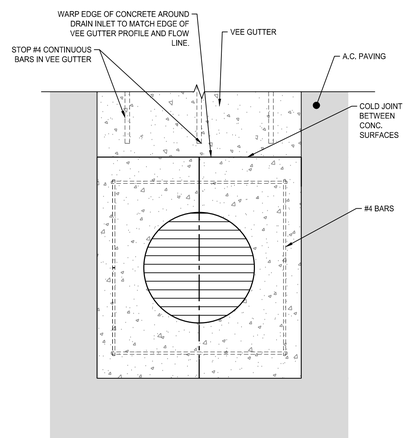

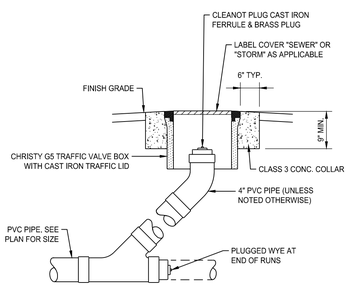

SURFACE CLEANOUT (COTG)

NO SCALE | 12

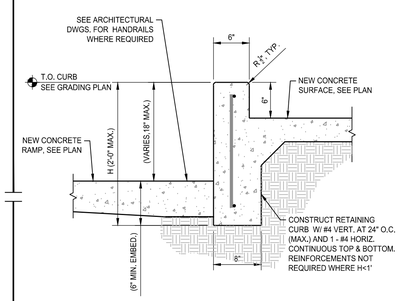

SECTION AT RAMP

NO SCALE | 53

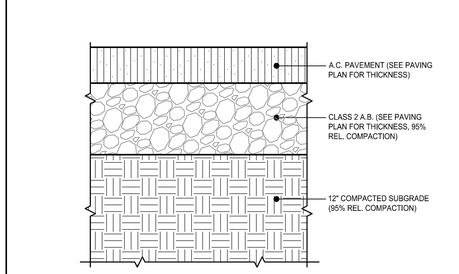

NOTES:

1.) ASPHALT CONCRETE SHALL BE COMPACTED TO 91%-97% IN ACCORDANCE WITH PROJECT SPECIFICATIONS.

ON-SITE ASPHALT PAVEMENT SECTION

NO SCALE | 33

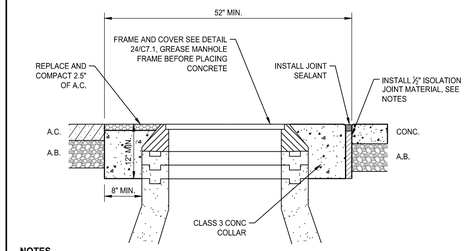

NOTES

1. FRAME AND COVER SHALL MATCH CROSS SLOPE OF FINISHED GRADE/FINISHED PAVEMENT SURFACE.
2. ISOLATION JOINT FILLER SHALL MEET THE REQUIREMENTS OF ASTM D 1751, ASPHALT-SATURATED CELLULOSIC FIBER IN PRE-FORMED STRIPS. EXTEND JOINT FILLERS FULL WIDTH AND DEPTH OF JOINT. TERMINATE JOINT FILLER NOT LESS THAN 1/2 INCH OR MORE THAN 1 INCH BELOW FINISHED SURFACE IF JOINT SEALANT IS INDICATED. PLACE TOP OF JOINT FILLER FLUSH WITH FINISHED CONCRETE SURFACE IF JOINT SEALANT IS NOT INDICATED.

MANHOLE COVER INSTALLATION

NO SCALE | 13

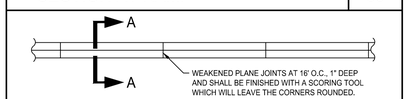

PLAN VIEW

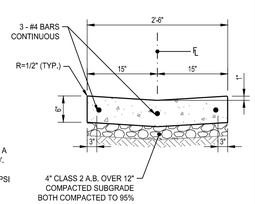

SECTION A-A

NOTES:

1. VEE TYPE GUTTER SHALL HAVE A MIN. GRADIENT OF 0.15' PER 100'.
2. ALL CONCRETE SHALL BE 2500 PSI MIN. AT 28 DAYS.
3. ALL CONCRETE WORK SHALL HAVE A LIGHT BROOM FINISH.
4. ALL EXPOSED SURFACES OF VEE GUTTER SHALL NOT VARY IN EXCESS OF 0.02' ON THE SURFACE, EXCEPT AT GRADE CHANGES OR CURVES.

2'-6" WIDE VEE GUTTER

NO SCALE | 54

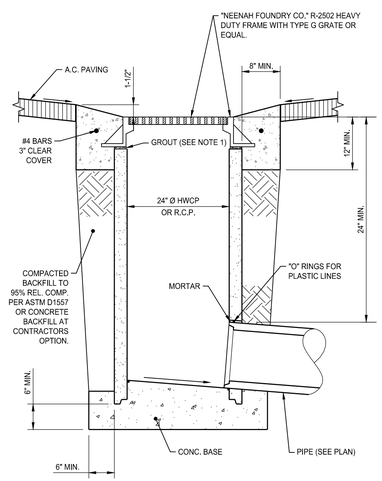

NOTES

1. GROUT SHALL BE A HIGH STRENGTH, SHRINKAGE COMPENSATING NON-METALLIC GROUT, "MASTERFLOW" 713 OR EQUAL.
2. CONCRETE SHALL BE 2500 PSI MIN. AT 28 DAYS.

VEE GUTTER DRAIN INLET

NO SCALE | 44

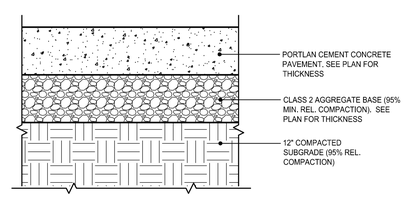

NOTES:

1. CONCRETE PAVEMENT SHALL HAVE A MIN. COMPRESSIVE STRENGTH OF 4,000 PSI AT 28 DAYS, 4" MAX. SLUMP, SEE PROJECT SPECIFICATIONS.
2. MAXIMUM WATER/CEMENT RATIO SHALL BE 0.50 AND A SLUMP LIMIT OF 5 INCHES MAXIMUM.
3. JOINT SPACING AND CONSTRUCTION JOINT SHALL BE AS NOTED ON PAVING PLAN.

CONCRETE PAVEMENT SECTION

NO SCALE | 34

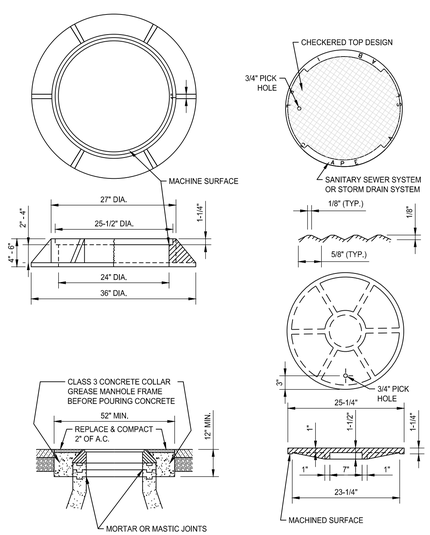

NOTES

1. MATERIAL SHALL BE CAST IRON. FRAME AND COVER TO BE CONSTRUCTED IN ACCORDANCE WITH ASTM DESIGNATION A48, CLASS 25.
2. FRAME AND COVER SHALL MATCH CROSS SLOPE OF FINISHED GRADE/FINISHED PAVEMENT SURFACE.

MANHOLE FRAME AND COVER

NO SCALE | 24

APPROVALS

FILE # 54-76 | APPLICATION # 02-121996

IDENTIFICATION STAMP
DIV. OF THE STATE ARCHITECT
APP: 02-121996 INC:
REVIEWED FOR
SS ☑ FLS ☑ ACS ☑
DATE: 8/14/2024

LICENSED ARCHITECT
MICHAEL J. SCOTT
No. C-34290
REN. 05-31-19
STATE OF CALIFORNIA

DATE: DECEMBER 31, 2023

NEW PRESCHOOL, TK, AND KINDERGARTEN CLASSROOMS AT SANTA FE ELEMENTARY SCHOOL

PORTERVILLE UNIFIED SCHOOL DISTRICT
286 E ORANGE AVENUE, PORTERVILLE, CA 93257

REVISIONS

REGISTERED PROFESSIONAL ENGINEER
NA VANG
C.E. 73148
06/26/2024
CIVIL
STATE OF CALIFORNIA

CONSULTANT

LANE ENGINEERS INC.
CIVIL• STRUCTURAL• SURVEYING
979 N. BLACKSTONE
TULARE, CALIFORNIA 93274
(559) 688-5263

MANGINI ARCHITECTURE INGENUITY
BARENG MORRELLI SCOTT
MANGINI ASSOCIATES INC.
4320 West Mineral King Avenue
Visalia, California 93291
www.mangini.us
(559) 627-0530 Office
(559) 627-1926 fax

TITLE
CIVIL DETAILS

C7.1

PROJECT 23076

APPROVALS

FILE # 54-76 | APPLICATION # 02-121996

IDENTIFICATION STAMP
DIV. OF THE STATE ARCHITECT
APP: 02-121996 INC:
REVIEWED FOR
SS ☑ FLS ☑ ACS ☑
DATE: 8/14/2024

LICENSED ARCHITECT
MICHAEL J. SCOTT
No. C-34290
REN. 05-31-19
STATE OF CALIFORNIA

DATE: DECEMBER 31, 2023

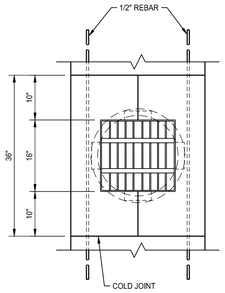

PLAN VIEW

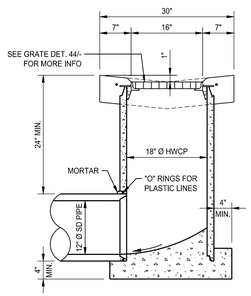

NOTES
CONCRETE SHALL BE CLASS 3 (MIN. 3000 PSI AT 28 DAYS).

VEE GUTTER CATCH BASIN — NO SCALE — 52

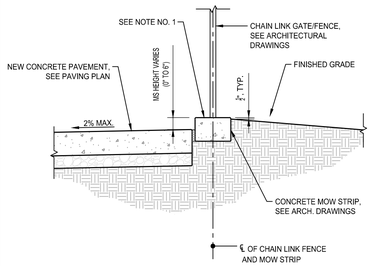

NOTE:
1. SEE GRADING PLAN FOR TOP OF MOW STRIP ELEVATIONS.
2. ALL NEW CONCRETE SHALL BE 2500 MIN. PSI AT 28 DAYS.

CONC. AT MOW STRIP SECTION — NO SCALE — 41

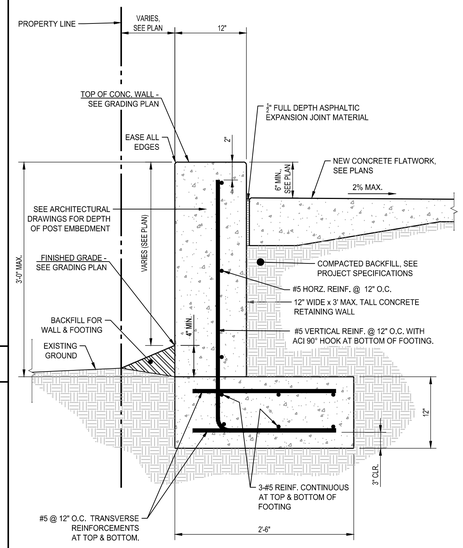

NOTES
1. CONCRETE SHALL BE 3,000 PSI MINIMUM AT 28 DAYS.
2. ALL REINFORCING SHALL BE 60 KSI

3' TALL CONCRETE RETAINING WALL — NO SCALE — 32

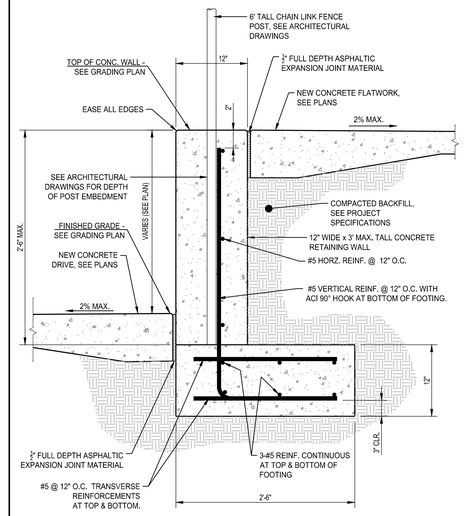

NOTES
1. CONCRETE SHALL BE 3,000 PSI MINIMUM AT 28 DAYS.
2. ALL REINFORCING SHALL BE 60 KSI

NO SCALE

2'-6" MAX. TALL CONCRETE RETAINING WALL — 22

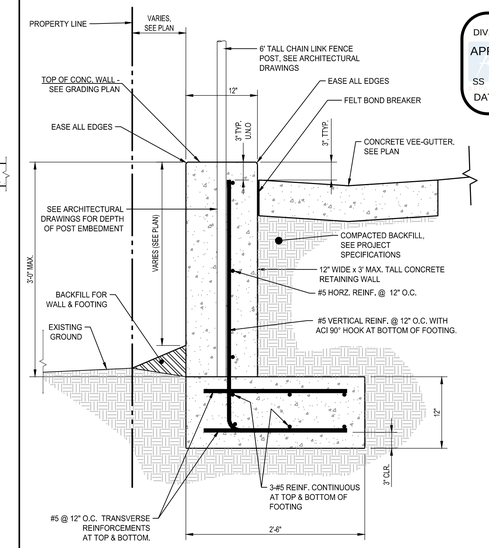

NOTES
1. CONCRETE SHALL BE 3,000 PSI MINIMUM AT 28 DAYS.
2. ALL REINFORCING SHALL BE 60 KSI

NO SCALE

3' TALL CONC. RET. WALL W/ VEE-GUTTER — 12

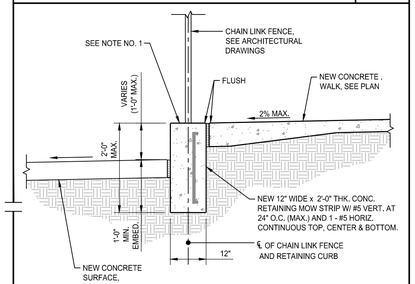

NOTE:
1. SEE GRADING PLAN FOR TOP OF MOW STRIP/RETAINING CURB ELEVATIONS.
2. ALL NEW CONCRETE SHALL BE 3000 MIN. PSI AT 28 DAYS.

NO SCALE

2' MAX. THICKENED MOW STRIP — 53

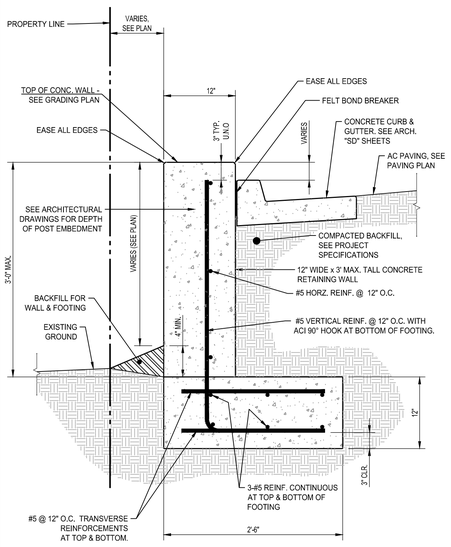

NOTES
1. CONCRETE SHALL BE 3,000 PSI MINIMUM AT 28 DAYS.
2. ALL REINFORCING SHALL BE 60 KSI

NO SCALE

3' MAX. TALL CONC. RET. WALL W/ C&G — 43

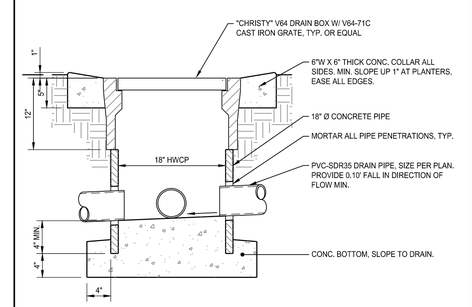

PLANTER DRAIN INLET — NO SCALE — 23

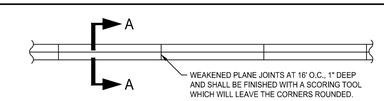

PLAN VIEW

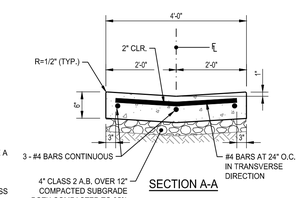

NOTES:
1. VEE-TYPE GUTTER SHALL HAVE A MIN. GRADIENT OF 0.15' PER 100'.
2. ALL CONCRETE SHALL BE 2500 PSI MIN. AT 28 DAYS.
3. ALL CONCRETE WORK SHALL HAVE A LIGHT BROOM FINISH.
4. ALL EXPOSED SURFACES OF VEE GUTTER SHALL NOT VARY IN EXCESS OF 0.02' ON THE SURFACE, EXCEPT AT GRADE CHANGES OR CURVES.

4' WIDE VEE GUTTER — NO SCALE — 13

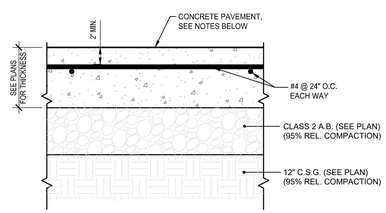

NOTES:
1. CONCRETE PAVEMENT SHALL HAVE A MIN. COMPRESSIVE STRENGTH OF 4,000 PSI AT 28 DAYS. 4" MAX. SLUMP, SEE PROJECT SPECIFICATIONS.
2. MAXIMUM WATER/CEMENT RATIO SHALL BE 0.50 AND A SLUMP LIMIT OF 5 INCHES MAXIMUM.
3. JOINT SPACING AND CONSTRUCTION JOINT SHALL BE AS NOTED ON PAVING PLAN.
4. ALL REINFORCING BARS SHALL BE 60 KSI.

NO SCALE

REINF. CONC. PAVING SECTION — 54

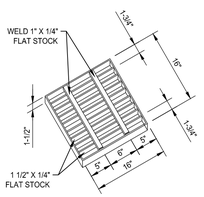

GRATE DETAIL

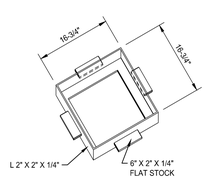

FRAME DETAIL

GRATE DETAIL — NO SCALE — 44

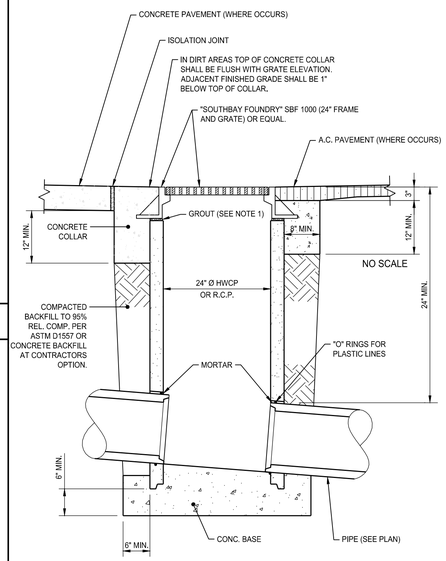

NOTES
1. GROUT SHALL BE A HIGH STRENGTH, SHRINKAGE COMPENSATING NON-METALLIC GROUT, "MASTERFLOW" 713 OR EQUAL.
2. CONCRETE SHALL BE 2500 PSI MIN. AT 28 DAYS.

NO SCALE

DRAIN INLET — NO SCALE — 34

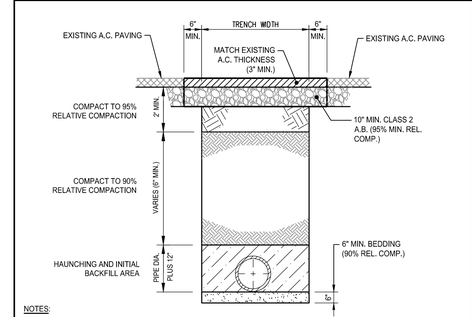

NOTES:
1. BACKFILL TO A DEPTH OF 12" OVER TOP OF PIPE, FILL SHALL BE PLACED BY HAND AND TAMPED OR FLOODED (90% REL. COMPACTION). FOR PLASTIC PIPE INSTALLATIONS, BEDDING SHALL BE IN ACCORDANCE W/PIPE MANUF. SPECIFICATIONS.
2. BACKFILL MATERIAL WITHIN THE HAUNCHING, INITIAL BACKFILL, AND OUTER BEDDING AREAS SHALL BE CATEGORY I, II, OR III MATERIAL (ASTM D2321) PLACED TO 90% REL. COMPACTION. (ON SITE)

AC PAVING TRENCH REPAIR — NO SCALE — 24

NEW PRESCHOOL, TK, AND KINDERGARTEN CLASSROOMS AT SANTA FE ELEMENTARY SCHOOL

PORTERVILLE UNIFIED SCHOOL DISTRICT
286 E ORANGE AVENUE, PORTERVILLE, CA 93257

REVISIONS

MANGINI ARCHITECTURE INGENUITY
BARENG MORRELLI SCOTT
MANGINI ASSOCIATES INC.
4320 West Mineral King Avenue
Visalia, California 93291
www.mangini.us
(559) 627-0530 Office
(559) 627-1926 fax

REGISTERED PROFESSIONAL ENGINEER
NA VANG
R.C.E. 73148
06/26/2024
CIVIL
STATE OF CALIFORNIA

CONSULTANT
LANE ENGINEERS INC.
CIVIL• STRUCTURAL• SURVEYING
979 N. BLACKSTONE
TULARE, CALIFORNIA 93274
(559) 688-5263

TITLE
CIVIL DETAILS

C7.2

PROJECT 23076

LANE PROJ. NO. 23242.1

APPROVALS

FILE # 54-76 | APPLICATION # 02-121996

IDENTIFICATION STAMP
DIV. OF THE STATE ARCHITECT
APP: 02-121996 INC:
REVIEWED FOR
SS ☑ FLS ☑ ACS ☑
DATE: 8/14/2024

LICENSED ARCHITECT
MICHAEL J. SCOTT
No. C-34290
REN. 05-31-19
STATE OF CALIFORNIA

DATE: DECEMBER 31, 2023

NEW PRESCHOOL, TK, AND KINDERGARTEN CLASSROOMS AT SANTA FE ELEMENTARY SCHOOL

PORTERVILLE UNIFIED SCHOOL DISTRICT
286 E ORANGE AVENUE, PORTERVILLE, CA 93257

SIDEWALKS AND RAMPS:

1. ALL SIDEWALKS AND RAMPS SHALL BE CLASS III CONCRETE.
2. SIDEWALKS AND RAMPS SHALL BE PLACED ON MOIST AND COMPACTED BASE MATERIAL PER DETAIL C-25.
3. SIDEWALKS AND RAMPS SHALL BE STEEL TROWELED AND HAVE A LIGHT BROOM FINISH UNLESS OTHERWISE NOTED. RAMPS SHALL HAVE A HEAVY BROOM FINISH ACROSS THE SLOPE OF THE RAMP.
4. SIDEWALKS AND RAMPS SHALL HAVE WEAKENED PLAN JOINTS CONSTRUCTED AT 15 FOOT CENTERS AND WHERE SHOWN IN THE CITY STANDARDS. WEAKENED PLAN JOINTS SHALL BE A MINIMUM OF 1" IN DEPTH AND SHALL BE FINISHED WITH A SCORING TOOL LEAVING THE EDGES ROUNDED.
5. ESTABLISHED SIDEWALK PATTERN IN BLOCK SHALL BE MATCHED.
6. SPECIAL SIDEWALK DESIGNS AND MATERIALS SHALL BE SUBJECTED TO APPROVAL BY THE CITY ENGINEER.
7. SIDEWALK INSTALLED IN INFILL OR EXISTING AREAS SHALL BE SUBJECT TO THE APPROVAL OF THE CITY ENGINEER.
8. ALL SIDEWALKS AND RAMPS SHALL BE CURED IN ACCORDANCE WITH THE PROVISIONS IN THE GENERAL CONCRETE NOTES OF THESE IMPROVEMENT STANDARDS.
9. DETECTABLE WARNING SURFACE SHALL BE INSTALLED PER THESE IMPROVEMENT STANDARDS AND AS REQUIRED BY THE CITY ENGINEER.

DRIVE APPROACHES:

1. ALL DRIVE APPROACHES SHALL BE CLASS III CONCRETE UNLESS NOTED OTHERWISE.
2. SINGLE FAMILY RESIDENTIAL DRIVE APPROACHES SHALL BE PLACED ON MOIST AND COMPACTED BASE MATERIAL PER DETAIL C-25.
3. MULTI-FAMILY RESIDENTIAL, OFFICE AND COMMERCIAL DRIVE APPROACHES SHALL BE PLACED ON MOIST AND COMPACTED BASE MATERIAL PER DETAIL C-25.
4. MAJOR COMMERCIAL DRIVE APPROACHES SHALL BE PLACED ON MOIST AND COMPACTED BASE MATERIAL PER DETAIL C-25.
5. DRIVE APPROACHES SHALL BE STEEL TROWELED AND HAVE LIGHT BROOM FINISH.
6. DRIVE APPROACHES SHALL HAVE A WEAKENED PLAN JOINT CONSTRUCTED AT EACH EDGE AND AT THE CENTERLINE. WEAKENED PLAN JOINTS SHALL BE A MINIMUM OF 1-1/2 INCH IN DEPTH AND SHALL BE FINISHED WITH A SCORING TOOL LEAVING THE EDGES ROUNDED.
7. NO MORE THAN 50 PERCENT OF PROPERTY FRONTAGE SHALL BE USED AS A DRIVE APPROACH.
8. DRIVE APPROACHES ON STATE ROUTES ARE SUBJECT TO APPROVAL BY CALTRANS.
9. ALL EXPOSED SURFACES OF THE DRIVE APPROACH AND FLOW LINES SHALL NOT VARY IN EXCESS OF 0.02 FEET WHEN A 10 FOOT STRAIGHT EDGE IS PLACED ON THE SURFACE, EXCEPT AT GRADE CHANGES OR CURVES.
10. ALL DRIVE APPROACHES SHALL BE CURED IN ACCORDANCE WITH THE PROVISIONS IN THE GENERAL CONCRETE NOTES OF THESE IMPROVEMENTS.

CITY OF PORTERVILLE CALIFORNIA | APPROVED BY: ENGINEERING & PROJECT MANAGEMENT DIRECTOR | DATE 5/19/2020 | CONCRETE SPECIFICATIONS | C-27

GENERAL CONCRETE NOTES:

1. ALL CONCRETE SHALL BE CLASS III CONCRETE UNLESS NOTED OTHERWISE.
2. CLASS II CONCRETE SHALL CONTAIN NO LESS THAN 590 POUNDS OF PORTLAND CEMENT PER CUBIC YARD WITH 1" AGGREGATE. 4" SLUMP ±1". 3000 PSI MINIMUM COMPRESSIVE STRENGTH AT 28 DAYS.
3. CLASS III CONCRETE SHALL CONTAIN NO LESS THAN 505 POUNDS OF PORTLAND CEMENT PER CUBIC YARD WITH 1" AGGREGATE. 4" SLUMP ±1". 2500 PSI MINIMUM COMPRESSIVE STRENGTH AT 28 DAYS.
4. CLASS IIII CONCRETE SHALL CONTAIN NO LESS THAN 420 POUNDS OF PORTLAND CEMENT PER CUBIC YARD WITH 1" AGGREGATE. 4" SLUMP ±1". 2500 PSI MINIMUM COMPRESSIVE STRENGTH AT 28 DAYS.
5. WHEN MAXIMUM AMBIENT TEMPERATURE EXCEEDS 50°F. ALL NEW CONCRETE PLACED SHALL BE SPRAYED UNIFORMLY WITH A CURING COMPOUND. CURING COMPOUND SHALL BE APPLIED AT A NOMINAL RATE OF ONE GALLON PER 150 SQUARE FEET, UNLESS OTHERWISE SPECIFIED.
6. ALL WORK CONSTRUCTED BY THESE STANDARDS SHALL BE IN COMPLIANCE WITH ALL CURRENT ADA REGULATIONS.
7. WHERE REBAR IS USED, CONTRACTOR SHALL INSTALL WIRE TIES SECURELY AT ALL REBAR CROSSINGS. CONCRETE BLOCK OR CHAIRS AS APPROVED BY THE CITY ENGINEER SHALL BE INSTALLED PRIOR TO CONCRETE INSTALLATION TO KEEP REBAR IN THE PROPER LOCATION.

CONCRETE CURB AND GUTTER:

1. ALL CURB AND GUTTER, VEE GUTTER, MEDIAN CURB AND LANDSCAPE CURB SHALL BE CLASS III CONCRETE.
2. BARRIER TYPE CURB AND GUTTER SHALL HAVE A MINIMUM GRADIENT OF 0.2 FEET PER 100 FEET OR AS APPROVED BY THE CITY ENGINEER.
3. BARRIER TYPE CURB AND GUTTER ON THE CURVE OF A CUL-DE-SACS AND STREET BULBS SHALL HAVE A MINIMUM GRADIENT OF 0.25 FEET PER 100 FEET OR AS APPROVED BY THE CITY ENGINEER.
4. ROLL TYPE CURB AND GUTTER SHALL HAVE A MINIMUM GRADIENT OF 0.25 FEET PER 100 FEET OR AS APPROVED BY THE CITY ENGINEER.
5. VEE GUTTER SHALL HAVE A MINIMUM GRADIENT OF 0.25 FEET PER 100 FEET OR AS APPROVED BY THE CITY ENGINEER.
6. ALL CURB AND GUTTER, VEE GUTTER, MEDIAN CURB AND LANDSCAPING CURB SHALL BE PLACED ON 6 INCH MOIST AND COMPACT BASE MATERIAL.
7. ALL CURB AND GUTTER, VEE GUTTER, MEDIAN CURB AND LANDSCAPE CURB SHALL HAVE A LIGHT BROOM FINISH.
8. ALL CURB AND GUTTER AND VEE GUTTER SHALL HAVE A WEAKENED PLAN JOINTS CONSTRUCTED AT 15 FOOT CENTERS. MEDIAN CURB AND LANDSCAPING CURB SHALL HAVE A WEAKENED PLAN JOINTS CONSTRUCTED AT 8 FOOT CENTERS. WEAKENED PLANE JOINTS SHALL BE A MINIMUM OF 1-1/2 INCHES IN DEPTH AND SHALL BE FINISHED WITH A SCORING TOOL LEAVING THE EDGES ROUND.
9. ALL EXPOSED SURFACED OF CURB AND GUTTER, VEE GUTTER, MEDIAN CURB AND LANDSCAPING CURB SHALL NOT VARY IN EXCESS OF 0.02 FEET WHEN A 10 FOOT STRAIGHT EDGE IS PLACED ON THE SURFACE, EXCEPT AT GRADE CHANGES OR CURVES.
10. ALL CURB, GUTTER AND VEE GUTTER SHALL BE WATER TESTED FOR FLOW.
11. ALL CURB AND GUTTER, VEE GUTTER, MEDIAN CURB AND LANDSCAPING CURB SHALL BE CURED IN ACCORDANCE WITH THE PROVISIONS IN THE GENERAL CONCRETE NOTES IN THESE IMPROVEMENT STANDARDS.

CITY OF PORTERVILLE CALIFORNIA | APPROVED BY: ENGINEERING & PROJECT MANAGEMENT DIRECTOR | DATE 5/19/2020 | CONCRETE SPECIFICATIONS | C-26

BASE MATERIAL REQUIRED IN REFERENCE TO THE EXPANSION INDEX:

EXPANSION INDEX LESS THAN 21

1. VERY LOW EXPANSION POTENTIAL SOILS, NON-EXPANSIVE BASE MATERIAL IS NOT REQUIRED.

EXPANSION INDEX 21 TO 50

2. LOW EXPANSION POTENTIAL SOILS, PLACE A MIN. OF 4" OF NON-EXPANSIVE BASE MATERIAL BENEATH CONCRETE STRUCTURES. SATURATE THE BASE MATERIAL AND SUBGRADE WITH WATER 24 HOURS PRIOR TO POURING CONCRETE.

EXPANSION INDEX 51 TO 90

3. MEDIUM EXPANSION POTENTIAL SOILS, PLACE A MINIMUM OF 8" OF NON-EXPANSIVE BASE MATERIAL BENEATH CONCRETE STRUCTURES. SATURATE THE BASE MATERIAL AND SUBGRADE BY PONDING WATER ON IT FOR 24 HOURS PRIOR TO POURING CONCRETE.

EXPANSION INDEX GREATER THAN 90

4. VERY HIGH EXPANSION POTENTIAL SOILS, PLACE A MINIMUM OF 16" OF NON-EXPANSIVE BASE MATERIAL BENEATH CONCRETE STRUCTURES. SATURATE THE BASE MATERIAL AND SUBGRADE WITH WATER 24 HOURS PRIOR TO POURING CONCRETE. PLACE TWO NUMBER FOUR REINFORCING BARS IN THE CURB, CONTINUOUSLY. A PRELIMINARY SOILS REPORT CONTAINING RECOMMENDATIONS FOR MITIGATION CONCERNING SIDEWALK, CURB AND GUTTER CONSTRUCTION IS REQUIRED, IN ORDER TO GAIN APPROVAL OF AN ALTERNATIVE TO THE USE OF 16" OF NON-EXPANSIVE MATERIAL.

NOTE:
IN ANY SUBDIVISION WHERE ANY INDIVIDUAL SOIL SAMPLE HAS AN EXPANSION INDEX GREATER THAN 50, THE CITY ENGINEER MAY REQUIRE ADDITIONAL SOIL SAMPLES AND TESTS, UP TO ONE SET PER THREE ACRES, FOR THE PURPOSE OF DETERMINING THE EXPANSIVE INDEX(ES) FOR THE PROPOSED DEVELOPMENT.

SHRINK/SWELL POTENTIALS:

BASE MATERIAL REQUIRED IN REFERENCE TO THE SOIL CONSERVATION SERVICE CRITERIA

1. AREAS WITH LOW SHRINK/SWELL POTENTIAL. NON-EXPANSIVE MATERIAL IS NOT REQUIRED. NO SOILS REPORT IS REQUIRED FOR BUILDING PERMITS.
2. AREAS CONTAINING SOIL THAT HAS A LOW TO MODERATE SHRINK/SWELL POTENTIAL, REQUIRES A MINIMUM OF 4 INCHES OF NON-EXPANSIVE MATERIAL BENEATH CONCRETE STRUCTURES. SATURATE THE BASE MATERIAL AND SUBGRADE WITH WATER 24 HOURS PRIOR TO POURING CONCRETE. A SOILS REPORT IS REQUIRED FOR ALL BUILDING PERMITS EXCEPT SINGLE FAMILY RESIDENTIAL.
3. AREAS CONTAINING SOIL THAT HAS A MODERATE SHRINK/SWELL POTENTIAL, REQUIRES A MINIMUM OF 8 INCHES OF NON-EXPANSIVE MATERIAL BENEATH CONCRETE STRUCTURES. SATURATE THE BASE MATERIAL AND SUBGRADE WITH WATER 24 HOURS PRIOR TO POURING CONCRETE. A SOILS REPORT IS REQUIRED FOR ALL BUILDING PERMITS.
4. AREAS CONTAINING SOIL THAT HAS A HIGH SHRINK/SWELL POTENTIAL, REQUIRES 16 INCHES OF NON-EXPANSIVE MATERIAL BENEATH CONCRETE STRUCTURES. SATURATE THE BASE MATERIAL AND SUBGRADE WITH WATER 24 HOURS PRIOR TO POURING CONCRETE. PLACE TWO NUMBER FOUR REINFORCING BARS IN CURB, CONTINUOUSLY. A SOILS REPORT IS REQUIRED FOR ALL BUILDING PERMITS.

NOTE:
SEE APPENDIX A FOR SOIL CONSERVATION SERVICE SOILS LEGEND WITH SHRINK/SWELL POTENTIALS AND APPENDIX B FOR SOIL CONSERVATION SERVICE SOILS MAP FOR PORTERVILLE AREA (SEE POCKET AT THE BACK OF THESE STANDARDS).

BASE MATERIAL WILL BE AS SHOWN ABOVE OR AS DETERMINED BY THE CITY ENGINEER.

CITY OF PORTERVILLE CALIFORNIA | APPROVED BY: ENGINEERING & PROJECT MANAGEMENT DIRECTOR | DATE 5/19/2020 | SPECIFICATIONS FOR CONSTRUCTION OF CONCRETE IMPROVEMENTS ON EXPANSIVE SOILS | C-25

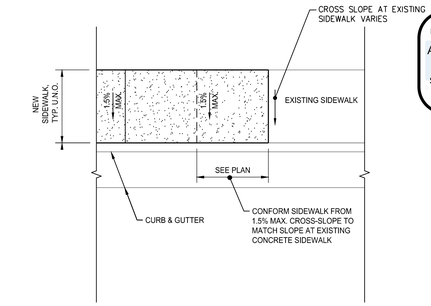

CONC. SIDEWALK TRANSITION | NO SCALE | 21

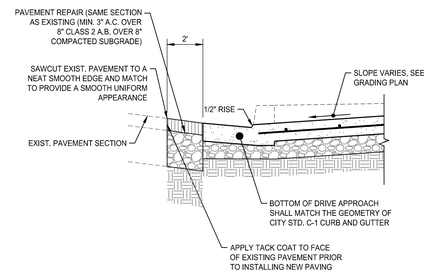

PAVING REPAIR AT DRIVE APPROACH | NO SCALE | 21

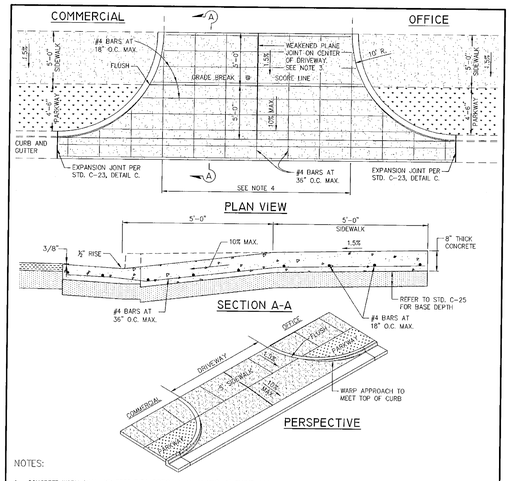

NOTES:

1. CONCRETE WORK SHALL BE 2500 P.S.I. DESIGN (5 SACK MIX). 4" SLUMP ±1".
2. ALL CONCRETE SHALL HAVE A LIGHT BROOM FINISH, EXCEPT AS NOTED.
3. WEAKENED PLANE JOINTS AT DRIVEWAY APPROACHES AND AT 15' SPACING, PER STANDARD SPECIFICATIONS. (SEE STD. DWG. C-23, DETAIL D) WEAKENED PLANE JOINTS SHALL BE A MIN. DEPTH OF 1 1/2" AND SHALL BE FINISHED WITH A SCORING TOOL LEAVING THE EDGES ROUNDED.
4. REFER TO STD. DWG. C-16 FOR DRIVEWAY SPACING AND WIDTH.
5. FINISHED SURFACES SHALL BE TREATED WITH CLEAR CURING COMPOUND COMPLYING WITH SECTION 201-4 OF THE STANDARD SPECIFICATIONS.
6. TRANSITIONS FROM RAMPS TO WALKS, GUTTERS OR STREET SHALL BE FLUSH & FREE OF ABRUPT CHANGES.
7. REPAIRS SHALL BE MADE BY REMOVING & REPLACING THE ENTIRE UNIT BETWEEN JOINTS.

CITY OF PORTERVILLE CALIFORNIA | APPROVED BY: ENGINEERING & PROJECT MANAGEMENT DIRECTOR | DATE 5/19/2020 | COMMERCIAL/OFFICE DRIVE APPROACH WITH CURB RETURNS | C-20

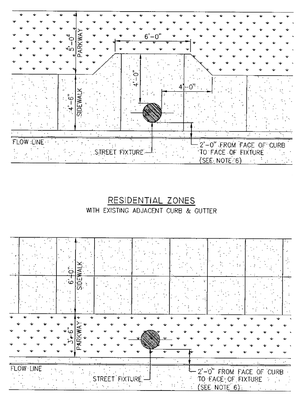

NOTES:

1. CONCRETE WORK SHALL BE 2500 P.S.I. DESIGN (5 SACK MIX). 4" SLUMP ±1".
2. ALL CONCRETE SHALL HAVE A LIGHT BROOM FINISH, EXCEPT AS NOTED.
3. FINISHED SURFACES SHALL BE TREATED WITH CLEAR CURING COMPOUND COMPLYING WITH SECTION 201-4 OF THE STANDARD SPECIFICATIONS.
4. SIDEWALK SHALL BE WIDENED AT STREET FIXTURE LOCATIONS PROVIDING A MINIMUM CLEARANCE OF 4' TO BACK OF SIDEWALK.
5. REPAIRS SHALL BE MADE BY REMOVING & REPLACING THE ENTIRE UNIT BETWEEN JOINTS.
6. REQUIRED LATERAL CLEARANCE MAY BE REDUCED TO 1'-0" WHERE SPACE IS LIMITED, SUBJECT TO APPROVAL BY CITY ENGINEER.

CITY OF PORTERVILLE CALIFORNIA | APPROVED BY: ENGINEERING & PROJECT MANAGEMENT DIRECTOR | DATE 5/19/2020 | SIDEWALKS WITH STREET FIXTURE | C-8

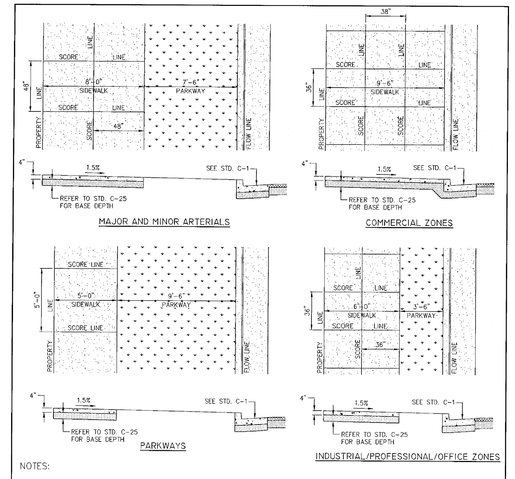

NOTES:

1. CONCRETE WORK SHALL BE 2500 P.S.I. DESIGN (5 SACK MIX). 4" SLUMP ±1".
2. ALL CONCRETE SHALL HAVE A LIGHT BROOM FINISH, EXCEPT AS NOTED.
3. WEAKENED PLANE JOINTS AT END OF CURVE AND BEGINNING OF CURVE OF WALK RETURNS, AT DRIVEWAY APPROACHES, AND AT 15' SPACING, PER STANDARD SPECIFICATIONS. (SEE STD. DWG. C-23, DETAIL D) WEAKENED PLANE JOINTS SHALL BE A MIN. DEPTH OF 1-1/2" AND SHALL BE FINISHED WITH A SCORING TOOL LEAVING THE EDGES ROUNDED.
4. FINISHED SURFACES SHALL BE TREATED WITH CLEAR CURING COMPOUND COMPLYING WITH SECTION 201-4 OF THE STANDARD SPECIFICATIONS.
5. ALIGN SIDEWALK EXPANSION JOINTS, WEAKENED PLANE JOINTS AND SCORE LINES WITH CURB AND GUTTER EXPANSION JOINTS AND WEAKENED PLANE JOINTS.
6. REPAIRS SHALL BE MADE BY REMOVING & REPLACING THE ENTIRE UNIT BETWEEN JOINTS.

CITY OF PORTERVILLE CALIFORNIA | APPROVED BY: ENGINEERING & PROJECT MANAGEMENT DIRECTOR | DATE 5/19/2020 | COMMERCIAL/OFFICE CONCRETE SIDEWALKS AND SIDEWALKS WITH STREET FIXTURE | C-7

REGISTERED PROFESSIONAL ENGINEER
HA VANG
R.C.E. 73146
06/26/2024
CIVIL
STATE OF CALIFORNIA

CONSULTANT
LANE ENGINEERS INC.
CIVIL • STRUCTURAL • SURVEYING
979 N. BLACKSTONE
TULARE, CALIFORNIA 93274
(559) 688-5263

REVISIONS

MANGINI ARCHITECTURE INGENUITY
BARENG MORRELLI SCOTT
MANGINI ASSOCIATES INC.
4320 West Mineral King Avenue
Visalia, California 93291
www.mangini.us
(559) 627-0530 Office
(559) 627-1926 Fax

TITLE
OFFSITE CIVIL DETAILS

C7.3

PROJECT 23076

CITY STANDARD DETAILS

LANE PROJ. NO. 232421

J:\Jobs\2023\23242.1\Dwg\Production Drawings\Civil Details_23076.dwg Jun 26 2024 10:47am

APPROVALS

FILE # 54-76 | APPLICATION # 02-121996

IDENTIFICATION STAMP
DIV. OF THE STATE ARCHITECT
APP: 02-121996 INC:
REVIEWED FOR
SS ☑ FLS ☑ ACS ☑
DATE: 8/14/2024

LICENSED ARCHITECT
MICHAEL J. SCOTT
No. C-34290
REN. 05-31-25
STATE OF CALIFORNIA

DATE: DECEMBER 31, 2023

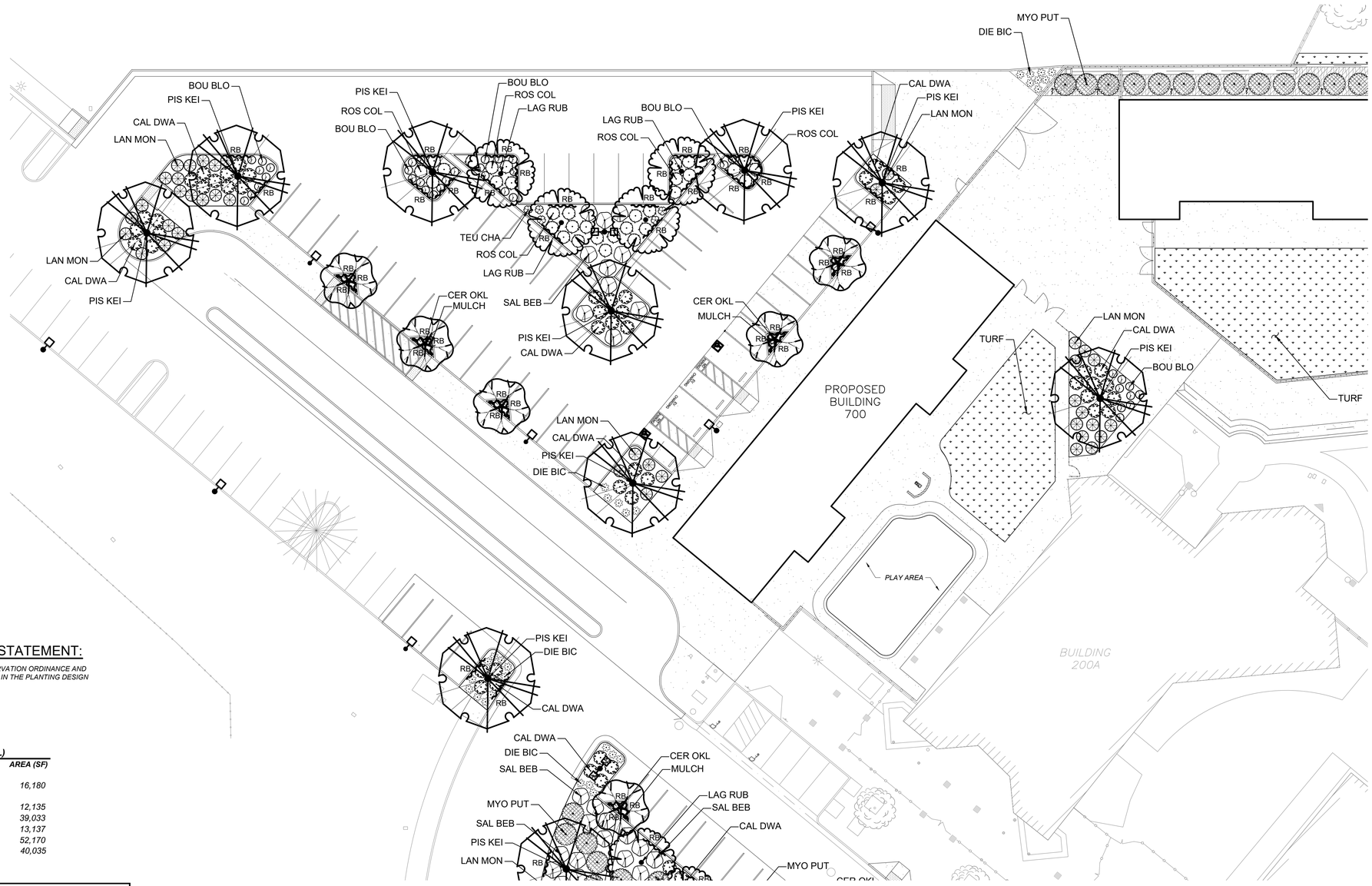

A
LA1

PARTIAL LANDSCAPE PLAN

SCALE: 1" = 20'

WATER CONSERVATION COMPLIANCE STATEMENT:

I HAVE COMPLIED WITH THE CRITERIA OF THE LANDSCAPE WATER CONSERVATION ORDINANCE AND GUIDELINES, AND HAVE APPLIED THEM FOR THE EFFICIENT USE OF WATER IN THE PLANTING DESIGN PLAN.

DAVID W. BRILEY, RLA 2787

LANDSCAPE PLANTING AREA REQUIREMENT (DSA 1-L)	AREA (SF)
NEW BUILDINGS FOOTPRINT: BLDG 700: 5,823 SF BLDG 800: 10,357 SF	16,180
REQUIRED MWELO COMPLIANT PLANTING:	12,135
EXISTING IRRIGATED AREA DESIGNATED FOR REMOVAL:	39,033
PROPOSED MWELO COMPLIANT PLANTING:	13,137
TOTAL CREDIT FOR MWELO COMPLIANT PLANTING:	52,170
EXCESS / (DEFICIT) OF PROPOSED COMPLIANT PLANTING:	40,035

LANDSCAPE SHADE CALCULATIONS	SHADING PER CALGREEN 5.106.12		
SITE SHADING - LANDSCAPE & HARDSCAPE	QUANTITY PROPOSED (SF)	PERCENT REQUIRED	SHADE AREA REQUIRED (SF)
LANDSCAPED AREA (EXCLUDING SPECIAL USE & PARKING LANDSCAPE AREAS)	3,127	20	625
UNCOVERED HARDSCAPE AREA (EXCLUDING PARKING HARDSCAPE AREAS)	25,048	20	5,010
TOTAL SITE SHADE REQUIRED			5,635
PROVIDED SHADE TREES	PROVIDED SHADE AREA	NO. TREES	
VERY LARGE (40' dia.= 1256 SF)	0	0	
LARGE (35' dia.= 962 SF)	5,772	6	
MEDIUM (30' dia.= 707 SF)	0	0	
SMALL (20' dia.= 314 SF)	0	0	
TOTALS	5,772	6	
OVER (UNDER) LANDSCAPE & HARDSCAPE SHADE REQUIREMENT			137

PARKING LOT SHADING	QUANTITY PROPOSED (SF)	PERCENT REQUIRED	SHADE AREA REQUIRED (SF)
PARKING LOT STALLS & AISLES	28,281	50	14,141
PARKING LOT LANDSCAPE	10,010	20	2,002
PARKING LOT HARDSCAPE	13,064	20	2,613
TOTAL PARKING SHADE REQUIRED			18,755
PROVIDED SHADE TREES - PARKING LOT AREA	PROVIDED SHADE AREA	NO. TREES	
VERY LARGE (40' dia.= 1256 SF)	0	0	
LARGE (35' dia.= 962 SF)	12,506	13	
MEDIUM (30' dia.= 707 SF)	0	0	
SMALL (20' dia.= 314 SF)	6,280	20	
TOTALS	18,786	33	
OVER (UNDER) PARKING LOT SHADE REQUIREMENT			31 OVER

LANDSCAPE PLANTING OBSERVATION LOG				
		REVIEWED & ACCEPTED BY OWNER'S REP OR LAND ARCH		
ITEM NO.	WORK ITEM DESCRIPTION	PRINT NAME	SIGNATURE	DATE
PL-1	REPORT & PROTECTION OF EXISTING TREES			
PL-2	RIPPING OF PLANTING AREAS			
PL-3	SOIL CONDITIONING & TILLAGE DEPTH			
PL-4	IRRIGATION COVERAGE PRIOR TO PLANTING			
PL-5	FINISH GRADING PRIOR TO PLANTING			
PL-6	TREES - INITIAL QUALITY & LAYOUT			
PL-7	PLANTS - INITIAL QUALITY & LAYOUT			
PL-8	GRANULAR PRE-EMERGENT HERBICIDE IN MULCHED AREAS			
PL-9	WOOD MULCH DEPTH			
NOTES:	THE ORIGINAL VERSION OF THIS LOG SHALL BE MAINTAINED ON THE AS-BUILT RECORD DRAWING SET. WORK ITEMS MAY NOT BE REVIEWED IF PRIOR WORK ITEMS HAVE NOT BEEN ACCEPTED.			

SCALE: N 1"=20'

0 5 20 40
SCALE IN FEET

SEE SHEETS LA2 AND LA3 FOR PLANTING PLAN, LA4 FOR LEGEND AND LA5 FOR DETAILS AND NOTES

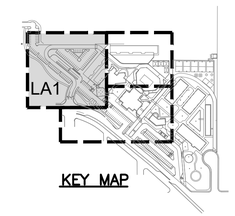

KEY MAP

811 Know what's below. Call before you dig.

LICENSED LANDSCAPE ARCHITECT
BRILEY NO. 2787
12/31/24
Renewal Date
Date
STATE OF CALIFORNIA
11/29/23

Blair, Church & Flynn
CONSULTING ENGINEERS
Blair, Church & Flynn Consulting Engineers
453 Clovis Avenue, Suite 200
Clovis, California 93612
Tel (559) 326-1400
Fax (559) 326-1500

NEW PRESCHOOL AND TK/KINDERGARTEN CLASSROOMS AT SANTA FE ELEMENTARY SCHOOL

PORTERVILLE UNIFIED SCHOOL DISTRICT

286 E ORANGE AVENUE, PORTERVILLE, CA 93257

REVISIONS

MANGINI ARCHITECTURE INTERIORS
BARENG MORRELLI SCOTT
MANGINI ASSOCIATES INC.
4320 West Mineral King Avenue
Visalia, California 93291
www.mangini.us
(559) 627.0530 Office
(559) 627.1926 Fax

TITLE
PARTIAL PLANTING PLAN

LA1

PROJECT 23076

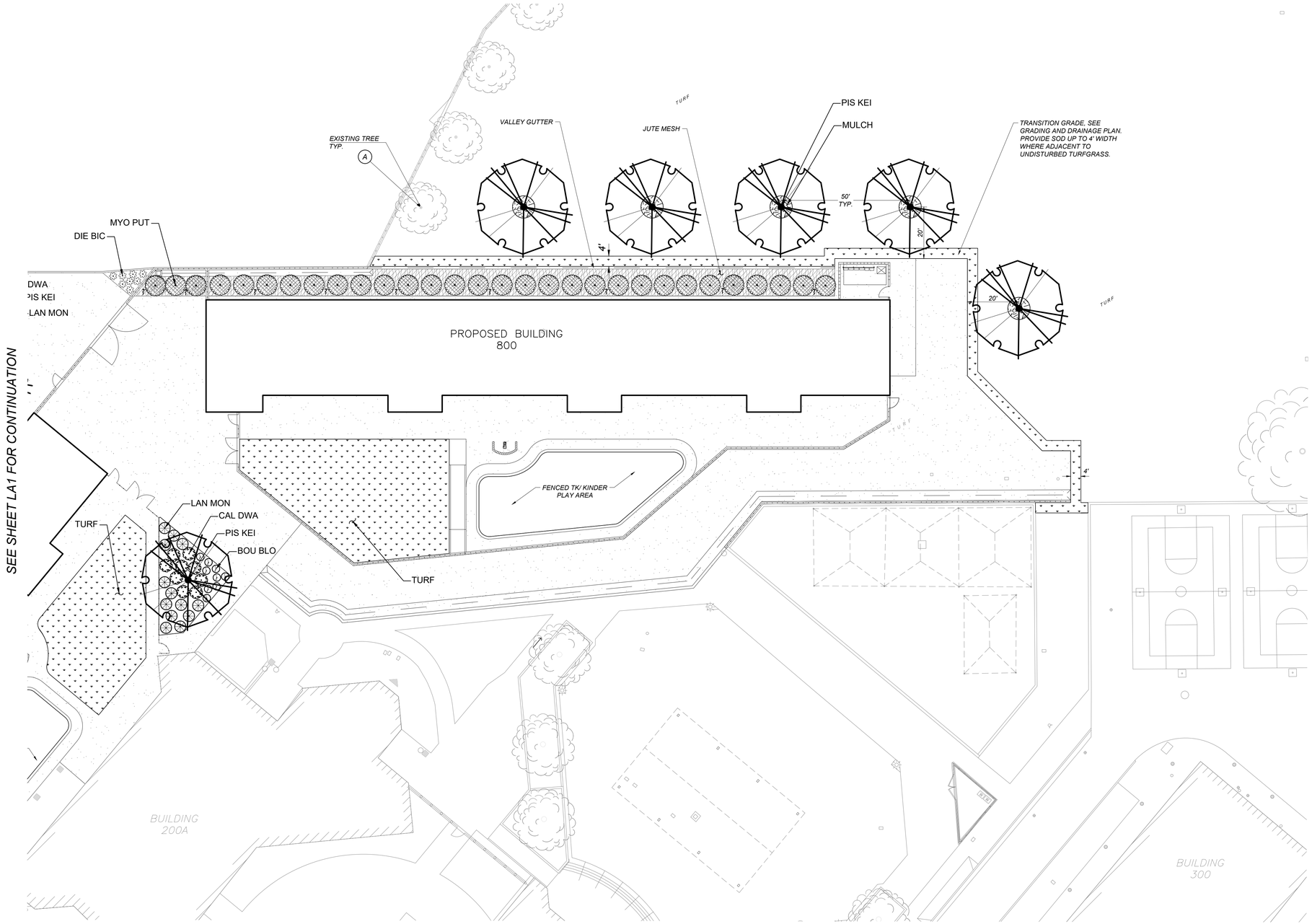

A / LA2 PARTIAL LANDSCAPE PLAN

SCALE: 1" = 20'

SEE SHEETS LA1 AND LA3 FOR PLANTING PLAN, LA4 FOR LEGEND AND LA5 FOR DETAILS AND NOTES

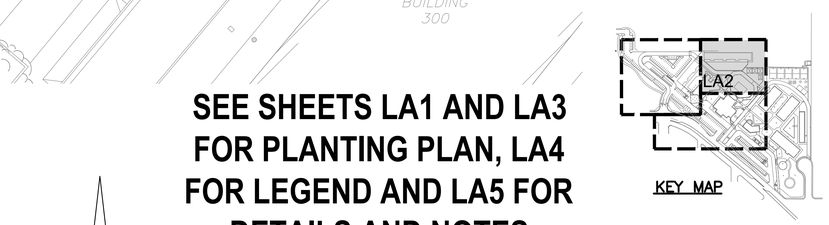

KEY MAP

SCALE: N 1"=20'

0 5 20 40

SCALE IN FEET

811 Know what's below. Call before you dig.

LICENSED LANDSCAPE ARCHITECT BRILEY NO. Signature 12/31/24 Renewal Date Date STATE OF CALIFORNIA

11/29/23

Blair, Church & Flynn CONSULTING ENGINEERS

Blair, Church & Flynn Consulting Engineers
453 Clovis Avenue, Suite 200
Clovis, California 93612
Tel (559) 326-1400
Fax (559) 326-1500

APPROVALS

FILE #	APPLICATION #
54-76	02-121996

IDENTIFICATION STAMP
DIV. OF THE STATE ARCHITECT
APP: 02-121996 INC:
REVIEWED FOR
SS ☑ FLS ☑ ACS ☑
DATE: 8/14/2024

LICENSED ARCHITECT MICHAEL J. SCOTT No. C-34290 REN. 05-31-25 STATE OF CALIFORNIA

DATE: DECEMBER 31, 2023

NEW PRESCHOOL AND TK/KINDERGARTEN CLASSROOMS AT SANTA FE ELEMENTARY SCHOOL

PORTERVILLE UNIFIED SCHOOL DISTRICT

286 E ORANGE AVENUE, PORTERVILLE, CA 93257

REVISIONS

MANGINI ARCHITECTURE INGENUITY

BARENG MORRELLI SCOTT

MANGINI ASSOCIATES INC.
4320 West Mineral King Avenue
Visalia, California 93291

www.mangini.us
(559) 627-0530 Office
(559) 627-1926 Fax

TITLE

PARTIAL PLANTING PLAN

LA2

PROJECT 23076

SEE SHEET LA1 FOR CONTINUATION

A / LA3 PARTIAL LANDSCAPE PLAN

SCALE: 1" = 20'

SCALE: N 1"=30'

0 10 20 30 60
SCALE IN FEET

SEE SHEETS LA1 AND LA2 FOR PLANTING PLAN, LA4 FOR LEGEND AND LA5 FOR DETAILS AND NOTES

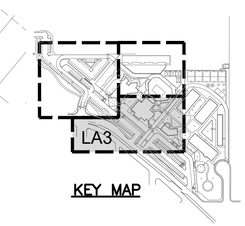

KEY MAP

811 Know what's below. Call before you dig.

LICENSED LANDSCAPE ARCHITECT
BRILEY NO.
Signature
12/31/24
Renewal Date
Date
STATE OF CALIFORNIA
11/29/23

Blair, Church & Flynn
CONSULTING ENGINEERS
Blair, Church & Flynn Consulting Engineers
453. Clovis Avenue, Suite 200
Clovis, California 93612
Tel (559) 326-1400
Fax (559) 326-1500

APPROVALS

FILE #	APPLICATION #
54-76	02-121996

IDENTIFICATION STAMP
DIV. OF THE STATE ARCHITECT
APP: 02-121996 INC:
REVIEWED FOR
SS ☑ FLS ☑ ACS ☑
DATE: 8/14/2024

LICENSED ARCHITECT
MICHAEL J. SCOTT
No. C-34290
REN. 05-31-25
STATE OF CALIFORNIA

DATE: DECEMBER 31, 2023

NEW PRESCHOOL AND TK/KINDERGARTEN CLASSROOMS AT SANTA FE ELEMENTARY SCHOOL

PORTERVILLE UNIFIED SCHOOL DISTRICT
286 E ORANGE AVENUE, PORTERVILLE, CA 93257

REVISIONS

MANGINI ARCHITECTURE INCORPORATED
BARENG MORRELLI SCOTT
MANGINI ASSOCIATES INC.
4320 West Mineral King Avenue
Visalia, California 93291
www.mangini.us
(559) 627-0530 Office
(559) 627-1926 Fax

TITLE
PARTIAL PLANTING PLAN

LA3

PROJECT 23076

2024-03-29 14:33

PLANT LEGEND

TOTAL MIXED PLANTING AREA = 13,137 SF *SUNSET ZONE# 9*

SYMBOL	CODE	BOTANICAL / COMMON NAME	CONT	WATER USE	QTY	DETAIL	REMARKS
LARGE TREES							
	PIS KEI	PISTACIA CHINENSIS 'KEITH DAVEY' / KEITH DAVEY CHINESE PISTACHE	24"BOX	L	19	A/LA5	DECIDUOUS. STANDARD FORM. FULL SUN. ORANGE-CRIMSON FALL COLOR MS: 30-40' H X 25-35' W
SMALL TREES							
	CER OKL	CERCIS TEXENSIS 'OKLAHOMA' / OKLAHOMA REDBUD	24"BOX	M	10	A/LA5	DECIDUOUS. STANDARD FORM. PARTIAL TO FULL SUN. PINK FLOWERS IN SPRING. MS: 15' H X 15' W
	LAG RUB	LAGERSTROEMIA INDICA 'RUBRA' / RED CRAPE MYRTLE	24"BOX	L	10	A/LA5	DECIDUOUS. STANDARD FORM. FULL SUN. SUMMER FLOWERING. MS: 25' H X 25" W

SYMBOL	CODE	BOTANICAL / COMMON NAME	SIZE	WATER USE	QTY	DETAIL	REMARKS
SHRUBS							
	CAL DWA	CALLISTEMON VIMINALIS `LITTLE JOHN` / DWARF WEEPING BOTTLEBRUSH	1 GAL	L	100	B/LA5	FULL SUN. RED FLOWERS MS: 3' H X 5' W
	LAN MON	LANTANA MONTEVIDENSIS / TRAILING LANTANA	1 GAL	L	62	B/LA5	FULL SUN TO PART SUN. LILAC FLOWES MS:1'-2' H X 3'-5' W
	MYO PUT	MYOPORUM PARVIFOLIUM `PINK` / PINK MYOPORUM	1 GAL	L	54	C/LA5	FULL SUN. PINK FLOWERS. MS: 3"-6" H X 9' W
	ROS COL	ROSMARINUS OFFICINALIS `COLLINGWOOD INGRAM` / COLLINGWOOD INGRAM ROSEMARY	5 GAL	L	34	B/LA5	EVERGREEN. FULL SUN. DARK BLUE FLOWERS. MS: 2-3' H X 4' W
GRASSES							
	BOU BLO	BOUTELOUA GRACILIS 'BLONDE AMBITION' / BLONDE AMBITION BLUE GRAMA	5 GAL	L	37	B/LA5	FULL SUN. PARTIAL SUN. MS: 1'-3' H X 1'-3' W
PERENNIALS							
	DIE BIC	DIETES BICOLOR / FORTNIGHT LILY	1 GAL	L	60	B/LA5	FULL SUN. LIGHT YELLOW IRIS-LIKE FLOWERS WITH VIVID MAROON BLOTCHES MS: 2'-3' H X 2'-3'W
	SAL BEB	SALVIA X `BEE`S BLISS` / BEE`S BLISS SAGE	3 GAL	L	45	B/LA5	FULL SUN. LAVENDER BLUE FLOWERS IN SPRING MS: 2' H X 6'-8' W
	TEU CHA	TEUCRIUM CHAMAEDRYS / GERMANDER	1 GAL	L	5	B/LA5	FULL SUN. DARK GREEN FOLIAGE TOPPED WITH LIGHT MAGENTA FLOWERS IN SPIKES. MS: 3'H X 3'W

SYMBOL	CODE	BOTANICAL / COMMON NAME	CONT	WATER USE	QTY	DETAIL	REMARKS
GROUND COVERS							
	MULCH	WALK-ON WOOD MULCH	N/A	N/A	605 SF	F/LA5	MIN. 3 INCH COMPRESSED DEPTH. SEE PLANTING NOTE #18. QUANTITY IS IN ADDITION TO THAT PROVIDED IN THE MIXED PLANTING AREA.
	TURF	`CELEBRATION` BERMUDAGRASS	SOD	M	6,583 SF	E/LA5	INSTALL FULL WIDTH SOD TO THE LIMITS OF DISTURBANCE. VERIFY QUANTITY. SEE DEMOLITION AND GRADING PLANS.
SURFACING							
	JUTE	JUTE MESH	N/A	N/A	1,210 SF	N/A	INSTALL ON SLOPES EQUAL TO OR GREATER THAN 1V:4H PER CALTRANS STANDARD PLAN H52
	RB	ROOT BARRIER UB24-2				D/LA5	
(A)		PROTECT EXISTING TREE IN PLACE. TPZ (TREE PROTECTION PROTECTION) PER SECTION 320190					

TREE SIZE AND QUALITY STANDARDS

AMERICAN STANDARDS FOR NURSERY STOCK (ANSI Z60.1) AND GUIDELINE SPECIFICATIONS FOR NURSERY TREE QUALITY (URBAN TREE FOUNDATION) SHALL APPLY

	TYPES 1 & 2 SHADE TREES			TYPE 3 SMALL UPRIGHT TREES**			TYPE 4 SMALL SPREADING TREES***		
CONTAINER SIZE	MIN. CALIPER	MAX. CALIPER	TYPE 1 MIN./MAX. HEIGHT*	MIN. CALIPER	MAX. CALIPER	MIN./MAX. HEIGHT	MIN. CALIPER	MAX. CALIPER	MIN./MAX. HEIGHT
15 GALLON	0.75	2.0	7-10 FT	0.75	2.0	6-8 FT	0.75	2.0	4-8 FT
24" BOX	1.25	3.0	8-12 FT	1.25	3.0	8-10 FT	1.25	3.0	6-10 FT
36" BOX	1.75	3.5	10-16 FT	1.75	3.5	10-14 FT	1.75	3.5	7-12 FT
42" BOX	2.0	4.0	12-20 FT	2.0	4.0	12-18 FT	2.0	4.0	8-14 FT
48" BOX	2.5	5.0	14-26 FT	2.5	5.0	14-22 FT	2.5	5.0	9-16 FT

* TYPE 2 TREE HEIGHTS SHALL NOT BE LESS THAN TWO-THIRDS THE LISTED HEIGHT RANGE.

** TYPE 3 TREES SHALL HAVE A MINIMUM OF SEVEN BRANCHES

*** TYPE 4 TREES SHALL HAVE A MINIMUM OF EIGHT BRANCHES

CALIPER MEASUREMENT FOR CLUMP OR MULTI-STEM TREES IS ONE-HALF THE SUM OF THE THREE LARGEST TRUNK CALIPERS

CALIPER MEASUREMENT FOR <4" TRUNK IS +6" ABOVE ROOTBALL (NOT INCLUDING ROOTSTOCK). >4" TRUNK IS +12"

TREES SHALL HAVE A CENTRAL LEADER. NEW LEADERS LESS THAN HALF THE DIAMETER OF A HEADED LEADER, BROKEN OR CO-DOMINATE LEADERS ARE NOT ACCEPTABLE

SCAFFOLD BRANCHES SHALL BE LESS THAN 2/3 THE DIAMETER OF THE TRUNK, WITHOUT INCLUDED BARK AT ATTACHMENT. SCAFFOLD BRANCHES SHALL BE BALANCED, WELL SPACED VERTICALLY, AND WITH A RADIALLY BLANK SECTOR NO GREATER THAN 1/3 OF THE CANOPY CIRCUMFERENCE.

TEMPORARY BRANCHES ON THE LOWER TRUNK SHALL BE LESS THAN 3/8 INCH DIAMETER; AND THE CLEAR TRUNK HEIGHT SHALL BE NO MORE THAN 40% OF THE TOTAL TREE HEIGHT.

THE ROOT COLLAR AND ROOTBALL SHALL BE FREE OF DEFECTS INCLUDING CIRCLING, KINKED AND GIRDLING ROOTS. ROOTS THE EDGE AND BOTTOM OF THE CONTAINER SHALL BE LESS THAN 1/4 INCH DIAMETER, AND UNIFORM THROUGHOUT THE CONTAINER.

TREE CANOPY WIDTH SHALL BE A MINIMUM OF 25% OF THE STANDARD FORM TREE HEIGHT.

DO NOT HEAD BACK OR PRUNE TREES UNLESS APPROVED AND/OR DIRECTED TO BY THE LANDSCAPE ARCHITECT

SEE SHEETS LA1 TO LA3 FOR PLANTING PLAN AND LA5 FOR DETAILS AND NOTES

Know what's below. Call before you dig.

LICENSED LANDSCAPE ARCHITECT BRILEY No. 5 STATE OF CALIFORNIA 12/31/24 Renewal Date Date

11/29/23

Blair, Church & Flynn CONSULTING ENGINEERS
Blair, Church & Flynn Consulting Engineers
451 Clovis Avenue, Suite 200
Clovis, California 93612
Tel (559) 326-1400
Fax (559) 326-1500

APPROVALS

FILE # 54-76 APPLICATION # 02-121996

IDENTIFICATION STAMP DIV. OF THE STATE ARCHITECT
APP: 02-121996 INC:
REVIEWED FOR
SS ☑ FLS ☑ ACS ☑
DATE: 8/14/2024

LICENSED ARCHITECT MICHAEL J. SCOTT No. C-34290 REN. 05-31-25 STATE OF CALIFORNIA

DATE: DECEMBER 31, 2023

NEW PRESCHOOL AND TK/KINDERGARTEN CLASSROOMS AT SANTA FE ELEMENTARY SCHOOL

PORTERVILLE UNIFIED SCHOOL DISTRICT

286 E ORANGE AVENUE, PORTERVILLE, CA 93257

REVISIONS

MANGINI ARCHITECTURE INCORPORATED

BARENG MORRELLI SCOTT

MANGINI ASSOCIATES INC.
4320 West Mineral King Avenue
Visalia, California 93291

www.mangini.us
(559) 627.0530 Office
(559) 627.1926 Fax

TITLE

PARTIAL PLANTING PLAN

LA4

PROJECT 23076

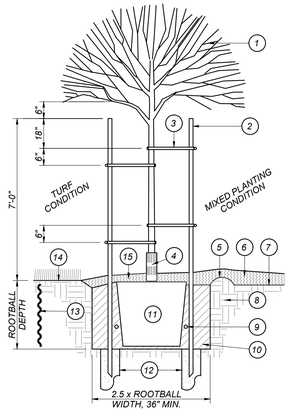

LEGEND:

1. *TREE PER PLANTING PLAN.*
2. *2" X 10' LODGEPOLE PINE STAKE. DO NOT DRIVE STAKE THROUGH ROOTBALL. CUT OFF TOP SECTION DAMAGED BY HAMMERING. TOP OF STAKE IS 6" CLEAR OF LOWEST TREE BRANCHES.*
3. *FLEXIBLE VINYL TREE TIE, 4 / TREE (V.I.T. OR APPROVED EQUAL.)*
4. *TREE TRUNK PROTECTOR (GRAY) WHERE TREE IS IN TURF AREA.*
5. *4" HIGH WATERING BERM.*
6. *ADJACENT PLANTING AREA WITH MULCH WHERE OCCURS.*
7. *FINISH GRADE.*
8. *SITE SOIL.*
9. *PLANT FERTILIZER TABLET. SEE SPECIFICATIONS.*
10. *AMENDED BACKFILL. SEE SPECIFICATIONS.*
11. *ROOTBALL. SET TOP OF ROOTBALL 2" ABOVE FINISH GRADE.*
12. *DRAINAGE SUMP: 12" DIA. PER DRAINAGE SUMP NOTES. FILL WITH CONCRETE SAND PER SSPWC 200-1.5.5.*
13. *ROOT CONTROL BARRIER WHERE REQUIRED. SEE GENERAL PLANTING NOTES AND DETAIL [D/LA5].*
14. *ADJACENT TURFGRASS PLANTING WHERE OCCURS.*
15. *MULCH, MINIMUM 3" DEPTH. SEE GENERAL PLANTING NOTE 17.*

DRAINAGE SUMP NOTES:

A. *DRAINAGE SUMPS SHALL PENETRATE THROUGH AND BEYOND ANY UNDERLYING PAVEMENT OR HARDPAN SOIL STRATUM, AND SUCH PAVEMENT OR HARDPAN MATERIAL SHALL BE REMOVED FROM THE SUMP HOLES.*

B. *THE SUMP HOLE SHALL BE DRILLED TO MINIMUM DEPTH OF TEN (10) FEET, UNLESS VISUAL EVIDENCE OF A SUBSURFACE SAND AND/OR GRAVEL DRAINAGE STRATUM IS APPARENT AT A LESSER DEPTH. THE SUMP HOLES SHALL EXTEND INTO THE DRAINAGE STRATUM A MINIMUM OF ONE (1) FOOT.*

A / LA5 DOUBLE STAKE TREE PLANTING

NOT TO SCALE

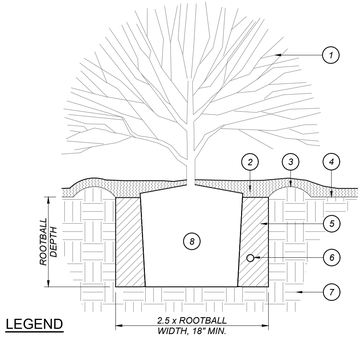

LEGEND

1. *SHRUB.*
2. *WOOD MULCH LAYER.*
3. *3" HIGH WATERING BASIN.*
4. *FINISH GRADE.*
5. *AMENDED BACKFILL. SEE SPECIFICATIONS.*
6. *FERTILIZER PACKET. SEE SPECIFICATIONS.*
7. *SITE SOIL.*
8. *ROOTBALL. SET TOP OF ROOTBALL 1" ABOVE FINISH GRADE.*

B / LA5 SHRUB PLANTING

NOT TO SCALE

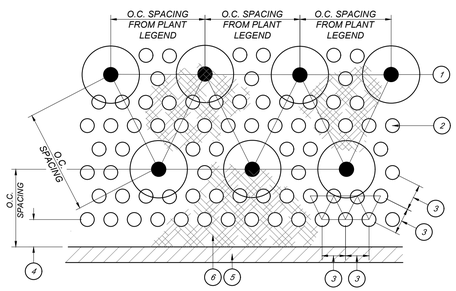

LEGEND:

1. *CONTAINER SHRUB OR GROUND COVER IN TRIANGULATED ROWS. SEE SHRUB PLANTING PER DETAIL [B/LA5].*
2. *GROUND COVER FLATS OR LINERS - TRIANGULATED ROWS.*
3. *SPACE PER PLANT LEGEND. OMIT PLANTS WHERE IN CONFLICT WITH SHRUBS OR TREE WATERING BASINS.*
4. *SPACING DISTANCE FROM PLANT LEGEND.*
5. *HARDSCAPE ELEMENT: CURB, WALK, ETC.*
6. *MULCH PER SPECIFICATIONS.*

C / LA5 SHRUB AND GROUND COVER SPACING

NOT TO SCALE

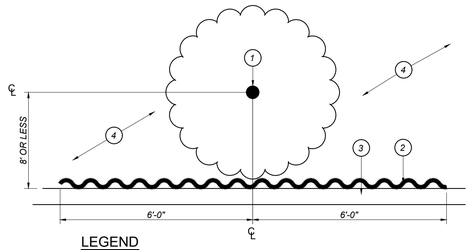

LEGEND

1. *TREE TRUNK.*
2. *12 LF OF 24"-DEEP ROOT CONTROL BARRIER: DEEP ROOT UB24-2 OR EQUIVALENT. CENTER BARRIER ON TRUNK OF TREE. INSTALL PER MANUFACTURER'S SPECIFICATIONS.*
3. *HARDSCAPE ELEMENT: CURB, SIDEWALK, WALL, ETC.*
4. *PLANTING AREA.*
5. *INSTALL ROOT CONTROL BARRIER ON ALL SIDES OF THE PLANTING AREA WHEN SURROUNDED BY HARDSCAPE WITHIN 8' OF THE TREE TRUNK.*

D / LA5 ROOT CONTROL BARRIER

NOT TO SCALE

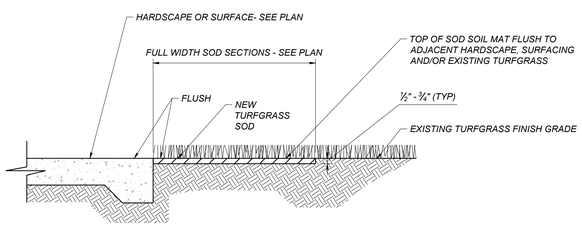

NOTE:

IF THE EXISTING TURFGRASS FINISH GRADE IS HIGHER OR LOWER THAN THE NEW FINISH SURFACE, TRANSITION GRADE THE NEW SOD AT A MAXIMUM 1V:12H SLOPE

E / LA5 TURF SOD INSTALLATION

NOT TO SCALE

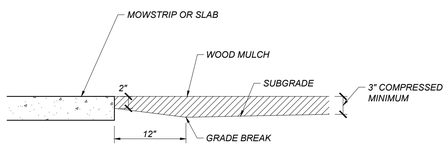

F / LA5 MULCH DETAIL

NOT TO SCALE

PLANTING NOTES:

1. *IMMEDIATELY NOTIFY THE OWNER'S REPRESENTATIVE IF IT IS OBVIOUS THAT OBSTRUCTIONS OR STRUCTURES, IRRIGATION SYSTEM MALFUNCTION, EXISTING TREES OR PLANTS, GRADE DIFFERENCES OR CHANGES IN THE SITE PLAN ARE PRESENT THAT WILL IMPACT THE PLANTING DESIGN. FAILURE TO GIVE SUCH NOTIFICATION SHALL PLACE THE RESPONSIBILITY ON THE CONTRACTOR FOR ANY REVISIONS OR REPLACEMENTS NECESSARY FOR CORRECTION.*
2. *ANY EXISTING PLANTING SHOWN ON THE PLAN IS FOR REFERENCE ONLY. THE CONTRACTOR SHALL VERIFY THE EXISTING PLANTING AT THE SITE PRIOR TO STARTING WORK. UNLESS NOTED OTHERWISE, THE CONTRACTOR SHALL PROTECT THE EXISTING PLANTING ADJACENT TO THE WORK FROM DAMAGE OR DISTRESS.*
3. *ALL TREES AND SHRUBS SHALL BE OF CLASS A QUALITY WITHOUT PESTS, DISEASE OR DAMAGE, SHALL BE WELL ESTABLISHED IN THEIR CONTAINERS WITHOUT GIRDLING ROOTS OR EXCESSIVE TOP GROWTH, AND SHALL COMPLY WITH THE REQUIREMENTS OF THE "AMERICAN STANDARDS FOR NURSERY STOCK" (ANSI Z60.1).*
4. *NOTIFY THE LANDSCAPE ARCHITECT PRIOR TO THE INSTALLATION OF IRRIGATION COMPONENTS AND TREE AND/OR SHRUB PLANTING FOR APPROVAL OF THE PLANT LAYOUT AND PLANT QUALITY. PLANT LOCATIONS SHALL AVOID CONFLICTS WITH EXISTING IMPROVEMENTS, PLANTINGS OR UTILITIES, LIGHT POLES WHILE MEETING THE DESIGN INTENT. DO NOT PLANT TREES WITHIN 15 FEET OF LIGHT POLES UNLESS SPECIFICALLY AUTHORIZED. FAILURE TO OBTAIN SUCH APPROVAL SHALL PLACE THE RESPONSIBILITY ON THE CONTRACTOR FOR ANY RELOCATION OR REPLACEMENT OF IRRIGATION COMPONENTS, PLANTED TREES AND/OR SHRUBS.*
5. *PLANT QUANTITIES ARE PROVIDED FOR BIDDING CONVENIENCE ONLY. THE CONTRACTOR SHALL PROVIDE SUFFICIENT QUANTITIES OF PLANTS EQUAL TO THE SYMBOL COUNT OR TO FILL THE AREA SHOWN ON THE PLAN AT THE SPECIFIED TRIANGULAR SPACING.*
6. *WHERE GROUND COVER PLANTS ARE SHOWN AT A SPECIFIED SPACING, THE GROUND COVER PLANTING CONTINUES UNDERNEATH THE TALLER SHRUBS AND TREES AS SHOWN IN THE PLANTING DETAILS. DO NOT PLANT GROUND COVER IN SHRUB OR TREE WATERING BASINS.*
7. *ALL NEW TREES LOCATED WITHIN 8 FEET OF PAVEMENT OR STRUCTURES SHALL HAVE A ROOT CONTROL BARRIER INSTALLED WHEN PLANTED. UNLESS OTHERWISE SPECIFIED, INSTALL A 12 FOOT LONG X 24 INCH DEEP LINEAR POLYETHYLENE BARRIER VESPRO OR EQUAL AT THE EDGE OF PAVEMENT/STRUCTURE, CENTERED ON THE TREE TRUNK AS SHOWN IN THE PLANTING DETAILS.*
8. *REMOVE NURSERY STAKES FROM TREES AFTER TREE STAKING OR GUYING AS SHOWN IN THE DETAILS.*
9. *INSTALL PERFORATED POLYETHYLENE TREE TRUNK PROTECTORS FOR ALL NEW TREES PLANTED IN TURF. UNLESS NOTED OTHERWISE, MAINTAIN A MINIMUM 6 FOOT DIAMETER MULCHED AREA AT THE BASE OF THE TREE INSIDE THE WATERING BASIN.*
10. *THE CONTRACTOR SHALL PRUNE NEW TREES ONLY WHEN SPECIFICALLY DIRECTED BY THE LANDSCAPE ARCHITECT. TREES HEADED BACK WITHOUT INTACT SCAFFOLDING BRANCH STRUCTURE OR IN ROOT-BOUND CONTAINERS SHALL BE REJECTED.*
11. *SUBMIT REPRESENTATIVE SOIL SAMPLES OF NATIVE AND PROPOSED IMPORT, IF NEEDED, PLANTING TOPSOIL TO A SOIL LAB FOR HORTICULTURAL ANALYSES AND FERTILITY RECOMMENDATIONS. AMEND SOIL ACCORDING TO THE RECOMMENDATIONS OF THE SOILS REPORT AND LANDSCAPE ARCHITECT'S DIRECTION. SEE THE LANDSCAPE PLANTING SPECIFICATIONS FOR ADDITIONAL INSTRUCTIONS.*
12. *PROVIDE SANDY LOAM TOPSOIL PER SPECIFICATION IN ALL RAISED PLANTERS AND WHERE IMPORT TOPSOIL IS REQUIRED. NATIVE SITE SOIL MAY BE USED IN RAISED PLANTERS ONLY WHEN THE NATIVE SITE SOIL MEETS THE CRITERIA FOR SANDY LOAM TOPSOIL AS DETERMINED BY A SOIL ANALYSIS.*
13. *PRIOR TO SOIL CONDITIONING, RIP IN TWO DIFFERENT DIRECTIONS WITH TINES AT 12 INCH SPACING, ALL TURFGRASS AREAS TO A 12 INCH DEPTH, AND SHRUB/GROUND COVER AREAS TO A 18 INCH DEPTH. ROUGH GRADE AND TILL THE APPROVED SOIL CONDITIONERS AND FERTILIZERS INTO THE TOP 6 INCHES PER THE LANDSCAPE PLANTING SPECIFICATIONS. COMPOST RATE SHALL BE A MINIMUM OF FOUR (4) CUBIC YARDS PER 1,000 SQUARE FEET.*
14. *UPON THE COMPLETION OF THE SOIL CONDITIONING, REMOVE ROCKS AND CLODS 1 INCH DIAMETER AND GREATER FROM THE TOP TWO INCHES OF TOPSOIL, AND ALL DEBRIS. FINISH GRADE THE AREA TO +/- 0.04 FOOT TOLERANCE. FINISH GRADE IN MULCHED AREAS SHALL BE STRAIGHT GRADES WITHOUT HUMPS OR DEPRESSIONS AND SHALL BE 2 INCHES BELOW ADJACENT HARDSCAPE, INLETS OR UTILITY BOX COLLARS. RELATIVE DENSITY OF THE TOPSOIL SHALL NOT EXCEED 85% COMPACTION.*
15. *OBTAIN THE APPROVAL OF THE OWNER'S REPRESENTATIVE TO BEGIN PLANTING OPERATIONS ONCE THE IRRIGATION SYSTEM IS OPERATIONAL AND THE SOIL CONDITIONING AND FINISH GRADING IS COMPLETED.*
16. *AFTER PLANTING IS COMPLETED AND JUST PRIOR TO MULCH INSTALLATION, APPLY A BROAD SPECTRUM PRE-EMERGENT HERBICIDE TO ALL NON-TURFGRASS PLANTING AREAS PER THE MANUFACTURER'S SPECIFICATIONS.*
17. *WHERE MULCH IS TO BE INSTALLED IN AN EXISTING PLANTING AREA, BREAKUP/TILL THE EXISTING SOIL TO A MINIMUM 6 INCH DEPTH PER SPECS, AND ADJUST FINISH GRADE ADJACENT TO HARDSCAPE AND DRAINAGE ELEMENTS TO PROVIDE A 2 INCH DEPTH THAT TRANSITIONS TO THE EXISTING GRADE OVER 1 TO 2 FEET.*
18. *INSTALL A MINIMUM 3 INCH DEPTH OF CHIPPED WALK-ON WOOD MULCH IN ALL PLANTING AREAS AND TREE WATERING BASINS EXCEPT FOR TURFGRASS AREAS. SLOPES 3H:1V OR GREATER, AREAS TO RECEIVE SEED PLANTING, OR AS NOTED ON THE PLAN. AREAS PLANTED WITH FLATS SHALL HAVE A MINIMUM MULCH DEPTH OF 2 INCHES. INSTALL A MINIMUM 3 FOOT RADIUS OF 3 INCH DEEP WOOD MULCH AT THE BASE OF ALL TREES IN NEW TURFGRASS AREAS.*
19. *ALL EXISTING PLANTS AND/OR TURFGRASS SHOWN TO REMAIN AND DAMAGED OR REMOVED BY CONSTRUCTION OPERATIONS AND/OR UTILITY/IRRIGATION/DRAINAGE LINES SHALL BE REPLACED WITH PLANTS THAT MATCH AS CLOSELY AS POSSIBLE TO THE EXISTING PLANT SPECIES, VARIETY AND SIZE. THE REPLACEMENT TURFGRASS SOD VARIETY SHALL BE THE SAME AS SHOWN IN THE PLANTING LEGEND AS IF FOR NEW WORK, OR SHALL MATCH THE EXISTING TURFGRASS VARIETY WHERE EXISTING. TILL SOIL CONDITIONING MATERIALS INTO THE TOP 6 INCHES OF THE SOIL OVER THE AREA OF REPAIR/REPLACEMENT AS IF FOR NEW WORK. ADJUST FINISH GRADE SO NEW TURFGRASS SOD ABUTS FLUSH TO EXISTING SOD GRADE. THE REPLACEMENT PLANTS AND/OR TURFGRASS SOD SHALL BE MAINTAINED AS PART OF THE ORIGINAL SCOPE OF WORK. THE REPAIR OR REPLACEMENT WORK SHALL BE AT THE CONTRACTOR'S SOLE EXPENSE.*
20. *CONTRACTOR SHALL MAINTAIN THE NEW PLANTING FOR HEALTHY AND VIGOROUS GROWTH, WHICH INCLUDES BUT IS NOT LIMITED TO WATERING, WEEDING, FERTILIZING, MOWING AND EDGING (AT LEAST ONCE A WEEK), REMOVING TRASH AND DEBRIS, AND OTHER RELATED ACTIVITIES THROUGHOUT THE DURATION OF THE MAINTENANCE PERIOD UNTIL FINAL ACCEPTANCE.*

CONTRACTOR SPECIAL PLANTING NOTES:

1. *AN ASSESSMENT AND VALUATION OF ONSITE EXISTING TREES SCHEDULED TO REMAIN IN THE AREA OF WORK SHALL BE PERFORMED BY THE CONTRACTOR'S ARBORIST PRIOR TO THE START OF CONSTRUCTION OPERATIONS PER THE 'EXISTING LANDSCAPE PROTECTION' SPECIFICATION.*
2. *THE CONTRACTOR SHALL RIP, CONDITION AND TILL THE ENTIRE EXTENT OF ALL PLANTING AREAS RECEIVING NEW PLANTS PER THE PLANTING NOTES AND 'LANDSCAPE PLANTING' SPECIFICATIONS.*
3. *ALL EXISTING MIXED PLANTING AREAS RECEIVING NEW WOOD MULCH SHALL BE MANUALLY TILLED TO A MINIMUM DEPTH OF 4 INCHES, CLODS BROKEN UP TO A MAXIMUM 1 INCH DIAMETER, FINISH GRADED TO 2 INCHES BELOW ADJACENT SURFACES AND UTILITY/IRRIGATION BOXES WITHIN 12 INCHES OF THE HARDSCAPE EDGE, AND A PRE-EMERGENT HERBICIDE APPLIED PRIOR TO WOOD MULCH INSTALLATION. PROTECT EXISTING PLANTING DURING WOOD MULCH PREPARATION AND INSTALLATION.*
4. *THE ORIGINAL PLANTING OBSERVATION LOG SHALL BE MAINTAINED ON THE AS-BUILT RECORD DRAWING SET.*
5. *THE AS-BUILT RECORD DRAWING SET AND MAINTENANCE MANUAL SHALL BE SUBMITTED AND ACCEPTED PRIOR TO THE SCHEDULING OF A FINAL ACCEPTANCE REVIEW.*

SEE SHEETS LA1 TO LA3 FOR PLANTING PLAN AND LA4 FOR LEGEND

Know what's below. Call before you dig.

LICENSED LANDSCAPE ARCHITECT — BRILEY NO. — 12/31/24 Renewal Date — STATE OF CALIFORNIA

11/29/23

Blair, Church & Flynn CONSULTING ENGINEERS
Blair, Church & Flynn Consulting Engineers
453 Clovis Avenue, Suite 200
Clovis, California 93612
Tel (559) 326-1400
Fax (559) 326-1500

APPROVALS

FILE # 54–76 APPLICATION # 02–121996

IDENTIFICATION STAMP
DIV. OF THE STATE ARCHITECT
APP: 02-121996 INC:
REVIEWED FOR
SS ☑ FLS ☑ ACS ☑
DATE: 8/14/2024

LICENSED ARCHITECT — MICHAEL J. SCOTT — No. C-34290 — REN. 05-31-25 — STATE OF CALIFORNIA

DATE: DECEMBER 31, 2023

NEW PRESCHOOL AND TK/KINDERGARTEN CLASSROOMS AT SANTA FE ELEMENTARY SCHOOL

PORTERVILLE UNIFIED SCHOOL DISTRICT

286 E ORANGE AVENUE, PORTERVILLE, CA 93257

REVISIONS

MANGINI ARCHITECTURE INTERIORS

BARENG MORRELLI SCOTT

MANGINI ASSOCIATES INC.
4320 West Mineral King Avenue
Visalia, California 93291

www.mangini.us
(559) 627.0530 Office
(559) 627.1926 Fax

TITLE PLANTING DETAILS

LA5

PROJECT 23076

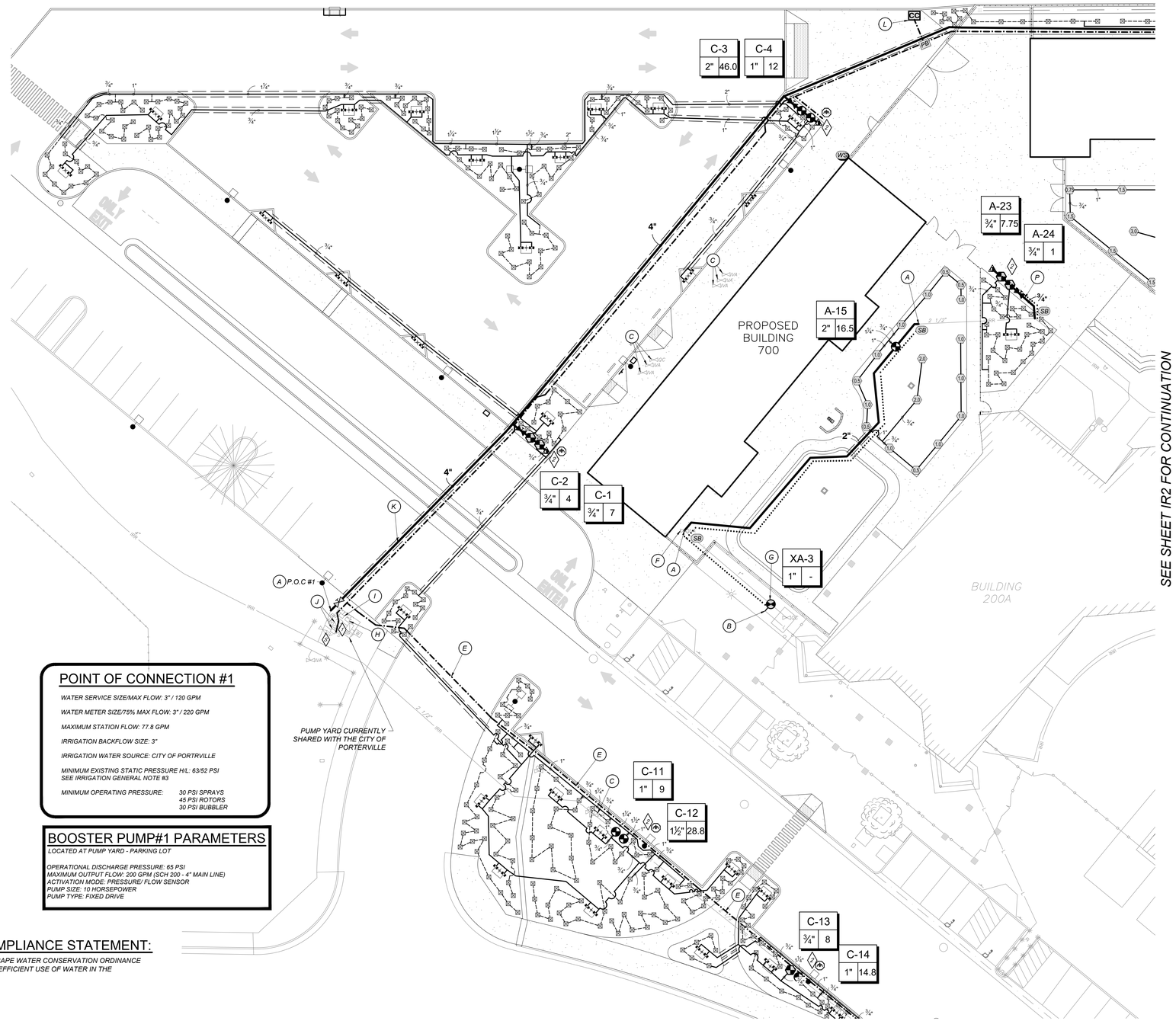

POINT OF CONNECTION #1

WATER SERVICE SIZE/MAX FLOW: 3" / 120 GPM

WATER METER SIZE/75% MAX FLOW: 3" / 220 GPM

MAXIMUM STATION FLOW: 77.8 GPM

IRRIGATION BACKFLOW SIZE: 3"

IRRIGATION WATER SOURCE: CITY OF PORTRVILLE

MINIMUM EXISTING STATIC PRESSURE HL: 63/52 PSI
SEE IRRIGATION GENERAL NOTE #3

MINIMUM OPERATING PRESSURE: *30 PSI SPRAYS*
45 PSI ROTORS
30 PSI BUBBLER

BOOSTER PUMP#1 PARAMETERS

LOCATED AT PUMP YARD - PARKING LOT

OPERATIONAL DISCHARGE PRESSURE: 65 PSI
MAXIMUM OUTPUT FLOW: 200 GPM (SCH 200 - 4" MAIN LINE)
ACTIVATION MODE: PRESSURE/ FLOW SENSOR
PUMP SIZE: 10 HORSEPOWER
PUMP TYPE: FIXED DRIVE

WATER CONSERVATION COMPLIANCE STATEMENT:

I HAVE COMPLIED WITH THE CRITERIA OF THE LANDSCAPE WATER CONSERVATION ORDINANCE AND GUIDELINES, AND HAVE APPLIED THEM FOR THE EFFICIENT USE OF WATER IN THE IRRIGATION DESIGN PLAN.

DAVID W. BRILEY, RLA 2787

IRRIGATION SYSTEM OBSERVATION LOG				
		REVIEWED & ACCEPTED BY OWNER'S REP OR LAND ARCH		
ITEM NO.	*WORK ITEM DESCRIPTION*	*PRINT NAME*	*SIGNATURE*	*DATE*
IR-1	*EXISTING SYSTEM OPERATION & PRESSURE CHECK*			
IR-2	*PIPING/WIRE SLEEVES UNDER PAVEMENT*			
IR-3	*MAIN LINE INSTALLATION & PRESSURE TEST*			
IR-4	*VALVE INSTALLATIONS*			
IR-5	*IRRIGATION COVERAGE PRIOR TO PLANTING*			
IR-6	*CONTROL EQUIPMENT INSTALLATION*			
IR-7	*BOOSTER PUMP INSTALLATION & START-UP (MANUF.)*	*N/A*	*N/A*	
IR-8	*FINAL SYSTEM OPERATION REVIEW*			

NOTE: *THE ORIGINAL VERSION OF THIS LOG SHALL BE MAINTAINED ON THE AS-BUILT RECORD DRAWING SET.*
WORK ITEMS MAY NOT BE REVIEWED IF PRIOR WORK ITEMS HAVE NOT BEEN ACCEPTED.

A / IR1 PARTIAL IRRIGATION PLAN

SEE SHEETS IR2 AND IR3 FOR IRRIGATION PLAN, IR4 FOR LEGEND AND NOTES AND IR5 AND IR6 FOR DETAILS

SCALE: N 1"=20'

0 5 20 40
SCALE IN FEET

Know what's below. Call before you dig.

LICENSED LANDSCAPE ARCHITECT
DAVID W. BRILEY
Signature
12/31/24
Renewal Date
Date
STATE OF CALIFORNIA
11/29/23

Blair, Church & Flynn
CONSULTING ENGINEERS
Blair, Church & Flynn
Consulting Engineers
451 Clovis Avenue,
Suite 200
Clovis, California 93612
Tel (559) 326-1400
Fax (559) 326-1500

APPROVALS

FILE #	APPLICATION #
54-76	02-121996

IDENTIFICATION STAMP
DIV. OF THE STATE ARCHITECT
APP: 02-121996 INC:
REVIEWED FOR
SS ☑ FLS ☑ ACS ☑
DATE: 8/14/2024

LICENSED ARCHITECT
MICHAEL J. SCOTT
No. C-34290
REN. 05-31-25
STATE OF CALIFORNIA

DATE: DECEMBER 31, 2023

NEW PRESCHOOL AND TK/KINDERGARTEN CLASSROOMS AT SANTA FE ELEMENTARY SCHOOL

PORTERVILLE UNIFIED SCHOOL DISTRICT
286 E ORANGE AVENUE, PORTERVILLE, CA 93257

REVISIONS

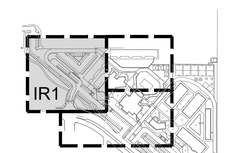

KEY MAP

MANGINI ARCHITECTURE INGENUITY
BARENG MORRELLI SCOTT
MANGINI ASSOCIATES INC.
4320 West Mineral King Avenue
Visalia, California 93291
www.mangini.us
(559) 627-0530 Office
(559) 627-1926 fax

TITLE
PARTIAL IRRIGATION PLAN

IR1

PROJECT 23076

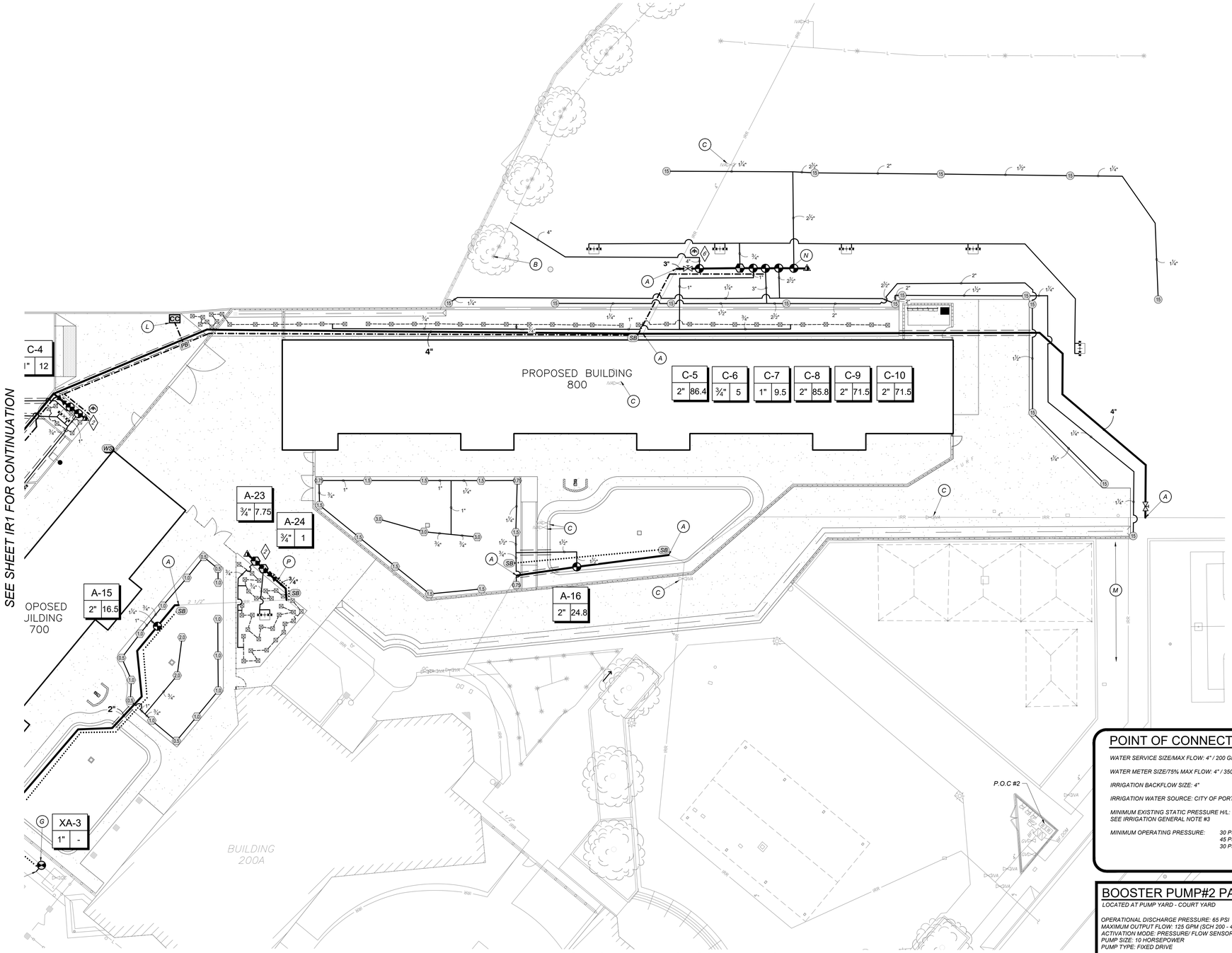

A / IR2 PARTIAL IRRIGATION PLAN

POINT OF CONNECTION #2

WATER SERVICE SIZE/MAX FLOW: 4" / 200 GPM

WATER METER SIZE/75% MAX FLOW: 4" / 350 GPM

IRRIGATION BACKFLOW SIZE: 4"

IRRIGATION WATER SOURCE: CITY OF PORTRVILLE

MINIMUM EXISTING STATIC PRESSURE H/L: 63/52 PSI
SEE IRRIGATION GENERAL NOTE #3

MINIMUM OPERATING PRESSURE: *30 PSI SPRAYS*
45 PSI ROTORS
30 PSI BUBBLER

BOOSTER PUMP#2 PARAMETERS

LOCATED AT PUMP YARD - COURT YARD

OPERATIONAL DISCHARGE PRESSURE: 65 PSI
MAXIMUM OUTPUT FLOW: 125 GPM (SCH 200 - 4" MAIN LINE)
ACTIVATION MODE: PRESSURE/ FLOW SENSOR
PUMP SIZE: 10 HORSEPOWER
PUMP TYPE: FIXED DRIVE

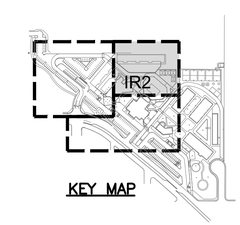

KEY MAP

SEE SHEETS IR1 AND IR3 FOR IRRIGATION PLAN, IR4 FOR LEGEND AND NOTES AND IR5 AND IR6 FOR DETAILS

SCALE: N 1"=20'

0 5 20 40
SCALE IN FEET

811 Know what's below. Call before you dig.

LICENSED LANDSCAPE ARCHITECT
BRILEY NO.
Signature
12/31/24
Renewal Date
Date
STATE OF CALIFORNIA
11/29/23

Blair, Church & Flynn
CONSULTING ENGINEERS
Blair, Church & Flynn Consulting Engineers
453 Clovis Avenue, Suite 200
Clovis, California 93612
Tel (559) 326-1400
Fax (559) 326-1500

APPROVALS

FILE #	APPLICATION #
54-76	02-121996

IDENTIFICATION STAMP
DIV. OF THE STATE ARCHITECT
APP: 02-121996 INC:
REVIEWED FOR
SS ☑ FLS ☑ ACS ☑
DATE: 8/14/2024

LICENSED ARCHITECT
MICHAEL J. SCOTT
No. C-34290
REN. 05-31-25
STATE OF CALIFORNIA
DATE: DECEMBER 31, 2023

NEW PRESCHOOL AND TK/KINDERGARTEN CLASSROOMS AT SANTA FE ELEMENTARY SCHOOL

PORTERVILLE UNIFIED SCHOOL DISTRICT
286 E ORANGE AVENUE, PORTERVILLE, CA 93257

REVISIONS

MANGINI ARCHITECTURE & ENGINEERING
BARENG MORRELLI SCOTT
MANGINI ASSOCIATES INC.
4320 West Mineral King Avenue
Visalia, California 93291
www.mangini.us
(559) 627-0530 Office
(559) 627-1926 Fax

TITLE
PARTIAL IRRIGATION PLAN

IR2

PROJECT 23076

SEE SHEET IR3 FOR CONTINUATION

SEE SHEET IR1 FOR CONTINUATION

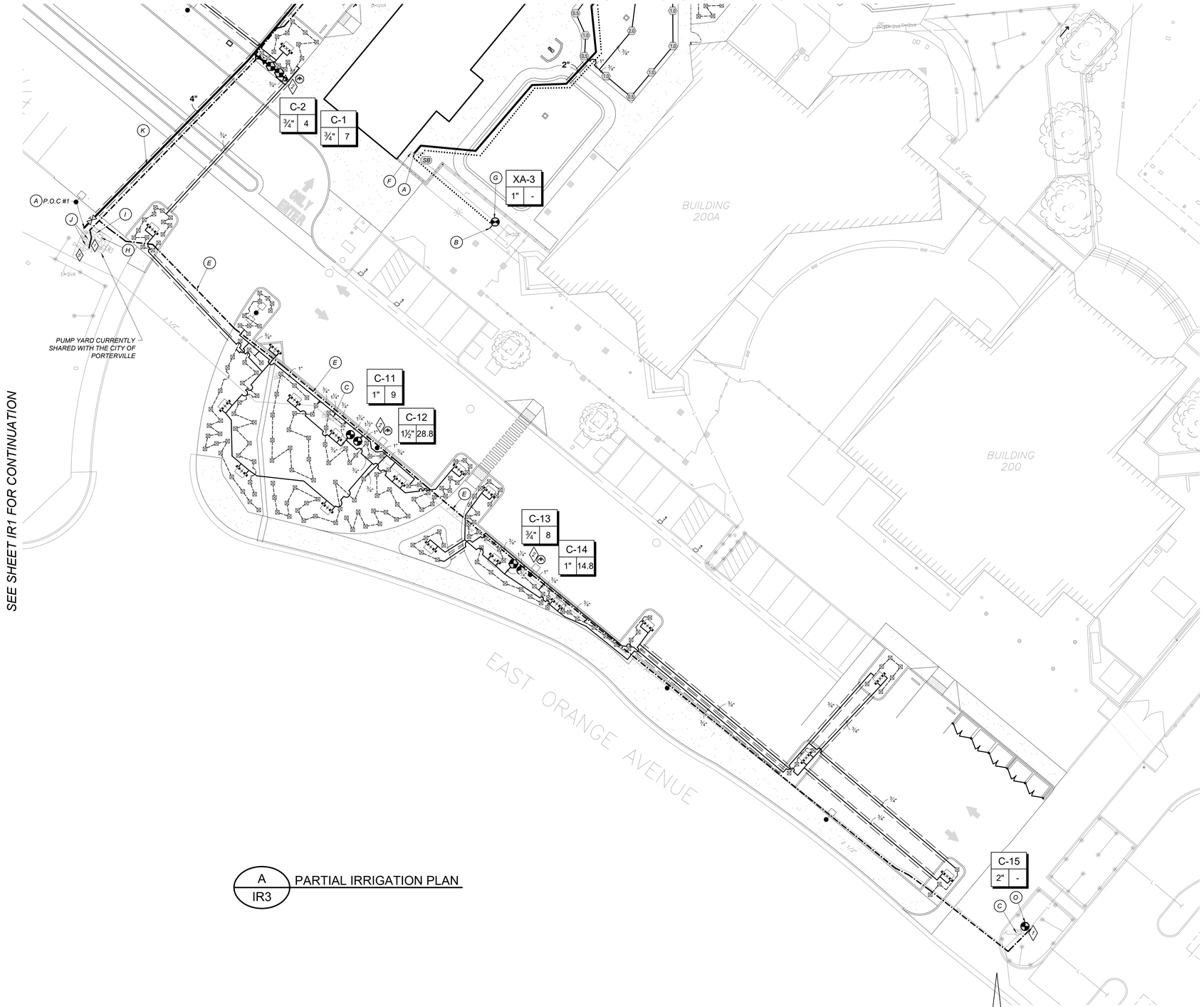

A / IR3 PARTIAL IRRIGATION PLAN

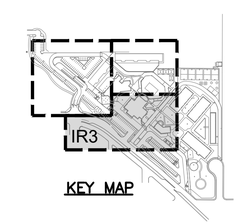

KEY MAP

SCALE: N 1"=20'

0 5 20 40
SCALE IN FEET

SEE SHEETS IR1 AND IR2 FOR IRRIGATION PLAN, IR4 FOR LEGEND AND NOTES AND IR5 AND IR6 FOR DETAILS

811 Know what's below. Call before you dig.

LICENSED LANDSCAPE ARCHITECT
STATE OF CALIFORNIA
11/29/23

Blair, Church & Flynn
CONSULTING ENGINEERS
Blair, Church & Flynn Consulting Engineers
451 Clovis Avenue, Suite 200
Clovis, California 93612
Tel (559) 326-1400
Fax (559) 326-1500

APPROVALS

FILE # 54-76 APPLICATION # 02-121996

IDENTIFICATION STAMP
DIV. OF THE STATE ARCHITECT
APP: 02-121996 INC:
REVIEWED FOR
SS ☑ FLS ☑ ACS ☑
DATE: 8/14/2024

LICENSED ARCHITECT
MICHAEL J. SCOTT
No. C-34290
REN. 05-31-25
STATE OF CALIFORNIA

DATE: DECEMBER 31, 2023

NEW PRESCHOOL AND TK/KINDERGARTEN CLASSROOMS AT SANTA FE ELEMENTARY SCHOOL

PORTERVILLE UNIFIED SCHOOL DISTRICT
286 E ORANGE AVENUE, PORTERVILLE, CA 93257

REVISIONS

MANGINI ARCHITECTURE INGENUITY
BARENG MORRELLI SCOTT
MANGINI ASSOCIATES INC.
4320 West Mineral King Avenue
Visalia, California 93291
www.mangini.us
(559) 627.0530 Office
(559) 627.1926 Fax

TITLE
PARTIAL IRRIGATION PLAN

IR3

PROJECT 23076

IRRIGATION LEGEND

SYMBOL	MANUFACTURER/MODEL/DESCRIPTION	ARC	PSI	GPM	RADIUS	DETAIL
	MULTI-STREAM SHURB BUBBLER 25Q HUNTER MSBN-25Q ON A RAIN BIRD RD-06-S	90	30	0.25	1'	A/IR6
	TREE BUBBLER 50H HUNTER PROS-04-PRS30-CV-MSBN-10F	180	30	0.5	1'	I/IR5
0.5	HUNTER I-20-04-SS-PRB-SR 0.5		50	0.5	18'	N/IR5
0.75	HUNTER I-20-04-SS-PRB-SR 0.75		50	0.75	25'	N/IR5
1.0	HUNTER I-20-04-SS-PRB-SR 1.0		50	1	18'	N/IR5
1.5	HUNTER I-20-04-SS-PRB-SR 1.5		50	1.5	25'	N/IR5
2.0	HUNTER I-20-04-SS-PRB-SR 2.0		50	2	18'	N/IR5
3.0	HUNTER I-20-04-SS-PRB-SR 3.0		50	3	25'	N/IR5
15	HUNTER I-25-04 15		65	14.3	57'	N/IR5
	EXISTING REMOTE CONTROL VALVE 2" IRRITROL 100 SERIES					
	REMOTE CONTROL VALVE IRRITROL 100P-G					L/IR5
	REMOTE CONTROL VALVE - 3/4" IRRITROL 700B-.75					L/IR5
	QUICK COUPLER VALVE HUNTER-44RC WITH HK44 KEY AND HS2 HOSE SWIVEL					G/IR5
	GATE VALVE LARGE LEEMCO LMV-BB PUSH-ON BELL ENDS, OR EQUAL (LARGE)					M/IR5
	GATE VALVE SMALL NIBCO T-113-K, OR EQUAL(SMALL PIPE SIZE)					M/IR5
CC	NEW CONTROLLER C REMOVE AND SALVAGE EXISTING CONTROLLER 'C' TO OWNER. REPLACE WITH A HUNTER A2C-75D-M TWO-WIRE OUTDOOR METAL PEDESTAL WITH A2C-LAN ETHERNET CONNECTION AND A2C-F3 FLOW SENSOR MODULE. PROVIDE ONE ROAM XL-KIT REMOTE. RUN CAT6 IN CONDUIT TO CONTROLLER. PROVIDE HUNTER ICD DECODERS AT CONTROL VALVES AS INDICATED. COORDINATE 120 VAC POWER CIRCUIT TO NEW CONTROLLER 'C' LOCATION. (SEE IRRIGATION PLAN FOR NEW LOCATION).					D/IR6
	GROUNDING ROD WITH 6 GA. GROUND WIRE, CONNECT TO ADJACENT DECODER. LOCATE 8' MIN. PERPENDICULAR TO CABLE					
PB	PULL BOX					F/IR6
SB	SPLICE BOX					J/IR5 G/IR6
WS	WIRED WEATHER SENSOR, HUNTER SOLAR-SYNC-SEN MOUNT IN SENSOR GUARD OUTSIDE OF CONTROLLER'S PEDESTAL ENCLOSURE					E/IR5
	IRRIGATION LATERAL LINE: PVC SCHEDULE 40 SOLVENT WELD, SIZE AS NOTED					C/IR5
	IRRIGATION LATERAL LINE: POLYETHYLENE 3/4" RAIN BIRD XBS 940 TUBING WITH TLF-0800 FITTINGS, AND 1/2" SPX-FLEX SWING PIPE WITH SB SERIES FITTINGS AT POP-UP HEADS					A/IR6
	IRRIGATION MAINLINE: PVC CLASS 200 SDR 21 RUBBER GASKETED, SIZE AS NOTED					A/IR5
	PIPE SLEEVE: PVC SCHEDULE 40 TWICE PIPE SIZE					D/IR5

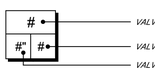

	TWO-WIRE CABLE - ACTIVE (GRAY) AND ONE SPARE (BLUE) TWO-WIRE CABLES IN CONDUIT	B/IR6
	CONTROL WIRE PLUS ONE (1) COMMON WIRE IN CONDUIT	B/IR6
L	EXISTING LATERAL LINE	
IRR	EXISTING MAIN LINE	
#	HUNTER ICD DECODER MODULE - QUANTITY/TYPE CHART: (PROVIDE A ICD-HP PROGRAMMER) AND DECODER STAKE KITS FOR INSTALLATION IN VALVE BOXES) 1 = ICD-100 2 = ICD-200 4 = ICD-400 6 = ICD-600 S = ICD-SEN	
BP	EXISTING BOOSTER PUMP (SEE IRRIGATION PLAN FOR PARAMETERS)	
CA	EXISTING CONTROLLER A - RAIN MASTER - EAGLE PLUS - 24 STATIONS/ 22 USED	
CB	EXISTING CONTROLLER B - IRRITROL - MC-18E - 14 STATIONS/ 14 USED (FIELD)	
W	EXISTING WATER METER	
FS	EXISTING FLOW SENSOR - MODEL: RAIN MASTER FS-300	
GV	EXISTING GATE VALVE	
IVC	EXISTING IRRIGATION VALVE	
+	PROPOSED TREE, SEE PLANTING PLAN ON SHEET L201 FOR VARIETY AND SIZE	
A	CONNECT NEW MAIN LINE TO EXISTING MAIN LINE.	
B	CONNECT NEW LATERAL LINE TO EXISTING LATERAL LINE.	
C	REMOVE EXISTING IRRIGATION VALVE. RETURN TO OWNER.	
D	RELOCATE AND RECONNECT EXISTING VALVE SCHEDULED TO REMAIN OPERATIONAL TO EXISTING MAIN LINE. USE EXISTING CONTROL STATION AND WIRE.	
E	RUN NEW TWO-WIRE CABLE TO EXISTING PLANTERS AND REPLACE DC SOLENOIDS WITH AC SOLENOIDS, KEEP THE RCVS.	
F	REMOVE AND RELOCATE EXISTING REMOTE CONTROL VALVE. SEE KEYNOTE "G" FOR NEW LOCATION.	
G	RELOCATE AND RECONNECT EXISTING REMOTE CONTROL VALVE SCHEDULED TO REMAIN OPERATIONAL TO EXISTING MAIN LINE. USE EXISTING CONTROL STATION AND WIRE.	
H	REMOVE EXISTING CONTROLLER "C".	
I	EXISTING CONTROLLER 'C1' - OWNED BY THE CITY OF PORTERVILLE - SHALL REMAIN OPERATIONAL.	
J	REPLACE AND RELOCATE EXISTING MASTER VALVE AND FLOW SENSOR.	
K	UPSIZE MAIN LINE FROM BOOSTER PUMP FROM 3" TO 4".	
L	PROVIDE CAT-6 ETHERNET CABLE IN CONDUIT TO CONTROLLER LOCATIONS AND MAKE CONNECTION. CONFIRM NEAREST CONNECTION POINT AND CONDUIT ROUTING WITH OWNER.	
M	PROTECT HEADS FOR NEW HARDSCAPE. ADJUST HEADS/NOZZLES FOR NEW IMPROVEMENTS. SEE GENERAL IRRIGATION NOTE #17	
N	IRRIGATION VALVES LOCATION SHOWN FOR CLARITY. LOCATE NEXT TO MOWSTRIP.	
O	REPLACE DC SOLENOIDS WITH AC SOLENOIDS, KEEP THE RCV AND EXTEND 2-WIRE CABLE FROM NEW CONTROLLER CC.	
P	PIPE SHOWN OUTSIDE OF PLANTER FOR CLARITY. INSTALL PIPE WITHIN PLANTER. SEE GENERAL IRRIGATION NOTE #8	

GENERAL IRRIGATION NOTES:

1. ALL ITEMS IN THE LEGEND ARE TO BE FURNISHED AND INSTALLED, UNLESS NOTED OTHERWISE. THE CONTRACTOR SHALL FURNISH THE ARTICLES, EQUIPMENT, MATERIALS OR PROCESSES SPECIFIED BY NAME. NO SUBSTITUTION WILL BE ALLOWED WITHOUT PRIOR WRITTEN APPROVAL OF THE DESIGN ENGINEER. (ALL MATERIAL REQUIRED SHALL BE NEW AND OF THE BEST QUALITY AVAILABLE)
2. THE DESIGN ENGINEER RESERVES THE RIGHT TO REJECT ANY MATERIAL OR WORK WHICH DOES NOT CONFORM TO THE CONTRACT PLANS AND SPECIFICATIONS WITHOUT THE PRIOR WRITTEN APPROVAL OF THE DESIGN ENGINEER.
3. PRIOR TO STARTING WORK, THE CONTRACTOR SHALL VERIFY THE EXISTING SYSTEM COMPONENTS' LOCATION, SIZES AND ROUTING FOR BACKFLOW PREVENTERS, CONTROLLERS, MAIN AND LATERAL PIPING, VALVES, SPRINKLER HEADS AND CONTROL WIRE; AND SHALL CONFIRM THEIR OPERATIONAL STATUS IN THE PRESENCE OF THE OWNER'S REPRESENTATIVE. THE CONTRACTOR SHALL ALSO VERIFY THE AVAILABLE STATIC PRESSURE AT THE POINT-OF-CONNECTION. FAILURE TO NOTIFY THE OWNER'S REPRESENTATIVE BEFORE STARTING WORK OF ANY DEVIATION FROM THE INFORMATION SHOWN ON THE CONTRACT DOCUMENTS, OR NECESSARY REPAIRS TO THE EXISTING SYSTEM, SHALL MAKE THE CONTRACTOR RESPONSIBLE TO PROVIDE, AT HIS OWN EXPENSE, ANY CORRECTIVE WORK OR COMPONENTS NECESSARY FOR A FULLY FUNCTIONAL SYSTEM WITH FULL COVERAGE.
4. THE CONTRACTOR IS RESPONSIBLE TO PROTECT AND KEEP ANY EXISTING IRRIGATION SYSTEM SCHEDULED TO REMAIN OPERATIONAL AT ALL TIMES DURING THE COURSE OF THIS WORK. THE CONTRACTOR SHALL REPLACE ANY PLANTS DEAD OR DISTRESSED DUE TO THE INTERRUPTION OF EXISTING IRRIGATION SCHEDULES AND SHALL PERFORM ALL WORK NECESSARY TO MAINTAIN THE EXISTING SYSTEM'S OPERATIONAL.
5. THE CONTRACTOR IS RESPONSIBLE TO LOCATE AND PROTECT ALL EXISTING UTILITIES. UTILITIES SHOWN ARE FOR THE CONTRACTOR'S AWARENESS AND NO SURVEY HAS BEEN COMPLETE TO VERIFY THE ACCURACY OF THE UTILITIES SHOWN. IT IS THE CONTRACTORS RESPONSIBILITY TO REPAIR ANY DAMAGED UTILITIES CAUSED BY CONSTRUCTION ACTIVITIES.
6. THE CONTRACTOR SHALL BE RESPONSIBLE TO VERIFY ALL DIMENSIONS SHOWN AND TO ADJUST SAID DIMENSIONS TO FIT SITE CONDITIONS AND ACTUAL EQUIPMENT INSTALLED.
7. THE CONTRACTOR SHALL NOT WILLFULLY INSTALL THE IRRIGATION FACILITIES AS INDICATED ON THE DRAWINGS WHEN IT IS OBVIOUS IN THE FIELD THAT UNKNOWN OBSTRUCTIONS MIGHT NOT HAVE BEEN CONSIDERED IN THE DESIGN. SUCH OBSTRUCTIONS OR DIFFERENCES SHALL BE BROUGHT TO THE ATTENTION OF THE DESIGN ENGINEER.
8. THE IRRIGATION PLAN IS DIAGRAMMATIC. ALL PIPING, VALVES, AND HEADS SHALL BE LOCATED IN PLANTING AREAS WHENEVER POSSIBLE.
9. THE CONTRACTOR SHALL PROVIDE ADEQUATE SAFETY MEASURES TO WARN AND PROTECT THE PUBLIC, OTHER SITE CONTRACTORS AND HIS WORKERS FROM POSSIBLE INJURY DUE TO HIS CONSTRUCTION EQUIPMENT AND OPERATIONS.
10. DUE TO THE SCALE OF THE DRAWINGS, IT IS NOT POSSIBLE TO INDICATE ALL OFFSETS, FITTINGS, ETC. WHICH MAY BE REQUIRED. THE CONTRACTOR SHALL CAREFULLY INVESTIGATE THE STRUCTURAL AND FINISHED CONDITIONS AFFECTING ALL HIS WORK, AND PLAN HIS WORK ACCORDINGLY, FURNISHING SUCH FITTINGS, ETC., AS MAY BE REQUIRED TO INSTALL THE PROPOSED FACILITIES AND ACCOMMODATE THE SITE CONDITIONS. DRAWINGS ARE GENERALLY DIAGRAMMATIC AND INDICATIVE OF THE WORK TO BE DONE TO PROVIDE A COMPLETE AND OPERATIONAL IRRIGATION SYSTEM. ALL WORK TO BE DONE IN ACCORDANCE WITH MANUFACTURER'S RECOMMENDATIONS, LOCAL CODES AND ORDINANCES.
11. VALVES SHALL BE LOCATED IN SHRUB/GROUND COVER AREAS INSTEAD OF IN TURFGRASS AREAS WHENEVER POSSIBLE. VALVES IN ATHLETIC SPORTS FIELDS SHALL BE LOCATED OUTSIDE OF THE FIELD-OF-PLAY TO THE GREATEST EXTENT POSSIBLE.
12. THE CONTRACTOR SHALL REPLACE ANY EXISTING PLANTS SCHEDULED TO REMAIN (SEE LANDSCAPE PLANS) THAT ARE DAMAGED BY THIS WORK WITH NEW PLANTS OF THE SAME SPECIES/VARIETY AND SIZE AS THE ORIGINAL.
13. ANY EXISTING TURFGRASS REMOVED FOR THIS WORK SHALL BE REPLANTED IF VIABLE, OR NEW SOD OF THE SAME SPECIES/VARIETY INSTALLED. THE UPPER 6 INCHES OF THE COMPACTED TRENCH BACKFILL SHALL BE CONDITIONED PER LANDSCAPE SPECIFICATIONS PRIOR TO SOD INSTALLATION. THE NEW SOD SURFACE SHALL BE FLUSH TO THE ADJACENT TURFGRASS WITHOUT HUMPS OR DEPRESSIONS.
14. INSTALL SLEEVES UNDER ALL ASPHALT/CONCRETE IMPROVEMENTS. SLEEVES SHALL BE PVC SCH. 40 PVC OR SDR 35 AND TWICE THE DIAMETER OF THE PIPE UNLESS OTHERWISE NOTED. CONTROL WIRING SHALL BE SLEEVED IN 2" SCH 40 PVC UNLESS OTHERWISE NOTED. MINIMUM DEPTH OF SLEEVES UNDER ALL ASPHALT/CONCRETE IMPROVEMENTS IS 18" BELOW SUBGRADE OR 24" BELOW FINISHED GRADE, WHICHEVER IS GREATER.
15. CONTRACTOR SHALL SAWCUT TO EXISTING JOINTS. REMOVE AND REPLACE SURFACING (CONCRETE, ASPHALT) AS NECESSARY TO INSTALL THE IRRIGATION SYSTEM.
16. THE CONTRACTOR SHALL PROVIDE AND KEEP AN UP-TO-DATE "RECORD DRAWING" SHOWING ALL CHANGES TO THE ORIGINAL DRAWINGS AND EXACT LOCATIONS OF THE FACILITIES INSTALLED. BEFORE FINAL INSPECTION, THE CONTRACTOR SHALL FURNISH MARKED "RECORD DRAWINGS" TO THE INSPECTOR.
17. THE CONTRACTOR SHALL PROVIDE ADJUSTMENT OF NOZZLE ARC AND RADIUS, INCLUDING ANY ALTERNATE NOZZLE TYPES, NECESSARY TO PROVIDE COMPLETE COVERAGE, TO SUIT ACTUAL SITE CONDITIONS, AND TO MINIMIZE OVERSPRAY ONTO HARDSCAPE, PAVEMENT AND/OR STRUCTURES.
18. CONCRETE ANCHORS OR THRUST BLOCKS SHALL BE PROVIDED ON ALL MAIN LINE PIPING. THEY ARE TO BE LOCATED AT ALL ABRUPT CHANGES IN PIPELINE GRADE, CHANGES IN HORIZONTAL ALIGNMENT, REDUCTION IN PIPE SIZES, END OF LINE AND IN-LINE VALVES TO ABSORB ANY AXIAL THRUST OF THE PIPE. THE PIPE MANUFACTURER'S RECOMMENDATIONS FOR THRUST CONTROL SHALL BE FOLLOWED. THRUST BLOCKS MUST BE FORMED AGAINST UNDISTURBED EARTH.
19. ALL MAIN LINE AND LATERAL LINE PIPES UNDER PAVEMENT SHALL BE PRESSURE TESTED WITH THE VALVES INSTALLED. THE CONTRACTOR SHALL PROVIDE ALL EQUIPMENT NEEDED. IF ANY LEAKS DEVELOP, THE REPAIRS ARE TO BE MADE AND THE TEST REPEATED UNTIL THE SYSTEM IS PROVEN WATERTIGHT. THE CONTRACTOR IS TO CENTER LOAD THE PIPE AND LEAVE ALL JOINTS EXPOSED FOR INSPECTION. THE PRESSURE TEST SHALL BE OBSERVED AND APPROVED BY THE OWNER'S REPRESENTATIVE. WHEN THE PIPE IS PROVEN WATERTIGHT AND ONLY THEN MAY THE LINE BE BACKFILLED.
20. WIRED CONNECTIONS BETWEEN THE CONTROLLER AND REMOTE CONTROL VALVES SHALL BE MADE WITH ONE CONTINUOUS DIRECT BURIAL WIRE RUN. A VALVE BOX MUST BE PROVIDED AT THE CONTRACTOR'S EXPENSE AT ALL UNDERGROUND SPLICES.
21. ONLY TEFLON TAPE OR AN APPROVED TEFLON PASTE MAY BE USED AS THE SEALING MATERIAL TO MAKE ALL THREADED CONNECTIONS. A MINIMUM OF TWO (2) WRAPS IN THE DIRECTION OF THE THREADS TO BE USED FOR TAPE. NO OTHER PIPE JOINT MATERIAL WILL BE ALLOWED WITHOUT THE WRITTEN AUTHORIZATION FROM THE DESIGN ENGINEER.
22. THE CONTRACTOR SHALL PROVIDE TWO (2) INDIVIDUALLY BOUND SETS OF OPERATION AND MAINTENANCE MANUALS. THE MANUAL SHALL CONTAIN THE FOLLOWING INFORMATION:
    - A. CONTRACTOR'S ADDRESS AND PHONE NUMBER.
    - B. DURATION OF GUARANTEE PERIOD (ONE YEAR AFTER FINAL ACCEPTANCE).
    - C. NAMES, ADDRESSES AND PHONE NUMBERS OF LOCAL MANUFACTURER REPRESENTATIVES.
    - D. COMPLETE SET OF MANUFACTURER'S LITERATURE AND SPECIFICATIONS.
    - E. COMPLETE OPERATING AND MAINTENANCE INSTRUCTIONS ON ALL MAJOR EQUIPMENT.
    - F. ISSUE A "CERTIFICATE OF CONSTRUCTION COMPLIANCE" WHICH STATES THAT ALL WORK DONE AND MATERIALS AND EQUIPMENT USED ARE IN CONFORMANCE WITH THE APPROVED PLANS, SPECIFICATIONS AND ALL AUTHORIZED REVISIONS.
    - G. INITIAL ELECTRICAL DATA ON EACH VALVE:
      - (1) OHMMS READING FOR EACH VALVE TAKEN AT THE CONTROLLER.
      - (2) VOLTAGE READING FOR EACH VALVE TAKEN BOTH AT THE CONTROLLER AND AT THE VALVE.
23. THE CONTRACTOR SHALL PROVIDE TWO SETS OF CONTROLLER CHARTS. THE CHARTS TO BE A REDUCED DRAWING OF THE ACTUAL PLANS. THE CHARTS SHALL BE COLORED WITH A DIFFERENT COLOR FOR EACH IRRIGATION CIRCUIT. THE CHARTS SHALL BE COVERED IN A WATERTIGHT ENVELOPE.
24. IRRIGATION LINE TRENCHING AND PIPE INSTALLATION LOCATED WITHIN THE CANOPY DRIP LINE OF EXISTING TREES SHALL BE PERFORMED BY HAND OR BY AIR SPADE WITHOUT CUTTING OR DAMAGING EXISTING ROOTS GREATER THAN ONE INCH IN DIAMETER. SEE EXISTING LANDSCAPE PROTECTION SECTION FOR ADDITIONAL REQUIREMENTS.
25. REPLACE ALL DAMAGED EXISTING VALVE BOXES AND/OR LIDS WITHIN THE AREA OF WORK. ADJUST THE ELEVATION OF ALL EXISTING VALVE BOXES WITHIN THE AREA OF WORK TO FINISH GRADE AS NECESSARY TO COMPLY WITH THE VALVE BOX DETAIL.

CONTRACTOR SPECIAL IRRIGATION NOTES:

1. THE CONTRACTOR SHALL PERFORM AN OPERATIONAL ASSESSMENT OF THE EXISTING IRRIGATION SYSTEM WITHIN THE AREA OF WORK WITH THE OWNER'S REPRESENTATIVE PRIOR TO THE START OF CONSTRUCTION OPERATIONS.
2. THE CONTRACTOR SHALL ENSURE THAT ALL EXISTING PLANTING SCHEDULED TO REMAIN SHALL CONTINUE TO BE IRRIGATED THROUGHOUT THE COURSE OF CONSTRUCTION OPERATIONS. ANY DAMAGE TO THE EXISTING IRRIGATION SYSTEM THAT IMPACTS EXISTING PLANTING TO REMAIN SHALL BE IMMEDIATELY REPAIRED TO THE OWNER'S SATISFACTION.
3. PRIOR TO THE START OF ANY SHRUB, GROUND COVER, AND/OR TURFGRASS PLANTING, AN OPERATIONAL REVIEW OF THE IRRIGATION SYSTEM SHALL BE PERFORMED FOR PROPER COVERAGE AND SOIL MOISTURE DEPTH BY THE OWNER'S REPRESENTATIVE. ALL CORRECTIONS AND/OR ADJUSTMENTS SHALL BE COMPLETED AND VERIFIED BY THE OWNER'S REPRESENTATIVE BEFORE GROUND LEVEL PLANTING MAY COMMENCE.
4. THE ORIGINAL IRRIGATION SYSTEM OBSERVATION LOG SHALL BE MAINTAINED ON THE AS-BUILT RECORD DRAWING SET.
5. THE AS-BUILT RECORD DRAWING SET AND OTHER CLOSE-OUT ITEMS SHALL BE SUBMITTED AND ACCEPTED PRIOR TO THE SCHEDULING OF A FINAL ACCEPTANCE REVIEW.
6. UNLESS NOTED OTHERWISE, SALVAGE AND RETURN TO THE OWNER ALL IRRIGATION VALVES, HEADS AND OTHER EQUIPMENT COMPONENTS REMOVED AS PART OF THE WORK. SALVAGED COMPONENTS SHALL BE CLEAN AND IN WORKING CONDITION UNLESS NOTED AS NON-OPERATIONAL DURING THE OPERATIONAL ASSESSMENT.

TWO-WIRE DECODER SYSTEM NOTES:

1. ALL DECODERS, CONTROL WIRE, ACCESSORIES, CONNECTORS, GROUNDING AND INSTALLATION SHALL COMPLY WITH THE CONTROLLER/DECODER MANUFACTURER'S SPECIFICATIONS AND REQUIREMENTS.
2. THE IRRIGATION CONTROLLER SHALL HAVE A DEDICATED EARTH GROUND, BY MEANS OF EITHER AN EIGHT FOOT LONG STEEL COPPER CLAD GROUND ROD, OR BY A PAIGE GROUNDING PLATE. THE GROUND ROD OR PLATE SHALL BE LOCATED AT LEAST 8 FEET AWAY FROM THE CONTROLLER, AND THE PLATE SHALL BE ORIENTED PERPENDICULAR FROM THE WIRE RUN AND SHALL BE AT LEAST 36 INCHES BELOW GRADE. GROUNDING CIRCUIT RESISTANCE SHALL BE LESS THAN OR EQUAL TO 10 OHMS.
3. EARTH GROUNDING SHALL BE INSTALLED ALONG THE WIRE PATH AT EVERY 12TH DECODER, OR 1,000 FEET OF CABLE RUN, WHICHEVER IS SHORTER. THE LAST DECODER ON A WIRE RUN SHALL BE EARTH GROUNDED. THE GROUNDING PLATE SHALL BE ORIENTED PERPENDICULAR FROM THE CABLE RUN AND SHALL BE AT LEAST 36 INCHES BELOW GRADE.
4. TWO-WIRE CABLE SHALL BE A JACKETED, TWISTED PAIR OF 14 AWG SOLID-CORE WIRE FOR UP TO 10,000 FEET OF RUN. WIRE CONNECTORS SHALL BE DBRY-6, OR EQUAL. EACH SEPARATE WIRE PATH FROM THE CONTROLLER SHALL HAVE A DIFFERENT COLOR CABLE MARKING.
5. CABLE PATH BRANCHES SHALL BE MADE WITH A PAIGE DCFC SPLITTER. INSTALL THE SPITTER WITH DBRY-6 CONNECTORS. PROVIDE A MINIMUM OF 5 FEET OF SLACK CABLE ON EACH SIDE OF THE CONNECTION, AND INSTALL IN A RECTANGULAR VALVE BOX PER THE SPECIFICATIONS.
6. USE ONE DECODER STATION TO OPERATE ONE CONTROL VALVE. GROUPED VALVES MAY USE MULTIPLE STATION DECODERS (2, 4, OR 6 OUTPUTS IN ONE DECODER). FLOW AND/OR CLICK TYPE SENSORS SHALL USE AN APPROPRIATE SENSOR DECODER. USE A SINGLE STATION DECODER FOR ANY PUMP START OR MASTER VALVE PURPOSE.
7. INSTALL THE DECODER INSIDE THE CONTROL VALVE BOX. PROVIDE ADEQUATE SLACK WIRE FOR ABOVE-GROUND INSPECTION AND MAINTENANCE. USE TWISTED WIRE CABLE FOR DECODER TO SOLENOID RUNS GREATER THAN 20 FEET UP TO 150 FEET, OTHERWISE USE 14 AWG IRRIGATION CONTROL WIRE. DECODER TO SOLENOID CONNECTIONS SHALL BE MADE WITH DBY-6 CONNECTORS OR EQUAL.

SEE SHEETS IR1 TO IR3 FOR IRRIGATION PLAN, AND IR5 AND IR6 FOR DETAILS

SCALE: N 1"=20'

0 5 20 40
SCALE IN FEET

Know what's below. Call before you dig.

LICENSED LANDSCAPE ARCHITECT
BRILEY NO.
12/31/24
Renewal Date
Date
STATE OF CALIFORNIA
11/29/23

Blair, Church & Flynn
CONSULTING ENGINEERS
Blair, Church & Flynn Consulting Engineers
453 Clovis Avenue, Suite 200
Clovis, California 93612
Tel (559) 326-1400
Fax (559) 326-1500

APPROVALS
FILE # 54-76
APPLICATION # 02-121996

IDENTIFICATION STAMP
DIV. OF THE STATE ARCHITECT
APP: 02-121996 INC: A
REVIEWED FOR
SS ☑ FLS ☑ ACS ☑
DATE: 8/14/2024

LICENSED ARCHITECT
MICHAEL J. SCOTT
No. C-34290
REN. 05-31-25
STATE OF CALIFORNIA
DATE: DECEMBER 31, 2023

NEW PRESCHOOL AND TK/KINDERGARTEN CLASSROOMS AT SANTA FE ELEMENTARY SCHOOL
PORTERVILLE UNIFIED SCHOOL DISTRICT
286 E ORANGE AVENUE, PORTERVILLE, CA 93257

REVISIONS

MANGINI ARCHITECTURE
BARENG MORRELLI SCOTT
MANGINI ASSOCIATES INC.
4320 West Mineral King Avenue
Visalia, California 93291
www.mangini.us
(559) 627.0530 Office
(559) 627.1926 Fax

TITLE
IRRIGATION LEGEND

IR4

PROJECT 23076

APPROVALS

FILE # 54-76 | APPLICATION # 02-121996

IDENTIFICATION STAMP
DIV. OF THE STATE ARCHITECT
APP: 02-121996 INC:
REVIEWED FOR
SS ☑ FLS ☑ ACS ☑
DATE: 8/14/2024

LICENSED ARCHITECT
MICHAEL J. SCOTT
No. C-34290
REN. 05-31-25
STATE OF CALIFORNIA

DATE: DECEMBER 31, 2023

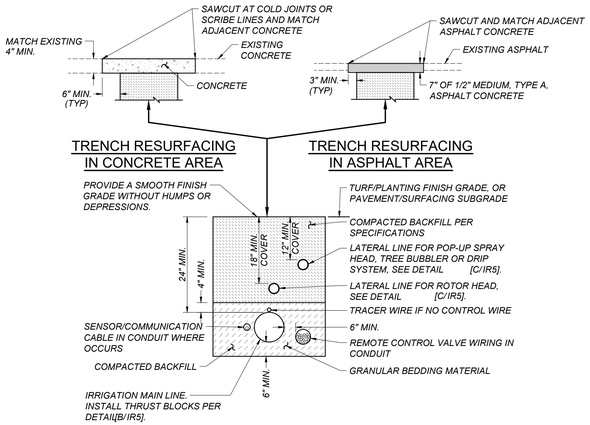

A / IR5 IRRIGATION TRENCH BACKFILL
NOT TO SCALE

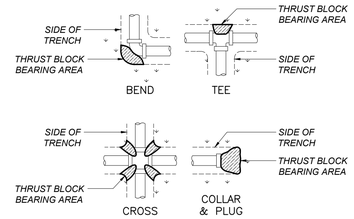

NOTE: CONCRETE PER SPECIFICATIONS. THRUST BLOCKS NOT REQUIRED WITH LESS THAN 2" MAIN LINE

TABLE OF BEARING AREAS REQUIRED (IN SQUARE FEET)

PIPE DIAMETER	≦4"	6"	8"	10"	12"
CROSS, TEE, 90° BEND, PLUG, FIRE HYDRANT	1	3	5	8	11
45° BEND	1	2	3	4	6
22-1/2° BEND	0.5	1	2	2	3
11-1/4° BEND	0	0	1	1	2
GATE VALVE (IN-LINE)	0	1	2.5	4	9

B / IR5 CONCRETE THRUST BLOCKS
NOT TO SCALE

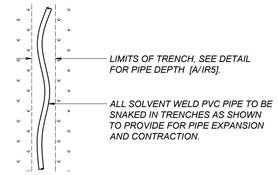

C / IR5 SOLVENT WELD PIPE
NOT TO SCALE

CONDUIT/SLEEVE FOR CONTROL WIRE

CONDUIT/SLEEVE SIZE	QTY. 14 GA. WIRE
1"	8 OR LESS
1-1/4"	15
1-1/2"	20
2"	32
2-1/2"	45
3"	70
4"	120

NOTE: SLEEVE FOR PIPE IS 2X THE PIPE DIAMETER

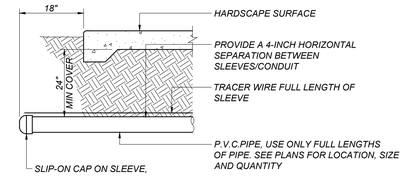

NOTE:
IF CONTROL WIRES ARE ROUTED IN CONDUIT, SLEEVE FOR WIRES IS NOT REQUIRED

D / IR5 IRRIGATION SLEEVE/CONDUIT
NOT TO SCALE

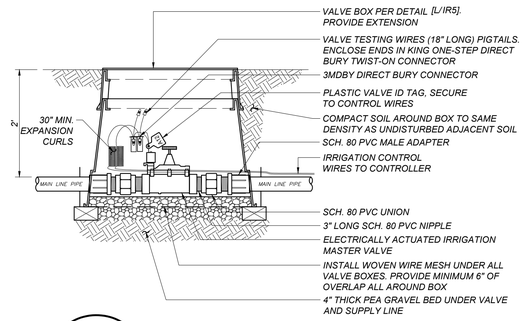

F / IR5 MASTER VALVE
NOT TO SCALE

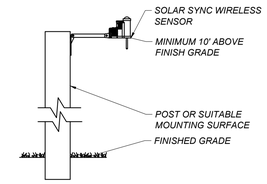

E / IR5 SOLAR SYNC WIRELESS
NOT TO SCALE

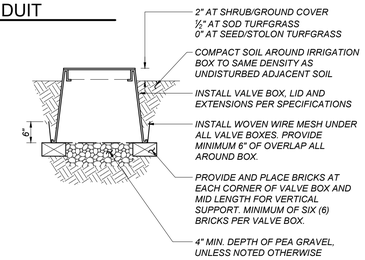

NOTE:
PROVIDE A TRAFFIC RATED CONCRETE BOX AND LID FOR ANY BOX LOCATED IN HARDSCAPE PAVEMENT AND SET FLUSH TO FINISHED SURFACE. PROVIDE A 6"X6" CONCRETE COLLAR AROUND THE BOX IF LOCATED IN ASPHALTIC CONCRETE.

K / IR5 IRRIGATION VALVE BOX
NOT TO SCALE

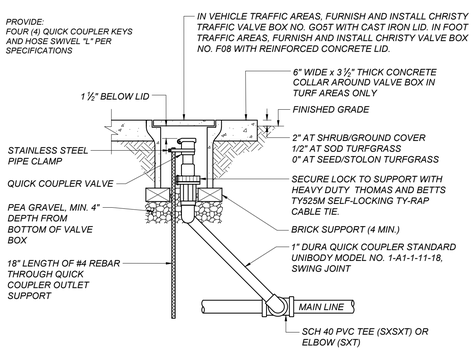

G / IR5 QUICK COUPLER VALVE
NOT TO SCALE

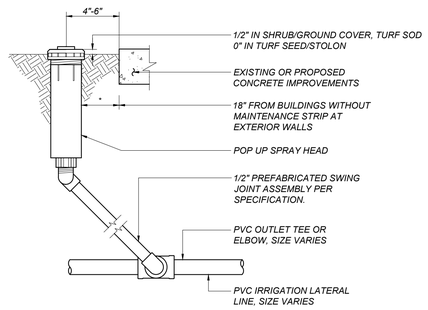

H / IR5 POP-UP SPRAY
NOT TO SCALE

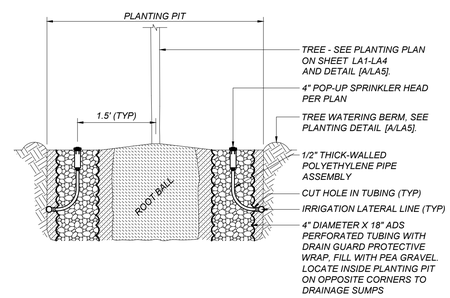

I / IR5 TREE BUBBLERS
NOT TO SCALE

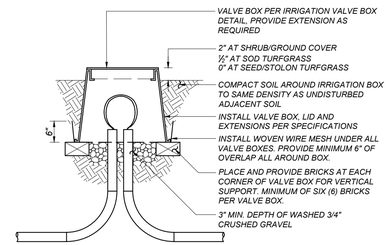

J / IR5 2-WIRE SPLICEBOX
NOT TO SCALE

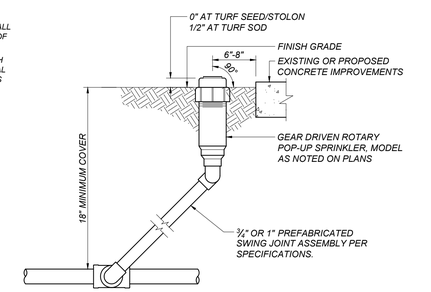

N / IR5 POP-UP ROTOR
NOT TO SCALE

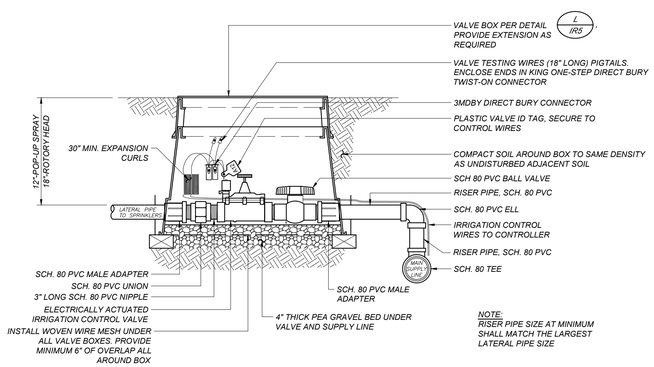

NOTE:
RISER PIPE SIZE AT MINIMUM SHALL MATCH THE LARGEST LATERAL PIPE SIZE

L / IR5 REMOTE CONTROL VALVE WITH BALL VALVE - GLOBE
NOT TO SCALE

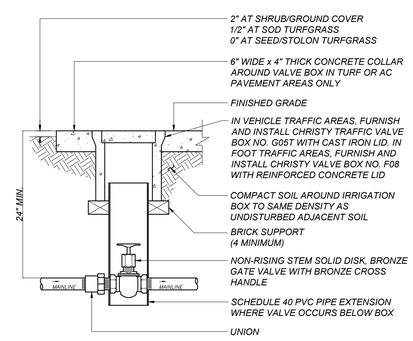

1-1/2" AND SMALLER GATE VALVE

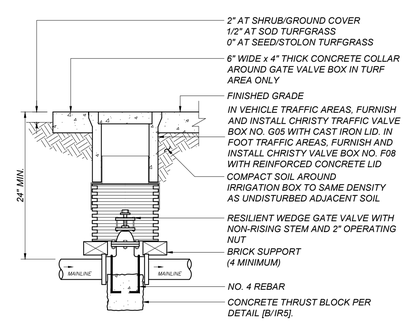

2" AND LARGER GATE VALVE

M / IR5 GATE VALVE
NOT TO SCALE

SEE SHEETS IR1 TO IR3 FOR IRRIGATION PLAN AND IR4 FOR LEGEND AND NOTES

811 Know what's below. Call before you dig.

LICENSED LANDSCAPE ARCHITECT
BRILEY NO.
Signature
12/31/24
Renewal Date
Date
STATE OF CALIFORNIA
11/29/23

Blair, Church & Flynn
CONSULTING ENGINEERS
Blair, Church & Flynn Consulting Engineers
453 Clovis Avenue, Suite 200
Clovis, California 93612
Tel (559) 326-1400
Fax (559) 326-1500

NEW PRESCHOOL AND TK/KINDERGARTEN CLASSROOMS AT SANTA FE ELEMENTARY SCHOOL

PORTERVILLE UNIFIED SCHOOL DISTRICT
286 E ORANGE AVENUE, PORTERVILLE, CA 93257

REVISIONS

MANGINI ARCHITECTURE INTERIOR ARCHITECTURE
BARENG MORRELLI SCOTT
MANGINI ASSOCIATES INC.
4330 West Mineral King Avenue
Visalia, California 93291
www.mangini.us
(559) 627-0530 Office
(559) 627-1926 Fax

TITLE
IRRIGATION DETAILS

IR5

PROJECT 23076

APPROVALS

FILE # 54-76 | APPLICATION # 02-121996

IDENTIFICATION STAMP
DIV. OF THE STATE ARCHITECT
APP: 02-121996 INC:
REVIEWED FOR
SS ☑ FLS ☑ ACS ☑
DATE: 8/14/2024

LICENSED ARCHITECT MICHAEL J. SCOTT No. C-34290 REN. 05-31-25 STATE OF CALIFORNIA

DATE: DECEMBER 31, 2023

NOTE:
ALL CONTROL WIRE AND TWO-WIRE CONTROL CABLE SHALL BE INSTALLED IN CONDUIT

LEGEND:

1. XBS 940 3/4" TUBING
2. TLF-TEE-0800 OR TLF-ELBOW-0800
3. EMITTER ON SPX PIPE
4. SHRUB, SEE PLANTING PLAN FOR VARIETY AND LAYOUT
5. LATERAL PIPE, PVC SCHEDULE 40
6. SCHEDULE 40 PVC TEE WITH TLF-MPT8-0800 3/4" MNPT, 3/4" BARB ADAPTER

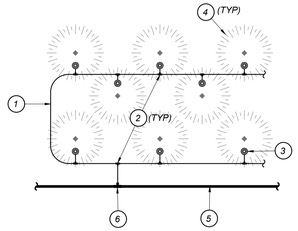

NOTE:
MAXIMUM FLOW ON A BUBBLER LOOP IS 8.0 GPM (480 GPH)

A / IR6 SHRUB BUBBLER LOOP
NOT TO SCALE

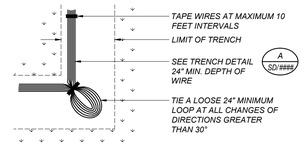

NOTES:

1. TRADITIONAL WIRES UNDER PAVEMENT OR WALKS SHALL BE INSTALLED WITHIN A CONDUIT WHICH HAS BEEN PLACED BY BORING, JACKING OR DRILLING. CONDUIT TO BE PVC SCH 40 TYPE II PIPE. WIRES SHALL NOT BE TAPED TOGETHER INSIDE THE CONDUIT.
2. NO SPLICES ARE ALLOWED BETWEEN POINTS OF CONNECTIONS.
3. A VALVE BOX MUST BE PROVIDED AT ALL UNDERGROUND SPLICE CONNECTIONS.
4. HOT - RED
   COMMON - WHITE
   SPARE HOT - BLACK
   SPARE COMMON - BLUE
   TRACER WIRE - GREEN

TRADITIONAL CONTROL WIRE

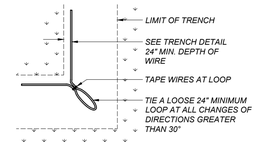

NOTES:

1. TWO-WIRE SHALL BE INSTALLED WITHIN A CONDUIT PVC SCH. 40 TYPE II PIPE CONDUIT.
2. SPLICES ARE ALLOWED ONLY WITH DBRY-6 CONNECTORS.
3. A VALVE BOX MUST BE PROVIDED AT ALL UNDERGROUND SPLICE CONNECTIONS.
4. SEE TWO-WIRE DECIDER SYSTEM NOTES.

TWO-WIRE CONTROL CABLE

B / IR6 CONTROL WIRE
NOT TO SCALE

NOTE:
ALL VALVES ARE TO BE GROUPED SIMILARLY TO BELOW WHERE POSSIBLE. ALL VALVE BOXES ARE TO BE SQUARE WITH ONE ANOTHER, AND PERPENDICULAR TO ADJACENT PAVEMENT.

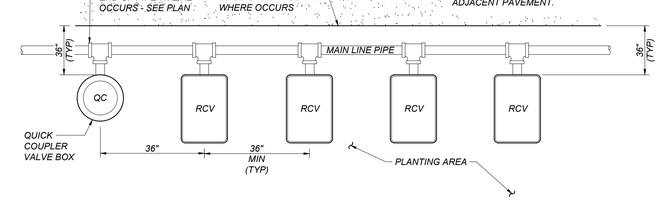

C / IR6 VALVE BOX LAYOUT
NOT TO SCALE

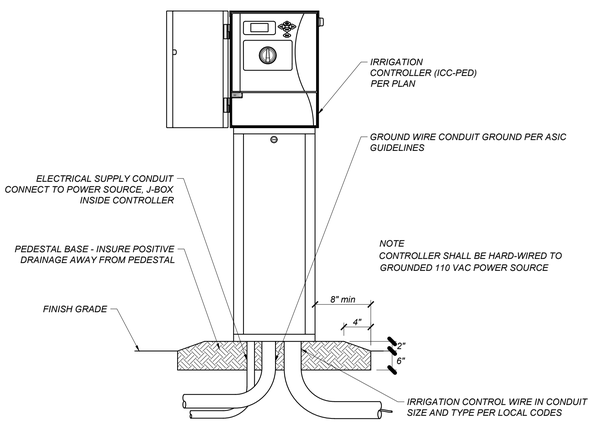

D / IR6 PEDESTAL CONTROLLER ASSEMBLY
NOT TO SCALE

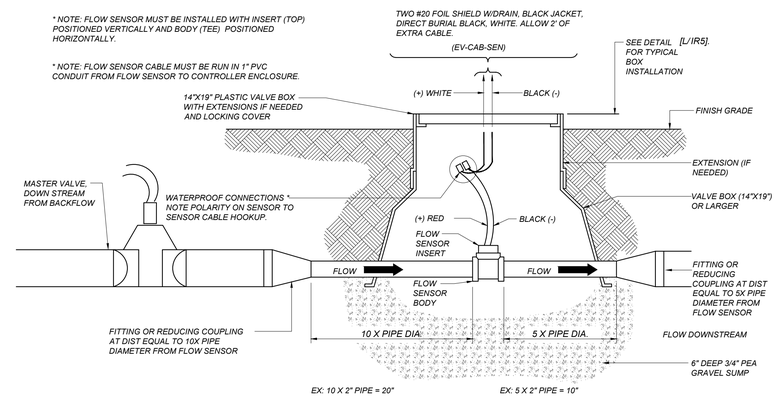

E / IR6 FLOW SENSOR AND MASTER VALVE
NOT TO SCALE

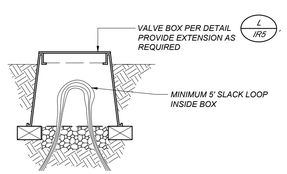

F / IR6 PULLBOX
NOT TO SCALE

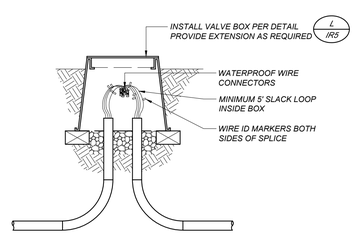

G / IR6 SPLICEBOX
NOT TO SCALE

SEE SHEETS IR1 TO IR3 FOR IRRIGATION PLAN AND IR4 FOR LEGEND AND NOTES

811 Know what's below. Call before you dig.

LICENSED LANDSCAPE ARCHITECT BRILEY NO. STATE OF CALIFORNIA
Signature 12/31/24 Renewal Date
Date 11/29/23

Blair, Church & Flynn
CONSULTING ENGINEERS
Blair, Church & Flynn Consulting Engineers
451 Clovis Avenue, Suite 200
Clovis, California 93612
Tel (559) 326-1400
Fax (559) 326-1500

NEW PRESCHOOL AND TK/KINDERGARTEN CLASSROOMS AT SANTA FE ELEMENTARY SCHOOL

PORTERVILLE UNIFIED SCHOOL DISTRICT
286 E ORANGE AVENUE, PORTERVILLE, CA 93257

REVISIONS

MANGINI ARCHITECTURE INGENUITY
BARENG MORRELLI SCOTT
MANGINI ASSOCIATES INC.
4320 West Mineral King Avenue
Visalia, California 93291
www.mangini.us
(559) 627-0330 Office
(559) 627-3925 Fax

TITLE
IRRIGATION DETAILS

IR6

PROJECT 23076

APPROVALS

FILE # 54-76 | APPLICATION # 02-121996

IDENTIFICATION STAMP
DIV. OF THE STATE ARCHITECT
APP: 02-121996 INC:
REVIEWED FOR
SS ☑ FLS ☑ ACS ☑
DATE: 8/14/2024

LICENSED ARCHITECT
MICHAEL J. SCOTT
No. C-34290
REN. 05-31-25
STATE OF CALIFORNIA

DATE: DECEMBER 31, 2023

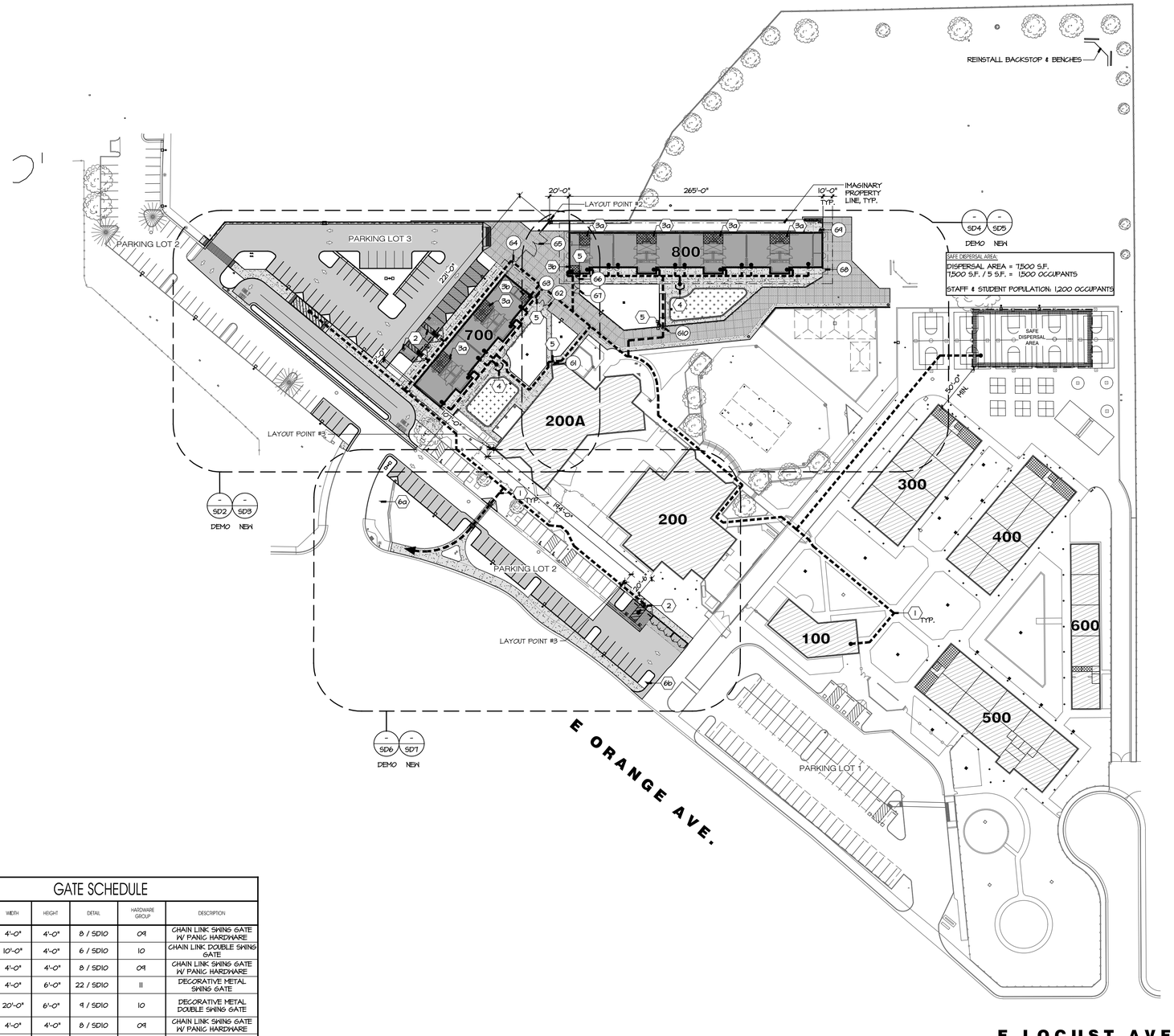

NOTES AND LEGEND :

- NEW BUILDING
- EXIST. BUILDING
- ACCESSIBLE RESTROOMS
- NEW 4" CONCRETE PAVING
- NEW 5" CONCRETE PAVING
- NEW 6" CONCRETE PAVING
- NEW POURED-IN-PLACE SOFT FALL SURFACING, OWNER PROVIDED, CONTRACTOR INSTALLED
- NEW AC PAVING
- ACCESSIBLE PATH OF TRAVEL
- PROPERTY LINE
- EXISTING CHAIN LINK FENCE
- NEW CHAIN LINK FENCE

(1) ACCESSIBLE PATH OF TRAVEL :

PATH OF TRAVEL (P.O.T.) AS VERIFIED BY THE ARCHITECT IS:
- A COMMON BARRIER FREE ACCESSIBLE ROUTE AT LEAST 48" WIDE WITHOUT ANY ABRUPT VERTICAL CHANGES EXCEEDING 1/2" BEVELED AT 1:2 MAXIMUM SLOPE, EXCEPT THAT LEVEL CHANGES DO NOT EXCEED 1/4" VERTICAL.
- THE PATH SURFACE IS SLIP RESISTANT, STABLE, FIRM, AND SMOOTH.
- PASSING SPACES AT LEAST 60" x 60" ARE LOCATED NOT MORE THAN 200' APART (11B-403.5.3).
- CONTINUOUS GRADIENTS HAVE 60" LEVEL AREAS NOT MORE THAN 400' APART (11B-403.7).
- CROSS-SLOPE DOES NOT EXCEED 2%.
- SLOPE IN THE DIRECTION OF TRAVEL IS 5% OR LESS UNLESS OTHERWISE INDICATED AS A RAMP.
- MAINTAIN P.O.T. FREE OF OVERHANGING OBSTRUCTIONS TO 80" MINIMUM, PROTRUDING OBJECTS GREATER THAN 4" PROJECTION FROM WALL OR EDGE AND 27" ABOVE FINISH GRADE (11B-307.2).
- GRATING LOCATED IN THE SURFACE OF ANY PEDESTRIAN WAY IN THE P.O.T. SHALL HAVE GRID/OPENINGS IN GRATING LIMITED TO 1/2" MAXIMUM CLEAR IN THE DIRECTION OF TRAVEL FLOW

(2) ACCESSIBLE PARKING :

NEW ACCESSIBLE PARKING, SEE DETAILS 8/SD8 & 16/SD8.

PARKING LOT 1: 71 EXISTING PARKING STALLS PER DSA# 02-103538/02-108500.
3 ACCESSIBLE PARKING STALLS REQUIRED. 6 ACCESSIBLE PARKING STALLS INCLUDING 2 VAN ACCESSIBLE STALLS PROVIDED, 6>3 THEREFORE OK.

PARKING LOT 2: 112 EXISTING PARKING STALLS PER DSA# 02-102527 REDUCED TO 105 PARKING STALLS PER THIS APPLICATION.
5 ACCESSIBLE PARKING STALLS REQUIRED. 6 ACCESSIBLE PARKING STALLS INCLUDING 1 VAN ACCESSIBLE STALL PROVIDED, 6>5 THEREFORE OK.

PARKING LOT 3: 49 PARKING STALLS PER THIS APPLICATION.
2 ACCESSIBLE PARKING STALLS REQUIRED. 2 ACCESSIBLE PARKING STALLS INCLUDING 1 VAN ACCESSIBLE STALL PROVIDED, 2=2 THEREFORE OK.
1 VAN ACCESSIBLE EV CHARGING STATION, 1 STANDARD ACCESSIBLE EV CHARGING STATION, AND 6 EV CAPABLE STALLS PROVIDED

ACCESSIBLE TOILETS

(3a) NEW ACCESSIBLE STUDENT TOILET ROOMS PER THIS APPLICATION. SEE SHEETS A2 & A12.

(3b) NEW ACCESSIBLE UNISEX STAFF TOILET ROOM PER THIS APPLICATION. SEE SHEETS A2 & A12.

(4) ACCESSIBLE DRINKING FOUNTAIN

NEW HI-LO DRINKING FOUNTAIN PER THIS APPLICATION. SEE DETAIL 1/SD11

(5) GATE ACCESS NOTE :

ALL C.L. AND DECORATIVE METAL 4'-0" WIDE GATES IN THE PATH OF TRAVEL SHALL HAVE LEVER-TYPE LATCH AND 10" HIGH KICKPLATES SECURE TO C.L. MESH BOTH SIDES, 5LBS MAX FORCE TO PUSH OR PULL OPEN (11B-404.2.9) AND 5LBS MAX TO ACTIVATE OPERABLE PARTS (11B-304.9) AND STRIKE SIDE (MANEUVERING) CLEARANCE PER. CBC 11B-404.2.4.1.

PARKING ENTRANCE SIGN

(6a) EXISTING PARKING ENTRANCE SIGN PER DSA# 02-102527

(6b) NEW PARKING ENTRANCE SIGN PER THIS APPLICATION. SEE DETAIL 11/SD11

DESIGN PROFESSIONAL IN GENERAL RESPONSIBLE CHARGE STATEMENT: THE POT IDENTIFIED IN THESE CONSTRUCTION DOCUMENTS IS COMPLIANT WITH THE CURRENT APPLICABLE CALIFORNIA BUILDING CODE ACCESSIBILITY PROVISIONS FOR PATH OF TRAVEL REQUIREMENTS FOR ALTERATIONS, ADDITIONS AND STRUCTURAL REPAIRS. AS PART OF THE DESIGN OF THIS PROJECT, THE POT WAS EXAMINED AND ANY ELEMENTS, COMPONENTS OR PORTIONS OF THE POT THAT WERE DETERMINED TO BE NONCOMPLIANT 1) HAVE BEEN IDENTIFIED AND 2) THE CORRECTIVE WORK NECESSARY TO BRING THEM INTO COMPLIANCE HAS BEEN INCLUDED WITHIN THE SCOPE OF THIS PROJECT'S WORK THROUGH DETAILS, DRAWINGS AND SPECIFICATIONS INCORPORATED INTO THESE CONSTRUCTION DOCUMENTS. ANY NONCOMPLIANT ELEMENTS, COMPONENTS OR PORTIONS OF THE POT THAT WILL NOT BE CORRECTED BY THIS PROJECT BASED ON VALUATION THRESHOLD LIMITATIONS OR A FINDING OF UNREASONABLE HARDSHIP ARE SO INDICATED IN THESE CONSTRUCTION DOCUMENTS.

DURING CONSTRUCTION, IF POT ITEMS WITHIN THE SCOPE OF THE PROJECT REPRESENTED AS CODE COMPLIANT ARE FOUND TO BE NONCONFORMING BEYOND REASONABLE CONSTRUCTION TOLERANCES, THEY SHALL BE BROUGHT INTO COMPLIANCE WITH THE CBC AS PART OF THIS PROJECT BY MEANS OF A CONSTRUCTION CHANGE DOCUMENT.

north

GATE SCHEDULE

GATE NUMBER	WIDTH	HEIGHT	DETAIL	HARDWARE GROUP	DESCRIPTION
61	4'-0"	4'-0"	8 / SD10	09	CHAIN LINK SWING GATE W/ PANIC HARDWARE
62	10'-0"	4'-0"	6 / SD10	10	CHAIN LINK DOUBLE SWING GATE
63	4'-0"	4'-0"	8 / SD10	09	CHAIN LINK SWING GATE W/ PANIC HARDWARE
64	4'-0"	6'-0"	22 / SD10	11	DECORATIVE METAL SWING GATE
65	20'-0"	6'-0"	9 / SD10	10	DECORATIVE METAL DOUBLE SWING GATE
66	4'-0"	4'-0"	8 / SD10	09	CHAIN LINK SWING GATE W/ PANIC HARDWARE
67	10'-0"	4'-0"	6 / SD10	10	CHAIN LINK DOUBLE SWING GATE
68	4'-0"	4'-0"	8 / SD10	09	CHAIN LINK SWING GATE W/ PANIC HARDWARE
69	4'-0"	8'-0"	12 / SD10	-	18 GA. GALV. STEEL PANEL SWING GATE
610	4'-0"	8'-0"	12 / SD10	09	CHAIN LINK SWING GATE W/ PANIC HARDWARE

OVERALL SITE PLAN

SCALE: 1" = 60'-0"

F:\01 Projects\23076\Drawings\01 Architectural\03 Sheets\23076_SD1 Overall Site Plan.dwg Jun 26 2024 12:13pm

NEW PRESCHOOL AND TK/KINDERGARTEN CLASSROOMS AT SANTA FE ELEMENTARY SCHOOL

PORTERVILLE UNIFIED SCHOOL DISTRICT
286 E ORANGE AVENUE, PORTERVILLE, CA 93257

REVISIONS

MANGINI ARCHITECTURE INGENUITY
BARENG MORRELLI SCOTT
MANGINI ASSOCIATES INC.
4320 West Mineral King Avenue
Visalia, California 93291
www.mangini.us
(559) 627.0530 Office
(559) 627.1928 Fax

TITLE
OVERALL SITE PLAN

SD1

PROJECT 23076

APPROVALS

FILE #	APPLICATION #
54-76	02-121996

IDENTIFICATION STAMP
DIV. OF THE STATE ARCHITECT
APP: 02-121996 INC:
REVIEWED FOR
SS ☑ FLS ☑ ACS ☑
DATE: 8/14/2024

LICENSED ARCHITECT
MICHAEL J. SCOTT
No. C-34290
REN. 05-31-25
STATE OF CALIFORNIA

DATE: DECEMBER 31, 2023

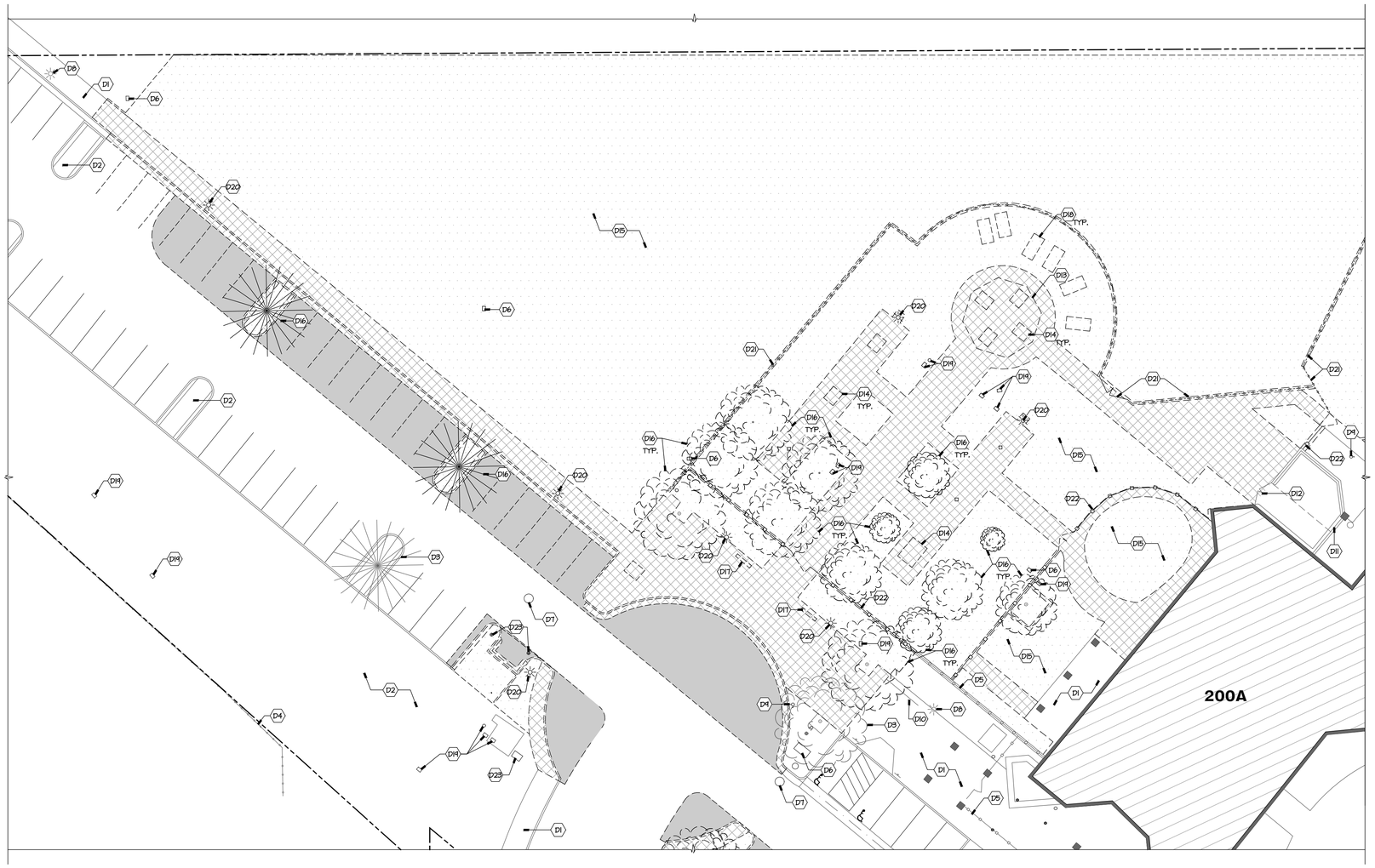

DEMOLITION PLAN LEGEND:

- EXISTING BUILDING
- EXIST. CONCRETE TO BE REMOVED
- EXIST. TURF/PLANTING TO BE REMOVED
- EXIST. ASPHALT PAVING TO BE REMOVED
- PROPERTY LINE

DEMOLITION KEYNOTES (THIS SHEET ONLY):

1. EXIST. CONCRETE PAVING TO REMAIN
2. EXIST. TURF/GRADE TO REMAIN
3. EXIST. TREE TO REMAIN
4. EXIST. CHAIN LINK FENCING TO REMAIN
5. EXIST. DECORATIVE METAL FENCING TO REMAIN
6. EXIST. ELECTRICAL BOX, SEE ELEC. DWGS.
7. EXIST. DRAIN INLET TO REMAIN
8. EXIST. SITE LIGHT TO REMAIN
9. EXIST. FIRE HYDRANT TO REMAIN, PROTECT, TYP.
10. EXIST. BIKE RACK TO REMAIN, PROTECT
11. EXIST. CMU ENCLOSURE TO REMAIN, PROTECT
12. EXIST. CORRUGATED METAL GATE TO REMAIN, PROTECT
13. REMOVE EXIST. GAZEBO
14. REMOVE EXIST. PICNIC TABLES
15. REMOVE EXIST. TURF/PLANTING
16. REMOVE EXIST. TREE
17. REMOVE EXIST. BENCH
18. REMOVE EXIST. RAISED PLANTER BOX
19. EXIST. IRRIGATION CONTROLS, SEE LANDSCAPE DWGS.
20. REMOVE EXIST. SITE LIGHT
21. REMOVE EXIST. CHAIN LINK FENCING & GATES
22. REMOVE EXIST. DECORATIVE METAL FENCING & GATES
23. EXISTING WATER VALVES & METER, SEE PLUMBING DWGS.

NEW PRESCHOOL AND TK/KINDERGARTEN CLASSROOMS AT SANTA FE ELEMENTARY SCHOOL

PORTERVILLE UNIFIED SCHOOL DISTRICT
286 E ORANGE AVENUE, PORTERVILLE, CA 93257

REVISIONS

MANGINI | ARCHITECTURE INGENUITY
BARENG MORRELLI SCOTT
MANGINI ASSOCIATES INC.
4320 West Mineral King Avenue
Visalia, California 93291
www.mangini.us
(559) 627.0530 Office
(559) 627.1926 fax

north

TITLE
ENLARGED DEMO SITE PLAN

SD2

PROJECT 23076

ENLARGED DEMO SITE PLAN

SCALE: 1" = 20'-0"

APPROVALS

FILE #	APPLICATION #
54-76	02-121996

IDENTIFICATION STAMP
DIV. OF THE STATE ARCHITECT
APP: 02-121996 INC:
REVIEWED FOR
SS ☑ FLS ☑ ACS ☑
DATE: 8/14/2024

LICENSED ARCHITECT
MICHAEL J. SCOTT
No. C-34290
REN. 05-31-25
STATE OF CALIFORNIA

DATE: DECEMBER 31, 2023

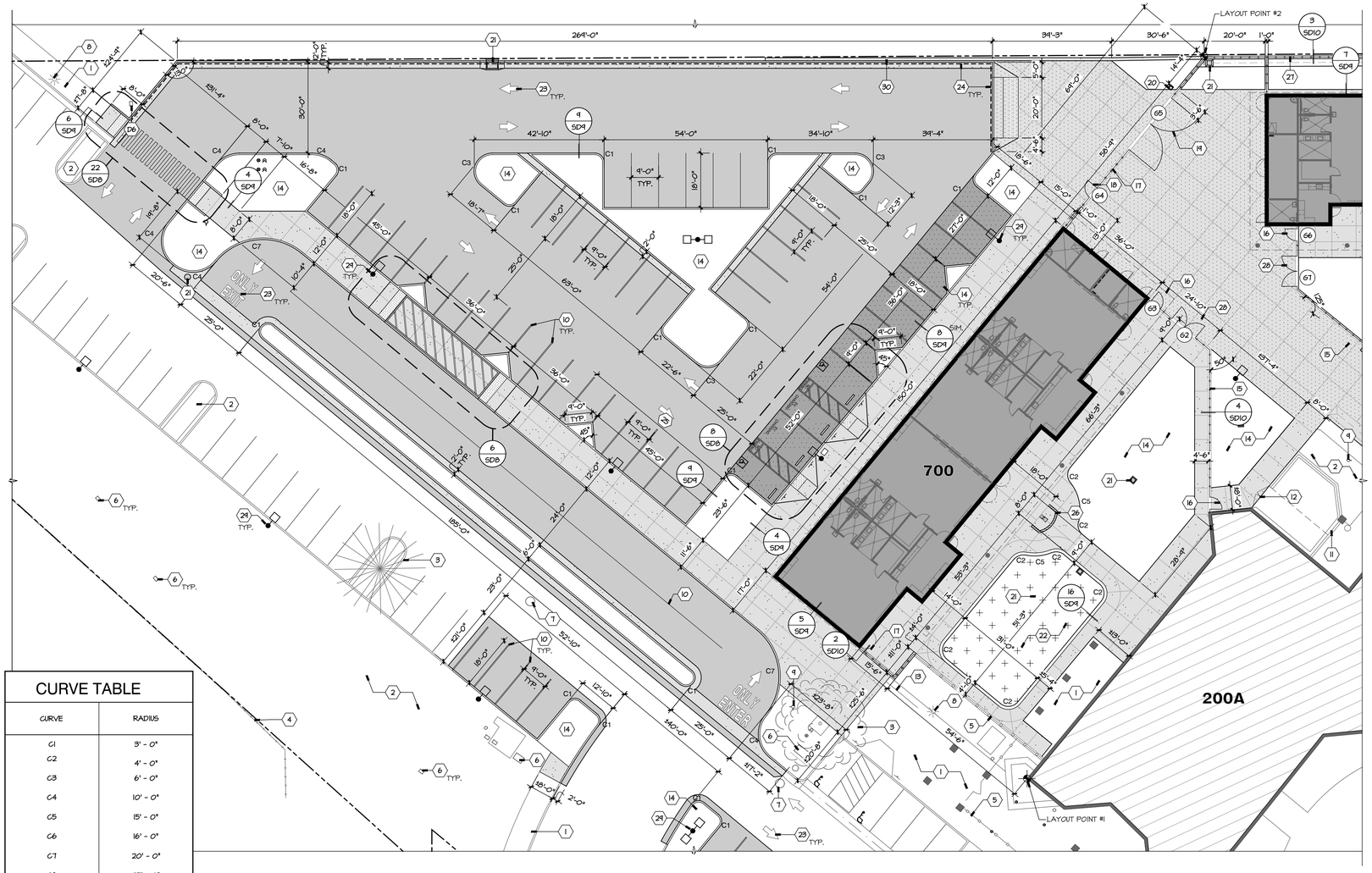

CURVE TABLE

CURVE	RADIUS
C1	3' - 0"
C2	4' - 0"
C3	6' - 0"
C4	10' - 0"
C5	15' - 0"
C6	16' - 0"
C7	20' - 0"
C8	25' - 0"
C9	31' - 0"
C10	57' - 0"
C11	63' - 0"

NOTES

RADII ARE TO FACE OF CURB, FACE OF MOWSTRIP OR EDGE OF AC, UNLESS OTHERWISE INDICATED.

ENLARGED SITE PLAN

SCALE: 1" = 20'-0"

SITE PLAN LEGEND:

- EXISTING BUILDING
- NEW BUILDING
- NEW 4" CONCRETE WALK, SEE 1/SD9
- NEW 5" CONCRETE PAVING, SEE 34/C7.1
- NEW 6-1/2" REINFORCED CONCRETE PAVING SEE 54/C7.2
- NEW POURED-IN-PLACE SOFT FALL SURFACING, OWNER PROVIDED, CONTRACTOR INSTALLED
- NEW ASPHALT PAVING, SEE PAVING PLAN C2.1
- PROPERTY LINE

SITE PLAN KEYNOTES (THIS SHEET ONLY):

1. EXIST. CONCRETE PAVING TO REMAIN
2. EXIST. TURF/GRADE TO REMAIN
3. EXIST. TREE TO REMAIN
4. EXIST. CHAIN LINK FENCING TO REMAIN
5. EXIST. DECORATIVE METAL FENCING TO REMAIN
6. EXIST. UTILITY BOX TO REMAIN (RAISE TO FLUSH W/NEW CONC. OR GRADE AS REQUIRED, TYP.)
7. EXIST. DRAIN INLET TO REMAIN (RAISE TO FLUSH W/NEW CONC. OR GRADE AS REQUIRED, TYP.)
8. EXIST. SITE LIGHT TO REMAIN
9. EXIST. FIRE HYDRANT TO REMAIN, PROTECT, TYP.
10. NEW 4" WIDE WHITE PAINTED STRIPING
11. EXIST. CMU ENCLOSURE TO REMAIN, PROTECT
12. EXIST. CORRUGATED METAL GATE TO REMAIN, PROTECT
13. EXIST. BIKE RACK TO REMAIN, PROTECT
14. NEW TURF/PLANTER SEE LANDSCAPE DWGS, TYP.
15. NEW 4'-0" HIGH CHAIN LINK FENCING, SEE 7/SD10
16. NEW 4'-0" WIDE, 4'-0" HIGH SINGLE LEAF ACCESSIBLE CHAIN LINK PEDESTRIAN GATE WITH PANIC HARDWARE, SEE 8/SD10
17. NEW 6'-0" DECORATIVE METAL FENCING, SEE 15/SD10
18. NEW 4'-0" WIDE, 6'-0" HIGH SINGLE LEAF DECORATIVE METAL PEDESTRIAN GATE, SEE 22/SD10
19. NEW 20'-0" WIDE, 6'-0" HIGH DOUBLE LEAF DECORATIVE METAL GATE, SEE 9/SD10
20. NEW KNOX BOX, SEE 4/SD11
21. NEW DRAIN INLET, SEE CIVIL DWGS
22. NEW POUR IN PLACE SOFT FALL SURFACING, OWNER PROVIDED, CONTRACTOR INSTALLED
23. NEW PAVEMENT MARKING, SEE 5/SD11
24. PAINT CURB RED AS INDICATED W/DASHED LINE AT FIRE LANE. PAINT WORDS "FIRE LANE NO PARKING" USING 5" HIGH WHITE LETTERS AT 30'-0" O.C. TYP.
25. FUTURE E.V. CHARGING SPACE, SEE ELECTRICAL DWGS.
26. NEW ACCESSIBLE DRINKING FOUNTAIN, SEE 1/SD11
27. NEW 6'-0" HIGH CHAIN LINK FENCING, SEE 7/SD10
28. NEW 10'-0" WIDE, 4'-0" HIGH DOUBLE LEAF CHAIN LINK GATE, SEE 6/SD10
29. SITE LIGHTING, SEE ELECTRICAL DRAWINGS
30. CONCRETE RETAINING WALL, SEE CIVIL DRAWINGS

north

NEW PRESCHOOL AND TK/KINDERGARTEN CLASSROOMS AT SANTA FE ELEMENTARY SCHOOL

PORTERVILLE UNIFIED SCHOOL DISTRICT
286 E ORANGE AVENUE, PORTERVILLE, CA 93257

REVISIONS

MANGINI ARCHITECTURE INCORPORATED
BARENG MORRELLI SCOTT
MANGINI ASSOCIATES INC.
4320 West Mineral King Avenue
Visalia, California 93291
www.mangini.us
(559) 627.0530 Office
(559) 627.1926 Fax

TITLE
ENLARGED SITE PLAN

SD3

PROJECT 23076

F:\01 Projects\23076\Drawings\01 Architectural\03 Sheets\23076_SD3 Enlarged Site Plan.dwg Jun 26 2024 12:13pm

APPROVALS

FILE # 54-76 | APPLICATION # 02-121996

IDENTIFICATION STAMP
DIV. OF THE STATE ARCHITECT
APP: 02-121996 INC:
REVIEWED FOR
SS ☑ FLS ☑ ACS ☑
DATE: 8/14/2024

LICENSED ARCHITECT
MICHAEL J. SCOTT
No. C-34290
REN. 05-31-25
STATE OF CALIFORNIA

DATE: DECEMBER 31, 2023

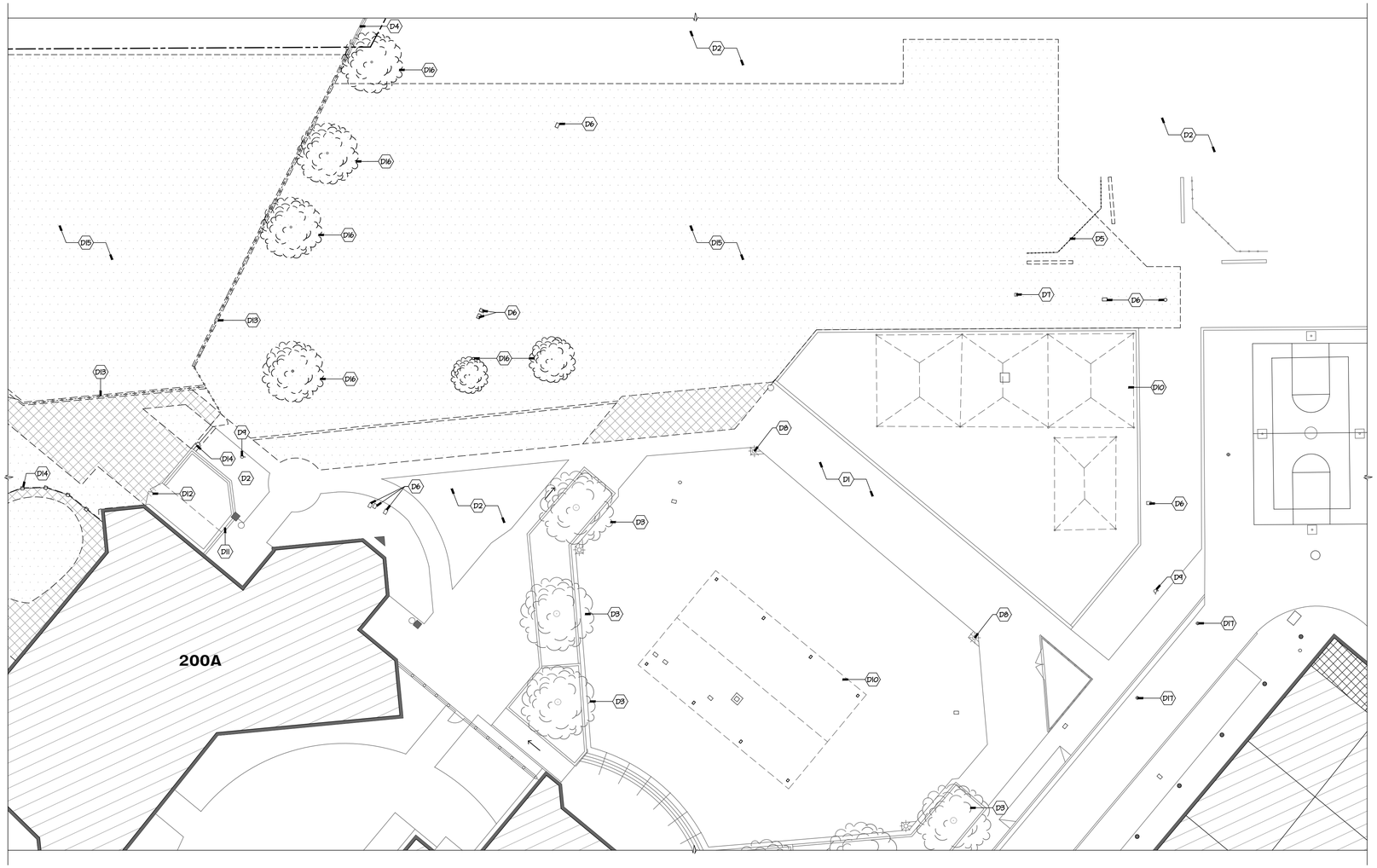

DEMOLITION PLAN LEGEND:

- EXISTING BUILDING
- EXIST. CONCRETE TO BE REMOVED
- EXIST. TURF/PLANTING TO BE REMOVED
- PROPERTY LINE

DEMOLITION KEYNOTES (THIS SHEET ONLY):

- D1 EXIST. CONCRETE PAVING TO REMAIN
- D2 EXIST. TURF/GRADE TO REMAIN
- D3 EXIST. TREE TO REMAIN
- D4 EXIST. CHAIN LINK FENCING TO REMAIN
- D5 REMOVE & RELOCATE EXIST. CHAIN LINK BACKSTOP & BENCHES TO NE CORNER OF CAMPUS, SEE SD1
- D6 EXIST. IRRIGATION CONTROLS, SEE LANDSCAPE DWGS.
- D7 EXIST. DRAIN INLET TO REMAIN
- D8 EXIST. SITE LIGHT TO REMAIN
- D9 EXIST. FIRE HYDRANT TO REMAIN, PROTECT, TYP.
- D10 EXIST. SHADE STRUCTURES TO REMAIN, PROTECT, TYP.
- D11 EXIST. CMU ENCLOSURE TO REMAIN, PROTECT
- D12 EXIST. CORRUGATED METAL GATE TO REMAIN, PROTECT
- D13 REMOVE EXIST. CHAIN LINK FENCING & GATES
- D14 REMOVE EXIST. DECORATIVE METAL FENCING
- D15 REMOVE EXIST. TURF/GRADE
- D16 REMOVE EXIST. TREE
- D17 EXIST. WATER VALVE, SEE PLUMBING DWGS.

north

ENLARGED DEMO SITE PLAN

SCALE: 1" = 20'-0"

NEW PRESCHOOL AND TK/KINDERGARTEN CLASSROOMS AT SANTA FE ELEMENTARY SCHOOL

PORTERVILLE UNIFIED SCHOOL DISTRICT

286 E ORANGE AVENUE, PORTERVILLE, CA 93257

REVISIONS

MANGINI ARCHITECTURE INGENUITY
BARENG MORRELLI SCOTT
MANGINI ASSOCIATES INC.
4320 West Mineral King Avenue
Visalia, California 93291
www.mangini.us
(559) 627-0530 Office
(559) 627-1926 fax

TITLE
ENLARGED DEMO SITE PLAN

SD4

PROJECT 23076

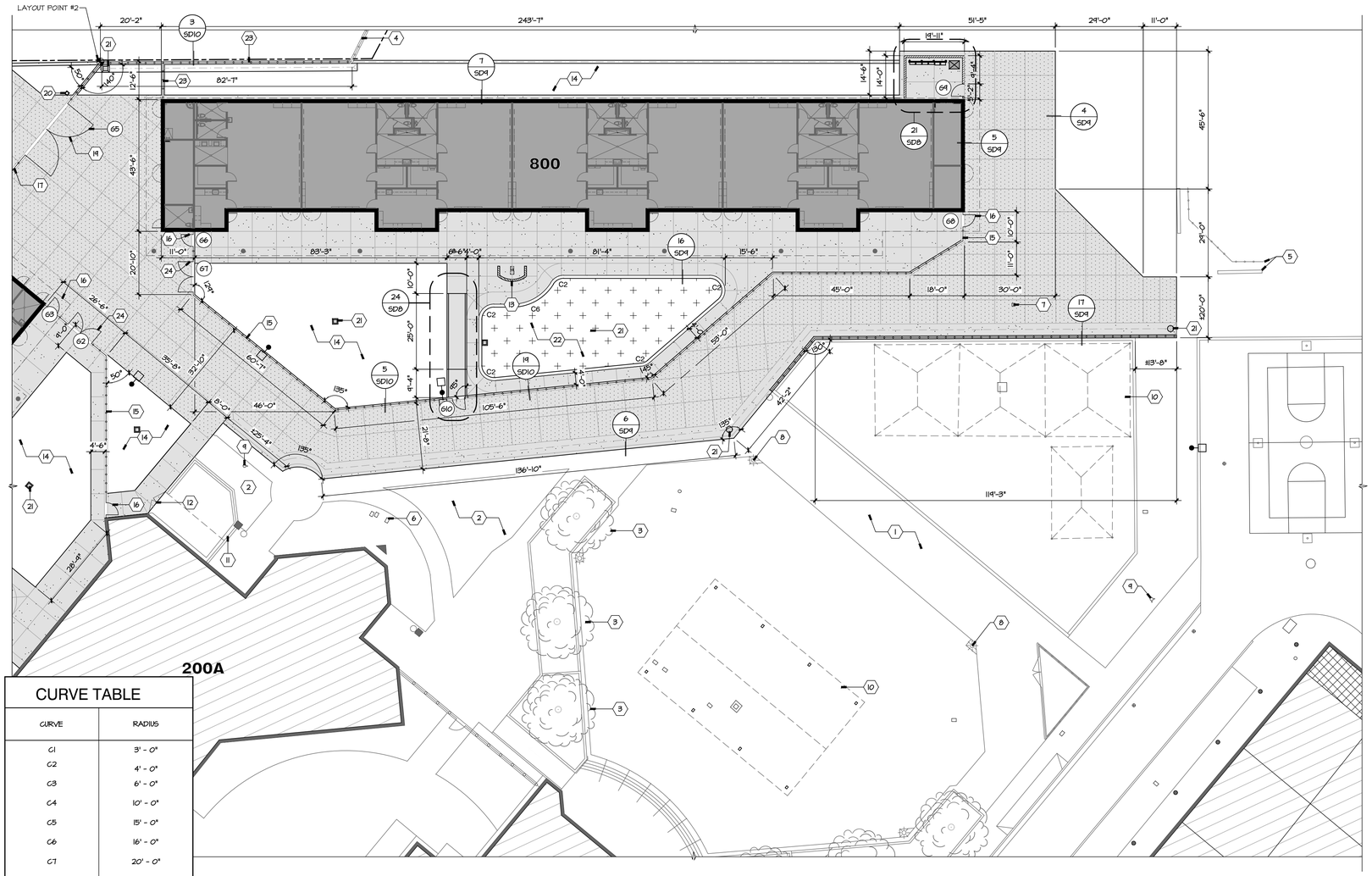

CURVE TABLE

CURVE	RADIUS
C1	3' - 0"
C2	4' - 0"
C3	6' - 0"
C4	10' - 0"
C5	15' - 0"
C6	16' - 0"
C7	20' - 0"
C8	25' - 0"
C9	31' - 0"
C10	57' - 0"
C11	63' - 0"

NOTES

RADII ARE TO FACE OF CURB, FACE OF MOWSTRIP OR EDGE OF AC, UNLESS OTHERWISE INDICATED.

SITE PLAN LEGEND:

- EXISTING BUILDING
- NEW BUILDING
- NEW 4" CONCRETE WALK, SEE 1/SD9
- NEW 6-1/2" REINFORCED CONCRETE PAVING, SEE S4/C7.2
- NEW POURED-IN-PLACE SOFT FALL SURFACING, OWNER PROVIDED, CONTRACTOR INSTALLED
- NEW ASPHALT PAVING, SEE PAVING PLAN C2.2
- PROPERTY LINE

SITE PLAN KEYNOTES

1. EXIST. CONCRETE PAVING TO REMAIN
2. EXIST. TURF/GRADE TO REMAIN
3. EXIST. TREE TO REMAIN
4. EXIST. CHAIN LINK FENCING TO REMAIN
5. EXIST. BACKSTOP AND BENCHES TO REMAIN, PROTECT
6. EXIST. UTILITY BOX TO REMAIN (RAISE TO FLUSH W/NEW CONC. OR GRADE AS REQUIRED, TYP.)
7. EXIST. DRAIN INLET TO REMAIN (RAISE TO FLUSH W/NEW CONC. OR GRADE AS REQUIRED, TYP.)
8. EXIST. SITE LIGHT TO REMAIN
9. EXIST. FIRE HYDRANT TO REMAIN, PROTECT, TYP.
10. EXIST. SHADE STRUCTURES TO REMAIN, PROTECT, TYP.
11. EXIST. CMU ENCLOSURE TO REMAIN, PROTECT
12. EXIST. CORRUGATED METAL GATE TO REMAIN, PROTECT
13. NEW ACCESSIBLE DRINKING FOUNTAIN, SEE 1/SD11
14. NEW TURF/PLANTER SEE LANDSCAPE DWGS, TYP.
15. NEW 4'-0" HIGH CHAIN LINK FENCING, SEE 7/SD10
16. NEW 4'-0" WIDE, 4'-0" HIGH SINGLE LEAF ACCESSIBLE CHAIN LINK PEDESTRIAN GATE WITH PANIC HARDWARE, SEE 8/SD10
17. NEW 6'-0" DECORATIVE METAL FENCING, SEE 15/SD10
18. NOT USED
19. NEW 20'-0" WIDE, 6'-0" HIGH DOUBLE LEAF DECORATIVE METAL GATE, SEE 4/SD10
20. NEW KNOX BOX, SEE 4/SD11
21. NEW DRAIN INLET, SEE CIVIL DWGS
22. NEW POUR IN PLACE SOFT FALL SURFACING, OWNER PROVIDED, CONTRACTOR INSTALLED
23. NEW 6'-0" HIGH CHAIN LINK FENCING, SEE 7/SD10
24. NEW 10'-0" WIDE, 4'-0" HIGH DOUBLE LEAF CHAIN LINK GATE, SEE 6/SD10

north

ENLARGED SITE PLAN

SCALE: 1" = 20'-0"

APPROVALS

FILE # 54-76 | APPLICATION # 02-121996

IDENTIFICATION STAMP
DIV. OF THE STATE ARCHITECT
APP: 02-121996 INC:
REVIEWED FOR
SS ☑ FLS ☑ ACS ☑
DATE: 8/14/2024

LICENSED ARCHITECT
MICHAEL J. SCOTT
No. C-34290
REN. 05-31-25
STATE OF CALIFORNIA

DATE: DECEMBER 31, 2023

NEW PRESCHOOL AND TK/KINDERGARTEN CLASSROOMS AT SANTA FE ELEMENTARY SCHOOL

PORTERVILLE UNIFIED SCHOOL DISTRICT

286 E ORANGE AVENUE, PORTERVILLE, CA 93257

REVISIONS

MANGINI ARCHITECTURE INGENUITY
BARENG MORRELLI SCOTT
MANGINI ASSOCIATES INC.
4320 West Mineral King Avenue
Visalia, California 93291
www.mangini.us
(559) 627.0530 Office
(559) 627.1926 Fax

TITLE
ENLARGED SITE PLAN

SD5

PROJECT 23076

APPROVALS

FILE #	APPLICATION #
54-76	02-121996

IDENTIFICATION STAMP
DIV. OF THE STATE ARCHITECT
APP: 02-121996 INC:
REVIEWED FOR
SS ☑ FLS ☑ ACS ☑
DATE: 8/14/2024

LICENSED ARCHITECT
MICHAEL J. SCOTT
No. C-34290
REN. 05-31-25
STATE OF CALIFORNIA

DATE: DECEMBER 31, 2023

DEMOLITION PLAN LEGEND:

- EXISTING BUILDING
- EXIST. CONCRETE TO BE REMOVED
- EXIST. GRADE TO BE REMOVED
- EXIST. ASPHALT PAVING TO BE REMOVED
- PROPERTY LINE

DEMOLITION KEYNOTES (THIS SHEET ONLY):

1. EXIST. CONCRETE PAVING TO REMAIN
2. EXIST. PARKING ENTRANCE SIGN TO REMAIN
3. EXIST. TREE TO REMAIN
4. EXIST. SERVICE YARD & EQUIPMENT TO REMAIN
5. EXIST. DECORATIVE METAL FENCING TO REMAIN
6. EXIST. IRRIGATION CONTROLS, SEE LANDSCAPE DWGS.
7. EXIST. DRAIN INLET TO REMAIN
8. EXIST. SITE LIGHT TO REMAIN
9. REMOVE EXIST. MONUMENT SIGN
10. REMOVE & SALVAGE EXIST. FLAG POLE, RETURN TO OWNER
11. REMOVE EXIST. SITE LIGHT
12. REMOVE EXIST. TREE
13. EXIST. ELECTRIC & COMMUNICATIONS, SEE ELEC. DWGS.

north

ENLARGED DEMO SITE PLAN

SCALE: 1" = 20'-0"

NEW PRESCHOOL AND TK/KINDERGARTEN CLASSROOMS AT SANTA FE ELEMENTARY SCHOOL

PORTERVILLE UNIFIED SCHOOL DISTRICT
286 E ORANGE AVENUE, PORTERVILLE, CA 93257

REVISIONS

MANGINI ARCHITECTURE INGENUITY
BARENG MORRELLI SCOTT
MANGINI ASSOCIATES INC.
4320 West Mineral King Avenue
Visalia, California 93291
www.mangini.us
(559) 627.0530 Office
(559) 627.1926 Fax

TITLE
ENLARGED DEMO SITE PLAN

SD6

PROJECT 23076

APPROVALS

FILE # 54-76 | APPLICATION # 02-121996

IDENTIFICATION STAMP
DIV. OF THE STATE ARCHITECT
APP: 02-121996 INC:
REVIEWED FOR
SS ☑ FLS ☑ ACS ☑
DATE: 8/14/2024

LICENSED ARCHITECT
MICHAEL J. SCOTT
No. C-34290
REN. 05-31-25
STATE OF CALIFORNIA

DATE: DECEMBER 31, 2023

SITE PLAN LEGEND:

- EXISTING BUILDING
- NEW 4" CONCRETE WALK, SEE 1/SD9
- NEW 5" CONCRETE PAVING, SEE 34/C7.1
- NEW 6-1/2" REINFORCED CONCRETE PAVING, SEE
- NEW ASPHALT PAVING, SEE PAVING PLAN C2.3
- PROPERTY LINE

SITE PLAN KEYNOTES (THIS SHEET ONLY):

1. EXIST. CONCRETE PAVING TO REMAIN
2. EXIST. PARKING ENTRANCE SIGN TO REMAIN
3. EXIST. TREE TO REMAIN
4. EXIST. SERVICE YARD & EQUIPMENT TO REMAIN
5. EXIST. DECORATIVE METAL FENCING AND GATES TO REMAIN
6. EXIST. UTILITY BOX TO REMAIN (RAISE TO FLUSH W/NEW CONC. OR GRADE AS REQUIRED, TYP.)
7. EXIST. DRAIN INLET TO REMAIN (RAISE TO FLUSH W/NEW CONC. OR GRADE AS REQUIRED, TYP.)
8. EXIST. SITE LIGHT TO REMAIN
9. EXIST. FIRE HYDRANT TO REMAIN, PROTECT
10. NEW TURF/PLANTER SEE LANDSCAPE DWGS, TYP.
11. NEW PAVEMENT MARKING, SEE 5/SD11
12. NEW 4" WIDE WHITE PAINTED STRIPING
13. NEW PARKING ENTRANCE SIGN, SEE 11/SD11
14. NEW DRAIN INLET, SEE CIVIL DWGS.

CURVE TABLE

CURVE	RADIUS
C1	3' - 0"
C2	4' - 0"
C3	6' - 0"
C4	10' - 0"
C5	15' - 0"
C6	16' - 0"
C7	20' - 0"
C8	25' - 0"
C9	31' - 0"
C10	57' - 0"
C11	63' - 0"

NOTES

RADII ARE TO FACE OF CURB, FACE OF NONSTRIP OR EDGE OF AC, UNLESS OTHERWISE INDICATED.

north

ENLARGED SITE PLAN

SCALE: 1" = 20'-0"

NEW PRESCHOOL AND TK/KINDERGARTEN CLASSROOMS AT SANTA FE ELEMENTARY SCHOOL

PORTERVILLE UNIFIED SCHOOL DISTRICT

286 E ORANGE AVENUE, PORTERVILLE, CA 93257

REVISIONS

MANGINI ARCHITECTURE INGENUITY

BARENG MORRELLI SCOTT

MANGINI ASSOCIATES INC.
4320 West Mineral King Avenue
Visalia, California 93291

www.mangini.us
(559) 627-0530 Office
(559) 627-1926 Fax

TITLE
ENLARGED SITE PLAN

SD7

PROJECT 23076

APPROVALS

FILE # 54-76 | APPLICATION # 02-121996

IDENTIFICATION STAMP
DIV. OF THE STATE ARCHITECT
APP: 02-121996 INC:
REVIEWED FOR
SS ☑ FLS ☑ ACS ☑
DATE: 8/14/2024

LICENSED ARCHITECT
MICHAEL J. SCOTT
No. C-34290
REN. 05-31-25
STATE OF CALIFORNIA

DATE: DECEMBER 31, 2023

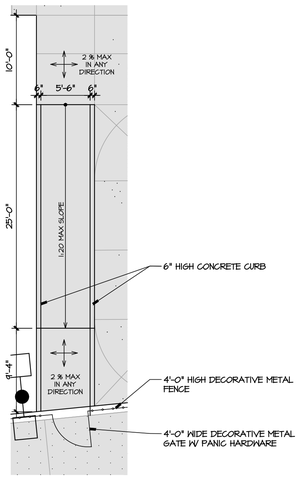

north

24 ENLARGED RAMP

SCALE: 1/8"=1'-0"

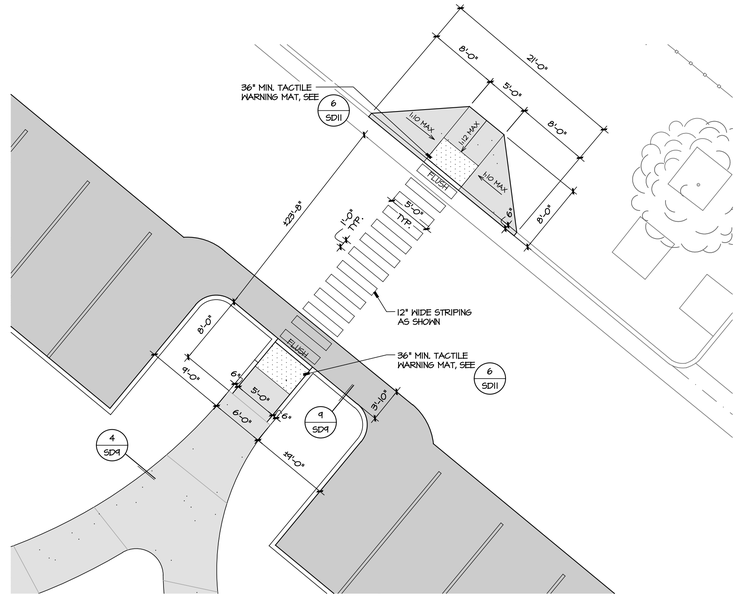

north

18 ENLARGED ACCESSIBLE CROSSING

SCALE: 1/8"=1'-0"

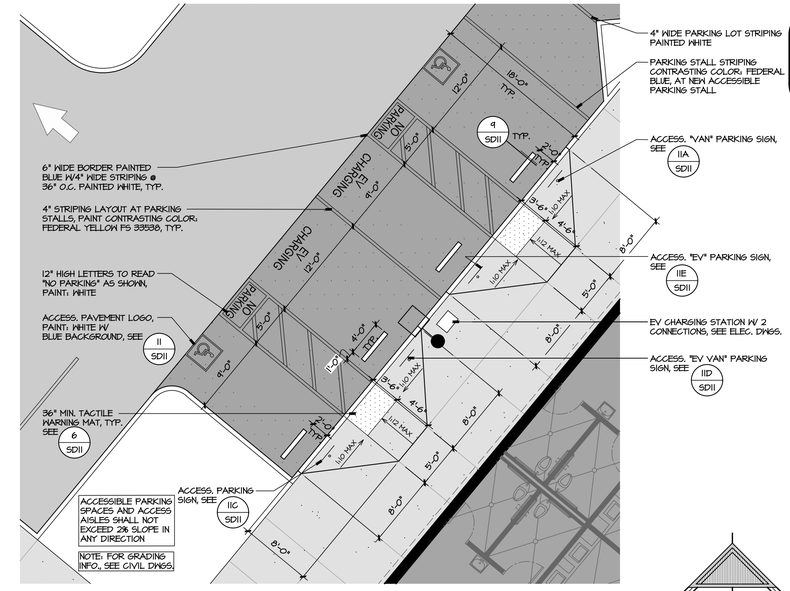

north

8 ENLARGED ACCESSIBLE PARKING

SCALE: 1/8"=1'-0"

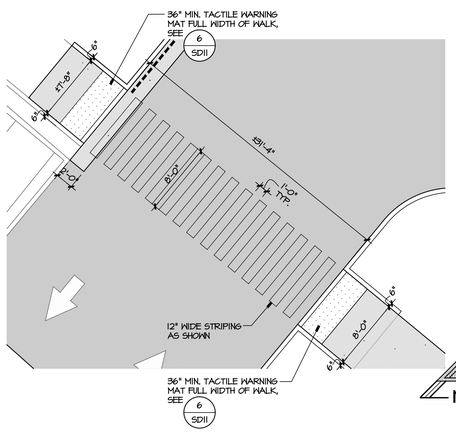

north

22 ENL. ACCESSIBLE CROSSING

SCALE: 1/8"=1'-0"

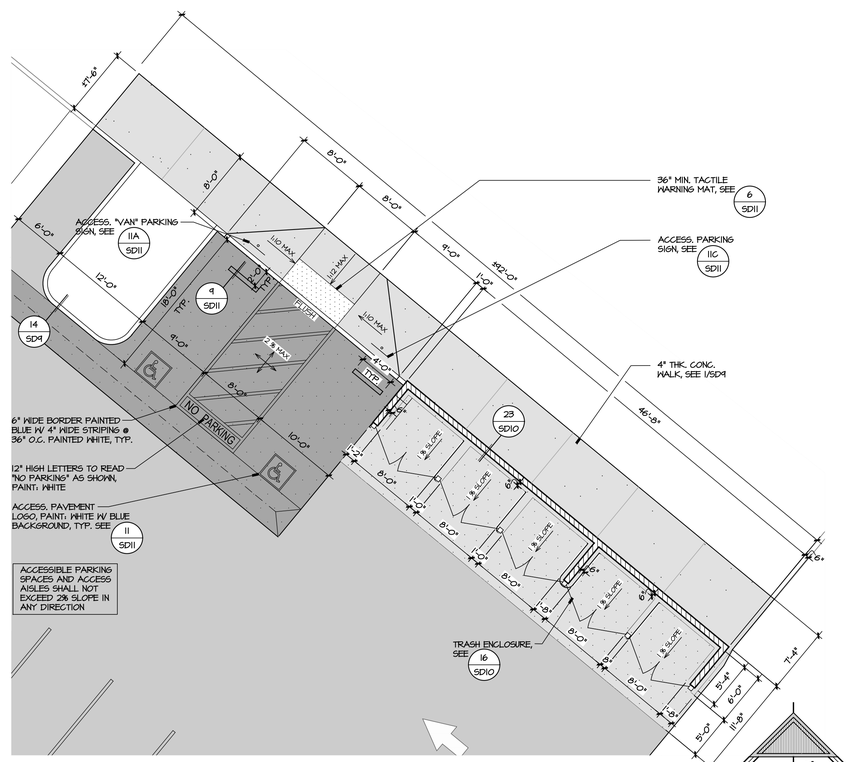

north

16 ENLARGED TRASH ENCLOSURES

SCALE: 1/8"=1'-0"

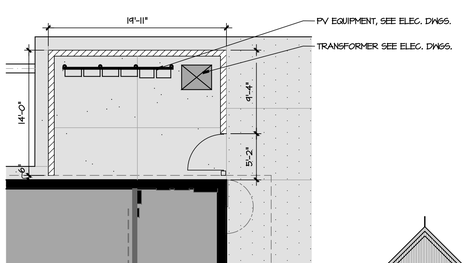

north

21 ENL. ELEC. ENCLOSURE

SCALE: 1/8"=1'-0"

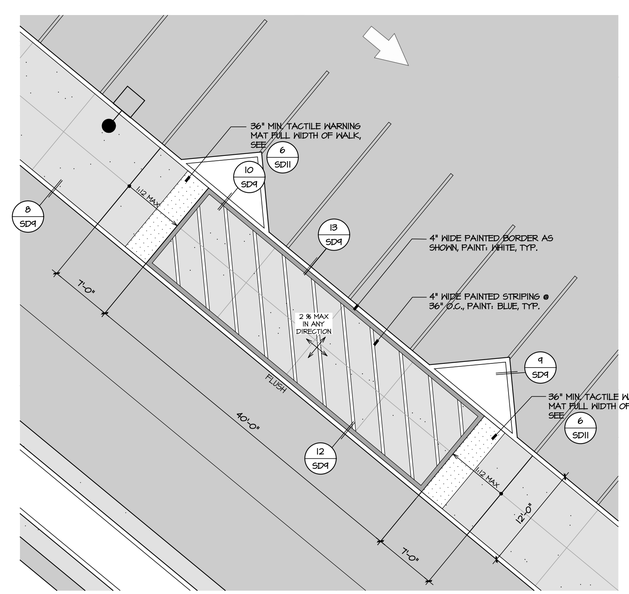

north

6 ENLARGED PARENT DROP OFF

SCALE: 1/8"=1'-0"

NEW PRESCHOOL AND TK/KINDERGARTEN CLASSROOMS AT SANTA FE ELEMENTARY SCHOOL

PORTERVILLE UNIFIED SCHOOL DISTRICT
286 E ORANGE AVENUE, PORTERVILLE, CA 93257

REVISIONS

MANGINI ARCHITECTURE INGENUITY
BARENG MORRELLI SCOTT
MANGINI ASSOCIATES INC.
4320 West Mineral King Avenue
Visalia, California 93291
www.mangini.us
(559) 627.0530 Office
(559) 627.1926 Fax

TITLE
ENLARGED SITE PLANS

SD8

PROJECT 23076

APPROVALS

FILE # 54-76 | APPLICATION # 02-121996

IDENTIFICATION STAMP
DIV. OF THE STATE ARCHITECT
APP: 02-121996 INC:
REVIEWED FOR
SS ☑ FLS ☑ ACS ☑
DATE: 8/14/2024

LICENSED ARCHITECT
MICHAEL J. SCOTT
No. C-34290
REN. 05-31-25
STATE OF CALIFORNIA

DATE: DECEMBER 31, 2023

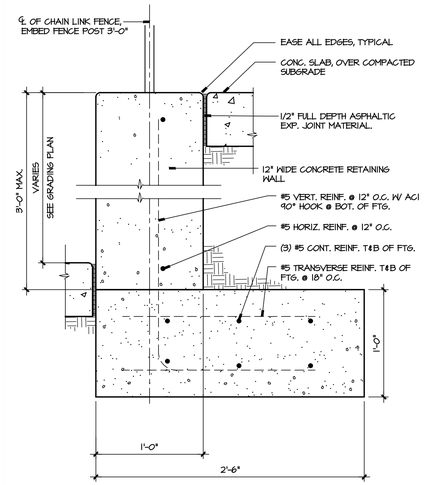

19 FENCE AT RETAINING WALL
SCALE: 1 1/2" = 1'-0"

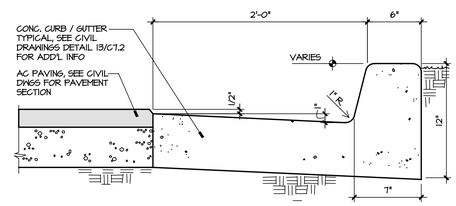

15 NOT USED
SCALE: NTS

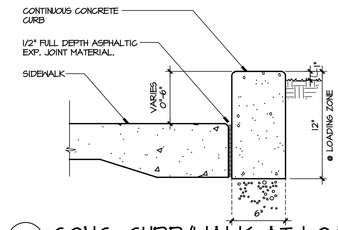

10 CONC. CURB/WALK AT LOADING
SCALE: 1 1/2" = 1'-0"

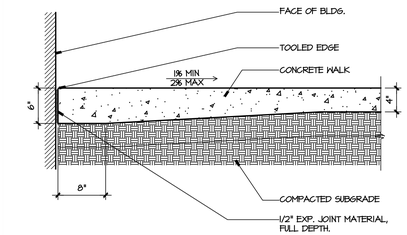

5 CONC. WALK AT BLDG.
SCALE: 1" = 1'-0"

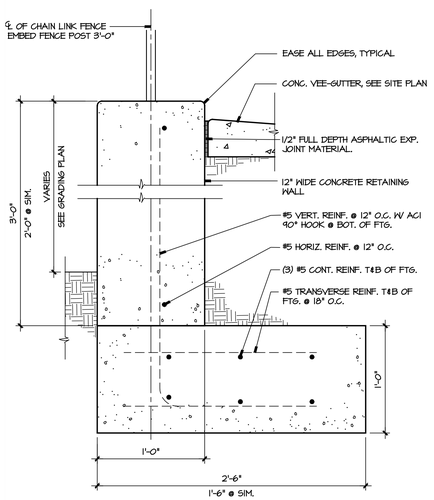

17 FENCE AT RETAINING WALL
SCALE: 1 1/2" = 1'-0"

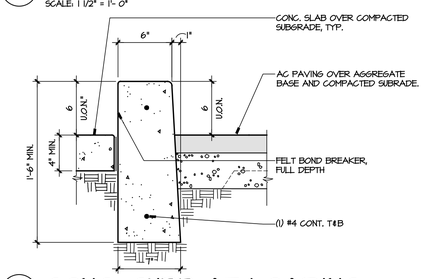

14 CONC. CURB / GUTTER
SCALE: 1 1/2" = 1'- 0"

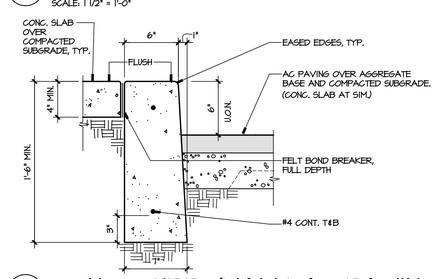

9 CONC. CURB AT PLANTER
SCALE: 1 1/2" = 1'-0"

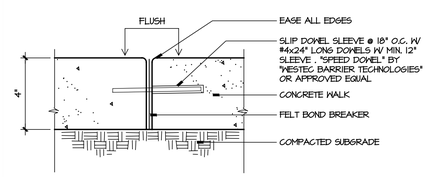

4 CONCRETE SIDEWALK
SCALE: 1" = 1'-0"

13 CONC. CURB AT LOADING
1 1/2" = 1'-0"

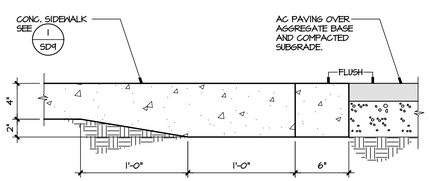

12 CONC. LANDING @ AC PAVING
SCALE: 1 1/2" = 1'-0"

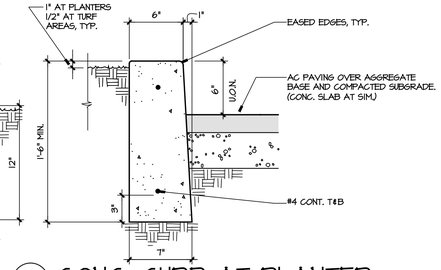

8 CONC. CURB /WALK AT PAVING
SCALE: 1 1/2" = 1'-0"

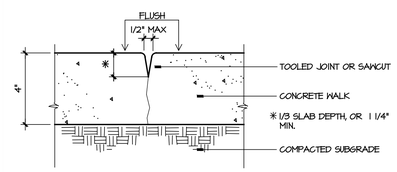

3 CONSTRUCTION JOINT (CJ)
SCALE: 3" = 1'-0"

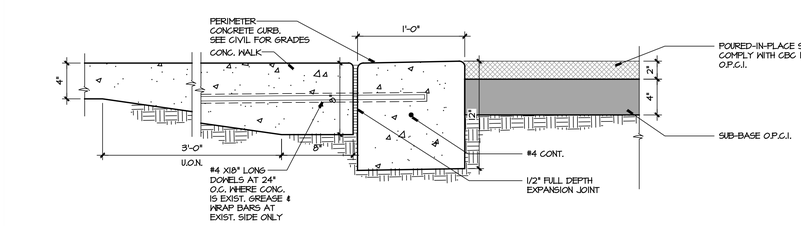

16 PLAYGROUND SURFACE
SCALE: 1 1/2" = 1'-0"

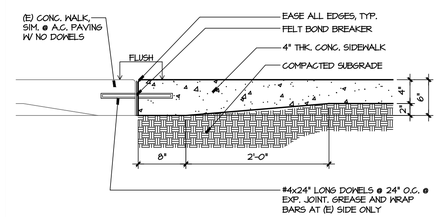

6 (N) CONC. WALK @ (E)
SCALE: 1" = 1'-0"

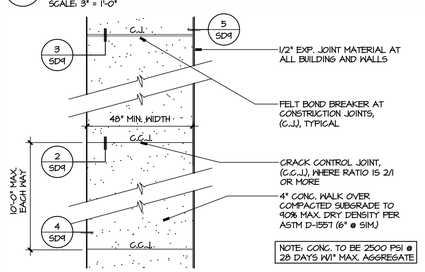

1 CONCRETE WALK
SCALE: 1/4" = 1'-0"

NEW PRESCHOOL AND TK/KINDERGARTEN CLASSROOMS AT SANTA FE ELEMENTARY SCHOOL

PORTERVILLE UNIFIED SCHOOL DISTRICT
286 E ORANGE AVENUE, PORTERVILLE, CA 93257

REVISIONS

MANGINI ARCHITECTURE INGENUITY
BARENG MORRELLI SCOTT
MANGINI ASSOCIATES INC.
4320 West Mineral King Avenue
Visalia, California 93291
www.mangini.us
(559) 627-0530 Office
(559) 627-1926 Fax

TITLE
SITE DETAILS

SD9

PROJECT 23076

APPROVALS

FILE # 54-76 | APPLICATION # 02-121996

IDENTIFICATION STAMP
DIV. OF THE STATE ARCHITECT
APP: 02-121996 INC:
REVIEWED FOR
SS ☑ FLS ☑ ACS ☑
DATE: 8/14/2024

LICENSED ARCHITECT MICHAEL J. SCOTT No. C-34290 REN. 05-31-25 STATE OF CALIFORNIA

DATE: DECEMBER 31, 2023

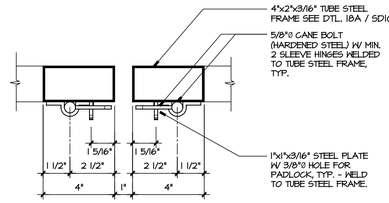

20 CANE BOLT
SCALE: 3" = 1'-0"

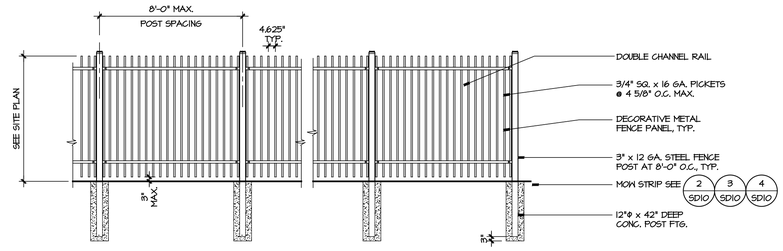

15 TYP. DECORATIVE METAL FENCE ELEVATION
(NOT PART OF THE DSA APPROVAL)
SCALE: 1/4" = 1'-0"

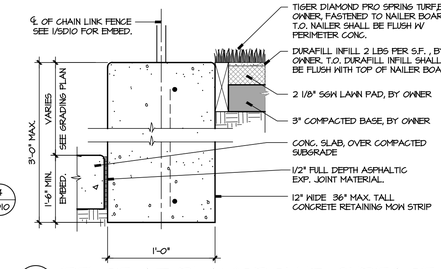

5 FENCE AT PLAYGROUND SURFACE
SCALE: 1 1/2" = 1'-0"

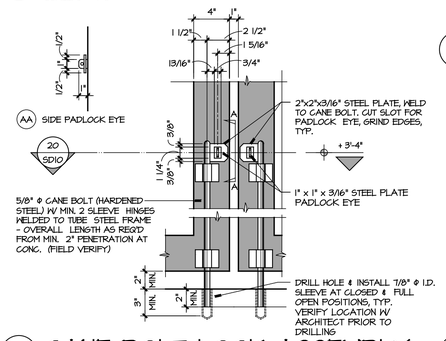

19 CANE BOLT LOCK ASSEMBLY
SCALE: 1 1/2" = 1'-0"

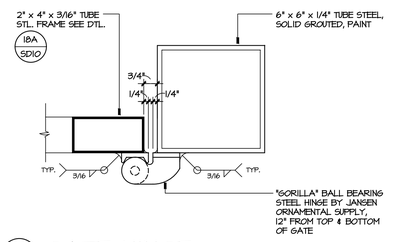

14 GATE HINGE
SCALE: 3" = 1'-0"

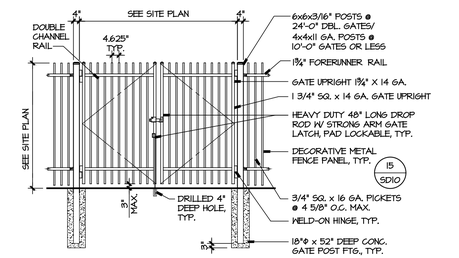

9 DECORATIVE DOUBLE LEAF GATE
SCALE: 1/4" = 1'-0"

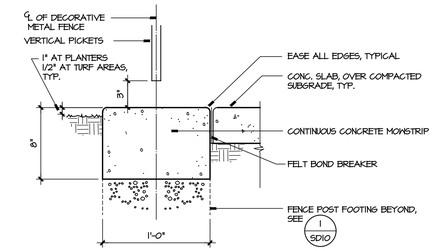

4 FENCE MOW STRIP
SCALE: 1 1/2" = 1'-0"

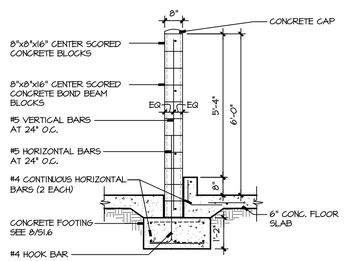

23 TRASH ENCLOSURE SECTION
SCALE: 3/8" = 1'-0"

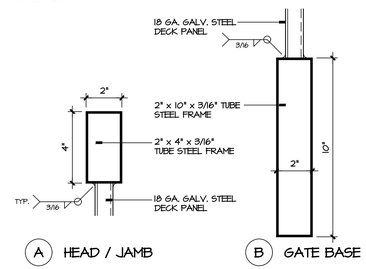

18 TRASH ENCLOSURE GATE FRAME
SCALE: 1 1/2" = 1'-0"

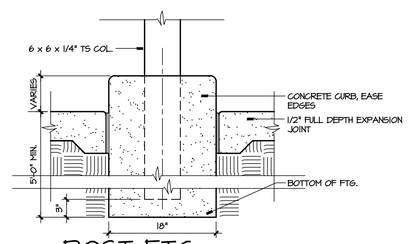

13 POST FTG. AT TRASH ENCLOSURE
SCALE: 1" = 1'-0"

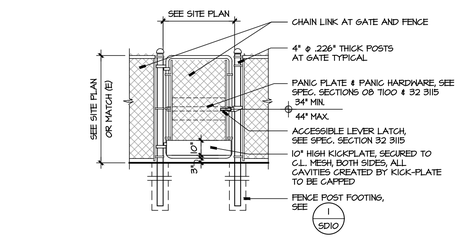

8 ACCESSIBLE C.L. GATE
SCALE: 1/4" = 1'-0"

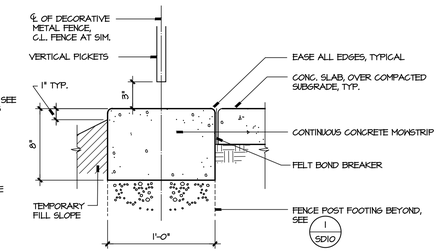

3 FENCE MOW STRIP
SCALE: 1 1/2" = 1'-0"

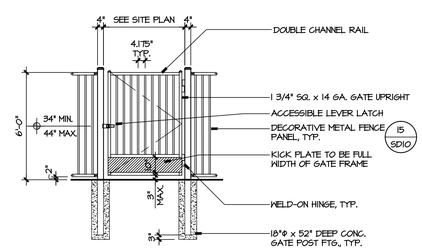

22 METAL SINGLE LEAF GATE
SCALE: 1/4" = 1'-0"

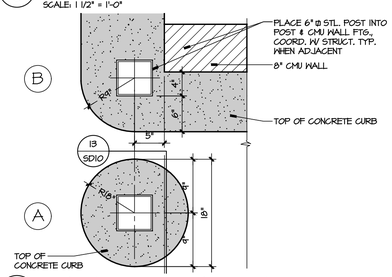

17 GATE POST AT CURB
SCALE: 1" = 1'-0"

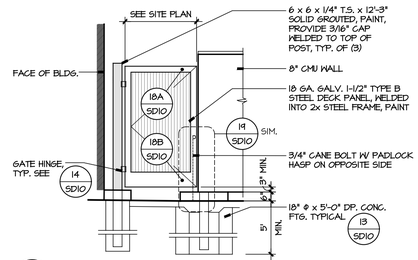

12 GALV. METAL FENCE ELEVATION
SCALE: 1/4" = 1'-0"

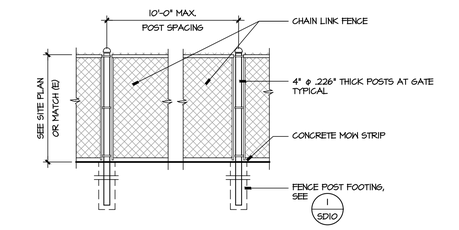

7 TYP. C.L. FENCE ELEVATION
SCALE: 1/4" = 1'-0"

2 FENCE MOW STRIP
SCALE: 1 1/2" = 1'-0"

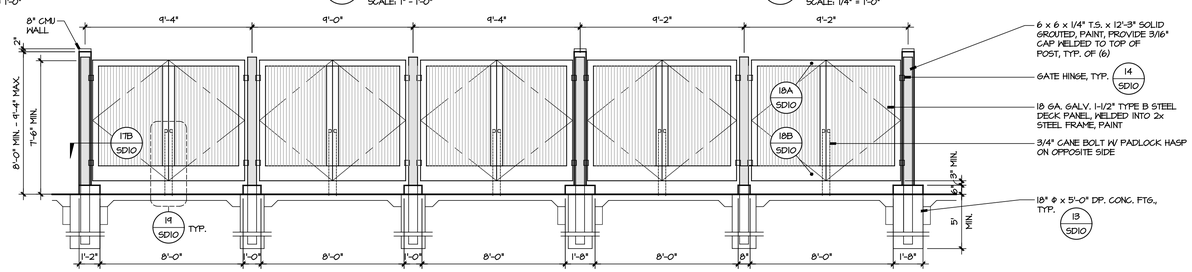

21 TRASH ENCLOSURE
SCALE: 1/4" = 1'-0"

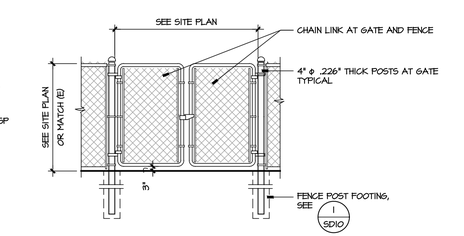

6 C.L. DOUBLE GATES
SCALE: 1/4" = 1'-0"

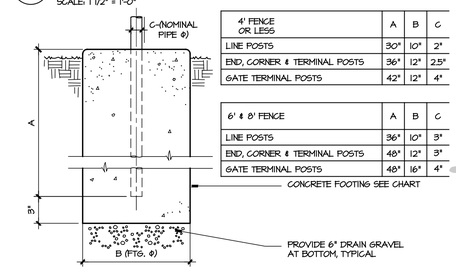

4' FENCE OR LESS	A	B	C
LINE POSTS	30"	10"	2"
END, CORNER & TERMINAL POSTS	36"	12"	2.5"
GATE TERMINAL POSTS	42"	12"	4"

6' & 8' FENCE	A	B	C
LINE POSTS	36"	10"	3"
END, CORNER & TERMINAL POSTS	48"	12"	3"
GATE TERMINAL POSTS	48"	16"	4"

1 C.L. FENCE POST FOOTING
SCALE: 1 1/2" = 1'-0"

NEW PRESCHOOL AND TK/KINDERGARTEN CLASSROOMS AT SANTA FE ELEMENTARY SCHOOL
PORTERVILLE UNIFIED SCHOOL DISTRICT
286 E ORANGE AVENUE, PORTERVILLE, CA 93257

REVISIONS

MANGINI ARCHITECTURE INGENUITY
BARENG MORRELLI SCOTT
MANGINI ASSOCIATES INC.
4320 West Mineral King Avenue
Visalia, California 93291
www.mangini.us
(559) 627-0530 Office
(559) 627-1926 Fax

TITLE
SITE DETAILS

SD10

PROJECT 23076

APPROVALS

FILE # 54-76 | APPLICATION # 02-121996

IDENTIFICATION STAMP
DIV. OF THE STATE ARCHITECT
APP: 02-121996 INC:
REVIEWED FOR
SS ☑ FLS ☑ ACS ☑
DATE: 8/14/2024

LICENSED ARCHITECT
MICHAEL J. SCOTT
No. C-34290
REN. 05-31-25
STATE OF CALIFORNIA

DATE: DECEMBER 31, 2023

NEW PRESCHOOL AND TK/KINDERGARTEN CLASSROOMS AT SANTA FE ELEMENTARY SCHOOL

PORTERVILLE UNIFIED SCHOOL DISTRICT
286 E ORANGE AVENUE, PORTERVILLE, CA 93257

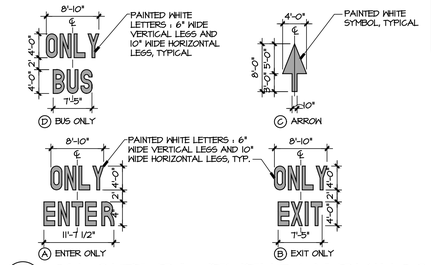

(5) ON-SITE PAVEMENT MARKINGS

N.T.S.

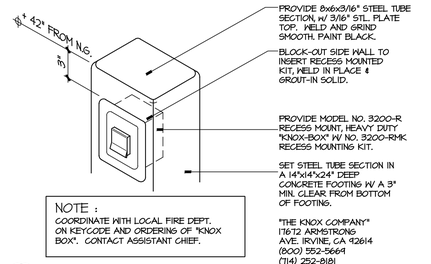

NOTE :
COORDINATE WITH LOCAL FIRE DEPT. ON KEYCODE AND ORDERING OF "KNOX BOX". CONTACT ASSISTANT CHIEF.

(4) KNOX BOX

N.T.S.

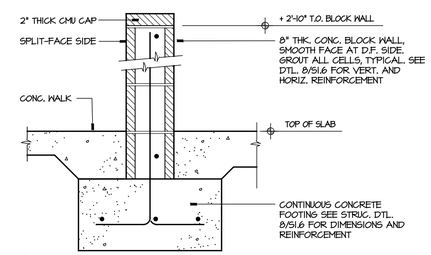

(3) CMU WALL

SCALE: N.T.S.

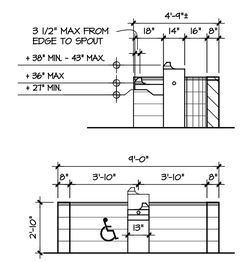

ELEV.

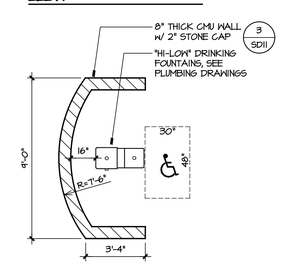

PLAN VIEW

(1) ACCESS. DRINKING FOUNTAIN

SCALE: 1/4" = 1'-0"

GENERAL NOTES:

1. SIGNS TO BE REFLECTORIZED AND EQUAL TO PORCELAIN ON STEEL WITH BEADED TEXT.
2. TEXT SHALL BE PROPORTIONED TO GIVEN OVERALL SIGN DIMENSIONS, SEE SIGN DESCRIPTIONS BELOW FOR SYMBOL OR TEXT.

SIGN DESCRIPTIONS:

NOTE:
WHERE SIGNAGE IS HUNG ON FENCE OR BLDG. USE SAME MOUNTING HEIGHTS, TYP.

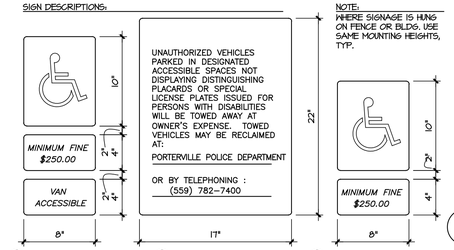

(A) VAN PARKING STALL SIGN
TOP SIGN TO BE TYPE (C) WITH SYMBOL OF ACCESSIBILITY & BOTTOM SIGN SHALL READ AS NOTED ABOVE.

(B) ENTRANCE SIGN
PER CBC 11.2.4B.4, SIGN TO READ AS NOTED ABOVE.
NOTE : THE CONTRACTOR SHALL PROVIDE THE RECLAIM INFORMATION PRIOR TO FABRICATION OF THE PROPOSED SIGN. SIGN WILL NOT BE INSTALLED WITHOUT THE APPROPRIATE INFORMATION.

(C) CAR PARKING STALL SIGN
SIGN TO SHOW SYMBOL OF ACCESSIBILITY & TEXT SHALL READ "MINIMUM FINE $250"

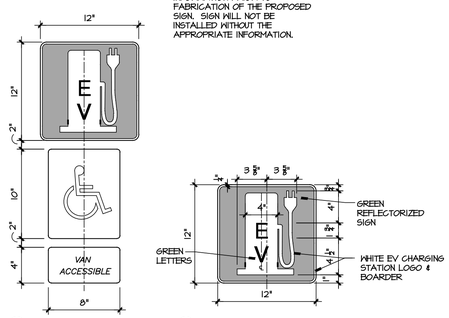

(D) VAN EV PARKING SIGN
TOP SIGN TO BE TYPE (E) WITH SYMBOL OF ACCESSIBILITY & BOTTOM SIGN SHALL READ AS NOTED ABOVE.

(E) EV PARKING SIGN
OPTICALLY SPACE THE "EV" LETTERS VERTICALLY W/ THE CHARGING UNIT

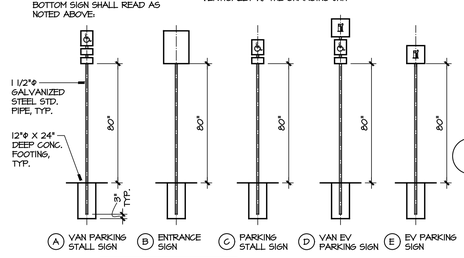

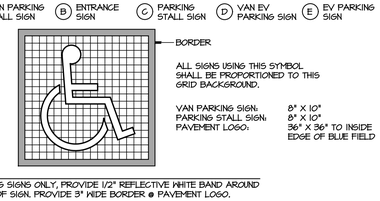

ALL SIGNS USING THIS SYMBOL SHALL BE PROPORTIONED TO THIS GRID BACKGROUND.

VAN PARKING SIGN: 8" X 10"
PARKING STALL SIGN: 8" X 10"
PAVEMENT LOGO: 36" X 36" TO INSIDE EDGE OF BLUE FIELD

NOTE :
FOR PARKING SIGNS ONLY, PROVIDE 1/2" REFLECTIVE WHITE BAND AROUND PERIMETER OF SIGN. PROVIDE 3" WIDE BORDER @ PAVEMENT LOGO.

(11) SITE SIGNAGE

SCALE 1/4" = 1'-0"

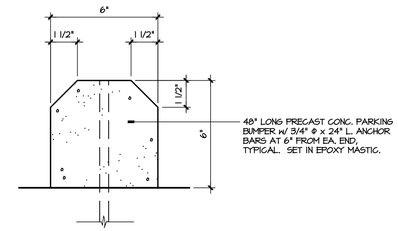

48" LONG PRECAST CONC. PARKING BUMPER W/ 3/4" ø x 24" L. ANCHOR BARS AT 6" FROM EA. END. TYPICAL. SET IN EPOXY MASTIC.

(9) CONC. WHEELSTOP

N.T.S.

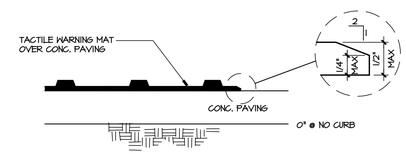

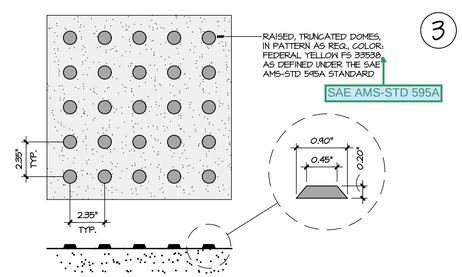

(7) TACTILE WARNING MAT

1 1/2" = 1'-0"

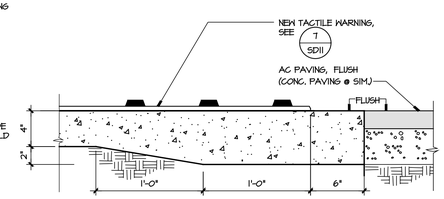

(6) TACTILE WARNING MAT

1 1/2" = 1'-0"

REVISIONS

MANGINI ARCHITECTURE INGENUITY
BARENG MORRELLI SCOTT
MANGINI ASSOCIATES INC.
4320 West Mineral King Avenue
Visalia, California 93291
www.mangini.us
(559) 627.0530 Office
(559) 627.1928 Fax

TITLE
SITE DETAILS

SD11

PROJECT 23076

APPROVALS

FILE #	APPLICATION #
54-76	02-121996

IDENTIFICATION STAMP
DIV. OF THE STATE ARCHITECT
APP: 02-121996 INC:
REVIEWED FOR
SS ☑ FLS ☑ ACS ☑
DATE: 8/14/2024

LICENSED ARCHITECT
MICHAEL J. SCOTT
No. C-34290
REN. 05-31-25
STATE OF CALIFORNIA

DATE: DECEMBER 31, 2023

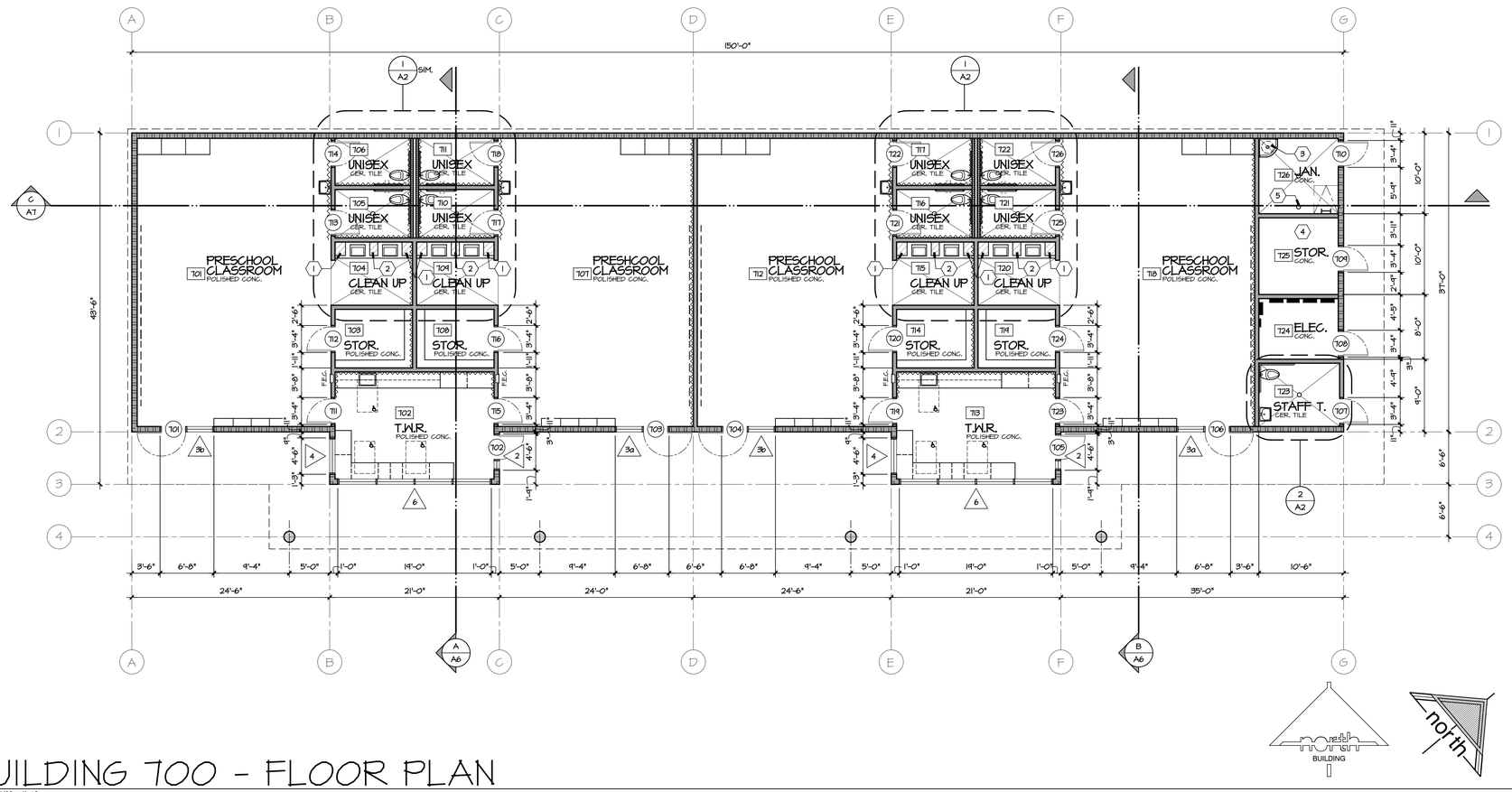

BUILDING 700 - FLOOR PLAN

SCALE: 1/8" = 1'-0"

FLOOR PLAN LEGEND:

- 2x8 WOOD STUDS AT 16" O.C.
- 2x6 WOOD STUDS AT 16" O.C.
- 2x4 WOOD STUDS AT 16" O.C.
- SOUND ATTENUATION BATT INSULATION, FULL HEIGHT
- INDICATES 30"x48" CLEAR SPACE

GENERAL FLOOR PLAN NOTES:

1. DIMENSIONS ARE TO FACE OF PLYWOOD OR FACE OF STUD U.O.N.
2. REFER TO SHEET A2 FOR EXIT ANALYSIS
3. CONSTRUCT ALL WALLS PER ASSEMBLY DETAILS ON SHEET A26
4. REFER TO ELEVATIONS AND DOOR SCHEDULE FOR ALL ROOM AND BUILDING SIGNAGES
5. FOR TYPICAL ACCESSIBLE MOUNTING HEIGHTS AND REQUIREMENTS, SEE INTERIOR ELEVATIONS AND DETAIL 16/A31 & 17/A31
6. FINISH ALL GYPSUM BOARD EDGES PER DETAIL 15/A31
7. FOR FIRE EXTINGUISHERS, SEE 18/A31
8. SOUND INSULATION & THERMAL INSULATION SHALL RUN FULL HEIGHT OF WALL. INSULATION LOCATED WHERE SHOWN ON FLOOR PLAN & WALL ASSEMBLIES, SHEET A26
9. FOR WALL PENETRATIONS OF PIPE OR CONDUIT, REFER TO DETAIL 19/A31

FLOOR PLAN KEYNOTES

1. 15 1/2" WIDE x 20" DEEP x 6" HIGH CONC. HSKPG. PAD, SEE STRUCTURAL
2. 12" WIDE x 20" DEEP x 6" HIGH CONC. HSKPG. PAD, SEE STRUCTURAL
3. SERVICE SINK & WALL MOUNTED WATER HEATER, SEE PLUMBING DWGS.
4. STAFF BIKE PARKING
5. FIRE RISER, SEE PLUMBING DWGS.

NEW PRESCHOOL AND TK/KINDERGARTEN CLASSROOMS AT SANTA FE ELEMENTARY SCHOOL

PORTERVILLE UNIFIED SCHOOL DISTRICT
286 E ORANGE AVENUE, PORTERVILLE, CA 93257

REVISIONS

MANGINI ARCHITECTURE INGENUITY
BARENG MORRELLI SCOTT
MANGINI ASSOCIATES INC.
4320 West Mineral King Avenue
Visalia, California 93291
www.mangini.us
(559) 627.0530 Office
(559) 627.1926 Fax

TITLE
BLDG. 700
FLOOR PLAN

A1

PROJECT 23076

EXIT ANALYSIS

CALCULATED OCCUPANTS OF PRIMARY SPACES WITH ACCESSORY OCCUPANTS EXITING THROUGH CBC 1004.1						EXITING CALCULATIONS OF SPACES			EGRESS WIDTH CALCULATIONS				
BLDG.	ROOM #	NAME	AREA (SF)	SQ. FT. / OCCUP.	# OCCUPANTS	TOTAL # OCCUPANTS	NUMBER OF REQUIRED EXITS CBC 1015.1	NUMBER OF PROVIDED EXITS	EGRESS WIDTH PER OCCUPANT SERVED CBC 1005.1	EXIT #	# OF OCC. THROUGH EXIT	REQ. EXIT WIDTH CALCULATION	EXIT WIDTH PROVIDED	DOOR ID #
BUILDING 700'	701	PRESCHOOL	864	20	44	45	45 < 50 = 1 EXIT REQ.	1 EXIT PROVIDED CBC 1025.2	.20" PER OCC.	EXIT 1	45	45 X .2" = 9"	34"	701
	702	TEACHERS WORK ROOM	268	100	3	3	3 < 50 = 1 EXIT REQ.			EXIT 1	45	45 X .2" = 9"	34"	702
	703	STORAGE	71	300	1	1	1 < 50 = 1 EXIT REQ.			EXIT THROUGH ROOM 701				
	704	CLEAN-UP	77	ACCESSORY										
	705	UNISEX STUDENT TOILET	57	ACCESSORY										
	706	UNISEX STUDENT TOILET	57	ACCESSORY										
	707	PRESCHOOL	864	20	44	45	45 < 50 = 1 EXIT REQ.			EXIT 1	45	45 X .2" = 9"	34"	703
	708	STORAGE	71	300	1	1	1 < 50 = 1 EXIT REQ.			EXIT THROUGH ROOM 708				
	709	CLEAN-UP	77	ACCESSORY										
	710	UNISEX STUDENT TOILET	57	ACCESSORY										
	711	UNISEX STUDENT TOILET	57	ACCESSORY										
	712	PRESCHOOL	864	20	44	45	45 < 50 = 1 EXIT REQ.			EXIT 1	45	45 X .2" = 9"	34"	704
	713	TEACHERS WORK ROOM	268	100	3	3	3 < 50 = 1 EXIT REQ.			EXIT 1	3	3 X .2" = .6"	34"	705
	714	STORAGE	71	300	1	1	1 < 50 = 1 EXIT REQ.			EXIT THROUGH ROOM 712				
	715	CLEAN-UP	77	ACCESSORY										
	716	UNISEX STUDENT TOILET	57	ACCESSORY										
	717	UNISEX STUDENT TOILET	57	ACCESSORY										
	718	PRESCHOOL	864	300	44	45	45 < 50 = 1 EXIT REQ.			EXIT 1	45	45 X .2" = 9"	34"	706
	719	STORAGE	71	20	1	1	1 < 50 = 1 EXIT REQ.			EXIT THROUGH ROOM 718				
	720	CLEAN-UP	77	ACCESSORY										
	721	UNISEX STUDENT TOILET	57	ACCESSORY										
	722	UNISEX STUDENT TOILET	57	ACCESSORY										
	723	UNISEX STAFF TOILET	75	ACCESSORY										
	724	STORAGE	80	300	1	1	1 < 50 = 1 EXIT REQ.			EXIT 1	1	1 X .2" = .2"	34"	708
	725	UNISEX STUDENT TOILET	95	ACCESSORY										
	726	UNISEX STUDENT TOILET	95	ACCESSORY										

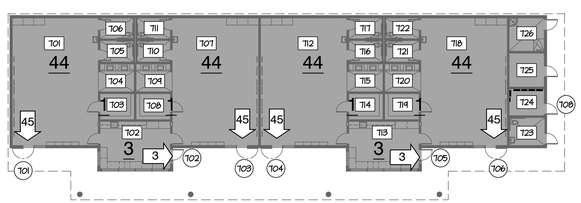

BUILDING 700 - EXIT ANALYSIS

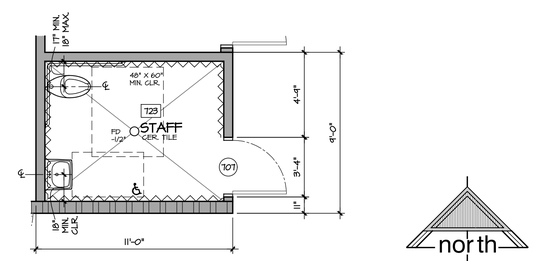

2 ENLARGED FLOOR PLAN

SCALE: 1/4" = 1'-0"

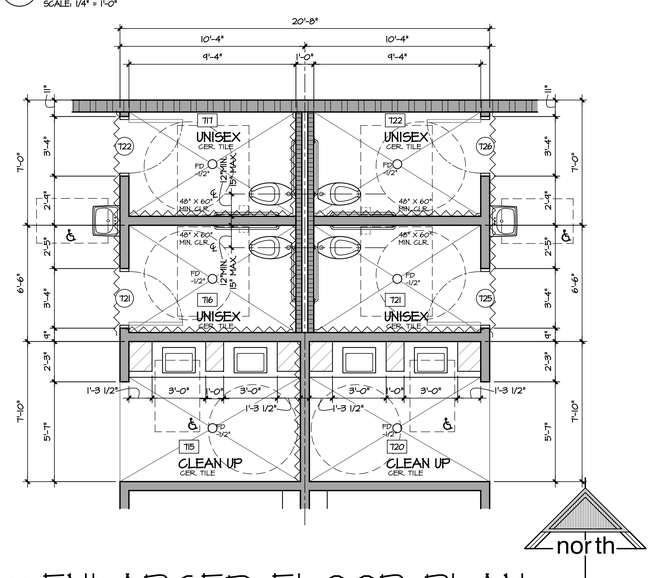

1 ENLARGED FLOOR PLAN

SCALE: 1/4" = 1'-0"

ENLARGED FLOOR PLAN LEGEND

- 2x8 WOOD STUDS AT 16" O.C.
- 2x6 WOOD STUDS AT 16" O.C.
- 2x4 WOOD STUDS AT 16" O.C.
- SOUND ATTENUATION BATT INSULATION, FULL HEIGHT
- INDICATES 30"x48" CLEAR SPACE
- 60'-0" INDICATES 5' DIAMETER M.C. ROTATION SPACE

ENLARGED FLOOR PLAN NOTES

1. DIMENSIONS ARE TO FACE OF PLYWOOD OR FACE OF STUD U.O.N.
2. REFER TO THIS SHEET FOR EXIT ANALYSIS
3. CONSTRUCT ALL WALLS PER ASSEMBLY DETAILS ON SHEET A26
4. REFER TO ELEVATIONS AND DOOR SCHEDULE FOR ALL ROOM AND BUILDING SIGNAGES
5. FOR TYPICAL ACCESSIBLE MOUNTING HEIGHTS AND REQUIREMENTS, SEE INTERIOR ELEVATIONS AND DETAIL 16/A31 & 17/A31
6. FINISH ALL GYPSUM BOARD EDGES PER DETAIL 15/A31
7. FOR FIRE EXTINGUISHERS, SEE 18/A31
8. SOUND INSULATION & THERMAL INSULATION SHALL RUN FULL HEIGHT OF WALL. INSULATION LOCATED WHERE SHOWN ON FLOOR PLAN & WALL ASSEMBLIES, SHEET A26
9. FOR WALL PENETRATIONS OF PIPE OR CONDUIT, REFER TO DETAIL 19/A31

APPROVALS

FILE # 54-76 | APPLICATION # 02-121996

IDENTIFICATION STAMP
DIV. OF THE STATE ARCHITECT
APP: 02-121996 INC:
REVIEWED FOR
SS ☑ FLS ☑ ACS ☑
DATE: 8/14/2024

LICENSED ARCHITECT
MICHAEL J. SCOTT
No. C-34290
REN. 05-31-25
STATE OF CALIFORNIA

DATE: DECEMBER 31, 2023

TK/KINDERGARTEN CLASSROOMS AT SANTA FE ELEMENTARY SCHOOL

PORTERVILLE UNIFIED SCHOOL DISTRICT

286 E ORANGE AVENUE, PORTERVILLE, CA 93257

REVISIONS

MANGINI ARCHITECTURE INCORPORATED
BARENG MORRELLI SCOTT
MANGINI ASSOCIATES INC.
4320 West Mineral King Avenue
Visalia, California 93291
www.mangini.us
(559) 627-0530 Office
(559) 627-1926 Fax

TITLE

BLDG. 700 ENLARGED FLOOR PLAN, EXIT ANALYSIS

A2

PROJECT 23076

APPROVALS

FILE # 54-76 | APPLICATION # 02-121996

IDENTIFICATION STAMP
DIV. OF THE STATE ARCHITECT
APP: 02-121996 INC:
REVIEWED FOR
SS ☑ FLS ☑ ACS ☑
DATE: 8/14/2024

LICENSED ARCHITECT
MICHAEL J. SCOTT
No. C-34290
REN. 05-31-25
STATE OF CALIFORNIA

DATE: DECEMBER 31, 2023

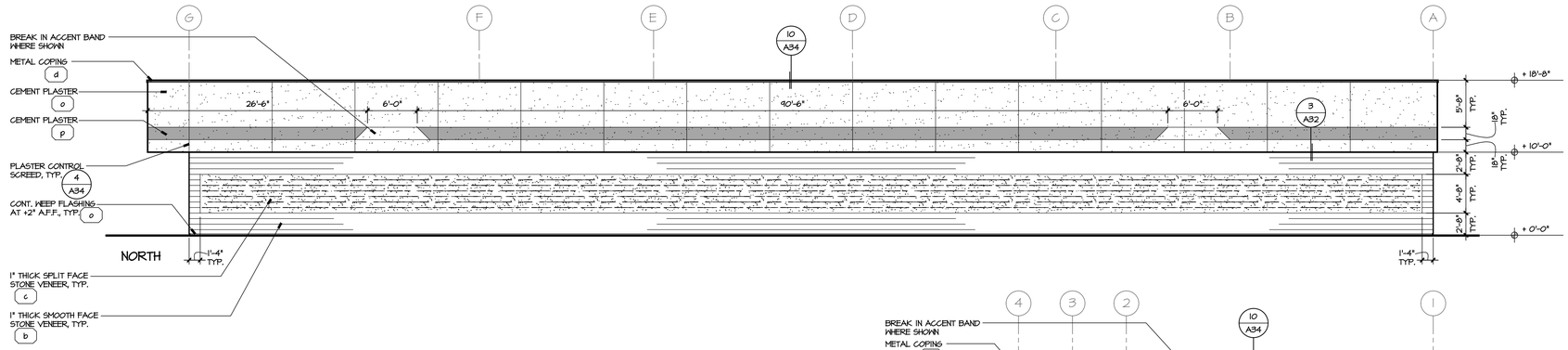

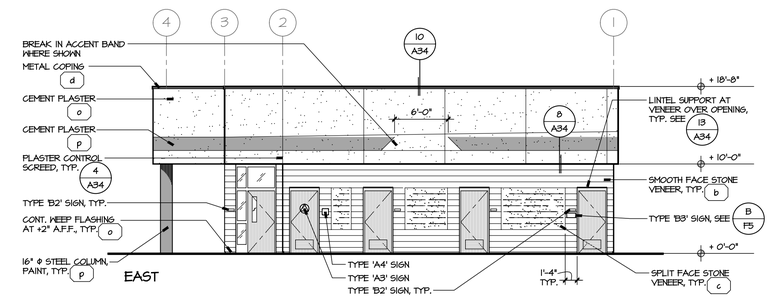

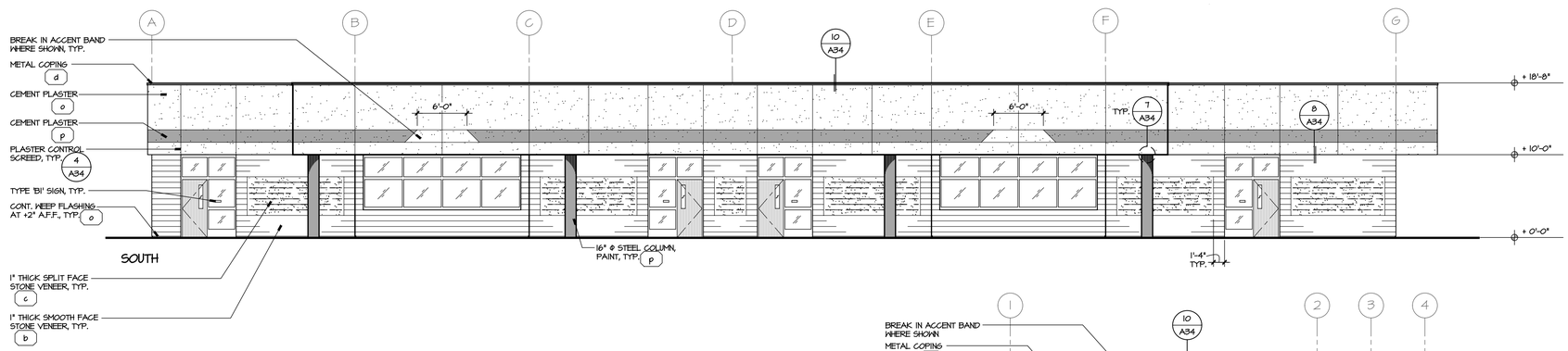

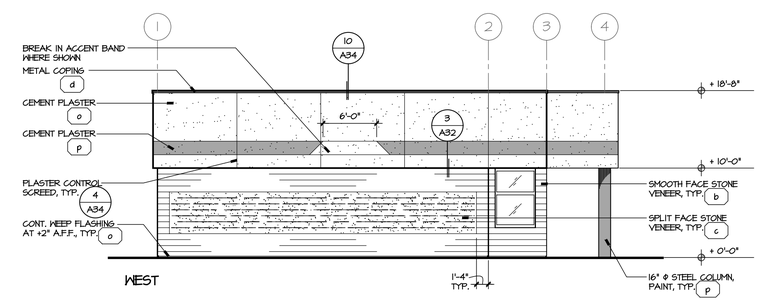

BUILDING 700 - EXTERIOR ELEVATIONS

SCALE:1/8"=1'-0"

NEW PRESCHOOL AND TK/KINDERGARTEN CLASSROOMS AT SANTA FE ELEMENTARY SCHOOL

PORTERVILLE UNIFIED SCHOOL DISTRICT

286 E ORANGE AVENUE, PORTERVILLE, CA 93257

REVISIONS

MANGINI ARCHITECTURE INGENUITY

BARENG MORRELLI SCOTT

MANGINI ASSOCIATES INC.
4320 West Mineral King Avenue
Visalia, California 93291

www.mangini.us
(559) 627.0530 Office
(559) 627.1926 Fax

TITLE

BLDG. 700
EXTERIOR
ELEVATIONS

A3

PROJECT 23076

APPROVALS

FILE # 54-76 | APPLICATION # 02-121996

IDENTIFICATION STAMP
DIV. OF THE STATE ARCHITECT
APP: 02-121996 INC:
REVIEWED FOR
SS ☑ FLS ☑ ACS ☑
DATE: 8/14/2024

LICENSED ARCHITECT
MICHAEL J. SCOTT
No. C-34290
REN. 05-31-25
STATE OF CALIFORNIA

DATE: DECEMBER 31, 2023

CEILING LEGEND

- TAPED, TEXTURED AND PAINTED 5/8" TYPE 'X' GYP. BD.
- CEMENT PLASTER SYSTEM (5 / A34)
- 24" x 48" SUSP. LAY-IN CEILING SYSTEM
- 12" X 12" GLUE UP TILE o/ 5/8" TYPE 'X' GYP. BD.
- * ASTERISK INDICATES 3 1/2" SOUND INSULATION BATTS ABOVE CEILING, TYP.
- (XX'-X") INDICATES HEIGHT OF FINISH CEILING AS MEASURED ABOVE FIN. FLOOR BELOW

REFLECTED CEILING PLAN KEYNOTES

1. 4" CONTINUOUS SOFFIT VENT, TYP. SEE (8 / A34)
2. LIGHT FIXTURE AS SHOWN, SEE ELECTRICAL DRAWINGS
3. AIR REGISTER AS SHOWN, SEE MECHANICAL
4. ATTIC ACCESS, SEE (20 / A9.1)
5. ROOF ACCESS, SEE (3 / A34)

NOTE:
SOFFIT SCREEDS ALIGN w/ WALL & FASCIA

BUILDING 700 - REFLECTED CEILING PLAN

SCALE: 1/8" = 1'-0"

NEW PRESCHOOL AND TK/KINDERGARTEN CLASSROOMS AT SANTA FE ELEMENTARY SCHOOL

PORTERVILLE UNIFIED SCHOOL DISTRICT

286 E ORANGE AVENUE, PORTERVILLE, CA 93257

REVISIONS

MANGINI | ARCHITECTURE INGENUITY
BARENG MORRELLI SCOTT
MANGINI ASSOCIATES INC.
4320 West Mineral King Avenue
Visalia, California 93291
www.mangini.us
(559) 627.0530 Office
(559) 627.1926 Fax

TITLE
BLDG. 700
REFLECTED CEILING PLAN

A4

PROJECT 23076

F:\01 Projects\23076\Drawings\01 Architectural\03 Sheets\23076_A4-Bldg. 700 Reflected Ceiling.dwg Jun 26 2024 12:19pm

APPROVALS

FILE # 54-76 | APPLICATION # 02-121996

IDENTIFICATION STAMP
DIV. OF THE STATE ARCHITECT
APP: 02-121996 INC:
REVIEWED FOR
SS ☑ FLS ☑ ACS ☑
DATE: 8/14/2024

LICENSED ARCHITECT
MICHAEL J. SCOTT
No. C-34290
REN. 05-31-25
STATE OF CALIFORNIA

DATE: DECEMBER 31, 2023

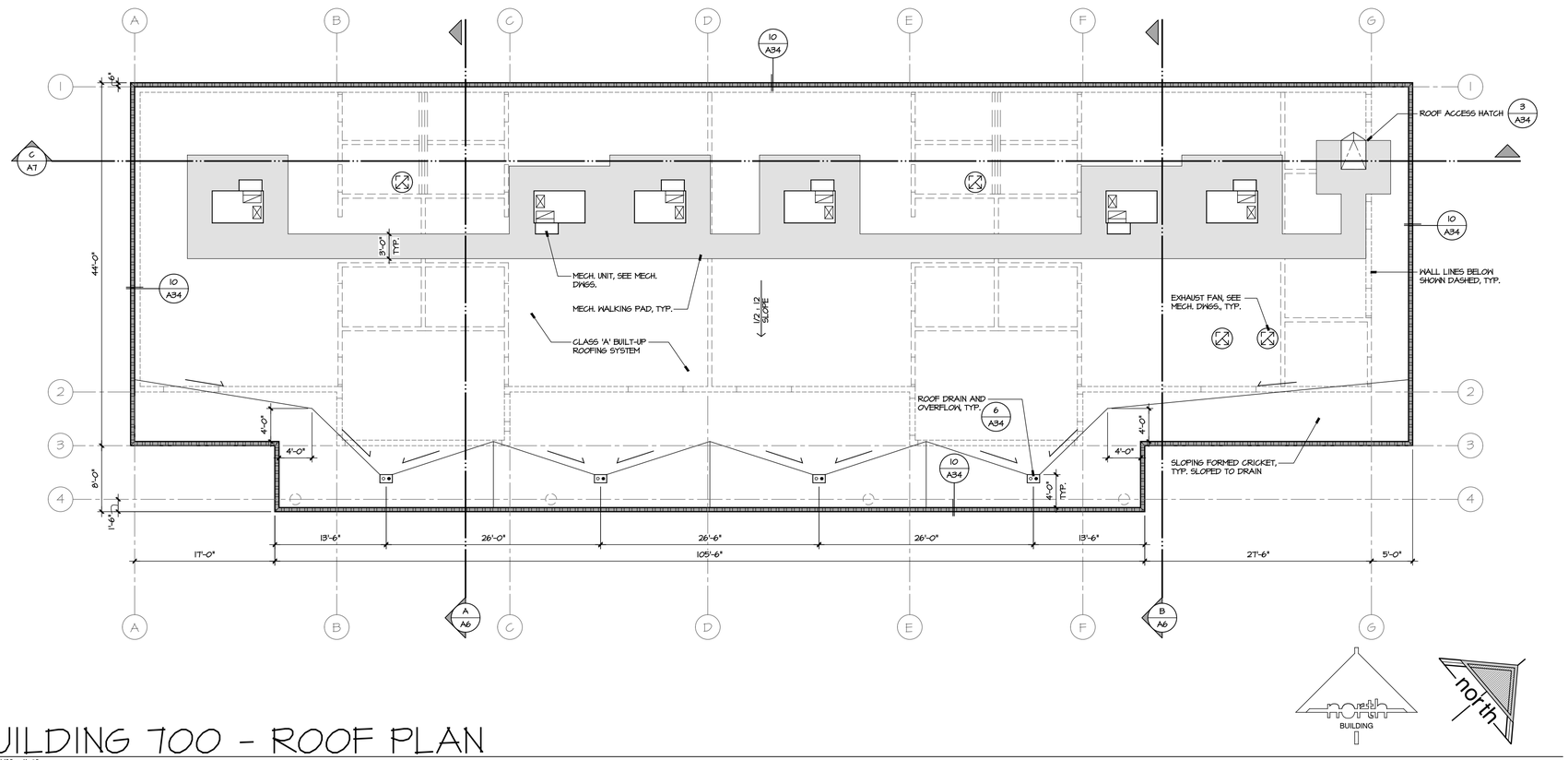

BUILDING 700 - ROOF PLAN

SCALE: 1/8" = 1'-0"

NEW PRESCHOOL AND TK/KINDERGARTEN CLASSROOMS AT SANTA FE ELEMENTARY SCHOOL

PORTERVILLE UNIFIED SCHOOL DISTRICT

286 E ORANGE AVENUE, PORTERVILLE, CA 93257

REVISIONS

MANGINI ARCHITECTURE INGENUITY
BARENG MORRELLI SCOTT
MANGINI ASSOCIATES INC.
4320 West Mineral King Avenue
Visalia, California 93291
www.mangini.us
(559) 627.0530 Office
(559) 627.1926 fax

TITLE
BLDG. 700
ROOF PLAN

A5

PROJECT 23076

APPROVALS

FILE #	APPLICATION #
54-76	02-121996

IDENTIFICATION STAMP
DIV. OF THE STATE ARCHITECT
APP: 02-121996 INC:
REVIEWED FOR
SS ☑ FLS ☑ ACS ☑
DATE: 8/14/2024

LICENSED ARCHITECT
MICHAEL J. SCOTT
No. C-34290
REN. 05-31-25
STATE OF CALIFORNIA

DATE: DECEMBER 31, 2023

BUILDING SECTION LEGEND

◇ # — WALL ASSEMBLY CALLOUT, REFER TO SHEET A26

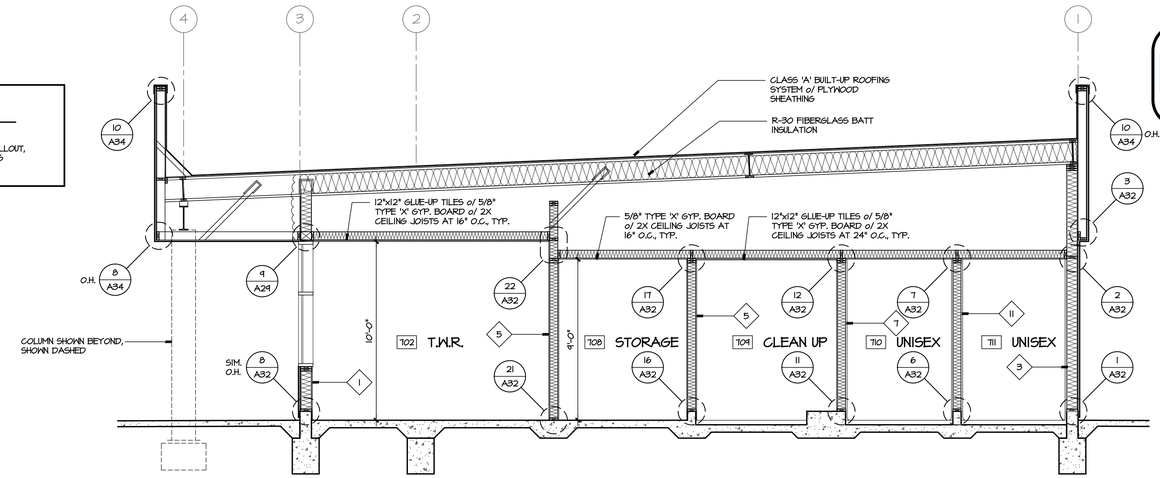

(A) BUILDING 700 - SECTION

1/4" = 1'-0"

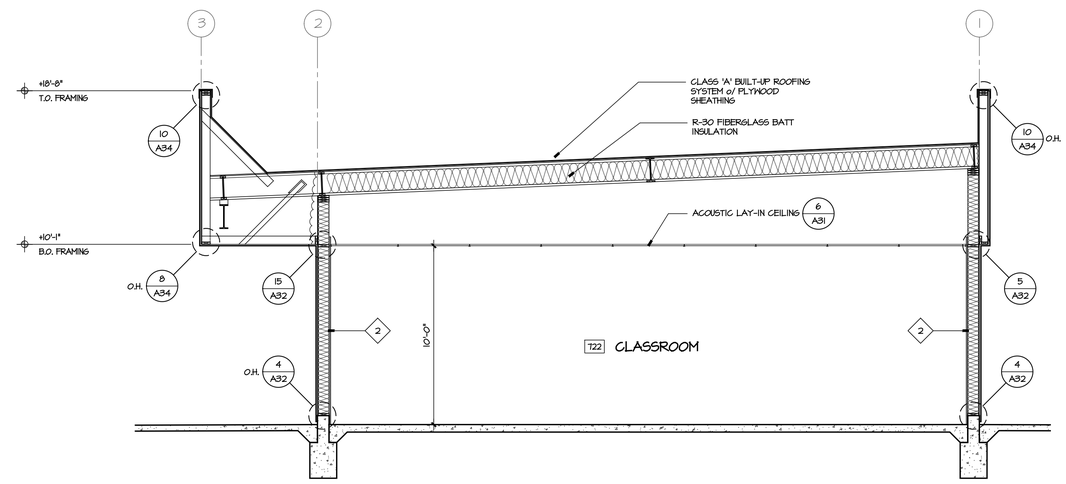

(B) BUILDING 700 - SECTION

1/4" = 1'-0"

AIR BARRIER SECTION KEYNOTES

1. CEMENT PLASTER & PLYWOOD AS AIR BARRIER WHERE SHOWN
2. PLYWOOD & ROOFING UNDERLAYMENT AS AIR BARRIER WHERE SHOWN
3. FOAM-IN-PLACE INSULATION TO COMPLETE AIR BARRIER

AIR BARRIER SECTION NOTES

1. BRIDGE AND SEAL AIR LEAKAGE PATHWAYS AND GAPS, INCLUDING, BUT NOT LIMITED TO:
   - CONNECTIONS OF THE WALLS TO THE ROOF AND AIR BARRIER
   - CONNECTIONS TO THE WALLS TO THE FOUNDATIONS
   - SEISMIC AND EXPANSION JOINTS
   - OPENINGS AND PENETRATIONS OF WINDOW AND DOOR FRAMES, STORE FRONT, CURTAIN WALL
   - PIPING, CONDUIT, DUCT, AND SIMILAR PENETRATIONS
   - MASONRY TIES, SCREWS, BOLTS, AND SIMILAR PENETRATIONS
   - FLASHING AND SHEET METAL ASSEMBLIES
   - ALL OTHER AIR LEAKAGE PATHWAYS IN THE BUILDING ENVELOPE
2. REFER TO 07 2700 AIR BARRIER SYSTEM FOR ADDITIONAL INFORMATION

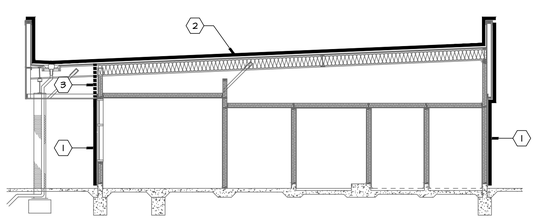

(A) BUILDING 700 - AIR BARRIER SECTION

1/8" = 1'-0"

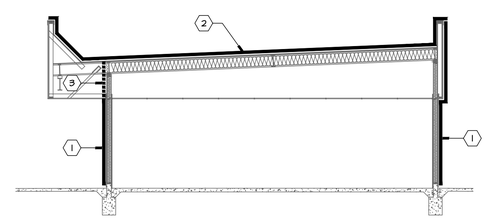

(B) BUILDING 700 - AIR BARRIER SECTION

1/8" = 1'-0"

NEW PRESCHOOL AND TK/KINDERGARTEN CLASSROOMS AT SANTA FE ELEMENTARY SCHOOL

PORTERVILLE UNIFIED SCHOOL DISTRICT
286 E ORANGE AVENUE, PORTERVILLE, CA 93257

REVISIONS

MANGINI ARCHITECTURE INGENUITY
BARENG MORRELLI SCOTT
MANGINI ASSOCIATES INC.
4320 West Mineral King Avenue
Visalia, California 93291
www.mangini.us
(559) 627.0530 Office
(559) 627.1926 Fax

TITLE
BLDG. 700 SECTIONS AND AIR BARRIER SECTIONS

A6

PROJECT 23076

BUILDING SECTION LEGEND

#	WALL ASSEMBLY CALLOUT, REFER TO SHEET A26

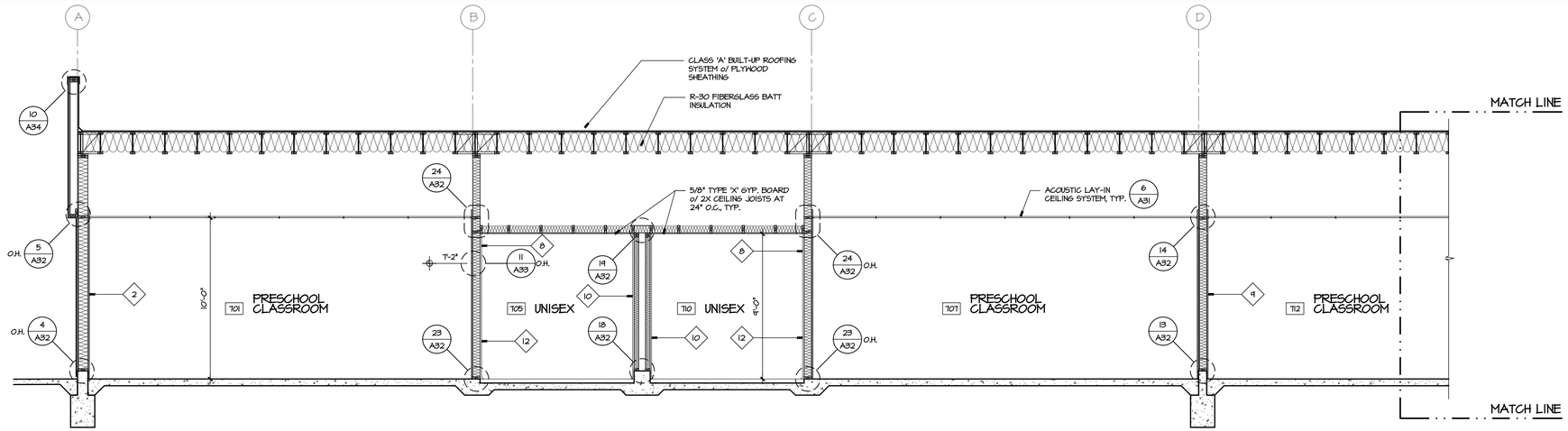

© BUILDING 700 - SECTION

1/4" = 1'-0"

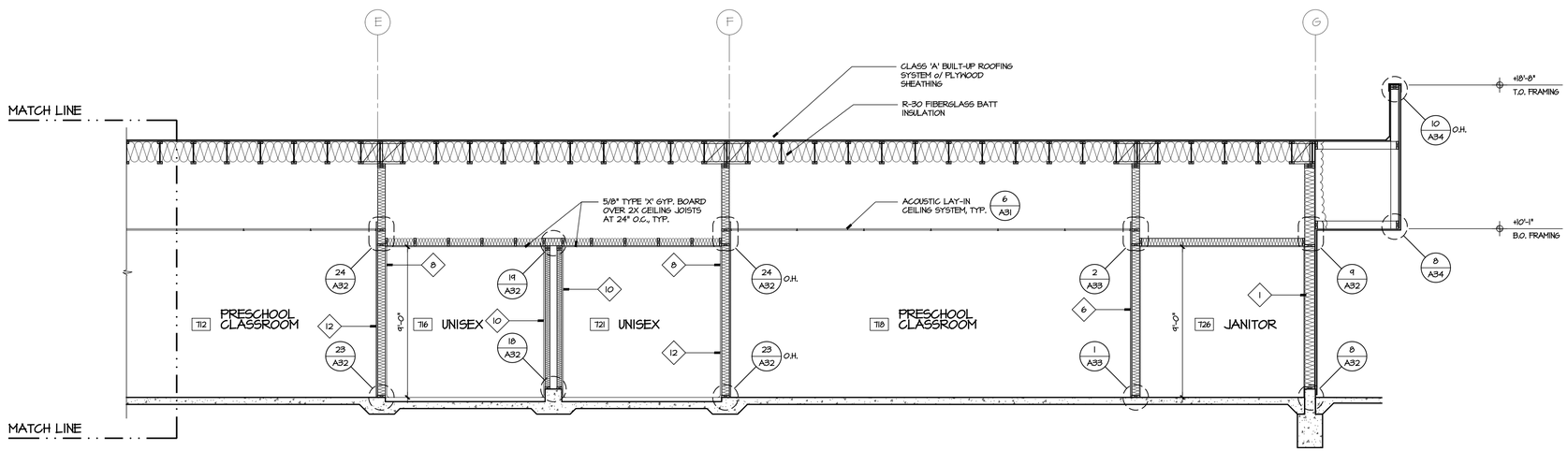

© BUILDING 700 - SECTION (CONTINUED)

1/4" = 1'-0"

AIR BARRIER SECTION KEYNOTES

1. CEMENT PLASTER & PLYWOOD AS AIR BARRIER WHERE SHOWN
2. PLYWOOD & ROOFING UNDERLAYMENT AS AIR BARRIER WHERE SHOWN
3. FOAM-IN-PLACE INSULATION TO COMPLETE AIR BARRIER

AIR BARRIER SECTION NOTES

1. BRIDGE AND SEAL AIR LEAKAGE PATHWAYS AND GAPS, INCLUDING, BUT NOT LIMITED TO:
   - -CONNECTIONS OF THE WALLS TO THE ROOF AND AIR BARRIER
   - -CONNECTIONS TO THE WALLS TO THE FOUNDATIONS
   - -SEISMIC AND EXPANSION JOINTS
   - -OPENINGS AND PENETRATIONS OF WINDOW AND DOOR FRAMES, STORE FRONT, CURTAIN WALL.
   - -PIPING, CONDUIT, DUCT, AND SIMILAR PENETRATIONS
   - -MASONRY TIES, SCREWS, BOLTS, AND SIMILAR PENETRATIONS
   - -FLASHING AND SHEET METAL ASSEMBLIES
   - -ALL OTHER AIR LEAKAGE PATHWAYS IN THE BUILDING ENVELOPE
2. REFER TO OT 2700 AIR BARRIER SYSTEM FOR ADDITIONAL INFORMATION

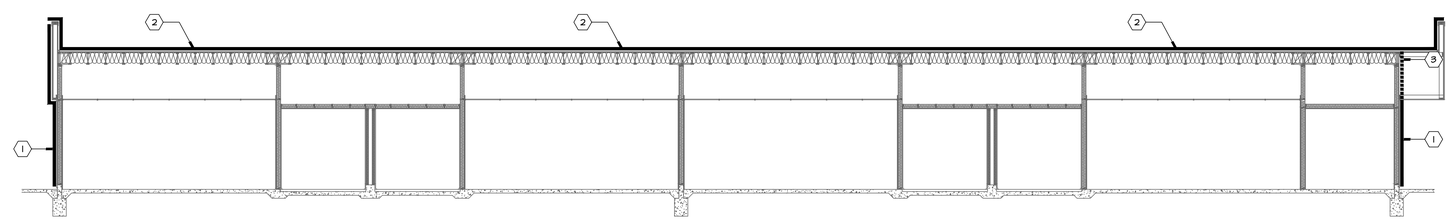

© BUILDING 700 - AIR BARRIER SECTION

1/8" = 1'-0"

APPROVALS

FILE #	APPLICATION #
54-76	02-121996

IDENTIFICATION STAMP
DIV. OF THE STATE ARCHITECT
APP: 02-121996 INC:
REVIEWED FOR
SS ☑ FLS ☑ ACS ☑
DATE: 8/14/2024

LICENSED ARCHITECT
MICHAEL J. SCOTT
No. C-34290
REN. 05-31-25
STATE OF CALIFORNIA

DATE: DECEMBER 31, 2023

NEW PRESCHOOL AND TK/KINDERGARTEN CLASSROOMS AT SANTA FE ELEMENTARY SCHOOL

PORTERVILLE UNIFIED SCHOOL DISTRICT
286 E ORANGE AVENUE, PORTERVILLE, CA 93257

REVISIONS

MANGINI ARCHITECTURE
BARENG MORRELLI WOENNUTT SCOTT
MANGINI ASSOCIATES INC.
4320 West Mineral King Avenue
Visalia, California 93291
www.mangini.us
(559) 627.0530 Office
(559) 627.1926 Fax

TITLE
BLDG. 700
SECTIONS AND
AIR BARRIER
SECTIONS

A7

PROJECT 23076

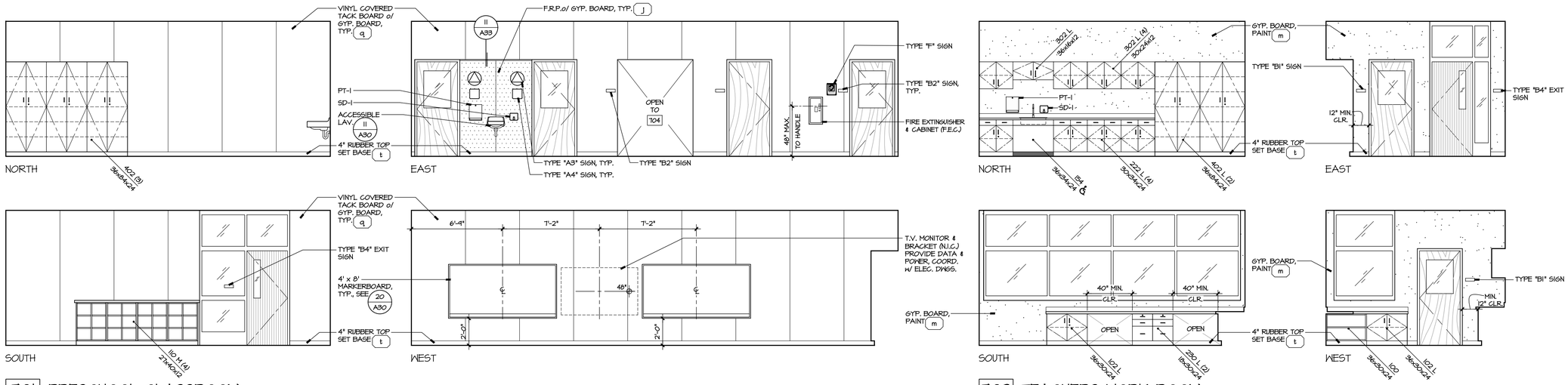

701 PRESCHOOL CLASSROOM

RM 712 SIM.
RM. 707, 718 O.H.,

702 TEACHERS WORK ROOM

RM. 713 SIM.

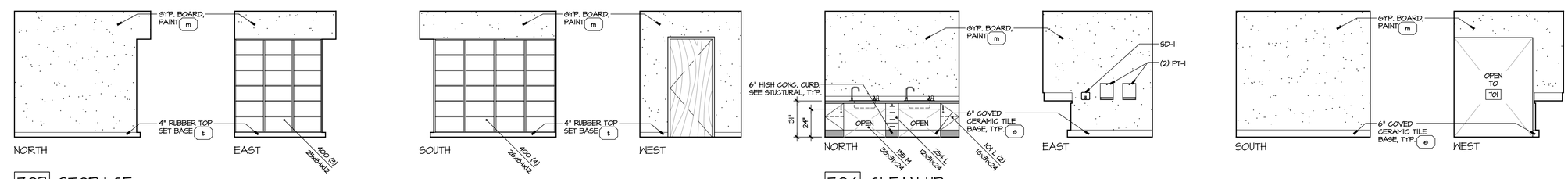

703 STORAGE

RM. 714 SIM.
RM. 708, 719 O.H.

704 CLEAN UP

RM. 715 SIM.
RM. 709, 720 O.H.

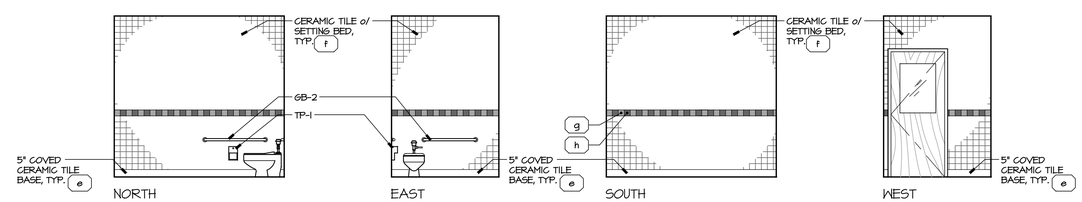

705 UNISEX STUDENT

RM. 711, 716, 722 SIM.
RM. 706, 710, 717, 721 O.H.

REFER TO 16/A31 FOR TYPICAL ACCESSIBLE MOUNTING HEIGHTS AND REQUIREMENTS U.O.N.

INTERIOR ELEVATION NOTES

1. # = MATERIAL DEFINITION REFER TO SHEET A25
2. REFER TO FINISH SCHEDULE SHEET A25 FOR DESIGNATION OF FINISHES.
3. REFER TO 16/A31 & 17/A31 FOR TYPICAL ACCESSIBLE MOUNTING HEIGHTS AND REQUIREMENTS, U.O.N.
4. REFER TO SPECIFICATIONS FOR TOILET ACCESSORY ABBREVIATIONS.
5. REFER TO 5/A30 FOR TYPICAL COUNTERTOP AND BACKSPLASH DETAILS, U.O.N.
6. REFER TO 1/A30 FOR TYPICAL CABINET AND SHELVING ANCHORAGE.
7. FOR ACCESSIBLE LAVATORY, SEE DETAILS 13/A31 & 14/A31
8. SEE 1/A28 AND DOOR SCHEDULE A27 FOR TYPICAL DOOR SIGNAGE.
9. REFER TO 15/A31 FOR TYPICAL GYPSUM BOARD EDGE DETAILS.
10. SEE 18/A31 FOR RECESSED FIRE EXTINGUISHER CABINET INFORMATION.
11. SEE 22/A30 FOR TYPICAL GRAB BAR ANCHORAGE.
12. ANY DISCREPANCY BETWEEN THE LOCATION OF DEVICES, FIXTURES, ETC., SHOWN HERE AND ON ANY PLUMBING, ELECTRICAL, MECHANICAL, OR SANITARY SEWER SHEETS ARE TO BE BROUGHT TO THE ATTENTION OF THE ARCHITECT PRIOR TO LAYOUT.
13. ANY ACCESSORIES SHOWN N.I.C. SHALL BE PROVIDED BY THE OWNER. CONTRACTOR TO PROVIDE BLOCKING PER 16/A30 AT LOCATION SHOWN.
14. ♿ = ADA, ACCESSIBLE. SEE CABINET DTLS. 11/A30 & 12/A30
15. OPEN KNEE SPACE AT WORK STATIONS TO HAVE NO SHARP OR ABRASIVE EDGES UNDER COUNTER.

INTERIOR ELEVATIONS

SCALE: 1/4" = 1'-0"

APPROVALS

FILE # 54-76 | APPLICATION # 02-121996

IDENTIFICATION STAMP
DIV. OF THE STATE ARCHITECT
APP: 02-121996 INC:
REVIEWED FOR
SS ☑ FLS ☑ ACS ☑
DATE: 8/14/2024

LICENSED ARCHITECT
MICHAEL J. SCOTT
No. C-34290
REN. 05-31-25
STATE OF CALIFORNIA

DATE: DECEMBER 31, 2023

NEW PRESCHOOL AND TK/KINDERGARTEN CLASSROOMS AT SANTA FE ELEMENTARY SCHOOL

PORTERVILLE UNIFIED SCHOOL DISTRICT
286 E ORANGE AVENUE, PORTERVILLE, CA 93257

REVISIONS

MANGINI ARCHITECTURE INGENUITY
BARENG MORRELLI SCOTT
MANGINI ASSOCIATES INC.
4320 West Mineral King Avenue
Visalia, California 93291
www.mangini.us
(559) 627-0530 Office
(559) 627-1928 Fax

TITLE
BLDG. 700
INTERIOR
ELEVATIONS

A8

PROJECT 23076

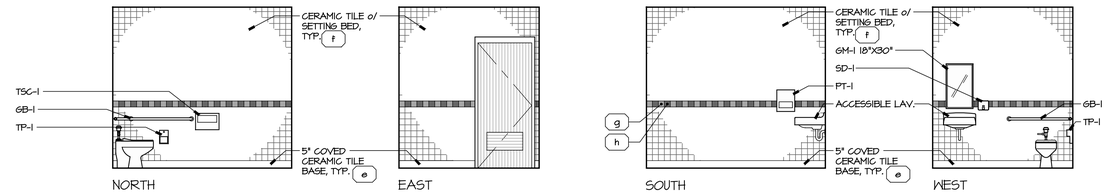

723 STAFF TOILET

REFER TO 17/A31 FOR TYPICAL ACCESSIBLE MOUNTING HEIGHTS AND REQUIREMENTS U.O.N.

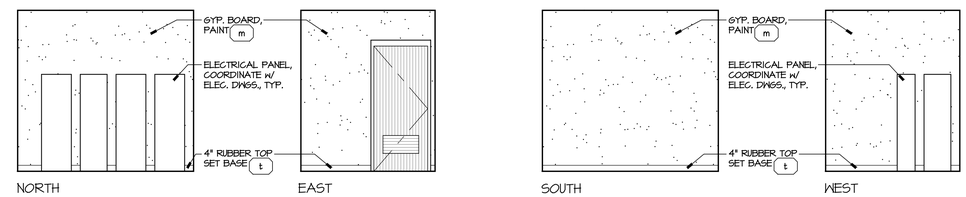

724 ELECTRICAL

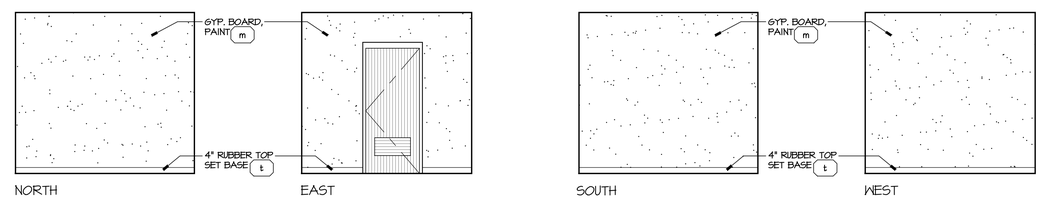

725 STORAGE

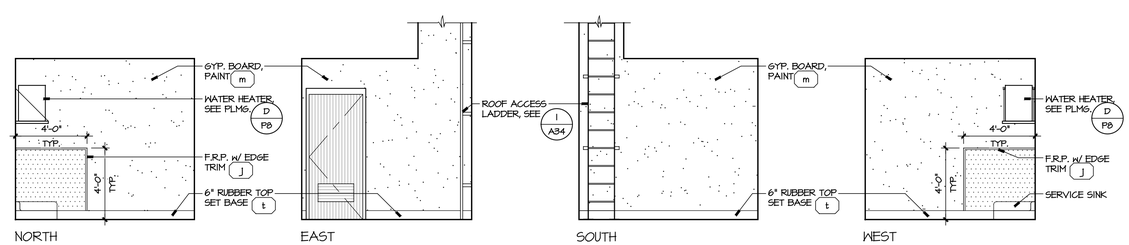

726 JANITOR

INTERIOR ELEVATION NOTES

1. # = MATERIAL DEFINITION REFER TO SHEET A25
2. REFER TO FINISH SCHEDULE SHEET A25 FOR DESIGNATION OF FINISHES.
3. REFER TO 16/A31 & 17/A31 FOR TYPICAL ACCESSIBLE MOUNTING HEIGHTS AND REQUIREMENTS, U.O.N.
4. REFER TO SPECIFICATIONS FOR TOILET ACCESSORY ABBREVIATIONS.
5. REFER TO 5/A30 FOR TYPICAL COUNTERTOP AND BACKSPLASH DETAILS, U.O.N.
6. REFER TO 1/A30 FOR TYPICAL CABINET AND SHELVING ANCHORAGE.
7. FOR ACCESSIBLE LAVATORY, SEE DETAILS 13/A31 & 14/A31
8. SEE 1/A28 AND DOOR SCHEDULE A27 FOR TYPICAL DOOR SIGNAGE.
9. REFER TO 15/A31 FOR TYPICAL GYPSUM BOARD EDGE DETAILS.
10. SEE 18/A31 FOR RECESSED FIRE EXTINGUISHER CABINET INFORMATION.
11. SEE 22/A30 FOR TYPICAL GRAB BAR ANCHORAGE.
12. ANY DISCREPANCY BETWEEN THE LOCATION OF DEVICES, FIXTURES, ETC., SHOWN HERE AND ON ANY PLUMBING, ELECTRICAL, MECHANICAL, OR SANITARY SEWER SHEETS ARE TO BE BROUGHT TO THE ATTENTION OF THE ARCHITECT PRIOR TO LAYOUT.
13. ANY ACCESSORIES SHOWN N.I.C. SHALL BE PROVIDED BY THE OWNER. CONTRACTOR TO PROVIDE BLOCKING PER 16/A30 AT LOCATION SHOWN.
14. ♿ = ADA. ACCESSIBLE. SEE CABINET DTLS. 11/A30 & 12/A30
15. OPEN KNEE SPACE AT WORK STATIONS TO HAVE NO SHARP OR ABRASIVE EDGES UNDER COUNTER.

INTERIOR ELEVATIONS

SCALE: 1/4" = 1'-0"

APPROVALS

FILE # 54-76 | APPLICATION # 02-121996

IDENTIFICATION STAMP
DIV. OF THE STATE ARCHITECT
APP: 02-121996 INC:
REVIEWED FOR
SS ☑ FLS ☑ ACS ☑
DATE: 8/14/2024

LICENSED ARCHITECT
MICHAEL J. SCOTT
No. C-34290
REN. 05-31-25
STATE OF CALIFORNIA

DATE: DECEMBER 31, 2023

NEW PRESCHOOL AND TK/KINDERGARTEN CLASSROOMS AT SANTA FE ELEMENTARY SCHOOL

PORTERVILLE UNIFIED SCHOOL DISTRICT

286 E ORANGE AVENUE, PORTERVILLE, CA 93257

REVISIONS

MANGINI ARCHITECTURE INGENUITY
BARENG MORRELLI SCOTT
MANGINI ASSOCIATES INC.
4320 West Mineral King Avenue
Visalia, California 93291
www.mangini.us
(559) 627-0530 Office
(559) 627-1926 Fax

TITLE
BLDG. 700
INTERIOR
ELEVATIONS

A9

PROJECT 23076

APPROVALS

FILE # 54-76 | APPLICATION # 02-121996

IDENTIFICATION STAMP
DIV. OF THE STATE ARCHITECT
APP: 02-121996 INC:
REVIEWED FOR
SS ☑ FLS ☑ ACS ☑
DATE: 8/14/2024

LICENSED ARCHITECT
MICHAEL J. SCOTT
No. C-34290
REN. 05-31-25
STATE OF CALIFORNIA

DATE: DECEMBER 31, 2023

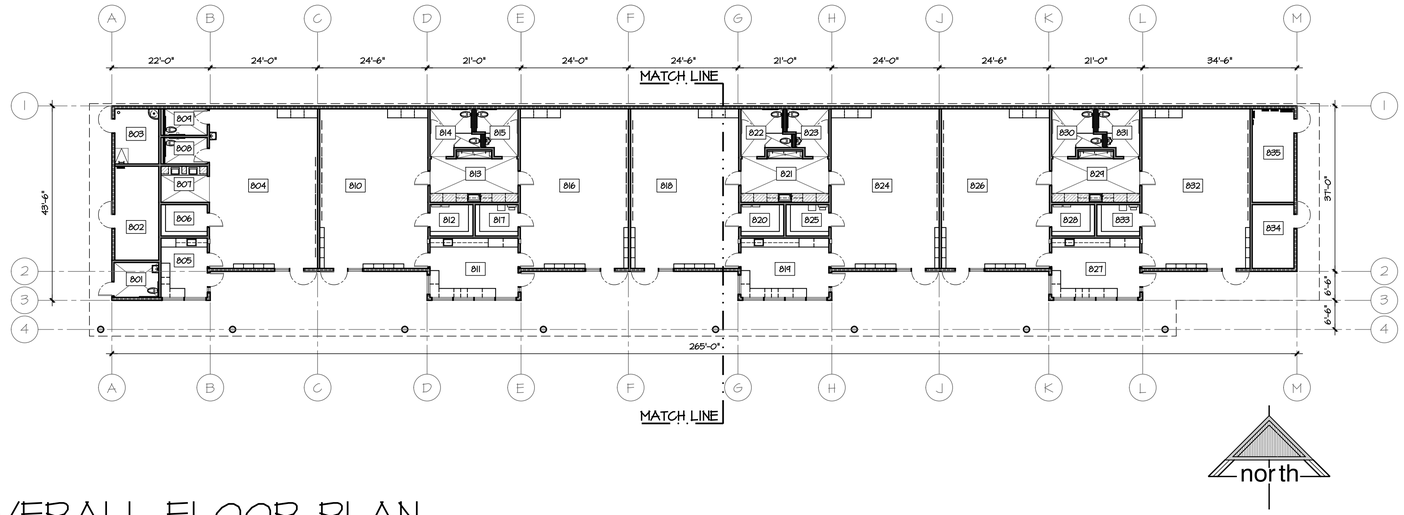

OVERALL FLOOR PLAN

SCALE: 1/16" = 1'-0"

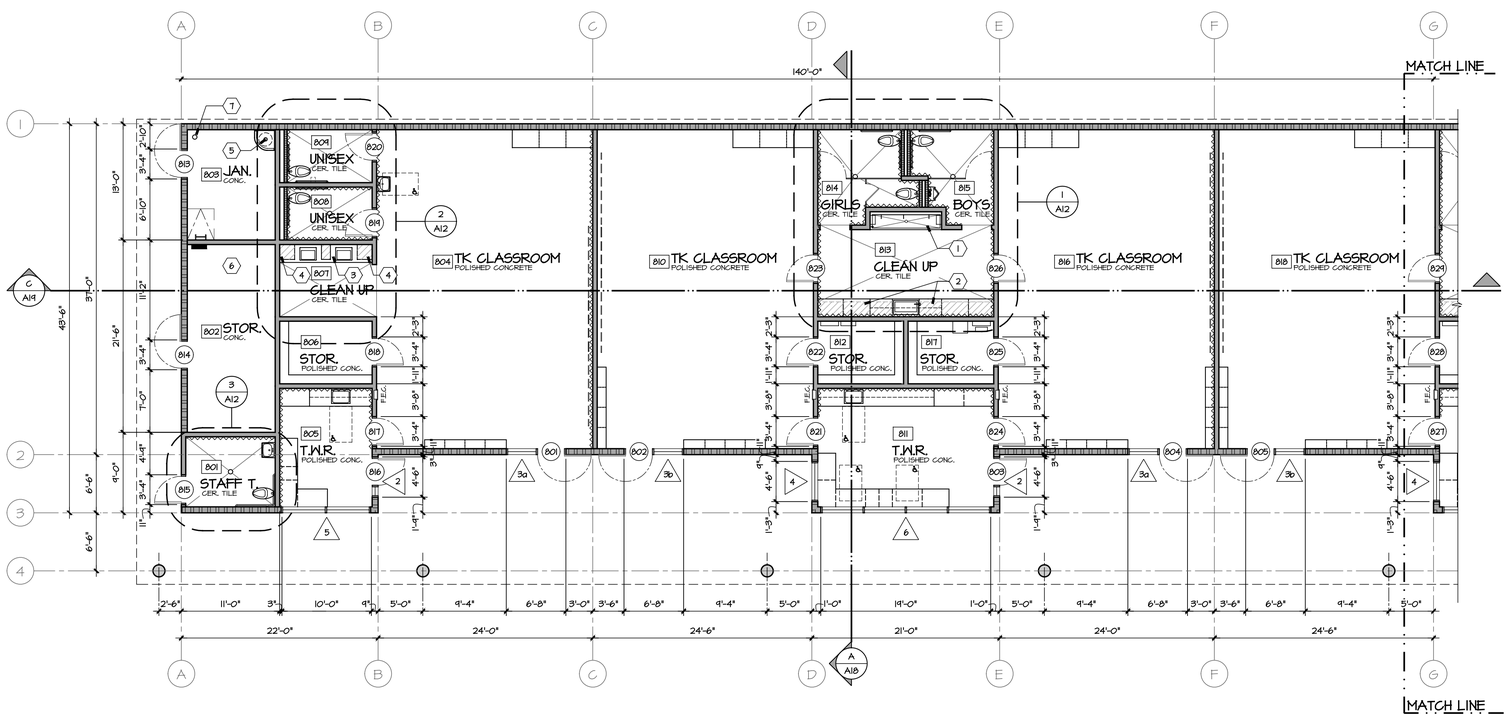

BUILDING 800 - PARTIAL FLOOR PLAN

SCALE: 1/8" = 1'-0"

FLOOR PLAN LEGEND:

- 2x8 WOOD STUDS AT 16" O.C.
- 2x6 WOOD STUDS AT 16" O.C.
- 2x4 WOOD STUDS AT 16" O.C.
- SOUND ATTENUATION BATT INSULATION, FULL HEIGHT
- INDICATES 30"x48" CLEAR SPACE

GENERAL FLOOR PLAN NOTES:

1. DIMENSIONS ARE TO FACE OF PLYWOOD OR FACE OF STUD U.O.N.
2. REFER TO SHEET A12 FOR EXIT ANALYSIS
3. CONSTRUCT ALL WALLS PER ASSEMBLY DETAILS ON SHEET A26
4. REFER TO ELEVATIONS AND DOOR SCHEDULE FOR ALL ROOM AND BUILDING SIGNAGES
5. FOR TYPICAL ACCESSIBLE MOUNTING HEIGHTS AND REQUIREMENTS, SEE INTERIOR ELEVATIONS AND DETAIL 16/A31 & 17/A31
6. FINISH ALL GYPSUM BOARD EDGES PER DETAIL 15/A31
7. FOR FIRE EXTINGUISHERS, SEE 18/A31
8. SOUND INSULATION & THERMAL INSULATION SHALL RUN FULL HEIGHT OF WALL. INSULATION LOCATED WHERE SHOWN ON FLOOR PLAN & WALL ASSEMBLIES, SHEET A26
9. FOR WALL PENETRATIONS OF PIPE OR CONDUIT, REFER TO DETAIL 19//A31

FLOOR PLAN KEYNOTES

1. TROUGH SINK W/ ACC. BUBBLER, SEE INTERIOR ELEVATIONS
2. 8'-4" WIDE x 20" DEEP x 6" HIGH CONC. HSKPG. PAD, SEE STRUCTURAL
3. 12" WIDE x 20" DEEP x 6" HIGH CONC. HSKPG. PAD, SEE STRUCTURAL
4. 20" WIDE x 20" DEEP x 6" HIGH CONC. HSKPG. PAD, SEE STRUCTURAL
5. SERVICE SINK & WALL MOUNTED WATER HEATER, SEE PLUMBING DWGS.
6. STAFF BIKE PARKING
7. FIRE RISER, SEE PLUMBING DWGS.

NEW PRESCHOOL AND TK/KINDERGARTEN CLASSROOMS AT SANTA FE ELEMENTARY SCHOOL

PORTERVILLE UNIFIED SCHOOL DISTRICT
286 E ORANGE AVENUE, PORTERVILLE, CA 93257

REVISIONS

MANGINI ARCHITECTURE INGENUITY
BARENG MORRELLI SCOTT
MANGINI ASSOCIATES INC.
4320 West Mineral King Avenue
Visalia, California 93291
www.mangini.us
(559) 627-0530 Office
(559) 627-1926 fax

TITLE
BLDG. 800
OVERALL FLOOR PLAN
AND PARTIAL
FLOOR PLAN

A10

PROJECT 23076

APPROVALS

FILE # 54-76 | APPLICATION # 02-121996

IDENTIFICATION STAMP
DIV. OF THE STATE ARCHITECT
APP: 02-121996 INC:
REVIEWED FOR
SS ☑ FLS ☑ ACS ☑
DATE: 8/14/2024

LICENSED ARCHITECT
MICHAEL J. SCOTT
No. C-34290
REN. 05-31-25
STATE OF CALIFORNIA

DATE: DECEMBER 31, 2023

NEW PRESCHOOL AND TK/KINDERGARTEN CLASSROOMS AT SANTA FE ELEMENTARY SCHOOL

PORTERVILLE UNIFIED SCHOOL DISTRICT
286 E ORANGE AVENUE, PORTERVILLE, CA 93257

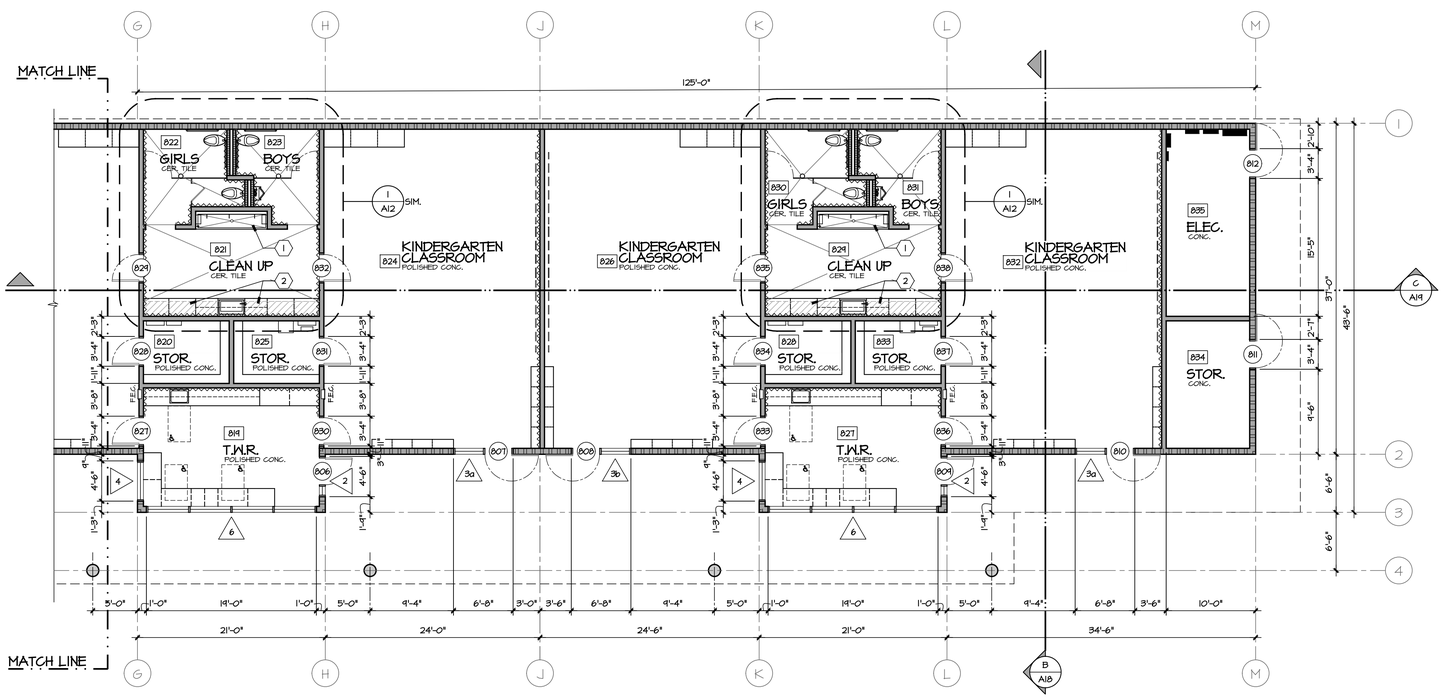

FLOOR PLAN LEGEND:

- 2x8 WOOD STUDS AT 16" O.C.
- 2x6 WOOD STUDS AT 16" O.C.
- 2x4 WOOD STUDS AT 16" O.C.
- SOUND ATTENUATION BATT INSULATION, FULL HEIGHT
- INDICATES 30"x48" CLEAR SPACE

GENERAL FLOOR PLAN NOTES:

1. DIMENSIONS ARE TO FACE OF PLYWOOD OR FACE OF STUD U.O.N.
2. REFER TO SHEET A12 FOR EXIT ANALYSIS
3. CONSTRUCT ALL WALLS PER ASSEMBLY DETAILS ON SHEET A26
4. REFER TO ELEVATIONS AND DOOR SCHEDULE FOR ALL ROOM AND BUILDING SIGNAGES
5. FOR TYPICAL ACCESSIBLE MOUNTING HEIGHTS AND REQUIREMENTS, SEE INTERIOR ELEVATIONS AND DETAIL 16/A31 & 17/A31
6. FINISH ALL GYPSUM BOARD EDGES PER DETAIL 15/A31
7. FOR FIRE EXTINGUISHERS, SEE 18/A31
8. SOUND INSULATION & THERMAL INSULATION SHALL RUN FULL HEIGHT OF WALL. INSULATION LOCATED WHERE SHOWN ON FLOOR PLAN & WALL ASSEMBLIES, SHEET A26
9. FOR WALL PENETRATIONS OF PIPE OR CONDUIT, REFER TO DETAIL 19/A31

FLOOR PLAN KEYNOTES

1. TROUGH SINK w/ ACC. BUBBLER, SEE INTERIOR ELEVATIONS
2. 8'-4" WIDE x 20" DEEP x 6" HIGH CONC. HSKPG. PAD, SEE STRUCTURAL

north

BUILDING 800 - PARTIAL FLOOR PLAN

SCALE: 1/8" = 1'-0"

REVISIONS

MANGINI ARCHITECTURE INGENUITY
BARENG MORRELLI SCOTT
MANGINI ASSOCIATES INC.
4320 West Mineral King Avenue
Visalia, California 93291
www.mangini.us
(559) 627.0530 Office
(559) 627.1928 Fax

TITLE
BLDG. 800 PARTIAL FLOOR PLAN

A11

PROJECT 23076

EXIT ANALYSIS

BLDG.	ROOM #	NAME	AREA (SF)	SQ.FT./ OCCUP.	# OCCUPANTS	TOTAL # OCCUPANTS	NUMBER OF REQUIRED EXITS CBC 1015.1	NUMBER OF PROVIDED EXITS	EGRESS WIDTH PER OCCUPANT SERVED CBC 1005.1	EXIT #	# OF OCC. THROUGH EXIT	REQ. EXIT WIDTH CALCULATION	EXIT WIDTH PROVIDED	DOOR ID #
		CALCULATED OCCUPANTS OF PRIMARY SPACES WITH ACCESSORY OCCUPANTS EXITING THROUGH CBC 1004.1					EXITING CALCULATIONS OF SPACES			EGRESS WIDTH CALCULATIONS				
BUILDING '800'	801	STAFF TOILET	78	ACCESSORY				1 EXIT PROVIDED CBC 1025.2	.15" PER OCC.					
	802	STORAGE	213	300	1	1	1 < 50 = 1 EXIT REQ.			EXIT 1	1	1 X .15" = .15"	34"	814
	803	JANITOR	125	ACCESSORY										
	804	TK CLASSROOM	864	20	44	45	45 < 50 = 1 EXIT REQ.			EXIT 1	45	45 X .15" = 6.75"	34"	801
	805	TEACHER WORK ROOM	141	100	2	2	2 < 50 = 1 EXIT REQ.			EXIT 1	2	2 X .15" = .3"	34"	816
	806	STORAGE	74	300	1	1	1 < 50 = 1 EXIT REQ.			EXIT THROUGH ROOM 804				
	807	CLEAN-UP	85	ACCESSORY										
	808	UNISEX STUDENT TOILET	58	ACCESSORY										
	809	UNISEX STUDENT TOILET	58	ACCESSORY										
	810	TK CLASSROOM	864	20	44	45	45 < 50 = 1 EXIT REQ.			EXIT 1	45	45 X .15" = 6.75"	34"	802
	811	TEACHER WORK ROOM	269	100	3	3	3 < 50 = 1 EXIT REQ.			EXIT 1	3	3 X .15" = .45"	34"	803
	812	STORAGE	69	300	1	1	1 < 50 = 1 EXIT REQ.			EXIT THROUGH ROOM 810				
	813	CLEAN-UP	211	ACCESSORY										
	814	GIRLS	100	ACCESSORY										
	815	BOYS	88	ACCESSORY										
	816	TK CLASSROOM	864	20	44	45	45 < 50 = 1 EXIT REQ.			EXIT 1	45	45 X .15" = 6.75"	34"	804
	817	STORAGE	69	300	1	1	1 < 50 = 1 EXIT REQ.			EXIT THROUGH ROOM 816				
	818	TK CLASSROOM	864	20	44	45	45 < 50 = 1 EXIT REQ.			EXIT 1	45	45 X .15" = 6.75"	34"	805
	819	TEACHER WORK ROOM	269	100	3	3	3 < 50 = 1 EXIT REQ.			EXIT 1	3	3 X .15" = .45"	34"	806
	820	STORAGE	69	300	1	1	1 < 50 = 1 EXIT REQ.			EXIT THROUGH ROOM 818				
	821	CLEAN-UP	211	ACCESSORY										
	822	GIRLS	100	ACCESSORY										
	823	BOYS	88	ACCESSORY										
	824	KINDER CLASSROOM	864	20	44	45	45 < 50 = 1 EXIT REQ.			EXIT 1	45	45 X .15" = 6.75"	34"	807
	825	STORAGE	69	300	1	1	1 < 50 = 1 EXIT REQ.			EXIT THROUGH ROOM 824				
	826	KINDER CLASSROOM	864	20	44	45	45 < 50 = 1 EXIT REQ.			EXIT 1	45	45 X .15" = 6.75"	34"	808
	827	TEACHER WORK ROOM	269	100	3	3	3 < 50 = 1 EXIT REQ.			EXIT 1	3	3 X .15" = .45"	34"	809
	828	STORAGE	69	300	1	1	1 < 50 = 1 EXIT REQ.			EXIT THROUGH ROOM 826				
	829	CLEAN-UP	211	ACCESSORY										
	830	GIRLS	100	ACCESSORY										
	831	BOYS	88	ACCESSORY										
	832	KINDER CLASSROOM	864	20	44	45	45 < 50 = 1 EXIT REQ.			EXIT 1	45	45 X .15" = 6.75"	34"	810
	833	STORAGE	69	300	1	1	1 < 50 = 1 EXIT REQ.			EXIT THROUGH ROOM 832				
	834	STORAGE	137	300	1	1	1 < 50 = 1 EXIT REQ.			EXIT 1	1	1 X .15" = .15"	34"	811
	835	ELECTRICAL	201	ACCESSORY										

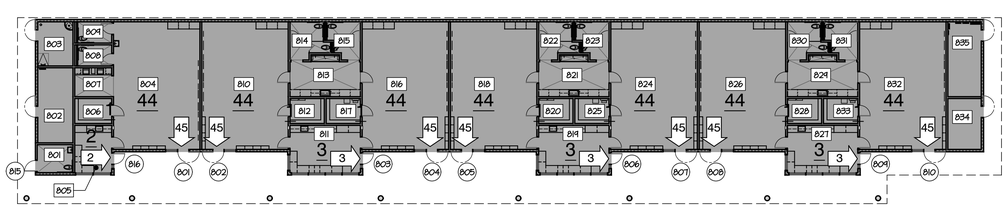

BUILDING 800 - EXIT ANALYSIS

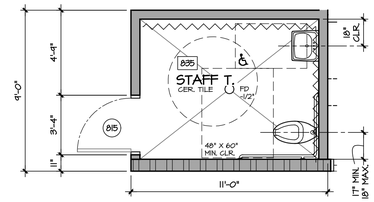

north

3 ENLARGED FLOOR PLAN

SCALE: 1/4" = 1'-0"

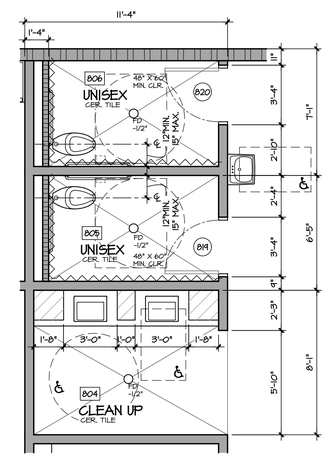

north

2 ENLARGED FLOOR PLAN

SCALE: 1/4" = 1'-0"

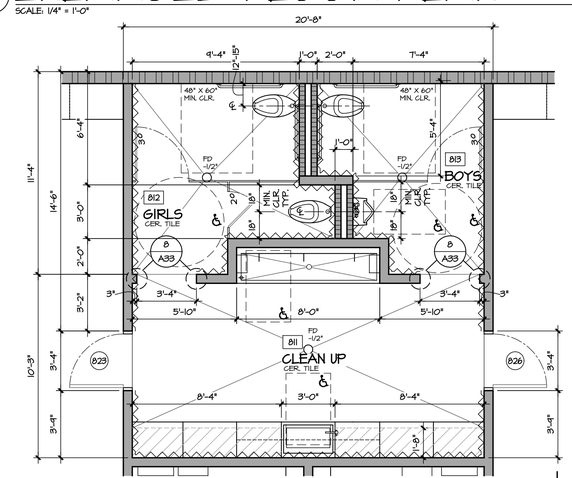

north

1 ENLARGED FLOOR PLAN

SCALE: 1/4" = 1'-0"

ENLARGED FLOOR PLAN LEGEND

- 2x8 WOOD STUDS AT 16" O.C.
- 2x6 WOOD STUDS AT 16" O.C.
- 2x4 WOOD STUDS AT 16" O.C.
- SOUND ATTENUATION BATT INSULATION, FULL HEIGHT
- INDICATES 30"x48" CLEAR SPACE
- Ø5'-0" — INDICATES 5' DIAMETER W.C. ROTATION SPACE

ENLARGED FLOOR PLAN NOTES

1. DIMENSIONS ARE TO FACE OF PLYWOOD OR FACE OF STUD U.O.N.
2. REFER TO THIS SHEET FOR EXIT ANALYSIS
3. CONSTRUCT ALL WALLS PER ASSEMBLY DETAILS ON SHEET A26
4. REFER TO ELEVATIONS AND DOOR SCHEDULE FOR ALL ROOM AND BUILDING SIGNAGES
5. FOR TYPICAL ACCESSIBLE MOUNTING HEIGHTS AND REQUIREMENTS, SEE INTERIOR ELEVATIONS AND DETAIL 16/A31 & 17 /A31
6. FINISH ALL GYPSUM BOARD EDGES PER DETAIL 15/A31
7. FOR FIRE EXTINGUISHERS, SEE 18/A31
8. SOUND INSULATION & THERMAL INSULATION SHALL RUN FULL HEIGHT OF WALL. INSULATION LOCATED WHERE SHOWN ON FLOOR PLAN & WALL ASSEMBLIES, SHEET A26
9. FOR WALL PENETRATIONS OF PIPE OR CONDUIT, REFER TO DETAIL 19/A31

APPROVALS

FILE # 54-76 | APPLICATION # 02-121996

IDENTIFICATION STAMP
DIV. OF THE STATE ARCHITECT
APP: 02-121996 INC:
REVIEWED FOR
SS ☑ FLS ☑ ACS ☑
DATE: 8/14/2024

LICENSED ARCHITECT
MICHAEL J. SCOTT
No. C-34290
REN. 05-31-25
STATE OF CALIFORNIA

DATE: DECEMBER 31, 2023

NEW PRESCHOOL AND TK/KINDERGARTEN CLASSROOMS AT SANTA FE ELEMENTARY SCHOOL

PORTERVILLE UNIFIED SCHOOL DISTRICT
286 E ORANGE AVENUE, PORTERVILLE, CA 93257

REVISIONS

MANGINI ARCHITECTURE INGENUITY
BARENG MORRELLI SCOTT
MANGINI ASSOCIATES INC.
4320 West Mineral King Avenue
Visalia, California 93291
www.mangini.us
(559) 627.0530 Office
(559) 627.1926 Fax

TITLE
BLDG. 800
ENLARGED FLOOR PLANS, EXIT ANALYSIS

A12

PROJECT 23076

APPROVALS

FILE # 54-76 | APPLICATION # 02-121996

IDENTIFICATION STAMP
DIV. OF THE STATE ARCHITECT
APP: 02-121996 INC:
REVIEWED FOR
SS ☑ FLS ☑ ACS ☑
DATE: 8/14/2024

LICENSED ARCHITECT
MICHAEL J. SCOTT
No. C-34290
REN. 05-31-25
STATE OF CALIFORNIA

DATE: DECEMBER 31, 2023

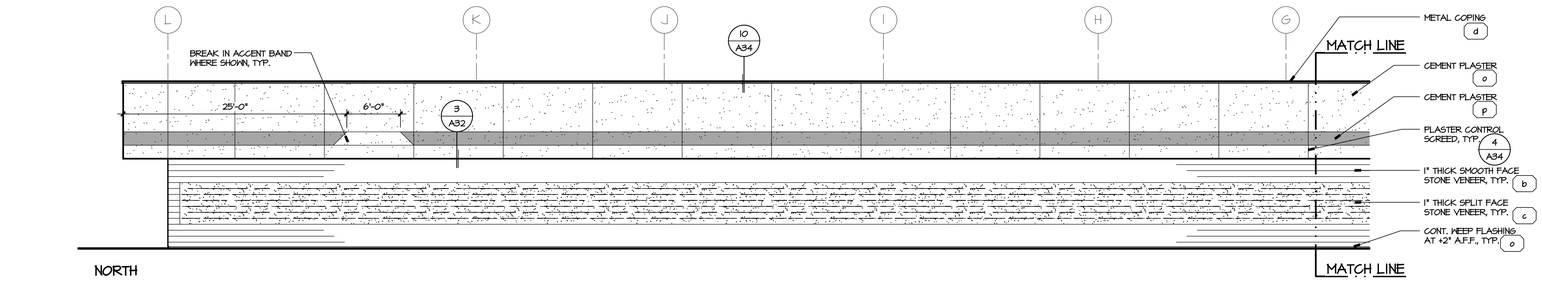

NORTH

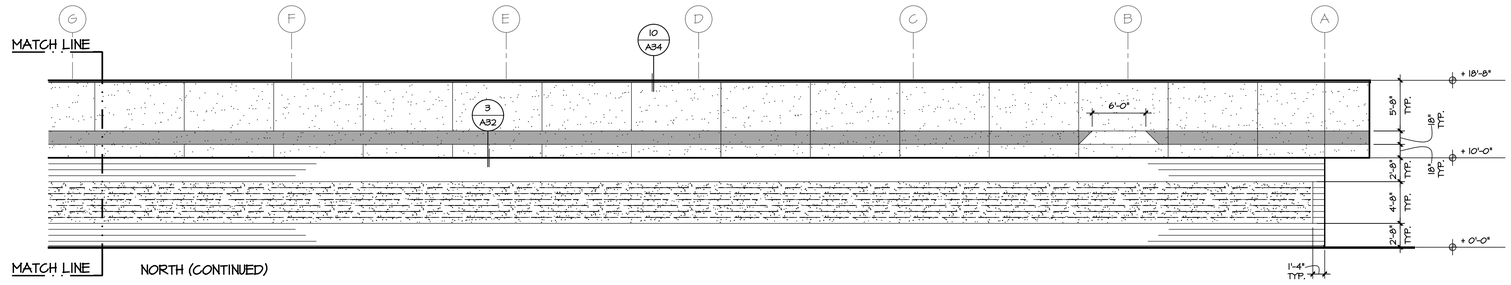

NORTH (CONTINUED)

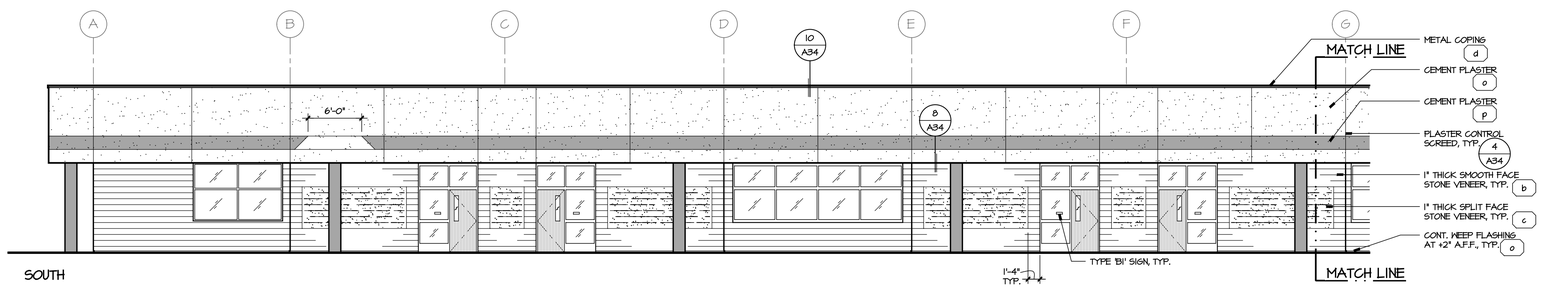

SOUTH

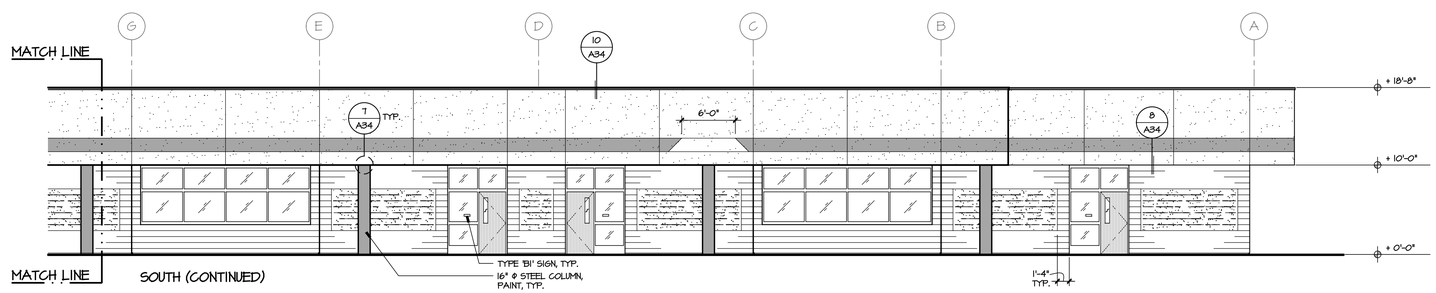

SOUTH (CONTINUED)

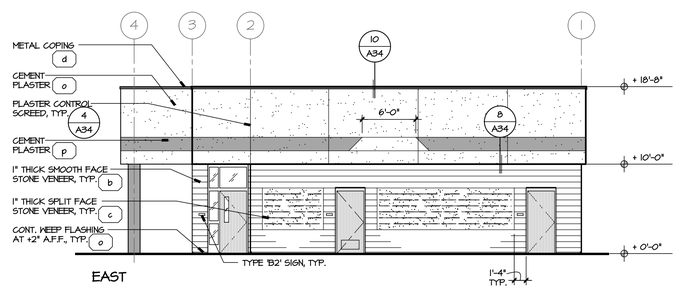

EAST

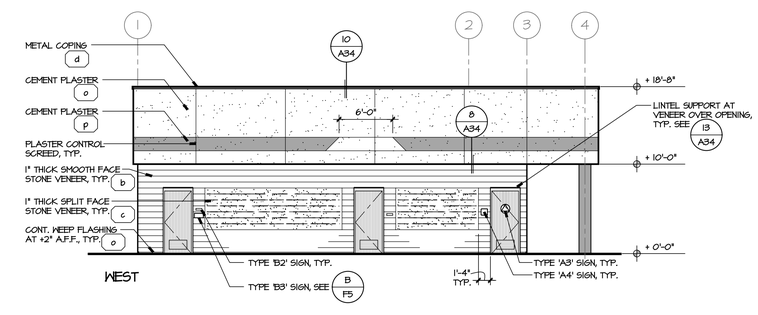

WEST

BUILDING 800 - EXTERIOR ELEVATIONS

SCALE:1/8"=1'-0"

NEW PRESCHOOL AND TK/KINDERGARTEN CLASSROOMS AT SANTA FE ELEMENTARY SCHOOL

PORTERVILLE UNIFIED SCHOOL DISTRICT

286 E ORANGE AVENUE, PORTERVILLE, CA 93257

REVISIONS

MANGINI ARCHITECTURE INGENUITY
BARENG MORRELLI SCOTT
MANGINI ASSOCIATES INC.
4320 West Mineral King Avenue
Visalia, California 93291
www.mangini.us
(559) 627-0530 Office
(559) 627-1926 Fax

TITLE

BLDG. 800
EXTERIOR
ELEVATIONS

A13

PROJECT 23076

APPROVALS

FILE # 54-76 | APPLICATION # 02-121996

IDENTIFICATION STAMP
DIV. OF THE STATE ARCHITECT
APP: 02-121996 INC:
REVIEWED FOR
SS ☑ FLS ☑ ACS ☑
DATE: 8/14/2024

LICENSED ARCHITECT
MICHAEL J. SCOTT
No. C-34290
REN. 05-31-25
STATE OF CALIFORNIA

DATE: DECEMBER 31, 2023

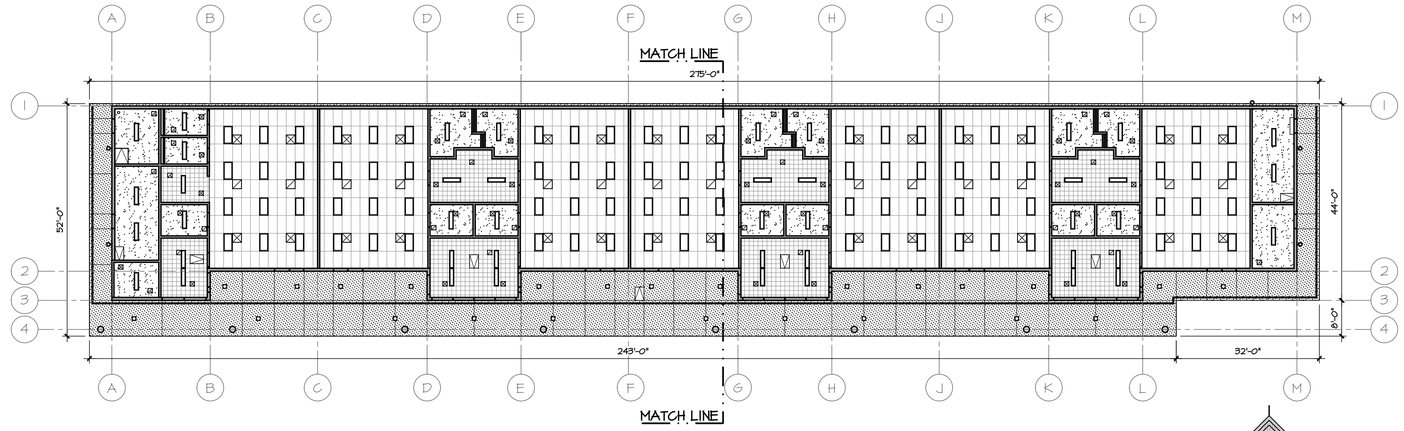

BUILDING 800 - OVERALL REFLECTED CEILING PLAN

SCALE: 1/16" = 1'-0"

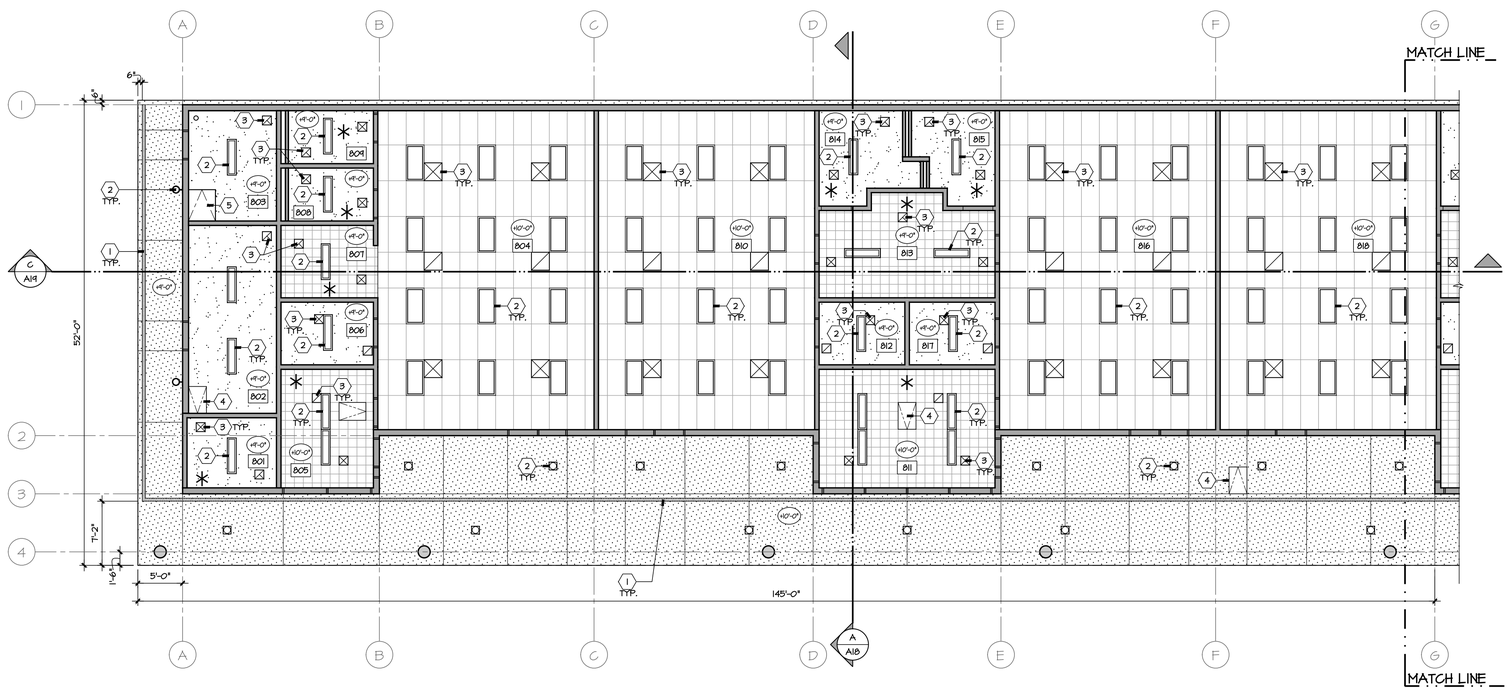

NOTE:
SOFFIT SCREEDS ALIGN W/ WALL & FASCIA

CEILING LEGEND

- TAPED, TEXTURED AND PAINTED 5/8" TYPE 'X' GYP. BD.
- CEMENT PLASTER SYSTEM (5 / A34)
- 24" x 48" SUSP. LAY-IN CEILING SYSTEM
- 12" X 12" GLUE UP TILE o/ 5/8" TYPE 'X' GYP. BD.
- * ASTERISK INDICATES 3 1/2" SOUND INSULATION BATTS ABOVE CEILING, TYP.
- (xx'-x") INDICATES HEIGHT OF FINISH CEILING AS MEASURED ABOVE FIN. FLOOR BELOW

REFLECTED CEILING PLAN KEYNOTES

1. 4" CONTINUOUS SOFFIT VENT, TYP. SEE (8 / A34)
2. LIGHT FIXTURE AS SHOWN, SEE ELECTRICAL DRAWINGS
3. AIR REGISTER AS SHOWN, SEE MECHANICAL
4. ATTIC ACCESS, SEE (20 / A31)
5. ROOF ACCESS, SEE (3 / A34)

north

BUILDING 800 - PARTIAL REFLECTED CEILING PLAN

SCALE: 1/8" = 1'-0"

NEW PRESCHOOL AND TK/KINDERGARTEN CLASSROOMS AT SANTA FE ELEMENTARY SCHOOL

PORTERVILLE UNIFIED SCHOOL DISTRICT

286 E ORANGE AVENUE, PORTERVILLE, CA 93257

REVISIONS

MANGINI ARCHITECTURE INGENUITY
BARENG MORRELLI SCOTT
MANGINI ASSOCIATES INC.
4320 West Mineral King Avenue
Visalia, California 93291
www.mangini.us
(559) 627-0530 Office
(559) 627-1926 Fax

TITLE
BLDG. 800
OVERALL REFLECTED CEILING PLAN AND PARTIAL CEILING PLAN

A14

PROJECT 23076

APPROVALS

FILE # 54-76 | APPLICATION # 02-121996

IDENTIFICATION STAMP
DIV. OF THE STATE ARCHITECT
APP: 02-121996 INC:
REVIEWED FOR
SS ☑ FLS ☑ ACS ☑
DATE: 8/14/2024

LICENSED ARCHITECT
MICHAEL J. SCOTT
No. C-34290
REN. 05-31-25
STATE OF CALIFORNIA

DATE: DECEMBER 31, 2023

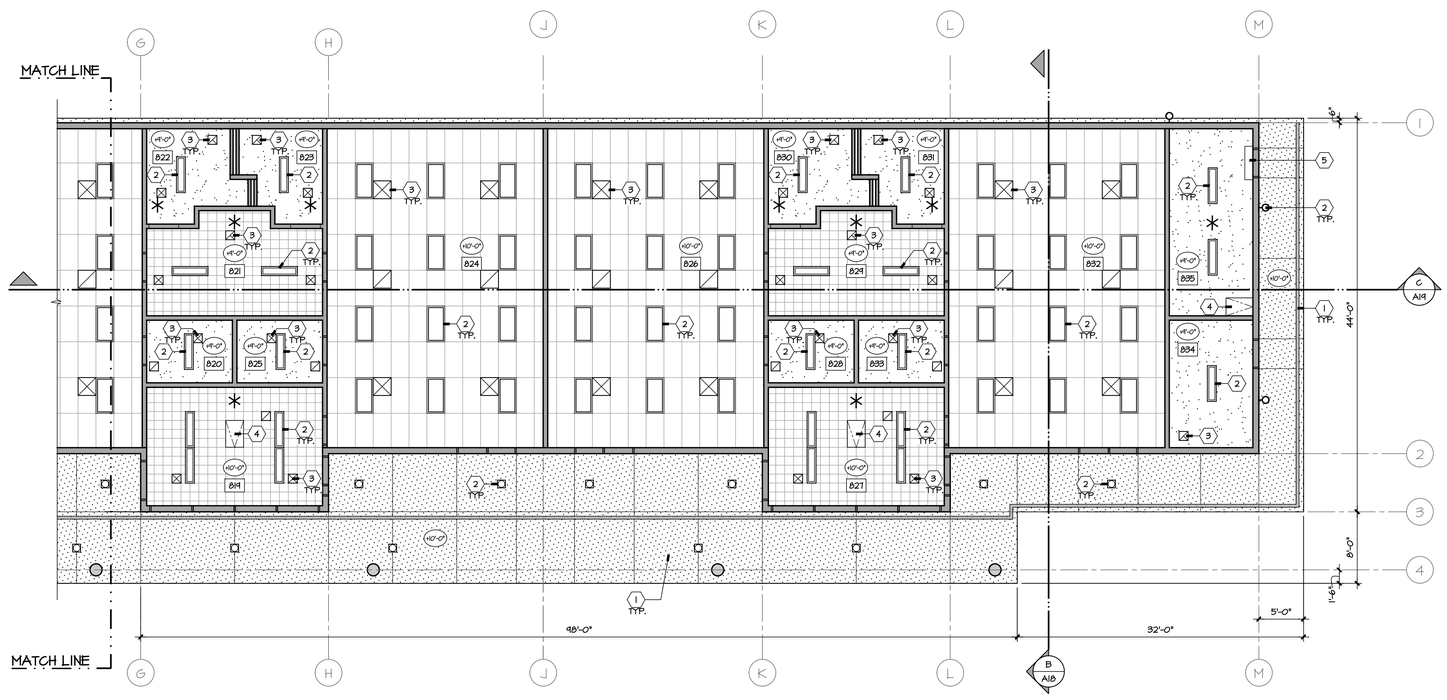

NOTE:
SOFFIT SCREEDS ALIGN W/ WALL & FASCIA

CEILING LEGEND

- TAPED, TEXTURED AND PAINTED 5/8" TYPE 'X' GYP. BD.
- CEMENT PLASTER SYSTEM (5 / A34)
- 24" x 48" SUSP. LAY-IN CEILING SYSTEM
- 12" X 12" GLUE UP TILE o/ 5/8" TYPE 'X' GYP. BD.
- * ASTERISK INDICATES 3 1/2" SOUND INSULATION BATTS ABOVE CEILING, TYP.
- (XX'-X") INDICATES HEIGHT OF FINISH CEILING AS MEASURED ABOVE FIN. FLOOR BELOW

REFLECTED CEILING PLAN KEYNOTES

1. 4" CONTINUOUS SOFFIT VENT, TYP. SEE (8 / A34)
2. LIGHT FIXTURE AS SHOWN, SEE ELECTRICAL DRAWINGS
3. AIR REGISTER AS SHOWN, SEE MECHANICAL
4. ATTIC ACCESS, SEE (20 / A31)
5. INDOOR UNIT, SEE MECHANICAL DRAWINGS

north

BUILDING 800 - PARTIAL REFLECTED CEILING PLAN

SCALE: 1/8" = 1'-0"

NEW PRESCHOOL AND TK/KINDERGARTEN CLASSROOMS AT SANTA FE ELEMENTARY SCHOOL

PORTERVILLE UNIFIED SCHOOL DISTRICT
286 E ORANGE AVENUE, PORTERVILLE, CA 93257

REVISIONS

MANGINI ARCHITECTURE INCORPORATED
BARENG MORRELLI SCOTT
MANGINI ASSOCIATES INC.
4320 West Mineral King Avenue
Visalia, California 93291
www.mangini.us
(559) 627.0530 Office
(559) 627.1926 Fax

TITLE
BLDG. 800
PARTIAL REFLECTED CEILING PLAN

A15

PROJECT 23076

F:\01 Projects\23076\Drawings\01 Architectural\03 Sheets\23076_A14-A15-Bldg. 800 Reflected Ceiling.dwg Jun 26 2024 12:19pm

APPROVALS

FILE # 54-76 | APPLICATION # 02-121996

IDENTIFICATION STAMP
DIV. OF THE STATE ARCHITECT
APP: 02-121996 INC:
REVIEWED FOR
SS ☑ FLS ☑ ACS ☑
DATE: 8/14/2024

LICENSED ARCHITECT
MICHAEL J. SCOTT
No. C-34290
REN. 05-31-25
STATE OF CALIFORNIA

DATE: DECEMBER 31, 2023

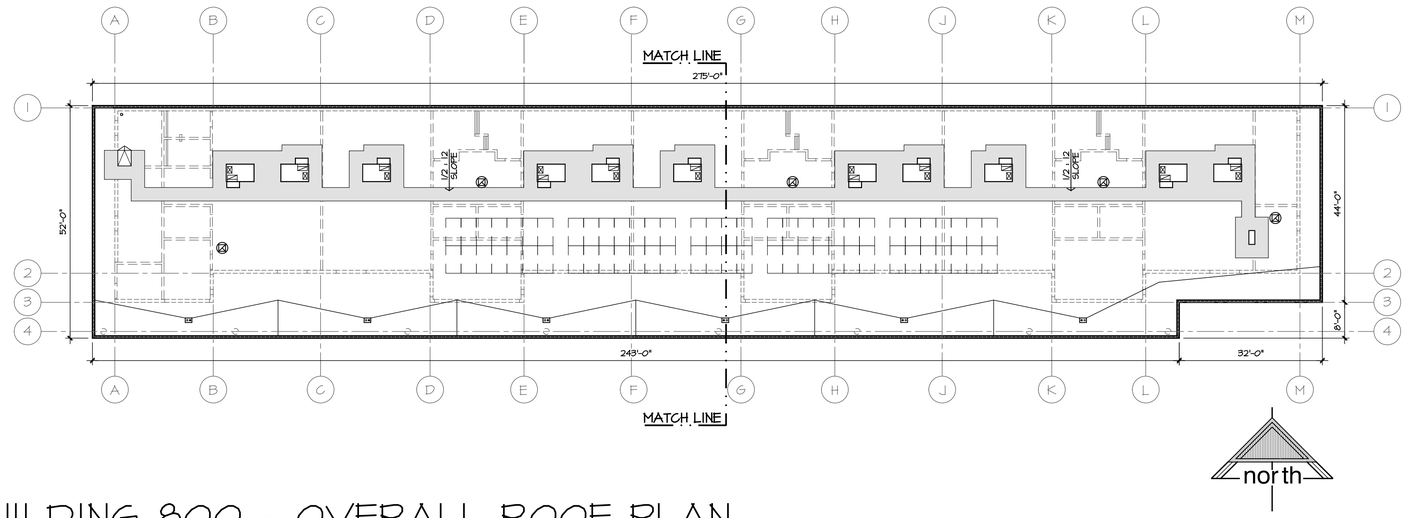

BUILDING 800 - OVERALL ROOF PLAN

SCALE: 1/16" = 1'-0"

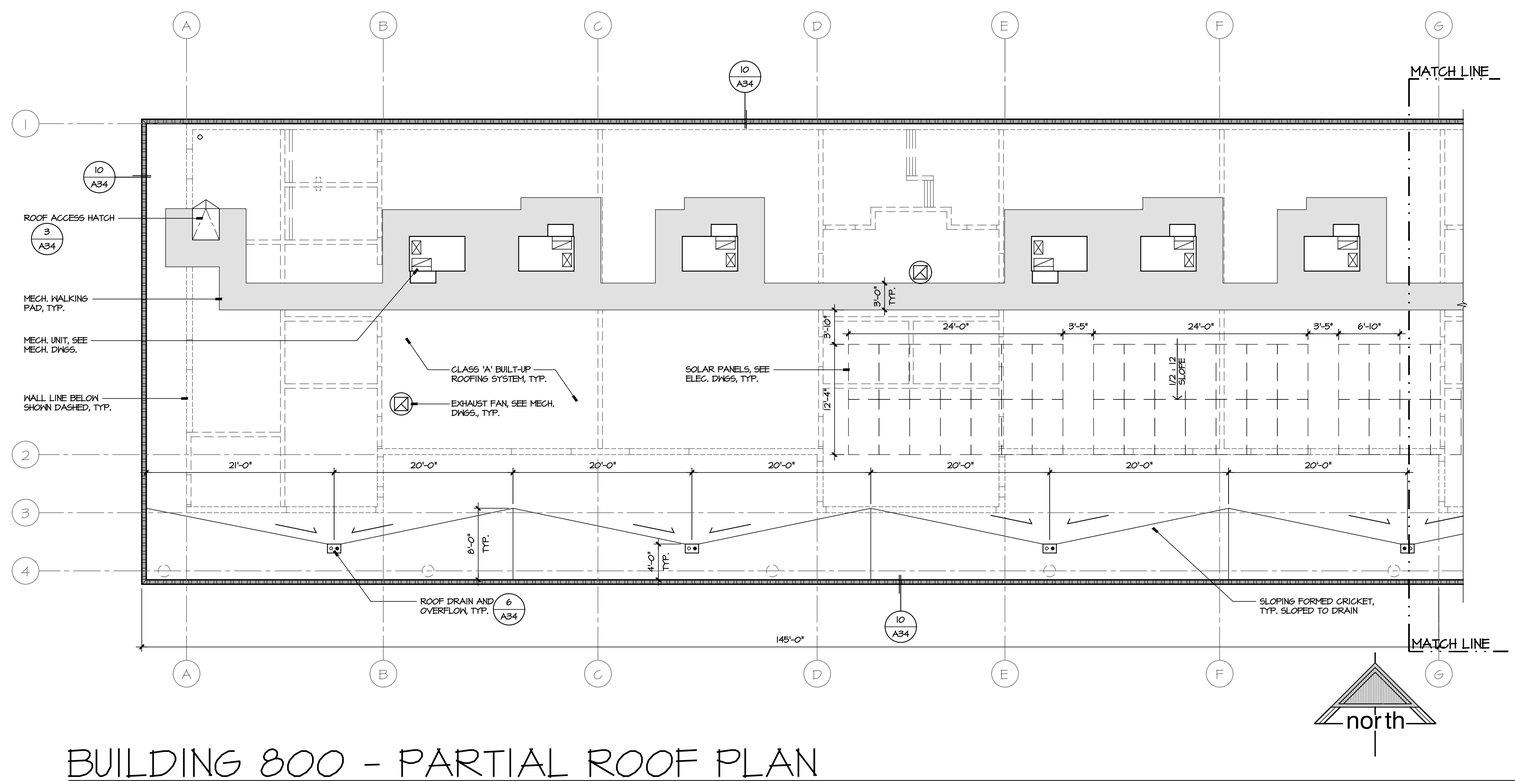

BUILDING 800 - PARTIAL ROOF PLAN

SCALE: 1/8" = 1'-0"

NEW PRESCHOOL AND TK/KINDERGARTEN CLASSROOMS AT SANTA FE ELEMENTARY SCHOOL

PORTERVILLE UNIFIED SCHOOL DISTRICT

286 E ORANGE AVENUE, PORTERVILLE, CA 93257

REVISIONS

MANGINI ARCHITECTURE INCORPORATED
BARENG MORRELLI SCOTT
MANGINI ASSOCIATES INC.
4320 West Mineral King Avenue
Visalia, California 93291
www.mangini.us
(559) 627.0530 Office
(559) 627.1926 Fax

TITLE

BLDG. 800 OVERALL ROOF PLAN AND PARTIAL ROOF PLAN

A16

PROJECT 23076

APPROVALS

FILE # 54-76 | APPLICATION # 02-121996

IDENTIFICATION STAMP
DIV. OF THE STATE ARCHITECT
APP: 02-121996 INC:
REVIEWED FOR
SS ☑ FLS ☑ ACS ☑
DATE: 8/14/2024

LICENSED ARCHITECT
MICHAEL J. SCOTT
No. C-34290
REN. 05-31-25
STATE OF CALIFORNIA

DATE: DECEMBER 31, 2023

NEW PRESCHOOL AND TK/KINDERGARTEN CLASSROOMS AT SANTA FE ELEMENTARY SCHOOL

PORTERVILLE UNIFIED SCHOOL DISTRICT
286 E ORANGE AVENUE, PORTERVILLE, CA 93257

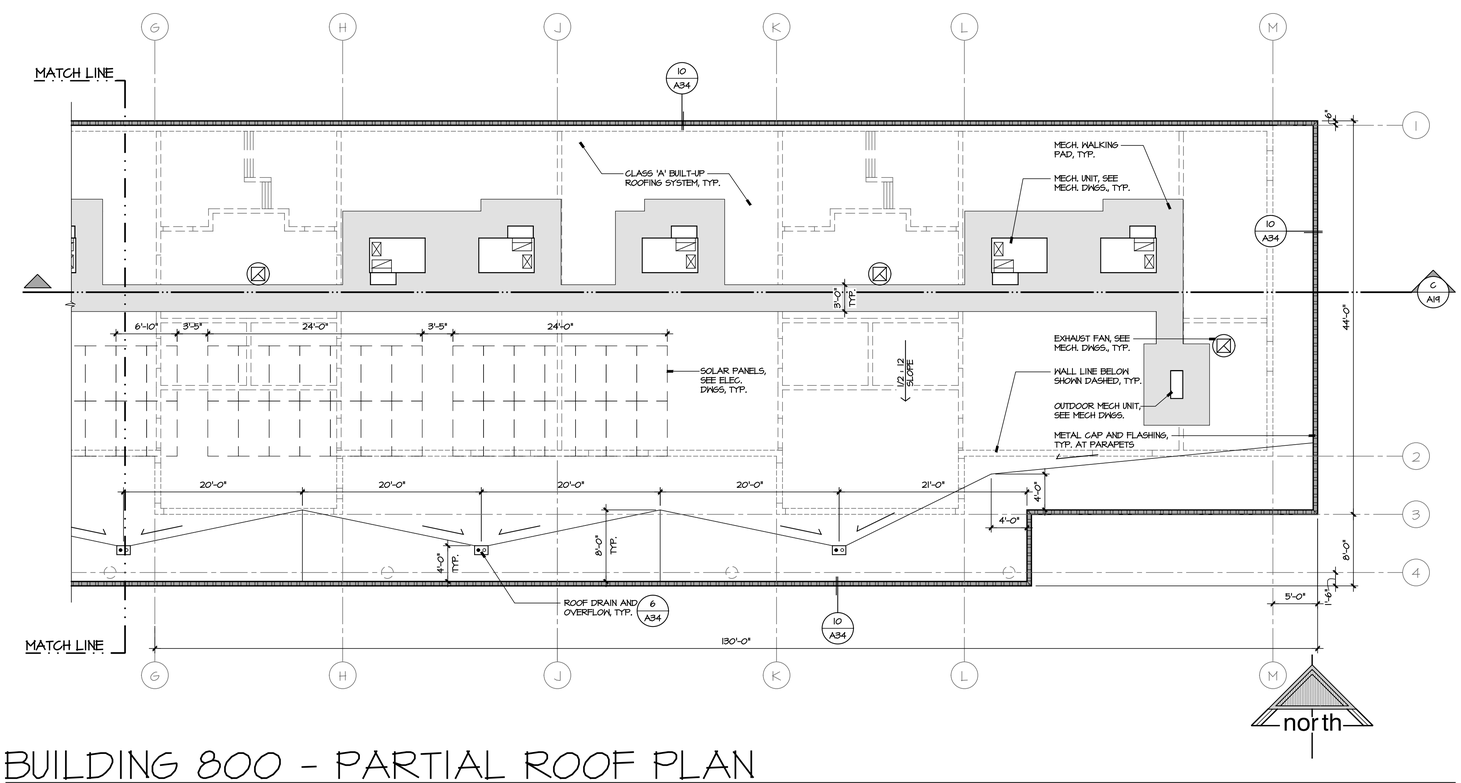

BUILDING 800 - PARTIAL ROOF PLAN

SCALE: 1/8" = 1'-0"

REVISIONS

MANGINI ARCHITECTURE INGENUITY
BARENG MORRELLI SCOTT
MANGINI ASSOCIATES INC.
4320 West Mineral King Avenue
Visalia, California 93291
www.mangini.us
(559) 627.0530 Office
(559) 627.1926 Fax

TITLE
BLDG. 800
PARTIAL ROOF PLAN

A17

PROJECT 23076

APPROVALS

FILE # 54-76 | APPLICATION # 02-121996

IDENTIFICATION STAMP
DIV. OF THE STATE ARCHITECT
APP: 02-121996 INC:
REVIEWED FOR
SS ☑ FLS ☑ ACS ☑
DATE: 8/14/2024

LICENSED ARCHITECT
MICHAEL J. SCOTT
No. C-34290
REN. 05-31-25
STATE OF CALIFORNIA

DATE: DECEMBER 31, 2023

BUILDING SECTION LEGEND

— WALL ASSEMBLY CALLOUT, REFER TO SHEET A26

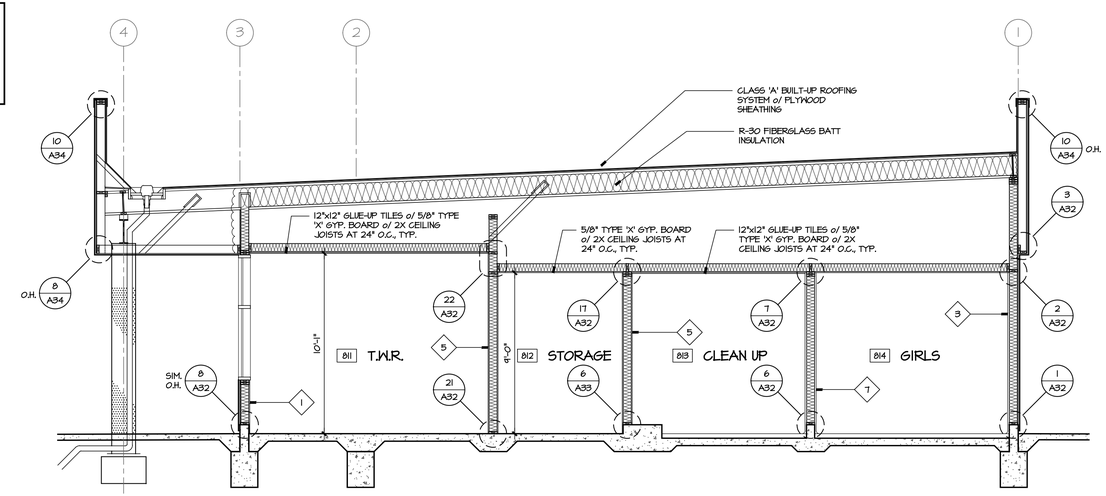

(A) BUILDING 800 - SECTION

1/4" = 1'-0"

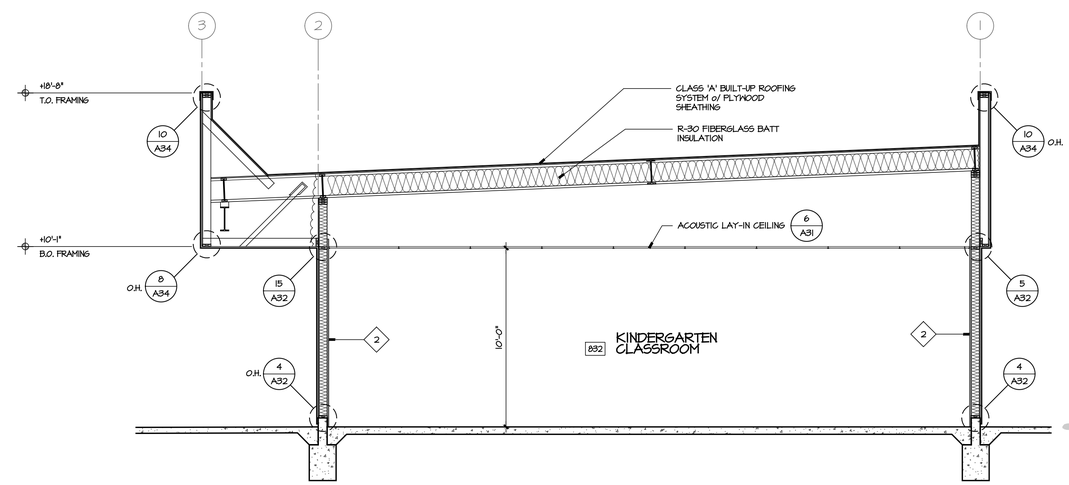

(B) BUILDING 800 - SECTION

1/4" = 1'-0"

NEW PRESCHOOL AND TK/KINDERGARTEN CLASSROOMS AT SANTA FE ELEMENTARY SCHOOL

PORTERVILLE UNIFIED SCHOOL DISTRICT
286 E ORANGE AVENUE, PORTERVILLE, CA 93257

REVISIONS

MANGINI ARCHITECTURE INGENUITY
BARENG MORRELLI SCOTT
MANGINI ASSOCIATES INC.
4320 West Mineral King Avenue
Visalia, California 93291
www.mangini.us
(559) 627-0530 Office
(559) 627-1926 Fax

TITLE
BLDG. 800 SECTIONS

A18

PROJECT 23076

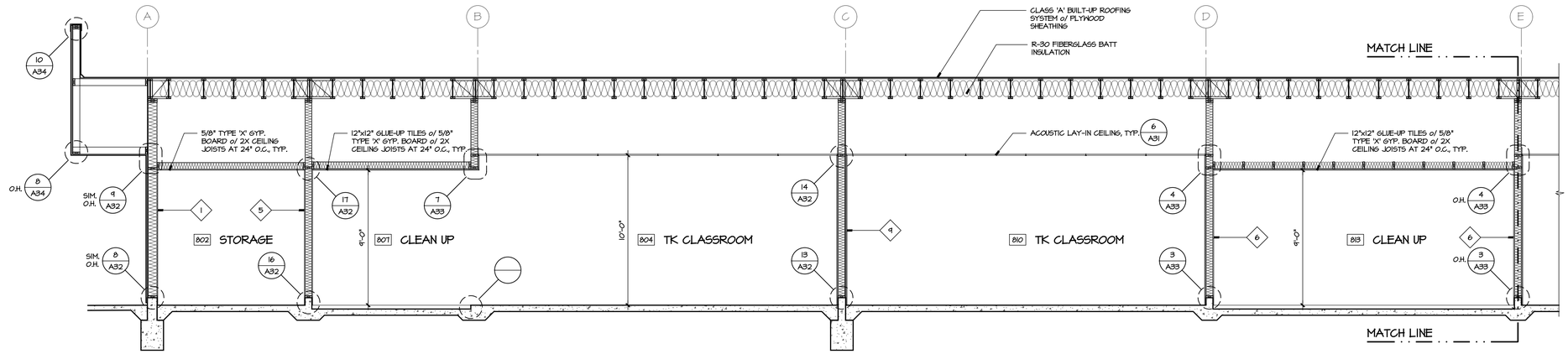

BUILDING 800 - SECTION

1/4" = 1'-0"

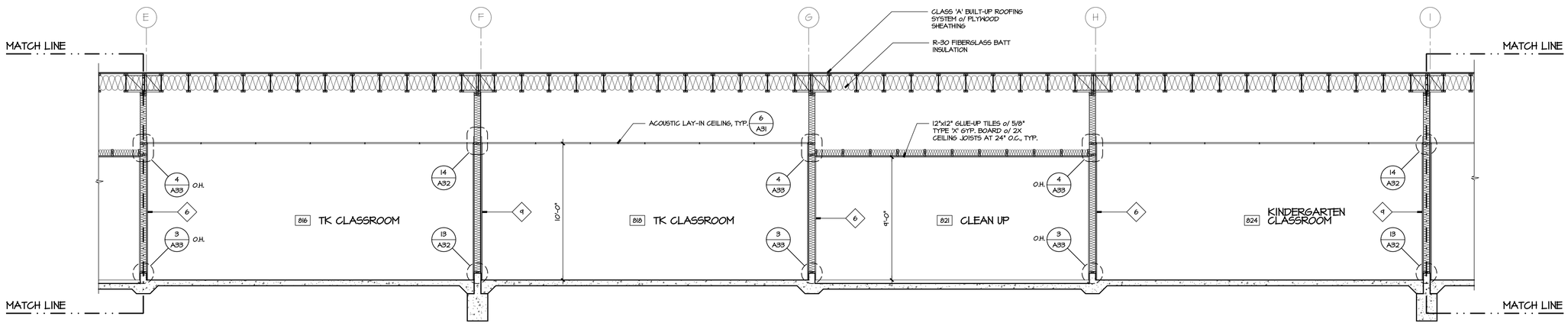

BUILDING 800 - SECTION (CONTINUED)

1/4" = 1'-0"

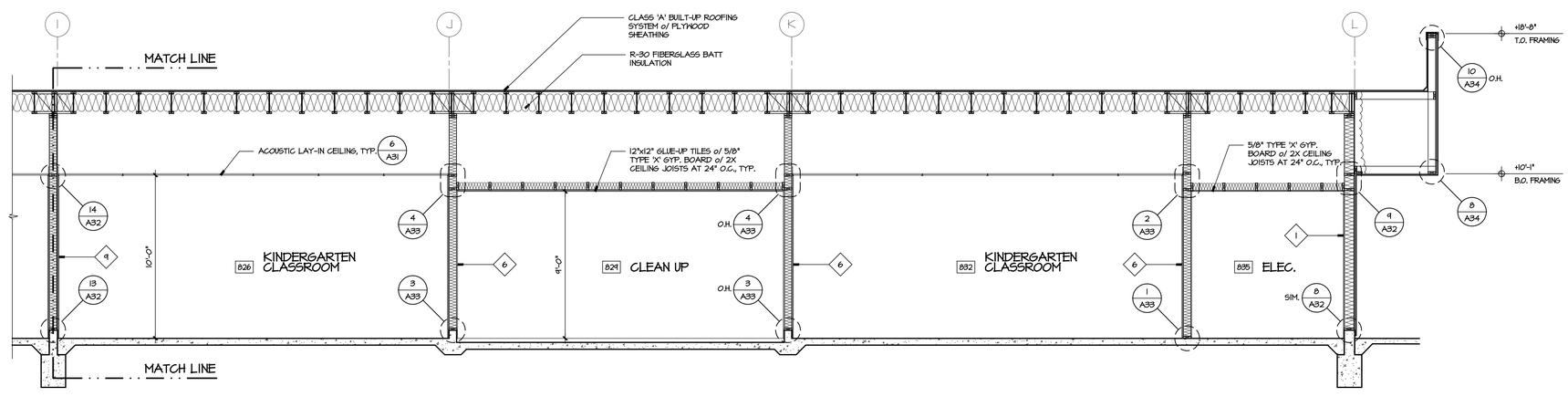

BUILDING SECTION LEGEND

WALL ASSEMBLY CALLOUT, REFER TO SHEET A26

BUILDING 800 - SECTION (CONTINUED)

1/4" = 1'-0"

APPROVALS

FILE #	APPLICATION #
54-76	02-121996

IDENTIFICATION STAMP
DIV. OF THE STATE ARCHITECT
APP: 02-121996 INC:
REVIEWED FOR
SS ☑ FLS ☑ ACS ☑
DATE: 8/14/2024

LICENSED ARCHITECT
MICHAEL J. SCOTT
No. C-34290
REN. 05-31-25
STATE OF CALIFORNIA

DATE: DECEMBER 31, 2023

TK/KINDERGARTEN CLASSROOMS AT SANTA FE ELEMENTARY SCHOOL

PORTERVILLE UNIFIED SCHOOL DISTRICT

286 E ORANGE AVENUE, PORTERVILLE, CA 93257

REVISIONS

MANGINI ARCHITECTURE INGENUITY
BARENG MORRELLI SCOTT
MANGINI ASSOCIATES INC.
4320 West Mineral King Avenue
Visalia, California 93291
www.mangini.us
(559) 627-0530 Office
(559) 627-1926 Fax

TITLE
BLDG. 800
SECTIONS

A19

PROJECT 23076

AIR BARRIER SECTION KEYNOTES

1. CEMENT PLASTER & PLYWOOD AS AIR BARRIER WHERE SHOWN
2. PLYWOOD & ROOFING UNDERLAYMENT AS AIR BARRIER WHERE SHOWN
3. FOAM-IN-PLACE INSULATION TO COMPLETE AIR BARRIER

AIR BARRIER SECTION NOTES

1. BRIDGE AND SEAL AIR LEAKAGE PATHWAYS AND GAPS, INCLUDING, BUT NOT LIMITED TO:
   - CONNECTIONS OF THE WALLS TO THE ROOF AND AIR BARRIER
   - CONNECTIONS TO THE WALLS TO THE FOUNDATIONS
   - SEISMIC AND EXPANSION JOINTS
   - OPENINGS AND PENETRATIONS OF WINDOW AND DOOR FRAMES, STORE FRONT, CURTAIN WALL
   - PIPING, CONDUIT, DUCT, AND SIMILAR PENETRATIONS
   - MASONRY TIES, SCREWS, BOLTS, AND SIMILAR PENETRATIONS
   - FLASHING AND SHEET METAL ASSEMBLIES
   - ALL OTHER AIR LEAKAGE PATHWAYS IN THE BUILDING ENVELOPE
2. REFER TO OT 2100 AIR BARRIER SYSTEM FOR ADDITIONAL INFORMATION

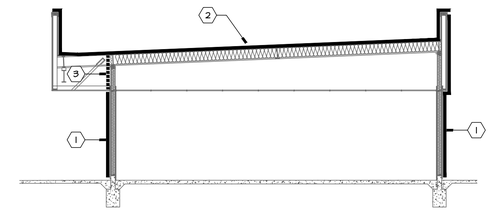

A BUILDING 800- AIR BARRIER SECTION
1/8" = 1'-0"

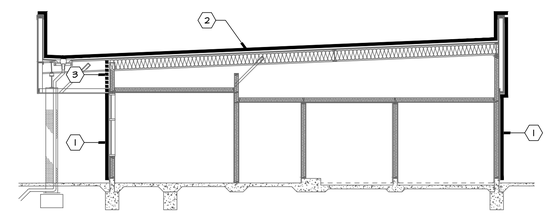

B BUILDING 800 - AIR BARRIER SECTION
1/8" = 1'-0"

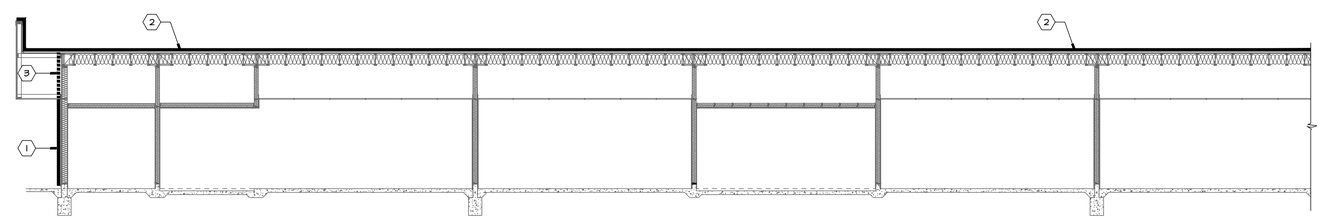

C BUILDING 800 - AIR BARRIER SECTION
1/8" = 1'-0"

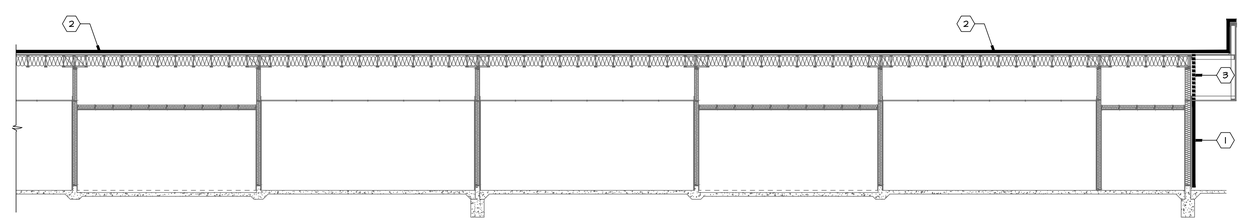

C BUILDING 800 - AIR BARRIER SECTION (CONTINUED)
1/8" = 1'-0"

APPROVALS

FILE #	APPLICATION #
54-76	02-121996

IDENTIFICATION STAMP
DIV. OF THE STATE ARCHITECT
APP: 02-121996 INC:
REVIEWED FOR
SS ☑ FLS ☑ ACS ☑
DATE: 8/14/2024

LICENSED ARCHITECT
MICHAEL J. SCOTT
No. C-34290
REN. 05-31-25
STATE OF CALIFORNIA

DATE: DECEMBER 31, 2023

NEW PRESCHOOL AND TK/KINDERGARTEN CLASSROOMS AT SANTA FE ELEMENTARY SCHOOL
PORTERVILLE UNIFIED SCHOOL DISTRICT
286 E ORANGE AVENUE, PORTERVILLE, CA 93257

REVISIONS

MANGINI ARCHITECTURE INGENUITY
BARENG MORRELLI SCOTT
MANGINI ASSOCIATES INC.
4320 West Mineral King Avenue
Visalia, California 93291
www.mangini.us
(559) 627-0530 Office
(559) 627-1926 Fax

TITLE
BLDG. 800
AIR BARRIER
SECTIONS

A20

PROJECT 23076

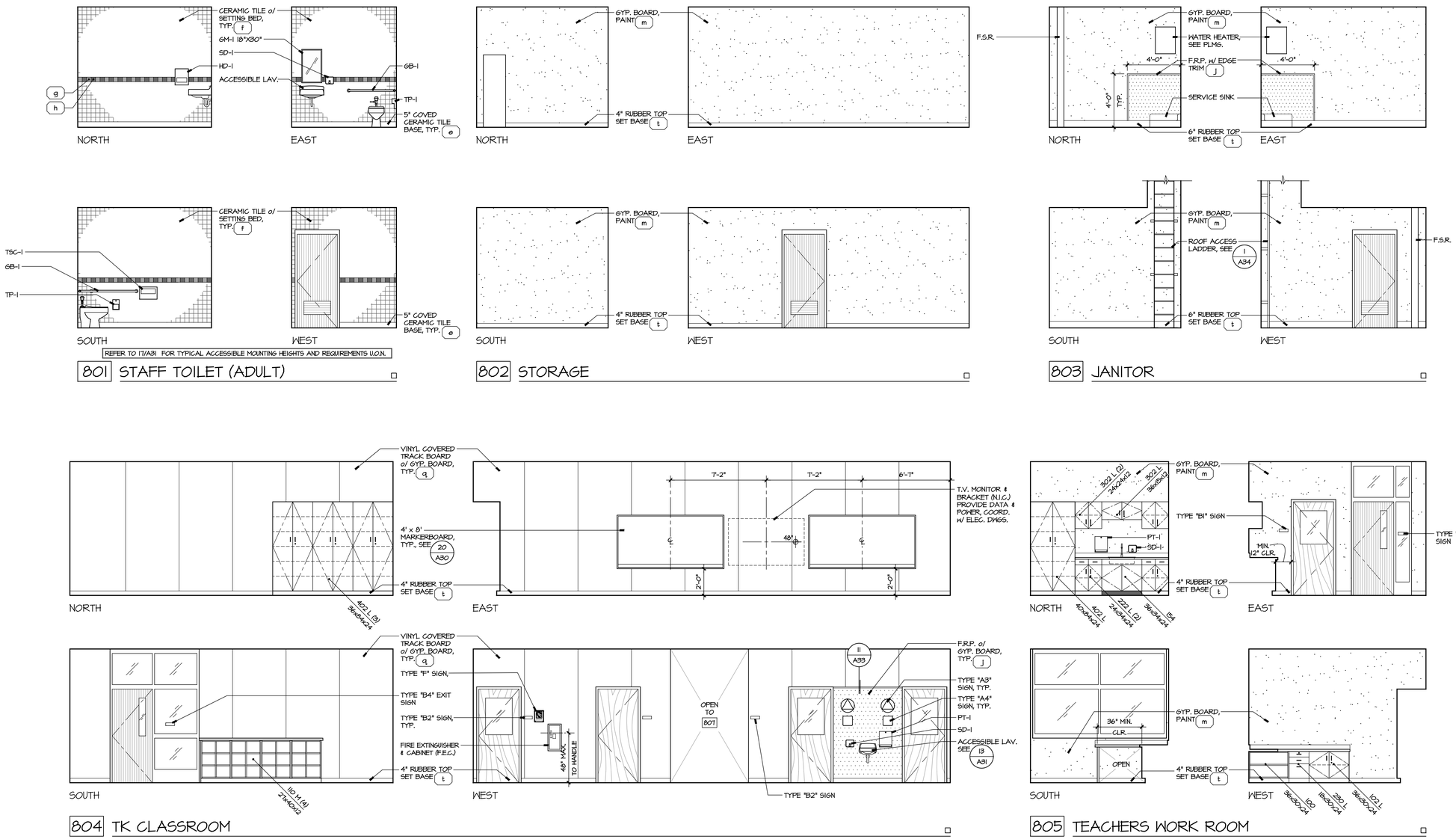

INTERIOR ELEVATION NOTES

1. # = MATERIAL DEFINITION REFER TO SHEET A25
2. REFER TO FINISH SCHEDULE SHEET A25 FOR DESIGNATION OF FINISHES.
3. REFER TO 16/A31 & 17/A31 FOR TYPICAL ACCESSIBLE MOUNTING HEIGHTS AND REQUIREMENTS, U.O.N.
4. REFER TO SPECIFICATIONS FOR TOILET ACCESSORY ABBREVIATIONS.
5. REFER TO 5/A30 FOR TYPICAL COUNTERTOP AND BACKSPLASH DETAILS, U.O.N.
6. REFER TO 1/A30 FOR TYPICAL CABINET AND SHELVING ANCHORAGE.
7. FOR ACCESSIBLE LAVATORY, SEE DETAILS 13/A31 & 14/A31
8. SEE 1/A28 AND DOOR SCHEDULE A27 FOR TYPICAL DOOR SIGNAGE.
9. REFER TO 15/A31 FOR TYPICAL GYPSUM BOARD EDGE DETAILS.
10. SEE 18/A31 FOR RECESSED FIRE EXTINGUISHER CABINET INFORMATION.
11. SEE 22/A30 FOR TYPICAL GRAB BAR ANCHORAGE.
12. ANY DISCREPANCY BETWEEN THE LOCATION OF DEVICES, FIXTURES, ETC., SHOWN HERE AND ON ANY PLUMBING, ELECTRICAL, MECHANICAL, OR SANITARY SEWER SHEETS ARE TO BE BROUGHT TO THE ATTENTION OF THE ARCHITECT PRIOR TO LAYOUT.
13. ANY ACCESSORIES SHOWN N.I.C. SHALL BE PROVIDED BY THE OWNER. CONTRACTOR TO PROVIDE BLOCKING PER 16/A30 AT LOCATION SHOWN.
14. ♿ = ADA. ACCESSIBLE. SEE CABINET DTLS. 11/A30 & 12/A30
15. OPEN KNEE SPACE AT WORK STATIONS TO HAVE NO SHARP OR ABRASIVE EDGES UNDER COUNTER.

INTERIOR ELEVATIONS

SCALE: 1/4" = 1'-0"

APPROVALS

FILE #	APPLICATION #
54-76	02-121996

IDENTIFICATION STAMP
DIV. OF THE STATE ARCHITECT
APP: 02-121996 INC:
REVIEWED FOR
SS ☑ FLS ☑ ACS ☑
DATE: 8/14/2024

LICENSED ARCHITECT
MICHAEL J. SCOTT
No. C-34290
REN. 05-31-25
STATE OF CALIFORNIA

DATE: DECEMBER 31, 2023

TK/KINDERGARTEN CLASSROOMS AT SANTA FE ELEMENTARY SCHOOL

PORTERVILLE UNIFIED SCHOOL DISTRICT

286 E ORANGE AVENUE, PORTERVILLE, CA 93257

REVISIONS

MANGINI ARCHITECTURE INGENUITY

BARENG MORRELLI SCOTT

MANGINI ASSOCIATES INC.
4320 West Mineral King Avenue
Visalia, California 93291

www.mangini.us
(559) 627-0530 Office
(559) 627-1926 Fax

TITLE

BLDG. 800
INTERIOR
ELEVATIONS

A21

PROJECT 23076

APPROVALS

FILE # 54-76 | APPLICATION # 02-121996

IDENTIFICATION STAMP
DIV. OF THE STATE ARCHITECT
APP: 02-121996 INC:
REVIEWED FOR
SS ☑ FLS ☑ ACS ☑
DATE: 8/14/2024

LICENSED ARCHITECT
MICHAEL J. SCOTT
No. C-34290
REN. 05-31-25
STATE OF CALIFORNIA

DATE: DECEMBER 31, 2023

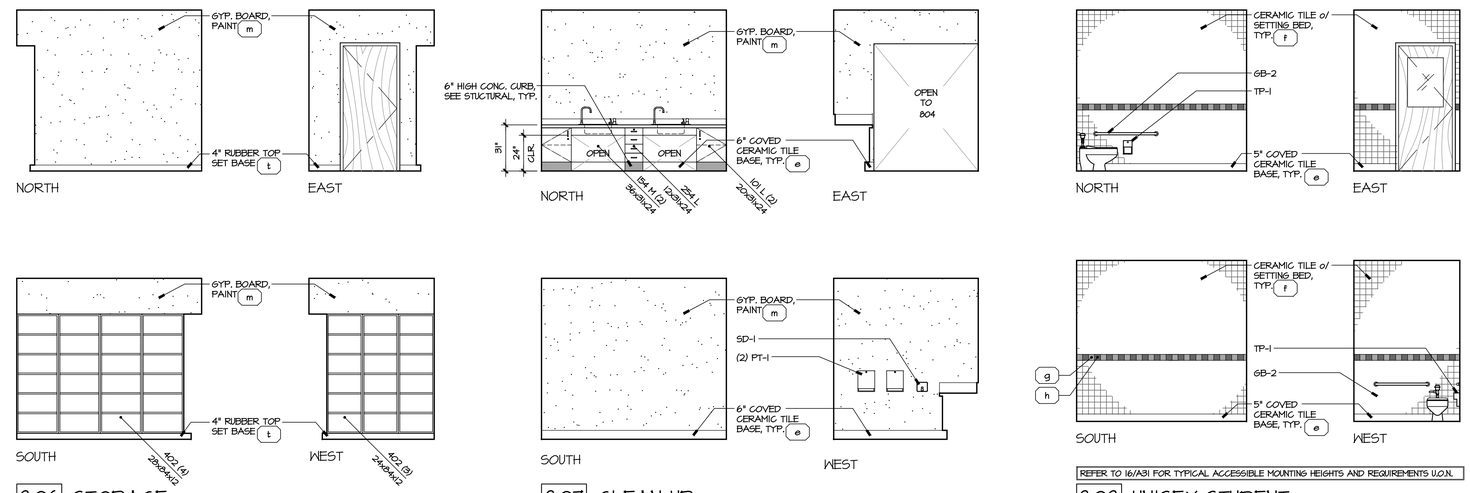

806 STORAGE

807 CLEAN UP

REFER TO 16/A31 FOR TYPICAL ACCESSIBLE MOUNTING HEIGHTS AND REQUIREMENTS U.O.N.

808 UNISEX STUDENT RM. 809 O.H.

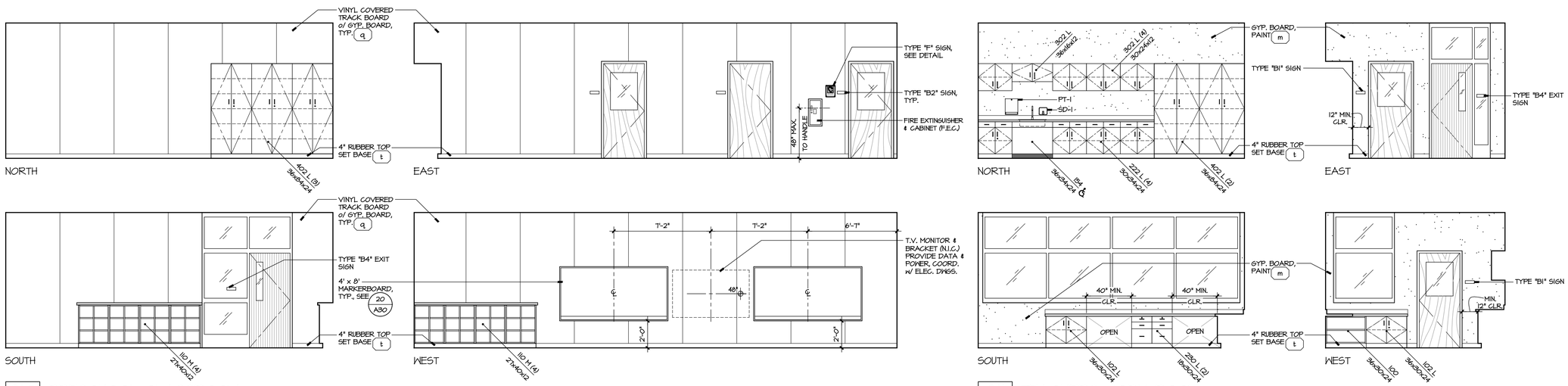

810 PRESCHOOL CLASSROOM RM. 818, 826, 832 SIM. RM 816, 824 O.H.

811 TEACHERS WORK ROOM RM. 819, 827 SIM.

INTERIOR ELEVATION NOTES

1. # = MATERIAL DEFINITION REFER TO SHEET A25
2. REFER TO FINISH SCHEDULE SHEET A25 FOR DESIGNATION OF FINISHES.
3. REFER TO 16/A31 & 17/A31 FOR TYPICAL ACCESSIBLE MOUNTING HEIGHTS AND REQUIREMENTS, U.O.N.
4. REFER TO SPECIFICATIONS FOR TOILET ACCESSORY ABBREVIATIONS.
5. REFER TO 5/A30 FOR TYPICAL COUNTERTOP AND BACKSPLASH DETAILS, U.O.N.
6. REFER TO 1/A30 FOR TYPICAL CABINET AND SHELVING ANCHORAGE.
7. FOR ACCESSIBLE LAVATORY, SEE DETAILS 13/A31 & 14/A31
8. SEE 1/A28 AND DOOR SCHEDULE A27 FOR TYPICAL DOOR SIGNAGE.
9. REFER TO 15/A31 FOR TYPICAL GYPSUM BOARD EDGE DETAILS.
10. SEE 18/A31 FOR RECESSED FIRE EXTINGUISHER CABINET INFORMATION.
11. SEE 22/A30 FOR TYPICAL GRAB BAR ANCHORAGE.
12. ANY DISCREPANCY BETWEEN THE LOCATION OF DEVICES, FIXTURES, ETC., SHOWN HERE AND ON ANY PLUMBING, ELECTRICAL, MECHANICAL, OR SANITARY SEWER SHEETS ARE TO BE BROUGHT TO THE ATTENTION OF THE ARCHITECT PRIOR TO LAYOUT.
13. ANY ACCESSORIES SHOWN N.I.C. SHALL BE PROVIDED BY THE OWNER. CONTRACTOR TO PROVIDE BLOCKING PER 16/A30 AT LOCATION SHOWN.
14. ♿ = ADA. ACCESSIBLE. SEE CABINET DTLS. 11/A30 & 12/A30
15. OPEN KNEE SPACE AT WORK STATIONS TO HAVE NO SHARP OR ABRASIVE EDGES UNDER COUNTER.

INTERIOR ELEVATIONS

SCALE: 1/4" = 1'-0"

NEW PRESCHOOL AND TK/KINDERGARTEN CLASSROOMS AT SANTA FE ELEMENTARY SCHOOL

PORTERVILLE UNIFIED SCHOOL DISTRICT

286 E ORANGE AVENUE, PORTERVILLE, CA 93257

REVISIONS

MANGINI ARCHITECTURE INGENUITY

BARENG MORRELLI SCOTT

MANGINI ASSOCIATES INC.
4320 West Mineral King Avenue
Visalia, California 93291

www.mangini.us
(559) 627-0530 Office
(559) 627-1926 Fax

TITLE
BLDG. 800
INTERIOR
ELEVATIONS

A22

PROJECT 23076

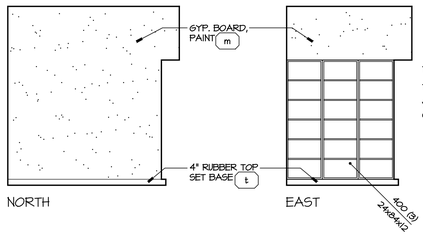

812 STORAGE RM. 820, 828 SIM.
RM. 817, 825, 833 O.H.

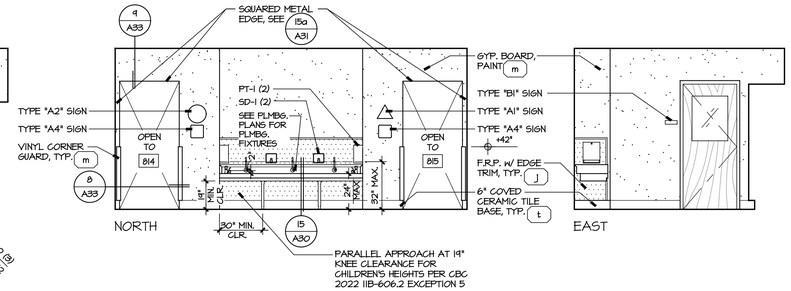

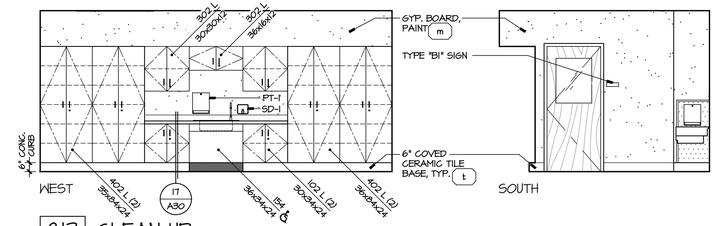

813 CLEAN UP RM. 821, 829 SIM.

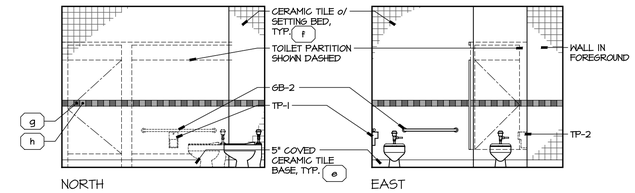

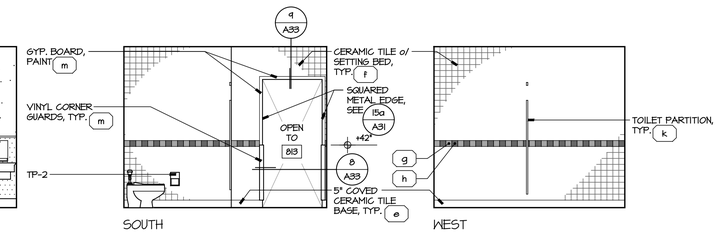

REFER TO 16/A31 FOR TYPICAL ACCESSIBLE MOUNTING HEIGHTS AND REQUIREMENTS U.O.N.

814 GIRLS (AGES 5 THROUGH 8) RM. 822, 830 SIM.

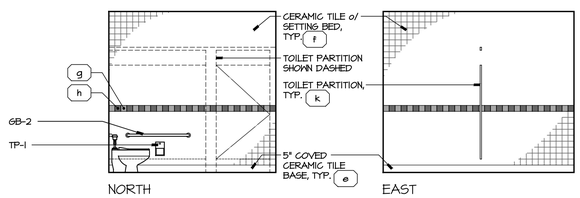

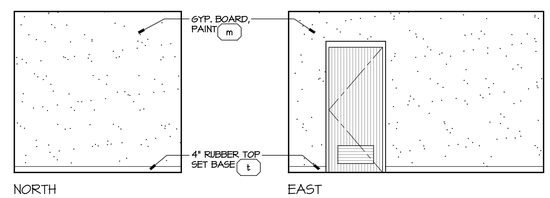

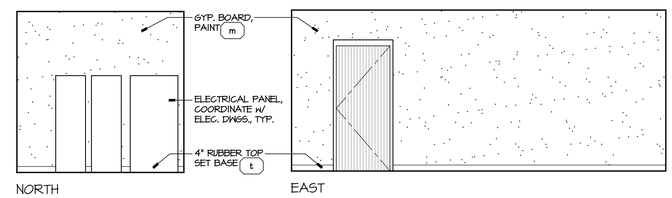

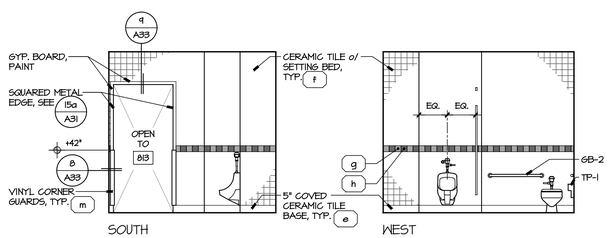

REFER TO 16/A31 FOR TYPICAL ACCESSIBLE MOUNTING HEIGHTS AND REQUIREMENTS U.O.N.

815 BOYS (AGES 5 THROUGH 8) RM. 823, 831

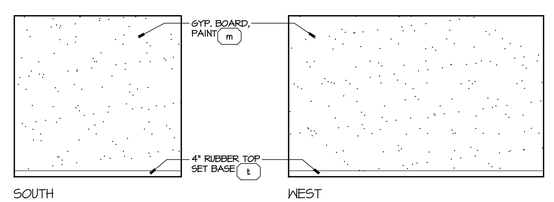

834 STORAGE

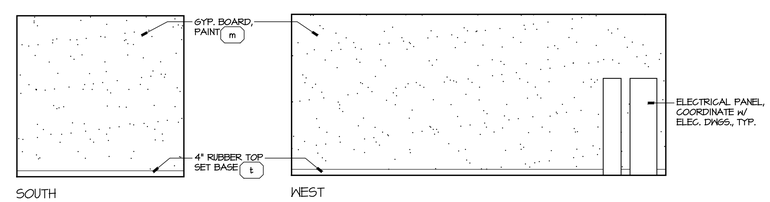

835 ELEC.

INTERIOR ELEVATION NOTES

1. # = MATERIAL DEFINITION REFER TO SHEET A25
2. REFER TO FINISH SCHEDULE SHEET A25 FOR DESIGNATION OF FINISHES.
3. REFER TO 16/A31 & 17/A31 FOR TYPICAL ACCESSIBLE MOUNTING HEIGHTS AND REQUIREMENTS, U.O.N.
4. REFER TO SPECIFICATIONS FOR TOILET ACCESSORY ABBREVIATIONS.
5. REFER TO 5/A30 FOR TYPICAL COUNTERTOP AND BACKSPLASH DETAILS, U.O.N.
6. REFER TO 1/A30 FOR TYPICAL CABINET AND SHELVING ANCHORAGE.
7. FOR ACCESSIBLE LAVATORY, SEE DETAILS 13/A31 & 14/A31
8. SEE 1/A28 AND DOOR SCHEDULE A27 FOR TYPICAL DOOR SIGNAGE.
9. REFER TO 15/A31 FOR TYPICAL GYPSUM BOARD EDGE DETAILS.
10. SEE 18/A31 FOR RECESSED FIRE EXTINGUISHER CABINET INFORMATION.
11. SEE 22/A30 FOR TYPICAL GRAB BAR ANCHORAGE.
12. ANY DISCREPANCY BETWEEN THE LOCATION OF DEVICES, FIXTURES, ETC., SHOWN HERE AND ON ANY PLUMBING, ELECTRICAL, MECHANICAL, OR SANITARY SEWER SHEETS ARE TO BE BROUGHT TO THE ATTENTION OF THE ARCHITECT PRIOR TO LAYOUT.
13. ANY ACCESSORIES SHOWN N.I.C. SHALL BE PROVIDED BY THE OWNER. CONTRACTOR TO PROVIDE BLOCKING PER 16/A30 AT LOCATION SHOWN.
14. = ADA. ACCESSIBLE. SEE CABINET DTLS. 11/A30 & 12/A30
15. OPEN KNEE SPACE AT WORK STATIONS TO HAVE NO SHARP OR ABRASIVE EDGES UNDER COUNTER.

INTERIOR ELEVATIONS

SCALE: 1/4" = 1'-0"

APPROVALS

FILE # 54-76 | APPLICATION # 02-121996

IDENTIFICATION STAMP
DIV. OF THE STATE ARCHITECT
APP: 02-121996 INC:
REVIEWED FOR
SS ☑ FLS ☑ ACS ☑
DATE: 8/14/2024

LICENSED ARCHITECT MICHAEL J. SCOTT No. C-34290 REN. 05-31-25 STATE OF CALIFORNIA

DATE: DECEMBER 31, 2023

NEW PRESCHOOL AND TK/KINDERGARTEN CLASSROOMS AT SANTA FE ELEMENTARY SCHOOL

PORTERVILLE UNIFIED SCHOOL DISTRICT

286 E ORANGE AVENUE, PORTERVILLE, CA 93257

REVISIONS

MANGINI ARCHITECTURE INGENUITY
BARENG MORRELLI SCOTT
MANGINI ASSOCIATES INC.
4320 West Mineral King Avenue
Visalia, California 93291
www.mangini.us
(559) 627.0530 Office
(559) 627.1926 Fax

TITLE
BLDG. 800
INTERIOR
ELEVATIONS

A23

PROJECT 23076

MATERIALS

FLOOR
10 SEALED CONCRETE
11 POLISHED CONCRETE
12 2" SQUARE CERAMIC MOSAIC TILE

BASE
20 4" RUBBER TOPSET
21 6" RUBBER TOPSET
22 5" HIGH COVED CERAMIC TILE
23 6" COVED CERAMIC TILE

WALLS
40 SEMI-GLOSS ENAMEL o/ GYPSUM BOARD
41 VINYL COVERED TACKBOARD o/ GYPSUM BOARD
42 FIBERGLASS REINFORCED PANELING o/ GYPSUM BOARD
43 4-1/4" SQUARE CERAMIC TILE o/ SETTING BED

CEILINGS
50 2'x4' LAY-IN ACOUSTICAL TILE
51 SEMI-GLOSS ENAMEL o/ GYPSUM BOARD
52 12"x12" ACOUSTICAL GLUE-UP TILE o/ GYPSUM BOARD

COUNTERTOPS
60 PLASTIC LAMINATE

MILLWORK
70 PLASTIC LAMINATE

FINISHES

- (a) REFER TO SPECIFICATIONS FOR MATERIAL / COLOR DESIGNATION
- (b) 'CORONADO STONE' URBANA SMOOTH- FRENCH WHITE
- (c) 'CORONADO STONE' URBANA SPLIT- FRENCH WHITE
- (d) 'METAL SALES' COLOR- REGAL BLUE (KB5)
- (e) 'DAL TILE' KEYSTONE 2X2 FLOOR TILE WITH BUILT-UP BASE #K855A- COLOR: #D208 SUDE GRAY SPECKLE W/ CUST. BUILD. PRISM GROUT #114 PEWTER
- (f) 'DAL TILE' COLOR WHEEL CLASSIC 4" X 4" #0190 ARTIC WHITE WITH CUSTOM BUILD. PRISM GROUT #544 ROLLING FOG
- (g) 'DAL TILE' COLOR WHEEL CLASSIC 4" X 4" #1469 GALAXY WITH CUSTOM BUILD. PRISM GROUT #544 ROLLING FOG
- (h) 'DAL TILE' COLOR WHEEL CLASSIC 4" X 4" #0182 SUDE GRAY WITH CUSTOM BUILD. PRISM GROUT #544 ROLLING FOG
- (j) 'CRANE COMPOSITES' PEBBLED EMBOSSED FINISH #85 WHITE
- (k) 'BOBRICK'- SIERRA SERIES- COMPOSITE- COLOR: DESERT BEIGE #SC02
- (m) 'SHERWIN WILLIAMS PAINT'- #SW 7646 FIRST STAR
- (n) 'SHERWIN WILLIAMS PAINT'- #SW 7006 EXTRA WHITE
- (o) 'SHERWIN WILLIAMS PAINT'- #SW 6078 REALIST BEIGE
- (p) 'SHERWIN WILLIAMS PAINT'- #SW 9150 ENDLESS SEA
- (q) 'KOROSEAL' CHATFIELD CLARKE- GRP2-TYPE1- SPRITE
- (r) 'WILSONART' #4860K-07 SILVER ALCHEMY (PREMIUM)
- (s) 'WILSONART' #5018-38 WASHI PEWTER (STD)
- (t) 'ROPPE' #150 DARK GRAY
- (u) 'WILSONART' #4651-60 NAVY LEGACY (STD)

EXTERIOR FINISHES

- (o) CEMENT PLASTER WALLS
- (p) CEMENT PLASTER WALLS
- (p) CEMENT PLASTER SOFFIT
- (p) WINDOW & DOOR FRAME
- (d) METAL COPING / TRIM
- (p) HOLLOW METAL DOOR
- (b) SMOOTH FACE STONE VENEER
- (c) SPLIT FACE STONE VENEER

FINISH SCHEDULE NOTES

1. CEILING HEIGHTS NOTED ON THIS SCHEDULE ARE FROM THE FLOOR BELOW IN THAT ROOM. THIS IS FOR THE PURPOSE OF ESTIMATING & DETERMINING INSTALLATION REQUIREMENTS.
2. REFER TO FLOOR PLANS, REFLECTED CEILING PLANS AND INTERIOR ELEVATIONS FOR EXTENT AND LOCATION OF INTERIOR FINISHES.
3. REFER TO EXTERIOR ELEVATIONS FOR EXTENT AND LOCATION OF EXTERIOR FINISHES.
4. REFER TO SPECIFICATIONS FOR METHOD OF APPLICATION AND MATERIALS DESCRIPTION.
5. WHERE MORE THAN ONE FINISH OR COLOR DESIGNATION OCCURS IN A BOX REFER TO THE APPROPRIATE PLAN OR INTERIOR ELEVATION FOR THE EXTENT AND DESIGNATION OF FINISH.
6. ALL GYP. BD. SHALL BE 5/8" THICK TYPE "X" UNLESS OTHERWISE NOTED.
7. REFER TO "INTERIOR ELEVATION NOTES" ON INTERIOR ELEVATION SHEETS FOR LOCATION IN THE DRAWINGS OF TYPICAL DETAILS.
8. FOR CABINET LAYOUT, VERIFY DIMENSIONS IN FIELD. DIMENSIONS NOTED ON DRAWINGS ARE NOMINAL - PROVIDE FILLERS @ END UNITS INCLUDING TOP OF CABINET AS REQUIRED FOR PROPER OPERATION AND CLOSING OF VOID SPACES.
9. PAINT METAL DOOR AND WINDOW FRAMES. PAINT METAL DOOR INTERIOR FACE, EXTERNAL FACE, AND ALL EDGES. WHERE INTERIOR AND EXTERIOR COLORS ARE DIFFERENT, PAINT EDGES TO MATCH THE SIDE TO WHICH THE DOOR OPENS.
10. PROTECT UNFINISHED CONCRETE FLOORS FROM DAMAGE DURING CONSTRUCTION . PREPARE FOR FINISH / SEALING BY HIGH PRESSURE WATER OR BEAD BLASTING AS REQUIRED TO REMOVE STAINS AND RESIDUE. GET APPROVAL OF ARCHITECT OR OWNER BEFORE SEALING. (TAKE EXTRA CARE WITH OCCUPIABLE ROOMS)
11. FINISH COLORS ARE SHOWN THUS: ( )
12. WHERE MORE THAN ONE COLOR IS SHOWN THE DESIGNATION IS: (a/b) — INTERIOR / EXTERIOR
13. AT ALL VINYL COVERED TACKBOARD EDGES, PROVIDE TACKBOARD MANUFACTURED TRIM

BUILDING 700 INTERIOR ROOM FINISH SCHEDULE

ROOM NUMBER	& NAME	FLOOR MAT'L	FLOOR FIN.	BASE MAT'L	BASE FIN.	WAINSCOT MAT'L	WAINSCOT FIN.	N. WALL MAT'L	N. WALL FIN.	E. WALL MAT'L	E. WALL FIN.	S. WALL MAT'L	S. WALL FIN.	W. WALL MAT'L	W. WALL FIN.	CEILING MAT'L	CEILING FIN.	HGT.	COUNTER MAT'L	COUNTER FIN.	UPPER MAT'L	UPPER FIN.	LOWER MAT'L	LOWER FIN.	REMARKS:
701	PRESCHOOL CLASSROOM	11	a	20	t			41	q	41/42	q/j	41	q	41	q	50	a	10'-0"	60	s	-	-	70	r	
702	TEACHER WORK ROOM	11	a	20	t			40	m	40	m	40	m	40	m	52	a	10'-0"	60	u	70	r	70	r	
703	STORAGE	11	a	20	t			40	m	40	m	40	m	40	m	51	m	9'-0"	-	-	-	-	70	r	
704	CLEAN UP	12	e	23	e			40	m	40	m	40	m	40	m	52	a	9'-0"	60	s	-	-	70	r	
705	UNISEX RESTROOM	12	e	22	e			43	f,g,h	43	f,g,h	43	f,g,h	43	f,g,h	51	a	9'-0"	-	-	-	-	-	-	
706	UNISEX RESTROOM	12	e	22	e			43	f,g,h	43	f,g,h	43	f,g,h	43	f,g,h	51	n	9'-0"	-	-	-	-	-	-	
707	PRESCHOOL CLASSROOM	11	a	20	t			41	q	41	q	41	q	41/42	q/j	50	a	10'-0"	60	s	-	-	70	r	
708	STORAGE	11	a	20	t			40	m	40	m	40	m	40	m	51	m	9'-0"	-	-	-	-	70	r	
709	CLEAN UP	12	e	23	e			40	m	40	m	40	m	40	m	52	a	9'-0"	-	-	-	-	70	r	
710	UNISEX RESTROOM	12	e	22	e			43	f,g,h	43	f,g,h	43	f,g,h	43	f,g,h	51	n	9'-0"	-	-	-	-	-	-	
711	UNISEX RESTROOM	12	e	22	e			43	f,g,h	43	f,g,h	43	f,g,h	43	f,g,h	51	n	9'-0"	-	-	-	-	-	-	
712	PRESCHOOL CLASSROOM	11	a	20	t			41	q	41/42	q/j	41	q	41	q	50	a	10'-0"	60	s	-	-	70	r	
713	TEACHER WORK ROOM	11	a	20	t			40	m	40	m	40	m	40	m	52	a	10'-0"	60	u	70	r	70	r	
714	STORAGE	11	a	20	t			40	m	40	m	40	m	40	m	51	a	9'-0"	-	-	-	-	70	r	
715	CLEAN UP	12	e	23	e			40	m	40	m	40	m	40	m	52	a	9'-0"	60	s	-	-	70	r	
716	UNISEX RESTROOM	12	e	22	e			43	m	43	m	43	m	43	m	51	n	9'-0"	-	-	-	-	-	-	
717	UNISEX RESTROOM	12	e	22	e			43	m	43	m	43	m	43	m	51	n	9'-0"	-	-	-	-	-	-	
718	PRESCHOOL CLASSROOM	11	a	20	t			41	q	41	q	41	q	41/42	q/j	50	a	10'-0"	60	s	-	-	70	r	
719	STORAGE	11	a	20	t			40	m	40	m	40	m	40	m	51	m	9'-0"	-	-	-	-	70	r	
720	CLEAN UP	12	e	23	e			40	m	40	m	40	m	40	m	52	a	9'-0"	60	s	-	-	70	r	
721	UNISEX RESTROOM	12	e	22	e			43	f,g,h	43	f,g,h	43	f,g,h	43	f,g,h	51	n	9'-0"	-	-	-	-	-	-	
722	UNISEX RESTROOM	12	e	22	e			43	f,g,h	43	f,g,h	43	f,g,h	43	f,g,h	51	n	9'-0"	-	-	-	-	-	-	
723	STAFF TOILET	12	e	22	e			43	f,g,h	43	f,g,h	43	f,g,h	43	f,g,h	51	n	9'-0"	-	-	-	-	-	-	
724	ELECTRICAL	10	a	20	t			40	m	40	m	40	m	40	m	51	m	9'-0"	-	-	-	-	-	-	
725	STORAGE	10	a	20	t			40	m	40	m	40	m	40	m	51	m	9'-0"	-	-	-	-	-	-	
726	JANITOR	10	a	21	t			40/42	m/j	40	m	40	m	40/42	m/j	51	m	9'-0"	-	-	-	-	-	-	

APPROVALS

FILE # 54-76 APPLICATION # 02-121996

IDENTIFICATION STAMP
DIV. OF THE STATE ARCHITECT
APP: 02-121996 INC:
REVIEWED FOR
SS ☑ FLS ☑ ACS ☑
DATE: 8/14/2024

LICENSED ARCHITECT
MICHAEL J. SCOTT
No. C-34290
REN. 05-31-25
STATE OF CALIFORNIA

DATE: DECEMBER 31, 2023

NEW PRESCHOOL AND TK/KINDERGARTEN CLASSROOMS AT SANTA FE ELEMENTARY SCHOOL
PORTERVILLE UNIFIED SCHOOL DISTRICT
286 E ORANGE AVENUE, PORTERVILLE, CA 93257

REVISIONS

MANGINI ARCHITECTURE
BARENG MORRELLI SCOTT WOENKUTZ
MANGINI ASSOCIATES INC.
4320 West Mineral King Avenue
Visalia, California 93291
www.mangini.us
(559) 627.0530 Office
(559) 627.1926 Fax

TITLE
BUILDING 700
FINISH SCHEDULE

A24

PROJECT 23076

MATERIALS

FLOOR
10 SEALED CONCRETE
11 POLISHED CONCRETE
12 2" SQUARE CERAMIC MOSAIC TILE

BASE
20 4" RUBBER TOPSET
21 6" RUBBER TOPSET
22 5" HIGH COVED CERAMIC TILE
23 6" COVED CERAMIC TILE

WALLS
40 SEMI-GLOSS ENAMEL o/ GYPSUM BOARD
41 VINYL COVERED TACKBOARD o/ GYPSUM BOARD
42 FIBERGLASS REINFORCED PANELING o/ GYPSUM BOARD
43 4-1/4" SQUARE CERAMIC TILE o/ SETTING BED

CEILINGS
50 2'x4' LAY-IN ACOUSTICAL TILE
51 SEMI-GLOSS ENAMEL o/ GYPSUM BOARD
52 12"x12" ACOUSTICAL GLUE-UP TILE o/ GYPSUM BOARD

COUNTERTOPS
60 PLASTIC LAMINATE

MILLWORK
70 PLASTIC LAMINATE

FINISHES

a. REFER TO SPECIFICATIONS FOR MATERIAL / COLOR DESIGNATION
b. 'CORONADO STONE' URBANA SMOOTH- FRENCH WHITE
c. 'CORONADO STONE' URBANA SPLIT- FRENCH WHITE
d. 'METAL SALES' COLOR- REGAL BLUE (KB5)
e. 'DAL TILE' KEYSTONE 2X2 FLOOR TILE WITH BUILT-UP BASE #K855A- COLOR: #D208 SUDE GRAY SPECKLE W/ CUST. BUILD. PRISM GROUT #114 PEWTER
f. 'DAL TILE' COLOR WHEEL CLASSIC 4" X 4" #0190 ARTIC WHITE WITH CUSTOM BUILD. PRISM GROUT #544 ROLLING FOG
g. 'DAL TILE' COLOR WHEEL CLASSIC 4" X 4" #1469 GALAXY WITH CUSTOM BUILD. PRISM GROUT #544 ROLLING FOG
h. 'DAL TILE' COLOR WHEEL CLASSIC 4" X 4" #0182 SUDE GRAY WITH CUSTOM BUILD. PRISM GROUT #544 ROLLING FOG
j. 'CRANE COMPOSITES' PEBBLED EMBOSSED FINISH #85 WHITE
k. 'BOBRICK'- SIERRA SERIES- COMPOSITE- COLOR: DESERT BEIGE #SC02
m. 'SHERWIN WILLIAMS PAINT'- #SW 7646 FIRST STAR
n. 'SHERWIN WILLIAMS PAINT'- #SW 7006 EXTRA WHITE
o. 'SHERWIN WILLIAMS PAINT'- #SW 6078 REALIST BEIGE
p. 'SHERWIN WILLIAMS PAINT'- #SW 9150 ENDLESS SEA
q. 'KOROSEAL' CHATFIELD CLARKE- GRP2-TYPE1- SPRITE
r. 'WILSONART' #4860K-07 SILVER ALCHEMY (PREMIUM)
s. 'WILSONART' #5018-38 WASHI PEWTER (STD)
t. 'ROPPE' #150 DARK GRAY
u. 'WILSONART' #4651-60 NAVY LEGACY (STD)

EXTERIOR FINISHES

o. CEMENT PLASTER WALLS
p. CEMENT PLASTER WALLS
p. CEMENT PLASTER SOFFIT
p. WINDOW & DOOR FRAME
d. METAL COPING / TRIM
p. HOLLOW METAL DOOR
b. SMOOTH FACE STONE VENEER
c. SPLIT FACE STONE VENEER

FINISH SCHEDULE NOTES

1. CEILING HEIGHTS NOTED ON THIS SCHEDULE ARE FROM THE FLOOR BELOW IN THAT ROOM. THIS IS FOR THE PURPOSE OF ESTIMATING & DETERMINING INSTALLATION REQUIREMENTS.
2. REFER TO FLOOR PLANS, REFLECTED CEILING PLANS AND INTERIOR ELEVATIONS FOR EXTENT AND LOCATION OF INTERIOR FINISHES.
3. REFER TO EXTERIOR ELEVATIONS FOR EXTENT AND LOCATION OF EXTERIOR FINISHES.
4. REFER TO SPECIFICATIONS FOR METHOD OF APPLICATION AND MATERIALS DESCRIPTION.
5. WHERE MORE THAN ONE FINISH OR COLOR DESIGNATION OCCURS IN A BOX REFER TO THE APPROPRIATE PLAN OR INTERIOR ELEVATION FOR THE EXTENT AND DESIGNATION OF FINISH.
6. ALL GYP. BD. SHALL BE 5/8" THICK TYPE "X" UNLESS OTHERWISE NOTED.
7. REFER TO "INTERIOR ELEVATION NOTES" ON INTERIOR ELEVATION SHEETS FOR LOCATION IN THE DRAWINGS OF TYPICAL DETAILS.
8. FOR CABINET LAYOUT, VERIFY DIMENSIONS IN FIELD. DIMENSIONS NOTED ON DRAWINGS ARE NOMINAL - PROVIDE FILLERS @ END UNITS INCLUDING TOP OF CABINET AS REQUIRED FOR PROPER OPERATION AND CLOSING OF VOID SPACES.
9. PAINT METAL DOOR AND WINDOW FRAMES. PAINT METAL DOOR INTERIOR FACE, EXTERNAL FACE, AND ALL EDGES. WHERE INTERIOR AND EXTERIOR COLORS ARE DIFFERENT, PAINT EDGES TO MATCH THE SIDE TO WHICH THE DOOR OPENS.
10. PROTECT UNFINISHED CONCRETE FLOORS FROM DAMAGE DURING CONSTRUCTION . PREPARE FOR FINISH / SEALING BY HIGH PRESSURE WATER OR BEAD BLASTING AS REQUIRED TO REMOVE STAINS AND RESIDUE. GET APPROVAL OF ARCHITECT OR OWNER BEFORE SEALING. (TAKE EXTRA CARE WITH OCCUPIABLE ROOMS)
11. FINISH COLORS ARE SHOWN THUS:
12. WHERE MORE THAN ONE COLOR IS SHOWN THE DESIGNATION IS: INTERIOR / EXTERIOR
13. AT ALL VINYL COVERED TACKBOARD EDGES, PROVIDE TACKBOARD MANUFACTURED TRIM

BUILDING 800 INTERIOR ROOM FINISH SCHEDULE

ROOM NUMBER	NAME	FLOOR MAT'L	FLOOR FIN.	BASE MAT'L	BASE FIN.	WAINSCOT MAT'L	WAINSCOT FIN.	N. WALL MAT'L	N. WALL FIN.	E. WALL MAT'L	E. WALL FIN.	S. WALL MAT'L	S. WALL FIN.	W. WALL MAT'L	W. WALL FIN.	CEILING MAT'L	CEILING FIN.	CEILING HGT.	COUNTER MAT'L	COUNTER FIN.	UPPER MAT'L	UPPER FIN.	LOWER MAT'L	LOWER FIN.	REMARKS:
801	STAFF TOILET	12	e	22	e			43	f,g,h	43	f,g,h	43	f,g,h	43	f,g,h	51	n	9'-0"	-	-	-	-	-	-	
802	STORAGE	10	a	20	t			40	m	40	m	40	m	40	m	51	m	9'-0"	-	-	-	-	-	-	
803	JANITOR	10	a	21	t			40 / 42	m / j	40 / 42	m / j	40	m	40	m	51	m	9'-0"	-	-	-	-	-	-	
804	TK CLASSROOM	11	a	20	t			42	q	42	q	42	q	41 / 42	q / j	50	a	10'-0"	60	s	-	-	70	r	
805	TEACHER WORK ROOM	11	a	20	t			40	m	40	m	40	m	40	m	52	a	10'-1"	60	u	70	r	70	r	
806	STORAGE	11	a	20	t			40	m	40	m	40	m	40	m	51	m	9'-0"	-	-	-	-	70	r	
807	CLEAN UP	12	e	23	e			40 / 41	f,g,h	40 / 41	f,g,h	40	m,g,h	40 / 41	f,g,h	52	a	9'-0"	60	s	-	-	70	r	
808	UNISEX	12	e	22	e			43	f,g,h	43	f,g,h	43	m,g,h	43	f,g,h	51	n	9'-0"	-	-	-	-	-	-	
809	UNISEX	12	e	22	e			43	f,g,h	43	f,g,h	43	m,g,h	43	f,g,h	51	n	9'-0"	-	-	-	-	-	-	
810	TK CLASSROOM	11	a	20	t			42	q	42	q	42	q	42	q	50	a	10'-0"	60	s	-	-	70	r	
811	TEACHER WORK ROOM	11	a	20	t			40	m	40	m	40	m	40	m	52	a	10'-1"	60	u	70	r	70	r	
812	STORAGE	11	a	20	t			40	m	40	m	40	m	40	m	51	m	9'-0"	-	-	-	-	70	r	
813	CLEAN UP	12	e	23	e			40 / 41	m / j	40 / 41	m / j	40	m	40 / 41	m / j	52	a	9'-0"	60	s	70	r	70	r	
814	GIRLS	12	e	22	e			43	f,g,h	43	f,g,h	43	m,g,h	43	f,g,h	51	n	9'-0"	-	-	-	-	-	-	
815	BOYS	12	e	22	e			43	f,g,h	43	f,g,h	43	m,g,h	43	f,g,h	51	n	9'-0"	-	-	-	-	-	-	
816	TK CLASSROOM	11	a	20	t			42	q	42	q	42	q	42	q	50	a	10'-0"	60	s	-	-	70	r	
817	STORAGE	11	a	20	t			40	m	40	m	40	m	40	m	51	m	9'-0"	-	-	-	-	70	r	
818	TK CLASSROOM	11	a	20	t			42	q	42	q	42	q	42	q	52	a	10'-0"	60	s	-	-	70	r	
819	TEACHER WORK ROOM	11	a	20	t			40	m	40	m	40	m	40	m	51	a	10'-1"	60	u	70	r	70	r	
820	STORAGE	11	a	20	t			40	m	40	m	40	m	40	m	52	m	9'-0"	-	-	-	-	70	r	
821	CLEAN UP	12	e	23	e			40 / 41	m / j	40 / 41	m / j	40	m	40 / 41	m / j	51	a	9'-0"	60	s	-	-	70	r	
822	GIRLS	12	e	22	e			43	f,g,h	43	f,g,h	43	m,g,h	43	f,g,h	51	n	9'-0"	-	-	-	-	-	-	
823	BOYS	12	e	22	e			43	f,g,h	43	f,g,h	43	m,g,h	43	f,g,h	51	n	9'-0"	-	-	-	-	-	-	
824	KINDERGARTEN CLASSROOM	11	a	20	t			42	q	42	q	42	q	42	q	50	a	10'-0"	60	s	-	-	70	r	
825	STORAGE	11	a	20	t			40	m	40	m	40	m	40	m	51	m	9'-0"	-	-	-	-	70	r	
826	KINDERGARTEN CLASSROOM	11	a	20	t			42	q	42	q	42	q	42	q	50	a	10'-0"	60	s	-	-	70	r	
827	TEACHER WORK ROOM	11	a	20	t			40	m	40	m	40	m	40	m	52	a	10'-1"	60	u	70	r	70	r	
828	STORAGE	11	a	20	t			40	m	40	m	40	m	40	m	51	m	9'-0"	-	-	-	-	70	r	
829	CLEAN UP	12	e	23	e			40 / 41	m / j	40 / 41	m / j	40	m	40 / 41	m / j	52	a	9'-0"	60	s	-	-	70	r	
830	GIRLS	12	e	22	e			43	f,g,h	43	f,g,h	43	m,g,h	43	f,g,h	51	n	9'-0"	-	-	-	-	-	-	
831	BOYS	12	e	22	e			43	f,g,h	43	f,g,h	43	m,g,h	43	f,g,h	51	n	9'-0"	-	-	-	-	-	-	
832	KINDERGARTEN CLASSROOM	11	a	20	t			42	q	42	q	42	q	42	q	50	a	10'-0"	60	s	-	-	70	r	
833	STORAGE	11	a	20	t			40	m	40	m	40	m	40	m	51	m	9'-0"	-	-	-	-	70	r	
834	STORAGE	10	a	20	t			40	m	40	m	40	m	40	m	51	m	9'-0"	-	-	-	-	-	-	
835	ELECTRICAL	10	a	20	t			40	m	40	m	40	m	40	m	51	m	9'-0"	-	-	-	-	-	-	

APPROVALS
FILE # 54-76 APPLICATION # 02-121996

IDENTIFICATION STAMP
DIV. OF THE STATE ARCHITECT
APP: 02-121996 INC: A
REVIEWED FOR
SS ☑ FLS ☑ ACS ☑
DATE: 8/14/2024

LICENSED ARCHITECT
MICHAEL J. SCOTT
No. C-34290
REN. 05-31-25
STATE OF CALIFORNIA
DATE: DECEMBER 31, 2023

NEW PRESCHOOL AND TK/KINDERGARTEN CLASSROOMS AT SANTA FE ELEMENTARY SCHOOL
PORTERVILLE UNIFIED SCHOOL DISTRICT
286 E ORANGE AVENUE, PORTERVILLE, CA 93257

REVISIONS

MANGINI ARCHITECTURE INGENUITY
BARENG MORRELLI SCOTT
MANGINI ASSOCIATES INC.
4320 West Mineral King Avenue
Visalia, California 93291
www.mangini.us
(559) 627.0530 Office
(559) 627.1926 Fax

TITLE
BUILDING 800
FINISH SCHEDULE

A25

PROJECT 23076

APPROVALS

FILE # 54-76 | APPLICATION # 02-121996

IDENTIFICATION STAMP
DIV. OF THE STATE ARCHITECT
APP: 02-121996 INC:
REVIEWED FOR
SS ☑ FLS ☑ ACS ☑
DATE: 8/14/2024

LICENSED ARCHITECT
MICHAEL J. SCOTT
No. C-34290
REN. 05-31-25
STATE OF CALIFORNIA

DATE: DECEMBER 31, 2023

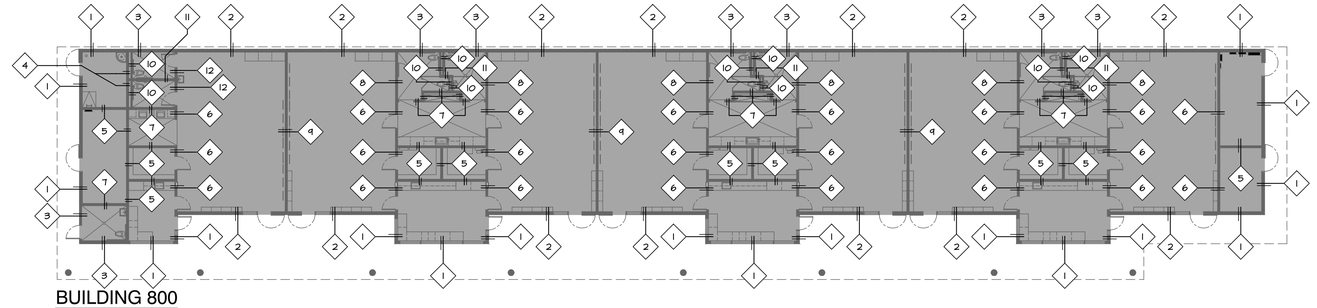

BUILDING 800

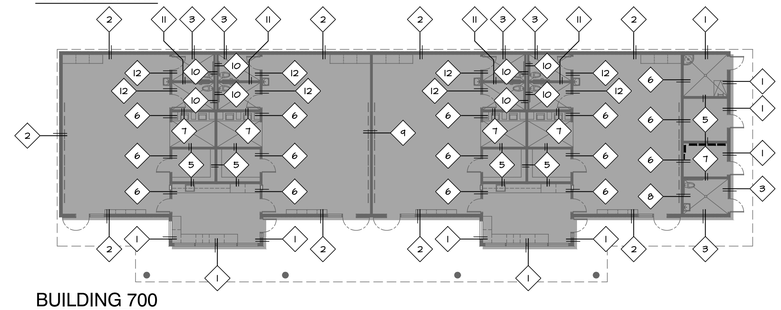

BUILDING 700

LEGEND

WALL ASSEMBLY DETAILS ON THIS PAGE.

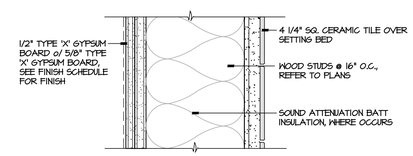

12 WALL ASSEMBLY
SCALE: 3" = 1'-0"

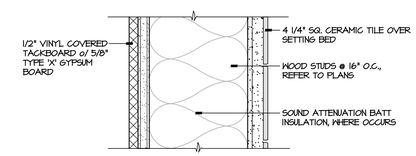

8 WALL ASSEMBLY
SCALE: 3" = 1'-0"

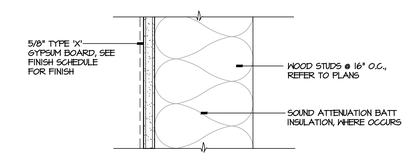

4 WALL ASSEMBLY
SCALE: 3" = 1'-0"

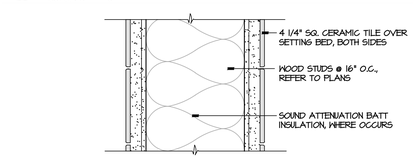

11 WALL ASSEMBLY
SCALE: 3" = 1'-0"

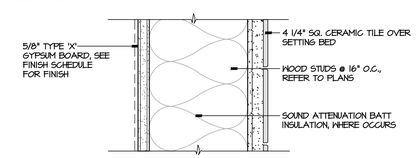

7 WALL ASSEMBLY
SCALE: 3" = 1'-0"

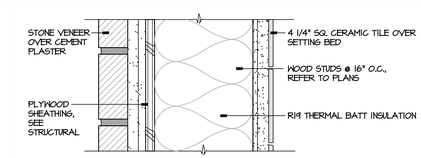

4 WALL ASSEMBLY
SCALE: 3" = 1'-0"

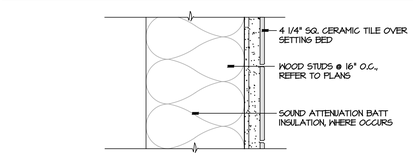

10 WALL ASSEMBLY
SCALE: 3" = 1'-0"

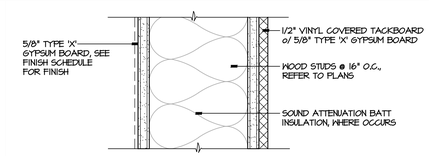

6 WALL ASSEMBLY
SCALE: 3" = 1'-0"

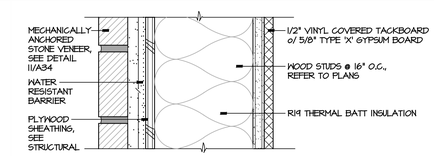

3 WALL ASSEMBLY
SCALE: 3" = 1'-0"

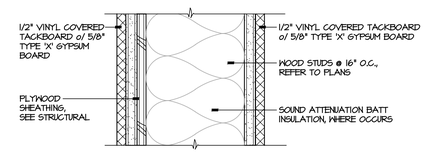

9 WALL ASSEMBLY
SCALE: 3" = 1'-0"

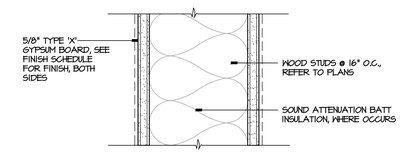

5 WALL ASSEMBLY
SCALE: 3" = 1'-0"

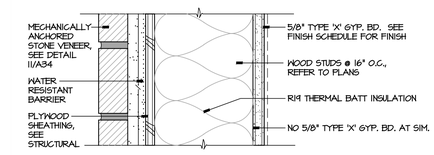

1 WALL ASSEMBLY
SCALE: 3" = 1'-0"

NEW PRESCHOOL AND TK/KINDERGARTEN CLASSROOMS AT SANTA FE ELEMENTARY SCHOOL

PORTERVILLE UNIFIED SCHOOL DISTRICT
286 E ORANGE AVENUE, PORTERVILLE, CA 93257

REVISIONS

MANGINI ARCHITECTURE INGENUITY
BARENG MORRELLI SCOTT
MANGINI ASSOCIATES INC.
4320 West Mineral King Avenue
Visalia, California 93291
www.mangini.us
(559) 627-0530 Office
(559) 627-1926 Fax

TITLE
WALL ASSEMBLIES

A26

PROJECT 23076

BUILDING 700 DOOR SCHEDULE

DOOR NO.	TYPE	DIMENSIONS WIDTH	DIMENSIONS HGT.	DIMENSIONS THK.	HDWR. GROUP	FINISH	FIRE RATING	FRAME TYPE	FRAME DEPTH	FRAME FINISH	DETAILS HEAD	DETAILS JAMB	DETAILS JAMB	DETAILS SILL	SIGNAGE TYPE	SIGNAGE TEXT	REMARKS: ** INDICATES VERIFY RM. NAME & NUMBER WITH OWNER PRIOR TO FABRICATION, TYP.
701	B	3'-0"	7'-0"	1 3/4"	01	P		3b	4"	P	22 SIM.	2	22	1	B1	**	
											A29	A29	A29	A29	B4	EXIT	
702	B	3'-0"	7'-0"	1 3/4"	01	P		2	4"	P	22 SIM.	22	7	1	B2	WORK ROOM	
											A29	A29	A29	A29	B4	EXIT	
703	B	3'-0"	7'-0"	1 3/4"	01	P		3a	4"	P	22 SIM.	22	2	1	B1	**	
											A29	A29	A29	A29	B4	EXIT	
704	B	3'-0"	7'-0"	1 3/4"	01	P		3b	4"	P	22 SIM.	2	22	1	B1	**	
											A29	A29	A29	A29	B4	EXIT	
705	B	3'-0"	7'-0"	1 3/4"	01	P		2	4"	P	22 SIM.	22	7	1	B2	WORK ROOM	
											A29	A29	A29	A29	B4	EXIT	
706	B	3'-0"	7'-0"	1 3/4"	01	P		3a	4"	P	22 SIM.	22	2	1	B1	**	
											A29	A29	A29	A29	B4	EXIT	
707	A	3'-0"	7'-0"	1 3/4"	03	P		1b	4"	P	13	12	12	16	A3 / A4	UNISEX	12"x24" DOOR LOUVER
											A29	A29	A29	A29	-	-	
708	A	3'-0"	7'-0"	1 3/4"	02	P		1b	4"	P	14	7	7	1	B2	ELECTRICAL	12"x24" DOOR LOUVER
											A29	A29	A29	A29	-	-	
709	A	3'-0"	7'-0"	1 3/4"	02	P		1b	4"	P	14	7	7	1	B2	STORAGE	12"x24" DOOR LOUVER
											A29	A29	A29	A29	-	-	
710	A	3'-0"	7'-0"	1 3/4"	04	P		1b	4"	P	14	7	7	1	B2/B3	JANITOR / FIRE RISER ROOM	12"x24" DOOR LOUVER
											A29	A29	A29	A29	-		
711	D	3'-0"	7'-0"	1 3/4"	05	P		1a	8"	P	17 SIM.	17	17	6	B2	WORK ROOM	
											A29	A29	A29	A29	B1	**	
712	C	3'-0"	7'-0"	1 3/4"	05	P		1a	8"	P	17 SIM.	17	17	6	B2	STORAGE	
											A29	A29	A29	A29	-	-	
713	D	3'-0"	7'-0"	1 3/4"	06	P		1a	8"	P	18 SIM.	18	18	11	A3 / A4	UNISEX	
											A29	A29	A29	A29	-	-	
714	D	3'-0"	7'-0"	1 3/4"	06	P		1a	8"	P	18 SIM.	18	18	11	A3 / A4	UNISEX	
											A29	A29	A29	A29	-	-	
715	D	3'-0"	7'-0"	1 3/4"	05	P		1a	8"	P	17 SIM.	17	17	6	B2	WORK ROOM	
											A29	A29	A29	A29	B1	**	
716	C	3'-0"	7'-0"	1 3/4"	05	P		1a	8"	P	17 SIM.	17	17	6	B2	STORAGE	
											A29	A29	A29	A29	-	-	
717	D	3'-0"	7'-0"	1 3/4"	06	P		1a	8"	P	18 SIM.	18	18	11	A3 / A4	UNISEX	
											A29	A29	A29	A29	-	-	
718	D	3'-0"	7'-0"	1 3/4"	06	P		1a	8"	P	18 SIM.	18	18	11	A3 / A4	UNISEX	
											A29	A29	A29	A29	-	-	
719	D	3'-0"	7'-0"	1 3/4"	05	P		1a	8"	P	17 SIM.	17	17	6	B2	WORK ROOM	
											A29	A29	A29	A29	B1	**	
720	C	3'-0"	7'-0"	1 3/4"	05	P		1a	8"	P	17 SIM.	17	17	6	B2	STORAGE	
											A29	A29	A29	A29	-	-	
721	D	3'-0"	7'-0"	1 3/4"	06	P		1a	8"	P	18 SIM.	18	18	11	A3 / A4	UNISEX	
											A29	A29	A29	A29	-	-	
722	D	3'-0"	7'-0"	1 3/4"	06	P		1a	8"	P	18 SIM.	18	18	11	A3 / A4	UNISEX	
											A29	A29	A29	A29	-	-	
723	D	3'-0"	7'-0"	1 3/4"	05	P		1a	8"	P	17 SIM.	17	17	6	B2	WORK ROOM	
											A29	A29	A29	A29	B1	**	
724	C	3'-0"	7'-0"	1 3/4"	05	P		1a	8"	P	17 SIM.	17	17	6	B2	STORAGE	
											A29	A29	A29	A29	-	-	
725	D	3'-0"	7'-0"	1 3/4"	06	P		1a	8"	P	18 SIM.	18	18	11	A3 / A4	UNISEX	
											A29	A29	A29	A29	-	-	
726	D	3'-0"	7'-0"	1 3/4"	06	P		1a	8"	P	18 SIM.	18	18	11	A3 / A4	UNISEX	
											A29	A29	A29	A29	-	-	

BUILDING 800 DOOR SCHEDULE

DOOR NO.	TYPE	DIMENSIONS WIDTH	DIMENSIONS HGT.	DIMENSIONS THK.	HDWR. GROUP	FINISH	FIRE RATING	FRAME TYPE	FRAME DEPTH	FRAME FINISH	DETAILS HEAD	DETAILS JAMB	DETAILS JAMB	DETAILS SILL	SIGNAGE TYPE	SIGNAGE TEXT	REMARKS: ** INDICATES VERIFY RM. NAME & NUMBER WITH OWNER PRIOR TO FABRICATION, TYP.
801	B	3'-0"	7'-0"	1 3/4"	01	P		3a	4"	P	22 SIM.	22	2	1	B1	**	
											A29	A29	A29	A29	B4	EXIT	
802	B	3'-0"	7'-0"	1 3/4"	01	P		3b	4"	P	22 SIM.	2	22	1	B1	**	
											A29	A29	A29	A29	B4	EXIT	
803	B	3'-0"	7'-0"	1 3/4"	01	P		2	4"	P	17 SIM.	22	7	1	B2	WORK ROOM	
											A29	A29	A29	A29	B4	EXIT	
804	B	3'-0"	7'-0"	1 3/4"	01	P		3a	4"	P	22 SIM.	22	2	1	B1	**	
											A29	A29	A29	A29	B4	EXIT	
805	B	3'-0"	7'-0"	1 3/4"	01	P		3b	4"	P	22 SIM.	2	22	1	B1	**	
											A29	A29	A29	A29	B4	EXIT	
806	B	3'-0"	7'-0"	1 3/4"	01	P		2	4"	P	22 SIM.	22	7	1	B2	WORK ROOM	
											A29	A29	A29	A29	B4	EXIT	
807	B	3'-0"	7'-0"	1 3/4"	01	P		3a	4"	P	22 SIM.	22	2	1	B1	**	
											A29	A29	A29	A29	B4	EXIT	
808	B	3'-0"	7'-0"	1 3/4"	01	P		3b	4"	P	22 SIM.	2	22	1	B1	**	
											A29	A29	A29	A29	B4	EXIT	
809	B	3'-0"	7'-0"	1 3/4"	01	P		2	4"	P	22 SIM.	22	7	1	B2	WORK ROOM	
											A29	A29	A29	A29	B4	EXIT	
810	B	3'-0"	7'-0"	1 3/4"	01	P		3a	4"	P	22 SIM.	22	2	1	B1	**	
											A29	A29	A29	A29	B4	EXIT	
811	A	3'-0"	7'-0"	1 3/4"	02	P		1b	4"	P	14	7	7	1	B2	STORAGE	12"x24" DOOR LOUVER
											A29	A29	A29	A29	-	-	
812	A	3'-0"	7'-0"	1 3/4"	08	P		1b	4"	P	14	7	7	1	B2	ELECTRICAL	
											A29	A29	A29	A29	-		
813	A	3'-0"	7'-0"	1 3/4"	02	P		1b	4"	P	14	7	7	1	B2/B3	JANITOR / FIRE RISER ROOM	12"x24" DOOR LOUVER
											A29	A29	A29	A29	-		
814	A	3'-0"	7'-0"	1 3/4"	02	P		1b	4"	P	14	7	7	1	B2	STORAGE	12"x24" DOOR LOUVER
											A29	A29	A29	A29	-	-	
815	A	3'-0"	7'-0"	1 3/4"	03	P		1b	4"	P	13	12	12	16	A3 / A4	UNISEX	12"x24" DOOR LOUVER
											A29	A29	A29	A29	-	-	
816	B	3'-0"	7'-0"	1 3/4"	01	P		2	4"	P	22 SIM.	22	7	1	B2	WORK ROOM	
											A29	A29	A29	A29	B4	EXIT	
817	D	3'-0"	7'-0"	1 3/4"	05	P		1a	8"	P	17 SIM.	17	17	6	B2	WORK ROOM	
											A29	A29	A29	A29	B1	**	
818	C	3'-0"	7'-0"	1 3/4"	05	P		1a	8"	P	17 SIM.	17	17	6	B2	STORAGE	
											A29	A29	A29	A29	-	-	
819	D	3'-0"	7'-0"	1 3/4"	06	P		1a	8"	P	18 SIM.	18	18	11	A3 / A4	UNISEX	
											A29	A29	A29	A29	-	-	
820	D	3'-0"	7'-0"	1 3/4"	06	P		1a	8"	P	18 SIM.	18	18	11	A3 / A4	UNISEX	
											A29	A29	A29	A29	-	-	
821	D	3'-0"	7'-0"	1 3/4"	05	P		1a	8"	P	17 SIM.	17	17	6	B2	WORK ROOM	
											A29	A29	A29	A29	B1	**	
822	C	3'-0"	7'-0"	1 3/4"	05	P		1a	8"	P	17 SIM.	17	17	6	B2	STORAGE	
											A29	A29	A29	A29	-	-	
823	D	3'-0"	7'-0"	1 3/4"	07	P		1a	8"	P	17 SIM.	17	17	16	B2	CLEAN UP	
											A29	A29	A29	A29	B1	**	
824	D	3'-0"	7'-0"	1 3/4"	05	P		1a	8"	P	17 SIM.	17	17	6	B2	WORK ROOM	
											A29	A29	A29	A29	B1	**	
825	C	3'-0"	7'-0"	1 3/4"	05	P		1a	8"	P	17 SIM.	17	17	6	B2	STORAGE	
											A29	A29	A29	A29	-	-	
826	D	3'-0"	7'-0"	1 3/4"	07	P		1a	8"	P	17 SIM.	17	17	16	B2	CLEAN UP	
											A29	A29	A29	A29	B1	**	
827	D	3'-0"	7'-0"	1 3/4"	05	P		1a	8"	P	17 SIM.	17	17	6	B2	WORK ROOM	
											A29	A29	A29	A29	B1	**	
828	C	3'-0"	7'-0"	1 3/4"	05	P		1a	8"	P	17 SIM.	17	17	6	B2	STORAGE	
											A29	A29	A29	A29	-	-	
829	D	3'-0"	7'-0"	1 3/4"	07	P		1a	8"	P	17 SIM.	17	17	16	B2	CLEAN UP	
											A29	A29	A29	A29	B1	**	
830	D	3'-0"	7'-0"	1 3/4"	05	P		1a	8"	P	17 SIM.	17	17	6	B2	WORK ROOM	
											A29	A29	A29	A29	B1	**	
831	C	3'-0"	7'-0"	1 3/4"	05	P		1a	8"	P	17 SIM.	17	17	6	B2	STORAGE	
											A29	A29	A29	A29	-	-	
832	D	3'-0"	7'-0"	1 3/4"	07	P		1a	8"	P	17 SIM.	17	17	16	B2	CLEAN UP	
											A29	A29	A29	A29	B1	**	
833	D	3'-0"	7'-0"	1 3/4"	05	P		1a	8"	P	17 SIM.	17	17	6	B2	WORK ROOM	
											A29	A29	A29	A29	B1	**	
834	C	3'-0"	7'-0"	1 3/4"	05	P		1a	8"	P	17 SIM.	17	17	6	B2	STORAGE	
											A29	A29	A29	A29	-	-	
835	D	3'-0"	7'-0"	1 3/4"	07	P		1a	8"	P	17 SIM.	17	17	16	B2	CLEAN UP	
											A29	A29	A29	A29	B1	**	
836	D	3'-0"	7'-0"	1 3/4"	05	P		1a	8"	P	17 SIM.	17	17	6	B2	WORK ROOM	
											A29	A29	A29	A29	B1	**	
837	C	3'-0"	7'-0"	1 3/4"	05	P		1a	8"	P	17 SIM.	17	17	6	B2	STORAGE	
											A29	A29	A29	A29	-	-	
838	D	3'-0"	7'-0"	1 3/4"	07	P		1a	8"	P	17 SIM.	17	17	16	B2	CLEAN UP	
											A29	A29	A29	A29	B1	**	

DOOR TYPES

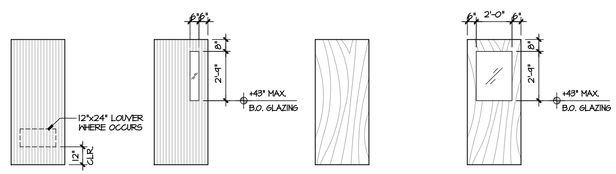

TYPE "A"
1 3/4" THK. H.M. DOOR

TYPE "B"
1 3/4" THK. H.M. DOOR w/ TYPE 'A' GLAZING

TYPE "C"
1 3/4" THK. WOOD DOOR

TYPE "D"
1 3/4" THK. WOOD DOOR w/ TYPE 'A' GLAZING

DOOR SCHEDULE NOTES:

1. VERIFY DOOR SHINGS WITH FLOOR PLAN.
2. METAL FRAMES SHALL FIT TIGHT TO WALL. SHIM GYP. BD. AS REQUIRED FOR PLUMB TOLERANCE AT FRAME AND GYP. BD.
3. PAINT H.M. DOORS AND FRAMES SEMI-GLOSS ENAMEL IN ACCORDANCE WITH SPECIFICATIONS. REFER TO FINISH COLORS FOR DESIGNATION.
4. PAINT DOORS AND FRAMES SEMI-GLOSS IN ACCORDANCE WITH SPECIFICATIONS. DO NOT PAINT OR ALTER FIRE RESISTANCE RATING LABELS, WHERE OCCURS.
5. PAINT DOORS THE SAME COLOR ON BOTH SIDES UNLESS OTHERWISE NOTED THUS:
   INTERIOR
   EXTERIOR
   WHEN INTERIOR AND EXTERIOR COLORS ARE DIFFERENT, LATCH EDGE SHALL MATCH EXTERIOR COLOR AND HINGE EDGE SHALL MATCH INTERIOR COLOR. FINISH ALL EDGES.
6. REFER TO SPECIFICATIONS FOR DOOR SIGNAGE TYPES. ALL SIGNS SHALL INCLUDE BRAILLE IDENTIFICATION IN ACCORDANCE WITH CBC. FOR TYPICAL SIGNAGE / MOUNTING, SEE DETAIL 1/A28
7. VERIFY ALL ROOM SIGNAGE TEXT WITH OWNER PRIOR TO LAYOUT.
8. REFER TO SPECIFICATIONS FOR DOOR HARDWARE AND SCHEDULES.
9. SEE SHEET A28 FOR FRAME TYPES
10. REFER TO GLAZING SCHEDULE ON SHEET A28 AND THE SPECIFICATIONS FOR TYPES OF GLAZING NOTED.
11. ALL CLASSROOM AND ROOMS WITH AN OCCUPANT LOAD OF 5 OR MORE MUST BE LOCKABLE FROM THE INTERIOR.
12. ALL DIMENSIONS ARE +/-, VERIFY IN THE FIELD (OR WITH FLOOR PLAN FOR APPROXIMATE AS INDICATED).

APPROVALS

FILE # 54-76 APPLICATION # 02-121996

IDENTIFICATION STAMP
DIV. OF THE STATE ARCHITECT
APP: 02-121996 INC:
REVIEWED FOR
SS ☑ FLS ☑ ACS ☑
DATE: 8/14/2024

LICENSED ARCHITECT MICHAEL J. SCOTT No. C-34290 REN. 05-31-25 STATE OF CALIFORNIA

DATE: DECEMBER 31, 2023

NEW PRESCHOOL AND TK/KINDERGARTEN CLASSROOMS AT SANTA FE ELEMENTARY SCHOOL

PORTERVILLE UNIFIED SCHOOL DISTRICT
286 E ORANGE AVENUE, PORTERVILLE, CA 93257

REVISIONS

MANGINI ARCHITECTURE INGENUITY
BARENG MORRELLI SCOTT
MANGINI ASSOCIATES INC.
4320 West Mineral King Avenue
Visalia, California 93291
www.mangini.us
(559) 627.0530 Office
(559) 627.1926 Fax

TITLE
DOOR SCHEDULE

A27

PROJECT 23076

FRAME TYPES

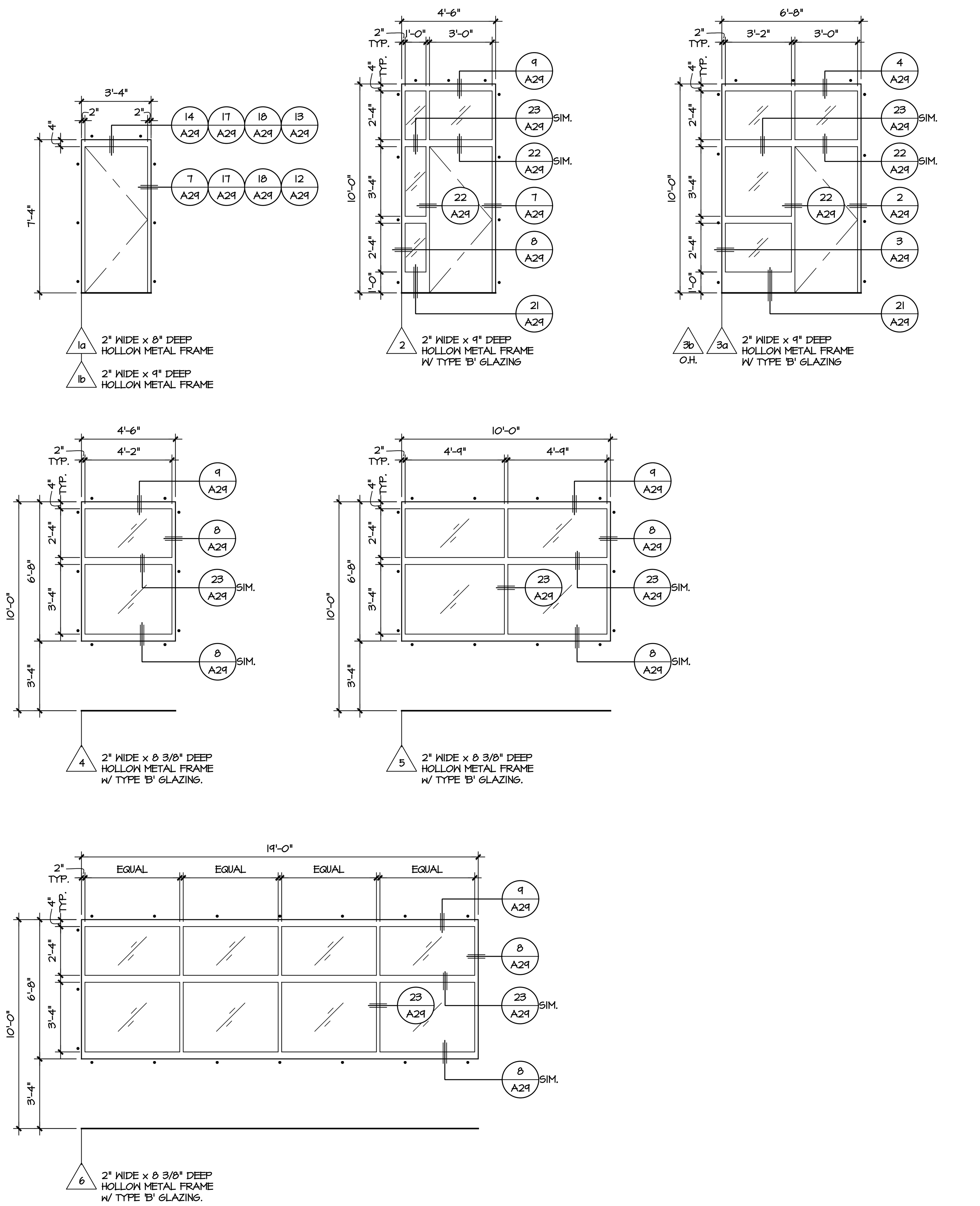

DOOR & WINDOW FRAME TYPE NOTES

1. GLAZING SCHEDULE: SEE SPECIFICATIONS

   TYPE 'A': 1/4" THICK, CLEAR, FULLY TEMPERED GLASS

   TYPE 'B': 1" THICK, TINTED, FULLY TEMPERED GLASS

   NOTE: ALL TEMPERED GLASS IS TO BE SAFETY GLASS & MEET HUMAN IMPACT LOADS LISTED IN SPECIFICATIONS.

2. METAL FRAMES SHALL FIT TIGHT TO WALL. CENTER FRAME THROAT OPENING BETWEEN OUTSIDE FACE OF MATERIALS BEING WRAPPED BY FRAME, SHIM GYPSUM BOARD AS REQUIRED FOR PLUMB TOLERANCE AT FRAME / GYPSUM BOARD.
3. "LABEL" SHALL MEAN "ASSEMBLY" AS DEFINED IN CBC SECTION 715.4.5 AND 715.4.5.1.
4. FIRE-RATED FRAMES SHALL BE INSTALLED IN STRICT ACCORDANCE WITH THE MANUFACTURER'S WRITTEN INSTRUCTIONS AND NFPA 80. THE MANUFACTURER'S WRITTEN INSTRUCTIONS SHALL BE MADE AVAILABLE TO THE INSPECTING AUTHORITY.
5. PAINT FRAMES AND DOORS SEMI-GLOSS ENAMEL IN ACCORDANCE WITH SPECIFICATION SECTION 099100 AS NOTED ON THE DOOR SCHEDULE. REFER TO FINISH COLORS FOR DESIGNATION. PAINT BOTH SIDES THE SAME COLOR. U.O.N.
6. ALL DIMENSIONS ARE +/-. VERIFY IN THE FIELD (OR WITH FLOOR PLAN FOR APPROXIMATE AS INDICATED).
7. VERIFY DOOR SWINGS WITH FLOOR PLAN.
8. MINIMUM ANCHOR REQUIREMENTS (U.O.N.):

FRAME HEIGHTS UP TO 4'-0":	2 JAMB ANCHORS
FRAME HEIGHTS UP TO 7'-4":	3 JAMB ANCHORS
FRAME HEIGHTS UP TO 10'-0":	4 JAMB ANCHORS
FRAME HEIGHTS OVER 10'-0":	1 ADDITIONAL ANCHOR PER 3'-0" OR PORTION THEREOF
FRAME WIDTHS UP TO 4'-0":	2 HEAD ANCHORS
FRAME WIDTHS UP TO 7'-4":	3 HEAD ANCHORS
FRAME WIDTHS UP TO 10'-0":	4 HEAD ANCHORS
FRAME WIDTHS OVER 10'-0":	1 ADDITIONAL ANCHOR PER 3'-0" OR PORTION THEREOF

   PROVIDE 6" EDGE DISTANCE AT FIRST HEAD ANCHOR.

9. FRAMES SHALL BE ANCHORED AT THE FLOOR WITH MANUFACTURER'S STANDARD FLOOR ANCHORS AS REQUIRED.
10. ALL FRAME ANCHORS SHALL BE MANUFACTURER'S STANDARD CONCEALED ANCHORS, UL LISTED WHERE REQUIRED BY THE DOOR SCHEDULE.
11. EXPOSED DIMPLE FASTENERS WILL ONLY BE ALLOWED UPON PRIOR WRITTEN ACCEPTANCE BY THE ARCHITECT.
12. WHERE FRAMES ARE ALLOWED TO BE DIMPLED FOR ANCHORAGE, COUNTERSINK SCREW HEADS.
13. TYPICAL FRAME ANCHOR FASTENERS:
    a. WOOD STUDS: 2-8d EACH SIDE.
    b. DIMPLED FRAME: 3/8" Φ SCREW OR EXPOSED ANCHOR, 5" LONG.
    c. CONC. SLAB: (2) 1/4"Φ X 2 1/2" EXP. ANCHOR AT 24" O.C. MIN. PROVIDE MIN. 2 SETS
14. VERTICAL AND HORIZONTAL FRAMING MEMBERS AT 2" THICK UNLESS OTHERWISE NOTED.
15. FOR TYP. SIGNAGE / MOUNTING SEE 1/A28
16. FOR HOLLOW METAL FRAMES AT CONCRETE CURBS, SEE 22/A31.

LEGEND

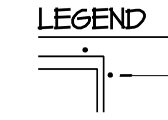
DOT INDICATED ANCHOR LOCATION, TYPICAL EQUALLY SPACED PER FRAME ELEVATIONS

NOTES:
1. REFER TO FLOOR PLANS & ELEVATIONS FOR LOCATIONS
2. LETTERS AND NUMBERS 5/8" HIGH.
3. EXTERIOR ATTACHMENT: EPOXY AND 4 VANDAL RESISTANT SCREWS. INTERIOR ATTACHMENT: EPOXY.
4. INTERNATIONAL SYMBOL OF ACCESS FOR HEARING IMPAIRED, FIGURE CBC 11B-703.7.2.4
5. COORDINATE EQUIPMENT LOCATION DESCRIPTION WITH ARCHITECT

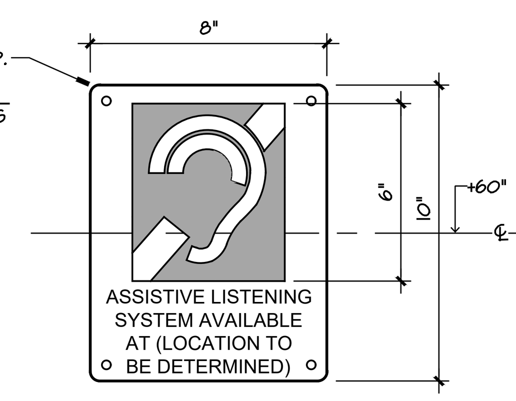

TYPE "F" ASSISTIVE LISTENING SIGN

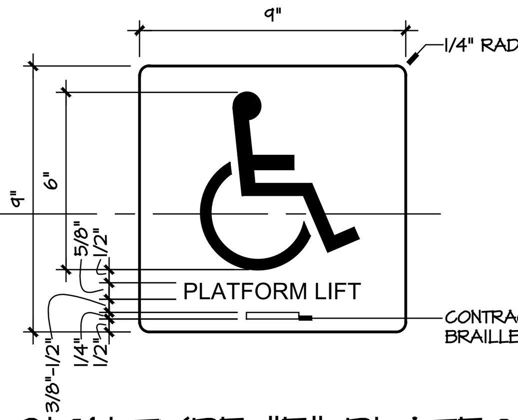

NOTES:
1. REFER TO FLOOR PLANS & ELEVATIONS FOR LOCATIONS
2. LETTERS AND NUMBERS 5/8" HIGH.
3. EXTERIOR ATTACHMENT: EPOXY AND 4 VANDAL RESISTANT SCREWS. INTERIOR ATTACHMENT: EPOXY.

SIGN TYPE "E" PLATFORM LIFT

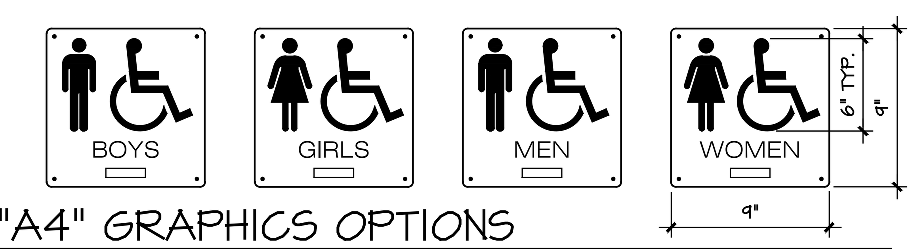

"A4" GRAPHICS OPTIONS

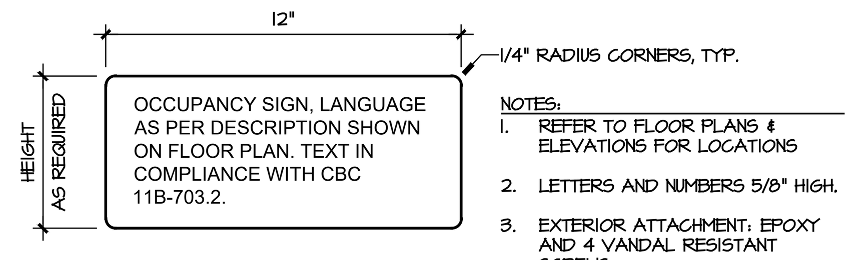

NOTES:
1. REFER TO FLOOR PLANS & ELEVATIONS FOR LOCATIONS
2. LETTERS AND NUMBERS 5/8" HIGH.
3. EXTERIOR ATTACHMENT: EPOXY AND 4 VANDAL RESISTANT SCREWS. INTERIOR ATTACHMENT: EPOXY.

SIGN TYPE "D" OCCUPANCY SIGNS

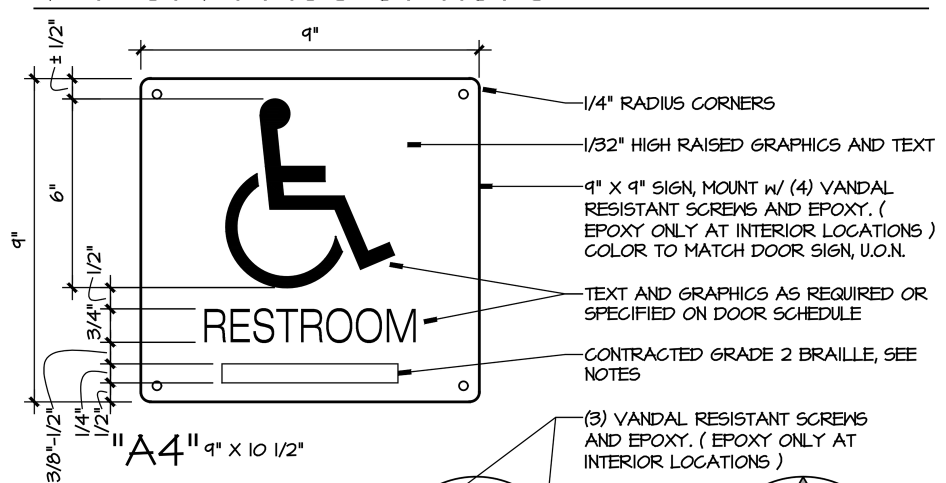

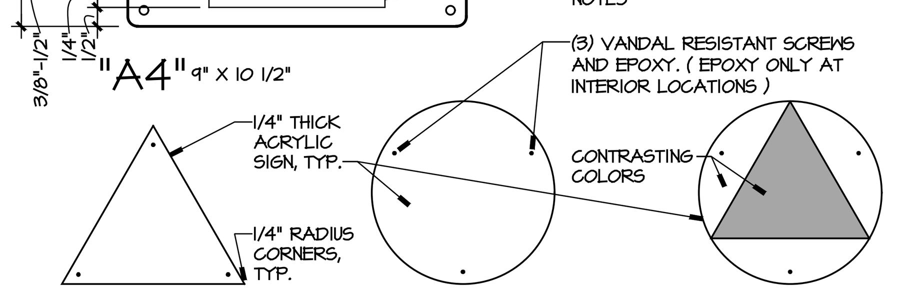

TYPE "A" SIGNS

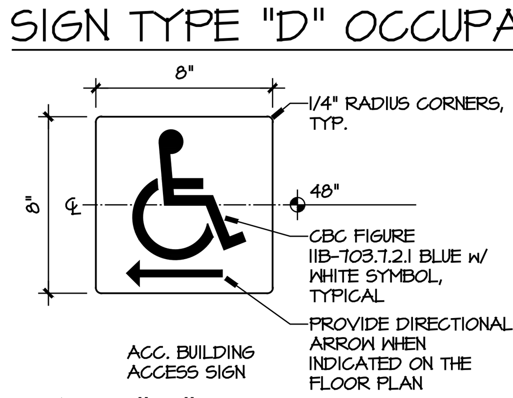

NOTES:
1. REFER TO FLOOR PLANS & ELEVATIONS FOR LOCATIONS
2. EXTERIOR ATTACHMENT: EPOXY AND 4 VANDAL RESISTANT SCREWS. INTERIOR ATTACHMENT: EPOXY.

TYPE "C" SIGNS

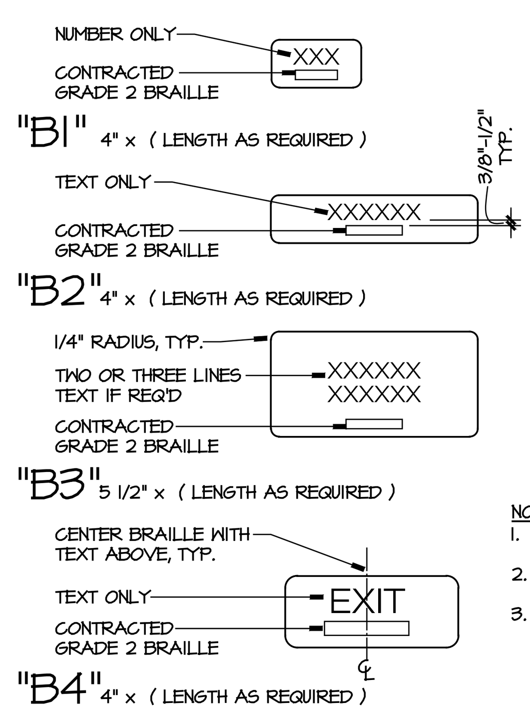

NOTES:
1. NUMBERS 2" HIGH.
2. LETTERS 1" HIGH.
3. EXTERIOR ATTACHMENT: EPOXY AND A MINIMUM OF 2 VANDAL RESISTANT SCREWS. INTERIOR ATTACHMENT: EPOXY.

TYPE "B" SIGNS

SIGN TYPES "A1, A2, OR A3"

SIGN TYPE "A4" OR "B" ROOM I.D.

NOTES:
1. IN ADDITION TO SIGN TYPES "A1, A2, AND A3" MOUNTED ON RESTROOM DOORS, PROVIDE SIGN TYPE "A4", LOCATED AS SHOWN.
2. TYPE "B" SIGNS TO BE MOUNTED ON LATCH SIDE OF SINGLE DOOR. AT DOUBLE DOORS, MOUNT SIGN ON INACTIVE LEAF. IF BOTH LEAVES ARE ACTIVE MOUNT SIGN ON RIGHT SIDE OF DOUBLE DOOR. WHERE THERE IS NO WALL SPACE AT THE LATCH SIDE OF A SINGLE DOOR OR AT THE RIGHT SIDE OF DOUBLE DOORS, SIGNS SHALL BE LOCATED ON THE NEAREST ADJACENT WALL.
3. REFER TO DOOR SCHED. & ELEVATIONS FOR LOCATIONS.
4. <u>USE 60" TO TOP OF THE UPPER SIGN TO SET SIGNS</u>. CBC ALLOWS 60" MAX. TO BASELINE OF RAISED CHARACTERS & 48" MIN. TO BASELINE OF LOWEST LINE OF BRAILLE.

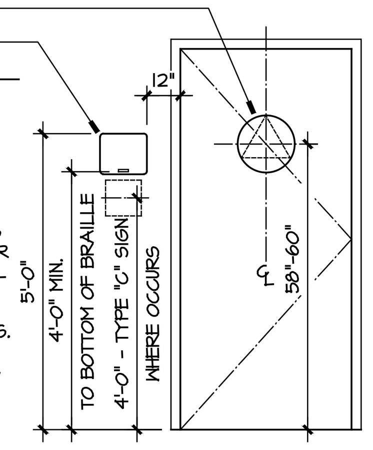

SIGN LOCATIONS

NOTES:

1. CONSTRUCT SIGNS OF 1/8" THK. PLASTIC UNLESS OTHERWISE NOTED. ALL CHARACTERS AND PICTOGRAMS SHALL BE RAISED 1/32".
2. <u>COLOR TO BE SELECTED BY ARCHITECT</u>. (SIGN BACKGROUND COLORS TO CONTRAST WITH DOOR COLOR) 70% CONTRAST BETWEEN CHARACTERS AND BACKGROUND. CIRCLE COLOR TO CONTRAST WITH TRIANGLE.
3. ALL EDGES SHALL BE EASED OR ROUNDED AT 1/16".
4. AT LOCATIONS WHERE AN EXIT SIGN AND A ROOM I.D. SIGN ARE BACK TO BACK ON GLASS, ALIGN & MAKE SIGNS THE SAME SIZE. WHEN SIGN IS MOUNTED ON GLASS WITH NO SIGN ON BACK SIDE, PROVIDE BLANK SIGN THE SAME SIZE ON THE BACK SIDE.
5. ROOM. I.D. SIGNAGE : RAISED CHARACTERS (LETTERS) (RAISED 1/32", ALL UPPER CASE CALIBRI) SHALL BE PROVIDED & SHALL BE ACCOMPANIED BY CONTRACTED (GRADE 2) BRAILLE.
6. RAISED CHARACTERS (LETTERS) SHALL COMPLY WITH CBC 11B-703.2.
7. CONTRACTED (GRADE 2) BRAILLE SHALL COMPLY WITH CBC 11B-703.3.

1 SIGN TYPES
N.T.S.

APPROVALS

FILE # 54-76 APPLICATION # 02-121996

IDENTIFICATION STAMP
DIV. OF THE STATE ARCHITECT
APP: 02-121996 INC:
REVIEWED FOR
SS ☑ FLS ☑ ACS ☑
DATE: 8/14/2024

LICENSED ARCHITECT
MICHAEL J. SCOTT JR.
No. C-34290
REN. 05-31-25
STATE OF CALIFORNIA

DATE: DECEMBER 31, 2023

NEW PRESCHOOL AND TK/KINDERGARTEN CLASSROOMS AT SANTA FE ELEMENTARY SCHOOL

PORTERVILLE UNIFIED SCHOOL DISTRICT
286 E ORANGE AVENUE, PORTERVILLE, CA 93257

REVISIONS

MANGINI | ARCHITECTURE INGENUITY
BARENG MORRELLI SCOTT
MANGINI ASSOCIATES INC.
4320 West Mineral King Avenue
Visalia, California 93291
www.mangini.us
(559) 627.0530 Office
(559) 627.1926 Fax

TITLE
FRAME TYPE SCHEDULE

A28

PROJECT 23076

APPROVALS

FILE # 54-76 | APPLICATION # 02-121996

IDENTIFICATION STAMP
DIV. OF THE STATE ARCHITECT
APP: 02-121996 INC:
REVIEWED FOR
SS ☑ FLS ☑ ACS ☑
DATE: 8/14/2024

LICENSED ARCHITECT
MICHAEL J. SCOTT
No. C-34290
REN. 05-31-25
STATE OF CALIFORNIA

DATE: DECEMBER 31, 2023

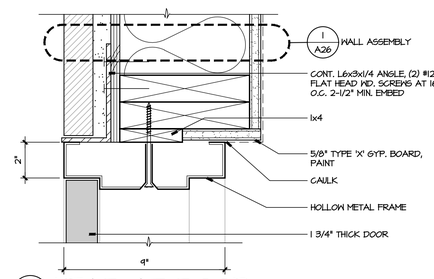

14 HEAD AT DOOR
SCALE: 3" = 1'-0"

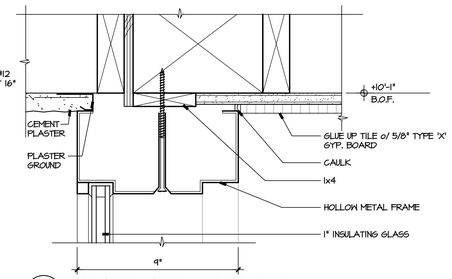

9 HEAD AT WINDOW
SCALE: 3" = 1'-0"

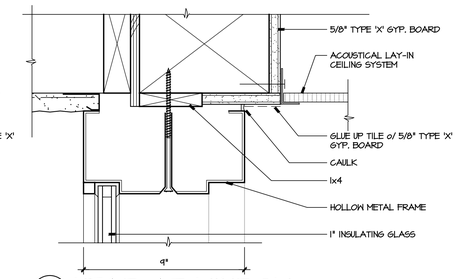

4 HEAD AT WINDOW
SCALE: 3" = 1'-0"

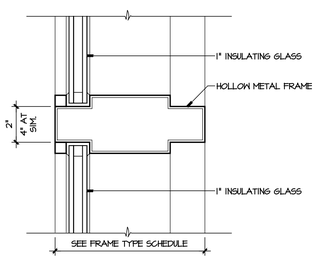

23 MULLION AT DOOR
SCALE: 3" = 1'-0"

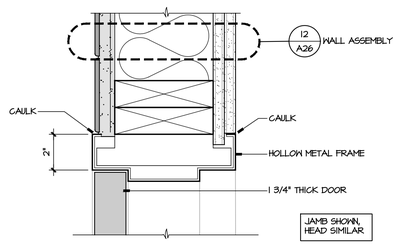

18 HEAD/JAMB AT DOOR
SCALE: 3" = 1'-0"

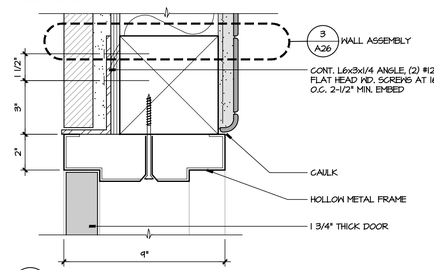

13 HEAD AT DOOR
SCALE: 3" = 1'-0"

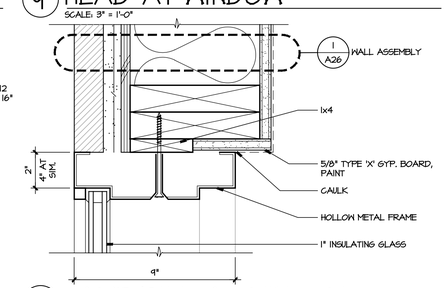

8 JAMB/SILL AT WINDOW
SCALE: 3" = 1'-0"

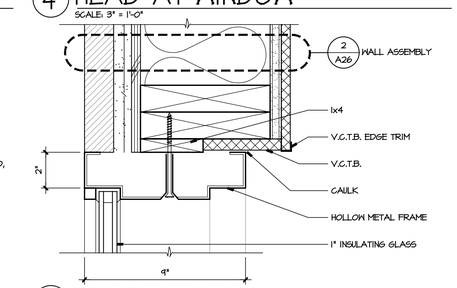

3 JAMB AT WINDOW
SCALE: 3" = 1'-0"

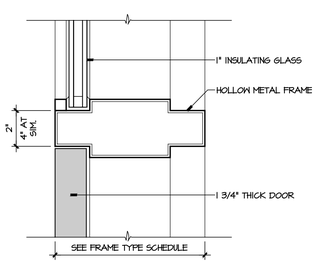

22 MULLION AT DOOR
SCALE: 3" = 1'-0"

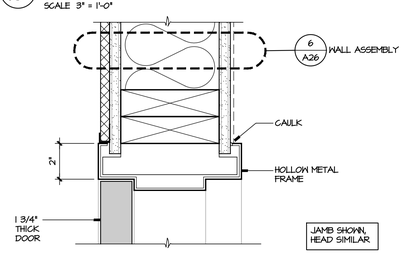

17 HEAD/JAMB AT DOOR
SCALE: 3" = 1'-0"

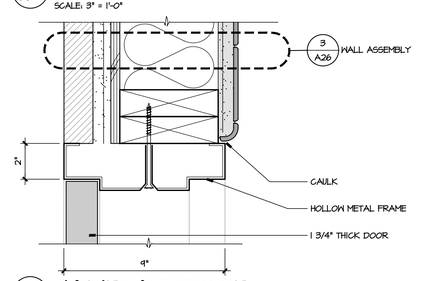

12 JAMB AT DOOR
SCALE: 3" = 1'-0"

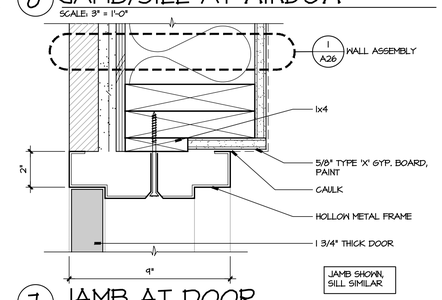

7 JAMB AT DOOR
SCALE: 3" = 1'-0"

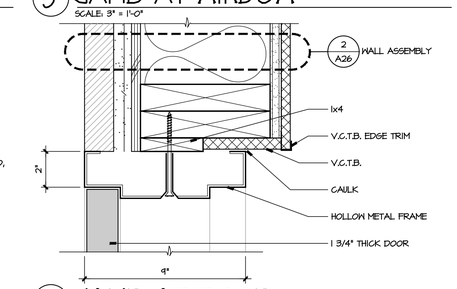

2 JAMB AT DOOR
SCALE: 3" = 1'-0"

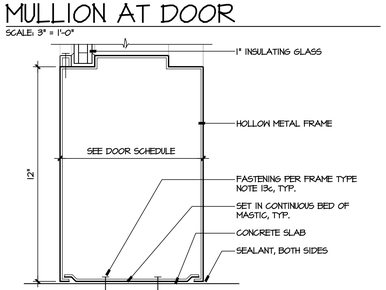

21 SILL AT WINDOW
SCALE 3" = 1'-0"

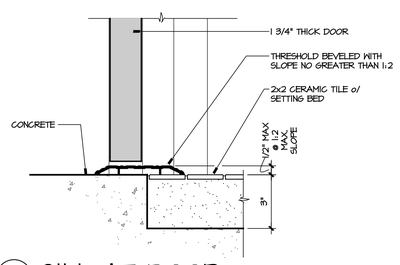

16 SILL AT DOOR
3" = 1'-0"

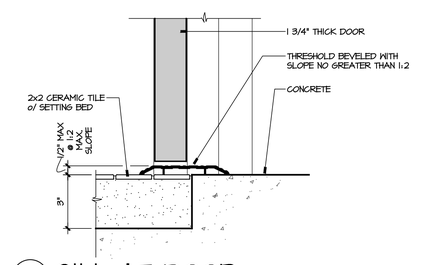

11 SILL AT DOOR
3" = 1'-0"

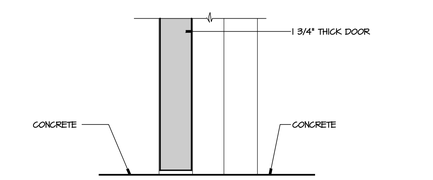

6 SILL AT DOOR
3" = 1'-0"

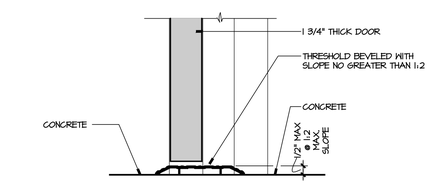

1 SILL AT DOOR
3" = 1'-0"

NEW PRESCHOOL AND TK/KINDERGARTEN CLASSROOMS AT SANTA FE ELEMENTARY SCHOOL

PORTERVILLE UNIFIED SCHOOL DISTRICT
286 E ORANGE AVENUE, PORTERVILLE, CA 93257

REVISIONS

MANGINI ARCHITECTURE INGENUITY
BARENG MORRELLI SCOTT
MANGINI ASSOCIATES INC.
4320 West Mineral King Avenue
Visalia, California 93291
www.mangini.us
(559) 627-0530 Office
(559) 627-1926 Fax

TITLE
FRAME DETAILS

A29

PROJECT 23076

APPROVALS

FILE # 54-76 | APPLICATION # 02-121996

IDENTIFICATION STAMP
DIV. OF THE STATE ARCHITECT
APP: 02-121996 INC:
REVIEWED FOR
SS ☑ FLS ☑ ACS ☑
DATE: 8/14/2024

LICENSED ARCHITECT MICHAEL J. SCOTT No. C-34290 REN. 05-31-25 STATE OF CALIFORNIA

DATE: DECEMBER 31, 2023

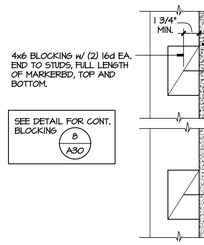

20 MARKERBD. ATTACHMENT
SCALE 1 1/2" = 1'-0"

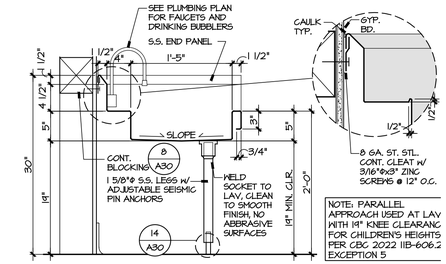

NOTE: PARALLEL APPROACH USED AT LAV WITH 14" KNEE CLEARANC FOR CHILDREN'S HEIGHTS PER CBC 2022 11B-606.2 EXCEPTION 5

15 STAINLESS STEEL LAV.
1" = 1'-0" FOR KINDERGARTEN OR YOUNGER USE

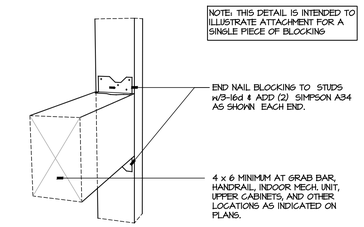

NOTE: THIS DETAIL IS INTENDED TO ILLUSTRATE ATTACHMENT FOR A SINGLE PIECE OF BLOCKING

10 BLOCKING ATTACHMENT
1 1/2" = 1'-0"

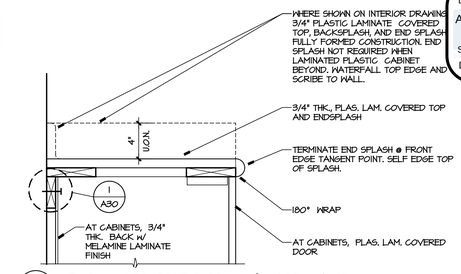

5 COUNTERTOP w/ SPLASH
1 1/2" = 1'-0"

19 NOT USED
1 1/2" = 1'-0"

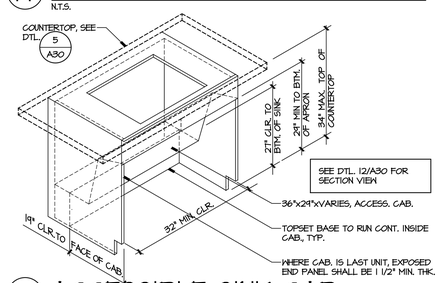

14 BULLET FOOT
N.T.S.

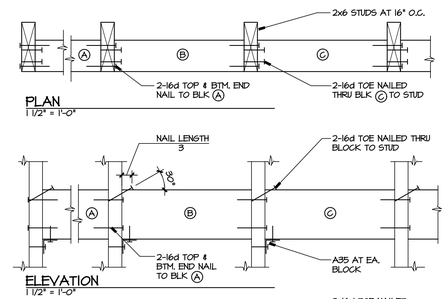

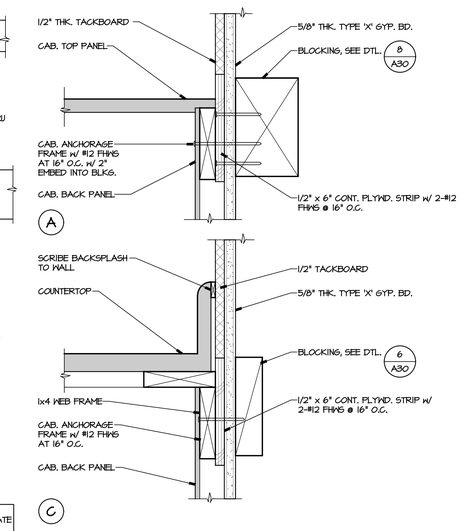

13 ACCESSIBLE SINK CAB.
1 1/2" = 1'-0"

8 4x6 BLKG. AT WALL
N.T.S.

3 CAB. ANCHORAGE AT TACKBAORD
3" = 1'-0"

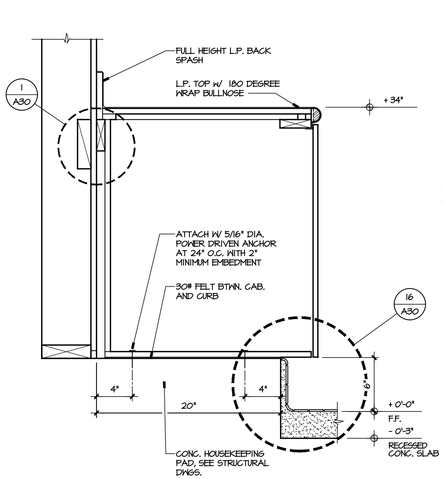

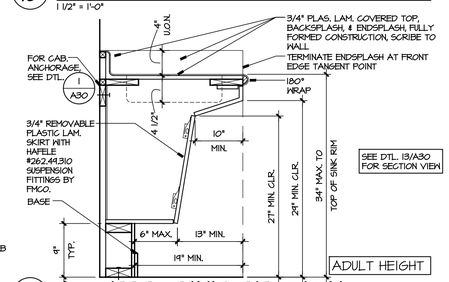

12 ACCESS. SINK SECTION
1" = 1'-0"

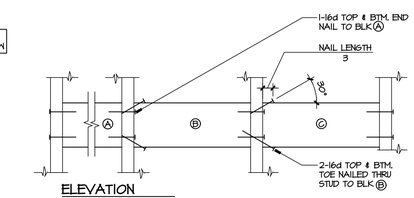

6 2x6 BLOCKING AT WALL
N.T.S.

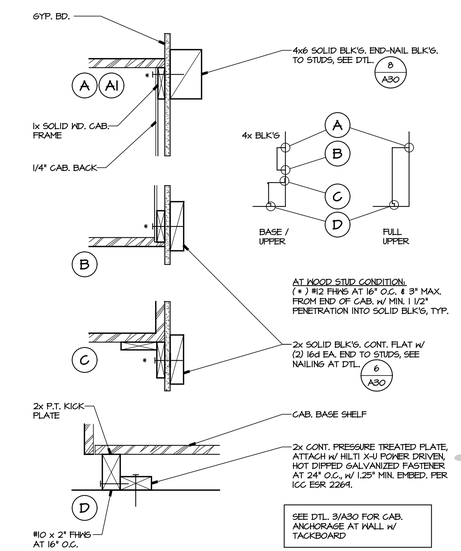

1 CAB. ANCHORAGE (AT WOOD)
1 1/2" = 1'-0"

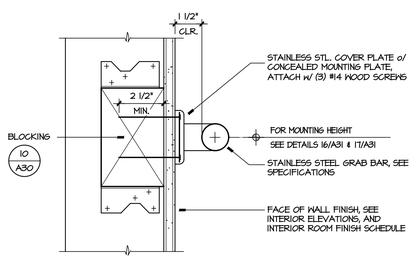

22 GRAB BAR ANCHORAGE
SCALE: 3" = 1'-0"

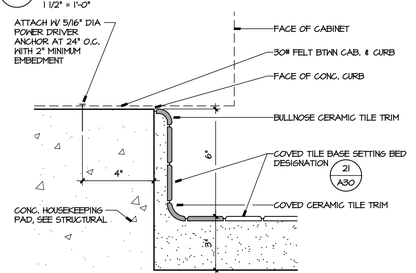

17 CABINET ANCHORAGE DTL.
1 1/2" = 1'-0"

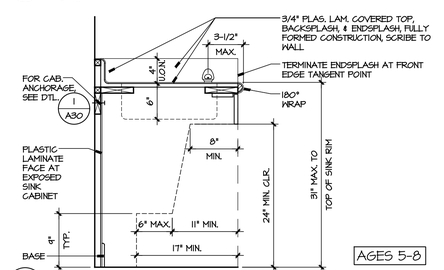

21 COVED TILE BASE
3" = 1'-0"

16 COVED TILE @ CAB BASE
3" = 1'-0"

11 ACCESS. SINK SECTION
SCALE 1" = 1'-0"

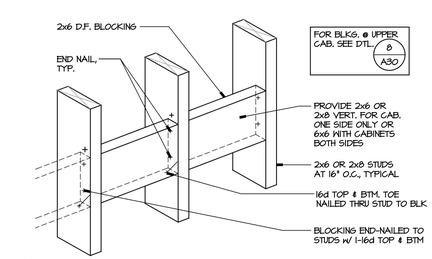

NOTE: THIS DETAIL IS INTENDED TO ILLUSTRATE ATTACHMENT FOR CONTINUOUS BLOCKING

NEW PRESCHOOL AND TK/KINDERGARTEN CLASSROOMS AT SANTA FE ELEMENTARY SCHOOL
PORTERVILLE UNIFIED SCHOOL DISTRICT
286 E ORANGE AVENUE, PORTERVILLE, CA 93257

REVISIONS

MANGINI ARCHITECTURE
BARENG MORRELLI WOENKUTT SCOTT
MANGINI ASSOCIATES INC.
4320 West Mineral King Avenue
Visalia, California 93291
www.mangini.us
(559) 627.0530 Office
(559) 627.1926 Fax

TITLE
MILLWORK DETAILS

A30

PROJECT 23076

APPROVALS

FILE # 54-76 | APPLICATION # 02-121996

IDENTIFICATION STAMP
DIV. OF THE STATE ARCHITECT
APP: 02-121996 INC:
REVIEWED FOR
SS ☑ FLS ☑ ACS ☑
DATE: 8/14/2024

LICENSED ARCHITECT MICHAEL J. SCOTT No. C-34290 REN. 05-31-25 STATE OF CALIFORNIA

DATE: DECEMBER 31, 2023

NEW PRESCHOOL AND TK/KINDERGARTEN CLASSROOMS AT SANTA FE ELEMENTARY SCHOOL

PORTERVILLE UNIFIED SCHOOL DISTRICT
286 E ORANGE AVENUE, PORTERVILLE, CA 93257

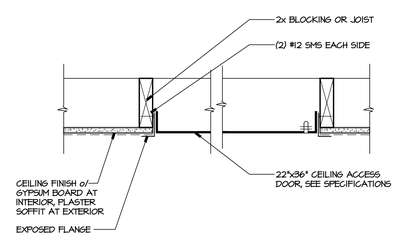

20 ATTIC ACCESS DOOR
1 1/2" = 1'-0"

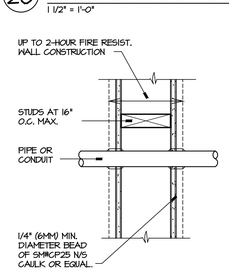

WALL PENETRATION NOTES :

1. CAULK IS TO BE FORCED INTO THE ANNULAR SPACE TO THE MAX. EXTENT POSSIBLE FLUSH W/ EXTERIOR OF THE PENETRATION SURFACE.
2. FINISH CAULKING W/ A 1/4" (6MM) MIN. BEAD OF 3M #CP25 N/S CAULK APPLIED TO PERIMETER OF CONDUIT PIPE AT ITS EGRESS FROM THE WALL.
3. THE MAX. ANNULAR SPACE IS NOT TO EXCEED 3/16" (5MM).
4. INSTALL FIRESTOP ON BOTH SIDES OF THE WALL.
5. THESE RECOMMENDATIONS ARE BASED ON PRODUCT PERFORMANCE PER ASTM E-814 (UL #L1001) FIRE TEST AND UL THROUGH PENETR. FIRESTOP SYSTEM #141.

19 PENTRATIONS THRU WALL
N.T.S.

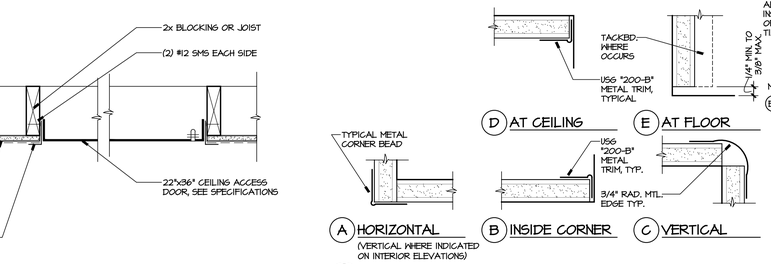

15 TYP. GYP. METAL EDGES
N.T.S.

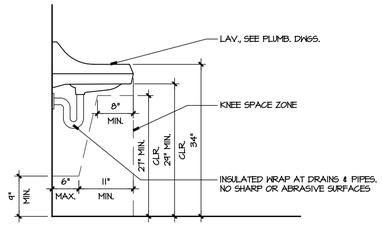

14 ACCESS LAV. - ADULT
SCALE: 3/4" = 1'-0"

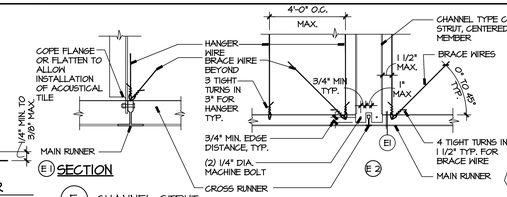

E CHANNEL STRUT

EMT COMPRESSION STRUT ALLOWABLE LENGTHS				
EMT SIZE	AREA	R	MAXIMUM HEIGHT	
	sq. in.	in.	in.	ft. - in.
1/2"	0.088	.235	47	3'-11"
3/4"	0.134	.309	62	5'-2"
1"	0.198	.342	78	6'-6"
1 1/4"	0.245	.511	102	8'-6"
1 1/2"	0.342	.593	119	9'-11"
2"	0.435	.794	151	12'-7"

METAL STUD COMPRESSION STRUT ALLOWABLE LENGTHS				
SINGLE STUD 362S125T-33	AREA	Ry	MAXIMUM HEIGHT	
	sq. in.	in.	in.	ft. - in.
18 ga. x 2 1/2"	.223	.624	96	8'-0"

COMPRESSION STRUT, MINIMUM 18 GA. x 4" STEEL C STUD TO SUPPORT A TRIBUTARY AREA OF 144 SQUARE FEET MAXIMUM. STRUT TO HAVE L/r RATIO EQUAL TO OR LESS THAN 300. ATTACH TO MAIN RUNNERS WITH (2) 1/4" MIN. AND TO WOOD 1-JOIST BLOCKING WITH 2-#12 WOOD SCREWS. SEE DETAIL B. COMPRESSION STRUT SHALL NOT REPLACE HANGER WIRE.

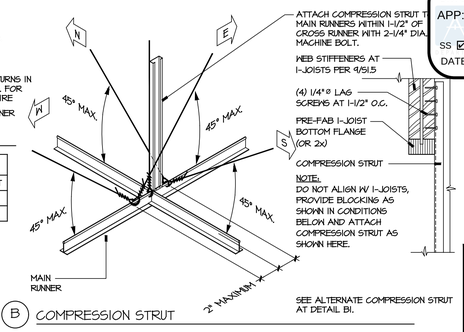

B COMPRESSION STRUT

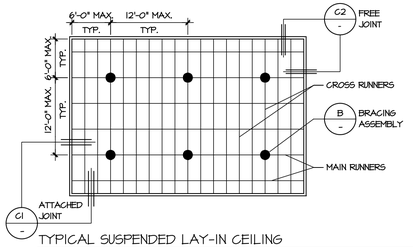

TYPICAL SUSPENDED LAY-IN CEILING

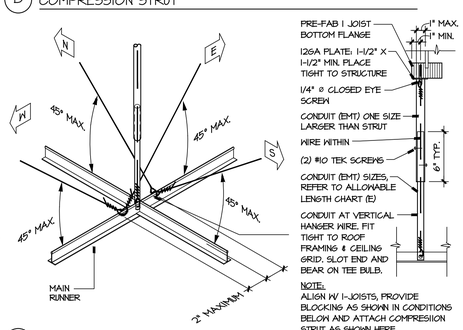

B1 ALTERNATE COMPRESSION STRUT

NOTE:
SEE DETAILS BELOW FOR CONNECTIONS OF BRACING AND HANGER WIRES TO THE STRUCTURE ABOVE.

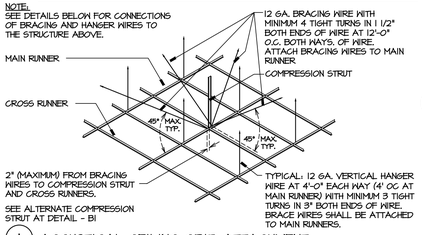

A ACOUSTICAL CEILING GRID ATTACHMENT

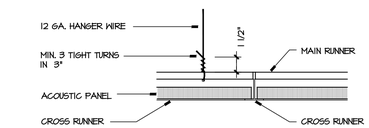

D HANGER WIRE CONNECTION TO GRID

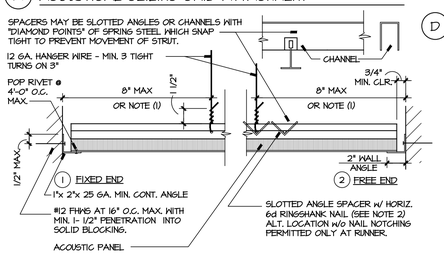

NOTES : 1) 1/4 OF THE LENGTH OF THE END RUNNER, WHICHEVER IS LESS. NAILS AT
2) ENDS OF HORIZONTAL STRUTS ARE TO BE PLACED WITH NAIL HEAD TOWARD CENTERLINE OF SPAN OF STRUT.

C HORIZONTAL STRUT

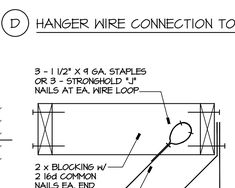

H AT WOOD BLOCK

DO NOT INSERT SCREW EYES INTO SIDE OF MICRO-LAM FLANGE

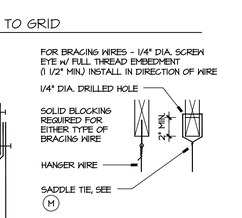

J TO BOTTOM OF BLOCK

NOTE : DO NOT INSERT SCREW EYES PARALLEL TO LAMINATIONS (DETAIL MAY ALSO BE USED AT TOP CHORD).

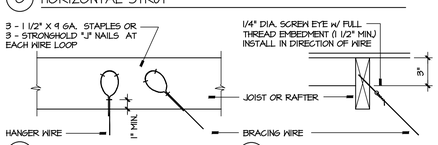

F WOOD JOIST OR RAFTER
G WOOD JOIST OR RAFTER

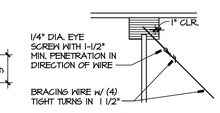

K MICRO-LAM UPPER FLANGE

USE 12 GA. BRACING WIRE TEST WIRE FOR 440 LBS.

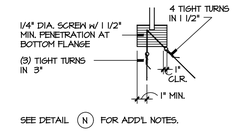

SEE DETAIL N FOR ADD'L NOTES.

L MICRO-LAM LOWER FLANGE

USE 12 GA. BRACING WIRE TEST WIRE FOR 440 LBS.

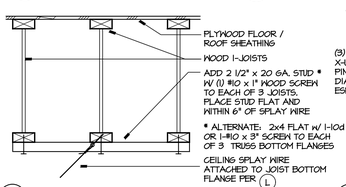

N WOOD I-JOIST

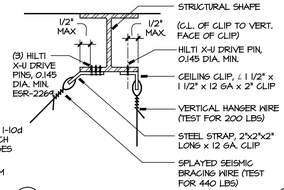

O AT STEEL BEAMS

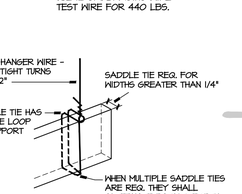

M TYP. SADDLE TIE

6 SUSPENDED CEILING DETAILS
N.T.S.

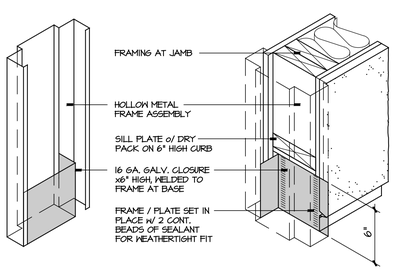

22 H.M. FRAME AT CONC. CURB.
N.T.S.

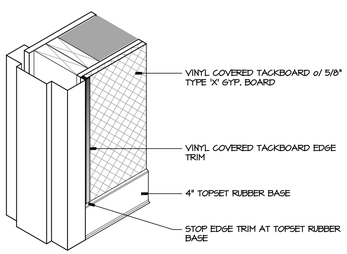

21 VCTB EDGE TRIM
SCALE: 1 1/2" = 1'-0"

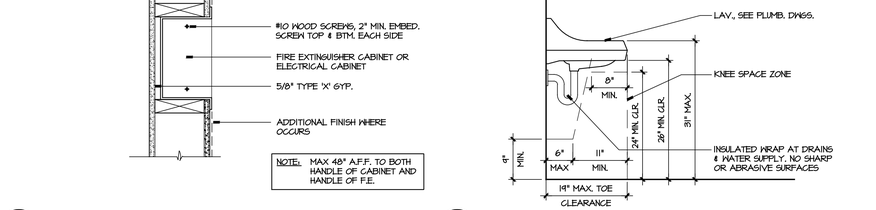

18 RECESSED FIRE EXTING. CAB.
SCALE: 1 1/2" = 1'-0"

13 ACCESS. LAV. - AGES 5-8
SCALE: 3/4" = 1'-0"

NOTES: 1) THESE DIMENSIONS ARE FOR TYPICAL MOUNTING HEIGHTS FOR ACCESSIBLE FIXTURES AND ACCESSORIES, UNLESS OTHERWISE NOTED. REFER TO FLOOR PLANS, INTERIOR ELEVATIONS, AND SPECIFICATIONS FOR ADDITIONAL INFORMATION.
2) REFER TO THE SPECIFICATIONS FOR TOILET ROOM ACCESSORIES.

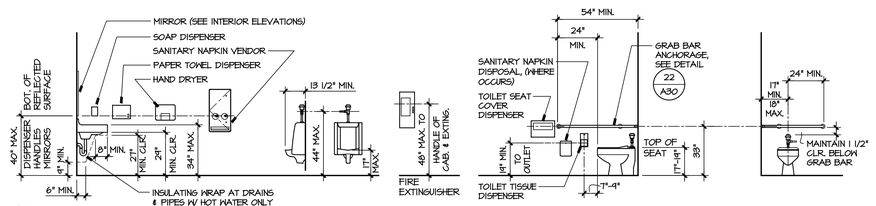

17 TYPICAL ACCESSIBLE MOUNTING HEIGHTS - ADULT
SCALE 1/4" = 1'-0"

NOTES: 1) THESE DIMENSIONS ARE FOR TYPICAL MOUNTING HEIGHTS FOR ACCESSIBLE FIXTURES AND ACCESSORIES, UNLESS OTHERWISE NOTED. REFER TO FLOOR PLANS, INTERIOR ELEVATIONS, AND SPECIFICATIONS FOR ADDITIONAL INFORMATION.
2) REFER TO THE SPECIFICATIONS FOR TOILET ROOM ACCESSORIES.

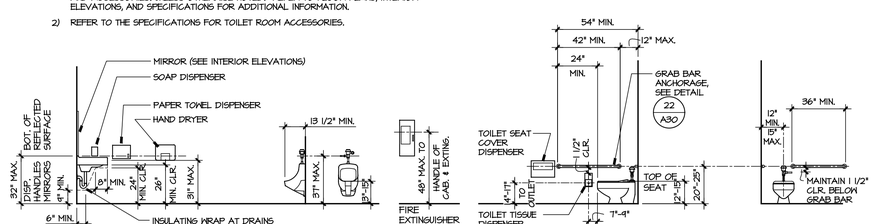

16 TYPICAL ACCESSIBLE MOUNTING HEIGHTS - AGES 5-8
SCALE 1/4" = 1'-0"

REVISIONS

MANGINI ARCHITECTURE INGENUITY
BARENG MORRELLI SCOTT
MANGINI ASSOCIATES INC.
4320 West Mineral King Avenue
Visalia, California 93291
www.mangini.us
(559) 627-0530 Office
(559) 627-1926 Fax

TITLE
TYPICAL DETAILS

A31

PROJECT 23076

APPROVALS

FILE # 54-76 | APPLICATION # 02-121996

IDENTIFICATION STAMP
DIV. OF THE STATE ARCHITECT
APP: 02-121996 INC:
REVIEWED FOR
SS ☑ FLS ☑ ACS ☑
DATE: 8/14/2024

LICENSED ARCHITECT
MICHAEL J. SCOTT
No. C-34290
REN. 05-31-25
STATE OF CALIFORNIA

DATE: DECEMBER 31, 2023

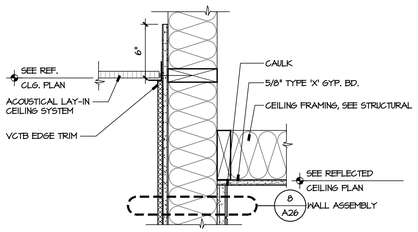

24 WALL AT CEILING
SCALE 1 1/2" = 1'-0"

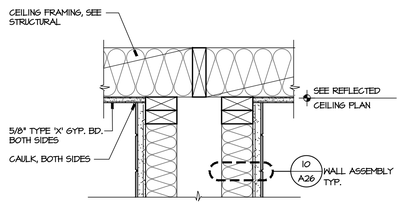

19 PLUMBING WALL AT CEILING
SCALE 1 1/2" = 1'-0"

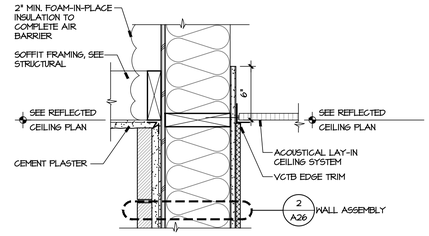

15 WALL AT CEILING/SOFFIT
SCALE 1 1/2" = 1'-0"

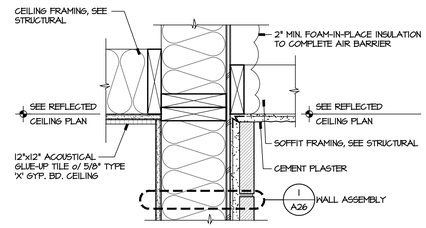

10 WALL AT CEILING
SCALE 1 1/2" = 1'-0"

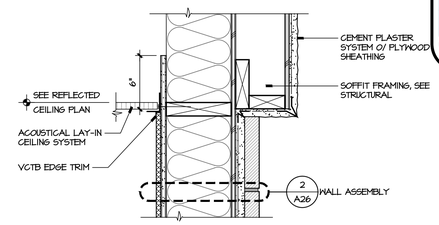

5 WALL AT CEILING/SOFFIT
SCALE 1 1/2" = 1'-0"

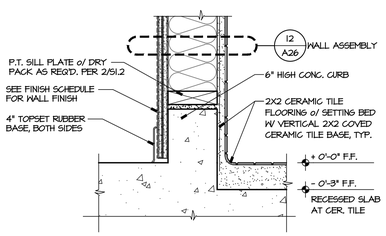

23 WALL AT BASE
SCALE 1 1/2" = 1'-0"

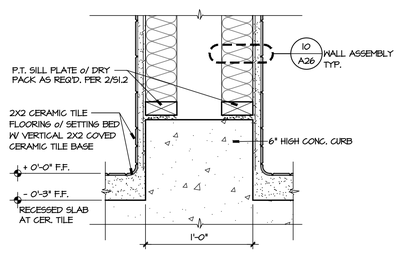

18 PLUMBING WALL AT BASE
SCALE 1 1/2" = 1'-0"

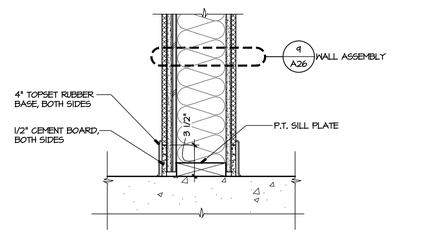

14 WALL AT CEILING
SCALE 1 1/2" = 1'-0"

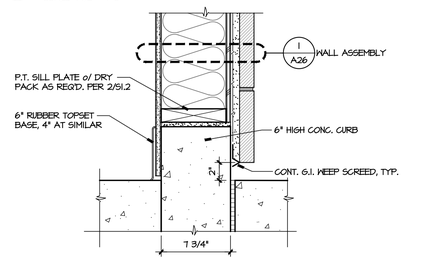

9 WALL AT BASE
SCALE 1 1/2" = 1'-0"

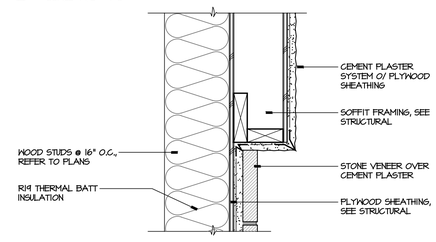

4 WALL AT BASE
SCALE 1 1/2" = 1'-0"

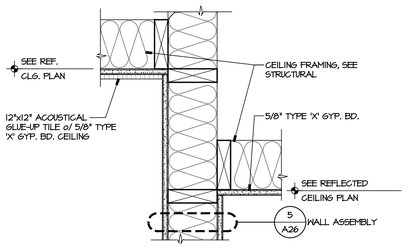

22 WALL AT CEILING
SCALE 1 1/2" = 1'-0"

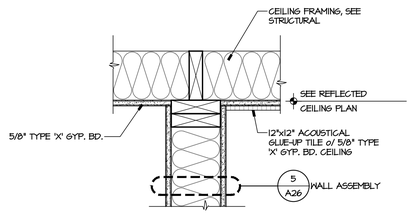

17 WALL AT CEILING
SCALE 1 1/2" = 1'-0"

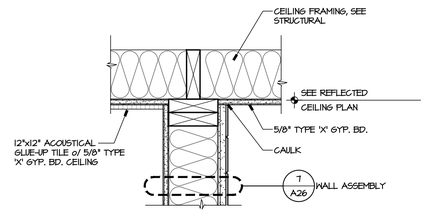

12 WALL AT CEILING
SCALE 1 1/2" = 1'-0"

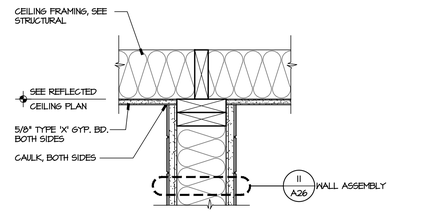

7 WALL AT CEILING
SCALE 1 1/2" = 1'-0"

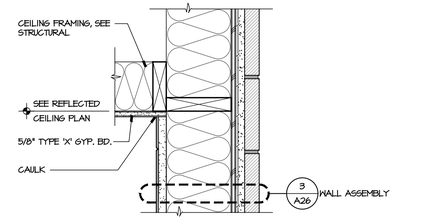

2 WALL AT CEILING
SCALE 1 1/2" = 1'-0"

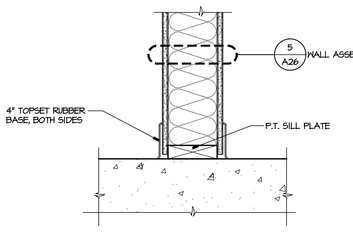

21 WALL AT BASE
SCALE 1 1/2" = 1'-0"

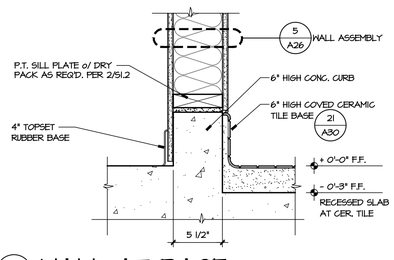

16 WALL AT BASE
SCALE 1 1/2" = 1'-0"

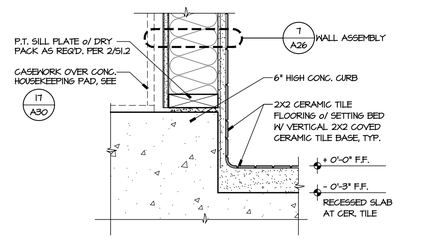

11 WALL AT BASE
SCALE 1 1/2" = 1'-0"

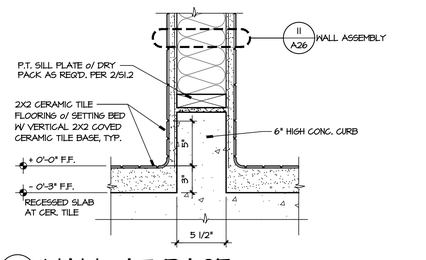

6 WALL AT BASE
SCALE 1 1/2" = 1'-0"

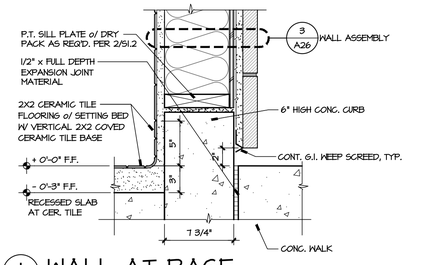

1 WALL AT BASE
SCALE 1 1/2" = 1'-0"

NEW PRESCHOOL AND TK/KINDERGARTEN CLASSROOMS AT SANTA FE ELEMENTARY SCHOOL

PORTERVILLE UNIFIED SCHOOL DISTRICT
286 E ORANGE AVENUE, PORTERVILLE, CA 93257

REVISIONS

MANGINI ARCHITECTURE INGENUITY
BARENG MORRELLI SCOTT
MANGINI ASSOCIATES INC.
4320 West Mineral King Avenue
Visalia, California 93291
www.mangini.us
(559) 627-0530 Office
(559) 627-1926 Fax

TITLE DETAILS

A32

PROJECT 23076

APPROVALS

FILE # 54-76 | APPLICATION # 02-121996

IDENTIFICATION STAMP
DIV. OF THE STATE ARCHITECT
APP: 02-121996 INC:
REVIEWED FOR
SS ☑ FLS ☑ ACS ☑
DATE: 8/14/2024

LICENSED ARCHITECT
MICHAEL J. SCOTT
No. C-34290
REN. 05-31-25
STATE OF CALIFORNIA

DATE: DECEMBER 31, 2023

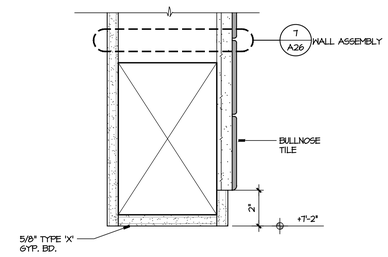

9 HEAD AT WALL OPENING
SCALE: 3" = 1'-0"

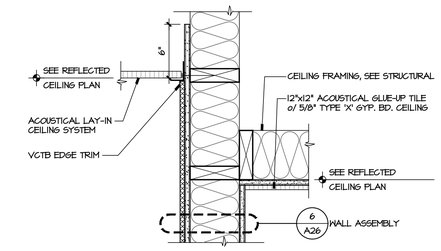

4 WALL AT CEILING
SCALE: 1 1/2" = 1'-0"

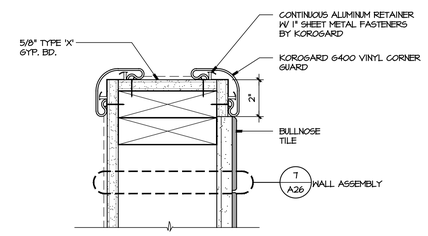

8 JAMB AT WALL OPENING
SCALE: 3" = 1'-0"

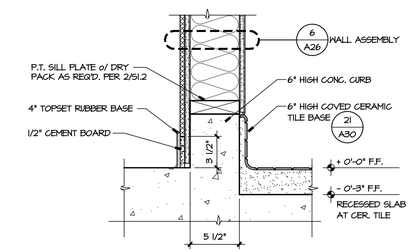

3 WALL AT BASE
SCALE: 1 1/2" = 1'-0"

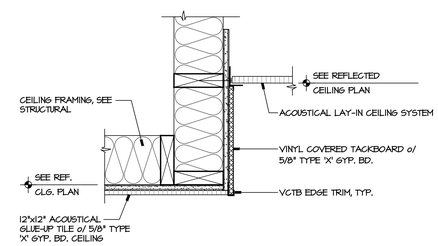

7 WALL AT CEILING
SCALE: 1 1/2" = 1'-0"

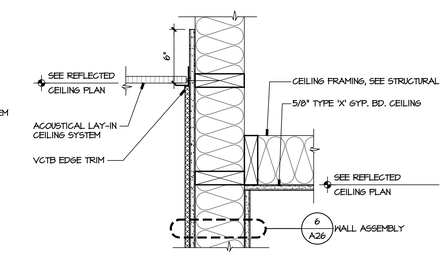

2 WALL AT CEILING
SCALE: 1 1/2" = 1'-0"

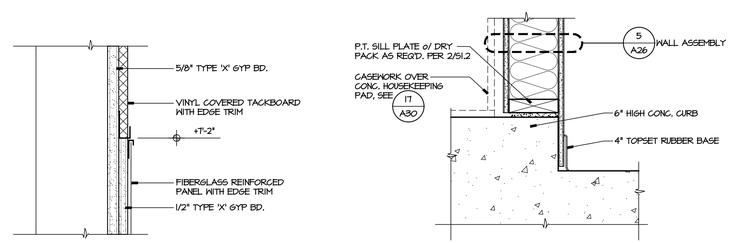

6 WALL AT BASE
SCALE: 1 1/2" = 1'-0"

1 WALL AT BASE
SCALE: 1 1/2" = 1'-0"

11 WALL FINISH TRANSITION
SCALE: 3" = 1'-0"

NEW PRESCHOOL AND TK/KINDERGARTEN CLASSROOMS AT SANTA FE ELEMENTARY SCHOOL

PORTERVILLE UNIFIED SCHOOL DISTRICT
286 E ORANGE AVENUE, PORTERVILLE, CA 93257

REVISIONS

MANGINI ARCHITECTURE INGENUITY
BARENG MORRELLI SCOTT
MANGINI ASSOCIATES INC.
4320 West Mineral King Avenue
Visalia, California 93291
www.mangini.us
(559) 627-0530 Office
(559) 627-1926 Fax

TITLE
DETAILS

A33

PROJECT 23076

APPROVALS

FILE # 54-76 | APPLICATION # 02-121996

IDENTIFICATION STAMP
DIV. OF THE STATE ARCHITECT
APP: 02-121996 INC:
REVIEWED FOR
SS ☑ FLS ☑ ACS ☑
DATE: 8/14/2024

LICENSED ARCHITECT
MICHAEL J. SCOTT
No. C-34290
REN. 05-31-25
STATE OF CALIFORNIA

DATE: DECEMBER 31, 2023

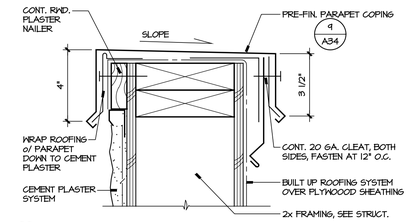

10 COPING DETAIL
3" = 1'-0"

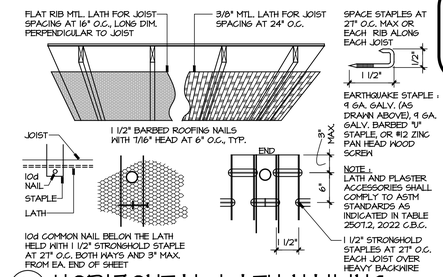

5 HORIZONTAL LATH NAILING
N.T.S.

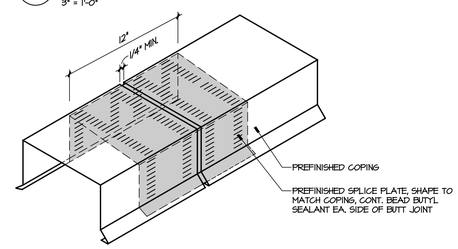

9 TYP. FLASHING SPLICE P.L.
1 1/2" = 1'-0"

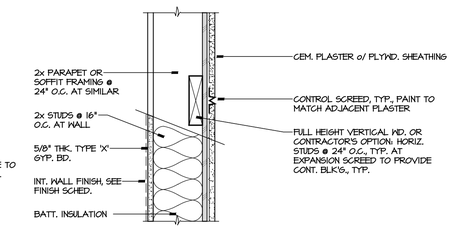

4 CONTROL SCREED
1 1/2" = 1'-0"

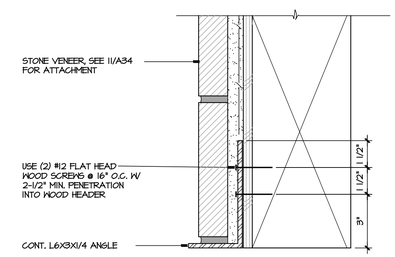

13 LINTEL SUPPORT
3" = 1'-0"

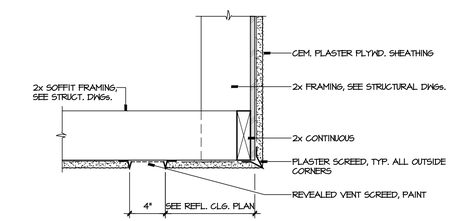

8 SOFFIT VENT SCREED
1 1/2" = 1'-0"

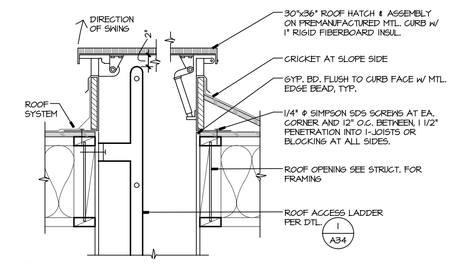

3 ROOF ACCESS HATCH
1" = 1'-0"

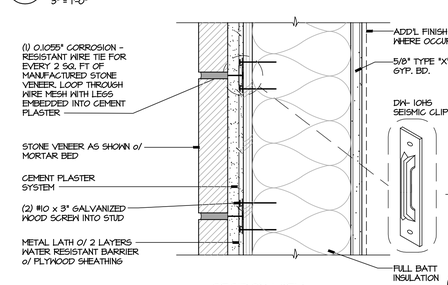

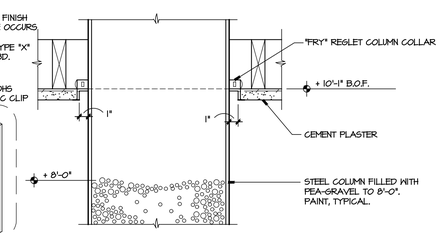

7 STEEL COLUMN COLLAR
1 1/2" = 1'-0"

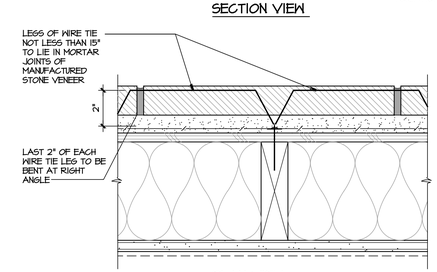

11 VENEER ANCHORAGE
3" = 1'-0"

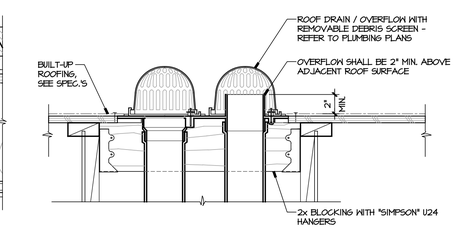

6 ROOF DRAIN / OVERFLOW
1 1/2" = 1'-0"

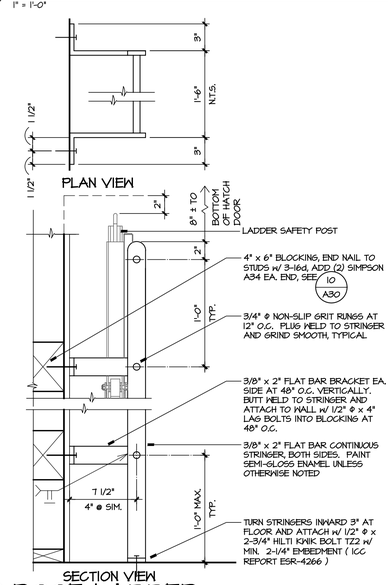

1 ROOF LADDER
1 1/2" = 1'-0"

NEW PRESCHOOL AND TK/KINDERGARTEN CLASSROOMS AT SANTA FE ELEMENTARY SCHOOL

PORTERVILLE UNIFIED SCHOOL DISTRICT
286 E ORANGE AVENUE, PORTERVILLE, CA 93257

REVISIONS

MANGINI ARCHITECTURE INGENUITY
BARENG MORRELLI SCOTT
MANGINI ASSOCIATES INC.
4320 West Mineral King Avenue
Visalia, California 93291
www.mangini.us
(559) 627.0530 Office
(559) 627.1926 Fax

TITLE
DETAILS

A34

PROJECT 23076

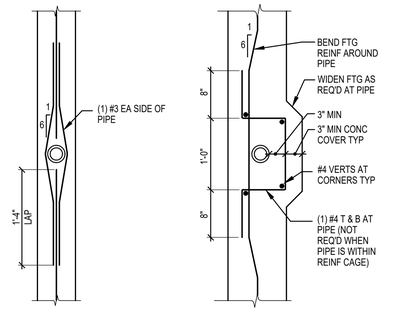

SECTION A AT CURB

SECTION B AT FOOTING

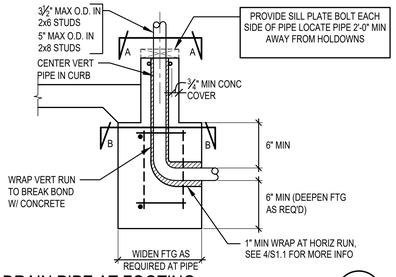

DRAIN PIPE AT FOOTING

NTS 3008-04 — 11 / S1.1

BAR SIZE	CONCRETE f'c = 3000 psi and 3500 psi — TENSION LAP SPLICE LENGTH (INCHES)					
	CONC COVER = 0.75"		CONC COVER = 1.5"		CONC COVER = 2"	
	TOP	OTHER	TOP	OTHER	TOP	OTHER
#3	17	13	17	13	17	13
#4	28	22	23	17	23	17
#5	41	32	28	22	28	22
#6	56	43	34	26	34	26
#7	90	69	55	43	49	38
#8	111	86	70	54	56	43
#9	135	104	86	66	69	53
#10	162	125	105	81	85	66
#11	190	146	125	97	102	79

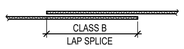

NOTES:

1. LAP SPLICES SHOWN CONFORM TO CLASS "B" SPLICES PER ACI 318-14.
2. USE THE SPLICE LENGTH GIVEN FOR TOP BARS WHEN MORE THAN 12" OF CONCRETE IS CAST BELOW HORIZONTAL BARS IN THE MEMBER. USE THE SPLICE LENGTH FOR BOTTOM BARS FOR ALL OTHER CONDITIONS.
3. SPLICES IN FOOTINGS, WALLS, AND SLABS ON GRADE SHALL BE STAGGERED AT LEAST 24". SPLICE IN BEAMS, COLUMNS, AND ELEVATED SLABS SHALL BE AS SHOWN ON DRAWINGS.

REBAR SPLICE LENGTH

=3000 psi 3301-30 — 12 / S1.1

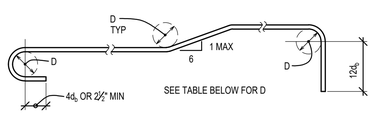

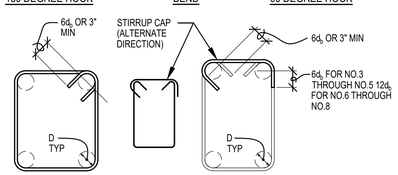

MINIMUM DIAMETERS OF BEND		
SIZE	TIES & STIRRUPS	BARS OTHER THAN TIES & STIRRUPS
	D	D
NO. 3 THROUGH NO. 5	4 d_b	6 d_b
NO. 6 THROUGH NO. 8	6 d_b	6 d_b
NO. 9 THROUGH NO. 11	8 d_b	8 d_b
NO. 14 THROUGH NO. 18	10 d_b	10 d_b

d_b = BAR DIAMETER
D = MINIMUM INSIDE BEND DIAMETER

TYP REINFORCING BENDS

NTS 3303-03 — 13 / S1.1

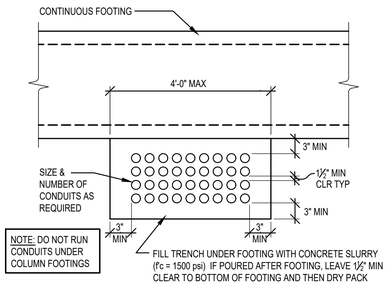

CONDUITS AT FOOTING

NTS 3005-06 — 5 / S1.1

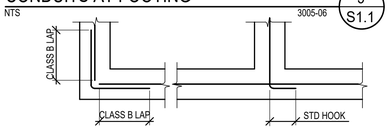

SINGLE CURTAIN REINFORCING

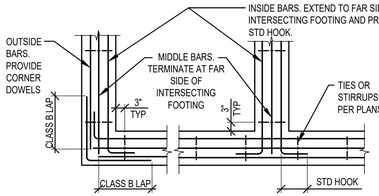

MULTIPLE CURTAIN REINFORCING

TYPICAL REINF AT FTG

CORNERS & INTERSECTIONS NTS 3006-01 — 6 / S1.1

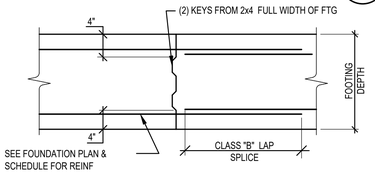

COLD JOINT AT CONT FTG

NTS 3007-01 — 7 / S1.1

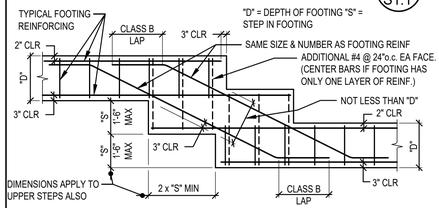

TYPICAL STEPPED FOOTING

NTS (STEPPED TOP & BOTTOM) 3004-01 — 8 / S1.1

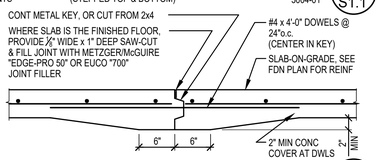

TYP CONSTRUCTION JOINT (CJ)

(AT SLAB WITH REBAR) NTS 3102-01 — 9 / S1.1

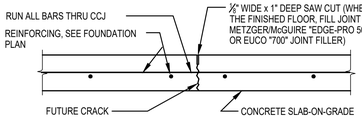

SAW CUTS MUST BE MADE AT EACH LOCATION AS SOON AS THE SLAB WILL SUPPORT THE WEIGHT OF THE SAW AND THE OPERATOR, NORMALLY WITHIN 2 HOURS AFTER FINISHING. USE A SAW WHICH IS SPECIALLY DESIGNED FOR CUTTING FRESH CONCRETE, SUCH AS "SOFF-CUT" OR EQUAL.

CRACK CONTROL JOINT (CCJ)

(AT SLAB WITH REBAR) NTS 3102-02 — 10 / S1.1

ABBREVIATIONS

AB	ANCHOR BOLT	(E)	EXISTING	O.C.	ON CENTER
ACI	AMERICAN CONCRETE INSTITUTE	EA	EACH	O.D.	OUTSIDE DIAMETER
		EJ	EXPANSION JOINT	O.H.	OPPOSITE HAND
ADD'L	ADDITIONAL	ELEV	ELEVATION	OPNG	OPENING
AISC	AMERICAN INSTITUTE OF STEEL CONSTRUCTION	EN	EDGE NAILING	OPP	OPPOSITE
		ENGR	ENGINEER	PC	PRE-CAST
		EQ	EQUAL	PERP	PERPENDICULAR
ALT	ALTERNATE	EQUIP	EQUIPMENT	PJP	PARTIAL JOINT PENETRATION
ARCH	ARCHITECTURAL	EXIST	EXISTING		
ASTM	AMERICAN SOCIETY FOR TESTING AND MATERIALS	EXP	EXPOSED		PLATE
		EXT	EXTERIOR	PLYWD	PLYWOOD
		FDN	FOUNDATION	PSF	POUNDS PER SQUARE FOOT
BEV	BEVELED	FHWS	FLAT HEAD WOOD SCREW	PSI	POUNDS PER SQUARE INCH
BLDG	BUILDING				
BLK	BLOCK	FIN	FINISH, FINISHED	PT	PRESSURE TREATED
BLKG	BLOCKING	FLG	FLANGE	R	RADIUS
BLT	BOLT	FLR	FLOOR	REF	REFERENCE
BM	BEAM	F.O.	FACE OF	REINF	REINFORCING
BN	BOUNDARY NAILING	FOB	FACE OF BLOCK	REQD	REQUIRED
B.O.	BOTTOM OF, BY OTHERS	FOC	FACE OF CONCRETE	RND	ROUND
		FOS	FACE OF STUDS, FACE OF STEEL	RHWS	ROUND HEAD WOOD SCREW
BOT	BOTTOM				
BP	BASE PLATE	FRMG	FRAMING	SCHED	SCHEDULE
BRG	BEARING	FS	FAR SIDE	SDS	SELF-DRILLING SCREW
BTWN	BETWEEN	FT (')	FEET, FOOT		
CBC	CALIFORNIA BUILDING CODE	FTG	FOOTING	SECT	SECTION
		GA	GAGE, GAUGE	SHT	SHEET
C.C.	CENTER TO CENTER	GALV	GALVANIZED	SHTG	SHEATHING
CCJ	CRACK CONTROL JOINT	GC	GENERAL CONTRACTOR	SIM	SIMILAR
		GL	GLU-LAM	SIMP	SIMPSON (BRAND NAME)
CIP	CAST IN PLACE	GLB	GLU-LAM BEAM		
CJ	CONSTRUCTION JOINT	GR	GRADE	SLRS	SEISMIC LOAD RESISTING
CJP	COMPLETE JOINT PENETRATION	GSM	GAUGE SHEET METAL		
		GYP BD	GYPSUM BOARD	SMS	SHEET METAL SCREW
	CENTER LINE	HD	HOLDOWN	SPEC	SPECIFICATION
CLG	CEILING	HDR	HEADER	SPECS	SPECIFICATIONS
CLR	CLEAR	HORIZ	HORIZONTAL	SQ	SQUARE
CMU	CONCRETE MASONRY UNIT	HSS	HOLLOW STEEL SECTIONS	STAGG	STAGGER
				STAG'D	STAGGERED
COL	COLUMN	HT	HEIGHT	STD	STANDARD
CONC	CONCRETE	I.D.	INSIDE DIAMETER	STL	STEEL
COND	CONDITION	IN. (")	INCH	STIFF	STIFFENER
CONN	CONNECTION	INFO	INFORMATION	STRUCT	STRUCTURAL
COORD	COORDINATE	INT	INTERIOR	SUSP	SUSPENDED
CONSTR	CONSTRUCTION	LAM	LAMINATED	SYMM	SYMMETRICAL
CONT	CONTINUOUS	LBS (#)	POUNDS	T & B	TOP AND BOTTOM
CONT'D	CONTINUED	LLH	LONG LEG HORIZONTAL	TEMP	TEMPORARY
CONTR	CONTRACTOR	LLV	LONG LEG VERTICAL	THK	THICK
CSK	COUNTER SINK	LOC	LOCATION	T.O.	TOP OF
DBL	DOUBLE	LONGIT	LONGITUDINAL	TOS	TOP OF STEEL
DEMO	DEMOLITION	LT	LIGHT	TRANS	TRANSVERSE
DET	DETAIL	LT WT	LIGHT WEIGHT	TYP	TYPICAL
DETS	DETAILS	MAS	MASONRY	UBC	UNIFORM BUILDING CODE
DF	DOUGLAS FIR	MAX	MAXIMUM		
DIA (Ø)	DIAMETER	MB	MACHINE BOLT		
DIAG	DIAGONAL	MCJ	MASONRY CONTROL JOINT	UON	UNLESS OTHERWISE NOTED
DIM	DIMENSION	MECH	MECHANICAL		
DIST	DISTANCE	MFR	MANUFACTURER	VERT	VERTICAL
DO	DITTO	MIN	MINIMUM	W/	WITH
DP	DEEP	MTL	METAL	WD	WOOD
DWG	DRAWING	(N)	NEW	WF	WIDE FLANGE
DWGS	DRAWINGS	NS	NEAR SIDE	WP	WORK POINT
DWL	DOWEL	NSA	NELSON STUD ANCHOR	WT	WEIGHT
		NTS	NOT TO SCALE	WWF	WELDED WIRE FABRIC

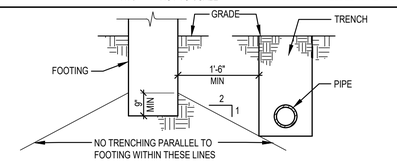

TRENCHING NEAR FOOTINGS

NTS 3005-03 — 2 / S1.1

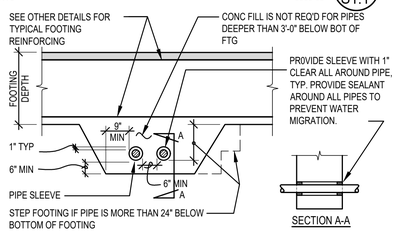

NOTE: ALL PENETRATIONS SHALL BE PERPENDICULAR TO THE LINE OF THE FOOTING, TYPICAL. NO PIPES ALLOWED AT COLUMN FOOTINGS.

PIPES BELOW FOOTING

NTS 3005-02 — 3 / S1.1

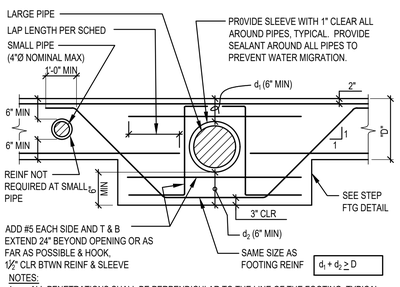

NOTES:

1. ALL PENETRATIONS SHALL BE PERPENDICULAR TO THE LINE OF THE FOOTING, TYPICAL.
2. NO PIPES ALLOWED THRU COLUMN PADS.
3. NO PIPES ALLOWED WITHIN 24" OF HOLDOWN BOLTS
4. SLEEVES FOR ADJACENT PIPES SHALL BE SPACED NO CLOSER THAN THREE DIAMETERS, CENTER LINE TO CENTER LINE, BASED ON DIAMETER OF LARGER SLEEVE.
5. ADDITIONAL REINFORCING SHOWN AROUND LARGE PIPE IS REQ'D FOR ALL PIPES LARGER THAN 4"Ø EVEN IF PIPE DOES NOT INTERRUPT REINFORCING.

PIPES THRU FOOTINGS

NTS 3005-04 — 4 / S1.1

CONCRETE NOTES

1. FORMWORK: ALL MOLDS, ORNAMENTS, GROOVES ETC. SHOWN ON THE ARCHITECTURAL DRAWINGS SHALL BE PROVIDED FOR IN THE FORMWORK BEFORE THE CONCRETE IS POURED.
2. EMBEDDED ITEMS: ALL REINFORCING STEEL, ANCHOR BOLTS, DOWELS AND OTHER EMBEDS SHALL BE IN PLACE AND SECURED TO FORMWORK PRIOR TO POURING OF CONCRETE.
3. PLUMBING: REFER TO BOTH ARCHITECTURAL AND MECHANICAL DRAWINGS FOR LOCATION OF PLUMBING FIXTURES.
4. PIPES: NO PIPES OR DUCTS SHALL BE PLACED IN CONCRETE WALLS OR STRUCTURAL SLABS UNLESS SPECIFICALLY DETAILED.
5. CONSTRUCTION JOINTS: CONSTRUCTION JOINTS NOT INDICATED ON THE DRAWINGS SHALL BE SO MADE AND LOCATED AS NOT TO IMPAIR THE STRENGTH OF THE STRUCTURE. PROVISION SHALL BE MADE FOR THE TRANSFER OF SHEAR AND OTHER FORCES THROUGH THE JOINTS. THE CONTRACTOR SHALL OBTAIN THE ARCHITECT'S APPROVAL OF CONSTRUCTION JOINT LOCATION IN ALL STRUCTURAL SLABS, BEAMS, AND SHEAR WALLS.
6. HORIZONTAL JOINTS: THE SURFACE OF ALL HORIZONTAL CONSTRUCTION JOINTS, INCLUDING JOINTS BETWEEN FOOTINGS AND SLABS ON GRADE, SHALL BE CLEANED AND ROUGHENED BY SANDBLASTING OR OTHER PRE-APPROVED MEANS, IN ORDER TO REMOVE THE ENTIRE SURFACE AND EXPOSE CLEAN AGGREGATE SOLIDLY EMBEDDED IN MORTAR MATRIX. IN THE EVENT THAT THE CONTACT SURFACE BECOMES COATED WITH EARTH, SAWDUST, ETC, AFTER BEING CLEANED, THE ENTIRE SURFACE SO COATED SHALL BE RECLEANED.
7. QUALITY: THE QUALITY AND DESIGN OF CONCRETE SHALL BE IN ACCORDANCE WITH THE CALIFORNIA BUILDING CODE EXCEPT ITEMS NOT SPECIFICALLY COVERED THEREIN SHALL ALSO CONFORM WITH ACI 318.
8. REINFORCING: ALL REINFORCING SHALL BE NEW STOCK DEFORMED BARS CONFORMING TO ASTM A615, EXCEPT STEEL TO BE WELDED SHALL BE ASTM A706.
   a.) #3 BARS AND SMALLER.....GRADE 40 b.) #4 BARS AND LARGER.....GRADE 60
   (EXCEPT THAT TIES & STIRRUPS MAY BE GRADE 40)
   c.) COLUMN SPIRALS, IF USED, SHALL CONFORM TO "STANDARD SPECIFICATION FOR CARBON-STEEL WIRE AND WELDED WIRE REINFORCEMENT, PLAIN AND DEFORMED, FOR CONCRETE" ASTM A1064 WITH A MINIMUM YIELD STRENGTH OF 70,000 psi. FABRICATION SHALL CONFORM TO ACI MANUAL OF STANDARD PRACTICE.
   d.) SEPARATE BARS ¼ DIAMETERS CLEAR OR ½" CLEAR WHICHEVER IS LARGER.
9. SPLICES: SPLICES FOR REINFORCING STEEL SHALL BE "CLASS B" AS DEFINED BY THE CBC AND ACI CODES UNLESS SPECIFICALLY SHOWN OTHERWISE. THE LENGTH OF LAP SHALL BE BASED ON GRADE 60 STEEL AND THE CONCRETE STRENGTH SHOWN BELOW. SEE REBAR SPLICE DETAIL.
10. FIELD SPLICES: FIELD SPLICES NOT ORIGINALLY SHOWN ON SHOP DRAWINGS WILL BE PERMITTED ONLY WITH APPROVAL FROM THE ARCHITECT. SUCH SPLICES SHALL BE MADE WITH FULL PENETRATION BUTT WELDING UNLESS OTHERWISE NOTED OR DETAILED.
11. WELDING OF REINFORCING: ALL WELDING OF REINFORCING STEEL SHALL BE WITH LOW HYDROGEN ELECTRODES AND SHALL COMPLY WITH ANSI/AWS D1.4. WELDING IS ALLOWED ONLY WHERE INDICATED ON DRAWINGS. REINFORCING SHALL COMPLY WITH ASTM A706. SHOP FUSION WELDED STIRRUP/TIE CAGES (OR SPIRAL ASSEMBLIES) CONSISTING OF ASTM A706 REINFORCING STIRRUPS/TIES AND LONGITUDINAL HOLDING WIRES OF MAXIMUM SIZE W5 AND CONFORMING TO ASTM A1064 SHALL BE PERMITTED.
12. CONCRETE COVER: MINIMUM CONCRETE COVER FOR REINFORCING SHALL BE AS FOLLOWS:
    CAST AGAINST EARTH (EXCEPT SLABS ON GRADE).....3"
    SLABS ON GRADE (TO BOTTOM).....2"
    EXPOSED TO EARTH OR WEATHER:
    #5 BARS AND SMALLER.....½"
    #6 BARS AND LARGER.....2"
    NOT EXPOSED TO WEATHER OR IN CONTACT WITH THE GROUND:
    SLABS, WALLS, JOISTS:
    #11 BARS AND SMALLER.....¾"
    #14 AND #18 BARS.....1½"
    BEAMS, GIRDERS, AND COLUMNS: PRINCIPLE REINFORCING, TIES, STIRRUPS, OR SPIRALS.....1½"
    SHELLS AND FOLDED PLATE MEMBERS:
    #5 BARS AND SMALLER.....¾"
    #6 BARS AND LARGER.....¾"
13. WIRE MESH: WELDED WIRE FABRIC SHALL COMPLY WITH ASTM A1064.
14. ANCHOR BOLTS: ALL ANCHOR BOLTS SHALL BE HEADED BOLTS AND SHALL COMPLY WITH ASTM A307 OR ASTM F1554 Gr. 36, UON. NO UPSET THREADS ALLOWED.
15. AGGREGATE SIZE: MAXIMUM AGGREGATE SIZE SHALL BE:
    1½" AT INTERIOR SLABS ON GRADE
    1" AT ALL OTHER CONCRETE
    SEE PROJECT SPECIFICATIONS FOR COMBINED GRADATION LIMITS.
16. MIX DESIGN: CONCRETE SHALL HAVE 5½ SACKS MINIMUM (6 SACKS MIN AT LIGHTWEIGHT CONC) TYPE-I/II PORTLAND CEMENT PER CUBIC YARD AND SHALL CONTAIN 15% FLY ASH PER ASTM C-618 CLASS F. EXCEPTION: FLY ASH IS NOT PERMITTED IN CONCRETE TO BE POLISHED.
17. CONCRETE STRENGTH: CONCRETE SHALL HAVE A MINIMUM ULTIMATE COMPRESSIVE STRENGTH IN 28 DAYS AS FOLLOWS:
    f'_c = 3,000 psi AT INTERIOR SLABS ON GRADE
    f'_c = 3,500 psi AT POLISHED CONCRETE
    f'_c = 3,000 psi AT ALL OTHER CONCRETE
18. WATER/CEMENT RATIO: MAXIMUM WATER/CEMENT RATIO SHALL BE:
    0.50 AT INTERIOR SLABS ON GRADE
    0.56 AT ALL OTHER CONCRETE

LEGEND

- CONCRETE
- MASONRY
- STEEL
- CURB
- CONTINUOUS WOOD MEMBER
- DISCONTINUOUS WOOD MEMBER (BLOCKING)
- DETAIL NO. / SHEET DRAWN ON (1 / S1.1)
- FOOTING STEP
- ELEVATION BOTTOM OF FOOTING
- ELEVATION
- ELEVATION TOP OF STEEL

FOUNDATIONS: MANDATORY MINIMUM FORMWORK

(UNLESS FULLY FORMED)

FOUNDATION CONCRETE MAY BE PLACED DIRECTLY INTO NEAT EXCAVATIONS PROVIDED THE FOUNDATION TRENCH WALLS ARE STABLE AS DETERMINED BY THE ARCHITECT (STRUCTURAL ENGINEER) SUBJECT TO THE APPROVAL OF THE DIVISION OF THE STATE ARCHITECT, IN SUCH CASE THE MINIMUM FORMWORK SHOWN ON THE DRAWINGS IS MANDATORY TO INSURE CLEAN EXCAVATIONS IMMEDIATELY PRIOR TO AND DURING THE PLACING OF THE CONCRETE.

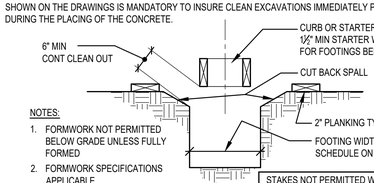

NOTES:

1. FORMWORK NOT PERMITTED BELOW GRADE UNLESS FULLY FORMED
2. FORMWORK SPECIFICATIONS APPLICABLE
3. AFTER CONCRETE HAS SET, REMOVE LAITANCE AND SCUM

STAKES NOT PERMITTED WITHIN FOOTING SECTIONS

STARTER WALL REQUIRED FOR ALL MASONRY OR CONCRETE WALLS WHEN BELOW GRADE

FOUNDATION TRENCHING AND FORMING DETAIL

NTS (CCR TITLE 24) 3001-02 — 1 / S1.1

GENERAL NOTES

1. DISCREPANCIES: THE CONTRACTOR SHALL VERIFY ALL DIMENSIONS, ELEVATIONS, AND CONDITIONS BEFORE STARTING WORK; AND SHALL NOTIFY THE ARCHITECT IMMEDIATELY IF ANY DISCREPANCIES ARE FOUND. TYPICAL DETAILS: THE TYPICAL DETAILS AND NOTES SHOWN ON THESE SHEETS SHALL APPLY
2. IN ALL CASES UNLESS SHOWN OTHERWISE. WHERE NO DETAILS ARE SHOWN, CONSTRUCTION SHALL BE AS SHOWN FOR OTHER SIMILAR WORK. NOTES AND DETAILS ON DRAWINGS SHALL TAKE PRECEDENCE OVER GENERAL NOTES AND TYPICAL DETAILS. ALL WORK AND CONSTRUCTION SHALL COMPLY WITH APPLICABLE BUILDING CODES, REGULATIONS, AND SAFETY REQUIREMENTS.
3. OTHER TRADES: SEE ARCHITECTURAL, ELECTRICAL, AND MECHANICAL DRAWINGS FOR SIZE AND LOCATION OF PIPE, VENT, DUCT, AND OTHER OPENINGS AND DETAILS NOT SHOWN ON STRUCTURAL DRAWINGS. VERIFY ALL DIMENSIONS WITH THE ARCHITECTURAL DRAWINGS.
4. SHORING AND BRACING: IT SHALL BE THE CONTRACTOR'S RESPONSIBILITY TO DESIGN AND PROVIDE ADEQUATE SHORING, BRACING, AND FORMWORK AS REQUIRED FOR THE CONSTRUCTION OF THIS BUILDING. PROVIDE TEMPORARY BRACING AS REQUIRED TO HOLD THE VARIOUS ELEMENTS IN PLACE UNTIL FINAL SUPPORT IS SECURELY ANCHORED.
5. EXCAVATION: THE CONTRACTOR SHALL BE RESPONSIBLE FOR ALL EXCAVATION PROCEDURES AND FOR PROTECTION OF ADJACENT PROPERTY, STRUCTURES, STREETS, AND UTILITIES IN ACCORDANCE WITH THE LOCAL BUILDING DEPARTMENT.
6. BACKFILL: DO NOT BACKFILL AROUND THE EXTERIOR PERIMETER WALLS UNTIL AFTER THE WALLS ARE SUPPORTED BY THE COMPLETION OF INTERIOR FLOOR SYSTEMS. IF THE FLOOR SLABS ARE CONCRETE, DO NOT BACKFILL UNTIL 7 DAYS MINIMUM AFTER COMPLETION OF THE FLOOR SLABS. DO NOT BACKFILL UNTIL AFTER COMPLETION AND INSPECTION OF DAMP-PROOFING.
7. DESIGN INTENT: IT IS THE INTENTION OF THESE DRAWINGS TO PROVIDE THE FOLLOWING CONTINUITIES IN THE STRUCTURE: ALL ROOF AND FLOOR MEMBERS LABELED AS STRUTS SHALL BE CONTINUOUSLY
   a.) CONNECTED FOR THE FULL LENGTH OF THE ROOF OR FLOOR SYSTEM UNLESS OTHERWISE NOTED. ALL WALL BRACING AND/OR SHEAR PANELS SHALL BE CONNECTED TO THE ROOF
   b.) AND/OR FLOOR STRUTS. ALL MASONRY AND CONCRETE WALLS SHALL BE POSITIVELY ANCHORED TO THE c.) ROOF AND FLOOR SYSTEMS AT MAXIMUM INTERVALS OF 4'-0"o.c. UON.
   IF DETAILS REQUIRED TO PROVIDE THE ABOVE CONTINUITIES ARE NOT EVIDENT ON THE DRAWINGS, THE CONTRACTOR SHALL CONTACT THE ARCHITECT FOR CLARIFICATION.
8. REGARDING SCHEDULES: NOT ALL ITEMS SHOWN ON SCHEDULES ARE NECESSARILY USED ON EACH SHEET WHERE SCHEDULE APPEARS.

DESIGN DATA

GOVERNING CODE: . . . . . 2022 CALIFORNIA BUILDING CODE (CBC) (PART II TITLE 24 CCR)

DESIGN LOADS:	UNIFORM:	CONCENTRATED:
BUILDINGS 700 & 800:		
TYPICAL ROOF DEAD LOAD:	20 psf	
EXTERIOR ROOF DEAD LOAD:	20 psf	
SOLAR WEIGHT (ADDITIONAL):	3 psf	
ROOF LIVE LOAD:	20 psf*	300 lbs.

* LIVE LOAD REDUCTION PER CBC 1607A.13.2.1
** LIVE LOAD REDUCTION PER CBC 1607A.11.1 FOR LOADS LESS THAN 100 psf.

FLOOD DESIGN DATA:
THIS PROJECT FALLS WITHIN MULTIPLE FLOOD HAZARD ZONES.

WIND DESIGN:
METHOD: . . . . . DIRECTIONAL PROCEDURE (ASCE 7-16, CH27)
BASIC WIND SPEED: . . . . . 101 MPH
EXPOSURE CATEGORY: C
ENCLOSURE CLASSIFICATION: . . . . . ENCLOSED (GCPi = ±0.18)

SEISMIC DESIGN:
RISK CATEGORY III
IMPORTANCE FACTOR, I_e 1.25
SEISMIC DESIGN CATEGORY: . . . . . D
S_S . . . 0.581 S_1 . . . 0.225
S_{DS} . . . 0.517 S_{D1} . . . 0.323
SYSTEM: . . . . . WOOD SHEAR WALLS: R = 6.5
SEISMIC RESPONSE COEFFICIENT: . . . . . C_s = 0.099 (STRENGTH LEVEL)
ANALYSIS PROCEDURE: . . . . . EQUIVALENT LATERAL FORCE

IRREGULARITIES:
HORIZONTAL: . . . . . N/A
VERTICAL: . . . . . N/A
BASE LEVEL: . . . . . +0'-0"

SOIL DATA:
CHARACTER OF SOIL: . . . . . CLAYEY SAND
SITE CLASS: . . . . . D
DESIGN SOIL PRESSURE: . . . . . 3,500 psf (DEAD PLUS LIVE LOAD)

GEOTECHNICAL REPORT No. 012-23614
PREPARED BY KRAZAN & ASSOCIATES INC
AND DATED JANUARY 5, 2024 (UPDATED MAY 23, 2024)

FOUNDATION NOTES

1. REFERENCE ELEVATION: REFERENCE ELEVATION (0'-0") IS TOP OF FINISHED FLOOR UNLESS OTHERWISE NOTED (UON).
2. EARTHWORK: PREPARE BUILDING PAD AS SHOWN ON DETAIL 2/S2.4 AND IN ACCORDANCE WITH THE RECOMMENDATIONS OF THE SOILS REPORT LISTED UNDER "DESIGN DATA".
3. FOOTINGS: ALL FOOTINGS SHALL EXTEND TO FIRM BEARING IN UNDISTURBED SOIL OR ENGINEERED FILL. IN THE EVENT THAT FOOTINGS ARE OVER-EXCAVATED, THEY SHALL BE FILLED WITH CONCRETE OR PROPERLY COMPACTED AND TESTED ENGINEERED FILL. ALL LOOSE SOIL AND DEBRIS MUST BE REMOVED PRIOR TO PLACING CONCRETE.
4. FOOTING TRENCHES: SEE FOUNDATION FORMING AND TRENCHING DETAIL FOR TRENCHING OF FOOTINGS.
5. STEPPED FOOTINGS: FOUNDATIONS FOR ALL BUILDINGS WHERE THE SURFACE OF THE GROUND SLOPES MORE THAN 1 FOOT IN 10 SHALL BE LEVEL OR SHALL BE STEPPED SO THAT BOTH TOP AND BOTTOM OF SUCH FOUNDATIONS ARE LEVEL.
6. EXTERIOR SLABS AND WALKWAYS: REFER TO ARCHITECTURAL DRAWINGS FOR LOCATION AND EXTENT OF EXTERIOR SLABS AND WALKWAYS.
7. NON-BEARING WALLS: REFER TO ARCHITECTURAL DRAWINGS FOR NON-BEARING WALLS NOT SHOWN ON STRUCTURAL DRAWINGS.
8. SLABS ON GRADE: ALL SLABS ON GRADE SHALL HAVE THICKNESS AND REINFORCING SHOWN ON 2/S2.4
9. EMBEDDED ITEMS: ALL REINFORCING STEEL, ANCHOR BOLTS, AND OTHER EMBEDDED ITEMS SHALL BE SECURELY POSITIONED AND ANCHORED TO THE FORMS PRIOR TO POURING OF CONCRETE.
10. CRACK CONTROL JOINTS: REFER TO FOUNDATION PLAN FOR LOCATION OF CRACK CONTROL JOINTS IN FLOOR SLABS. IF NOT SHOWN, JOINT SPACING SHALL NOT EXCEED 12 FEET IN EACH DIRECTION.
11. CONSTRUCTION JOINTS: PROVIDE CONSTRUCTION JOINTS WHERE CONCRETE POURS ARE STOPPED

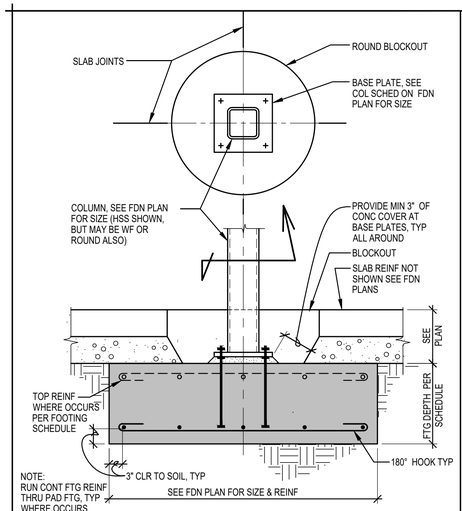

COLUMN FOOTING

NTS 3501-02 — 13 / S1.2

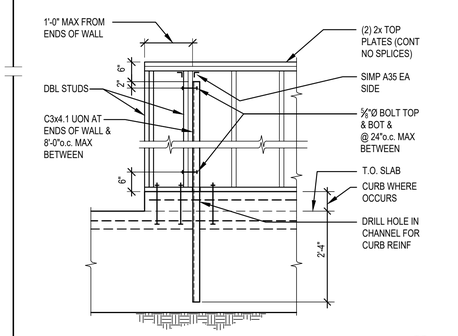

WING WALL DETAIL

NTS 6311-02 — 14 / S1.2

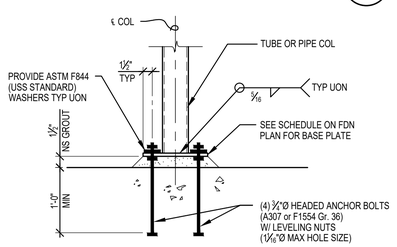

BASE PLATE DETAIL

TUBE OR PIPE COLUMN NTS 5101-01 — 15 / S1.2

STRUCTURAL STEEL NOTES

1. GRADES: STRUCTURAL STEEL SHALL CONFORM TO THE FOLLOWING (UNLESS OTHERWISE NOTED):

STRUCTURAL SHAPE	ASTM SPECIFICATION	Fy (MIN)
W-SHAPES, WT-SHAPES	ASTM A992	50 ksi
CHANNELS, PLATES, AND ANGLES	ASTM A36	36 ksi
STEEL PIPE	ASTM A53 GRADE B	35 ksi
ROUND HSS	ASTM A500 GRADE C	46 ksi
SQUARE AND RECTANGULAR HSS	ASTM A500 GRADE C	50 ksi

2. NATURAL CAMBER: WHEN FABRICATING BEAMS, PLACE NATURAL CAMBER UP.
3. FABRICATION AND ERECTION: FABRICATION AND ERECTION OF STRUCTURAL STEEL SHALL BE IN ACCORDANCE WITH THE AISC MANUAL OF STEEL CONSTRUCTION. SHOP DRAWINGS SHALL BE SUBMITTED BEFORE FABRICATION.
4. BOLTS: ALL UNFINISHED BOLTS FOR WOOD TO STEEL SHALL BE ASTM A307 UNLESS OTHERWISE NOTED. BOLTS FOR STEEL TO STEEL CONNECTIONS SHALL BE A307 UON, EXCEPT THAT BOLTS FOR BEAM CONNECTIONS SHALL BE PER BEAM CONNECTION SCHEDULE. BOLT HOLES SHALL BE STANDARD SIZE UON.
5. HIGH STRENGTH BOLTS: HIGH STRENGTH (HS) BOLTS, IN SLIP CRITICAL CONNECTIONS (SC), SHALL BE ASTM A325. ASSEMBLY SHALL COMPLY WITH AISC SPECIFICATIONS FOR STRUCTURAL JOINTS USING ASTM A325 BOLTS AND SHALL COMPLY WITH THE REQUIREMENTS FOR SLIP CRITICAL TYPE CONNECTION, CLASS A SURFACE. INSTALLATION SHALL BE BY EITHER "CALIBRATED WRENCH TIGHTENING", "TURN OF THE NUT TIGHTENING METHOD", OR "TIGHTENING BY USE OF A DIRECT TENSION INDICATOR". HIGH STRENGTH BOLTS IN NON-SLIP CRITICAL CONNECTIONS (A325N) REQUIRE TIGHTENING TO THE SNUG TIGHT CONDITION ONLY.
6. MINIMUM CONNECTION: IF DETAILS ARE NOT SHOWN, BEAMS SHALL BE CONNECTED USING ¾"Ø A325N BOLTS PER PART 7, TABLE 7-1 OF AISC MANUAL OF STEEL CONSTRUCTION 15th EDITION. THE NUMBER OF BOLTS SHALL BE THE MAXIMUM POSSIBLE FOR THE PARTICULAR BEAM DEPTH. NO CONNECTION SHALL HAVE LESS THAN 2 BOLTS.
7. WELDING:
   a.) ALL WELDS SHALL BE MADE WITH PREQUALIFIED JOINTS PER AISC, USING THE ELECTRIC ARC PROCESS AND E-70XX ELECTRODES IN ACCORDANCE WITH AWS STANDARDS.
   b.) ALL WELDING SHALL BE DONE BY APPROVED CERTIFIED WELDERS.
   c.) NO WELDING IS PERMITTED ON MEMBERS SUPPORTING LOADS.
   d.) ALL SHOP AND FIELD WELDING SHALL HAVE SPECIAL INSPECTION. ALL COMPLETE PENETRATION WELDS SHALL BE TESTED BY NON-DESTRUCTIVE TESTING (NDT PROCEDURES IN ACCORDANCE WITH AWS STANDARDS).
   e.) ALL WELDS USED IN MEMBERS AND CONNECTIONS IN THE SFRS (SEISMIC FORCE RESISTING SYSTEM) SHALL BE MADE WITH A FILLER METALS MEETING THE REQUIREMENTS SPECIFIED IN CLAUSE 6.3 OF "STRUCTURAL WELDING CODE - SEISMIC SUPPLEMENT" (AWS D1.8 / D1.8M).
8. TEMPORARY BRACING: THE STEEL FABRICATOR SHALL PROVIDE ADEQUATE TEMPORARY BRACING FOR ERECTION.
9. SLOTTED AND OVERSIZED HOLES: WHERE SLOTTED OR OVERSIZED HOLES ARE SPECIFIED IN THE DRAWINGS, PROVIDE WASHERS PER AISC UNDER BOLT THREADS AND NUTS WHICH ARE IN CONTACT WITH SLOTTED AND OVERSIZED HOLES.
10. SHIMS: PROVIDE STEEL SHIMS AT SPLICES OF PARTS HAVING MORE THAN ⅛" DIFFERENCE IN THICKNESS.
11. BEVELED WASHERS: PROVIDE BEVELED WASHERS ON ALL CONNECTIONS TO SLOPING FLANGES OF WIDE FLANGE SECTIONS AND CHANNELS.
12. STITCH BOLTS: PROVIDE ¾"Ø STITCH BOLTS AND FILL PLATE (OR EQUIVALENT WELDED FILL PLATES) CONNECTING ALL DOUBLE ANGLE MEMBERS AT 2'-0"o.c. MAX.
13. MINIMUM WELDS: WHERE MINIMUM AISC FILLET WELD THICKNESS REQUIREMENT EXCEEDS WELDS SHOWN ON DETAILS, PROVIDE MINIMUM AISC WELD.
14. OPENINGS IN STEEL MEMBERS: OPENINGS SHALL NOT BE PLACED IN STEEL MEMBERS UNLESS SPECIFICALLY DETAILED. STEEL MEMBERS SHALL BE SHORED WHEN PERMISSIBLE HOLES ARE CUT WITH TORCH AFTER STEEL IS ERECTED. THE SHORES SHALL REMAIN IN PLACE UNTIL STEEL TEMPERATURE HAS RETURNED TO AIR TEMPERATURE.
15. STUD BOLTS: ALL STUD BOLTS SHALL BE NELSON STUDS OR EQUIV PER ESR 2856 AND SHALL BE INSTALLED BY A LICENSED FABRICATOR.
16. STEEL EXPOSED TO EARTH: ALL STEEL EXPOSED TO EARTH SHALL HAVE A MINIMUM CONCRETE COVER OF 3" UON.
17. LIGHT GAGE STEEL: LIGHT GAGE COLD-FORMED STRUCTURAL STEEL SHALL CONFORM TO THE SPECIFICATIONS OF THE AISI MANUAL UNLESS OTHERWISE NOTED.
18. SHEAR CONNECTORS: SHEAR CONNECTORS SHALL BE ASTM A108 WITH Fu = 65 KSI.

UNLESS LARGER SIZES ARE SHOWN, THE MINIMUM SIZE OF FILLET WELDS SHALL BE AS SHOWN IN TABLE J2.4. THESE PROVISIONS DO NOT APPLY TO FILLET WELD REINFORCEMENTS OF PARTIAL-OR COMPLETE-JOINT-PENETRATION GROOVE WELDS.

TABLE J2.4 AISC MINIMUM SIZE OF FILLET WELDS

MATERIAL THICKNESS OF THINNER PART JOINED (IN)	MINIMUM SIZE OF FILLET WELD (IN) *
TO ¼ INCLUSIVE	⊗ USE 3/16 MIN
OVER ¼ TO ½	3/16
OVER ½ TO ¾	¼
OVER ¾ TO 1½"	5/16

* LEG DIMENSION OF FILLET WELDS. SINGLE-PASS WELDS MUST BE USED.

FILLET WELDS

NTS 5001-02 — 11 / S1.2

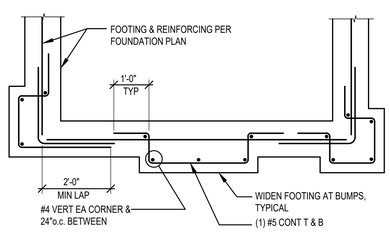

BUMP-OUTS AT FOOTINGS

NTS 3006-02 — 12 / S1.2

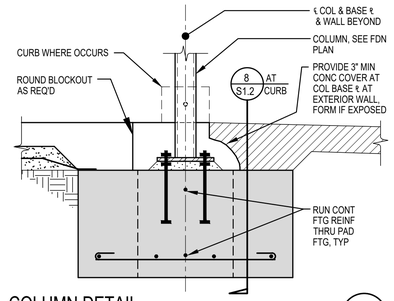

COLUMN DETAIL

NTS 3501-04 — 7 / S1.2

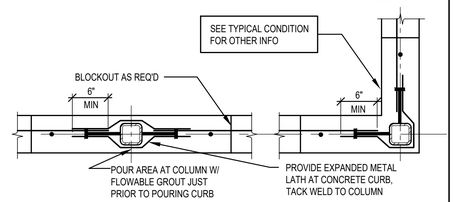

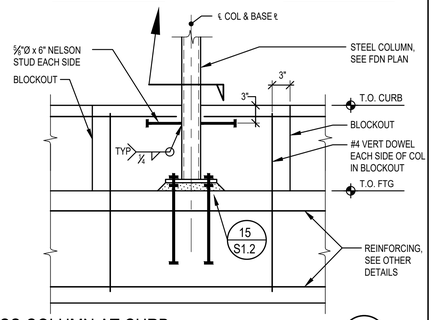

HSS COLUMN AT CURB

NTS 3501-03 — 8 / S1.2

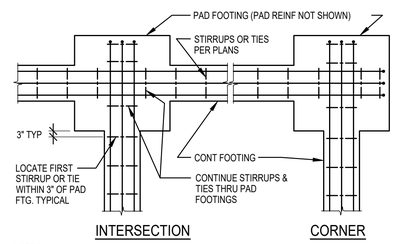

NOTES:
1. EXTEND GRADE BEAM BARS TO FAR SIDE OF PAD FOOTING AND PROVIDE STD HOOK. (TURN UP/DOWN)
2. PROVIDE SLAB DOWELS AND WALL DOWELS SHOWN ON CONT FOOTING DETAILS IN PAD FOOTING REGION ALSO.

CONT FTG REINF AT PAD FTGS

NTS 3006-03 — 9 / S1.2

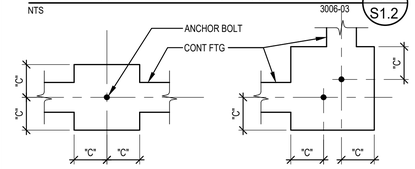

HOLDOWN	"C"
HDU2	9"
HDU4	9"
HDU5	9"
HDU8	15"
HDU11	17"
HDU14	17"

NOTES:
1. WIDEN FOOTINGS AS REQUIRED TO PROVIDE MINIMUM CONCRETE COVER "C" AT EACH ANCHOR BOLT.
2. WIDENED FOOTINGS ARE NOT SHOWN ON FOUNDATION PLANS.
3. NO ADDITIONAL REINF IS REQUIRED UON.

CONC COVER AT HD ANCHORS

NTS 3206-01 — 10 / S1.2

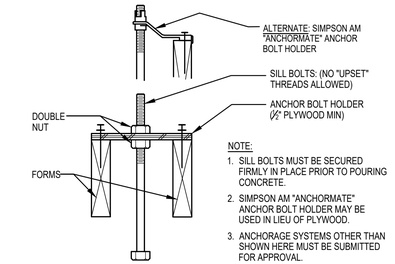

NOTE:
1. SILL BOLTS MUST BE SECURED FIRMLY IN PLACE PRIOR TO POURING CONCRETE.
2. SIMPSON AM "ANCHORMATE" ANCHOR BOLT HOLDER MAY BE USED IN LIEU OF PLYWOOD.
3. ANCHORAGE SYSTEMS OTHER THAN SHOWN HERE MUST BE SUBMITTED FOR APPROVAL.

SILL BOLT SETTING DETAIL

NTS 3205-02 — 3 / S1.2

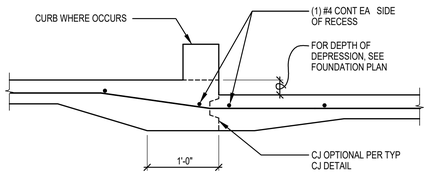

TYPICAL DEPRESSED SLAB

NTS 3104-01 — 4 / S1.2

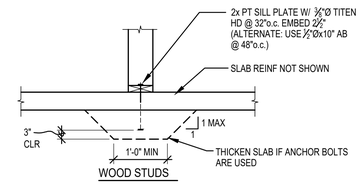

TYPICAL INTERIOR NON-BEARING WALL

NTS 3101-03C-MOD — 5 / S1.2

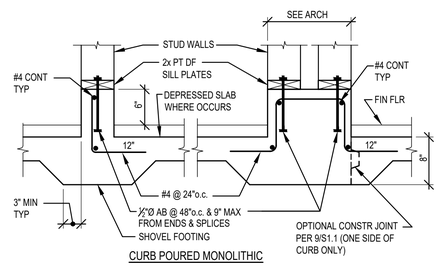

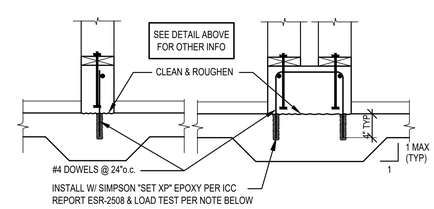

TESTING: TENSION TEST 25% OF ANCHORS TO 2400 LBS. IF ANY ANCHOR FAILS TEST ALL ANCHORS NOT PREVIOUSLY TESTED UNTIL 20 CONSECUTIVE ANCHORS PASS, THEN RESUME THE 25% TEST FREQUENCY.

CURBS AT INTERIOR WALLS

(NON-BEARING & NON-SHEAR) NTS 3101-00 — 6 / S1.2

ANCHOR DIAMETER	INSTALLATION REQUIREMENTS									
	HILTI KB-TZ2		SIMPSON STRONG-BOLT 2		DEWALT POWER-STUD+ SD2		SIMPSON TITEN HD	HILTI KH-EZ	DEWALT SCREW-BOLT+	
	MINIMUM NOMINAL EMBED	INSTALL TORQUE (FT-LBS)	MINIMUM NOMINAL EMBED	INSTALL TORQUE (FT-LBS)	MINIMUM NOMINAL EMBED	INSTALL TORQUE (FT-LBS)	MINIMUM NOMINAL EMBED	MINIMUM NOMINAL EMBED	MINIMUM NOMINAL EMBED	
¼"	1¾"	4	1¾"	4	-	-	1⅝"	1¾"	1¾"	
⅜"	3"	30	2¼"	30	2¾"	20	2⅜"	2¼"	2¼"	
½"	3¾"	50	3¼"	60	3¾"	40	3¼"	3"	2½"	
⅝"	4½"	40	5¼"	90	4¼"	60	4"	3¼"	3¼"	
¾"	5½"	110	5¾"	150	5¾"	110	5½"	4"	4¼"	
1"	6¾"	185	9¾"	230	-	-	-	-	-	

GENERAL NOTES:

1. THE TESTING OF POST-INSTALLED ANCHORS SHALL BE DONE IN THE PRESENCE OF THE SPECIAL INSPECTOR AND A REPORT OF THE TEST RESULTS SHALL BE SUBMITTED TO THE ENFORCEMENT AGENCY. TEST ANCHORS, AS FOLLOWS:
   10% OF SILL PLATE BOLTS
   50% OF EQUIPMENT ANCHORAGE BOLTS
   100% OF ALL OTHER STRUCTURAL ANCHORS
   IF ANY ANCHOR FAILS, TEST ALL ANCHORS OF THE SAME CATEGORY NOT PREVIOUSLY TESTED UNTIL 20 CONSECUTIVE ANCHORS PASS THE TEST REQUIREMENTS. THE INITIAL TESTING FREQUENCY SHALL THEN BE RESUMED.
2. TEST PROCEDURE SHALL BE AS PERMITTED BY AN APPROVED TEST REPORT USING CRITERIA ADOPTED IN THE CALIFORNIA BUILDING CODE (CBC). TORQUE CONTROLLED POST-INSTALLED ANCHORS SHALL BE PERMITTED TO BE TESTED USING TORQUE BASED ON APPROVED TEST REPORT AS SHOWN IN TABLE ABOVE.
3. HOLES FOR ANCHORS SHALL BE DRILLED USING A CARBIDE-TIPPED DRILL BIT CONFORMING TO ANSI B212.15 W/ THE SAME NOMINAL DIAMETER AS THE ANCHOR.
4. TESTING IS NOT REQUIRED FOR POWER ACTUATED FASTENERS USED TO ATTACH TRACKS OF INTERIOR NON-SHEAR WALL PARTITIONS FOR SHEAR ONLY, WHERE THERE ARE AT LEAST THREE FASTENERS PER SEGMENT OF TRACK.
5. USE POST-INSTALLED ANCHORS ONLY WHERE SHOWN ON DRAWINGS.

REQUIREMENTS FOR TORQUE CONTROLLED ANCHORS:

1. ACCEPTANCE CRITERIA FOR POST-INSTALLED ANCHORS SHALL BE BASED ON APPROVED TEST REPORT USING CRITERIA ADOPTED IN THE CBC. FIELD TORQUE TESTS SHALL SATISFY THE FOLLOWING MINIMUM REQUIREMENTS:
   TORQUE WRENCH METHOD: ANCHORS TESTED WITH A CALIBRATED TORQUE WRENCH MUST ATTAIN THE SPECIFIED TORQUE WITHIN ½ TURN OF THE NUT.
   EXCEPTIONS:
   a. WEDGE OR SLEEVE TYPE: ONE-QUARTER (¼) TURN OF THE NUT FOR A ⅜" DIAMETER SLEEVE ANCHOR ONLY.
   b. THREADED (SCREW) TYPE: ONE-QUARTER (¼) TURN OF THE SCREW AFTER INITIAL SEATING OF THE SCREW HEAD.
2. TORQUE CONTROLLED ANCHORS MUST BE LISTED IN A CURRENT APPROVED TEST REPORT INCLUDING, BUT NOT LIMITED TO THE FOLLOWING:
   a. HILTI KB-TZ2 (ESR-4266)
   b. SIMPSON STRONG BOLT 2 (ESR-3037)
   c. DEWALT\POWERS POWER-STUD+ SD2 (ESR-2502)
   d. HILTI KH-EZ SCREW ANCHOR (ESR-3027)
   e. SIMPSON TITEN HD SCREW ANCHOR (ESR-2713)
   f. DEWALT\POWERS SCREWBOLT+ SCREW ANCHOR (ESR-3889)
3. INSTALL SCREW ANCHORS PER MANUFACTURER'S APPROVED TEST REPORT. DO NOT EXCEED MAXIMUM INSTALLATION TORQUE VALUES LISTED IN REPORT.

REQUIREMENTS FOR ADHESIVE ANCHORS:

1. FIELD TENSION TESTS SHALL SATISFY THE FOLLOWING MINIMUM REQUIREMENTS:
   HYDRAULIC RAM METHOD:
   ANCHORS TESTED WITH A HYDRAULIC JACK OR SPRING LOADED DEVICES SHALL MAINTAIN THE TEST LOAD FOR A MINIMUM OF 15 SECONDS AND SHALL EXHIBIT NO DISCERNIBLE MOVEMENT DURING THE TENSION TEST, E.G., AS EVIDENCED BY LOOSENING OF THE WASHER UNDER THE NUT.
2. TESTING OF SHEAR DOWELS ACROSS COLD JOINTS IN SLABS ON GRADE, WHERE THE SLAB IS NOT PART OF THE LATERAL FORCE-RESISTING SYSTEM SHALL NOT BE REQUIRED.
3. TENSION TEST LOAD SHALL BE AS INDICATED ON DETAILS.
4. INSTALLATION OF ADHESIVE ANCHORS HORIZONTALLY OR UPWARDLY INCLINED TO SUPPORT SUSTAINED TENSION LOADS SHALL BE PERFORMED BY A CERTIFIED ADHESIVE ANCHOR INSTALLER (AAI) AS CERTIFIED THROUGH ACI AND IN ACCORDANCE WITH ACI 318-14 (SECTION 17.8.2.2). PROOF OF CURRENT CERTIFICATION SHALL BE SUBMITTED TO THE ARCHITECT & SEOR PRIOR TO INSTALLATION.
5. ADHESIVE ANCHORS SHALL BE INSTALLED IN CONCRETE HAVING A MINIMUM AGE OF 21 DAYS AT THE TIME OF ANCHOR INSTALLATION PER ACI 318-19 (SECTION 26.7.2(f)).

POST-INSTALLED ANCHORS IN CONCRETE

NTS 3305-01(14) — 1 / S1.2

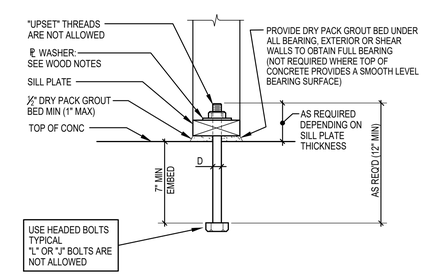

SILL BOLT DETAIL

NTS 3205-01 — 2 / S1.2

APPROVALS
FILE # 54-76 APPLICATION # 02-121996
IDENTIFICATION STAMP
DIV. OF THE STATE ARCHITECT
APP: 02-121996 INC:
REVIEWED FOR
SS ☑ FLS ☑ ACS ☑
DATE: 8/14/2024

LICENSED ARCHITECT MICHAEL J. SCOTT No. C-34290 REN. 05-31-25 STATE OF CALIFORNIA
DATE: DECEMBER 31, 2023

NEW PRESCHOOL, TK, AND KINDERGARTEN CLASSROOMS AT SANTA FE ELEMENTARY SCHOOL

PORTERVILLE UNIFIED SCHOOL DISTRICT
286 E ORANGE AVENUE, PORTERVILLE, CA 93257

REVISIONS

MANGINI ARCHITECTURE INGENUITY
BARENG MORRELLI SCOTT
MANGINI ASSOCIATES INC.
4320 West Mineral King Avenue
Visalia, California 93291
www.mangini.us
(559) 627-0530 Office
(559) 627-1926 fax

TITLE
TYPICAL NOTES AND DETAILS

S1.2

PROJECT 23076

REGISTERED PROFESSIONAL ENGINEER JACK D. BREWER No. S5792 Exp. 6-30-25 STATE OF CALIFORNIA

ASD
advanced structural design, inc.
STRUCTURAL ENGINEERS
7112 N. Fresno Street, suite 311
Fresno, California 93720
(559) 432-4151 office
asdi@asdiengr.com

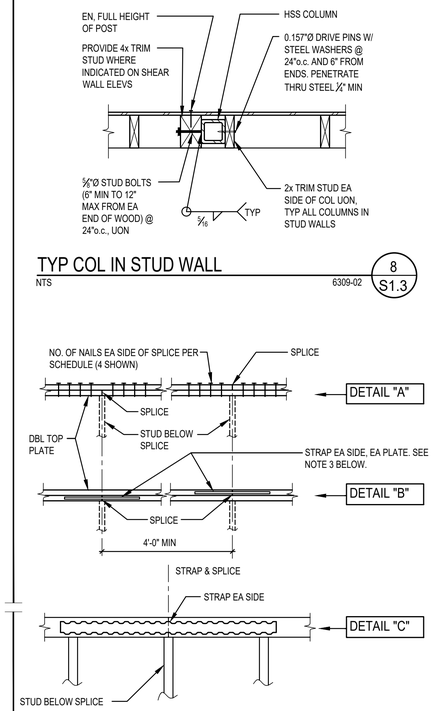

TYP COL IN STUD WALL

NTS 6309-02 8 S1.3

DETAIL "A" (NAILS)		DETAIL "B" (STRAPS)		DETAIL "C" (STRAPS AT 4x OR 6x)	
TYPE	NAIL SIZE	TYPE	SIMP STRAP	TYPE	SIMP STRAP
1	(4) - 16d	4	MSTA18	7	ST6236 *
2	(6) - 16d	5	MSTA24	8	MST60 *
3	(8) - 16d	6	MSTA30	-	-

NOTES:
1. BOTH TOP AND BOTTOM PLATES MUST BE SPLICED.
2. ALL SPLICES ARE TO OCCUR OVER A STUD.
3. USE 10d x 1½" NAILS WHEN STRAPS ARE APPLIED DIRECTLY TO TOP PLATES. USE 10d x 2½" MIN NAILS WHEN STRAPS ARE APPLIED OVER PLYWOOD.

* AT ST6236 & MST60 STRAPS: USE 16d x 2½" NAILS

TOP PLATE SPLICE DETAIL

NTS 6301-08 9 S1.3

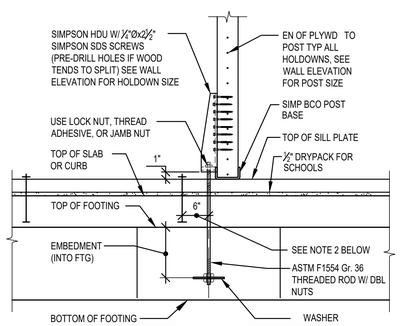

HOLDOWN SIZE	NO. OF SCREWS TO POST	ANCHOR DIA	MIN EMBED DEPTH	WASHER SIZE
HDU2	(6)	5/8"	20"	3/8"x3" SQ
HDU4	(10)			
HDU5	(14)			
HDU8	(20)	7/8"	20"	1/2"x3 1/2" SQ
HDU11	(30)	1"	20"	1/2"x3 1/2" SQ
HDU14	(36)	1"	20"	1/2"x3 1/2" SQ

NOTES:
1. DEEPEN FTG AS REQUIRED TO PROVIDE 3" MIN CONCRETE COVER AT ANCHOR BOLT & PLATE WASHER, AND WIDEN FTG AS REQ'D AT ANCHORS PER 10/S1.2.
2. WHEN HOLDOWN (HD) OCCURS NEAR END OF SILL PLATE, LOCATE A SILL BOLT 6" MAX FROM HD BOLT.
3. PIPES OR CONDUITS IN FOOTINGS SHALL NOT BE LOCATED WITHIN "C" DISTANCE OF HOLDOWN ANCHORS AS SHOWN ON 10/S1.2.

HOLDOWN DETAIL

NTS 6310-02B 10 S1.3

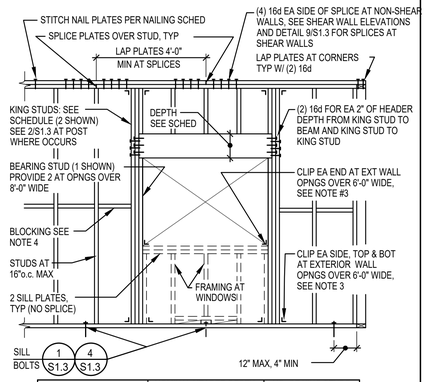

HEADER SPAN	NOMINAL HEADER DEPTH		NO. OF KING STUDS	
	BEARING WALL	NON-BRG WALL	EXTERIOR WALL	INTERIOR WALL
UP TO 4'-0"	6"	4"	1	1
OVER 4' TO 8'-0"	8"	6"	2	1
OVER 8' TO 10'-0"	12"	8"	3	2
OVER 10' TO 12'-0"	14"	10"	3	2

NOTES:
1. UNLESS OTHERWISE NOTED, HEADERS SHALL BE THE SAME WIDTH AS STUDS. FUR GLU-LAM HEADERS WITH PLYWOOD TO FLUSH WITH WALL STUDS.
2. SEE NAILING SCHEDULE FOR TYPICAL NAILING. STITCH NAIL ALL MULTIPLE STUDS PER SCHEDULE.
3. UNLESS OTHERWISE NOTED: USE SIMPSON LS30 OR A34 @ 2x4 STUDS, LS50 OR A35 @ 2x6 STUDS, LS70 @ 2x8 STUDS AND LS90 @ 2x10 STUDS.
4. BLOCKING REQUIRED AT ALL PLYWOOD SPLICES. (10'-0"o.c. MAX FOR FIRE BLOCKING.)
5. SEE DET 2/S1.3 WHERE POST OCCURS AT OPNG.

TYP WALL AND OPENING FRAMING (UON)

NTS 6303-01 5 S1.3

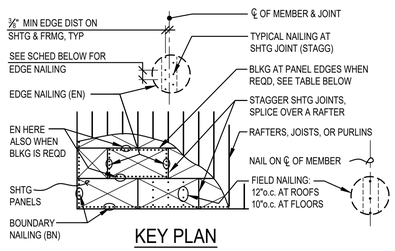

KEY PLAN

SHEATHING PANEL SCHEDULE						
TYPE	THICK	INDEX	BN	EN	EDGE BLOCKING	USE
A	5/8"	40/20	10d @ 6"o.c.	10d @ 6"o.c.	3x4 FLAT	ROOF

NOTES:
1. ALL NAILS SHALL BE COMMON WIRE NAILS. NAILS DRIVEN INTO PRESSURE TREATED LUMBER SHALL BE HOT DIPPED GALVANIZED PER ASTM A153 CLASS D.
2. ALL SHEATHING SHALL BE MARKED "APA RATED GROUP 1 DF, C-D, EXPOSURE".
3. INDIVIDUAL PIECES OF SHEATHING SHALL NOT BE LESS THAN 24" IN THE LEAST DIMENSION NOR LESS THAN 8 SQ-FT IN AREA.
4. EDGE BLOCKING, IF CALLED FOR ABOVE, IS FOR DIAPHRAGM SHEAR REQUIREMENTS ONLY. IF BLOCKING IS NOT REQUIRED FOR SHEAR, VERIFY ADEQUACY OF UNBLOCKED EDGES WITH ROOF INSTALLER BEFORE APPLYING SHEATHING. USE T & G SHTG ON ALL FLOORS.
5. PROVIDE EDGE NAILING ALONG ALL SHEAR WALL LINES AND MEMBERS LABELED AS STRUTS. USE TWO ROWS OF EDGE NAILING AT ALL INTERIOR SHEAR WALL LINES AND STRUTS.
6. PREDRILL HOLES WHERE WOOD TENDS TO SPLIT.
7. USE DEFORMED SHANK NAILS FOR ALL FLOOR SHEATHING USED AS COMBINATION SUBFLOOR-UNDERLAYMENT.
8. FLOOR SHEATHING SHALL BE GLUED TO ALL FRAMING MEMBERS.

ROOF / FLOOR SHEATHING

NTS 6002-01 6 S1.3

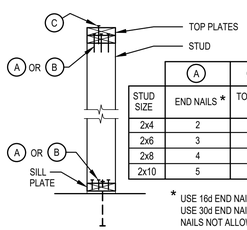

STUD SIZE	A END NAILS *	B TOE NAILS (8d)	C STITCH NAILS
2x4	2	4	(1) 16d @ 16"o.c.
2x6	3	5	(2) 16d @ 16"o.c.
2x8	4	6	(2) 16d @ 16"o.c.
2x10	5	7	(3) 16d @ 16"o.c.

* USE 16d END NAILS AT 2x PLATES. USE 30d END NAILS AT 3x PLATES (PRE-DRILL) (END NAILS NOT ALLOWED AT 4x PLATES)

STUD NAILING

NTS 6403-01A 7 S1.3

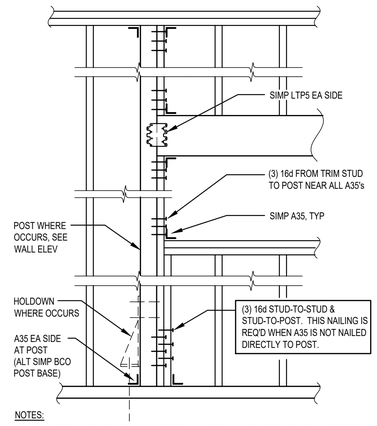

NOTES:
1. THIS DETAIL APPLIES AT ALL CONDITIONS WHERE A 3x STUD/POST (OR LARGER) REPLACES THE 2x FULL HEIGHT KING STUDS SHOWN ON DETAIL 5/S1.3, TYP UON.
2. SEE DETAIL 5/S1.3 FOR OTHER INFO.

TYP POST AT OPNG

NTS 6303-01C 2 S1.3

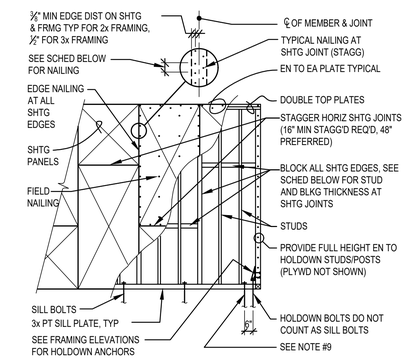

SHEATHING PANEL SCHEDULE			
TYPE	EDGE NAILING (EN)	NOMINAL THICKNESS STUDS & BLKG AT PLYWD JOINTS	SILL BOLTS *
1	10d @ 6"o.c.	2x	5/8"Ø @ 48"o.c.
2	10d @ 4"o.c.	3x	5/8"Ø @ 32"o.c.
3	10d @ 3"o.c.	3x	5/8"Ø @ 24"o.c.
4	10d @ 2"o.c.	3x	5/8"Ø @ 16"o.c.

NOTE: * ANCHOR BOLTS WITH UPSET THREADS ARE NOT ALLOWED.
1. ALL NAILS SHALL BE COMMON WIRE NAILS. NAILS DRIVEN INTO PRESSURE TREATED LUMBER SHALL BE HOT DIPPED GALVANIZED PER ASTM A153 CLASS D.
2. ALL SHEATHING SHALL BE MARKED "A.P.A. RATED SHEATHING, STRUCT I, EXPOSURE 1".
3. INDIVIDUAL PIECES OF SHEATHING SHALL NOT BE LESS THAN 16" IN THE LEAST DIMENSION NOR LESS THAN 8 SQ-FT IN AREA.
4. ALL SHEATHING SHALL BE 1/2" OR 19/32" THICK UNLESS OTHERWISE NOTED.
5. SPACE NAILS AT 12"o.c. ALONG INTERMEDIATE FRAMING MEMBERS (FIELD NAILING).
6. PROVIDE EDGE NAILS FULL HEIGHT OF JAMB STUDS, TYPICAL AT WALL OPENINGS AND ALL STUDS WITH HOLDOWNS.
7. PREDRILL HOLES WHERE WOOD TENDS TO SPLIT.
8. STAGGER NAILS WHERE SPACED @ 3"o.c. OR LESS.
9. WHEN HOLDOWN (HD) BOLT OCCURS NEAR END OF SILL PLATE, LOCATE SILL BOLT 6" FROM HD BOLT.

SHEAR WALL DETAIL

NTS 6309-01 3 S1.3

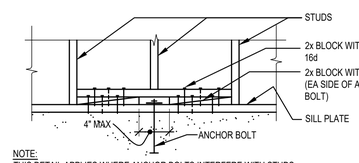

NOTE:
THIS DETAIL APPLIES WHERE ANCHOR BOLTS INTERFERE WITH STUDS. (NOT ALLOWED UNDER KING STUDS OR JAMB STUDS)

SILL BOLT FALLS AT STUD

NTS 6304-02 4 S1.3

NAILING SCHEDULE

2022 CBC

NOTE: NAILING SHOWN BELOW IS MINIMUM PERMISSIBLE. DETAILS SHALL GOVERN WHEN THEIR NAILING IS MORE STRINGENT. ALL NAILS SHALL BE COMMON WIRE NAILS AND THEY SHALL BE DRIVEN PERPENDICULAR TO THE GRAIN INSTEAD OF TOENAILED IF POSSIBLE.

CONNECTION	NAILING	LOCATION
1. BLOCKING BETWEEN JOISTS OR RAFTERS TO TOP PLATE	(3) 8d	TOENAIL EA END
2. CEILING JOISTS TO PLATE	(3) 8d	TOENAIL EA END
3. CEILING JOISTS, LAPS OVER PARTITIONS	(3) 16d	FACE NAIL
4. CEILING JOISTS TO PARALLEL RAFTERS (NO THRUST)	(3) 16d	FACE NAIL
5. COLLAR TIE TO RAFTER	(3) 10d	FACE NAIL
6. RAFTERS TO PLATE	(3) 10d	TOENAIL (2 NAILS ON ONE SIDE, 1 NAIL ON OPPOSITE SIDE)
7. ROOF RAFTER TO RIDGE VALLEY OR HIP RAFTER	(3) 10d (2) 16d	TOENAIL END NAIL
ROOF RAFTER TO 2x RIDGE BEAM	(3) 10d (2) 16d	TOENAIL END NAIL
8. DOUBLE STUDS	16d @ 24"o.c.	FACE NAIL
9. BUILT-UP CORNER STUDS	16d @ 16"o.c.	ALONG EACH EDGE
10. CONTINUOUS HEADER, TWO PIECES	16d @ 16"o.c.	ALONG EACH EDGE
11. CONTINUOUS HEADER TO STUD	(4) 8d	TOENAIL
12. DOUBLE TOP PLATES DOUBLE TOP PLATES	16d @ 16"o.c. (8) 16d	TYPICAL FACE NAIL LAP SPLICE, UON
13. SOLE PLATE TO JOIST OR BLOCKING	16d @ 16"o.c.	TYPICAL FACE NAIL
SOLE PLATE TO JOIST OR BLOCKING AT BRACED WALL PANEL	(2) 16d @ 16"o.c.	BRACED WALL PANELS
14. TOP PLATE TO STUD	SEE STUD NAILING DETAIL 7/S1.3	
15. STUD TO SILL (SOLE PLATE)		
16. TOP PLATE, LAPS AND INTERSECTIONS	(2) 16d	FACE NAIL
17. 1" DIAGONAL BRACE TO EACH STUD AND PLATE	(2) 8d	FACE NAIL
18. 1"x8" SHEATHING, OR LESS TO EA BEARING	(3) 8d	FACE NAIL
19. WIDER THAN 1"x8" SHTG TO EA BEARING	(3) 8d	FACE NAIL
20. JOISTS TO SILL OR GIRDER	(3) 8d	TOENAIL
21. RIM JOIST TO TOP PLATE	8d @ 6"o.c.	TOENAIL EA END
22. 1"x6" SUBFLOOR OR LESS TO EACH JOIST	(2) 8d	
23. 2" SUBFLOOR TO JOIST OR GIRDER	(2) 16d	BLIND AND FACE NAIL
24. 2" PLANKS	(2) 16d	EACH BEARING
25. BUILT-UP GIRDER AND BEAMS	20d @ 32"o.c. 10d @ 24"o.c. (2) 20d (3) 10d	FACE NAIL AT TOP AND BOTTOM, STAGG'D ON OPPOSITE SIDES FACE NAIL AT ENDS AND AT EACH SPLICE
26. LEDGER STRIP	(3) 16d	FACE NAIL AT EA JOIST
27. JOIST TO BAND JOIST	(3) 16d	FACE NAIL
28. BRIDGING TO JOIST	(2) 8d	TOENAIL EACH END

MACHINE NAILING OF PLYWOOD

USE OF MACHINE NAILING IS SUBJECT TO A SATISFACTORY JOB SITE DEMONSTRATION FOR EACH PROJECT AND THE APPROVAL BY THE PROJECT ARCHITECT OR STRUCTURAL ENGINEER AND THE DIVISION OF THE STATE ARCHITECT. THE APPROVAL IS SUBJECT TO CONTINUED SATISFACTORY PERFORMANCE. MACHINE NAILING WILL NOT BE ACCEPTED IN 3/4" PLYWOOD. IF NAIL HEADS PENETRATE THE OUTER PLY MORE THAN WOULD BE NORMAL FOR A HAND HAMMER OR IF MINIMUM ALLOWABLE EDGE DISTANCES ARE NOT MAINTAINED THE PERFORMANCE WILL BE DEEMED UNSATISFACTORY, AND MACHINE NAILING SHALL BE DISCONTINUED.

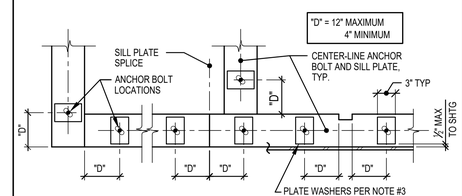

ANCHOR BOLT WASHER SCHEDULE		
WALL SIZE	MINIMUM WASHER SIZE	
2x4	PLATE 0.229" x 3" x 3"	(ALT SIMP BPS5/8-3)
2x6	PLATE 0.229" x 3" x 4 1/2"	(ALT SIMP BPS5/8-6)
2x8	PLATE 7/4" x 3" x 6 3/4"	
2x10	PLATE 7/8" x 3" x 8 1/2"	

NOTES:
1. WHERE SILL PLATE IS NOTCHED OR DRILLED MORE THAN 1/4 OF ITS WIDTH, A BOLT SHALL BE PLACED ON EACH SIDE OF THE NOTCH.
2. PROVIDE 2 BOLTS MINIMUM EACH PIECE OF SILL PLATE. FOR WALL LESS THAN 2'-0" LONG, THE MINIMUM END DISTANCE MAY BE REDUCED TO 4x BOLT DIAMETER.
3. PROVIDE PLATE WASHERS PER SCHEDULE AT ALL SILL BOLTS. THE HOLE IN THE PLATE WASHER IS PERMITTED TO BE DIAGONALLY SLOTTED WITH A WIDTH OF UP TO 3/4" LARGER THAN THE BOLT DIAMETER AND A SLOT LENGTH NOT TO EXCEED 1 3/4", PROVIDED A STANDARD CUT WASHER IS PLACED BETWEEN THE PLATE WASHER AND THE NUT. THE WASHER PLATE SHALL EXTEND TO WITHIN 1/2" OF THE EDGE OF THE SILL PLATE ON THE SIDES WITH SHEATHING. ANCHOR BOLTS SHALL BE CENTERED ON THE SILL PLATE, TYP UON.
4. STANDARD CUT WASHERS MAY BE USED AT INTERIOR NON-BRG, NON-SHEAR WALLS.

TYPICAL SILL FRAMING

NTS 6304-01 1 S1.3

WOOD NOTES

1. LUMBER GRADES: ALL FRAMING LUMBER INCLUDING JOISTS, RAFTERS, BEAMS, STUDS, POSTS, PLATES AND BLOCKING SHALL BE GRADE MARKED DOUGLAS FIR NO. 1, UNLESS OTHERWISE NOTED. ALL FRAMING LUMBER 3x AND LARGER SHALL BE FREE OF HEART CENTER.
2. GRADE MARKS: ALL GRADE MARKS ON FRAMING LUMBER AND PLYWOOD SHEATHING SHALL BE LEGIBLE.
3. SILL PLATES: SILL PLATES SHALL BE PRESSURE TREATED DOUGLAS FIR NO. 1 UNLESS OTHERWISE NOTED. EACH PIECE SHALL BEAR THE STAMP OF AN APPROVED INDEPENDENT AGENCY OPERATING UNDER ALSC OVERVIEW. TREATED WOOD, WHERE CUT, DRILLED OR NOTCHED, SHALL BE FIELD TREATED WITH PRESERVATIVE.
4. FASTENERS AND CONNECTORS FOR PRESERVATIVE-TREATED AND FIRE-RETARDANT-TREATED WOOD: FASTENERS, INCLUDING NUTS AND WASHERS, SHALL BE OF HOT-DIPPED ZINC-COATED GALVANIZED STEEL COMPLYING WITH ASTM A153. FASTENERS OTHER THAN NAILS, WOOD SCREWS, AND LAG SCREWS SHALL BE PERMITTED TO BE OF MECHANICALLY DEPOSITED ZINC-COATED STEEL WITH COATING WEIGHTS IN ACCORDANCE WITH ASTM B 695, CLASS 55 MINIMUM. CONNECTORS USED IN EXTERIOR APPLICATIONS AND IN CONTACT WITH PRESERVATIVE-TREATED WOOD SHALL HAVE COATING TYPES AND WEIGHTS IN ACCORDANCE WITH THE TREATED WOOD OR CONNECTOR MANUFACTURERS RECOMMENDATIONS. IN THE ABSENCE OF MANUFACTURES RECOMMENDATIONS, A MIN OF ASTM A653, TYPE G185 ZINC-COATED GALVANIZED STEEL, OR EQUIVALENT, SHALL BE USED.
5. SILL BOLTS/PLATE WASHERS: PROVIDE PLATE WASHERS NOT LESS THAN 0.229"x3"x3" AT ALL SILL BOLTS - USE A LARGER PLATE AS REQ'D BY STUD SIZE (SEE DETAIL 1/S1.3). THE HOLE IN THE PLATE WASHER IS PERMITTED TO BE DIAGONALLY SLOTTED WITH A WIDTH OF UP TO 3/4" LARGER THAN THE BOLT DIAMETER AND A SLOT LENGTH NOT TO EXCEED 1 3/4", PROVIDED A STANDARD CUT WASHER IS PLACED BETWEEN THE PLATE WASHER AND THE NUT. THE PLATE WASHER SHALL EXTEND TO WITHIN 1/2" OF THE EDGE OF THE SILL ON THE SIDE(S) WITH SHEATHINGSTANDARD WASHERS MAY BE USED AT INTERIOR NON-BEARING, NON-SHEAR WALLS. SEE TYPICAL SILL FRAMING DETAIL. BOLTS AND PLATE WASHERS SHALL BE GALVANIZED AS REQUIRED BY NOTE #4 ABOVE .
6. HANGERS: ALL JOISTS AND BEAMS WHICH DO NOT BEAR DIRECTLY ON A SUPPORT SHALL BE PROVIDED WITH SIMPSON 'LU' AND 'HU' TYPE HANGERS, RESPECTIVELY, OF MATCHING SIZE OR EQUIVALENT, UNLESS HEAVIER CONNECTIONS ARE SHOWN. USE MAXIMUM NAILS POSSIBLE UON. PROVIDE SLOPED AND/OR SKEWED HANGERS AT SLOPED AND/OR SKEWED MEMBERS. JOISTS SHALL BEAR COMPLETELY ON THE CONNECTOR SEATS, AND THE GAP BETWEEN THE JOIST END AND THE HEADER SHALL NOT EXCEED 1/2".
7. POST CAPS/BASES: ALL POSTS SHALL HAVE SIMPSON 'PCZ' POST CAPS AND 'BC' POST BASES AS APPLICABLE, OR EQUIVALENT, UNLESS HEAVIER CONNECTIONS ARE SHOWN.
8. NAILS: ALL NAILS, INCLUDING MACHINE NAILS, SHALL BE COMMON NAILS WITH FULL SIZE HEAD PER ASTM F1667. ALL NAILS FOR PRESSURE TREATED OR FIRE-RETARDANT LUMBER SHALL BE HOT-DIP GALVANIZED PER ASTM A153, CLASS D. NAILS WITH OTHER TYPES OF GALVANIZING MAY BE USED IF PRE-APPROVED BY THE ENFORCEMENT AGENCY. PROVIDE SUFFICIENT EDGE DISTANCE, END DISTANCE, AND SPACING TO PREVENT SPLITTING. REPLACE MEMBER IF SPLITTING OCCURS.
9. PREDRILLING: PREDRILL NAIL HOLES WHERE WOOD TENDS TO SPLIT. PREDRILL HOLES FOR ALL SCREWS AND LAG BOLTS.
10. BOLTS: ALL BOLTS, INCLUDING SILL ANCHOR BOLTS, SHALL BE FULL-DIAMETER CUT-THREAD BOLTS PROD BY AN AMERICAN MANUFACTURER. NO "UPSET" THREADS ARE ALLOWED.
11. BOLT HOLES: ALL BOLT HOLES IN WOOD, INCLUDING SILL PLATES, SHALL BE 1/16" MAX OVERSIZE.
12. BOLT SPACING: SPACE ALL BOLTS IN WOOD 4 DIAMETERS MINIMUM WITH 7 DIAMETERS MINIMUM END DISTANCE UNLESS OTHERWISE NOTED.
13. STANDARD WASHERS: PROVIDE STANDARD CUT WASHERS UNDER ALL BOLT HEADS AND NUTS BEARING ON WOOD UNLESS OTHERWISE NOTED. PROVIDE WASHERS UNDER ALL LAG SCREW HEADS.
14. BOLT RETIGHTENING: RETIGHTEN ALL BOLTS PRIOR TO APPLICATION OF SHEATHING, PLASTER, ETC.
15. LAG SCREWS: ALL LAG SCREWS SHALL BE FULL BODY DIAMETER CUT THREAD LAG SCREWS WITH STAND/ HEX HEAD. "REDUCED BODY DIAMETER" SCREWS ARE NOT ALLOWED.
16. WOOD SCREWS: ALL WOOD SCREWS SHALL BE CUT THREAD WOOD SCREWS WITH FULL BODY DIAMETER.
17. BLOCKING AT BEARINGS: PLACE 2x SOLID BLOCKING BETWEEN JOISTS OR RAFTERS OVER ALL SUPPORTS. BLOCKING SHALL BE FULL DEPTH OF JOISTS.
18. BLOCKING/BRIDGING AT JOISTS AND RAFTERS: PROVIDE 2x FULL DEPTH SOLID BLOCKING FOR ROOF RAFTERS OVER 8" DEEP AND FLOOR JOISTS OVER 4" DEEP AT 8'-0"o.c. MAXIMUM. APPROVED METAL BRIDGING OR 2x3 CROSS BRIDGING MAY BE USED AT SAME SPACING. WHERE CROSS BRIDGING IS USED, THE LOWER ENDS SHALL BE DRIVEN UP AND NAILED AFTER THE FLOOR, SUBFLOOR, OR ROOF HAS BEEN NAILED.
19. BLOCKING IN WALLS: PROVIDE 2x BLOCKING SAME WIDTH AS WALL STUDS AT 10'-0"o.c. MAXIMUM IN STUD WALLS. PROVIDE 2x MINIMUM BLOCKING AT ALL EDGES OF PLYWOOD APPLIED TO STUD WALLS, UON. IT SHALL BE THE CONTRACTOR'S RESPONSIBILITY TO PROVIDE SOLID BLOCKING AT 48"o.c. MAX, OR OTHER MEANS OF LATERAL SUPPORT FOR STUDS IN BEARING WALLS WHICH ARE LOADED PRIOR TO RECEIVING SHEATHING OR GYP BOARD.
20. BLOCKING AT UNSHEATHED REGIONS OF WALLS: ALL BEARING WALLS REQUIRE SHEATHING OR GYP BOARD FULL HEIGHT TO PREVENT BUCKLING OF STUDS. REGIONS OF WALLS WHICH DO NOT RECEIVE PERMANENT SHEATHING OR GYP BOARD ON AT LEAST ONE FACE SHALL BE PROVIDED WITH ROWS OF SOLID BLOCKING SPACED AT 48"o.c. MAX.
21. MISC. BLOCKING: IT IS NOT THE INTENT OF THESE DRAWINGS TO SHOW BLOCKING REQUIRED FOR FINISHES, FIRE BLOCKING, OR BLOCKING FOR THE ATTACHMENT OF NON-STRUCTURAL ITEMS. CONTRACTOR SHALL PROVIDE ALL REQUIRED BLOCKING. SEE ARCHITECTURAL DWGS AND SPECIFICATIONS FOR ADDITIONAL INFORMATION.
22. HOLES IN JOISTS AND BEAMS: HOLES OR NOTCHES ARE NOT ALLOWED IN JOISTS OR BEAMS UNLESS SPECIFICALLY SHOWN AND DETAILED ON DRAWINGS.
23. HOLES IN STUDS: HOLES IN STUDS SHALL COMPLY WITH DETAIL 3/S1.4. HOLES IN POSTS ARE NOT ALLOWED UNLESS SHOWN ON STRUCTURAL DRAWINGS. NOTCHES ARE NOT ALLOWED.
24. HOLES IN TOP PLATES: HOLES ARE NOT ALLOWED IN TOP PLATES OF BEARING WALLS OR SHEAR WALLS. HOLES IN TOP PLATES OF NON-BEARING NON-SHEAR WALLS SHALL COMPLY WITH DETAIL 1/S1.4.
25. STRAPS THROUGH SHEATHING: STRAPS PASSING THROUGH PLYWOOD SHEATHING SHALL PASS THROUGH NEATLY DRILLED ROUND HOLES, OR NEATLY SLOTTED HOLES. THE DIAMETER OF HOLES OR THE LENGTH OF SLOTS SHALL NOT EXCEED THE STRAP WIDTH PLUS 1/2". WIDTH OF SLOTS SHALL NOT EXCEED 1/2".
26. TIMBER CONNECTORS: ALL TIMBER CONNECTORS SPECIFIED ON THESE DRAWINGS REFERS TO SIMPSON STRONG TIE CATALOG NO. C-C 2019. ALL CONNECTORS SHALL BE STAMPED AT THE FACTORY WITH AN IDENTIFYING MARK. ALL CONNECTORS IN CONTACT WITH PRESSURE TREATED LUMBER SHALL BE COATED WITH ZMAX (G-180) OR HOT DIPPED GALVANIZED.
27. MOISTURE CONTENT: THE MAXIMUM MOISTURE CONTENT OF ALL FRAMING LUMBER SHALL NOT EXCEED 19% AT THE TIME OF INSTALLATION.
28. HARD CEILINGS: IT IS NOT THE INTENT OF THESE DRAWINGS TO SHOW FRAMING PLANS OR SECTION CUTS AT ALL HARD CEILINGS AND SUSPENDED SOFFITS. SEE ARCHITECTURAL DRAWINGS FOR LOCATIONS OF HARD (GYP) CEILINGS AND SOFFITS. FRAME CEILINGS PER TYPICAL CEILING FRAMING DETAILS UON FRAME SOFFITS PER TYPICAL SOFFIT FRAMING DETAILS OR OTHER SIMILAR SOFFIT DETAILS SHOWN ON DRAWINGS.

APPROVALS

FILE # 54-76 APPLICATION # 02-121996

IDENTIFICATION STAMP
DIV. OF THE STATE ARCHITECT
APP: 02-121996 INC: A
REVIEWED FOR
SS ☑ FLS ☑ ACS ☑
DATE: 8/14/2024

LICENSED ARCHITECT MICHEL J. SCOTT No. C-34290 REN. 05-31-25 STATE OF CALIFORNIA
DATE: DECEMBER 31, 2023

REGISTERED PROFESSIONAL ENGINEER JACK D. BREWER No. S5792 Exp. 6-30-25 STRUCTURAL STATE OF CALIFORNIA

NEW PRESCHOOL, TK, AND KINDERGARTEN CLASSROOMS AT SANTA FE ELEMENTARY SCHOOL

PORTERVILLE UNIFIED SCHOOL DISTRICT
286 E ORANGE AVENUE, PORTERVILLE, CA 93257

REVISIONS

MANGINI ARCHITECTURE INGENUITY
BARENG MORRELLI SCOTT
MANGINI ASSOCIATES INC.
4320 West Mineral King Avenue
Visalia, California 93291
www.mangini.us
(559) 627-0530 Office
(559) 627-1926 Fax

ASD advanced structural design, inc.
STRUCTURAL ENGINEERS
7112 N. Fresno Street, suite 311
Fresno, California 93720
(559) 432-4151 office
asdi@asdiengr.com

TITLE
TYPICAL NOTES AND DETAILS

S1.3

PROJECT 23076

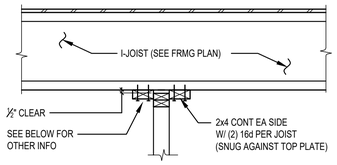

WALL PERPENDICULAR TO JOISTS

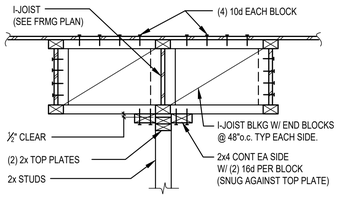

WALL PARALLEL TO JOISTS

NON-BEARING WALL
TOP PLATE DETAIL — NTS — 6305-03 — 15 / S1.4

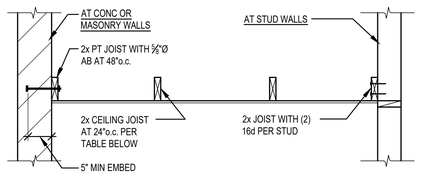

AT JOISTS PARALLEL TO WALL

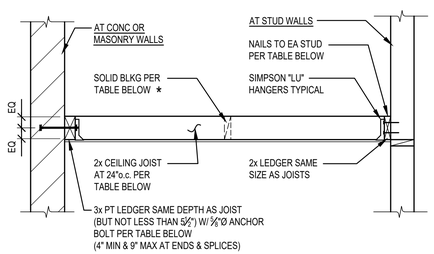

AT LEDGERS

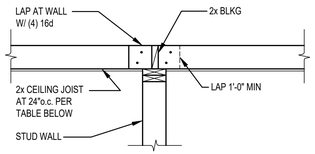

AT INTERIOR WALL

JOIST SIZE	MAX SPAN		LEDGER NAILS	BOLT SPACING	BLOCKING (NOTE #5)
	GYP BD	PLASTER			
2x4	6'-0"	4'-0"	(2) 16d	48"o.c.	NOT REQ'D
2x6	12'-0"	8'-0"	(2) 16d	48"o.c.	MID-SPAN
2x8	16'-0"	12'-0"	(3) 16d	32"o.c.	MID-SPAN
2x10	20'-0"	16'-0"	(3) 16d	32"o.c.	TWO ROWS
2x12	24'-0"	20'-0"	(4) 16d	24"o.c.	TWO ROWS

NOTES:
1. DESIGN LOADS: DL=6psf AT GYP BD; 10psf AT PLASTER
   LL=10psf
2. AT CONTRACTOR'S OPTION, 10d x 1½" NAILS MAY BE USED FOR ATTACHMENT OF JOIST HANGERS TO LEDGERS.
3. SPACE CEILING JOISTS @ 16"o.c. AT FIRE RATED CONSTRUCTION, WHERE REQ'D PER ARCH DWGS.
4. SEE "TYPICAL FRAMING AT OPENINGS" FOR FRAMING AT OPENINGS OR RECESSED FIXTURES
5. ROWS OF BLOCKING TO BE EQUALLY SPACED BETWEEN SUPPORTS.

TYPICAL CEILING FRAMING
NTS — 6009-03 — 16 / S1.4

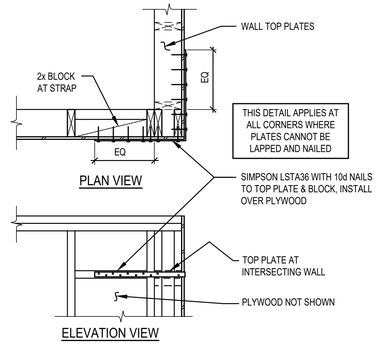

TYPICAL CORNER SPLICE
(WALL PLATES AT DIFFERENT HT) — NTS — 6401-01 — 12 / S1.4

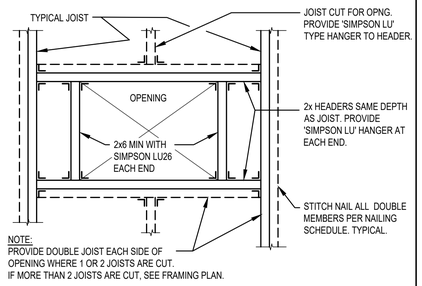

TYP FRMG AT CLG OPENINGS
N.T.S. — 6011-02 — 13 / S1.4

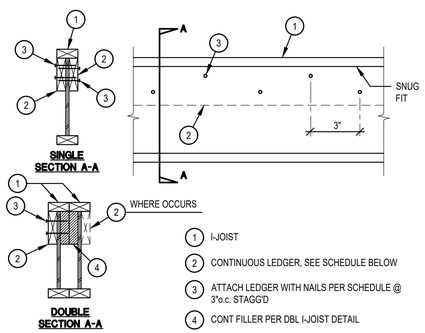

I-JOIST FLANGE WIDTH (IN)	LEDGER			FASTENER
	DEPTH	THICKNESS	MATERIAL	
3½"	5½"	1½"	LSL OR LVL	16d
2½"	5½"	1"	LSL OR LVL	8d

CONTINUOUS LEDGER AT I-JOIST
NTS — 6110-05 — 14 / S1.4

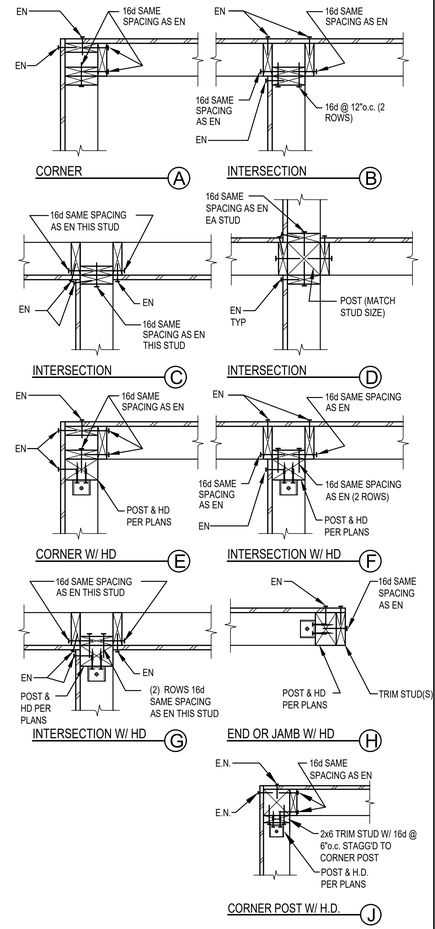

PLAN VIEW OF SHEAR WALL DETAILS
NTS — 6306-00 — 9 / S1.4

NOT USED
NTS — 10 / S1.4

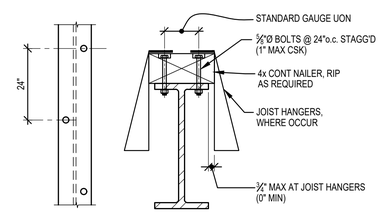

NAILER ON STEEL BEAMS
NTS — 6003-03 — 11 / S1.4

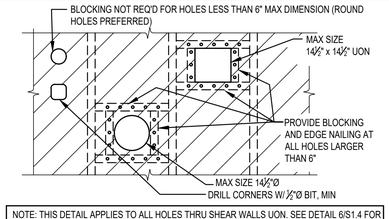

NOTE: THIS DETAIL APPLIES TO ALL HOLES THRU SHEAR WALLS UON. SEE DETAIL 6/S1.4 FOR HOLES WHICH CUT THRU STUDS OR EXCEED THESE DIMENSIONS.

HOLES AT SHEAR WALLS
(HOLES DO NOT CUT STUDS) — NTS — 6404-01 — 5 / S1.4

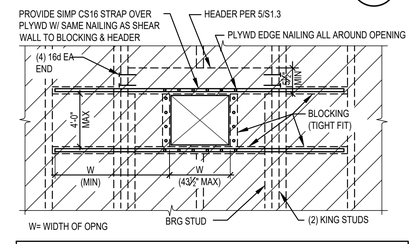

NOTE: THIS DETAIL APPLIES TO ALL HOLES THRU SHEAR WALLS UON. SEE DETAIL 5/S1.4 FOR HOLES WHICH DO NOT CUT THRU STUDS.

HOLES AT SHEAR WALLS
(HOLES CUT 1 OR 2 STUDS) — N.T.S. — 6404-02 — 6 / S1.4

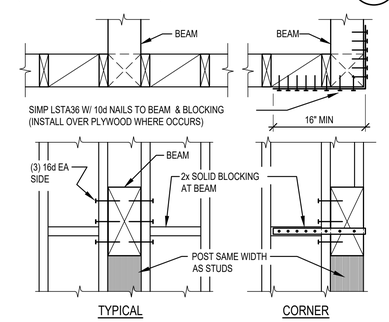

TYP BEAM INTO STUD WALL
NTS — 6306-05 — 7 / S1.4

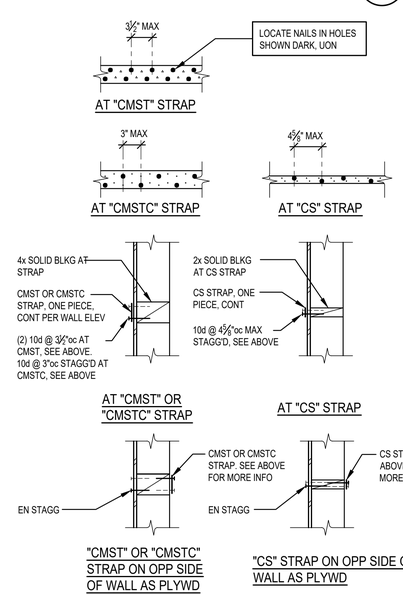

STRAP DETAIL
NTS — 6302-01 — 8 / S1.4

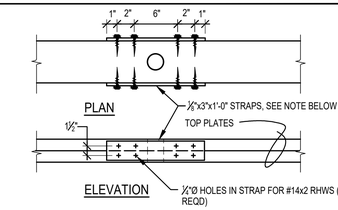

NOTE:
½"x3"x1'-0" STRAPS REQUIRED FOR HOLE DIAMETERS OF ⅓ TO ½ THE WIDTH OF WOOD PLATES. HOLES HAVING DIAMETERS GREATER THAN ½ OF THE PLATE WIDTH ARE NOT PERMITTED. NO HOLES PERMITTED IN TOP PLATES LESS THAN 5½" WIDE.

THIS DETAIL APPLIES AT NON-BEARING, NON-SHEAR WALLS ONLY. NO HOLES PERMITTED IN BEARING WALLS OR SHEAR WALLS.

HOLES IN TOP PLATES
NTS — 6307-01 — 1 / S1.4

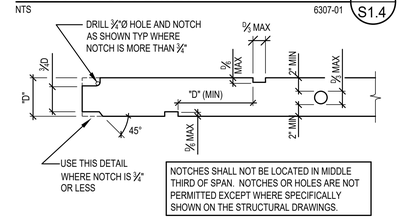

NOTCHES SHALL NOT BE LOCATED IN MIDDLE THIRD OF SPAN. NOTCHES OR HOLES ARE NOT PERMITTED EXCEPT WHERE SPECIFICALLY SHOWN ON THE STRUCTURAL DRAWINGS.

NOTCHES & HOLES AT
JOISTS OR RAFTERS — NTS — 6010-01 (TITLE 24) — 2 / S1.4

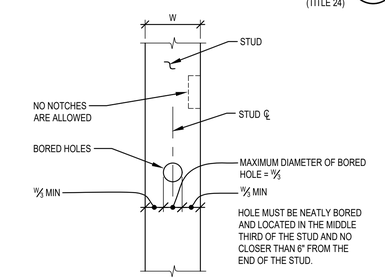

NOTCHES AND HOLES
IN STUDS (CBC) — NTS 6010-03 — 3 / S1.4

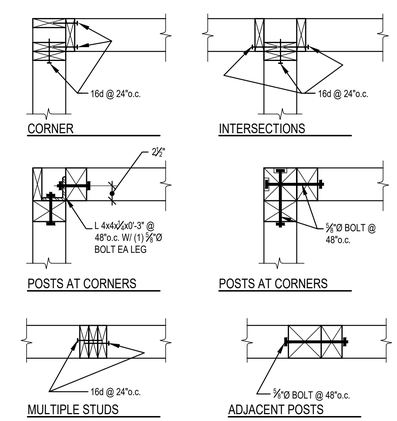

NOTE: USE THESE DETAILS AS A MINIMUM UNLESS MORE STRINGENT CONDITIONS ARE SHOWN ELSEWHERE ON THESE DRAWINGS.

TYPICAL FRAMING DETAILS
NTS — 6306-04 — 4 / S1.4

APPROVALS
FILE # 54-76 — APPLICATION # 02-121996
IDENTIFICATION STAMP DIV. OF THE STATE ARCHITECT
APP: 02-121996 INC:
REVIEWED FOR
SS ☑ FLS ☑ ACS ☑
DATE: 8/14/2024

LICENSED ARCHITECT — MICHAEL J. SCOTT — No. C-34290 — REN. 05-31-25 — STATE OF CALIFORNIA
DATE: DECEMBER 31, 2023

NEW PRESCHOOL, TK, AND KINDERGARTEN CLASSROOMS AT SANTA FE ELEMENTARY SCHOOL
PORTERVILLE UNIFIED SCHOOL DISTRICT
286 E ORANGE AVENUE, PORTERVILLE, CA 93257

REVISIONS

MANGINI ARCHITECTURE INGENUITY
BARENG MORRELLI SCOTT
MANGINI ASSOCIATES INC.
4320 West Mineral King Avenue
Visalia, California 93291
www.mangini.us
(559) 627-0530 Office
(559) 627-1926 Fax

TITLE
TYPICAL NOTES AND DETAILS

S1.4

PROJECT 23076

REGISTERED PROFESSIONAL ENGINEER — JACK D. BREWER — No. S5792 — Exp. 6-30-24 — STRUCTURAL — STATE OF CALIFORNIA

ASD
advanced structural design, inc.
STRUCTURAL ENGINEERS
7112 N. Fresno Street, suite 311
Fresno, California 93720
(559) 432-4151 office
asdi@asdiengr.com

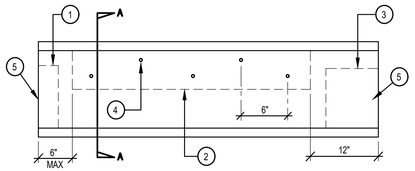

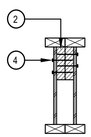

SECTION A-A

1. PLANT ATTACH WEB STIFFENERS AT LEFT END BTWN JOISTS PER STANDARD TYPICAL WEB STIFF DETAIL 2/S1.5.
2. FULL LENGTH FILLER BETWEEN JOISTS. SEE SCHEDULE BELOW.
3. LARGE STIFFENER BETWEEN JOISTS AT RIGHT END TO ALLOW FOR FIELD TRIMMING.
4. ATTACH FILLER WITH NAILS PER SCHEDULE @ 6"o.c. STAGG'D FROM EACH SIDE, SEE TABLE BELOW.
5. WEB STIFFENERS FOR EACH END (NOT SHOWN) ARE SHIPPED LOOSE.

I-JOIST FLANGE WIDTH (IN)	FILLER			FASTENER
	DEPTH	THICKNESS	MATERIAL	
3½"	5½"	2-1½"	LSL OR LVL	16d
2½"	5½"	2-1"	LSL OR LVL	8d

DOUBLE I-JOIST DETAIL

NTS 6014-03 — 13 / S1.5

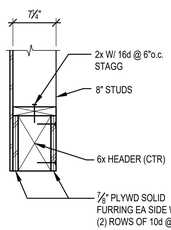

HEADERS AT 8" WALLS

1" ~ 1'-0" 6303-02 — 14 / S1.5

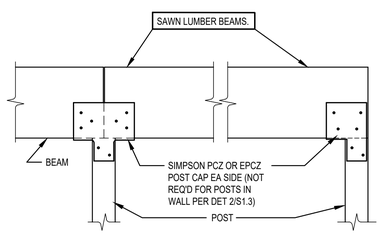

BEAM TO POST CONN

NTS 6201-01R — 15 / S1.5

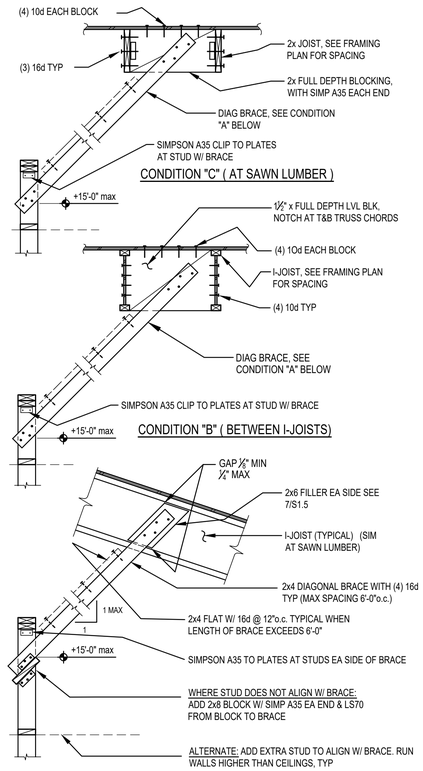

WALL BRACE DETAIL

NTS (INTERIOR WALLS) 6110-03A — 11 / S1.5

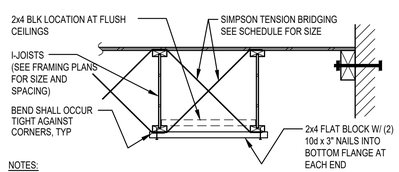

NOTES:

1. PROVIDE CONTINUOUS ROWS OF BRIDGING @ 14'-0"o.c. MAX FOR I-90 AND 10'-0"o.c. MAX FOR I -65. PROVIDE ONE ROW WITHIN 1'-0" OF ENDS OF JOISTS SUPPORTED BY TOP FLANGE HANGERS.
2. APPLY BRIDGING BETWEEN JOISTS W/ (2) 10d x 1½" NAILS EA END.
3. LOWER ENDS OF CROSS BRIDGING SHALL BE DRIVEN UP AND NAILED AFTER THE ROOF SHEATHING HAS BEEN NAILED, TYPICAL.
4. BRIDGING SHALL BE STRAIGHT. NO BOWING OR KINKS ALLOWED, TYPICAL.

JOIST HEIGHT	JOIST SPACING (INCHES)								
	12	16	19.2	24	30	32	36	42	48
9⅞	TB20	TB27	TB27	TB30	TB36	TB36	TB42	TB48	TB54
10	TB20	TB27	TB27	TB30	TB36	TB36	TB42	TB48	TB54
11⅞	TB20	TB27	TB27	TB30	TB36	TB36	TB42	TB48	TB54
12	TB20	TB27	TB27	TB30	TB36	TB36	TB42	TB48	TB54
14	TB27	TB27	TB27	TB36	TB36	TB42	TB42	TB48	TB54
16	TB27	TB27	TB30	TB36	TB42	TB42	TB42	TB48	TB54
18	TB27	TB30	TB30	TB36	TB42	TB42	TB48	TB54	TB56
20	TB30	TB30	TB36	TB36	TB42	TB42	TB48	TB54	TB56
22	TB30	TB36	TB36	TB36	TB42	TB42	TB48	TB54	TB56
24	TB36	TB36	TB36	TB42	TB42	TB48	TB48	TB54	TB56

I-JOIST BRIDGING DETAIL

NTS 6111-01i — 12 / S1.5

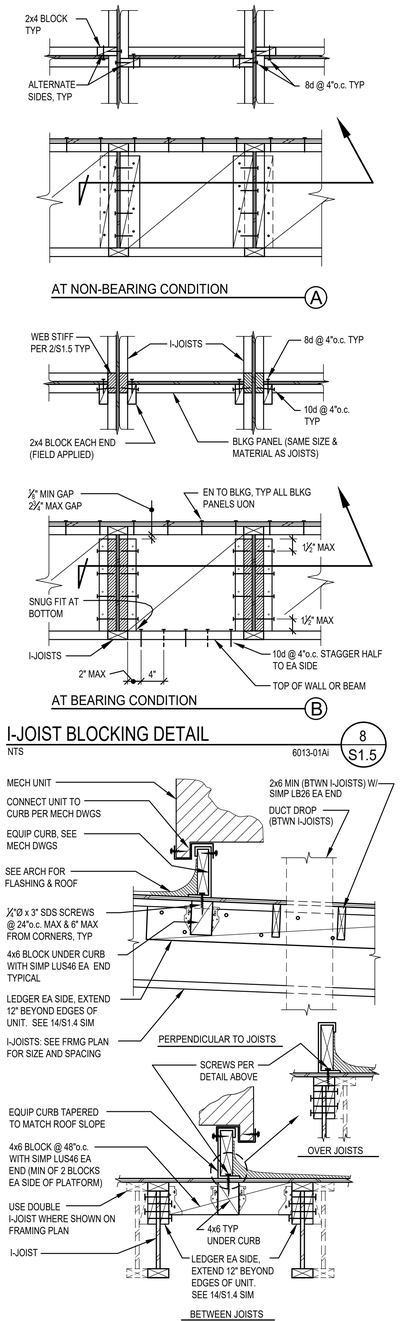

I-JOIST BLOCKING DETAIL

NTS 6013-01Ai — 8 / S1.5

FRAMING AT MECH EQUIP

(AT I-JOIST FRAMING) NTS 6102-01i — 9 / S1.5

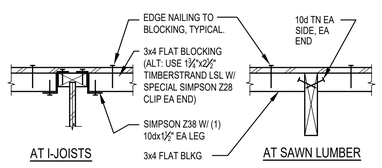

PLYWOOD EDGE BLOCKING

NTS 6006-01 — 10 / S1.5

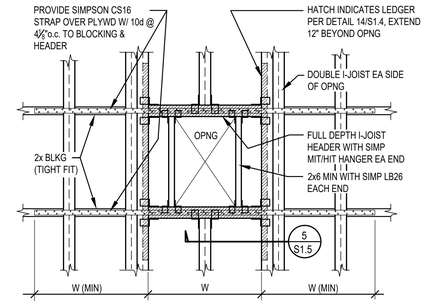

NOTES:

1. PROVIDE STRAPS AT ALL ROOF OPENINGS WITH EITHER DIMENSION 2'-0" OR GREATER.
2. MAXIMUM SIZE OF OPENING = 4'-0" SQUARE UNLESS DETAILED ON PLANS.
3. PROVIDE DOUBLE JOIST EACH SIDE OF OPENING WHERE JOISTS ARE CUT.
4. PROVIDE PLYWOOD EDGE NAILING ALL AROUND OPENING.

TYPICAL FRAMING AT OPENINGS

(AT I-JOISTS) NTS 6103-02Ai — 4 / S1.5

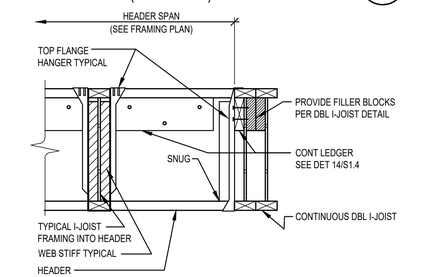

HEADER AT I-JOIST

NTS 6015-03i — 5 / S1.5

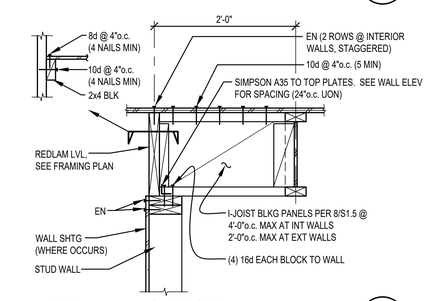

LATERAL WALL SUPPORT

NTS 6300-03 — 6 / S1.5

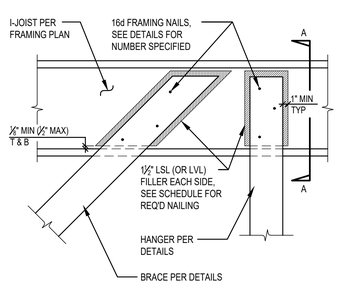

FILLER NAILING SCHEDULE	
FRAMING NAILS PER DETAILS	REQ'D FILLER NAILS (EACH SIDE)
(2) 16d	(2) 16d
(3) 16d	(2) 16d
(4) 16d	(3) 16d
(5) 16d	(4) 16d
(6) 16d	(5) 16d

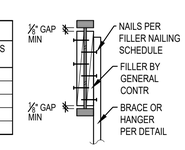

SECTION A-A

FILLER BLOCK DETAIL

NTS 6110-04 — 7 / S1.5

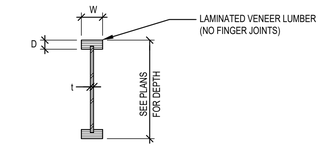

I-JOIST	FLANGE		WEB	
	W	D	THICK "t"	MATERIAL
11⅞" RED-I90	3½"	1½"	7/16"	OSB
16" RED-I90	3½"	1½"	7/16"	OSB

MINIMUM SECTION PROPERTIES			
I-JOIST	M allow (#-ft) AT 100%	V allow (#) AT 100%	E(10^6#-in^2)
11⅞" RED-I90	9,605	2,255	621
16" RED-I90	13,115	2,810	1,246

NOTES:

1. RED-I JOISTS ARE MANUFACTURED BY RED BUILT, LLC. THE RED-I SECTION PROPERTIES ARE BASED ON ICC ESR-2994.

I-JOIST PROPERTIES

NTS 6016-01A — 1 / S1.5

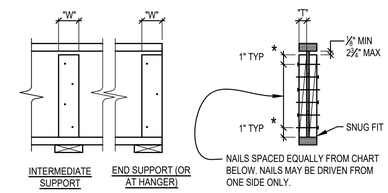

* ½" TYP AT 2x4 WEB STIFFENERS

I-JOIST DEPTH/SERIES	NO. OF NAILS REQUIRED		MIN WEB STIFFENER WIDTH "W"	MIN WEB STIFFENER THICK "T"
	END OR HANGER	INTERMEDIATE		
11⅞" RED-I90	(2) 16d	(2) 16d	3½"	1½"
16" RED-I90	(4) 16d	(4) 16d	3½"	1½"

NOTES:

1. ALL STIFFENERS ARE TO BE SUPPLIED BY MFR.
2. WEB STIFFENERS ARE REQUIRED AT ALL BEARINGS AND AT HANGERS.
3. GAP MUST BE AT THE TOP FOR ALL BEARING CONDITIONS. STIFFENER MUST BE SNUG TO BOTTOM CHORD.
4. WEB STIFFENER MATERIAL FOR RED-I90 SHALL BE 2x4 CONSTR GRADE OR LVL.

I-JOIST WEB STIFFENERS

NTS 6013-02i — 2 / S1.5

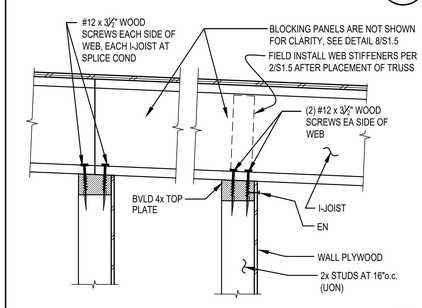

I-JOIST CONNECTION

NTS 6017-02i — 3 / S1.5

APPROVALS

FILE # 54-76 APPLICATION # 02-121996

IDENTIFICATION STAMP
DIV. OF THE STATE ARCHITECT
APP: 02-121996 INC:
REVIEWED FOR
SS ☑ FLS ☑ ACS ☑
DATE: 8/14/2024

LICENSED ARCHITECT MICHAEL J. SCOTT No. C-34290 REN. 05-31-25 STATE OF CALIFORNIA

DATE: DECEMBER 31, 2023

NEW PRESCHOOL, TK, AND KINDERGARTEN CLASSROOMS AT SANTA FE ELEMENTARY SCHOOL

PORTERVILLE UNIFIED SCHOOL DISTRICT
286 E ORANGE AVENUE, PORTERVILLE, CA 93257

REVISIONS

MANGINI ARCHITECTURE INGENUITY
BARENG MORRELLI SCOTT
MANGINI ASSOCIATES INC.
4320 West Mineral King Avenue
Visalia, California 93291
www.mangini.us
(559) 627.0530 Office
(559) 627.1926 Fax

TITLE
TYPICAL NOTES AND DETAILS

S1.5

PROJECT 23076

REGISTERED PROFESSIONAL ENGINEER JACK D. BREWER No. S5792 Exp. 6-30-25 STRUCTURAL STATE OF CALIFORNIA

ASD
advanced structural design, inc.
STRUCTURAL ENGINEERS
7112 N. Fresno Street, suite 311
Fresno, California 93720
(559) 432-4151 office
asdi@asdiengr.com

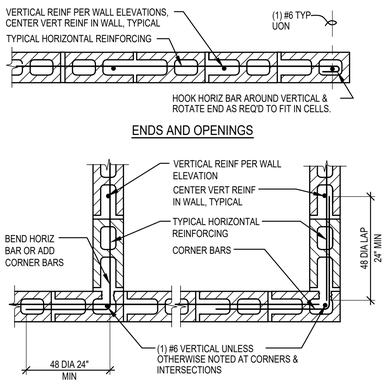

CMU WALL REINFORCING
(SINGLE CURTAIN) NTS 4001-01 — 9 / S1.6

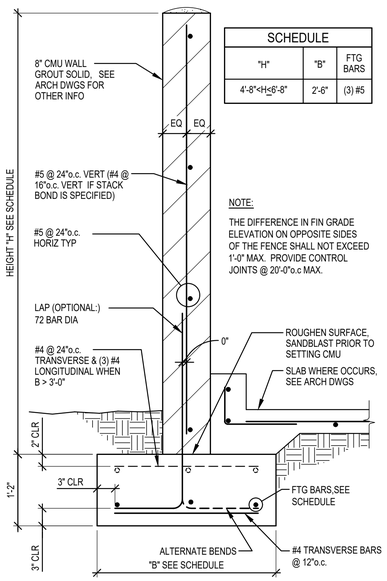

SCHEDULE		
"H"	"B"	FTG BARS
4'-8"<H≤6'-8"	2'-6"	(3) #5

NOTE:
THE DIFFERENCE IN FIN GRADE ELEVATION ON OPPOSITE SIDES OF THE FENCE SHALL NOT EXCEED 1'-0" MAX. PROVIDE CONTROL JOINTS @ 20'-0"o.c MAX.

NOTE: TESTING AND SPECIAL INSPECTION FOR CMU FENCE MAY BE WAIVED PER DSA IR 21-1 AND DSA 103 FORM.

CMU FENCE DETAIL
NTS 4500-00a — 8 / S1.6

NOTE: DO NOT CUT, DRILL, OR NOTCH FLANGES.

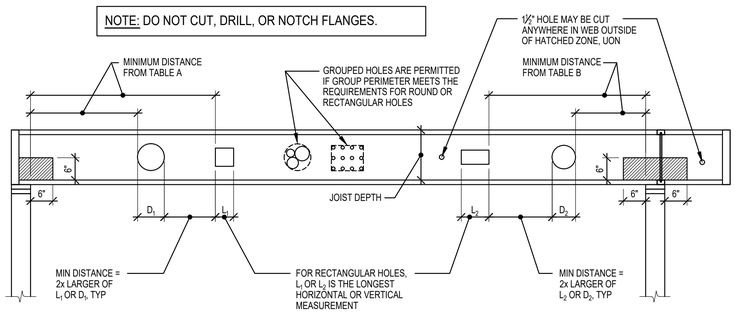

DO NOT CUT HOLES LARGER THAN 1½" IN CANTILEVER WITHOUT CONSULTING STRUCTURAL ENGINEER OF RECORD.

TABLE A — END SUPPORT OR SIMPLE SPAN									TABLE B — INTERMEDIATE OR CANTILEVER SUPPORT						
		○ ROUND HOLE SIZE							○ ROUND HOLE SIZE						
		2"	4"	6"	8"	10"	12"	14"	2"	4"	6"	8"	10"	12"	14"
		□ RECTANGULAR HOLE SIZE							□ RECTANGULAR HOLE SIZE						
JOIST DEPTH	JOIST SERIES	1.25"	2.5"	4"	5"	6"	7"	8.5"	1.25"	2.5"	4"	5"	6"	7"	8.5"
14"	-90	1'-0"	3'-0"	5'-0"	6'-6"	–	–	–	1'-0"	3'-6"	6'-0"	9'-0"	–	–	–
16"	-90	1'-0"	2'-0"	4'-0"	6'-0"	8'-6"	–	–	1'-0"	1'-6"	4'-6"	8'-0"	11'-0"	–	–
18"	-90	1'-0"	1'-0"	2'-6"	5'-0"	7'-0"	9'-6"	–	1'-0"	1'-0"	2'-6"	5'-6"	9'-0"	12'-6"	–
20"	-90	1'-0"	1'-0"	2'-0"	4'-0"	6'-0"	8'-0"	11'-0"	1'-0"	1'-0"	1'-0"	3'-6"	7'-0"	10'-6"	14'-6"

NOTES:
1. TABULATED DISTANCE IS THE MINIMUM DISTANCE FROM THE EDGE OF HOLE TO INSIDE FACE OF NEAREST SUPPORT.
2. MAINTAIN MINIMUM DISTANCE PER TABLE FROM BOTH SUPPORTS.
3. HOLES MAY BE LOCATED VERTICALLY ANYWHERE IN THE WEB. LEAVE ½" OF WEB (MINIMUM) AT TOP AND BOTTOM OF HOLE (DO NOT CUT FLANGES).
4. WHERE 1½" KNOCKOUTS ARE PRESENT, THEY DO NOT AFFECT HOLE PLACEMENT.
5. INTERPOLATION BETWEEN HOLES SIZES SHOWN IN THE TABLES IS NOT ALLOWED. USE NEXT LARGEST HOLE SIZE FOR MINIMUM DISTANCE REQUIREMENTS.

RED-I JOIST™ ALLOWABLE HOLES
NTS 6117-01 — 10 / S1.6

CONCRETE BLOCK NOTES
(TITLE 24)

1. BLOCK UNITS: ALL CONCRETE BLOCK UNITS SHALL BE LIGHT WEIGHT OR MEDIUM WEIGHT, AND SHALL BE MANUFACTURED IN COMPLIANCE WITH ASTM C-90, GRADE N, AND UNITS SHALL BE PLACED IN A RUNNING BOND PATTERN. TYPICAL UNLESS NOTED OTHERWISE. VERTICAL BARS SHALL BE SPACED @ 16"o.c. MAX FOR STACKED BOND.
2. GROUTING: ALL CELLS SHALL BE SOLIDLY FILLED WITH GROUT. GROUT SHALL BE CONSOLIDATED BY MECHANICAL VIBRATION DURING PLACING & RECONSOLIDATED AFTER EXCESS MOISTURE HAS BEEN ABSORBED, BUT BEFORE WORKABILITY IS LOST. THE GROUTING OF ANY SECTION OF A WALL SHALL BE COMPLETED IN ONE DAY, WITH NO INTERRUPTIONS GREATER THAN ONE HOUR.
3. WEBS & CELLS: WEBS OF EACH COURSE SHALL BE CENTERED ON WEBS BELOW. VERTICAL CELLS SHALL HAVE VERTICAL ALIGNMENT TO MAINTAIN A CLEAN UNOBSTRUCTED VERTICAL FLUE MEASURING NOT LESS THAN 3" x 3".
4. OPEN END UNITS: OPEN END UNITS SHALL BE USED WITH ALL REINFORCED CELLS EXCEPT AT JAMBS. ALL CELLS, REINFORCED OR NOT, SHALL BE FILLED WITH GROUT. HORIZONTAL REINFORCEMENT SHALL BE PLACED IN BOND BEAM UNITS WITH A MINIMUM GROUT COVER OF 1" ABOVE THE STEEL FOR EACH GROUT POUR.
5. FOOTING DOWELS: FOOTING DOWELS TO MATCH VERTICAL WALL REINFORCING SHALL BE PROVIDED AT ALL POINTS WHERE CELLS ARE TO BE REINFORCED.
6. REINFORCING: SEE CONCRETE NOTES FOR REINFORCING STEEL GRADES. MAXIMUM SIZE OF REINFORCING IN 8" WALLS IS #6. MAX SIZE IN 12" CMU IS #8.
7. REINFORCING POSITIONERS: REINFORCING SHALL BE STRAIGHT AND PLACED ACCURATELY IN POSITION. VERTICAL BARS IN CELLS SHALL BE HELD IN PLACE BY AN APPROVED MECHANICAL DEVICE AT TOP AND BOTTOM AND AT INTERVALS NOT TO EXCEED 192 BAR DIAMETERS NOR 10 FEET.
8. SPLICES: SPLICES IN REINFORCING STEEL SHALL BE 48 BAR DIAMETERS FOR #5 AND SMALLER BARS AND 62 BAR DIAMETERS FOR #6 AND LARGER BARS UNLESS NOTED OTHERWISE. WHEN ADJACENT SPLICES ARE SEPARATED BY 3" OR LESS, INCREASE THE LAP LENGTH TO 72 DIAMETERS. IF SPLICES ARE STAGGERED AT LEAST 24 BAR DIAMETERS, NO INCREASE IS REQUIRED. PILASTER BARS SHALL BE ONE PIECE FULL HEIGHT UNLESS DETAILED OTHERWISE.
9. CHORD BARS: PROVIDE (2) #5 HORIZONTAL BARS MINIMUM IN WALLS AT ALL ROOFS AND FLOORS IN ADDITION TO TYPICAL HORIZONTAL REINFORCING. LAP BARS 72 BAR DIAMETERS AT SPLICES. RUN BARS CONTINUOUS THROUGH MC/'s.
10. CLEANOUTS: WHERE BLOCK IS LAID TO A MAXIMUM OF FOUR FEET BEFORE GROUTING, NO CLEANOUTS SHALL BE REQUIRED. WHERE THE BLOCK IS LAID TO HEIGHTS GREATER THAN FOUR FEET BEFORE GROUTING, CLEANOUTS SHALL BE PROVIDED AT THE BOTTOM OF ALL CELLS. CLEANOUTS SHALL BE OF SUFFICIENT SIZE AND LOCATION TO ALLOW THOROUGH FLUSHING AWAY OF ALL MORTAR DROPPINGS AND DEBRIS.
11. HIGH LIFT: THE MAXIMUM HEIGHT OF POURS FOR HIGH LIFT SHALL BE LIMITED TO 12 FEET FOR 8" CMU AND 16 FEET FOR 12" CMU. BETWEEN GROUT POURS, HORIZONTAL CONSTRUCTION JOINTS SHALL BE FORMED BY STOPPING ALL MASONRY UNITS AT THE SAME ELEVATION AND WITH THE GROUT STOPPING A MINIMUM OF 1½" BELOW THE MORTAR JOINT, EXCEPT AT THE TOP OF THE WALL. WHERE BOND BEAMS OCCUR, THE GROUT SHALL BE STOPPED A MINIMUM OF ½" BELOW THE TOP OF THE MASONRY.
12. REINFORCING IN WALLS: SEE TYPICAL DETAILS FOR MIN REINFORCING AT ENDS, CORNERS, INTERSECTIONS AND OPENINGS IN WALLS, UNLESS OTHERWISE NOTED.
13. EMBEDDED ITEMS: ALL REINFORCING AND EMBEDDED ITEMS SHALL BE PLACED AND SECURELY ANCHORED AGAINST MOVING PRIOR TO GROUTING. BOLTS SHALL BE ACCURATELY SET WITH TEMPLATES OR APPROVED EQUIVALENT MEANS AND HELD IN PLACE TO PREVENT DISLOCATION DURING GROUTING. ALL BOLTS AND ANCHORS SHALL BE GROUTED IN PLACE WITH AT LEAST 1 INCH OF GROUT ALL AROUND BETWEEN THE BOLT AND THE MASONRY.
14. GROUT: CEMENT GROUT SHALL CONSIST OF ONE PART PORTLAND CEMENT, 2¼ TO 3 PARTS SAND, AND 1 TO 2 PARTS OF ⅜" PEA GRAVEL. CEMENT CONTENT SHALL CONTAIN 15% TO 20% FLY ASH PER ASTM C-618 CLASS F. ALL GROUT SHALL CONTAIN "SIKA GROUT AID" TO COUNTERACT GROUT SHRINKAGE.
15. GROUT STRENGTH: GROUT SHALL ATTAIN A MINIMUM COMPRESSIVE STRENGTH OF 2000 psi AT 28 DAYS AND TEST SPECIMENS SHALL BE PREPARED PER ASTM C-1019.
16. MORTAR (TYPE S): CEMENT MORTAR SHALL CONSIST OF ONE PART PORTLAND CEMENT, OVER ¼ TO ½ PARTS LIME PUTTY, AND 2¼ TO 3 TIMES THE SUM OF THE SEPARATE VOLUMES OF CEMENTITIOUS MATERIALS OF SAND. LIME SHALL BE THE LAST MATERIAL ADDED TO THE MIXER.
17. MORTAR STRENGTH: MORTAR SHALL ATTAIN A MINIMUM COMPRESSIVE STRENGTH OF 1800 psi AT 28 DAYS AND TEST SPECIMENS SHALL BE PREPARED PER ASTM C 1586 AND ASTM C-270.
18. PIPES/CONDUITS: PIPE OR CONDUIT SHALL NOT BE EMBEDDED IN ANY MASONRY UNLESS SPECIFICALLY DETAILED. ANY PIPE OR CONDUIT MAY PASS PERPENDICULAR THROUGH ANY MASONRY BY MEANS OF A SLEEVE AT LEAST LARGE ENOUGH TO PASS ANY HUB OR COUPLING ON THE PIPE LINE. SUCH SLEEVES SHALL BE PLACED NOT CLOSER THAN THREE DIAMETERS, CENTER TO CENTER.
19. CODES: ALL WORK SHALL CONFORM TO THE REQUIREMENTS OF THE CBC, TITLE 24 AND IR 21-2.13
20. MASONRY STRENGTH: MINIMUM ULTIMATE COMPRESSIVE STRENGTH IN 28 DAYS: f'm = 2000 psi

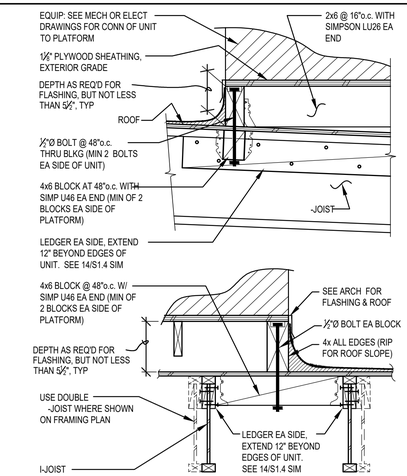

EQUIP PLATFORM
(AT -JOIST FRAMING) NTS 6102-02i — 5 / S1.6

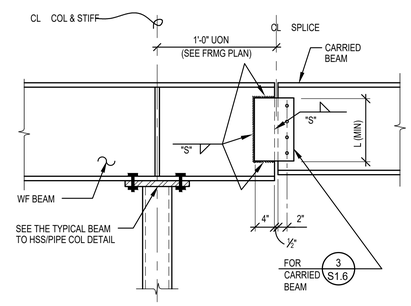

BEAM SPLICE DETAIL
NTS 5211-02 — 6 / S1.6

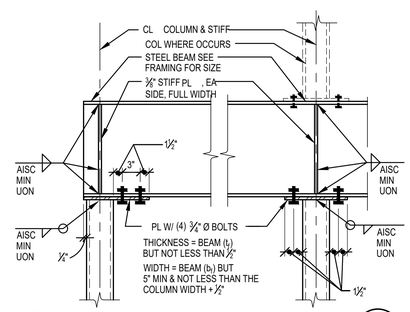

BEAM TO HSS/PIPE COLUMN
NTS 5203-01 — 7 / S1.6

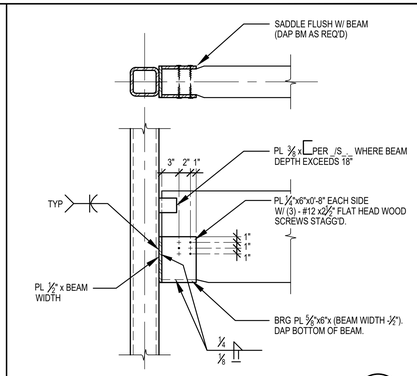

FLUSH BEAM SADDLE
NTS 5204-05 — 1 / S1.6

SCHEDULE A — SINGLE-PLATE SHEAR CONNECTION					
BEAM SIZE	BOLTS	TYPE	SHEAR PLATE		
			MIN L	t	WELD "S"
W8,W10	(2) ¾"Ø	A307	6"	¼"	3/16"
W12,W14	(3) ¾"Ø	A307	9"	3/16"	¼"
W16	(4) ¾"Ø	A307	12"	3/16"	¼"
W18	(5) ¾"Ø	A307	15"	¼"	3/16"
W21,W24	(6) ¾"Ø	A307	18"	¼"	3/16"
W27	(7) ¾"Ø	A307	21"	¼"	3/16"
W30	(8) ¾"Ø	A307	24"	¼"	3/16"
W33	(9) ¾"Ø	A307	27"	¼"	3/16"
W36	(10) ¾"Ø	A307	30"	¼"	3/16"

NOTE:
1. BOLT HOLES SHALL BE STANDARD UON.
2. WHERE SLOTTED HOLES ARE SHOWN IN AN OUTER PLY, A FLAT HARDENED WASHER OR COMMON PLATE WASHER SHALL BE INSTALLED OVER THE SLOT.

BEAM CONN SCHEDULE
¾"Ø A307 5206-05(15th) — 2 / S1.6

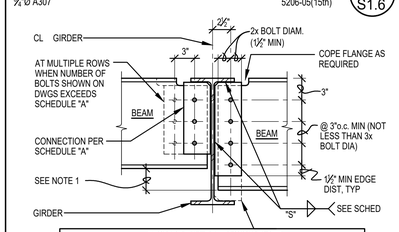

PROVIDE FULL DEPTH CONN PLATE:
1. AT DEEPER BEAM, WHERE DIFFERENCE IN BEAM DEPTH EXCEEDS 6".
2. AT EACH BEAM, WHERE BEAMS ARE OFFSET MORE THAN 1'-0" IN PLAN.
3. WHERE BEAM OCCURS ON ONE SIDE ONLY.

BEAMS TO GIRDER CONN
NTS 5207-01 — 3 / S1.6

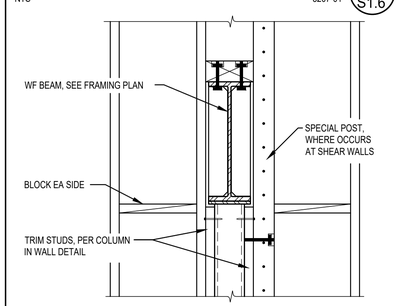

TYP WF BEAM TO STUD WALL
NTS 6306-07 — 4 / S1.6

REGISTERED PROFESSIONAL ENGINEER JACK D. BRENNER No. S5792 Exp. 6-30-25 STRUCTURAL STATE OF CALIFORNIA

ASD
advanced structural design, inc.
STRUCTURAL ENGINEERS
7112 N. Fresno Street, suite 311
Fresno, California 93720
(559) 432-4151 office
asdi@asdiengr.com

APPROVALS
FILE # 54-76 APPLICATION # 02-121996
IDENTIFICATION STAMP DIV. OF THE STATE ARCHITECT
APP: 02-121996 INC:
REVIEWED FOR
SS ☑ FLS ☑ ACS ☑
DATE: 8/14/2024

LICENSED ARCHITECT MICHEL J. SCOTT No. C-34290 REN. 05-31-25 STATE OF CALIFORNIA
DATE: DECEMBER 31, 2023

NEW PRESCHOOL, TK, AND KINDERGARTEN CLASSROOMS AT SANTA FE ELEMENTARY SCHOOL
PORTERVILLE UNIFIED SCHOOL DISTRICT
286 E ORANGE AVENUE, PORTERVILLE, CA 93257

REVISIONS

MANGINI ARCHITECTURE ENGINEERING
BARENG MORRELLI SCOTT
MANGINI ASSOCIATES INC.
4320 West Mineral King Avenue
Visalia, California 93291
www.mangini.us
(559) 627.0530 Office
(559) 627.1926 Fax

TITLE
TYPICAL NOTES AND DETAILS

S1.6

PROJECT 23076

P:\M62317 Santa Fe TK\Struct\S1.6_Typ.dwg Jun 24 2024 4:29pm

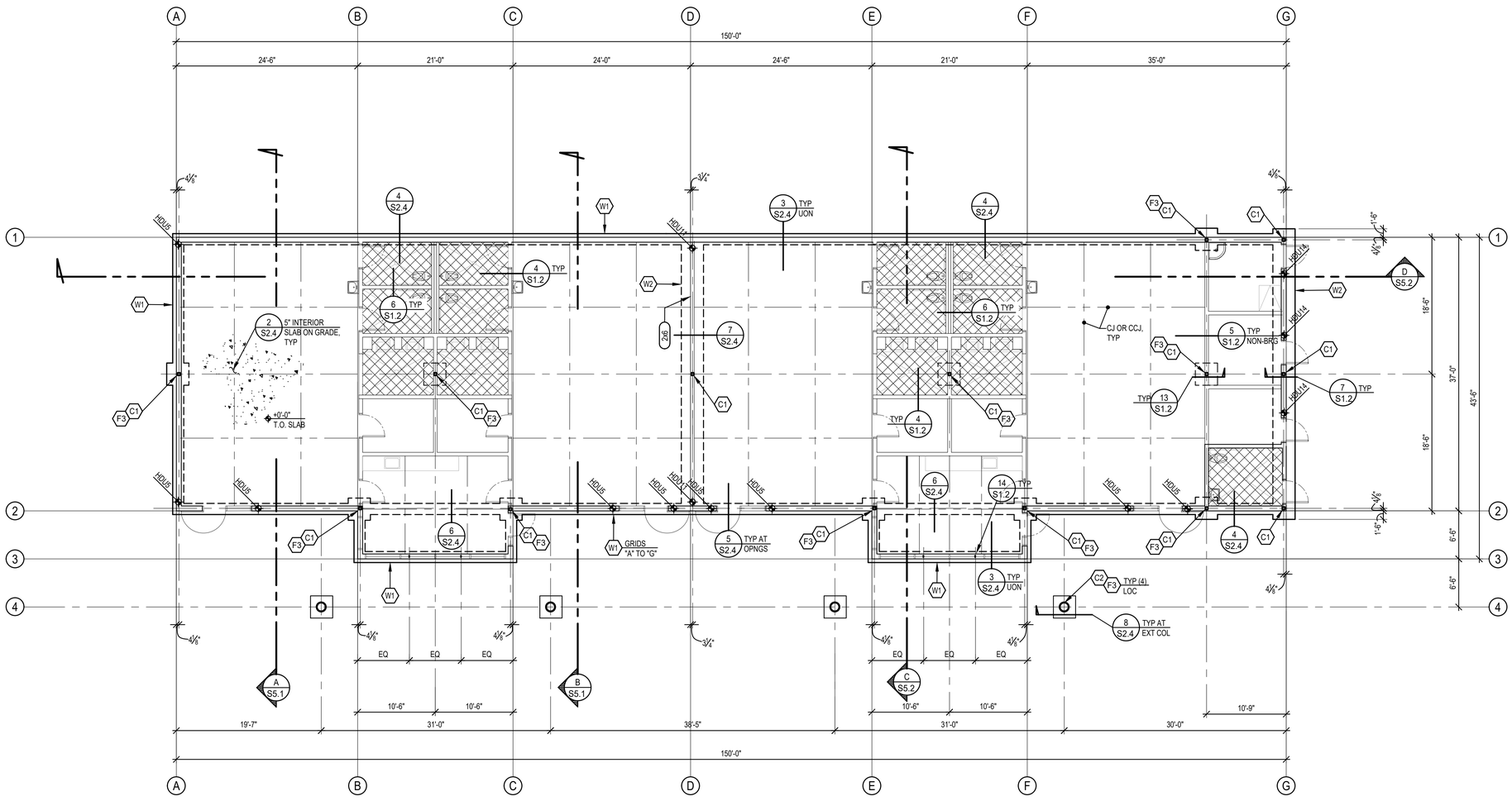

FOUNDATION PLAN

1/8" = 1'-0"

B.O. FOOTING ELEV = -3'-0" TYP UON

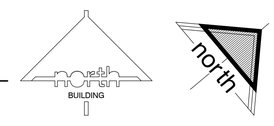

FOUNDATION NOTES

1. SEE SHEET S1.1 FOR GENERAL NOTES AND FOUNDATION NOTES.
2. REVIEW ALL DETAILS RELATED TO FOUNDATIONS ON THE TYPICAL DETAIL SHEETS PRIOR TO STARTING ANY WORK. TYPICAL DETAILS APPLY UNLESS SPECIFICALLY SHOWN OTHERWISE.
3. ALL REINFORCING AT CONTINUOUS FOOTINGS, INCLUDING TIES OR STIRRUPS, SHALL CONTINUE THRU PAD FOOTINGS.
4. SEE ARCHITECTURAL DRAWINGS AND/OR CIVIL DRAWINGS FOR LOCATIONS OF SIDEWALKS, PLANTERS, AND MOW STRIPS AROUND THE BUILDING PERIMETER.
5. PROVIDE SLIP DOWELS AT BUILDING SLAB TO EXTERIOR SLABS AND SIDEWALKS AT ALL DOOR OPENINGS.
6. SEE ARCHITECTURAL AND PLUMBING DRAWINGS FOR FLOOR DRAIN LOCATIONS WHICH MAY NOT NECESSARILY BE SHOWN ON FOUNDATION PLANS. SLOPE SLABS TO DRAINS.
7. COORDINATE LOCATION AND DEPTH OF ALL DEPRESSED SLABS WITH ARCHITECTURAL DRAWINGS.
8. DIMENSIONS AND GRID LINES ARE FROM F.O. PLYWOOD OR CL OF COLUMNS, TYP UON.

LEGEND

CCJ = CRACK CONTROL JOINT PER DET 10/S1.1

CJ = CONSTRUCTION JOINT PER DET 9/S1.1

= COLUMN / FOOTING TYPE

= BOTTOM OF FOOTING ELEVATION

HDU = SIMPSON HOLDOWN PER DET 10/S1.3

= 6" HIGH CONC CURB

= DEPRESSED SLAB AREA (-3" UON), SEE DET 4/S1.2

XxX = NOMINAL SIZE OF WALL STUDS. ALL STRUCTURAL WALLS ARE 2x8 UON. SEE ARCH DWGS FOR NON-STRUCTURAL WALL SIZES

FOOTING SCHEDULE

MARK	PLAN DIMENSION	DEPTH	REINFORCEMENT
W1	1'-6"	2'-0"	(2) #5 CONT T&B W/ #3 STIRRUPS @24" o.c.
W2	3'-0"	2'-0"	(4) #6 CONT T&B W/ #3 STIRRUPS @24" o.c.
F3	3'-0" SQ	2'-0"	(4) #6 EW T&B

COLUMN SCHEDULE

MARK	SIZE	BASE PLATE	REF DET
C1	HSS 5x5x¼	¾"x11" SQ	15/S1.2
C2	HSS 16"Øx0.375	¾"x18" SQ	8/S2.4

APPROVALS

FILE # 54-76 APPLICATION # 02-121996

IDENTIFICATION STAMP
DIV. OF THE STATE ARCHITECT
APP: 02-121996 INC:
REVIEWED FOR
SS ☑ FLS ☑ ACS ☑
DATE: 8/14/2024

LICENSED ARCHITECT
MICHAEL J. SCOTT
No. C-34290
REN. 05-31-25
STATE OF CALIFORNIA

DATE: DECEMBER 31, 2023

NEW PRESCHOOL, TK, AND KINDERGARTEN CLASSROOMS AT SANTA FE ELEMENTARY SCHOOL

PORTERVILLE UNIFIED SCHOOL DISTRICT

286 E ORANGE AVENUE, PORTERVILLE, CA 93257

REVISIONS

MANGINI ARCHITECTURE INGENUITY
BARENG MORRELLI SCOTT
MANGINI ASSOCIATES INC.
4320 West Mineral King Avenue
Visalia, California 93291
www.mangini.us
(559) 627-0530 Office
(559) 627-1926 Fax

TITLE
BUILDING 700
FOUNDATION
PLAN

S2.1

PROJECT 23076

REGISTERED PROFESSIONAL ENGINEER
JACK D. BREWER
No. S5792
Exp. 6-30-25
STRUCTURAL
STATE OF CALIFORNIA

ASD
advanced structural design, inc.
STRUCTURAL ENGINEERS
7112 N. Fresno Street, suite 311
Fresno, California 93720
(559) 432-4151 office
asdi@asdiengr.com

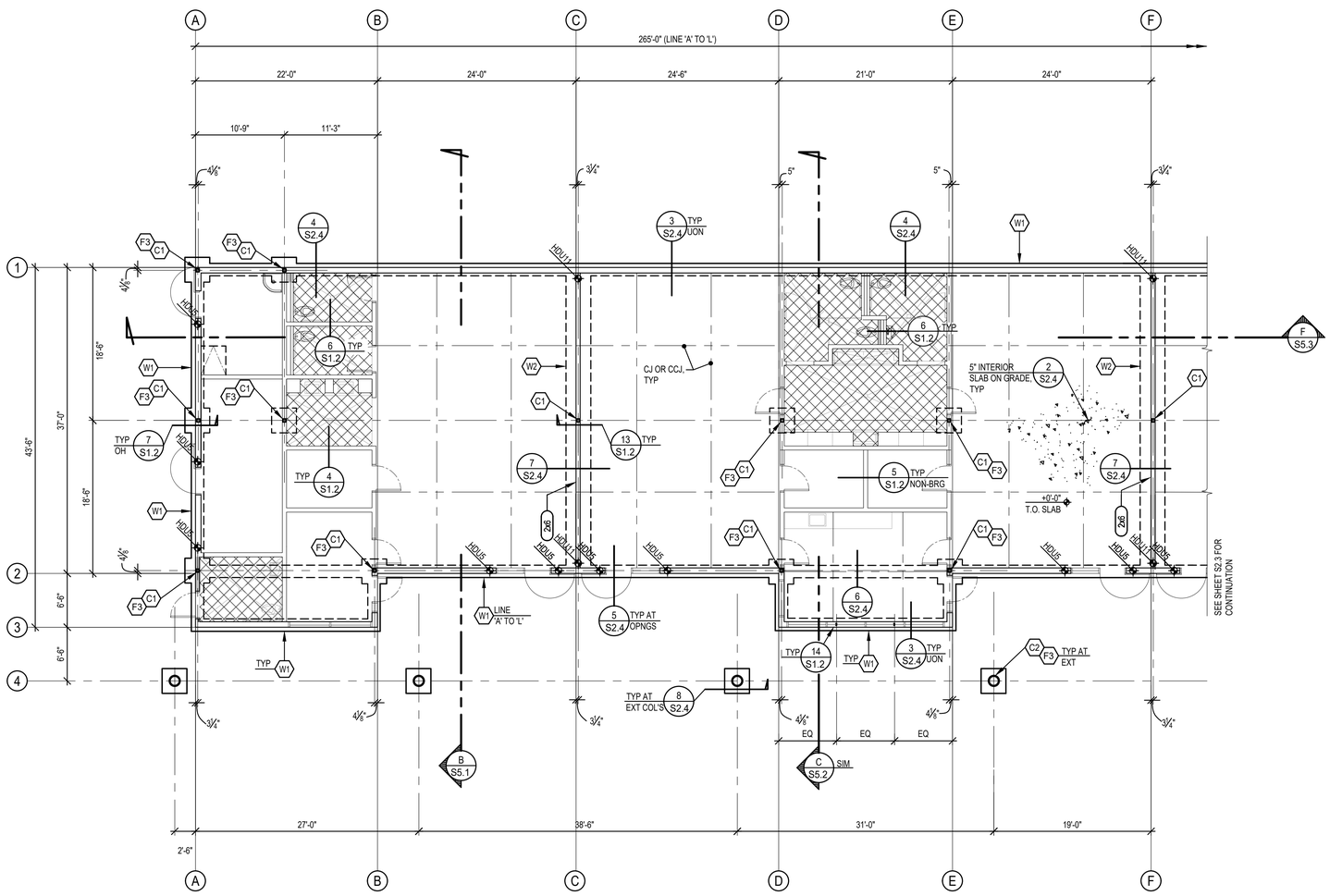

PARTIAL FOUNDATION PLAN

1/8" = 1'-0"

B.O. FOOTING ELEV = -3'- 0" TYP UON

north

FOUNDATION NOTES

1. SEE SHEET S2.1 FOR FOUNDATION NOTES

LEGEND

CCJ = CRACK CONTROL JOINT PER DET 10/S1.1

CJ = CONSTRUCTION JOINT PER DET 9/S1.1

= COLUMN / FOOTING TYPE

= BOTTOM OF FOOTING ELEVATION

= SIMPSON HOLDOWN PER DET 10/S1.3

= 6" HIGH CONC CURB

= DEPRESSED SLAB AREA (-3" UON), SEE DET 4/S1.2

XxX = NOMINAL SIZE OF WALL STUDS. ALL STRUCTURAL WALLS ARE 2x8 UON. SEE ARCH DWGS FOR NON-STRUCTURAL WALL SIZES

FOOTING SCHEDULE

MARK	PLAN DIMENSION	DEPTH	REINFORCEMENT
W1	1'-6"	2'-0"	(2) #5 CONT T&B W/ #3 STIRRUPS @24" o.c.
W2	3'-0"	2'-0"	(4) #6 CONT T&B W/ #3 STIRRUPS @24" o.c.
F3	3'-0" SQ	2'-0"	(4) #6 EW T&B

COLUMN SCHEDULE

MARK	SIZE	BASE PLATE	REF DET
C1	HSS 5x5x1/4	3/4"x11" SQ	15/S1.2
C2	HSS 16"Øx0.375	3/4"x18" SQ	8/S2.4

APPROVALS

FILE # 54-76 APPLICATION # 02-121996

IDENTIFICATION STAMP
DIV. OF THE STATE ARCHITECT
APP: 02-121996 INC:
REVIEWED FOR
SS ☑ FLS ☑ ACS ☑
DATE: 8/14/2024

LICENSED ARCHITECT
MICHAEL J. SCOTT
No. C-34290
REN. 05-31-25
STATE OF CALIFORNIA

DATE: DECEMBER 31, 2023

NEW PRESCHOOL, TK, AND KINDERGARTEN CLASSROOMS AT SANTA FE ELEMENTARY SCHOOL

PORTERVILLE UNIFIED SCHOOL DISTRICT

286 E ORANGE AVENUE, PORTERVILLE, CA 93257

REVISIONS

MANGINI ARCHITECTURE INCORPORATED

BARENG MORRELLI SCOTT

MANGINI ASSOCIATES INC.
4320 West Mineral King Avenue
Visalia, California 93291

www.mangini.us
(559) 627.0530 Office
(559) 627.1926 Fax

TITLE

BUILDING 800
FOUNDATION
PLAN

S2.2

PROJECT 23076

REGISTERED PROFESSIONAL ENGINEER
JACK D. BRENNEMAN
No. S5792
Exp. 6-30-25
STRUCTURAL
STATE OF CALIFORNIA

ASDi
advanced structural design, inc.
STRUCTURAL ENGINEERS
7112 N. Fresno Street, suite 311
Fresno, California 93720
(559) 432-4151 office
asdi@asdiengr.com

P:\M62317 Santa Fe TK\Struct\S2.3_ Building 800TK Foundation.dwg Jun 24 2024 4:29pm

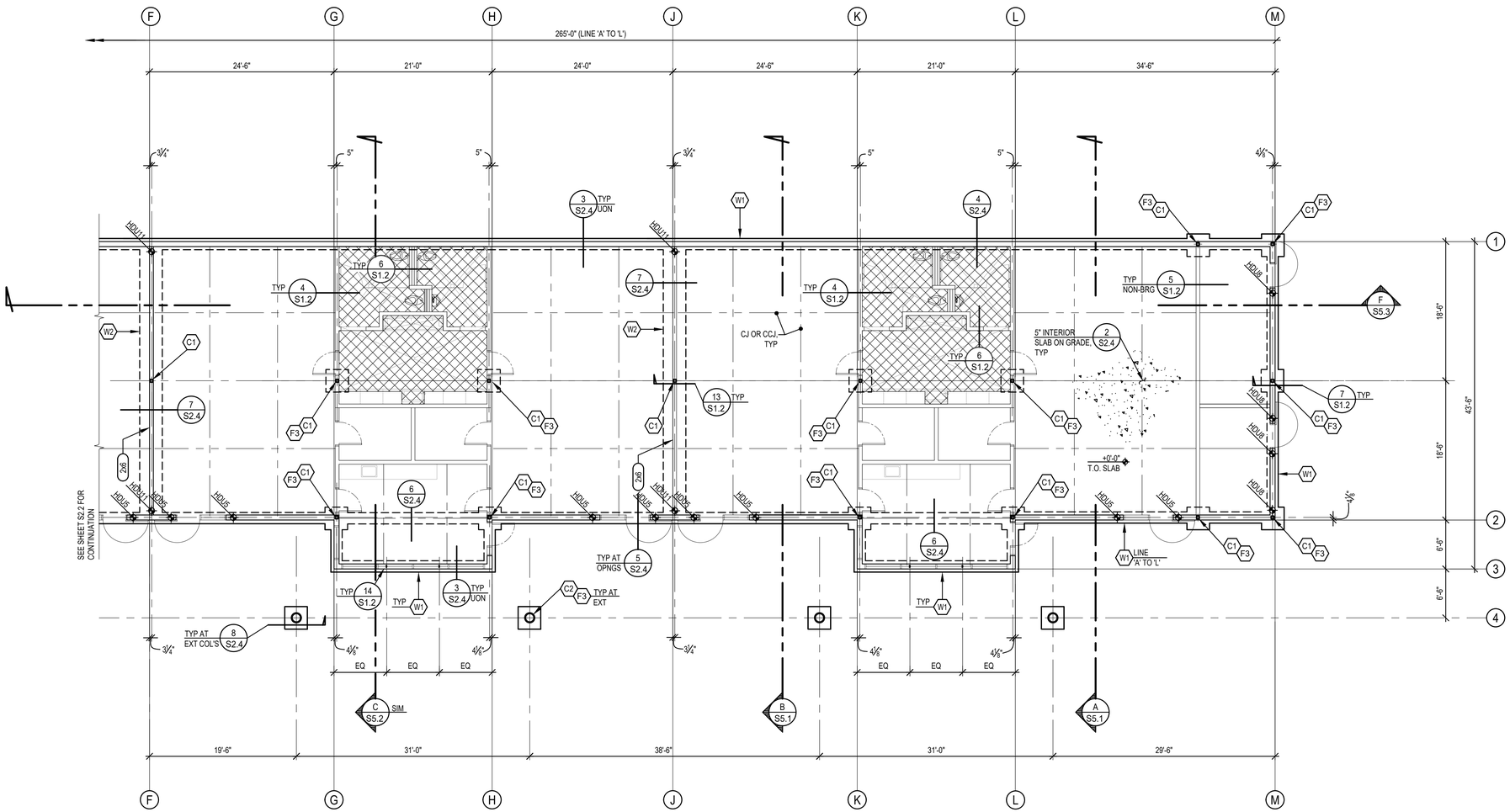

PARTIAL FOUNDATION PLAN

1/8" = 1'-0"

B.O. FOOTING ELEV = -3'-0" TYP UON

north

FOUNDATION NOTES

1. SEE SHEET S2.1 FOR FOUNDATION NOTES

LEGEND

CCJ = CRACK CONTROL JOINT PER DET 10/S1.1

CJ = CONSTRUCTION JOINT PER DET 9/S1.1

= COLUMN / FOOTING TYPE

= BOTTOM OF FOOTING ELEVATION

= SIMPSON HOLDOWN PER DET 10/S1.3

= 6" HIGH CONC CURB

= DEPRESSED SLAB AREA (-3" UON), SEE DET 4/S1.2

= NOMINAL SIZE OF WALL STUDS. ALL STRUCTURAL WALLS ARE 2x8 UON. SEE ARCH DWGS FOR NON-STRUCTURAL WALL SIZES

FOOTING SCHEDULE

MARK	PLAN DIMENSION	DEPTH	REINFORCEMENT
W1	1'-6"	2'-0"	(2) #5 CONT T&B W/ #3 STIRRUPS @24" o.c.
W2	3'-0"	2'-0"	(4) #6 CONT T&B W/ #3 STIRRUPS @24" o.c.
F3	3'-0" SQ	2'-0"	(4) #6 EW T&B

COLUMN SCHEDULE

MARK	SIZE	BASE PLATE	REF DET
C1	HSS 5x5x1/4	3/4"x11" SQ	15/S1.2
C2	HSS 16"Øx0.375	7/8"x18" SQ	8/S2.4

APPROVALS

FILE # 54-76 APPLICATION # 02-121996

IDENTIFICATION STAMP
DIV. OF THE STATE ARCHITECT
APP: 02-121996 INC:
REVIEWED FOR
SS ☑ FLS ☑ ACS ☑
DATE: 8/14/2024

LICENSED ARCHITECT MICHAEL J. SCOTT No. C-34290 REN. 05-31-25 STATE OF CALIFORNIA

DATE: DECEMBER 31, 2023

NEW PRESCHOOL, TK, AND KINDERGARTEN CLASSROOMS AT SANTA FE ELEMENTARY SCHOOL

PORTERVILLE UNIFIED SCHOOL DISTRICT

286 E ORANGE AVENUE, PORTERVILLE, CA 93257

REVISIONS

MANGINI ARCHITECTURE INGENUITY
BARENG MORRELLI SCOTT
MANGINI ASSOCIATES INC.
4320 West Mineral King Avenue
Visalia, California 93291
www.mangini.us
(559) 627.0530 Office
(559) 627.1926 Fax

TITLE

BUILDING 800
FOUNDATION
PLAN

S2.3

PROJECT 23076

REGISTERED PROFESSIONAL ENGINEER JACK D. BRENNEMAN No. S5792 Exp. 6-30-25 Structural STATE OF CALIFORNIA

ASD
advanced structural design, inc.
STRUCTURAL ENGINEERS
7112 N. Fresno Street, suite 311
Fresno, California 93720
(559) 432-4151 office
asdi@asdiengr.com

P:\M62317 Santa Fe TK\Struct\S2.3_ Building 800TK Foundation.dwg Jun 24 2024 4:29pm

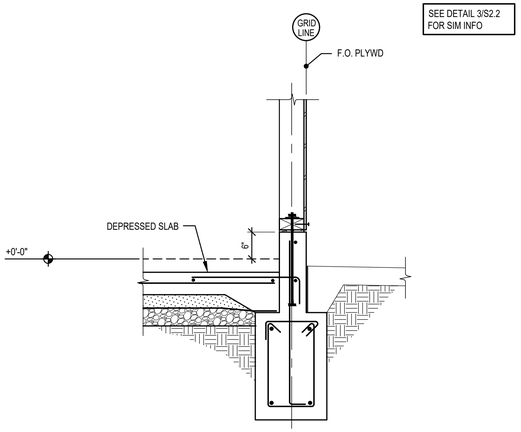

FOOTING DETAIL 4 S2.4
¾" ~ 1'-0"

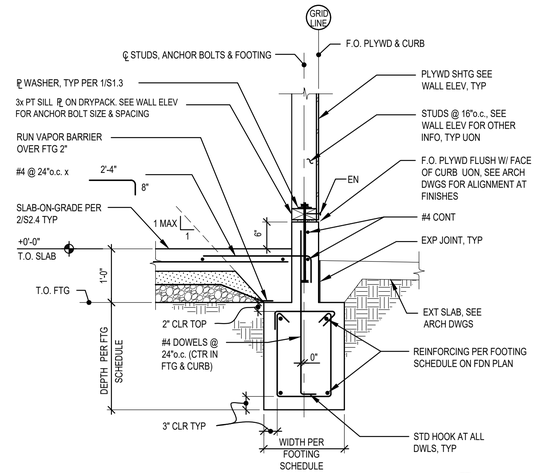

TYPICAL EXTERIOR FOOTING DETAIL 3 S2.4
¾" ~ 1'-0"

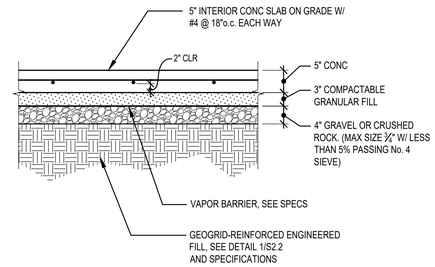

SLAB ON GRADE 2 S2.4
¾" ~ 1'-0"

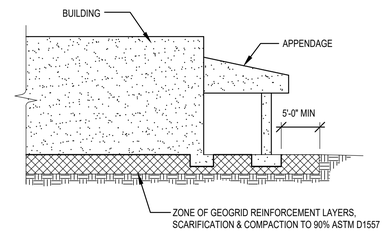

NOTES:

1. PRIOR TO EARTHWORK OPERATIONS, THE AREA TO BE DEVELOPED SHALL BE STRIPPED AND CLEARED ACCORDING TO THE REQUIREMENTS OF THE SOILS REPORT.
2. FOR EXPANSIVE SOIL MITIGATION, THE PROPOSED BUILDING AREA SHALL BE EXCAVATED TO A DEPTH OF 5 FEET OR UNTIL ALL EXISTING FILL IS REMOVED, WHICHEVER IS DEEPER, AND THE RESULTING EXCAVATION SHALL BE BACKFILLED WITH A LAYERED SYSTEM OF ENGINEERED FILL AND GEOGRID REINFORCING. THE DEPTH OF THE OVER-EXCAVATION SHALL BE MEASURED FROM EXISTING GROUND OR ROUGH PAD GRADE, WHICHEVER IS DEEPER. THE FIRST LAYER OF GEOGRID REINFORCEMENT SHALL BE PLACED DIRECTLY AT THE BOTTOM OF THE EXCAVATION. A TOTAL OF 4 GEOGRID LAYERS, INCLUDING THE LAYER AT THE BASE OF THE EXCAVATION, SHALL BE INSTALLED AT VERTICAL INCREMENTS OF 1 FOOT.
3. ALL ENGINEERED FILLS SHALL BE MOISTURE CONDITIONED TO A MINIMUM OF 2% ABOVE OPTIMUM MOISTURE CONTENT AND PLACED IN 6"-8" COMPACTED LIFTS. EACH LIFT SHALL BE COMPACTED TO A MINIMUM OF 90% RELATIVE COMPACTION.
4. THE LIMITS OF THE GEOGRID LAYERS OVER EXCAVATION SHALL BE AT LEAST 5 FEET BEYOND THE OUTSIDE PERIMETER OF THE PROPOSED BUILDING AND SHALL BE INSPECTED BY A GEOTECHNICAL ENGINEER . GEOGRID FABRIC SHALL CONSIST OF TENSAR TRIAX TX7, NX750, OR EQUIVALENT.
5. SEE SOILS REPORT AND PROJECT SPECIFICATIONS FOR ADDITIONAL INFORMATION.

EXCAVATION AND COMPACTION DETAIL 1 S2.4
NTS

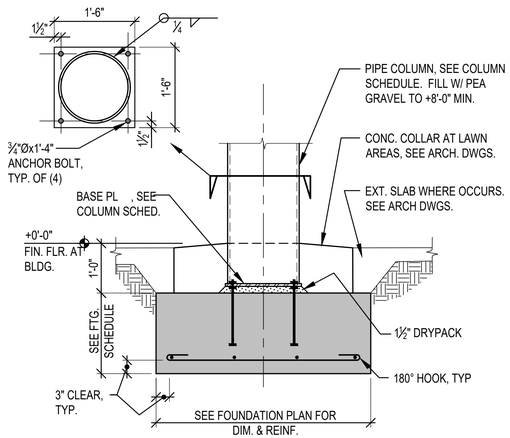

EXTERIOR PIPE COLUMN 8 S2.4
¾" ~ 1'-0" WITH PEA GRAVEL

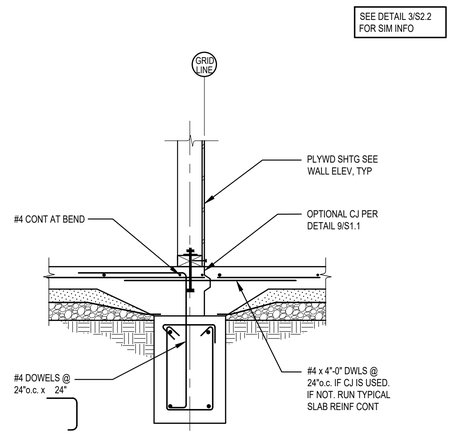

INTERIOR WALL FOOTING 7 S2.4
¾" ~ 1'-0"

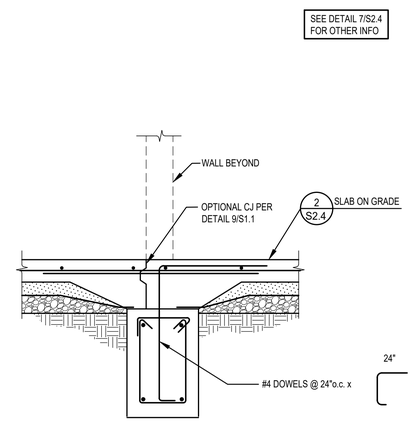

INTERIOR FOOTING 6 S2.4
¾" ~ 1'-0"

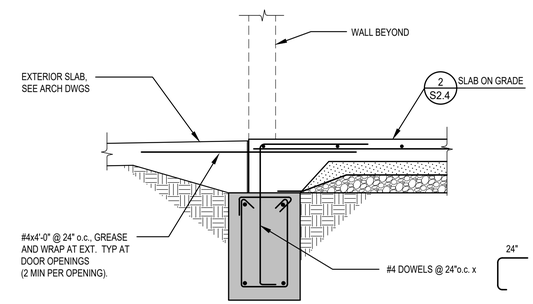

FOOTING AT OPENING DETAIL 5 S2.4
¾" ~ 1'-0"

APPROVALS

FILE # 54-76 APPLICATION # 02-121996

IDENTIFICATION STAMP
DIV. OF THE STATE ARCHITECT
APP: 02-121996 INC:
REVIEWED FOR
SS ☑ FLS ☑ ACS ☑
DATE: 8/14/2024

LICENSED ARCHITECT MICHAEL J. SCOTT No. C-34290 REN. 05-31-25 STATE OF CALIFORNIA

DATE: DECEMBER 31, 2023

NEW PRESCHOOL, TK, AND KINDERGARTEN CLASSROOMS AT SANTA FE ELEMENTARY SCHOOL

PORTERVILLE UNIFIED SCHOOL DISTRICT
286 E ORANGE AVENUE, PORTERVILLE, CA 93257

REVISIONS

MANGINI ARCHITECTURE INGENUITY
BARENG MORRELLI SCOTT
MANGINI ASSOCIATES INC.
4320 West Mineral King Avenue
Visalia, California 93291
www.mangini.us
(559) 627.0530 Office
(559) 627.1926 Fax

TITLE
FOOTING DETAILS

S2.4

PROJECT 23076

REGISTERED PROFESSIONAL ENGINEER JACK D. BRENEMAN No. S5792 Exp. 6-30-25 STRUCTURAL STATE OF CALIFORNIA

ASD
advanced structural design, inc.
STRUCTURAL ENGINEERS
7112 N. Fresno Street, suite 311
Fresno, California 93720
(559) 432-4151 office
asdi@asdiengr.com

APPROVALS

FILE # 54-76 | APPLICATION # 02-121996

IDENTIFICATION STAMP
DIV. OF THE STATE ARCHITECT
APP: 02-121996 INC:
REVIEWED FOR
SS ☑ FLS ☑ ACS ☑
DATE: 8/14/2024

LICENSED ARCHITECT
MICHAEL J. SCOTT
No. C-34290
REN. 05-31-25
STATE OF CALIFORNIA

DATE: DECEMBER 31, 2023

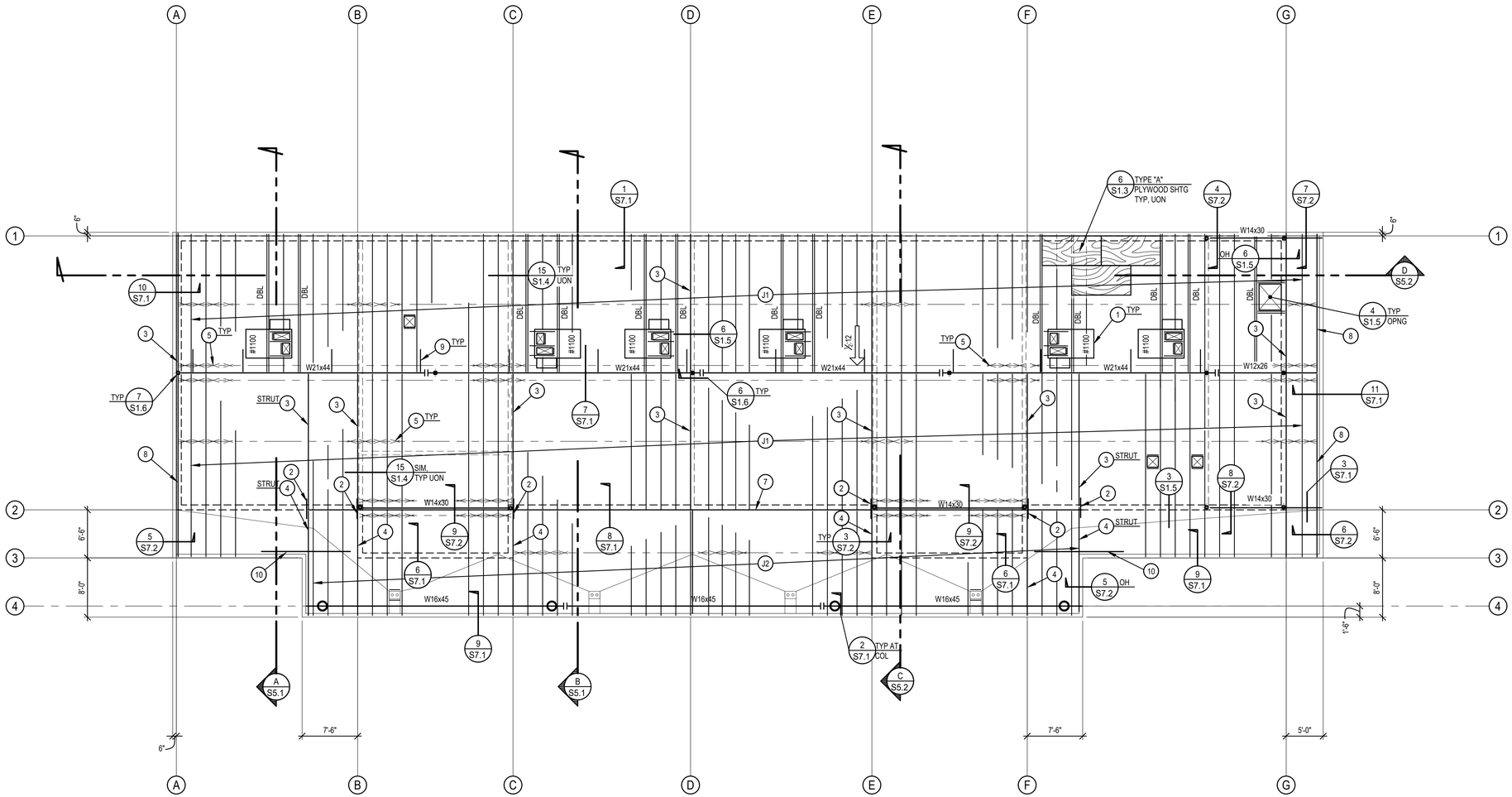

ROOF FRAMING PLAN

1/8" = 1'-0"

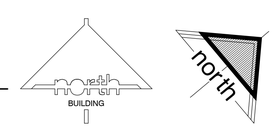

WOOD FRAMING NOTES

1. ELEVATIONS ARE GIVEN TO TOP OF FRAMING (BOTTOM OF SHEATHING) UON, WHERE OCCURS.
2. SEE TYPICAL DETAIL SHEETS FOR GENERAL NOTES, SCHEDULES, AND TYPICAL DETAILS. WHERE SPECIFIC DETAILS ARE NOT SHOWN, THE TYPICAL DETAILS SHALL APPLY.
3. VERIFY SIZE AND LOCATION OF OPENINGS FOR EQUIPMENT WITH MECHANICAL AND ELECTRICAL DRAWINGS. LOCATE UNITS SO DUCT DROPS FALL BETWEEN JOISTS AS SHOWN. DO NOT CUT JOISTS EXCEPT WHERE SHOWN ON DRAWINGS. UNIT WEIGHTS SHOWN ARE THE WEIGHTS USED FOR DESIGN OF THE FRAMING. WEIGHTS OF UNITS SHALL NOT EXCEED THESE WEIGHTS WITHOUT THE ADVANCE APPROVAL OF THE STRUCTURAL ENGINEER.
4. SEE TYPICAL DETAILS FOR FRAMING AT ROOF OPENINGS, UON.
5. SEE TYPICAL DETAILS FOR FRAMING OF EQUIPMENT PLATFORMS.
6. PROVIDE POSTS UNDER ALL BEAMS UNLESS DETAILS SHOW OTHERWISE. POSTS SHALL BE AT LEAST AS WIDE AS THE BEAMS AND AS DEEP AS THE WALL STUDS.
7. PROVIDE PLYWOOD EDGE NAILING (EN) ALONG ALL RAFTERS, BLOCKING, AND STRUTS ALONG SHEAR WALL LINES.
8. ALL SIMPSON CONNECTORS ARE TAKEN FROM CATALOG C-C 2021 BY SIMPSON STRONGTIE INC.
9. IT IS NOT THE INTENT OF THESE DRAWINGS TO SHOW FIRE BLOCKING OR BLOCKING REQUIRED FOR FINISHES OR OTHER NON-STRUCTURAL ELEMENTS. SEE ARCHITECTURAL DRAWINGS AND SPECIFICATIONS.
10. SEE ARCHITECTURAL DRAWINGS FOR SIZE AND LOCATIONS OF ROOF ACCESSES. PROVIDE FRAMING AND BLOCKING AROUND OPENINGS PER TYPICAL DETAILS UON WHERE APPLICABLE, FRAME OPENING IN CEILING FRAMING ALSO.
11. PROVIDE FRAMING AT ALL HARD CEILINGS PER DET 16/S1.4 UON. REFER TO THE ARCHITECTURAL DRAWINGS FOR LOCATIONS OF HARD CEILINGS.

= BEAM SPLICE PER DET 6/S1.6

I-JOIST NOTES

1. SEE DETAIL 1/S1.5 FOR I-JOIST PROPERTIES.
2. SEE DETAIL 8/S1.5 FOR I-JOIST BLOCKING.
3. PROVIDE X-BRIDGING WHERE INDICATED ON PLAN, SEE DETAIL 12/S1.5
4. SEE DETAIL 13/S1.5 FOR DOUBLE I-JOIST'S. PROVIDE SPECIAL HANGER MADE FOR DOUBLE JOISTS.
5. EACH I-JOIST SHALL BE IDENTIFIED BY A STAMP INDICATING THE JOIST TYPE, ESR REPORT NUMBER, MANUFACTURER'S NAME, PLANT NUMBER, AND PFS CORPORATION LOGO.

I-JOIST SCHEDULE

MARK	SIZE	SPACING
J1	16" RED I-90	24"o.c.
J2	11 7/8" RED I-90	24"o.c.

KEY NOTES

1. MECH UNIT, SEE DETAIL 9/S1.5 & MECH DWGS FOR MORE INFO
2. SIMPSON MSTA30 STRAP OVER PLYWD ROOF SHTG, CTR ON LVL SPLICE
3. 1 3/4" x 16" REDLAM LVL (2.0 E)
4. 1 3/4" x 11 7/8" REDLAM LVL (2.0 E)
5. I-JOIST "X" BRIDGING PER DET 12/S1.5
6. NOT USED
7. CONT 1 3/4" x 18" REDLAM LVL (2.0 E) RIM, SHP'D T&B
8. 3 1/2" x 16" REDLAM LVL (2.0 E)
9. L3x3x1/4 BRACE AT BOTTOM FLANGE OF STEEL BEAM PER 7/S7.1. LOCATE @ 12'-0" o.c. MAX AND 2'-0" MAX FROM COLUMNS.
10. SIMPSON CS16 STRAP x 12'-0" OVER PLYWD W/ 10d @ 4 1/2"o.c. TO 3x4 FLAT BLKG. CTR ON CORNER

NEW PRESCHOOL, TK, AND KINDERGARTEN CLASSROOMS AT SANTA FE ELEMENTARY SCHOOL

PORTERVILLE UNIFIED SCHOOL DISTRICT
286 E ORANGE AVENUE, PORTERVILLE, CA 93257

REVISIONS

MANGINI ARCHITECTURE INGENUITY
BARENG MORRELLI SCOTT
MANGINI ASSOCIATES INC.
4320 West Mineral King Avenue
Visalia, California 93291
www.mangini.us
(559) 627-0530 Office
(559) 627-1926 Fax

TITLE
BUILDING 700
ROOF FRAMING
PLAN

S3.1

PROJECT 23076

REGISTERED PROFESSIONAL ENGINEER
JACK D. BREWER
No. S5792
Exp. 6-30-25
STRUCTURAL
STATE OF CALIFORNIA

ASD
advanced structural design, inc.
STRUCTURAL ENGINEERS
7112 N. Fresno Street, suite 311
Fresno, California 93720
(559) 432-4151 office
asdi@asdiengr.com

APPROVALS

FILE # 54-76 | APPLICATION # 02-121996

WOOD FRAMING NOTES

1. SEE SHEET S3.1 FOR WOOD FRAMING NOTES

= BEAM SPLICE PER DET 6/S1.6

IDENTIFICATION STAMP
DIV. OF THE STATE ARCHITECT
APP: 02-121996 INC:
REVIEWED FOR
SS ☑ FLS ☑ ACS ☑
DATE: 8/14/2024

I-JOIST NOTES

1. SEE SHEET S3.1 FOR I-JOIST NOTES

I-JOIST SCHEDULE

MARK	SIZE	SPACING
J1	16" RED I-90	24"o.c.
J2	11 1/8" RED I-90	24"o.c.

LICENSED ARCHITECT
MICHAEL J. SCOTT
No. C-34290
REN. 05-31-25
STATE OF CALIFORNIA

DATE: DECEMBER 31, 2023

KEY NOTES

1. MECH UNIT, SEE DETAIL 9/S1.5 & MECH DWGS FOR MORE INFO
2. SIMPSON MSTA30 STRAP OVER PLYWD ROOF SHTG, CTR ON LVL SPLICE
3. 1 3/4" x 16" REDLAM LVL (2.0 E)
4. 1 3/4" x 11 7/8" REDLAM LVL (2.0 E)
5. I-JOIST "X" BRIDGING PER DET 12/S1.5
6. SOLAR ARRAY PER ELECT DWGS
7. CONT 1 3/4" x 18" REDLAM LVL (2.0 E) RIM, SHP'D T&B
8. 3 1/2" x 16" REDLAM LVL (2.0 E)
9. L3x3x1/4 BRACE AT BOTTOM FLANGE OF STEEL BEAM PER 7/S7.1. LOCATE @ 12'-0" o.c. MAX AND 2'-0" MAX FROM COLUMNS.
10. 3 1/2" x 11 7/8" REDLAM LVL (2.0 E)

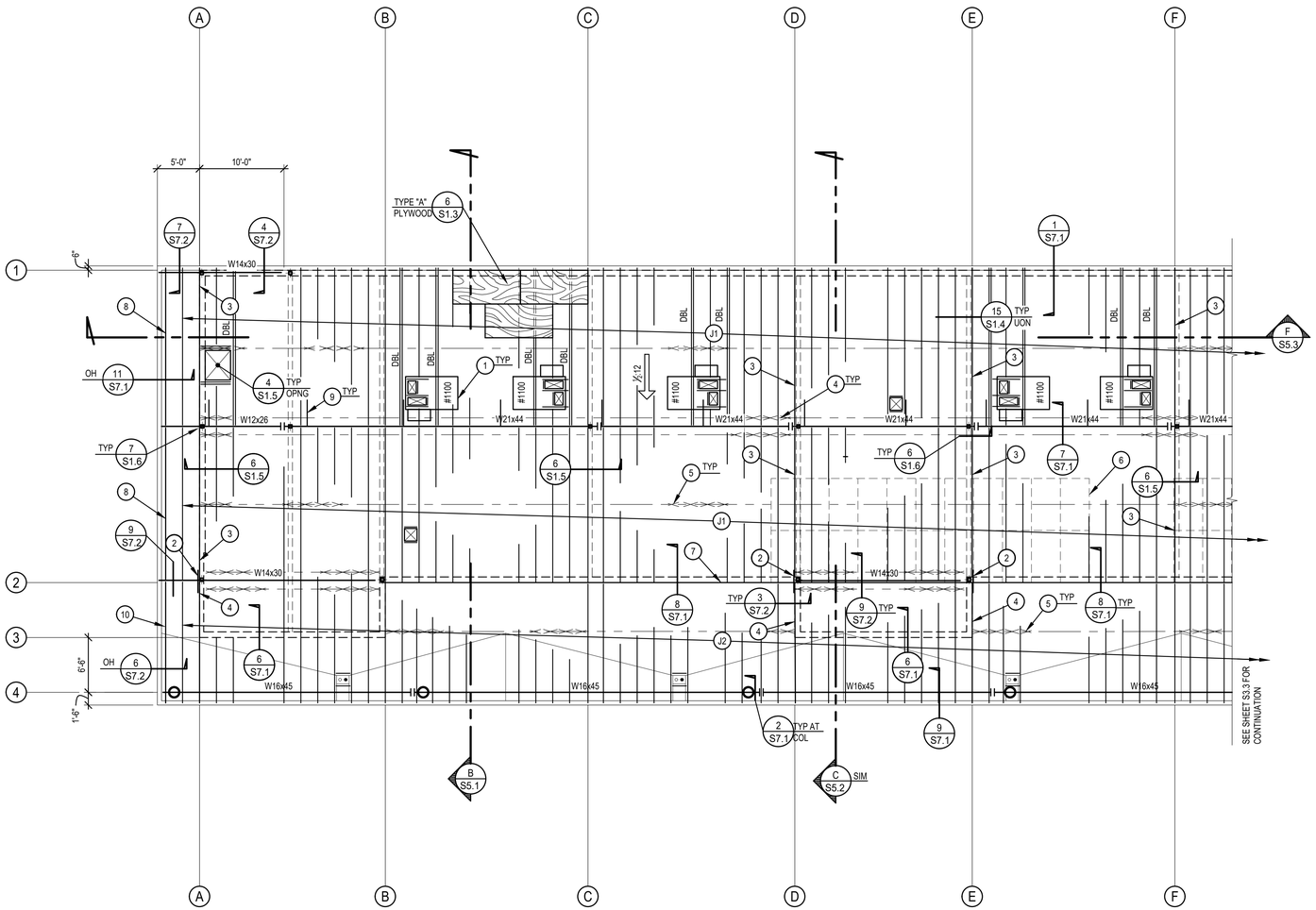

PARTIAL ROOF FRAMING PLAN

1/8" = 1'-0"

north

REGISTERED PROFESSIONAL ENGINEER
JACK D. BRENNEMAN
No. S5792
Exp. 6-30-25
STRUCTURAL
STATE OF CALIFORNIA

ASD
advanced structural design, inc.
STRUCTURAL ENGINEERS
7112 N. Fresno Street, suite 311
Fresno, California 93720
(559) 432-4151 office
asdi@asdiengr.com

NEW PRESCHOOL, TK, AND KINDERGARTEN CLASSROOMS AT SANTA FE ELEMENTARY SCHOOL

PORTERVILLE UNIFIED SCHOOL DISTRICT
286 E ORANGE AVENUE, PORTERVILLE, CA 93257

REVISIONS

MANGINI | ARCHITECTURE INGENIUITY
BARENG MORRELLI SCOTT
MANGINI ASSOCIATES INC.
4320 West Mineral King Avenue
Visalia, California 93291
www.mangini.us
(559) 627-0530 Office
(559) 627-1929 Fax

TITLE
BUILDING 800
ROOF FRAMING
PLAN

S3.2

PROJECT 23076

P:\M62317 Santa Fe TK\Struct\S3.3_ Building 800TK Roof.dwg Jun 24 2024 4:30pm

APPROVALS

FILE # 54-76 | APPLICATION # 02-121996

IDENTIFICATION STAMP
DIV. OF THE STATE ARCHITECT
APP: 02-121996 INC:
REVIEWED FOR
SS ☑ FLS ☑ ACS ☑
DATE: 8/14/2024

WOOD FRAMING NOTES

1. SEE SHEET S3.1 FOR WOOD FRAMING NOTES

—||— = BEAM SPLICE PER DET 6/S1.6

I-JOIST NOTES

1. SEE SHEET S3.1 FOR I-JOIST NOTES

I-JOIST SCHEDULE

MARK	SIZE	SPACING
J1	16" RED I-90	24"o.c.
J2	11 7/8" RED I-90	24"o.c.

KEY NOTES

1. MECH UNIT, SEE DETAIL 9/S1.5 & MECH DWGS FOR MORE INFO
2. SIMPSON MSTA30 STRAP OVER PLYWD ROOF SHTG, CTR ON LVL SPLICE
3. 1¾" x 16" REDLAM LVL (2.0 E)
4. 1¾" x 11⅞" REDLAM LVL (2.0 E)
5. I-JOIST "X" BRIDGING PER DET 12/S1.5
6. SOLAR ARRAY PER ELECT DWGS
7. CONT 1¾" x 18" REDLAM LVL (2.0 E) RIM, SHP'D T&B
8. 3½" x 16" REDLAM LVL (2.0 E)
9. L3x3x¼ BRACE AT BOTTOM FLANGE OF STEEL BEAM PER 7/S7.1. LOCATE @ 12'-0" o.c. MAX AND 2'-0" MAX FROM COLUMNS.
10. SIMPSON CS16 STRAP x 12'-0" OVER PLYWD W/ 10d @ 4⅜"o.c. TO 3x4 FLAT BLKG. CTR ON CORNER

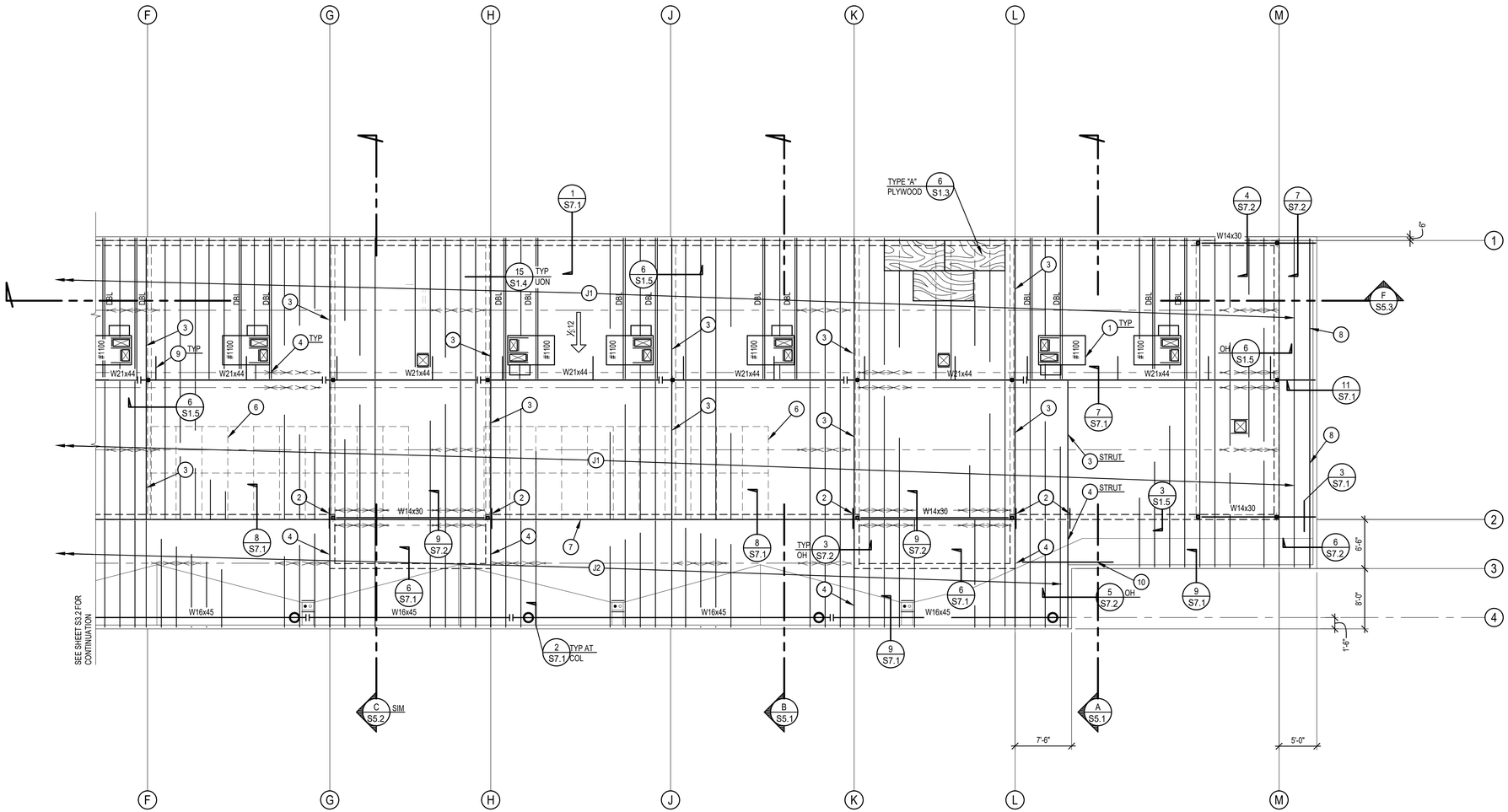

PARTIAL ROOF FRAMING PLAN

1/8" = 1'-0"

north

REGISTERED PROFESSIONAL ENGINEER
JACK D. BRENEMAN
No. S5792
Exp. 6-30-25
STRUCTURAL
STATE OF CALIFORNIA

ASD
advanced structural design, inc.
STRUCTURAL ENGINEERS
7112 N. Fresno Street, suite 311
Fresno, California 93720
(559) 432-4151 office
asdi@asdiengr.com

LICENSED ARCHITECT
MICHAEL J. SCOTT
No. C-34290
REN. 05-31-25
STATE OF CALIFORNIA

DATE: DECEMBER 31, 2023

NEW PRESCHOOL, TK, AND KINDERGARTEN CLASSROOMS AT SANTA FE ELEMENTARY SCHOOL

PORTERVILLE UNIFIED SCHOOL DISTRICT

286 E ORANGE AVENUE, PORTERVILLE, CA 93257

REVISIONS

MANGINI ARCHITECTURE INGENUITY
BARENG MORRELLI SCOTT
MANGINI ASSOCIATES INC.
4320 West Mineral King Avenue
Visalia, California 93291
www.mangini.us
(559) 627.9530 Office
(559) 627.1926 Fax

TITLE
BUILDING 800
ROOF FRAMING PLAN

S3.3

PROJECT 23076

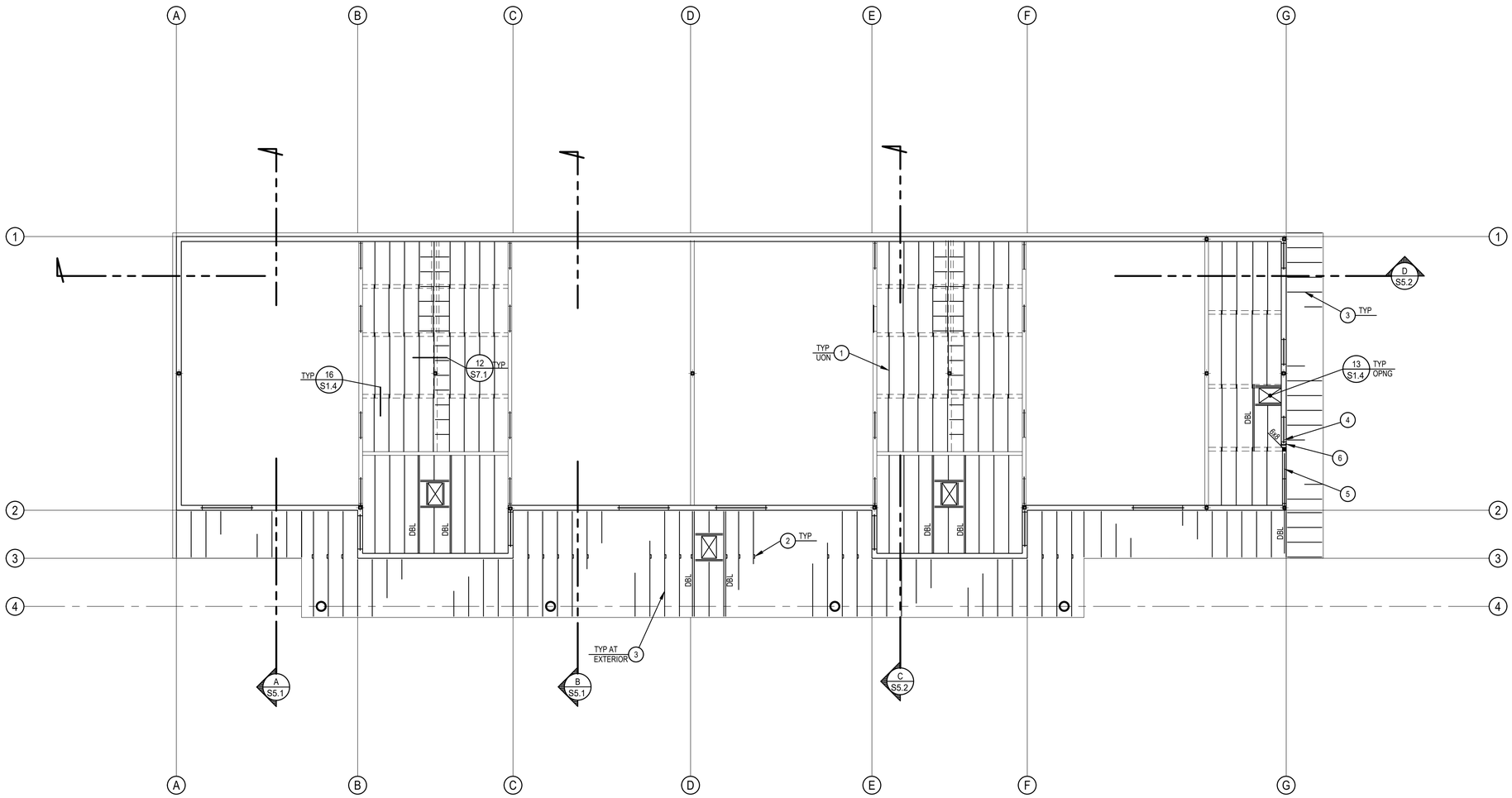

CEILING FRAMING PLAN

1/8" = 1'-0"

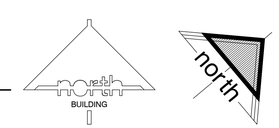

CEILING FRAMING NOTES

1. PROVIDE CEILING FRAMING AT ALL HARD CEILING AND SOFFITS SHOWN ON ARCHITECTURAL DRAWINGS EVEN IF NOT SPECIFICALLY SHOWN ON STRUCTURAL DRAWINGS.
2. SEE DETAIL 16/S1.4 FOR JOIST SIZE AND SPACING UON.
3. FRAME OPENINGS PER DETAIL 13/S1.4.
4. PROVIDE DOUBLE JOISTS AT SIDES OF OPENINGS AND AT CHANGES IN FRAMING DIRECTION UNLESS MORE STRINGENT FRAMING IS SHOWN.
5. COORDINATE JOIST LAYOUT WITH LIGHTS, VENTS, ACCESS OPENINGS, AND OTHER CEILING PENETRATIONS AS REQUIRED.
6. PROVIDE DOUBLE JOISTS EACH SIDE OF JOISTS THAT ARE CUT. DO NOT CUT MORE THAN TWO ADJACENT JOISTS.
7. SEE DETAIL 5/S1.3 FOR HEADER SIZES NOT SPECIFICALLY CALLED OUT.
8. SEE DETAIL 14/S1.5 FOR HEADERS IN 8" WALLS UON.

KEY NOTES

1. 2x CEILING JOISTS @ 24"o.c., UON, SEE DETAIL 16/S1.4
2. 2x6 VERT HANGER WHERE EXTERIOR SOFFIT JOIST SPAN EXCEEDS 8'-0". PROVIDE W/ (3) 16d EA END TO SOFFIT JOIST & I-JOIST. SEE DETAIL 7/S1.5 AT ROOF.
3. 2x6 @ 24"o.c.
4. 6x8
5. 6x12
6. SIMPSON HUC HANGER TO F.O. POST

APPROVALS

FILE # 54-76 APPLICATION # 02-121996

IDENTIFICATION STAMP
DIV. OF THE STATE ARCHITECT
APP: 02-121996 INC:
REVIEWED FOR
SS ☑ FLS ☑ ACS ☑
DATE: 8/14/2024

LICENSED ARCHITECT
MICHAEL J. SCOTT
No. C-34290
REN. 05-31-25
STATE OF CALIFORNIA

DATE: DECEMBER 31, 2023

NEW PRESCHOOL, TK, AND KINDERGARTEN CLASSROOMS AT SANTA FE ELEMENTARY SCHOOL

PORTERVILLE UNIFIED SCHOOL DISTRICT

286 E ORANGE AVENUE, PORTERVILLE, CA 93257

REVISIONS

MANGINI | ARCHITECTURE INGENUITY
BARENG MORRELLI SCOTT
MANGINI ASSOCIATES INC.
4320 West Mineral King Avenue
Visalia, California 93291
www.mangini.us
(559) 627.0530 Office
(559) 627.1926 Fax

TITLE
BUILDING 700
CEILING FRAMING PLAN

S4.1

PROJECT 23076

REGISTERED PROFESSIONAL ENGINEER
JACK D. BRENNEMAN
No. S5792
Exp. 6-30-25
STRUCTURAL
STATE OF CALIFORNIA

ASD
advanced structural design, inc.
STRUCTURAL ENGINEERS
7112 N. Fresno Street, suite 311
Fresno, California 93720
(559) 432-4151 office
asdi@asdiengr.com

P:\M62317 Santa Fe TK\Struct\S4.1_ Building 700P Ceiling.dwg Jun 24 2024 4:30pm

APPROVALS

FILE # 54-76 | APPLICATION # 02-121996

IDENTIFICATION STAMP
DIV. OF THE STATE ARCHITECT
APP: 02-121996 INC:
REVIEWED FOR
SS ☑ FLS ☑ ACS ☑
DATE: 8/14/2024

LICENSED ARCHITECT
MICHAEL J. SCOTT
No. C-34290
REN. 05-31-25
STATE OF CALIFORNIA

DATE: DECEMBER 31, 2023

CEILING FRAMING NOTES

1. SEE SHEET S4.1 FOR CEILING FRAMING NOTES.

KEY NOTES

1. 2x CEILING JOISTS @ 24"o.c., UON, SEE DETAIL 16/S1.4
2. 2x6 VERT HANGER WHERE EXTERIOR SOFFIT JOIST SPAN EXCEEDS 8'-0". PROVIDE W/ (3) 16d EA END TO SOFFIT JOIST & I-JOIST. SEE DETAIL 7/S1.5 AT ROOF.
3. 2x6 @ 24"o.c.
4. 6x10

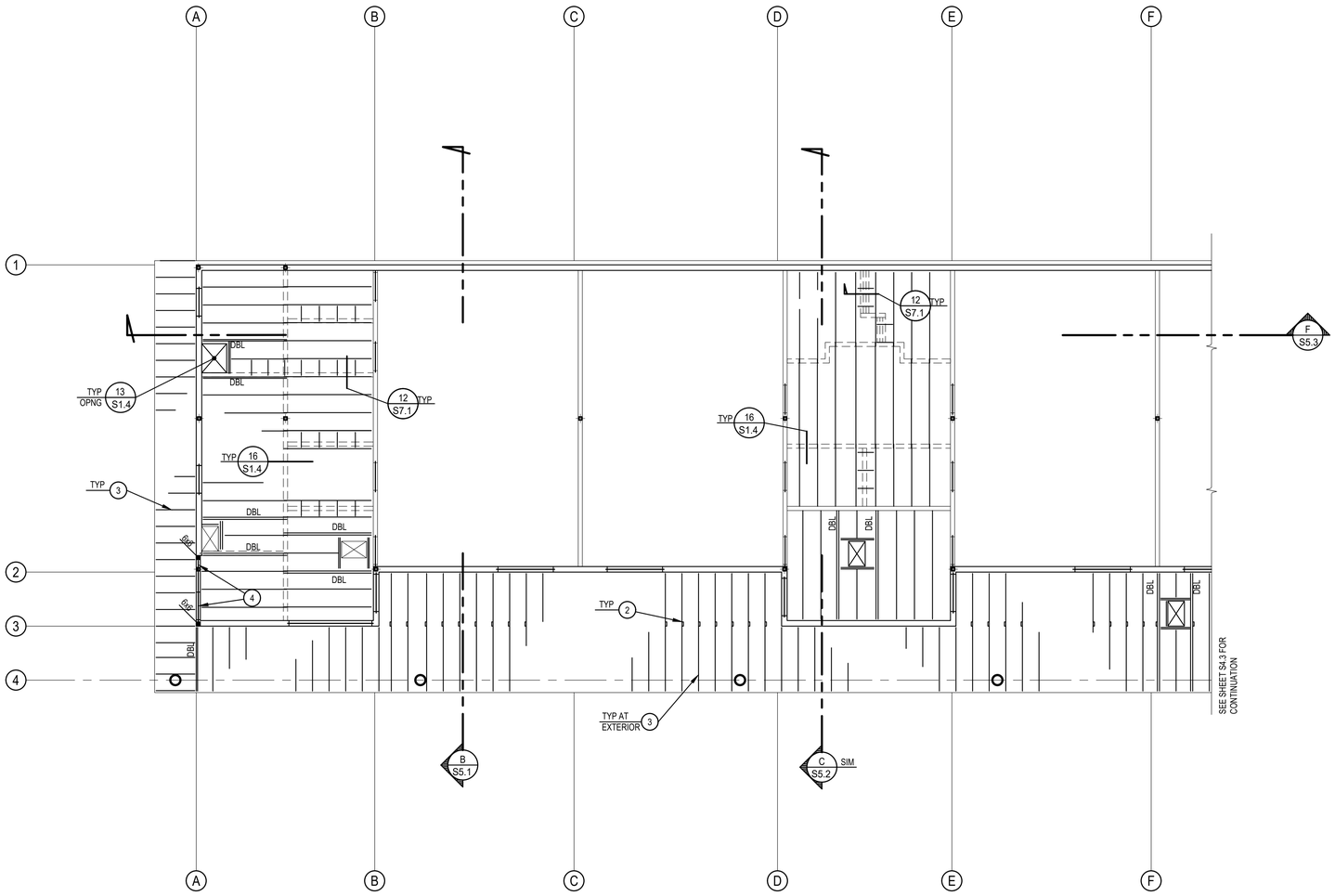

PARTIAL CEILING FRAMING PLAN

1/8" = 1'-0"

north

REGISTERED PROFESSIONAL ENGINEER
JACK D. BREWER
No. S5792
Exp. 6-30-25
STRUCTURAL
STATE OF CALIFORNIA

ASD
advanced structural design, inc.
STRUCTURAL ENGINEERS
7112 N. Fresno Street, suite 311
Fresno, California 93720
(559) 432-4151 office
asdi@asdiengr.com

NEW PRESCHOOL, TK, AND KINDERGARTEN CLASSROOMS AT SANTA FE ELEMENTARY SCHOOL

PORTERVILLE UNIFIED SCHOOL DISTRICT

286 E ORANGE AVENUE, PORTERVILLE, CA 93257

REVISIONS

MANGINI | ARCHITECTURE INGENUITY
BARENG MORRELLI SCOTT
MANGINI ASSOCIATES INC.
4320 West Mineral King Avenue
Visalia, California 93291
www.mangini.us
(559) 627-0530 Office
(559) 627-1926 Fax

TITLE
BUILDING 800
CEILING FRAMING PLAN

S4.2

PROJECT 23076

APPROVALS

FILE # 54-76 | APPLICATION # 02-121996

IDENTIFICATION STAMP
DIV. OF THE STATE ARCHITECT
APP: 02-121996 INC:
REVIEWED FOR
SS ☑ FLS ☑ ACS ☑
DATE: 8/14/2024

LICENSED ARCHITECT
MICHAEL J. SCOTT
No. C-34290
REN. 05-31-25
STATE OF CALIFORNIA

DATE: DECEMBER 31, 2023

CEILING FRAMING NOTES

1. SEE SHEET S4.1 FOR CEILING FRAMING NOTES.

KEY NOTES

1. 2x CEILING JOISTS @ 24"o.c., UON, SEE DETAIL 16/S1.4
2. 2x6 VERT HANGER WHERE EXTERIOR SOFFIT JOIST SPAN EXCEEDS 8'-0". PROVIDE W/ (3) 16d EA END TO SOFFIT JOIST & I-JOIST. SEE DETAIL 7/S1.5 AT ROOF.
3. 2x6 @ 24"o.c.

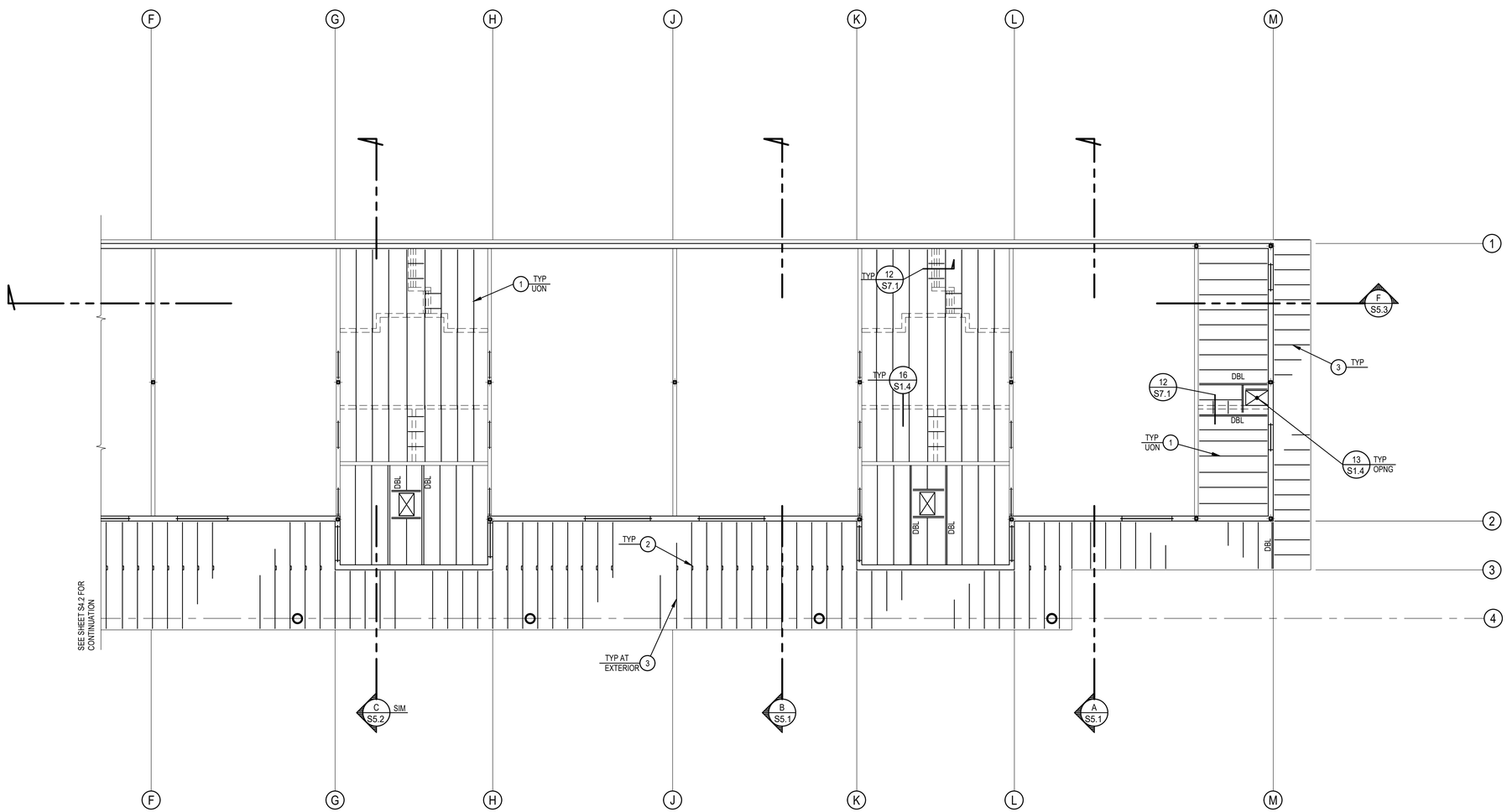

PARTIAL CEILING FRAMING PLAN

1/8" ~ 1'-0"

north

REGISTERED PROFESSIONAL ENGINEER
JACK D. BRENEMAN
No. S5792
Exp. 6-30-25
STRUCTURAL
STATE OF CALIFORNIA

ASD
advanced structural design, inc.
STRUCTURAL ENGINEERS
7112 N. Fresno Street, suite 311
Fresno, California 93720
(559) 432-4151 office
asdi@asdiengr.com

NEW PRESCHOOL, TK, AND KINDERGARTEN CLASSROOMS AT SANTA FE ELEMENTARY SCHOOL

PORTERVILLE UNIFIED SCHOOL DISTRICT

286 E ORANGE AVENUE, PORTERVILLE, CA 93257

REVISIONS

MANGINI ARCHITECTURE INGENUITY
BARENG MORRELLI SCOTT
MANGINI ASSOCIATES INC.
4320 West Mineral King Avenue
Visalia, California 93291
www.mangini.us
(559) 627.0530 Office
(559) 627.1926 Fax

TITLE
BUILDING 800
CEILING FRAMING PLAN

S4.3

PROJECT 23076

P:\M62317 Santa Fe TK\Struct\S4.3_ Building 800TK Ceiling.dwg Jun 24 2024 4:30pm

APPROVALS

FILE # 54-76 APPLICATION # 02-121996

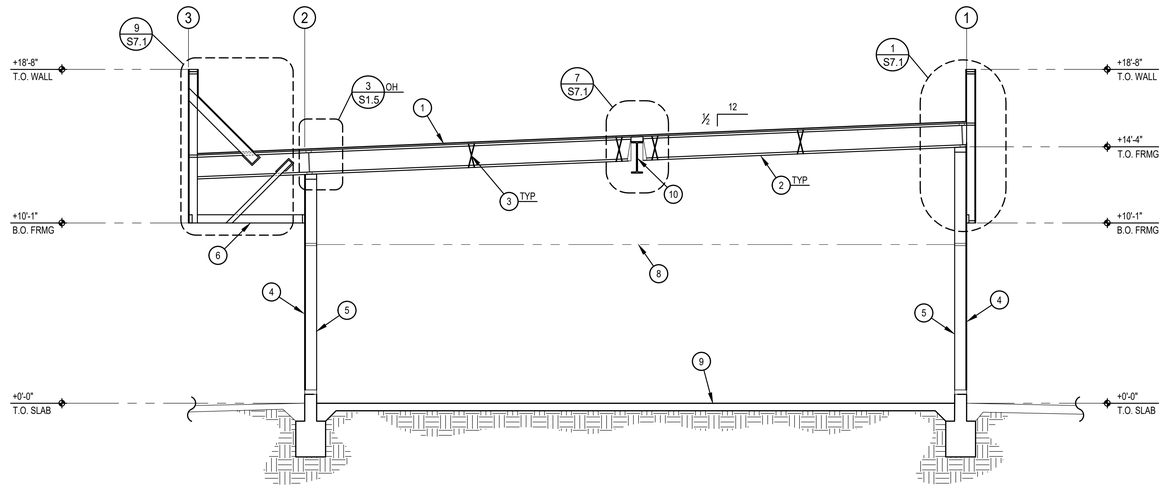

SECTION A S5.1
¼" = 1'-0"

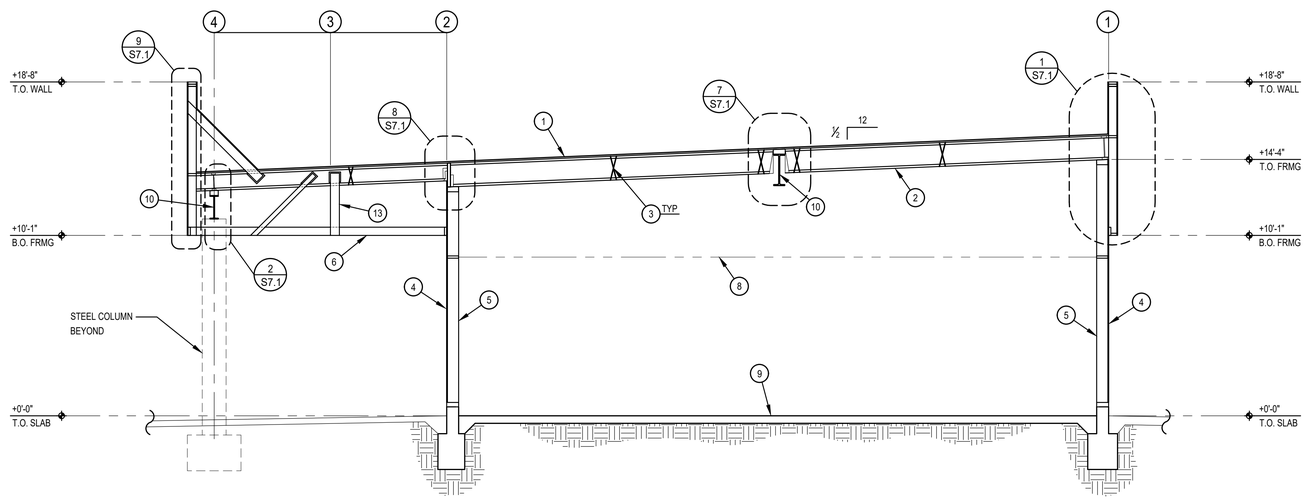

SECTION B S5.1
¼" = 1'-0"

KEY NOTES

1. PLYWOOD ROOF SHEATHING PER FRAMING PLAN
2. I-JOISTS PER ROOF FRAMING PLAN
3. X-BRIDGING PER FRAMING PLAN & DETAIL 12/S1.5
4. PLYWOOD WALL SHEATHING PER WALL ELEVATIONS
5. STUDS @ 16"o.c. PER WALL ELEVATIONS
6. CEILING JOISTS PER CEILING FRAMING PLAN & DETAIL 16/S1.4
7. NOT USED
8. SUSPENDED CEILING PER ARCH DWGS
9. CONCRETE SLAB ON GRADE PER FOUNDATION PLAN
10. BEAM PER FRAMING PLAN
11. NOT USED
12. NOT USED
13. 2x VERTICAL HANGER EA CLG JOIST TO ROOF. SEE CLG FRMG PLAN

IDENTIFICATION STAMP
DIV. OF THE STATE ARCHITECT
APP: 02-121996 INC:
REVIEWED FOR
SS ☑ FLS ☑ ACS ☑
DATE: 8/14/2024

LICENSED ARCHITECT
MICHAEL J. SCOTT
No. C-34290
REN. 05-31-25
STATE OF CALIFORNIA

DATE: DECEMBER 31, 2023

NEW PRESCHOOL, TK, AND KINDERGARTEN CLASSROOMS AT SANTA FE ELEMENTARY SCHOOL

PORTERVILLE UNIFIED SCHOOL DISTRICT
286 E ORANGE AVENUE, PORTERVILLE, CA 93257

REVISIONS

MANGINI ARCHITECTURE INGENUITY
BARENG MORRELLI SCOTT
MANGINI ASSOCIATES INC.
4320 West Mineral King Avenue
Visalia, California 93291
www.mangini.us
(559) 627-0530 Office
(559) 627-1926 Fax

TITLE
BUILDINGS 700 & 800
SECTIONS

S5.1

PROJECT 23076

REGISTERED PROFESSIONAL ENGINEER
JACK D. BREWER
No. S5792
Exp. 6-30-25
STRUCTURAL
STATE OF CALIFORNIA

ASD
advanced structural design, inc.
STRUCTURAL ENGINEERS
7112 N. Fresno Street, suite 311
Fresno, California 93720
(559) 432-4151 office
asdi@asdiengr.com

APPROVALS

FILE # 54-76 | APPLICATION # 02-121996

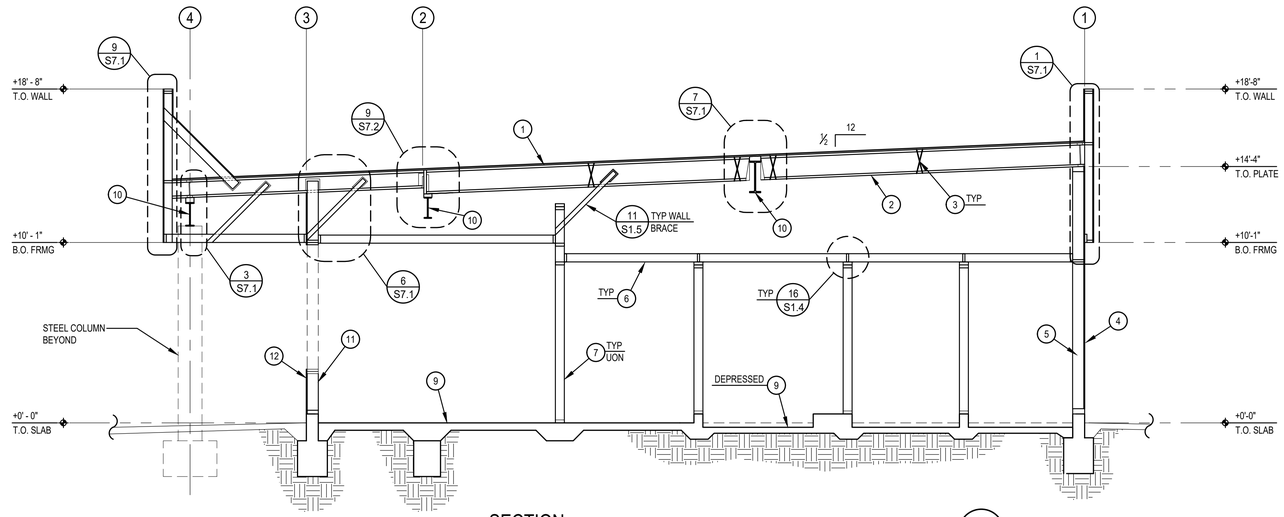

SECTION C S5.2
½" = 1'-0"

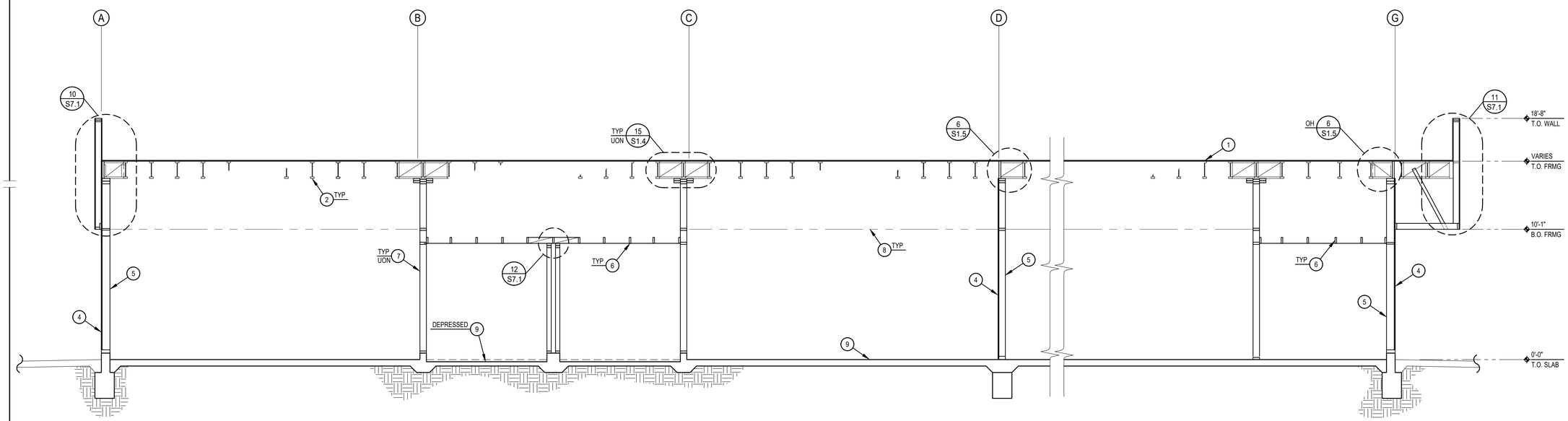

SECTION D S5.2
½" = 1'-0"

KEY NOTES

1. PLYWOOD ROOF SHEATHING PER FRAMING PLAN
2. I-JOISTS PER ROOF FRAMING PLAN
3. X-BRIDGING PER FRAMING PLAN & DETAIL 12/S1.5
4. PLYWOOD WALL SHEATHING PER WALL ELEVATIONS
5. STUDS @ 16"o.c. PER WALL ELEVATIONS
6. CEILING JOISTS PER CEILING FRAMING PLAN & DETAIL 13/S1.2
7. NON-BRG STUDS @16"o.c. PER ARCH DWGS
8. SUSPENDED CEILING PER ARCH DWGS
9. CONCRETE SLAB ON GRADE PER FOUNDATION PLAN
10. BEAM PER FRAMING PLAN
11. 2x6 STUDS @16"o.c.
12. TYPE 1 PLYWD WALL SHTG

IDENTIFICATION STAMP
DIV. OF THE STATE ARCHITECT
APP: 02-121996 INC:
REVIEWED FOR
SS ☑ FLS ☑ ACS ☑
DATE: 8/14/2024

LICENSED ARCHITECT MICHAEL J. SCOTT No. C-34290 REN. 05-31-25 STATE OF CALIFORNIA

DATE: DECEMBER 31, 2023

NEW PRESCHOOL, TK, AND KINDERGARTEN CLASSROOMS AT SANTA FE ELEMENTARY SCHOOL

PORTERVILLE UNIFIED SCHOOL DISTRICT
286 E ORANGE AVENUE, PORTERVILLE, CA 93257

REVISIONS

MANGINI ARCHITECTURE INGENUITY
BARENG MORRELLI SCOTT
MANGINI ASSOCIATES INC.
4320 West Mineral King Avenue
Visalia, California 93291
www.mangini.us
(559) 627-0530 Office
(559) 627-1926 Fax

TITLE
BUILDING 700
SECTIONS

S5.2

PROJECT 23076

REGISTERED PROFESSIONAL ENGINEER JACK D. BREWER No. S5792 Exp. 6-30-25 STRUCTURAL STATE OF CALIFORNIA

ASD
advanced structural design, inc.
STRUCTURAL ENGINEERS
7112 N. Fresno Street, suite 311
Fresno, California 93720
(559) 432-4151 office
asdi@asdiengr.com

APPROVALS

FILE # 54-76 | APPLICATION # 02-121996

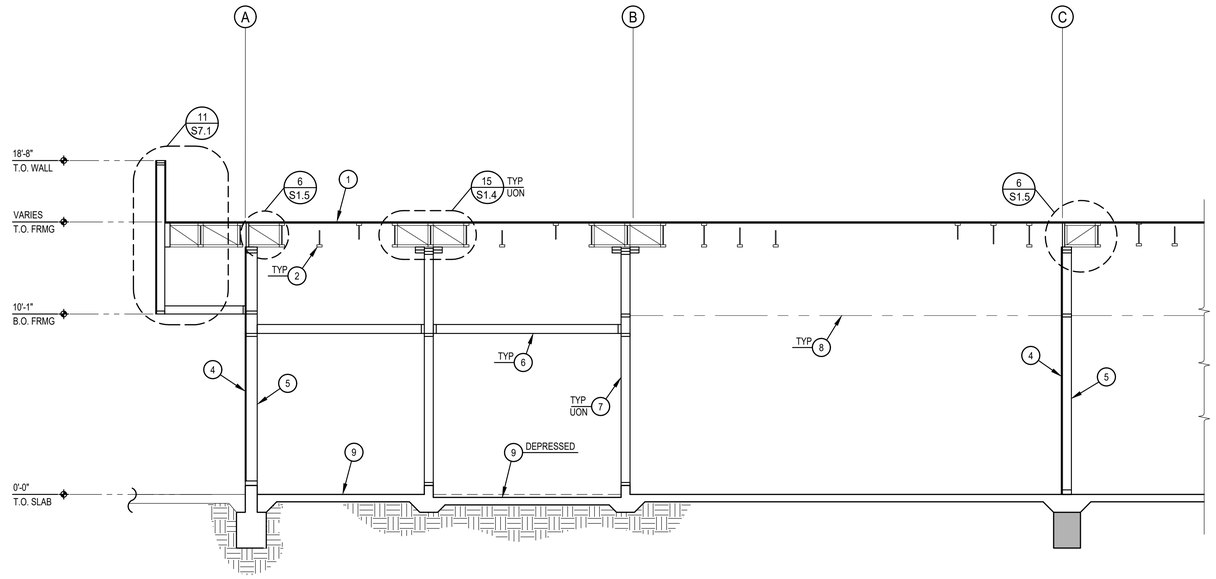

PARTIAL SECTION

1/4" = 1'-0"

F
S5.3

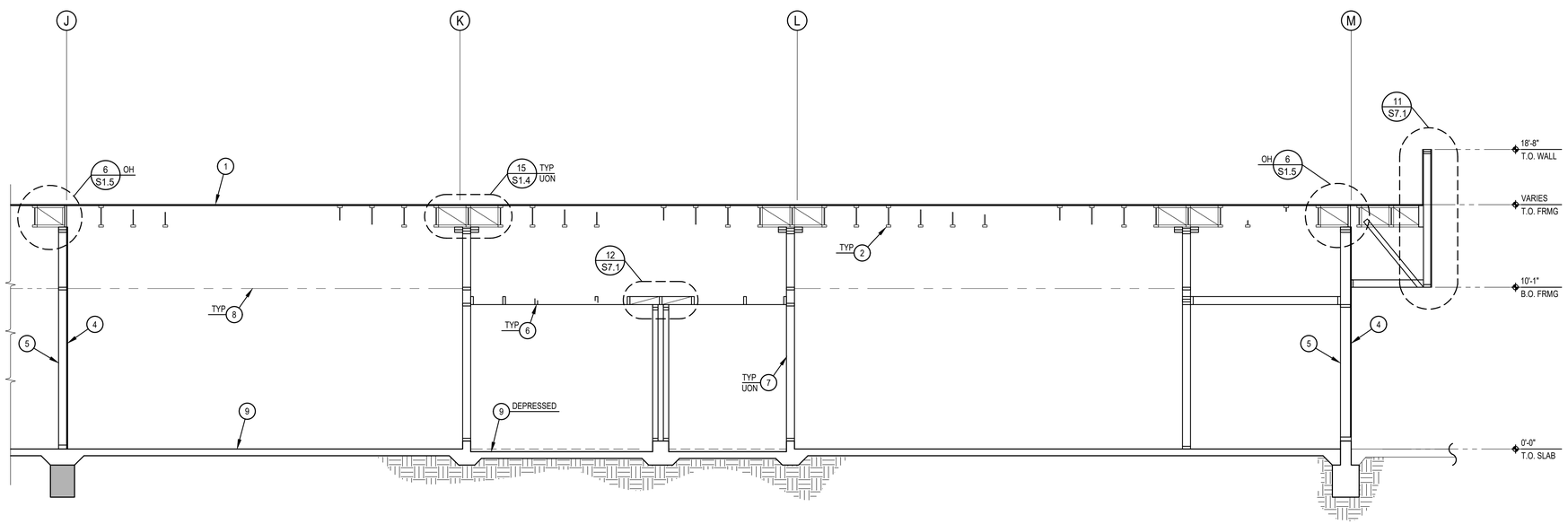

PARTIAL SECTION (CONTINUED)

1/4" = 1'-0"

F
S5.3

KEY NOTES

1. PLYWOOD ROOF SHEATHING PER FRAMING PLAN
2. I-JOISTS PER ROOF FRAMING PLAN
3. X-BRIDGING PER FRAMING PLAN & DETAIL 12/S1.5
4. PLYWOOD WALL SHEATHING PER WALL ELEVATIONS
5. STUDS @ 16"o.c. PER WALL ELEVATIONS
6. CEILING JOISTS PER CEILING FRAMING PLAN & DETAIL 13/S1.2
7. NON-BRG STUDS @16"o.c. PER ARCH DWGS
8. SUSPENDED CEILING PER ARCH DWGS
9. CONCRETE SLAB ON GRADE PER FOUNDATION PLAN

IDENTIFICATION STAMP
DIV. OF THE STATE ARCHITECT
APP: 02-121996 INC:
REVIEWED FOR
SS ☑ FLS ☑ ACS ☑
DATE: 8/14/2024

LICENSED ARCHITECT
MICHAEL J. SCOTT
No. C-34290
REN. 05-31-25
STATE OF CALIFORNIA

DATE: DECEMBER 31, 2023

NEW PRESCHOOL, TK, AND KINDERGARTEN CLASSROOMS AT SANTA FE ELEMENTARY SCHOOL

PORTERVILLE UNIFIED SCHOOL DISTRICT

286 E ORANGE AVENUE, PORTERVILLE, CA 93257

REVISIONS

MANGINI ARCHITECTURE INGENUITY
BARENG MORRELLI SCOTT
MANGINI ASSOCIATES INC.
4320 West Mineral King Avenue
Visalia, California 93291
www.mangini.us
(559) 627-0530 Office
(559) 627-1926 Fax

TITLE

BUILDING 800
SECTIONS

S5.3

PROJECT 23076

REGISTERED PROFESSIONAL ENGINEER
JACK D. BREWER
No. S5792
Exp. 6-30-25
STRUCTURAL
STATE OF CALIFORNIA

ASD
advanced structural design, inc.
STRUCTURAL ENGINEERS
7112 N. Fresno Street, suite 311
Fresno, California 93720
(559) 432-4151 office
asdi@asdiengr.com

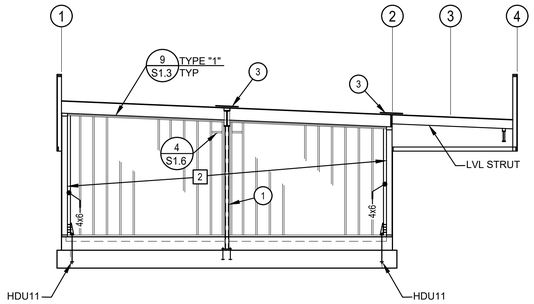

WALL LINE "D"

⅛" ~ 1'-0"

2x6 @ 16"o.c.
(3x MIN STUDS & BLKG AT TYPE 2 PLYWD JOINTS)

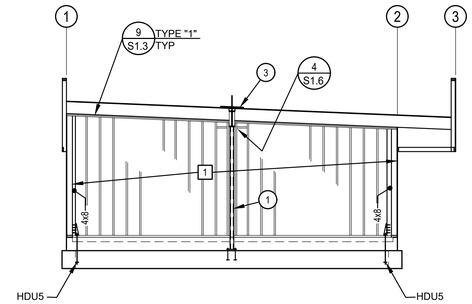

WALL LINE "A"

⅛" ~ 1'-0"

2x8 @ 16"o.c.

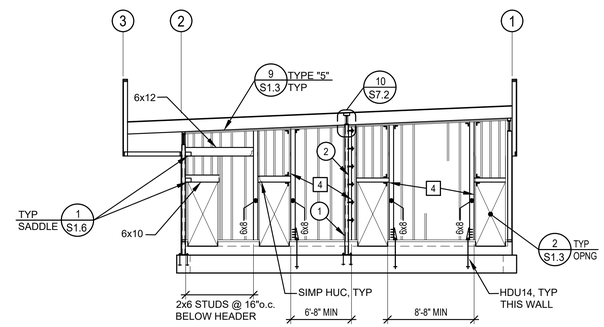

WALL LINE "G"

⅛" ~ 1'-0"

2x8 @ 16"o.c.
(3x MIN STUDS & BLKG AT TYPE 4 PLYWD JOINTS)

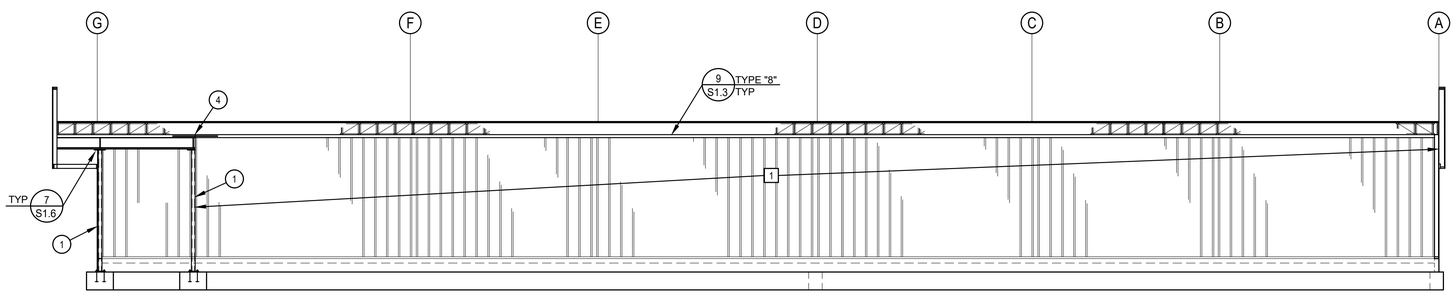

WALL LINE "1"

⅛" ~ 1'-0"

2x8 @ 16"o.c.

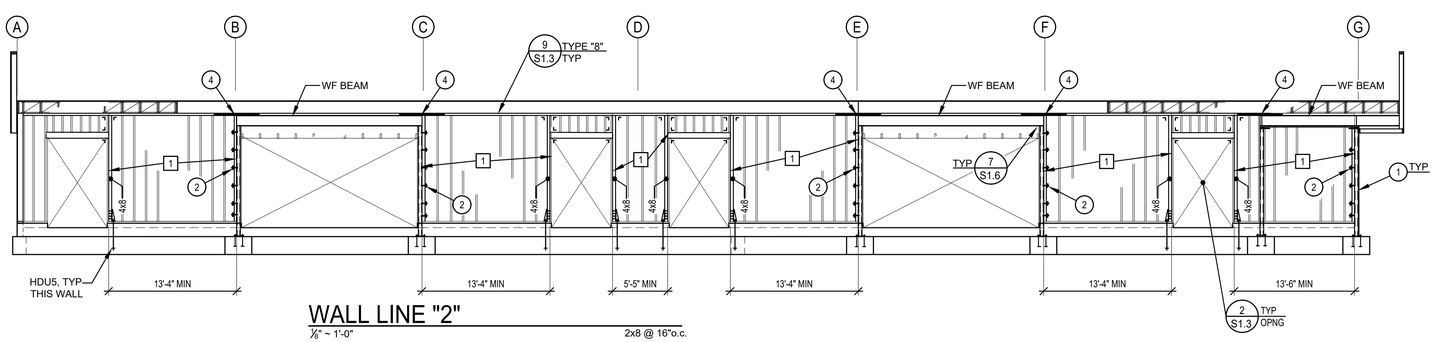

WALL LINE "2"

⅛" ~ 1'-0"

2x8 @ 16"o.c.

SHEAR WALL NOTES

1. SHADED AREAS ON WALLS INDICATE REGIONS OF STRUCTURAL SHEAR PANELS. OTHER REGIONS ON WALL SHALL HAVE THE SAME SHEATHING WITH NAILS AT 6"o.c AT EDGES AND 12"o.c. FIELD.
2. PROVIDE PLYWOOD ON ALL EXTERIOR SURFACES OF FASCIAS AND EXTERIOR WALLS PER NOTE #1 "OTHER REGIONS", EVEN IF WALL ELEVATIONS ARE NOT DRAWN.
3. (EN) "EDGE NAILING" SPACE NAILS AS REQUIRED FOR SHEAR PANEL EDGES EVEN IF NOT AT AN EDGE.
4. # - INDICATES SHEATHING TYPE AND ANCHOR BOLT SPACING PER SCHEDULE ON DETAIL 3/S1.3.
5. SILL PLATE BOLTS AT NON-SHEAR REGIONS OF WALLS SHALL BE ⅝"Ø SPACED AT 48"o.c. MAXIMUM WITH 7" MIN EMBED BELOW TOP OF SLAB.
6. STUDS OR POSTS AT EDGES OF SHEAR PANELS AND AT HOLD DOWNS SHALL BE ONE PIECE FULL HEIGHT OF WALL AND SHALL RECEIVE EDGE NAILING FULL HEIGHT.
7. PROVIDE EDGE NAILING TO EACH TOP PLATE OF WALL. SEE DETAIL 9/S1.3 FOR SCHEDULE OF PLATE SPLICES.
8. ALL MEMBERS DESIGNATED AS "STRUTS" SHALL RECEIVE EN FOR THEIR ENTIRE LENGTH.
9. SEE DETAIL 10/S1.3 FOR HOLD DOWNS, UNLESS OTHERWISE NOTED.
10. FRAME WALLS AND OPENINGS PER 5/S1.3 UNLESS OTHERWISE NOTED.
11. FRAME ALL HOLES THRU SHEAR WALLS PER DETAILS 5/S1.4 & 6/S1.4 UON.
12. PROVIDE SOLID CONTINUOUS BLOCKING AT 48"o.c. AT ALL WALL REGIONS WHICH DO NOT HAVE PLYWOOD OR GYP BOARD ON AT LEAST ONE SIDE.
13. STUD SIZES INDICATED ON THE WALL ELEVATIONS ARE FOR THE TYPICAL STUDS. REFER TO THE SHEATHING PANEL SCHEDULE ON THE TYPICAL SHEAR WALL DETAIL FOR REGIONS REQUIRING 3x STUDS AND BLOCKING AT PANEL JOINTS.
14. THE PIER LENGTH DIMENSIONS SHOWN ON THE SHEAR WALL ELEVATIONS ARE THE MINIMUM DIMENSIONS ALLOWED AND ARE NOT INTENDED FOR CONSTRUCTION. SEE ARCHITECTURAL DRAWINGS FOR THE ACTUAL PIER DIMENSIONS FOR CONSTRUCTION.

KEY NOTES

1. HSS COLUMN: SEE FDN PLAN FOR SIZE
2. 4x TRIM STUD W/ ⅝ Ø STUD BOLTS TO COL PER 8/S1.3
3. SIMPSON MSTA30 STRAP OVER ROOF SHTG, CTR ON BEAM
4. SIMP MST60 EACH FACE PER DETAIL 9/S1.3 IF TOP PLATE IS NOT CONTINUOUS

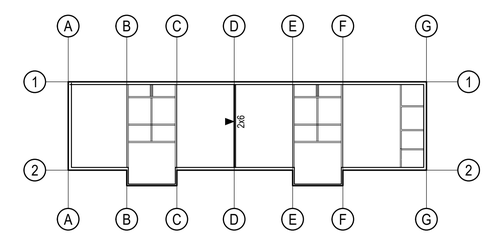

KEY PLAN - BLDG 700

NO SCALE

◄ - INDICATES FACE TO RECEIVE SHEAR WALL PLYWOOD AT INTERIOR WALLS. ALL EXTERIOR WALLS HAVE PLYWOOD ON THE OUTSIDE FACE UON. ALL WALLS ARE 2x8 NOMINAL STUDS UON.

REGISTERED PROFESSIONAL ENGINEER JACK D. BREWER No. S5792 Exp. 6-30-25 STRUCTURAL STATE OF CALIFORNIA

ASD
advanced structural design, inc.
STRUCTURAL ENGINEERS
7112 N. Fresno Street, suite 311
Fresno, California 93720
(559) 432-4151 office
asdi@asdiengr.com

APPROVALS

FILE # 54-76 APPLICATION # 02-121996

IDENTIFICATION STAMP
DIV. OF THE STATE ARCHITECT
APP: 02-121996 INC:
REVIEWED FOR
SS ☑ FLS ☑ ACS ☑
DATE: 8/14/2024

LICENSED ARCHITECT MICHAEL J. SCOTT No. C-34290 REN. 05-31-25 STATE OF CALIFORNIA

DATE: DECEMBER 31, 2023

NEW PRESCHOOL, TK, AND KINDERGARTEN CLASSROOMS AT SANTA FE ELEMENTARY SCHOOL

PORTERVILLE UNIFIED SCHOOL DISTRICT
286 E ORANGE AVENUE, PORTERVILLE, CA 93257

REVISIONS

MANGINI ARCHITECTURE INGENUITY
BARENG MORRELLI SCOTT
MANGINI ASSOCIATES INC.
4320 West Mineral King Avenue
Visalia, California 93291
www.mangini.us
(559) 627-0530 Office
(559) 627-1926 Fax

TITLE
BUILDING 700
SHEAR WALL
ELEVATIONS

S6.1

PROJECT 23076

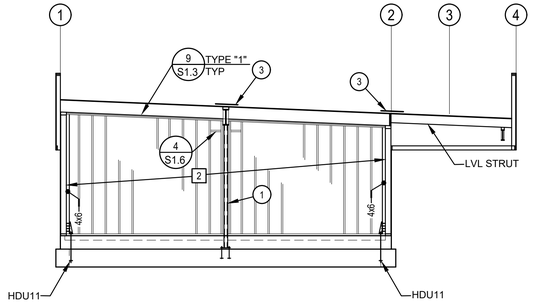

WALL LINE "C", "F" & "J"

⅛" ~ 1'-0"

2x6 @ 16"o.c.
(3x MIN STUDS & BLKG AT TYPE 2 PLYWD JOINTS)

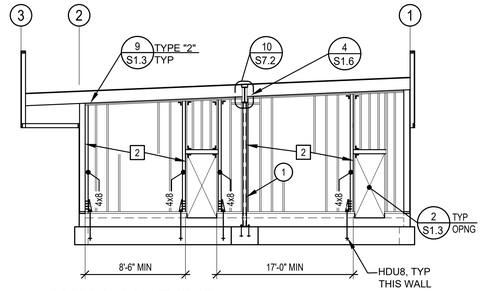

WALL LINE "M"

⅛" ~ 1'-0"

2x8 @ 16"o.c.
(3x MIN STUDS & BLKG AT TYPE 2 PLYWD JOINTS)

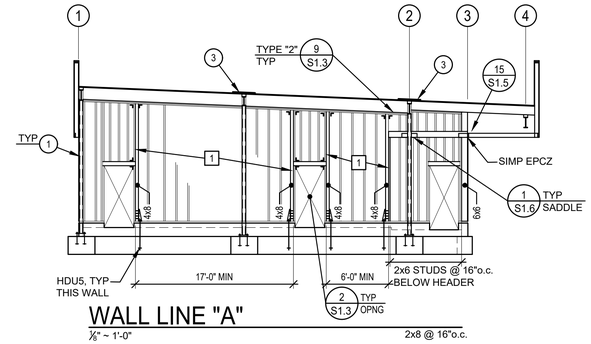

WALL LINE "A"

⅛" ~ 1'-0"

2x8 @ 16"o.c.

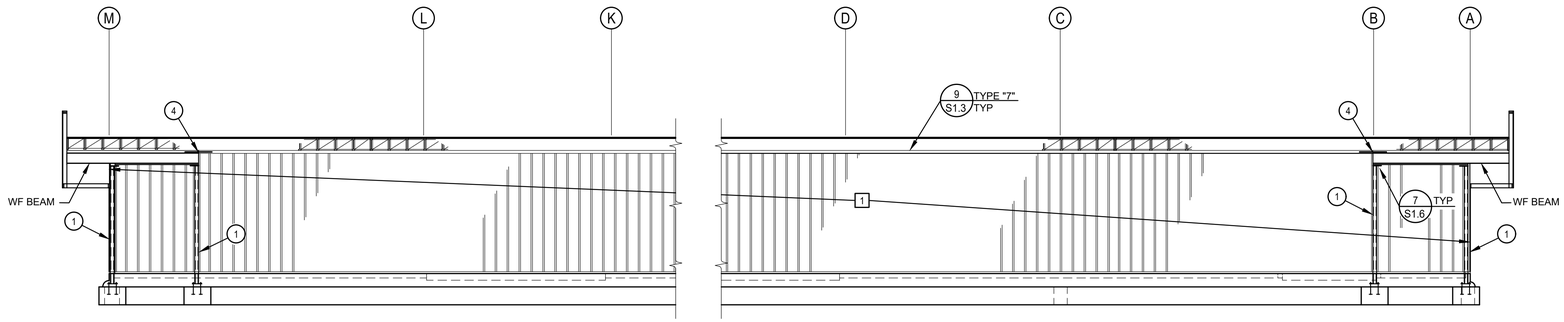

WALL LINE "1"

⅛" ~ 1'-0"

2x8 @ 16"o.c.

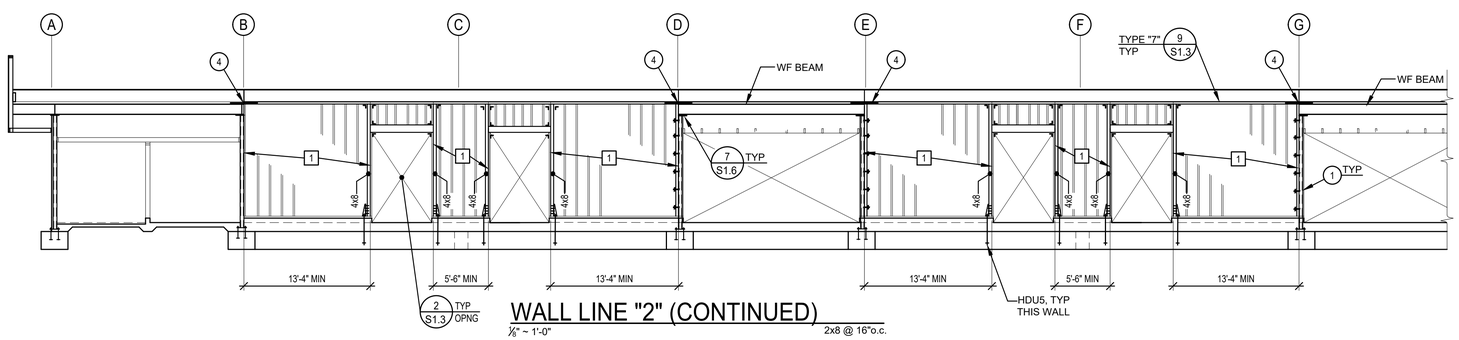

WALL LINE "2" (CONTINUED)

⅛" ~ 1'-0"

2x8 @ 16"o.c.

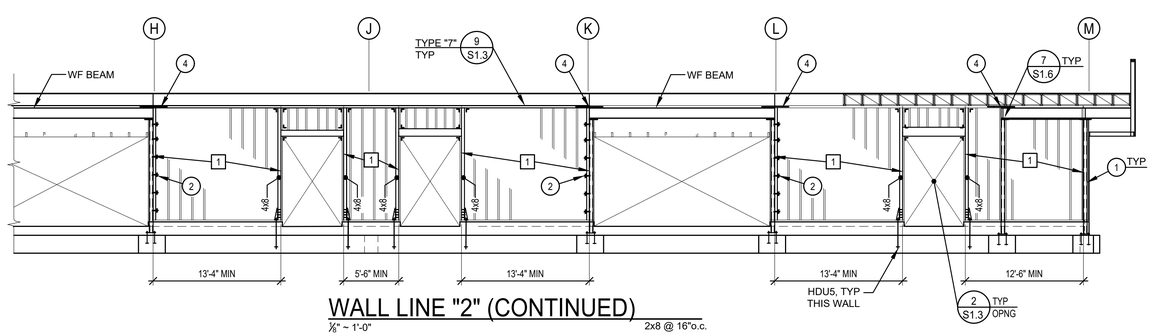

WALL LINE "2" (CONTINUED)

⅛" ~ 1'-0"

2x8 @ 16"o.c.

SHEAR WALL NOTES

1. SEE SHEET S6.1 FOR SHEAR WALL NOTES.

KEY NOTES

1. HSS COLUMN: SEE FDN PLAN FOR SIZE
2. 4x TRIM STUD W/ 5/8 Ø STUD BOLTS TO COL PER 8/S1.3
3. SIMPSON MSTA30 STRAP OVER ROOF SHTG, CTR ON BEAM
4. SIMP ST6236 EACH FACE PER DETAIL 9/S1.3 IF TOP PLATE IS NOT CONTINUOUS

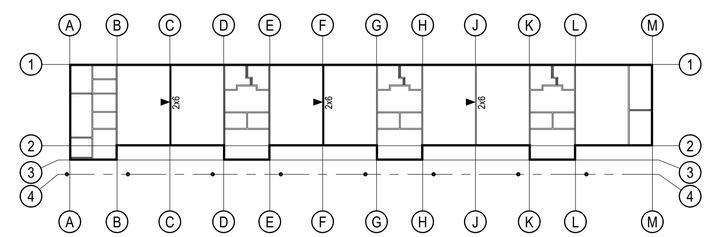

KEY PLAN - BLDG 800

NO SCALE

◄ - INDICATES FACE TO RECEIVE SHEAR WALL PLYWOOD AT INTERIOR WALLS. ALL EXTERIOR WALLS HAVE PLYWOOD ON THE OUTSIDE FACE UON. ALL WALLS ARE 2x8 NOMINAL STUDS UON.

REGISTERED PROFESSIONAL ENGINEER JACK D. BREWER No. S5792 Exp. 6-30-24 STRUCTURAL STATE OF CALIFORNIA

ASD
advanced structural design, inc.
STRUCTURAL ENGINEERS
7112 N. Fresno Street, suite 311
Fresno, California 93720
(559) 432-4151 office
asdi@asdiengr.com

APPROVALS

FILE # 54-76 APPLICATION # 02-121996

IDENTIFICATION STAMP
DIV. OF THE STATE ARCHITECT
APP: 02-121996 INC:
REVIEWED FOR
SS ☑ FLS ☑ ACS ☑
DATE: 8/14/2024

LICENSED ARCHITECT MICHAEL J. SCOTT No. C-34290 REN. 05-31-25 STATE OF CALIFORNIA

DATE: DECEMBER 31, 2023

NEW PRESCHOOL, TK, AND KINDERGARTEN CLASSROOMS AT SANTA FE ELEMENTARY SCHOOL

PORTERVILLE UNIFIED SCHOOL DISTRICT
286 E ORANGE AVENUE, PORTERVILLE, CA 93257

REVISIONS

MANGINI ARCHITECTURE INGENUITY
BARENG MORRELLI SCOTT
MANGINI ASSOCIATES INC.
4320 West Mineral King Avenue
Visalia, California 93291
www.mangini.us
(559) 627-0530 Office
(559) 627-1926 Fax

TITLE
BUILDING 800
SHEAR WALL
ELEVATIONS

S6.2

PROJECT 23076

SEE DETAIL 3/S7.1
FOR OTHER INFO

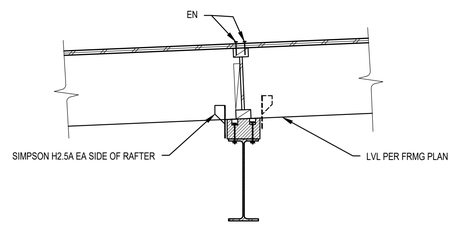

DETAIL AT LVL
1" ~ 1'-0"
4 / S7.1

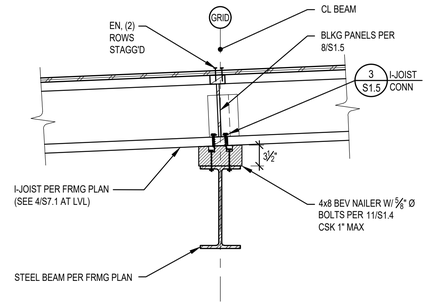

DETAIL
1" ~ 1'-0"
3 / S7.1

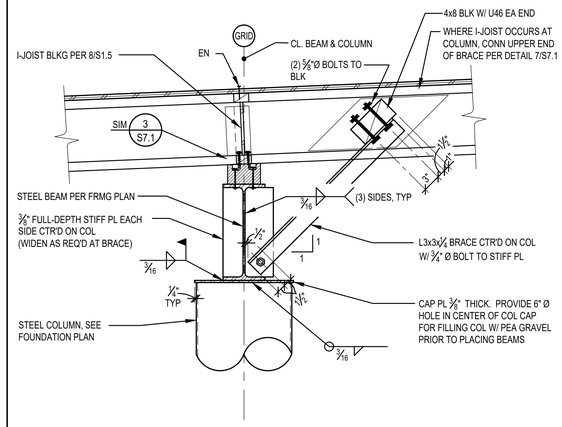

DETAIL
1" ~ 1'-0"
2 / S7.1

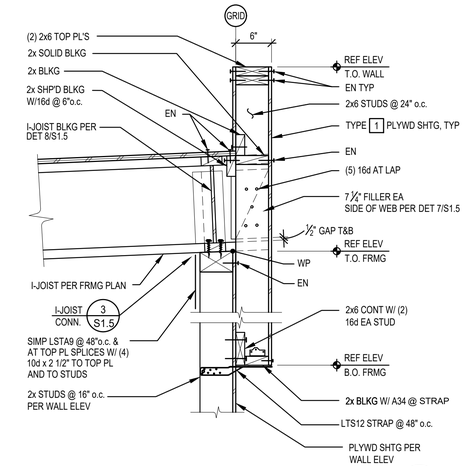

DETAIL
1" ~ 1'-0"
1 / S7.1

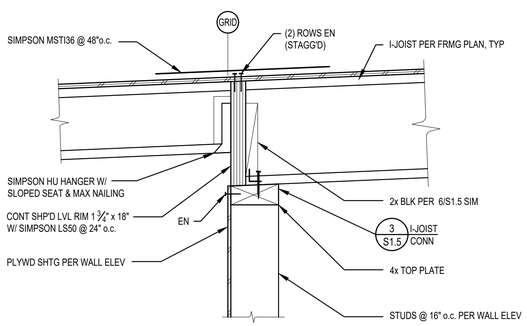

DETAIL
1" ~ 1'-0"
8 / S7.1

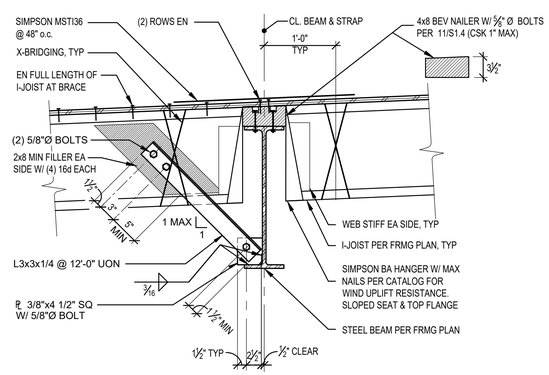

DETAIL
1" ~ 1'-0"
7 / S7.1

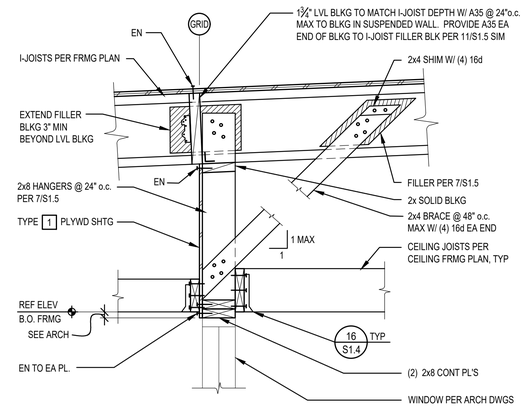

DETAIL
1" ~ 1'-0"
6 / S7.1

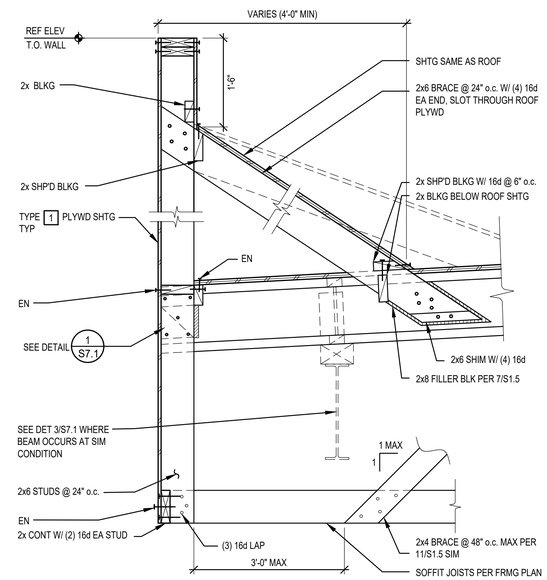

DETAIL
1" ~ 1'-0"
9 / S7.1

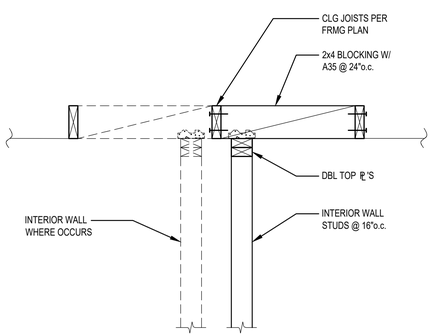

DETAIL
1" ~ 1'-0"
12 / S7.1

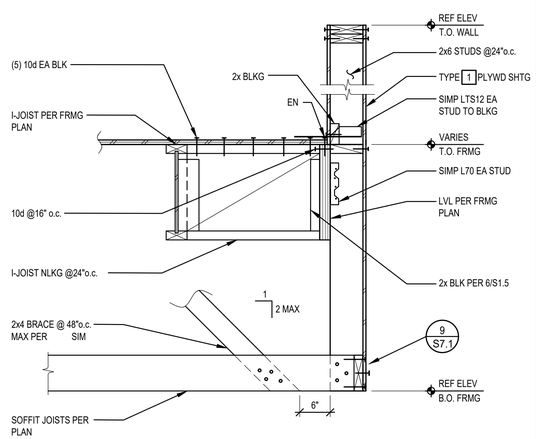

DETAIL
1" ~ 1'-0"
11 / S7.1

SEE DETAIL DET 1/S7.1
SIM FOR OTHER INFO

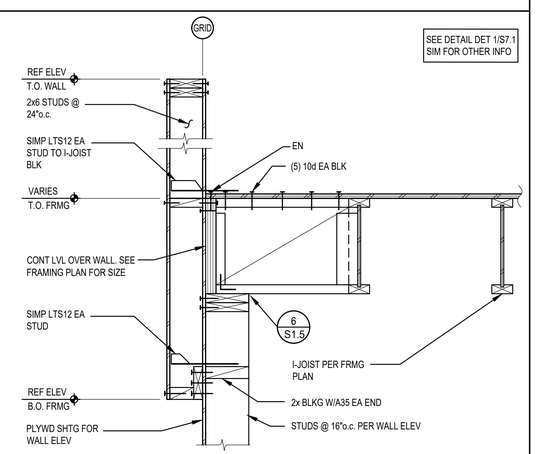

DETAIL
1" ~ 1'-0"
10 / S7.1

APPROVALS

FILE # 54-76 | APPLICATION # 02-121996

IDENTIFICATION STAMP
DIV. OF THE STATE ARCHITECT
APP: 02-121996 INC:
REVIEWED FOR
SS ☑ FLS ☑ ACS ☑
DATE: 8/14/2024

LICENSED ARCHITECT
MICHAEL J. SCOTT
No. C-34290
REN. 05-31-25
STATE OF CALIFORNIA

DATE: DECEMBER 31, 2023

NEW PRESCHOOL, TK, AND KINDERGARTEN CLASSROOMS AT SANTA FE ELEMENTARY SCHOOL

PORTERVILLE UNIFIED SCHOOL DISTRICT
286 E ORANGE AVENUE, PORTERVILLE, CA 93257

REVISIONS

MANGINI ARCHITECTURE
BARENG MORRELLI INGENUITY SCOTT
MANGINI ASSOCIATES INC.
4320 West Mineral King Avenue
Visalia, California 93291
www.mangini.us
(559) 627.0530 Office
(559) 627.1926 Fax

TITLE
FRAMING
DETAILS

S7.1

PROJECT 23076

REGISTERED PROFESSIONAL ENGINEER
JACK D. BRENNEMAN
No. S5792
Exp. 6-30-25
STRUCTURAL
STATE OF CALIFORNIA

ASD
advanced structural design, inc.
STRUCTURAL ENGINEERS
7112 N. Fresno Street, suite 311
Fresno, California 93720
(559) 432-4151 office
asdi@asdiengr.com

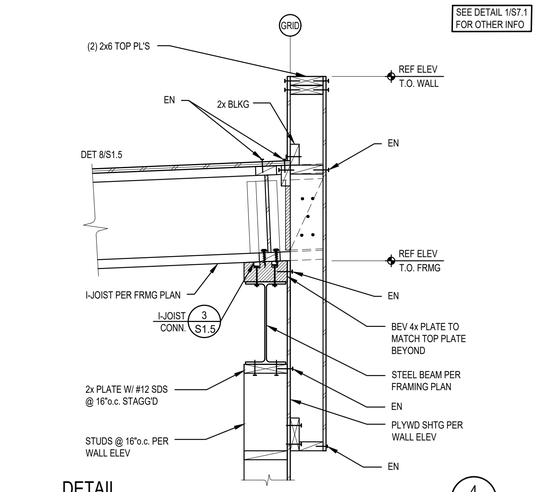

DETAIL 4/S7.2
1" ~ 1'-0"

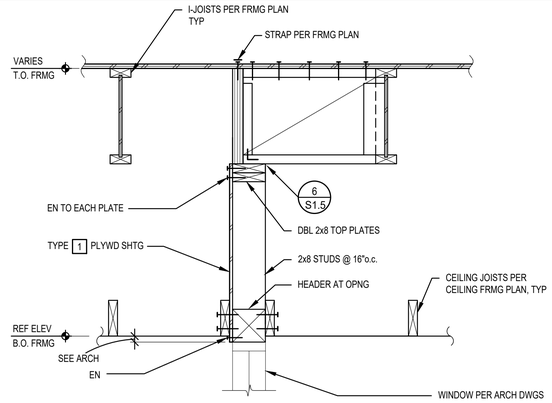

DETAIL 3/S7.2
1" ~ 1'-0"

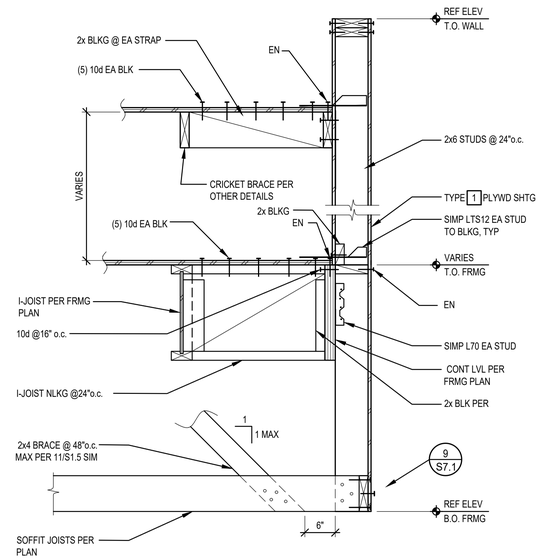

DETAIL 6/S7.2
1" ~ 1'-0"

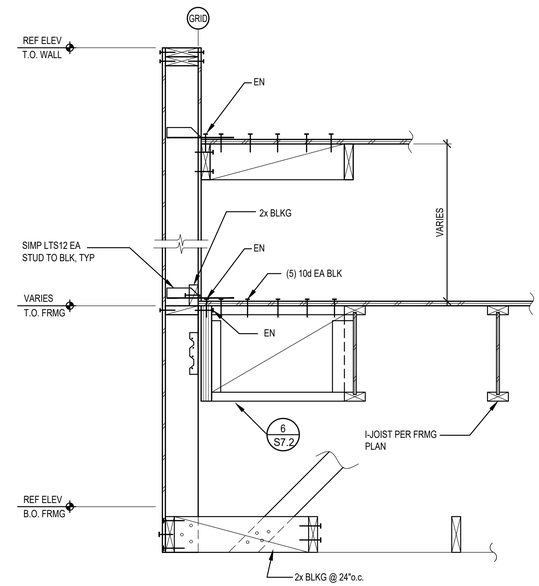

DETAIL 5/S7.2
1" ~ 1'-0"

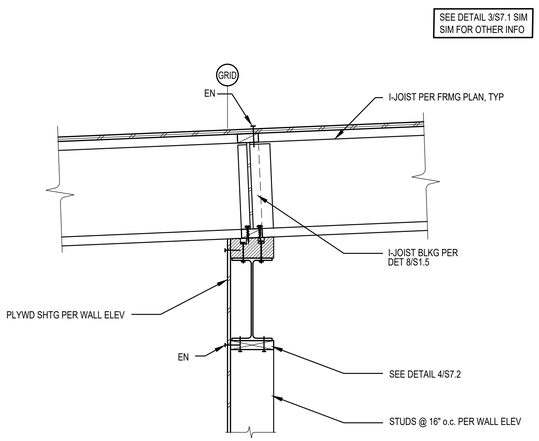

DETAIL 8/S7.2
1" ~ 1'-0"

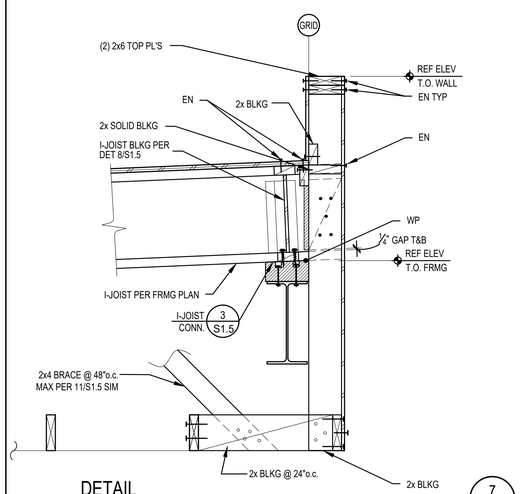

DETAIL 7/S7.2
1" ~ 1'-0"

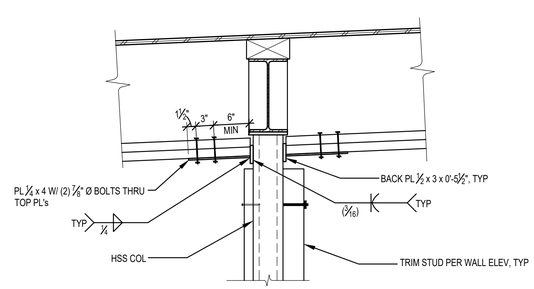

DETAIL 10/S7.2
1" ~ 1'-0"

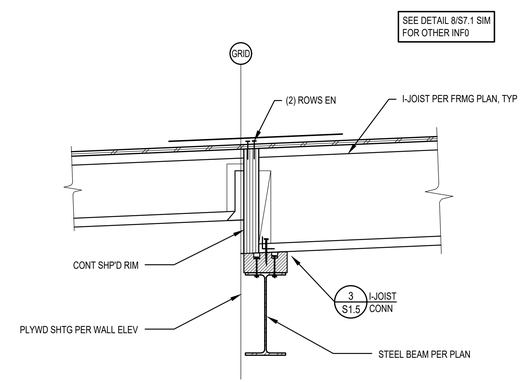

DETAIL 9/S7.2
1" ~ 1'-0"

APPROVALS

FILE # 54-76 APPLICATION # 02-121996

IDENTIFICATION STAMP
DIV. OF THE STATE ARCHITECT
APP: 02-121996 INC:
REVIEWED FOR
SS ☑ FLS ☑ ACS ☑
DATE: 8/14/2024

LICENSED ARCHITECT MICHAEL J. SCOTT No. C-34290 REN. 05-31-25 STATE OF CALIFORNIA

DATE: DECEMBER 31, 2023

NEW PRESCHOOL, TK, AND KINDERGARTEN CLASSROOMS AT SANTA FE ELEMENTARY SCHOOL

PORTERVILLE UNIFIED SCHOOL DISTRICT
286 E ORANGE AVENUE, PORTERVILLE, CA 93257

REVISIONS

MANGINI ARCHITECTURE INGENUITY
BARENG MORRELLI SCOTT
MANGINI ASSOCIATES INC.
4320 West Mineral King Avenue
Visalia, California 93291
www.mangini.us
(559) 627-0530 Office
(559) 627-3925 Fax

TITLE
FRAMING DETAILS

S7.2

PROJECT 23076

REGISTERED PROFESSIONAL ENGINEER JACK D. BRENENG No. S5792 Exp. 6-30-25 STRUCTURAL STATE OF CALIFORNIA

ASD
advanced structural design, inc.
STRUCTURAL ENGINEERS
7112 N. Fresno Street, suite 311
Fresno, California 93720
(559) 432-4151 office
asdi@asdiengr.com

APPROVALS

FILE # 54-76 | APPLICATION # 02-121996

IDENTIFICATION STAMP
DIV. OF THE STATE ARCHITECT
APP: 02-121996 INC:
REVIEWED FOR
SS ☑ FLS ☑ ACS ☑
DATE: 8/14/2024

LICENSED ARCHITECT
MICHAEL J. SCOTT
No. C-34290
REN. 05-31-25
STATE OF CALIFORNIA

DATE: DECEMBER 31, 2023

GENERAL PLUMBING NOTES:

1. THE INTENT OF THE DRAWINGS AND SPECIFICATIONS IS TO CONSTRUCT THE BUILDING IN ACCORDANCE WITH THE 2022 EDITION OF TITLE 24, CALIFORNIA CODE OF REGULATIONS. SHOULD ANY CONDITIONS DEVELOP NOT COVERED BY THE CONTRACT DOCUMENTS WHEREIN THE FINISHED WORK WOULD NOT COMPLY WITH SAID TITLE 24, CALIFORNIA CODE OF REGULATIONS, A CHANGE ORDER DETAILING AND SPECIFYING THE REQUESTED WORK SHALL BE SUBMITTED TO AND APPROVED BY DSA BEFORE PROCEEDING WITH THE WORK.

2. THE APPLICABLE CODES AND REGULATIONS FOR THIS PROJECT INCLUDE, BUT ARE NOT LIMITED TO, THE FOLLOWING:

CALIFORNIA CODE OF REGULATIONS
TITLE 8, INDUSTRIAL RELATIONS
TITLE 19, PUBLIC SAFETY, STATE FIRE MARSHAL REGULATIONS
TITLE 24, PART 1 ,ADMINISTRATIVE REGULATIONS
2022 CALIFORNIA BUILDING CODE, PART 2, TITLE 24 CCR
2022 CALIFORNIA ELECTRICAL CODE, PART 3, TITLE 24 CCR
2022 CALIFORNIA MECHANICAL CODE, PART 4, TITLE 24 CCR
2022 CALIFORNIA PLUMBING CODE, PART 5, TITLE 24 CCR
2022 CALIFORNIA FIRE CODE, PART 9, TITLE 24 CCR

NFPA 101 2021 EDITION
OSHA - OCCUPATIONAL SAFETY AND HEALTH ACT

3. LAYOUT OF MATERIALS, EQUIPMENT AND SYSTEMS IS GENERALLY DIAGRAMMATIC UNLESS SPECIFICALLY DIMENSIONED. SOME WORK MAY BE SHOWN OFFSET FOR CLARITY. THE PLUMBING BUILDING PLANS HAVE BEEN PREPARED TO MATCH THE ARCHITECTURAL PLANS. IF DIFFERENCES OCCUR, THE ARCHITECTURAL PLANS ARE TO TAKE PRECEDENCE. THE ACTUAL LOCATIONS OF ALL MATERIALS, PIPING, DUCTWORK, FIXTURES, EQUIPMENT, SUPPORTS, ETC. SHALL BE CAREFULLY PLANNED, PRIOR TO INSTALLATION OF ANY WORK, TO AVOID ALL INTERFERENCE WITH EACH OTHER, OR WITH STRUCTURAL, ELECTRICAL, ARCHITECTURAL, OR OTHER ELEMENTS. ALL PIPE OFFSET ELBOWS FOR COORDINATION BETWEEN TRADES ARE NOT SHOWN. CONTRACTOR SHALL INCLUDE SUFFICIENT FUNDS FOR THE COORDINATION OFFSETS IN THE BID. VERIFY THE PROPER VOLTAGE AND PHASE OF ALL EQUIPMENT WITH THE ELECTRICAL PLANS. ALL CONFLICTS SHALL BE CALLED TO THE ATTENTION OF THE ARCHITECT AND THE ENGINEER PRIOR TO INSTALLATION OF ANY WORK OR THE ORDERING OF ANY EQUIPMENT.

4. WHEN INSTALLING DRILLED-IN ANCHORS AND/OR POWDER-DRIVEN PINS IN EXISTING NON-PRESTRESSED CONCRETE, USE CARE AND CAUTION TO AVOID CUTTING OR DAMAGING THE EXISTING REINFORCING BARS. WHEN INSTALLING THEM INTO EXISTING PRE-STRESSED CONCRETE (PRE- OR POST-TENSIONED), LOCATE THE PRESTRESSED TENDONS BY USING A NON-DESTRUCTIVE METHOD PRIOR TO INSTALLATION. MAINTAIN A MINIMUM CLEARANCE OF ONE INCH BETWEEN THE REINFORCEMENT AND THE DRILLED-IN ANCHOR AND/OR PIN.

5. MEP COMPONENT ANCHORAGE NOTE:

ALL MECHANICAL, PLUMBING, AND ELECTRICAL COMPONENTS SHALL BE ANCHORED AND INSTALLED PER THE DETAILS ON THE DSA APPROVED CONSTRUCTION DOCUMENTS. THE FOLLOWING COMPONENTS SHALL BE ANCHORED OR BRACED TO MEET THE FORCE AND DISPLACEMENT REQUIREMENTS PRESCRIBED IN THE 2022 CBC, SECTIONS 1617A.1.18 THROUGH 1617A.1.26 AND ASCE 7-16 CHAPTERS 13, 26 AND 30.

1. ALL PERMANENT EQUIPMENT AND COMPONENTS.

2. TEMPORARY, MOVABLE OR MOBILE EQUIPMENT THAT IS PERMANENTLY ATTACHED (E.G. HARD WIRED) TO THE BUILDING UTILITY SERVICES SUCH AS ELECTRICITY, GAS OR WATER. "PERMANENTLY ATTACHED" SHALL INCLUDE ALL ELECTRICAL CONNECTIONS EXCEPT PLUGS FOR 110/220 VOLT RECEPTACLES HAVING A FLEXIBLE CABLE.

3. TEMPORARY, MOVABLE, OR MOBILE EQUIPMENT WHICH IS HEAVIER THAN 400 POUNDS OR HAS A CENTER OF MASS LOCATED 4 FEET OR MORE ABOVE THE ADJACENT FLOOR OR ROOF LEVEL THAT DIRECTLY SUPPORT THE COMPONENT IS REQUIRED TO BE RESTRAINED IN A MANNER APPROVED BY DSA.

THE FOLLOWING MECHANICAL AND ELECTRICAL COMPONENTS SHALL BE POSITIVELY ATTACHED TO THE STRUCTURE, BUT NEED NOT DEMONSTRATE DESIGN COMPLIANCE WITH THE REFERENCES NOTED ABOVE. THESE COMPONENTS SHALL HAVE FLEXIBLE CONNECTIONS PROVIDED BETWEEN THE COMPONENT AND ASSOCIATED DUCTWORK, PIPING, AND CONDUIT. FLEXIBLE CONNECTIONS MUST ALLOW MOVEMENT IN BOTH TRANSVERSE AND LONGITUDINAL DIRECTIONS.

A. COMPONENTS WEIGHING LESS THAN 400 POUNDS AND HAVE A CENTER OF MASS LOCATED 4 FEET OR LESS ABOVE THE ADJACENT FLOOR OR ROOF LEVEL THAT DIRECTLY SUPPORT THE COMPONENT.

B. COMPONENTS WEIGHING LESS THAN 20 POUNDS, OR IN THE CASE OF DISTRIBUTED SYSTEMS, LESS THAN 5 POUNDS PER FOOT, WHICH ARE SUSPENDED FROM A ROOF OR FLOOR OR HUNG FROM A WALL.

THE ANCHORAGE OF ALL MECHANICAL, ELECTRICAL AND PLUMBING COMPONENTS SHALL BE SUBJECT TO THE APPROVAL OF THE DESIGN PROFESSIONAL IN GENERAL RESPONSIBLE CHARGE OR STRUCTURAL ENGINEER DELEGATED RESPONSIBILITY AND ACCEPTANCE BY DSA. THE PROJECT INSPECTOR WILL VERIFY THAT ALL COMPONENTS AND EQUIPMENT HAVE BEEN ANCHORED IN ACCORDANCE WITH ABOVE REQUIREMENTS.

6. PIPING, DUCTWORK, AND ELECTRICAL DISTRIBUTION SYSTEM BRACING NOTE:

PIPING, DUCTWORK, AND ELECTRICAL DISTRIBUTION SYSTEMS SHALL BE BRACED TO COMPLY WITH THE FORCES AND DISPLACEMENTS PRESCRIBED IN ASCE 7-16 SECTION 13.3 AS DEFINED IN ASCE 7-16 SECTION 13.6.5, 13.6.6, 13.6.7, 13.6.8, AND 2022 CBC, SECTIONS 1617A.1.24, 1617A.1.25, 1617A.1.26.

THE METHOD OF SHOWING BRACING AND ATTACHMENTS TO THE STRUCTURE FOR THE IDENTIFIED DISTRIBUTION SYSTEM ARE AS NOTED BELOW. WHEN BRACING AND ATTACHMENTS ARE BASED ON A PREAPPROVED INSTALLATION GUIDE (E.G., HCAI OPM FOR 2022 CBC OR LATER), COPIES OF THE BRACING SYSTEM INSTALLATION GUIDE OR MANUAL SHALL BE AVAILABLE ON THE JOBSITE PRIOR TO THE START OF AND DURING THE HANGING AND BRACING OF THE DISTRIBUTION SYSTEMS. THE STRUCTURAL ENGINEER OF RECORD SHALL VERIFY THE ADEQUACY OF THE STRUCTURE TO SUPPORT THE HANGER AND BRACE LOADS.

MP ☐ MD ☐ PP ☒ A. OPTION 1: DETAILED ON THE APPROVED DRAWINGS WITH PROJECT SPECIFIC NOTES AND DETAILS.

MP ☐ MD ☐ PP ☐ B. OPTION 2: PLUMBING PIPING (PP) - SHALL COMPLY WITH OPM-0043-13 HCAI PRE-APPROVAL (MASON WEST. SEISMIC RESTRAINT GUIDELINES FOR SUSPENDED DISTRIBUTION SYSTEMS).

BRACE ALL PIPING 3" DIAMETER AND GREATER; USE Ip=1.0 FOR SEISMIC DESIGN CALCULATIONS. EXCEPTION: NATURAL GAS PIPING 1"DIAMETER AND GREATER, USE Ip=1.5 FOR SEISMIC DESIGN CALCULATIONS.

7. PENETRATIONS THROUGH FIRE RATED WALLS, FLOOR/CEILING, AND ROOF/CEILING ASSEMBLIES SHALL BE SEALED USING AN APPROVED SYSTEM CAPABLE OF PREVENTING THE PASSAGE OF FLAMES AND HOT GASES WHEN SUBJECTED TO THE REQUIREMENTS OF THE TEST STANDARD SPECIFIC TO FIRE STOPS PER 2022 CBC SECTION 714. THIS INCLUDES EXISTING PIPE AND CONDUIT THROUGH NEW ASSEMBLIES. CUSTOM DESIGNED SYSTEMS WHICH COMBINE COMPONENTS FROM DIFFERENT APPROVED SYSTEMS BUT HAVE NOT BEEN TESTED AS A COMPLETE ASSEMBLY WILL NOT BE ACCEPTABLE. FOR FIRE STOPS FOR PIPE PENETRATIONS SEE SPECIFICATIONS.

8. FIELD VERIFY THE EXACT LOCATION, DEPTH AND SIZE OF ALL NEW POINTS OF CONNECTION TO EXISTING UTILITIES PRIOR TO COMMENCING NEW UTILITY WORK.

9. INSTALLATION OF NEW UTILITIES FROM EXISTING MAINS IN THE STREET SHALL BE DONE IN STRICT ACCORDANCE WITH GOVERNING AUTHORITY REQUIREMENTS.

10. INSTALLATION, TYPE AND MANUFACTURERS MODELS OF DOMESTIC WATER METERS, BACKFLOW PREVENTERS, FIRE HYDRANTS, DETECTOR CHECK VALVES, MANHOLES, DRAIN INLETS/OUTLETS AND OTHER APPURTENANCE OF SITE UTILITY SYSTEMS SHALL BE DONE IN STRICT ACCORDANCE WITH GOVERNING AUTHORITY REQUIREMENTS.

11. CONTRACTOR SHALL EXCAVATE AND BACKFILL THE GAS SERVICE TRENCH FOR THE LOCAL GAS UTILITY. THE LOCAL GAS UTILITY SHALL INSTALL THEIR GAS SERVICE LINE TO THE GAS METER. TRENCHING SHALL BE IN ACCORDANCE WITH UTILITY STANDARDS. ALL CHARGES AND FEES INCURRED BY THE UTILITY FOR NEW GAS SERVICE SHALL BE PAID BY THE CONTRACTOR.

12. ALL DOMESTIC WATER PIPING SHALL BE A MINIMUM OF 1/2" SIZE UNLESS NOTED OTHERWISE. USE A REDUCING DROP ELL AT FIXTURE CONNECTION WHEN APPLICABLE.

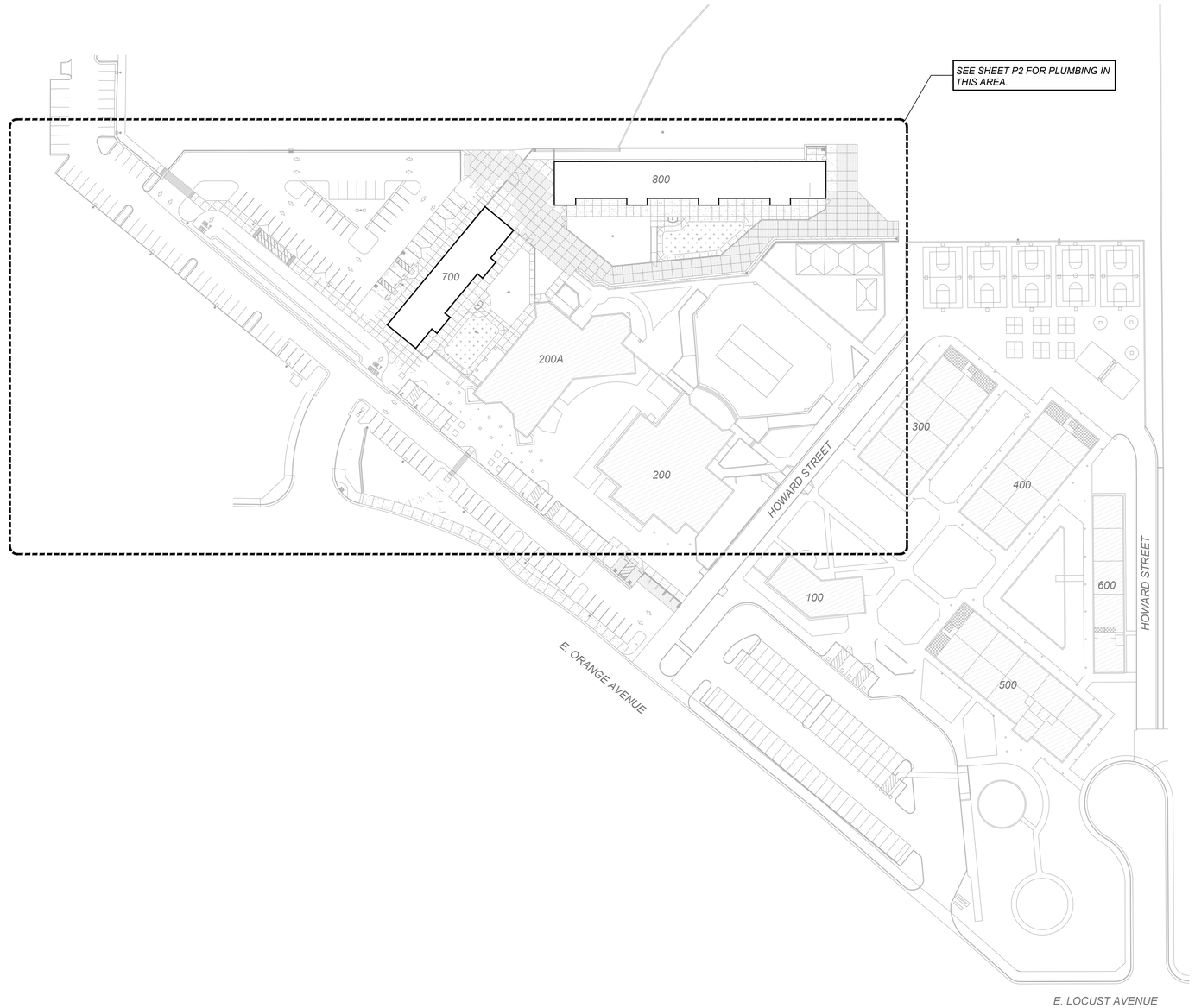

OVERALL PLUMBING SITE PLAN

SCALE: 1" = 60'-0"

	PLUMBING LEGEND	
SYMBOL	ITEM	ABBR
	SOIL or WASTE	S or W
	VENT	V
	VENT RISER	VR
	VENT THRU ROOF	VTR
	DOMESTIC COLD WATER	CW
	DOMESTIC HOT WATER	HW
	DOMESTIC HOT WATER RETURN	HWR
—G—	LOW PRESSURE NATURAL GAS	G
2#G	2 PSI GAS	2#G
5#G	5 PSI GAS	5#G
GSM	GAS SERVICE MAIN BY THE LOCAL GAS UTILITY	GSM
—C—	CONDENSATE DRAIN	CD
RWL	RAIN WATER LEADER	RWL
OD	OVERFLOW DRAIN	OD
SD	STORM DRAIN	SD
IW	INDIRECT WASTE	IW
—F—	FIRE PROTECTION LINE	F
	EXISTING PIPING	(E)
(E)	EXISTING	
(N)	NEW	
	ABOVE CEILING	ABV CLG
	BELOW FLOOR	BEL FLR
	BELOW GRADE	BEL GR
	TYPICAL	TYP
	CONTINUATION	CONT
	DOWN	DN
	FLOOR CLEANOUT	FCO
	CLEANOUT TO GRADE	COTG
	WALL CLEANOUT	WCO
	PIPING TURN UP	
	PIPING TURN DOWN	
	POINT OF CONNECTION	POC
	SHUT-OFF VALVE IN BOX	SOV
	SHUT-OFF VALVE	SOV
	SHUT-OFF VALVE IN RISER	-
	SHUT-OFF VALVE IN DROP	-
	GATE VALVE	-
	BUTTERFLY VALVE	-
	GLOBE VALVE	-
	CHECK VALVE	-
	PLUG VALVE	-
	BALL VALVE	-
	BALANCE COCK	-
	REDUCER	-
	MANHOLE	MH
	FLOW LINE	FL
	UNION	-
	RELIEF VALVE	-
	BALANCING VALVE	-
	PRESSURE GAUGE	-
	THERMOMETER	-

NEW PRESCHOOL AND TK/KINDERGARTEN CLASSROOMS AT SANTA FE ELEMENTARY SCHOOL

PORTERVILLE UNIFIED SCHOOL DISTRICT
286 E. ORANGE AVENUE, PORTERVILLE, CA 93257

REVISIONS

MANGINI ARCHITECTURE INGENUITY
BARENG MORRELLI SCOTT
MANGINI ASSOCIATES INC.
4320 West Mineral King Avenue
Visalia, California 93291
www.mangini.us
(559) 627-0530 Office
(559) 627-1926 Fax

REGISTERED PROFESSIONAL ENGINEER
STEVAN W. CARLSON
NO. M34646
Exp. 6-30-26
MECHANICAL
STATE OF CALIFORNIA

LAWRENCE ENGINEERING GROUP
4910 E. Clinton Way, Suite 101
(559) 431-0101
23114
Fresno, CA 93727
FAX (559) 431-1362

TITLE
OVERALL PLUMBING SITE PLAN, LEGEND, AND NOTES

P1

PROJECT 23076

24 June 2024 11:48 AM P:\2023\23114 Porterville USD - Santa Fe ES - Kinder\4-Drawings\5 P\P1 - Overall Plumbing Site Plan.dwg rajj g

C:\Users\raj\AppData\Local\Temp\AcPublish_4216\P1 - Overall Plumbing Site Plan.dwg Jun 24 2024 11:48am

APPROVALS

FILE # 54-76 | APPLICATION # 02-121996

IDENTIFICATION STAMP
DIV. OF THE STATE ARCHITECT
APP: 02-121996 INC:
REVIEWED FOR
SS ☑ FLS ☑ ACS ☑
DATE: 8/14/2024

LICENSED ARCHITECT
MICHAEL J. SCOTT
No. C-34290
REN. 05-31-25
STATE OF CALIFORNIA

DATE: DECEMBER 31, 2023

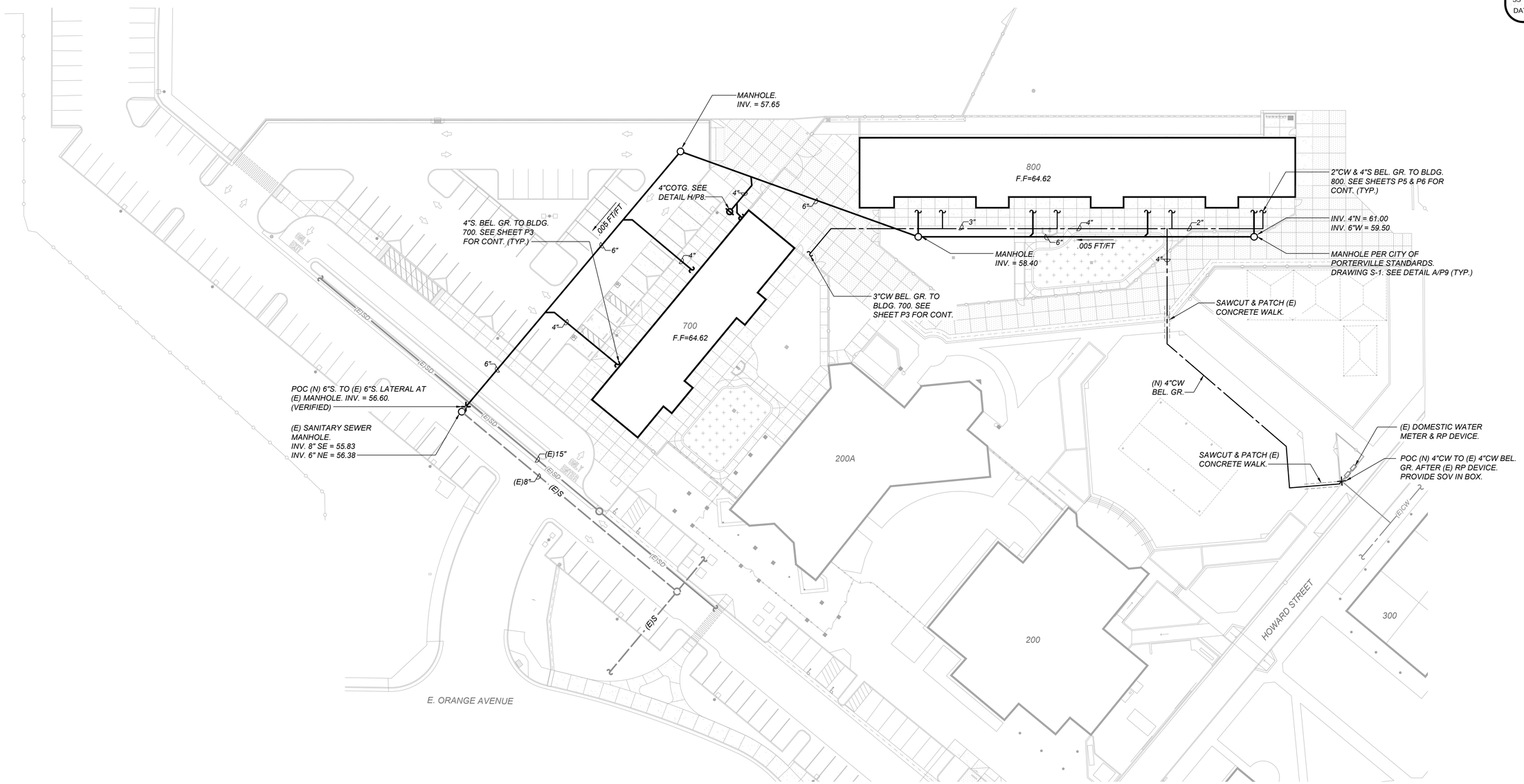

ENLARGED PLUMBING SITE PLAN

SCALE: 1" = 30'-0"

north

NEW PRESCHOOL AND TK/KINDERGARTEN CLASSROOMS AT SANTA FE ELEMENTARY SCHOOL

PORTERVILLE UNIFIED SCHOOL DISTRICT

286 E ORANGE AVENUE, PORTERVILLE, CA 93257

REVISIONS

MANGINI | ARCHITECTURE INGENUITY
BARENG MORRELLI SCOTT
MANGINI ASSOCIATES INC.
4320 West Mineral King Avenue
Visalia, California 93291
www.mangini.us
(559) 627.0530 Office
(559) 627.1926 Fax

REGISTERED PROFESSIONAL ENGINEER
BRIAN W. CARLSON
NO. M34646
Exp. 6-30-26
MECHANICAL
STATE OF CALIFORNIA

LAWRENCE ENGINEERING GROUP
4910 E. Clinton Way, Suite 101
(559) 431-0101
23114
Fresno, CA 93727
FAX (559) 431-1362

TITLE
ENLARGED PLUMBING SITE PLAN

P2

PROJECT 23076

24 June 2024 11:48 AM P:\2023\23114 Porterville USD - Santa Fe ES - Kinder\4-Drawings\5 P\P2 - Enlarged Plumbing Site Plan.dwg rej g

P:\2023\23114 Porterville USD - Santa Fe ES - Kinder\4-Drawings\5 P\P2 - Enlarged Plumbing Site Plan.dwg Jun 24 2024 11:48am

APPROVALS

FILE # 54-76 | APPLICATION # 02-121996

IDENTIFICATION STAMP
DIV. OF THE STATE ARCHITECT
APP: 02-121996 INC:
REVIEWED FOR
SS ☑ FLS ☑ ACS ☑
DATE: 8/14/2024

LICENSED ARCHITECT
MICHAEL J. SCOTT
No. C-34290
REN. 05-31-25
STATE OF CALIFORNIA

DATE: DECEMBER 31, 2023

NEW PRESCHOOL AND TK/KINDERGARTEN CLASSROOMS AT SANTA FE ELEMENTARY SCHOOL

PORTERVILLE UNIFIED SCHOOL DISTRICT
286 E ORANGE AVENUE, PORTERVILLE, CA 93257

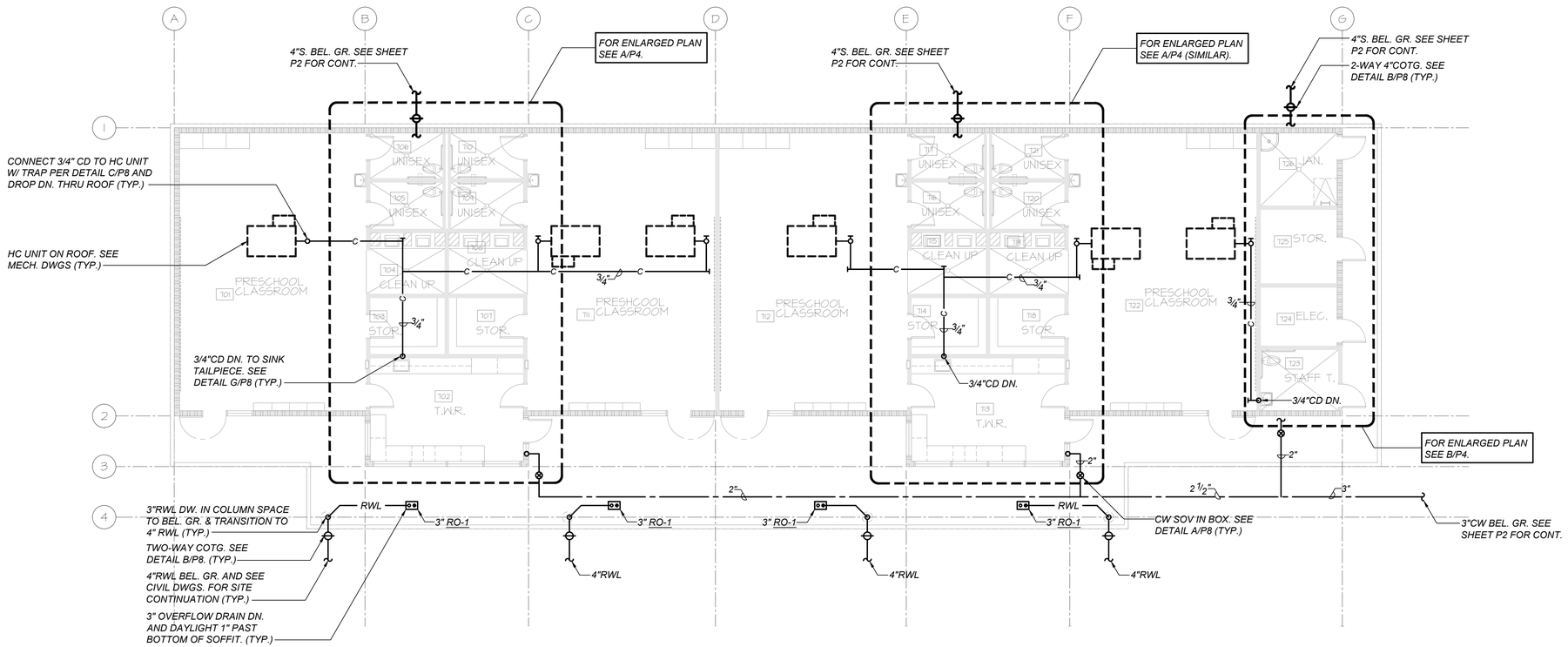

north

PLUMBING PLAN - BUILDING 700

SCALE: 1/8" = 1'-0"

REVISIONS

MANGINI | ARCHITECTURE INGENUITY
BARENG MORRELLI SCOTT
MANGINI ASSOCIATES INC.
4320 West Mineral King Avenue
Visalia, California 93291
www.mangini.us
(559) 627.0530 Office
(559) 627.1926 Fax

REGISTERED PROFESSIONAL ENGINEER
BRIAN W. CARLSON
NO. M34646
Exp. 6-30-26
MECHANICAL
STATE OF CALIFORNIA

LAWRENCE ENGINEERING GROUP
4910 E. Clinton Way, Suite 101
(559) 431-0101
23114
Fresno, CA 93727
FAX (559) 431-1362

TITLE
BLDG. 700
PLUMBING PLAN

P3

PROJECT 23076

24 June 2024 11:48 AM P:\2023\23114 Porterville USD - Santa Fe ES - Kinder\4-Drawings\5 P\P3 - Plumbing Plan - Building 700.dwg rej g

P:\2023\23114 Porterville USD - Santa Fe ES - Kinder\4-Drawings\5 P\P3 - Plumbing Plan - Building 700.dwg Jun 24 2024 11:48am

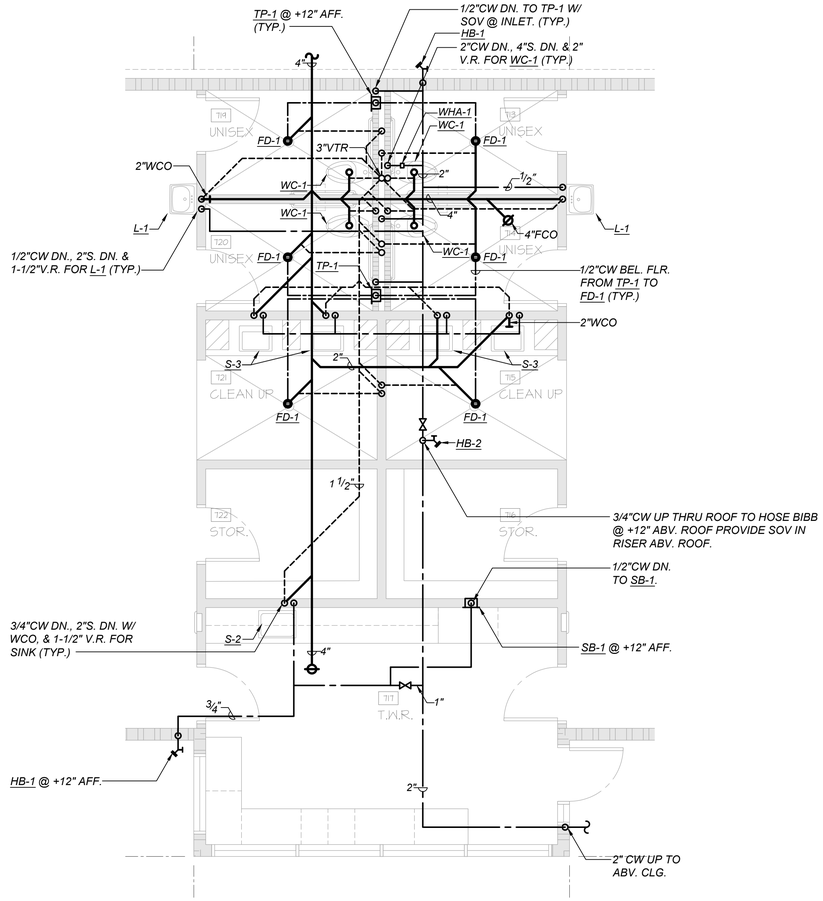

ENLARGED PLUMBING PLAN - BUILDING 700

SCALE: 1/4"=1'-0"

A / P4

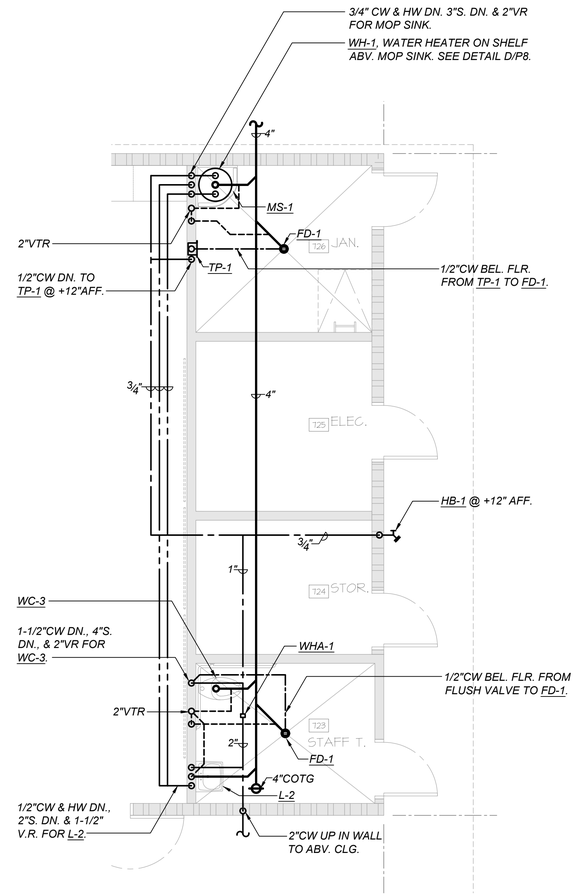

ENLARGED PLUMBING PLAN - BUILDING 700

SCALE: 1/4"=1'-0"

B / P4

APPROVALS

FILE # 54-76 | APPLICATION # 02-121996

IDENTIFICATION STAMP
DIV. OF THE STATE ARCHITECT
APP: 02-121996 INC:
REVIEWED FOR
SS ☑ FLS ☑ ACS ☑
DATE: 8/14/2024

LICENSED ARCHITECT MICHAEL J. SCOTT No. C-34290 REN. 05-31-25 STATE OF CALIFORNIA

DATE: DECEMBER 31, 2023

NEW PRESCHOOL AND TK/KINDERGARTEN CLASSROOMS AT SANTA FE ELEMENTARY SCHOOL

PORTERVILLE UNIFIED SCHOOL DISTRICT

286 E ORANGE AVENUE, PORTERVILLE, CA 93257

REVISIONS

MANGINI ARCHITECTURE INGENUITY
BARENG MORRELLI SCOTT
MANGINI ASSOCIATES INC.
4320 West Mineral king Avenue
Visalia, California 93291
www.mangini.us
(559) 627.0530 Office
(559) 627.1926 Fax

TITLE

BLDG. 700
ENLARGED
PLUMBING PLANS

P4

PROJECT 23076

north

REGISTERED PROFESSIONAL ENGINEER BRIAN W. CARLSON NO. M34646 Exp. 6-30-26 MECHANICAL STATE OF CALIFORNIA

LAWRENCE ENGINEERING GROUP
4910 E. Clinton Way, Suite 101
(559) 431-0101
23114
Fresno, CA 93727
FAX (559) 431-1362

APPROVALS

FILE # 54-76 | APPLICATION # 02-121996

IDENTIFICATION STAMP
DIV. OF THE STATE ARCHITECT
APP: 02-121996 INC:
REVIEWED FOR
SS ☑ FLS ☑ ACS ☑
DATE: 8/14/2024

LICENSED ARCHITECT
MICHAEL J. SCOTT
No. C-34290
REN. 05-31-25
STATE OF CALIFORNIA

DATE: DECEMBER 31, 2023

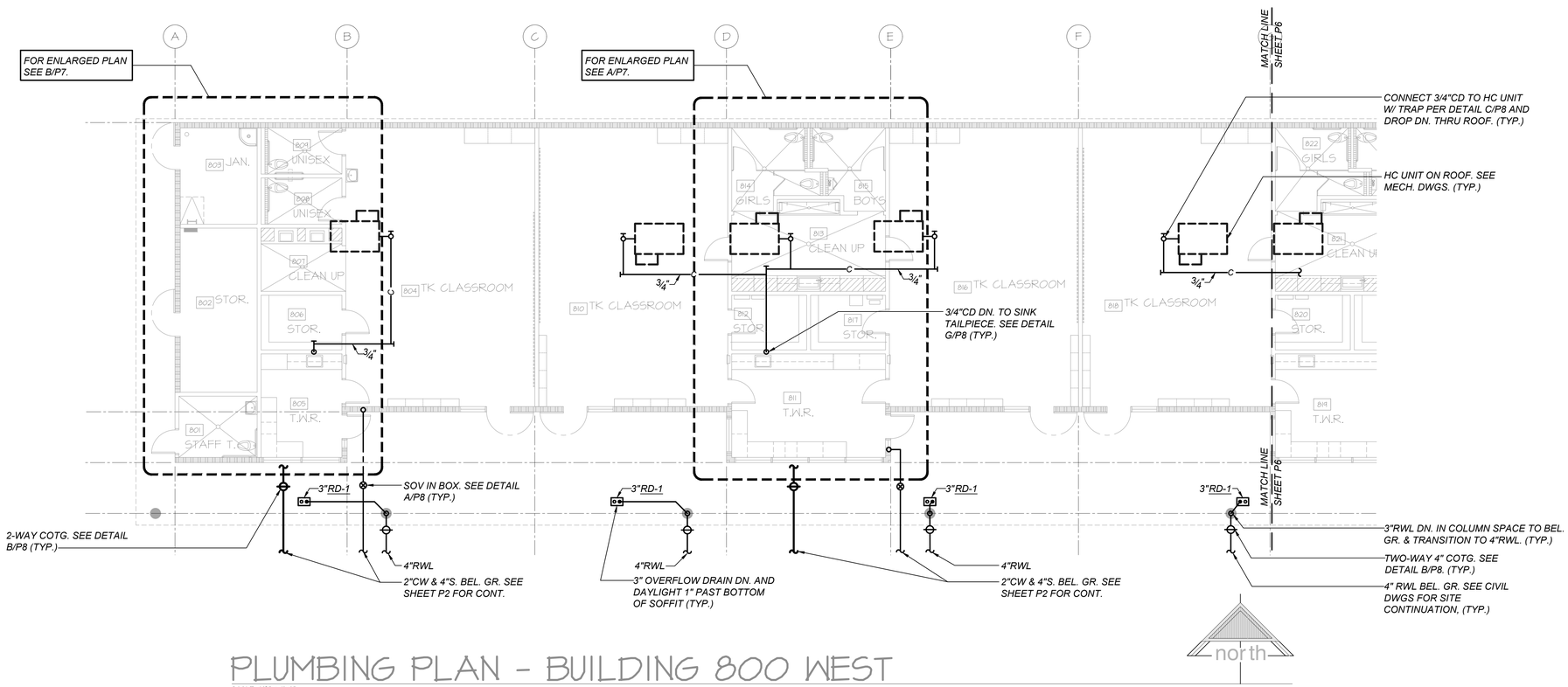

PLUMBING PLAN - BUILDING 800 WEST

SCALE: 1/8" = 1'-0"

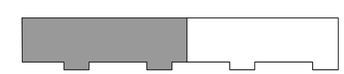

BUILDING 800 - KEY PLAN

PROFESSIONAL ENGINEER
BRYAN W. CARLSON
No. M34646
Exp. 6-30-26
MECHANICAL
STATE OF CALIFORNIA

LAWRENCE ENGINEERING GROUP
4910 E. Clinton Way, Suite 101
(559) 431-0101
23114
Fresno, CA 93727
FAX (559) 431-1362

NEW PRESCHOOL AND TK/KINDERGARTEN CLASSROOMS AT SANTA FE ELEMENTARY SCHOOL

PORTERVILLE UNIFIED SCHOOL DISTRICT

286 E ORANGE AVENUE, PORTERVILLE, CA 93257

REVISIONS

MANGINI | ARCHITECTURE INGENUITY
BARENG MORRELLI SCOTT
MANGINI ASSOCIATES INC.
4320 West Mineral king Avenue
Visalia, California 93291
www.mangini.us
(559) 627.0530 Office
(559) 627.1926 Fax

TITLE
BLDG. 800
PLUMBING PLAN
WEST

P5

PROJECT 23076

24 June 2024 11:48 AM P:\2023\23114 Porterville USD - Santa Fe ES - Kinder\4-Drawings\5 P\P5 - Plumbing Plan - Building 800 West.dwg roj g

P:\2023\23114 Porterville USD - Santa Fe ES - Kinder\4-Drawings\5 P\P5 - Plumbing Plan - Building 800 West.dwg Jun 24 2024 11:48am

APPROVALS

FILE # 54-76 | APPLICATION # 02-121996

IDENTIFICATION STAMP
DIV. OF THE STATE ARCHITECT
APP: 02-121996 INC:
REVIEWED FOR
SS ☑ FLS ☑ ACS ☑
DATE: 8/14/2024

LICENSED ARCHITECT
MICHAEL J. SCOTT
No. C-34290
REN. 05-31-25
STATE OF CALIFORNIA

DATE: DECEMBER 31, 2023

NEW PRESCHOOL AND TK/KINDERGARTEN CLASSROOMS AT SANTA FE ELEMENTARY SCHOOL

PORTERVILLE UNIFIED SCHOOL DISTRICT
286 E ORANGE AVENUE, PORTERVILLE, CA 93257

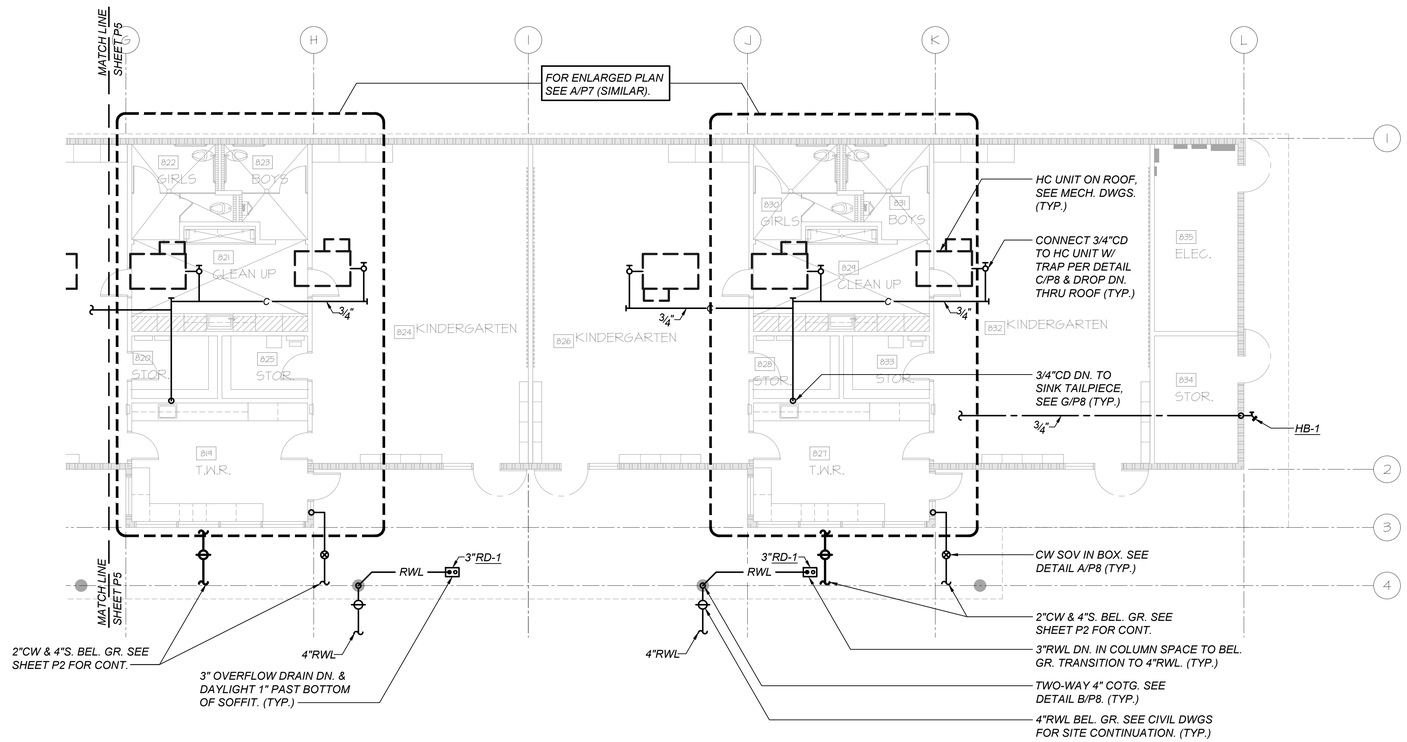

PLUMBING PLAN - BUILDING 800 EAST

SCALE: 1/8" = 1'-0"

north

BUILDING 800 - KEY PLAN

MECHANICAL PROFESSIONAL ENGINEER
JONATHAN W. CARLSON
No. M34045
Exp. 6-30-26
STATE OF CALIFORNIA

LAWRENCE ENGINEERING GROUP
4910 E. Clinton Way, Suite 101
(559) 431-0101
23114
Fresno, CA 93727
FAX (559) 431-1362

REVISIONS

MANGINI ARCHITECTURE INGENUITY
BARENG MORRELLI SCOTT
MANGINI ASSOCIATES INC.
4320 West Mineral King Avenue
Visalia, California 93291
www.mangini.us
(559) 627.0530 Office
(559) 627.1926 Fax

TITLE
BLDG. 800
PLUMBING PLAN
EAST

P6

PROJECT 23076

24 June 2024 11:48 AM P:\2023\23114 Porterville USD - Santa Fe ES - Kinder\4-Drawings\5 P\P6 - Plumbing Plan - Building 800 East.dwg rej g

P:\2023\23114 Porterville USD - Santa Fe ES - Kinder\4-Drawings\5 P\P6 - Plumbing Plan - Building 800 East.dwg Jun 24 2024 11:48am

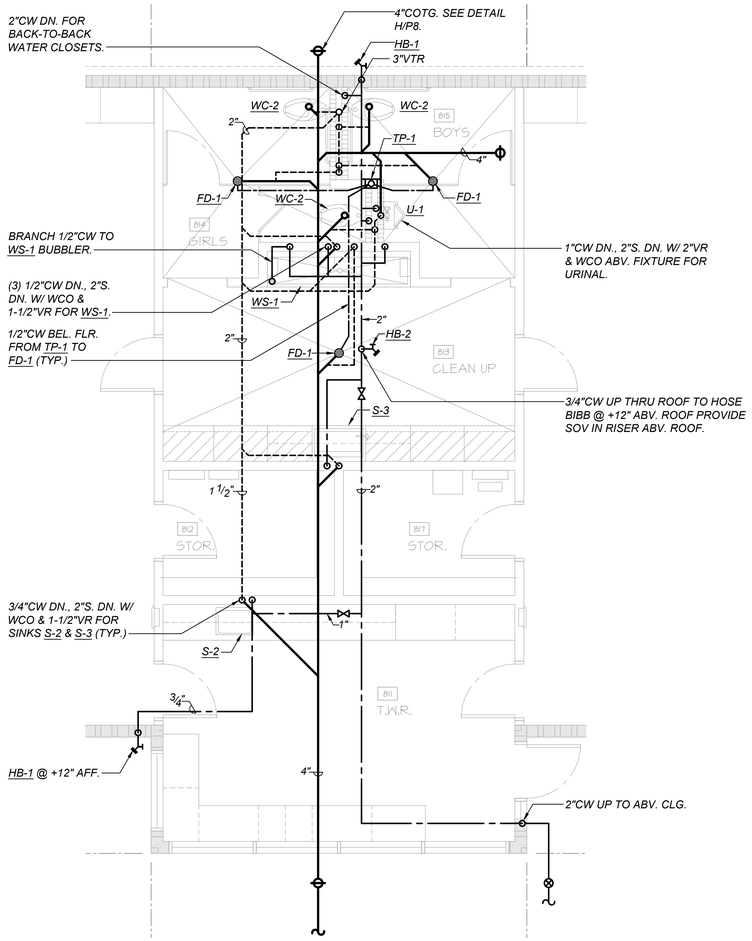

ENLARGED PLUMBING PLAN - BUILDING 800

SCALE: 1/4"=1'-0"

A / P7

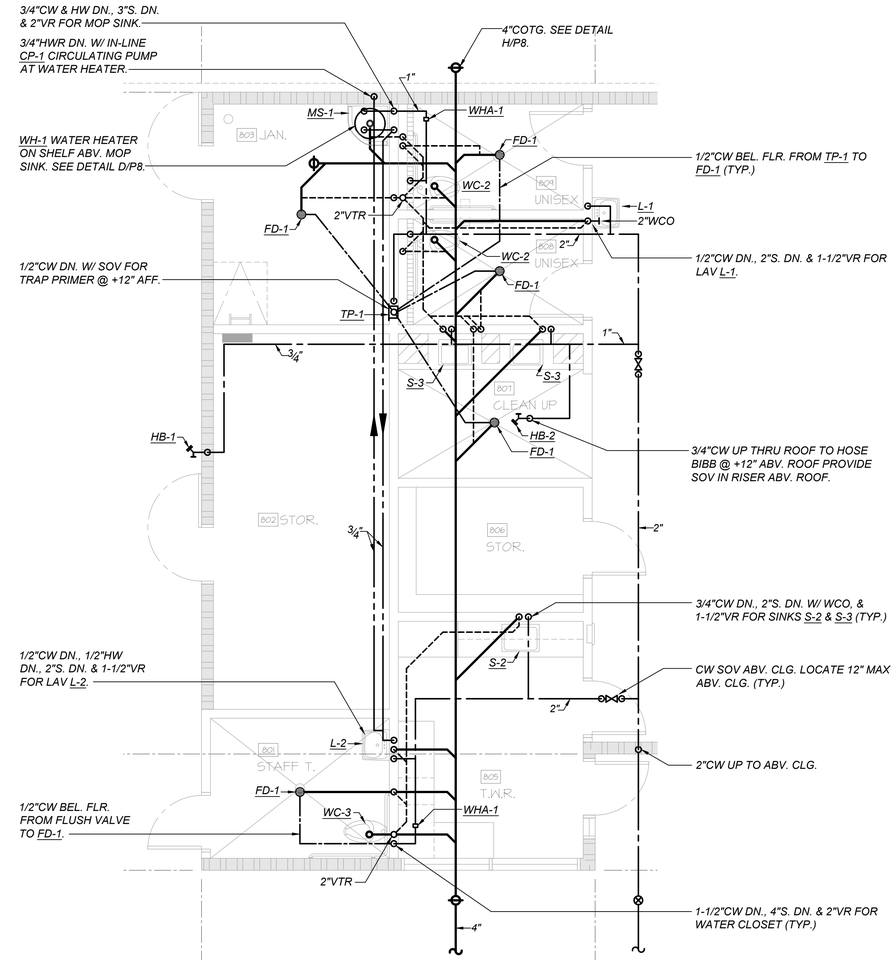

ENLARGED PLUMBING PLAN - BUILDING 800

SCALE: 1/4"=1'-0"

B / P7

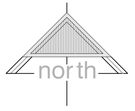

LAWRENCE ENGINEERING GROUP
4910 E. Clinton Way, Suite 101 (559) 431-0101
23114
Fresno, CA 93727 FAX (559) 431-1362

REGISTERED PROFESSIONAL ENGINEER BRIAN W. CARLSON No. M34646 Exp. 6-30-26 MECHANICAL STATE OF CALIFORNIA

APPROVALS

FILE # 54-76 | APPLICATION # 02-121996

IDENTIFICATION STAMP
DIV. OF THE STATE ARCHITECT
APP: 02-121996 INC:
REVIEWED FOR
SS ☑ FLS ☑ ACS ☑
DATE: 8/14/2024

LICENSED ARCHITECT MICHAEL J. SCOTT No. C-34290 REN. 05-31-25 STATE OF CALIFORNIA

DATE: DECEMBER 31, 2023

NEW PRESCHOOL AND TK/KINDERGARTEN CLASSROOMS AT SANTA FE ELEMENTARY SCHOOL

PORTERVILLE UNIFIED SCHOOL DISTRICT
286 E ORANGE AVENUE, PORTERVILLE, CA 93257

REVISIONS

MANGINI ARCHITECTURE INGENUITY
BARENG MORRELLI SCOTT
MANGINI ASSOCIATES INC.
4320 West Mineral King Avenue
Visalia, California 93291
www.mangini.us
(559) 627-0530 Office
(559) 627-1926 Fax

TITLE
BLDG. 800
ENLARGED
PLUMBING PLANS

P7

PROJECT 23076

24 June 2024 11:48 AM P:\2023\23114 Porterville USD - Santa Fe ES - Kinder\4-Drawings\5 P\P7 - Enlarged Plumbing Plan - Building 800.dwg rej g

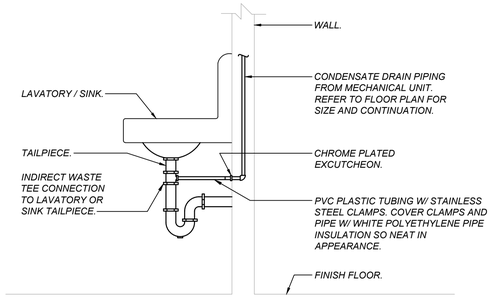

CONDENSATE TERMINATION TO TAILPIECE

G / P8

SCALE: NONE

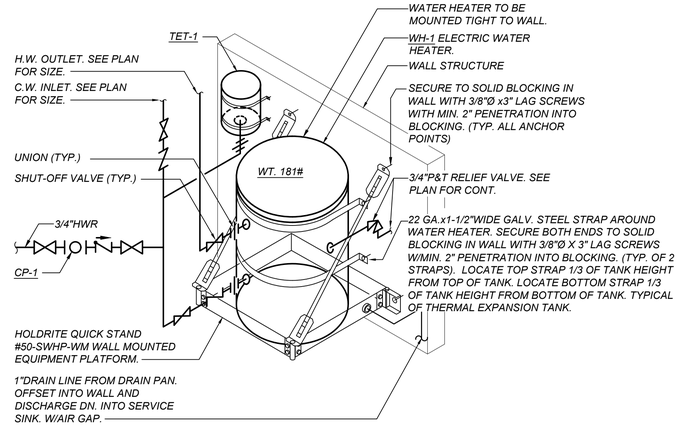

FOR BLOCKING DETAIL REFER TO ARCHITECTURAL DETAIL 8/A30.

WATER HEATER DETAIL

D / P8

SCALE: NONE

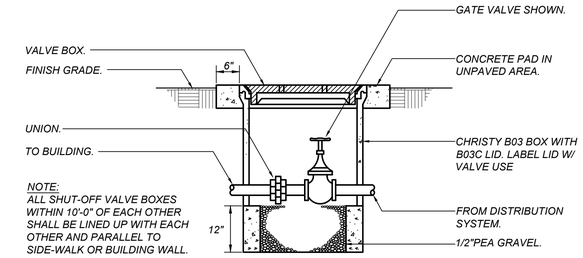

SHUT-OFF VALVE IN BOX DETAIL

A / P8

SCALE: NONE

P159

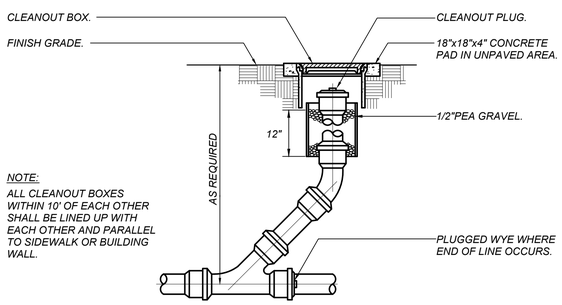

CLEANOUT TO GRADE DETAIL

H / P8

SCALE: NONE

P114

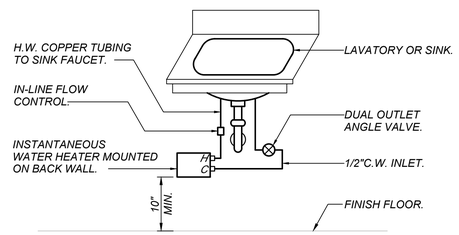

INSTANTANEOUS WATER HEATER

E / P8

SCALE: NTS

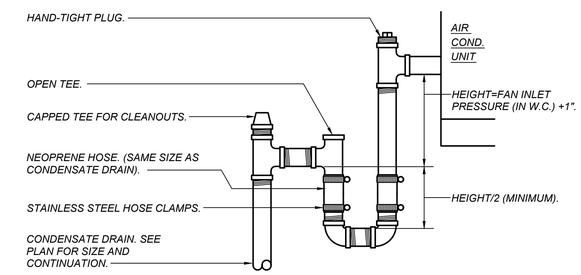

CONDENSATE DRAIN CONNECTION DETAIL

C / P8

SCALE: NONE

P020

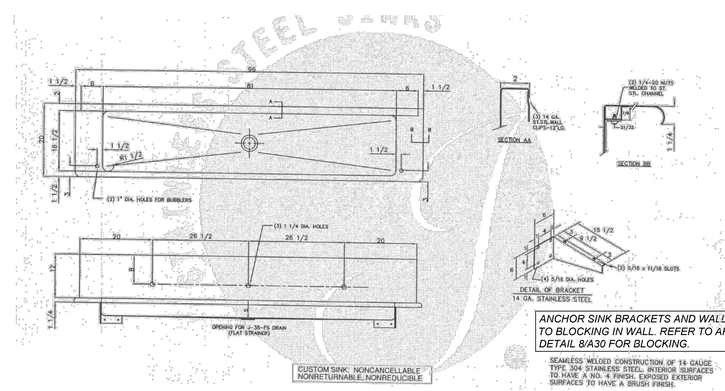

ANCHOR SINK BRACKETS AND WALL CLIPS TO BLOCKING IN WALL. REFER TO ARCH. DETAIL 8/A30 FOR BLOCKING.

CUSTOM SINK WS-1 SHOP DRAWING

F / P8

SCALE: NONE

APPROVALS

FILE # 54-76 APPLICATION # 02-121996

IDENTIFICATION STAMP
DIV. OF THE STATE ARCHITECT
APP: 02-121996 INC:
REVIEWED FOR
SS ☑ FLS ☑ ACS ☑
DATE: 8/14/2024

LICENSED ARCHITECT MICHAEL J. SCOTT No. C-34290 REN. 05-31-25 STATE OF CALIFORNIA

DATE: DECEMBER 31, 2023

NEW PRESCHOOL AND TK/KINDERGARTEN CLASSROOMS AT SANTA FE ELEMENTARY SCHOOL

PORTERVILLE UNIFIED SCHOOL DISTRICT

286 E ORANGE AVENUE, PORTERVILLE, CA 93257

REVISIONS

MANGINI ARCHITECTURE INGENUITY
BARENG MORRELLI SCOTT
MANGINI ASSOCIATES INC.
4320 West Mineral King Avenue
Visalia, California 93291
www.mangini.us
(559) 627.0530 Office
(559) 627.1926 Fax

REGISTERED PROFESSIONAL ENGINEER RYAN W. CARLSON NO. M34646 Exp. 6-30-26 MECHANICAL STATE OF CALIFORNIA

LAWRENCE ENGINEERING GROUP
4910 E. Clinton Way, Suite 101
(559) 431-0101
23114
Fresno, CA 93727
FAX (559) 431-1362

TITLE
PLUMBING DETAILS

P8

PROJECT 23076

APPROVALS

FILE # 54-76 | APPLICATION # 02-121996

IDENTIFICATION STAMP
DIV. OF THE STATE ARCHITECT
APP: 02-121996 INC:
REVIEWED FOR
SS ☑ FLS ☑ ACS ☑
DATE: 8/14/2024

LICENSED ARCHITECT MICHAEL J. SCOTT No. C-34290 REN. 05-31-25 STATE OF CALIFORNIA

DATE: DECEMBER 31, 2023

NOTES:

1. ALL MATERIALS AND WORKMANSHIP SHALL CONFORM TO THE REQUIREMENTS OF THE STANDARD SPECIFICATIONS.
2. PRECAST REINFORCED CONCRETE MAINTENANCE HOLE SHALL BE CONSTRUCTED IN ACCORDANCE WITH PROVISIONS OF ASTM DESIGNATION C-478.
3. ALL CONCRETE SHALL BE 2500# (5 SACK MIX).
4. GROUT AND BOND ALL PIPE JOINTS. GROUT MIXTURE ONE PART CEMENT PER TWO PARTS SAND. CONE AND GRADE RINGS SHALL BE PRECAST REINFORCED CONCRETE AS PER ASTM C-478. KENT SEAL CAN BE USED IN LIEU OF GROUT AT PIPE JOINTS AND NOTE 5 IS REQUIRED.
5. INTERIOR OF SANITARY SEWER MAINTENANCE HOLE SHALL HAVE A SMOOTH FINISH.
6. ALL FLOWLINES SHALL BE MAINTAINED THROUGHOUT, EITHER BY EMBEDDING PIPE IN CONCRETE BASE AND CUTTING OUT THE TOP HALF, OR BY CREATING A SMOOTH TROUGH WHICH IS NO WIDER THAN THE CONNECTING PIPE.

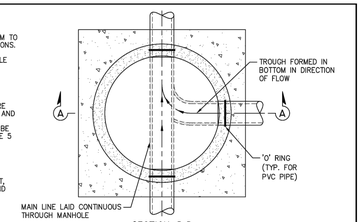

SECTION B-B

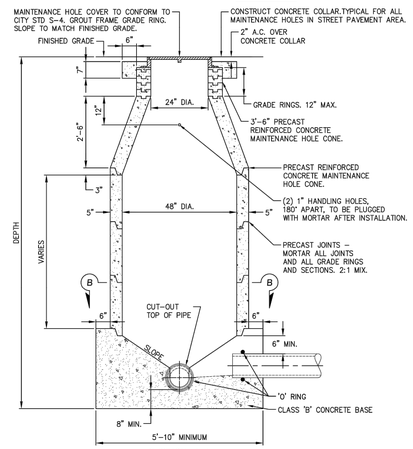

SECTION A-A

APPROVED BY: ____ Date E.P.M.D. DIRECTOR DATE RCE	48" SANITARY SEWER MAINTENANCE HOLE	S-1

SEWER MANHOLE DETAIL

A / P9

SCALE: NONE

PLUMBING FIXTURE SCHEDULE

WS-1
"JUST" CUSTOM FABRICATED SIMILAR TO THE MULTI-STATION SURGEON'S WASH-UP SINK, (SEE DETAIL J/P4), ACCESSIBLE WALL MOUNTED 14 GAUGE, TYPE 304 STAINLESS STEEL, 3-STATION WASH SINK, 96" X 20" X 5" DEEP WITH 8" STAINLESS STEEL BACKSPLASH, "JUST" J-ADA-35 OFFSET GRID STRAINER, AND (3) "CHICAGO" HYTRONIC ECAST #116.204.AB.1-GN2A BATTERY POWERED, BACKSPLASH MOUNTED FAUCETS WITH GOOSENECK SPOUT MODIFIED WITH "CHICAGO" #E35VPJKABCP AERATOR OUTLET, AND "CHICAGO" #748-665ABCP DRINKING BUBBLER LOCATED AT LEFT FRONT 6" WIDE LEDGE. PROVIDE STEEL SUPPORT PLATE FOR MOUNTING FIXTURE PER DETAIL D/P4. REFER TO ARCHITECTURAL DRAWINGS FOR MOUNTING HEIGHTS. (3) LOOSE KEY ANGLED WALL STOPS WITH SUPPLIES, 17 GA. C.P. TRAP/TAILPIECE WITH ESCUTCHEON, (WRAP C.W. AND TRAP/TAILPIECE PER SPECIFICATIONS) 1/2" C.W., 2" S., 1-1/2" V., 2" W.C.O.

MS-1
"KOHLER" #K-6710 WHITBY, FLOOR MOUNTED ENAMELED CAST IRON 28" X 28" MOP SINK WITH #K-8940 RIM GUARD, AND #K-9146 GRID DRAIN, "CHICAGO" # 897-CP FAUCET WITH VACUUM BREAKER AND TOP BRACE, "FLORESTONE" #MR-0360 5 FT. HOSE WITH WALL BRACKET, AND "FLORESTONE" #MR-372 MOP HANGER, 3" P-TRAP, 3/4" H.W./C.W., 3" S., 2" V., 3" W.C.O.

SB-1
RECESSED METAL WATER SUPPLY BOX WITH WHITE POWDER COAT FINISH, INTEGRAL SHUTOFF VALVE, AND MINI WATER HAMMER ARRESTOR, "SPECIALTY PRODUCTS" #OB-509-LL, 1/2" C.W.

HB-1
"WOODFORD" # 24P, WALL MOUNTED BENT NOSE ROUGH CHROME PLATED BRASS LOOSE TEE KEY HOSE BIBB WITH INTEGRAL VACUUM BREAKER, 3/4" C.W.

HB-2
"WOODFORD" # Y24, STANDPIPE MOUNTED BENT NOSE ROUGH CHROME PLATED BRASS LOOSE TEE KEY HOSE BIBB, WITH INTEGRAL VACUUM BREAKER, 3/4" C.W.

HB-3
WOODFORD #B74, RECESSED WALL HOSE BOX WITH LOCKING DOOR AND DRAIN PORT, 3/4" INLET BRASS HOSE CONNECTION WITH LOCKSHIELD, NON-REMOVEABLE VACUUM BREAKER, AND OPTIONAL LOOSE TEE KEY HANDLE, 3/4" C.W.

TP-1
"PRECISION PLUMBING PRODUCTS" #PR-500, TRAP PRIMER IN WALL ACCESS DOOR, WITH #DU-4/DU-U DISTRIBUTION UNIT AS REQUIRED FOR MULTIPLE TRAPS, AND 12" X 12" STAINLESS STEEL ACCESS DOOR WITH CYLINDER LOCK, 1/2" C.W. W/ BALL VALVE TO PRIMER INLET.

FD-1
"JAY R. SMITH" # 2005BY02-P050-HP-NB CAST IRON FLOOR DRAIN, , WITH 5" SQUARE NICKEL BRONZE HEEL-PROOF ADA GRATE AND 1/2" C.W. TRAP PRIMER CONNECTION, 2" S., 2" P-TRAP AND 1-1/2" V. BELOW SLAB.

RO-1
CAST IRON BODY ROOF DRAIN, "J.R. SMITH" #1310Y-E-C-R-CIDG, WITH 12" DIAMETER GALVANIZED CAST IRON DOME, EXTENSION, SUMP RECEIVER, AND UNDERDECK CLAMP, OVERFLOW DRAIN TO BE "J.R. SMITH" #1310Y-WD4-E-C-R-CIDG, WITH 4" HIGH EXTERIOR WATER DAM HEIGHT. PROVIDE 16 OZ. SOFT COPPER SUMP PAN. SEE PLAN FOR SIZES.

WHA-1
"SIOUX CHIEF" HYDRA-RESTER MODELS 654-C, SEAMLESS COPPER CHAMBER APPROVED FOR CONCEALED INSTALLATIONS.

IWH-1
"CHRONOMITE" #M-30L/120 WALL MOUNTED, ELECTRIC INSTANTANEOUS WATER HEATER WITH MICRO-PROCESSOR SET FOR 104° F. FIXED OUTLET TEMPERATURE AT 0.5 GPM FLOW RATE. ELECTICAL POWER REQUIRED: 3,600 WATTS, 30 AMPS, 120V/1PH.

WH-1
"AO SMITH" #DEL-20, COMMERICIAL ELECTRIC WATER HEATER, 20 GALLON GLASS LINED TANK, 4.5 KW, 208V/1PH., 3/4" T&P RELIEF VALVE WITH FULL SIDE DISCHARGE, 3/4" C.W., 3/4" H.W, OPERATING WEIGHT = 250 LBS.

TET-1 "THERM-X-TROL" #ST-5-C, STAINLESS STEEL CONNECTIONS, POTABLE WATER APPROVED IN-LINE EXPANSION TANK, 2.0 GALLON CAPACITY, 0.9 GALLON ACCEPTANCE VOLUME, ASME RATED. OPERATING WEIGHT = 22 LBS.

CP-1
STAINLESS STEEL DOMESTIC HOT WATER CIRCULATING PUMP, "GRUNDFOS" #UP25-64SF, 1/12 HP. @ 120V-1PH., 6 GPM @ 14 FT. HEAD, (CONTROL THRU "HONEYWELL" AQUASTAT AND DIGITAL 365 DAY TIME CLOCK OR EMS CONTACTS – SEE PLAN.

WC-1
"KOHLER" #K-96064 PRIMARY, ACCESSIBLE FOR PRESCHOOL STUDENT USE, (+12" TO TOP OF SEAT), 1.28 GPF, FLOOR MOUNTED, ELONGATED WATER CLOSET, "KOHLER" #K-4846 OPEN-FRONT SEAT WITH CHECK STAINLESS STEEL HINGE POSTS AND FASTENERS AND SELF-SUSTAINING HINGES, LESS COVER, BOLT CAPS, "SLOAN ROYAL" #111-1.28 FLUSH VALVE WITH LEVER HANDLE POINTED TOWARDS WIDE SIDE OF ROOM, 1" C.W., 4" S., 2" V.

WC-2
"KOHLER" #K-96059 JUVENILE ULTRA, ACCESSIBLE FOR KINDERGARTEN STUDENT USE (+15" TO TOP OF SEAT), 1.28 GPF, FLOOR MOUNTED, ELONGATED WATER CLOSET, "CHURCH" #295SSC OPEN-FRONT SEAT WITH CHECK STAINLESS STEEL HINGE POSTS AND FASTENERS AND SELF-SUSTAINING HINGES, LESS COVER, BOLT CAPS, "SLOAN ROYAL" #111-1.28 FLUSH VALVE WITH LEVER HANDLE POINTED TOWARDS WIDE SIDE OF ROOM, 1" C.W., 4" S., 2" V.

WC-3
"KOHLER" K-96057, HIGHCLIFF ULTRA, ACCESSIBLE FOR ADULT USE (+ 18" TO TOP OF SEAT), 1.28 GPF, FLOOR MOUNTED ELONGATED WATER CLOSET, "CHURCH" #295SSC OPEN-FRONT SEAT WITH CHECK STAINLESS STEEL HINGE POSTS AND FASTENERS AND SELF-SUSTAINING HINGES, LESS COVER, BOLT CAPS, AND "SLOAN ROYAL" 8111-1.28-TP, BATTERY SENSOR OPERATED AUTOMATIC FLUSH VALVE, 1.28 GPF, WITH MECHANICAL OVERRIDE BUTTON, AND WITH TRAP PRIMER CONNECTION, 1" C.W., 4" S., 2" V.

U-1
KOHLER "BARDON" #K-4991-ET, ACCESSIBLE WALL MOUNTED URINAL, WITH STAINLESS STEEL STRAINER, "SLOAN ROYAL" #186-0.125 MANUAL LEVER FLUSH VALVE (0.125 GALLONS/FLUSH), MOUNTED TO STEEL SUPPORT PLATE PER DETAIL E/X/P101. SEE ARCHITECTURAL DRAWINGS FOR MOUNTING HEIGHTS, ACCESSIBLE MOUNTING HEIGHT SHALL BE +17" MAXIMUM AFF TO LIP, 3/4" C.W., 2" S., 2" V., 2" W.C.O.

L-1
"KOHLER" KINGSTON #K-2005 WALL MOUNTED VITREOUS CHINA LAVATORY, WITH 4" CENTER FAUCET HOLES, "CHICAGO" #3400ABCP, DECK MOUNTED MANUAL METERING FAUCET WITH 0.5 GPM VANDAL RESISTANT SPRAY OUTLET, ADJUST FAUCET TO OPERATE ON FOR 10-15 SECONDS, "MCGUIRE" #155WC OFFSET GRID DRAIN, AND "JAY R. SMITH" #700-Z SUPPORT CARRIER, 1/2" C.W., 2" S.,1-1/2"V.

L-2
"KOHLER" KINGSTON #K-2005 WALL MOUNTED VITREOUS CHINA LAVATORY, WITH 4" CENTER FAUCET HOLES, "CHICAGO" #EVR-A12A-11ABCP BATTERY SENSOR FAUCET WITH, 0.5 GPM OUTLET, "MCGUIRE" 155WC OFFSET GRID DRAIN, "JAY R. SMITH" #700-Z FLOOR MOUNTED, CONCEALED ARM CARRIER. PROVIDE "LEONARD" #170A-LF-BRKT THERMOSTATIC MIXING VALVE WALL MOUNTING BRACKET BELOW LAV, SET H.W. OUTLET TO 108° F. SEE ARCHITECTURAL DRAWINGS FOR ACCESSIBLE MOUNTING HEIGHT, (2) LOOSE KEY COMPRESSION ANGLED WALL STOPS WITH SUPPLIES, 17 GA. C.P. P-TRAP/TAILPIECE WITH ESCUTCHEON, (WRAP C.W., H.W. AND TRAP/TAILPIECE PER SPECIFICATIONS) 1/2" H.W./C.W., 2" W.,1- 1/2" V.

WS-1
"JUST" CUSTOM FABRICATED SIMILAR TO THE MULTI-STATION SURGEON'S WASH-UP SINK, (SEE DETAIL J/P4), ACCESSIBLE WALL MOUNTED 14 GAUGE, TYPE 304 STAINLESS STEEL, 3-STATION WASH SINK, 96" X 20" X 5" DEEP WITH 8" STAINLESS STEEL BACKSPLASH, "JUST" J-ADA-35 OFFSET GRID STRAINER, AND (3) "CHICAGO" HYTRONIC ECAST #116.204.AB.1-GN2A BATTERY POWERED, BACKSPLASH MOUNTED FAUCETS WITH GOOSENECK SPOUT MODIFIED WITH "CHICAGO" #E35VPJKABCP AERATOR OUTLET, AND "CHICAGO" #748-665ABCP DRINKING BUBBLER LOCATED AT LEFT FRONT 6" WIDE LEDGE. PROVIDE STEEL SUPPORT PLATE FOR MOUNTING FIXTURE PER DETAIL D/P4. REFER TO ARCHITECTURAL DRAWINGS FOR MOUNTING HEIGHTS. (3) LOOSE KEY ANGLED WALL STOPS WITH SUPPLIES, 17 GA. C.P. TRAP/TAILPIECE WITH ESCUTCHEON, (WRAP C.W. AND TRAP/TAILPIECE PER SPECIFICATIONS) 1/2" C.W., 2" S., 1-1/2" V., 2" W.C.O.

S-1
"JUST" #CRA-ADA-1931-A-GR, ACCESSIBLE COUNTER MOUNTED, 19" X 31" X 5" DEEP, 18 GAUGE STAINLESS STEELWITH #J-35-SSF STRAINER, "CHICAGO" 350-LH-ABCP GOOSENECK FAUCET WITH LEVER HANDLE AT CENTER OF LEFT LEDGE, MODIFIED WITH #E35JKABCP, 1.5 GPM AERATOR, AND "CHICAGO" #748-665CP DRINKING BUBBLER AT RIGHT FRONT, (2) LOOSE KEY ANGLED WALL STOPS WITH SUPPLIES, 17 GA. C.P. TRAP/TAILPIECE WITH ESCUTCHEON, (WRAP C.W. AND TRAP/TAILPIECE PER SPECIFICATIONS), (2) 1/2" C.W., 2" S., 1-1/2" V., 2" W.C.O.

S-2
"JUST" #SL-ADA-2125-A-GR, ACCESSIBLE COUNTER MOUNTED 18 GAUGE, TYPE 304 STAINLESS STEEL (16" X 22" X 6" DEEP BOWL SIZE) SINGLE COMPARTMENT SINK, , WITH CENTER REAR DRAIN OUTLET, "JUST" # J35-GS DRAIN BODY WITH BASKET STRAINER, "ZURN" # Z831S1-XL-17M, FAUCET WITH LEVER HANDLES, HI ARC SPOUT AND 1.5 GPM PRESSURE COMPENSATING AERATOR, (2) LOOSE KEY ANGLED WALL STOPS WITH SUPPLIES, 17-GAUGE C.P. TRAP/TAILPIECE WITH ESCUTCHEON, (WRAP C.W., H.W. AND TRAP/TAILPIECE PER SPECIFICATIONS) 1/2" H.W./C.W., 2" W., 1-1/2" V., 2" W.C.O.

S-3
"JUST" #CRA-ADA-1931-A-GR, ACCESSIBLE 19" X 31" X 5" DEEP, 18 GAUGE STAINLESS STEELWITH #J-35-SSF STRAINER, "CHICAGO" 350-LH-ABCP GOOSENECK FAUCET WITH LEVER HANDLE AT CENTER OF LEFT LEDGE, MODIFIED WITH #E35JKABCP, 1.5 GPM AERATOR, AND "CHICAGO" #748-665CP DRINKING BUBBLER AT RIGHT FRONT, (2) LOOSE KEY ANGLED WALL STOPS WITH SUPPLIES, 17 GA. C.P. TRAP/TAILPIECE WITH ESCUTCHEON, (WRAP C.W. AND TRAP/TAILPIECE PER SPECIFICATIONS), (2) 1/2" C.W., 2" S., 1-1/2" V., 2" W.C.O.

WS-1
"JUST" CUSTOM FABRICATED SIMILAR TO THE MULTI-STATION SURGEON'S WASH-UP SINK, (SEE DETAIL J/P4), ACCESSIBLE WALL MOUNTED 14 GAUGE, TYPE 304 STAINLESS STEEL, 3-STATION WASH SINK, 96" X 20" X 5" DEEP WITH 8" STAINLESS STEEL BACKSPLASH, "JUST" J-ADA-35 OFFSET GRID STRAINER, AND (3) "CHICAGO" HYTRONIC ECAST #116.204.AB.1-GN2A BATTERY POWERED, BACKSPLASH MOUNTED FAUCETS WITH GOOSENECK SPOUT MODIFIED WITH "CHICAGO" #E35VPJKABCP AERATOR OUTLET, AND "CHICAGO" #748-665ABCP DRINKING BUBBLER LOCATED AT LEFT FRONT 6" WIDE LEDGE. PROVIDE STEEL SUPPORT PLATE FOR MOUNTING FIXTURE PER DETAIL D/P4. REFER TO ARCHITECTURAL DRAWINGS FOR MOUNTING HEIGHTS. (3) LOOSE KEY ANGLED

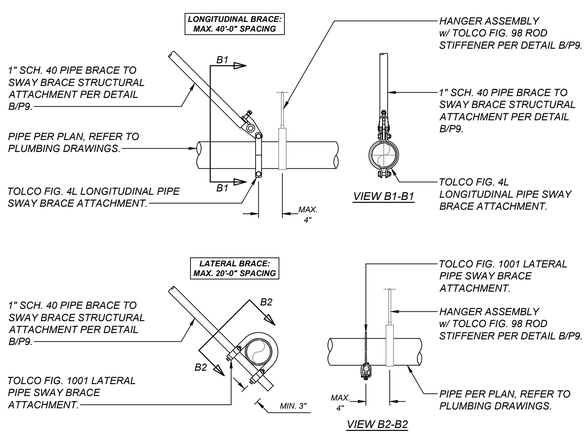

LOWER SEISMIC BRACING ATTACHMENT AT PIPE

C / P9

SCALE: NONE

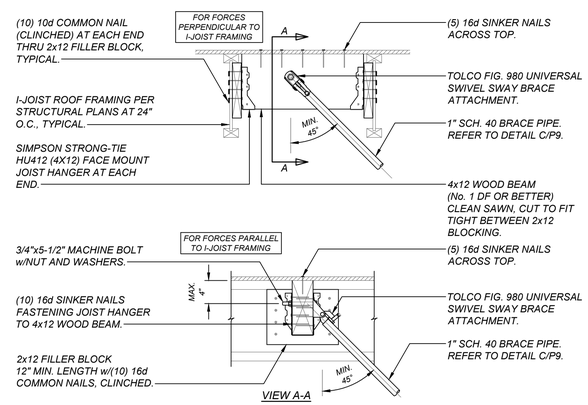

SEISMIC BRACING ATTACHMENT AT I-JOIST

B / P9

SCALE: NONE

NEW PRESCHOOL AND TK/KINDERGARTEN CLASSROOMS AT SANTA FE ELEMENTARY SCHOOL

PORTERVILLE UNIFIED SCHOOL DISTRICT
286 E ORANGE AVENUE, PORTERVILLE, CA 93257

REVISIONS

MANGINI ARCHITECTURE INGENUITY
BARENG MORRELLI SCOTT
MANGINI ASSOCIATES INC.
4320 West Mineral King Avenue
Visalia, California 93291
www.mangini.us
(559) 627-0530 Office
(559) 627-1926 Fax

CERTIFIED PROFESSIONAL ENGINEER BRIAN W. CARLSON No. M34646 Exp. 6-30-26 MECHANICAL STATE OF CALIFORNIA

LAWRENCE ENGINEERING GROUP
4910 E. Clinton Way, Suite 101
(559) 431-0101
23114
Fresno, CA 93727
FAX (559) 431-1362

TITLE
PLUMBING SCHEDULES AND DETAILS

P9

PROJECT 23076

GENERAL NOTES

SPRINKLER SYSTEM DESIGNED IN ACCORDANCE WITH NFPA 13 (2022), CFC/CBC (2022), DIVISION OF THE STATE ARCHITECT - DEPARTMENT OF GENERAL SERVICES, AND CITY OF PORTERVILLE STANDARDS. ALL WORK TO BE DONE IN ACCORDANCE WITH THESE PLANS AND ALL NATIONAL, STATE, AND LOCAL CODES.

THESE DRAWINGS ARE NOT COORDINATED PLANS (AMONGST THE TRADES). IT IS THE RESPONSIBILITY OF THE CONTRACTOR TO FURNISH AND INSTALL ALL ITEMS REQUIRED FOR A COMPLETE ACCEPTABLE WORKING INSTALLATION, WHETHER SHOWN OR NOT SHOWN, APPLICABLE TO ALL CITED CODES AND STANDARDS. IT SHALL BE THE RESPONSIBILITY OF THE SPRINKLER INSTALLATION CONTRACTOR TO COORDINATE WITH ALL TRADES.

CONTRACTOR TO REVIEW FOR BID, THE PLANS AS DESIGNED BY ENGINEER. ANY ALTERNATE PROPOSED DESIGN CHANGES OR REVISIONS BY CONTRACTOR, ARE TO BE SUBMITTED IN WRITTEN FORMAT, REVIEWED AND RESPONDED TO, BY ENGINEER PRIOR TO BIDDING. AFTER AWARD OF BID, ALL DEVIATIONS FROM THE ORIGINAL DESIGN INTENTION SHALL BE CLOUDED AND NOTED ON CONTRACTOR ISSUED SHOP DRAWINGS TO ENGINEER, WHICH HAVE BEEN COORDINATED AMONGST THE TRADES, FOR REVIEW AND APPROVAL BY ENGINEER. ALL CHANGES TO THE PLAN SHALL BE SUBMITTED TO DSA FOR REVIEW AND APPROVAL PRIOR TO FABRICATION AND INSTALLATION.

GENERAL CONTRACTOR IS SOLELY RESPONSIBLE FOR INSURING ALL SUB-CONTRACTOR'S COORDINATE SHOP DRAWINGS PRIOR TO ORDERING OR INSTALLATION OF ANY EQUIPMENT, DEVICE, MATERIAL, ETC. SUBMISSION OF SHOP DRAWINGS TO THE ENGINEER CONSTITUTES THAT THE DRAWINGS SUBMITTED HAVE BEEN COORDINATED AMONGST THE TRADES. FAILURE TO COORDINATE ALL SHOP DRAWINGS AMONGST THE TRADES, FOR REVIEW AND APPROVAL BY ENGINEER, WILL NOT CONSTITUTE A CHANGE ORDER TO THE OWNER, FOR UNIDENTIFIED FIELD COORDINATION ISSUES.

ANY REVISIONS OR DEVIATIONS THAT ARISE FROM COORDINATION AND CONSTRUCTION OF INSTALLATION METHODS AND MEANS AMONGST THE TRADES DURING CONSTRUCTION, SHALL BE PROVIDED TO THE ARCHITECT BY RFI, DETAILING COORDINATION ISSUE AND PROPOSED SOLUTION. ONCE REVIEWED AND APPROVED BY ENGINEER, THE DESIGN REVISIONS OR DEVIATIONS SHALL BE APPROVED BY THE DSA, THEN COORDINATED IN THE FIELD AMONGST THE IMPACTED TRADES, AND SHOWN ON THE AS-BUILT DRAWINGS. A COMPLETE, ACCURATE SET OF AS-BUILT DRAWINGS SHALL BE MAINTAINED ONSITE DURING CONSTRUCTION, AND ARE TO BE ISSUED TO ARCHITECT AND ENGINEER UPON COMPLETION, INSPECTION, AND TESTING OF INSTALLATION.

CONTRACTOR TO PROVIDE SIX (6) SETS OF THE FOLLOWING:

A. FULLY COORDINATED AMONGST THE TRADES INSTALLATION SHOP DRAWINGS, INCLUDING ALL PIPE CUT LENGTHS, FITTINGS, HANGERS, BRACES, SPRINKLERS WITH LEGEND, HYDRAULIC AND SEISMIC CALCULATIONS, AND PRODUCT SUBMITTAL.
B. BOUND SUBMITTAL TO INCLUDE COVER PAGE, PIPING, HARDWARE, AND MATERIALS (INCLUDING FIRE STOPPING). COVER PAGE TO INCLUDE PROJECT NAME, SPRINKLER CONTRACTOR, GENERAL CONTRACTOR, ARCHITECT, AND DATE SUBMITTED FOR REVIEW.

ALL ITEMS REQUIRED BY NFPA 13 (2022) CHAPTER 28 (FOR WORKING DRAWINGS) SHALL BE PROVIDED ON THE SHOP DRAWINGS. SUBMITTALS ARE IN ADDITION TO, AND NOT IN LIEU OF, THIS REQUIREMENT.

FINAL INSTALLATION SPACING FOR SPRINKLER SYSTEM PIPING AND SPRINKLERS, MAY VARY WITH FIELD COORDINATION ISSUES. ALL VARIANCES TO COMPLY WITH LISTING OF SPRINKLERS, NFPA 13 (2022), CFC/CBC (2022), DIVISION OF THE STATE ARCHITECT - DEPARTMENT OF GENERAL SERVICES, AND CITY OF PORTERVILLE REQUIREMENTS.

ALL HANGERS, THREADED ROD, BRACING COMPONENTS AND HARDWARE, SHALL BE HOT DIPPED GALVANIZED - OR FACTORY COATED GALVANIZED - FOR ALL EQUIPMENT AND COMPONENTS IN EXTERIOR APPLICATIONS. ALL FASTENERS USED (IE BOLTS - NUTS / WASHERS) TO BE STAINLESS STEEL.

SPRINKLERS ARE TO BE LOCATED CENTER TILE (OR AS SHOWN) ACCORDING TO INDUSTRY STANDARDS AND PRACTICES.

LOCATION OF SEISMIC BRACING AND HANGERS ARE SCHEMATIC IN NATURE AND INTENDED TO SHOW APPROXIMATE LOCATIONS. SPRINKLER CONTRACTOR SHALL BE RESPONSIBLE FOR SHOWING THE EXACT LOCATION OF SEISMIC RESTRAINTS ON SUBMITTED COORDINATED AMONGST THE TRADES SHOP DRAWINGS, AND FINAL AS-BUILT DRAWINGS.
SUBMITTED SHOP DRAWINGS SHALL DESIGNATE THE TYPE AND LOCATION OF EACH BRACE, HANGER OR RESTRAINT, AND SHALL BE ACCOMPANIED BY A DETAIL WITH LEGEND, AND CALCULATIONS (IF APPLICABLE) IN ACCORDANCE WITH NFPA 13 (2022), CFC/CBC (2022), AND THE APPROPRIATE SEISMIC DESIGN CRITERIA FOR THE PROJECT.

ANY SUBSTITUTION OF "FLEXIBLE" TYPE PIPING IN LIEU OF "RIGID" PIPE, OR ANY CHANGES TO SIZE, MANUFACTURER, OR LENGTHS OF "FLEXIBLE" TYPE PIPING WILL REQUIRED RE-SUBMITTAL OF PIPING PLANS, PRODUCT DATA SHEETS, AND HYDRAULIC CALCULATIONS TO DIVISION OF THE STATE ARCHITECT - DEPARTMENT OF GENERAL SERVICES (FIRE LIFE SAFETY) FOR REVIEW AND APPROVAL.

SHOP DRAWINGS THAT HAVE NOT BEEN COORDINATED AMONGST THE TRADES UTILIZING THE MOST CURRENT 2D/3D FILES, WILL NOT BE ACCEPTED FOR REVIEW.

ELECTRONIC (DIGITAL) SUBMITTAL IN PDF FORMAT IS ACCEPTABLE, IF PREPARED IN ACCORDANCE WITH SPECIFICATION 2105 00, SECTION (1-10, A.5). SUBMITTALS NOT CONFORMING TO THE SPECIFICATION WILL NOT BE REVIEWED.

SITE PIPING SPECIFICATIONS

PIPING TO BE AS FOLLOWS:

1. UNDERGROUND SITE PIPING SHALL BE DR14 PVC UPSTREAM OF THE FIRE DEPARTMENT CONNECTION PER LOCAL AUTHORITY HAVING JURISDICTION REQUIREMENTS, AND SHALL BE DR14 PVC DOWNSTREAM OF THE FIRE DEPARTMENT CONNECTION.
2. UNDERGROUND PIPING INSTALLATION TO MEET REQUIREMENTS OF NFPA 13 (2022), NFPA 24 (2019), CBC/CFC (2022), DIVISION OF THE STATE ARCHITECT - DEPARTMENT OF GENERAL SERVICES, AND CITY OF PORTERVILLE REQUIREMENTS.
3. ALL PIPE TO BE INSTALLED WITH A 36" MIN. BURY, FROM TOP OF PIPE, OR AS APPLICABLE TO LOCATION, AS PER NFPA 13 (2022), NFPA 24 (2019), CBC/CFC (2022), DIVISION OF THE STATE ARCHITECT - DEPARTMENT OF GENERAL SERVICES, AND CITY OF PORTERVILLE REQUIREMENTS.
4. ALL THRUST BLOCKS & RESTRAINING GLANDS TO BE POURED IN PLACE AND SIZED IN ACCORDANCE TO NFPA 13 (2022), NFPA 24 (2019), CBC/CFC (2022), DIVISION OF THE STATE ARCHITECT - DEPARTMENT OF GENERAL SERVICES, AND CITY OF PORTERVILLE REQUIREMENTS.
5. UNDERGROUND PIPING RISING UP AT BASE OF RISER SHALL BE A STAINLESS STEEL, SINGLE PIECE IN-BUILDING RISER, LISTED FOR FIRE PROTECTION USE.
6. ALL MECHANICAL JOINT FITTINGS SHALL BE COATED WITH A NON-OXIDIZING, CORROSIVE PROHIBITING COATING, AND WRAPPED WITH 2 MIL POLY WRAP.
7. ALL UNDERGROUND PIPING, COATED / WRAPPED FITTINGS, VALVES, DETECTION WIRE LOCATION AND TYPE, ETC TO BE INSPECTED BY ONSITE IOR BEFORE BACKFILL.
8. PER NFPA 24 §6.2.9(1)(a), THE POST INDICATOR VALVE MINIMUM DISTANCE TO BUILDING SHALL NOT BE LESS THAN THE HEIGHT OF THE EXTERIOR WALL FACING THE POST INDICATOR VALVE OR AS ALLOWED BY THE LOCAL FIRE MARSHAL.

SITE UNDERGROUND PLAN NOTES

1. UNDERGROUND FIRE PIPING INSTALLATION CONTRACTOR SHALL COORDINATE WITH PLUMBING, CIVIL, LANDSCAPE, AND MECHANICAL PIPING PLANS PRIOR TO INSTALLATION.
2. ALL UNDERGROUND PIPE LENGTHS INDICATED ON PLANS REFLECT TOTAL PIPE LENGTH (CENTER TO CENTER) WITH NO TAKEOUT FOR FITTINGS.
3. ALL UNDERGROUND PVC, C-900, OR OTHER PLASTIC PIPING UTILIZED SHALL BE EQUIPPED WITH A SUITABLE MAGNETIC LOCATION TAPE INSTALLED APPROPRIATELY TO THE TOP OF THE PIPING.
4. INSTALLING CONTRACTOR SHALL CALL 811 AND LOCATE EXISTING UTILITIES PRIOR TO CONDUCTING ANY TRENCHING.
5. PROTECTIVE BOLLARDS SHALL BE COORDINATED WITH THE GENERAL CONTRACTOR AND THE OWNER'S REPRESENTATIVE PRIOR TO INSTALLATION. BOLLARDS SHALL BE INSTALLED PER 2022 CFC §312. ADDITIONAL BOLLARDS MAY BE REQUIRED IN ADDITION TO WHAT IS INDICATED ON THE PLANS.

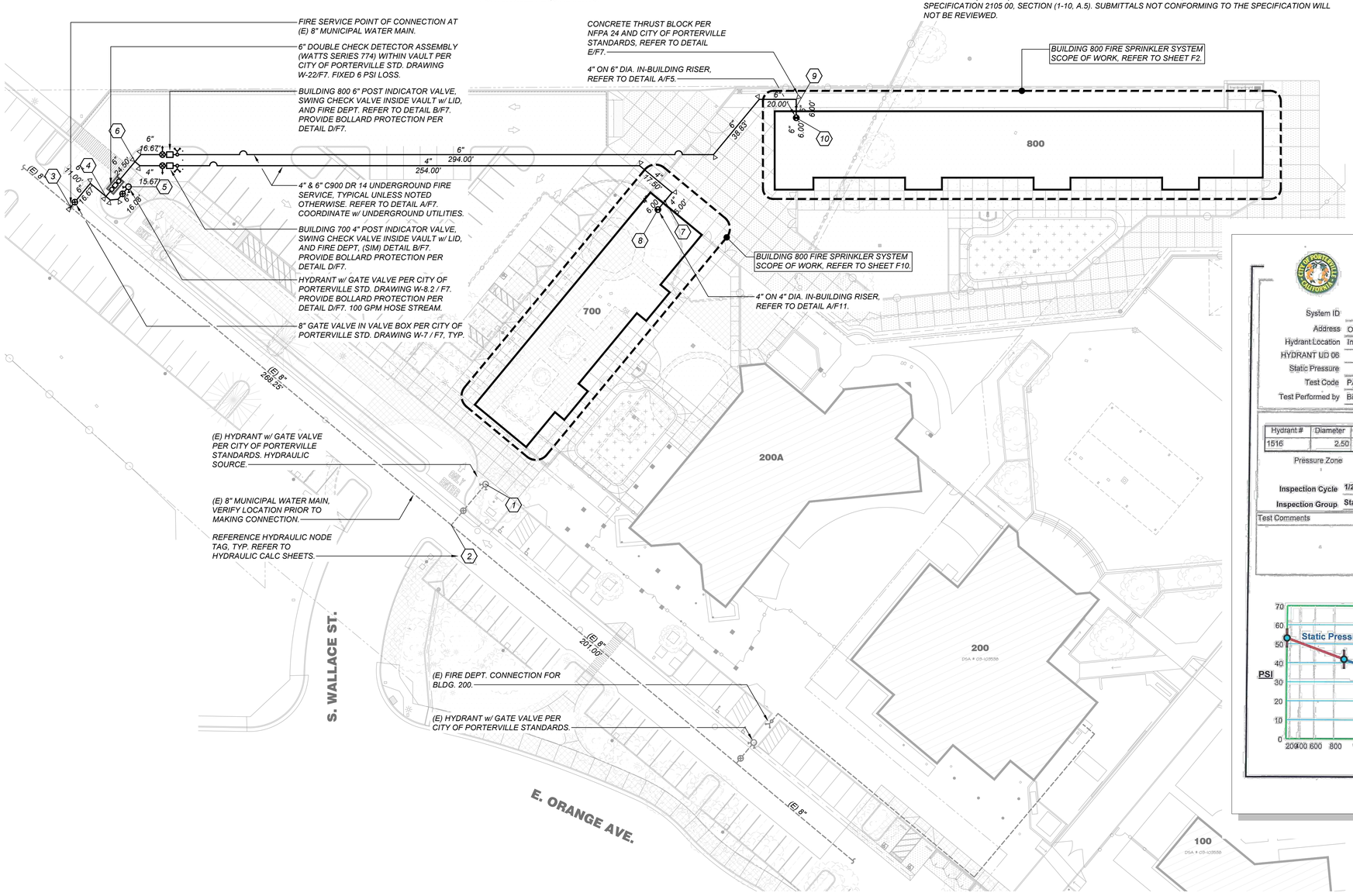

HYDRANT FLOW TEST

Test Hydrant			
Hydrant Number	1516		
Test Date	10/30/2023		
Time of Test	9:00 AM		
System ID	No: 2004737		
Address	Orange X Wallace		
Hydrant Location	In Cul de Sac Fire Lane, West of Heritage Center		
HYDRANT UD 06		Map Page	
Static Pressure	53	Residual Press	42
Test Code	PASS_FLOW	Needs Maint?	No
Test Performed by	Bill Colson	Test Company	

Flow Hydrant(s)

Hydrant #	Diameter	Coeffecient	Pitot PSI	Flush Time (Min)	Flow (GPM)	Water Used (Gal)
1516	2.50	0.90	28.00	5.00	888	4,440
				Totals:	888	4,440
				Flow at 20 PSI	1,607	

Pressure Zone

Inspection Cycle	1/2	Test Cycle	2/7
Inspection Group	Station 1 Cycle 1	Test Group	Station 1 Cycle 1

Test Comments

Flushing Information

Time to Clear	0	Temperature	0
Initial Color		pH Level	0
Initial CL2	0	Initial Turbidity	0
Final CL2	0	Final Turbidity	0

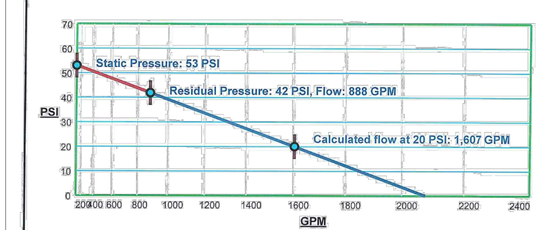

FIRE PROTECTION SITE PLAN

SCALE: 1" = 30'-0"

SCALE: 1"=30'

APPROVALS

FILE # 54-76 APPLICATION # 02-121996

IDENTIFICATION STAMP
DIV. OF THE STATE ARCHITECT
APP: 02-121996 INC:
REVIEWED FOR
SS ☑ FLS ☑ ACS ☑
DATE: 8/14/2024

LICENSED ARCHITECT MICHAEL J. SCOTT No. C-34290 REN. 05-31-25 STATE OF CALIFORNIA

DATE: DECEMBER 31, 2023

NEW PRESCHOOL AND TK/KINDERGARTEN CLASSROOMS AT SANTA FE ELEMENTARY SCHOOL

PORTERVILLE UNIFIED SCHOOL DISTRICT
286 E. ORANGE AVENUE, PORTERVILLE, CA 93257

REVISIONS

MANGINI ARCHITECTURE INGENUITY
BARENG MORRELLI SCOTT
MANGINI ASSOCIATES INC.
4320 West Mineral King Avenue
Visalia, California 93291
www.mangini.us
(559) 627.0530 Office
(559) 627.1926 Fax

REGISTERED PROFESSIONAL ENGINEER BRIAN W. CARLSON No. M34846 Exp. 6-30-26 MECHANICAL STATE OF CALIFORNIA

LAWRENCE ENGINEERING GROUP
4910 E. Clinton Way, Suite 101
(559) 431-0101
23114
Fresno, CA 93727
FAX (559) 431-1362

TITLE
FIRE PROTECTION SITE PLAN

F1

PROJECT 23076

SPRINKLER LEGEND DATA IS FOR PLAN REVIEW ONLY. THE INSTALLING CONTRACTOR SHALL VERIFY THE ACCURACY OF THE SPRINKLER LAYOUT AND SPRINKLER HEAD QUANTITIES TO MEET NFPA 13 STANDARDS. NO PRICING ADJUSTMENTS WILL BE PERMITTED FOR SPRINKLER HEADS ADDED BY THE CONTRACTOR.

Sprinkler Legend

Symbol	Manufacturer	SIN	Model	Quantity	K-Factor	Type	Size	Response	Finish	Temperature	Note
	Victaulic	V2704	FL-QR	174	5.6	Upright	½	Quick	Brass	200°F	
	Victaulic	V2708	FL-QR	91	5.6	Pendent	½	Quick	Chrome	155°F	
	Victaulic	V4201	FL-QR	6	4.2	Pendent	½	Quick	Chrome	200°F	
				Total = 271							

SPRINKLER SYSTEM NOTES

SPRINKLER SYSTEM DESIGN CRITERIA:

1. SYSTEM SHALL BE DESIGNED TO CONFORM WITH NFPA 13 (2022 CALIFORNIA EDITION), CFC/CBC (2022), DIVISION OF THE STATE ARCHITECT - DEPARTMENT OF GENERAL SERVICES, AND CITY OF PORTERVILLE STANDARDS].
2. SPRINKLER DISCHARGE DENSITY FOR THIS PROJECT SHALL BE IN ACCORDANCE WITH NFPA 13 (2022) §19.2.3.1 WITH DESIGN DENSITY IN ACCORDANCE WITH TABLE §19.2.3.1.1.
   - 2.1. LIGHT HAZARD OCCUPANCY SHALL INCLUDE ALL OFFICE, CORRIDOR, DINING, CONCEALED ATTIC SPACES, RESTROOMS, AND SIMILAR AREAS. LIGHT HAZARD OCCUPANCY SHALL HAVE A DESIGN DENSITY OF 0.10 GPM/FT² OVER A MINIMUM REMOTE AREA OF 1500 FT². THE MAXIMUM ALLOWABLE PROTECTION AREA OF COVERAGE FOR A SPRINKLER SHALL BE IN ACCORDANCE WITH THE VALUE INDICATED IN TABLE 10.2.4.2.1(a) AND SHALL NOT EXCEED 225FT².
   - 2.2. ORDINARY HAZARD GROUP I (OH1) SHALL FOOD SERVICE AREAS, ELECTRICAL AND MECHANICAL EQUIPMENT ROOMS, PORTE COCHERES, AND SIMILAR AREAS INDICATED IN NFPA 13 (2022) §A.4.3.3.1 OH1 OCCUPANCY SHALL HAVE A DENSITY OF 0.15GPM/FT² OVER A MINIMUM REMOTE AREA OF 1500FT². THE MAXIMUM ALLOWABLE PROTECTION AREA OF COVERAGE FOR A SPRINKLER SHALL BE IN ACCORDANCE WITH THE VALUE INDICATED IN TABLE 10.2.4.2.1(b) - 130FT².
   - 2.3. ORDINARY HAZARD GROUP II (OH2) SHALL INCLUDE AUTOMOTIVE WORKSHOP AREAS, SCIENCE LABRATORIES, STAGES, STORAGE ROOMS, SIMILAR AREAS INDICATED IN NFPA 13 (2022) §A.4.3.3.2 OH2 OCCUPANCY SHALL HAVE A DESIGN DENSITY OF 0.20GPM/FT² OVER A MINIMUM REMOTE AREA OF 1500FT². THE MAXIMUM ALLOWABLE PROTECTION AREA OF COVERAGE FOR A SPRINKLER SHALL BE IN ACCORDANCE WITH THE VALUE INDICATED IN TABLE 10.2.4.2.1(b) - 130FT².
3. MAXIMUM SPRINKLER SPACING SHALL NOT EXCEED 15'-0" ON CENTER, UNLESS SPECIFICALLY LISTED BY THE SPRINKLER MANUFACTURER.
4. HOSE STREAM ALLOWANCE GPM FLOW SHALL BE IN ACCORDANCE WITH THE VALUES INDICATED IN TABLE 19.2.3.1.2: LIGHT HAZARD - 100 GPM; ORD HAZARD - 250 GPM.
5. PER NFPA 13 (2022) §19.2.3.2.3.1, WHERE LISTED QUICK-RESPONSE SPRINKLERS ARE USED THROUGHOUT A SYSTEM OR PORTION OF A SYSTEM HAVING THE SAME HYDRAULIC DESIGN BASIS, THE SYSTEM AREA OF OPERATION SHALL BEPERMITTED TO BE REDUCED WITHOUT REVISING THE DENSITY AS INDICATED IN FIG. 19.2.3.2.3.1. NOTE: REMOTE AREA REDUCTION EXCLUDES EXTENDED COVERAGE SPRINKLER HEADS AND ONLY APPLICABLE TO LIGHT HAZARD OCCUPANCY ONLY.
6. PER NFPA 13 (2022) §19.2.3.2.4, THE SYSTEM REMOTE AREA SHALL BE INCREASED BY 30% WITHOUT REVISING THE DENSITY WHEN SPRAY SPRINKLERS AND CMSA SPRINKLERS ARE USED ON SLOPED CEILINGS WITH A PITCH EXCEEDING 1 IN 6 (A RISE OF 2 UNITS IN A RUN OF 12 UNITS) IN NON-STORAGE APPLICATIONS.
7. PER NFPA 13 (2022) §19.2.3.2.8.1, MULTIPLE ADJUSTMENTS CAN BE MADE TO THE REMOTE AREA WHEN BOTH QUICK RESPONSE SPRINKLER AREA REDUCTIONS AND SLOPED CEILING AREA INCREASE ARE APPLICABLE.
8. THE HYDRAULIC CALCULATION SOURCE SHALL BE TO THE FLOW TEST HYDRANT OR APPLICABLE STREET CONNECTION, ACCORDING TO LOCAL FIRE PREVENTION DISTRICT WATER CURVE DETERMINATIONS AND OR TESTING PROCEDURES. REFER TO SITE PLAN AND HYDRAULIC CALCULATIONS.
9. STORAGE HEIGHT SHALL NOT EXCEED 8-FEET.
10. MICROBIAL INDUCED CORROSION WILL NOT BE A FACTOR FOR THIS SYSTEM.
11. THE FIRE SPRINKLER ALARM SYSTEM SHALL BE DESIGNED, INSTALLED AND PERMITTED BY OTHERS, AND IS NOT IN THE SCOPE OF WORK. SUPERVISORY FLOW DETECTORS AND TAMPER RESISTANT VALVES INSTALLED ON THE OVERHEAD SPRINKLER SYSTEM PIPING WILL BE SUPPLIED AND INSTALLED BY FIRE SPRINKLER CONTRACTOR AND WIRED BY ALARM CONTRACTOR.
12. PER PROJECT SPECIFICATIONS, IF DESIGN OR MATERIALS DIFFER FROM THAT SPECIFIED HEREIN, SUPPLEMENTAL ENGINEERING DESIGN, SUBMITTAL, AND REVIEW SHALL BE REQUIRED.

GENERAL INSTALLATION REQUIREMENTS:

1. OVERHEAD FIRE SPRINKLER PIPING SHALL BE AS FOLLOWS (UNLESS NOTED OTHERWISE ON PLANS):
   - 1.1. PIPING 2-1/2" AND LARGER SHALL BE SCH. 10 BLACK STEEL WITH ROLLED GROOVED FITTINGS, RISER TO BE SCH.10 GALVANIZED STEEL PIPE.
   - 1.2. PIPING 2" AND LESS SHALL BE SCH. 40 BLACK STEEL.
   - 1.3. DRAINAGE PIPING 2" OR SMALLER, DOWNSTREAM OF THE DRAIN VALVE SHALL BE SCH. 40 GALVANIZED PIPE WITH GALVANIZED FITTINGS.
2. WHERE APPLICABLE IN UNOBSTRUCTION CONSTRUCTION CONDITIONS (AS DEFINED PER NFPA 13 §3.3.43.2); PER NFPA 13 (2022) §10.2.6.1.1.1, THE DISTANCE BETWEEN THE SPRINKLER DEFLECTOR AND THE CEILING SHALL BE A MINIMUM OF 1-INCH AND A MAXIMUM OF 12-INCHES THROUGHOUT THE AREA OF COVERAGE OF THE SPRINKLER.
3. WHERE APPLICABLE IN OBSTRUCTION CONSTRUCTION CONDITIONS (AS DEFINED PER NFPA 13 §3.3.43.1); PER NFPA 13 (2022) §10.2.6.1.2, SPRINKLER DEFLECTORS SHALL BE INSTALLED WITH THE DEFLECTORS WITHIN THE HORIZONTAL PLANES OF 1-INCH TO 6-INCHES BELOW THE STRUCTURAL MEMBERS AND A MAXIMUM DISTANCE OF 22-INCHES FROM THE CEILING/ROOF DECK.
4. PER NFPA 13 (2022) §9.4.1.3 UPRIGHT SPRINKLERS SHALL BE INSTALLED WITH THE FRAME ARMS PARALLEL TO THE BRANCH LINE, UNLESS SPECIFICALLY LISTED FOR OTHER ORIENTATION.
5. PER NFPA 13 (2022) §9.5.4.2 DEFLECTORS OF SPRINKLERS SHALL BE ALIGNED PARALLEL TO CEILINGS, ROOFS, OR THE INCLINE OF STAIRS.
6. PER NFPA 13 (2022) §9.3.17.1 CONCEALED SPACES OF EXPOSED COMBUSTIBLE CONSTRUCTION SHALL BE PROTECTED BY SPRINKLERS EXCEPT IN CONCEALED SPACES WHERE SPRINKLERS ARE NOT REQUIRED TO BE INSTALLED BY §9.2.1.1 THROUGH §9.2.1.20 AND §9.2.2.
7. PER NFPA 13 (2022) §9.2.1.1 CONCEALED SPACES OF NONCOMBUSTIBLE WITH MINIMAL COMBUSTIBLE LOADING HAVING NO ACCESS SHALL NOT REQUIRE SPRINKLER PROTECTION.
8. PER NFPA 13 (2106) §9.2.1.3 CONCEALED SPACES FORMED BY STUDS OR JOISTS WITH LESS THAN 6-INCHES BETWEEN THE INSIDE OR NEAR EDGES OF THE STUDS OR JOISTS SHALL NOT REQUIRE SPRINKLER PROTECTION.
9. PER NFPA 13 (2022) §9.2.1.7 CONCEALED SPACES FILLED WITH NONCOMBUSTIBLE INSULATION SHALL NOT REQUIRE SPRINKLER PROTECTION; MAXIMUM 2-INCH AIR GAP AT THE TOP OFTHE SPACE SHALL BE PERMITTED.
10. PER NFPA 13 (2022) §9.2.1.20.2 COMBUSTIBLE SOFFITS, EAVES, OVERHANGS, AND DECORATIVE FRAME ELEMENTS SHALL NOT EXCEED 4-FEET IN WIDTH SHALL NOT REQUIRED SPRINKLER PROTECTION.
11. PER NFPA 13 (2022) §9.2.1.20.4 SPRINKLERS SHALL BE PERMITTED TO BE OMITTED WHERE THE EXTERIOR CANOPIES, ROOFS, PORTE-COCHERES, BALCONIES, DECKS, AND SIMILAR PROJECTIONS ARE CONSTRUCTED WITH MATERIALS THAT ARE NONCOMBUSTIBLE.
12. PER NFPA 13 (2022) §9.2.3.2 SPRINKLERS SHALL BE PERMITTED TO BE OMITTED FROM BELOW THE EXTERIOR PROJECTIONS OF COMBUSTIBLE CONSTRUCTION, PROVIDED THE EXPOSED FINISH MATERIAL ON THE EXTERIOR PROJECTIONS ARE NON-COMBUSTIBLE AND THE EXTERIOR PROJECTIONS CONTAIN ONLY SPRINKLERED CONCEALED SPACES OR ANY OF THE FOLLOWING UNSPRINKLERED COMBUSTIBLE CONCEALED SPACES: (1) COMBUSTIBLE CONCEALED SPACES FILLED ENTIRELY WITH NON-COMBUSTIBLE INSULATION, (2) LIGHT OR ORDINARY HAZARD OCCUPANCIES WHERE NONCOMBUSTIBLE OR LIMITED-COMBUSTIBLE CEILINGS ARE DIRECTLY ATTACHED TO THE BOTTOM OF SOLID WOOD JOISTS SO AS TO CREATE ENCLOSED JOIST SPACES 220-FT³ OR LESS IN VOLUME, INCLUDING SPACE BELOW INSULATION THAT IS LAID DIRECTLY ON TOP OR WITHIN THE CEILING JOISTS IN AN OTHERWISE SPRINKLERED ATTIC, OR (3) CONCEALED SPACES OVER ISOLATED SMALL EXTERIOR PROJECTIONS NOT EXCEEDING 55FT³ IN AREA
13. CAGE-TYPE SPRINKLER HEAD GUARDS SHALL BE INSTALLED TO PROTECT ALL SPRINKLERS SUBJECT TO MECHANICAL DAMAGE, INCLUDING ALL NON-CONCEALED PENDENT SPRINKLER BELOW 8-FEET ABOVE FINISH FLOOR OR EXPOSED UPRIGHTS AND PENDENT SPRINKLER INSTALLED DIRECTLY ON PIPING WITHIN A GYMNASIUM AREA.
14. ALL HANGERS, BRACES, AND RESTRAINTS SHALL BE INSTALLED IN ACCORDANCE WITH NFPA 13 (2022 CALIFORNIA EDITION), CBC/CFC (2022), DIVISION OF THE STATE ARCHITECT - DEPARTMENT OF GENERAL SERVICES, AND CITY OF PORTERVILLE STANDARDS.
15. PER NFPA 13 (2022) §18.6.5 BRANCH LINE RESTRAINT SHALL NOT BE REQUIRED WHERE BRANCH LINES ARE SUPPORTED BY RODS LESS THAN 6" IN LENGTH WHEN MEASURED BETWEEN THE TOP OF THE PIPE TO THE POINT OF ATTACHMENT TO THE BUILDING STRUCTURE.

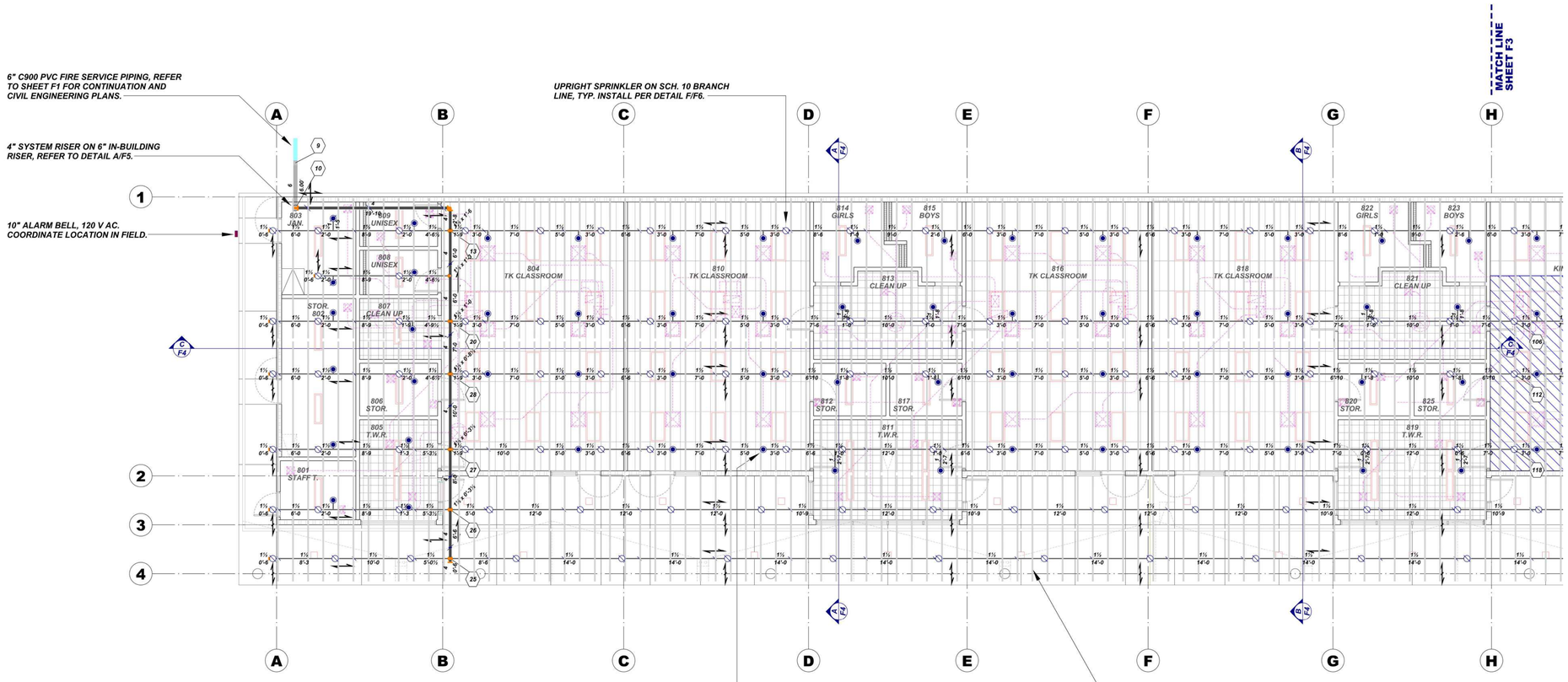

SPRINKLER LEGEND	
SYMBOL	DESCRIPTION
	LATERAL SEISMIC BRACE (PERPENDICULAR)
	LONGITUDINAL SEISMIC BRACE (PARALLEL)
	4-WAY SEISMIC BRACE (PARALLEL/PERPENDICULAR)
	LINE RESTRAINT
	PIPE HANGERS
	PENDENT SPRINKLER ON 1" DROP
	UPRIGHT SPRINKLER ON BRANCH LINE
	SEISMIC SEPARATION ASSEMBLY
	HYDRAULIC NODE
	FIRE PIPING
	EXISTING FIRE PIPING

APPROVALS

FILE # 54-76 APPLICATION # 02-121996

IDENTIFICATION STAMP
DIV. OF THE STATE ARCHITECT
APP: 02-121996 INC:
REVIEWED FOR
SS ☑ FLS ☑ ACS ☑
DATE: 8/14/2024

LICENSED ARCHITECT MICHAEL J. SCOTT No. C-34290 REN. 05-31-25 STATE OF CALIFORNIA

DATE: DECEMBER 31, 2023

NEW PRESCHOOL AND TK/KINDERGARTEN CLASSROOMS AT SANTA FE ELEMENTARY SCHOOL

PORTERVILLE UNIFIED SCHOOL DISTRICT
286 E ORANGE AVENUE, PORTERVILLE, CA 93257

REVISIONS

MANGINI ARCHITECTURE INGENUITY
BARENG MORRELLI SCOTT
MANGINI ASSOCIATES INC.
4320 West Mineral King Avenue
Visalia, California 93291
www.mangini.us
(559) 627-0530 Office
(559) 627-1926 Fax

REGISTERED PROFESSIONAL ENGINEER BRIAN W. CARLSON No. M34846 Exp. 6-30-26 MECHANICAL STATE OF CALIFORNIA

LAWRENCE ENGINEERING GROUP
4910 E. Clinton Way, Suite 101
(559) 431-0101
23114
Fresno, CA 93727
FAX (559) 431-1362

TITLE
BUILDING 800
FIRE PROTECTION
PLANS (WEST)

F2

PROJECT 23076

24 June 2024 10:07 AM P:\2023\23114 Porterville USD – Santa Fe ES – Kinder\4-Drawings\6 F\F2 – Building 800 Fire Protection Plan.dwg bott

APPROVALS

FILE # 54-76 | APPLICATION # 02-121996

IDENTIFICATION STAMP
DIV. OF THE STATE ARCHITECT
APP: 02-121996 INC:
REVIEWED FOR
SS ☑ FLS ☑ ACS ☑
DATE: 8/14/2024

LICENSED ARCHITECT
MICHAEL J. SCOTT
No. C-34290
REN. 05-31-25
STATE OF CALIFORNIA

DATE: DECEMBER 31, 2023

NEW PRESCHOOL AND TK/KINDERGARTEN CLASSROOMS AT SANTA FE ELEMENTARY SCHOOL

PORTERVILLE UNIFIED SCHOOL DISTRICT
286 E. ORANGE AVENUE, PORTERVILLE, CA 93257

SPRINKLER LEGEND DATA IS FOR PLAN REVIEW ONLY. THE INSTALLING CONTRACTOR SHALL VERIFY THE ACCURACY OF THE SPRINKLER LAYOUT AND SPRINKLER HEAD QUANTITIES TO MEET NFPA 13 STANDARDS. NO PRICING ADJUSTMENTS WILL BE PERMITTED FOR SPRINKLER HEADS ADDED BY THE CONTRACTOR.

Hydraulic Information

Remote Area 1	
OCCUPANCY CLASSIFICATION	Light Hazard
DENSITY (gpm/ft²)	0.100 for 1500.00ft² (Actual 1261.53ft²)
QUICK RESPONSE REDUCTION	14'-6 Ceiling (33.3%) 1001.25ft²
TOTAL HOSE STREAMS	100.00
TOTAL HEADS FLOWING	18
K-FACTOR	5.6
TOTAL WATER REQUIRED	371.30
TOTAL PRESSURE REQUIRED	34.002
BASE of RISER (gpm)	271.30
BASE of RISER (psi)	25.721
SAFETY MARGIN (psi)	+10.459 (23.5%)

Hydraulic Information

Remote Area 2	
OCCUPANCY CLASSIFICATION	Light Hazard
DENSITY (gpm/ft²)	0.100 for 1500.00ft² (Actual 970.69ft²)
QUICK RESPONSE REDUCTION	10'-0 Ceiling (40.0%) 900.00ft²
TOTAL HOSE STREAMS	100.00
TOTAL HEADS FLOWING	9
K-FACTOR	5.6
TOTAL WATER REQUIRED	279.11
TOTAL PRESSURE REQUIRED	35.889
BASE of RISER (gpm)	179.11
BASE of RISER (psi)	28.713
SAFETY MARGIN (psi)	+8.793 (19.7%)

Sprinkler Legend

Symbol	Manufacturer	SIN	Model	Quantity	K-Factor	Type	Size	Response	Finish
	Victaulic	V2704	FL-QR	174	5.6	Upright	½	Quick	Brass
	Victaulic	V2708	FL-QR	91	5.6	Pendent	½	Quick	Chrome
	Victaulic	V4201	FL-QR	6	4.2	Pendent	½	Quick	Chrome
				Total = 271					

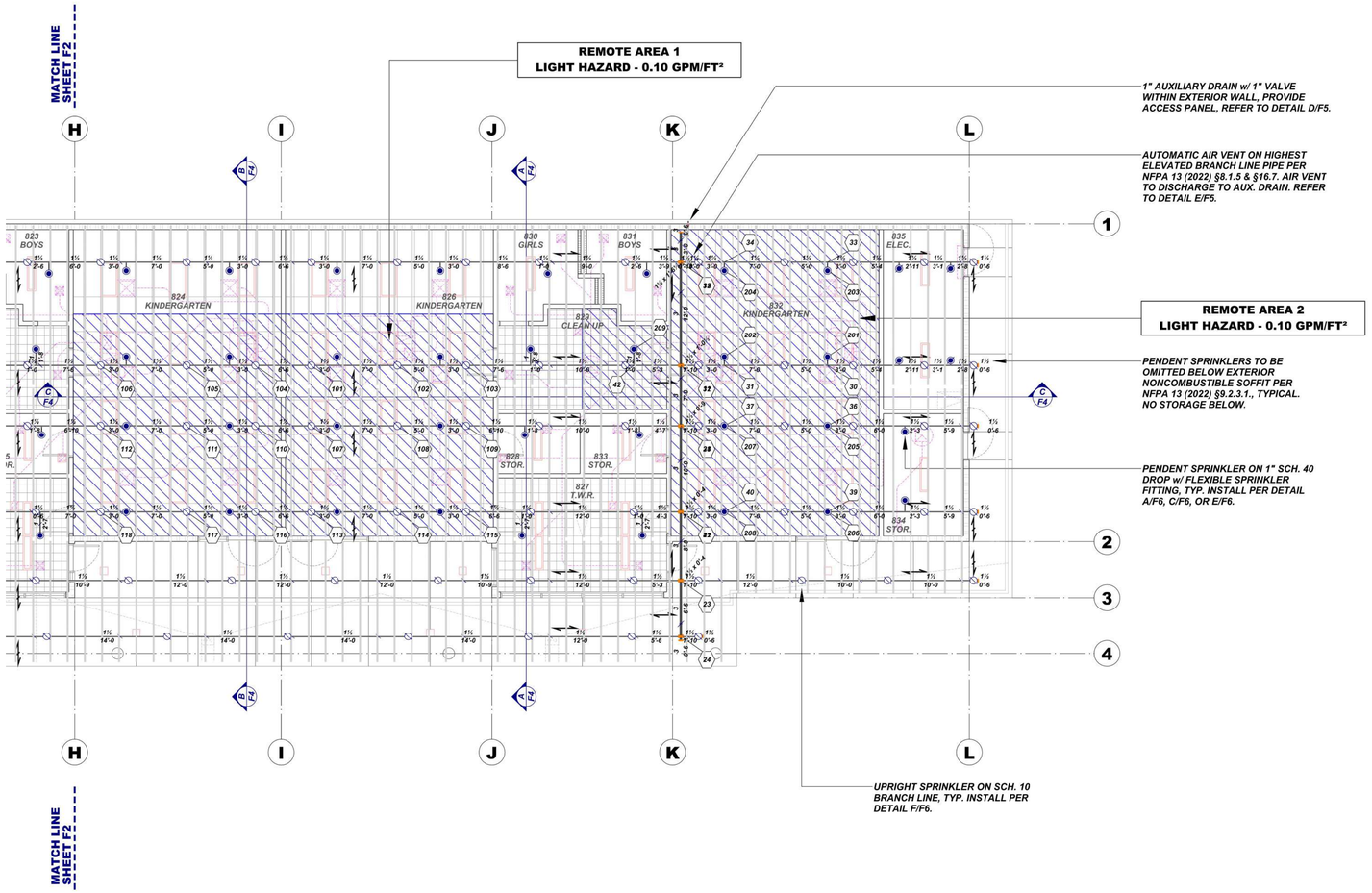

SPRINKLER LEGEND

SYMBOL	DESCRIPTION
	LATERAL SEISMIC BRACE (PERPENDICULAR)
	LONGITUDINAL SEISMIC BRACE (PARALLEL)
	4-WAY SEISMIC BRACE (PARALLEL/PERPENDICULAR)
	LINE RESTRAINT
	PIPE HANGERS
	PENDENT SPRINKLER ON 1" DROP
	UPRIGHT SPRINKLER ON BRANCH LINE
	SEISMIC SEPARATION ASSEMBLY
	HYDRAULIC NODE
	FIRE PIPING
	EXISTING FIRE PIPING

REGISTERED PROFESSIONAL ENGINEER
BRIAN W. CARLSON
No. M34846
Exp. 6-30-26
MECHANICAL
STATE OF CALIFORNIA

LAWRENCE ENGINEERING GROUP
4910 E. Clinton Way, Suite 101
(559) 431-0101
23114
Fresno, CA 93727
FAX (559) 431-1362

MANGINI ARCHITECTURE INGENUITY
BARENG MORRELLI SCOTT
MANGINI ASSOCIATES INC.
4320 West Mineral King Avenue
Visalia, California 93291
www.mangini.us
(559) 627.0530 Office
(559) 627.1926 Fax

REVISIONS

TITLE
BUILDING 800
FIRE PROTECTION
PLANS (EAST)

F3

PROJECT 23076

SCALE: 1/8" = 1'-0"

24 June 2024 10:07 AM P:\2023\23114 Porterville USD – Santa Fe ES – Kinder\4–Drawings\6 F\F3 – Building 800 Fire Protection Plan.dwg bolt

P:\2023\23114 Porterville USD – Santa Fe ES – Kinder\4–Drawings\6 F\F3 – Building 800 Fire Protection Plan.dwg Jun 24 2024 10:07am

APPROVALS

FILE # 54-76 | APPLICATION # 02-121996

IDENTIFICATION STAMP
DIV. OF THE STATE ARCHITECT
APP: 02-121996 INC:
REVIEWED FOR
SS ☑ FLS ☑ ACS ☑
DATE: 8/14/2024

LICENSED ARCHITECT
MICHAEL J. SCOTT
No. C-34290
REN. 05-31-25
STATE OF CALIFORNIA

DATE: DECEMBER 31, 2023

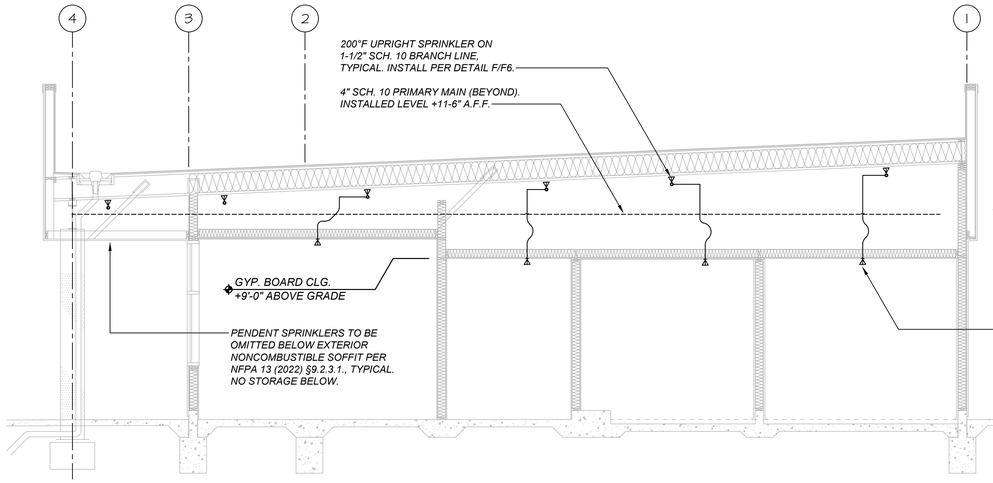

BUILDING SECTION

SCALE: 1/4" = 1'

FSS101

B / F4

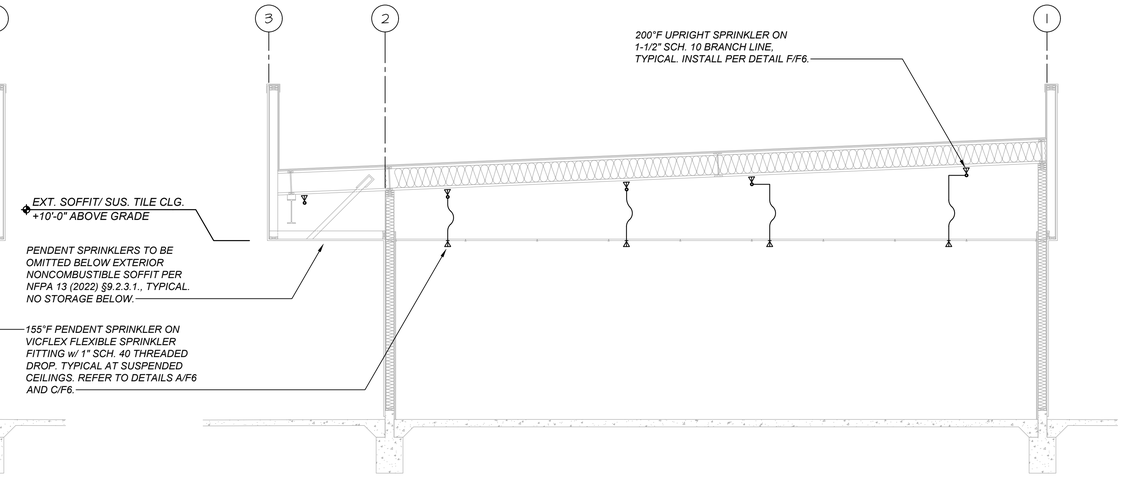

BUILDING SECTION

SCALE: 1/4" = 1'

FSS101

A / F4

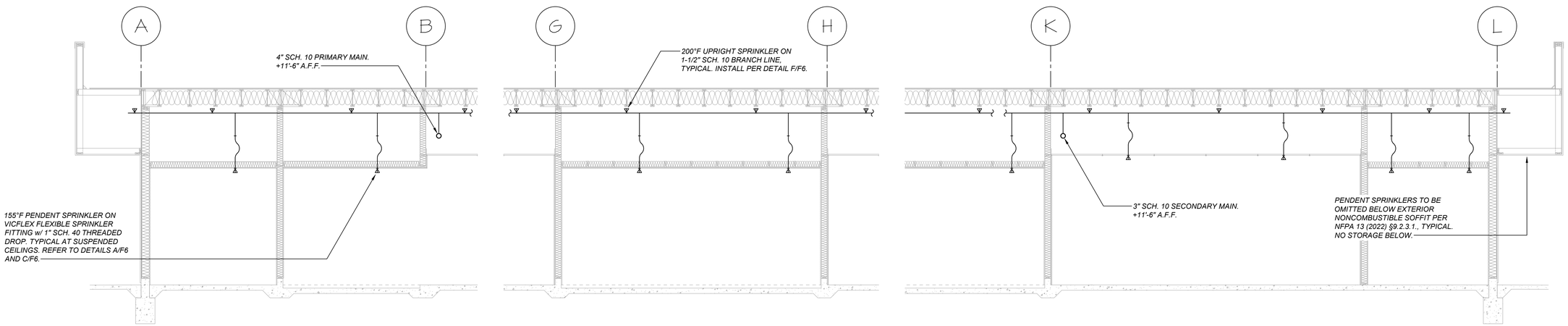

BUILDING SECTION

SCALE: 1/4" = 1'

FSS101

C / F4

REGISTERED PROFESSIONAL ENGINEER
BRIAN W. CARLSON
No. M34846
Exp. 6-30-26
MECHANICAL
STATE OF CALIFORNIA

LAWRENCE
ENGINEERING GROUP
4910 E. Clinton Way, Suite 101
(559) 431-0101
23114
Fresno, CA 93727
FAX (559) 431-1362

NEW PRESCHOOL AND TK/KINDERGARTEN CLASSROOMS AT SANTA FE ELEMENTARY SCHOOL

PORTERVILLE UNIFIED SCHOOL DISTRICT

286 E ORANGE AVENUE, PORTERVILLE, CA 93257

REVISIONS

MANGINI | ARCHITECTURE INGENUITY

BARENG MORRELLI SCOTT

MANGINI ASSOCIATES INC.
4320 West Mineral King Avenue
Visalia, California 93291
www.mangini.us
(559) 627-0530 Office
(559) 627-1926 Fax

TITLE
BUILDING 800
SECTION DRAWINGS

F4

PROJECT 23076

24 June 2024 10:07 AM P:\2023\23114 Porterville USD - Santa Fe ES - Kinder\4-Drawings\6 F\F4 - Building 800 Section Drawings.dwg bolt

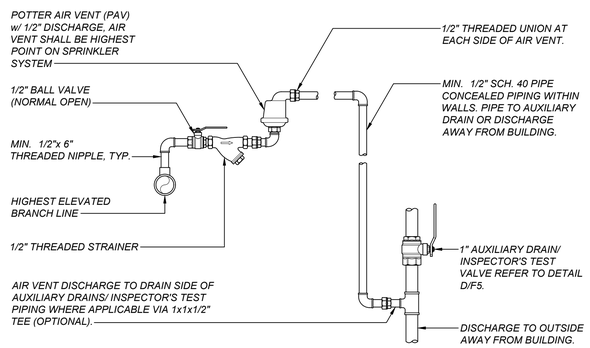

INSTALLATION NOTES:

A. WHERE APPLICABLE, AIR VENT DISCHARGE PIPING (MIN. 1/2" DIA. PIPING/TUBING) MAY DRAIN INTO THE NEAREST PLUMBING AIR VENT.
B. WHERE IT IS NOT PRACTICAL TO PROVIDE A DRAIN, POTTER AUTOMATIC AIR RELEASE w/ DRIP PAN (PAAR-B) MAY BE USED IN LIEU OF POTTER MODEL (PAV).

POTTER AIR VENT

SCALE: NONE FSSXXX E/F5

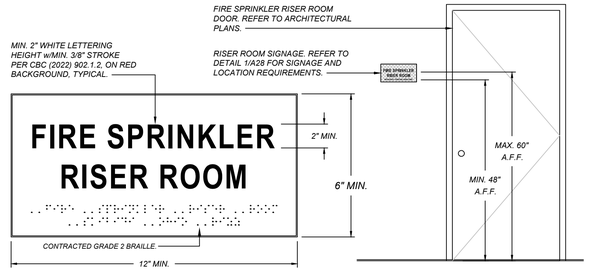

INSTALLATION NOTES:

A. PER CFC 2022 §509.1, ROOMS CONTAINING CONTROLS FOR SPRINKLER RISERS AND VALVES OR OTHER FIRE DETECTION, SUPPRESSION OR CONTROL ELEMENTS SHALL BE IDENTIFIED FOR USE OF THE FIRE DEPARTMENT. SUCH SIGNS SHALL BE CONSTRUCTED OF DURABLE MATERIALS, PERMANENTLY INSTALLED, AND READILY VISIBLE.
B. IF THE FIRE SPRINKLER RISER ROOM IS ONLY ACCESSIBLE VIA AN INTERIOR DOOR, ADDITIONAL SIGNS SHALL BE INSTALLED ON APPLICABLE DOORS INDICATING THE DIRECT ROUTE TO THE FIRE SPRINKLER RISER ROOM.
C. THE SIGN INSTALLER SHALL COORDINATE, VERIFY, AND CONFORM WITH THE LOCAL FIRE MARSHAL FOR SPECIFIC FIRE SPRINKLER RISER ROOM SIGN IDENTIFICATION REQUIREMENTS WHICH MAY HAVE ADDITIONAL CRITERIA NOT LISTED ON THIS DETAIL.
D. SIGNAGE TO RISER ROOM SHALL HAVE TACTILE CHARACTERS AND COMPLY WITH CBC 2022 §11B-703.4.1. REFER TO ARCHITECTURAL DETAIL 1/A28 FOR SIGNAGE STANDARDS. ALL SIGNS SHALL BE APPROVED BY THE ARCHITECT.

FIRE SPRINKLER RISER ROOM SIGNAGE

SCALE: NONE FSS101 B/F5

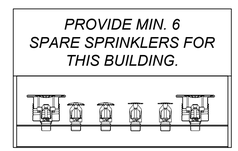

SPARE HEAD BOX NOTES:

1. PER NFPA 13 (2022) §16.2.7.3 THE SPRINKLERS SHALL BE KEPT IN A CABINET LOCATED WHERE THE TEMPERATURE TO WHICH THEY ARE SUBJECTED WILL AT NO TIME EXCEED THE MAXIMUM CEILING TEMPERATURES SPECIFIED IN TABLE 6.2.5.1 FOR EACH OF THE SPRINKLERS WITHIN THE CABINET.
2. THE SPARE HEAD CABINET SHALL BE PLACED IN A SECURE LOCATION, PREFERABLY FASTENED TO A WALL ABOVE 6'-0" A.F.F. LOCATION SHALL BE COORDINATED BY THE OWNER.
3. PER NFPA 13 (2022) §16.2.7.5 THE STOCK OF SPARE SPRINKLERS SHALL INCLUDE ALL TYPES AND RATINGS INSTALLED AND SHALL BE AS FOLLOWS:
   3.1. FOR PROTECTED FACILITIES HAVING UNDER 300 SPRINKLERS — NO FEWER THAN SIX SPRINKLERS.
   3.2. FOR PROTECTED FACILITIES HAVING 300 TO 1000 SPRINKLERS — NO FEWER THAN 12 SPRINKLERS.
   3.3. FOR PROTECTED FACILITIES HAVING OVER 1000 SPRINKLERS — NO FEWER THAN 24 SPRINKLERS.
   3.4. A MINIMUM OF TWO SPRINKLERS OF EACH TYPE AND TEMPERATURE RATING SHOULD BE PROVIDED.
4. PER NFPA 13 (2022) §16.2.7.6 ONE SPRINKLER WRENCH AS SPECIFIED BY THE SPRINKLER MANUFACTURER SHALL BE PROVIDED IN THE CABINET FOR EACH TYPE OF SPRINKLER INSTALLED TO BE USED FOR THE REMOVAL AND INSTALLATION OF SPRINKLERS IN THE SYSTEM. ONE SPRINKLER WRENCH DESIGN CAN BE APPROPRIATE FOR MANY TYPES OF SPRINKLERS AND SHOULD NOT REQUIRE MULTIPLE WRENCHES OF THE SAME DESIGN.
5. PER NFPA 13 (2022) §16.2.7.7 A LIST OF THE SPRINKLERS INSTALLED IN THE PROPERTY SHALL BE POSTED IN THE SPRINKLER CABINET. THE LIST SHALL INCLUDE THE FOLLOWING:
   5.1. SPRINKLER IDENTIFICATION NUMBER (SIN) IF EQUIPPED; OR THE MANUFACTURER, MODEL, ORIFICE, DEFLECTOR TYPE, THERMAL SENSITIVITY, AND PRESSURE RATING.
   5.2. GENERAL DESCRIPTION.
   5.3. QUANTITY OF EACH TYPE TO BE CONTAINED IN THE CABINET.
   5.4. ISSUE OR REVISION DATE OF THE LIST.

SPARE HEAD BOX DETAIL

SCALE: NONE FRM010 C/F5

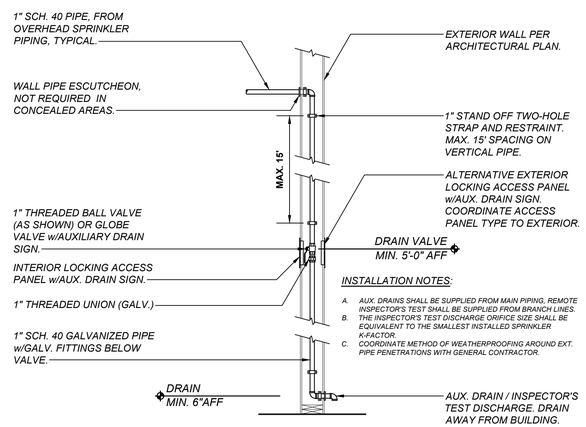

INSTALLATION NOTES:

A. AUX. DRAINS SHALL BE SUPPLIED FROM MAIN PIPING, REMOTE INSPECTOR'S TEST SHALL BE SUPPLIED FROM BRANCH LINES.
B. THE INSPECTOR'S TEST DISCHARGE ORIFICE SIZE SHALL BE EQUIVALENT TO THE SMALLEST INSTALLED SPRINKLER K-FACTOR.
C. COORDINATE METHOD OF WEATHERPROOFING AROUND EXT. PIPE PENETRATIONS WITH GENERAL CONTRACTOR.

CONCEALED AUXILIARY DRAIN DETAIL/ REMOTE INSPECTOR'S TEST

SCALE: NONE FRM010 D/F5

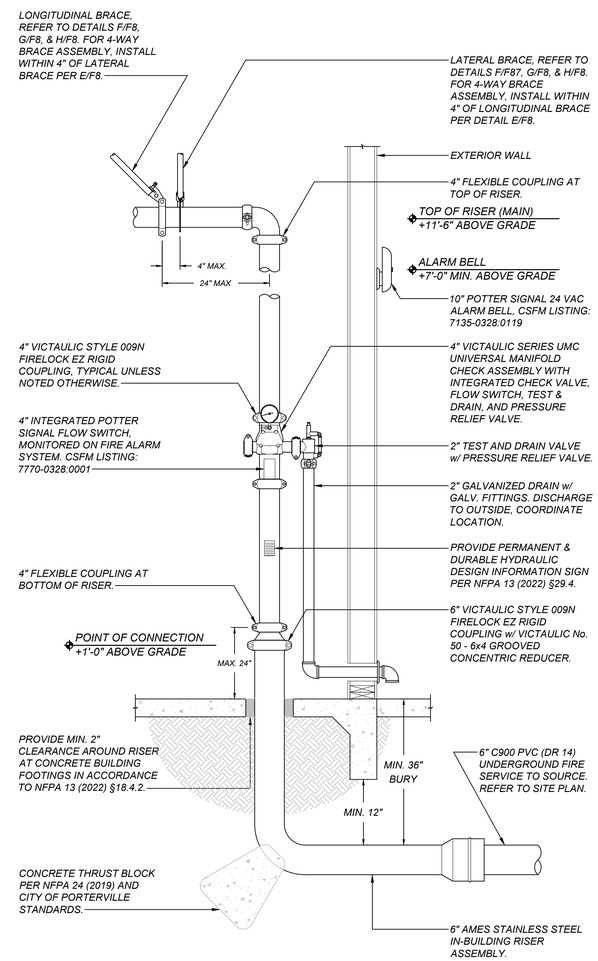

TITLE 19 ARTICLE 906 (A). A LABEL OF THE SELF-ADHESIVE TYPE SHALL BE PLACED ON THE FIRE DEPARTMENT CONNECTION OR ON THE RISER FOR FIRE SPRINKLER SYSTEM WITH THE DATE OF SERVICE AND/OR DATE INSTALLATION WAS PERFORMED AND LICENSE NUMBER OF PERSON PERFORMING SERVICE WORK.

RISER NOTES:

1. EACH RISER DETAIL IS A SCHEMATIC REPRESENTATION OF THE RISER(S). ORIENTATION OF FITTINGS, VALVES, GAUGES, AND OTHER DEVICES HAVE BEEN MODIFIED FOR ILLUSTRATION PURPOSES AND MAY VARY IN ACTUAL INSTALLATION.
2. PER NFPA 13 (2022) §18.2.3.1 - A FLEXIBLE COUPLING SHALL BE INSTALLED WITHIN 24" OF THE TOP AND BOTTOM OF ALL RISERS. RISERS LESS THAN 3 FT IN LENGTH MAY OMIT FLEX COUPLINGS. ONE FLEX COUPLING IS ADEQUATE FOR RISERS 3' TO 7' IN LENGTH.
3. PER NFPA 13 (2022) §18.5.8.3 - WHEN A FOUR-WAY BRACE AT THE TOP OF A RISER IS ATTACHED ON THE HORIZONTAL PIPING, IT SHALL BE WITHIN 24" OF THE CENTERLINE OF THE RISER AND THE LOADS FOR THAT BRACE SHALL INCLUDE BOTH THE VERTICAL AND HORIZONTAL PIPE.
4. PER NFPA 13 (2022) §29.4. - THE INSTALLING CONTRACTOR SHALL IDENTIFY A HYDRAULICALLY DESIGNED SPRINKLER SYSTEM WITH A PERMANENTLY MARKED WEATHERPROOF METAL OR RIGID PLASTIC SIGN SECURED WITH CORROSION RESISTANT WIRE, CHAIN, OR OTHER APPROVED MEANS.
5. PER NFPA 13 (2022) §29.4.1 - THE INSTALLING CONTRACTOR SHALL PROVIDE A GENERAL INFORMATION SIGN USED TO DETERMINE SYSTEM DESIGN BASIS AND INFORMATION RELEVANT TO THE INSPECTION, TESTING, AND MAINTENANCE REQUIREMENTS REQUIRED BY NFPA 25.
6. LOCATION OF 2" SYSTEM DRAIN TO BE COORDINATED WITH GENERAL CONTRACTOR. DRAIN PIPE AND FITTINGS SHALL BE GALV.
7. FIRE RISER ROOM SHALL COMPLY WITH CBC (2022) 901.3 PER CFC (2022) SECTION 509.1 FIRE EQUIPMENT ROOMS SHALL BE IDENTIFIED IN AN APPROVED MANNER. APPROVED SIGNS SHALL BE DURABLE, PERMANENT, AND VISIBLE.

RISER DETAIL: 4" SYSTEM RISER ON 6" IN-BUILDING RISER (INT)

SCALE: NONE FSSXXX A/F5

APPROVALS

FILE # 54-76 APPLICATION # 02-121996

IDENTIFICATION STAMP
DIV. OF THE STATE ARCHITECT
APP: 02-121996 INC:
REVIEWED FOR
SS ☑ FLS ☑ ACS ☑
DATE: 8/14/2024

LICENSED ARCHITECT MICHAEL J. SCOTT No. C-34290 REN. 05-31-25 STATE OF CALIFORNIA

DATE: DECEMBER 31, 2023

NEW PRESCHOOL AND TK/KINDERGARTEN CLASSROOMS AT SANTA FE ELEMENTARY SCHOOL

PORTERVILLE UNIFIED SCHOOL DISTRICT
286 E ORANGE AVENUE, PORTERVILLE, CA 93257

REVISIONS

MANGINI ARCHITECTURE INCORPORATED
BARENG MORRELLI SCOTT
MANGINI ASSOCIATES INC.
4320 West Mineral King Avenue
Visalia, California 93291
www.mangini.us
(559) 627-0530 Office
(559) 627-1926 Fax

REGISTERED PROFESSIONAL ENGINEER BRYAN W. CARLSON No. M34846 Exp. 6-30-26 MECHANICAL STATE OF CALIFORNIA

LAWRENCE ENGINEERING GROUP
4910 E. Clinton Way, Suite 101
(559) 431-0101
23114
Fresno, CA 93727
FAX (559) 431-1362

TITLE
RISER & PIPING DETAILS

F5

PROJECT 23076

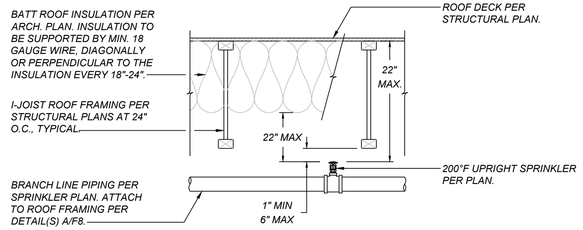

INSTALLATION NOTES:

A. INSTALLATION OF SPRINKLER HEAD SHALL BE IN ACCORDANCE TO NFPA 13 (2022) §10.2.6.1.2(1): OBSTRUCTED CONSTRUCTION, IN WHICH SPRINKLER DEFLECTORS SHALL BE A MINIMUM 1" TO A MAXIMUM 6" FROM THE HORIZONTAL PLANE BELOW STRUCTURAL MEMBERS AND A MAXIMUM 22" BELOW THE CEILING/ROOF DECK.
B. PER NFPA 13 (2022) §9.5.4.1.3, WHEN INSULATION IS INSTALLED DIRECTLY AGAINST UNDERSIDE OF THE CEILING OR ROOF STRUCTURE, THE DEFLECTOR DISTANCE SHALL BE MEASURED FROM THE BOTTOM OF THE INSULATION. INSTALLATION OF THE INSULATION SHALL COMPLY WITH NFPA 13 §9.5.4.1.3.2 & §9.5.4.1.3.3.
C. PER NFPA 13 (2022) §9.4.1.3 UPRIGHT SPRINKLERS FRAME ARMS SHALL BE INSTALLED PARALLEL TO THE BRANCH LINE AND §9.5.4.2, SPRINKLER DEFLECTORS SHALL BE ALIGNED PARALLEL TO CEILINGS AND ROOFS.

UPRIGHT SPRINKLER & BRANCH LINE INSTALLATION AT I-JOIST ROOF FRAMING

F / F6

SCALE: NONE FSSXXX

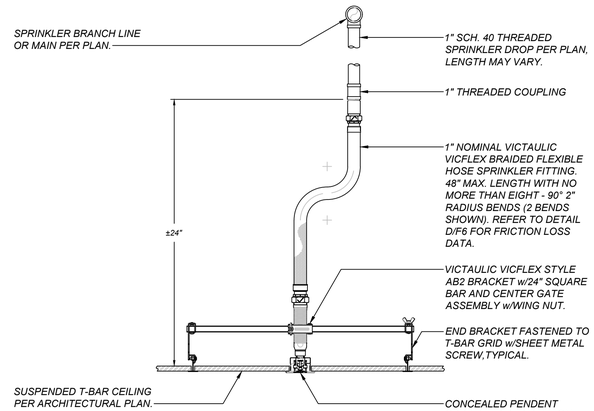

VICFLEX FLEXIBLE SPRINKLER DROP w/CONCEALED PENDENT SPRINKLER

C / F6

SCALE: NONE FSSXXX

INSTALLATION NOTES:

A. PENDENT SPRINKLER HEADS INSTALLED WITHIN SUSPENDED CEILING TILES SHALL BE POSITIONED "CENTER OF TILE" AS INDICATED PER PROJECT SPECIFICATIONS. HOWEVER, SPRINKLER SPACING SHALL NOT EXCEED THE MAXIMUM SPRINKLER SPACING PER NFPA 13 (2022) §10.2.5.1, §10.2.5.2, §10.2.5.2.3.1, §11.2.3.1, §11.2.3.2 AND FIRE SPRINKLER MANUFACTURER LISTINGS.
B. PENDENT SPRINKLER HEADS INSTALLED IN DRY-WALL CEILINGS SHALL BE POSITIONED PER PLAN, ALIGNED WITH LIGHTING, AUDIO, AND OTHER CEILING FEATURES. HOWEVER, SPRINKLER SPACING SHALL NOT EXCEED MAXIMUM NFPA 13 REQUIREMENTS AND FIRE SPRINKLER MANUFACTURER LISTINGS.

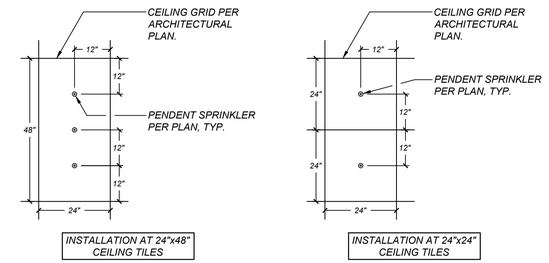

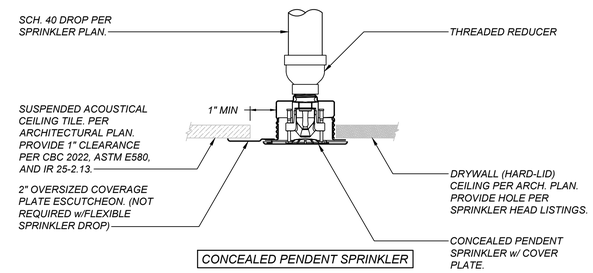

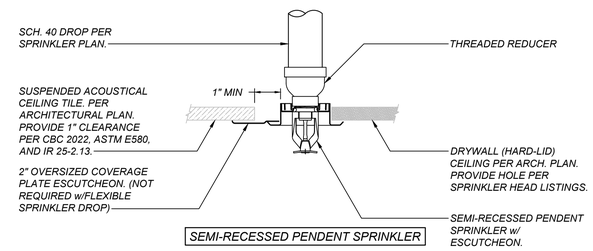

SPRINKLER HEAD INSTALLATION DETAIL

A / F6

SCALE: NONE FSSXXX

NOTES:

1. WALL ASSEMBLY - THE 1 OR 2 HR FIRE-RATED GYPSUM WALLBOARD/STUD WALL ASSEMBLY SHALL BE CONSTRUCTED OF THE MATERIALS AND IN THE MANNER SPECIFIED IN THE INDIVIDUAL U300 OR U400 SERIES WALL AND PARTITION DESIGNS IN THE UL FIRE RESISTANCE DIRECTORY AND SHALL INCLUDE THE FOLLOWING CONSTRUCTION FEATURES:
   A. STUDS - WALL FRAMING MAY CONSIST OF EITHER WOOD STUDS OR STEEL CHANNEL STUDS. WOOD STUDS TO CONSIST OF NOMINAL 2"x4" LUMBER SPACED 16" OC. STEEL STUDS TO BE MIN. 2-1/2" WIDE AND SPACED MAX. 24" OC. WHEN STEEL STUDS ARE USED AND THE DIAMETER OF OPENING EXCEEDS THE WIDTH OF STUD CAVITY, THE OPENING SHALL BE FRAMED ON ALL SIDES USING LENGTHS OF STEEL STUD INSTALLED BETWEEN THE VERTICAL STUDS AND SCREW-ATTACHED TO THE STEEL STUDS AT EACH END. THE FRAMED OPENING IN THE WALL SHALL BE 4"-6" WIDER AND 4"-6" HIGHER THAN THE DIAMETER OF THE PENETRATING ITEM SUCH THAT, WHEN THE PENETRATING ITEM IS INSTALLED IN THE OPENING, A 2"-3" CLEARANCE IS PRESENT BETWEEN THE PENETRATING ITEM AND THE FRAMING ON ALL FOUR SIDES.
   B. GYPSUM BOARD* - 5/8" THICK, 4' WIDE WITH SQUARE OR TAPERED EDGES. THE GYPSUM BOARD TYPE, THICKNESS, NUMBER OF LAYERS, FASTENER TYPE AND SHEET ORIENTATION SHALL BE AS SPECIFIED IN THE INDIVIDUAL U300 OR U400 SERIES DESIGN IN THE UL FIRE RESISTANCE DIRECTORY. MAX DIAMETER OF OPENING IS 32-1/4" FOR STEEL STUD WALLS. MAX. DIAMETER OF OPENING IS 14-1/2" FOR WOOD STUD WALLS. THE F RATING OF THE FIRESTOP SYSTEM IS EQUAL TO THE FIRE RATING OF THE WALL ASSEMBLY.
2. THROUGH-PENETRANTS - ONE METALLIC PIPE, CONDUIT OR TUBING TO BE INSTALLED EITHER CONCENTRICALLY OR ECCENTRICALLY WITHIN THE FIRESTOP SYSTEM. THE ANNULAR SPACE SHALL BE MIN. 0" TO MAX 2-1/4" PIPE MAY BE INSTALLED WITH CONTINUOUS POINT CONTACT. PIPE, CONDUIT OR TUBING MAY BE INSTALLED AT AN ANGLE NOT GREATER THAN 45° FROM PERPENDICULAR. PIPE, CONDUIT OR TUBING TO BE RIGIDLY SUPPORTED ON BOTH SIDES OF WALL ASSEMBLY. THE FOLLOWING TYPES AND SIZES OF METALLIC PIPES, CONDUITS OR TUBING MAY BE USED:
   A. STEEL PIPE - NOMINAL 30"Ø (OR SMALLER) SCHEDULE 10 (OR HEAVIER) STEEL PIPE.
   B. IRON PIPE - NOMINAL 30"Ø (OR SMALLER) CAST OR DUCTILE IRON PIPE.
   C. CONDUIT - NOMINAL 4"Ø (OR SMALLER) STEEL ELECTRICAL METALLIC TUBING OR 6 IN. DIAMETER STEEL CONDUIT.
   D. COPPER TUBING - NOMINAL 6"Ø (OR SMALLER) TYPE L (OR HEAVIER) COPPER TUBING.
   E. COPPER PIPE - NOMINAL 6"Ø (OR SMALLER) REGULAR (OR HEAVIER) COPPER PIPE.
3. FILL, VOID OR CAVITY MATERIAL HILTI FS-ONE SEALANT - MIN. 5/8" THICKNESS OF FILL MATERIAL APPLIED WITHIN THE ANNULUS, FLUSH WITH BOTH SURFACES OF WALL. AT THE POINT OR CONTINUOUS CONTACT LOCATIONS BETWEEN PIPE AND WALL, A MIN. 1/2"Ø BEAD OF FILL MATERIAL SHALL BE APPLIED AT THE PIPE WALL INTERFACE ON BOTH SURFACES OF WALL.

PIPE CLEARANCE NOTES:

PER NFPA 13 (2022) §18.4.1 - CLEARANCE SHALL BE PROVIDED AROUND ALL PIPING EXTENDING THROUGH WALLS, FLOORS, PLATFORMS, AND FOUNDATIONS, INCLUDING DRAINS, FIRE DEPARTMENT CONNECTIONS, AND OTHER AUXILIARY PIPING.

PER NFPA 13 (2022) §18.4.2 - WHERE PIPE PASSES THROUGH HOLES IN PLATFORMS, FOUNDATIONS, WALLS, OR FLOORS, THE HOLES SHALL BE SIZED SUCH THAT THE DIAMETER OF THE HOLES IS NOMINALLY 2" LARGER THAN THE PIPE FOR PIPE 1" NOMINAL TO 3-1/2" NOMINAL AND 4" LARGER THAN THE PIPE FOR PIPE 4" NOMINAL AND LARGER.

PER NFPA 13 (2022) §18.4.4 - NO CLEARANCE SHALL BE REQ'D FOR PIPING PASSING THROUGH GYPSUM BOARD OR EQUALLY FRANGIBLE CONSTRUCTION THAT IS NOT REQ'D TO HAVE A FIRE RESISTANCE RATING.

SYSTEM NO. W-L-1054

F RATINGS - 1 AND 2 HR (SEE ITEMS 1 AND 3)
T RATING - 0 HR
L RATING AT AMBIENT - LESS THAN 1 CFM/SQ FT
L RATING AT 400 F-4 CFM/SQ FT

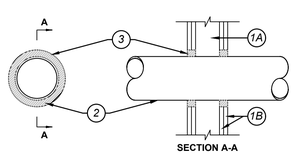

HILTI FS-ONE FIRE RATED PENETRATION

G / F6

SCALE: NONE FSSXXX

VICFLEX FLEXIBLE SPRINKLER DROP FRICTION LOSS DATA AND INSTALLATION NOTES

D / F6

SCALE: NONE FSSXXX

SERIES AH2/AH2-CC VICTAULIC VICFLEX - FRICTION LOSS DATA (UL)

LENGTH IN INCHES	OUTLET SIZE	1 - 90° BEND	2 - 90° BEND	3 - 90° BEND	4 - 90° BEND	5 - 90° BEND	6 - 90° BEND	7 - 90° BEND	8 - 90° BEND
31"	1/2"	11.0'	13.0'	15.0'	16.0'	N/A	N/A	N/A	N/A
	3/4"	12.0'	14.0'	19.0'	20.0'	N/A	N/A	N/A	N/A
36"	1/2"	14.0'	16.0'	18.0'	19.0'	21.0'	N/A	N/A	N/A
	3/4"	17.0'	19.0'	21.0'	22.0'	23.0'	N/A	N/A	N/A
48"	1/2"	18.0'	19.0'	21.0'	23.0'	25.0'	27.0'	30.0'	32.0'
	3/4"	21.0'	24.0'	26.0'	28.0'	31.0'	33.0'	35.0'	37.0'
60"	1/2"	21.0'	24.0'	27.0'	30.0'	32.0'	35.0'	37.0'	40.0'
	3/4"	23.0'	25.0'	27.0'	29.0'	32.0'	34.0'	37.0'	40.0'
72"	1/2"	27.0'	29.0'	31.0'	34.0'	37.0'	40.0'	43.0'	46.0'
	3/4"	26.0'	28.0'	30.0'	33.0'	37.0'	40.0'	44.0'	48.0'

INSTALLATION NOTES:

A. ALL VICTAULIC VICFLEX FLEXIBLE SPRINKLER HOSE FITTINGS AND ANCHORING COMPONENTS SHALL BE INSTALLED IN ACCORDANCE WITH MANUFACTURER GUIDELINES.
B. PER NFPA 13 (2022) §17.4.1.3.3, THE MAXIMUM UNSUPPORTED LENGTH FOR FLEXIBLE HOSE SPRINKLER FITTINGS SHALL NOT EXCEED 6-FEET.
C. PER NFPA 13 (2022) §17.4.1.3.3.4, WHERE FLEXIBLE SPRINKLER HOSE FITTINGS ARE USED TO CONNECT SPRINKLERS TO BRANCH LINES IN SUSPENDED CEILINGS, A LABEL LIMITING RELOCATION OF THE SPRINKLER SHALL BE PROVIDED ON THE ANCHORING COMPONENT.

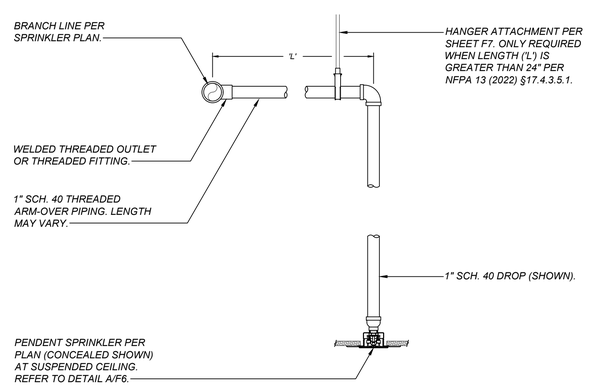

1" ARM-OVER PIPING DETAIL

E / F6

SCALE: NONE FSSXXX

THIS DETAIL IS TO BE USED FOR AVOIDING OBSTRUCTIONS PRESENTED BY SURFACE MOUNTED LIGHTING IN GYPBOARD CEILINGS. SPRINKLER SPACING TO BE IN ACCORDANCE WITH NFPA 13 (2022) FOR PARTICULAR HAZARD, AND TYPE OF SPRINKLER WHERE OBSTRUCTION OCCURS. DETAIL AS SHOWN IS FOR STANDARD SPRAY PENDENT SPRINKLER, WITH PRESSURES FROM 15 PSI TO 100 PSI ONLY. IF EXTENDED COVERAGE OR SPECIAL LISTED SPRINKLERS ARE USED, REFER TO APPROPRIATE NFPA 13 (2022) TABLE FOR THE SPECIFIC REQUIREMENTS FOR EACH SPECIFIC TYPE OF SPRINKLER.

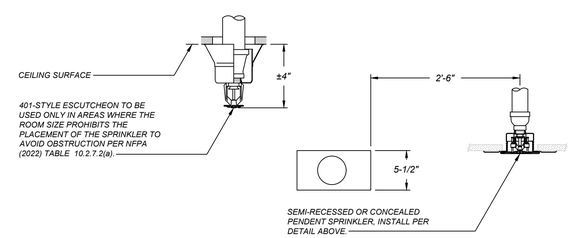

NFPA 13 (2022) TABLE 10.2.7.2(a) POSITIONING OF SPRINKLERS TO AVOID OBSTRUCTIONS TO DISCHARGE	
DISTANCE FROM SPRINKLERS TO SIDE OF OBSTRUCTION	MAX. ALLOWABLE DISTANCE OF DEFLECTOR ABOVE BOTTOM OF OBSTRUCTION
2" TO LESS THAN 2'-6"	5-1/2"
COORDINATE ALL CONCEALED PENDENT SPRINKLERS W/ CURRENT LIGHT LAYOUT AND TYPES. AN AREAS W/ SURFACE MOUNTED LIGHT FIXTURES, UTILIZE OBSTRUCTION SPACING PER NFPA 13 (2022). IF SIZE OF ROOM PROHIBITS SPACING REQUIREMENTS TO BE MET, UTILIZE ST-1E 401 ESCUTCHEON W/ PENDENT SPRINKLER OF SAME TEMPERATURE, K-FACTOR, AND DESIGN CRITERIA.	

SPRINKLER HEAD OBSTRUCTION DETAIL

B / F6

SCALE: NONE FSSXXX

APPROVALS

FILE # 54-76 APPLICATION # 02-121996

IDENTIFICATION STAMP
DIV. OF THE STATE ARCHITECT
APP: 02-121996 INC:
REVIEWED FOR
SS ☑ FLS ☑ ACS ☑
DATE: 8/14/2024

LICENSED ARCHITECT MICHAEL J. SCOTT No. C-34290 REN. 05-31-25 STATE OF CALIFORNIA

DATE: DECEMBER 31, 2023

NEW PRESCHOOL AND TK/KINDERGARTEN CLASSROOMS AT SANTA FE ELEMENTARY SCHOOL

PORTERVILLE UNIFIED SCHOOL DISTRICT
286 E. ORANGE AVENUE, PORTERVILLE, CA 93257

REVISIONS

MANGINI ARCHITECTURE INCORPORATED
BARENG MORRELLI SCOTT
MANGINI ASSOCIATES INC. 4320 West Mineral King Avenue Visalia, California 93291
www.mangini.us (559) 627.0530 Office (559) 627.1926 Fax

LAWRENCE ENGINEERING GROUP
4910 E. Clinton Way, Suite 101 Fresno, CA 93727
(559) 431-0101 23114 FAX (559) 431-1362

REGISTERED PROFESSIONAL ENGINEER BRIAN W. CARLSON No. M34846 Exp. 6-30-26 MECHANICAL STATE OF CALIFORNIA

TITLE
INSTALLATION DETAILS

F6

PROJECT 23076

24 June 2024 10:07 AM P:\2023\23114 Porterville USD - Santa Fe ES - Kinder\4-Drawings\6 F\F6 - Installation Details.dwg bolt

APPROVALS

FILE # 54-76 | APPLICATION # 02-121996

IDENTIFICATION STAMP
DIV. OF THE STATE ARCHITECT
APP: 02-121996 INC:
REVIEWED FOR
SS ☑ FLS ☑ ACS ☑
DATE: 8/14/2024

LICENSED ARCHITECT MICHAEL J. SCOTT No. C-34290 REN. 05-31-25 STATE OF CALIFORNIA

DATE: DECEMBER 31, 2023

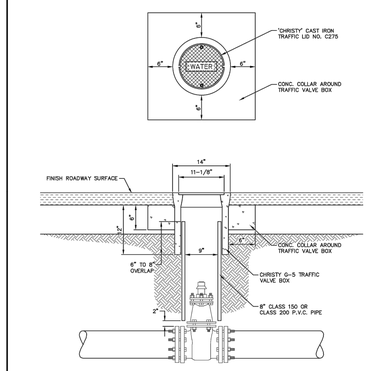

NOTE:

VALVE BOX SHALL BE SET TO SURFACE OF UNCOMPACTED ASPHALT CONCRETE AND SHALL BE ADJUSTED TO FINAL GRADE BY ROLLING OVER THE VALVE BOX AS THE PAVEMENT IS COMPACTED.

APPROVED BY: PUBLIC WORKS DIRECTOR / A.C.E. 45304 — Date — DATE

VALVE BOX DETAILS — W-7

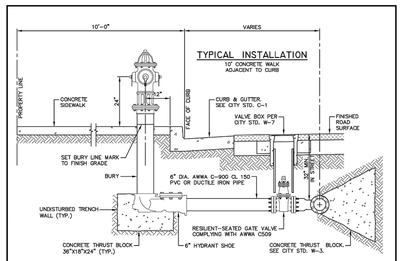

FIRE HYDRANT ASSEMBLY:

MUELLER A423 CENTURIAN, WATEROUS PACER NO. WB-67, AMERICAN DARLING, KENNEDY GUARDIAN, CLOW MEDALLION, OR CITY ENGINEER APPROVED EQUAL; COMPLETE WITH:

A. ONE 4-INCH N.S.T. PUMPER NOZZLE;
B. TWO 2-1/2-INCH N.S.T. HOSE NOZZLE;
C. HYDRANT VALVE OPENING SHALL BE 5-1/4-INCH, MINIMUM;
D. BURY SHALL BE 42-INCHES WITH RING TIGHT INLET;
E. STANDARD PENTAGON OPERATING NUT AND CAP NUT;
F. HYDRANT BODY PAINTED SAFETY YELLOW; AND
G. BLUE TWO-WAY REFLECTIVE TRAFFIC MARKER OPPOSITE FIRE HYDRANT LOCATION, 6-INCHES FROM ROAD CENTERLINE.

HYDRANT "T" TO DUCTILE IRON PIPE OR PVC C-900 FOR NEW DEVELOPMENT:

CITY WATER SYSTEM:
RING TITE BY RING TITE BY FLANGE

CALIFORNIA WATER SERVICE COMPANY:
GRIP TITE BY GRIP TITE BY FLANGE.

CONTACT RESPECTIVE WATER SYSTEM REGARDING CONNECTION TO PIPE BY OTHER MATERIAL.

GATE VALVES:

CLOW "RESILIENT WEDGE"
MUELLER "RESILIENT SEAT"
AMERICAN DARLING
KENNEDY RESILIENT
WATEROUS SERIES 500

APPROVED BY: PUBLIC WORKS DIRECTOR / A.C.E. 45304 — Date — DATE

STANDARD FIRE HYDRANT ASSEMBLY — W-8.2

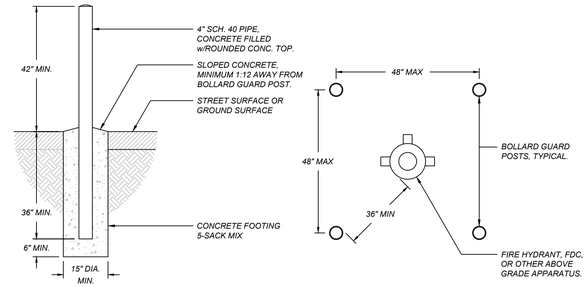

BOLLARD GUARD POST ELEVATION VIEW

BOLLARD GUARD POST PLAN VIEW

INSTALLATION NOTES:

A. BOLLARD GUARD POSTS SHALL BE INSTALLED IN ACCORDANCE TO CFC 2022 §312.2. GUARD POSTS SHALL BE CONSTRUCTED OF STEEL NOT LESS THAN 4-INCHES IN DIAMETER AND CONCRETE FILLED.
B. STEEL POSTS SHALL BE PAINTED WITH A CORROSIVE PROTECTIVE ENAMEL PAINT FINISH. COLOR SHALL BE SPECIFIED BY THE ARCHITECT.

PROTECTIVE BOLLARD DETAIL

D / F7

SCALE: NONE — FSS101

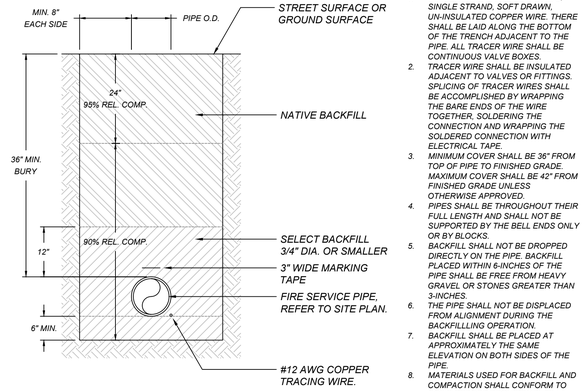

INSTALLATION NOTES:

1. TRACER WIRE SHALL BE #12 AWG, SINGLE STRAND, SOFT DRAWN, UN-INSULATED COPPER WIRE. THERE SHALL BE LAID ALONG THE BOTTOM OF THE TRENCH ADJACENT TO THE PIPE. ALL TRACER WIRE SHALL BE CONTINUOUS VALVE BOXES.
2. TRACER WIRE SHALL BE INSULATED ADJACENT TO VALVES OR FITTINGS. SPLICING OF TRACER WIRES SHALL BE ACCOMPLISHED BY WRAPPING THE BARE ENDS OF THE WIRE TOGETHER, SOLDERING THE CONNECTION AND WRAPPING THE SOLDERED CONNECTION WITH ELECTRICAL TAPE.
3. MINIMUM COVER SHALL BE 36" FROM TOP OF PIPE TO FINISHED GRADE. MAXIMUM COVER SHALL BE 42" FROM FINISHED GRADE UNLESS OTHERWISE APPROVED.
4. PIPES SHALL BE THROUGHOUT THEIR FULL LENGTH AND SHALL NOT BE SUPPORTED BY THE BELL ENDS ONLY OR BY BLOCKS.
5. BACKFILL SHALL NOT BE DROPPED DIRECTLY ON THE PIPE. BACKFILL PLACED WITHIN 6-INCHES OF THE PIPE SHALL BE FREE FROM HEAVY GRAVEL OR STONES GREATER THAN 3-INCHES.
6. THE PIPE SHALL NOT BE DISPLACED FROM ALIGNMENT DURING THE BACKFILLING OPERATION.
7. BACKFILL SHALL BE PLACED AT APPROXIMATELY THE SAME ELEVATION ON BOTH SIDES OF THE PIPE.
8. MATERIALS USED FOR BACKFILL AND COMPACTION SHALL CONFORM TO SOILS REPORT REQUIREMENTS.

PIPE TRENCH DETAIL

A / F7

SCALE: NONE — FSS101

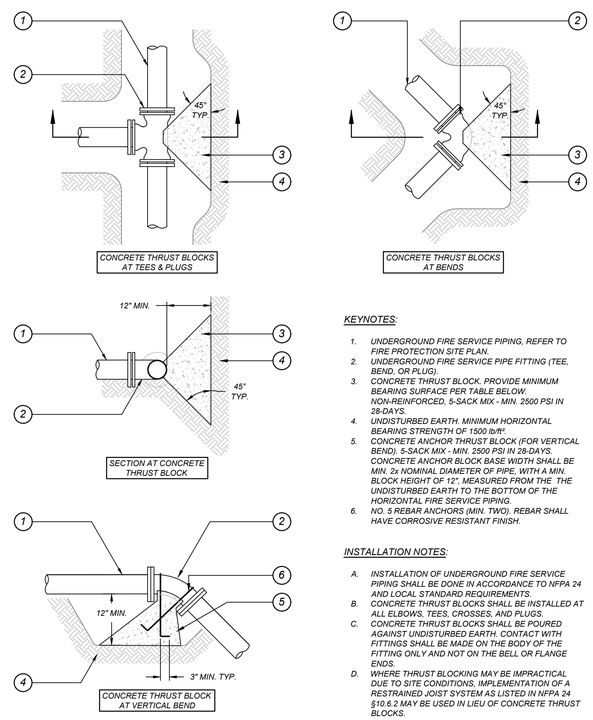

KEYNOTES:

1. UNDERGROUND FIRE SERVICE PIPING, REFER TO FIRE PROTECTION SITE PLAN.
2. UNDERGROUND FIRE SERVICE PIPE FITTING (TEE, BEND, OR PLUG).
3. CONCRETE THRUST BLOCK. PROVIDE MINIMUM BEARING SURFACE PER TABLE BELOW. NON-REINFORCED, 5-SACK MIX - MIN. 2500 PSI IN 28-DAYS.
4. UNDISTURBED EARTH. MINIMUM HORIZONTAL BEARING STRENGTH OF 1500 lb/ft².
5. CONCRETE ANCHOR THRUST BLOCK (FOR VERTICAL BEND). 5-SACK MIX - MIN. 2500 PSI IN 28-DAYS. CONCRETE ANCHOR BLOCK BASE WIDTH SHALL BE MIN. 2x NOMINAL DIAMETER OF PIPE, WITH A MIN. BLOCK HEIGHT OF 12", MEASURED FROM THE THE UNDISTURBED EARTH TO THE BOTTOM OF THE HORIZONTAL FIRE SERVICE PIPING.
6. NO. 5 REBAR ANCHORS (MIN. TWO). REBAR SHALL HAVE CORROSIVE RESISTANT FINISH.

INSTALLATION NOTES:

A. INSTALLATION OF UNDERGROUND FIRE SERVICE PIPING SHALL BE DONE IN ACCORDANCE TO NFPA 24 AND LOCAL STANDARD REQUIREMENTS.
B. CONCRETE THRUST BLOCKS SHALL BE INSTALLED AT ALL ELBOWS, TEES, CROSSES, AND PLUGS.
C. CONCRETE THRUST BLOCKS SHALL BE POURED AGAINST UNDISTURBED EARTH. CONTACT WITH FITTINGS SHALL BE MADE ON THE BODY OF THE FITTING ONLY AND NOT ON THE BELL OR FLANGE ENDS.
D. WHERE THRUST BLOCKING MAY BE IMPRACTICAL DUE TO SITE CONDITIONS, IMPLEMENTATION OF A RESTRAINED JOIST SYSTEM AS LISTED IN NFPA 24 §10.6.2 MAY BE USED IN LIEU OF CONCRETE THRUST BLOCKS.
E. BACKFILL TRENCH PER DETAIL A/F7.

REQUIRED HORIZONTAL BEARING BLOCK AREA

PIPE DIA.	TEE/PLUGS	90°-BEND	45°-BEND	22½°-BEND	11¼°-BEND
3-INCH	2.6 ft²	2.6 ft²	1.4 ft²	0.7 ft²	0.4 ft²
4-INCH	3.8 ft²	3.8 ft²	2.1 ft²	1.0 ft²	0.5 ft²
6-INCH	7.9 ft²	7.9 ft²	4.3 ft²	2.2 ft²	1.1 ft²
8-INCH	13.6 ft²	13.6 ft²	7.4 ft²	3.8 ft²	1.9 ft²
10-INCH	20.5 ft²	20.5 ft²	11.1 ft²	5.7 ft²	2.8 ft²
12-INCH	29.0 ft²	29 ft²	15.7 ft²	8.0 ft²	4.0 ft²
14-INCH	39.0 ft²	39 ft²	21.1 ft²	10.8 ft²	5.4 ft²

INFORMATION ABOVE BASED ON NFPA 24 TABLE A.10.6.1(b) - MIN. HORIZONTAL BEARING LOAD: 1500lb/ft²

CONCRETE THRUST BLOCK DETAILS AND TABLE

E / F7

SCALE: NONE — FSS101

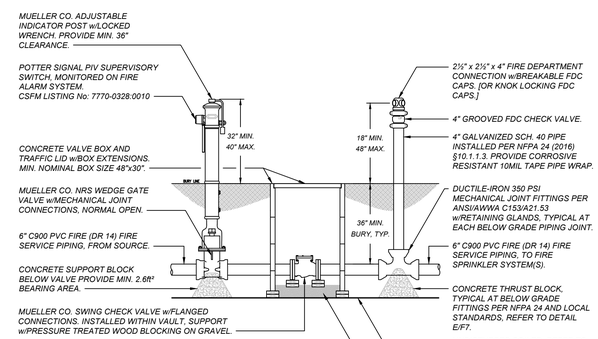

INSTALLATION NOTES:

1. PER CFC 2022 §912.4.3, WHERE FIRE DEPARTMENT CONNECTIONS ARE SUBJECT TO IMPACT BY A MOTOR VEHICLE, VEHICLE IMPACT PROTECTION SHALL BE PROVIDED IN ACCORDANCE WITH SECTION 312. REFER TO DETAIL D/F7.
2. PER NFPA 13 (2022) TABLE A.16.17 & CFC §912.5 SIGNAGE OF APPARATUS SHALL HAVE IDENTIFICATION SIGNAGE, REFER TO DETAIL C/F7.

POST INDICATOR - CHECK VALVE - FDC ASSEMBLY

B / F7

SCALE: NONE — FSS101

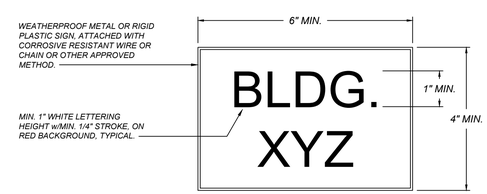

INSTALLATION NOTES:

A. PER NFPA 13 (2022) TABLE A.16.17 SPRINKLER SYSTEM SIGNAGE SUMMARY, SYSTEM CONTROL VALVES AND FIRE DEPARTMENT CONNECTIONS SHALL HAVE IDENTIFICATION SIGNAGE. IDENTIFICATION SIGNS SHALL BE INSTALLED AT A MINIMUM 18" ABOVE FINISH GRADE MEASURED FROM THE BOTTOM EDGE OF THE SIGN.
B. PER NFPA 13 (2022) §16.9.3.5 IDENTIFICATION SIGNS ON CONTROL VALVES SHALL BE PROVIDED AT EACH VALVE TO INDICATE ITS FUNCTION AND WHAT IT CONTROLS.
C. PER NFPA 13 (2022) §16.12.5.8 (CFC 2022 §912.5) EACH FIRE DEPARTMENT CONNECTION TO SPRINKLER SYSTEMS SHALL BE DESIGNATED BY A SIGN HAVING RAISED OR ENGRAVED LETTERS AT LEAST 1-INCH IN HEIGHT ON PLATE OR FITTING READING SERVICE DESIGN.
D. WHEN SYSTEM DEMANDS ARE GREATER THAN 150PSI, THE SIGN SHALL INDICATE THE PRESSURE REQUIRED AT THE INLETS TO DELIVER THE GREATEST SYSTEM DEMAND.
E. WHERE LOCAL JURISDICTION REQUIRES ADDRESS OR BUILDING IDENTIFICATION ON POST INDICATOR VALVES AND/OR FIRE DEPARTMENT CONNECTIONS, IDENTIFICATION MARKING CAN BE PAINTED DIRECTLY ON THE APPARATUS IN LIEU OF SIGNAGE. VERIFY REQUIREMENT WITH LOCAL JURISDICTION REGARDING MINIMUM LETTERING HEIGHT AND PAINT COLOR REQUIREMENTS.

SITE APPARATUS SIGNAGE

C / F7

SCALE: NONE — FSS101

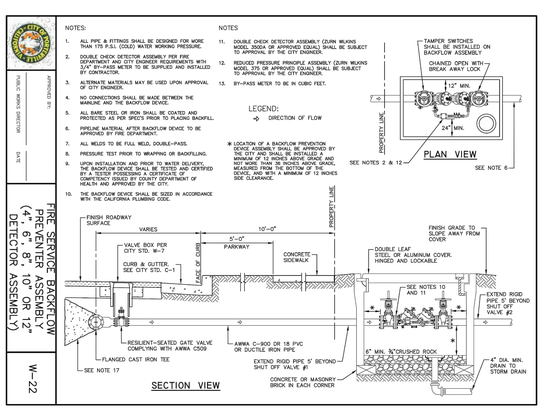

NEW PRESCHOOL AND TK/KINDERGARTEN CLASSROOMS AT SANTA FE ELEMENTARY SCHOOL

PORTERVILLE UNIFIED SCHOOL DISTRICT
286 E ORANGE AVENUE, PORTERVILLE, CA 93257

REVISIONS

MANGINI ARCHITECTURE INGENUITY
BARENG MORRELLI SCOTT
MANGINI ASSOCIATES INC.
4320 West Mineral King Avenue
Visalia, California 93291
www.mangini.us
(559) 627-0530 Office
(559) 627-1926 Fax

REGISTERED PROFESSIONAL ENGINEER RYAN W. CARLSON No. M34846 Exp. 6-30-26 MECHANICAL STATE OF CALIFORNIA

LAWRENCE ENGINEERING GROUP
4910 E. Clinton Way, Suite 101
(559) 431-0101
23114
Fresno, CA 93727
FAX (559) 431-1362

TITLE: SITE DETAILS

F7

PROJECT: 23076

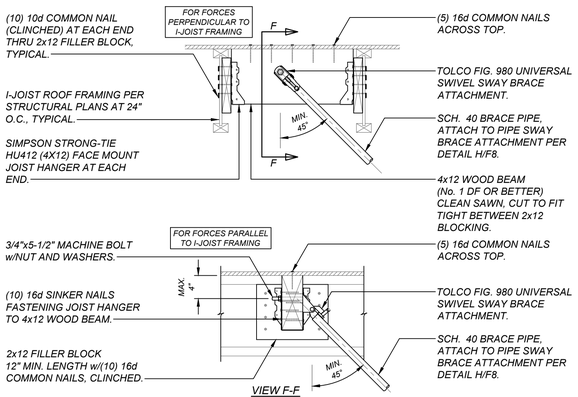

4x12 WOOD BEAM ASSEMBLY FOR SEISMIC BRACING ATTACHMENT AT I-JOIST (PERPENDICULAR AND PARALLEL FORCES)

F / F8

SCALE: NONE FSS006

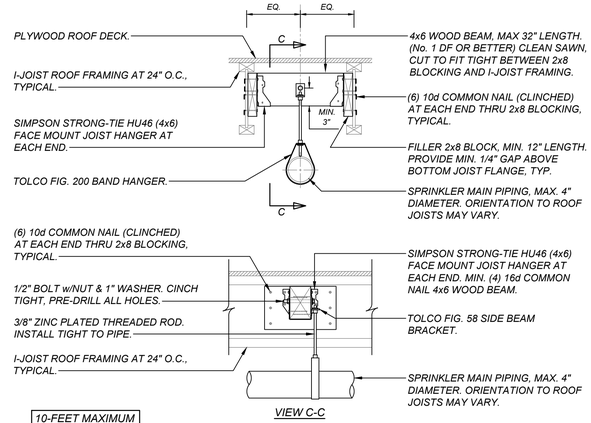

SYMBOL

4x6 WOOD BLOCKING SPANNING I-JOIST FRAMING - 4" MAX. PIPE DIAMETER

C / F8

SCALE: NONE FSS105-11.19

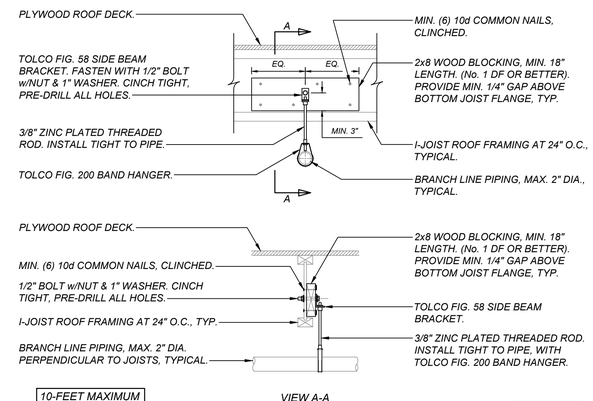

SYMBOL

BRANCH LINE HANGER SUPPORT AT I-JOIST FRAMING (2" MAX. PIPE DIAMETER)

A / F8

SCALE: NONE FSS101-11.19

2x8 BLOCKING ASSEMBLY FOR SEISMIC BRACING ATTACHMENT AT I-JOIST (PARALLEL FORCES ONLY)

G / F8

SCALE: NONE FSS007

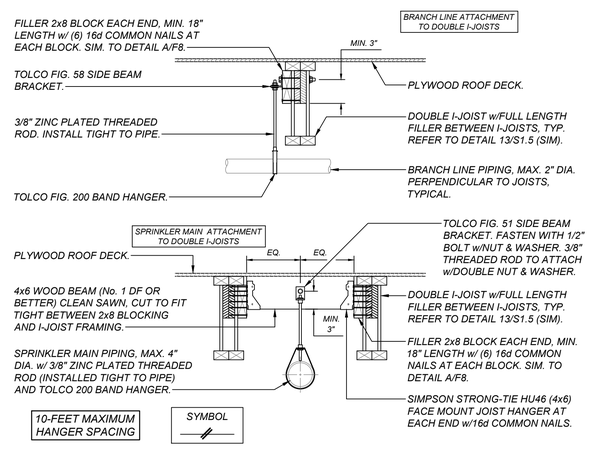

SYMBOL

HANGER ATTACHMENTS TO DOUBLE I-JOIST

D / F8

SCALE: NONE FSS005

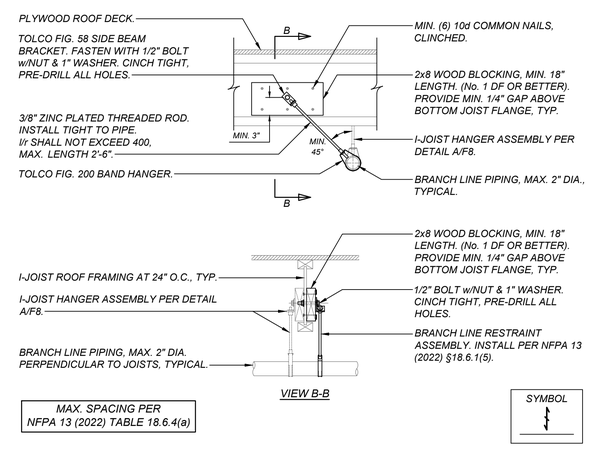

SYMBOL

BRANCH LINE RESTRAINT AT I-JOIST FRAMING

B / F8

SCALE: NONE FSS102-11.19

MAX. SPACING OF BRANCH LINE RESTRAINTS				
PIPE DIA. (INCHES)	SEISMIC COEFFICIENT - C_p			
	$C_p \leq 0.50$	$0.50 < C_p \leq 0.71$	$0.71 < C_p \leq 1.40$	$C_p \geq 1.40$
1	43-FT	36-FT	26-FT	22-FT
1¼	46-FT	39-FT	27-FT	24-FT
1½	49-FT	41-FT	29-FT	25-FT
2	53-FT	45-FT	31-FT	27-FT
NFPA 13 (2022) TABLE 18.6.4(a)				

MAXIMUM PIPE BRACE LENGTH NFPA 13, TABLE 18.5.11.8(b) WITH I/r=200	
BRACE PIPE DIA. (INCHES)	BRACE LENGTH
1	7'-0"
1¼	9'-0"
1½	10'-4"
2	13'-1"

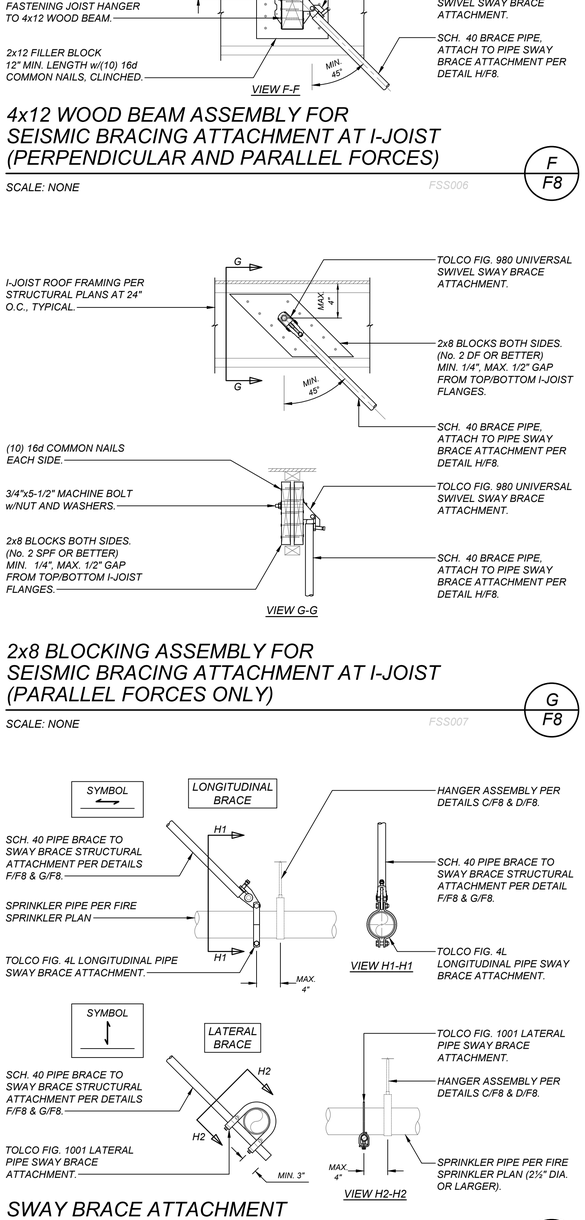

SWAY BRACE ATTACHMENT AT SPRINKLER MAIN PIPING

H / F8

SCALE: NONE FSS008

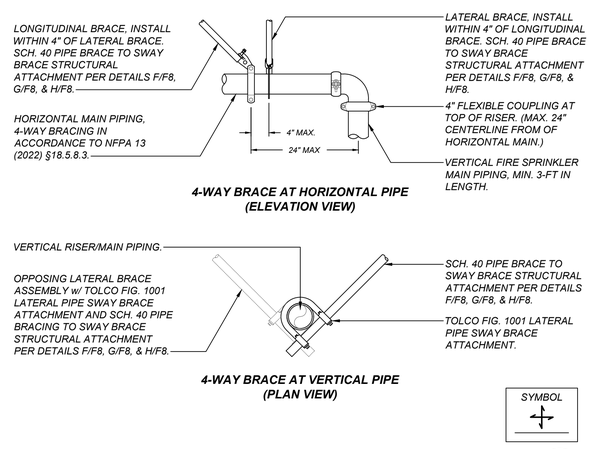

SYMBOL

4-WAY BRACING ASSEMBLIES

E / F8

SCALE: NONE FSS004

APPROVALS

FILE # 54-76 APPLICATION # 02-121996

IDENTIFICATION STAMP
DIV. OF THE STATE ARCHITECT
APP: 02-121996 INC:
REVIEWED FOR
SS ☑ FLS ☑ ACS ☑
DATE: 8/14/2024

LICENSED ARCHITECT MICHAEL J. SCOTT No. C-34290 REN. 05-31-25 STATE OF CALIFORNIA

DATE: DECEMBER 31, 2023

NEW PRESCHOOL AND TK/KINDERGARTEN CLASSROOMS AT SANTA FE ELEMENTARY SCHOOL

PORTERVILLE UNIFIED SCHOOL DISTRICT

286 E ORANGE AVENUE, PORTERVILLE, CA 93257

REVISIONS

MANGINI ARCHITECTURE INGENUITY
BARENG MORRELLI SCOTT
MANGINI ASSOCIATES INC. 4320 West Mineral King Avenue Visalia, California 93291
www.mangini.us (559) 627-0530 Office (559) 627-1926 Fax

SCHEDULED PROFESSIONAL ENGINEER BRIAN W. CARLSON No. M34846 Exp. 6-30-26 MECHANICAL STATE OF CALIFORNIA

LAWRENCE ENGINEERING GROUP
4910 E. Clinton Way, Suite 101 (559) 431-0101
23114
Fresno, CA 93727 FAX (559) 431-1362

TITLE STRUCTURAL DETAILS

F8

PROJECT 23076

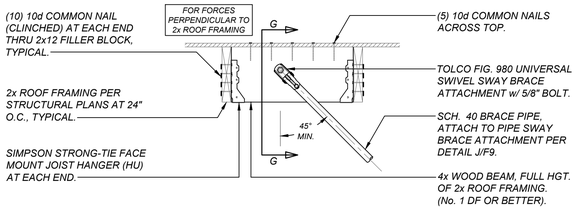

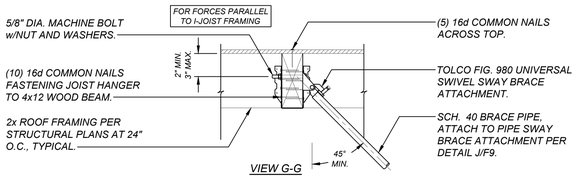

4x WOOD BEAM ASSEMBLY FOR SEISMIC BRACING ATTACHMENT AT 2x ROOF FRAMING (PERPENDICULAR AND PARALLEL FORCES)

G / F9

SCALE: NONE FSS006

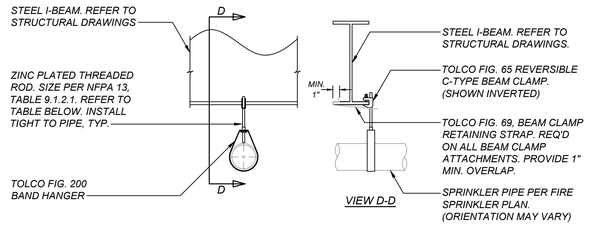

HANGER ROD SIZES	
PIPE SIZE	DIA. OF ROD
≤ 4"	3/8"
5" - 8"	1/2"
NFPA 13 (2016) TABLE 9.1.2.1	

12-FEET MAXIMUM HANGER SPACING

SYMBOL

SPRINKLER PIPE HANGER SUPPORT AT STEEL I-BEAM

D / F9

SCALE: NONE FSS101

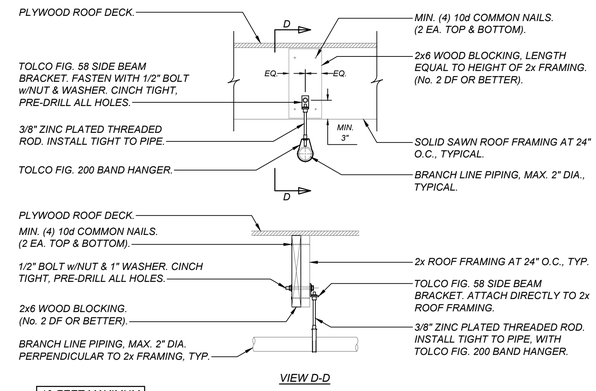

10-FEET MAXIMUM HANGER SPACING

SYMBOL

BRANCH LINE HANGER SUPPORT AT 2x ROOF FRAMING (2" MAX. PIPE DIAMETER)

A / F9

SCALE: NONE FSS201-11.19

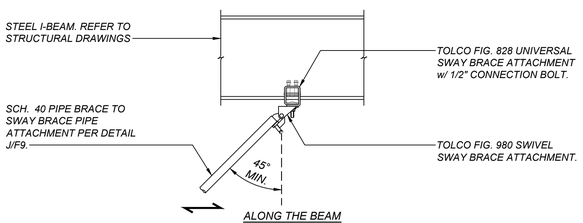

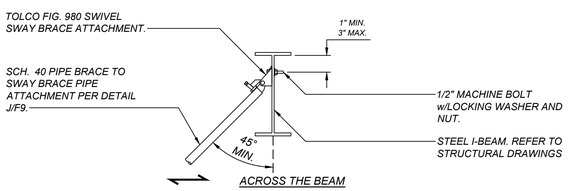

SWAY BRACE STRUCTURAL ATTACHMENT TO STEEL I-BEAM

H / F9

SCALE: NONE FSS007

NOT USED

E / F9

SCALE: NONE FSS302-03.20

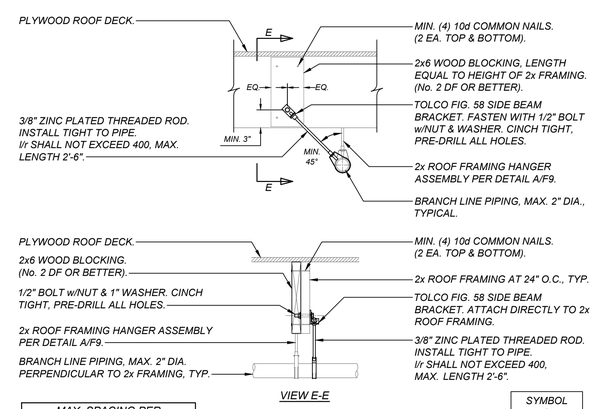

MAX. SPACING PER NFPA 13 (2022) TABLE 18.6.4(a)

SYMBOL

BRANCH LINE RESTRAINT AT 2x ROOF FRAMING

B / F9

SCALE: NONE FSS102-11.19

MAX. SPACING OF BRANCH LINE RESTRAINTS				
PIPE DIA. (INCHES)	SEISMIC COEFFICIENT - C_p			
	C_p≤0.50	0.50< C_p≤0.71	0.71< C_p≤1.40	C_p≥1.40
1	43-FT	36-FT	26-FT	22-FT
1¼	46-FT	39-FT	27-FT	24-FT
1½	49-FT	41-FT	29-FT	25-FT
2	53-FT	45-FT	31-FT	27-FT
NFPA 13 (2022) TABLE 18.6.4(a)				

MAXIMUM PIPE BRACE LENGTH NFPA 13, TABLE 18.5.11.8(b) WITH I/r=200	
BRACE PIPE DIA. (INCHES)	BRACE LENGTH
1	7'-0"
1¼	9'-0"
1½	10'-4"
2	13'-1"

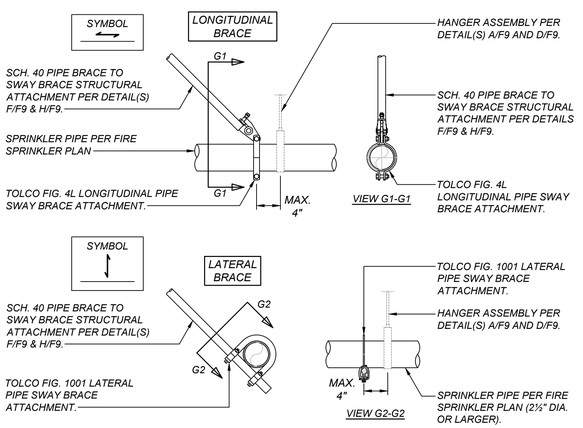

SWAY BRACE ATTACHMENT AT SPRINKLER MAIN PIPING

J / F9

SCALE: NONE FSS008

NOTES:

1. ROD STIFFENERS ARE REQUIRED ONLY ON VERTICAL STRUT COMPONENT OF THE SEISMIC BRACE SYSTEM ON HANGER AND TRAPEZE ASSEMBLIES THAT HAVE SEISMIC BRACING BRACING ATTACHED AT OR WITHIN 4" OF THE ROD. A MINIMUM OF TWO ROD STIFFENERS (TOLCO FIG. 98B) MUST BE INSTALLED.
2. DETAIL APPLIES TO ALL HUNG UTILITIES INCLUDING SINGLE HUNG UTILITIES, TRAPEZE HUNG UTILITIES, AND HUNG EQUIPMENT.
3. AN EXCEPTION IS THE USE OF TWO OPPOSING RIGID BRACES AT THE SAME LOCATION. FOR INDIVIDUALLY HUNG PIPE THE TWO OPPOSING RIGID BRACES MUST BE AT THE SAME HANGER ROD; TOTAL OF TWO (2) FOR TRANSVERSE, OR TWO (2) FOR LONGITUDINAL. FOR A TRAPEZE HANGER THE TWO OPPOSING RIGID BRACES MUST BE AT THE SAME HANGER ROD; TOTAL OF TWO (2) FOR TRANSVERSE, OR FOUR (4) FOR LONGITUDINAL. THE TWO OPPOSING BRACES MUST BE AT THE SAME ANGLE FROM HORIZONTAL AND WITHIN 5-DEGREES OF 180 DEGREES FROM EACH OTHER. IN THIS CASE NO STIFFENING OF VERTICAL ROD IS NECESSARY.
4. MATERIAL SPECIFICATIONS FOR TOLCO FIG. 98B, BODY: ASTM A-1011 CS TYPE B SAE: BREAK-OFF BOLT: 1035 (AISI-SAE) CASE HARDENED TO 0.015 MIN. DEPTH THRU HARDENED @ 45-55 RC FROM ANNEALED CONDITION.

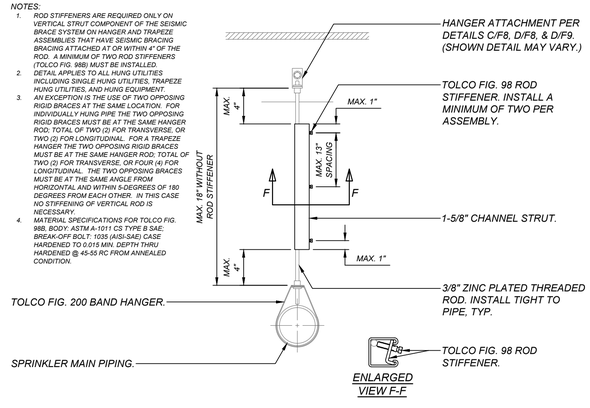

TOLCO FIG. 98 ROD STIFFENER ASSEMBLY

F / F9

SCALE: NONE FSS305-03.20

APPROVALS

FILE # 54-76 APPLICATION # 02-121996

IDENTIFICATION STAMP
DIV. OF THE STATE ARCHITECT
APP: 02-121996 INC:
REVIEWED FOR
SS ☑ FLS ☑ ACS ☑
DATE: 8/14/2024

LICENSED ARCHITECT MICHAEL J. SCOTT No. C-34290 REN. 05-31-25 STATE OF CALIFORNIA

DATE: DECEMBER 31, 2023

TK/KINDERGARTEN CLASSROOMS AT SANTA FE ELEMENTARY SCHOOL

PORTERVILLE UNIFIED SCHOOL DISTRICT

286 E ORANGE AVENUE, PORTERVILLE, CA 93257

REVISIONS

MANGINI ARCHITECTURE TIMEWORKS

BARENG MORRELLI SCOTT

MANGINI ASSOCIATES INC.
4320 West Mineral King Avenue
Visalia, California 93291

www.mangini.us
(559) 627-0530 Office
(559) 627-1926 Fax

REGISTERED PROFESSIONAL ENGINEER BRIAN W. CARLSON No. M34846 Exp. 6-30-26 MECHANICAL STATE OF CALIFORNIA

LAWRENCE ENGINEERING GROUP

4910 E. Clinton Way, Suite 101
(559) 431-0101

23114

Fresno, CA 93727
FAX (559) 431-1342

TITLE STRUCTURAL DETAILS

F9

PROJECT 23076

APPROVALS

FILE # 54-76 | APPLICATION # 02-121996

IDENTIFICATION STAMP
DIV. OF THE STATE ARCHITECT
APP: 02-121996 INC:
REVIEWED FOR
SS ☑ FLS ☑ ACS ☑
DATE: 8/14/2024

LICENSED ARCHITECT
MICHAEL J. SCOTT
No. C-34290
REN. 05-31-25
STATE OF CALIFORNIA

DATE: DECEMBER 31, 2023

SPRINKLER LEGEND DATA IS FOR PLAN REVIEW ONLY. THE INSTALLING CONTRACTOR SHALL VERIFY THE ACCURACY OF THE SPRINKLER LAYOUT AND SPRINKLER HEAD QUANTITIES TO MEET NFPA 13 STANDARDS. NO PRICING ADJUSTMENTS WILL BE PERMITTED FOR SPRINKLER HEADS ADDED BY THE CONTRACTOR.

Hydraulic Information

Remote Area 4	
PANCY CLASSIFICATION	Light Hazard
ITY (gpm/ft²)	0.100 for 1500.00ft² (Actual 1102.56ft²)
K RESPONSE REDUCTION	15'-0 Ceiling (32.5%) 1012.50ft²
L HOSE STREAMS	100.00
L HEADS FLOWING	16
CTOR	5.6
L WATER REQUIRED	344.87

TOTAL PRESSURE REQUIRED	33.023
BASE of RISER (gpm)	238.10
BASE of RISER (psi)	33.023
SAFETY MARGIN (psi)	+11.740 (26.2%)

TOTAL PRESSURE REQUIRED	32.055
BASE of RISER (gpm)	344.87
BASE of RISER (psi)	32.055
SAFETY MARGIN (psi)	+12.475 (28.0%)

Sprinkler Legend

Symbol	Manufacturer	SIN	Model	Quantity	K-Factor	Type	Size	Response	Finish	Temperature	Note
	Victaulic	V4201	FL-QR	3	4.2	Pendent	½	Quick	Chrome	200°F	
	Victaulic	V2708	FL-QR	45	5.6	Pendent	½	Quick	Chrome	155°F	
	Victaulic	V2704	FL-QR	85	5.6	Upright	½	Quick	Brass	200°F	
	Victaulic	V2704	FL-QR	8	5.6	Upright	½	Quick	Brass	200°F	ON 1" SPRIG-UP
				Total = 141							

REMOTE AREA 3
LIGHT HAZARD - 0.10 GPM/FT²

REMOTE AREA 4
LIGHT HAZARD - 0.10 GPM/FT²

AUTOMATIC AIR VENT ON HIGHEST ELEVATED BRANCH LINE PIPE PER NFPA 13 (2022) §8.1.5 & §16.7. AIR VENT TO DISCHARGE TO AUX. DRAIN. REFER TO DETAIL E/F5.

1" AUXILIARY DRAIN w/ 1" VALVE WITHIN EXTERIOR WALL, PROVIDE ACCESS PANEL, REFER TO DETAIL D/F5.

UPRIGHT SPRINKLER ON SCH. 10 BRANCH LINE, TYP. INSTALL PER DETAIL F/F6.

10" ALARM BELL, 120 V AC. COORDINATE LOCATION IN FIELD.

4" C900 PVC FIRE SERVICE PIPING, REFER TO SHEET F1 FOR CONTINUATION AND CIVIL ENGINEERING PLANS.

3" SYSTEM RISER ON 4" IN-BUILDING RISER, REFER TO DETAIL A/F11.

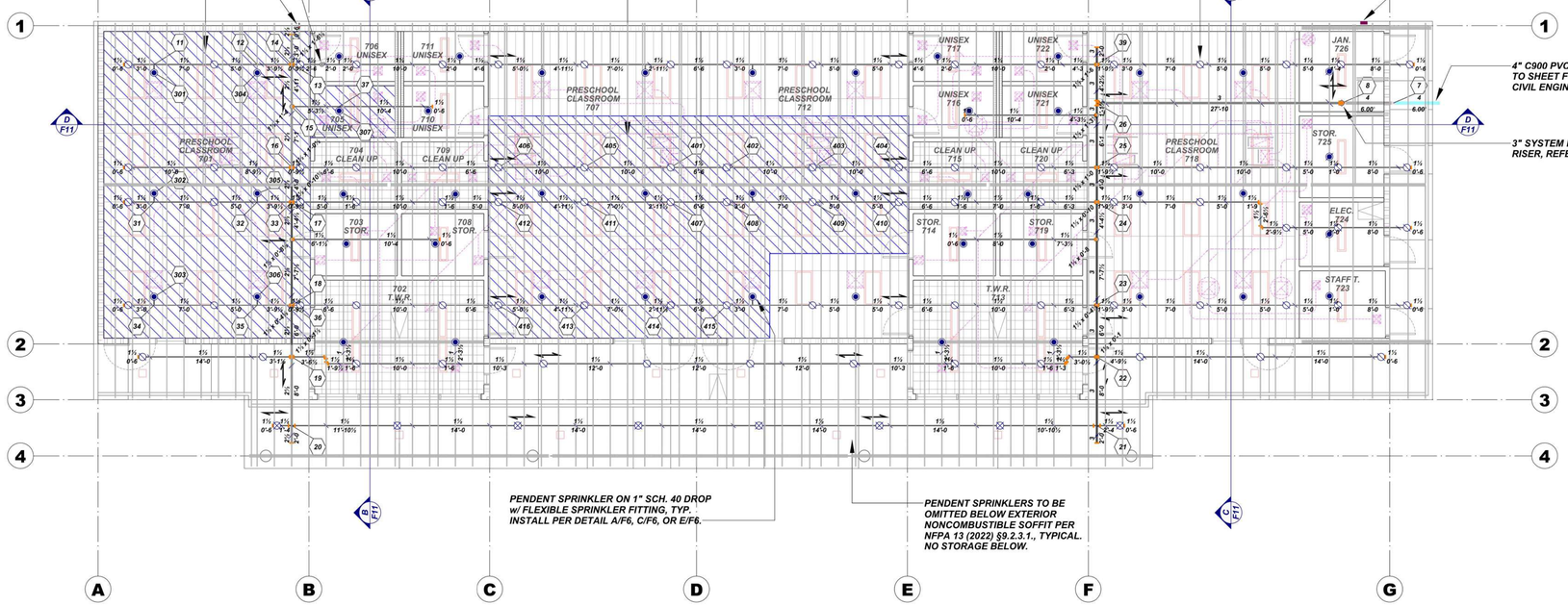

PENDENT SPRINKLER ON 1" SCH. 40 DROP w/ FLEXIBLE SPRINKLER FITTING, TYP. INSTALL PER DETAIL A/F6, C/F6, OR E/F6.

PENDENT SPRINKLERS TO BE OMITTED BELOW EXTERIOR NONCOMBUSTIBLE SOFFIT PER NFPA 13 (2022) §9.2.3.1., TYPICAL. NO STORAGE BELOW.

SPRINKLER LEGEND

SYMBOL	DESCRIPTION
	LATERAL SEISMIC BRACE (PERPENDICULAR)
	LONGITUDINAL SEISMIC BRACE (PARALLEL)
	4-WAY SEISMIC BRACE (PARALLEL/PERPENDICULAR)
	LINE RESTRAINT
	PIPE HANGERS
	PENDENT SPRINKLER ON 1" DROP
	UPRIGHT SPRINKLER ON BRANCH LINE
	SEISMIC SEPARATION ASSEMBLY
	HYDRAULIC NODE
	FIRE PIPING
	EXISTING FIRE PIPING

REGISTERED PROFESSIONAL ENGINEER
RYAN W. CARLSON
No. M34846
Exp. 6-30-26
MECHANICAL
STATE OF CALIFORNIA

LAWRENCE ENGINEERING GROUP
4910 E. Clinton Way, Suite 101
(559) 431-0101
23114
Fresno, CA 93727
FAX (559) 431-1362

NEW PRESCHOOL AND TK/KINDERGARTEN CLASSROOMS AT SANTA FE ELEMENTARY SCHOOL

PORTERVILLE UNIFIED SCHOOL DISTRICT
286 E ORANGE AVENUE, PORTERVILLE, CA 93257

REVISIONS

MANGINI ARCHITECTURE INGENUITY
BARENG MORRELLI SCOTT
MANGINI ASSOCIATES INC.
4320 West Mineral King Avenue
Visalia, California 93291
www.mangini.us
(559) 627-0530 Office
(559) 627-1926 fax

TITLE
BUILDING 700
FIRE PROTECTION
PLANS

F10

PROJECT 23076

SCALE: 1/8" = 1'-0"

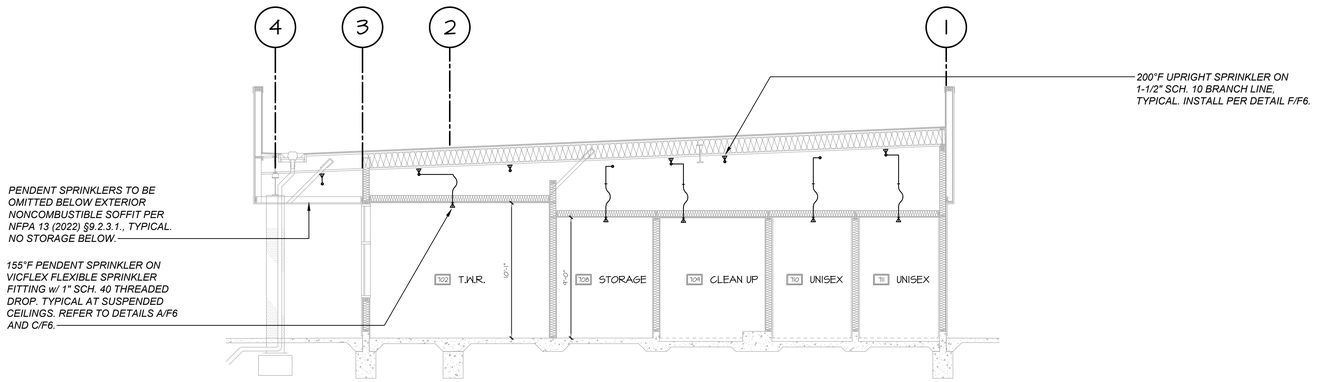

BUILDING SECTION

SCALE: 3/16" = 1'

FSS101

B / F11

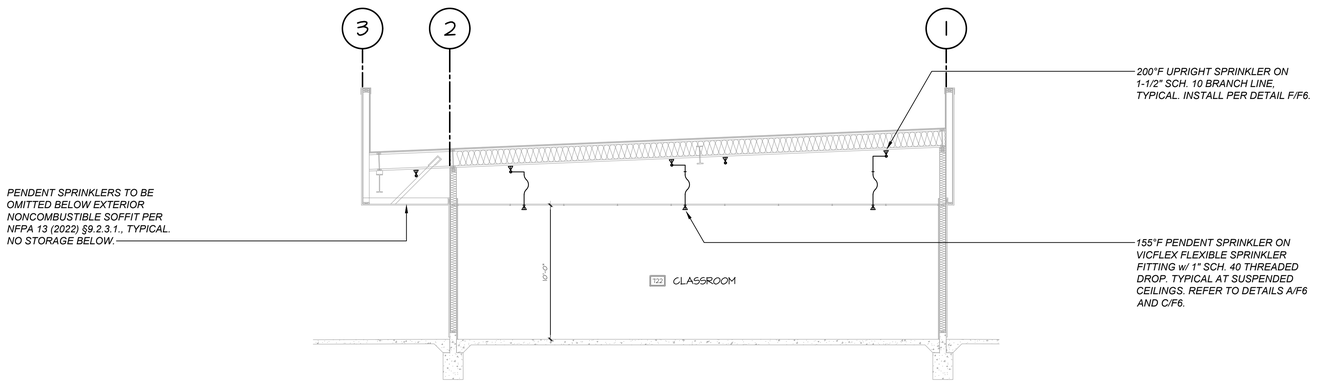

BUILDING SECTION

SCALE: 3/16" = 1'

FSS101

C / F11

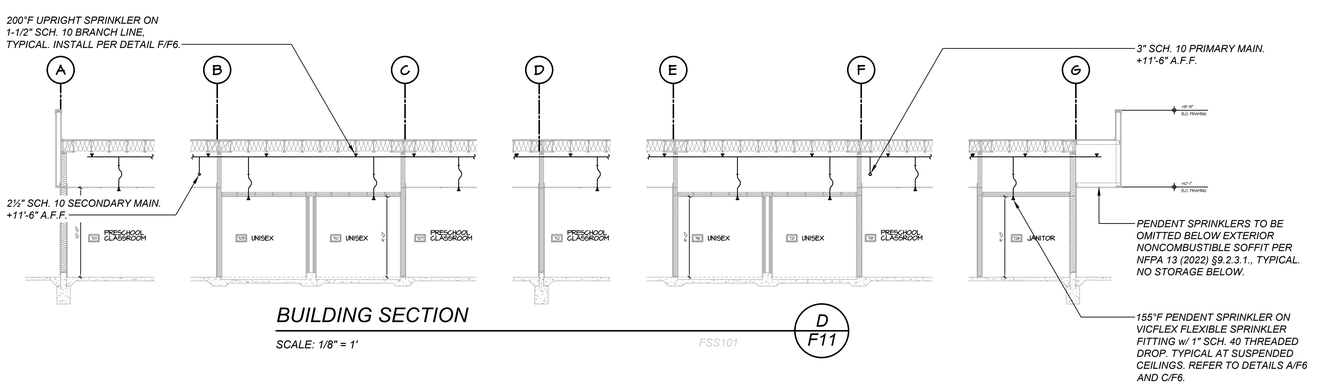

BUILDING SECTION

SCALE: 1/8" = 1'

FSS101

D / F11

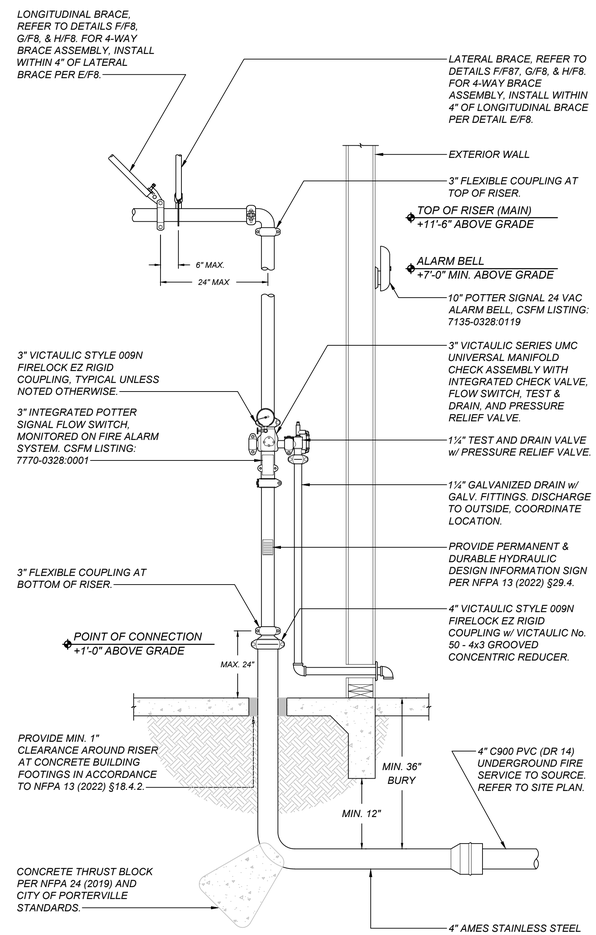

TITLE 19 ARTICLE 906 (A). A LABEL OF THE SELF-ADHESIVE TYPE SHALL BE PLACED ON THE FIRE DEPARTMENT CONNECTION OR ON THE RISER FOR FIRE SPRINKLER SYSTEM WITH THE DATE OF SERVICE AND/OR DATE INSTALLATION WAS PERFORMED AND LICENSE NUMBER OF PERSON PERFORMING SERVICE WORK.

RISER NOTES:

1. EACH RISER DETAIL IS A SCHEMATIC REPRESENTATION OF THE RISER(S). ORIENTATION OF FITTINGS, VALVES, GAUGES, AND OTHER DEVICES HAVE BEEN MODIFIED FOR ILLUSTRATION PURPOSES AND MAY VARY IN ACTUAL INSTALLATION.
2. PER NFPA 13 (2022) §18.2.3.1 - A FLEXIBLE COUPLING SHALL BE INSTALLED WITHIN 24" OF THE TOP AND BOTTOM OF ALL RISERS. RISERS LESS THAN 3 FT IN LENGTH MAY OMIT FLEX COUPLINGS. ONE FLEX COUPLING IS ADEQUATE FOR RISERS 3' TO 7' IN LENGTH.
3. PER NFPA 13 (2022) §18.5.8.3 - WHEN A FOUR-WAY BRACE AT THE TOP OF A RISER IS ATTACHED ON THE HORIZONTAL PIPING, IT SHALL BE WITHIN 24" OF THE CENTERLINE OF THE RISER AND THE LOADS FOR THAT BRACE SHALL INCLUDE BOTH THE VERTICAL AND HORIZONTAL PIPE.
4. PER NFPA 13 (2022) §29.4. - THE INSTALLING CONTRACTOR SHALL IDENTIFY A HYDRAULICALLY DESIGNED SPRINKLER SYSTEM WITH A PERMANENTLY MARKED WEATHERPROOF METAL OR RIGID PLASTIC SIGN SECURED WITH CORROSION RESISTANT WIRE, CHAIN, OR OTHER APPROVED MEANS.
5. PER NFPA 13 (2022) §29.4.1 - THE INSTALLING CONTRACTOR SHALL PROVIDE A GENERAL INFORMATION SIGN USED TO DETERMINE SYSTEM DESIGN BASIS AND INFORMATION RELEVANT TO THE INSPECTION, TESTING, AND MAINTENANCE REQUIREMENTS REQUIRED BY NFPA 25.
6. LOCATION OF 1½" SYSTEM DRAIN TO BE COORDINATED WITH GENERAL CONTRACTOR. DRAIN PIPE AND FITTINGS SHALL BE GALV.
7. FIRE RISER ROOM SHALL COMPLY WITH CBC (2022) 901.3 PER CFC (2022) SECTION 509.1 FIRE EQUIPMENT ROOMS SHALL BE IDENTIFIED IN AN APPROVED MANNER. APPROVED SIGNS SHALL BE DURABLE, PERMANENT, AND VISIBLE.

RISER DETAIL: 3" SYSTEM RISER ON 4" IN-BUILDING RISER (INT)

SCALE: NONE

FSS/XXX

A / F11

APPROVALS

FILE # 54-76 | APPLICATION # 02-121996

IDENTIFICATION STAMP
DIV. OF THE STATE ARCHITECT
APP: 02-121996 INC:
REVIEWED FOR
SS ☑ FLS ☑ ACS ☑
DATE: 8/14/2024

LICENSED ARCHITECT MICHAEL J. SCOTT No. C-34290 REN. 05-31-25 STATE OF CALIFORNIA

DATE: DECEMBER 31, 2023

NEW PRESCHOOL AND TK/KINDERGARTEN CLASSROOMS AT SANTA FE ELEMENTARY SCHOOL

PORTERVILLE UNIFIED SCHOOL DISTRICT

286 E ORANGE AVENUE, PORTERVILLE, CA 93257

REVISIONS

MANGINI ARCHITECTURE INGENUITY
BARENG MORRELLI SCOTT
MANGINI ASSOCIATES INC.
4320 West Mineral King Avenue
Visalia, California 93291
www.mangini.us
(559) 627-0330 Office
(559) 627-3926 Fax

REGISTERED PROFESSIONAL ENGINEER BRIAN W. CARLSON No. M34846 Exp. 6-30-26 MECHANICAL STATE OF CALIFORNIA

LAWRENCE ENGINEERING GROUP
4910 E. Clinton Way, Suite 101
(559) 431-0101
23114
Fresno, CA 93727
FAX (559) 431-1362

TITLE

BUILDING 700 RISER DETAIL AND SECTION DRAWINGS

F11

PROJECT 23076

24 June 2024 10:08 AM P:\2023\23114 Porterville USD - Santa Fe ES - Kinder\4-Drawings\6 F\F11 - Building 800 Section Drawings.dwg bolt

APPROVALS

FILE # 54-76 | APPLICATION # 02-121996

IDENTIFICATION STAMP
DIV. OF THE STATE ARCHITECT
APP: 02-121996 INC:
REVIEWED FOR
SS ☑ FLS ☑ ACS ☑
DATE: 8/14/2024

LICENSED ARCHITECT
MICHAEL J. SCOTT
No. C-34290
REN. 05-31-25
STATE OF CALIFORNIA

DATE: DECEMBER 31, 2023

AIR CONDITIONING LEGEND		
SYMBOL	ITEM	ABBR
	ROUND DUCT	Ø
	FLAT OVAL DUCT	
	SHEET METAL DUCT	—
	ACOUSTIC LINING FOR DUCT OR GRILLES	(L)
	DUCT W/EXT INSULATION & GALV. SM SUNSHIELD	—
	SUPPLY AIR DUCT DROP	—
	RETURN AIR DUCT DROP	—
	EXHAUST DUCT AIR DROP	—
	SUPPLY AIR DUCT RISE	—
	RETURN AIR DUCT RISE	—
	EXHAUST AIR DUCT RISE	—
	TURNING VANES	TV
	EXTRACTOR	—
	VOLUME CONTROL DAMPER W/LOCKING QUADRANT	VCD
	OPPOSED BLADE DAMPER	OBD
	BACKDRAFT DAMPER	BDD
	VOLUME CONTROL DAMPER W/ REMOTE REGULATOR	VCR
&	FIRE/SMOKE DAMPER WITH ACCESS PANEL	F/SD
&	FIRE DAMPER WITH ACCESS PANEL	FD
&	SMOKE DAMPER WITH ACCESS PANEL	SD
CFM	CUBIC FEET OF AIR PER MINUTE	CFM
M	EMS MOTORIZED DUCT DAMPER/ PIPE VALVE ACTUATOR	—
T	THERMOSTAT @ +4'-0" TOP OF BOX	T'STAT
H	HUMIDISTAT @ +4'-0" TOP OF BOX	H'STAT
C	CO_2 SENSOR @ +4'-0" TOP OF BOX	CO_2
T	EMS TEMPERATURE SENSOR @ +4'-0" TOP OF BOX	—
H	EMS HUMIDITY SENSOR @ +4'-0" TOP OF BOX	—
C	EMS CO_2 SENSOR @ +4'-0" TOP OF BOX	CO_2
SP	EMS STATIC PRESSURE SENSOR	SP
DP	EMS DIFFERENTIAL PRESSURE SENSOR	DP
CS	EMS CURRENT SENSOR	CS
	DIRECTION OF FLOW	—
	SUPPLY AIR	SA
	RETURN AIR	RA
	EXHAUST AIR	EA
—	OUTSIDE AIR	OSA
	PIPE/DUCT TURN DOWN	—
	PIPE/DUCT TURN UP	—
	POINT OF CONNECTION	POC
	EXISTING (DESIGNATED)	(E)
	NEW (DESIGNATED)	(N)
SD	DUCT SMOKE DETECTOR	SD
A/V	AUDIBLE/VISUAL ALARM	A/VA
	BYPASS TIMER	BPT
—EMS—	ENERGY MANAGEMENT SYSTEM CABLE IN CONDUIT	EMS

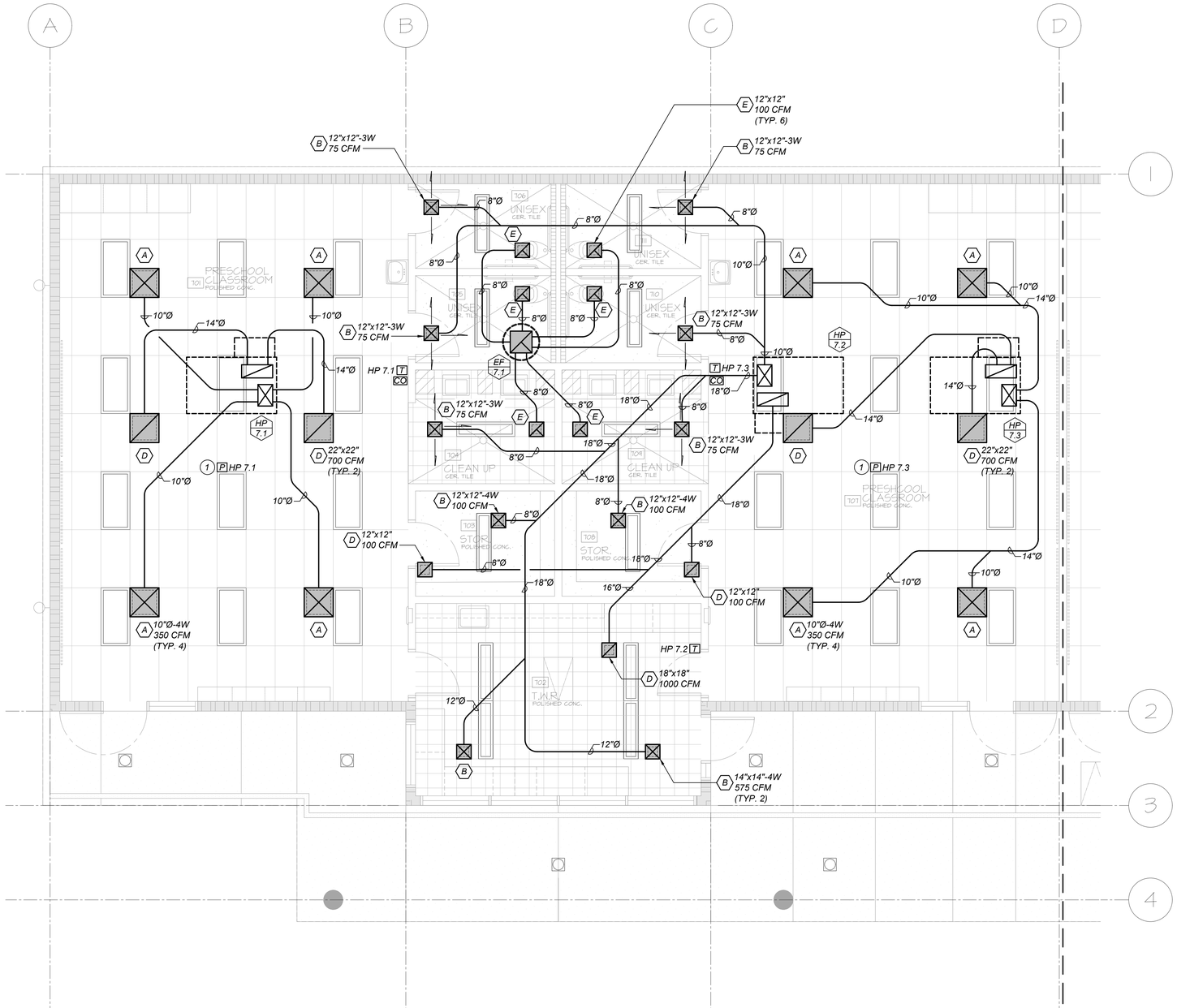

SHEET NOTES:
1. SEE DETAILS F&G/M4.2 FOR ROUND DUCT HANGING & UPPER ATTACHMENT DETAILS

2. SEE DETAIL A/M4.1 FOR S/A GRILLE AND BRANCH DUCT GRILLES INFORMATION. (TYP. ALL S/A)

3. SEE DETAIL B/M4.1 FOR R/A & E/A GRILLE AND BRANCH DUCT INFORMATION. (TYP. ALL R/A & E/A GRILLES)

KEYNOTES: (THIS SHEET ONLY)

1 SEE DETAIL J/M4.1 FOR CEILING MTD. PRESSURE SENSOR INFORMATION. (TYP. 2)

KEY PLAN

MECHANICAL FLOOR PLAN - BUILDING 700

SCALE: 1/4" = 1'-0"

north

REGISTERED PROFESSIONAL ENGINEER
BRIAN W. CARLSON
No. M34846
Exp. 6-30-26
MECHANICAL
STATE OF CALIFORNIA

LAWRENCE ENGINEERING GROUP
4910 E. Clinton Way, Suite 101
(559) 431-0101
23114
Fresno, CA 93727
FAX (559) 431-1362

NEW PRESCHOOL AND TK/KINDERGARTEN CLASSROOMS AT SANTA FE ELEMENTARY SCHOOL

PORTERVILLE UNIFIED SCHOOL DISTRICT
286 E ORANGE AVENUE, PORTERVILLE, CA 93257

REVISIONS

MANGINI ARCHITECTURE INGENUITY
BARENG MORRELLI SCOTT
MANGINI ASSOCIATES INC.
4320 West Mineral King Avenue
Visalia, California 93291
www.mangini.us
(559) 627-0550 Office
(559) 627-5925 Fax

TITLE
BLDG. 700
MECHANICAL
FLOOR PLAN

M1.1

PROJECT 23076

24 June 2024 11:35 AM P:\2023\23114 Porterville USD - Santa Fe ES - Kinder\4-Drawings\4 M\M1.1 & M1.2 - Mechanical Floor Plan - Building 700.dwg rajg

C:\Users\raj\AppData\Local\Temp\AcPublish_4216\M1.1 & M1.2 - Mechanical Floor Plan - Building 700.dwg Jun 24 2024 11:35am

APPROVALS

FILE # 54-76 | APPLICATION # 02-121996

IDENTIFICATION STAMP
DIV. OF THE STATE ARCHITECT
APP: 02-121996 INC:
REVIEWED FOR
SS ☑ FLS ☑ ACS ☑
DATE: 8/14/2024

LICENSED ARCHITECT
MICHAEL J. SCOTT
No. C-34290
REN. 05-31-25
STATE OF CALIFORNIA

DATE: DECEMBER 31, 2023

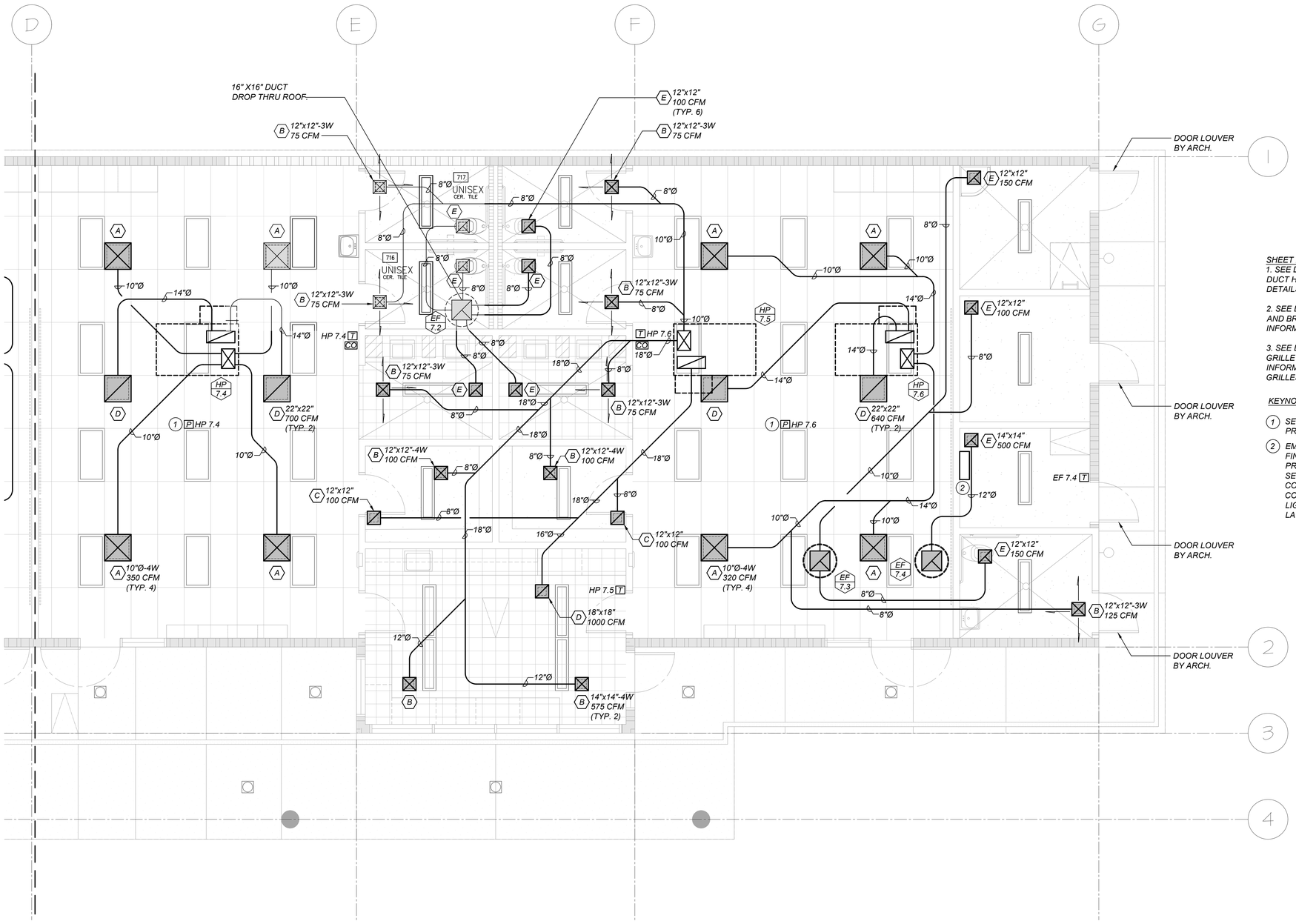

SHEET NOTES:

1. SEE DETAILS F&G/M4.2 FOR ROUND DUCT HANGING & UPPER ATTACHMENT DETAILS

2. SEE DETAIL A/M4.1 FOR S/A GRILLE AND BRANCH DUCT GRILLES INFORMATION. (TYP. ALL S/A)

3. SEE DETAIL B/M4.1 FOR R/A & E/A GRILLE AND BRANCH DUCT INFORMATION. (TYP. ALL R/A & E/A GRILLES)

KEYNOTES: (THIS SHEET ONLY)

1. SEE DETAIL J/M4.1 FOR CEILING MTD. PRESSURE SENSOR INFORMATION. (TYP. 2)
2. EMS PANEL SERVING BLDG. 700. COORDINATE FINAL PLACEMENT W/ ELECTRICAL. ELEC TO PROVIDE 120V POWER CIRCUIT & DATA DROP. SEE DETAILS A&B/M4.2 FOR MTG. COORDINATE W/ ELECTRICAL FOR EMS CONTROL OF (N) SITE & EXTERIOR BLDG LIGHTING. SEE DETAIL H/M4.2 FOR LIGHTING LAYOUT.

NEW PRESCHOOL AND TK/KINDERGARTEN CLASSROOMS AT SANTA FE ELEMENTARY SCHOOL

PORTERVILLE UNIFIED SCHOOL DISTRICT
286 E. ORANGE AVENUE, PORTERVILLE, CA 93257

REVISIONS

KEY PLAN

REGISTERED PROFESSIONAL ENGINEER
RYAN W. CARLSON
No. M34846
Exp. 6-30-26
MECHANICAL
STATE OF CALIFORNIA

MANGINI ARCHITECTURE INGENUITY
BARENG MORRELLI SCOTT
MANGINI ASSOCIATES INC.
4320 West Mineral King Avenue
Visalia, California 93291
www.mangini.us
(559) 627-0530 Office
(559) 627-1926 Fax

LAWRENCE ENGINEERING GROUP
4910 E. Clinton Way, Suite 101
(559) 431-0101
23114
Fresno, CA 93727
FAX (559) 431-1362

TITLE
BLDG. 700
MECHANICAL
FLOOR PLAN

M1.2

PROJECT 23076

MECHANICAL FLOOR PLAN - BUILDING 700

SCALE: 1/4" = 1'-0"

north

24 June 2024 11:35 AM P:\2023\23114 Portenville USD - Santa Fe ES - Kinder\4-Drawings\4 M\M1.1 & M1.2 - Mechanical Floor Plan - Building 700.dwg raj g

C:\Users\raj\AppData\Local\Temp\AcPublish_4216\M1.1 & M1.2 - Mechanical Floor Plan - Building 700.dwg Jun 24 2024 11:35am

APPROVALS

FILE # 54-76 | APPLICATION # 02-121996

IDENTIFICATION STAMP
DIV. OF THE STATE ARCHITECT
APP: 02-121996 INC:
REVIEWED FOR
SS ☑ FLS ☑ ACS ☑
DATE: 8/14/2024

LICENSED ARCHITECT
MICHAEL J. SCOTT
No. C-34290
REN. 05-31-25
STATE OF CALIFORNIA

DATE: DECEMBER 31, 2023

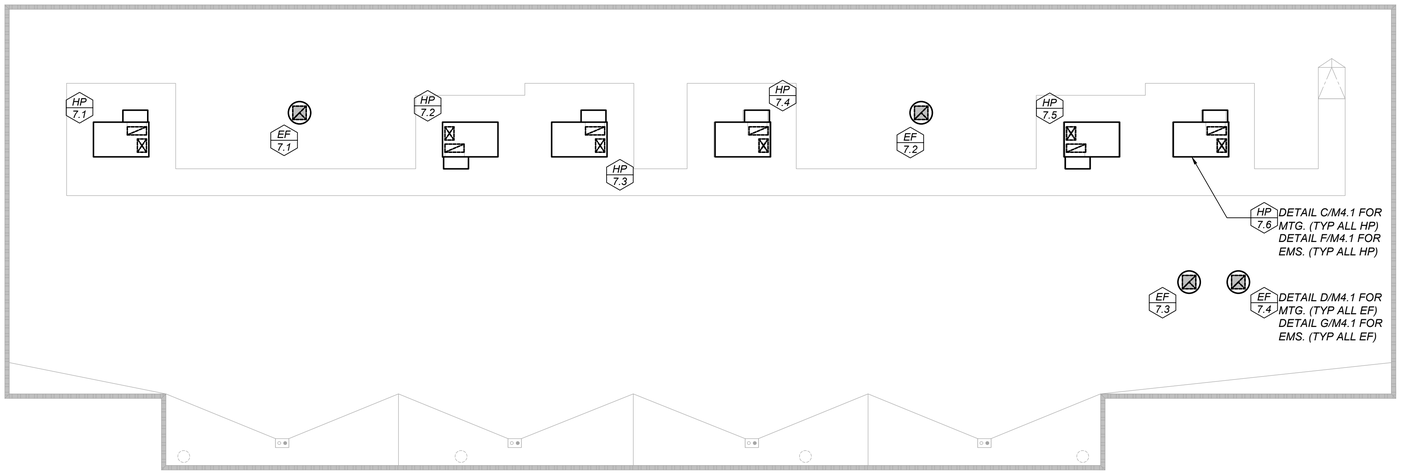

MECHANICAL ROOF PLAN - BUILDING 700

SCALE: 1/8" = 1'-0"

north

REGISTERED PROFESSIONAL ENGINEER
RYAN W. CARLSON
No. M34846
Exp. 6-30-26
MECHANICAL
STATE OF CALIFORNIA

LAWRENCE ENGINEERING GROUP
4910 E. Clinton Way, Suite 101
(559) 431-0101
23114
Fresno, CA 93727
FAX (559) 431-1362

NEW PRESCHOOL AND TK/KINDERGARTEN CLASSROOMS AT SANTA FE ELEMENTARY SCHOOL

PORTERVILLE UNIFIED SCHOOL DISTRICT

286 E ORANGE AVENUE, PORTERVILLE, CA 93257

REVISIONS

MANGINI | ARCHITECTURE INGENUITY
BARENG MORRELLI SCOTT
MANGINI ASSOCIATES INC.
4320 West Mineral King Avenue
Visalia, California 93291
www.mangini.us
(559) 627-0530 Office
(559) 627-1926 Fax

TITLE
BLDG. 700
MECHANICAL
ROOF PLAN

M1.3

PROJECT 23076

APPROVALS

FILE # 54-76 | APPLICATION # 02-121996

IDENTIFICATION STAMP
DIV. OF THE STATE ARCHITECT
APP: 02-121996 INC:
REVIEWED FOR
SS ☑ FLS ☑ ACS ☑
DATE: 8/14/2024

LICENSED ARCHITECT
MICHAEL J. SCOTT
No. C-34290
REN. 05-31-25
STATE OF CALIFORNIA

DATE: DECEMBER 31, 2023

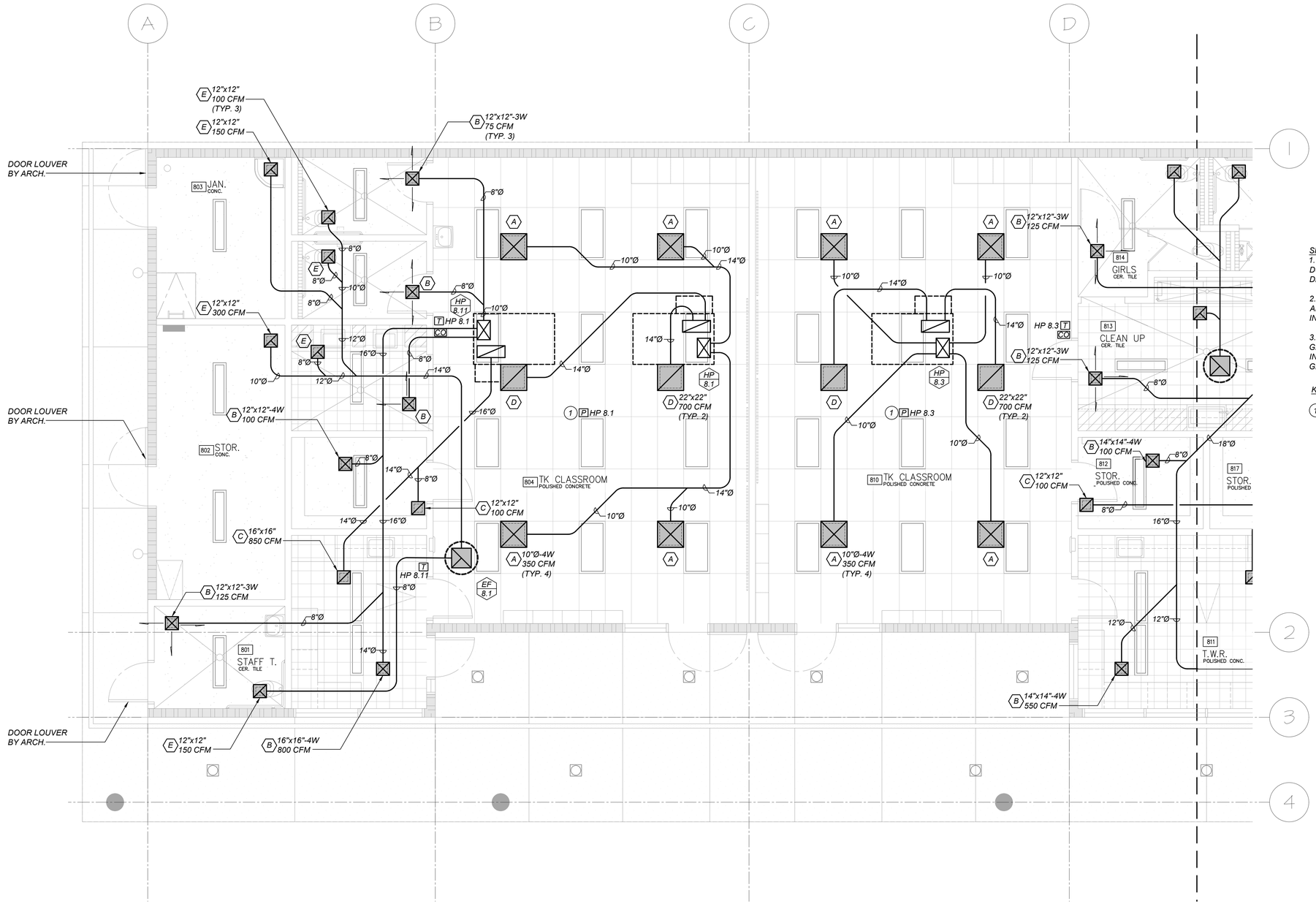

SHEET NOTES:
1. SEE DETAILS F&G/M4.2 FOR ROUND DUCT HANGING & UPPER ATTACHMENT DETAILS

2. SEE DETAIL A/M4.1 FOR S/A GRILLE AND BRANCH DUCT GRILLES INFORMATION. (TYP. ALL S/A)

3. SEE DETAIL B/M4.1 FOR R/A & E/A GRILLE AND BRANCH DUCT INFORMATION. (TYP. ALL R/A & E/A GRILLES)

KEYNOTES: (THIS SHEET ONLY)

(1) SEE DETAIL J/M4.1 FOR CEILING MTD. PRESSURE SENSOR INFORMATION. (TYP. 2)

NEW PRESCHOOL AND TK/KINDERGARTEN CLASSROOMS AT SANTA FE ELEMENTARY SCHOOL

PORTERVILLE UNIFIED SCHOOL DISTRICT
286 E ORANGE AVENUE, PORTERVILLE, CA 93257

REVISIONS

KEY PLAN

REGISTERED PROFESSIONAL ENGINEER
BRIAN W. CARLSON
No. M34846
Exp. 6-30-26
MECHANICAL
STATE OF CALIFORNIA

MANGINI ARCHITECTURE INGENUITY
BARENG MORRELLI SCOTT
MANGINI ASSOCIATES INC.
4320 West Mineral king Avenue
Visalia, California 93291
www.mangini.us
(559) 627.0530 Office
(559) 627.1926 Fax

LAWRENCE ENGINEERING GROUP
4910 E. Clinton Way, Suite 101
(559) 431-0101
23114
Fresno, CA 93727
FAX (559) 431-1362

TITLE
BLDG. 800
MECHANICAL
FLOOR PLAN

M2.1

PROJECT 23076

MECHANICAL FLOOR PLAN - BUILDING 800

SCALE: 1/4" = 1'-0"

north

24 June 2024 11:35 AM P:\2023\23114 Porterville USD - Santa Fe ES - Kinder\4-Drawings\4 M\M2.1 & M2.2 & M2.3 - Mechanical Floor Plan - Building 800.dwg rej g

P:\2023\23114 Porterville USD - Santa Fe ES - Kinder\4-Drawings\4 M\M2.1 & M2.2 & M2.3 - Mechanical Floor Plan - Building 800.dwg Jun 24 2024 11:35am

APPROVALS

FILE # 54-76 | APPLICATION # 02-121996

IDENTIFICATION STAMP
DIV. OF THE STATE ARCHITECT
APP: 02-121996 INC:
REVIEWED FOR
SS ☑ FLS ☑ ACS ☑
DATE: 8/14/2024

LICENSED ARCHITECT
MICHAEL J. SCOTT
No. C-34290
REN. 05-31-25
STATE OF CALIFORNIA

DATE: DECEMBER 31, 2023

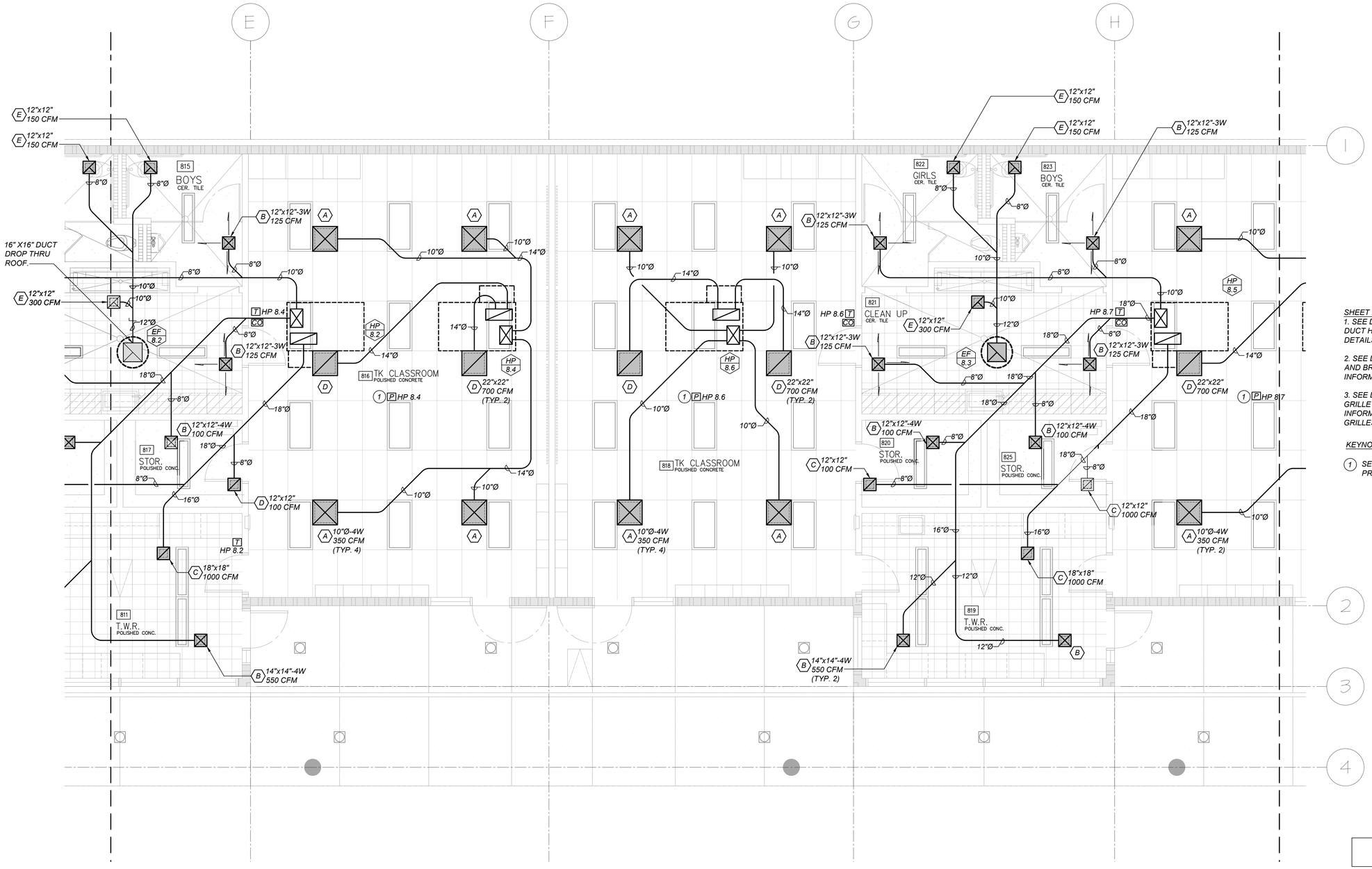

SHEET NOTES:
1. SEE DETAILS F&G/M4.2 FOR ROUND DUCT HANGING & UPPER ATTACHMENT DETAILS

2. SEE DETAIL A/M4.1 FOR S/A GRILLE AND BRANCH DUCT GRILLES INFORMATION. (TYP. ALL S/A)

3. SEE DETAIL B/M4.1 FOR R/A & E/A GRILLE AND BRANCH DUCT INFORMATION. (TYP. ALL R/A & E/A GRILLES)

KEYNOTES: (THIS SHEET ONLY)

(1) SEE DETAIL J/M4.1 FOR CEILING MTD. PRESSURE SENSOR INFORMATION. (TYP. 3)

NEW PRESCHOOL AND TK/KINDERGARTEN CLASSROOMS AT SANTA FE ELEMENTARY SCHOOL

PORTERVILLE UNIFIED SCHOOL DISTRICT
286 E. ORANGE AVENUE, PORTERVILLE, CA 93257

REVISIONS

KEY PLAN

REGISTERED PROFESSIONAL ENGINEER
RYAN W. CARLSON
No. M34846
Exp. 6-30-26
MECHANICAL
STATE OF CALIFORNIA

MANGINI ARCHITECTURE INGENUITY
BARENG MORRELLI SCOTT
MANGINI ASSOCIATES INC.
4320 West Mineral King Avenue
Visalia, California 93291
www.mangini.us
(559) 627-0530 Office
(559) 627-1926 Fax

LAWRENCE ENGINEERING GROUP
4910 E. Clinton Way, Suite 101
(559) 431-0101
23114
Fresno, CA 93727
FAX (559) 431-1362

TITLE
BLDG. 800
MECHANICAL
FLOOR PLAN

M2.2

PROJECT 23076

MECHANICAL FLOOR PLAN - BUILDING 800

SCALE: 1/4" = 1'-0"

north

APPROVALS

FILE # 54-76 | APPLICATION # 02-121996

IDENTIFICATION STAMP
DIV. OF THE STATE ARCHITECT
APP: 02-121996 INC:
REVIEWED FOR
SS ☑ FLS ☑ ACS ☑
DATE: 8/14/2024

LICENSED ARCHITECT
MICHAEL J. SCOTT
No. C-34290
REN. 05-31-25
STATE OF CALIFORNIA

DATE: DECEMBER 31, 2023

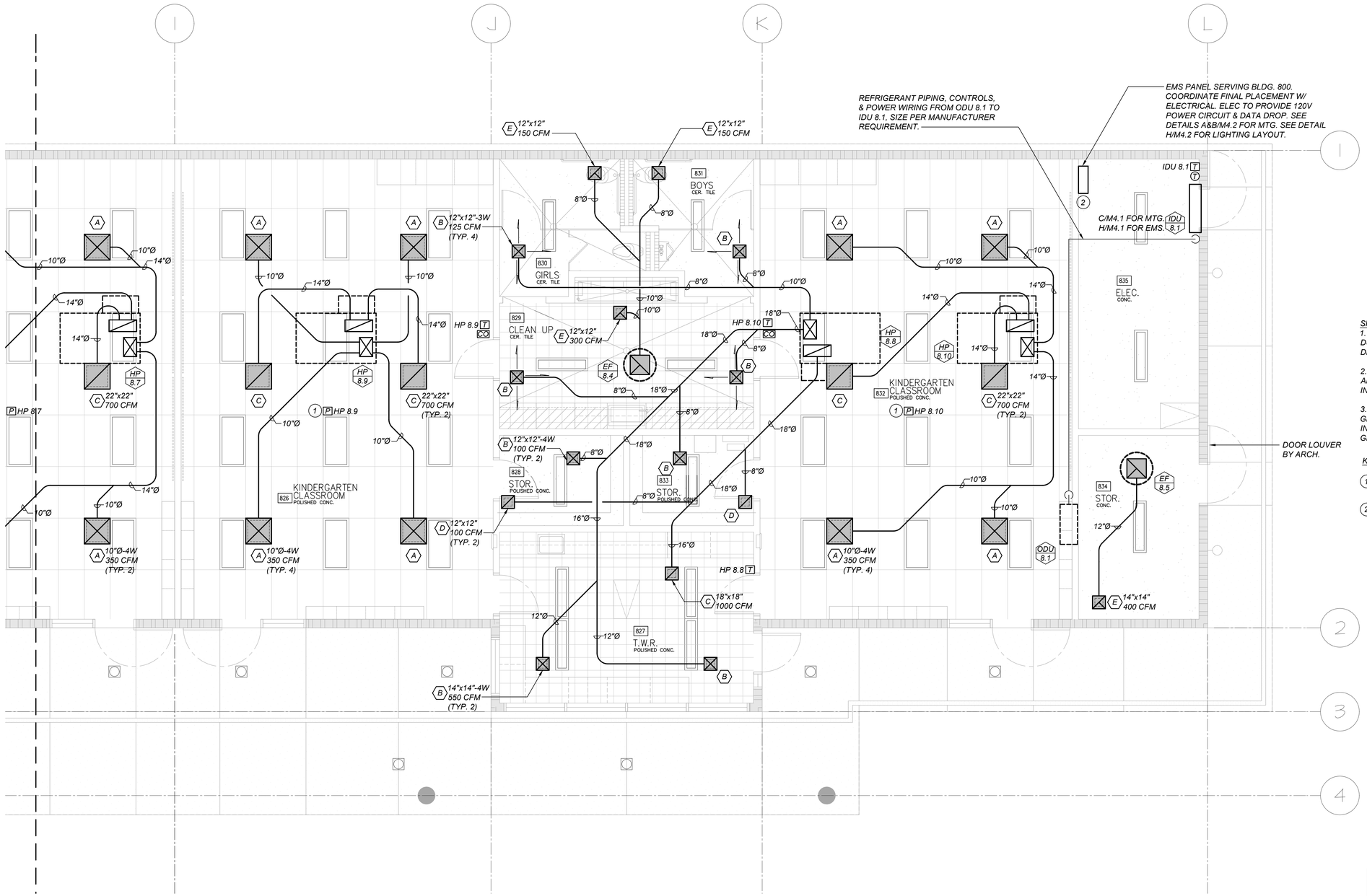

SHEET NOTES:
1. SEE DETAILS F&G/M4.2 FOR ROUND DUCT HANGING & UPPER ATTACHMENT DETAILS

2. SEE DETAIL A/M4.1 FOR S/A GRILLE AND BRANCH DUCT GRILLES INFORMATION. (TYP. ALL S/A)

3. SEE DETAIL B/M4.1 FOR R/A & E/A GRILLE AND BRANCH DUCT INFORMATION. (TYP. ALL R/A & E/A GRILLES)

KEYNOTES: (THIS SHEET ONLY)

1. SEE DETAIL J/M4.1 FOR CEILING MTD. PRESSURE SENSOR INFORMATION. (TYP. 2)
2. COORDINATE W/ ELECTRICAL FOR EMS CONTROL OF (N) SITE & EXTERIOR BLDG LIGHTING.

KEY PLAN

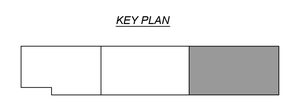

MECHANICAL FLOOR PLAN - BUILDING 800

SCALE: 1/4" = 1'-0"

north

REGISTERED PROFESSIONAL ENGINEER
BRIAN W. CARLSON
No. M34846
Exp. 6-30-26
MECHANICAL
STATE OF CALIFORNIA

LAWRENCE ENGINEERING GROUP
4910 E. Clinton Way, Suite 101
(559) 431-0101
23114
Fresno, CA 93727
FAX (559) 431-1362

NEW PRESCHOOL AND TK/KINDERGARTEN CLASSROOMS AT SANTA FE ELEMENTARY SCHOOL

PORTERVILLE UNIFIED SCHOOL DISTRICT
286 E ORANGE AVENUE, PORTERVILLE, CA 93257

REVISIONS

MANGINI | ARCHITECTURE INGENUITY
BARENG MORRELLI SCOTT
MANGINI ASSOCIATES INC.
4320 West Mineral king Avenue
Visalia, California 93291
www.mangini.us
(559) 627.0530 Office
(559) 627.1926 Fax

TITLE
BLDG. 800
MECHANICAL
FLOOR PLAN

M2.3

PROJECT 23076

24 June 2024 11:35 AM P:\2023\23114 Porterville USD - Santa Fe ES - Kinder\4-Drawings\4 M\M2.1 & M2.2 & M2.3 - Mechanical Floor Plan - Building 800.dwg rej g

P:\2023\23114 Porterville USD - Santa Fe ES - Kinder\4-Drawings\4 M\M2.1 & M2.2 & M2.3 - Mechanical Floor Plan - Building 800.dwg Jun 24 2024 11:35am

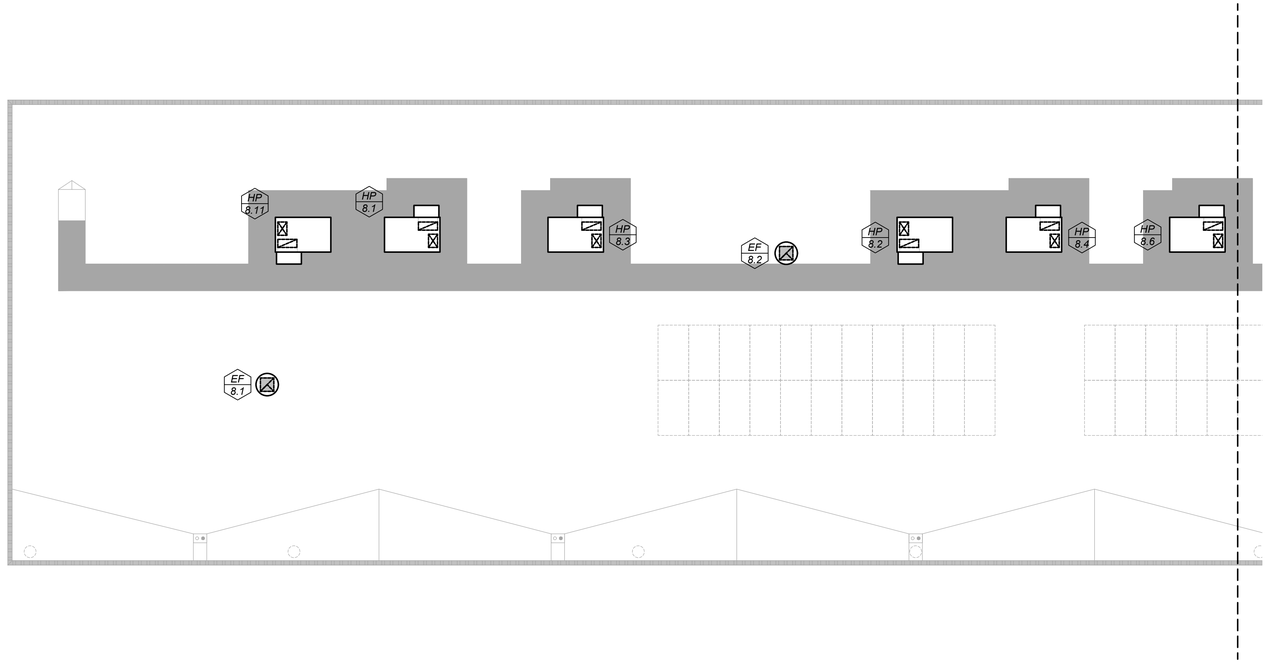

north

MECHANICAL ROOF PLAN - BUILDING 800

SCALE: 1/8" = 1'-0"

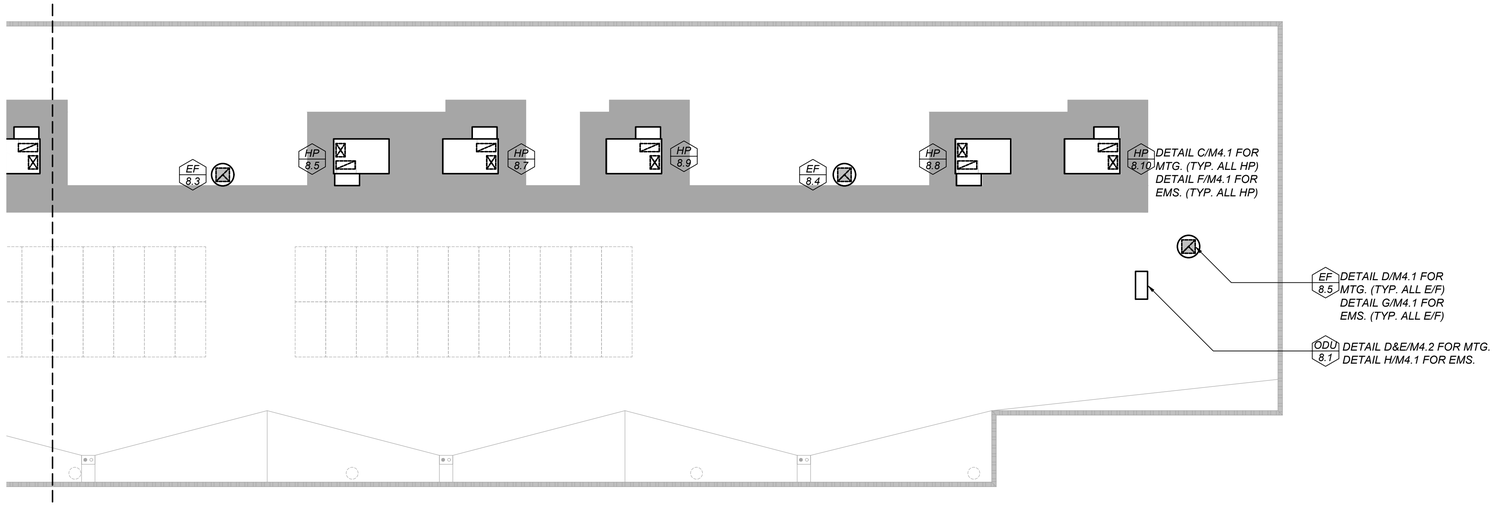

north

MECHANICAL ROOF PLAN - BUILDING 800

SCALE: 1/8" = 1'-0"

APPROVALS

FILE # 54-76 APPLICATION # 02-121996

IDENTIFICATION STAMP
DIV. OF THE STATE ARCHITECT
APP: 02-121996 INC:
REVIEWED FOR
SS ☑ FLS ☑ ACS ☑
DATE: 8/14/2024

LICENSED ARCHITECT
MICHAEL J. SCOTT
No. C-34290
REN. 05-31-25
STATE OF CALIFORNIA

DATE: DECEMBER 31, 2023

NEW PRESCHOOL AND TK/KINDERGARTEN CLASSROOMS AT SANTA FE ELEMENTARY SCHOOL

PORTERVILLE UNIFIED SCHOOL DISTRICT

286 E ORANGE AVENUE, PORTERVILLE, CA 93257

REVISIONS

MANGINI ARCHITECTURE INGENUITY
BARENG MORRELLI SCOTT
MANGINI ASSOCIATES INC.
4320 West Mineral King Avenue
Visalia, California 93291
www.mangini.us
(559) 627-0530 Office
(559) 627-1926 Fax

REGISTERED PROFESSIONAL ENGINEER
RYAN W. CARLSON
No. M34846
Exp. 6-30-26
MECHANICAL
STATE OF CALIFORNIA

LAWRENCE ENGINEERING GROUP
4910 E. Clinton Way, Suite 101
(559) 431-0101
23114
Fresno, CA 93727
FAX (559) 431-1362

TITLE
BLDG. 800
MECHANICAL
ROOF PLAN

M2.4

PROJECT 23076

APPROVALS

FILE # 54-76 | APPLICATION # 02-121996

IDENTIFICATION STAMP
DIV. OF THE STATE ARCHITECT
APP: 02-121996 INC:
REVIEWED FOR
SS ☑ FLS ☑ ACS ☑
DATE: 8/14/2024

LICENSED ARCHITECT
MICHAEL J. SCOTT
No. C-34290
REN. 05-31-25
STATE OF CALIFORNIA

DATE: DECEMBER 31, 2023

NEW PRESCHOOL AND TK/KINDERGARTEN CLASSROOMS AT SANTA FE ELEMENTARY SCHOOL
PORTERVILLE UNIFIED SCHOOL DISTRICT
286 E ORANGE AVENUE, PORTERVILLE, CA 93257

REVISIONS

PACKAGE HEAT PUMP SCHEDULE

	DESIGNATION	HP 7.1	HP 7.2	HP 7.3	HP 7.4	HP 7.5	HP 7.6	HP 8.1	HP 8.2	HP 8.3	HP 8.4	HP 8.5	HP 8.6	HP 8.7
	VOLTS/PHASE	460 / 3	460 / 3	460 / 3	460 / 3	460 / 3	460 / 3	460 / 3	460 / 3	460 / 3	460 / 3	460 / 3	460 / 3	460 / 3
	M.C.A.	1.) 21	1.) 22	1.) 21	1.) 21	1.) 22	1.) 21	1.) 21	1.) 22	1.) 21	1.) 21	1.) 22	1.) 21	1.) 21
	M.O.C.P.	25	25	25	25	25	25	25	25	25	25	25	25	25
	SEER/EER @ ARI	17 / -	17 / -	17 / -	17 / -	17 / -	17 / -	17 / -	17 / -	17 / -	17 / -	17 / -	17 / -	17 / -
BLOWER	SUPPLY AIR (CFM)	1,400	1,800	1,400	1,400	1,800	1,405	1,400	1,800	1,400	1,400	1,800	1,400	1,400
BLOWER	EXT. SP (IN. WC)	0.8	0.8	0.8	0.8	0.8	0.8	0.8	0.8	0.8	0.8	0.8	0.8	0.8
BLOWER	MIN. O.S.A. (CFM)	450 / 125	600	450 / 125	450 / 125	600	450 / 125	450 / 125	660	450 / 125	450 / 125	660	450 / 125	450 / 125
BLOWER	BHP	.67	.92	.67	.67	.92	.67	.67	.92	.67	.67	.92	.67	.67
BLOWER	RPM	1,847	2,053	1,847	1,847	2,053	1,847	1,847	1,800	1,847	1847	1,800	1,847	1,847
BLOWER	DRIVE	DIRECT	DIRECT	DIRECT	DIRECT	DIRECT	DIRECT	DIRECT	DIRECT	DIRECT	DIRECT	DIRECT	DIRECT	DIRECT
COOLING	SENSIBLE (MBH)	38.6	50.7	38.6	38.6	50.7	38.6	38.6	52.2	38.6	38.6	52.2	38.6	38.6
COOLING	TOTAL (MBH)	41.9	52.0	41.9	41.9	52.0	41.9	41.9	52.3	41.9	41.9	52.3	41.9	41.9
COOLING	EADB/EAWB (°F)	85 / 66	86 / 66	85 / 66	85 / 66	86 / 66	85 / 66	85 / 66	86 / 66	85 / 66	85 / 66	86 / 66	85 / 66	85 / 66
COOLING	AMBIENT AIR (°F)	105	105	105	105	105	105	105	105	105	105	105	105	105
HEATING	CAPACITY @ 47 DEG. (MBH)	33.4	41.1	33.4	33.4	41.1	33.4	33.4	41.1	33.4	33.4	41.1	33.4	33.4
HEATING	COP	3.7	3.8	3.7	3.7	3.8	3.7	3.7	3.8	3.7	3.7	3.8	3.7	3.7
HEATING	AUXILIARY ELEC. (KW)	5.5	5.5	5.5	5.5	5.5	5.5	5.5	5.5	5.5	5.5	5.5	5.5	5.5
HEATING	NO. OF STAGES	VARIABLE	VARIABLE	VARIABLE	VARIABLE	VARIABLE	VARIABLE	VARIABLE	VARIABLE	VARIABLE	VARIABLE	VARIABLE	VARIABLE	VARIABLE
HEATING	AMBIENT AIR (°F)	28	28	28	28	28	28	28	28	28	28	28	28	28
FILTERS	QUANTITY/SIZE (RETURN)	(4) 16x16x4	(4) 16x16x4	(4) 16x16x4	(4) 16x16x4	(4) 16x16x4	(4) 16x16x4	(4) 16x16x4	(4) 16x16x4	(4) 16x16x4	(4) 16x16x4	(4) 16x16x4	(4) 16x16x4	(4) 16x16x4
FILTERS	TYPE	MERV 13	MERV 13	MERV 13	MERV 13	MERV 13	MERV 13	MERV 13	MERV 13	MERV 13	MERV 13	MERV 13	MERV 13	MERV 13
FILTERS	QUANTITY/SIZE (OSA)	FACTORY	FACTORY	FACTORY	FACTORY	FACTORY	FACTORY	FACTORY	FACTORY	FACTORY	FACTORY	FACTORY	FACTORY	FACTORY
FILTERS	TYPE	FACTORY	FACTORY	FACTORY	FACTORY	FACTORY	FACTORY	FACTORY	FACTORY	FACTORY	FACTORY	FACTORY	FACTORY	FACTORY
FILTERS	P D (IN WC)	0.3	0.3	0.3	0.3	0.3	0.3	0.3	0.3	0.3	0.3	0.3	0.3	0.3
	MANUFACTURER	CARRIER	CARRIER	CARRIER	CARRIER	CARRIER	CARRIER	CARRIER	CARRIER	CARRIER	CARRIER	CARRIER	CARRIER	CARRIER
	TYPE	HEAT PUMP	HEAT PUMP	HEAT PUMP	HEAT PUMP	HEAT PUMP	HEAT PUMP	HEAT PUMP	HEAT PUMP	HEAT PUMP	HEAT PUMP	HEAT PUMP	HEAT PUMP	HEAT PUMP
	MODEL NUMBER	50GCQJ05	50GCQJ06	50GCQJ05	50GCQJ05	50GCQJ06	50GCQJ05	50GCQJ05	50GCQJ06	50GCQJ05	50GCQJ05	50GCQJ06	50GCQJ05	50GCQJ05
	CONDENSING UNIT	N/A	N/A	N/A	N/A	N/A	N/A	N/A	N/A	N/A	N/A	N/A	N/A	N/A
	LOCATION	ROOF TOP	ROOF TOP	ROOF TOP	ROOF TOP	ROOF TOP	ROOF TOP	ROOF TOP	ROOF TOP	ROOF TOP	ROOF TOP	ROOF TOP	ROOF TOP	ROOF TOP
	OPER. WT (LBS)	1,100	1,100	1,100	1,100	1,100	1,100	1,100	1,100	1,100	1,100	1,100	1,100	1,100
	ACCESSORIES	1, 2 ,3, 4, 5, 6, 7	1, 2 ,3, 4, 5, 7	1, 2 ,3, 4, 5, 6, 7	1, 2 ,3, 4, 5, 6, 7	1, 2 ,3, 4, 5, 7	1, 2 ,3, 4, 5, 6, 7	1, 2 ,3, 4, 5, 6, 7	1, 2 ,3, 4, 5, 7	1, 2 ,3, 4, 5, 6, 7	1, 2 ,3, 4, 5, 6, 7	1, 2 ,3, 4, 5, 7	1, 2 ,3, 4, 5, 6, 7	1, 2 ,3, 4, 5, 6, 7

1. MODULATING POWERED EXHAUST W/ SEPARATE DISCONNECT, 460V/3PH, 1.5 FLA
2. MODULATING ECONOMIZER CONTROLLED BY EMS. ACTUATOR PROVIDED BY EMS & MTD. IN FIELD.
3. SLOPED SEISMIC CURB
4. U.V. LIGHTS, SEE DETAIL E/M4.1
5. SUPPLEMENTAL ELECTRIC RESISTANCE HEAT
6. DEMAND CONTROL VENTILATION
7. AIRFLOW MONITORING STATION

PACKAGE HEAT PUMP SCHEDULE

	DESIGNATION	HP 8.8	HP 8.9	HP 8.10	HP 8.11
	VOLTS/PHASE	460 / 3	460 / 3	460 / 3	460 / 3
	M.C.A.	1.) 22	1.) 21	1.) 21	1.) 21
	M.O.C.P.	25	25	25	25
	SEER/EER @ ARI	17 / -	17 / -	17 / -	17 / -
BLOWER	SUPPLY AIR (CFM)	1,800	1,400	1,400	1,400
BLOWER	EXT. SP (IN. WC)	0.8	0.8	0.8	0.8
BLOWER	MIN. O.S.A. (CFM)	660	450 / 125	450 / 125	450
BLOWER	BHP	.92	.67	.67	.67
BLOWER	RPM	1,847	1,847	1,847	1,847
BLOWER	DRIVE	DIRECT	DIRECT	DIRECT	DIRECT
COOLING	SENSIBLE (MBH)	52.2	38.6	38.6	40.6
COOLING	TOTAL (MBH)	52.3	41.9	41.9	42.4
COOLING	EADB/EAWB (°F)	86 / 66	85 / 66	85 / 66	87 / 66
COOLING	AMBIENT AIR (°F)	105	105	105	105
HEATING	CAPACITY @ 47 DEG. (MBH)	41.1	33.4	33.4	29.6
HEATING	COP	3.8	3.7	3.7	3.7
HEATING	AUXILIARY ELEC. (KW)	5.5	5.5	5.5	5.5
HEATING	NO. OF STAGES	VARIABLE	VARIABLE	VARIABLE	VARIABLE
HEATING	AMBIENT AIR (°F)	28	28	28	28
FILTERS	QUANTITY/SIZE (RETURN)	(4) 16x16x4	(4) 16x16x4	(4) 16x16x4	(4) 16x16x4
FILTERS	TYPE	MERV 13	MERV 13	MERV 13	MERV 13
FILTERS	QUANTITY/SIZE (OSA)	FACTORY	FACTORY	FACTORY	FACTORY
FILTERS	TYPE	FACTORY	FACTORY	FACTORY	FACTORY
FILTERS	P D (IN WC)	0.3	0.3	0.3	0.3
	MANUFACTURER	CARRIER	CARRIER	CARRIER	CARRIER
	TYPE	HEAT PUMP	HEAT PUMP	HEAT PUMP	HEAT PUMP
	MODEL NUMBER	50GCQJ06	50GCQJ05	50GCQJ05	50GCQJ05
	CONDENSING UNIT	N/A	N/A	N/A	N/A
	LOCATION	ROOF TOP	ROOF TOP	ROOF TOP	ROOF TOP
	OPER. WT (LBS)	1,100	1,100	1,100	1,100
	ACCESSORIES	1, 2 ,3, 4, 5, 7	1, 2 ,3, 4, 5, 6, 7	1, 2 ,3, 4, 5, 6, 7	1, 2 ,3, 4, 5, 7

1. MODULATING POWERED EXHAUST W/ SEPARATE DISCONNECT, 460V/3PH, 1.5 FLA
2. MODULATING ECONOMIZER CONTROLLED BY EMS. ACTUATOR PROVIDED BY EMS & MTD. IN FIELD.
3. SLOPED SEISMIC CURB
4. U.V. LIGHTS, SEE DETAIL E/M4.1
5. SUPPLEMENTAL ELECTRIC RESISTANCE HEAT
6. DEMAND CONTROL VENTILATION
7. AIRFLOW MONITORING STATION

EXHAUST FAN SCHEDULE

DESIGNATION	EF 7.1	EF 7.2	EF 7.3	EF 7.4	EF 8.1	EF 8.2	EF 8.3	EF 8.4	EF 8.5
CFM	600	600	400	500	900	600	600	600	400
EXT. S.P. (IN. WC)	0.6	0.6	0.5	0.6	0.7	0.6	0.6	0.6	0.5
HP / BHP	.333 / .20	.333 / 0.20	.25 / .118	.333 / .144	.5 / .256	.333 / .20	.333 / .20	.333 / .20	.25 / .118
VOLTS / PHASE	115 / 1	115 / 1	115 / 1	115 / 1	115 / 1	115 / 1	115 / 1	115 / 1	115 / 1
MCA / MOP (AMPS)	5.4 / 15	5.4 / 15	3.7 / 15	5.4 / 15	- / -	5.4 / 15	5.4 / 15	5.4 / 15	3.7 / 15
FLA (AMPS)	N/A	N/A	N/A	N/A	6.3	N/A	N/A	N/A	N/A
RPM	1,442	1,442	1,394	1,285	1,301	1,442	1,442	1,442	1,394
TIP SPEED/ SONES	4,436	4,436	3,832	3,953	N/A	4,436	4,436	4,436	3,832
DRIVE	DIRECT	DIRECT	DIRECT	DIRECT	DIRECT	DIRECT	DIRECT	DIRECT	DIRECT
MOUNTING	ROOF	ROOF	ROOF	ROOF	ROOF	ROOF	ROOF	ROOF	ROOF
MANUFACTURER	THERMOTEK	THERMOTEK	THERMOTEK	THERMOTEK	THERMOTEK	THERMOTEK	THERMOTEK	THERMOTEK	THERMOTEK
TYPE	DOWNBLAST	DOWNBLAST	DOWNBLAST	DOWNBLAST	DOWNBLAST	DOWNBLAST	DOWNBLAST	DOWNBLAST	DOWNBLAST
MODEL NUMBER	DR33HTH	DR33HTH	DR12HTH	DR33HTH	DR50HTH	DR33HTH	DR33HTH	DR33HTH	DR12HTH
CONTROL	EMS	EMS	EMS	T-STAT	EMS	EMS	EMS	EMS	T-STAT
LOCATION	BLDG 700	BLDG 700	BLDG 700	BLDG 700	BLDG 800	BLDG 800	BLDG 800	BLDG 800	BLDG 800
OPER. WT. (LBS)	65	65	60	65	75	65	65	65	60
ACCESSORIES	1, 2, 3	1, 2, 3	1, 2, 3	1, 2, 3, 4	1, 2, 3	1, 2, 3	1, 2, 3	1, 2, 3	1, 2, 4

1 . B.D.D.
2 . FACTORY SLOPED ROOF CURB
3 . ECM W/ DIAL ON MOTOR FOR BALANCING
4 . T-STAT CONTROL

GRILLE SCHEDULE

MARK	DUTY	DESCRIPTION
A	CEILING SUPPLY	TITUS TDC (TYPE 3) FULL LOUVER FACE OR RECTANGULAR NECK DIFFUSER FOR STD. LAY-IN CEILING WITH NO. 26 WHITE FINISH. (18"x18" NECK, ADAPTER SIZE SHOWN)
B	CEILING SUPPLY	TITUS TDC (TYPE 1) LOUVER FACE SQUARE OR RECTANGULAR NECK DIFFUSER FOR SURFACE MOUNTING WITH NO. 26 WHITE FINISH.
C	CEILING RETURN	TITUS CORE 50F (TYPE 3) ALUMINUM EGG CRATE REGISTER WITH 1/2"x1/2" GRID FOR SURFACE MOUNTING WITH NO. 26 WHITE FINISH.
D	CEILING RETURN	TITUS CORE 50F (TYPE 1) ALUMINUM EGG CRATE REGISTER W/ 1/2"x1/2" GRID FOR STD. LAY-IN CEILING WITH NO. 26 WHITE FINISH.
E	CEILING EXHAUST	TITUS CORE 50F (TYPE 3) ALUMINUM EGG CRATE REGISTER WITH 1/2"x1/2" GRID FOR SURFACE MOUNTING WITH NO. 26 WHITE FINISH.

REGISTERED PROFESSIONAL ENGINEER
BRIAN W. CARLSON
No. M34846
Exp. 6-30-26
MECHANICAL
STATE OF CALIFORNIA

LAWRENCE ENGINEERING GROUP
4910 E. Clinton Way, Suite 101
(559) 431-0101
23114
Fresno, CA 93727
FAX (559) 431-1362

MANGINI ARCHITECTURE INCORPORATED
BARENG MORRELLI SCOTT
MANGINI ASSOCIATES INC.
4320 West Mineral King Avenue
Visalia, California 93291
www.mangini.us
(559) 627.0530 Office
(559) 627.1926 Fax

TITLE
MECHANICAL SCHEDULES GENERAL NOTES & LEGENDS

M3.1

PROJECT 23076

TITLE 24 ACCEPTANCE TESTING TABLE

	DESIGNATION	HP 8.1	HP 8.2	HP 8.3	HP 8.4	HP 8.5	HP 8.6	HP 8.7	HP 8.8	HP 8.9	HP 8.10	HP 8.11	IDU 8.1
FORM / TITLE	NRCA-MCH-02-A OUTDOOR AIR.	X	X	X	X	X	X	X	X	X	X	X	
	NRCA-MCH-03-A CONSTANT VOLUME SINGLE ZONE HVAC.	X	X	X	X	X	X	X	X	X	X	X	X
	NRCA-MCH-04-A AIR DISTRIBUTION DUCT LEAKAGE.												
	NRCA-MCH-05-A AIR ECONOMIZER CONTROLS.	X	X	X	X	X	X	X	X	X	X	X	
	NRCA-MCH-06-A DEMAND CONTROL VENTILATION SYSTEMS.	X		X	X		X	X		X	X		
	NRCA-MCH-07-A SUPPLY FAN VARIABLE FLOW CONTROLS.												
	NRCA-MCH-08-A VALVE LEAKAGE TEST.												
	NRCA-MCH-09-A SUPPLY WATER TEMPERATURE RESET CONTROLS.												
	NRCA-MCH-10-A HYDRONIC SYSTEM VARIABLE FLOW CONTROLS.												
	NRCA-MCH-11-A AUTOMATIC DEMAND SHED CONTROLS.												
	NRCA-MCH-12-A FDD FOR PACKAGED DIRECT EXPANSION UNITS.	X	X	X	X	X	X	X	X	X	X	X	
	NRCA-MCH-13-A AUTOMATIC FDD FOR AIR HANDLING UNITS AND ZONE TERMINAL UNITS.												
	NRCA-MCH-14-A DISTRIBUTED ENERGY STORAGE DX AC SYSTEMS.												
	NRCA-MCH-15-A THERMAL ENERGY STORAGE (TES) SYSTEM.												
	NRCA-MCH-16-A SUPPLY AIR TEMPERATURE RESET CONTROLS.												
	NRCA-MCH-17-A CONDENSER WATER TEMPERATURE RESET CONTROLS.												
	NRCA-MCH-18-A ENERGY MANAGEMENT CONTROL SYSTEMS.	X	X	X	X	X	X	X	X	X	X	X	
	NRCA-MCH-19-A OCCUPANCY SENSOR CONTROLS.												
	NRCA-MCH-20 MULTI-FAMILY VENTILATION.												
	NRCA-MCH-21 MULTI-FAMILY ENVENLOPE LEAKAGE.												
	NRCA-MCH-22-A MF DUCT LEAKAGE.												
	NRCA-MCH-23-A MF HRV/ERV VERIFICATION.												

1. REFER TO TITLE-24 DOCUMENTS FOR ADDITIONAL INFORMATION.
2. NRCA MUST BE SUMBITTED AND COMPLETED BY A CERTIFED ACCEPTANCE TEST TECHNICIAN TO COMPLY WITH CALIFORNIA ENERGY CODE.
3. SUBMIT ACCEPTANCE FORMS TO PROJECT INSPECTOR & MEOR FOR REVIEW.

TITLE 24 ACCEPTANCE TESTING TABLE

	DESIGNATION	HP 7.1	HP 7.2	HP 7.3	HP 7.4	HP 7.5	HP 7.6
FORM / TITLE	NRCA-MCH-02-A OUTDOOR AIR.	X	X	X	X	X	X
	NRCA-MCH-03-A CONSTANT VOLUME SINGLE ZONE HVAC.	X	X	X	X	X	X
	NRCA-MCH-04-A AIR DISTRIBUTION DUCT LEAKAGE.						
	NRCA-MCH-05-A AIR ECONOMIZER CONTROLS.	X	X	X	X	X	X
	NRCA-MCH-06-A DEMAND CONTROL VENTILATION SYSTEMS.	X		X	X		X
	NRCA-MCH-07-A SUPPLY FAN VARIABLE FLOW CONTROLS.						
	NRCA-MCH-08-A VALVE LEAKAGE TEST.						
	NRCA-MCH-09-A SUPPLY WATER TEMPERATURE RESET CONTROLS.						
	NRCA-MCH-10-A HYDRONIC SYSTEM VARIABLE FLOW CONTROLS.						
	NRCA-MCH-11-A AUTOMATIC DEMAND SHED CONTROLS.						
	NRCA-MCH-12-A FDD FOR PACKAGED DIRECT EXPANSION UNITS.	X	X	X	X	X	X
	NRCA-MCH-13-A AUTOMATIC FDD FOR AIR HANDLING UNITS AND ZONE TERMINAL UNITS.						
	NRCA-MCH-14-A DISTRIBUTED ENERGY STORAGE DX AC SYSTEMS.						
	NRCA-MCH-15-A THERMAL ENERGY STORAGE (TES) SYSTEM.						
	NRCA-MCH-16-A SUPPLY AIR TEMPERATURE RESET CONTROLS.						
	NRCA-MCH-17-A CONDENSER WATER TEMPERATURE RESET CONTROLS.						
	NRCA-MCH-18-A ENERGY MANAGEMENT CONTROL SYSTEMS.	X	X	X	X	X	X
	NRCA-MCH-19-A OCCUPANCY SENSOR CONTROLS.						
	NRCA-MCH-20 MULTI-FAMILY VENTILATION.						
	NRCA-MCH-21 MULTI-FAMILY ENVENLOPE LEAKAGE.						
	NRCA-MCH-22-A MF DUCT LEAKAGE.						
	NRCA-MCH-23-A MF HRV/ERV VERIFICATION.						

1. REFER TO TITLE-24 DOCUMENTS FOR ADDITIONAL INFORMATION.
2. NRCA MUST BE SUMBITTED AND COMPLETED BY A CERTIFED ACCEPTANCE TEST TECHNICIAN TO COMPLY WITH CALIFORNIA ENERGY CODE.
3. SUBMIT ACCEPTANCE FORMS TO PROJECT INSPECTOR & MEOR FOR REVIEW.

OUTDOOR UNIT SCHEDULE

DESIGNATION	ODU 8.1
COOLING CAPACITY (MBH)	24.0
HEATING CAPACITY (MBH)	24.0
NOMINAL TONS	2
VOLTS/PHASE	208-230 / 1
FLA	N/A
MCA / MOCP	25 / 35
SEER / EER (AT ARI)	25.1 / 13
AMBIENT (°F)	105
REFRIG. LINE SIZE	
LIQUID (IN.OD)	3/8
SUCTION (IN. OD)	5/8
REFRIG. TYPE	R-410A
MANUFACTURER	CARRIER
TYPE	HEAT PUMP
MODEL NUMBER	38MARBQ24
SERVICE	ELEC 835
OPER. WT (LBS)	150
ACCESSORIES	-

INDOOR UNIT SCHEDULE

	DESIGNATION	IDU 8.1
BLOWER	SUPPLY AIR (CFM)	600
	EXT. S P (IN. WC)	N/A
	MIN. O.S.A. (CFM)	N/A
	MOCP	N/A
	MCA / FLA (AMPS)	.625 / - 1
	VOLTS/PHASE	208-230 / 1
	SEER / EER	25.1 / 13
COOLING	SENSIBLE (MBH)	24.0
	TOTAL (MBH)	24.0
	EADB/EAWB (°F)	N/A
	REFRIGERANT	R-410A
HEATING	CAPACITY (MBH) @47°F	24.0
	KW	N/A
	STAGES	VARIABLE
FILTER	QUANTITY/SIZE	FACTORY
	TYPE	FACTORY
	P D (IN. WC)	FACTORY
	MANUFACTURER	CARRIER
	TYPE	HEAT PUMP
	MODEL NUMBER	40MAHBQ24
	CONDENSING UNIT	ODU-8.1
	LOCATION	ELEC 835
	OPER. WT (LBS)	45
	ACCESSORIES	1, 2, 3

1 . POWERED BY ASSOCIATED ODU
2 . WIRED WALL CONTROLLER
3 . FACTORY CONDENSATE PUMP

APPROVALS

FILE # 54-76 APPLICATION # 02-121996

IDENTIFICATION STAMP
DIV. OF THE STATE ARCHITECT
APP: 02-121996 INC:
REVIEWED FOR
SS ☑ FLS ☑ ACS ☑
DATE: 8/14/2024

LICENSED ARCHITECT MICHAEL J. SCOTT No. C-34290 REN. 05-31-25 STATE OF CALIFORNIA

DATE: DECEMBER 31, 2023

NEW PRESCHOOL AND TK/KINDERGARTEN CLASSROOMS AT SANTA FE ELEMENTARY SCHOOL

PORTERVILLE UNIFIED SCHOOL DISTRICT
286 E ORANGE AVENUE, PORTERVILLE, CA 93257

REVISIONS

MANGINI ARCHITECTURE INGENUITY
BARENG MORRELLI SCOTT
MANGINI ASSOCIATES INC.
4320 West Mineral King Avenue
Visalia, California 93291
www.mangini.us
(559) 627-0530 Office
(559) 627-1926 Fax

REGISTERED PROFESSIONAL ENGINEER BRIAN W. CARLSON No. M34846 Exp. 6-30-26 MECHANICAL STATE OF CALIFORNIA

LAWRENCE ENGINEERING GROUP
4910 E. Clinton Way, Suite 101
(559) 431-0101
23114
Fresno, CA 93727
FAX (559) 431-1362

TITLE
MECHANICAL SCHEDULES GENERAL NOTES & LEGENDS

M3.2

PROJECT 23076

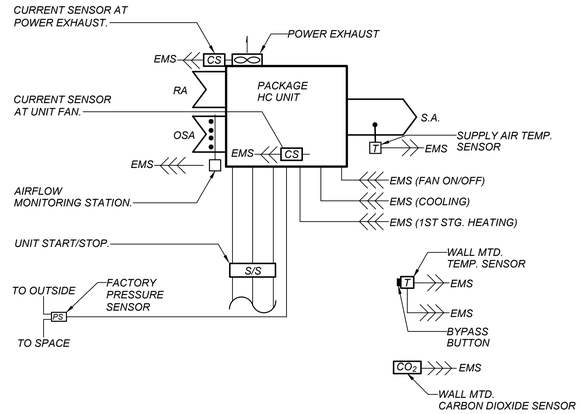

PACKAGE HC UNIT DIAGRAM

SCALE: NONE

F / M4.1

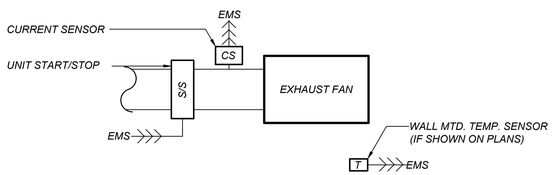

EXHAUST FAN DIAGRAM

SCALE: NONE

G / M4.1

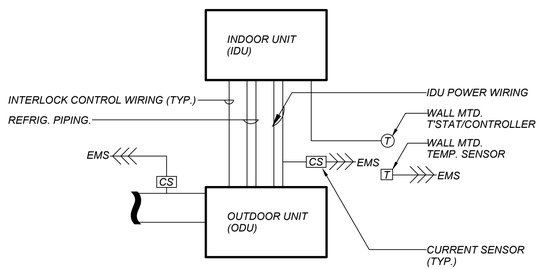

SPLIT SYSTEM DIAGRAM

SCALE: NONE

H / M4.1

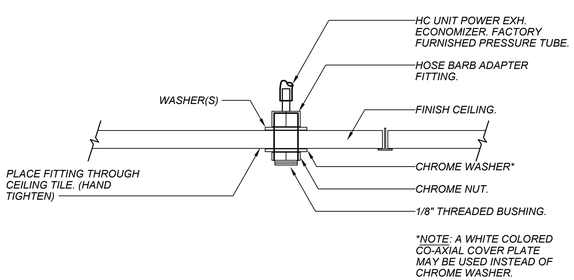

PRESSURE SENSOR TUBE MOUNTING DETAIL

SCALE: NONE

J / M4.1

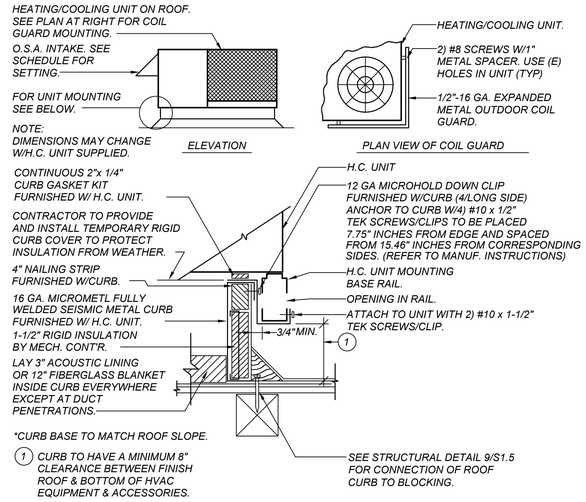

H.C. UNIT R00F MOUNTING DETAIL

SCALE: NONE

C / M4.1

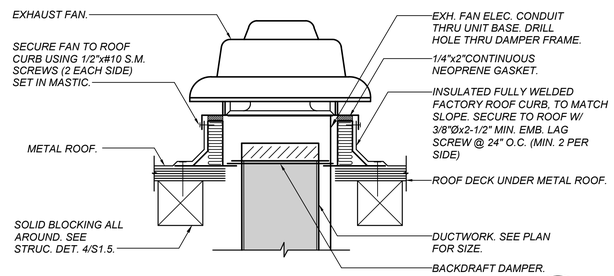

ROOF EXHAUST FAN MOUNTING DETAIL

SCALE: NONE

MM120

D / M4.1

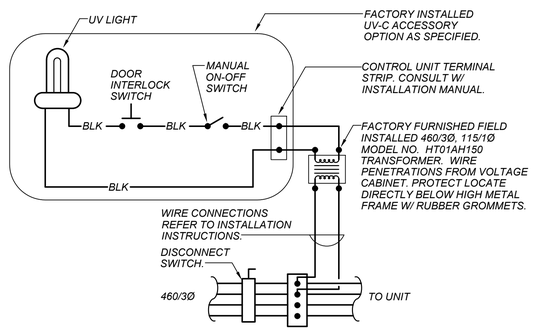

WIRING DIAGRAM FOR UV-C TRANSFORMER

SCALE: NONE

E / M4.1

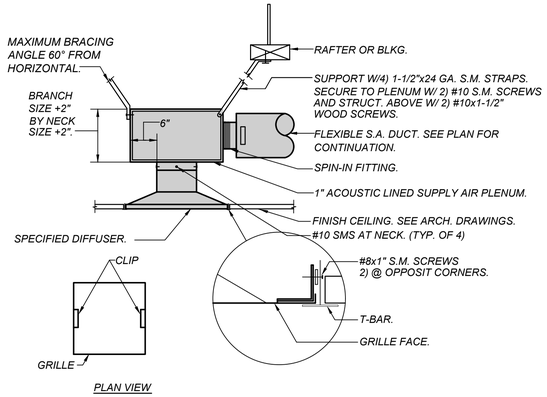

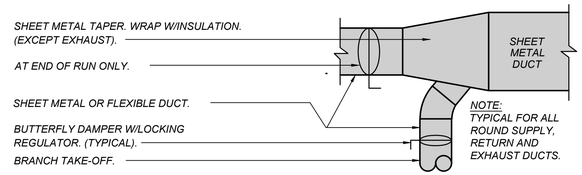

TYPICAL S.A. DEVICE-BRANCH DUCT DETAIL

SCALE: NONE

A / M4.1

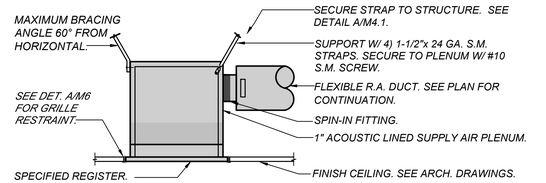

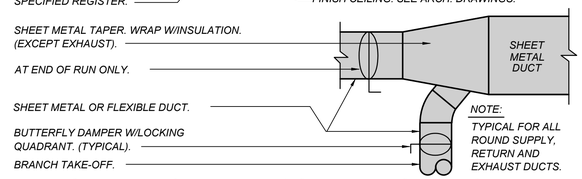

TYPICAL R.A. & E.A. DEVICE-BRANCH DUCT DETAIL

SCALE: NONE

B / M4.1

APPROVALS

FILE # 54-76 APPLICATION # 02-121996

IDENTIFICATION STAMP
DIV. OF THE STATE ARCHITECT
APP: 02-121996 INC:
REVIEWED FOR
SS ☑ FLS ☑ ACS ☑
DATE: 8/14/2024

LICENSED ARCHITECT MICHAEL J. SCOTT No. C-34290 REN. 05-31-25 STATE OF CALIFORNIA

DATE: DECEMBER 31, 2023

NEW PRESCHOOL AND TK/KINDERGARTEN CLASSROOMS AT SANTA FE ELEMENTARY SCHOOL

PORTERVILLE UNIFIED SCHOOL DISTRICT

286 E ORANGE AVENUE, PORTERVILLE, CA 93257

REVISIONS

MANGINI ARCHITECTURE INGENUITY.
BARENG MORRELLI SCOTT
MANGINI ASSOCIATES INC.
4320 West Mineral King Avenue
Visalia, California 93291
www.mangini.us
(559) 627.0530 Office
(559) 627.1926 Fax

REGISTERED PROFESSIONAL ENGINEER BRIAN W. CARLSON No. M34846 Exp. 6-30-26 MECHANICAL STATE OF CALIFORNIA

LAWRENCE ENGINEERING GROUP
4910 E. Clinton Way, Suite 101
(559) 431-0101
23114
Fresno, CA 93727
FAX (559) 431-1362

TITLE

MECHANICAL DETAILS

M4.1

PROJECT 23076

24 June 2024 11:35 AM P:\2023\23114 Porterville USD - Santa Fe ES - Kinder\4-Drawings\4 M\M4.1 & M4.2 - Mechanical Details.dwg rqj g

C:\Users\rqj\AppData\Local\Temp\AcPublish_4216\M4.1 & M4.2 - Mechanical Details.dwg Jun 24 2024 11:35am

GENERAL NOTES:

1. THE INTENT OF THE DRAWING AND SPECIFICATIONS IS TO CONSTRUCT THE BUILDING IN ACCORDANCE WITH THE 2022 EDITION OF TITLE 24, CALIFORNIA CODE OF REGULATIONS. CHANGES TO THE STRUCTURAL, ACCESSIBILITY OR FIRE AND LIFE-SAFETY PORTIONS OF THE APPROVED PLANS AND SPECIFICATIONS SHALL BE MADE BY AN ADDENDUM OR CONSTRUCTION CHANGE DOCUMENT AS REQUIRED IN SECTION 4-338, PART 1, TITLE 24, CCR, AND SHALL BE SUBMITTED TO AND APPROVED BY DSA PRIOR TO COMMENCEMENT OF THE WORK. DOCUMENTS SHALL BE PREPARED AND SUBMITTED TO DSA IN COMPLIANCE WITH DSA INTERPRETATION OF REGULATION IR A-6.

2. LAYOUT OF MATERIALS, EQUIPMENT AND SYSTEMS IS GENERALLY DIAGRAMMATIC UNLESS SPECIFICALLY DIMENSIONED. SOME WORK MAY BE SHOWN OFFSET FOR CLARITY. THE HVAC BUILDING PLANS HAVE BEEN PREPARED TO MATCH THE ARCHITECTURAL PLANS. IF DIFFERENCES OCCUR, THE ARCHITECTURAL PLANS ARE TO TAKE PRECEDENCE. THE ACTUAL LOCATIONS OF ALL MATERIALS, PIPING, DUCTWORK, FIXTURES, EQUIPMENT, SUPPORTS, ETC. SHALL BE CAREFULLY PLANNED, PRIOR TO INSTALLATION OF ANY WORK, TO AVOID ALL INTERFERENCE WITH EACH OTHER, OR WITH STRUCTURAL, ELECTRICAL, ARCHITECTURAL, OR OTHER ELEMENTS. ALL DUCT AND PIPE OFFSET ELBOWS FOR COORDINATION BETWEEN TRADES ARE NOT SHOWN. CONTRACTOR SHALL INCLUDE SUFFICIENT FUNDS FOR THE COORDINATION OFFSETS IN THE BID. VERIFY THE PROPER VOLTAGE AND PHASE OF ALL EQUIPMENT WITH THE ELECTRICAL PLANS. ALL CONFLICTS SHALL BE CALLED TO THE ATTENTION OF THE ARCHITECT AND THE ENGINEER PRIOR TO THE INSTALLATION OF ANY WORK OR THE ORDERING OF ANY EQUIPMENT.

3. WHEN INSTALLING DRILLED-IN ANCHORS AND/OR POWDER-DRIVEN PINS IN EXISTING NON-PRESTRESSED CONCRETE, USE CARE AND CAUTION TO AVOID CUTTING OR DAMAGING THE EXISTING REINFORCING BARS. WHEN INSTALLING THEM INTO EXISTING PRESTRESSED CONCRETE (PRE- OR POST-TENSIONED), LOCATE THE PRESTRESSED TENDONS BY USING A NON-DESTRUCTIVE METHOD PRIOR TO INSTALLATION. EXERCISE EXTREME CARE AND CAUTION TO AVOID CUTTING OR DAMAGING THE TENDONS DURING INSTALLATION. MAINTAIN A MINIMUM CLEARANCE OF ONE INCH BETWEEN THE REINFORCEMENT AND THE DRILLED-IN ANCHOR AND/OR PIN.

4. MEP COMPONENT ANCHORAGE NOTE:

   ALL MECHANICAL, PLUMBING, AND ELECTRICAL COMPONENTS SHALL BE ANCHORED AND INSTALLED PER THE DETAILS ON THE DSA APPROVED CONSTRUCTION DOCUMENTS. THE FOLLOWING COMPONENTS SHALL BE ANCHORED OR BRACED TO MEET THE FORCE AND DISPLACEMENT REQUIREMENTS PRESCRIBED IN THE 2022 CBC, SECTIONS 1617A.1.18 THROUGH 1617A.1.26 AND ASCE 7-16 CHAPTERS 13, 26 AND 30.

   1. ALL PERMANENT EQUIPMENT AND COMPONENTS.
   2. TEMPORARY OR MOVABLE EQUIPMENT THAT IS PERMANENTLY ATTACHED (E.G. HARD WIRED) TO THE BUILDING UTILITY SERVICES SUCH AS ELECTRICITY, GAS OR WATER. "PERMANENTLY ATTACHED" SHALL INCLUDE ALL ELECTRICAL CONNECTIONS EXCEPT PLUGS FOR 110/220 VOLT RECEPTACLES HAVING A FLEXIBLE CABLE.
   3. TEMPORARY, MOVABLE OR MOBILE EQUIPMENT WHICH IS HEAVER THAN 400 POUNDS OR HAS A CENTER OF MASS LOCATED 4 FEET OR MORE ABOVE THE ADJACENT FLOOR OR ROOF LEVEL THAT DIRECTLY SUPPORT THE COMPONENT IS REQUIRED TO BE RESTRAINED IN A MANNER APPROVED BY DSA.

   THE FOLLOWING MECHANICAL AND ELECTRICAL COMPONENTS SHALL BE POSITIVELY ATTACHED TO THE STRUCTURE BUT NEED NOT DEMONSTRATE DESIGN COMPLIANCE WITH THE REFERENCES NOTED ABOVE. THESE COMPONENTS SHALL HAVE FLEXIBLE CONNECTIONS PROVIDED BETWEEN THE COMPONENT AND ASSOCIATED DUCTWORK, PIPING AND CONDUIT. FLEXIBLE CONNECTIONS MUST ALLOW MOVEMENT IN BOTH TRANSVERSE AND LONGITUDINAL DIRECTIONS:

   A. COMPONENTS WEIGHING LESS THAN 400 POUNDS AND HAVE A CENTER OF MASS LOCATED 4 FEET OR LESS ABOVE THE ADJACENT FLOOR OR ROOF LEVEL THAT DIRECTLY SUPPORT THE COMPONENT.
   B. COMPONENTS WEIGHING LESS THAN 20 POUNDS, OR IN THE CASE OF DISTRIBUTED SYSTEMS, LESS THAN THAN 5 POUNDS PER FOOT, WHICH ARE SUSPENDED FROM A ROOF OR FLOOR OR HUNG FROM A WALL.

   THE ANCHORAGE OF ALL MECHANICAL, ELECTRICAL AND PLUMBING COMPONENTS SHALL BE SUBJECT TO THE APPROVAL OF THE DESIGN PROFESSIONAL IN GENERAL RESPONSIBLE CHARGE OR STRUCTURAL ENGINEER DELEGATED RESPONSIBILITY AND ACCEPTANCE BY DSA. THE PROJECT INSPECTOR WILL VERIFY THAT ALL COMPONENTS AND EQUIPMENT HAVE BEEN ANCHORED IN ACCORDANCE WITH ABOVE REQUIREMENTS.

5. PIPING, DUCTWORK AND ELECTRICAL DISTRIBUTION SYSTEM BRACING NOTE:

   PIPING, DUCTWORK, AND ELECTRICAL DISTRIBUTION SYSTEMS SHALL BE BRACED TO COMPLY WITH THE FORCES AND DISPLACEMENTS PRESCRIBED IN ASCE 7-16 SECTION 13.3 AS DEFINED IN ASCE 7-16 SECTION 13.6.5, 13.6.6, 13.6.7, 13.6.8; AND 2022 CBC, SECTIONS 1617A.1.24, 1617A.1.25 AND 1617A.1.26.

   THE METHOD OF SHOWING BRACING AND ATTACHMENTS TO THE STRUCTURE FOR THE IDENTIFIED DISTRIBUTION SYSTEM ARE AS NOTED BELOW. WHEN BRACING AND ATTACHMENTS ARE BASED ON A PREAPPROVED INSTALLATION GUIDE (E.G., HCAI (OSHPD) OPM FOR 2022 CBC OR LATER), COPIES OF THE BRACING SYSTEM INSTALLATION GUIDE OR MANUAL SHALL BE AVAILABLE ON THE JOBSITE PRIOR TO THE START OF AND DURING THE HANGING AND BRACING OF THE DISTRIBUTION SYSTEMS. THE STRUCTURAL ENGINEER OF RECORD SHALL VERIFY THE ADEQUACY OF THE STRUCTURE TO SUPPORT THE HANGER AND BRACE LOADS.

   MECHANICAL PIPING (MP), MECHANICAL DUCTS (MD), PLUMBING PIPING (PP), ELECTRICAL DISTRIBUTION SYSTEMS(E):

   MP☒ MD☒ PP☐ E☐ OPTION 1: DETAILED ON THE APPROVED DRAWINGS WITH PROJECT SPECIFIC NOTES AND DETAILS.

   MP☐ MD☐ PP☐ E☐ OPTION 2: SHALL COMPLY WITH THE APPLICABLE HCAI (OSHPD) PRE-APPROVAL (OPM#) # _____ .

6. PENETRATIONS THROUGH FIRE RATED WALLS, FLOOR/CEILING, AND ROOF/CEILING ASSEMBLIES SHALL BE SEALED USING AN APPROVED SYSTEM CAPABLE OF PREVENTING THE PASSAGE OF FLAMES AND HOT GASES WHEN SUBJECTED TO THE REQUIREMENTS OF THE TEST STANDARD SPECIFIC TO FIRE STOPS PER 2022 CBC SECTION 714. THIS INCLUDES EXISTING PIPE AND CONDUIT THROUGH NEW ASSEMBLIES. CUSTOM DESIGNED SYSTEMS WHICH COMBINE COMPONENTS FROM DIFFERENT APPROVED SYSTEMS BUT HAVE NOT BEEN TESTED AS A COMPLETE ASSEMBLY WILL NOT BE ACCEPTABLE. FOR FIRE STOPS FOR PIPE PENETRATIONS SEE SPECIFICATIONS.

7. DUCTWORK SIZES SHOWN ARE INSIDE CLEAR DIMENSIONS. WHERE ACOUSTIC LINING IS SHOWN, INCREASE EACH SHEET METAL DIMENSION TO ACCOMMODATE LINING & MAINTAIN CLEAR INSIDE DUCT DIMENSIONS SHOWN.

8. SA DUCTWORK SHALL BE 1" PRESSURE CLASS, AND RA & EA DUCTWORK SHALL 1" PRESSURE CLASS UNLESS OTHERWISE NOTED.

9. A DSA CERTIFIED PROJECT INSPECTOR (CLASS 2) EMPLOYED BY THE DISTRICT & APPROVED BY DSA SHALL PROVIDE CONTINUOUS INSPECTION OF THE WORK. THE DUTIES OF THE INSPECTOR ARE DEFINED IN SECTION 4-338, PART 1, TITLE 24, CCR.

10. A DSA ACCEPTED TESTING LABORATORY DIRECTLY EMPLOYED BY THE DISTRICT SHALL CONDUCT ALL THE REQUIRED TESTS AND INSPECTIONS FOR THE PROJECT.

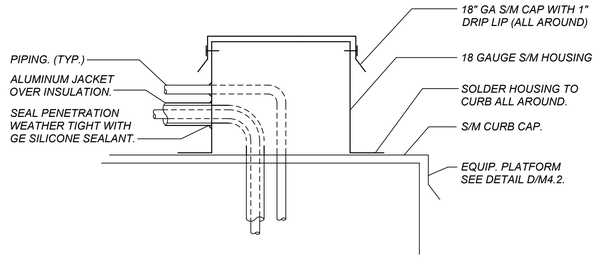

PIPE THRU PLATFORM DETAIL (E / M4.2)

SCALE: NONE

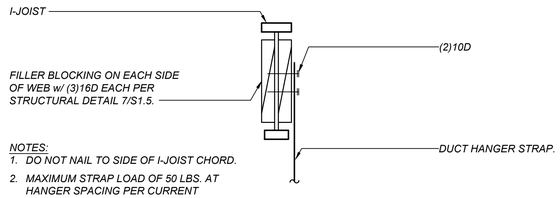

NOTES:
1. DO NOT NAIL TO SIDE OF I-JOIST CHORD.
2. MAXIMUM STRAP LOAD OF 50 LBS. AT HANGER SPACING PER CURRENT SMACNA GUIDELINES.

I-JOIST DUCT HANGER STRAP DETAIL (F / M4.2)

SCALE: NONE

NOTE: DUCT SUPPORTS SHALL BE 10'-0" O.C. ALL DUCTS ARE LESS THAN 28"Ø AND DON'T REQUIRE DIAGONAL BRACING PER OPM-0052-13, SECTION 5.0.

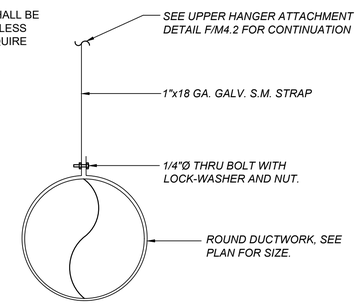

ROUND DUCT HANGING DETAIL (G / M4.2)

SCALE: NONE

MATERIAL LEGEND

ALL PART NUMBERS ARE ALERTON UNLESS OTHERWISE NOTED

SYMBOL	DESCRIPTION
LCP	LIGHTING CONTROL PANEL
TX	LOW VOLTAGE CONTROL TRANSFORMER
VLC	ALERTON BACNET PROGRAMMABLE CONTROLLER
BPT	2 HOUR BY-PASS TIMER
PC	KELE CELESTIAL AMBIENT LIGHT SENSOR, OUTDOOR, 0-5 VDC
LC	LIGHTING CONTACTOR - BY EC
PWR	POWER BY DIV. ELECTRICAL CONTRACTOR

AI = ANALOG INPUT — AO = ANALOG OUTPUT
DI = DIGITAL INPUT — DO = DIGITAL OUTPUT

WIRING BY BUILDING AUTOMATION CONTRACTOR (BAS)

WIRING BY DIVISION ELECTRICAL CONTRACTOR (EC)

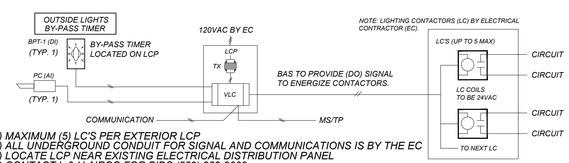

1) MAXIMUM (5) LC'S PER EXTERIOR LCP
2) ALL UNDERGROUND CONDUIT FOR SIGNAL AND COMMUNICATIONS IS BY THE EC
3) LOCATE LCP NEAR EXISTING ELECTRICAL DISTRIBUTION PANEL
4) CONTACT L & H AIRCO FOR BIDS (559) 253-9660

TYPICAL EXTERIOR LIGHTING ALERTON BAS LAYOUT (H / M4.2)

SCALE: NONE

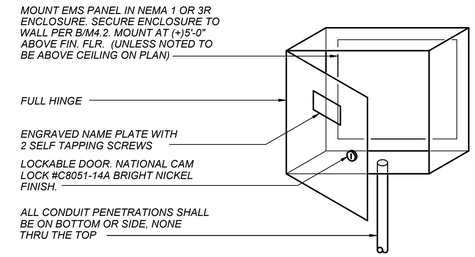

EMS PANEL ENCLOSURE DETAIL (A / M4.2)

SCALE: NONE

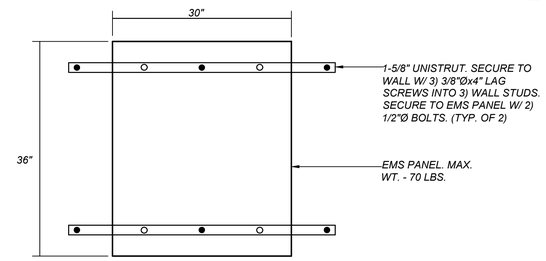

EMS PANEL MOUNTING DETAIL (B / M4.2)

SCALE: NONE

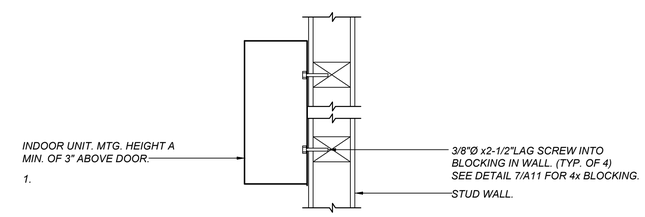

INDOOR UNIT MOUNTING DETAIL (C / M4.2)

SCALE: NONE

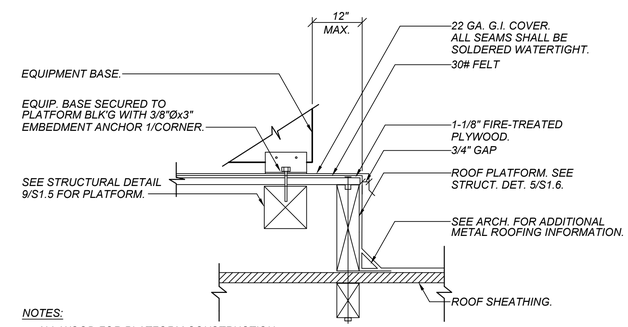

NOTES:
ALL WOOD FOR PLATFORM CONSTRUCTION IS TO BE FIRE RETARDANT TREATED.

ROOF PLATFORM DETAIL (D / M4.2)

SCALE: NONE

REGISTERED PROFESSIONAL ENGINEER — RYAN W. CARLSON — No. M34846 — Exp. 6-30-26 — MECHANICAL — STATE OF CALIFORNIA

LAWRENCE ENGINEERING GROUP
4910 E. Clinton Way, Suite 101 (559) 431-0101
23114
Fresno, CA 93727 FAX (559) 431-1362

APPROVALS
FILE # 54-76 — APPLICATION # 02-121996

IDENTIFICATION STAMP
DIV. OF THE STATE ARCHITECT
APP: 02-121996 INC:
REVIEWED FOR
SS ☑ FLS ☑ ACS ☑
DATE: 8/14/2024

LICENSED ARCHITECT — MICHAEL J. SCOTT — No. C-34290 — REN. 05-31-25 — STATE OF CALIFORNIA

DATE: DECEMBER 31, 2023

NEW PRESCHOOL AND TK/KINDERGARTEN CLASSROOMS AT SANTA FE ELEMENTARY SCHOOL

PORTERVILLE UNIFIED SCHOOL DISTRICT
286 E ORANGE AVENUE, PORTERVILLE, CA 93257

REVISIONS

MANGINI ARCHITECTURE INGENUITY
BARENG MORRELLI SCOTT
MANGINI ASSOCIATES INC.
4320 West Mineral King Avenue
Visalia, California 93291
www.mangini.us
(559) 627.0530 Office
(559) 627.1926 Fax

TITLE
MECHANICAL DETAILS

M4.2

PROJECT 23076

24 June 2024 11:35 AM P:\2023\23114 Porterville USD – Santa Fe ES – Kinder\4-Drawings\4 M\M4.1 & M4.2 – Mechanical Details.dwg rej g

APPROVALS

FILE # 54-76 | APPLICATION # 02-121996

IDENTIFICATION STAMP
DIV. OF THE STATE ARCHITECT
APP: 02-121996 INC:
REVIEWED FOR
SS ☑ FLS ☑ ACS ☑
DATE: 8/14/2024

LICENSED ARCHITECT MICHAEL J. SCOTT No. C-34290 REN. 05-31-25 STATE OF CALIFORNIA

DATE: DECEMBER 31, 2023

CERTIFICATE OF COMPLIANCE - NONRESIDENTIAL PERFORMANCE COMPLIANCE METHOD NRCC-PRF-E

Nonresidential Performance Compliance Method (Page 1 of 19)

Project Name: Building 700 | **Date Prepared:** 2023-12-05

A. General Information

1	Project Name	Building 700			
2	Run Title	Title 24 Analysis			
3	Project Location	286 E Orange Ave			
4	City	Porterville	5	Standards Version	Compliance 2022
6	Zip code	93257	7	Compliance Software (version)	EnergyPro 9.1
8	Climate Zone	13	9	Building Orientation (deg)	315
10	Building Type(s)	• Nonresidential	11	Weather File	PORTERVILLE_STYP20.epw
12	Project Scope	• New envelope and mechanical	13	Number of Dwelling Units	0
14	Total Conditioned Floor Area in Scope (ft^2)	5115	15	Total # of hotel/motel rooms	0
16	Total Unconditioned Floor Area (ft^2)	0	17	Fuel Type	Natural gas
18	Nonresidential Conditioned Floor Area	5115	19	Total # of Stories (Habitable Above Grade)	1
20	Residential Conditioned Floor Area	0			

CA Building Energy Efficiency Standards - 2022 Nonresidential Compliance | Report Version: 2022.0.000 Schema Version: rev 20220601 | Report Generated: 2023-12-05 09:35:20 Compliance ID: EnergyPro-2975-1223-0446

CERTIFICATE OF COMPLIANCE - NONRESIDENTIAL PERFORMANCE COMPLIANCE METHOD NRCC-PRF-E

Nonresidential Performance Compliance Method (Page 2 of 19)

B. PROJECT SUMMARY

Table B shows which building components are included in the performance calculation. If indicated as not included, the project must show compliance prescriptively if within the permit application.

Building Components Complying via Performance

Envelope (See Table G)	Nonres	Performance	Solar Thermal Water Heating (See Table I3)	☐	Performance
	MultiFam	Not Included		☒	Not Included
Mechanical (See Table H)	Nonres	Performance	Covered Process: Commercial Kitchens (see Table J)	☐	Performance
	MultiFam	Not Included		☒	Not Included
Domestic Hot Water (See Table I)	Nonres	Not Included	Covered Process: Laboratory Exhaust (see Table J)	☐	Performance
	MultiFam	Not Included		☒	Not Included
Lighting (Indoor Conditioned, see Table K)	Nonres	Not Included	Photovoltaics (see Table F)	☒	Performance
	MultiFam	Not Included		☐	Not Included
			Battery (see Table F)	☒	Performance
				☐	Not Included

Building Components Complying Prescriptively

The following building components are ONLY eligible for prescriptive compliance and should be documented on the NRCC form listed if within the scope of the permit application (i.e. compliance will not be shown on the NRCC-PRF-E).

Indoor Lighting (Unconditioned) 140.6 & 170.2(e)	NRCC-LTI-E is required
Outdoor Lighting 140.7 & 170.2(e)	NRCC-LTO-E is required
Sign Lighting 140.8 & 170.2(e)	NRCC-LTS-E is required

Building Components Complying with Mandatory Measures

Electrical power systems, commissioning, solar ready, elevator and escalator requirements are mandatory and should be documented on the NRCC form listed if applicable (i.e. compliance will not be shown on the NRCC-PRF-E.)	
Electrical Power Distribution 110.11	NRCC-ELC-E is required
Commissioning 120.8	NRCC-CXR-E is required
Solar and Battery 110.10	NRCC-SAB-E is required

CA Building Energy Efficiency Standards - 2022 Nonresidential Compliance | Report Version: 2022.0.000 Schema Version: rev 20220601 | Report Generated: 2023-12-05 09:35:20 Compliance ID: EnergyPro-2975-1223-0446

CERTIFICATE OF COMPLIANCE - NONRESIDENTIAL PERFORMANCE COMPLIANCE METHOD NRCC-PRF-E

Nonresidential Performance Compliance Method (Page 3 of 19)

C1. COMPLIANCE SUMMARY

COMPLIES[3]

	Time Dependent Valuaton (TDV)		Source Energy Use
	Efficiency[1] (kBtu/ft² - yr)	Total[2] (kBtu/ft² - yr)	Total[2] (kBtu/ft² - yr)
Standard Design	267.72	212.42	16.77
Proposed Design	263.62	199.98	16.38
Compliance Margins	**4.1**	**12.44**	**0.39**
	Pass	**Pass**	**Pass**

[1] *Efficiency measures include improvements like a better building envelope and more efficient equipment*
[2] *Compliance Totals include efficiency, photovoltaics and batteries*
[3] *Building complies when efficiency and total compliance margins are greater than or equal to zero and unmet load hour limits are not exceeded*

CA Building Energy Efficiency Standards - 2022 Nonresidential Compliance | Report Version: 2022.0.000 Schema Version: rev 20220601 | Report Generated: 2023-12-05 09:35:20 Compliance ID: EnergyPro-2975-1223-0446

CERTIFICATE OF COMPLIANCE - NONRESIDENTIAL PERFORMANCE COMPLIANCE METHOD NRCC-PRF-E

Nonresidential Performance Compliance Method (Page 4 of 19)

C2. TDV ENERGY COMPLIANCE RESULTS FOR PERFORMANCE COMPONENTS (Annual TDV Energy Use, kBtu/ft² - yr)

COMPLIES[2]

Energy Component	Standard Design (TDV)	Proposed Design (TDV)	Compliance Margin (TDV)[1]
Space Heating	7.31	7.25	0.06
Space Cooling	91.17	87.78	3.39
Indoor Fans	115.12	114.47	0.65
Heat Rejection	0	0	0
Pumps & Misc.	0	0	0
Domestic Hot Water	22.05	22.05	0
Indoor Lighting	32.07	32.07	0
Flexibility	---	---	---
EFFICIENCY COMPLIANCE TOTAL	**267.72**	**263.62**	**4.1 (1.5%)**
Photovoltaics	-52.35	-62.48	10.13
Batteries	-2.95	-1.16	-1.79
TOTAL COMPLIANCE	**212.42**	**199.98**	**12.44 (5.9%)**

[1] *Notes: This number in parenthesis following the Compliance Margin in column 4, represents the Percent Better than Standard.*

CA Building Energy Efficiency Standards - 2022 Nonresidential Compliance | Report Version: 2022.0.000 Schema Version: rev 20220601 | Report Generated: 2023-12-05 09:35:20 Compliance ID: EnergyPro-2975-1223-0446

CERTIFICATE OF COMPLIANCE - NONRESIDENTIAL PERFORMANCE COMPLIANCE METHOD NRCC-PRF-E

Nonresidential Performance Compliance Method (Page 5 of 19)

C3. TDV ENERGY RESULTS FOR NON-REGULATED COMPONENTS[1]

Non-Regulated Energy Component	Standard Design (TDV)	Proposed Design (TDV)	Compliance Margin (TDV)[1]
Receptacle	76.1	76.1	---
Process	95.1	95.1	---
Other Ltg	---	---	---
Process Motors	---	---	---
TOTAL (TOTAL COMPLIANCE + NON-REGULATED COMPONENTS)	**383.62**	**371.18**	**12.44 (3.2%)**

[1] *Notes: This table is not used for Energy Code Compliance.*

CA Building Energy Efficiency Standards - 2022 Nonresidential Compliance | Report Version: 2022.0.000 Schema Version: rev 20220601 | Report Generated: 2023-12-05 09:35:20 Compliance ID: EnergyPro-2975-1223-0446

CERTIFICATE OF COMPLIANCE - NONRESIDENTIAL PERFORMANCE COMPLIANCE METHOD NRCC-PRF-E

Nonresidential Performance Compliance Method (Page 6 of 19)

C4. SOURCE ENERGY COMPLIANCE RESULTS FOR PERFORMANCE COMPONENTS (Annual SOURCE Energy Use, kBtu/ft² /yr)

COMPLIES[2]

Energy Component	Standard Design (SOURCE)	Proposed Design (SOURCE)	Compliance Margin (SOURCE)[1]
Space Heating	0.98	0.97	0.01
Space Cooling	4.06	3.8	0.26
Indoor Fans	9.77	9.85	-0.08
Heat Rejection	0	0	0
Pumps & Misc.	0	0	0
Domestic Hot Water	2.01	2.01	0
Indoor Lighting	2.57	2.57	0
Flexibility	---	---	---
EFFICIENCY COMPLIANCE TOTAL	**19.39**	**19.2**	**0.19 (1%)**
Photovoltaics	-1.95	-2.29	0.34
Batteries	-0.67	-0.53	-0.14
TOTAL COMPLIANCE	**16.77**	**16.38**	**0.39 (2.3%)**

[1] *Notes: This number in parenthesis following the Compliance Margin in column 4, represents the Percent Better than Standard.*

CA Building Energy Efficiency Standards - 2022 Nonresidential Compliance | Report Version: 2022.0.000 Schema Version: rev 20220601 | Report Generated: 2023-12-05 09:35:20 Compliance ID: EnergyPro-2975-1223-0446

CERTIFICATE OF COMPLIANCE - NONRESIDENTIAL PERFORMANCE COMPLIANCE METHOD NRCC-PRF-E

Nonresidential Performance Compliance Method (Page 7 of 19)

C5. SOURCE ENERGY RESULTS FOR NON-REGULATED COMPONENTS[1]

Non-Regulated Energy Component	Standard Design (SOURCE)	Proposed Design (SOURCE)	Compliance Margin (SOURCE)[1]
Receptacle	5.69	5.69	---
Process	7.03	7.03	---
Other Ltg	---	---	---
Process Motors	---	---	---
TOTAL (TOTAL COMPLIANCE + NON-REGULATED COMPONENTS)	**29.49**	**29.1**	**0.39 (1.3%)**

[1] *Notes: This table is not used for Energy Code Compliance.*

C6. 'ABOVE CODE' QUALIFICATIONS

☐ This project is pursuing CalGreen Tier 1 ☐ This project is pursuing CalGreen Tier 2

CA Building Energy Efficiency Standards - 2022 Nonresidential Compliance | Report Version: 2022.0.000 Schema Version: rev 20220601 | Report Generated: 2023-12-05 09:35:20 Compliance ID: EnergyPro-2975-1223-0446

CERTIFICATE OF COMPLIANCE - NONRESIDENTIAL PERFORMANCE COMPLIANCE METHOD NRCC-PRF-E

Nonresidential Performance Compliance Method (Page 8 of 19)

C7. ENERGY USE SUMMARY

Energy Component	Standard Design Site (MWh)	Proposed Design Site (MWh)	Margin (MWh)	Standard Design Site (MBtu)	Proposed Design Site (MBtu)	Margin (MBtu)
Space Heating	1	1.1	-0.1	---	---	---
Space Cooling	13.4	11.9	1.5	---	---	---
Indoor Fans	20.7	20.5	0.2	---	---	---
Heat Rejection	---	---	---	---	---	---
Pumps & Misc.	---	---	---	---	---	---
Domestic Hot Water	4.6	4.6	0	---	---	---
Indoor Lighting	6.3	6.3	0	---	---	---
Flexibility	---	---	---	---	---	---
EFFICIENCY TOTAL	**46**	**44.4**	**1.6**	**0**	**0**	**0**
Photovoltaics	-13.5	-15.9	2.4	---	---	---
Batteries	0.1	0.1	0	---	---	---
ENERGY USE SUBTOTAL	**32.6**	**28.6**	**4**	**0**	**0**	**0**
Receptacle	15.6	15.6	0	---	---	---
Process	19.9	19.9	0	---	---	---
Other Ltg	---	---	---	---	---	---
Process Motors	---	---	---	---	---	---
ENERGY USE TOTAL	**68.1**	**64.1**	**4**	**0**	**0**	**0**

CA Building Energy Efficiency Standards - 2022 Nonresidential Compliance | Report Version: 2022.0.000 Schema Version: rev 20220601 | Report Generated: 2023-12-05 09:35:20 Compliance ID: EnergyPro-2975-1223-0446

CERTIFICATE OF COMPLIANCE - NONRESIDENTIAL PERFORMANCE COMPLIANCE METHOD NRCC-PRF-E

Nonresidential Performance Compliance Method (Page 9 of 19)

C8. ENERGY USE INTENSITY (EUI)

	Standard Design (kBtu/ft² / yr)	Proposed Design (kBtu/ft² / yr)	Margin (kBtu/ft² / yr)	Margin Percentage
GROSS EUI[1]	54.43	53.36	1.07	1.97
NET EUI[1]	45.43	42.76	2.67	5.88

[1] *Notes: Gross EUI is Energy Use Total (not including PV)/Total Building Area. Net EUI is Energy Use Total (including PV)/Total Building Area.*

D1. EXCEPTIONAL CONDITIONS

• The project uses the Simplified Geometry Performance Modeling Approach which is not capable of modeling daylighting controls and assumes the prescriptive Secondary Daylit Control requirements are met. PRESCRIPTIVE COMPLIANCE documentation (form NRCC-LTI-02-E) for the requirements of section 140.6(d) Automatic Daylighting Controls in Secondary Daylit Zones is required.
• The building does not include service water heating. Verify that service water heating is not required and is not included in the design.
• PV/Battery Building Type has been modified from software defaults for one or more spaces. Review project's PV/Battery Building Type(s) with documentation author. Refer to Energy Code section 140.10 for Nonresidential or 170.2(g) for more information.

F1. REQUIRED PV SYSTEMS

01	02	03	04	05	06	07	08	09	10	11	12
DC System Size (kWdc)	Exception[1]	Module Type	Array Type	Power Electronics	CFI	Azimuth (deg)	Tilt Input	Array Angle (deg)	Tilt: (x in 12)	Inverter Eff. (%)	Annual Solar Access (%)
9.55	n/a	Standard (14-17%)	Fixed	none	false	180	Degrees	18	3.9	96	100

[1] *See Table D1 for any PV exceptions used.*

CA Building Energy Efficiency Standards - 2022 Nonresidential Compliance | Report Version: 2022.0.000 Schema Version: rev 20220601 | Report Generated: 2023-12-05 09:35:20 Compliance ID: EnergyPro-2975-1223-0446

NEW PRESCHOOL AND TK/KINDERGARTEN CLASSROOMS AT SANTA FE ELEMENTARY SCHOOL

PORTERVILLE UNIFIED SCHOOL DISTRICT
286 E ORANGE AVENUE, PORTERVILLE, CA 93257

REVISIONS

MANGINI ARCHITECTURE INGENUITY
BARENG MORRELLI SCOTT
MANGINI ASSOCIATES INC.
4320 West Mineral King Avenue
Visalia, California 93291
www.mangini.us
(559) 627.0530 Office
(559) 627.1926 Fax

REGISTERED PROFESSIONAL ENGINEER BRIAN W. CARLSON NO. M34546 Exp. 6-30-26 MECHANICAL STATE OF CALIFORNIA

LAWRENCE ENGINEERING GROUP
4910 E. Clinton Way, Suite 101
(559) 431-0101
23114
Fresno, CA 93727
FAX (559) 431-1362

TITLE TITLE 24 DOCUMENTS

M5.1

PROJECT 23076

APPROVALS

FILE # 54-76 APPLICATION # 02-121996

IDENTIFICATION STAMP
DIV. OF THE STATE ARCHITECT
APP: 02-121996 INC:
REVIEWED FOR
SS ☑ FLS ☑ ACS ☑
DATE: 8/14/2024

LICENSED ARCHITECT MICHAEL J. SCOTT No. C-34290 REN. 05-31-25 STATE OF CALIFORNIA

DATE: DECEMBER 31, 2023

NEW PRESCHOOL AND TK/KINDERGARTEN CLASSROOMS AT SANTA FE ELEMENTARY SCHOOL
PORTERVILLE UNIFIED SCHOOL DISTRICT
286 E ORANGE AVENUE, PORTERVILLE, CA 93257

REVISIONS

MANGINI ARCHITECTURE INGENUITY
BARENG MORRELLI SCOTT
MANGINI ASSOCIATES INC.
4320 West Mineral King Avenue
Visalia, California 93291
www.mangini.us
(559) 627-0530 Office
(559) 627-1926 Fax

TITLE
TITLE 24 DOCUMENTS

M5.2

PROJECT 23076

REGISTERED PROFESSIONAL ENGINEER RYAN W. CARLSON No. M34846 Exp. 6-30-26 MECHANICAL STATE OF CALIFORNIA

LAWRENCE ENGINEERING GROUP
4910 E. Clinton Way, Suite 101
(559) 431-0101
23114
Fresno, CA 93727
FAX (559) 431-1362

CERTIFICATE OF COMPLIANCE - NONRESIDENTIAL PERFORMANCE COMPLIANCE METHOD NRCC-PRF-E

Nonresidential Performance Compliance Method (Page 12 of 19)

G5. OPAQUE SURFACE ASSEMBLY SUMMARY

01	02	03	04	05	06		07	08	09	10
Surface Name	Construction Type	Area (ft²)	Framing Type	Cavity R-Value	Continuous R-Value		Units	Value	Description of Assembly Layers	Status[1]
					Interior	Exterior				
23114 Exterior Wall6	Exterior Wall	4,650	Wood	19	N/A	N/A	U-factor	0.0678	Mortar - Cement - 1 in. Plywood - 1/2 in. Composite-1 Gypsum Board - 5/8 in.	N
Slab On Grade14	Underground Floor	5,115	N/A	0	N/A	N/A	F-factor	0.73	Slab Type =Unheated slab on grade Insulation Orientation =None Insulation R-Value =none	N
23114 Acoustic Roof16	Roof	3,456	Metal	30	N/A	N/A	U-factor	0.0544	AsphaltShingles0_25In Plywood - 1/2 in. Composite-2 Air - Cavity - Wall Roof Ceiling - 4 in. or more Acoustic Tile - 3/8 in.	N
23114 Gyp Roof32	Roof	1,659	Metal	30	N/A	18	U-factor	0.0278	AsphaltShingles0_25In Plywood - 1/2 in. Composite-3 Air - Cavity - Wall Roof Ceiling - 4 in. or more Glass fiber batt - 5 1/2 in. R19 (CEC Default) Gypsum Board - 5/8 in.	N
23114 Interior Wall36	Interior Wall	1,044	Wood	0	N/A	N/A	U-factor	0.334	Gypsum Board - 5/8 in. Composite-4 Gypsum Board - 5/8 in.	N

[1] *Status: N - New, A - Altered, E - Existing*

CA Building Energy Efficiency Standards - 2022 Nonresidential Compliance | Report Version: 2022.0.000 Schema Version: rev 20220601 | Report Generated: 2023-12-05 09:35:20 Compliance ID: EnergyPro-2975-1223-0446

CERTIFICATE OF COMPLIANCE - NONRESIDENTIAL PERFORMANCE COMPLIANCE METHOD NRCC-PRF-E

Nonresidential Performance Compliance Method (Page 11 of 19)

G1. ENVELOPE GENERAL INFORMATION (conditioned spaces only)

01	02	03	04
Opaque Surfaces & Orientation	Total Gross Surface Area (ft²)	Total Fenestration Area (ft²)	Window to Wall Ratio (%)
North-Facing[1]	252	18.84	7.48
East-Facing[2]	1852	372.36	20.11
South-Facing[3]	638	50	7.84
West-Facing[4]	1908	0	0
Total	**4650**	**441.2**	**9.49**
Roof	5115	0	0

Notes
[1]*North-Facing is oriented to within 45 degrees of true north, including 45 00'00" east of north (NE), but excluding 45 00'00" west of north (NW),*
[2]*East-Facing is oriented to within 45 degrees of true east, including 45 00'00" south of east (SE), but excluding 45 00'00" north of east (NE),*
[3]*South-Facing is oriented to within 45 degrees of true south, including 45 00'00" west of south (SW), but excluding 45 00'00" east of south (SE),*
[4]*West-Facing is oriented to within 45 degrees of true west, including 45 00'00" north of west (NW), but excluding 45 00'00" south of west (SW),*

G4. NONRESIDENTIAL AIR BARRIER

01	02
Building Story Name	Air Barrier
Com-Floor 1	No air barrier

CA Building Energy Efficiency Standards - 2022 Nonresidential Compliance | Report Version: 2022.0.000 Schema Version: rev 20220601 | Report Generated: 2023-12-05 09:35:20 Compliance ID: EnergyPro-2975-1223-0446

CERTIFICATE OF COMPLIANCE - NONRESIDENTIAL PERFORMANCE COMPLIANCE METHOD NRCC-PRF-E

Nonresidential Performance Compliance Method (Page 10 of 19)

F1B. PV BATTERY BUILDING TYPE(S)

01	02	03
Building Occupancy Type* (From Table 140.10-A/B and 170.2-U/V)	Conditioned Floor Area (ft²)	Unconditioned Floor Area (ft²)
Grocery	0	0
High-Rise Multifamily	0	0
Office, Financial Institutions, Unleased Tenant Space	0	0
Retail	0	0
School	5115	0
Warehouse	0	0
Auditorium, Convention Center, Hotel/Motel, Library, Medical Office Building/Clinic, Restaurant, Theater	0	0
None	0	0

Building Occupancy Types are defined in Section 100.1 of the Energy Code

F2. BATTERY SYSTEMS[1]

01	02	03	04	05	06	07
Control	Capacity (kWh)	Charging Efficiency	Charging Rate (kW)	Discharging Efficiency	Discharging Rate (kW)	Round Trip Efficiency
Basic	18.1	N/A	5	N/A	5	0.9

[1]*See Table D1 for any Battery exceptions used.*

CA Building Energy Efficiency Standards - 2022 Nonresidential Compliance | Report Version: 2022.0.000 Schema Version: rev 20220601 | Report Generated: 2023-12-05 09:35:20 Compliance ID: EnergyPro-2975-1223-0446

CERTIFICATE OF COMPLIANCE - NONRESIDENTIAL PERFORMANCE COMPLIANCE METHOD NRCC-PRF-E

Nonresidential Performance Compliance Method (Page 15 of 19)

H3. NONRESIDENTIAL / COMMON USE AREA FAN SYSTEMS SUMMARY

01	02	03	04	05	06	07	08	09	10	11	12	13
Name or Item Tag	Qty	Design OA CFM	Supply Fan				Return / Relief Fan					Status[1]
			CFM	Power	Power Units	Control	Fan Type	CFM	Power	Power Units	Control	
HP-7.1 Carrier 50GCQJ05	1	328.32	1,400	0.65	BHP	Constant Vol	N/A	N/A	N/A	N/A	N/A	N
HP-7.2 Carrier 50GCQJ06	1	118.8	1,800	0.9	BHP	Constant Vol	N/A	N/A	N/A	N/A	N/A	N
HP-7.3 Carrier 50GCQJ05	1	328.32	1,400	0.65	BHP	Constant Vol	N/A	N/A	N/A	N/A	N/A	N
HP-7.4 Carrier 50GCQJ05	1	328.32	1,400	0.65	BHP	Constant Vol	N/A	N/A	N/A	N/A	N/A	N
HP-7.5 Carrier 50GCQJ06	1	118.8	1,800	0.9	BHP	Constant Vol	N/A	N/A	N/A	N/A	N/A	N
HP-7.6 Carrier 50GCQJ05	1	356.82	1,400	0.65	BHP	Constant Vol	N/A	N/A	N/A	N/A	N/A	N

[1] *Status: N - New, A - Altered, E - Existing*

H5. GENERAL EXHAUST FAN SUMMARY

01	02	03	04	05	06	07	08
System ID	Zone Name	Qty	CFM	Power	Power Units	Continuous Operation?	Status[1]
Zone 217	2-Zone 2	1	600	0.15	BHP	No	N
Zone 572	5-Zone 5	1	600	0.15	BHP	No	N
Zone 6107	6-Zone 6	1	150	0.02	BHP	No	N

[1] *Status: N - New, A - Altered, E - Existing*

CA Building Energy Efficiency Standards - 2022 Nonresidential Compliance | Report Version: 2022.0.000 Schema Version: rev 20220601 | Report Generated: 2023-12-05 09:35:20 Compliance ID: EnergyPro-2975-1223-0446

CERTIFICATE OF COMPLIANCE - NONRESIDENTIAL PERFORMANCE COMPLIANCE METHOD NRCC-PRF-E

Nonresidential Performance Compliance Method (Page 14 of 19)

H1. DRY SYSTEM EQUIPMENT (FURNACES, AIR HANDLING UNITS, HEAT PUMPS, VRF, ECONOMIZERS ETC.)

01	02	03	04	05	06	07	08	09	10	11	12
Equipment Name	Equipment Type	Qty	Heating				Cooling			Economizer Type (if present)	Status[1]
			Total Heating Output (kBtu/h)	Supp Heat Output (kBtu/h)	Efficiency Unit	Efficiency	Total Cooling Output (kBtu/h)	Efficiency Unit	Efficiency		
HP-7.1 Carrier 50GCQJ05	Single Zone Heat Pump (SZHP) Air System	1	34.79	18.77	N/A	NA	40.23	EER SEER	12.5 17	Differential DB	N
HP-7.2 Carrier 50GCQJ06	Single Zone Heat Pump (SZHP) Air System	1	42.81	18.77	N/A	NA	49.93	EER SEER	12.3 17	Differential DB	N
HP-7.3 Carrier 50GCQJ05	Single Zone Heat Pump (SZHP) Air System	1	34.79	18.77	N/A	NA	40.23	EER SEER	12.5 17	Differential DB	N
HP-7.4 Carrier 50GCQJ05	Single Zone Heat Pump (SZHP) Air System	1	34.79	18.77	N/A	NA	40.23	EER SEER	12.5 17	Differential DB	N
HP-7.5 Carrier 50GCQJ06	Single Zone Heat Pump (SZHP) Air System	1	42.81	18.77	N/A	NA	49.93	EER SEER	12.3 17	Differential DB	N
HP-7.6 Carrier 50GCQJ05	Single Zone Heat Pump (SZHP) Air System	1	34.79	18.77	N/A	NA	40.23	EER SEER	12.5 17	Differential DB	N

[1] *Status: N - New, A - Altered, E - Existing*

CA Building Energy Efficiency Standards - 2022 Nonresidential Compliance | Report Version: 2022.0.000 Schema Version: rev 20220601 | Report Generated: 2023-12-05 09:35:20 Compliance ID: EnergyPro-2975-1223-0446

CERTIFICATE OF COMPLIANCE - NONRESIDENTIAL PERFORMANCE COMPLIANCE METHOD NRCC-PRF-E

Nonresidential Performance Compliance Method (Page 13 of 19)

G6A. OPAQUE DOOR SUMMARY (NONRESIDENTIAL)

01	02	03	04
Assembly Name	Area (ft²)	Overall U-factor	Status[1]
Metal Door11	138.48	0.7	N

[1] *Status: N - New, A - Altered, E - Existing*

G7A. FENESTRATION ASSEMBLY SUMMARY (NONRESIDENTIAL)

01	02	03	04	05	06	07	08	09
Fenestration Assembly Name	Fenestration Type/ Product Type / Frame Type	Certification Method[1]	Assembly Method	Area (ft²)	Overall U-factor	Overall SHGC	Overall VT	Status[2]
Double Metal Tinted	Vertical fenestration Fixed window Metal	Default 110.6	Site built	432.68	0.71	0.6	0.77	N
Single Metal Clear	Vertical fenestration Operable window Metal	Default 110.6	Site built	8.52	1.28	0.8	0.67	N

[1] *Notes: Newly installed fenestration shall have a certified NFRC Label Certificate or use the CEC default tables found in Table 110.6-A and Table 110.6-B. Center of Glass (COG) values are for the glass-only, determined by the manufacturer, and are shown for ease of verification. Site-built fenestration values are calculated per Nonresidential Appendix NA6 and are used in the analysis.*
[2] *Status: N - New, A - Altered, E - Existing*

CA Building Energy Efficiency Standards - 2022 Nonresidential Compliance | Report Version: 2022.0.000 Schema Version: rev 20220601 | Report Generated: 2023-12-05 09:35:20 Compliance ID: EnergyPro-2975-1223-0446

CERTIFICATE OF COMPLIANCE - NONRESIDENTIAL PERFORMANCE COMPLIANCE METHOD NRCC-PRF-E

Nonresidential Performance Compliance Method (Page 18 of 19)

M. DECLARATION OF REQUIRED CERTIFICATES OF ACCEPTANCE

Selections made by Documentation Author indicate which Certificates of Acceptance must be submitted for the features to be recognized for compliance. These documents must be provided to the building inspector during construction and must be completed through an Acceptance Test Technician Certification Provider (ATTCP).

Building Component	Form/Title
Envelope	NRCA-ENV-02-F - NRFC label verification for fenestration
Mechanical	NRCA-MCH-02-A - Outdoor Air must be submitted for all newly installed HVAC units. Note: MCH-02-A can be performed in conjunction with MCH-07-A Supply Fan VFD Acceptance (if applicable) since testing activities overlap
Mechanical	NRCA-MCH-03-A - Constant Volume Single Zone HVAC
Mechanical	NRCA-MCH-05-A - Air Economizer Controls
Mechanical	NRCA-MCH-06-A Demand Control Ventilation Systems must be submitted for all systems required to employ demand controlled ventilation (refer to) can vary outside ventilation flow rates based on maintaining interior carbon dioxide (CO2) concentration setpoints.

N. DECLARATION OF REQUIRED CERTIFICATES OF VERIFICATION

Selections made by Documentation Author indicate which Certificates of Verification must be submitted for the features to be recognized for compliance. These documents must be retained and provided to the building inspector during construction and can be found online

There are no Certificates of Verification applicable to this project

CA Building Energy Efficiency Standards - 2022 Nonresidential Compliance | Report Version: 2022.0.000 Schema Version: rev 20220601 | Report Generated: 2023-12-05 09:35:20 Compliance ID: EnergyPro-2975-1223-0446

CERTIFICATE OF COMPLIANCE - NONRESIDENTIAL PERFORMANCE COMPLIANCE METHOD NRCC-PRF-E

Nonresidential Performance Compliance Method (Page 17 of 19)

H9. NONRESIDENTIAL / COMMON USE AREA & HOTEL/MOTEL VENTILATION

01	02	03	04	05	06	07
Zone Name	Mechanical Ventilation				Conditioned Area (sf)	DCV or Occupant Sensor Controls, or Both
	Ventilation Function	# of People	Supply OA CFM	Exhaust CFM		
6-Zone 6	Education - Classrooms (ages 5-8)	23.48	356.82	150	939	DCV

H11. ZONAL SYSTEM AND TERMINAL UNIT SUMMARY

01	02	03	04	05	06	07	08	09	10	11	12
System ID	System Type	Qty	Rated Capacity (kBtuh)		Airflow (cfm)			Fan			VSD
			Heating	Cooling	Design	Min.	Min. Ratio	Power	Power Units	Cycles	
1-Zone 1-Trm	Uncontrolled	1	N/A	N/A	1,400	N/A	0	N/A	N/A	N/A	☐
2-Zone 2-Trm	Uncontrolled	1	N/A	N/A	1,800	N/A	0	N/A	N/A	N/A	☐
3-Zone 3-Trm	Uncontrolled	1	N/A	N/A	1,400	N/A	0	N/A	N/A	N/A	☐
4-Zone 4-Trm	Uncontrolled	1	N/A	N/A	1,400	N/A	0	N/A	N/A	N/A	☐
5-Zone 5-Trm	Uncontrolled	1	N/A	N/A	1,800	N/A	0	N/A	N/A	N/A	☐
6-Zone 6-Trm	Uncontrolled	1	N/A	N/A	1,400	N/A	0	N/A	N/A	N/A	☐

L. DECLARATION OF REQUIRED CERTIFICATES OF INSTALLATION

Selections made by Documentation Author indicate which Certificates of Installation must be submitted for the features to be recognized for compliance. These documents must be retained and provided to the building inspector during construction and can be found online

Building Component	Form/Title
Envelope	NRCI-ENV-01-E - Must be submitted for all buildings
Envelope	NRCI-ENV-E - Envelope (for all buildings)
Mechanical	NRCI-MCH-01-E - Must be submitted for all buildings
Mechanical	NRCI-MCH-E - For all buildings with Mechanical Systems

CA Building Energy Efficiency Standards - 2022 Nonresidential Compliance | Report Version: 2022.0.000 Schema Version: rev 20220601 | Report Generated: 2023-12-05 09:35:20 Compliance ID: EnergyPro-2975-1223-0446

CERTIFICATE OF COMPLIANCE - NONRESIDENTIAL PERFORMANCE COMPLIANCE METHOD NRCC-PRF-E

Nonresidential Performance Compliance Method (Page 16 of 19)

H8. SYSTEM SPECIAL FEATURES

01	02	03	04
System Name	Equipment Type	Interlocks per 140.4(n)[1]	Other Special Features and Controls
HP-7.1 Carrier 50GCQJ05	Single Zone Heat Pump (SZHP) Air System	No	Zone(s) With CO2 Sensor Vent. Control Differential DB
HP-7.2 Carrier 50GCQJ06	Single Zone Heat Pump (SZHP) Air System	No	Differential DB
HP-7.3 Carrier 50GCQJ05	Single Zone Heat Pump (SZHP) Air System	No	Zone(s) With CO2 Sensor Vent. Control Differential DB
HP-7.4 Carrier 50GCQJ05	Single Zone Heat Pump (SZHP) Air System	No	Zone(s) With CO2 Sensor Vent. Control Differential DB
HP-7.5 Carrier 50GCQJ06	Single Zone Heat Pump (SZHP) Air System	No	Differential DB
HP-7.6 Carrier 50GCQJ05	Single Zone Heat Pump (SZHP) Air System	No	Zone(s) With CO2 Sensor Vent. Control Differential DB

Notes: This table includes controls related to the performance path only. For projects using the prescriptive path, mandatory and prescriptive controls requirements are documented on the NRCC-MCH-E.

[1] *Yes = interlocks are provided, No = interlocks are not provided, NA means no operable openings.*

H9. NONRESIDENTIAL / COMMON USE AREA & HOTEL/MOTEL VENTILATION

01	02	03	04	05	06	07
Zone Name	Mechanical Ventilation				Conditioned Area (sf)	DCV or Occupant Sensor Controls, or Both
	Ventilation Function	# of People	Supply OA CFM	Exhaust CFM		
1-Zone 1	Education - Classrooms (ages 5-8)	21.6	328.32	0	864	DCV
2-Zone 2	Office - Office space	3.96	118.8	600	792	N/A
3-Zone 3	Education - Classrooms (ages 5-8)	21.6	328.32	0	864	DCV
4-Zone 4	Education - Classrooms (ages 5-8)	21.6	328.32	0	864	DCV
5-Zone 5	Office - Office space	3.96	118.8	600	792	N/A

CA Building Energy Efficiency Standards - 2022 Nonresidential Compliance | Report Version: 2022.0.000 Schema Version: rev 20220601 | Report Generated: 2023-12-05 09:35:20 Compliance ID: EnergyPro-2975-1223-0446

STATE OF CALIFORNIA
Domestic Water Heating System
CALIFORNIA ENERGY COMMISSION

CERTIFICATE OF COMPLIANCE		NRCC-PLB-E
Project Name: Santa Fe Elementary School - Building 700	Report Page:	(Page 2 of 6)
	Date Prepared:	12/5/2023

E. ADDITIONAL REMARKS
This table includes remarks made by the permit applicant to the Authority Having Jurisdiction.

F. DOMESTIC HOT WATER EQUIPMENT
This table is used to demonstrate compliance with mandatory equipment requirements in 110.1 and 110.3. Compliance with prescriptive requirements in 140.5(c) / 170.2(d) must also be demonstrated and with 141.0 / 180.1/ 180.2 for addition and alteration scopes.

Equipment Schedule: Water Heating Efficiency and Standby Loss

03	04			05		06		
System Name	AO Smith DEL-20	Exception to 140.5(c)/ 170.2(d)3		☐	Gas Service Water Heating System >= 1MMBtu/h[1]	Capacity-weighted Average Efficiency %		
07	08	09	10	11	12	13	14	15
Name or Item Tag	Equipment Type	Volume (gal)	Rated Input Capacity (Btu/h)	Max GPM/ First Hour Rating (FHR)	Rated Efficiency	Minimum Efficiency Required	Efficiency Unit	Designed Standby Loss	Maximum Standby Loss
AO Smith DEL-20	Consumer Rated Electric Storage	20	15,354	FHR >=75	0.92	0.93	UEF		

[1]*FOOTNOTE: In systems >= 1MMBtu/h with multiple units, gas water heaters with input capacity > 100,000 Btu/h may meet 90% Et requirements via an input capacity-weighted average.*

Water Heating Equipment All Occupancies

	Yes	No	Not Applicable	Requirement
18	☐	☐	☒	Unfired storage tank insulation shall have Internal + External >=R-16 OR External >=R-3.5. Label required per 110.3(c)3
19	☐	☐	☒	New state buildings 60% of energy for service water heating from site solar energy or recovered energy per 110.3(c)5
20	☐	☐	☒	Isolation valves for instantaneous water heater with input rating >6.8 kBTUH or 2 kW has been specified per 110.3(c)6
21	☐	☐	☒	School buildings < 25,000 ft^2 and < 4 stories must install a heat pump water heating system per 140.5(a)1. Water heating systems serving an individual bathroom space may be an instantaneous electric water heater.

STATE OF CALIFORNIA
Domestic Water Heating System
CALIFORNIA ENERGY COMMISSION

CERTIFICATE OF COMPLIANCE		NRCC-PLB-E
Project Name: Santa Fe Elementary School - Building 700	Report Page:	(Page 1 of 6)
Project Address: 286 E Orange Ave	Date Prepared:	12/5/2023

This document is used to demonstrate compliance for nonresidential occupancies with requirements in 110.1, 110.3, 120.3, and 140.5, and with requirements in 141.0 for additions and alterations, for domestic water heating scopes using the prescriptive path. For high-rise residential and hotel/motel occupancies compliance is demonstrated with requirements in 110.1, 110.3, 160.4 and 170.2(d), and with requirements 180.1 for additions and 180.2 for alterations.

A. GENERAL INFORMATION

01	Project Location (city)	Porterville	02	Climate Zone	13
03	Occupancy Types Within Project (select all that apply):				

● Classroom ● Office

B. PROJECT SCOPE
This table includes domestic water heating systems that are within the scope of the permit application and are demonstrating compliance using the prescriptive paths outlined in 140./ 170.2(d) and 141.0(a)/ 180.1, or 141.0(b)2N / 180.2 for additions or alterations. Solar water heating systems are documented on the NRCC-SAB compliance document. Combined hydronic water heating systems are documented on the NRCC-MCH compliance document.

01	02	03		
My project consists of (check all that apply):	System Type[1,2]	System Components		
☒ New system (DHW system being installed for the first time)	Individual System (serving nonresidential spaces)	☒ Equipment	☒ Distribution	☒ Controls
☐ System Alteration (equipment, distribution or controls)		☐ Equipment	☐ Distribution	☐ Controls

[1]*FOOTNOTES: Point of use water heaters, or other non-central systems used to serve nonresidential spaces, are considered individual systems.*
[2] *Dwelling units refers to hotel/motel guest rooms and units in a multifamily residential occupancy.*
[3] *DHW systems serving 2 or more dwelling units are considered "Central Systems" for multifamily occupancies*

C. COMPLIANCE RESULTS
Table C will indicate if the project data input into the compliance document is compliant with water heating requirements. If this table says "DOES NOT COMPLY" or "COMPLIES with Exceptional Conditions" refer to Table D. or the table indicated as not compliant for guidance.

01	02	03	04
Domestic Hot Water Equipment	Distribution Systems	Controls	**Compliance Results**
Table F	Table G	Table H	
Yes	Yes	Yes	COMPLIES

D. EXCEPTIONAL CONDITIONS
This table is auto-filled with uneditable comments because of selections made or data entered in tables throughout the form.

CERTIFICATE OF COMPLIANCE - NONRESIDENTIAL PERFORMANCE COMPLIANCE METHOD	NRCC-PRF-E
Nonresidential Performance Compliance Method	**(Page 19 of 19)**

Documentation Author's Declaration Statement

I. I certify that this Certificate of Compliance documentation is accurate and complete.

Documentation Author Name: Brent Yang	Documentation Author Signature: Brent Yang
Company: Lawrence Engineering Group	Signature Date: 2023-12-05
Address: 4910 E Clinton Way	CEA/HERS Certification Identification (if applicable):
City/State/Zip: Fresno, CA 93727	Phone: 5594310101

Responsible Person's Declaration statement

I certify the following under penalty of perjury, under the laws of the State of California:
1. The information provided on this Certificate of Compliance is true and correct.
2. I am eligible under Division 3 of the Business and Professions Code to accept responsibility for the building design or system design identified on this Certificate of Compliance (responsible designer)
3. The energy features and performance specifications, materials, components, and manufactured devices for the building design or system design identified on this Certificate of Compliance conform to the requirements of Title 24, Part 1 and Part 6 of the California Code of Regulations.
4. The building design features or system design features identified on this Certificate of Compliance are consistent with the information provided on other applicable compliance documents, worksheets, calculations, plans and specifications submitted to the enforcement agency for approval with this building permit application.
5. I understand that a registered copy of this Certificate of Compliance shall be made available with the building permit(s) issued for the building, and made available to the enforcement agency for all applicable inspections, and I will take the necessary steps to accomplish this requirement.
6. I understand that a registered copy of this Certificate of Compliance is required to be included with the documentation the builder provides to the building owner at occupancy, and I will take the necessary steps to accomplish these requirements.

Responsible Designer Name: Michael Scott	Responsible Designer Signature: MScott	
Company: Mangini Associates Inc		
Address: 4320 W Mineral King Ave	Date Signed: 6.26.24	
City/State/Zip: Visalia, CA 93291	License #: C-33544	
Phone: 559-627-0530	Title:	Scope:
Responsible Designer Name: Ryan W Carlson	Responsible Designer Signature:	
Company: Lawrence Engineering Group		
Address: 4910 E Clinton Way	Date Signed: 2023-12-05	
City/State/Zip: Fresno, CA 93727	License #: M34846	
Phone: 559-431-0101	Title:	Scope:

STATE OF CALIFORNIA
Domestic Water Heating System
CALIFORNIA ENERGY COMMISSION

CERTIFICATE OF COMPLIANCE		NRCC-PLB-E
Project Name: Santa Fe Elementary School - Building 700	Report Page:	(Page 5 of 6)
	Date Prepared:	12/5/2023

I. DECLARATION OF REQUIRED CERTIFICATES OF INSTALLATION
Selections have been made based on information provided in this document. If any selection have been changed by permit applicant, an explanation should be included in Table E. Additional Remarks. These documents must be provided to the building inspector during construction and can be found online

Form/Title
NRCI-PLB-E - Must be submitted for all buildings

J. DECLARATION OF REQUIRED CERTIFICATES OF ACCEPTANCE
There are no forms required for this project.

K. DECLARATION OF REQUIRED CERTIFICATES OF VERIFICATION
There are no forms required for this project.

STATE OF CALIFORNIA
Domestic Water Heating System
CALIFORNIA ENERGY COMMISSION

CERTIFICATE OF COMPLIANCE		NRCC-PLB-E
Project Name: Santa Fe Elementary School - Building 700	Report Page:	(Page 4 of 6)
	Date Prepared:	12/5/2023

H. DOMESTIC HOT WATER CONTROLS
This table is used to demonstrate compliance with control requirements in 110.3 for all occupancies. For multifamily residential and hotel/motel occupancies, compliance is also demonstrated with requirements in 160.4(e) / 170.2(d).

	Yes	No	Not Applicable	Requirement
01	☒	☐	☐	Construction documents require manufacturer certification that service water-heating systems are equipped with automatic temperature controls capable of adjusting temperature settings per 110.3(a).
02	☐	☐	☒	Systems with capacity > 167,000 BTUH equipped with outlet temperature controls per 110.3(c)1 unless covered by California Plumbing Code 613.0.
03	☐	☐	☒	Controls for circulating pumps or electrical heat trace systems are capable of automatically turning off the system per §110.3(c)2 unless systems serves healthcare facility.
04	☐	☐	☒	For recirculation systems serving multiple dwelling units, design includes automatic pump controls per 170.2(d) or 180.1(b)3 for additions.
05	☐	☐	☒	For recirculation systems serving individual dwelling units, design includes manual on/off controls as specified in Reference Appendix RA4.4.9 per 170.2(d).
06	☐	☐	☒	Combustion air positive shut-off shall be provided per 160.4(3).on all newly installed commercial boilers as follows: • Boilers with input capacity >= 2.5 MMBtu/h, in which the boiler is designed to operate with a nonpositive vent static pressure • Boilers where one stack serves two or more boilers with a total combined input capacity per stack of 2.5 MMBtu/h.
07	☐	☐	☒	Boiler combustion air fans with motor >= 10 hp shall meet one of the following • The fan motor shall be driven by a variable speed drive OR • The fan motor shall include controls that limit the fan motor demand to <=30% of the total design wattage at 50% of the design air volume.
08	☐	☐	☒	Newly installed boilers with an input capacity [d:gte/] 5MMBtu/h and a steady state full-load combustion efficiency < 90% shall maintain excess (stack-gas) oxygen concentrations <= 5% by volume on a dry basis over firing rates of 20-100%. Combustion air volume shall be controlled with respect to firing rate or flue gas oxygen concentration. Use of a common gas and combustion air control linkage or jack shaft is prohibited.

STATE OF CALIFORNIA
Domestic Water Heating System
CALIFORNIA ENERGY COMMISSION

CERTIFICATE OF COMPLIANCE		NRCC-PLB-E
Project Name: Santa Fe Elementary School - Building 700	Report Page:	(Page 3 of 6)
	Date Prepared:	12/5/2023

G. DOMESTIC HOT WATER DISTRIBUTION SYSTEM
This table is used to demonstrate compliance for nonresidential occupancies with distribution requirements in 120.3 and 140.5. For multifamily and hotel/motel occupancies, compliance is demonstrated with requirements 110.3(c), 160.4, 170.2(d).

Mandatory Pipe Insulation All Occupancies

13	☐	For systems serving dwelling units, pipe insulation must meet the minimum insulation requirements in Table 160.4-A (see blow) except: • Piping that penetrates framing members shall not be required to have pipe insulation for the distance of the framing penetration. Piping that penetrates metal framing shall use grommets, plugs, wrapping or other insulating material to assure that no contact is made with the metal framing. Insulation shall abut securely against all framing members • Piping installed in interior or exterior walls shall not be required to have pipe insulation if all of the requirements are met for compliance with Quality Insulation Installation (QII) as specified in the Reference Residential Appendix RA3.5. • Piping surrounded with a minimum of 1 inch of wall insulation, 2 inches of crawlspace insulation, or 4 inches of attic insulation, shall not be required to have pipe insulation.
14	☒	For systems serving nonresidential spaces, pipe insulation for the following applications is specified to comply with Table 120.3-A (see below) per 120.3: • Recirculating system piping, including supply and return piping of the water heater • The first 8 ft of hot and cold outlet piping, including between storage tank and heat trap, for a nonrecirculating storage system • Pipes that are externally heated
15	☐	Insulation shall be protected from damage, including that due to sunlight, moisture, equipment maintenance, and wind. Insulation exposed to weather shall be installed with a cover suitable for outdoor service per 120.3(b) / 160.4(f). Pipe insulation buried below grade must be installed in a water proof and non-crushable casing or sleeve.

TABLE 120.3-A / 160.4-A PIPE INSULATION THICKNESS

Fluid Temperature Range (°F)	Conductivity Range (Btu-in per hour per ft^2 per °F)	Insulation Mean Rating Temp (°F)	Nominal Pipe Diameter (in)			
			< 1	1 to < 1.5	1.5 to < 4	1.5 to < 4 Multifamily & Hotel/Motel
			Minimum Insulation Required			
105-140	0.22 - 0.28	100	1.0 in or R-7.7	1.5 in or R-12.5	1.5 in or R-11	2.0 in or R-16

STATE OF CALIFORNIA
Domestic Water Heating System
CALIFORNIA ENERGY COMMISSION

CERTIFICATE OF COMPLIANCE		NRCC-PLB-E
Project Name: Santa Fe Elementary School - Building 700	Report Page:	(Page 6 of 6)
Project Address: 286 E Orange Ave	Date Prepared:	12/5/2023

DOCUMENTATION AUTHOR'S DECLARATION STATEMENT

I certify that this Certificate of Compliance documentation is accurate and complete.

Documentation Author Name: Brent Yang	Documentation Author Signature: Brent Yang
Company: Lawrence Engineering Group	Signature Date: 2023-12-05
Address: 4910 E Clinton Way	CEA/ HERS Certification Identification (if applicable):
City/State/Zip: Fresno CA 93727	Phone: 5594310101

RESPONSIBLE PERSON'S DECLARATION STATEMENT

I certify the following under penalty of perjury, under the laws of the State of California:
1. The information provided on this Certificate of Compliance is true and correct.
2. I am eligible under Division 3 of the Business and Professions Code to accept responsibility for the building design or system design identified on this Certificate of Compliance (responsible designer)
3. The energy features and performance specifications, materials, components, and manufactured devices for the building design or system design identified on this Certificate of Compliance conform to the requirements of Title 24, Part 1 and Part 6 of the California Code of Regulations.
4. The building design features or system design features identified on this Certificate of Compliance are consistent with the information provided on other applicable compliance documents, worksheets, calculations, plans and specifications submitted to the enforcement agency for approval with this building permit application.
5. I will ensure that a completed signed copy of this Certificate of Compliance shall be made available with the building permit(s) issued for the building, and made available to the enforcement agency for all applicable inspections. I understand that a completed signed copy of this Certificate of Compliance is required to be included with the documentation the builder provides to the building owner at occupancy.

Responsible Designer Name: Ryan W Carlson	Responsible Designer Signature:
Company: Lawrence Engineering Group	Date Signed: 2023-12-05
Address: 4910 E Clinton Way	License: M34846
City/State/Zip: Fresno CA 93727	Phone: 559-431-0101

REGISTERED PROFESSIONAL ENGINEER
RYAN W. CARLSON
No. M34846
Exp. 6-30-26
MECHANICAL
STATE OF CALIFORNIA

LAWRENCE ENGINEERING GROUP
4910 E. Clinton Way, Suite 101
(559) 431-0101
23114
Fresno, CA 93727
FAX (559) 431-1362

APPROVALS
FILE # 54-76
APPLICATION # 02-121996

IDENTIFICATION STAMP
DIV. OF THE STATE ARCHITECT
APP: 02-121996 INC: A
REVIEWED FOR
SS ☑ FLS ☑ ACS ☑
DATE: 8/14/2024

LICENSED ARCHITECT
MICHEL J. SCOTT
No. C-34290
REN. 05-31-25
STATE OF CALIFORNIA
DATE: DECEMBER 31, 2023

NEW PRESCHOOL AND TK/KINDERGARTEN CLASSROOMS AT SANTA FE ELEMENTARY SCHOOL
PORTERVILLE UNIFIED SCHOOL DISTRICT
286 E ORANGE AVENUE, PORTERVILLE, CA 93257

REVISIONS

MANGINI ARCHITECTURE INGENUITY
BARENG MORRELLI SCOTT
MANGINI ASSOCIATES INC.
4320 West Mineral King Avenue
Visalia, California 93291
www.mangini.us
(559) 627-0530 Office
(559) 627-1926 Fax

TITLE
TITLE 24 DOCUMENTS

M5.3

PROJECT 23076

24 June 2024 11:35 AM P:\2023\23114 Portenville USD - Santa Fe ES - Kinder\4-Drawings\4 AA\M5.1-5.8 Title 24 Documents.dwg raj g
C:\Users\raj\AppData\Local\Temp\AcPublish_4216\M5.1-5.8 Title 24 Documents.dwg Jun 24 2024 11:35am

APPROVALS

FILE # 54-76 | APPLICATION # 02-121996

IDENTIFICATION STAMP
DIV. OF THE STATE ARCHITECT
APP: 02-121996 INC:
REVIEWED FOR
SS ☑ FLS ☑ ACS ☑
DATE: 8/14/2024

LICENSED ARCHITECT MICHAEL J. SCOTT No. C-34290 REN. 05-31-25 STATE OF CALIFORNIA

DATE: DECEMBER 31, 2023

CERTIFICATE OF COMPLIANCE - NONRESIDENTIAL PERFORMANCE COMPLIANCE METHOD NRCC-PRF-E

Nonresidential Performance Compliance Method (Page 1 of 21)

Project Name: Building 800 | **Date Prepared:** 2023-12-05

A. General Information

1	Project Name	Building 800			
2	Run Title	Title 24 Analysis			
3	Project Location	286 E Orange Ave			
4	City	Porterville	5	Standards Version	Compliance 2022
6	Zip code	93257	7	Compliance Software (version)	EnergyPro 9.1
8	Climate Zone	13	9	Building Orientation (deg)	0
10	Building Type(s)	• Nonresidential	11	Weather File	PORTERVILLE_STYP20.epw
12	Project Scope	• New envelope and mechanical	13	Number of Dwelling Units	0
14	Total Conditioned Floor Area in Scope (ft^2)	8960	15	Total # of hotel/motel rooms	0
16	Total Unconditioned Floor Area (ft^2)	0	17	Fuel Type	Natural gas
18	Nonresidential Conditioned Floor Area	8960	19	Total # of Stories (Habitable Above Grade)	1
20	Residential Conditioned Floor Area	0			

CA Building Energy Efficiency Standards - 2022 Nonresidential Compliance | Report Version: 2022.0.000 Schema Version: rev 20220601 | Report Generated: 2023-12-05 10:31:02 Compliance ID: EnergyPro-2975-1223-0448

CERTIFICATE OF COMPLIANCE - NONRESIDENTIAL PERFORMANCE COMPLIANCE METHOD NRCC-PRF-E

Nonresidential Performance Compliance Method (Page 2 of 21)

B. PROJECT SUMMARY

Table B shows which building components are included in the performance calculation. If indicated as not included, the project must show compliance prescriptively if within the permit application.

Building Components Complying via Performance

Envelope (See Table G)	Nonres	Performance	Solar Thermal Water Heating (See Table I3)	☐	Performance
	MultiFam	Not Included		☒	Not Included
Mechanical (See Table H)	Nonres	Performance	Covered Process: Commercial Kitchens (see Table J)	☐	Performance
	MultiFam	Not Included		☒	Not Included
Domestic Hot Water (See Table I)	Nonres	Not Included	Covered Process: Laboratory Exhaust (see Table J)	☐	Performance
	MultiFam	Not Included		☒	Not Included
Lighting (Indoor Conditioned, see Table K)	Nonres	Not Included	Photovoltaics (see Table F)	☒	Performance
	MultiFam	Not Included		☐	Not Included
			Battery (see Table F)	☒	Performance
				☐	Not Included

Building Components Complying Prescriptively

The following building components are ONLY eligible for prescriptive compliance and should be documented on the NRCC form listed if within the scope of the permit application (i.e. compliance will not be shown on the NRCC-PRF-E).

Indoor Lighting (Unconditioned) 140.6 & 170.2(e)	NRCC-LTI-E is required
Outdoor Lighting 140.7 & 170.2(e)	NRCC-LTO-E is required
Sign Lighting 140.8 & 170.2(e)	NRCC-LTS-E is required

Building Components Complying with Mandatory Measures

Electrical power systems, commissioning, solar ready, elevator and escalator requirements are mandatory and should be documented on the NRCC form listed if applicable (i.e. compliance will not be shown on the NRCC-PRF-E.)	
Electrical Power Distribution 110.11	NRCC-ELC-E is required
Commissioning 120.8	NRCC-CXR-E is required
Solar and Battery 110.10	NRCC-SAB-E is required

CA Building Energy Efficiency Standards - 2022 Nonresidential Compliance | Report Version: 2022.0.000 Schema Version: rev 20220601 | Report Generated: 2023-12-05 10:31:02 Compliance ID: EnergyPro-2975-1223-0448

CERTIFICATE OF COMPLIANCE - NONRESIDENTIAL PERFORMANCE COMPLIANCE METHOD NRCC-PRF-E

Nonresidential Performance Compliance Method (Page 3 of 21)

C1. COMPLIANCE SUMMARY

COMPLIES[3]

	Time Dependent Valuaton (TDV)		Source Energy Use
	Efficiency[1] (kBtu/ft² - yr)	Total[2] (kBtu/ft² - yr)	Total[2] (kBtu/ft² - yr)
Standard Design	279.99	224.56	17.61
Proposed Design	261.47	196.89	16.01
Compliance Margins	**18.52**	**27.67**	**1.6**
	Pass	**Pass**	**Pass**

[1] Efficiency measures include improvements like a better building envelope and more efficient equipment
[2] Compliance Totals include efficiency, photovoltaics and batteries
[3] Building complies when efficiency and total compliance margins are greater than or equal to zero and unmet load hour limits are not exceeded

CA Building Energy Efficiency Standards - 2022 Nonresidential Compliance | Report Version: 2022.0.000 Schema Version: rev 20220601 | Report Generated: 2023-12-05 10:31:02 Compliance ID: EnergyPro-2975-1223-0448

CERTIFICATE OF COMPLIANCE - NONRESIDENTIAL PERFORMANCE COMPLIANCE METHOD NRCC-PRF-E

Nonresidential Performance Compliance Method (Page 4 of 21)

C2. TDV ENERGY COMPLIANCE RESULTS FOR PERFORMANCE COMPONENTS (Annual TDV Energy Use, kBtu/ft² - yr)

COMPLIES[2]

Energy Component	Standard Design (TDV)	Proposed Design (TDV)	Compliance Margin (TDV)[1]
Space Heating	15.61	5.46	10.15
Space Cooling	101.39	83.41	17.98
Indoor Fans	111.7	121.32	-9.62
Heat Rejection	0	0	0
Pumps & Misc.	0	0	0
Domestic Hot Water	19.08	19.07	0.01
Indoor Lighting	32.21	32.21	0
Flexibility	---	---	---
EFFICIENCY COMPLIANCE TOTAL	**279.99**	**261.47**	**18.52 (6.6%)**
Photovoltaics	-52.35	-63.57	11.22
Batteries	-3.08	-1.01	-2.07
TOTAL COMPLIANCE	**224.56**	**196.89**	**27.67 (12.3%)**

[1] Notes: This number in parenthesis following the Compliance Margin in column 4, represents the Percent Better than Standard.

CA Building Energy Efficiency Standards - 2022 Nonresidential Compliance | Report Version: 2022.0.000 Schema Version: rev 20220601 | Report Generated: 2023-12-05 10:31:02 Compliance ID: EnergyPro-2975-1223-0448

CERTIFICATE OF COMPLIANCE - NONRESIDENTIAL PERFORMANCE COMPLIANCE METHOD NRCC-PRF-E

Nonresidential Performance Compliance Method (Page 5 of 21)

C3. TDV ENERGY RESULTS FOR NON-REGULATED COMPONENTS[1]

Non-Regulated Energy Component	Standard Design (TDV)	Proposed Design (TDV)	Compliance Margin (TDV)[1]
Receptacle	76.6	76.6	---
Process	101.09	101.09	---
Other Ltg	---	---	---
Process Motors	---	---	---
TOTAL (TOTAL COMPLIANCE + NON-REGULATED COMPONENTS)	**402.25**	**374.58**	**27.67 (6.9%)**

[1] Notes: This table is not used for Energy Code Compliance.

CA Building Energy Efficiency Standards - 2022 Nonresidential Compliance | Report Version: 2022.0.000 Schema Version: rev 20220601 | Report Generated: 2023-12-05 10:31:02 Compliance ID: EnergyPro-2975-1223-0448

CERTIFICATE OF COMPLIANCE - NONRESIDENTIAL PERFORMANCE COMPLIANCE METHOD NRCC-PRF-E

Nonresidential Performance Compliance Method (Page 6 of 21)

C4. SOURCE ENERGY COMPLIANCE RESULTS FOR PERFORMANCE COMPONENTS (Annual SOURCE Energy Use, kBtu/ft² /yr)

COMPLIES[2]

Energy Component	Standard Design (SOURCE)	Proposed Design (SOURCE)	Compliance Margin (SOURCE)[1]
Space Heating	2.16	0.71	1.45
Space Cooling	4.48	3.6	0.88
Indoor Fans	9.38	10.28	-0.9
Heat Rejection	0	0	0
Pumps & Misc.	0	0	0
Domestic Hot Water	1.68	1.68	0
Indoor Lighting	2.58	2.58	0
Flexibility	---	---	---
EFFICIENCY COMPLIANCE TOTAL	**20.28**	**18.85**	**1.43 (7.1%)**
Photovoltaics	-1.95	-2.33	0.38
Batteries	-0.72	-0.51	-0.21
TOTAL COMPLIANCE	**17.61**	**16.01**	**1.6 (9.1%)**

[1] Notes: This number in parenthesis following the Compliance Margin in column 4, represents the Percent Better than Standard.

CA Building Energy Efficiency Standards - 2022 Nonresidential Compliance | Report Version: 2022.0.000 Schema Version: rev 20220601 | Report Generated: 2023-12-05 10:31:02 Compliance ID: EnergyPro-2975-1223-0448

CERTIFICATE OF COMPLIANCE - NONRESIDENTIAL PERFORMANCE COMPLIANCE METHOD NRCC-PRF-E

Nonresidential Performance Compliance Method (Page 7 of 21)

C5. SOURCE ENERGY RESULTS FOR NON-REGULATED COMPONENTS[1]

Non-Regulated Energy Component	Standard Design (SOURCE)	Proposed Design (SOURCE)	Compliance Margin (SOURCE)[1]
Receptacle	5.73	5.73	---
Process	7.47	7.47	---
Other Ltg	---	---	---
Process Motors	---	---	---
TOTAL (TOTAL COMPLIANCE + NON-REGULATED COMPONENTS)	**30.81**	**29.21**	**1.6 (5.2%)**

[1] Notes: This table is not used for Energy Code Compliance.

C6. 'ABOVE CODE' QUALIFICATIONS

☐ This project is pursuing CalGreen Tier 1 ☐ This project is pursuing CalGreen Tier 2

CA Building Energy Efficiency Standards - 2022 Nonresidential Compliance | Report Version: 2022.0.000 Schema Version: rev 20220601 | Report Generated: 2023-12-05 10:31:02 Compliance ID: EnergyPro-2975-1223-0448

CERTIFICATE OF COMPLIANCE - NONRESIDENTIAL PERFORMANCE COMPLIANCE METHOD NRCC-PRF-E

Nonresidential Performance Compliance Method (Page 8 of 21)

C7. ENERGY USE SUMMARY

Energy Component	Standard Design Site (MWh)	Proposed Design Site (MWh)	Margin (MWh)	Standard Design Site (MBtu)	Proposed Design Site (MBtu)	Margin (MBtu)
Space Heating	4.2	1.4	2.8	---	---	---
Space Cooling	25.7	19.7	6	---	---	---
Indoor Fans	35.1	38.1	-3	---	---	---
Heat Rejection	---	---	---	---	---	---
Pumps & Misc.	---	---	---	---	---	---
Domestic Hot Water	7.1	7.1	0	---	---	---
Indoor Lighting	11	11	0	---	---	---
Flexibility	---	---	---	---	---	---
EFFICIENCY TOTAL	**83.1**	**77.3**	**5.8**	**0**	**0**	**0**
Photovoltaics	-23.6	-28.3	4.7	---	---	---
Batteries	0.2	0.2	0	---	---	---
ENERGY USE SUBTOTAL	**59.7**	**49.2**	**10.5**	**0**	**0**	**0**
Receptacle	27.6	27.6	0	---	---	---
Process	37.1	37.1	0	---	---	---
Other Ltg	---	---	---	---	---	---
Process Motors	---	---	---	---	---	---
ENERGY USE TOTAL	**124.4**	**113.9**	**10.5**	**0**	**0**	**0**

CA Building Energy Efficiency Standards - 2022 Nonresidential Compliance | Report Version: 2022.0.000 Schema Version: rev 20220601 | Report Generated: 2023-12-05 10:31:02 Compliance ID: EnergyPro-2975-1223-0448

CERTIFICATE OF COMPLIANCE - NONRESIDENTIAL PERFORMANCE COMPLIANCE METHOD NRCC-PRF-E

Nonresidential Performance Compliance Method (Page 9 of 21)

C8. ENERGY USE INTENSITY (EUI)

	Standard Design (kBtu/ft² / yr)	Proposed Design (kBtu/ft² / yr)	Margin (kBtu/ft² / yr)	Margin Percentage
GROSS EUI[1]	56.36	54.15	2.21	3.92
NET EUI[1]	47.37	43.37	4	8.44

[1] Notes: Gross EUI is Energy Use Total (not including PV)/Total Building Area. Net EUI is Energy Use Total (including PV)/Total Building Area.

D1. EXCEPTIONAL CONDITIONS

• The project uses the Simplified Geometry Performance Modeling Approach which is not capable of modeling daylighting controls and assumes the prescriptive Secondary Daylit Control requirements are met. PRESCRIPTIVE COMPLIANCE documentation (form NRCC-LTI-02-E) for the requirements of section 140.6(d) Automatic Daylighting Controls in Secondary Daylit Zones is required.
• The building does not include service water heating. Verify that service water heating is not required and is not included in the design.
• PV/Battery Building Type has been modified from software defaults for one or more spaces. Review project's PV/Battery Building Type(s) with documentation author. Refer to Energy Code section 140.10 for Nonresidential or 170.2(g) for more information.

F1. REQUIRED PV SYSTEMS

01	02	03	04	05	06	07	08	09	10	11	12
DC System Size (kWdc)	Exception[1]	Module Type	Array Type	Power Electronics	CFI	Azimuth (deg)	Tilt Input	Array Angle (deg)	Tilt: (x in 12)	Inverter Eff. (%)	Annual Solar Access (%)
17.02	n/a	Standard (14-17%)	Fixed	none	false	180	Degrees	18	3.9	96	100

[1]See Table D1 for any PV exceptions used.

CA Building Energy Efficiency Standards - 2022 Nonresidential Compliance | Report Version: 2022.0.000 Schema Version: rev 20220601 | Report Generated: 2023-12-05 10:31:02 Compliance ID: EnergyPro-2975-1223-0448

REGISTERED PROFESSIONAL ENGINEER BRIAN W. CARLSON NO. M34546 Exp. 6-30-26 MECHANICAL STATE OF CALIFORNIA

LAWRENCE ENGINEERING GROUP
4910 E. Clinton Way, Suite 101 (559) 431-0101 | Fresno, CA 93727 FAX (559) 431-1362
23114

NEW PRESCHOOL AND TK/KINDERGARTEN CLASSROOMS AT SANTA FE ELEMENTARY SCHOOL

PORTERVILLE UNIFIED SCHOOL DISTRICT
286 E ORANGE AVENUE, PORTERVILLE, CA 93257

REVISIONS

MANGINI ARCHITECTURE INGENUITY
BARENG MORRELLI SCOTT
MANGINI ASSOCIATES INC.
4320 West Mineral King Avenue
Visalia, California 93291
www.mangini.us
(559) 627.0530 Office
(559) 627.1926 Fax

TITLE
TITLE 24 DOCUMENTS

M5.4

PROJECT 23076

APPROVALS

FILE # 54-76 APPLICATION # 02-121996

IDENTIFICATION STAMP
DIV. OF THE STATE ARCHITECT
APP: 02-121996 INC:
REVIEWED FOR
SS ☑ FLS ☑ ACS ☑
DATE: 8/14/2024

LICENSED ARCHITECT MICHAEL J. SCOTT No. C-34290 REN. 05-31-25 STATE OF CALIFORNIA

DATE: DECEMBER 31, 2023

CERTIFICATE OF COMPLIANCE - NONRESIDENTIAL PERFORMANCE COMPLIANCE METHOD NRCC-PRF-E

Nonresidential Performance Compliance Method (Page 12 of 21)

G5. OPAQUE SURFACE ASSEMBLY SUMMARY

01	02	03	04	05	06		07	08	09	10
Surface Name	Construction Type	Area (ft²)	Framing Type	Cavity R-Value	Continuous R-Value		Units	Value	Description of Assembly Layers	Status[1]
					Interior	Exterior				
23114 Exterior Wall6	Exterior Wall	7,120	Wood	19	N/A	N/A	U-factor	0.0678	Mortar - Cement - 1 in. Plywood - 1/2 in. Composite-1 Gypsum Board - 5/8 in.	N
Slab On Grade13	Underground Floor	8,960	N/A	0	N/A	N/A	F-factor	0.73	Slab Type =Unheated slab on grade Insulation Orientation =None Insulation R-Value =none	N
23114 Acoustic Roof15	Roof	6,048	Metal	30	N/A	N/A	U-factor	0.0544	AsphaltShingles0_25In Plywood - 1/2 in. Composite-2 Air - Cavity - Wall Roof Ceiling - 4 in. or more Acoustic Tile - 3/8 in.	N
23114 Gyp Roof31	Roof	2,912	Metal	30	N/A	18	U-factor	0.0278	AsphaltShingles0_25In Plywood - 1/2 in. Composite-3 Air - Cavity - Wall Roof Ceiling - 4 in. or more Glass fiber batt - 5 1/2 in. R19 (CEC Default) Gypsum Board - 5/8 in.	N
23114 Interior Wall35	Interior Wall	1,350	Wood	0	N/A	N/A	U-factor	0.334	Gypsum Board - 5/8 in. Composite-4 Gypsum Board - 5/8 in.	N

[1] *Status: N - New, A - Altered, E - Existing*

CA Building Energy Efficiency Standards - 2022 Nonresidential Compliance | Report Version: 2022.0.000 Schema Version: rev 20220601 | Report Generated: 2023-12-05 10:31:02 Compliance ID: EnergyPro-2975-1223-0448

CERTIFICATE OF COMPLIANCE - NONRESIDENTIAL PERFORMANCE COMPLIANCE METHOD NRCC-PRF-E

Nonresidential Performance Compliance Method (Page 11 of 21)

G1. ENVELOPE GENERAL INFORMATION (conditioned spaces only)

01	02	03	04
Opaque Surfaces & Orientation	Total Gross Surface Area (ft²)	Total Fenestration Area (ft²)	Window to Wall Ratio (%)
North-Facing[1]	3549	81.75	2.3
East-Facing[2]	228	28.26	12.39
South-Facing[3]	3017	594.88	19.72
West-Facing[4]	326	75	23.01
Total	**7120**	**779.89**	**10.95**
Roof	8960	0	0

Notes
[1]*North-Facing is oriented to within 45 degrees of true north, including 45 00'00" east of north (NE), but excluding 45 00'00" west of north (NW),*
[2]*East-Facing is oriented to within 45 degrees of true east, including 45 00'00" south of east (SE), but excluding 45 00'00" north of east (NE),*
[3]*South-Facing is oriented to within 45 degrees of true south, including 45 00'00" west of south (SW), but excluding 45 00'00" east of south (SE),*
[4]*West-Facing is oriented to within 45 degrees of true west, including 45 00'00" north of west (NW), but excluding 45 00'00" south of west (SW),*

G4. NONRESIDENTIAL AIR BARRIER

01	02
Building Story Name	Air Barrier
Com-Floor 1	No air barrier

CA Building Energy Efficiency Standards - 2022 Nonresidential Compliance | Report Version: 2022.0.000 Schema Version: rev 20220601 | Report Generated: 2023-12-05 10:31:02 Compliance ID: EnergyPro-2975-1223-0448

CERTIFICATE OF COMPLIANCE - NONRESIDENTIAL PERFORMANCE COMPLIANCE METHOD NRCC-PRF-E

Nonresidential Performance Compliance Method (Page 10 of 21)

F1B. PV BATTERY BUILDING TYPE(S)

01	02	03
Building Occupancy Type* (From Table 140.10-A/B and 170.2-U/V)	Conditioned Floor Area (ft²)	Unconditioned Floor Area (ft²)
Grocery	0	0
High-Rise Multifamily	0	0
Office, Financial Institutions, Unleased Tenant Space	0	0
Retail	0	0
School	8960	0
Warehouse	0	0
Auditorium, Convention Center, Hotel/Motel, Library, Medical Office Building/Clinic, Restaurant, Theater	0	0
None	0	0

Building Occupancy Types are defined in Section 100.1 of the Energy Code

F2. BATTERY SYSTEMS[1]

01	02	03	04	05	06	07
Control	Capacity (kWh)	Charging Efficiency	Charging Rate (kW)	Discharging Efficiency	Discharging Rate (kW)	Round Trip Efficiency
Basic	32.4	N/A	5	N/A	5	0.9

[1]*See Table D1 for any Battery exceptions used.*

CA Building Energy Efficiency Standards - 2022 Nonresidential Compliance | Report Version: 2022.0.000 Schema Version: rev 20220601 | Report Generated: 2023-12-05 10:31:02 Compliance ID: EnergyPro-2975-1223-0448

CERTIFICATE OF COMPLIANCE - NONRESIDENTIAL PERFORMANCE COMPLIANCE METHOD NRCC-PRF-E

Nonresidential Performance Compliance Method (Page 15 of 21)

H1. DRY SYSTEM EQUIPMENT (FURNACES, AIR HANDLING UNITS, HEAT PUMPS, VRF, ECONOMIZERS ETC.)

01	02	03	04	05	06	07	08	09	10	11	12
Equipment Name	Equipment Type	Qty	Heating				Cooling			Economizer Type (if present)	Status[1]
			Total Heating Output (kBtu/h)	Supp Heat Output (kBtu/h)	Efficiency Unit	Efficiency	Total Cooling Output (kBtu/h)	Efficiency Unit	Efficiency		
HP-8.9 Carrier 50GCQJ05	Single Zone Heat Pump (SZHP) Air System	1	34.79	18.77	N/A	NA	40.23	EER SEER	12.5 17	Differential DB	N
HP-8.10 Carrier 50GCQJ05	Single Zone Heat Pump (SZHP) Air System	1	34.79	18.77	N/A	NA	40.23	EER SEER	12.5 17	Differential DB	N
HP-8.11 Carrier 50GCQJ05	Single Zone Heat Pump (SZHP) Air System	1	30.83	18.77	N/A	NA	40.71	EER SEER	12.5 17	Differential DB	N

[1] *Status: N - New, A - Altered, E - Existing*

CA Building Energy Efficiency Standards - 2022 Nonresidential Compliance | Report Version: 2022.0.000 Schema Version: rev 20220601 | Report Generated: 2023-12-05 10:31:02 Compliance ID: EnergyPro-2975-1223-0448

CERTIFICATE OF COMPLIANCE - NONRESIDENTIAL PERFORMANCE COMPLIANCE METHOD NRCC-PRF-E

Nonresidential Performance Compliance Method (Page 14 of 21)

H1. DRY SYSTEM EQUIPMENT (FURNACES, AIR HANDLING UNITS, HEAT PUMPS, VRF, ECONOMIZERS ETC.)

01	02	03	04	05	06	07	08	09	10	11	12
Equipment Name	Equipment Type	Qty	Heating				Cooling			Economizer Type (if present)	Status[1]
			Total Heating Output (kBtu/h)	Supp Heat Output (kBtu/h)	Efficiency Unit	Efficiency	Total Cooling Output (kBtu/h)	Efficiency Unit	Efficiency		
HP-8.1 Carrier 50GCQJ05	Single Zone Heat Pump (SZHP) Air System	1	34.79	18.77	N/A	NA	40.23	EER SEER	12.5 17	Differential DB	N
HP-8.2 Carrier 50GCQJ06	Single Zone Heat Pump (SZHP) Air System	1	42.81	18.77	N/A	NA	50.21	EER SEER	12.3 17	Differential DB	N
HP-8.3 Carrier 50GCQJ05	Single Zone Heat Pump (SZHP) Air System	1	34.79	18.77	N/A	NA	40.23	EER SEER	12.5 17	Differential DB	N
HP-8.4 Carrier 50GCQJ05	Single Zone Heat Pump (SZHP) Air System	1	34.79	18.77	N/A	NA	40.23	EER SEER	12.5 17	Differential DB	N
HP-8.5 Carrier 50GCQJ06	Single Zone Heat Pump (SZHP) Air System	1	42.81	18.77	N/A	NA	50.21	EER SEER	12.3 17	Differential DB	N
HP-8.6 Carrier 50GCQJ05	Single Zone Heat Pump (SZHP) Air System	1	34.79	18.77	N/A	NA	40.23	EER SEER	12.5 17	Differential DB	N
HP-8.7 Carrier 50GCQJ05	Single Zone Heat Pump (SZHP) Air System	1	34.79	18.77	N/A	NA	40.23	EER SEER	12.5 17	Differential DB	N
HP-8.8 Carrier 50GCQJ06	Single Zone Heat Pump (SZHP) Air System	1	42.81	18.77	N/A	NA	50.21	EER SEER	12.3 17	Differential DB	N

[1] *Status: N - New, A - Altered, E - Existing*

CA Building Energy Efficiency Standards - 2022 Nonresidential Compliance | Report Version: 2022.0.000 Schema Version: rev 20220601 | Report Generated: 2023-12-05 10:31:02 Compliance ID: EnergyPro-2975-1223-0448

CERTIFICATE OF COMPLIANCE - NONRESIDENTIAL PERFORMANCE COMPLIANCE METHOD NRCC-PRF-E

Nonresidential Performance Compliance Method (Page 13 of 21)

G6A. OPAQUE DOOR SUMMARY (NONRESIDENTIAL)

01	02	03	04
Assembly Name	Area (ft²)	Overall U-factor	Status[1]
Metal Door11	216.8	0.7	N

[1] *Status: N - New, A - Altered, E - Existing*

G7A. FENESTRATION ASSEMBLY SUMMARY (NONRESIDENTIAL)

01	02	03	04	05	06	07	08	09
Fenestration Assembly Name	Fenestration Type/ Product Type / Frame Type	Certification Method[1]	Assembly Method	Area (ft²)	Overall U-factor	Overall SHGC	Overall VT	Status[2]
Double Metal Tinted	Vertical fenestration Fixed window Metal	Default 110.6	Site built	765.69	0.71	0.6	0.77	N
Single Metal Clear	Vertical fenestration Operable window Metal	Default 110.6	Site built	14.2	1.28	0.8	0.67	N

[1] *Notes: Newly installed fenestration shall have a certified NFRC Label Certificate or use the CEC default tables found in Table 110.6-A and Table 110.6-B. Center of Glass (COG) values are for the glass-only, determined by the manufacturer, and are shown for ease of verification. Site-built fenestration values are calculated per Nonresidential Appendix NA6 and are used in the analysis.*
[2] *Status: N - New, A - Altered, E - Existing*

CA Building Energy Efficiency Standards - 2022 Nonresidential Compliance | Report Version: 2022.0.000 Schema Version: rev 20220601 | Report Generated: 2023-12-05 10:31:02 Compliance ID: EnergyPro-2975-1223-0448

CERTIFICATE OF COMPLIANCE - NONRESIDENTIAL PERFORMANCE COMPLIANCE METHOD NRCC-PRF-E

Nonresidential Performance Compliance Method (Page 18 of 21)

H8. SYSTEM SPECIAL FEATURES

01	02	03	04
System Name	Equipment Type	Interlocks per 140.4(n)[1]	Other Special Features and Controls
HP-8.9 Carrier 50GCQJ05	Single Zone Heat Pump (SZHP) Air System	No	Zone(s) With CO2 Sensor Vent. Control Differential DB
HP-8.10 Carrier 50GCQJ05	Single Zone Heat Pump (SZHP) Air System	No	Zone(s) With CO2 Sensor Vent. Control Differential DB
HP-8.11 Carrier 50GCQJ05	Single Zone Heat Pump (SZHP) Air System	N/A	Differential DB

Notes: This table includes controls related to the performance path only. For projects using the prescriptive path, mandatory and prescriptive controls requirements are documented on the NRCC-MCH-E.

[1] *Yes = interlocks are provided, No = interlocks are not provided, NA means no operable openings.*

H9. NONRESIDENTIAL / COMMON USE AREA & HOTEL/MOTEL VENTILATION

01	02	03	04	05	06	07
Zone Name	Mechanical Ventilation				Conditioned Area (sf)	DCV or Occupant Sensor Controls, or Both
	Ventilation Function	# of People	Supply OA CFM	Exhaust CFM		
1-Zone 1	Education - Classrooms (ages 5-8)	21.6	328.32	0	864	DCV
2-Zone 2	Office - Office space	4.03	120.9	600	806	N/A
3-Zone 3	Education - Classrooms (ages 5-8)	21.6	328.32	0	864	DCV
4-Zone 4	Education - Classrooms (ages 5-8)	21.6	328.32	0	864	DCV
5-Zone 5	Office - Office space	4.03	120.9	600	806	N/A
6-Zone 6	Education - Classrooms (ages 5-8)	21.6	328.32	0	864	DCV
7-Zone 7	Education - Classrooms (ages 5-8)	21.6	328.32	0	864	DCV
8-Zone 8	Office - Office space	4.03	120.9	600	806	N/A
9-Zone 9	Education - Classrooms (ages 5-8)	21.6	328.32	0	864	DCV

CA Building Energy Efficiency Standards - 2022 Nonresidential Compliance | Report Version: 2022.0.000 Schema Version: rev 20220601 | Report Generated: 2023-12-05 10:31:02 Compliance ID: EnergyPro-2975-1223-0448

CERTIFICATE OF COMPLIANCE - NONRESIDENTIAL PERFORMANCE COMPLIANCE METHOD NRCC-PRF-E

Nonresidential Performance Compliance Method (Page 17 of 21)

H5. GENERAL EXHAUST FAN SUMMARY

01	02	03	04	05	06	07	08
System ID	Zone Name	Qty	CFM	Power	Power Units	Continuous Operation?	Status[1]
Zone 216	2-Zone 2	1	600	0.2	BHP	No	N
Zone 562	5-Zone 5	1	600	0.2	BHP	No	N
Zone 8102	8-Zone 8	1	600	0.2	BHP	No	N
Zone 11142	11-Zone 11	1	900	0.26	BHP	No	N

[1] *Status: N - New, A - Altered, E - Existing*

H8. SYSTEM SPECIAL FEATURES

01	02	03	04
System Name	Equipment Type	Interlocks per 140.4(n)[1]	Other Special Features and Controls
HP-8.1 Carrier 50GCQJ05	Single Zone Heat Pump (SZHP) Air System	No	Zone(s) With CO2 Sensor Vent. Control Differential DB
HP-8.2 Carrier 50GCQJ06	Single Zone Heat Pump (SZHP) Air System	No	Differential DB
HP-8.3 Carrier 50GCQJ05	Single Zone Heat Pump (SZHP) Air System	No	Zone(s) With CO2 Sensor Vent. Control Differential DB
HP-8.4 Carrier 50GCQJ05	Single Zone Heat Pump (SZHP) Air System	No	Zone(s) With CO2 Sensor Vent. Control Differential DB
HP-8.5 Carrier 50GCQJ06	Single Zone Heat Pump (SZHP) Air System	No	Differential DB
HP-8.6 Carrier 50GCQJ05	Single Zone Heat Pump (SZHP) Air System	No	Zone(s) With CO2 Sensor Vent. Control Differential DB
HP-8.7 Carrier 50GCQJ05	Single Zone Heat Pump (SZHP) Air System	No	Zone(s) With CO2 Sensor Vent. Control Differential DB
HP-8.8 Carrier 50GCQJ06	Single Zone Heat Pump (SZHP) Air System	No	Differential DB

Notes: This table includes controls related to the performance path only. For projects using the prescriptive path, mandatory and prescriptive controls requirements are documented on the NRCC-MCH-E.

[1] *Yes = interlocks are provided, No = interlocks are not provided, NA means no operable openings.*

CA Building Energy Efficiency Standards - 2022 Nonresidential Compliance | Report Version: 2022.0.000 Schema Version: rev 20220601 | Report Generated: 2023-12-05 10:31:02 Compliance ID: EnergyPro-2975-1223-0448

CERTIFICATE OF COMPLIANCE - NONRESIDENTIAL PERFORMANCE COMPLIANCE METHOD NRCC-PRF-E

Nonresidential Performance Compliance Method (Page 16 of 21)

H3. NONRESIDENTIAL / COMMON USE AREA FAN SYSTEMS SUMMARY

01	02	03	04	05	06	07	08	09	10	11	12	13
Name or Item Tag	Qty	Design OA CFM	Supply Fan				Return / Relief Fan					Status[1]
			CFM	Power	Power Units	Control	Fan Type	CFM	Power	Power Units	Control	
HP-8.1 Carrier 50GCQJ05	1	328.32	1,400	0.67	BHP	Constant Vol	N/A	N/A	N/A	N/A	N/A	N
HP-8.2 Carrier 50GCQJ06	1	120.9	1,800	0.92	BHP	Constant Vol	N/A	N/A	N/A	N/A	N/A	N
HP-8.3 Carrier 50GCQJ05	1	328.32	1,400	0.67	BHP	Constant Vol	N/A	N/A	N/A	N/A	N/A	N
HP-8.4 Carrier 50GCQJ05	1	328.32	1,400	0.67	BHP	Constant Vol	N/A	N/A	N/A	N/A	N/A	N
HP-8.5 Carrier 50GCQJ06	1	120.9	1,800	0.92	BHP	Constant Vol	N/A	N/A	N/A	N/A	N/A	N
HP-8.6 Carrier 50GCQJ05	1	328.32	1,400	0.67	BHP	Constant Vol	N/A	N/A	N/A	N/A	N/A	N
HP-8.7 Carrier 50GCQJ05	1	328.32	1,400	0.67	BHP	Constant Vol	N/A	N/A	N/A	N/A	N/A	N
HP-8.8 Carrier 50GCQJ06	1	120.9	1,800	0.92	BHP	Constant Vol	N/A	N/A	N/A	N/A	N/A	N
HP-8.9 Carrier 50GCQJ05	1	328.32	1,400	0.67	BHP	Constant Vol	N/A	N/A	N/A	N/A	N/A	N
HP-8.10 Carrier 50GCQJ05	1	328.32	1,400	0.67	BHP	Constant Vol	N/A	N/A	N/A	N/A	N/A	N
HP-8.11 Carrier 50GCQJ05	1	74.1	1,400	0.67	BHP	Constant Vol	N/A	N/A	N/A	N/A	N/A	N

[1] *Status: N - New, A - Altered, E - Existing*

CA Building Energy Efficiency Standards - 2022 Nonresidential Compliance | Report Version: 2022.0.000 Schema Version: rev 20220601 | Report Generated: 2023-12-05 10:31:02 Compliance ID: EnergyPro-2975-1223-0448

REGISTERED PROFESSIONAL ENGINEER BRIAN W. CARLSON No. M34846 Exp. 6-30-26 MECHANICAL STATE OF CALIFORNIA

LAWRENCE ENGINEERING GROUP
4910 E. Clinton Way, Suite 101 (559) 431-0101 | Fresno, CA 93727 FAX (559) 431-1362
23114

NEW PRESCHOOL AND TK/KINDERGARTEN CLASSROOMS AT SANTA FE ELEMENTARY SCHOOL

PORTERVILLE UNIFIED SCHOOL DISTRICT
286 E ORANGE AVENUE, PORTERVILLE, CA 93257

REVISIONS

MANGINI ARCHITECTURE INGENUITY
BARENG MORRELLI SCOTT
MANGINI ASSOCIATES INC.
4320 West Mineral King Avenue
Visalia, California 93291
www.mangini.us
(559) 627-0530 Office
(559) 627-1926 Fax

TITLE
TITLE 24 DOCUMENTS

M5.5

PROJECT 23076

24 June 2024 11:35 AM P:\2023\23114 Porterville USD - Santa Fe ES - Kinder\4-Drawings\4 M\M5.1-5.8 Title 24 Documents.dwg rqj 9

C:\Users\rqj\AppData\Local\Temp\AcPublish_4216\M5.1-5.8 Title 24 Documents.dwg Jun 24 2024 11:35am

APPROVALS

FILE # 54-76 | APPLICATION # 02-121996

IDENTIFICATION STAMP
DIV. OF THE STATE ARCHITECT
APP: 02-121996 INC: A
REVIEWED FOR
SS ☑ FLS ☑ ACS ☑
DATE: 8/14/2024

LICENSED ARCHITECT MICHAEL J. SCOTT No. C-34290 REN. 05-31-25 STATE OF CALIFORNIA

DATE: DECEMBER 31, 2023

CERTIFICATE OF COMPLIANCE - NONRESIDENTIAL PERFORMANCE COMPLIANCE METHOD NRCC-PRF-E

Nonresidential Performance Compliance Method (Page 21 of 21)

Documentation Author's Declaration Statement

I. I certify that this Certificate of Compliance documentation is accurate and complete.

Documentation Author Name: Brent Yang	Documentation Author Signature: Brent Yang
Company: Lawrence Engineering Group	Signature Date: 2023-12-05
Address: 4910 E Clinton Way	CEA/HERS Certification Identification (if applicable):
City/State/Zip: Fresno, CA 93727	Phone: 5594310101

Responsible Person's Declaration statement

I certify the following under penalty of perjury, under the laws of the State of California:

1. The information provided on this Certificate of Compliance is true and correct.
2. I am eligible under Division 3 of the Business and Professions Code to accept responsibility for the building design or system design identified on this Certificate of Compliance (responsible designer)
3. The energy features and performance specifications, materials, components, and manufactured devices for the building design or system design identified on this Certificate of Compliance conform to the requirements of Title 24, Part 1 and Part 6 of the California Code of Regulations.
4. The building design features or system design features identified on this Certificate of Compliance are consistent with the information provided on other applicable compliance documents, worksheets, calculations, plans and specifications submitted to the enforcement agency for approval with this building permit application.
5. I understand that a registered copy of this Certificate of Compliance shall be made available with the building permit(s) issued for the building, and made available to the enforcement agency for all applicable inspections, and I will take the necessary steps to accomplish this requirement.
6. I understand that a registered copy of this Certificate of Compliance is required to be included with the documentation the builder provides to the building owner at occupancy, and I will take the necessary steps to accomplish these requirements.

Responsible Designer Name: Gilbert M Bareng	Responsible Designer Signature:	
Company: Mangini Associates Inc		
Address: 4320 W Mineral King Ave	Date Signed:	
City/State/Zip: Visalia, CA 93291	License #: C-33544	
Phone: 559-627-0530	Title:	Scope:
Responsible Designer Name: Ryan W Carlson	Responsible Designer Signature:	
Company: Lawrence Engineering Group		
Address: 4910 E Clinton Way	Date Signed: 2023-12-05	
City/State/Zip: Fresno, CA 93727	License #: M34846	
Phone: 559-431-0101	Title:	Scope:

CERTIFICATE OF COMPLIANCE - NONRESIDENTIAL PERFORMANCE COMPLIANCE METHOD NRCC-PRF-E

Nonresidential Performance Compliance Method (Page 20 of 21)

L. DECLARATION OF REQUIRED CERTIFICATES OF INSTALLATION

Selections made by Documentation Author indicate which Certificates of Installation must be submitted for the features to be recognized for compliance. These documents must be retained and provided to the building inspector during construction and can be found online

Building Component	Form/Title
Envelope	NRCI-ENV-01-E - Must be submitted for all buildings
Envelope	NRCI-ENV-E - Envelope (for all buildings)
Mechanical	NRCI-MCH-01-E - Must be submitted for all buildings
Mechanical	NRCI-MCH-E - For all buildings with Mechanical Systems

M. DECLARATION OF REQUIRED CERTIFICATES OF ACCEPTANCE

Selections made by Documentation Author indicate which Certificates of Acceptance must be submitted for the features to be recognized for compliance. These documents must be provided to the building inspector during construction and must be completed through an Acceptance Test Technician Certification Provider (ATTCP).

Building Component	Form/Title
Envelope	NRCA-ENV-02-F - NRFC label verification for fenestration
Mechanical	NRCA-MCH-02-A - Outdoor Air must be submitted for all newly installed HVAC units. Note: MCH-02-A can be performed in conjunction with MCH-07-A Supply Fan VFD Acceptance (if applicable) since testing activities overlap
Mechanical	NRCA-MCH-03-A - Constant Volume Single Zone HVAC
Mechanical	NRCA-MCH-05-A - Air Economizer Controls
Mechanical	NRCA-MCH-06-A Demand Control Ventilation Systems must be submitted for all systems required to employ demand controlled ventilation (refer to) can vary outside ventilation flow rates based on maintaining interior carbon dioxide (CO2) concentration setpoints.

N. DECLARATION OF REQUIRED CERTIFICATES OF VERIFICATION

Selections made by Documentation Author indicate which Certificates of Verification must be submitted for the features to be recognized for compliance. These documents must be retained and provided to the building inspector during construction and can be found online

There are no Certificates of Verification applicable to this project

CERTIFICATE OF COMPLIANCE - NONRESIDENTIAL PERFORMANCE COMPLIANCE METHOD NRCC-PRF-E

Nonresidential Performance Compliance Method (Page 19 of 21)

H9. NONRESIDENTIAL / COMMON USE AREA & HOTEL/MOTEL VENTILATION

01	02	03	04	05	06	07
Zone Name	Mechanical Ventilation				Conditioned Area (sf)	DCV or Occupant Sensor Controls, or Both
	Ventilation Function	# of People	Supply OA CFM	Exhaust CFM		
10-Zone 10	Education - Classrooms (ages 5-8)	21.6	328.32	0	864	DCV
11-Zone 11	Office - Office space	2.47	74.1	900	494	N/A

H11. ZONAL SYSTEM AND TERMINAL UNIT SUMMARY

01	02	03	04	05	06	07	08	09	10	11	12
System ID	System Type	Qty	Rated Capacity (kBtuh)		Airflow (cfm)			Fan			VSD
			Heating	Cooling	Design	Min.	Min. Ratio	Power	Power Units	Cycles	
1-Zone 1-Trm	Uncontrolled	1	N/A	N/A	1,400	N/A	0	N/A	N/A	N/A	☐
2-Zone 2-Trm	Uncontrolled	1	N/A	N/A	1,800	N/A	0	N/A	N/A	N/A	☐
3-Zone 3-Trm	Uncontrolled	1	N/A	N/A	1,400	N/A	0	N/A	N/A	N/A	☐
4-Zone 4-Trm	Uncontrolled	1	N/A	N/A	1,400	N/A	0	N/A	N/A	N/A	☐
5-Zone 5-Trm	Uncontrolled	1	N/A	N/A	1,800	N/A	0	N/A	N/A	N/A	☐
6-Zone 6-Trm	Uncontrolled	1	N/A	N/A	1,400	N/A	0	N/A	N/A	N/A	☐
7-Zone 7-Trm	Uncontrolled	1	N/A	N/A	1,400	N/A	0	N/A	N/A	N/A	☐
8-Zone 8-Trm	Uncontrolled	1	N/A	N/A	1,800	N/A	0	N/A	N/A	N/A	☐
9-Zone 9-Trm	Uncontrolled	1	N/A	N/A	1,400	N/A	0	N/A	N/A	N/A	☐
10-Zone 10-Trm	Uncontrolled	1	N/A	N/A	1,400	N/A	0	N/A	N/A	N/A	☐
11-Zone 11-Trm	Uncontrolled	1	N/A	N/A	1,400	N/A	0	N/A	N/A	N/A	☐

STATE OF CALIFORNIA
Domestic Water Heating System
CALIFORNIA ENERGY COMMISSION

CERTIFICATE OF COMPLIANCE		NRCC-PLB-E
Project Name: Santa Fe Elementary School - Building 800	Report Page:	(Page 3 of 6)
	Date Prepared:	12/5/2023

G. DOMESTIC HOT WATER DISTRIBUTION SYSTEM

This table is used to demonstrate compliance for nonresidential occupancies with distribution requirements in 120.3 and 140.5. For multifamily and hotel/motel occupancies, compliance is demonstrated with requirements 110.3(c), 160.4, 170.2(d).

Mandatory Pipe Insulation All Occupancies

13	☐	For systems serving dwelling units, pipe insulation must meet the minimum insulation requirements in Table 160.4-A (see blow) except: • Piping that penetrates framing members shall not be required to have pipe insulation for the distance of the framing penetration. Piping that penetrates metal framing shall use grommets, plugs, wrapping or other insulating material to assure that no contact is made with the metal framing. Insulation shall abut securely against all framing members • Piping installed in interior or exterior walls shall not be required to have pipe insulation if all of the requirements are met for compliance with Quality Insulation Installation (QII) as specified in the Reference Residential Appendix RA3.5. • Piping surrounded with a minimum of 1 inch of wall insulation, 2 inches of crawlspace insulation, or 4 inches of attic insulation, shall not be required to have pipe insulation.
14	☒	For systems serving nonresidential spaces, pipe insulation for the following applications is specified to comply with Table 120.3-A (see below) per 120.3: • Recirculating system piping, including supply and return piping of the water heater • The first 8 ft of hot and cold outlet piping, including between storage tank and heat trap, for a nonrecirculating storage system • Pipes that are externally heated
15	☐	Insulation shall be protected from damage, including that due to sunlight, moisture, equipment maintenance, and wind. Insulation exposed to weather shall be installed with a cover suitable for outdoor service per 120.3(b) / 160.4(f). Pipe insulation buried below grade must be installed in a water proof and non-crushable casing or sleeve.

TABLE 120.3-A / 160.4-A PIPE INSULATION THICKNESS

Fluid Temperature Range (°F)	Conductivity Range (Btu-in per hour per ft² per °F)	Insulation Mean Rating Temp (°F)	Nominal Pipe Diameter (in)			
			< 1	1 to < 1.5	1.5 to < 4	1.5 to < 4 Multifamily & Hotel/Motel
			Minimum Insulation Required			
105-140	0.22 - 0.28	100	1.0 in or R-7.7	1.5 in or R-12.5	1.5 in or R-11	2.0 in or R-16

STATE OF CALIFORNIA
Domestic Water Heating System
CALIFORNIA ENERGY COMMISSION

CERTIFICATE OF COMPLIANCE		NRCC-PLB-E
Project Name: Santa Fe Elementary School - Building 800	Report Page:	(Page 2 of 6)
	Date Prepared:	12/5/2023

E. ADDITIONAL REMARKS

This table includes remarks made by the permit applicant to the Authority Having Jurisdiction.

F. DOMESTIC HOT WATER EQUIPMENT

This table is used to demonstrate compliance with mandatory equipment requirements in 110.1 and 110.3. Compliance with prescriptive requirements in 140.5(c) / 170.2(d) must also be demonstrated and with 141.0 / 180.1/ 180.2 for addition and alteration scopes.

Equipment Schedule: Water Heating Efficiency and Standby Loss

03		04		05		06	
System Name	AO Smith DEL-20	Exception to 140.5(c)/ 170.2(d)3		☐	Gas Service Water Heating System >= 1MMBtu/h[1]	Capacity-weighted Average Efficiency %	

07	08	09	10		11	12	13	14	15
Name or Item Tag	Equipment Type	Volume (gal)	Rated Input Capacity (Btu/h)	Max GPM/ First Hour Rating (FHR)	Rated Efficiency	Minimum Efficiency Required	Efficiency Unit	Designed Standby Loss	Maximum Standby Loss
AO Smith DEL-20	Consumer Rated Electric Storage	20	15,354	FHR >=75	0.92	0.86	UEF		

[1]*FOOTNOTE: In systems >= 1MMBtu/h with multiple units, gas water heaters with input capacity > 100,000 Btu/h may meet 90% Et requirements via an input capacity-weighted average.*

Water Heating Equipment All Occupancies

	Yes	No	Not Applicable	Requirement
18	☐	☐	☒	Unfired storage tank insulation shall have Internal + External >=R-16 OR External >=R-3.5. Label required per 110.3(c)3
19	☐	☐	☒	New state buildings 60% of energy for service water heating from site solar energy or recovered energy per 110.3(c)5
20	☐	☐	☒	Isolation valves for instantaneous water heater with input rating >6.8 kBTUH or 2 kW has been specified per 110.3(c)6
21	☐	☐	☒	School buildings < 25,000 ft² and < 4 stories must install a heat pump water heating system per 140.5(a)1. Water heating systems serving an individual bathroom space may be an instantaneous electric water heater.

STATE OF CALIFORNIA
Domestic Water Heating System
CALIFORNIA ENERGY COMMISSION

CERTIFICATE OF COMPLIANCE		NRCC-PLB-E
Project Name: Santa Fe Elementary School - Building 800	Report Page:	(Page 1 of 6)
Project Address: 286 E Orange Ave	Date Prepared:	12/5/2023

This document is used to demonstrate compliance for nonresidential occupancies with requirements in 110.1, 110.3, 120.3, and 140.5, and with requirements in 141.0 for additions and alterations, for domestic water heating scopes using the prescriptive path. For high-rise residential and hotel/motel occupancies compliance is demonstrated with requirements in 110.1, 110.3, 160.4 and 170.2(d), and with requirements 180.1 for additions and 180.2 for alterations.

A. GENERAL INFORMATION

01	Project Location (city)	Porterville	02	Climate Zone	13
03	Occupancy Types Within Project (select all that apply):				

● Classroom ● Office

B. PROJECT SCOPE

This table includes domestic water heating systems that are within the scope of the permit application and are demonstrating compliance using the prescriptive paths outlined in 140./ 170.2(d) and 141.0(a)/ 180.1, or 141.0(b)2N / 180.2 for additions or alterations. Solar water heating systems are documented on the NRCC-SAB compliance document. Combined hydronic water heating systems are documented on the NRCC-MCH compliance document.

01	02	03
My project consists of (check all that apply):	System Types[1,2]	System Components
☒ New system (DHW system being installed for the first time)	Individual System (serving nonresidential spaces)	☒ Equipment ☒ Distribution ☒ Controls
☐ System Alteration (equipment, distribution or controls)		☐ Equipment ☐ Distribution ☐ Controls

[1]*FOOTNOTES: Point of use water heaters, or other non-central systems used to serve nonresidential spaces, are considered individual systems.*
[2] *Dwelling units refers to hotel/motel guest rooms and units in a multifamily residential occupancy.*
[3] *DHW systems serving 2 or more dwelling units are considered "Central Systems" for multifamily occupancies*

C. COMPLIANCE RESULTS

Table C will indicate if the project data input into the compliance document is compliant with water heating requirements. If this table says "DOES NOT COMPLY" or "COMPLIES with Exceptional Conditions" refer to Table D, or the table indicated as not compliant for guidance.

01	02	03	04
Domestic Hot Water Equipment	Distribution Systems	Controls	Compliance Results
Table F	Table G	Table H	
Yes	Yes	Yes	COMPLIES

D. EXCEPTIONAL CONDITIONS

This table is auto-filled with uneditable comments because of selections made or data entered in tables throughout the form.

STATE OF CALIFORNIA
Domestic Water Heating System
CALIFORNIA ENERGY COMMISSION

CERTIFICATE OF COMPLIANCE		NRCC-PLB-E
Project Name: Santa Fe Elementary School - Building 800	Report Page:	(Page 6 of 6)
Project Address: 286 E Orange Ave	Date Prepared:	12/5/2023

DOCUMENTATION AUTHOR'S DECLARATION STATEMENT

I certify that this Certificate of Compliance documentation is accurate and complete.

Documentation Author Name: Brent Yang	Documentation Author Signature: Brent Yang
Company: Lawrence Engineering Group	Signature Date: 2023-12-05
Address: 4910 E Clinton Way	CEA/ HERS Certification Identification (if applicable):
City/State/Zip: Fresno CA 93727	Phone: 5594310101

RESPONSIBLE PERSON'S DECLARATION STATEMENT

I certify the following under penalty of perjury, under the laws of the State of California:

1. The information provided on this Certificate of Compliance is true and correct.
2. I am eligible under Division 3 of the Business and Professions Code to accept responsibility for the building design or system design identified on this Certificate of Compliance (responsible designer)
3. The energy features and performance specifications, materials, components, and manufactured devices for the building design or system design identified on this Certificate of Compliance conform to the requirements of Title 24, Part 1 and Part 6 of the California Code of Regulations.
4. The building design features or system design features identified on this Certificate of Compliance are consistent with the information provided on other applicable compliance documents, worksheets, calculations, plans and specifications submitted to the enforcement agency for approval with this building permit application.
5. I will ensure that a completed signed copy of this Certificate of Compliance shall be made available with the building permit(s) issued for the building, and made available to the enforcement agency for all applicable inspections. I understand that a completed signed copy of this Certificate of Compliance is required to be included with the documentation the builder provides to the building owner at occupancy.

Responsible Designer Name: Ryan W Carlson	Responsible Designer Signature:	
Company: Lawrence Engineering Group	Date Signed: 2023-12-05	
Address: 4910 E Clinton Way	License: M34846	
City/State/Zip: Fresno CA 93727	Phone: 559-431-0101	

STATE OF CALIFORNIA
Domestic Water Heating System
CALIFORNIA ENERGY COMMISSION

CERTIFICATE OF COMPLIANCE		NRCC-PLB-E
Project Name: Santa Fe Elementary School - Building 800	Report Page:	(Page 5 of 6)
	Date Prepared:	12/5/2023

I. DECLARATION OF REQUIRED CERTIFICATES OF INSTALLATION

Selections have been made based on information provided in this document. If any selection have been changed by permit applicant, an explanation should be included in Table E. Additional Remarks. These documents must be provided to the building inspector during construction and can be found online

Form/Title

NRCI-PLB-E - Must be submitted for all buildings

J. DECLARATION OF REQUIRED CERTIFICATES OF ACCEPTANCE

There are no forms required for this project.

K. DECLARATION OF REQUIRED CERTIFICATES OF VERIFICATION

There are no forms required for this project.

STATE OF CALIFORNIA
Domestic Water Heating System
CALIFORNIA ENERGY COMMISSION

CERTIFICATE OF COMPLIANCE		NRCC-PLB-E
Project Name: Santa Fe Elementary School - Building 800	Report Page:	(Page 4 of 6)
	Date Prepared:	12/5/2023

H. DOMESTIC HOT WATER CONTROLS

This table is used to demonstrate compliance with control requirements in 110.3 for all occupancies. For multifamily residential and hotel/motel occupancies, compliance is also demonstrated with requirements in 160.4(e) / 170.2(d).

	Yes	No	Not Applicable	Requirement
01	☒	☐	☐	Construction documents require manufacturer certification that service water-heating systems are equipped with automatic temperature controls capable of adjusting temperature settings per 110.3(a).
02	☐	☐	☒	Systems with capacity > 167,000 BTUH equipped with outlet temperature controls per 110.3(c)1 unless covered by California Plumbing Code 613.0.
03	☐	☐	☒	Controls for circulating pumps or electrical heat trace systems are capable of automatically turning off the system per §110.3(c)2 unless systems serves healthcare facility.
04	☐	☐	☒	For recirculation systems serving multiple dwelling units, design includes automatic pump controls per 170.2(d) or 180.1(b)3 for additions.
05	☐	☐	☒	For recirculation systems serving individual dwelling units, design includes manual on/off controls as specified in Reference Appendix RA4.4.9 per 170.2(d).
06	☐	☐	☒	Combustion air positive shut-off shall be provided per 160.4(3).on all newly installed commercial boilers as follows: • Boilers with input capacity >= 2.5 MMBtu/h, in which the boiler is designed to operate with a nonpositive vent static pressure • Boilers where one stack serves two or more boilers with a total combined input capacity per stack of 2.5 MMBtu/h.
07	☐	☐	☒	Boiler combustion air fans with motor >= 10 hp shall meet one of the following • The fan motor shall be driven by a variable speed drive OR • The fan motor shall include controls that limit the fan motor demand to <=30% of the total design wattage at 50% of the design air volume.
08	☐	☐	☒	Newly installed boilers with an input capacity {d.gte/} 5MMBtu/h and a steady state full-load combustion efficiency < 90% shall maintain excess (stack-gas) oxygen concentrations <= 5% by volume on a dry basis over firing rates of 20-100%. Combustion air volume shall be controlled with respect to firing rate or flue gas oxygen concentration. Use of a common gas and combustion air control linkage or jack shaft is prohibited.

REGISTERED PROFESSIONAL ENGINEER RYAN W. CARLSON No. M34846 Exp. 6-30-26 MECHANICAL STATE OF CALIFORNIA

LAWRENCE ENGINEERING GROUP
4910 E. Clinton Way, Suite 101 (559) 431-0101 | 23114 | Fresno, CA 93727 FAX (559) 431-1362

NEW PRESCHOOL AND TK/KINDERGARTEN CLASSROOMS AT SANTA FE ELEMENTARY SCHOOL

PORTERVILLE UNIFIED SCHOOL DISTRICT
286 E ORANGE AVENUE, PORTERVILLE, CA 93257

REVISIONS

MANGINI ARCHITECTURE ENGINEERING
BARENG MORRELLI SCOTT
MANGINI ASSOCIATES INC. 4320 West Mineral King Avenue Visalia, California 93291
www.mangini.us (559) 627-0530 Office (559) 627-1926 Fax

TITLE: TITLE 24 DOCUMENTS

M5.6

PROJECT 23076

24 June 2024 11:36 AM P:\2023\23114 Portenville USD – Santa Fe ES – Kinder\4-Drawings\4 M\M5.1-5.8 Title 24 Documents.dwg rajg
C:\Users\raj\AppData\Local\Temp\AcPublish_4216\M5.1-5.8 Title 24 Documents.dwg Jun 24 2024 11:36am

APPROVALS

FILE # 54-76 | APPLICATION # 02-121996

IDENTIFICATION STAMP
DIV. OF THE STATE ARCHITECT
APP: 02-121996 INC: A
REVIEWED FOR
SS ☑ FLS ☑ ACS ☑
DATE: 8/14/2024

LICENSED ARCHITECT MICHAEL J. SCOTT No. C-34290 REN. 05-31-25 STATE OF CALIFORNIA

DATE: DECEMBER 31, 2023

STATE OF CALIFORNIA
Nonresidential Building Commissioning
CALIFORNIA ENERGY COMMISSION

CERTIFICATE OF COMPLIANCE		NRCC-CXR-E
Project Name: Santa Fe ES New Preschool, TK and Kindergarten - Building 800	Report Page:	(Page 3 of 16)
	Date Prepared:	2023-12-19T18:05:14-05:00

F. DESIGN REVIEW KICKOFF MEETING

This table indicates that the design reviewer meets the qualification requirements per Title 24, Part 1 Section 10-103(a)1 and demonstrates compliance with design review kickoff requirements per 120.8(d)2. This meeting should occur during the Schematic Design phase of the project.

Design Review Kickoff Meeting Details

01	Date of Design Review Kickoff Meeting		2023-12-14
02	Meeting Attendees: (one person may play multiple roles)		
☐ Owner/Facility Manager:		☐ Design Reviewer(s)	
☐ Project Manager:		☒ Design Architect/ Engineer(s):	Ryan Carlson - Mechanical Engineer / Lance Smith - Electrical Engineer
☐ Contractor:		☐ Certified Acceptance Test Tech(s):	
☐ Commissioning Provider:		☐ Energy/ T24 Part 6 Consultant:	

Design Reviewer Qualifications per Title 24 Part 1 Section 10-103(a)1

		Do the Design Reviewer(s) meet these qualifications?	
03	The design reviewer(s) must be licensed professional engineers or licensed architects, or licensed contractors representing services performed by or under the direct supervision of a licensed engineer or architect, as specified in the provisions of Division 3 of the Business and Professions Code.	Yes	No
	In addition, for buildings with >= 10,000 ft² but < 50,000², the design reviewer(s) shall be a qualified in-house engineer or architect with no other project involvement or a third party engineer, architect, or contractor	●	○
04	The design reviewer(s) for this project will be:	Muey Tarvin	

Preliminary Construction Schedule

		Start Date	Completion Date
05	Schematic Design	2023-05-08	2023-07-05
06	Design Development	2023-07-12	2023-09-26
07	Construction Documents	2023-09-27	2024-04-12
08	Construction	2024-10-01	2025-10-03
09	Building Turnover	2025-10-06	2025-10-10

STATE OF CALIFORNIA
Nonresidential Building Commissioning
CALIFORNIA ENERGY COMMISSION

CERTIFICATE OF COMPLIANCE		NRCC-CXR-E
Project Name: Santa Fe ES New Preschool, TK and Kindergarten - Building 800	Report Page:	(Page 2 of 16)
	Date Prepared:	2023-12-19T18:05:14-05:00

B. PROJECT SCOPE

08	Table M: Commissioning Report	120.8(i)	A complete report of commissioning process activities undertaken through the design, construction and reporting recommendations for post-construction phases of the building project shall be completed and provided to the owner or representative.

C. COMPLIANCE RESULTS

Table C will indicate if the project data input into the compliance document is compliant with commissioning requirements per 120.8. This table is not editable by the user. If any cell on this table says "DOES NOT COMPLY" or "COMPLIES with Exceptional Conditions" refer to Table D, for guidance.

01	02	03	04	05	06	07	08	09
Design Kickoff Review	Owner's Project Requirements	Basis of Design	Design Review	Commissioning Plan	Functional Performance Testing	Documentation and Training	Commissioning Report	
Table F	Table G	Table H	Table I	Table J	Table K	Table L	Table M	
Yes	Yes	Yes	Yes	Yes	Yes	Yes	Yes	COMPLIES
10				Muey Tarvin				COMPLIES

D. EXCEPTIONAL CONDITIONS

This table is auto-filled with uneditable comments because of selections made or data entered in tables throughout the form.

E. ADDITIONAL REMARKS

This table includes remarks made by the permit applicant to the Authority Having Jurisdiction.

STATE OF CALIFORNIA
Nonresidential Building Commissioning
CALIFORNIA ENERGY COMMISSION

CERTIFICATE OF COMPLIANCE		NRCC-CXR-E
Project Name: Santa Fe ES New Preschool, TK and Kindergarten - Building 800	Report Page:	(Page 1 of 16)
Project Address:	Date Prepared:	2023-12-19T18:05:14-05:00

This document is used to demonstrate compliance with mandatory commissioning requirements in 120.8 for nonresidential buildings and hotel/motel or mixed-use buildings with nonresidential spaces. This document does not demonstrate compliance with commissioning requirements within Title 24, Part 11, which need to be documented separately if they apply.

A. GENERAL INFORMATION

01	Project Location (city)	Porterville	04	Building Size (ft²)	10358
02	Occupancy Type	Nonresidential	05		10,000 - 49,999 ft²
03	Project Type	Newly constructed	06		Unitary or packaged equipment each serving one zone
			07	Climate Zone	13

B. PROJECT SCOPE

Based on project information provided in Table A, Table B indicates which commissioning related requirements apply per 120.8. Table B is not editable by the user.

Commissioning Requirements per 120.8

01	Table F: Design Review Kickoff	120.8(d)1 and 120.8(d)2	The design review kickoff meeting establishes who will play the role of the design reviewer, the project schedule and identify owner's requirements. This meeting should be conducted during schematic design.
02	Table G: Owner's Project Requirements (OPR)	120.8(b)	The owner's project requirements establish the owner's goals, requirements and expectations for everything related to energy consumption and operation. This should be completed during schematic design.
03	Table H: Basis of Design (BOD)	120.8(c)	The basis of design documents the design elements such as calculations and product selections that meet the owner's project requirements and applicable regulatory requirements. This should be completed during schematic design.
04	Table I: Design Review	120.8(d) and 120.8(e)	The design reviewer(s) reviews the construction documents for clarity, completeness, and adherence to the owner's goals. Commissioning measures must be included in the construction documents to facilitate the design review and commissioning process. For projects with >= 10,000 ft² of nonresidential conditioned floor area, the design review is for adherence with the Owner's Project Requirements (OPR) and Basis of Design (BOD). This should be conducted during design.
05	Table J: Commissioning Plan	120.8(f)	The commissioning plan is developed by the commissioning provider with input from the designer and defines the scope of commissioning the project. This should be drafted during design and completed during early construction.
06	Table K: Functional Performance Testing	120.8(g)	Functional performance testing is conducted on building systems to demonstrate correct installation and operation.
07	Table L: Documentation and Training	120.8(h)	Documentation of the operational aspects of the building shall be completed within the Systems Manual and delivered to the building owner or representative and facilities operator.

STATE OF CALIFORNIA
Nonresidential Building Commissioning
CALIFORNIA ENERGY COMMISSION

CERTIFICATE OF COMPLIANCE		NRCC-CXR-E
Project Name: Santa Fe ES New Preschool, TK and Kindergarten - Building 800	Report Page:	(Page 6 of 16)
	Date Prepared:	2023-12-19T18:05:14-05:00

G. OWNER'S PROJECT REQUIREMENTS (OPR)

28	Describe the maintenance plan and how the HVAC design needs to address operation and maintenance issues.	Training for systems and equipment operations will be conducted on-site by each sub-contractor to the maintenance personnel. The training will be hands-on demonstration and documentations.
29	Additional notes regarding HVAC system efficiency	System heating and cooling capacities shall be established by engineering calculations and energy modeling in conformance with the design summer/winter conditions and ventilation required by code. All equipment selected for the project is expected to comply with CEC.
Energy Efficiency Goals: Indoor Lighting Systems		
30	Describe specific lighting requirements including quality and glare.	Lighting systems and lighting controls shall be designed to meet or exceed the CEC. Include occupancy sensors and automatic daylight controls where required to minimize electric lighting usage. Illuminance shall comply with Illuminating Engineering Society (IES) Lighting Standards.
31	List the desired types of lighting (if any) and ones that are not to be considered. (example: fluorescent in 2x2 grid, accent lighting, particular lamps)	Illumination shall meet the IES requirement. LED lighting used throughout the building for efficiency. Natural Lighting where possible. Primary and Secondary Daylit where required.
32	Describe (if any) task lighting requirements.	N/A
33	Describe any desired features of the lighting control system including occupancy, daylighting, and demand response if applicable.	Lighting controls system comply with code minimum requirements.
34	What is the expected occupancy schedule? Will the occupants be allowed to override the lighting system controls during "unoccupied hours"?	Weekdays: 8:00 AM to 5:00 PM / Weekends: Off
35	Does occupancy-based control need to be coordinated with mechanical demand control ventilation?	N/A
36	Describe how occupants will interact with the lighting control system (overrides etc)	Occupant sensor will shut off after 20 mins when space is unoccupied. Override button or lighting control system can be programmed to allow for after hour maintenance.
37	Additional notes regarding Indoor Lighting system efficiency	N/A
Energy Efficiency Goals: Outdoor Lighting Systems		
38	Describe specific outdoor lighting requirements.	Lighting systems and lighting controls shall be designed to meet or exceed the CEC.
39	List the desired types of outdoor lighting, including lighting for building facade, landscape, walkways, roof-top, etc. if applicable.	Include building facade lighting, walkways, and site pole lighting to meet or exceed the CEC.
40	Describe any features of the outdoor lighting control system, including motion sensors, photocontrol, time-switch and automatic scheduling.	Lighting controls system comply with code minimum requirements.

STATE OF CALIFORNIA
Nonresidential Building Commissioning
CALIFORNIA ENERGY COMMISSION

CERTIFICATE OF COMPLIANCE		NRCC-CXR-E
Project Name: Santa Fe ES New Preschool, TK and Kindergarten - Building 800	Report Page:	(Page 5 of 16)
	Date Prepared:	2023-12-19T18:05:14-05:00

G. OWNER'S PROJECT REQUIREMENTS (OPR)

Energy Efficiency Goals: HVAC Systems		
13	List the HVAC system types considered desirable, and ones that are not to be considered.	The HVAC system design, equipment efficiencies, and installation shall meet or exceed all applicable building and energy codes and/or ASHRAE 90.1 requirements for the site location. All equipment selected for the project is expected to comply with CEC, where required.
14	What is the desired thermostatic setpoint range in the heating season, and cooling season?	Heating: 68°F, Cooling: 74°F, User Adjustment: +/- 3°F
15	What is the expected occupancy schedule? Will the occupants be allowed to override the mechanical system controls during "unoccupied hours"?	Weekdays: 7:00 AM to 5:00 PM / Weekends: off
16	Are there times during the day that the zone temperature is allowed to drift out of the temperature setpoint range? If so, how long and what times are acceptable.	Temperature range maximum is +/-5°F
17	Is it acceptable to let the facility cool down to a night setback temperature in the winter?	Night setback temperature is desired.
18	Is it acceptable to let the facility temperature drift above setpoint during the summer evenings?	The building will be in operation year round with summer camp program. It is expected that drift is acceptable if the district is set up for the process.
19	How many days out of the year is it acceptable to not meet the entire cooling/heating load?	The building will be in operation year round.
20	Are there zones with special temperature, humidity, air filtering, etc., requirements? If so, identify and list the special environmental control requirements.	N/A
21	What expectations are there around building ventilation?	Ventilation shall comply with code minimum requirements.
22	Is occupancy-based demand control ventilation (DCV) desired, or required?	Comply with code minimum requirements.
23	Is a building automation system (BAS) desired? If so, what are the requirements of the BAS and what value is expected to be added with the BAS?	BAS shall meet district standard, Allerton.
24	Will zone setpoints be controlled locally by the user, or via the BAS only by the maintenance staff?	BAS only by the maintenance staff.
25	Explain the requirements of the HVAC system in regards to temperature, humidity and draft control.	Comply with code minimum requirements.
26	Explain the requirements of the facility in regards to indoor air quality	Comply with code minimum requirements.
27	What are the acoustic requirements of the HVAC system within the various spaces of the facility?	Comply with code minimum requirements.

STATE OF CALIFORNIA
Nonresidential Building Commissioning
CALIFORNIA ENERGY COMMISSION

CERTIFICATE OF COMPLIANCE		NRCC-CXR-E
Project Name: Santa Fe ES New Preschool, TK and Kindergarten - Building 800	Report Page:	(Page 4 of 16)
	Date Prepared:	2023-12-19T18:05:14-05:00

G. OWNER'S PROJECT REQUIREMENTS (OPR)

This table is only completed if an OPR document is not attached to permit application to demonstrate compliance with 120.8(b). If a specific field is not applicable to the project scope, "NA" is indicated in the table. Per 120.8(b), the OPR is to be completed before design begins. This may be done at the Design Review Kickoff Meeting (see Table F)

		YES	NO
01	Attaching Completed Owner's Project Requirements Document?	○	●
02	Owner's Project Requirements Document Authors and Roles	Porterville Unified School District	
Energy Efficiency Goals: General			
03	What is the target total energy usage per square foot per year? (ie, Energy User Intensity (EUI) in kBtu/ft²)	1	
04	What is the target total energy cost per square foot per year?	1	
05	Is kW demand control specifically an interest of the client or the design team? If so, for what reason?	The owner has not specified.	
06	What are the project goals and requirements for building siting that will impact energy use?	The design of the facility including framing and insulation shall meet all applicable codes. During design, energy conservation strategies, measures and specific system shall be considered including building orientation and location.	
07	What are the project goals and requirements for landscape that will impact energy use?	The project is to comply with the mandatory measures of CalGreen Code to ensure water efficiency and conservation.	
08	Additional notes regarding general efficiency	N/A	
Energy Efficiency Goals: Envelope			
09	What are the project goals and requirements for building fenestration that will impact energy use?	All proposed window openings, exterior wall insulation, and roof insulation to comply with California Energy Code (CEC).	
10	What are the project goals and requirements for walls/floors that will impact energy use?	All proposed window openings, exterior wall insulation, and roof insulation to comply with California Energy Code (CEC).	
11	What are the project goals and requirements for building roof that will impact energy use?	All proposed window openings, exterior wall insulation, and roof insulation to comply with California Energy Code (CEC).	
12	Additional notes regarding envelope efficiency	N/A	

STATE OF CALIFORNIA
Nonresidential Building Commissioning
CALIFORNIA ENERGY COMMISSION

CERTIFICATE OF COMPLIANCE		NRCC-CXR-E
Project Name: Santa Fe ES New Preschool, TK and Kindergarten - Building 800	Report Page:	(Page 9 of 16)
	Date Prepared:	2023-12-19T18:05:14-05:00

14	Ventilation System Description	Ventilation complies with 2022 California Mechanical Code.
15	Control Intent Narrative/ Sequence of Operations	Title 24 compliant, 7 day programmable thermostat.
16	Outside Air Supply	Ventilation complies with 2022 California Mechanical Code.
17	Load Calculation	Assumptions • Exterior Wall: Masonry Wall • Roof: Built up roof with R-30 Insulation • Ventilation per code • Heat producing equipment (ie: TV monitors, coffee maker, vending machines, refrigerators, freezers, etc.), as applicable
18	Indoor Design Conditions	Occupied Spaces / Unoccupied Spaces
		Occupied Periods: Temp (°F) / Temp (°F) / Relative Humidity (%)
		Heating: 68 / 68 / 50
		Cooling: 74 / 72 / 50
		Unoccupied Periods: Temp (°F) / Temp (°F) / Relative Humidity (%)
		Heating: 55 / 55 / 50
		Cooling: 95 / 95 / 50
19	Response to OPR Document	The mechanical systems meets the OPR because it is designed according to the following objectives: code compliant, energy efficient, cost effective, thermal comfort, and maintainability.
Indoor Lighting System Basis of Design		
20	Indoor Lighting System Narrative	The system is comprised of lighting zones which are controlled by a Lighting Control and lighting controller panel. Time clock and power pack control is overridden through the use of occupancy sensors with dimming controls within each space to be controlled. Sensors are mounted on the ceiling or wall with the mounting location determined by the amount of potential interference from areas outside the space to be controlled.
21	Fixture Types	• All lighting fixtures used in this building are LED with integral dimming drivers. • Dimmable fixtures are LED 0-10V. • All light fixtures are LED. They are recess, and surface mounted as appropriate for the room. • Exterior fixtures are controlled via astronomical time clock or photocontrol to meet code minimum requirements.
22	Lamp and Ballast Types	N/A – LEDs and Drivers for all fixtures.
23	Control Types	• Lighting fixtures will be LED controlled by wall or ceiling room occupancy sensors and/or wall switches. Lighting controls shall comply with CEC. • Illuminance shall comply with IES Standards.

STATE OF CALIFORNIA
Nonresidential Building Commissioning
CALIFORNIA ENERGY COMMISSION

CERTIFICATE OF COMPLIANCE		NRCC-CXR-E
Project Name: Santa Fe ES New Preschool, TK and Kindergarten - Building 800	Report Page:	(Page 8 of 16)
	Date Prepared:	2023-12-19T18:05:14-05:00

Title 24 Part 6 Compliance Approach		
03	Title 24 Part 6 Compliance Approach (select one)	☐ Prescriptive ☐ Performance ☒ Performance and Prescriptive Combined
04	Description of prescriptive scope and performance scope	Electrical - Prescriptive / Mechanical - Performance
General Energy Efficiency Goals		
05	Energy Use Intensity (EUI)	The project is to comply with code minimum requirements using Energy Pro Software, for calculations.
06	Energy Cost Budget	The project is to comply with code minimum requirements using Energy Pro Software, for calculations.
Envelope Basis of Design		
07	Window to Wall Ratio	All proposed window openings, exterior wall insulation, and roof insulation to comply with California Energy Code (CEC).
08	Opaque Wall Assembly	All proposed window openings, exterior wall insulation, and roof insulation to comply with California Energy Code (CEC).
09	Window Performance	All proposed window openings, exterior wall insulation, and roof insulation to comply with California Energy Code (CEC).
10	Response to OPR Document	All proposed window openings, exterior wall insulation, and roof insulation to comply with California Energy Code (CEC).
HVAC System Basis of Design		
11	HVAC System Design	The heating and air conditioning system serving the building will consist heat pump packaged air conditioning units equipped with supplemental electric heat . Units will be located on the roofs and ducted to areas served. Units will be zoned to serve similar spaces. MERV 13 filter as required by code. In addition, integrated economizer with powered exhaust fans, VFD for balancing, and outside air monitoring station for additional energy savings, ventilation, maintain building pressure, and to comply with code.
12	Heating System Description	Units will be zoned to serve similar spaces. Each zone consists of a heat pump packaged unit with electric heating/electric cooling, and a thermostat for temperature control. Electric heating with supplemental heat for heating.
13	Cooling System Description	Units will be zoned to serve similar spaces. Each zone consists of a heat pump packaged unit with electric heating/electric cooling, and a thermostat for temperature control. R-410A refrigerant used for cooling.

STATE OF CALIFORNIA
Nonresidential Building Commissioning
CALIFORNIA ENERGY COMMISSION

CERTIFICATE OF COMPLIANCE		NRCC-CXR-E
Project Name: Santa Fe ES New Preschool, TK and Kindergarten - Building 800	Report Page:	(Page 7 of 16)
	Date Prepared:	2023-12-19T18:05:14-05:00

G. OWNER'S PROJECT REQUIREMENTS (OPR)

41	Describe how occupants will interact with the lighting control system (overrides etc)	Lighting controls system comply with code minimum requirements.
42	Additional notes regarding Outdoor lighting system efficiency	N/A
Energy Efficiency Goals: Water Heating Systems		
43	Describe what the water heating system will be used for and expected demand?	Water heaters shall be designed to comply code minimum requirements.
44	Describe the desired type (if any) of water heating system and those that should not be considered, (example: instantaneous, heatpump, manufacturer, etc.)	Instantaneous tank less water heater for the building.
45	What are the desired automation features and controls for the water heating system.	Recirculating pump with aquastat
46	What are the efficiency requirements of the water heating system?	Comply with code minimum requirements.
47	Additional notes regarding Water Heating system efficiency.	Comply with code minimum requirements.
Operations and Maintenance Requirements		
48	Desired building life span	The desired life span is 30+ years.
49	What are the broad goals relative to life cycle of the equipment?	It is anticipated the Contractor's workmanship and equipment warranty shall be included in the O&M's. Anticipated average lifecycle of HVAC and Solar PV equipment is approximately 20 years and water heating system is approximately 10 years.
50	What is the desired level of training and orientation for building occupants to understand and use the building systems?	Training for systems and equipment operations will be conducted on-site by each sub-contractor to the building and maintenance personnel.
51	What is the desired level of training and orientation for O&M staff to understand and maintain the building systems?	Training for systems and equipment operations will be conducted on-site by each sub-contractor to the maintenance personnel. The training will be hands-on demonstration and documentations.

H. BASIS OF DESIGN (BOD)

This table is only completed if a BOD document is not attached to the permit application to demonstrate compliance with 120.8(c). If a specific field is not applicable to the project scope, "NA" is indicated in the table. Per 120.8(c), the BOD should be completed and updated during the design phase.

		YES	NO
01	Attaching Completed Basis of Design Document?	○	●
02	Basis of Design Document Authors and Roles	Ryan Carlson, Mechanical Engineer	

REGISTERED PROFESSIONAL ENGINEER RYAN W. CARLSON NO. M34546 Exp. 6-30-26 MECHANICAL STATE OF CALIFORNIA

LAWRENCE ENGINEERING GROUP
4910 E. Clinton Way, Suite 101
(559) 431-0101
23114
Fresno, CA 93727
FAX (559) 431-1362

NEW PRESCHOOL AND TK/KINDERGARTEN CLASSROOMS AT SANTA FE ELEMENTARY SCHOOL
PORTERVILLE UNIFIED SCHOOL DISTRICT
286 E ORANGE AVENUE, PORTERVILLE, CA 93257

REVISIONS

MANGINI ARCHITECTURE INGENUITY
BARENG MORRELLI SCOTT
MANGINI ASSOCIATES INC.
4320 West Mineral King Avenue
Visalia, California 93291
www.mangini.us
(559) 627.0530 Office
(559) 627.1926 Fax

TITLE
COMMISSIONING DOCUMENTS

M5.7

PROJECT 23076

24 June 2024 11:36 AM P:\2023\23114 Porterville USD - Santa Fe ES - Kinder\4-Drawings\4 M\M5.1-5.8 Title 24 Documents.dwg rajg
C:\Users\raj\AppData\Local\Temp\AcPublish_4216\M5.1-5.8 Title 24 Documents.dwg Jun 24 2024 11:36am

J. COMMISSIONING PLAN

This table is only completed if a Commissioning Plan document is not attached to permit application to demonstrate compliance with 120.8(j). Per 120.8(j), the Commissioning Plan is to be stated during the design phase and a completed draft must be submitted with permit application

		YES	NO
01	Attaching Completed Commissioning Plan?	○	●
02	Commissioning Plan Authors and Roles	Muey Tarvin / Commissioning	

Commissioning Provider Information

03	Company Name	Lawrence Engineering Group	05	Contact Email	muey@LEGFresno.com
04	Contact Person	Muey Tarvin	06	Contact Phone	559-431-0101

Commissioning Process Overview

07	Owner Goals	Building commissioning is to provide documented confirmation that building systems function to meet the owner's operational needs and to meet code minimum requirements.
08	Roles and Responsibilities	The contractor verifies installation, provides scheduling and coordination of commissioning activities, performs training, starts up equipment, conducts tests, corrects deficiencies, performs re-tests, and provides documentation of the process. The CxA provides the owner an unbiased, objective view of the systems installation, documentation, operation, and performance. Commissioning procedures and results are observed by the CxA. The contractor is expected to verify the functional readiness of systems to be tested prior to performing the tests in the presence of the witnesses. A high rate of test failure will indicate that the contractor has not adequately verified the readiness of the systems. This plan is the key means for the CxA to inform all parties as to how each system functions independently and with respect to other systems.
09	Schedule	As this is the first issuance of the commissioning plan and no definitive construction schedule has been adopted, a finalized commissioning schedule will be provided following the identification of a construction schedule. For the purpose of review and analysis all checklists necessary for the commissioning of referenced systems will be included for subcontractors.

Commissioning Activities During Construction

10	Construction Observation	The CxA makes periodic site visits to witness equipment and system installations, and will verify installation procedures and conformance to specifications and construction documents. Each site visit will have a specific agenda and will be coordinated with the general contractor site supervisor. The CxA attends selected planning and job-site meetings in order to remain informed on construction progress and to update parties involved in commissioning. The GC provides the CxA with information regarding construction schedules, substitutions or change orders that may affect commissioned equipment or the commissioning schedule.

33	Water Heating Load Calculations	The water heater was selected using the ASHRAE and ASPE sizing method in conjunction with sizing software from the manufacturer. The 100 gallon storage capacity with 250,000 BTUH input water heater selected will supply hot water as follows: 416 GPH at 125°F temperature rise.
34	Response to OPR Document	The selected system meets the owner's project requirements because of its thermal efficiency, low operating cost, natural gas, and meets or exceeds code minimum compliance.

I. CONSTRUCTION DOCUMENT DESIGN REVIEW CHECKLIST

This table is only completed if a design review document is not attached to permit application to demonstrate compliance with 120.8(b) and 120.8(e). For buildings with >= 10,000 ft² conditioned floor area, the design review will ensure the construction documents meet the Owner's Project Requirements (Table G.) and the Basis of Design Documents (Table H.). For buildings with < 10,000 ft² conditioned floor area, the design review will ensure the construction documents meet the goals documented in Table F. during the Design Review Kickoff.

		YES	NO
01	Attaching Completed Design Review Documentation?	○	●

Design Review Checklist

02	Envelope Design	Envelope design complies with code minimum requirements.
03	HVAC System Design	HVAC system designed matches owner's expectation which is rooftop packaged units with programmable thermostats as well as ventilation and filtration to comply with code minimum requirements.
04	HVAC Controls Design	Title 24 compliant, 7 day programmable thermostat.
05	Indoor Lighting System Design	Indoor lighting is controlled by dimmers, motion sensors, lighting relay control panel with astronomical time switch, photosensors in rooms with windows, programmable room controllers, and programmable central controller. Specialty lighting installed where required.
06	Indoor Lighting Controls Design	Project lighting control system shall consist of a network of occupancy sensors, photocontrols, low voltage dimming and control relays.
07	Outdoor Lighting System and Controls Design	Exterior lighting will be controlled by the automatic time switch or the photocell feature of the central lighting control system to meet the requirements of code and OPR.
08	Water Heating System Design	Water heating system with circulating pump complies with code minimum requirements and OPR.
09	Other Systems and Features	Title 24 compliant, 7 day programmable thermostat. EMS will be Allerton to match district standard.

24	Control Intent Narrative/ Sequence of Operations	Project lighting control system shall consist of a network of occupancy sensors, photocontrols, low voltage dimming and control relays. Lighting control system shall comply with code minimum requirements.
25	Response to OPR Document	The selected LED lighting system is a better choice than alternatives using Fluorescent and Incandescent fixtures. The LED fixtures have greater visual comfort performance, efficiency, reliability, flexibility, simplicity, color rendering, integration with daylighting, ease of maintenance and longevity.

Outdoor Lighting System Basis of Design

26	Outdoor Lighting System Narrative	Exterior lighting will be controlled by the automatic time switch or the photocell feature of the central lighting control system.
27	Fixture Types	LEDs and Drivers for all fixtures.
28	Lamp and Ballast Types	N/A
29	Control Types	Exterior lighting will be controlled by the automatic time switch or the photocell feature of the central lighting control system.
30	Control Intent Narrative/ Sequence of Operations	Lighting control system shall comply with code minimum requirements.
31	Response to OPR Document	The selected LED lighting system is a better choice than alternatives using Fluorescent and Incandescent fixtures. The LED fixtures have greater visual comfort performance, efficiency, reliability, flexibility, simplicity, color rendering, integration with daylighting, ease of maintenance and longevity.

Water Heating System Basis of Design

32	Water Heating System Narrative	The water heaters is located in the building and supplies hot water to all lavatories, sinks, and showers.. The 94% thermal efficiency, 100-gallon natural gas storage tank type water heater is an Bradford White EF-100T. To achieve high thermal efficiency, the water heater is capable adjusting firing rate to the specific demand to further efficiency. The direct fired heat exchanger keeps hot burner gases swirling, uses centrifugal force to maximize efficiency of heat transfer to water in tank. This efficiency allows for operational cost savings, a minimal amount of wasted fuel with the maximum output of BTU's transferred to the water. The water heater complies with the Low-NOx emission requirements of less than 20 ppm or less. The water heater is provided with a circulating pump that will continuously circulate a small amount of hot water from the water heater to the farthest fixture and back to the water heater providing hot water to the fixtures allowing the end user to have precise control of water temperature and usage which will result in energy savings.

L. DOCUMENTATION AND TRAINING

[1] FOOTNOTE: See the signature block on the last page of this compliance document for the responsible party.

M. COMMISSIONING REPORT

The table below is completed to demonstrate compliance with commissioning report requirements per 120.8(i)

By checking this box, the responsible party[1] certifies that a complete report of commissioning process' activities undertaken through the design, construction and reporting recommendations for post-construction phases of the building project shall be completed and provided to the owner or owner's representative.	01 ☒

[1] FOOTNOTES: See the signature block on the last page of this compliance document for the responsible party.

N. DECLARATION OF REQUIRED CERTIFICATES OF INSTALLATION

There are no forms required for this project.

O. DECLARATION OF REQUIRED CERTIFICATES OF ACCEPTANCE

There are no forms required for this project.

K. FUNCTIONAL PERFORMANCE TESTING

HP-8.1 thru HP-8.11	Verify each AC Unit is providing outside requirements to meet code requirements and design intent.	NA7.5.1 Outdoor Air	Yes
HP-8.1 thru HP-8.11	Verify component associated with each AC Unit such as thermostat installation and programming, supply fan, heating, cooling, and damper operation properly functions.	NA7.5.2 CV, Single Zone AC/HP's	Yes
HP-8.1 thru HP-8.11	Verify air side economizer uses outdoor air to satisfy space-cooling loads.	NA7.5.4 Air Economizer Controls & Exhaust Heat Recovery	Yes
HP-8.1, HP-8.3, HP-8.4, HP-8.6, HP-8.7, HP-8.9, HP-8.10	Verify the AC Unit can vary outside air ventilation flow rates based on maintaining Interior CO2 concentration setpoints for high density areas.	NA7.5.5 DCV Systems	Yes
HP-8.1 thru HP-8.11	Verify proper FDD reporting for automated fault detection and diagnostics systems for each AC Unit.	NA7.5.11 FDD for Package DX	Yes
Indoor Lighting	Verify that occupant sensing controls and automatic time switch controls are functioning properly to achieve the desired lighting controls.	NA7.6.2 Lighting Shut-Off	Yes
Indoor Lighting	Verify automatic daylighting in primary and secondary zone.	NA7.6.1 Daylighting Controls	Yes
Outdoor Lighting	Verify outdoor lighting turns on/off according to astronomical time switch control	NA7.8.2 Photocontrol	Yes

The acceptance tests required by Title 24, Part 6 outline the minimum functional performance testing scope to be conducted for compliance. However, the commissioning scope may include additional functional performance tests on systems or equipment not having acceptance tests required by Title 24 Part 6.

The following additional functional performance tests have been requested by the owner or owner's representative:

06	07
System/ Equipment to be Tested	Brief description of functional performance test

[1] FOOTNOTE: See the signature block on the last page of this compliance document for the responsible party.
[2] Required acceptance tests can be determined by reviewing the "Certificates of Acceptance" table on each Certificate of Compliance submitted for permit application.

L. DOCUMENTATION AND TRAINING

The table below is completed to demonstrate compliance with documentation and training requirements per 120.8(h)

By checking this box, the responsible party[1] certifies that a systems manual will be provided to the building owner or representative per 120.8(h)1.	01 ☒
By checking this box, the responsible party[1] certifies that a training of the appropriate maintenance staff for each equipment and system will be completed and documented in the commissioning report per 120.8(h)2. Training requirements should be included in the contract document in the specifications.	02 ☒

J. COMMISSIONING PLAN

11	Issues Logs	Commissioning Corrections Log provide a record of deficiencies that are discovered through the commissioning process so that they may be tracked and appropriately resolved. The Commissioning Corrections Log is a formal and ongoing record of concerns – and their resolution – that have been raised by members of the Commissioning Team during the course of the commissioning process that synopsizes the issues recorded on the Commissioning Corrections Log.
12	Installation Verification	Verification is a systematic process of ensuring that all building systems perform interactively according to operational needs. This is achieved by reviewing construction submittals in the Construction Phase and continuing a review of the project through the occupancy and operations period with actual verification of performance prior to occupancy.
13	Functional Performance Testing	Observation is conducted with the technician or subcontractor. Verification during the construction of this project is intended to achieve the following specific objectives according to the Contract Documents: • Ensure that applicable equipment and systems are installed properly and receive adequate operational checkout by installing contractors. • Verify and document proper performance of equipment and systems. • Ensure that O&M documentation is complete. • Verify that adequate and accurate system and assembly documentation is provided to the owner. • Verify that operation and maintenance personnel and occupants are properly trained. • Utilize quality-based sampling techniques to detect systemic problems. • Verify proper coordination among systems and assemblies.
14	Documentation and Training	The final commissioning report will include an overview or summary of the commissioning process, major results of the process, the final commissioning issues log and resolutions, commissioning progress and field reports, a deferred testing log, an unresolved issues log, a lessons-learned evaluation, and concluding with a recommendation to accept the process as complete.

K. FUNCTIONAL PERFORMANCE TESTING

The table below is completed to demonstrate compliance with functional performance testing requirements per 120.8(g).

By checking this box, the responsible party[1] certifies that functional performance testing will be executed to demonstrate the correct installation and operation of each component, system and system-to-system interface in accordance with the acceptance test requirements in 120.5, 130.4 and 140.9. The functional performance testing reports shall contain information addressing each of the building components tested, the testing methods utilized, and include any readings and adjustments made.	01 ☒

The following acceptance tests have been identified as applicable to the project scope:[2]

02	03	04	05
System/ Equipment to be Tested	Brief description of functional performance test	Applicable Reference Appendix	Certified Acceptance Test Technician Required?

DOCUMENTATION AUTHOR'S DECLARATION STATEMENT

I certify that this Certificate of Compliance documentation is accurate and complete.

Documentation Author Name: Muey Tarvin	Documentation Author Signature:
Company: Lawrence Engineering Group	Signature Date: 12/19/2023
Address:	CEA/ HERS Certification Identification (if applicable):
City/State/Zip:	Phone:

RESPONSIBLE PERSON'S DECLARATION STATEMENT

I certify the following under penalty of perjury, under the laws of the State of California:

1. The information provided on this Certificate of Compliance is true and correct.
2. I am eligible under Division 3 of the Business and Professions Code to accept responsibility for the building design or system design identified on this Certificate of Compliance (responsible designer)
3. The energy features and performance specifications, materials, components, and manufactured devices for the building design or system design identified on this Certificate of Compliance conform to the requirements of Title 24, Part 1 and Part 6 of the California Code of Regulations.
4. The building design features or system design features identified on this Certificate of Compliance are consistent with the information provided on other applicable compliance documents, worksheets, calculations, plans and specifications submitted to the enforcement agency for approval with this building permit application.
5. I will ensure that a completed signed copy of this Certificate of Compliance shall be made available with the building permit(s) issued for the building, and make available to the enforcement agency for all applicable inspections. I understand that a completed signed copy of this Certificate of Compliance is required to be included with the documentation of the building provided to the building owner at occupancy.

Responsible Designer Name: Ryan Carlson	Responsible Designer Signature:
Company: Lawrence Engineering Group	Date Signed: 12/19/2023
Address: 4910 E. Clinton Way, Suite 101	License: M34846
City/State/Zip: Fresno, CA 93727	Phone: 559-431-0101

REGISTERED PROFESSIONAL ENGINEER
RYAN W. CARLSON
NO. M34846
Exp. 6-30-26
MECHANICAL
STATE OF CALIFORNIA

LAWRENCE ENGINEERING GROUP
4910 E. Clinton Way, Suite 101
(559) 431-0101
23114
Fresno, CA 93727
FAX (559) 431-1362

APPROVALS
FILE # 54-76
APPLICATION # 02-121996

IDENTIFICATION STAMP
DIV. OF THE STATE ARCHITECT
APP: 02-121996 INC: A
REVIEWED FOR
SS ☑ FLS ☑ ACS ☑
DATE: 8/14/2024

LICENSED ARCHITECT
MICHAEL J. SCOTT
No. C-34290
REN. 05-31-25
STATE OF CALIFORNIA
DATE: DECEMBER 31, 2023

NEW PRESCHOOL AND TK/KINDERGARTEN CLASSROOMS AT SANTA FE ELEMENTARY SCHOOL

PORTERVILLE UNIFIED SCHOOL DISTRICT
286 E ORANGE AVENUE, PORTERVILLE, CA 93257

REVISIONS

MANGINI ARCHITECTURE INGENUITY
BARENG MORRELLI SCOTT
MANGINI ASSOCIATES INC.
4320 West Mineral King Avenue
Visalia, California 93291
www.mangini.us
(559) 627-0530 Office
(559) 627-1926 Fax

TITLE
COMMISSIONING DOCUMENTS

M5.8

PROJECT 23076

24 June 2024 11:36 AM P:\2023\23114 Porterville USD - Santa Fe ES - Kinder\4-Drawings\4 M\M5.1-5.8 Title 24 Documents.dwg rajl g
C:\Users\raj\AppData\Local\Temp\AcPublish_4216\M5.1-5.8 Title 24 Documents.dwg Jun 24 2024 11:36am

FIXTURE SCHEDULE

FIXTURE SYMBOL (3-A-48): 3 = CIRCUIT NUMBER, A = FIXTURE TYPE, 48 = FIXTURE WATTAGE

TYPE	WATTS	LAMPS	VOLT	MANUFACTURER	CATALOG NO.	MOUNT	NOTES	
A	48	L.E.D.	120-277V	LITHONIA	2BLT4-60L-ADP-MVOLT-WZ1-LP840-N100	FLUSH T-BAR	PER #1/E5.2	
AE	48	L.E.D.	↓	LITHONIA	2BLT4-60L-ADP-MVOLT-WZ1-LP840-N100-E10WLP	FLUSH T-BAR	PER #1/E5.2	(1)
B	35	L.E.D.	↓	LITHONIA	STL4-40L-D50-LP840-N100	SURFACE	PER #2/E5.2	
BE	35	L.E.D.	↓	LITHONIA	STL4-40L-D50-LP840-N100-E14L	SURFACE	PER #2/E5.2	(1)
C	25	L.E.D.	↓	GOTHAM	EVO6VR-40-25-6AR-WD-LSS-MVOLT	RECESS	PER #6/E5.2 EXTERIOR	(3)
CE	25	L.E.D.	↓	GOTHAM	EVO6VR-40-25-6AR-WD-LSS-MVOLT-E10WCP	RECESS	PER #6/E5.2 EXTERIOR	(2), (3)
D	25	L.E.D.	↓	LITHONIA	WST-LED-P2-40K-VF-MVOLT-DBLXD	WALL	EXTERIOR	(4)
DE	25	L.E.D.	↓	LITHONIA	WST-LED-P2-40K-VF-MVOLT-DBLXD-E20WH	WALL	EXTERIOR	(2), (4)
P1	138	L.E.D.	↓	LITHONIA	DSX1-LED-P5-40K-T4LG RPA-MVOLT-PIRH-DNAXD	POLE	PER #7/E5.2	(5)
P2	276	L.E.D.	↓	LITHONIA	(2) DSX1-LED-P5-40K-T4LG RPA-MVOLT-PIRH-DNAXD	POLE	PER #10/E5.2	(5)
P3	138	L.E.D.	↓	LITHONIA	DSX1-LED-P5-40K-T1S RPA-MVOLT-PIRH-DNAXD	POLE	PER #7/E5.2	(5)
X	2	L.E.D.	120-277V	LITHONIA	LE-S-W-1-R-120/277-ELNSD	SURFACE	SINGLE FACE EXIT SIGN WITH EMERGENCY BATTERY PACK	

FIXTURE SCHEDULE NOTES:

(1) LIGHT FIXTURE SHALL BE EQUIPPED WITH AN EMERGENCY BATTERY PACK TO OPERATE THE L.E.D. DRIVER IN THE EMERGENCY MODE FOR A MINIMUM OF 90 MINUTES. PULL UNSWITCHED CIRCUIT TO EMERGENCY BATTERY PACK. REFER TO LIGHTING PLANS FOR EXACT LOCATIONS AND DETAIL PER #4/E5.2 FOR WIRING REQUIREMENTS.

(2) LIGHT FIXTURE SHALL BE EQUIPPED WITH AN EMERGENCY BATTERY PACK TO OPERATE THE L.E.D. DRIVER IN THE EMERGENCY MODE FOR A MINIMUM OF 90 MINUTES. PULL UNSWITCHED CIRCUIT TO EMERGENCY BATTERY PACK. REFER TO LIGHTING PLANS FOR EXACT LOCATIONS AND DETAIL PER #4/E5.2 FOR WIRING REQUIREMENTS.

(3) PROVIDE BAR HANGERS AS REQUIRED.

(4) SEE LIGHTING PLANS FOR MOUNTING HEIGHTS.

(5) SET FIXTURE TO DIM TO 50% AFTER FIRST 15 MINUTES, THEN TO OFF AT 30 MINUTES.

ELECTRICAL SYMBOLS NOTES:

(A) REFER TO FIRE ALARM DEVICES ELEVATION, DETAIL #1/E4.4 FOR RESPECTIVE MOUNTING HEIGHTS.

(B) AT EXTERIOR LOCATIONS, PROVIDE WEATHER-RESISTANT TYPE G.F.C.I. DUPLEX RECEPTACLES, LEVITON #GFWT2-W OR EQUAL. AT DAMP LOCATIONS, PROVIDE A DIECAST WEATHERPROOF LOCKABLE COVER, RACO #5028-0 OR EQUAL. AT WET LOCATIONS, PROVIDE A DIECAST WEATHERPROOF "WHILE-IN-USE" LOCKABLE COVER, RED DOT #CKSUV OR EQUAL.

(C) "nLIGHT" ENABLED LIGHT FIXTURE PER FIXTURE SCHEDULE ON SHEET #EG1.1.

(D) LIBERTY WIRE CABLE, INC #18-2C-LVB OR EQUAL.

(E) ACUITY CONTROLS #CAT 5e * J1 OR EQUAL. *ASTERISK INDICATES LENGTH OF CABLE. CABLES ARE AVAILABLE IN 6", 1', 2', 5', 10', 15', 30', AND 50' LENGTHS.

(F) ACUITY CONTROLS #nCM-PDT-10-ADCX-RJB OR EQUAL.

(G) ACUITY CONTROLS #nPODMA-DX-WH OR EQUAL. PROVIDE A DECORATOR STYLE STAINLESS STEEL WALLPLATE.

(H) ACUITY CONTROLS #nCM-PDT-10-RJB OR EQUAL.

(J) ACUITY CONTROLS #nWSXA-PDT-LV-WH OR EQUAL. PROVIDE A DECORATOR STYLE STAINLESS STEEL WALLPLATE.

(K) ACUITY CONTROLS #WSD-PDT-WH OR EQUAL. PROVIDE A DECORATOR STYLE STAINLESS STEEL WALLPLATE.

(L) ACUITY CONTROLS #nPODMA-2P-DX-WH OR EQUAL. PROVIDE A DECORATOR STYLE STAINLESS STEEL WALLPLATE.

(M) ACUITY CONTROLS #nPODMA-4P-DX-WH OR EQUAL. PROVIDE A DECORATOR STYLE STAINLESS STEEL WALLPLATE.

(N) ACUITY CONTROLS #nECY-MVOLT-BAC-ADR-ENC-GFXK OR EQUAL. REFER TO DETAIL #8/E5.2 FOR ADDITIONAL INFORMATION.

(P) ACUITY CONTROLS #nBRG-8-KIT OR EQUAL. REFER TO DETAIL #9/E5.2 FOR ADDITIONAL INFORMATION. PROVIDE A 4" SQ. x 2 1/8" DEEP OUTLET BOX FOR MOUNTING OF NETWORK INTERFACE BRIDGE AND POWER SUPPLY.

(Q) ACUITY CONTROLS #nGWY2-GFX AND 150ma POWER SUPPLY #PS150 OR EQUAL.

ELECTRICAL SYMBOLS

ALL DIMENSIONS TO CENTER OF BOX, U.O.N.

NOTE	SYMBOL	DESCRIPTION
	3-	CIRCUIT NUMBER (3-A-48)
	-A-	FIXTURE TYPE (3-A-48)
	-48	FIXTURE WATTAGE (3-A-48)
	A/3	HOME RUN 3/4"C - MIN. (PANEL A, CIRCUIT #3)
		CONDUIT RUN IN WALL OR ATTIC (1/2"C - 2 #12 AWG THWN + 1 #12 GND)
		CONDUIT RUN IN FLOOR OR UG (1/2"C - 2 #12 AWG THWN + 1 #12 GND)
		ANY CONDUIT RUN - 1/2"C - 3 #12 AWG THWN + 1 #12 GND
		" " - 3/4"C - 4 #12 AWG THWN + 1 #12 GND
		" " - 3/4"C - 5 #12 AWG THWN + 1 #12 GND
		" " - 1"C - 6 #12 AWG THWN + 1 #12 GND
		CONDUIT STUB - CAPPED AND LABELED.
	1	ELECTRICAL KEYNOTE #1, REFER TO NOTES ON SAME SHEET.
	U.O.N.	UNLESS OTHERWISE NOTED
	W.P.	WEATHERPROOF
	PDZ	DENOTES BOUNDARY OF PRIMARY DAYLIT ZONE.
	SDZ	DENOTES BOUNDARY OF SECONDARY DAYLIT ZONE.
		TERMINAL CABINET (SIZE AS SHOWN)
		ELECTRICAL PANELBOARD
		TAMPER-RESISTANT SINGLE 20A RECEPTACLE IN WALL (+15" MIN. TO BOTTOM OF BOX)
		TAMPER-RESISTANT DUPLEX RECEPTACLE IN WALL (+15" MIN. TO BOTTOM OF BOX)
		TAMPER-RESISTANT DUPLEX RECEPTACLE IN FLUSH FLOOR BOX
		TAMPER-RESISTANT QUADRUPLEX RECEPTACLE IN FLUSH FLOOR BOX
		TAMPER-RESISTANT SPECIAL OUTLET AS NOTED ON DWGS. (+15" MIN. TO BOTTOM OF BOX)
		TAMPER-RESISTANT QUADRUPLEX RECEPTACLE IN WALL (+15" MIN. TO BOTTOM OF BOX)
(B)		TAMPER-RESISTANT G.F.C.I. DUPLEX RECEPTACLE IN WALL (+15" MIN. TO BOTTOM OF BOX)
	H	EXIT LIGHT, WALL MOUNTED
		EXIT LIGHT, CEILING MOUNTED
		RECESSED MOUNTED LIGHT FIXTURE IN CEILING
		LIGHT FIXTURE
(E)	--C5--	NETWORK CABLE - CATEGORY 5e CABLE, LENGTH AS REQUIRED
(D)	--DC--	0-10V DIMMING CONTROL CABLE, LENGTH AS REQUIRED
(C)		LIGHT FIXTURE WITH "nLIGHT" EMBEDDED CONTROLS
	EM	RECESSED MOUNTED LIGHT FIXTURE EQUIPPED WITH EMERGENCY BATTERY PACK
		LIGHT FIXTURE EQUIPPED WITH EMERGENCY BATTERY PACK
		SINGLE HEAD AREA LIGHT
		TWIN HEAD AREA LIGHT
	$	LIGHT SWITCH (+4'-0" MAX. TO TOP OF BOX, U.O.N.)
(F)	OSP	360° OCCUPANCY SENSOR (DUAL TECHNOLOGY) WITH AUTOMATIC DIMMING CONTROL PHOTOCELL, CEILING MOUNTED
(G)	D	ON/OFF SWITCH WITH RAISE/LOWER DIMMING CONTROL (+4'-0" MAX. TO TOP OF BOX, U.O.N.)
(H)	OS	360° OCCUPANCY SENSOR (DUAL TECHNOLOGY), CEILING MOUNTED
(J)	OS	OCCUPANCY SENSOR WALL SWITCH, LOW VOLTAGE (+4'-0" MAX. TO TOP OF BOX, U.O.N.)
(K)	S	OCCUPANCY SENSOR WALL SWITCH, LINE VOLTAGE (+4'-0" MAX. TO TOP OF BOX, U.O.N.)
(L)	D2	ON/OFF SWITCH WITH RAISE/LOWER DIMMING CONTROL (TWO CHANNELS) (+4'-0" MAX. TO TOP OF BOX, U.O.N.)
(M)	D4	ON/OFF SWITCH WITH RAISE/LOWER DIMMING CONTROL (FOUR CHANNELS) (+4'-0" MAX. TO TOP OF BOX, U.O.N.)
(N)	NLC	NETWORK LIGHTING CONTROLLER
(P)	BRG	NETWORK INTERFACE BRIDGE WITH POWER SUPPLY
(Q)	GFX	GRAPHIC WALLPOD WITH POWER SUPPLY
	J	JUNCTION BOX EQUIPPED WITH BLANK COVER
	J	JUNCTION BOX EQUIPPED WITH BLANK COVER AND FLEX CONNECTION
		COMBINATION HEAVY-DUTY FUSED SAFETY SWITCH/MAGNETIC STARTER
		MOTOR
		HEAVY-DUTY FUSED SAFETY SWITCH
	SD	ADDRESSABLE SMOKE DETECTOR MOUNTED ON CEILING
	CO	CONVENTIONAL CARBON MONOXIDE DETECTOR, WITH ADDRESSABLE MONITOR MODULE, MOUNTED ON CEILING
	HD	HEAT DETECTOR MOUNTED IN ATTIC
	RM	ADDRESSABLE RELAY MODULE
	SCM	ADDRESSABLE SIGNAL CONTROL MODULE
	DMM	ADDRESSABLE DUAL MONITOR MODULE
(A)	V 15	FIRE ALARM VISUAL STROBE, 15 CANDELA, CEILING MOUNTED
(A)	SV 15	FIRE ALARM SPEAKER/15 CANDELA VISUAL STROBE (CEILING MOUNTED)
(A)	SV 75	FIRE ALARM SPEAKER/75 CANDELA VISUAL STROBE (CEILING MOUNTED)
(A)	V 15	FIRE ALARM VISUAL STROBE, 15 CANDELA, WALL MOUNTED
(A)	V 30	FIRE ALARM VISUAL STROBE, 30 CANDELA, WALL MOUNTED
	SP W.P.	FIRE ALARM EXTERIOR SPEAKER IN WALL. SEE FIRE ALARM PLANS FOR MOUNTING HEIGHT(S).
	B	FIRE RISER BELL
	WF	WATER FLOW
	TS	TAMPER SWITCH

DIVISION OF THE STATE ARCHITECT APPLICABLE CODES AND STANDARDS

CODES:

2022 CALIFORNIA ADMINISTRATIVE CODE, PART 1, TITLE 24 C.C.R.

2022 CALIFORNIA BUILDING CODE (C.B.C.), PART 2, TITLE 24 C.C.R. (2021 INTERNATIONAL BUILDING CODE, VOLUMES 1 AND 2 WITH 2022 CALIFORNIA AMENDMENTS)

2022 CALIFORNIA ELECTRICAL CODE (C.E.C.), PART 3, TITLE 24 C.C.R. (2020 NFPA 70 NATIONAL ELECTRICAL CODE WITH 2022 CALIFORNIA AMENDMENTS)

2022 CALIFORNIA MECHANICAL CODE (C.M.C.), PART 4, TITLE 24 C.C.R. (2021 UNIFORM MECHANICAL CODE WITH 2022 CALIFORNIA AMENDMENTS)

2022 CALIFORNIA PLUMBING CODE (C.P.C.), PART 5, TITLE 24 C.C.R. (2021 UNIFORM PLUMBING CODE WITH 2022 CALIFORNIA AMENDMENTS)

2022 CALIFORNIA ENERGY CODE (CEnC), PART 6, TITLE 24 C.C.R.

2022 CALIFORNIA FIRE CODE (C.F.C.), PART 9, TITLE 24 C.C.R. (2021 INTERNATIONAL FIRE CODE WITH 2022 CALIFORNIA AMENDMENTS)

2022 CALIFORNIA REFERENCED STANDARDS CODE (C.R.S.C.), PART 12, TITLE 24 C.C.R.

TITLE 19, C.C.R. PUBLIC SAFETY, STATE FIRE MARSHAL REGULATIONS.

STANDARDS AND GUIDES:

NFPA 72 NATIONAL FIRE ALARM CODE, 2022 EDITION (CALIFORNIA AMENDED)

NFPA 720 STANDARD FOR THE INSTALLATION OF CARBON MONOXIDE (CO) DETECTION WARNING EQUIPMENT, 2015 EDITION

ADAAG AMERICANS WITH DISABILITIES ACT, ACCESSIBILITY GUIDELINES

UL 38 MANUAL ACTUATED SIGNALING BOXES, 2005 EDITION

UL 268 SMOKE DETECTORS FOR FIRE PROTECTIVE SIGNALING SYSTEMS, 2016 EDITION

UL 268A SMOKE DETECTORS FOR DUCT APPLICATIONS, 2016 EDITION

UL 464 AUDIBLE SIGNAL APPLIANCES, 2003 EDITION

UL 521 HEAT DETECTORS FOR FIRE PROTECTIVE SIGNALING SYSTEMS, 1999 EDITION (WITH REVISIONS THROUGH JULY 2005)

UL 864 CONTROL UNITS FOR FIRE PROTECTIVE SIGNALING SYSTEMS, 2014 EDITION

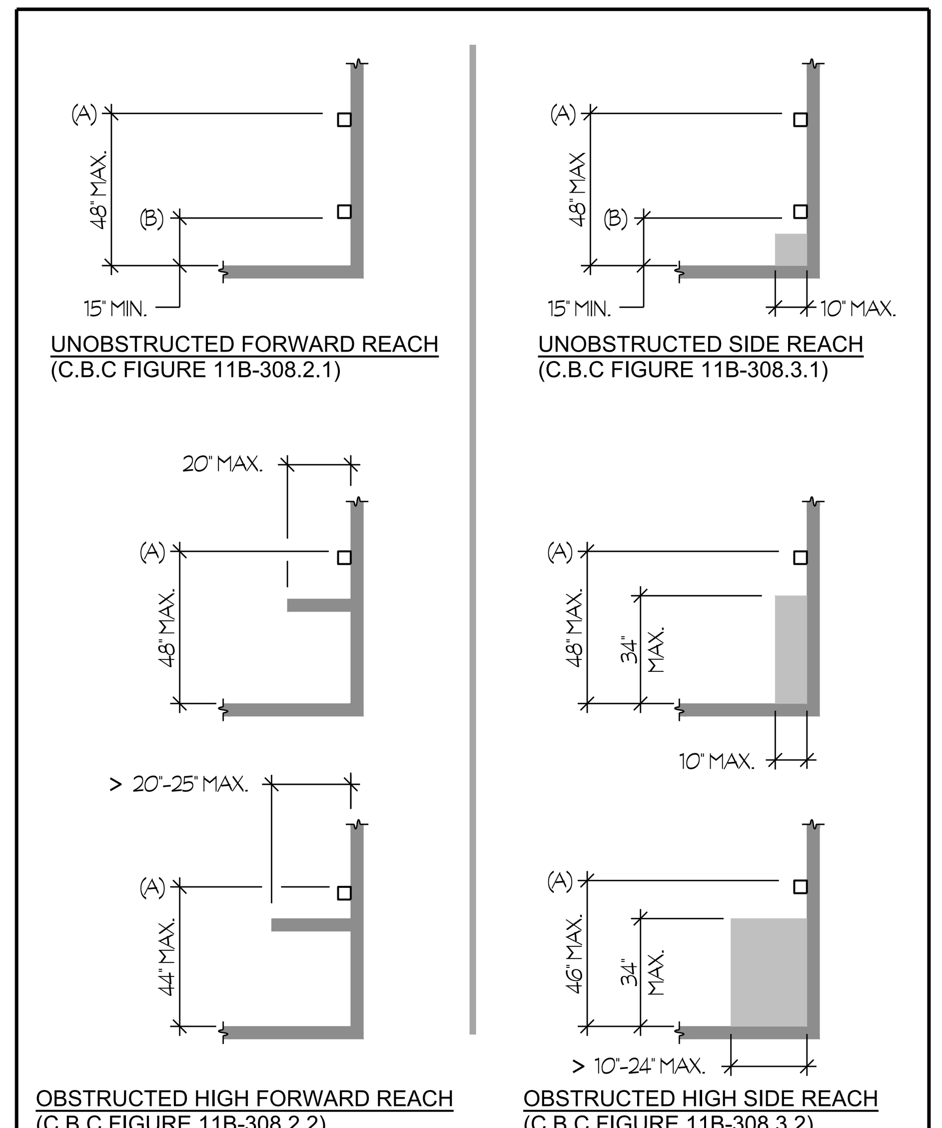

(A) TOP OF OUTLET BOX FOR RECEPTACLES, SWITCHES AND CONTROLS.

(B) BOTTOM OF OUTLET BOX FOR RECEPTACLES, SWITCHES AND CONTROLS.

1 ELECTRICAL RECEPTACLE, SWITCH AND CONTROL HEIGHTS

NTS

TITLE 24, PART 6

THE CALIFORNIA ENERGY EFFICIENCY STANDARDS FOR NONRESIDENTIAL BUILDINGS HAS BEEN REVIEWED AND THE BUILDING DESIGN DESCRIBED ON THESE PAGES IS IN SUBSTANTIAL CONFORMANCE.

CODE, RULES AND REGULATIONS

ALL WORK AND MATERIALS SHALL COMPLY WITH THE LATEST REGULATIONS OF THE STATE FIRE MARSHAL, CALIFORNIA CODE OF REGULATIONS, SERVING UTILITY COMPANIES AND OTHER APPLICABLE STATE ORDINANCES. NOTHING IN THESE PLANS OR SPECIFICATIONS IS TO BE CONSTRUED AS TO PERMIT WORK NOT CONFORMING TO THESE CODES. WHERE WORK OF A HIGHER DEGREE IS INDICATED IN THE PLANS OR SPECIFICATIONS THIS REQUIREMENT SHALL GOVERN.

SEISMIC ANCHORAGE REQUIREMENTS

MECHANICAL, ELECTRICAL AND PLUMBING ANCHORAGE NOTE

ALL MECHANICAL, PLUMBING AND ELECTRICAL COMPONENTS SHALL BE ANCHORED AND INSTALLED PER THE DETAILS ON THE DSA APPROVED CONSTRUCTION DOCUMENTS. THE FOLLOWING COMPONENTS SHALL BE ANCHORED OR BRACED TO MEET THE FORCE AND DISPLACEMENT REQUIREMENTS PRESCRIBED IN THE 2022 CBC, SECTIONS 1617A.1.18 THROUGH 1617A.1.26 AND ASCE 7-16 CHAPTERS 13, 26 AND 30.

1. ALL PERMANENT EQUIPMENT AND COMPONENTS.
2. TEMPORARY, MOVABLE OR MOBILE EQUIPMENT THAT IS PERMANENTLY ATTACHED (e.g. HARD WIRED) TO THE BUILDING UTILITY SERVICES SUCH AS ELECTRICITY, GAS OR WATER. "PERMANENTLY ATTACHED" SHALL INCLUDE ALL ELECTRICAL CONNECTIONS EXCEPT PLUGS FOR 110/220 VOLT RECEPTACLES HAVING A FLEXIBLE CABLE.
3. TEMPORARY, MOVABLE OR MOBILE EQUIPMENT WHICH IS HEAVIER THAN 400 POUNDS OR HAS A CENTER OF MASS LOCATED 4 FEET OR MORE ABOVE THE ADJACENT FLOOR OR ROOF LEVEL THAT DIRECTLY SUPPORT THE COMPONENT IS REQUIRED TO BE RESTRAINED IN A MANNER APPROVED BY DSA.

THE FOLLOWING MECHANICAL AND ELECTRICAL COMPONENTS SHALL BE POSITIVELY ATTACHED TO THE STRUCTURE BUT NEED NOT DEMONSTRATE DESIGN COMPLIANCE WITH THE REFERENCES NOTED ABOVE. THESE COMPONENTS SHALL HAVE FLEXIBLE CONNECTIONS PROVIDED BETWEEN THE COMPONENT AND ASSOCIATED DUCTWORK, PIPING AND CONDUIT. FLEXIBLE CONNECTIONS MUST ALLOW MOVEMENT IN BOTH TRANSVERSE AND LONGITUDINAL DIRECTIONS:

A. COMPONENTS WEIGHING LESS THAN 400 POUNDS AND HAVE A CENTER OF MASS LOCATED 4 FEET OR LESS ABOVE THE ADJACENT FLOOR OR ROOF LEVEL THAT DIRECTLY SUPPORT THE COMPONENT.

B. COMPONENTS WEIGHING LESS THAN 20 POUNDS, OR IN THE CASE OF DISTRIBUTED SYSTEMS, LESS THAN 5 POUNDS PER FOOT, WHICH ARE SUSPENDED FROM A ROOF OR FLOOR OR HUNG FROM A WALL.

THE ANCHORAGE OF ALL MECHANICAL, ELECTRICAL AND PLUMBING COMPONENTS SHALL BE SUBJECT TO THE APPROVAL OF THE DESIGN PROFESSIONAL IN GENERAL RESPONSIBLE CHARGE OR STRUCTURAL ENGINEER DELEGATED RESPONSIBILITY AND ACCEPTANCE BY DSA. THE PROJECT INSPECTOR WILL VERIFY THAT ALL COMPONENTS AND EQUIPMENT HAVE BEEN ANCHORED IN ACCORDANCE WITH THE ABOVE REQUIREMENTS.

PIPING, DUCTWORK, AND ELECTRICAL DISTRIBUTION SYSTEM BRACING NOTE

PIPING, DUCTWORK, AND ELECTRICAL DISTRIBUTION SYSTEMS SHALL BE BRACED TO COMPLY WITH THE FORCES AND DISPLACEMENTS PRESCRIBED IN ASCE 7-16 SECTION 13.3 AS DEFINED IN ASCE 7-16 SECTIONS 13.6.5, 13.6.6, 13.6.7, 13.6.8 AND 2022 CBC, SECTIONS 1617A.1.24, 1617A.1.25, AND 1617A.1.26.

THE METHOD OF SHOWING BRACING AND ATTACHMENTS TO THE STRUCTURE FOR THE IDENTIFIED DISTRIBUTION SYSTEM ARE AS NOTED BELOW. WHEN BRACING AND ATTACHMENTS ARE BASED ON A PREAPPROVED INSTALLATION GUIDE (e.g., HCAi OPM FOR 2013 CBC OR LATER), COPIES OF THE BRACING SYSTEM INSTALLATION GUIDE OR MANUAL SHALL BE AVAILABLE ON THE JOBSITE PRIOR TO THE START OF AND DURING THE HANGING AND BRACING OF THE DISTRIBUTION SYSTEMS. THE STRUCTURAL ENGINEER OF RECORD SHALL VERIFY THE ADEQUACY OF THE STRUCTURE TO SUPPORT THE HANGER AND BRACE LOADS.

MECHANICAL PIPING (MP), MECHANICAL DUCTS (MD), PLUMBING PIPING (PP), ELECTRICAL DISTRIBUTION SYSTEMS (E):

MP ☐ MD ☐ PP ☐ E ☑ - OPTION 1: DETAILED ON THE APPROVED DRAWINGS WITH PROJECT SPECIFIC NOTES AND DETAILS.

MP ☐ MD ☐ PP ☐ E ☐ - OPTION 2: SHALL COMPLY WITH HCAi PRE-APPROVAL (OPM#) #0043-13.

COMPLETE AUTOMATIC FIRE ALARM SYSTEM PLAN SUBMITTAL

THE FIRE ALARM SYSTEM SHOWN ON THESE PLANS HAS BEEN SUBMITTED AND APPROVED BY THE DIVISION OF THE STATE ARCHITECT. ANY SUBSTITUTION OF THE FIRE ALARM SYSTEM SHALL BE RESUBMITTED TO THE ARCHITECT FOR REVIEW AND APPROVAL. THE CONTRACTOR SHALL PAY ANY ADDITIONAL FEES THAT ARE INCURRED DUE TO THIS SUBSTITUTION.

THE FIRE ALARM SYSTEM SHALL BE A TOTAL (COMPLETE) AUTOMATIC HEAT AND SMOKE DETECTION SYSTEM, PER C.F.C. SECTION 907.2.3.6, AND SHALL COVER EVERY ROOM AND/OR AREA. UPON THE ACTIVATION OF ANY INITIATION DEVICE THE FIRE ALARM SYSTEM SHALL ALERT ALL OCCUPANTS AND TRANSMIT THE ALARM, SUPERVISORY, AND TROUBLE SIGNALS TO AN APPROVED SUPERVISING STATION (C.F.C. SECTION 907.2.3.5).

Rose Sing Eastham & Associates
Electrical Consultants
131 S. Dunworth – (559)733-2671
Visalia, California 93292-6705

REGISTERED PROFESSIONAL ENGINEER STEVEN KIRK EASTHAM No. E 18786 Exp. 6/30/25 ELECTRICAL STATE OF CALIFORNIA

APPROVALS

FILE # 54-76 APPLICATION # 02-121996

IDENTIFICATION STAMP DIV. OF THE STATE ARCHITECT
APP: 02-121996 INC:
REVIEWED FOR
SS ☑ FLS ☑ ACS ☑
DATE: 8/14/2024

LICENSED ARCHITECT MICHAEL J. SCOTT JR. No. C-34290 REN. 05-31-25 STATE OF CALIFORNIA

DATE: DECEMBER 31, 2023

NEW PRESCHOOL AND TK/KINDERGARTEN CLASSROOMS AT SANTA FE ELEMENTARY SCHOOL

PORTERVILLE UNIFIED SCHOOL DISTRICT
286 E ORANGE AVENUE, PORTERVILLE, CA 93257

REVISIONS

MANGINI | ARCHITECTURE INGENUITY
BARENG MORRELLI SCOTT
MANGINI ASSOCIATES INC.
4320 West Mineral King Avenue
Visalia, California 93291
www.mangini.us
(559) 627.0530 Office
(559) 627.1926 Fax

TITLE
ELEC. CODES, NOTES SYMBOLS AND FIXTURE SCHEDULE

EG1.1

PROJECT 23076

Z:\Drafting\Jobs\RSE\SCHOOLS\Porterville\Santa Fe Elementary\EG1.1.dwg DATE SAVED: 06/21/24 BY: Casey DATE PLOTTED: 06/21/24 JOB #: 23-093-J

APPROVALS

FILE # 54-76 | APPLICATION # 02-121996

IDENTIFICATION STAMP
DIV. OF THE STATE ARCHITECT
APP: 02-121996 INC:
REVIEWED FOR
SS ☑ FLS ☑ ACS ☑
DATE: 8/14/2024

LICENSED ARCHITECT
MICHAEL J. SCOTT
No. C-34290
REN. 05-31-25
STATE OF CALIFORNIA

DATE: DECEMBER 31, 2023

STATE OF CALIFORNIA
Indoor Lighting
CALIFORNIA ENERGY COMMISSION

CERTIFICATE OF COMPLIANCE — **NRCC-LTI-E**

This document is used to demonstrate compliance with requirements in 110.9, 110.12(c), 130.0, 130.1, 140.6 and 141.0(b)2 for indoor lighting scopes using the prescriptive path for nonresidential and hotel/motel occupancies. It is also used to document compliance with requirements in 160.5, 170.2(e) and 180.2(b)4 for indoor lighting scopes using the prescriptive path for multifamily occupancies. Multifamily includes dormitory and senior living facilities.

Project Name:	SANTA FE ELEMENTARY SCHOOL - BUILDING 700	**Report Page:**	**(Page 1 of 7)**
Project Address: 286 E ORANGE AVE		**Date Prepared:**	2023-10-11T11:22:50-04:00

A. GENERAL INFORMATION

01	Project Location (city)	PORTERVILLE	04	Total Conditioned Floor Area (ft^2)	5,823
02	Climate Zone	13	05	Total Unconditioned Floor Area (ft^2)	0
03	Occupancy Types Within Project (select all that apply):		06	# of Stories (Habitable Above Grade)	1

● Classroom ● School or Classroom

B. PROJECT SCOPE

This table includes any lighting systems that are within the scope of the permit application and are demonstrating compliance using the prescriptive path outlined in 140.6 / 170.2(e) or 141.0(b)2 / 180.2(b)4 for alterations.

Scope of Work	Conditioned Spaces		Unconditioned Spaces	
01	02	03	04	05
My Project Consists of (check all that apply):	Calculation Method	Area (ft^2)	Calculation Method	Area (ft^2)
☒ New Lighting System	Complete Building Method	5823	N/A	0
☐ New Lighting System - Parking Garage	N/A	0	N/A	0
Total Area of Work (ft^2)	5823			

STATE OF CALIFORNIA
Indoor Lighting
CALIFORNIA ENERGY COMMISSION

CERTIFICATE OF COMPLIANCE — **NRCC-LTI-E**

Project Name:	SANTA FE ELEMENTARY SCHOOL - BUILDING 700	**Report Page:**	**(Page 4 of 7)**
		Date Prepared:	2023-10-11T11:22:50-04:00

H. INDOOR LIGHTING CONTROLS (Not including PAFs)

Area Level Controls

04	05	06	07	08	09	10	11	12	
Area Description	Complete Building or Area Category Primary Function Area	Manual Area Controls 130.1(a) / 160.5(b)4A	Multi-Level Controls 130.1(b) / 160.5(b)4B	Shut-Off Controls 130.1(c) / 160.5(b)4C	Primary/Skylit Daylighting 130.1(d) / 160.5(b)4D	Secondary Daylighting 130.1(d) / 160.5(b)4D	Interlocked Systems 140.6(a)1/ 170.2(e)2A	Field Inspector	
								Pass	Fail
CLASSROOM BUILDING	School or Classroom	Readily Accessible	Dimmer	Occupancy Sensor	Included	Included	No	☐	☐
					13				
					Plan Sheet Showing Daylit Zones:				
					E1.2, E1.3				

I. LIGHTING POWER ALLOWANCE: COMPLETE BUILDING OR AREA CATEGORY METHODS

Each area complying using the Complete Building or Area Category Methods per 140.6(b) are included in this table. Column 06 indicates if additional lighting power allowances per 140.6(c) or adjustments per 140.6(a) are being used .

Conditioned Spaces

01	02	03	04	05	06	
Area Description	Complete Building or Area Category Primary Function Area	Allowed Density (W/ft^2)	Area (ft^2)	Allowed Wattage (Watts)	Additional Allowance / Adjustment	
					Area Category	PAF
CLASSROOM BUILDING	School or Classroom	0.6	5,823	3,493.8	No	No
		TOTALS:	5,823	3,493.8	See Tables J, or P for detail	

J. ADDITIONAL ALLOWANCE: AREA CATEGORY METHOD QUALIFYING LIGHTING SYSTEM

This section does not apply to this project.

STATE OF CALIFORNIA
Indoor Lighting
CALIFORNIA ENERGY COMMISSION

CERTIFICATE OF COMPLIANCE — **NRCC-LTI-E**

Project Name:	SANTA FE ELEMENTARY SCHOOL - BUILDING 700	**Report Page:**	**(Page 6 of 7)**
		Date Prepared:	2023-10-11T11:22:50-04:00

S. DAYLIGHT DESIGN POWER ADJUSTMENT FACTOR (PAF)

This section does not apply to this project.

T. DWELLING UNIT LIGHTING

This section does not apply to this project.

U. DECLARATION OF REQUIRED CERTIFICATES OF INSTALLATION

Selections have been made based on information provided in this document. If any selections have been changed by permit applicant, an explanation should be included in Table E. Additional Remarks. These documents must be provided to the building inspector during construction and can be found online

Form/Title
NRCI-LTI-E - Must be submitted for all buildings

V. DECLARATION OF REQUIRED CERTIFICATES OF ACCEPTANCE

Selections have been made based on information provided in this document. If any selections have been changed by the permit applicant, an explanation should be included in Table E. Additional Remarks. These documents must be provided to the building inspector during construction and any with ".A" in the form name must be completed through an Acceptance Test Technician Certification Provider (ATTCP). For more information visit: http://www.energy.ca.gov/title24/attcp/providers.html

Form/Title	Systems/Spaces To Be Field Verified
NRCA-LTI-02-A - Must be submitted for occupancy sensors and automatic time switch controls.	CLASSROOM BUILDING
NRCA-LTI-03-A - Must be submitted for automatic daylight controls.	CLASSROOM BUILDING

STATE OF CALIFORNIA
Indoor Lighting
CALIFORNIA ENERGY COMMISSION

CERTIFICATE OF COMPLIANCE — **NRCC-LTI-E**

Project Name:	SANTA FE ELEMENTARY SCHOOL - BUILDING 700	**Report Page:**	**(Page 2 of 7)**
		Date Prepared:	2023-10-11T11:22:50-04:00

C. COMPLIANCE RESULTS

If any cell on this table says "DOES NOT COMPLY" or "COMPLIES with Exceptional Conditions" refer to Table D. for guidance.

Lighting in conditioned and unconditioned spaces must not be combined for compliance per 140.6(b)1 / 170.2(e)	Allowed Lighting Power per 140.6(b) / 170.2(e) (Watts)						Adjusted Lighting Power per 140.6(a) / 170.2(e) (Watts)				Compliance Results
	01	02	03	04		05	06	07		08	09
	Complete Building 140.6(c)1	Area Category 140.6(c)2 / 170.2(e)4	Area Category Additional 140.6(c)2G / 170.2(e)4Av (+)	Tailored 140.6(c)3 / 170.2(e)4B (+)	=	**Total Allowed** (Watts)	Total Designed (Watts)	Adjustments: PAF Lighting Control Credits 140.6(a)2 / 170.2(e)1B (-)	=	**Total Adjusted** (Watts) *Includes Adjustments	**05 must be >= 08 140.6 / 170.2(e)**
	(See Table I)	(See Table I)	(See Table J)	(See Table K)			(See Table F)	(See Table P)			
Conditioned	3,493.8				=	3,493.8	≥ 3,284		=	3284	COMPLIES
Unconditioned					=		≥		=		
Controls Compliance (See Table H for Details)											COMPLIES
Rated Power Reduction Compliance (See Table Q for Details)											

D. EXCEPTIONAL CONDITIONS

This table is auto-filled with uneditable comments because of selections made or data entered in tables throughout the form.

E. ADDITIONAL REMARKS

This table includes remarks made by the permit applicant to the Authority Having Jurisdiction.

STATE OF CALIFORNIA
Indoor Lighting
CALIFORNIA ENERGY COMMISSION

CERTIFICATE OF COMPLIANCE — **NRCC-LTI-E**

Project Name:	SANTA FE ELEMENTARY SCHOOL - BUILDING 700	**Report Page:**	**(Page 5 of 7)**
		Date Prepared:	2023-10-11T11:22:50-04:00

K. TAILORED METHOD GENERAL LIGHTING POWER ALLOWANCE

This section does not apply to this project.

L. ADDITIONAL LIGHTING ALLOWANCE: TAILORED WALL DISPLAY

This section does not apply to this project.

M. ADDITIONAL LIGHTING ALLOWANCE: TAILORED FLOOR AND TASK LIGHTING

This section does not apply to this project.

N. ADDITIONAL LIGHTING ALLOWANCE: TAILORED DECORATIVE /SPECIAL EFFECTS

This section does not apply to this project.

O. ADDITIONAL LIGHTING ALLOWANCE: TAILORED VERY VALUABLE MERCHANDISE

This section does not apply to this project.

P. POWER ADJUSTMENT: LIGHTING CONTROL CREDIT (POWER ADJUSTMENT FACTOR (PAF))

This section does not apply to this project.

Q. RATED POWER REDUCTION COMPLIANCE FOR ONE-FOR-ONE ALTERATIONS

This section does not apply to this project.

R. 80% LIGHTING POWER FOR ALL ALTERATIONS - CONTROLS EXCEPTIONS

This section does not apply to this project.

STATE OF CALIFORNIA
Indoor Lighting
CALIFORNIA ENERGY COMMISSION

CERTIFICATE OF COMPLIANCE — **NRCC-LTI-E**

Project Name:	SANTA FE ELEMENTARY SCHOOL - BUILDING 700	**Report Page:**	**(Page 7 of 7)**
Project Address: 286 E ORANGE AVE		**Date Prepared:**	2023-10-11T11:22:50-04:00

DOCUMENTATION AUTHOR'S DECLARATION STATEMENT

I certify that this Certificate of Compliance documentation is accurate and complete.

Documentation Author Name: Jeff Jackson	Documentation Author Signature:
Company: Rose Sing Eastham & Associates	Signature Date: 23-10-11
Address: 131 S DUNWORTH	CEA/ HERS Certification Identification (if applicable):
City/State/Zip: VISALIA, CA, 93292	Phone: 559-733-2671 EXT. 104

RESPONSIBLE PERSON'S DECLARATION STATEMENT

I certify the following under penalty of perjury, under the laws of the State of California:

1. The information provided on this Certificate of Compliance is true and correct.
2. I am eligible under Division 3 of the Business and Professions Code to accept responsibility for the building design or system design identified on this Certificate of Compliance (responsible designer)
3. The energy features and performance specifications, materials, components, and manufactured devices for the building design or system design identified on this Certificate of Compliance conform to the requirements of Title 24, Part 1 and Part 6 of the California Code of Regulations.
4. The building design features or system design features identified on this Certificate of Compliance are consistent with the information provided on other applicable compliance documents, worksheets, calculations, plans and specifications submitted to the enforcement agency for approval with this building permit application.
5. I will ensure that a completed signed copy of this Certificate of Compliance shall be made available with the building permit(s) issued for the building, and made available to the enforcement agency for all applicable inspections. I understand that a completed signed copy of this Certificate of Compliance is required to be included with the documentation the builder provides to the building owner at occupancy.

Responsible Designer Name: Steven Eastham	Responsible Designer Signature:
Company: Rose Sing Eastham	Date Signed: 23-10-11
Address: 131 S DUNWORTH	License: E-18786
City/State/Zip: VISALIA, CA, 93292	Phone: 559-733-2671 EXT. 101

STATE OF CALIFORNIA
Indoor Lighting
CALIFORNIA ENERGY COMMISSION

CERTIFICATE OF COMPLIANCE — **NRCC-LTI-E**

Project Name:	SANTA FE ELEMENTARY SCHOOL - BUILDING 700	**Report Page:**	**(Page 3 of 7)**
		Date Prepared:	2023-10-11T11:22:50-04:00

F. INDOOR LIGHTING FIXTURE SCHEDULE

This table includes all planned permanent and portable lighting other than dwelling unit/ hotel/ motel room lighting. Multifamily dwelling unit and hotel/motel room lighting is documented in Table T. If using Table T to document lighting in multifamily common use areas providing shared provisions for living, eating, cooking or sanitation, those luminaires are not included here.

Designed Wattage: Conditioned Spaces

01	02	03	04	05	06	07	08	09	10	
Name or Item Tag	Complete Luminaire Description	Modular (Track) Fixture	Small Aperture & Color Change[1]	Watts per luminaire[2]	How is Wattage determined	Total Number of Luminaires	Excluded per 140.6(a)3 / 170.2(e)2C	Design Watts	Field Inspector	
									Pass	Fail
A, AE	2' x 4' L.E.D. GRID TROFFER	No	NA	48	Mfr. Spec	48	No	2,304	☐	☐
B, BE	1' x 4' SURFACE L.E.D.	No	NA	35	Mfr. Spec	28	No	980	☐	☐
							Total Designed Watts: CONDITIONED SPACES	3,284		

[1]*FOOTNOTE: Design Watts for small aperture and color changing luminaires which qualify per 140.6(a)4B / 170.2(e)2D is adjusted to be 75% /80% of their rated wattage. Table F automatically makes this adjustment, the permit applicant should enter full rated wattage in column 05.*

[2]*Authority Having Jurisdiction may ask for Luminaire cut sheets to confirm wattage used for compliance per 130.0(c) / 160.5(b). Wattage used must be the maximum rated for the luminaire, not the lamp.*

G. MODULAR LIGHTING SYSTEMS

This section does not apply to this project.

H. INDOOR LIGHTING CONTROLS (Not including PAFs)

This table includes lighting controls for conditioned and unconditioned spaces.

Building Level Controls

01	02	03	
		Field Inspector	
		Pass	Fail
Mandatory Demand Response 110.12(c)	Shut-off controls 130.1(c) / 160.5(b)4C	☐	☐
NA < 4,000W subject to multilevel	See Area/Space Level Controls		

NEW PRESCHOOL AND TK/KINDERGARTEN CLASSROOMS AT SANTA FE ELEMENTARY SCHOOL

PORTERVILLE UNIFIED SCHOOL DISTRICT
286 E ORANGE AVENUE, PORTERVILLE, CA 93257

REVISIONS

MANGINI ARCHITECTURE INGENUITY
BARENG MORRELLI SCOTT
MANGINI ASSOCIATES INC.
4320 West Mineral King Avenue
Visalia, California 93291
www.mangini.us
(559) 627.0530 Office
(559) 627.1926 Fax

TITLE
BUILDING 700
INDOOR LIGHITNG
COMPLIANCE

EG1.2

PROJECT 23076

Rose Sing Eastham & Associates
Electrical Consultants
131 S. Dunworth – (559)733-2671
Visalia, California 93292-6705

REGISTERED PROFESSIONAL ENGINEER
JONATHAN KIRK EASTHAM
No. E-18786
Exp. 6/30/25
ELECTRICAL
STATE OF CALIFORNIA

Z:\Portfolio\Jobs\PERSCHOOLS\Portervile\Santa Fe Elementary\EG1.2.dwg DATE: SAVED: 10/11/23 BY: Casey DATE: PLOTTED: 10/21/24 JOB #: 23-093-U

STATE OF CALIFORNIA
Indoor Lighting
CALIFORNIA ENERGY COMMISSION

CERTIFICATE OF COMPLIANCE — **NRCC-LTI-E**

This document is used to demonstrate compliance with requirements in 110.9, 110.12(c), 130.0, 130.1, 140.6 and 141.0(b)2 for indoor lighting scopes using the prescriptive path for nonresidential and hotel/motel occupancies. It is also used to document compliance with requirements in 160.5, 170.2(e) and 180.2(b)4 for indoor lighting scopes using the prescriptive path for multifamily occupancies. Multifamily includes dormitory and senior living facilities.

Project Name:	SANTA FE ELEMENTARY SCHOOL - BUILDING 800	**Report Page:**	**(Page 1 of 7)**
Project Address: 286 E ORANGE AVE		**Date Prepared:**	2023-10-11T11:24:09-04:00

A. GENERAL INFORMATION

01	Project Location (city)	PORTERVILLE	04 Total Conditioned Floor Area (ft^2)	10,355
02	Climate Zone	13	05 Total Unconditioned Floor Area (ft^2)	0
03	Occupancy Types Within Project (select all that apply):		06 # of Stories (Habitable Above Grade)	1

♦ Classroom ♦ School or Classroom

B. PROJECT SCOPE

This table includes any lighting systems that are within the scope of the permit application and are demonstrating compliance using the prescriptive path outlined in 140.6 / 170.2(e) or 141.0(b)2 / 180.2(b)4 for alterations.

Scope of Work	Conditioned Spaces		Unconditioned Spaces	
01	02	03	04	05
My Project Consists of (check all that apply):	Calculation Method	Area (ft^2)	Calculation Method	Area (ft^2)
☒ New Lighting System	Complete Building Method	10355	N/A	0
☐ New Lighting System - Parking Garage	N/A	0	N/A	0
Total Area of Work (ft^2)	10355			

STATE OF CALIFORNIA
Indoor Lighting
CALIFORNIA ENERGY COMMISSION

CERTIFICATE OF COMPLIANCE — **NRCC-LTI-E**

Project Name:	SANTA FE ELEMENTARY SCHOOL - BUILDING 800	**Report Page:**	**(Page 4 of 7)**
		Date Prepared:	2023-10-11T11:24:09-04:00

H. INDOOR LIGHTING CONTROLS (Not including PAFs)

Area Level Controls

04	05	06	07	08	09	10	11	12	
Area Description	Complete Building or Area Category Primary Function Area	Manual Area Controls 130.1(a) / 160.5(b)4A	Multi-Level Controls 130.1(b) / 160.5(b)4B	Shut-Off Controls 130.1(c) / 160.5(b)4C	Primary/Skylit Daylighting 130.1(d) / 160.5(b)4D	Secondary Daylighting 130.1(d) / 160.5(b)4D	Interlocked Systems 140.6(a)1/ 170.2(e)2A	Field Inspector	
								Pass	Fail
CLASSROOM BUILDING	School or Classroom	Readily Accessible	Dimmer	Occupancy Sensor	Included	Included	Yes	☐	☐
					13				
					Plan Sheet Showing Daylit Zones:				
					E2.2, E2.3				

I. LIGHTING POWER ALLOWANCE: COMPLETE BUILDING OR AREA CATEGORY METHODS

Each area complying using the Complete Building or Area Category Methods per 140.6(b) are included in this table. Column 06 indicates if additional lighting power allowances per 140.6(c) or adjustments per 140.6(a) are being used .

Conditioned Spaces

01	02	03	04	05	06	
Area Description	Complete Building or Area Category Primary Function Area	Allowed Density (W/ft^2)	Area (ft^2)	Allowed Wattage (Watts)	Additional Allowance / Adjustment	
					Area Category	PAF
CLASSROOM BUILDING	School or Classroom	0.6	10,355	6,213	No	No
		TOTALS:	10,355	6,213	See Tables J, or P for detail	

J. ADDITIONAL ALLOWANCE: AREA CATEGORY METHOD QUALIFYING LIGHTING SYSTEM

This section does not apply to this project.

STATE OF CALIFORNIA
Indoor Lighting
CALIFORNIA ENERGY COMMISSION

CERTIFICATE OF COMPLIANCE — **NRCC-LTI-E**

Project Name:	SANTA FE ELEMENTARY SCHOOL - BUILDING 800	**Report Page:**	**(Page 6 of 7)**
		Date Prepared:	2023-10-11T11:24:09-04:00

S. DAYLIGHT DESIGN POWER ADJUSTMENT FACTOR (PAF)

This section does not apply to this project.

T. DWELLING UNIT LIGHTING

This section does not apply to this project.

U. DECLARATION OF REQUIRED CERTIFICATES OF INSTALLATION

Selections have been made based on information provided in this document. If any selections have been changed by permit applicant, an explanation should be included in Table E. Additional Remarks. These documents must be provided to the building inspector during construction and can be found online

Form/Title
NRCI-LTI-E - Must be submitted for all buildings

V. DECLARATION OF REQUIRED CERTIFICATES OF ACCEPTANCE

Selections have been made based on information provided in this document. If any selections have been changed by the permit applicant, an explanation should be included in Table E. Additional Remarks. These documents must be provided to the building inspector during construction and any with ".A" in the form name must be completed through an Acceptance Test Technician Certification Provider (ATTCP). For more information visit: http://www.energy.ca.gov/title24/attcp/providers.html

Form/Title	Systems/Spaces To Be Field Verified
NRCA-LTI-02-A - Must be submitted for occupancy sensors and automatic time switch controls.	CLASSROOM BUILDING
NRCA-LTI-03-A - Must be submitted for automatic daylight controls.	CLASSROOM BUILDING
NRCA-LTI-04-A - Must be submitted for demand responsive lighting controls.	CLASSROOM BUILDING

STATE OF CALIFORNIA
Indoor Lighting
CALIFORNIA ENERGY COMMISSION

CERTIFICATE OF COMPLIANCE — **NRCC-LTI-E**

Project Name:	SANTA FE ELEMENTARY SCHOOL - BUILDING 800	**Report Page:**	**(Page 2 of 7)**
		Date Prepared:	2023-10-11T11:24:09-04:00

C. COMPLIANCE RESULTS

If any cell on this table says "DOES NOT COMPLY" or "COMPLIES with Exceptional Conditions" refer to Table D. for guidance.

Lighting in conditioned and unconditioned spaces must not be combined for compliance per 140.6(b)1 / 170.2(e)	Allowed Lighting Power per 140.6(b) / 170.2(e) (Watts)						Adjusted Lighting Power per 140.6(a) / 170.2(e) (Watts)				Compliance Results
	01	02	03	04		05	06	07		08	09
	Complete Building 140.6(c)1	Area Category 140.6(c)2 / 170.2(e)4	Area Category Additional 140.6(c)2G / 170.2(e)4Av (+)	Tailored 140.6(c)3 / 170.2(e)4B (+)	=	**Total Allowed** (Watts)	Total Designed (Watts)	Adjustments: PAF Lighting Control Credits 140.6(a)2 / 170.2(e)1B (-)	=	**Total Adjusted** (Watts) *Includes Adjustments	**05 must be >= 08 140.6 / 170.2(e)**
	(See Table I)	(See Table I)	(See Table J)	(See Table K)			(See Table F)	(See Table P)			
Conditioned	6,213				=	6,213	≥ 5,502		=	5502	COMPLIES
Unconditioned					=		≥		=		
Controls Compliance (See Table H for Details)											COMPLIES
Rated Power Reduction Compliance (See Table Q for Details)											

D. EXCEPTIONAL CONDITIONS

This table is auto-filled with uneditable comments because of selections made or data entered in tables throughout the form.

E. ADDITIONAL REMARKS

This table includes remarks made by the permit applicant to the Authority Having Jurisdiction.

STATE OF CALIFORNIA
Indoor Lighting
CALIFORNIA ENERGY COMMISSION

CERTIFICATE OF COMPLIANCE — **NRCC-LTI-E**

Project Name:	SANTA FE ELEMENTARY SCHOOL - BUILDING 800	**Report Page:**	**(Page 5 of 7)**
		Date Prepared:	2023-10-11T11:24:09-04:00

K. TAILORED METHOD GENERAL LIGHTING POWER ALLOWANCE

This section does not apply to this project.

L. ADDITIONAL LIGHTING ALLOWANCE: TAILORED WALL DISPLAY

This section does not apply to this project.

M. ADDITIONAL LIGHTING ALLOWANCE: TAILORED FLOOR AND TASK LIGHTING

This section does not apply to this project.

N. ADDITIONAL LIGHTING ALLOWANCE: TAILORED DECORATIVE /SPECIAL EFFECTS

This section does not apply to this project.

O. ADDITIONAL LIGHTING ALLOWANCE: TAILORED VERY VALUABLE MERCHANDISE

This section does not apply to this project.

P. POWER ADJUSTMENT: LIGHTING CONTROL CREDIT (POWER ADJUSTMENT FACTOR (PAF))

This section does not apply to this project.

Q. RATED POWER REDUCTION COMPLIANCE FOR ONE-FOR-ONE ALTERATIONS

This section does not apply to this project.

R. 80% LIGHTING POWER FOR ALL ALTERATIONS - CONTROLS EXCEPTIONS

This section does not apply to this project.

STATE OF CALIFORNIA
Indoor Lighting
CALIFORNIA ENERGY COMMISSION

CERTIFICATE OF COMPLIANCE — **NRCC-LTI-E**

Project Name:	SANTA FE ELEMENTARY SCHOOL - BUILDING 800	**Report Page:**	**(Page 7 of 7)**
Project Address: 286 E ORANGE AVE		**Date Prepared:**	2023-10-11T11:24:09-04:00

DOCUMENTATION AUTHOR'S DECLARATION STATEMENT

I certify that this Certificate of Compliance documentation is accurate and complete.

Documentation Author Name: Jeff Jackson	Documentation Author Signature:
Company: Rose Sing Eastham & Associates	Signature Date: 23-10-11
Address: 131 S DUNWORTH	CEA/ HERS Certification Identification (if applicable):
City/State/Zip: VISALIA, CA, 93292	Phone: 559-733-2671 EXT. 104

RESPONSIBLE PERSON'S DECLARATION STATEMENT

I certify the following under penalty of perjury, under the laws of the State of California:

1. The information provided on this Certificate of Compliance is true and correct.
2. I am eligible under Division 3 of the Business and Professions Code to accept responsibility for the building design or system design identified on this Certificate of Compliance (responsible designer)
3. The energy features and performance specifications, materials, components, and manufactured devices for the building design or system design identified on this Certificate of Compliance conform to the requirements of Title 24, Part 1 and Part 6 of the California Code of Regulations.
4. The building design features or system design features identified on this Certificate of Compliance are consistent with the information provided on other applicable compliance documents, worksheets, calculations, plans and specifications submitted to the enforcement agency for approval with this building permit application.
5. I will ensure that a completed signed copy of this Certificate of Compliance shall be made available with the building permit(s) issued for the building, and made available to the enforcement agency for all applicable inspections. I understand that a completed signed copy of this Certificate of Compliance is required to be included with the documentation the builder provides to the building owner at occupancy.

Responsible Designer Name: Steven Eastham	Responsible Designer Signature:
Company: Rose Sing Eastham	Date Signed: 23-10-11
Address: 131 S DUNWORTH	License: E-18786
City/State/Zip: VISALIA, CA, 93292	Phone: 559-733-2671 EXT. 101

STATE OF CALIFORNIA
Indoor Lighting
CALIFORNIA ENERGY COMMISSION

CERTIFICATE OF COMPLIANCE — **NRCC-LTI-E**

Project Name:	SANTA FE ELEMENTARY SCHOOL - BUILDING 800	**Report Page:**	**(Page 3 of 7)**
		Date Prepared:	2023-10-11T11:24:09-04:00

F. INDOOR LIGHTING FIXTURE SCHEDULE

This table includes all planned permanent and portable lighting other than dwelling unit/ hotel/ motel room lighting. Multifamily dwelling unit and hotel/motel room lighting is documented in Table T. If using Table T to document lighting in multifamily common use areas providing shared provisions for living, eating, cooking or sanitation, those luminaires are not included here.

Designed Wattage: Conditioned Spaces

01	02	03	04	05	06	07	08	09	10	
Name or Item Tag	Complete Luminaire Description	Modular (Track) Fixture	Small Aperture & Color Change[1]	Watts per luminaire[2]	How is Wattage determined	Total Number of Luminaires	Excluded per 140.6(a)3 / 170.2(e)2C	Design Watts	Field Inspector	
									Pass	Fail
A, AE	2' x 4' L.E.D. GRID TROFFER	No	NA	48	Mfr. Spec	84	No	4,032	☐	☐
B, BE	1' x 4' SURFACE L.E.D.	No	NA	35	Mfr. Spec	42	No	1,470	☐	☐
							Total Designed Watts: CONDITIONED SPACES	5,502		

[1]*FOOTNOTE: Design Watts for small aperture and color changing luminaires which qualify per 140.6(a)4B / 170.2(e)2D is adjusted to be 75% /80% of their rated wattage. Table F automatically makes this adjustment, the permit applicant should enter full rated wattage in column 05.*

[2]*Authority Having Jurisdiction may ask for Luminaire cut sheets to confirm wattage used for compliance per 130.0(c) / 160.5(b). Wattage used must be the maximum rated for the luminaire, not the lamp.*

G. MODULAR LIGHTING SYSTEMS

This section does not apply to this project.

H. INDOOR LIGHTING CONTROLS (Not including PAFs)

This table includes lighting controls for conditioned and unconditioned spaces.

Building Level Controls

01	02	03	
		Field Inspector	
		Pass	Fail
Mandatory Demand Response 110.12(c)	Shut-off controls 130.1(c) / 160.5(b)4C		
Required >= 4,000W subject to multilevel	See Area/Space Level Controls	☐	☐

APPROVALS

FILE # 54-76 APPLICATION # 02-121996

IDENTIFICATION STAMP
DIV. OF THE STATE ARCHITECT
APP: 02-121996 INC: A
REVIEWED FOR
SS ☑ FLS ☑ ACS ☑
DATE: 8/14/2024

LICENSED ARCHITECT MICHAEL J. SCOTT No. C-34290 REN. 05-31-25 STATE OF CALIFORNIA
DATE: DECEMBER 31, 2023

NEW PRESCHOOL AND TK/KINDERGARTEN CLASSROOMS AT SANTA FE ELEMENTARY SCHOOL
PORTERVILLE UNIFIED SCHOOL DISTRICT
286 E ORANGE AVENUE, PORTERVILLE, CA 93257

REVISIONS

MANGINI ARCHITECTURE INGENUITY
BARENG MORRELLI SCOTT
MANGINI ASSOCIATES INC.
4320 West Mineral King Avenue
Visalia, California 93291
www.mangini.us
(559) 627.0530 Office
(559) 627.1926 Fax

TITLE
BUILDING 800
INDOOR LIGHITNG
COMPLIANCE

EG1.3

PROJECT 23076

REGISTERED PROFESSIONAL ENGINEER JEFFREY KIRK EASTHAM No. 18786 Exp. 6/30/25 ELECTRICAL STATE OF CALIFORNIA

Rose Sing Eastham & Associates
Electrical Consultants
131 S. Dunworth – (559)733-2671
Visalia, California 93292-6705

Z:\Portfolio\Jobs\PORTSCHOOLS\Portaville\Santa Fe Elementary\EG1.1.dwg DATE: 3MAED: 10/11/23 By: Casey DATE PLOTTED: 10/21/24 JOB #: 23-093-U

STATE OF CALIFORNIA
Outdoor Lighting
CALIFORNIA ENERGY COMMISSION

CERTIFICATE OF COMPLIANCE — **NRCC-LTO-E**

This document is used to demonstrate compliance with requirements in 110.9, 130.0, 130.2, 140.7, and 141.0(b)2L for outdoor lighting scopes using the prescriptive path for nonresidential and hotel/motel occupancies. It is also used to document compliance with requirements in 160.5, 170.2(e)6, 180.1(a) and 180.2(b)4Bv for outdoor lighting scopes using the prescriptive path for multifamily and mixed-use occupancies. Multifamily includes dormitory and senior living facilities.

Project Name:	SANTA FE ELEMENTARY SCHOOL	**Report Page:**	**(Page 1 of 8)**
Project Address: 286 E ORANGE AVE		**Date Prepared:**	2024-06-21T14:56:37-04:00

A. GENERAL INFORMATION

01	Project Location (city)	PORTERVILLE	04	Total Illuminated Hardscape Area (ft²)	160881
02	Climate Zone	13			

03 Outdoor Lighting Zone per Title 24 Part 1 10.114 or as designated by Authority Having Jurisdiction (AHJ):

☐ LZ-0: Very Low - Undeveloped Parkland ☐ LZ-2: Moderate - Urban Clusters ☐ LZ-4: High - Must be reviewed by CA Energy Commission for Approval
☐ LZ-1: Low - Rural Areas ☒ LZ-3: Moderately High - Urban Areas

05 Occupancy Types within Project

● Classroom ● School or Classroom

B. PROJECT SCOPE

This table includes outdoor lighting systems that are within the scope of the permit application and are demonstrating compliance using the prescriptive path outlined in 140.7 / 170.2(e)6 or 141.0(b)2L / 180.2(b)4Bv for alterations.

My Project Consists of:

01	02		
☒ New Lighting System	Must Comply with Allowances from 140.7 / 170.2(e)6		
☐ Altered Lighting System	Is your alteration increasing the connected lighting load (Watts)?	○ Yes	○ No
03	04	05	
% of Existing Luminaires Being Altered[1]	Sum Total of Luminaires Being Added or Altered	Calculation Method	
☐ < 10% ☐ >= 10% and < 50% ☐ >= 50%			

Please proceed to Table F. Outdoor Lighting Fixture Schedule to define the project's luminaires.

[1] *FOOTNOTES: % of Existing Luminaires Being Altered = (Sum Total of Luminaires Being Added or Altered / Existing Luminaires within the Scope of the Permit Application) x 100.*

C. COMPLIANCE RESULTS

Results in this table are automatically calculated from data input and calculations in Tables F through N. Note: If any cell on this table says "COMPLIES with Exceptional Conditions" refer to Table D. Exceptional Conditions for guidance or see applicable Table referenced below.

Calculations of Total Allowed Lighting Power (Watts) 140.7 / 170.2(e)6 or 141.0(b)2L / 180.2(b)4Bv												Compliance Results
01		02		03	04	05		06		07		08	09
General Hardscape Allowance 140.7(d)1 / 170.2(e)6 (See Table I)	+	Per Application 140.7(d)2 / 170.2(e)6 (See Table J)	+	Sales Frontage 140.7(d)2 (See Table K)	+ Ornamental 140.7(d)2 / 170.2(e)6 (See Table L)	+ Per Specific Area 140.7(d)2 / 170.2(e)6 (See Table M)	OR	Existing Power Allowance 141.0(b)2L / 180.2(b)4Bv (See Table N)	=	**Total Allowed** (Watts)	≥	**Total Actual** (Watts)	**07 must be >= 08**
4,875.3	+	---	+	---	+ ---	+ ---	OR	---	=	4,875.3	≥	4,550	COMPLIES
Shielding Compliance (See Table G for Details)													COMPLIES
Controls Compliance (See Table H for Details)													COMPLIES

D. EXCEPTIONAL CONDITIONS

This table is auto-filled with uneditable comments because of selections made or data entered in tables throughout the form.

E. ADDITIONAL REMARKS

This table includes remarks made by the permit applicant to the Authority Having Jurisdiction.

F. OUTDOOR LIGHTING FIXTURE SCHEDULE

For new or altered lighting systems demonstrating compliance with 140.7 / 170.2(e)6 all new luminaires being installed and any existing luminaires remaining or being moved within the spaces covered by the permit application are included in the Table below. For altered lighting systems using the Existing Power method per 141.0(b)2L only new luminaires being installed and replacement luminaires being installed as part of the project scope are included (ie, existing luminaires remaining or existing luminaires being moved are not included). Outdoor lighting attached to multifamily buildings and controlled from the inside of a dwelling unit are included in Table H. and are not included here. All other multifamily outdoor lighting is included here.

Designed Wattage:

01	02		03	04	05	06	07	08	09	10	
Name or Item Tag	Complete Luminaire Description		Watts per luminaire[1,2]	How is Wattage determined	Total Number Luminaires [2]	Luminaire Status[3]	Excluded per 140.7(a) / 170.2(e)6A	Design Watts	Cutoff Req. > 6,200 initial lumen output 130.2(b) / 160.5(c)1[4]	Field Inspector	
										Pass	Fail
C, CE	RECESSED L.E.D. DOWN LIGHT	☐ Linear	25	Mfr. Spec	36	New	☐	900	NA: < 6200 lumens	☐	☐
D, DE	L.E.D. WALL PACK	☐ Linear	25	Mfr. Spec	8	New	☐	200	NA: < 6200 lumens	☐	☐
P1	SINGLE HEAD L.E.D. POLE LIGHT	☐ Linear	138	Mfr. Spec	17	New	☐	2,346	Provided	☐	☐
P2	TWIN HEAD L.E.D. POLE LIGHT	☐ Linear	276	Mfr. Spec	3	New	☐	828	Provided	☐	☐
P3	L.E.D. POLE LIGHT	☐ Linear	138	Mfr. Spec	2	New	☐	276	Provided	☐	☐
							Total Design Watts:	4550			

* NOTES: Selections with a * require a note in the space below explaining how compliance is achieved.
EX: Luminaire is lighting a statue; EXCEPTION 2 to 130.2(b)

[1] *FOOTNOTES: Authority Having Jurisdiction may ask for Luminaire cut sheets to confirm wattage used for compliance per 130.0(c) / 160.5(b)*
[2] *For linear luminaires, wattage should be indicated as W/lf instead of Watts/luminaire. Total linear feet should be indicated in column 05 instead of number of luminaires.*
[3] *Select "New" for new luminaires in a new outdoor lighting project, or for added luminaires in an alteration. Select "Altered" for replacement luminaires in an alteration. Select "Existing to Remain" for existing luminaires within the project scope that are not being altered and are remaining. Select "Existing Reinstalled" for existing luminaires which are being removed and reinstalled as part of the project scope.*
[4] *Compliance with mandatory shielding requirements is required for luminaires with initial lumen output >= 6,200 unless exempted by 130.2(b)/ 160.5(c)*

G. SHIELDING REQUIREMENTS (BUG)

This table includes fixtures of >=6,200 initial lumens indicated on Table F as needing to comply with Shielding Requirements. Maximum lumens can be found in Title 24, Part 11, Section 5.106.8.

01	02	03	04	05	06	07	08	09	10	11	12	
Name or Item Tag	Complete Luminaire Description	Backlight Rating[1]			Uplight Rating[2]			Glare Rating (Lumens)[2]			Field Inspector	
		Mounting Height[1]	Max Allowable Backlight Rating[3]	Backlight Rating Per Design	Lighting type	Max Allowable Uplight Rating[3]	Uplight Rating Per Design	Mounting Height[1]	Max Allowable Glare Rating[3]	Glare Rating Per Design	Pass	Fail
P1	SINGLE HEAD L.E.D. POLE LIGHT	2 MH from property line	No Limit	B2	Area Lighting	U0	U0	> 2 MH from property line	G3	G2	☐	☐
P2	TWIN HEAD L.E.D. POLE LIGHT	2 MH from property line	No Limit	B2	Area Lighting	U0	U0	> 2 MH from property line	G3	G2	☐	☐
P3	L.E.D. POLE LIGHT	2 MH from property line	No Limit	B2	Area Lighting	U0	U0	> 2 MH from property line	G3	G3	☐	☐

[1] *FOOTNOTES: Mounting Height is labeled MH in this table.*
[2] *Authority Having Jurisdiction may ask for Luminaire cut sheets or other documentation to confirm luminaire type, uplight ratings and glare ratings used for compliance per 130.2(b)/ 160.5(c)*
[3] *BUG ratings with a lower number than the 'Max Allowable' are compliant. Ex. If Max Allowable is Bug Rating B4, then B0, B1, B2 and B3 are all compliant.*

H. OUTDOOR LIGHTING CONTROLS

This table demonstrates compliance with controls requirements for all new or altered luminaires installed as part of the permit application. For alteration projects, luminaires which are existing to remain (ie untouched) and luminaires which are removed and reinstalled (wiring only) do not need to be included in this table even if they are within the spaces covered by the permit application.
Outdoor lighting for nonresidential buildings, parking garages and common service areas in multifamily buildings must be documented separately from outdoor lighting attached to multifamily buildings and controlled from the inside of a dwelling unit

Mandatory Controls for Nonresidential Occupancies, Parking Garages & Common Areas in Multifamily Buildings

01	02	03	04	05	
Area Description	Shut-Off 130.2(c)1 / 160.5(c)	Auto-Schedule 130.2(c)2 / 160.5(c)	Motion Sensor 130.2(c)3 / 160.5(c)	Field Inspector	
				Pass	Fail
WALKWAY: "C, CE"	Astronomical Timer	Provided	NA: Each Luminaire <= 40 Watts	☐	☐
WALKWAY: "D, DE"	Astronomical Timer	Provided	NA: Each Luminaire <= 40 Watts	☐	☐
PARKING LOT: "P1"	Astronomical Timer	Provided	Provided	☐	☐
PARKING LOT: "P2"	Astronomical Timer	Provided	Provided	☐	☐
PARKING LOT: "P3"	Astronomical Timer	Provided	Provided	☐	☐

[1] *FOOTNOTE: Text has been abbreviated, please refer to Table 160.5-A to confirm compliance with the specific light source technologies listed.*
[2] *Authority having jurisdiction may ask for cutsheets or other documentation to confirm compliance of light source.*
[3] *Recessed luminaires marked for use in fire-rated installations, and recessed luminaires installed in non-insulated ceilings are excepted from ii and iii.*

I. LIGHTING POWER ALLOWANCE (per 140.7 / 170.2(e))

This table includes areas using allowance calculations per 140.7 / 170.2(e). General Hardscape Allowance is per Table 140.7-A/Table 170.2-R while "Use it or lose it" Allowances are per Table 140.7-B /Table 170.2-S. Indicate which allowances are being used to expand sections for user input. Luminaires that qualify for one of the "Use it or lose it" allowances shall not qualify for another "Use it or lose it" allowance.
Outdoor lighting attached to multifamily buildings and controlled from the inside of a dwelling unit are included in Table H. and are not included here. All other multifamily outdoor lighting is included here.

01					
	"Use it or lose it" Allowance (select all that apply) (select all that apply)				
☒ General Hardscape Allowance Table I (below)	☐ Per Application Table J	☐ Sales Frontage Table K	☐ Ornamental Table L	☐ Per Specific Area Table M	

Calculated General Hardscape Lighting Power Allowance per Table 140.7-A for Nonresidential & Hotel/Motel

02	03	04	05	06	07	08	09
Area Description	Area Wattage Allowance (AWA)			Linear Wattage Allowance (LWA)			Total General AWA + LWA (Watts)
	Illuminated Area (ft²)	Allowed Density (W/ft²)	Area Allowance (Watts)	Perimeter Length (lf)	Allowed Density (W/lf)	Linear Allowance (Watts)	
WALKWAY	30612	0.021	642.85	4072	0.2	814.4	1457.25
PARKING LOT	130269	0.021	2735.65	2162	0.2	432.4	3168.05
Initial Wattage Allowance for Entire Site (Watts):							250
Instances of Initial Wattage Allowance (LZ 0 only)[1]							
Total General Hardscape Allowance (Watts):							4875.3

J. LIGHTING ALLOWANCE: PER APPLICATION

This section does not apply to this project.

K. LIGHTING ALLOWANCE: SALES FRONTAGE

This section does not apply to this project.

L. LIGHTING ALLOWANCE: ORNAMENTAL

This section does not apply to this project.

M. LIGHTING ALLOWANCE: PER SPECIFIC AREA

This section does not apply to this project.

N. EXISTING CONDITIONS POWER ALLOWANCE (alterations only)

This section does not apply to this project.

O. DECLARATION OF REQUIRED CERTIFICATES OF INSTALLATION

Selections have been made based on information provided in this document. If any selection has been changed by permit applicant, an explanation should be included in Table E. Additional Remarks. These documents must be provided to the building inspector during construction and can be found online

Form/Title
NRCI-LTO-E - Must be submitted for all buildings

P. DECLARATION OF REQUIRED CERTIFICATES OF ACCEPTANCE

Selections have been made based on information provided in this document. If any selection has been changed by permit applicant, an explanation should be included in Table E. Additional Remarks. These documents must be provided to the building inspector during construction and must be completed through an Acceptance Test Technician Certification Provider (ATTCP). For more information visit: http://www.energy.ca.gov/title24/attcp/providers.html

Form/Title	Systems/Spaces To Be Field Verified
NRCA-LTO-02-A - Must be submitted for all outdoor lighting controls except for alterations where controls are added to <= 20 luminaires.	WALKWAY: "C, CE"; WALKWAY: "D, DE"; PARKING LOT: "P1"; PARKING LOT: "P2"; PARKING LOT: "P3"

DOCUMENTATION AUTHOR'S DECLARATION STATEMENT

I certify that this Certificate of Compliance documentation is accurate and complete.

Documentation Author Name: Jeff Jackson	Documentation Author Signature:
Company: Rose Sing Eastham & Associates	Signature Date: 23-10-11
Address: 131 S DUNWORTH	CEA/ HERS Certification Identification (if applicable):
City/State/Zip VISALIA, CA 93292:	Phone: 559-733-2671 EXT. 104

RESPONSIBLE PERSON'S DECLARATION STATEMENT

I certify the following under penalty of perjury, under the laws of the State of California:
1. The information provided on this Certificate of Compliance is true and correct.
2. I am eligible under Division 3 of the Business and Professions Code to accept responsibility for the building design or system design identified on this Certificate of Compliance (responsible designer)
3. The energy features and performance specifications, materials, components, and manufactured devices for the building design or system design identified on this Certificate of Compliance conform to the requirements of Title 24, Part 1 and Part 6 of the California Code of Regulations.
4. The building design features or system design features identified on this Certificate of Compliance are consistent with the information provided on other applicable compliance documents, worksheets, calculations, plans and specifications submitted to the enforcement agency for approval with this building permit application.
5. I will ensure that a completed signed copy of this Certificate of Compliance shall be made available with the building permit(s) issued for the building, and made available to the enforcement agency for all applicable inspections. I understand that a completed signed copy of this Certificate of Compliance is required to be included with the documentation the builder provides to the building owner at occupancy.

Responsible Designer Name: Steven Eastham	Responsible Designer Signature:
Company: Rose Sing Eastham	Date Signed: 23-10-11
Address: 131 S DUNWORTH	License: E-18786
City/State/Zip: VISALIA, CA 93292	Phone: 559-733-2671 EXT. 101

APPROVALS
FILE # 54-76 APPLICATION # 02-121996

IDENTIFICATION STAMP
DIV. OF THE STATE ARCHITECT
APP: 02-121996 INC: A
REVIEWED FOR
SS ☑ FLS ☑ ACS ☑
DATE: 8/14/2024

LICENSED ARCHITECT MICHAEL J. SCOTT No. C-34290 REN. 05-31-25 STATE OF CALIFORNIA
DATE: DECEMBER 31, 2023

NEW PRESCHOOL AND TK/KINDERGARTEN CLASSROOMS AT SANTA FE ELEMENTARY SCHOOL
PORTERVILLE UNIFIED SCHOOL DISTRICT
286 E ORANGE AVENUE, PORTERVILLE, CA 93257

REVISIONS

MANGINI ARCHITECTURE INCORPORATED
BARENG MORRELLI SCOTT
MANGINI ASSOCIATES INC.
4320 West Mineral King Avenue
Visalia, California 93291
www.mangini.us
(559) 627-0530 Office
(559) 627-1926 Fax

TITLE
OUTDOOR LIGHTING COMPLIANCE

EG1.4

PROJECT 23076

Rose Sing Eastham & Associates
Electrical Consultants
131 S. Dunworth – (559)733–2671
Visalia, California 93292–6705

REGISTERED PROFESSIONAL ENGINEER STEVEN KIRK EASTHAM No. 18786 Exp. 6/30/25 ELECTRICAL STATE OF CALIFORNIA

Z:\Drafting\Jobs\PES\50-003.5\Portervile\Santa Fe Elementary\EG1.4.dwg DATE SAVED: 10/11/23 Dr: Casey DATE PLOTTED: 06/21/24 JOB # 23-093-LJ

APPROVALS

FILE # 54-76 | APPLICATION # 02-121996

IDENTIFICATION STAMP
DIV. OF THE STATE ARCHITECT
APP: 02-121996 INC:
REVIEWED FOR
SS ☑ FLS ☑ ACS ☑
DATE: 8/14/2024

LICENSED ARCHITECT
MICHAEL J. SCOTT
No. C-34290
REN. 05-31-25
STATE OF CALIFORNIA

DATE: DECEMBER 31, 2023

STATE OF CALIFORNIA
Electrical Power Distribution
CALIFORNIA ENERGY COMMISSION

CERTIFICATE OF COMPLIANCE — **NRCC-ELC-E**

This document is used to demonstrate compliance with mandatory requirements in 130.5, for electrical systems in newly constructed nonresidential and hotel/motel occupancies and 160.6 and 160.9 for electrical systems in newly constructed multifamily occupancies. Additions and alterations to electrical service systems in nonresidential and hotel/motel occupancies will also use this document to demonstrate compliance per 141.0(a) or 141.0(b)2P for alterations. For multifamily addition or alterations compliance will be documented per 180.1(a) or 180.2 (b)4Bvii

Project Name:	SANTA FE ELEMENTARY SCHOOL	**Report Page:**	**(Page 1 of 4)**
Project Address: 286 E ORANGE AVE		**Date Prepared:**	2023-10-11T11:27:47-04:00

A. GENERAL INFORMATION

01	Project Location (city)	PORTERVILLE	02	Climate Zone	13
			03	Occupancy Types Within Project:	ClassroomSchool or Classroom

B. PROJECT SCOPE

This table includes electrical systems that are within the scope of the permit application.

01	02	03	04	05	06	07
Electrical Service Designation/ Description	Scope of Work[1]	Rating[2] (kVA)	Utility Provided Metering System Exception to 130.5(a)/ 160.6(a)[3]	System subject to CA Elec Code Article 517 Exception to 130.5(a)and (b)	Demand Response Controls	Provides power to dwelling units/common living areas only in multifamily occupancy
EXISTING MAIN SWITCHBOARD "MSB"	Add/Alt to feeders and branch circuits only	---	☐	☐	Where required, demand response controls must be specified which are capable of receiving and automatically responding to at least one standards based messaging protocol which enables demand response after receiving a demand response signal. Sections 120.2/ 160.3, 130.1/ 160.5, and 130.3/ 160.5, and mechanical, indoor lighting, and sign lighting Certificate of Compliance documents will indicate when demand response controls are required.	☐

[1]FOOTNOTES: Adding only new feeders and branch circuits triggers Voltage Drop 130.5(c)/160.6(c), no other requirements from 130.5/160.6 are required.
[2] If common use areas in a multifamily are submetered, rating is for submeter size serving common use areas.
[3] Applicable if the utility company is providing a metering system that indicates instantaneous kW demand and kWh for a utility-defined period.

STATE OF CALIFORNIA
Electrical Power Distribution
CALIFORNIA ENERGY COMMISSION

CERTIFICATE OF COMPLIANCE — **NRCC-ELC-E**

Project Name:	SANTA FE ELEMENTARY SCHOOL	**Report Page:**	**(Page 3 of 4)**
		Date Prepared:	2023-10-11T11:27:47-04:00

K. DECLARATION OF REQUIRED CERTIFICATES OF INSTALLATION

Selections have been made based on information provided in this document. If any selection have been changed by permit applicant, an explanation should be included in Table E. Additional Remarks. These documents must be provided to the building inspector during construction and can be found online

Form/Title
NRCI-ELC-E - Must be submitted for all buildings

L. DECLARATION OF REQUIRED CERTIFICATES OF ACCEPTANCE

There are no forms required for this project.

STATE OF CALIFORNIA
Electrical Power Distribution
CALIFORNIA ENERGY COMMISSION

CERTIFICATE OF COMPLIANCE — **NRCC-ELC-E**

Project Name:	SANTA FE ELEMENTARY SCHOOL	**Report Page:**	**(Page 2 of 4)**
		Date Prepared:	2023-10-11T11:27:47-04:00

C. COMPLIANCE RESULTS

Results in this table are automatically calculated from data input and calculations in Tables F through J. Note: If any cell on this table says "COMPLIES with Exceptional Conditions" refer to Table D. Exceptional Conditions for guidance or see applicable Table referenced below.

01		02		03		04	05	06
Service Electrical Metering 130.5(a)/ 160.6(a) (See Table F)	AND	Separation for Monitoring 130.5(b)/ 160.6(b) (See Table G)	AND	Voltage Drop 130.5(c)/ 160.6(c) (See Table H)	AND	Controlled Receptacles 130.5(d)/ 160.6(d) (See Table I)	Electric Ready 160.9 (See Table J)	**Compliance Results**
	AND		AND	Yes	AND			COMPLIES

D. EXCEPTIONAL CONDITIONS

This table is auto-filled with uneditable comments because of selections made or data entered in tables throughout the form.

E. ADDITIONAL REMARKS

This table includes remarks made by the permit applicant to the Authority Having Jurisdiction.

H. VOLTAGE DROP

This table includes entirely new or complete replacement electrical power distribution systems, or alterations that add, modify or replace both feeders and branch circuits to demonstrate compliance with 130.5(c)/ 160.6(c). For alterations, only the altered circuits must demonstrate compliance per 141.0(b)2Piii/ 180.2(b)4Bviic.

01	02			03	04	05	
Electrical Service Designation/Description	Combined Voltage Drop on Installed Feeder/Branch Circuit Conductors Compliance Method			Location of Voltage Drop Calculations[1]	Sheet Number for Voltage Drop Calculations in Construction Documents	Field Inspector	
						Pass	Fail
EXISTING MAIN SWITCHBOARD "MSB"	☒	Voltage drop less than 5%	☐	Permitted by CA Elec Code (Exception to 130.5(c))*	In construction documents	E5.1	☐ ☐

** NOTES: If "Permitted by CA Elec Code *" is selected under Compliance Method above, please indicate where the exception applies in the space provided below.*

[1] FOOTNOTES: Voltage drop calculations may be attached to the permit application outside the construction documents if allowed by the Authority Having Jurisdiction. Select "attached" if applicable. If calculations will be the responsibility of the installing contractor, select "Contractor Responsible".

STATE OF CALIFORNIA
Electrical Power Distribution
CALIFORNIA ENERGY COMMISSION

CERTIFICATE OF COMPLIANCE — **NRCC-ELC-E**

Project Name:	SANTA FE ELEMENTARY SCHOOL	**Report Page:**	**(Page 4 of 4)**
Project Address: 286 E ORANGE AVE		**Date Prepared:**	2023-10-11T11:27:47-04:00

DOCUMENTATION AUTHOR'S DECLARATION STATEMENT

I certify that this Certificate of Compliance documentation is accurate and complete.

Documentation Author Name: Jeff Jackson	Documentation Author Signature:
Company: Rose Sing Eastham & Associates	Signature Date: 23-10-11
Address: 131 S DUNWORTH	CEA/ HERS Certification Identification (if applicable):
City/State/Zip: VISALIA, CA, 93292	Phone: 559-733-2671 EXT. 104

RESPONSIBLE PERSON'S DECLARATION STATEMENT

I certify the following under penalty of perjury, under the laws of the State of California:

1. The information provided on this Certificate of Compliance is true and correct.
2. I am eligible under Division 3 of the Business and Professions Code to accept responsibility for the building design or system design identified on this Certificate of Compliance (responsible designer)
3. The energy features and performance specifications, materials, components, and manufactured devices for the building design or system design identified on this Certificate of Compliance conform to the requirements of Title 24, Part 1 and Part 6 of the California Code of Regulations.
4. The building design features or system design features identified on this Certificate of Compliance are consistent with the information provided on other applicable compliance documents, worksheets, calculations, plans and specifications submitted to the enforcement agency for approval with this building permit application.
5. I will ensure that a completed signed copy of this Certificate of Compliance shall be made available with the building permit(s) issued for the building, and made available to the enforcement agency for all applicable inspections. I understand that a completed signed copy of this Certificate of Compliance is required to be included with the documentation the builder provides to the building owner at occupancy.

Responsible Designer Name: Steven Eastham	Responsible Designer Signature:
Company: Rose Sing Eastham	Date Signed: 23-10-11
Address: 131 S DUNWORTH	License: E-18786
City/State/Zip: VISALIA, CA, 93292	Phone: 559-733-2671 EXT. 101

REGISTERED PROFESSIONAL ENGINEER
STEVEN KIRK EASTHAM
No. E-18786
Exp. 6/30/25
ELECTRICAL
STATE OF CALIFORNIA

Rose Sing Eastham & Associates
Electrical Consultants
131 S. Dunworth – (559)733–2671
Visalia, California 93292–6705

NEW PRESCHOOL AND TK/KINDERGARTEN CLASSROOMS AT SANTA FE ELEMENTARY SCHOOL

PORTERVILLE UNIFIED SCHOOL DISTRICT
286 E ORANGE AVENUE, PORTERVILLE, CA 93257

REVISIONS

MANGINI ARCHITECTURE INGENUITY
BARENG MORRELLI SCOTT
MANGINI ASSOCIATES INC.
4320 West Mineral King Avenue
Visalia, California 93291
www.mangini.us
(559) 627-0530 Office
(559) 627-1926 Fax

TITLE
POWER COMPLIANCE

EG1.5

PROJECT 23076

Z:\Drafing\Jobs\RSES\SCHOOLS\Portervile\Santa Fe Elementary\EG1.5.dwg DATE SAVED: 10/11/23 Br. Casey DATE PLOTTED: 06/21/24 JOB # 23-003-JJ

STATE OF CALIFORNIA
Solar And Battery
CALIFORNIA ENERGY COMMISSION

CERTIFICATE OF COMPLIANCE **NRCC-SAB-E**

This document is used to demonstrate compliance with prescriptive PV and battery requirements in 140.10/ 170.2 for nonresidential, multifamily and mixed-use buildings and prescriptive solar thermal requirements in 170.2(d)3C for multifamily and hotel/ motel occupancies. When PV/battery/solar thermal requirements don't apply or are traded using the performance approach, this document demonstrates compliance with mandatory solar readiness requirements in 110.10/ 160.8 for newly constructed buildings which are either multifamily ten stories or fewer, hotel/motel ten stories or fewer or all other nonresidential buildings three stories or fewer. It is also used to demonstrate compliance with solar readiness in 110.10/ 160.8 for additions to nonresidential, multifamily or hotel/motel building types which add more than 2,000 ft^2 of roof area. Alterations, or additions of less than 2,000 ft^2 of roof area, are not required to comply with solar readiness, solar PV and battery requirements and do not need to complete this document.

Project Name:	SANTA FE ELEMENTARY SCHOOL	**Report Page:**	**(Page 1 of 6)**
Project Address:	**286 E ORANGE AVE**	**Date Prepared:**	2023-10-11T11:30:07-04:00

A. GENERAL INFORMATION

01	Project Location (city)	PORTERVILLE	04	Building Occupancies	School or Classroom
02	Climate Zone	13	05	Construction Type	New construction
03	Conditioned Floor Area (ft^2)	16178	06	Number of Stories	Bldg <= 3 stories

B. PROJECT SCOPE

The compliance path the project is using to comply per 110.10(b)1B/ 140.10/ 170.2(g and h) is indicated below.

Compliance with Solar Photovoltaic (PV) and Battery Requirements in 140.10/ 170.2(g and h)

	01	
☒	Provided PV system and battery storage sized per 140.10/ 170.2 (g and h)	The project has included an installed PV system and battery storage system per requirements in 140.10/ 170.2(g and h) as documented in Table J.
☐	Exception to PV and Battery: Not enough Solar Access Roof Area	The total of all available Solar Access Roof Area(s) of the project site is less than three percent of the conditioned floor area as documented in Table J.
☐	Exception to PV and Battery: Required PV < 4kW	The required PV system size is less than 4 kW dc as documented in Table J..
☐	Exception to PV and Battery: No contiguous Solar Access Roof Area	The Solar Access Roof Area(s) of the project site contains less than 80 contiguous square feet as documented in Table J.
☐	Exception to PV and Battery: Can't meet snow load	The project has a roof design where the enforcement authority has verified it is not possible for the PV system, including panels, modules, components, supports, and attachments to the roof structure, to meet ASCE 7-16 Chapter 7, Snow Loads.
☐	Exception to PV and Battery: Multi-tenant without VNEM or Community Solar	The project is a multi-tenant building in an area where a load serving entity does not provide either a Virtual Net Metering (VNEM) or community solar program.
☐	The prescriptive PV/battery requirement has been traded off using the performance compliance approach as documented on the PRF Certificate of Compliance form.	

STATE OF CALIFORNIA
Solar And Battery
CALIFORNIA ENERGY COMMISSION

CERTIFICATE OF COMPLIANCE **NRCC-SAB-E**

Project Name:	SANTA FE ELEMENTARY SCHOOL	**Report Page:**	**(Page 3 of 6)**
		Date Prepared:	2023-10-11T11:30:07-04:00

F. ALLOCATED SOLAR ZONE

This section does not apply to this project.

G. PERMANENTLY INSTALLED SOLAR PV FOR SOLAR READY EXCEPTION

This section does not apply to this project.

H. PERMANENTLY INSTALLED SOLAR HOT WATER SYSTEMS

This section does not apply to this project.

I. SMART THERMOSTATS AND ALTERNATIVE EFFICIENCY MEASURE FOR SOLAR READY EXCEPTION

This section does not apply to this project.

STATE OF CALIFORNIA
Solar And Battery
CALIFORNIA ENERGY COMMISSION

CERTIFICATE OF COMPLIANCE **NRCC-SAB-E**

Project Name:	SANTA FE ELEMENTARY SCHOOL	**Report Page:**	**(Page 5 of 6)**
		Date Prepared:	2023-10-11T11:30:07-04:00

K. DECLARATION OF REQUIRED CERTIFICATES OF INSTALLATION

Selections have been made based on information provided in this document. If any selections have been changed by the permit applicant, an explanation should be included Table E. Additional Remarks and ExceptionalConditionMessageCCSABE += UserChangedSelectionInCI. These documents must be provided to the building inspector during construction and can be found online

Form/Title
NRCI-SAB-01-E - Must be submitted for all buildings that must comply with solar readiness or PV/Battery requirements.

L. DECLARATION OF REQUIRED CERTIFICATES OF ACCEPTANCE

There are no forms required for this project.

STATE OF CALIFORNIA
Solar And Battery
CALIFORNIA ENERGY COMMISSION

CERTIFICATE OF COMPLIANCE **NRCC-SAB-E**

Project Name:	SANTA FE ELEMENTARY SCHOOL	**Report Page:**	**(Page 2 of 6)**
		Date Prepared:	2023-10-11T11:30:07-04:00

Compliance with Solar Thermal Water Heating Requirements in 170.2(d)3C (Multifamilly and hotel/ motel occupancies only)

	01
☐	The project includes a hotel/motel or multifamily occupancy with a gas or propane central water-heating system (serves 2+ dwelling units) and includes a permanently installed domestic solar water-heating system to comply with 170.2(d)3C and Reference Residential Appendix RA4, as documented in Table H. Compliance meets Exception 2 to solar ready requirements in 110.10(b).

C. COMPLIANCE RESULTS

Results in this table are automatically calculated from data input and calculations in Tables F through I. Note: If any cell on this table says "DOES NOT COMPLY" or "COMPLIES with Exceptional Conditions" refer to Table D. for guidance or see the applicable Table referenced below.

Allocated Solar Zone				Installed PV System				Installed SWH System				Smart Tstat and Alternative EE Measure		Compliance Results
01		02		03		04		05		06		07	08	
Required Minimum Area (ft^2)	<=	Designated Area (ft^2)	OR	Required Minimum DC Power Rating (Watts)	<=	Designed DC Power Rating (Watts)	OR	Required Minimum Solar Savings Fraction	<=	Designed/Rated Solar Savings Fraction	OR	JA5 Compliant Thermostat Specified?	Alternative Energy Efficiency Measure	COMPLIES
(See Table F)				(See Tables G or J)				(See Table H)				(See Table I)		
	<=		OR	26,370	<=	26,560	OR		<=		OR			
Location in construction documents showing the location for inverters and metering equipment and a pathway for the routing of conduit/ plumbing to the electrical service/ water heating system per §110.10(c).														
Battery storage system design meets the minimum requirements in Joint Appendix JA12 and the minimum energy (kWh)/ power (kW) capacity per Table J.														COMPLIES

D. EXCEPTIONAL CONDITIONS

This table is auto-filled with uneditable comments because of selections made or data entered in tables throughout the form.

E. ADDITIONAL REMARKS

This table is includes remarks made by the permit applicant to the Authority Having Jurisdiction.

STATE OF CALIFORNIA
Solar And Battery
CALIFORNIA ENERGY COMMISSION

CERTIFICATE OF COMPLIANCE **NRCC-SAB-E**

Project Name:	SANTA FE ELEMENTARY SCHOOL	**Report Page:**	**(Page 4 of 6)**
		Date Prepared:	2023-10-11T11:30:07-04:00

J. PHOTOVOLTAIC (PV) AND BATTERY SYSTEMS

This table documents compliance with prescriptive photovoltaic and battery system requirements in 140.10/ 170.2(g and h). Unless the project meets one of the listed exceptions, or trades-off PV in an energy model using performance path, 140.10/ 170.2(g and h) requires installed photovoltaic and battery systems for newly constructed buildings. The installed PV systems must meet the minimum requirements in Joint Appendix 11.

Photovoltaic (PV) System

01	02	03	04	05	06	07	08
Occupancy	Conditioned Floor Area (ft^2)	Area of New Roof[1] (ft^2)	Roof Area < 70% Solar Access[2] (ft^2)	Plansheet or Document showing Solar Access Calculations	Occupied Roof Area[3] (ft^2)	Solar Access Roof Area (SARA) (ft^2)	Min Size of PV System Required (kWdc)
School or Classroom	16,178	21,725	0	E2.3	100	21,625	26.37
					Total Min Size PV System Required for all Spaces (kWdc):		26.37
					Total Size PV System in Design (kWdc):		26.56

[1]FOOTNOTES: Includes the area of the building's roof space capable of structurally supporting a PV system and the area of all roof space on covered parking areas, carports, and all other newly constructed structures on the site that are compatible with supporting a PV system per Title 24, Part 2 Section 1511.2.
[2]Solar access must be determined using CEC approved solar access calculation tools found at https://www.energy.ca.gov/programs-and-topics/programs/building-energy-efficiency-standards/solar-assessment-tools.
[3]As specified by CBC Section 503.1.4.

Battery Storage System

01	02	03	04	05
Space Type	Min Size of PV System Required (kWdc)	Rated Single Charge-Discharge AC Efficiency of Battery System[1]	Min Battery Rated Energy Capacity Required (kWh)	Min Power Capacity of Battery Required (kWdc)
School or Classroom	26.37	0.97	50.06	12.13
	Total Min Energy (kWh) and Power (kW) Capacity Required		50.07	12.13
	Total Energy (kWh) and Power (kW) Capacity in Design		54	18

[1]FOOTNOTE: Rated single charge-discharge cycle AC to AC (round trip) efficiency of the battery storage system

STATE OF CALIFORNIA
Solar And Battery
CALIFORNIA ENERGY COMMISSION

CERTIFICATE OF COMPLIANCE **NRCC-SAB-E**

Project Name:	SANTA FE ELEMENTARY SCHOOL	**Report Page:**	**(Page 6 of 6)**
Project Address:	**286 E ORANGE AVE**	**Date Prepared:**	2023-10-11T11:30:07-04:00

DOCUMENTATION AUTHOR'S DECLARATION STATEMENT

I certify that this Certificate of Compliance documentation is accurate and complete.

Documentation Author Name: Jeff Jackson	Documentation Author Signature:
Company: Rose Sing Eastham & Associates	Signature Date: 23-10-11
Address: 131 S DUNWORTH	CEA/ HERS Certification Identification (if applicable):
City/State/Zip: VISALIA, CA, 93292	Phone: 559-733-2671 EXT. 104

RESPONSIBLE PERSON'S DECLARATION STATEMENT

I certify the following under penalty of perjury, under the laws of the State of California:
1. The information provided on this Certificate of Compliance is true and correct.
2. I am eligible under Division 3 of the Business and Professions Code to accept responsibility for the building design or system design identified on this Certificate of Compliance (responsible designer)
3. The energy features and performance specifications, materials, components, and manufactured devices for the building design or system design identified on this Certificate of Compliance conform to the requirements of Title 24, Part 1 and Part 6 of the California Code of Regulations.
4. The building design features or system design features identified on this Certificate of Compliance are consistent with the information provided on other applicable compliance documents, worksheets, calculations, plans and specifications submitted to the enforcement agency for approval with this building permit application.
5. I will ensure that a completed signed copy of this Certificate of Compliance shall be made available with the building permit(s) issued for the building, and made available to the enforcement agency for all applicable inspections. I understand that a completed signed copy of this Certificate of Compliance is required to be included with the documentation the builder provides to the building owner at occupancy.

Responsible Designer Name: Steven Eastham	Responsible Designer Signature:
Company: Rose Sing Eastham	Date Signed: 23-10-11
Address: 131 S DUNWORTH	License: E-18786
City/State/Zip: VISALIA, CA, 93292	Phone: 559-733-2671 EXT. 101

APPROVALS
FILE # 54-76 APPLICATION # 02-121996

IDENTIFICATION STAMP
DIV. OF THE STATE ARCHITECT
APP: 02-121996 INC:
REVIEWED FOR
SS ☑ FLS ☑ ACS ☑
DATE: 8/14/2024

LICENSED ARCHITECT MICHAEL J. SCOTT No. C-34290 REN. 05-31-25 STATE OF CALIFORNIA

DATE: DECEMBER 31, 2023

NEW PRESCHOOL AND TK/KINDERGARTEN CLASSROOMS AT SANTA FE ELEMENTARY SCHOOL
PORTERVILLE UNIFIED SCHOOL DISTRICT
286 E ORANGE AVENUE, PORTERVILLE, CA 93257

REVISIONS

MANGINI ARCHITECTURE INGENUITY
BARENG MORRELLI SCOTT
MANGINI ASSOCIATES INC.
4320 West Mineral King Avenue
Visalia, California 93291
www.mangini.us
(559) 627.0530 Office
(559) 627.1926 Fax

TITLE
SOLAR AND BATTERY COMPLIANCE

EG1.6

PROJECT 23076

REGISTERED PROFESSIONAL ENGINEER JOSEPH KIRK EASTHAM No. E-18786 Exp. 6/30/25 ELECTRICAL STATE OF CALIFORNIA

Rose Sing Eastham & Associates
Electrical Consultants
131 S. Dunworth – (559)733-2671
Visalia, California 93292-6705

Z:\Drafting\Jobs\KES\SCHOOLS\Portervile\Santa Fe Elementary\EG1.6.dwg DATE: SAVED: 10/11/23 BY: Casey DATE PLOTTED: 06/21/24 JOB #: 23-093-U

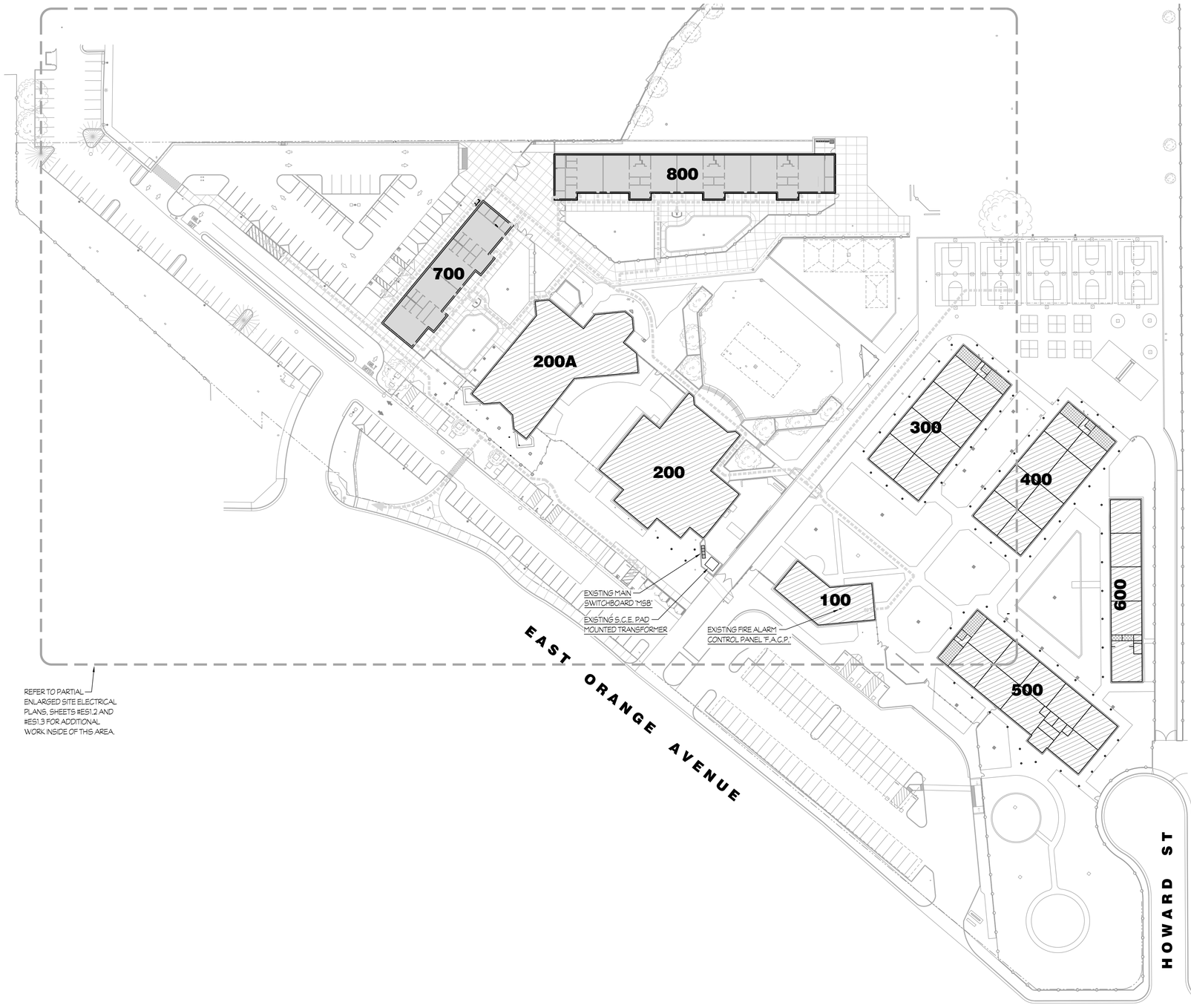

OVERALL SITE ELECTRICAL PLAN

1" = 50'-0"

COMPLETE AUTOMATIC FIRE ALARM SYSTEM PLAN SUBMITTAL

THE FIRE ALARM SYSTEM SHOWN ON THESE PLANS HAS BEEN SUBMITTED AND APPROVED BY THE DIVISION OF THE STATE ARCHITECT. ANY SUBSTITUTION OF THE FIRE ALARM SYSTEM SHALL BE RESUBMITTED TO THE ARCHITECT FOR REVIEW AND APPROVAL. THE CONTRACTOR SHALL PAY ANY ADDITIONAL FEES THAT ARE INCURRED DUE TO THIS SUBSTITUTION.

THE FIRE ALARM SYSTEM SHALL BE A TOTAL (COMPLETE) AUTOMATIC HEAT AND SMOKE DETECTION SYSTEM, PER C.F.C. SECTION 907.2.3.6, AND SHALL COVER EVERY ROOM AND/OR AREA. UPON THE ACTIVATION OF ANY INITIATION DEVICE THE FIRE ALARM SYSTEM SHALL ALERT ALL OCCUPANTS AND TRANSMIT THE ALARM, SUPERVISORY, AND TROUBLE SIGNALS TO AN APPROVED SUPERVISING STATION (C.F.C. SECTION 907.2.3.5).

Rose Sing Eastham & Associates
Electrical Consultants
131 S. Dunworth – (559)733-2671
Visalia, California 93292-6705

REGISTERED PROFESSIONAL ENGINEER
STEVEN KIRK EASTHAM
No. E-16786
Exp. 6/30/25
ELECTRICAL
STATE OF CALIFORNIA

APPROVALS

FILE # 54-76 APPLICATION # 02-121996

IDENTIFICATION STAMP
DIV. OF THE STATE ARCHITECT
APP: 02-121996 INC:
REVIEWED FOR
SS ☑ FLS ☑ ACS ☑
DATE: 8/14/2024

LICENSED ARCHITECT
MICHAEL J. SCOTT
No. C-34290
REN. 05-31-25
STATE OF CALIFORNIA

DATE: DECEMBER 31, 2023

NEW PRESCHOOL AND TK/KINDERGARTEN CLASSROOMS AT SANTA FE ELEMENTARY SCHOOL

PORTERVILLE UNIFIED SCHOOL DISTRICT
286 E ORANGE AVENUE, PORTERVILLE, CA 93257

REVISIONS

MANGINI ARCHITECTURE INGENUITY
BARENG MORRELLI SCOTT
MANGINI ASSOCIATES INC.
4320 West Mineral King Avenue
Visalia, California 93291
www.mangini.us
(559) 627.0530 Office
(559) 627.1926 Fax

TITLE
OVERALL SITE ELECTICAL PLAN

ES1.1

PROJECT 23076

Z:\Drafting\Jobs\RSE\SCHOOLS\Portervile\Santa Fe Elementary\ES1.1.dwg DATE SAVED: 05/28/24 BY: Casey DATE PLOTTED: 06/21/24 JOB #: 23-083-JJ

APPROVALS

FILE # 54-76 APPLICATION # 02-121996

IDENTIFICATION STAMP
DIV. OF THE STATE ARCHITECT
APP: 02-121996 INC:
REVIEWED FOR
SS ☑ FLS ☑ ACS ☑
DATE: 8/14/2024

LICENSED ARCHITECT
MICHAEL J. SCOTT
No. C-34290
REN. 05-31-25
STATE OF CALIFORNIA

DATE: DECEMBER 31, 2023

NOTES (THIS SHEET ONLY):

1. EXISTING FOUR SPARE 3"C.
2. EXISTING TWO SPARE 3"C.
3. EXISTING TWO SPARE 2"C.
4. DISCONNECT, REMOVE AND RETURN EXISTING POLE LIGHT TO THE OWNER. DISPOSE OF ALL ASSOCIATED CONDUIT AND WIRING. TYPICAL, U.O.N..
5. TO REMAIN IN USE. SEE PARTIAL ENLARGED SITE ELECTRICAL PLAN - NEW, SHEET #ES1.3, FOR ADDITIONAL INFORMATION.
6. SEE PARTIAL ENLARGED SITE ELECTRICAL PLAN - NEW, SHEET #ES1.3, FOR ADDITIONAL INFORMATION.

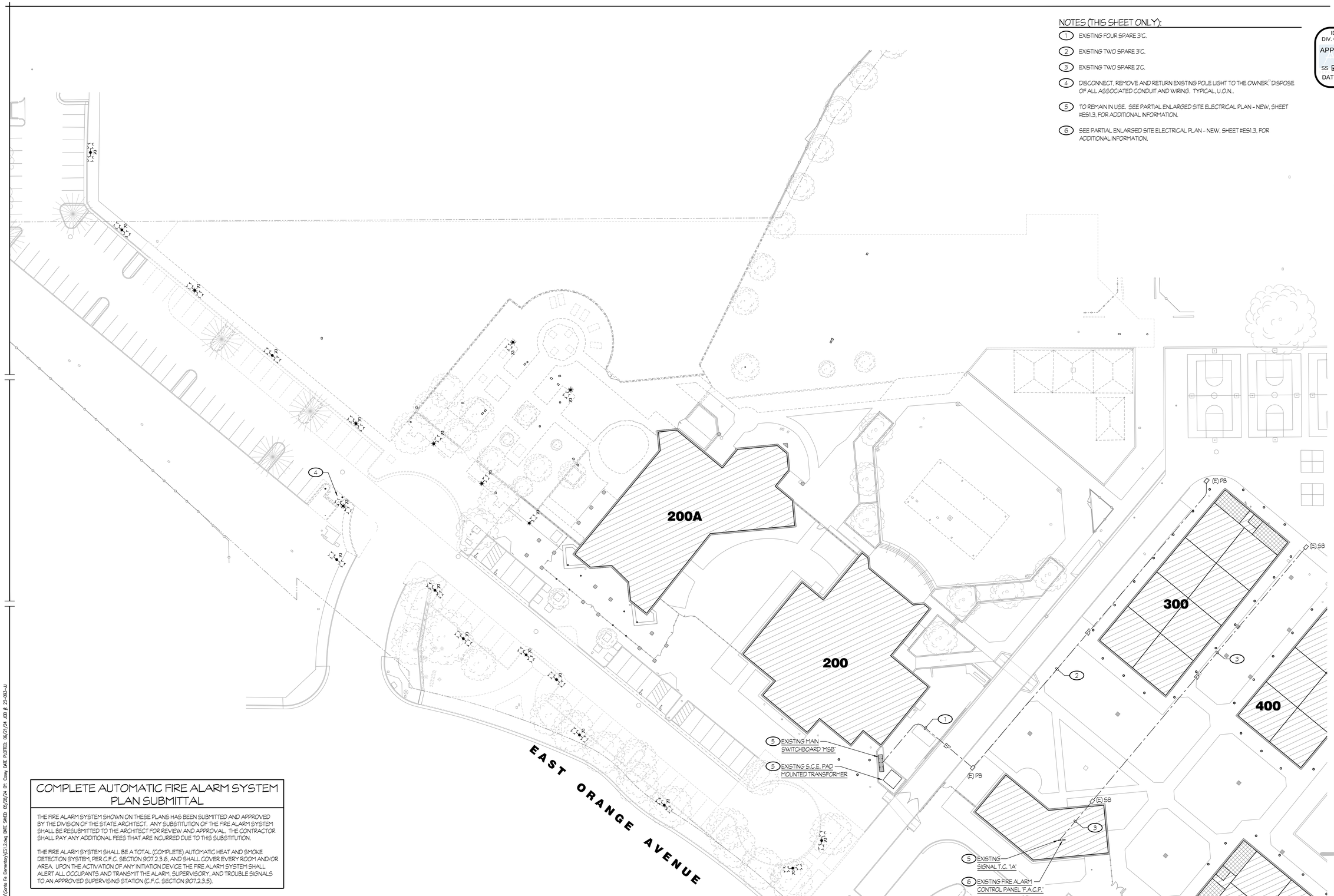

COMPLETE AUTOMATIC FIRE ALARM SYSTEM PLAN SUBMITTAL

THE FIRE ALARM SYSTEM SHOWN ON THESE PLANS HAS BEEN SUBMITTED AND APPROVED BY THE DIVISION OF THE STATE ARCHITECT. ANY SUBSTITUTION OF THE FIRE ALARM SYSTEM SHALL BE RESUBMITTED TO THE ARCHITECT FOR REVIEW AND APPROVAL. THE CONTRACTOR SHALL PAY ANY ADDITIONAL FEES THAT ARE INCURRED DUE TO THIS SUBSTITUTION.

THE FIRE ALARM SYSTEM SHALL BE A TOTAL (COMPLETE) AUTOMATIC HEAT AND SMOKE DETECTION SYSTEM, PER C.F.C. SECTION 907.2.3.6, AND SHALL COVER EVERY ROOM AND/OR AREA. UPON THE ACTIVATION OF ANY INITIATION DEVICE THE FIRE ALARM SYSTEM SHALL ALERT ALL OCCUPANTS AND TRANSMIT THE ALARM, SUPERVISORY, AND TROUBLE SIGNALS TO AN APPROVED SUPERVISING STATION (C.F.C. SECTION 907.2.3.5).

PARTIAL ENLARGED SITE ELECTRICAL PLAN - DEMO

1" = 30'-0"

Rose Sing Eastham & Associates
Electrical Consultants
131 S. Dunworth - (559)733-2671
Visalia, California 93292-6705

REGISTERED PROFESSIONAL ENGINEER
STEVEN KIRK EASTHAM
No. E-16786
Exp. 6/30/25
ELECTRICAL
STATE OF CALIFORNIA

NEW PRESCHOOL AND TK/KINDERGARTEN CLASSROOMS AT SANTA FE ELEMENTARY SCHOOL

PORTERVILLE UNIFIED SCHOOL DISTRICT
286 E ORANGE AVENUE, PORTERVILLE, CA 93257

REVISIONS

MANGINI ARCHITECTURE INGENUITY
BARENG MORRELLI SCOTT
MANGINI ASSOCIATES INC.
4320 West Mineral King Avenue
Visalia, California 93291
www.mangini.us
(559) 627.0530 Office
(559) 627.1926 Fax

TITLE
PARTIAL ENLARGED SITE ELECTRICAL PLAN - DEMO

ES1.2

PROJECT 23076

Z:\Drafting\Jobs\RSE\SCHOOLS\Porterville\Santa Fe Elementary\ES1.2.dwg DATE SAVED: 05/28/24 BY: Casey DATE PLOTTED: 06/21/24 JOB #: 23-093-JJ

APPROVALS

FILE #	APPLICATION #
54-76	02-121996

IDENTIFICATION STAMP
DIV. OF THE STATE ARCHITECT
APP: 02-121996 INC:
REVIEWED FOR
SS ☑ FLS ☑ ACS ☑
DATE: 8/14/2024

LICENSED ARCHITECT
MICHAEL J. SCOTT
No. C-34290
REN. 05-31-25
STATE OF CALIFORNIA

DATE: DECEMBER 31, 2023

NOTES (THIS SHEET ONLY):

1. EXISTING FOUR SPARE 3"C. SEE ONE LINE DIAGRAM, #1/E5.1 FOR ADDITIONAL INFORMATION.
2. EXISTING TWO SPARE 3"C. SEE ONE LINE DIAGRAM, #1/E5.1 FOR ADDITIONAL INFORMATION.
3. EXISTING TWO SPARE 2"C. SEE FIRE ALARM SYSTEM RISER DIAGRAM, #1/E4.2 FOR ADDITIONAL INFORMATION.
4. SEE POWER PLANS FOR EXACT LOCATION AND REQUIREMENTS.
5. CONDUIT AND WIRING PER FIRE ALARM RISER DIAGRAM #1/E4.2.
6. SEE ONE LINE DIAGRAM, #1/E5.1 FOR ADDITIONAL INFORMATION.
7. TO REMAIN IN USE. NO WORK REQUIRED.
8. FEEDER PER ONE LINE DIAGRAM, #1/E5.1.
9. SAWCUT AND PATCH EXISTING CONCRETE TO UNDERGROUND NEW CONDUITS AS SHOWN.
10. PULL BOX PER DETAILS #3/E5.3 AND #4/E5.3. TYPICAL, U.O.N..
11. SEE FIRE ALARM PLANS FOR EXACT LOCATION AND REQUIREMENTS.
12. INTERCEPT TWO EXISTING SPARE 3"C WITH NEW PULL BOX AND EXTEND AS SHOWN. PULL IN CONDUCTORS PER ONE LINE DIAGRAM #1/E5.1.
13. PROVIDE WEATHERPROOF VISIBLE STYLE DISCONNECT SWITCH PER UTILITY REQUIREMENTS. MOUNT PER DETAIL #5/E5.5.
14. CONNECT TAMPER SWITCH AT THE POST INDICATOR VALVE 'P.I.V.'. RUN 1/2" LIQUIDTIGHT FLEXIBLE METALLIC CONDUIT WITH 2 #14 INSIDE TO TAMPER SWITCH AND PROVIDE AN END-OF-LINE RESISTOR 'E.O.L'. SECURE CONDUIT TO PIPING WITH 1/2" WIDE STAINLESS STEEL STRAPPING. PROVIDE A TWO-DEVICE DECAST WEATHERPROOF JUNCTION BOX WITH A BLANK GASKETED COVER AND MOUNT AT +6' A.F.G.. PROVIDE AN ADDITIONAL GALVANIZED RIGID STEEL CONDUIT, MINIMUM OF 24" LONG, WRAPPED WITH PVC TAPE TO SUPPORT WEATHERPROOF JUNCTION BOX. COORDINATE EXACT LOCATION WITH FIRE SPRINKLER CONTRACTOR PRIOR TO ROUGH-IN.
15. RUN 3/4"C - 6 #14 TO DUAL MONITOR MODULES ' 18-151 AND ' 18-152 ROOM #803.
16. CONNECT TAMPER SWITCHES AT THE O.S.&Y. VALVES LOCATED ON THE DOUBLE CHECK DETECTOR/BACKFLOW PREVENTER ASSEMBLY. RUN 1/2" LIQUIDTIGHT FLEXIBLE METALLIC CONDUIT WITH 2 #14 INSIDE TO EACH TAMPER SWITCH AND PROVIDE AN END-OF-LINE RESISTOR 'E.O.L.' AT EACH TAMPER SWITCH. SECURE CONDUIT TO PIPING WITH 1/2" WIDE STAINLESS STEEL STRAPPING. PROVIDE A TWO-DEVICE DECAST WEATHERPROOF JUNCTION BOX WITH A BLANK GASKETED COVER AND MOUNT AT +6' A.F.G.. PROVIDE AN ADDITIONAL GALVANIZED RIGID STEEL CONDUIT, MINIMUM OF 24" LONG, WRAPPED WITH PVC TAPE TO SUPPORT WEATHERPROOF JUNCTION BOX. COORDINATE EXACT LOCATION WITH FIRE SPRINKLER CONTRACTOR PRIOR TO ROUGH-IN.
17. INDICATES EXISTING EXTERIOR LIGHTS TO REMAIN. TYPICAL, U.O.N..
18. DISCONNECT, REMOVE AND RETURN EXISTING FIRE ALARM CONTROL PANEL TO THE OWNER. LEAVE CONDUIT AND WIRING IN PLACE FOR RECONNECTION.
19. CONNECT ELECTRIC VEHICLE CHARGING STATION, 208V 1ph, 30A. COORDINATE EXACT 'POINT-OF-CONNECTION' PRIOR TO ROUGH-IN.
20. SPARE CONDUIT(S) PER ONE LINE DIAGRAM #1/E5.1.
21. ROUTE LIGHTING CIRCUIT THROUGH LIGHTING CONTROL CONTACTOR CABINET IN ROOM #724.
22. 3/4"C - 3 #10 + 1 #10 GND.
23. 3/4"C - 2 #10 + 1 #10 GND.
24. ROUTE LIGHTING CIRCUIT THROUGH LIGHTING CONTROL CONTACTOR CABINET IN ROOM #835.
25. INSTALL NEW FIRE ALARM CONTROL PANEL N SAME LOCATION AS ONE THAT WAS REMOVED PER DETAIL #7/E4.4. RECONNECT ALL EXISTING CONDUIT AND WIRING.
26. ACCESS EXISTING PULL BOX AS REQUIRED TO PICK UP EXISTING TWO SPARE 3"C AND EXTEND AS SHOWN. PULL IN NEW FEEDER PER ONE LINE DIAGRAM, #1/E5.1.
27. ACCESS EXISTING PULL BOX AS REQUIRED TO PICK UP EXISTING SPARE 2"C AND EXTEND AS SHOWN. CONDUIT AND WIRING PER FIRE ALARM SYSTEM RISER DIAGRAM, #1/E4.1. THE OTHER SPARE 2"C IS TO REMAIN SPARE.
28. 3/4"C - 10 #14.
29. RUN 3/4"C - 6 #14 TO DUAL MONITOR MODULES ' 17-29 AND ' 17-30 ROOM #728.
30. 3/4"C - 2 #14.

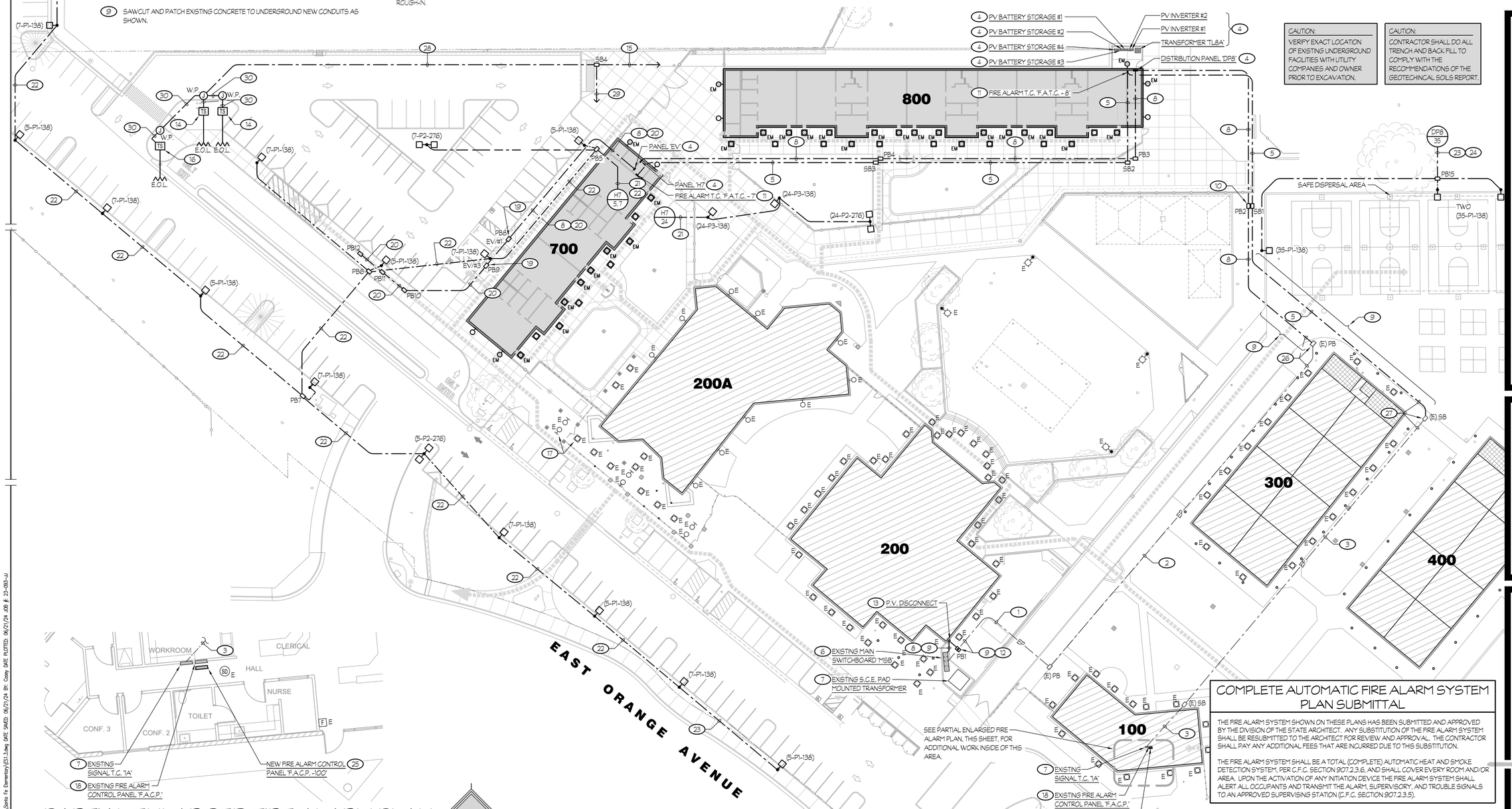

CAUTION:
VERIFY EXACT LOCATION OF EXISTING UNDERGROUND FACILITIES WITH UTILITY COMPANIES AND OWNER PRIOR TO EXCAVATION.

CAUTION:
CONTRACTOR SHALL DO ALL TRENCH AND BACK FILL TO COMPLY WITH THE RECOMMENDATIONS OF THE GEOTECHNICAL SOILS REPORT.

COMPLETE AUTOMATIC FIRE ALARM SYSTEM PLAN SUBMITTAL

THE FIRE ALARM SYSTEM SHOWN ON THESE PLANS HAS BEEN SUBMITTED AND APPROVED BY THE DIVISION OF THE STATE ARCHITECT. ANY SUBSTITUTION OF THE FIRE ALARM SYSTEM SHALL BE RESUBMITTED TO THE ARCHITECT FOR REVIEW AND APPROVAL. THE CONTRACTOR SHALL PAY ANY ADDITIONAL FEES THAT ARE INCURRED DUE TO THIS SUBSTITUTION.

THE FIRE ALARM SYSTEM SHALL BE A TOTAL (COMPLETE) AUTOMATIC HEAT AND SMOKE DETECTION SYSTEM, PER C.F.C. SECTION 907.2.3.6, AND SHALL COVER EVERY ROOM AND/OR AREA. UPON THE ACTIVATION OF ANY INITIATION DEVICE THE FIRE ALARM SYSTEM SHALL ALERT ALL OCCUPANTS AND TRANSMIT THE ALARM, SUPERVISORY, AND TROUBLE SIGNALS TO AN APPROVED SUPERVISING STATION (C.F.C. SECTION 907.2.3.5).

PARTIAL ENLARGED FIRE ALARM PLAN

1/8" = 1'-0"

north

PARTIAL ENLARGED SITE ELECTRICAL PLAN - NEW

1" = 30'-0"

north

Rose Sing Eastham & Associates
Electrical Consultants
131 S. Dunworth – (559)733-2671
Visalia, California 93292-6705

REGISTERED PROFESSIONAL ENGINEER
ANTHONY KIRK EASTHAM
No. E-19766
Exp. 6/30/25
ELECTRICAL
STATE OF CALIFORNIA

NEW PRESCHOOL AND TK/KINDERGARTEN CLASSROOMS AT SANTA FE ELEMENTARY SCHOOL

PORTERVILLE UNIFIED SCHOOL DISTRICT
286 E ORANGE AVENUE, PORTERVILLE, CA 93257

REVISIONS

MANGINI ARCHITECTURE INGENUITY
BARENG MORRELLI SCOTT
MANGINI ASSOCIATES INC.
4320 West Mineral King Avenue
Visalia, California 93291
www.mangini.us
(559) 627-0530 Office
(559) 627-1926 Fax

TITLE
PARTIAL ENLARGED SITE ELECTRICAL PLAN - NEW

ES1.3

PROJECT 23076

Z:\Drafting\Jobs\RSES\23003\Portervile\Santa Fe Elementary\ES1.3.dwg DATE SAVED: 06/21/24 By: Casey DATE PLOTTED: 06/21/24 JOB #: 23-093-JJ

APPROVALS

FILE #	APPLICATION #
54-76	02-121996

IDENTIFICATION STAMP
DIV. OF THE STATE ARCHITECT
APP: 02-121996 INC: A
REVIEWED FOR
SS ☑ FLS ☑ ACS ☑
DATE: 8/14/2024

LICENSED ARCHITECT
MICHAEL J. SCOTT
No. C-34290
REN. 05-31-25
STATE OF CALIFORNIA

DATE: DECEMBER 31, 2023

NOTES (THIS SHEET ONLY):

1. ROUTE CIRCUIT(S) THROUGH LIGHTING CONTACTOR CABINET.
2. PROVIDE A NEMA 1 T.C., 12" x 12" x 6" DP, WITH MECHANICALLY HELD LIGHTING CONTACTOR WITH 4 CONTACTS EACH RATED FOR 20 AMPS (MINIMUM) AT 600V WITH A 24 VAC RATED COIL. SQUARE D #8903-L040-V01 WITH NORMALLY OPEN CONTACTS OR EQUAL.

GENERAL NOTE:

1. REFER TO DETAIL #5/E5.4 FOR CONDUIT SUPPORT DETAILS.

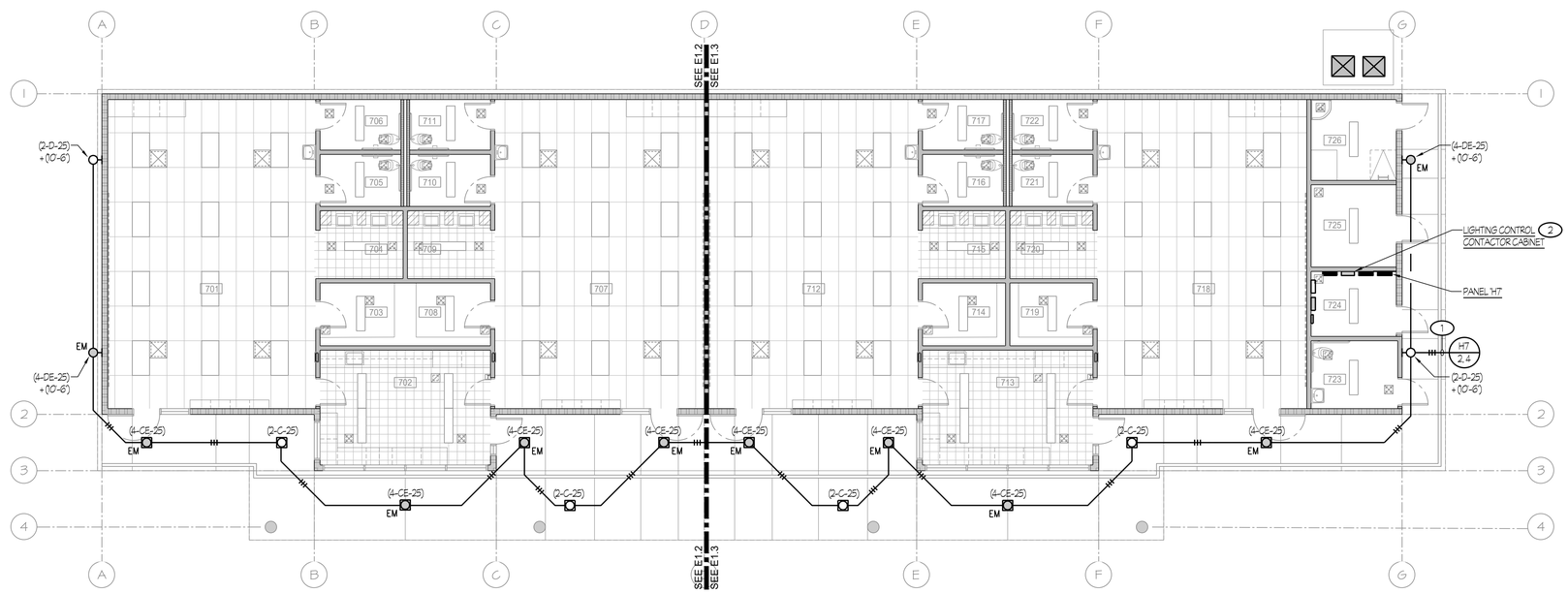

BUILDING 700
OVERALL LIGHTING PLAN

1/8" = 1'-0"

north

ROOM LEGEND		
#	ROOM NAME	CEILING HEIGHT
701	PRESCHOOL CLSRM	+10'-0"
702	TEACHER WORK RM	+10'-0"
703	STORAGE	+9'-0"
704	CLEAN UP	+9'-0"
705	UNISEX	+9'-0"
706	UNISEX	+9'-0"
707	PRESCHOOL CLSRM	+10'-0"
708	STORAGE	+9'-0"
709	CLEAN UP	+9'-0"
710	UNISEX	+9'-0"
711	UNISEX	+9'-0"
712	PRESCHOOL CLSRM	+10'-0"
713	TEACHER WORK RM	+10'-0"
714	STORAGE	+9'-0"
715	CLEAN UP	+9'-0"
716	UNISEX	+9'-0"
717	UNISEX	+9'-0"
718	PRESCHOOL CLSRM	+10'-0"
719	STORAGE	+9'-0"
720	CLEAN UP	+9'-0"
721	UNISEX	+9'-0"
722	CLEAN UP	+9'-0"
723	STAFF TOILET	+9'-0"
724	ELECTRICAL	+9'-0"
725	STORAGE	+9'-0"
726	JANITOR	+9'-0"

Rose Sing Eastham & Associates
Electrical Consultants
131 S. Dunworth - (559)733-2671
Visalia, California 93292-6705

REGISTERED PROFESSIONAL ENGINEER
JOSEPH KIRK EASTHAM
No. E-19786
Exp. 6/30/25
ELECTRICAL
STATE OF CALIFORNIA

NEW PRESCHOOL AND TK/KINDERGARTEN CLASSROOMS AT SANTA FE ELEMENTARY SCHOOL

PORTERVILLE UNIFIED SCHOOL DISTRICT
286 E ORANGE AVENUE, PORTERVILLE, CA 93257

REVISIONS

MANGINI ARCHITECTURE INCORPORATED
BARENG MORRELLI SCOTT
MANGINI ASSOCIATES INC.
4320 West Mineral King Avenue
Visalia, California 93291
www.mangini.us
(559) 627-0530 Office
(559) 627-1926 Fax

TITLE
BUILDING 700
OVERALL
LIGHTING PLAN

E1.1

PROJECT 23076

Z:\Drafting\Jobs\RES\SCHOOLS\Porterville\Santa Fe Elementary\E1.1.dwg DATE SAVED: 12/12/23 By: Casey DATE PLOTTED: 06/21/24 JOB # 23-093-U

APPROVALS

FILE # 54-76 | APPLICATION # 02-121996

IDENTIFICATION STAMP
DIV. OF THE STATE ARCHITECT
APP: 02-121996 INC:
REVIEWED FOR
SS ☑ FLS ☑ ACS ☑
DATE: 8/14/2024

LICENSED ARCHITECT
MICHAEL J. SCOTT
No. C-34290
REN. 05-31-25
STATE OF CALIFORNIA

DATE: DECEMBER 31, 2023

NOTES (THIS SHEET ONLY):

1. LOWER CASE LETTER DENOTES CONTROLLING SWITCH, TYPICAL.
2. REFER TO DETAIL #3/E5.2 FOR LOW VOLTAGE DEVICES AND LIGHTING CONTROL WIRING REQUIREMENTS, TYPICAL.
3. SYMBOL EM (SHADED LIGHT FIXTURE) DENOTES LIGHT FIXTURE EQUIPPED WITH AN EMERGENCY L.E.D. DRIVER. CONNECT PER DETAIL #4/E5.2.
4. — —C5— — DENOTES CAT. 5e CABLE. ELECTRICAL CONTRACTOR MAY USE PRETERMINATED CAT. 5e CABLING OR PROVIDE CAT. 5e CABLING, MODULAR JACKS ON EACH END AND TERMINATE THE MODULAR JACKS USING THE TIA/EIA-568-B.2 PIN-PAIR SPECIFICATION. ELECTRICAL CONTRACTOR SHALL PROVIDE CONDUIT AND OUTLET BOXES IN WALLS FOR ROUTING OF CABLING. CABLE MAY BE ROUTED IN FREE-AIR, WHEN LOCATED IN ACCESSIBLE ATTIC SPACE ABOVE T-BAR CEILINGS. AT GYPBOARD CEILINGS, PROVIDE A DOUBLE-GANG LOW VOLTAGE MOUNTING PLATE BRACKET, CADDY #MPLS2 OR EQUAL. AT THE RJ-45 JACKS (EMBEDDED CONTROLS) OF THE SURFACE MOUNTED LIGHT FIXTURES FOR PASSAGE OF CAT. 5e CABLING.

GENERAL NOTE:

1. REFER TO DETAIL #5/E5.4 FOR CONDUIT SUPPORT DETAILS.

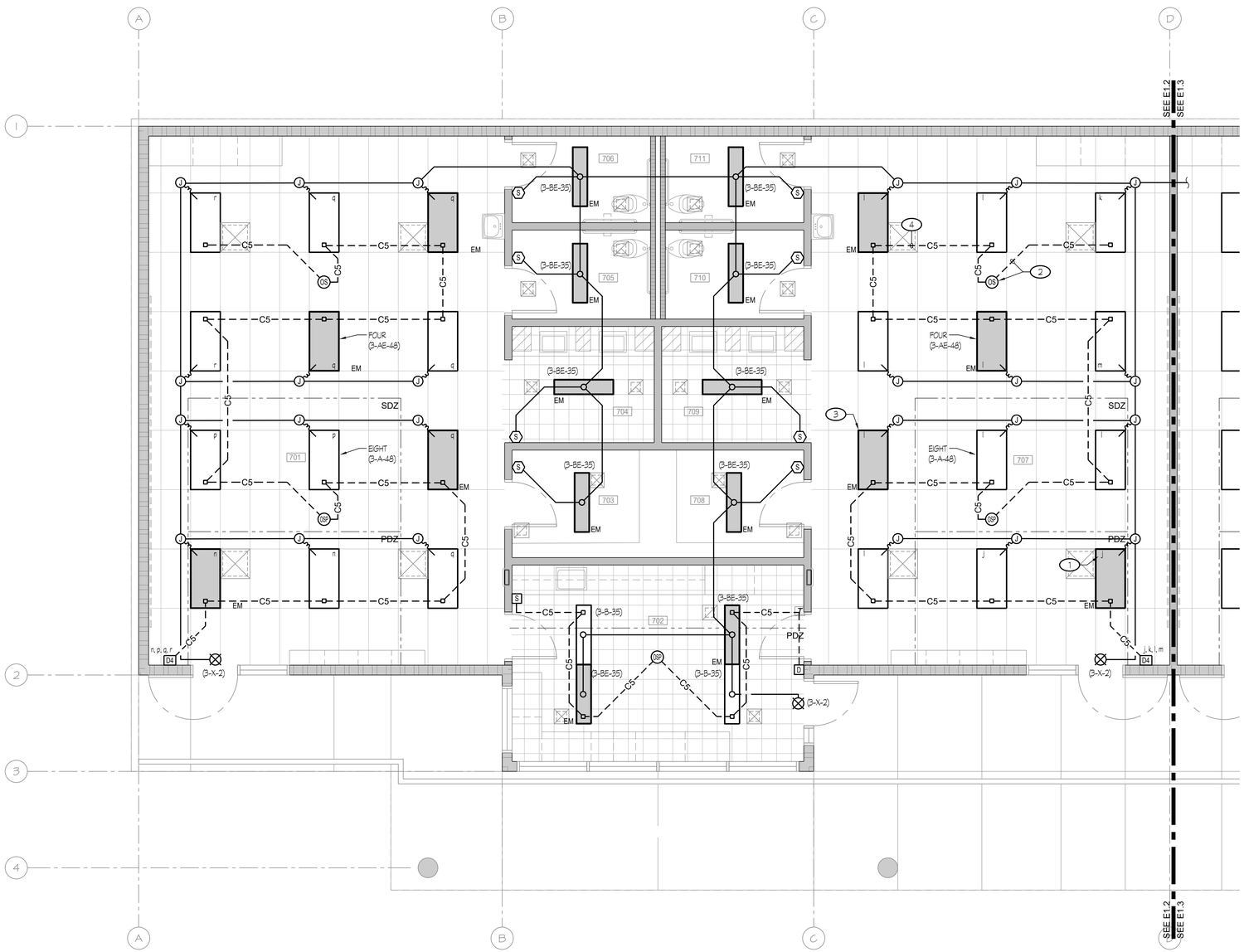

ROOM LEGEND

#	ROOM NAME	CEILING HEIGHT
701	PRESCHOOL CLSRM	+10'-0"
702	TEACHER WORK RM	+10'-0"
703	STORAGE	+9'-0"
704	CLEAN UP	+9'-0"
705	UNISEX	+9'-0"
706	UNISEX	+9'-0"
707	PRESCHOOL CLSRM	+10'-0"
708	STORAGE	+9'-0"
709	CLEAN UP	+9'-0"
710	UNISEX	+9'-0"
711	UNISEX	+9'-0"
712	PRESCHOOL CLSRM	+10'-0"
713	TEACHER WORK RM	+10'-0"
714	STORAGE	+9'-0"
715	CLEAN UP	+9'-0"
716	UNISEX	+9'-0"
717	UNISEX	+9'-0"
718	PRESCHOOL CLSRM	+10'-0"
719	STORAGE	+9'-0"
720	CLEAN UP	+9'-0"
721	UNISEX	+9'-0"
722	CLEAN UP	+9'-0"
723	STAFF TOILET	+9'-0"
724	ELECTRICAL	+9'-0"
725	STORAGE	+9'-0"
726	JANITOR	+9'-0"

BUILDING 700
PARTIAL ENLARGED LIGHTING PLAN

1/4" = 1'-0"

north

Rose Sing Eastham & Associates
Electrical Consultants
131 S. Dunworth - (559)733-2671
Visalia, California 93292-6705

REGISTERED PROFESSIONAL ENGINEER
JOSEPH KIRK SINGER
No. 19786
Exp. 6/30/25
ELECTRICAL
STATE OF CALIFORNIA

NEW PRESCHOOL AND TK/KINDERGARTEN CLASSROOMS AT SANTA FE ELEMENTARY SCHOOL

PORTERVILLE UNIFIED SCHOOL DISTRICT
286 E ORANGE AVENUE, PORTERVILLE, CA 93257

REVISIONS

MANGINI ARCHITECTURE INCORPORATED
BARENG MORRELLI SCOTT
MANGINI ASSOCIATES INC.
4320 West Mineral King Avenue
Visalia, California 93291
www.mangini.us
(559) 627-0530 Office
(559) 627-1926 Fax

TITLE
BUILDING 700
PARTIAL ENLARGED
LIGHTING PLAN

E1.2

PROJECT 23076

Z:\Drafting\Jobs\RES\SCHOOLS\Porterville\Santa Fe Elementary\E1.2.dwg DATE SAVED: 12/15/23 By: Casey DATE PLOTTED: 06/21/24 JOB # 23-093-U

APPROVALS

FILE # 54-76 APPLICATION # 02-121996

IDENTIFICATION STAMP
DIV. OF THE STATE ARCHITECT
APP: 02-121996 INC:
REVIEWED FOR
SS ☑ FLS ☑ ACS ☑
DATE: 8/14/2024

LICENSED ARCHITECT
MICHAEL J. SCOTT
No. C-34290
REN. 05-31-25
STATE OF CALIFORNIA

DATE: DECEMBER 31, 2023

NOTES (THIS SHEET ONLY):

1. LOWER CASE LETTER DENOTES CONTROLLING SWITCH, TYPICAL.
2. REFER TO DETAIL #3/E5.2FOR LOW VOLTAGE DEVICES AND LIGHTING CONTROL WIRING REQUIREMENTS, TYPICAL.
3. SYMBOL (SHADED LIGHT FIXTURE) DENOTES LIGHT FIXTURE EQUIPPED WITH AN EMERGENCY L.E.D. DRIVER. CONNECT PER DETAIL #4/E5.2.
4. — —C5— — DENOTES CAT. 5e CABLE. ELECTRICAL CONTRACTOR MAY USE PRETERMINATED CAT. 5e CABLING OR PROVIDE CAT. 5e CABLING, MODULAR JACKS ON EACH END AND TERMINATE THE MODULAR JACKS USING THE TIA/E1A-568-B.2 PIN-PAIR SPECIFICATION. ELECTRICAL CONTRACTOR SHALL PROVIDE CONDUIT AND OUTLET BOXES IN WALLS FOR ROUTING OF CABLING. CABLE MAY BE ROUTED IN FREE-AIR, WHEN LOCATED IN ACCESSIBLE ATTIC SPACE ABOVE T-BAR CEILINGS. AT GYPBOARD CEILINGS, PROVIDE A DOUBLE-GANG LOW VOLTAGE MOUNTING PLATE BRACKET, CADDY #MPLS2 OR EQUAL, AT THE RJ-45 JACKS (EMBEDDED CONTROLS) OF THE SURFACE MOUNTED LIGHT FIXTURES FOR PASSAGE OF CAT. 5e CABLING.

GENERAL NOTE:

1. REFER TO DETAIL #5/E5.4 FOR CONDUIT SUPPORT DETAILS.

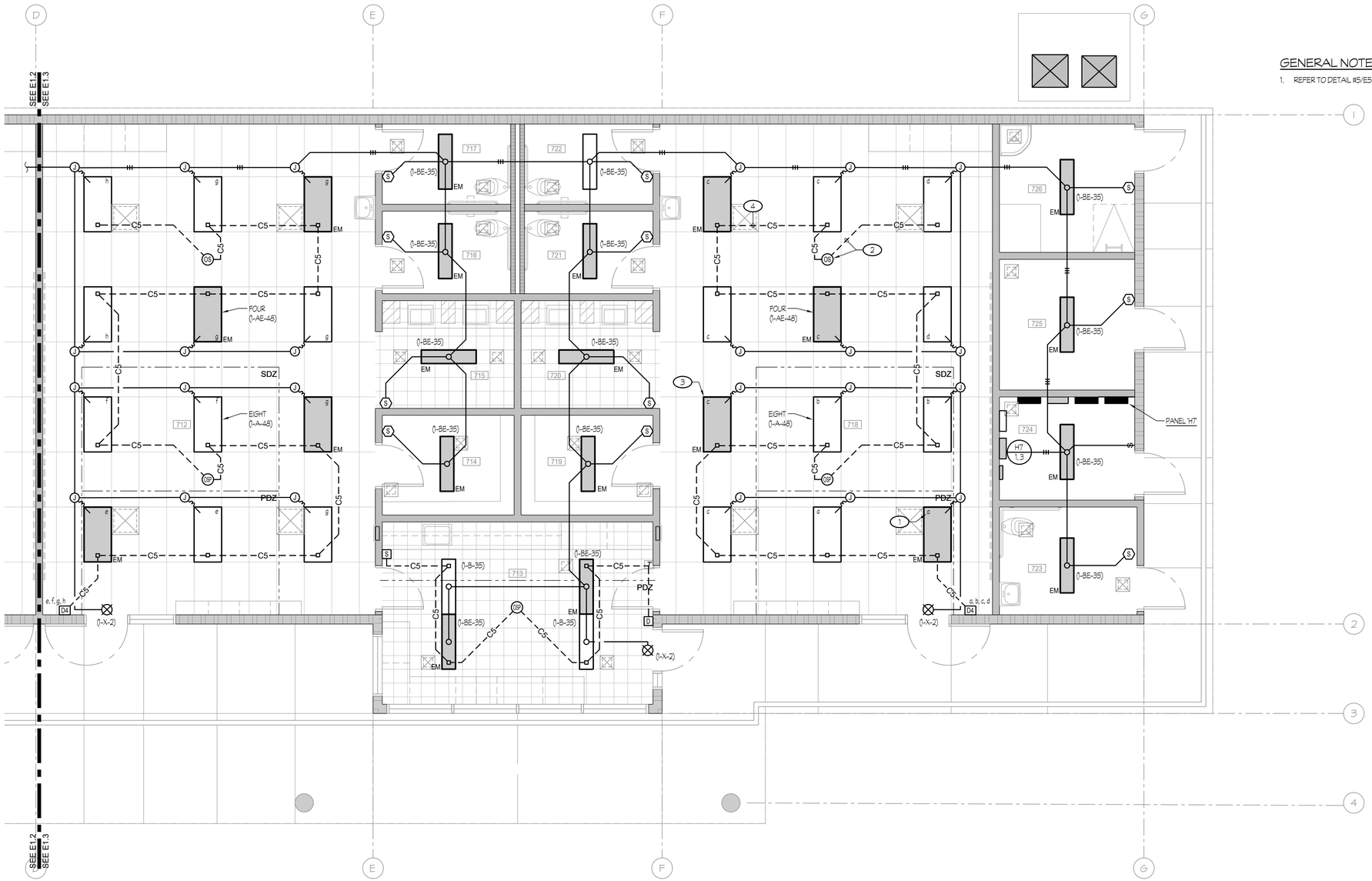

BUILDING 700
PARTIAL ENLARGED LIGHTING PLAN
1/4" = 1'-0"

north

ROOM LEGEND		
#	ROOM NAME	CEILING HEIGHT
701	PRESCHOOL CLSRM	+10'-0"
702	TEACHER WORK RM	+10'-0"
703	STORAGE	+9'-0"
704	CLEAN UP	+9'-0"
705	UNISEX	+9'-0"
706	UNISEX	+9'-0"
707	PRESCHOOL CLSRM	+10'-0"
708	STORAGE	+9'-0"
709	CLEAN UP	+9'-0"
710	UNISEX	+9'-0"
711	UNISEX	+9'-0"
712	PRESCHOOL CLSRM	+10'-0"
713	TEACHER WORK RM	+10'-0"
714	STORAGE	+9'-0"
715	CLEAN UP	+9'-0"
716	UNISEX	+9'-0"
717	UNISEX	+9'-0"
718	PRESCHOOL CLSRM	+10'-0"
719	STORAGE	+9'-0"
720	CLEAN UP	+9'-0"
721	UNISEX	+9'-0"
722	CLEAN UP	+9'-0"
723	STAFF TOILET	+9'-0"
724	ELECTRICAL	+9'-0"
725	STORAGE	+9'-0"
726	JANITOR	+9'-0"

Rose Sing Eastham & Associates
Electrical Consultants
131 S. Dunworth – (559)733-2671
Visalia, California 93292-6705

REGISTERED PROFESSIONAL ENGINEER
STEVEN KIRK EASTHAM
No. E-13786
Exp. 6/30/25
ELECTRICAL
STATE OF CALIFORNIA

NEW PRESCHOOL AND TK/KINDERGARTEN CLASSROOMS AT SANTA FE ELEMENTARY SCHOOL

PORTERVILLE UNIFIED SCHOOL DISTRICT
286 E ORANGE AVENUE, PORTERVILLE, CA 93257

REVISIONS

MANGINI ARCHITECTURE INGENUITY
BARENG MORRELLI SCOTT
MANGINI ASSOCIATES INC.
4320 West Mineral King Avenue
Visalia, California 93291
www.mangini.us
(559) 627.0530 Office
(559) 627.1926 Fax

TITLE
BUILDING 700
PARTIAL ENLARGED
LIGHTING PLAN

E1.3

PROJECT 23076

Z:\Drafting\Jobs\RSE\SCHOOLS\Porterville\Santa Fe Elementary\E1.3.dwg DATE SAVED: 12/15/23 BY: Casey DATE PLOTTED: 06/21/24 JOB #: 23-093-JJ

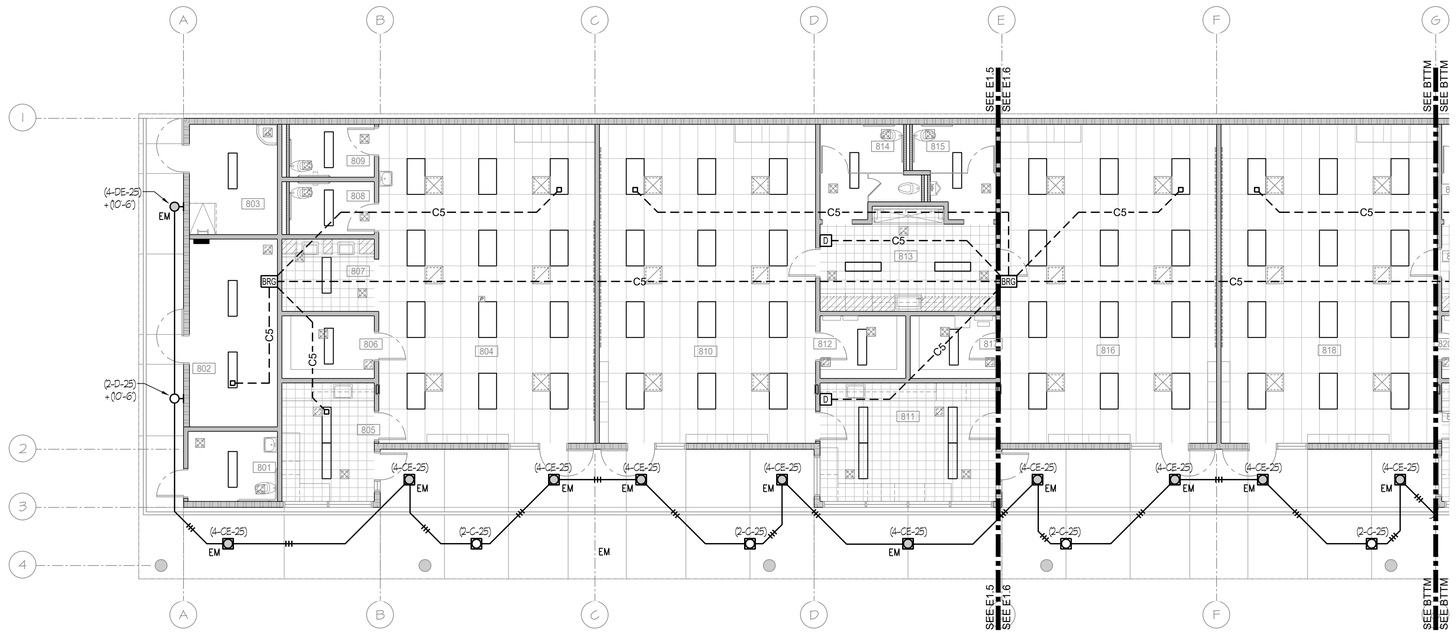

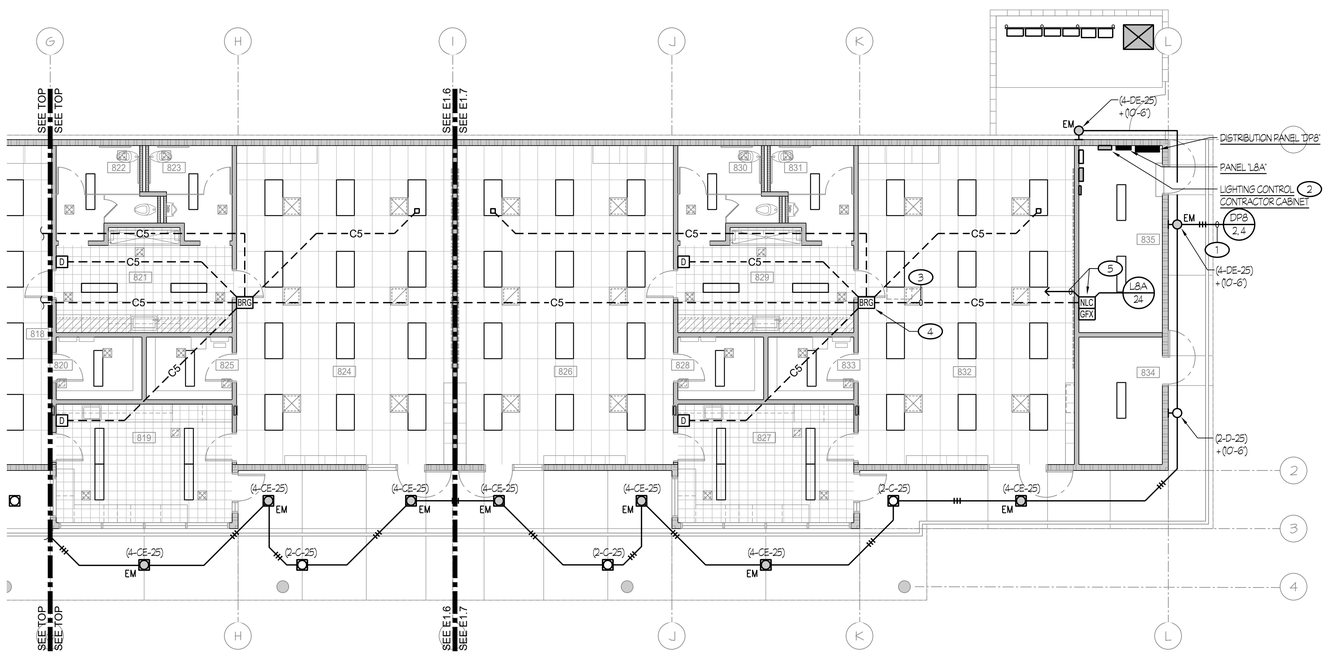

BUILDING 800

OVERALL LIGHTING PLAN

1/8" = 1'-0"

north

NOTES (THIS SHEET ONLY):

1. ROUTE CIRCUIT(S) THROUGH LIGHTING CONTROL PANEL.
2. PROVIDE A NEMA 1 T.C., 12" x 12" x 6" DP, WITH MECHANICALLY HELD LIGHTING CONTACTOR WITH 4 CONTACTS EACH RATED FOR 20 AMPS (MINIMUM) AT 600V WITH A 24 VAC RATED COIL. SQUARE D #8903-L040-V01 WITH NORMALLY OPEN CONTACTS OR EQUAL.
3. — —C5— — DENOTES CAT. 5e CABLE. ELECTRICAL CONTRACTOR MAY USE PRETERMINATED CAT. 5e CABLING OR PROVIDE CAT. 5e CABLING, MODULAR JACKS ON EACH END AND TERMINATE THE MODULAR JACKS USING THE TIA/EIA-568-B.2 PIN-PAIR SPECIFICATION. ELECTRICAL CONTRACTOR SHALL PROVIDE CONDUIT AND OUTLET BOXES IN WALLS FOR ROUTING OF CABLING. CABLE MAY BE ROUTED IN FREE-AIR, WHEN LOCATED IN ACCESSIBLE ATTIC SPACE ABOVE T-BAR CEILINGS. AT GYPBOARD CEILINGS, PROVIDE A DOUBLE-GANG LOW VOLTAGE MOUNTING PLATE BRACKET, CADDY #MPLS2 OR EQUAL, AT THE RJ-45 JACKS (EMBEDDED CONTROLS) OF THE SURFACE MOUNTED LIGHT FIXTURES FOR PASSAGE OF CAT. 5e CABLING.
4. TYPICAL OF NETWORK INTERFACE BRIDGE (SYMBOL BRG): LOCATE THE NETWORK INTERFACE BRIDGE IN THE ACCESSIBLE ATTIC SPACE ABOVE THE T-BAR CEILING. SURFACE MOUNT ON THE WALL AT A MINIMUM OF 12' ABOVE THE T-BAR CEILING. RUN 1/2"C - 2 #12 TO NEAREST 'UNSWITCHED' LIGHTING CIRCUIT. RUN CAT. 5e CABLE BETWEEN ADJACENT NETWORK INTERFACE BRIDGES, WHERE APPLICABLE. REFER TO DETAIL #9/E5.2 FOR ADDITIONAL INFORMATION AND REQUIREMENTS.
5. SURFACE MOUNT THE NETWORK LIGHTING CONTROLLER 'NLC' AT +42" A.F.F.. LOCATE THE GRAPHIC WALLPOD ADJACENT TO THE NETWORK CONTROLLER. RUN 1"C - ONE CAT. 5e PATCH CABLE, LENGTH AS REQUIRED, FROM THE 'NLC' TO THE EXISTING PATCH PANEL IN THE MAIN CROSS-CONNECT LOCATED IN THE ELECTRICAL ROOM. REFER TO DETAIL #8/E5.2 FOR ADDITIONAL INFORMATION AND REQUIREMENTS.

GENERAL NOTE:

1. REFER TO DETAIL #5/E5.4 FOR CONDUIT SUPPORT DETAILS.

ROOM LEGEND					
#	ROOM NAME	CEILING HEIGHT	#	ROOM NAME	CEILING HEIGHT
801	STAFF TOILET	+9'-0"	819	TEACHER WORK RM	+10'-0"
802	STORAGE	+9'-0"	820	STORAGE	+9'-0"
803	JANITOR	+9'-0"	821	CLEAN UP	+9'-0"
804	TK CLASSROOM	+10'-0"	822	GIRLS	+9'-0"
805	TEACHER WORK RM	+10'-0"	823	BOYS	+9'-0"
806	STORAGE	+9'-0"	824	KINDERGARTEN	+10'-0"
807	CLEAN UP	+9'-0"	825	STORAGE	+9'-0"
808	UNISEX	+9'-0"	826	KINDERGARTEN	+10'-0"
809	UNISEX	+9'-0"	827	TEACHER WORK RM	+10'-0"
810	TK CLASSROOM	+10'-0"	828	STORAGE	+9'-0"
811	TEACHER WORK RM	+10'-0"	829	CLEAN UP	+9'-0"
812	STORAGE	+9'-0"	830	GIRLS	+9'-0"
813	CLEAN UP	+9'-0"	831	BOYS	+9'-0"
814	GIRLS	+9'-0"	832	KINDERGARTEN	+10'-0"
815	BOYS	+9'-0"	833	STORAGE	+9'-0"
816	TK CLASSROOM	+10'-0"	834	STORAGE	+9'-0"
817	STORAGE	+9'-0"	835	ELECTRICAL	+9'-0"
818	TK CLASSROOM	+10'-0"			

APPROVALS

FILE # 54-76 APPLICATION # 02-121996

IDENTIFICATION STAMP
DIV. OF THE STATE ARCHITECT
APP: 02-121996 INC:
REVIEWED FOR
SS ☑ FLS ☑ ACS ☑
DATE: 8/14/2024

LICENSED ARCHITECT MICHAEL J. SCOTT No. C-34290 REN. 05-31-25 STATE OF CALIFORNIA

DATE: DECEMBER 31, 2023

NEW PRESCHOOL AND TK/KINDERGARTEN CLASSROOMS AT SANTA FE ELEMENTARY SCHOOL

PORTERVILLE UNIFIED SCHOOL DISTRICT

286 E ORANGE AVENUE, PORTERVILLE, CA 93257

REVISIONS

MANGINI ARCHITECTURE INCORPORATED
BARENG MORRELLI SCOTT
MANGINI ASSOCIATES INC.
4320 West Mineral King Avenue
Visalia, California 93291
www.mangini.us
(559) 627-0530 Office
(559) 627-1926 Fax

TITLE

E1.4
OVERALL
LIGHTING PLAN

E1.4

PROJECT 23076

REGISTERED PROFESSIONAL ENGINEER JOSEPH KIRK SINGER No. 19786 Exp. 6/30/25 ELECTRICAL STATE OF CALIFORNIA

Rose Sing Eastham & Associates
Electrical Consultants
131 S. Dunworth - (559)733-2671
Visalia, California 93292-6705

Z:\Drafting\Jobs\RSE\SCHOOLS\Portervile\Santa Fe Elementary\E1.4.dwg DATE SAVED: 12/15/23 BY: Casey DATE PLOTTED: 06/21/24 JOB # 23-093-JJ

APPROVALS

FILE # 54-76 | APPLICATION # 02-121996

IDENTIFICATION STAMP
DIV. OF THE STATE ARCHITECT
APP: 02-121996 INC:
REVIEWED FOR
SS ☑ FLS ☑ ACS ☑
DATE: 8/14/2024

LICENSED ARCHITECT
MICHAEL J. SCOTT
No. C-34290
REN. 05-31-25
STATE OF CALIFORNIA

DATE: DECEMBER 31, 2023

NOTES (THIS SHEET ONLY):

1. LOWER CASE LETTER DENOTES CONTROLLING SWITCH, TYPICAL.
2. REFER TO DETAIL #3/E5.2 FOR LOW VOLTAGE DEVICES AND LIGHTING CONTROL WIRING REQUIREMENTS, TYPICAL.
3. SYMBOL (SHADED LIGHT FIXTURE) DENOTES LIGHT FIXTURE EQUIPPED WITH AN EMERGENCY L.E.D. DRIVER. CONNECT PER DETAIL #4/E5.2.
4. — —C5— — DENOTES CAT. 5e CABLE. ELECTRICAL CONTRACTOR MAY USE PRETERMINATED CAT. 5e CABLING OR PROVIDE CAT. 5e CABLING, MODULAR JACKS ON EACH END AND TERMINATE THE MODULAR JACKS USING THE TIA/EIA-568-B.2 PIN-PAIR SPECIFICATION. ELECTRICAL CONTRACTOR SHALL PROVIDE CONDUIT AND OUTLET BOXES IN WALLS FOR ROUTING OF CABLING. CABLE MAY BE ROUTED IN FREE-AIR, WHEN LOCATED IN ACCESSIBLE ATTIC SPACE ABOVE T-BAR CEILINGS. AT GYPBOARD CEILINGS, PROVIDE A DOUBLE-GANG LOW VOLTAGE MOUNTING PLATE BRACKET, CADDY #MPLS2 OR EQUAL. AT THE RJ-45 JACKS (EMBEDDED CONTROLS) OF THE SURFACE MOUNTED LIGHT FIXTURES FOR PASSAGE OF CAT. 5e CABLING.

GENERAL NOTE:

1. REFER TO DETAIL #5/E5.4 FOR CONDUIT SUPPORT DETAILS.

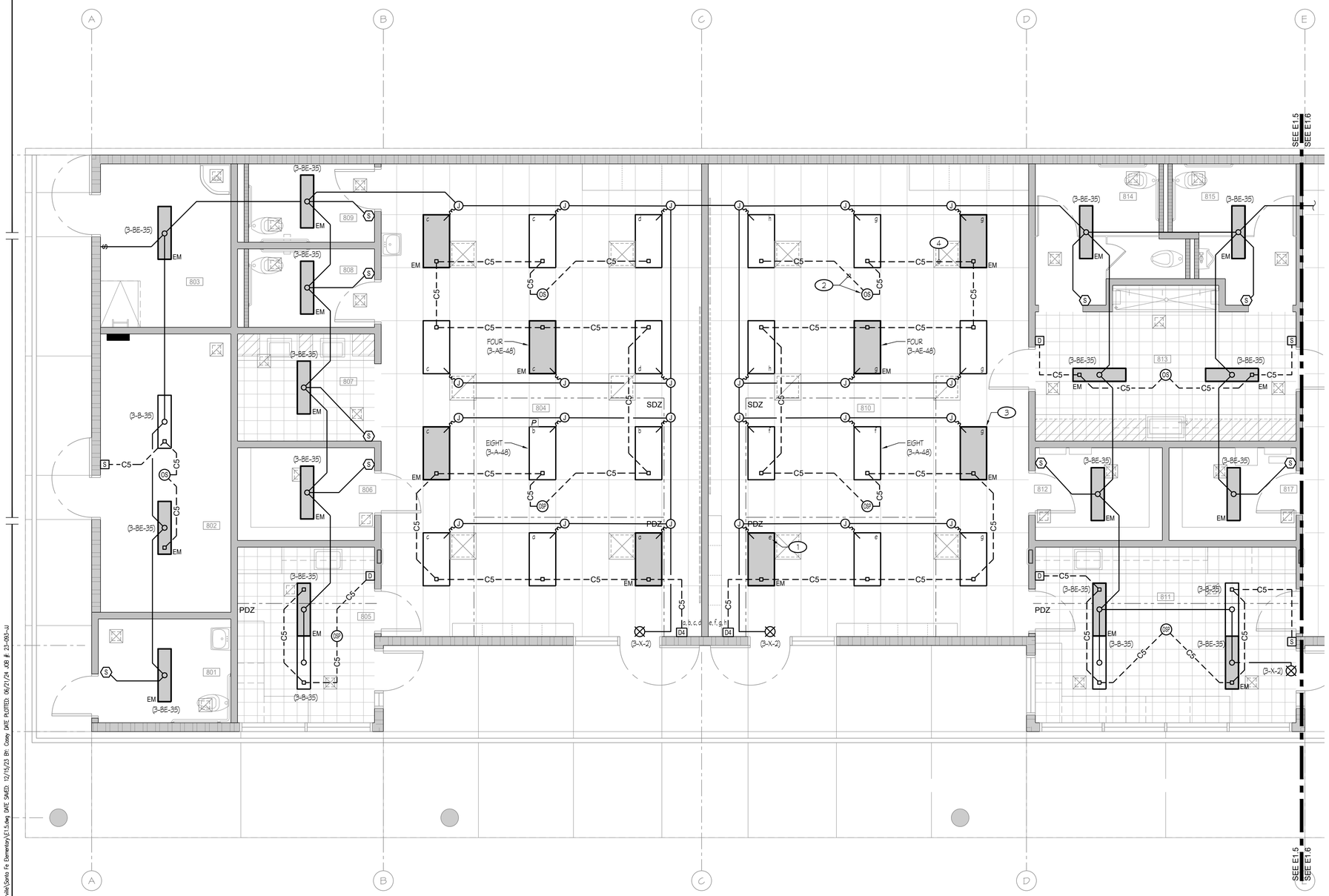

BUILDING 800
PARTIAL ENLARGED LIGHTING PLAN

1/4" = 1'-0"

ROOM LEGEND					
#	ROOM NAME	CEILING HEIGHT	#	ROOM NAME	CEILING HEIGHT
801	STAFF TOILET	+9'-0"	819	TEACHER WORK RM	+10'-0"
802	STORAGE	+9'-0"	820	STORAGE	+9'-0"
803	JANITOR	+9'-0"	821	CLEAN UP	+9'-0"
804	TK CLASSROOM	+10'-0"	822	GIRLS	+9'-0"
805	TEACHER WORK RM	+10'-0"	823	BOYS	+9'-0"
806	STORAGE	+9'-0"	824	KINDERGARTEN	+10'-0"
807	CLEAN UP	+9'-0"	825	STORAGE	+9'-0"
808	UNISEX	+9'-0"	826	KINDERGARTEN	+10'-0"
809	UNISEX	+9'-0"	827	TEACHER WORK RM	+10'-0"
810	TK CLASSROOM	+10'-0"	828	STORAGE	+9'-0"
811	TEACHER WORK RM	+10'-0"	829	CLEAN UP	+9'-0"
812	STORAGE	+9'-0"	830	GIRLS	+9'-0"
813	CLEAN UP	+9'-0"	831	BOYS	+9'-0"
814	GIRLS	+9'-0"	832	KINDERGARTEN	+10'-0"
815	BOYS	+9'-0"	833	STORAGE	+9'-0"
816	TK CLASSROOM	+10'-0"	834	STORAGE	+9'-0"
817	STORAGE	+9'-0"	835	ELECTRICAL	+9'-0"
818	TK CLASSROOM	+10'-0"			

Rose Sing Eastham & Associates
Electrical Consultants
131 S. Dunworth - (559)733-2671
Visalia, California 93292-6705

REGISTERED PROFESSIONAL ENGINEER
JOHN KIRK EASTHAM
No. E-19706
Exp. 6/30/25
ELECTRICAL
STATE OF CALIFORNIA

NEW PRESCHOOL AND TK/KINDERGARTEN CLASSROOMS AT SANTA FE ELEMENTARY SCHOOL

PORTERVILLE UNIFIED SCHOOL DISTRICT
286 E ORANGE AVENUE, PORTERVILLE, CA 93257

REVISIONS

MANGINI ARCHITECTURE
BARENG MORRELLI SCOTT
MANGINI ASSOCIATES INC.
4320 West Mineral King Avenue
Visalia, California 93291
www.mangini.us
(559) 627.0530 Office
(559) 627.1926 Fax

TITLE
BUILDING 800
PARTIAL ENLARGED
LIGHTING PLAN

E1.5

PROJECT 23076

Z:\Drafting\Jobs\RSES\23-0103\Porterville\Santa Fe Elementary\E1.5.dwg DATE SAVED: 12/15/23 Eric Casey DATE PLOTTED: 06/21/24 JOB # 23-103-JJ

APPROVALS

FILE #	APPLICATION #
54-76	02-121996

IDENTIFICATION STAMP
DIV. OF THE STATE ARCHITECT
APP: 02-121996 INC:
REVIEWED FOR
SS ☑ FLS ☑ ACS ☑
DATE: 8/14/2024

LICENSED ARCHITECT
MICHAEL J. SCOTT
No. C-34290
REN. 05-31-25
STATE OF CALIFORNIA

DATE: DECEMBER 31, 2023

NOTES (THIS SHEET ONLY):

1. LOWER CASE LETTER DENOTES CONTROLLING SWITCH, TYPICAL.
2. REFER TO DETAIL #3/E5.2 FOR LOW VOLTAGE DEVICES AND LIGHTING CONTROL WIRING REQUIREMENTS, TYPICAL.
3. SYMBOL (SHADED LIGHT FIXTURE) DENOTES LIGHT FIXTURE EQUIPPED WITH AN EMERGENCY L.E.D. DRIVER. CONNECT PER DETAIL #4/E5.2.
4. — —C5— — DENOTES CAT. 5e CABLE. ELECTRICAL CONTRACTOR MAY USE PRETERMINATED CAT. 5e CABLING OR PROVIDE CAT. 5e CABLING, MODULAR JACKS ON EACH END AND TERMINATE THE MODULAR JACKS USING THE TIA/EIA-568-B.2 PIN-PAIR SPECIFICATION. ELECTRICAL CONTRACTOR SHALL PROVIDE CONDUIT AND OUTLET BOXES IN WALLS FOR ROUTING OF CABLING. CABLE MAY BE ROUTED IN FREE-AIR, WHEN LOCATED IN ACCESSIBLE ATTIC SPACE ABOVE T-BAR CEILINGS. AT GYPBOARD CEILINGS, PROVIDE A DOUBLE-GANG LOW VOLTAGE MOUNTING PLATE BRACKET, CADDY #MPLS2 OR EQUAL, AT THE RJ-45 JACKS (EMBEDDED CONTROLS) OF THE SURFACE MOUNTED LIGHT FIXTURES FOR PASSAGE OF CAT. 5e CABLING.

GENERAL NOTE:

1. REFER TO DETAIL #5/E5.4 FOR CONDUIT SUPPORT DETAILS.

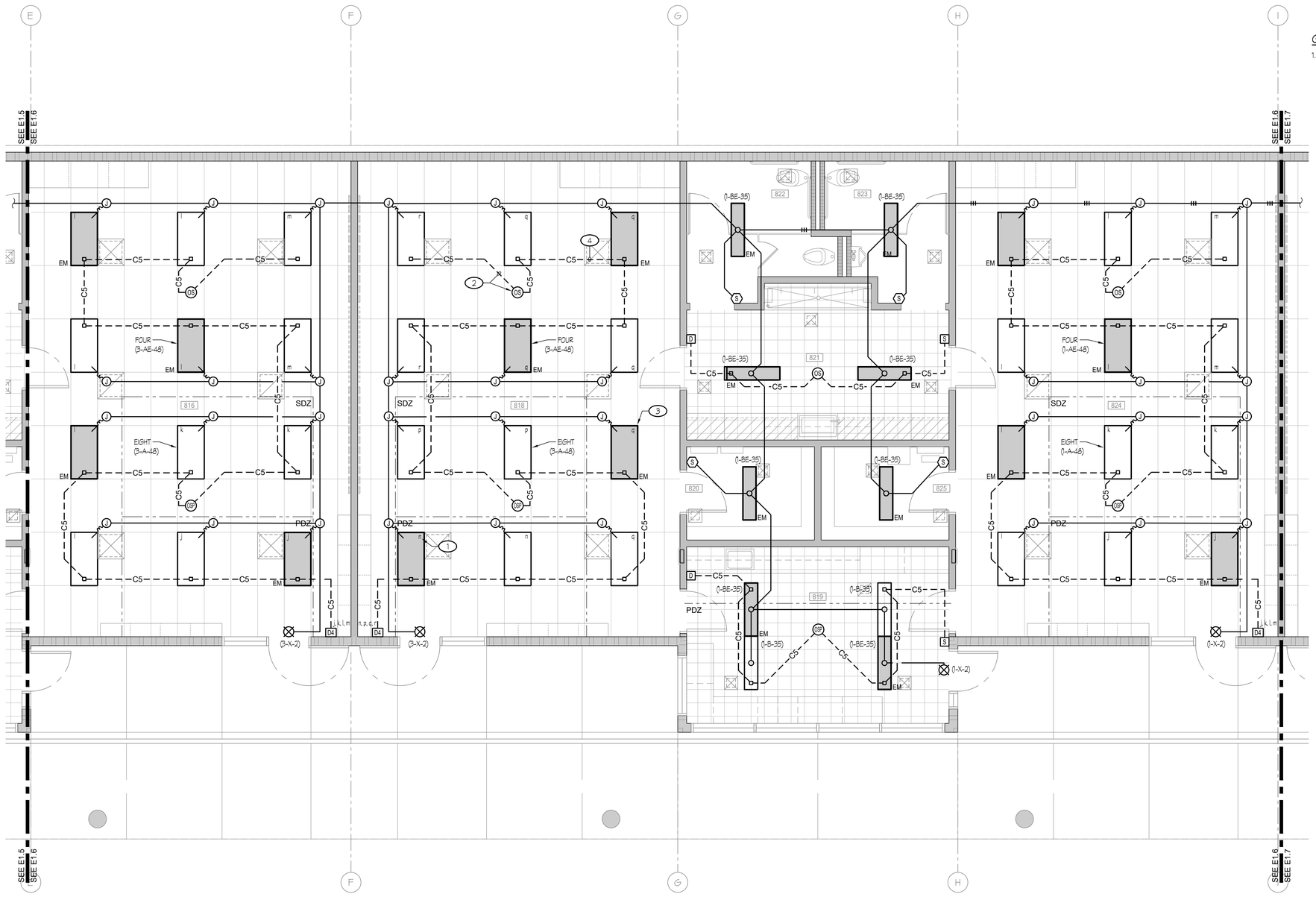

ROOM LEGEND

#	ROOM NAME	CEILING HEIGHT	#	ROOM NAME	CEILING HEIGHT
801	STAFF TOILET	+9'-0"	819	TEACHER WORK RM	+10'-0"
802	STORAGE	+9'-0"	820	STORAGE	+9'-0"
803	JANITOR	+9'-0"	821	CLEAN UP	+9'-0"
804	TK CLASSROOM	+10'-0"	822	GIRLS	+9'-0"
805	TEACHER WORK RM	+10'-0"	823	BOYS	+9'-0"
806	STORAGE	+9'-0"	824	KINDERGARTEN	+10'-0"
807	CLEAN UP	+9'-0"	825	STORAGE	+9'-0"
808	UNISEX	+9'-0"	826	KINDERGARTEN	+10'-0"
809	UNISEX	+9'-0"	827	TEACHER WORK RM	+10'-0"
810	TK CLASSROOM	+10'-0"	828	STORAGE	+9'-0"
811	TEACHER WORK RM	+10'-0"	829	CLEAN UP	+9'-0"
812	STORAGE	+9'-0"	830	GIRLS	+9'-0"
813	CLEAN UP	+9'-0"	831	BOYS	+9'-0"
814	GIRLS	+9'-0"	832	KINDERGARTEN	+10'-0"
815	BOYS	+9'-0"	833	STORAGE	+9'-0"
816	TK CLASSROOM	+10'-0"	834	STORAGE	+9'-0"
817	STORAGE	+9'-0"	835	ELECTRICAL	+9'-0"
818	TK CLASSROOM	+10'-0"			+10'-0"

BUILDING 800
PARTIAL ENLARGED LIGHTING PLAN
1/4" = 1'-0"

north

Rose Sing Eastham & Associates
Electrical Consultants
131 S. Dunworth - (559)733-2671
Visalia, California 93292-6705

REGISTERED PROFESSIONAL ENGINEER
ROSEANN KIRK EASTHAM
No. E-13066
Exp. 6/30/25
ELECTRICAL
STATE OF CALIFORNIA

NEW PRESCHOOL AND TK/KINDERGARTEN CLASSROOMS AT SANTA FE ELEMENTARY SCHOOL

PORTERVILLE UNIFIED SCHOOL DISTRICT
286 E ORANGE AVENUE, PORTERVILLE, CA 93257

REVISIONS

MANGINI ARCHITECTURE INGENUITY
BARENG MORRELLI SCOTT
MANGINI ASSOCIATES INC.
4320 West Mineral King Avenue
Visalia, California 93291
www.mangini.us
(559) 627.0530 Office
(559) 627.1926 Fax

TITLE
BUILDING 800
PARTIAL ENLARGED
LIGHTING PLAN

E1.6

PROJECT 23076

Z:\Drafting\Jobs\RSS\SCHOOLS\Portersville\Santa Fe Elementary\E1.6.dwg DATE SAVED: 12/15/23 BY: Casey DATE PLOTTED: 06/21/24 JOB # 23-093-U

APPROVALS

FILE # 54-76 | APPLICATION # 02-121996

IDENTIFICATION STAMP
DIV. OF THE STATE ARCHITECT
APP: 02-121996 INC:
REVIEWED FOR
SS ☑ FLS ☑ ACS ☑
DATE: 8/14/2024

LICENSED ARCHITECT
MICHAEL J. SCOTT
No. C-34290
REN. 05-31-25
STATE OF CALIFORNIA

DATE: DECEMBER 31, 2023

NOTES (THIS SHEET ONLY):

1. LOWER CASE LETTER DENOTES CONTROLLING SWITCH, TYPICAL.
2. REFER TO DETAIL #3/E5.2 FOR LOW VOLTAGE DEVICES AND LIGHTING CONTROL WIRING REQUIREMENTS, TYPICAL.
3. SYMBOL (SHADED LIGHT FIXTURE) DENOTES LIGHT FIXTURE EQUIPPED WITH AN EMERGENCY L.E.D. DRIVER. CONNECT PER DETAIL #4/E5.2.
4. — —C5— — DENOTES CAT. 5e CABLE. ELECTRICAL CONTRACTOR MAY USE PRETERMINATED CAT. 5e CABLING OR PROVIDE CAT. 5e CABLING, MODULAR JACKS ON EACH END AND TERMINATE THE MODULAR JACKS USING THE TIA/E1A-568-B.2 PIN-PAIR SPECIFICATION. ELECTRICAL CONTRACTOR SHALL PROVIDE CONDUIT AND OUTLET BOXES IN WALLS FOR ROUTING OF CABLING. CABLE MAY BE ROUTED IN FREE-AIR, WHEN LOCATED IN ACCESSIBLE ATTIC SPACE ABOVE T-BAR CEILINGS. AT GYPBOARD CEILINGS, PROVIDE A DOUBLE-GANG LOW VOLTAGE MOUNTING PLATE BRACKET, CADDY #MPLS2 OR EQUAL, AT THE RJ-45 JACKS (EMBEDDED CONTROLS) OF THE SURFACE MOUNTED LIGHT FIXTURES FOR PASSAGE OF CAT. 5e CABLING.

GENERAL NOTE:

1. REFER TO DETAIL #5/E5.4 FOR CONDUIT SUPPORT DETAILS.

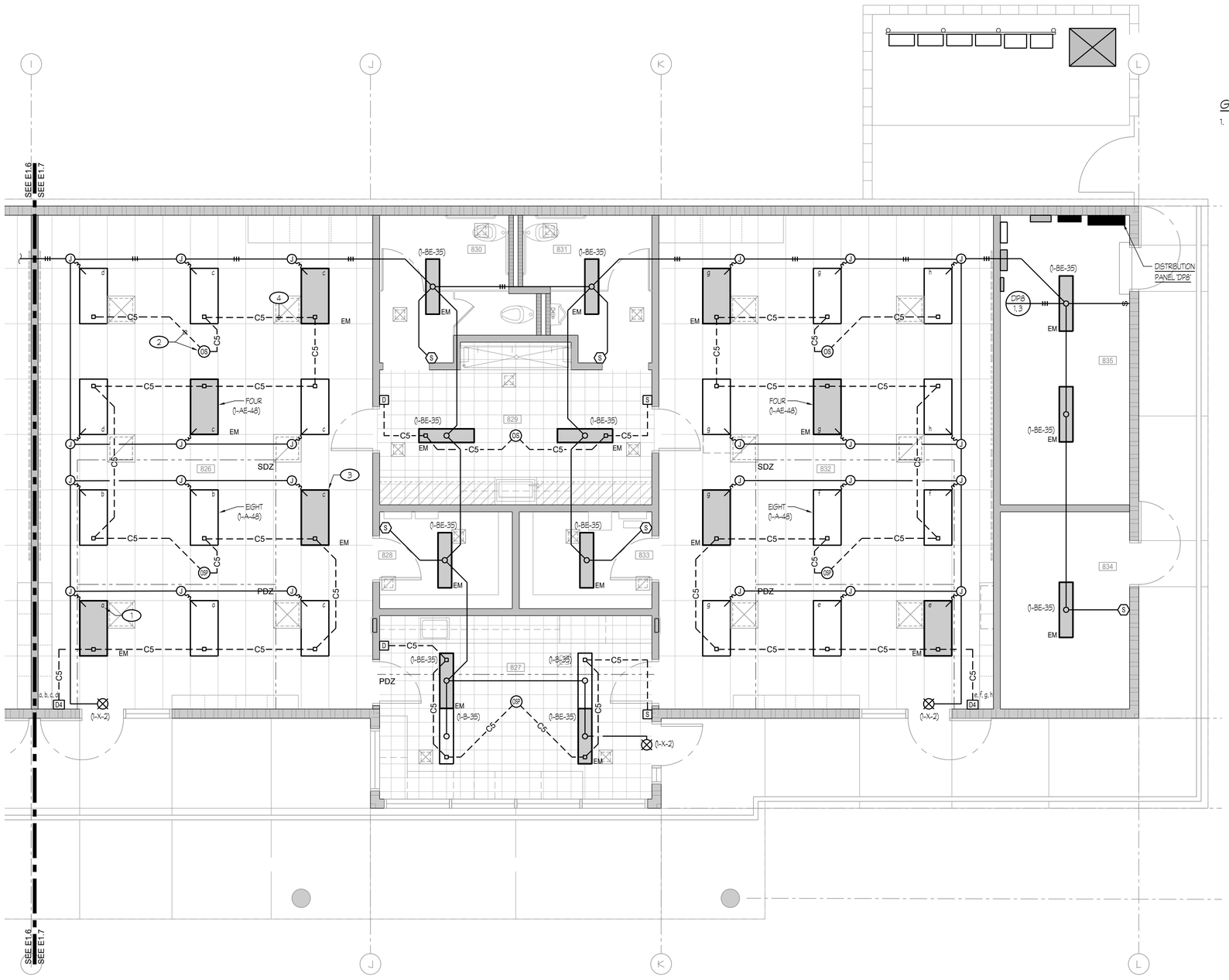

BUILDING 800
PARTIAL ENLARGED LIGHTING PLAN

1/4" = 1'-0"

north

ROOM LEGEND					
#	ROOM NAME	CEILING HEIGHT	#	ROOM NAME	CEILING HEIGHT
801	STAFF TOILET	+9'-0"	819	TEACHER WORK RM	+10'-0"
802	STORAGE	+9'-0"	820	STORAGE	+9'-0"
803	JANITOR	+9'-0"	821	CLEAN UP	+9'-0"
804	TK CLASSROOM	+10'-0"	822	GIRLS	+9'-0"
805	TEACHER WORK RM	+10'-0"	823	BOYS	+9'-0"
806	STORAGE	+9'-0"	824	KINDERGARTEN	+10'-0"
807	CLEAN UP	+9'-0"	825	STORAGE	+9'-0"
808	UNISEX	+9'-0"	826	KINDERGARTEN	+10'-0"
809	UNISEX	+9'-0"	827	TEACHER WORK RM	+10'-0"
810	TK CLASSROOM	+10'-0"	828	STORAGE	+9'-0"
811	TEACHER WORK RM	+10'-0"	829	CLEAN UP	+9'-0"
812	STORAGE	+9'-0"	830	GIRLS	+9'-0"
813	CLEAN UP	+9'-0"	831	BOYS	+9'-0"
814	GIRLS	+9'-0"	832	KINDERGARTEN	+10'-0"
815	BOYS	+9'-0"	833	STORAGE	+9'-0"
816	TK CLASSROOM	+10'-0"	834	STORAGE	+9'-0"
817	STORAGE	+9'-0"	835	ELECTRICAL	+9'-0"
818	TK CLASSROOM	+10'-0"			

Rose Sing Eastham & Associates
Electrical Consultants
131 S. Dunworth - (559)733-2671
Visalia, California 93292-6705

REGISTERED PROFESSIONAL ENGINEER
SUSAN KIRK EASTHAM
No. E-17866
Exp. 6/30/25
ELECTRICAL
STATE OF CALIFORNIA

NEW PRESCHOOL AND TK/KINDERGARTEN CLASSROOMS AT SANTA FE ELEMENTARY SCHOOL

PORTERVILLE UNIFIED SCHOOL DISTRICT
286 E ORANGE AVENUE, PORTERVILLE, CA 93257

REVISIONS

MANGINI ARCHITECTURE INGENUITY
BARENG MORRELLI SCOTT
MANGINI ASSOCIATES INC.
4320 West Mineral King Avenue
Visalia, California 93291
www.mangini.us
(559) 627.0530 Office
(559) 627.1926 Fax

TITLE
BUILDING 800
PARTIAL ENLARGED
LIGHTING PLAN

E1.7

PROJECT 23076

Z:\Drafting\Jobs\PORTSCHOOLS\Porterville\Santa Fe Elementary\E1.7.dwg DATE SAVED: 12/15/23 Brr. Casey DATE PLOTTED: 06/21/24 JOB # 23-093-JJ

APPROVALS

FILE # 54-76 | APPLICATION # 02-121996

IDENTIFICATION STAMP
DIV. OF THE STATE ARCHITECT
APP: 02-121996 INC:
REVIEWED FOR
SS ☑ FLS ☑ ACS ☑
DATE: 8/14/2024

LICENSED ARCHITECT
MICHAEL J. SCOTT
No. C-34290
REN. 05-31-25
STATE OF CALIFORNIA

DATE: DECEMBER 31, 2023

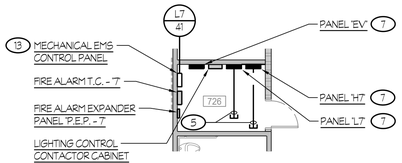

PARTIAL POWER PLAN

1/8" = 1'-0"

north

NOTES (THIS SHEET ONLY):

1. PROVIDE G.F.C.I. DUPLEX RECEPTACLE INSIDE A WEATHERPROOF OUTLET BOX WITH LOCKABLE WEATHERPROOF 'WHILE-IN-USE' COVER (RED-DOT #CKSUV, OR EQUAL) AND MOUNT ONTO HVAC UNIT. COORDINATE EXACT LOCATION WITH MECHANICAL CONTRACTOR PRIOR TO ROUGH-IN. TYPICAL OF 4.
2. CONNECT INSTANTANEOUS WATER HEATER, 120V, 3,600 WATTS.
3. PROVIDE DEDICATED DOUBLE DUPLEX RECEPTACLE FOR HORIZONTAL CROSS-CONNECT. COORDINATE AND VERIFY EXACT LOCATION WITH DATA SYSTEMS CONTRACTOR PRIOR TO ROUGH-IN.
4. FOR CONNECTION OF T.V..
5. STUB TWO 1"C AND TWO 3/4"C INTO ACCESSIBLE ATTIC SPACE FROM RESPECTIVE PANEL.
6. 3/4"C - 2 #10 + 1 #10 GND.
7. MOUNT PANEL PER DETAIL #1/E5.3. PROVIDE CONDUIT ENCLOSING SHROUD PER DETAIL #2/E5.3.
8. PROVIDE G.F.C.I. DUPLEX RECEPTACLE INSIDE A WEATHERPROOF OUTLET BOX AT +18" A.F.F. WITH LOCKABLE WEATHERPROOF 'WHILE-IN-USE' COVER (RED-DOT #CKSUV, OR EQUAL). TYPICAL OF 6.
9. PROVIDE A 30A, 1-POLE RECEPTACLE (NEMA 5-30R) FOR I.D.F. CONNECTIONS.
10. BONDING AND GROUNDING PER DETAIL #8/E5.3.
11. MOUNT JUNCTION BOX IN ACCESSIBLE ATTIC SPACE BELOW, TYPICAL, U.O.N..
12. 3/4"C - 2 #8 + 1 #10 GND.
13. PROVIDED BY MECHANICAL. COORDINATE LOCATION WITH MECHANICAL PRIOR TO ROUGH-IN.
14. CONNECT CIRCULATION PUMP, 120V.
15. PROVIDE AND ENGRAVED NAMEPLATE: 'HP DISCONNECT'.
16. PV CABLE WITH MC4 CONNECTOR MOUNTED TO UNDERSIDE OF PV MODULE. TYPICAL FOR PV MODULE INTERCONNECTIONS.
17. CONNECT WATER HEATER, 208V, 1ph, 4,500 WATTS.
18. PROVIDE A NEW N3R SCREW COVER CAN (8" SQ. x 4" DP.) AND LOCATE AT WHERE THE BRANCH CIRCUIT ROUTES UP THRU THE ROOF.
19. TYPICAL AT ALL H.V.A.C. EQUIPMENT:
    ROUTE BRANCH CIRCUITING UP THRU OPENING OF ROOF CURB AND THEN THRU UNIT TO DISCONNECT SWITCH. PROVIDE LIQUIDTIGHT FLEXIBLE METALLIC CONDUIT INSIDE UNIT FOR ROUTING OF CONDUCTORS.
20. PROVIDE A 60A, 3-POLE, HEAVY-DUTY RATED, FUSED SAFETY SWITCH AND MOUNT ONTO H.V.A.C. UNIT. PROVIDE FUSES PER MANUFACTURER RECOMMENDATIONS. COORDINATE EXACT LOCATION WITH MECHANICAL CONTRACTOR PRIOR TO ROUGH-IN.
21. PROVIDE ENGRAVED NAMEPLATE: 'ECONOMIZER DISCONNECT'.
22. 3/4"C - 3 #10 + 1 #10 GND.
23. MOUNT PER DETAIL #9/E5.3.
24. PROVIDE A 30A, 3-POLE, HEAVY-DUTY RATED, FUSED SAFETY SWITCH AND MOUNT ONTO H.V.A.C. UNIT. PROVIDE FUSES PER MANUFACTURER RECOMMENDATIONS. COORDINATE EXACT LOCATION WITH MECHANICAL CONTRACTOR PRIOR TO ROUGH-IN.
25. PROVIDE A 30A, 1-POLE, HEAVY-DUTY RATED, FUSED SAFETY SWITCH AND MOUNT ONTO H.V.A.C. UNIT. PROVIDE FUSES PER MANUFACTURER RECOMMENDATIONS. COORDINATE EXACT LOCATION WITH MECHANICAL CONTRACTOR PRIOR TO ROUGH-IN.
26. FLUSH FLOOR OUTLET BOX WITH DEVICE(S) SHOWN PER SPECIFICATIONS. TYPICAL, U.O.N.

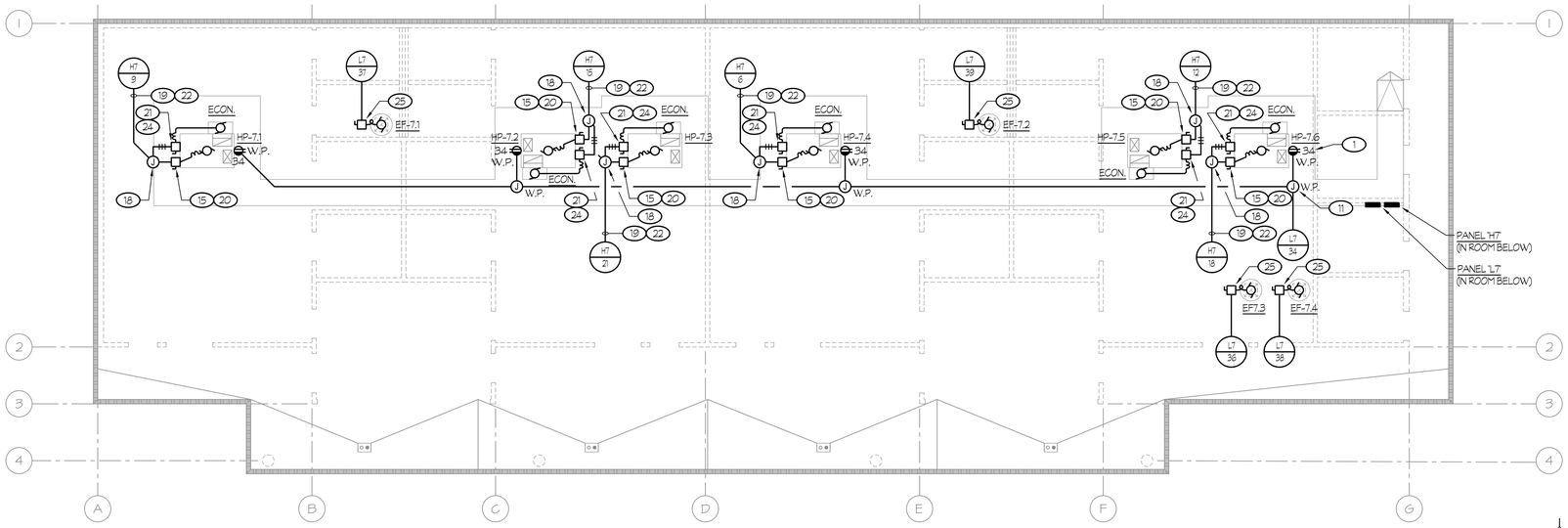

BUILDING 700
ROOF ELECTRICAL PLAN

1/8" = 1'-0"

north

GENERAL NOTES:

1. REFER TO DETAIL #5/E5.4 FOR CONDUIT SUPPORT DETAILS.
2. VERIFY EXACT LOCATION AND REQUIREMENTS OF ALL HVAC EQUIPMENT WITH MECHANICAL CONTRACTOR PRIOR TO ROUGH-N. CONDUT AND WIRING FOR CONTROLS, BOTH LINE AND LOW VOLTAGE, SHALL BE BY MECHANICAL CONTRACTOR.

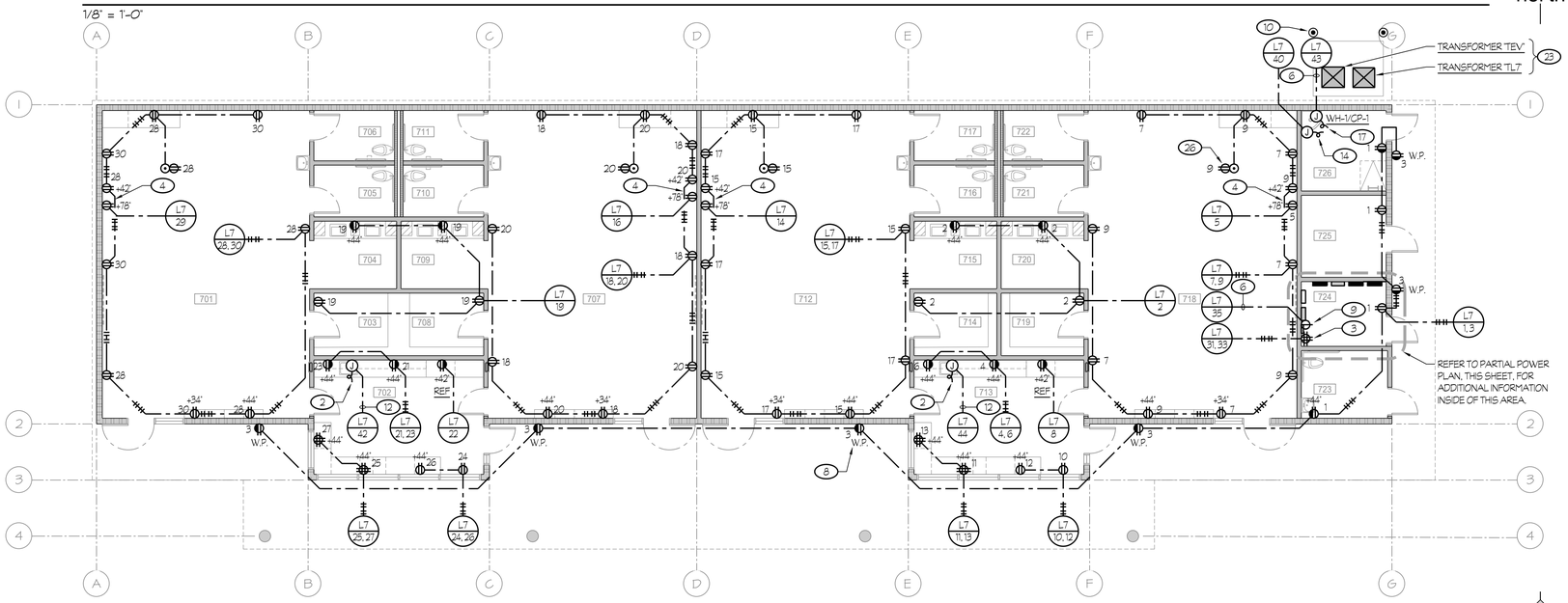

BUILDING 700
POWER PLAN

1/8" = 1'-0"

north

ROOM LEGEND		
#	ROOM NAME	CEILING HEIGHT
701	PRESCHOOL CLSRM	+10'-0"
702	TEACHER WORK RM	+10'-0"
703	STORAGE	+9'-0"
704	CLEAN UP	+9'-0"
705	UNISEX	+9'-0"
706	UNISEX	+9'-0"
707	PRESCHOOL CLSRM	+10'-0"
708	STORAGE	+9'-0"
709	CLEAN UP	+9'-0"
710	UNISEX	+9'-0"
711	UNISEX	+9'-0"
712	PRESCHOOL CLSRM	+10'-0"
713	TEACHER WORK RM	+10'-0"
714	STORAGE	+9'-0"
715	CLEAN UP	+9'-0"
716	UNISEX	+9'-0"
717	UNISEX	+9'-0"
718	PRESCHOOL CLSRM	+10'-0"
719	STORAGE	+9'-0"
720	CLEAN UP	+9'-0"
721	UNISEX	+9'-0"
722	CLEAN UP	+9'-0"
723	STAFF TOILET	+9'-0"
724	ELECTRICAL	+9'-0"
725	STORAGE	+9'-0"
726	JANITOR	+9'-0"

REGISTERED PROFESSIONAL ENGINEER
JOSEPH KIRK EASTHAM
No. E-19705
Exp. 6/30/25
ELECTRICAL
STATE OF CALIFORNIA

Rose Sing Eastham & Associates
Electrical Consultants
131 S. Dunworth - (559)733-2671
Visalia, California 93292-6705

NEW PRESCHOOL AND TK/KINDERGARTEN CLASSROOMS AT SANTA FE ELEMENTARY SCHOOL

PORTERVILLE UNIFIED SCHOOL DISTRICT

286 E ORANGE AVENUE, PORTERVILLE, CA 93257

REVISIONS

MANGINI ARCHITECTURE INGENUITY
BARENG MORRELLI SCOTT
MANGINI ASSOCIATES INC.
4320 West Mineral King Avenue
Visalia, California 93291
www.mangini.us
(559) 627-0530 Office
(559) 627-1926 Fax

TITLE
BUILDING 700
POWER PLANS

E2.1

PROJECT 23076

Z:\Drafting\Jobs\RSS\SCHOOLS\Portervile\Santa Fe Elementary\E2.1.dwg DATE SAVED: 05/28/24 By: Casey DATE PLOTTED: 06/21/24 JOB #: 23-093-U

APPROVALS

FILE # 54-76 | APPLICATION # 02-121996

IDENTIFICATION STAMP
DIV. OF THE STATE ARCHITECT
APP: 02-121996 INC:
REVIEWED FOR
SS ☑ FLS ☑ ACS ☑
DATE: 8/14/2024

LICENSED ARCHITECT
MICHAEL J. SCOTT
No. C-34290
REN. 05-31-25
STATE OF CALIFORNIA

DATE: DECEMBER 31, 2023

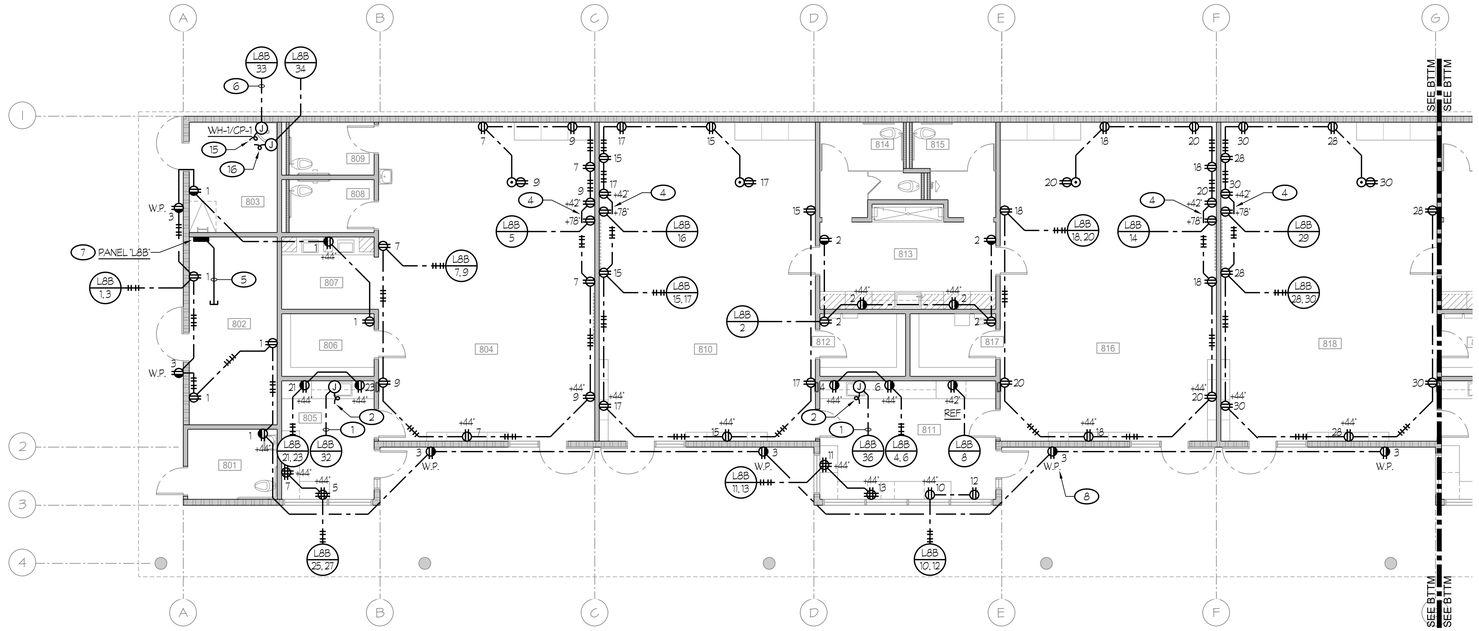

NOTES (THIS SHEET ONLY):

1. 3/4"C - 2 #8 + 1 #10 GND.
2. CONNECT INSTANTANEOUS WATER HEATER, 120V, 3,600 WATTS.
3. PROVIDE DEDICATED DOUBLE DUPLEX RECEPTACLE FOR HORIZONTAL CROSS-CONNECT. COORDINATE AND VERIFY EXACT LOCATION WITH DATA SYSTEMS CONTRACTOR PRIOR TO ROUGH-IN.
4. FOR CONNECTION OF T.V..
5. STUB TWO 1"C AND TWO 3/4"C INTO ACCESSIBLE ATTIC SPACE FROM RESPECTIVE PANEL.
6. 3/4"C - 2 #10 + 1 #10 GND.
7. MOUNT PANEL PER DETAIL #1/E5.3. PROVIDE CONDUIT ENCLOSING SHROUD PER DETAIL #2/E5.3.
8. PROVIDE G.F.C.I. DUPLEX RECEPTACLE INSIDE A WEATHERPROOF OUTLET BOX AT +18" A.F.F. WITH LOCKABLE WEATHERPROOF 'WHILE-IN-USE' COVER (RED-DOT #CKSUV, OR EQUAL). TYPICAL OF 11.
9. PROVIDE A 30A, 1-POLE RECEPTACLE (NEMA 5-30R) FOR I.D.F. CONNECTIONS.
10. RUN A 1"C TO RESPECTIVE ODU FOR CONTROLS. COORDINATE EXACT REQUIREMENTS WITH MECHANICAL.
11. MOUNT DISTRIBUTION PANEL PER DETAIL #5/E5.3.
12. MOUNT PER DETAIL #1/E5.4.
13. BONDING AND GROUNDING PER DETAIL #2/E5.4.
14. SEE ONE LINE DIAGRAM #1/E5.1 FOR FEEDER INFORMATION.
15. CONNECT WATER HEATER, 208V, 1ph, 4,500 WATTS.
16. CONNECT CIRCULATION PUMP, 120V.
17. PROVIDED BY MECHANICAL. COORDINATE LOCATION WITH MECHANICAL PRIOR TO ROUGH-IN.
18. FLUSH FLOOR OUTLET BOX WITH DEVICE(S) SHOWN PER SPECIFICATIONS. TYPICAL, U.O.N.

GENERAL NOTES:

1. REFER TO DETAIL #5/E5.4 FOR CONDUIT SUPPORT DETAILS.
2. VERIFY EXACT LOCATION AND REQUIREMENTS OF ALL HVAC EQUIPMENT WITH MECHANICAL CONTRACTOR PRIOR TO ROUGH-IN. CONDUIT AND WIRING FOR CONTROLS, BOTH LINE AND LOW VOLTAGE, SHALL BE BY MECHANICAL CONTRACTOR.

NEW PRESCHOOL AND TK/KINDERGARTEN CLASSROOMS AT SANTA FE ELEMENTARY SCHOOL

PORTERVILLE UNIFIED SCHOOL DISTRICT
286 E ORANGE AVENUE, PORTERVILLE, CA 93257

REVISIONS

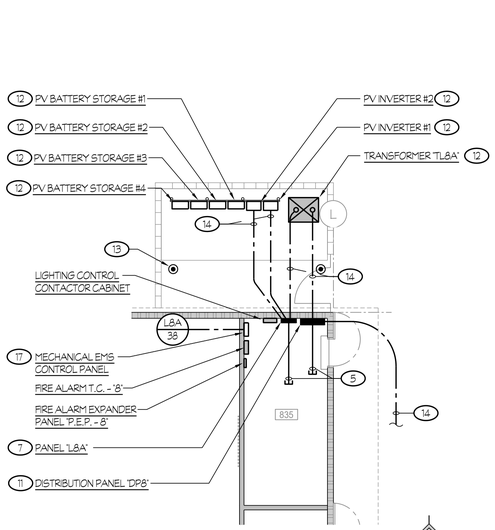

PARTIAL POWER PLAN

1/8" = 1'-0"

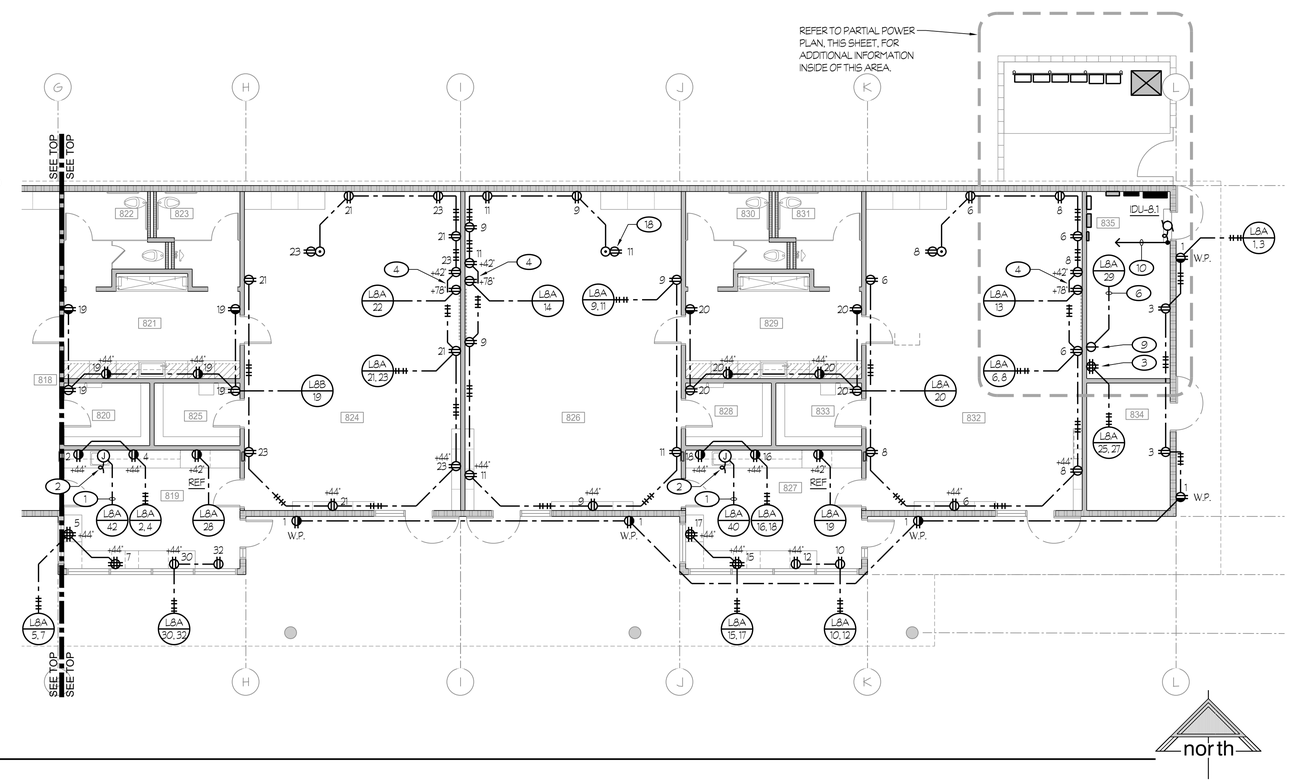

BUILDING 800 POWER PLAN

1/8" = 1'-0"

ROOM LEGEND					
#	ROOM NAME	CEILING HEIGHT	#	ROOM NAME	CEILING HEIGHT
801	STAFF TOILET	+9'-0"	819	TEACHER WORK RM	+10'-0"
802	STORAGE	+9'-0"	820	STORAGE	+9'-0"
803	JANITOR	+9'-0"	821	CLEAN UP	+9'-0"
804	TK CLASSROOM	+10'-0"	822	GIRLS	+9'-0"
805	TEACHER WORK RM	+10'-0"	823	BOYS	+9'-0"
806	STORAGE	+9'-0"	824	KINDERGARTEN	+10'-0"
807	CLEAN UP	+9'-0"	825	STORAGE	+9'-0"
808	UNISEX	+9'-0"	826	KINDERGARTEN	+10'-0"
809	UNISEX	+9'-0"	827	TEACHER WORK RM	+10'-0"
810	TK CLASSROOM	+10'-0"	828	STORAGE	+9'-0"
811	TEACHER WORK RM	+10'-0"	829	CLEAN UP	+9'-0"
812	STORAGE	+9'-0"	830	GIRLS	+9'-0"
813	CLEAN UP	+9'-0"	831	BOYS	+9'-0"
814	GIRLS	+9'-0"	832	KINDERGARTEN	+10'-0"
815	BOYS	+9'-0"	833	STORAGE	+9'-0"
816	TK CLASSROOM	+10'-0"	834	STORAGE	+9'-0"
817	STORAGE	+9'-0"	835	ELECTRICAL	+9'-0"
818	TK CLASSROOM	+10'-0"			

MANGINI ARCHITECTURE INGENUITY
BARENG MORRELLI SCOTT
MANGINI ASSOCIATES INC.
4320 West Mineral King Avenue
Visalia, California 93291
www.mangini.us
(559) 627-0530 Office
(559) 627-1926 fax

Rose Sing Eastham & Associates
Electrical Consultants
131 S. Dunworth – (559)733-2671
Visalia, California 93292-6705

REGISTERED PROFESSIONAL ENGINEER
JOSHUA KIRK EASTHAM
No. E-17966
Exp. 6/30/25
ELECTRICAL
STATE OF CALIFORNIA

TITLE
BUILDING 800
POWER PLAN

E2.2

PROJECT 23076

Z:\Drafting\Jobs\RSES\SCHOOLS\Portersville\Santa Fe Elementary\E2.2.dwg DATE SAVED: 06/19/24 BY: Casey DATE PLOTTED: 06/21/24 JOB # 23-093-U

APPROVALS

FILE # 54-76 | APPLICATION # 02-121996

IDENTIFICATION STAMP
DIV. OF THE STATE ARCHITECT
APP: 02-121996 INC:
REVIEWED FOR
SS ☑ FLS ☑ ACS ☑
DATE: 8/14/2024

LICENSED ARCHITECT
MICHAEL J. SCOTT
No. C-34290
REN. 05-31-25
STATE OF CALIFORNIA

DATE: DECEMBER 31, 2023

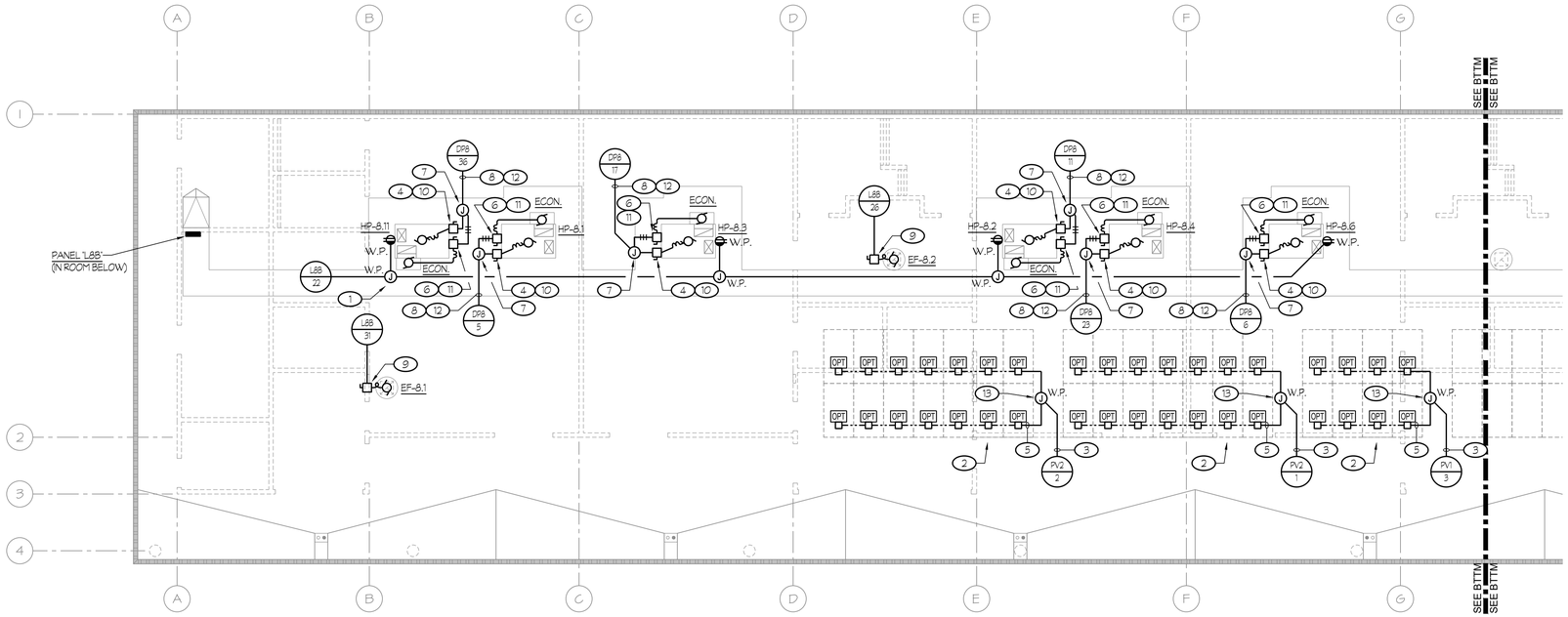

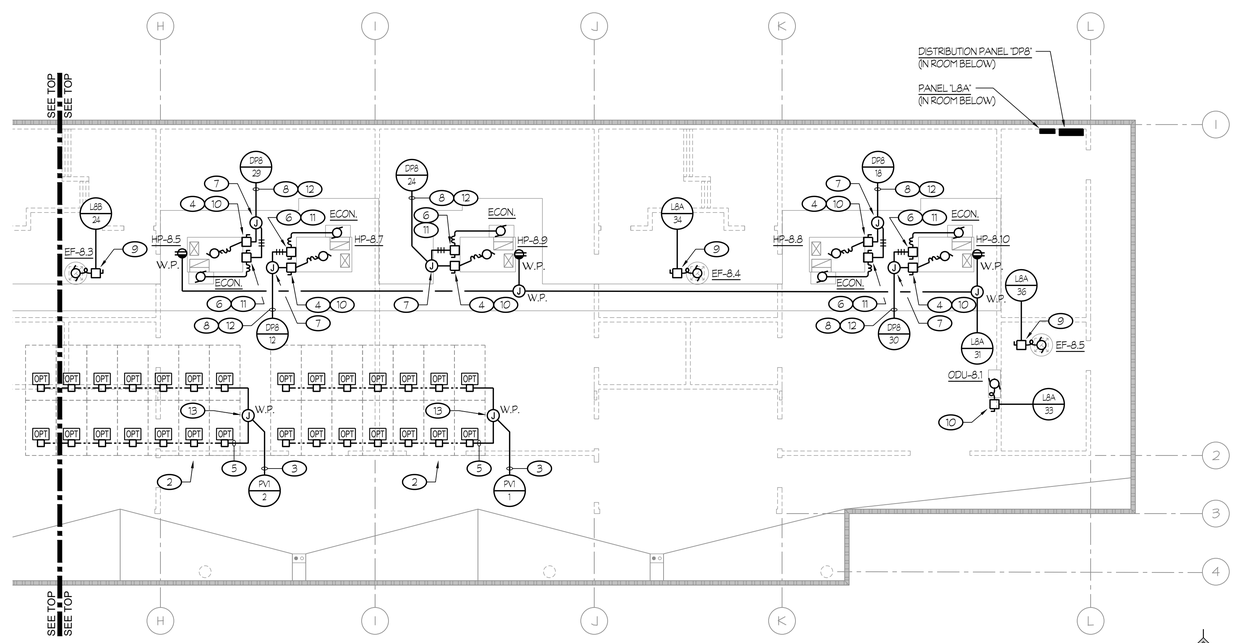

NOTES (THIS SHEET ONLY):

1. MOUNT JUNCTION BOX IN ACCESSIBLE ATTIC SPACE BELOW, TYPICAL, U.O.N..
2. 415W SOLAR PV MODULE. REFER TO ONE-LINE DIAGRAM ON SHEET #E5.1 AND DETAIL #3/E5.5, FOR ADDITIONAL REQUIREMENTS.
3. 3/4"C - 2 #10 + 1 #10 EG + 1 #8 CU BARE. ROUTED IN CEILING SPACE BELOW ROOF.
4. PROVIDE AND ENGRAVED NAMEPLATE: 'HP DISCONNECT'.
5. PV CABLE WITH MC4 CONNECTOR MOUNTED TO UNDERSIDE OF PV MODULE. TYPICAL FOR PV MODULE INTERCONNECTIONS.
6. PROVIDE A 30A, 3-POLE, HEAVY-DUTY RATED, FUSED SAFETY SWITCH AND MOUNT ONTO H.V.A.C. UNIT. PROVIDE FUSES PER MANUFACTURER RECOMMENDATIONS. COORDINATE EXACT LOCATION WITH MECHANICAL CONTRACTOR PRIOR TO ROUGH-IN.
7. PROVIDE A NEW N3R SCREW COVER CAN (8" SQ. x 4" DP.) AND LOCATE AT WHERE THE BRANCH CIRCUIT ROUTES UP THRU THE ROOF.
8. TYPICAL AT ALL H.V.A.C. EQUIPMENT:
   ROUTE BRANCH CIRCUITING UP THRU OPENING OF ROOF CURB AND THEN THRU UNIT TO DISCONNECT SWITCH. PROVIDE LIQUIDTIGHT FLEXIBLE METALLIC CONDUIT INSIDE UNIT FOR ROUTING OF CONDUCTORS.
9. PROVIDE A 30A, 1-POLE, HEAVY-DUTY RATED, FUSED SAFETY SWITCH AND MOUNT ONTO H.V.A.C. UNIT. PROVIDE FUSES PER MANUFACTURER RECOMMENDATIONS. COORDINATE EXACT LOCATION WITH MECHANICAL CONTRACTOR PRIOR TO ROUGH-IN.
10. PROVIDE A 60A, 3-POLE, HEAVY-DUTY RATED, FUSED SAFETY SWITCH AND MOUNT ONTO H.V.A.C. UNIT. PROVIDE FUSES PER MANUFACTURER RECOMMENDATIONS. COORDINATE EXACT LOCATION WITH MECHANICAL CONTRACTOR PRIOR TO ROUGH-IN.
11. PROVIDE ENGRAVED NAMEPLATE: 'ECONOMIZER DISCONNECT'.
12. 3/4"C - 3 #10 + 1 #10 GND.
13. PROVIDE 12" SQ. x 6" DP. WEATHERPROOF ENCLOSURE FOR COMBINING OF PV STRINGS AS REQUIRED.

NOTE:
VERIFY EXACT LOCATION AND REQUIREMENTS OF ALL HVAC EQUIPMENT WITH MECHANICAL CONTRACTOR PRIOR TO ROUGH-IN. CONDUIT AND WIRING FOR CONTROLS, BOTH LINE AND LOW VOLTAGE, SHALL BE BY MECHANICAL CONTRACTOR.

MINIMUM BATTERY STORAGE RATED ENERGY CAPACITY

PER BUILDING ENERGY EFFICIENCY STANDARDS
EQUATION 140.10-B
kWh(batt) = kW (PVdc) x B / (D ^ 0.5)

kW (PVdc) = 26.56 kW
B = 1.87 (PER TABLE 140.10-B)
D = 0.965 (PER EG4 ELECTRONICS 15kWh BATTERY)

kWh (batt) = 50.58
MORE THAN 10 kWh

NEW PRESCHOOL AND TK/KINDERGARTEN CLASSROOMS AT SANTA FE ELEMENTARY SCHOOL

PORTERVILLE UNIFIED SCHOOL DISTRICT
286 E ORANGE AVENUE, PORTERVILLE, CA 93257

REVISIONS

MANGINI ARCHITECTURE INGENUITY
BARENG MORRELLI SCOTT
MANGINI ASSOCIATES INC.
4320 West Mineral King Avenue
Visalia, California 93291
www.mangini.us
(559) 627-0530 Office
(559) 627-1926 Fax

TITLE
BUILDING 800
ROOF ELECTRICAL
PLAN

E2.3

PROJECT 23076

BUILDING 800
ROOF ELECTRICAL PLAN

1/8" = 1'-0"

north

Rose Sing Eastham & Associates
Electrical Consultants
131 S. Dunworth - (559)733-2671
Visalia, California 93292-6705

REGISTERED PROFESSIONAL ENGINEER
JOSEPH KIRK EASTHAM
No. E-19786
Exp. 6/30/25
ELECTRICAL
STATE OF CALIFORNIA

Z:\Drafting\Jobs\RSES\SFUSD\Porterville\Santa Fe Elementary\E2.3.dwg DATE SAVED: 06/18/24 By: Casey DATE PLOTTED: 06/21/24 JOB # 23-093-U

APPROVALS

FILE #	APPLICATION #
54-76	02-121996

IDENTIFICATION STAMP
DIV. OF THE STATE ARCHITECT
APP: 02-121996 INC:
REVIEWED FOR
SS ☑ FLS ☑ ACS ☑
DATE: 8/14/2024

LICENSED ARCHITECT
MICHAEL J. SCOTT
No. C-34290
REN. 05-31-25
STATE OF CALIFORNIA

DATE: DECEMBER 31, 2023

NOTES (THIS SHEET ONLY):

1. RUN 1/2"C - 2 #12 + 1 #12 GND TO PANEL AND CONNECT TO DEDICATED 120V, 20 AMP, 1-POLE CIRCUIT BREAKER. CIRCUIT BREAKER SHALL BE EQUIPPED WITH A LOCK-ON ACCESSORY. PROVIDE AN ENGRAVED NAMEPLATE: "FIRE ALARM - LEAVE ON". NAMEPLATE SHALL HAVE WHITE LETTERS ON A RED BACKGROUND. PAINT CIRCUIT BREAKER HANDLE OR LOCK-ON ACCESSORY "RED" IN COLOR.
2. REFER TO FIRE ALARM SYSTEM RISER DIAGRAM, DETAIL #1/E4.2 FOR CONDUIT AND CABLING REQUIREMENTS BETWEEN FIRE ALARM TERMINAL CABINET.
3. PER DETAIL #3/E4.4.
4. 3/4"C - TWO "FSP" CABLES.
5. 1"C - ONE "FSP" CABLE, 2 #12. TYPICAL, U.O.N.
6. PER DETAIL #6/E4.4.
7. 3/4"C - ONE "FSP" CABLE.
8. TO FIRE ALARM T.C..
9. 3/4"C - ONE "FA" CABLE, ONE "FAP" CABLE (24VDC AUXILIARY POWER FOR SOUNDER BASE AT CO DETECTOR). TYPICAL, U.O.N..
10. CONNECT THE WATERFLOW SWITCH AT FIRE SPRINKLER RISER. COORDINATE EXACT LOCATION WITH FIRE SPRINKLER CONTRACTOR. RUN 1/2"C - 2 #14 FROM DUAL MONITOR MODULE TO THE WATERFLOW SWITCH. PROVIDE JUNCTION BOX AND LIQUIDTIGHT FLEXIBLE METALLIC CONDUIT AS REQUIRED.
11. CONNECT ELECTRIC BELL. ROUTE BRANCH CIRCUITING THRU THE WATERFLOW SWITCH. COORDINATE EXACT LOCATION WITH THE FIRE SPRINKLER CONTRACTOR PRIOR TO ROUGH-IN.
12. RUN 1/2"C - 2 #14 TO THE SUPERVISORY SWITCH AT THE POST INDICATOR VALVE "P.I.V.". REFER TO PARTIAL SITE ELECTRICAL PLAN, SHEET #ES1.3, FOR CONTINUATION.

GENERAL NOTE:

1. REFER TO DETAIL #5/E5.4 FOR CONDUIT SUPPORT DETAILS.

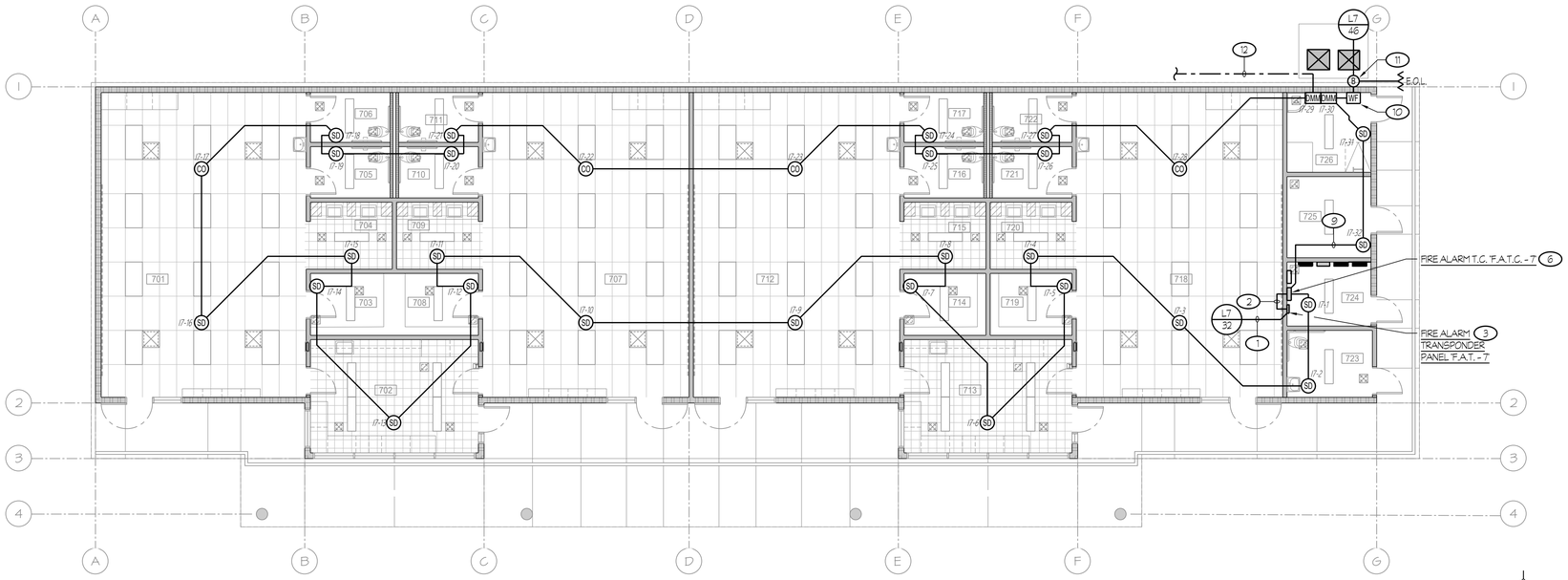

BUILDING 700
FIRE ALARM PLAN - INITIATION
1/8" = 1'-0"

north

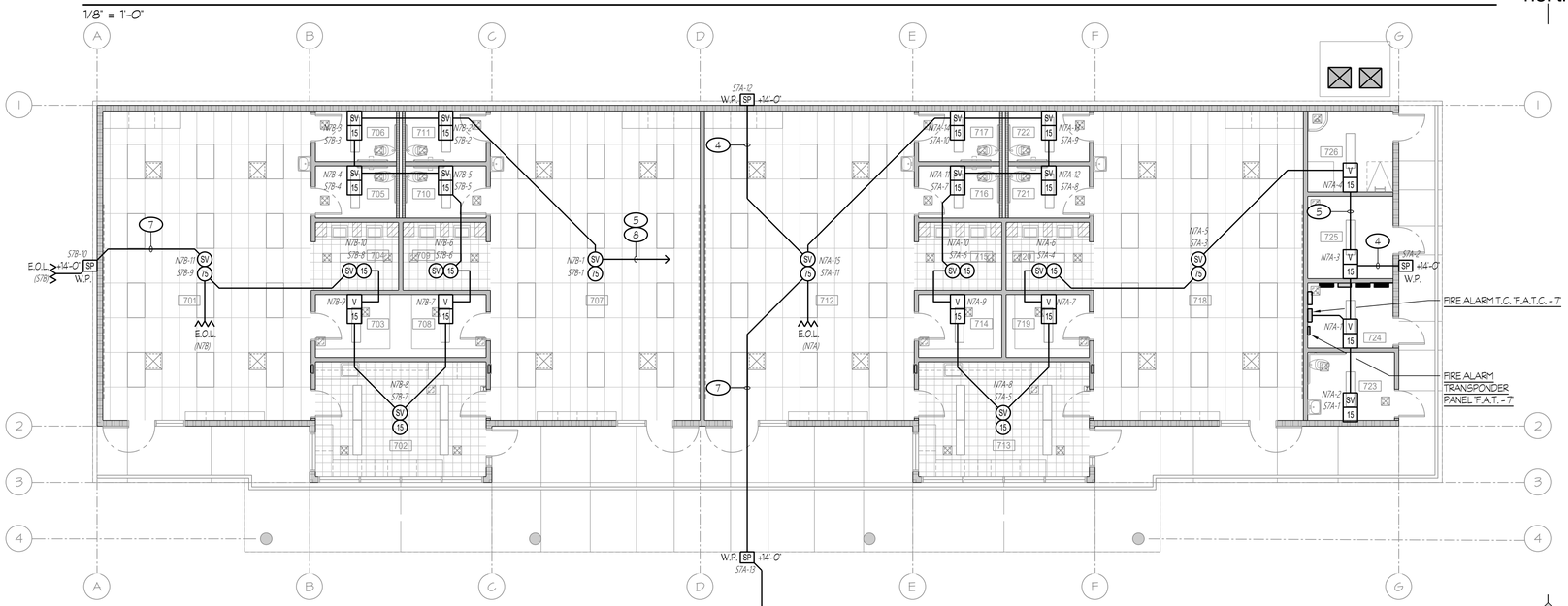

BUILDING 700
FIRE ALARM PLAN - NOTIFICATION
1/8" = 1'-0"

north

ROOM LEGEND		
#	ROOM NAME	CEILING HEIGHT
701	PRESCHOOL CLSRM	+10'-0"
702	TEACHER WORK RM	+10'-0"
703	STORAGE	+9'-0"
704	CLEAN UP	+9'-0"
705	UNISEX	+9'-0"
706	UNISEX	+9'-0"
707	PRESCHOOL CLSRM	+10'-0"
708	STORAGE	+9'-0"
709	CLEAN UP	+9'-0"
710	UNISEX	+9'-0"
711	UNISEX	+9'-0"
712	PRESCHOOL CLSRM	+10'-0"
713	TEACHER WORK RM	+10'-0"
714	STORAGE	+9'-0"
715	CLEAN UP	+9'-0"
716	UNISEX	+9'-0"
717	UNISEX	+9'-0"
718	PRESCHOOL CLSRM	+10'-0"
719	STORAGE	+9'-0"
720	CLEAN UP	+9'-0"
721	UNISEX	+9'-0"
722	CLEAN UP	+9'-0"
723	STAFF TOILET	+9'-0"
724	ELECTRICAL	+9'-0"
725	STORAGE	+9'-0"
726	JANITOR	+9'-0"

COMPLETE AUTOMATIC FIRE ALARM SYSTEM PLAN SUBMITTAL

THE FIRE ALARM SYSTEM SHOWN ON THESE PLANS HAS BEEN SUBMITTED AND APPROVED BY THE DIVISION OF THE STATE ARCHITECT. ANY SUBSTITUTION OF THE FIRE ALARM SYSTEM SHALL BE RESUBMITTED TO THE ARCHITECT FOR REVIEW AND APPROVAL. THE CONTRACTOR SHALL PAY ANY ADDITIONAL FEES THAT ARE INCURRED DUE TO THIS SUBSTITUTION.

THE FIRE ALARM SYSTEM SHALL BE A TOTAL (COMPLETE) AUTOMATIC HEAT AND SMOKE DETECTION SYSTEM, PER C.F.C. SECTION 907.2.3.6, AND SHALL COVER EVERY ROOM AND/OR AREA. UPON THE ACTIVATION OF ANY INITIATION DEVICE THE FIRE ALARM SYSTEM SHALL ALERT ALL OCCUPANTS AND TRANSMIT THE ALARM, SUPERVISORY, AND TROUBLE SIGNALS TO AN APPROVED SUPERVISING STATION (C.F.C. SECTION 907.2.3.5).

REGISTERED PROFESSIONAL ENGINEER
JOSEPH KIRK BARENG
No. E-19705
Exp. 6/30/25
ELECTRICAL
STATE OF CALIFORNIA

Rose Sing Eastham & Associates
Electrical Consultants
131 S. Dunworth - (559)733-2671
Visalia, California 93292-6705

NEW PRESCHOOL AND TK/KINDERGARTEN CLASSROOMS AT SANTA FE ELEMENTARY SCHOOL
PORTERVILLE UNIFIED SCHOOL DISTRICT
286 E ORANGE AVENUE, PORTERVILLE, CA 93257

REVISIONS
1
2
3
4
5

MANGINI ARCHITECTURE INGENUITY
BARENG MORRELLI SCOTT
MANGINI ASSOCIATES INC.
4320 West Mineral King Avenue
Visalia, California 93291
www.mangini.us
(559) 627-0530 Office
(559) 627-1926 Fax

TITLE
BUILDING 700
FIRE ALARM
PLANS

E3.1

PROJECT 23076

Z:\Drafting\Jobs\RSS\SCHOOLS\Portervile\Santa Fe Elementary\E3.1.dwg DATE SAVED: 06/11/24 By: Casey DATE PLOTTED: 06/21/24 JOB #: 23-093-JJ

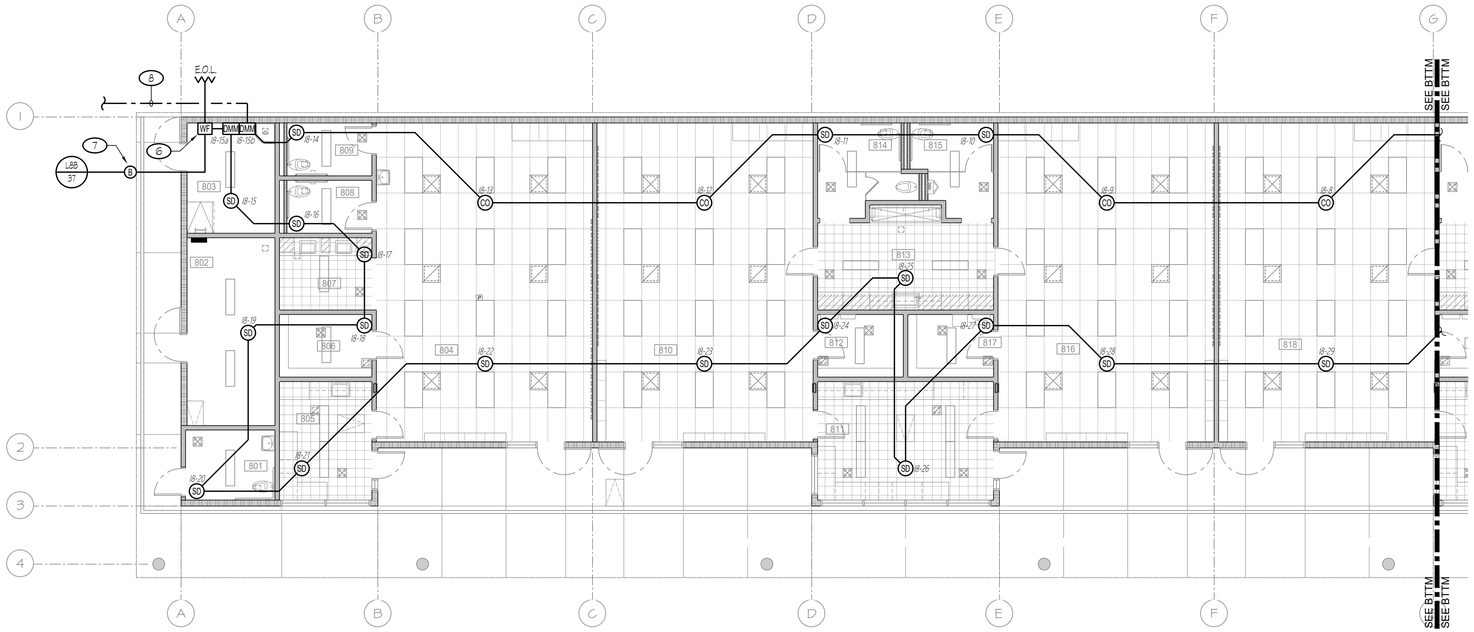

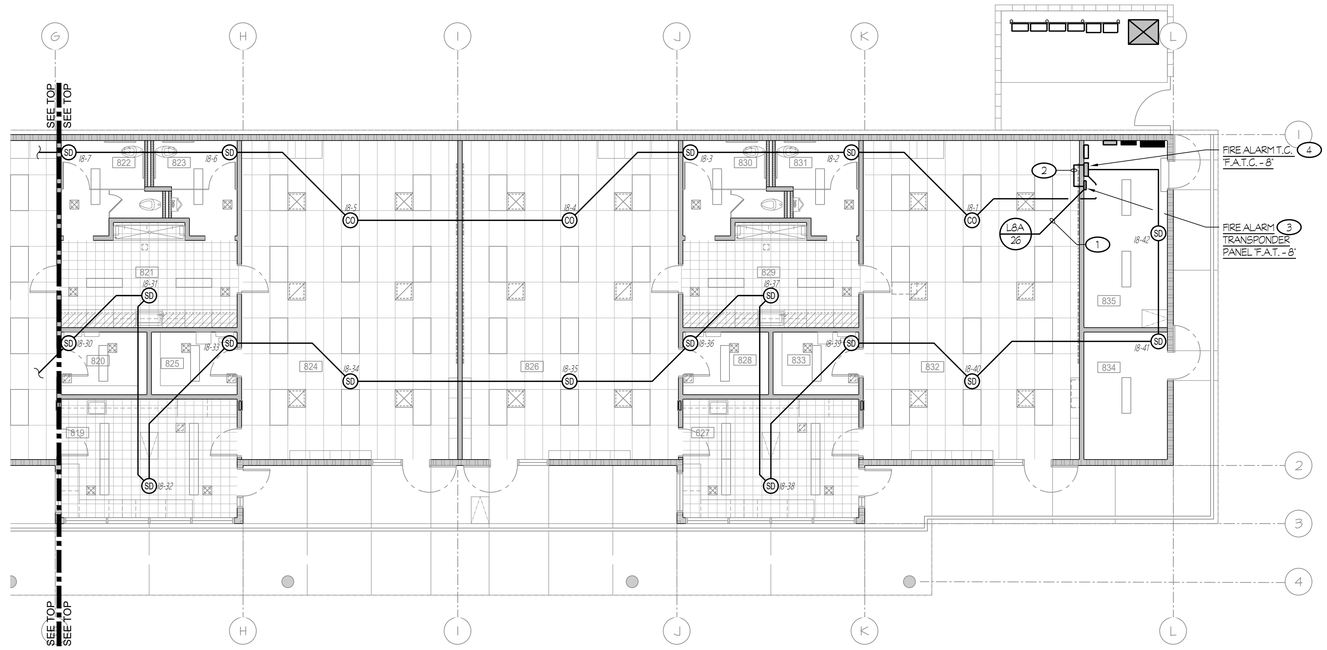

BUILDING 800
FIRE ALARM PLAN - INITIATION

1/8" = 1'-0"

north

NOTES (THIS SHEET ONLY):

1. RUN 1/2"C - 2 #12 + 1 #12 GND TO PANEL AND CONNECT TO DEDICATED 120V, 20 AMP, 1-POLE CIRCUIT BREAKER. CIRCUIT BREAKER SHALL BE EQUIPPED WITH A LOCK-ON ACCESSORY. PROVIDE AN ENGRAVED NAMEPLATE: "FIRE ALARM - LEAVE ON". NAMEPLATE SHALL HAVE WHITE LETTERS ON A RED BACKGROUND. PAINT CIRCUIT BREAKER HANDLE OR LOCK-ON ACCESSORY "RED" IN COLOR.
2. REFER TO FIRE ALARM SYSTEM RISER DIAGRAM, DETAIL #1/E4.2 FOR CONDUIT AND CABLING REQUIREMENTS BETWEEN FIRE ALARM TERMINAL CABINET AND FIRE ALARM POWER EXPANDER PANEL.
3. PER DETAIL #3/E4.4.
4. PER DETAIL #6/E4.4.
5. 3/4"C - ONE "FA" CABLE, ONE "FAP" CABLE (24VDC AUXILIARY POWER FOR SOUNDER BASE AT CO DETECTOR). TYPICAL, U.O.N..
6. CONNECT THE WATERFLOW SWITCH AT FIRE SPRINKLER RISER. COORDINATE EXACT LOCATION WITH FIRE SPRINKLER CONTRACTOR. RUN 1/2"C - 2 #14 FROM DUAL MONITOR MODULE TO THE WATERFLOW SWITCH. PROVIDE JUNCTION BOX AND LIQUIDTIGHT FLEXIBLE METALLIC CONDUIT AS REQUIRED.
7. CONNECT ELECTRIC BELL. ROUTE BRANCH CIRCUITING THRU THE WATERFLOW SWITCH. COORDINATE EXACT LOCATION WITH THE FIRE SPRINKLER CONTRACTOR PRIOR TO ROUGH-IN.
8. RUN 1/2"C - 2 #14 TO THE SUPERVISORY SWITCH AT THE POST INDICATOR VALVE "P.I.V.". REFER TO PARTIAL SITE ELECTRICAL PLAN, SHEET #ES1.3, FOR CONTINUATION.

GENERAL NOTE:

1. REFER TO DETAIL #5/E5.4 FOR CONDUIT SUPPORT DETAILS.

ROOM LEGEND

#	ROOM NAME	CEILING HEIGHT	#	ROOM NAME	CEILING HEIGHT
801	STAFF TOILET	+9'-0"	819	TEACHER WORK RM	+10'-0"
802	STORAGE	+9'-0"	820	STORAGE	+9'-0"
803	JANITOR	+9'-0"	821	CLEAN UP	+9'-0"
804	TK CLASSROOM	+10'-0"	822	GIRLS	+9'-0"
805	TEACHER WORK RM	+10'-0"	823	BOYS	+9'-0"
806	STORAGE	+9'-0"	824	KINDERGARTEN	+10'-0"
807	CLEAN UP	+9'-0"	825	STORAGE	+9'-0"
808	UNISEX	+9'-0"	826	KINDERGARTEN	+10'-0"
809	UNISEX	+9'-0"	827	TEACHER WORK RM	+10'-0"
810	TK CLASSROOM	+10'-0"	828	STORAGE	+9'-0"
811	TEACHER WORK RM	+10'-0"	829	CLEAN UP	+9'-0"
812	STORAGE	+9'-0"	830	GIRLS	+9'-0"
813	CLEAN UP	+9'-0"	831	BOYS	+9'-0"
814	GIRLS	+9'-0"	832	KINDERGARTEN	+10'-0"
815	BOYS	+9'-0"	833	STORAGE	+9'-0"
816	TK CLASSROOM	+10'-0"	834	STORAGE	+9'-0"
817	STORAGE	+9'-0"	835	ELECTRICAL	+9'-0"
818	TK CLASSROOM	+10'-0"			

COMPLETE AUTOMATIC FIRE ALARM SYSTEM PLAN SUBMITTAL

THE FIRE ALARM SYSTEM SHOWN ON THESE PLANS HAS BEEN SUBMITTED AND APPROVED BY THE DIVISION OF THE STATE ARCHITECT. ANY SUBSTITUTION OF THE FIRE ALARM SYSTEM SHALL BE RESUBMITTED TO THE ARCHITECT FOR REVIEW AND APPROVAL. THE CONTRACTOR SHALL PAY ANY ADDITIONAL FEES THAT ARE INCURRED DUE TO THIS SUBSTITUTION.

THE FIRE ALARM SYSTEM SHALL BE A TOTAL (COMPLETE) AUTOMATIC HEAT AND SMOKE DETECTION SYSTEM, PER C.F.C. SECTION 907.2.3.6, AND SHALL COVER EVERY ROOM AND/OR AREA. UPON THE ACTIVATION OF ANY INITIATION DEVICE THE FIRE ALARM SYSTEM SHALL ALERT ALL OCCUPANTS AND TRANSMIT THE ALARM, SUPERVISORY, AND TROUBLE SIGNALS TO AN APPROVED SUPERVISING STATION (C.F.C. SECTION 907.2.3.5).

APPROVALS

FILE # 54-76 | APPLICATION # 02-121996

IDENTIFICATION STAMP
DIV. OF THE STATE ARCHITECT
APP: 02-121996 INC:
REVIEWED FOR
SS ☑ FLS ☑ ACS ☑
DATE: 8/14/2024

LICENSED ARCHITECT
MICHAEL J. SCOTT
No. C-34290
REN. 05-31-25
STATE OF CALIFORNIA

DATE: DECEMBER 31, 2023

NEW PRESCHOOL AND TK/KINDERGARTEN CLASSROOMS AT SANTA FE ELEMENTARY SCHOOL
PORTERVILLE UNIFIED SCHOOL DISTRICT
286 E ORANGE AVENUE, PORTERVILLE, CA 93257

REVISIONS

MANGINI ARCHITECTURE
BARENG MORRELLI ENGINEERS SCOTT
MANGINI ASSOCIATES INC.
4320 West Mineral King Avenue
Visalia, California 93291
www.mangini.us
(559) 627.0530 Office
(559) 627.1926 Fax

TITLE
BUILDING 800
FIRE ALARM
PLAN - INITIATION

E3.2

PROJECT 23076

Rose Sing Eastham & Associates
Electrical Consultants
131 S. Dunworth - (559)733-2671
Visalia, California 93292-6705

REGISTERED PROFESSIONAL ENGINEER
JOHN KIRK EASTHAM
No. E-19766
Exp. 6/30/25
ELECTRICAL
STATE OF CALIFORNIA

Z:\Drafting\Jobs\RSES\SCHOOLS\Portervile\Santa Fe Elementary\E3.2.dwg DATE SAVED: 12/14/23 BY: Casey DATE PLOTTED: 06/21/24 JOB # 23-003-JJ

APPROVALS

FILE #	APPLICATION #
54-76	02-121996

IDENTIFICATION STAMP
DIV. OF THE STATE ARCHITECT
APP: 02-121996 INC:
REVIEWED FOR
SS ☑ FLS ☑ ACS ☑
DATE: 8/14/2024

LICENSED ARCHITECT
MICHAEL J. SCOTT
No. C-34290
REN. 05-31-25
STATE OF CALIFORNIA

DATE: DECEMBER 31, 2023

NOTES (THIS SHEET ONLY):

1. 3/4"C - TWO FSP CABLES.
2. 1"C - ONE FSP CABLE, 2 #12. TYPICAL, U.O.N.
3. 3/4"C - ONE FSP CABLE.
4. TO FIRE ALARM T.C..

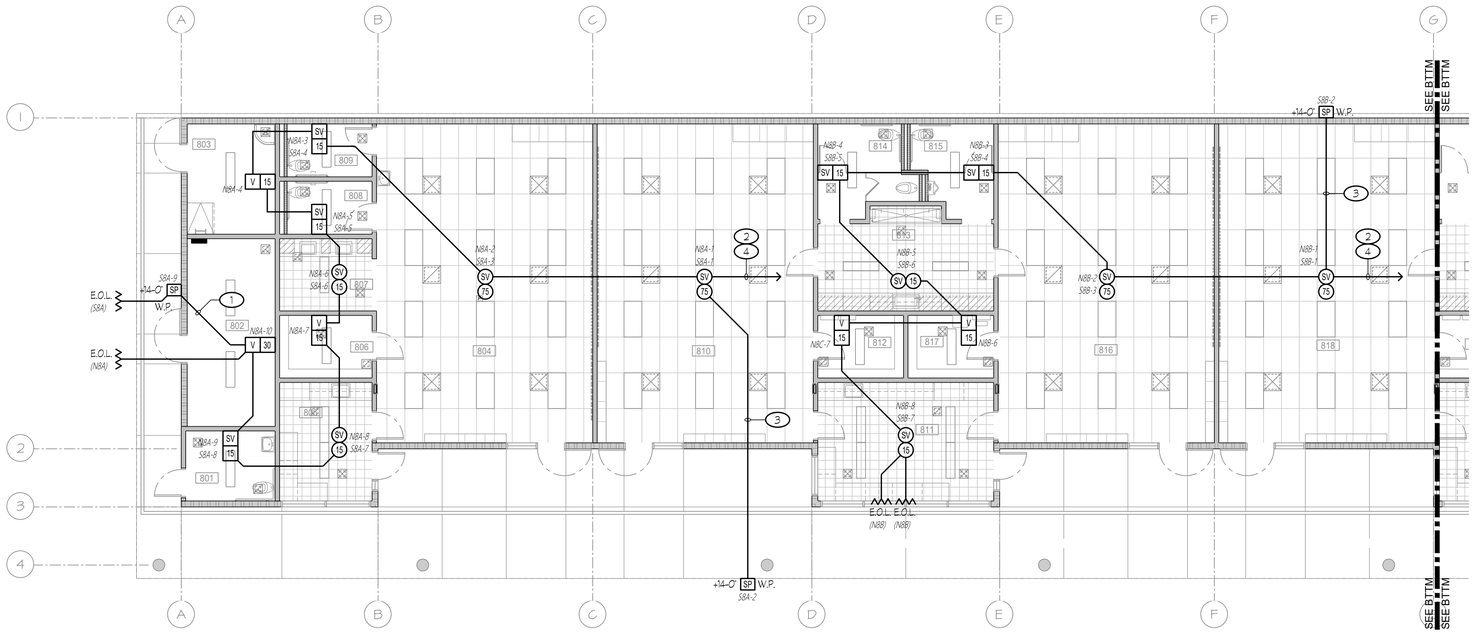

GENERAL NOTE:

1. REFER TO DETAIL #5/E5.4 FOR CONDUIT SUPPORT DETAILS.

ROOM LEGEND					
#	ROOM NAME	CEILING HEIGHT	#	ROOM NAME	CEILING HEIGHT
801	STAFF TOILET	+9'-0"	819	TEACHER WORK RM	+10'-0"
802	STORAGE	+9'-0"	820	STORAGE	+9'-0"
803	JANITOR	+9'-0"	821	CLEAN UP	+9'-0"
804	TK CLASSROOM	+10'-0"	822	GIRLS	+9'-0"
805	TEACHER WORK RM	+10'-0"	823	BOYS	+9'-0"
806	STORAGE	+9'-0"	824	KINDERGARTEN	+10'-0"
807	CLEAN UP	+9'-0"	825	STORAGE	+9'-0"
808	UNISEX	+9'-0"	826	KINDERGARTEN	+10'-0"
809	UNISEX	+9'-0"	827	TEACHER WORK RM	+10'-0"
810	TK CLASSROOM	+10'-0"	828	STORAGE	+9'-0"
811	TEACHER WORK RM	+10'-0"	829	CLEAN UP	+9'-0"
812	STORAGE	+9'-0"	830	GIRLS	+9'-0"
813	CLEAN UP	+9'-0"	831	BOYS	+9'-0"
814	GIRLS	+9'-0"	832	KINDERGARTEN	+10'-0"
815	BOYS	+9'-0"	833	STORAGE	+9'-0"
816	TK CLASSROOM	+10'-0"	834	STORAGE	+9'-0"
817	STORAGE	+9'-0"	835	ELECTRICAL	+9'-0"
818	TK CLASSROOM	+10'-0"			

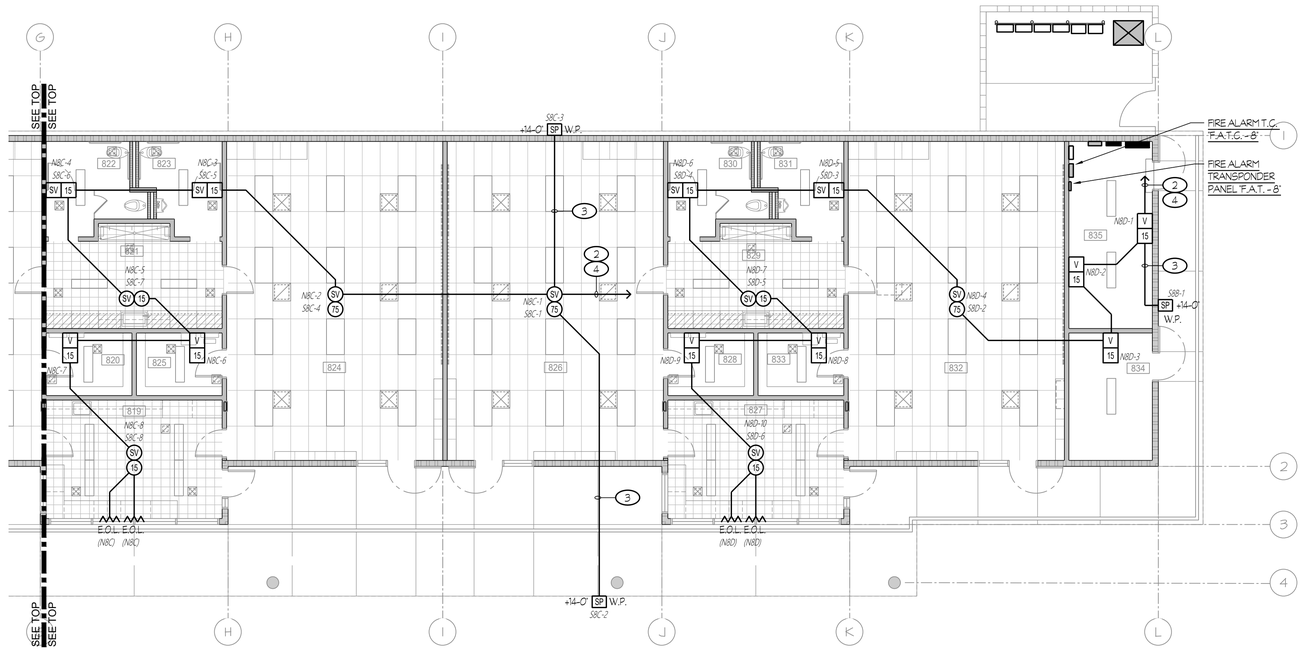

COMPLETE AUTOMATIC FIRE ALARM SYSTEM PLAN SUBMITTAL

THE FIRE ALARM SYSTEM SHOWN ON THESE PLANS HAS BEEN SUBMITTED AND APPROVED BY THE DIVISION OF THE STATE ARCHITECT. ANY SUBSTITUTION OF THE FIRE ALARM SYSTEM SHALL BE RESUBMITTED TO THE ARCHITECT FOR REVIEW AND APPROVAL. THE CONTRACTOR SHALL PAY ANY ADDITIONAL FEES THAT ARE INCURRED DUE TO THIS SUBSTITUTION.

THE FIRE ALARM SYSTEM SHALL BE A TOTAL (COMPLETE) AUTOMATIC HEAT AND SMOKE DETECTION SYSTEM, PER C.F.C. SECTION 907.2.3.6, AND SHALL COVER EVERY ROOM AND/OR AREA. UPON THE ACTIVATION OF ANY INITIATION DEVICE THE FIRE ALARM SYSTEM SHALL ALERT ALL OCCUPANTS AND TRANSMIT THE ALARM, SUPERVISORY, AND TROUBLE SIGNALS TO AN APPROVED SUPERVISING STATION (C.F.C. SECTION 907.2.3.5).

BUILDING 800
FIRE ALARM PLAN - NOTIFICATION

1/8" = 1'-0"

north

REGISTERED PROFESSIONAL ENGINEER
JOHN KIRK EASTHAM
No. E-19766
Exp. 6/30/25
ELECTRICAL
STATE OF CALIFORNIA

Rose Sing Eastham & Associates
Electrical Consultants
131 S. Dunworth - (559)733-2671
Visalia, California 93292-6705

NEW PRESCHOOL AND TK/KINDERGARTEN CLASSROOMS AT SANTA FE ELEMENTARY SCHOOL

PORTERVILLE UNIFIED SCHOOL DISTRICT
286 E ORANGE AVENUE, PORTERVILLE, CA 93257

REVISIONS

MANGINI ARCHITECTURE INCORPORATED
BARENG MORRELLI SCOTT
MANGINI ASSOCIATES INC.
4320 West Mineral King Avenue
Visalia, California 93291
www.mangini.us
(559) 627.0530 Office
(559) 627.1926 Fax

TITLE
BUILDING 800
FIRE ALARM
PLAN - NOTIFICATION

E3.3

PROJECT 23076

Z:\Drafting\Jobs\KES\SCHOOLS\Porterville\Santa Fe Elementary\E3.3.dwg DATE SAVED: 12/14/23 BY: Casey DATE PLOTTED: 06/21/24 JOB # 23-083-JJ

APPROVALS

FILE # 54-76 | APPLICATION # 02-121996

IDENTIFICATION STAMP
DIV. OF THE STATE ARCHITECT
APP: 02-121996 INC:
REVIEWED FOR
SS ☑ FLS ☑ ACS ☑
DATE: 8/14/2024

LICENSED ARCHITECT MICHAEL J. SCOTT No. C-34290 REN. 05-31-25 STATE OF CALIFORNIA

DATE: DECEMBER 31, 2023

FIRE ALARM SYSTEM SEQUENCE OF OPERATIONS

RESULT OF OPERATION	TYPE OF INITIATION: MANUAL PULL STATION	AREA SMOKE/ HEAT DETECTOR	CARBON MONOXIDE DETECTOR (1), (2)	LOSS OF POWER	SHORT CIRCUIT/ GROUND FAULT	FIRE SPRINKLER RISER WATER FLOW SWITCH	FIRE SPRINKLER RISER TAMPER SWITCH
ANNUNCIATE ALARM AT FIRE ALARM CONTROL PANEL	YES	YES	—	—	—	YES	—
ANNUNCIATE TROUBLE AT FIRE ALARM CONTROL PANEL	—	—	—	YES	YES	—	YES
ANNUNCIATE SUPERVISORY AT FIRE ALARM CONTROL PANEL	—	—	YES	—	—	—	—
ACTIVATE ALL AUDIBLE AND VISUAL ALARM SIGNALS	YES	YES	—	—	—	YES	—
TRANSFER TO BATTERY BACK-UP	—	—	—	YES	—	—	—
(1) ANNUNCIATE SUPERVISORY AT THE FIRE ALARM CONTROL PANEL	—	—	YES	—	—	—	—
ANNUNCIATE AT 24 HR ATTENDED LOCATION	YES	YES	YES	YES	—	YES	YES
CENTRAL STATION FOR MONITORING (ALARM)	YES	YES	—	—	—	YES	—
CENTRAL STATION FOR MONITORING (TROUBLE)	—	—	—	YES	—	—	YES
CENTRAL STATION FOR MONITORING (SUPERVISORY)	—	—	—	—	—	—	—

(1) UPON DETECTION OF CARBON MONOXIDE, A SUPERVISORY SIGNAL SHALL ANNUNCIATE AT THE FIRE ALARM CONTROL PANEL 'F.A.C.P.'.

(2) THE ANNUNCIATION OF THE CARBON MONOXIDE DETECTOR WILL ONLY TAKE PLACE AT THE POINT WHERE IT IS DETECTED VIA A SOUNDER BASE. IT IS NOT BROADCAST OVER THE ENTIRE NOTIFICATION APPLIANCE CIRCUIT TO THE NOTIFICATION APPLIANCES. THEREFORE THE USE OF THE WORD 'FIRE' ON THE NOTIFICATION DEVICES IS PERMITTED.

FIRE ALARM SYSTEM GENERAL NOTES

1. APPLICABLE STANDARD NFPA 72, AS ADOPTED AND AMENDED IN CBC CHAPTER 35.
2. INSTALLATION OF THE SYSTEMS SHALL NOT BE STARTED UNTIL DETAILED DESIGN DOCUMENTS AND SPECIFICATION, INCLUDING STATE FIRE MARSHAL LISTING NUMBERS FOR EACH COMPONENT OF THE SYSTEM, HAS BEEN APPROVED BY DSA.
3. UPON COMPLETION OF SYSTEM INSTALLATION, A SATISFACTORY TEST OF THE ENTIRE SYSTEM SHALL BE MADE IN THE PRESENCE OF A DSA PROJECT INSPECTOR TEST SHALL INCLUDE ALL INFORMATION PER NFPA 72 14.6.2.4 AND FIGURE 7.8.2(B) AND READ OUT VERIFICATION FORM FROM CENTER STATION.
4. A STAMPED SET OF APPROVED FIRE ALARM DESIGN DOCUMENTS SHALL BE ON THE JOB SITE AND USED FOR INSTALLATION.
5. ANY DISCREPANCIES BETWEEN THE DRAWINGS AND THE CODE OR RECOGNIZED STANDARDS SHALL BE BROUGHT TO THE ATTENTION OF DSA AND THE ARCHITECT/ ENGINEER OF THE PROJECT.
6. DSA, ARCHITECT/ENGINEER AND OWNER SHALL BE NOTIFIED A MINIMUM OF 48 HOURS PRIOR TO THE FINAL INSPECTION AND/OR TESTING.
7. ALL PENETRATIONS THROUGH RATED ASSEMBLIES REQUIRING OPENING PROTECTION SHALL BE PROVIDED WITH A PENETRATION FIRE STOP SYSTEM AS IDENTIFIED IN CBC CHAPTER 7, UL OR OTHER APPROVED LAB TESTING CRITERIA. APPROVED TYPES OF MATERIALS SHALL BE IDENTIFIED WITHIN THE PROJECT SPECIFICATIONS WITHIN THE FIRE ALARM SECTION.
8. WALL MOUNTED VISIBLE NOTIFICATION DEVICES SHALL HAVE THEIR BOTTOMS MOUNTED AT 80" MINIMUM AND 96" MAXIMUM FROM FINISHED FLOOR.
9. WALL MOUNTED AUDIBLE NOTIFICATION DEVICES SHALL HAVE THEIR TOPS MOUNTED AT 90" MINIMUM AND 100" MAXIMUM FROM FINISHED FLOOR AND NO CLOSER THAN 6' TO A HORIZONTAL STRUCTURE.
10. AUDIBLE DEVICES SHALL PROVIDE A SOUND PRESSURE LEVEL OF 15 DECIBELS (dBA) ABOVE THE AVERAGE AMBIENT SOUND LEVEL OR FIVE dBA ABOVE THE MAXIMUM SOUND LEVEL HAVING A DURATION OF AT LEAST 60 SECONDS, WHICHEVER IS GREATER, IN EVERY OCCUPIABLE SPACE WITHIN THE BUILDING.
11. AUDIBLE DEVICES SHALL BE SYNCHRONIZED TEMPORAL CODE 3 PATTERN FOR A FIRE ALARM SIGNAL. AUDIBLE DEVICES SHALL ALSO SOUND A TEMPORAL CODE 4 PATTERN FOR A CARBON MONOXIDE SIGNAL. THE EXISTING FIRE ALARM CONTROL PANEL WILL PRODUCE/GENERATE BOTH SIGNALS.
12. THE CONTRACTOR SHALL ADJUST/INSTALL ALL DEVICES TO MAXIMIZE PERFORMANCE AND TO MINIMIZE FALSE ALARMS.
13. VISIBLE DEVICES SHOULD NOT EXCEED TWO FLASHES PER SECOND AND SHOULD NOT BE SLOWER THAN ONE FLASH EVERY SECOND. THE DEVICE SHALL HAVE A PULSING LIGHT SOURCE NOT LESS THAN 15 CANDELA. VISIBLE DEVICES WITHIN 55 FROM EACH OTHER SHALL BE SYNCHRONIZED.
14. UNDERGROUND AND EXTERIOR CONDUITS TO HAVE WATER TIGHT FITTINGS AND WIRE TO BE APPROVED FOR WET LOCATIONS.
15. ALL FIRE ALARM WIRING SHALL BE FPL OR FPLP (FIRE POWER LIMITED OR FIRE POWER LIMITED PLENUM) AS REQUIRED FOR APPLICATION. WIRING IN CONDUIT ABOVE GROUND MAY BE TYPE THHN OR THWN.
16. PER CEC STANDARDS, ALL WIRING IS TO BE PULLED THROUGH EACH JUNCTION BOX AND CONNECTED DIRECTLY TO EACH FIRE DEVICE. DO NOT SPLICE THE WIRE. ALL BOXES TO BE SIZED PER CEC.
17. SMOKE DETECTORS SHALL NOT BE ANY CLOSER THAN 1' FROM FIRE SPRINKLERS OR 3' FROM ANY SUPPLY DIFFUSER. IN AREA OF CONSTRUCTION OR POSSIBLE DAMAGE/ CONTAMINATION ON NEWLY INSTALLED FIRE ALARM, DEVICES SHALL BE COVERED UNTIL THAT AREA IS READY TO BE TURNED OVER TO THE OWNER.
18. ALL FIRE ALARM CIRCUITS SHALL BE IN CONDUIT, SURFACE RACEWAY OR OPEN RUN ABOVE CEILING, UNDER FLOORS AND IN WALLS IN A NEAT AND PROTECTED MANNER AS INDICATED ON DESIGN DOCUMENTS. EXPOSED CIRCUITS ARE ONLY PERMITTED WHEN NOTED AS EXPOSED ON DESIGN DOCUMENTS.
19. FIRE ALARM PANEL, REMOTES, AND COMPONENTS SHALL BE SECURED TO MOUNTING SURFACES PER MANUFACTURERS SPECIFICATIONS. NO SINGLE DEVICE SHALL EXCEED 20 LBS. WITHOUT SPECIAL MOUNTING DETAILS.
20. A DEDICATED BRANCH CIRCUIT SHALL BE PROVIDED FOR FIRE ALARM EQUIPMENT. THIS CIRCUIT SHALL BE ENERGIZED FROM THE COMMON USE AREA PANEL AND SHALL HAVE NO OTHER OUTLETS. THE BREAKER SHALL HAVE A RED LOCKING DEVICE TO BLOCK THE HANDLE IN THE 'ON' POSITION. THE CIRCUIT BREAKER SHALL BE LABELED 'FIRE ALARM CIRCUIT CONTROL'. CIRCUIT ID TO BE LABELED AT FIRE PANELS/EXTENDERS.
21. THE INSTALLING CONTRACTOR SHALL PROVIDE A COMPLETED 'SYSTEM RECORD OF COMPLETION' PER NFPA 72, FIGURE 17.8.2.
22. FIRE ALARM CONTROL PANELS AND REMOTE ANNUNCIATORS SHALL BE INSTALLED WITH THEIR BOTTOMS MOUNTED AT 48" ABOVE THE FINISHED FLOOR.
23. MICROPHONES ASSOCIATED WITH EMERGENCY VOICE ALARM COMMUNICATION SYSTEMS (EVAC) SHALL BE ACCESSIBLE FOR USE, INSTALLED IN COMPLIANCE WITH CBC SECTIONS 11B-305 AND 11B-308.
24. THE INSTALLING CONTRACTOR SHALL PROVIDE SYSTEM PROGRAMMING FOR SUPERVISORY MONITORING PER CBC SECTION 907.6.2.
25. SUPERVISORY MONITORING SHALL BE TESTED AND VERIFIED AS SENDING CORRECT SIGNALS IN CONJUNCTION WITH FINAL ACCEPTANCE TEST.
26. OWNER SHALL BE RESPONSIBLE FOR ESTABLISHING A FIRE SYSTEM MONITORING CONTRACT OR PROVISIONS.
27. PROVIDE AN ENGRAVED NAMEPLATE INDICATING THE D.S.A. APPLICATION NUMBER, FILE NUMBER AND DATE OF INSTALLATION AT EACH FIRE ALARM CONTROL PANEL 'F.A.C.P.'; AT EACH FIRE ALARM TRANSPONDER 'F.A.T.' AND AT EACH FIRE ALARM POWER EXPANDER PANEL 'P.E.P.'.
    - A. THE PRIMARY POWER SUPPLY TO EACH FIRE ALARM CONTROL PANEL 'F.A.C.P.', TO EACH FIRE ALARM TRANSPONDER 'F.A.T.' AND TO EACH FIRE ALARM POWER EXPANDER PANEL 'P.E.P.' SHALL BE IN ACCORDANCE WITH NFPA 72 10.6.5 AND AS FOLLOWS:
        - a) THE CIRCUIT BREAKER FEEDING THE RESPECTIVE PANEL SHALL BE LOCATED IN A LOCKED ROOM OR BEHIND A LOCKABLE DOOR AND BE READILY ACCESSIBLE TO AUTHORIZED PERSONNEL ONLY.
        - b) THE CIRCUIT BREAKER SHALL BE EQUIPPED WITH A LOCK-ON ACCESSORY. PAINT LOCK-ON ACCESSORY 'RED' IN COLOR.
        - c) THE CIRCUIT BREAKER SHALL HAVE AN ENGRAVED NAMEPLATE THAT IDENTIFIES IT AS A 'FIRE ALARM CIRCUIT'. THIS ENGRAVED NAMEPLATE SHALL HAVE WHITE LETTERS ON A RED BACKGROUND. MOUNT ONTO THE INTERIOR TRIM AND LOCATE ADJACENT TO CIRCUIT BREAKER WHERE POSSIBLE.
        - d) THE LOCATION OF THE CIRCUIT DISCONNECTING MEANS SHALL BE PERMANENTLY IDENTIFIED AT EACH FIRE ALARM CONTROL PANEL 'F.A.C.P.'; AT EACH FIRE ALARM TRANSPONDER 'F.A.T.' AND AT EACH FIRE ALARM POWER EXPANDER PANEL 'P.E.P.'. PROVIDE AN ENGRAVED NAMEPLATE (WHITE LETTERS ON A RED BACKGROUND) WHICH INDICATES THIS.
    - B. ALL ENGRAVED NAMEPLATES SHALL BE ATTACHED TO THE FRONT OF THE RESPECTIVE ENCLOSURE WITH SCREWS OR RIVETS.
28. PROVIDE A COPY OF THE BATTERY CALCULATION AT EACH FIRE ALARM CONTROL PANEL 'F.A.C.P.'; AT EACH FIRE ALARM TRANSPONDER 'F.A.T.' AND AT EACH FIRE ALARM POWER EXPANDER PANEL 'P.E.P.'. BATTERY CALCULATION SHALL CONTAIN INFORMATION AS NOTED ON SCHEDULES AND BE PLASTIC LAMINATED. MOUNT ONTO INSIDE FACE OF DOOR.

FIRE ALARM SYSTEM EQUIPMENT SPECIFICATIONS

SYMBOL	DESCRIPTION	MODEL #	CSFM LISTING #	BACKBOX REQUIREMENTS (B)	MOUNTING HEIGHT (TO CENTER U.O.N.)
FACP	FIRE ALARM CONTROL PANEL 'F.A.C.P.'		7165-1703:0125	INCLUDED	+60" PER DETAIL #7/E4.4
	INTELLIGENT LOOP INTERFACE - MAIN BOARD	GAMEWELL/F.C.I. #ILI-MB-E3			
	INTELLIGENT LOOP INTERFACE - EXPANSION BOARD	GAMEWELL/F.C.I. #ILI35-6-E3			
	LCD DISPLAY	GAMEWELL/F.C.I. #LCD-SLP			
	POWER SUPPLY	GAMEWELL/F.C.I. #PM-9			
	VOICE GATEWAY	GAMEWELL/F.C.I. #IN-VGX			
(D)	50W 70V AUDIO AMPLIFIER	GAMEWELL/F.C.I. #AM-50-70			
	ENCLOSURE WITH PLEXI-GLASS DOOR	GAMEWELL/F.C.I. #E388-RC/NCC			
	INNER DOOR	GAMEWELL/F.C.I. #E3102-D			
	MOUNTING PLATE	GAMEWELL/F.C.I. #E3-NX-CPLATE			
	COMMAND CENTER BLANK PLATE	GAMEWELL/F.C.I. #100-0450			
	INNER DOOR PANEL	GAMEWELL/F.C.I. #E3-BP			
	ADAPTER PLATE FOR VOICE GATEWAY	GAMEWELL/F.C.I. #90375			
	DIGITAL ALARM COMMUNICATOR/ TRANSMITTER	GAMEWELL/F.C.I. #DACT-E3			
FAT	FIRE ALARM TRANSPONDER		7165-1703:0125	INCLUDED (C)	+60" PER DETAIL #3/E4.4
	INTELLIGENT LOOP INTERFACE - MAIN BOARD	GAMEWELL/F.C.I. #ILI-MB-E3			
(D)	50W 70V AUDIO AMPLIFIER	GAMEWELL/F.C.I. #AM-50-70			
	VOICE GATEWAY	GAMEWELL/F.C.I. #IN-VGX			
	ADAPTER PLATE FOR VOICE GATEWAY	GAMEWELL/F.C.I. #90375			
	POWER SUPPLY	GAMEWELL/F.C.I. #PM-9			
	ENCLOSURE WITH SOLID DOOR	GAMEWELL/F.C.I. #E388-RC/NX			
	MOUNTING PLATE	GAMEWELL/F.C.I. #E3-NX-CPLATE			
SD	ADDRESSABLE PHOTOELECTRONIC SMOKE DETECTOR	GAMEWELL/F.C.I. #ASD-PL3/B3000-6	7272-1703:0501 7300-1653:0109	3.5" OCTAGON BOX OR 4" OCTAGON BOX WITH RAISED ROUND COVER	PER DETAIL #1/E4.4
CO	ADDRESSABLE FIRE AND CARBON MONOXIDE DETECTOR	GAMEWELL/F.C.I. #MCS-COF3/B3000-6	7272-1703:0508 7300-1653:0109	3.5" OCTAGON BOX OR 4" OCTAGON BOX WITH RAISED ROUND COVER	PER DETAIL #1/E4.4
SCM	ADDRESSABLE SUPERVISED CONTROL MODULE	GAMEWELL/F.C.I. #AOM-25F	7300-1703:0102	4" SQ. x 2 1/8" DP. OUTLET BOX	—
DMM	ADDRESSABLE DUAL MONITOR MODULE	GAMEWELL/F.C.I. #AIM-21F	7300-1703:0107	4" SQ. x 2 1/8" DP. OUTLET BOX	—
V 15 30	VISUAL STROBE, 15 CANDELA WALL MOUNTED	SYSTEM SENSOR #SWL-CLR-ALERT	7125-1653:0504	4" SQ. x 2 1/8" DP. OUTLET BOX	PER DETAIL #1/E4.4
SV 15	SPEAKER/STROBE, WALL MOUNTED (CANDELA RATING AS NOTED)	SYSTEM SENSOR #SPSWL-CLR-ALERT	7320-1653:0505	4" SQ. x 2 1/8" DP. OUTLET BOX WITH 11/2" DP. BOX EXTENSION	PER DETAIL #1/E4.4
SV 15 75	SPEAKER/STROBE, CEILING MOUNTED (CANDELA RATING AS NOTED)	SYSTEM SENSOR #SPSCWL-CLR-ALERT	7320-1653:0505	4" SQ. x 2 1/8" DP. OUTLET BOX WITH 11/2" DP. BOX EXTENSION	PER DETAIL #1/E4.4
SP W.P.	EXTERIOR SPEAKER, WALL MOUNTED	SYSTEM SENSOR #SPRK-R/WTP-SPW	7320-1653:0201	4" SQ. x 2 1/8" DP. OUTLET BOX WITH 11/2" DP. BOX EXTENSION. PROVIDE WEATHERPROOF PLATE FOR SEMI-FLUSH MOUNTING	—
(A) E.O.L.	END OF LINE RESISTOR	—	—	—	—
WF	WATERFLOW SWITCH (AT FIRE SPRINKLER RISER)	PROVIDED BY OTHERS	—	—	VERIFY EXACT LOCATION WITH FIRE SPRINKLER CONTR.
TS	TAMPER SWITCH (AT FIRE SPRINKLER RISER)	PROVIDED BY OTHERS	—	—	VERIFY EXACT LOCATION WITH FIRE SPRINKLER CONTR.
B	ELECTRIC BELL (FOR FIRE SPRINKLER RISER)	PROVIDED BY OTHERS	—	4" SQ. x 2 1/8" DP. OUTLET BOX	—
'FA' CABLE	ADDRESSABLE FIRE ALARM CABLE (INDOORS)	WEST PENN #D990	7161-0859:0101	—	—
'SFA' CABLE	ADDRESSABLE FIRE ALARM CABLE (OUTDOORS)	WEST PENN #AQ225	7161-0859:0101	—	—
'FSP' CABLE	FIRE ALARM SPEAKER CABLE	WEST PENN #9945	7161-0859:0101	—	—
'SFSP' CABLE	FIRE ALARM SPEAKER CABLE (OUTDOORS)	WEST PENN #AQC224	7161-0859:0101	—	—
'SFN' CABLE	NETWORK FIBER OPTIC CABLE (OUTDOORS)	BERK-TEK #LTRO6ABO403	—	—	—

NOTES (FIRE ALARM SYSTEM EQUIPMENT SPECIFICATIONS):

(A) END OF LINE RESISTORS FOR CONVENTIONAL DEVICES CONNECTED TO ADDRESSABLE MONITOR MODULE DEVICES AND/OR ADDRESSABLE CONTROL MODULES SHALL BE 3.9K OHM, 1/2 WATT.

(B) VERIFY BACKBOX REQUIREMENTS WITH FIRE ALARM SYSTEM EQUIPMENT SUPPLIER PRIOR TO ROUGH-IN.

(C) PROVIDE EXTERNAL BATTERY BOX, FCI #LBB AND MOUNT BELOW ENCLOSURE. PROVIDE 3/4" CHASE NIPPLE WITH 2 #12 BETWEEN ADJACENT ENCLOSURES.

(D) PROVIDE TWO 50W AMPLIFIERS.

FIRE ALARM LEVEL OF AUDIBILITY

ALARM INDICATING DEVICES OF A FIRE ALARM SYSTEM INTENDED TO ALERT ALL OCCUPANTS SHALL BE SO LOCATED AND UNOBSTRUCTED AS TO CAUSE A LEVEL OF AUDIBILITY OF NOT LESS THAN 15db ABOVE AMBIENT NOISE LEVELS MEASURED FOUR FEET ABOVE THE FLOOR INSIDE BUILDING.

AMBIENT NOISE LEVELS SHALL BE CONSTRUED TO MEAN THAT WHICH CAN NORMALLY BE EXPECTED TO EXIST WHEN THE FACILITY, BUILDING, ROOM OR AREA IS FUNCTIONING UNDER NORMAL OPERATIVE OR WORKING CONDITIONS.

THE FIRE ALARM SIGNAL SHALL COMPLY WITH THE CALIFORNIA EDUCATION CODE, SECTIONS 32000 AND 32004, AND BE A TEMPORAL PATTERN, CODE 3 AND THEN FOLLOWED BY ANY VOICE MESSAGES.

SCHOOLS FIRE ALARM REQUIREMENTS

THE FIRE ALARM SYSTEM SHALL CONFORM TO CALIFORNIA BUILDING CODE, SECTION 907.2.3; CALIFORNIA ELECTRICAL CODE, ARTICLE 760 AND CALIFORNIA FIRE CODE, CHAPTER 9, SECTION 907.

UPON COMPLETION OF THE INSTALLATION OF THE FIRE PROTECTIVE SIGNALING EQUIPMENT, A SATISFACTORY TEST OF THE ENTIRE SYSTEM SHALL BE MADE IN THE PRESENCE OF THE ENFORCING FIRE AGENCY, NFPA 72. IF TESTING RESULTS DETERMINE FIRE ALARM AUDIBILITY DOES NOT MEET 15db OVER AMBIENT NOISE LEVELS, ADDITIONAL FIRE ALARM SIGNALING DEVICES MAY BE REQUIRED BY THE ENFORCING FIRE AGENCY.

FIRE ALARM SYSTEM CERTIFICATION AND DESCRIPTION SHALL BE PROVIDED FOR TESTING AND A PLASTIC LAMINATED COPY SHALL REMAIN (WITH INSTRUCTIONS) AT THE FIRE ALARM CONTROL PANEL PER NFPA 72.

THE FIRE ALARM 'CERTIFICATE OF COMPLETION' FORM IN NFPA 72 SHALL BE COMPLETED, SIGNED AND SUBMITTED.

SCOPE OF WORK

1. PROVIDE A NEW AUTOMATIC FIRE ALARM CONTROL PANEL TO REPLACE EXISTING FIRE ALARM CONTROL PANEL. THE SYSTEM WILL BE FULLY AUTOMATIC WITH MANUAL FIRE ACTIVATION WHERE REQUIRED.
2. PROVIDE A NEW FIRE ALARM CONTROL PANEL, FIRE ALARM TRANSPONDER PANEL, ADDRESSABLE INITIATION DEVICES, NOTIFICATION APPLIANCES, CONDUIT, CABLING AND CONDUCTORS AS SHOWN ON THE DRAWINGS.

FIRE ALARM MONITORING NOTE

AUTOMATIC FIRE ALARM SYSTEMS SHALL TRANSMIT THE ALARM, SUPERVISORY AND TROUBLE SIGNALS TO AN APPROVED SUPERVISING STATION IN ACCORDANCE WITH NFPA 72. THE SUPERVISING STATION SHALL BE LISTED AS EITHER UUFX (CENTRAL STATION) OR UUJS (REMOTE AND PROPRIETARY) BY UNDERWRITERS LABORATORY (UL) OR SHALL COMPLY WITH THE REQUIREMENTS OF STANDARD FM 3011. SUPERVISION OF SYSTEM AND LEASED TELEPHONE LINES SHALL BE ARRANGED BY OWNER.

FIRE ALARM RECORD DOCUMENTS CABINET NFPA 72, 7.7.2

- EVERY NEW FIRE ALARM SYSTEM SHALL PROVIDE A DOCUMENTATION CABINET, INSTALLED AT THE SYSTEM CONTROL PANEL OR OTHER APPROVED LOCATION.
- THE DOCUMENTATION CABINET SHALL BE PROMINENTLY LABELED, 'SYSTEM RECORD DOCUMENTS'.
- ALL RECORD AND TESTING DOCUMENTATION SHALL BE STORED IN THE CABINET.
- CONTENTS SHALL BE ACCESSIBLE BY AUTHORIZED PERSONNEL ONLY.
- WHERE CABINET IS INSTALLED IN A LOCATION OTHER THAN THE SYSTEM CONTROL UNIT, ITS LOCATION SHALL BE IDENTIFIED AT THE SYSTEM CONTROL UNIT.

SYSTEM DOCUMENTS AS APPLICABLE:

- RECORD DRAWINGS/AS-BUILTS.
- EQUIPMENT CUT SHEETS AND CA SFM LISTINGS.
- ALTERNATIVE MEANS AND METHODS.
- PERFORMANCE BASED DESIGN DOCUMENTATION (NFPA 72, 7.3.7).
- SYSTEM RECORD OF COMPLETION AND ANY SUPPLEMENTAL INSPECTION AND TESTING DOCUMENTATION (NFPA 72, 7.8.2).
- EMERGENCY RESPONSE PLAN (NFPA 72, 7.3.8.).
- EVALUATION DOCUMENTATION (NFPA 72, 7.3.9.).
- RISK ANALYSIS DOCUMENTATION (NFPA 72, 7.3.6).
- SOFTWARE AND FIRMWARE CONTROL DOCUMENTATION (NFPA 72, 23.2.2).

COMPLETE AUTOMATIC FIRE ALARM SYSTEM PLAN SUBMITTAL

THE FIRE ALARM SYSTEM SHOWN ON THESE PLANS HAS BEEN SUBMITTED AND APPROVED BY THE DIVISION OF THE STATE ARCHITECT. ANY SUBSTITUTION OF THE FIRE ALARM SYSTEM SHALL BE RESUBMITTED TO THE ARCHITECT FOR REVIEW AND APPROVAL. THE CONTRACTOR SHALL PAY ANY ADDITIONAL FEES THAT ARE INCURRED DUE TO THIS SUBSTITUTION.

THE FIRE ALARM SYSTEM SHALL BE A TOTAL (COMPLETE) AUTOMATIC HEAT AND SMOKE DETECTION SYSTEM, PER C.F.C. SECTION 907.2.3.6, AND SHALL COVER EVERY ROOM AND/OR AREA. UPON THE ACTIVATION OF ANY INITIATION DEVICE THE FIRE ALARM SYSTEM SHALL ALERT ALL OCCUPANTS AND TRANSMIT THE ALARM, SUPERVISORY, AND TROUBLE SIGNALS TO AN APPROVED SUPERVISING STATION (C.F.C. SECTION 907.2.3.5).

REGISTERED PROFESSIONAL ENGINEER JOSEPH KIRK EASTHAM III No. E 19705 Exp. 6/30/25 ELECTRICAL STATE OF CALIFORNIA

Rose Sing Eastham & Associates
Electrical Consultants
131 S. Dunworth - (559)733-2671
Visalia, California 93292-6705

NEW PRESCHOOL AND TK/KINDERGARTEN CLASSROOMS AT SANTA FE ELEMENTARY SCHOOL

PORTERVILLE UNIFIED SCHOOL DISTRICT
286 E ORANGE AVENUE, PORTERVILLE, CA 93257

REVISIONS

MANGINI ARCHITECTURE INGENUITY
BARENG MORRELLI SCOTT
MANGINI ASSOCIATES INC.
4320 West Mineral King Avenue
Visalia, California 93291
www.mangini.us
(559) 627-0530 Office
(559) 627-1926 Fax

TITLE
FIRE ALARM SPECIFICATIONS, CODES AND NOTES

E4.1

PROJECT 23076

Z:\Drafting\Jobs\RSS\SCHOOLS\Portervile\Santa Fe Elementary\E4.1.dwg DATE SAVED: 06/11/24 By: Casey DATE PLOTTED: 06/21/24 JOB # 23-093-JJ

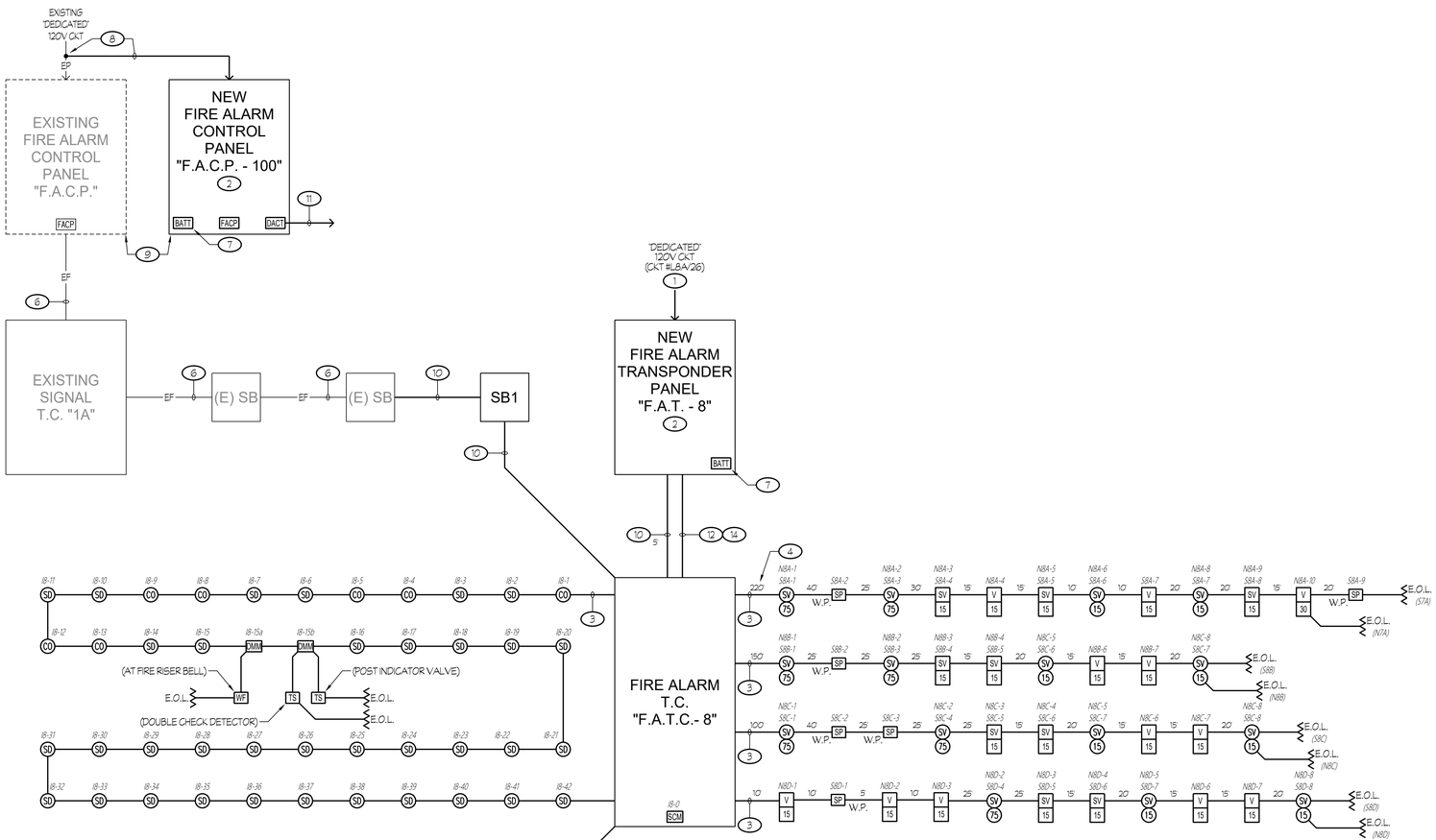

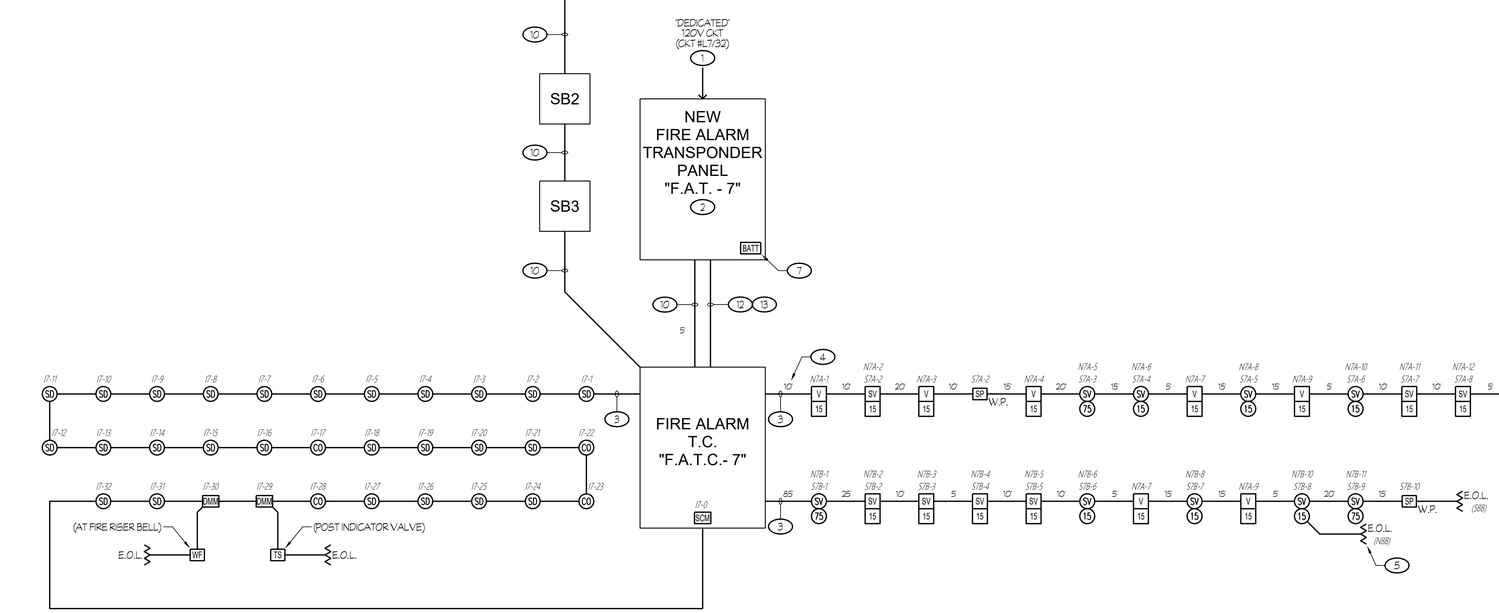

1 FIRE ALARM SYSTEM RISER DIAGRAM

NTS

NOTES (THIS SHEET ONLY):

1. CIRCUIT BREAKER SHALL BE EQUIPPED WITH A LOCK-ON ACCESSORY. PROVIDE AN ENGRAVED NAMEPLATE: "FIRE ALARM - LEAVE ON". NAMEPLATE SHALL HAVE WHITE LETTERS ON A RED BACKGROUND. PAINT HANDLE OR LOCK-ON ACCESSORY "RED" IN COLOR.
2. PROVIDE A COPY OF THE BATTERY CALCULATION FOR THE "RESPECTIVE" POWER EXPANDER PANEL (OR THE FIRE ALARM CONTROL PANEL "F.A.C.P."). THE BATTERY CALCULATION SHALL CONTAIN INFORMATION (AS NOTED ON THESE PLANS) AND BE PLASTIC LAMINATED. MOUNT ONTO INSIDE FACE OF PANEL DOOR.
3. REFER TO RESPECTIVE FIRE ALARM PLAN FOR CONDUIT AND CABLING/ CONDUCTOR REQUIREMENTS, TYPICAL.
4. LENGTHS INDICATED WERE USED FOR CALCULATIONS/DESIGN PURPOSES ONLY AND BASED UPON THE "DIAGRAMMATIC" LAYOUT SHOWN ON THE DRAWINGS. LENGTHS SHALL NOT BE USED FOR BIDDING.
5. DENOTES END OF LINE RESISTOR ON NOTIFICATION APPLIANCE CIRCUIT. RESISTORS SUPPLIED WITH CONTROL/EXPANDER PANELS AS REQUIRED. LOCATE RESISTORS AT END OF LINE APPLIANCES (CLASS 'B' WIRING), TYPICAL.
6. EXISTING TWO SPARE 2"C. IN ONE EXISTING SPARE 2"C, PULL IN THREE "SFA" CABLES. THE OTHER IS TO REMAIN A SPARE.
7. BATTERIES PER FIRE ALARM BATTERY CALCULATION ON SHEET #E4.3.
8. USE EXISTING CIRCUIT TO CONNECT NEW FIRE ALARM CONTROL PANEL "F.A.C.P. - 100". CONTRACTOR TO FIELD VERIFY THAT EXISTING CIRCUIT BREAKER IS EQUIPPED WITH A LOCK-ON ACCESSORY, HAS AN ENGRAVED NAMEPLATE THAT READS: "FIRE ALARM - LEAVE ON" WITH WHITE LETTERS AND A RED BACKGROUND AND THAT THE HANDLE OR LOCK-ACCESSORY IS "RED" IN COLOR. CONTRACTOR TO PROVIDE THESE ITEMS IF ANY ARE NOT PRESENT.
9. DISCONNECT, REMOVE AND RETURN EXISTING FIRE ALARM CONTROL PANEL TO THE OWNER. INSTALL NEW FIRE ALARM CONTROL IN ITS PLACE AND RECONNECT ALL EXISTING CONDUIT AND WIRING.
10. 1 1/4"C - THREE "SFA" CABLES, 2 #14 (AUX. POWER FOR SOUNDER BASE).
11. RUN A 3/4"C - TWO DEDICATED PHONE LINES TO CONNECT TO OFF SITE MONITORING.
12. 1 1/2"C SPARE (WITH NYLON PULL ROPE).
13. 1 1/2"C - 2 "FSP" CABLES, 4 #12.
14. 1 1/2"C - 2 "FSP" CABLES, 8 #12.

COMPLETE AUTOMATIC FIRE ALARM SYSTEM PLAN SUBMITTAL

THE FIRE ALARM SYSTEM SHOWN ON THESE PLANS HAS BEEN SUBMITTED AND APPROVED BY THE DIVISION OF THE STATE ARCHITECT. ANY SUBSTITUTION OF THE FIRE ALARM SYSTEM SHALL BE RESUBMITTED TO THE ARCHITECT FOR REVIEW AND APPROVAL. THE CONTRACTOR SHALL PAY ANY ADDITIONAL FEES THAT ARE INCURRED DUE TO THIS SUBSTITUTION.

THE FIRE ALARM SYSTEM SHALL BE A TOTAL (COMPLETE) AUTOMATIC HEAT AND SMOKE DETECTION SYSTEM, PER C.F.C. SECTION 907.2.3.6, AND SHALL COVER EVERY ROOM AND/OR AREA. UPON THE ACTIVATION OF ANY INITIATION DEVICE THE FIRE ALARM SYSTEM SHALL ALERT ALL OCCUPANTS AND TRANSMIT THE ALARM, SUPERVISORY, AND TROUBLE SIGNALS TO AN APPROVED SUPERVISING STATION (C.F.C. SECTION 907.2.3.5).

APPROVALS

FILE # 54-76 | APPLICATION # 02-121996

IDENTIFICATION STAMP
DIV. OF THE STATE ARCHITECT
APP: 02-121996 INC:
REVIEWED FOR
SS ☑ FLS ☑ ACS ☑
DATE: 8/14/2024

LICENSED ARCHITECT
MICHAEL J. SCOTT
No. C-34290
REN. 05-31-25
STATE OF CALIFORNIA

DATE: DECEMBER 31, 2023

NEW PRESCHOOL AND TK/KINDERGARTEN CLASSROOMS AT SANTA FE ELEMENTARY SCHOOL

PORTERVILLE UNIFIED SCHOOL DISTRICT
286 E ORANGE AVENUE, PORTERVILLE, CA 93257

REVISIONS

MANGINI ARCHITECTURE INGENUITY
BARENG MORRELLI SCOTT
MANGINI ASSOCIATES INC.
4320 West Mineral King Avenue
Visalia, California 93291
www.mangini.us
(559) 627.0530 Office
(559) 627.1928 Fax

TITLE
FIRE ALARM SYSTEM RISER DIAGRAM

E4.2

PROJECT 23076

REGISTERED PROFESSIONAL ENGINEER
BRIAN KIRK EASTHAM
No. E-19766
Exp. 6/30/25
ELECTRICAL
STATE OF CALIFORNIA

Rose Sing Eastham & Associates
Electrical Consultants
131 S. Dunworth – (559)733-2671
Visalia, California 93292-6705

Z:\Portfolio\Jobs\PES\SCHOOLS\Porterville\Santa Fe Elementary\E4.2.dwg DATE SAVED: 06/11/24 BY: Casey DATE PLOTTED: 06/21/24 JOB # 23-093-JJ

APPROVALS

FILE # 54-76 | APPLICATION # 02-121996

IDENTIFICATION STAMP
DIV. OF THE STATE ARCHITECT
APP: 02-121996 INC:
REVIEWED FOR
SS ☑ FLS ☑ ACS ☑
DATE: 8/14/2024

LICENSED ARCHITECT
MICHAEL J. SCOTT
No. C-34290
REN. 05-31-25
STATE OF CALIFORNIA

DATE: DECEMBER 31, 2023

VOLTAGE DROP CALCULATIONS (OHM'S LAW)

VOLTAGE DROP = 2 (DC RESISTANCE AT 75°C FROM TABLE 8, C.E.C.) (LENGTH OF CIRCUIT / 1000) (CURRENT / 1)

PERCENT VOLTAGE DROP = VOLTAGE DROP / NOMINAL VOLTAGE x 100

1. NOTIFICATION APPLIANCE CIRCUIT 'N74':

SV 15 : 3 x 0.066 A = 0.198 A

SV 75 : 2 x 0.158 A = 0.316 A

V 15 : 5 x 0.043 A = 0.215 A

SV 15 : 5 x 0.043 A = 0.215 A / 0.944 A

VOLTAGE DROP = 2 (1.98) (200 / 1000) (0.944) = 0.748 V.D.

PERCENT VOLTAGE DROP = 0.748 / 24 x 100 = 3.117 %

VOLTAGE DROP CALCULATIONS (OHM'S LAW)

VOLTAGE DROP = 2 (DC RESISTANCE AT 75°C FROM TABLE 8, C.E.C.) (LENGTH OF CIRCUIT / 1000) (CURRENT / 1)

PERCENT VOLTAGE DROP = VOLTAGE DROP / NOMINAL VOLTAGE x 100

1. NOTIFICATION APPLIANCE CIRCUIT 'N78':

SV 15 : 3 x 0.066 A = 0.198 A

SV 75 : 2 x 0.158 A = 0.316 A

V 15 : 2 x 0.043 A = 0.086 A

SV 15 : 4 x 0.043 A = 0.172 A / 0.772 A

VOLTAGE DROP = 2 (1.98) (205 / 1000) (0.772) = 0.627 V.D.

PERCENT VOLTAGE DROP = 0.627 / 24 x 100 = 2.613 %

VOLTAGE DROP CALCULATIONS (OHM'S LAW)

VOLTAGE DROP = 2 (DC RESISTANCE AT 75°C FROM TABLE 8, C.E.C.) (LENGTH OF CIRCUIT / 1000) (CURRENT / 1)

PERCENT VOLTAGE DROP = VOLTAGE DROP / NOMINAL VOLTAGE x 100

1. NOTIFICATION APPLIANCE CIRCUIT 'N84':

SV 15 : 2 x 0.066 A = 0.132 A

SV 75 : 2 x 0.158 A = 0.316 A

V 15 : 2 x 0.043 A = 0.086 A

V 30 : 1 x 0.063 A = 0.063 A

SV 15 : 3 x 0.043 A = 0.129 A / 0.726 A

VOLTAGE DROP = 2 (1.98) (380 / 1000) (0.726) = 1.092 V.D.

PERCENT VOLTAGE DROP = 1.092 / 24 x 100 = 4.6 %

VOLTAGE DROP CALCULATIONS (OHM'S LAW)

VOLTAGE DROP = 2 (DC RESISTANCE AT 75°C FROM TABLE 8, C.E.C.) (LENGTH OF CIRCUIT / 1000) (CURRENT / 1)

PERCENT VOLTAGE DROP = VOLTAGE DROP / NOMINAL VOLTAGE x 100

1. NOTIFICATION APPLIANCE CIRCUIT 'N89':

SV 15 : 2 x 0.066 A = 0.132 A

SV 75 : 2 x 0.158 A = 0.316 A

V 15 : 2 x 0.043 A = 0.086 A

SV 15 : 2 x 0.043 A = 0.086 A / 0.620 A

VOLTAGE DROP = 2 (1.98) (285 / 1000) (0.620) = 0.7 V.D.

PERCENT VOLTAGE DROP = 0.7 / 24 x 100 = 2.9 %

VOLTAGE DROP CALCULATIONS (OHM'S LAW)

VOLTAGE DROP = 2 (DC RESISTANCE AT 75°C FROM TABLE 8, C.E.C.) (LENGTH OF CIRCUIT / 1000) (CURRENT / 1)

PERCENT VOLTAGE DROP = VOLTAGE DROP / NOMINAL VOLTAGE x 100

1. NOTIFICATION APPLIANCE CIRCUIT 'N80':

SV 15 : 2 x 0.066 A = 0.132 A

SV 75 : 1 x 0.158 A = 0.158 A

V 15 : 5 x 0.043 A = 0.215 A

SV 15 : 2 x 0.043 A = 0.086 A / 0.591 A

VOLTAGE DROP = 2 (1.98) (160 / 1000) (0.591) = 0.374 V.D.

PERCENT VOLTAGE DROP = 0.374 / 24 x 100 = 1.6 %

NEW FIRE ALARM CONTROL PANEL "F.A.C.P. - 100" BATTERY CALCULATION

DESCRIPTION	QUANTITY	SUPV. CURRENT EACH	SUPV. CURRENT SUB-TOTAL	ALARM CURRENT EACH	ALARM CURRENT SUB-TOTAL
FIRE ALARM CONTROL PANEL	1	0.336	0.336	0.409	0.408
SMOKE DETECTOR	61	0.0003	0.0183	0.0065	0.3965
CARBON MONOXIDE DETECTOR	11	0.00030	0.0033	0.0072	0.0792
SUPV. CONTROL MODULE	2	0.0003	0.0006	0.0003	0.0006
DUAL MONITOR MODULE	4	0.0075	0.03	0.0057	0.0228
	TOTALS		0.3882		0.9071

TOTAL ALARM CURRENT OF 0.9071 x 0.250 (15 MINUTES) = 0.2268 A.H.
TOTAL SUPERVISORY CURRENT OF 0.3882 x 24 HOURS = 8.1168 A.H.
TOTAL AMP HOURS REQUIRED 8.3436 A.H.
x 1.25 SAFETY FACTOR
10.4295 A.H.

PROVIDE 12.0 AMP HOUR BATTERIES.

NEW FIRE ALARM TRANSPONDER PANEL "F.A.T. - 7" BATTERY CALCULATION

	DESCRIPTION	QUANTITY	SUPV. CURRENT EACH	SUPV. CURRENT SUB-TOTAL	ALARM CURRENT EACH	ALARM CURRENT SUB-TOTAL
	TRANSPONDER PANEL	1	0.466	0.466	4.775	4.775
(A)	SPEAKER/15cd STROBE (CEILING)	6	—	—	0.041	0.246
(A)	SPEAKER/75cd STROBE (CEILING)	4	—	—	0.111	0.444
	15cd STROBE (WALL)	7	—	—	0.043	0.301
(A)	SPEAKER/15cd STROBE (WALL)	9	—	—	0.043	0.387
		TOTALS		0.466		6.153

TOTAL ALARM CURRENT OF 6.153 x 0.250 (15 MINUTES) = 1.538 A.H.
TOTAL SUPERVISORY CURRENT OF 0.466 x 24 HOURS = 11.184 A.H.
TOTAL AMP HOURS REQUIRED 12.722 A.H.
x 1.25 SAFETY FACTOR
15.903 A.H.

PROVIDE 18.0 AMP HOUR BATTERIES.

(A) THE CURRENT VALUES LISTED ARE FOR THE STROBES ONLY. THE SPEAKER CURRENT IS INCLUDED IN THE VALUES LISTED UNDER THE DIGITAL AMPLIFIER.

NEW FIRE ALARM TRANSPONDER PANEL "F.A.T. - 8" BATTERY CALCULATION

	DESCRIPTION	QUANTITY	SUPV. CURRENT EACH	SUPV. CURRENT SUB-TOTAL	ALARM CURRENT EACH	ALARM CURRENT SUB-TOTAL
	TRANSPONDER PANEL	1	0.466	0.466	4.775	4.775
(A)	SPEAKER/15cd STROBE (CEILING)	8	—	—	0.041	0.328
(A)	SPEAKER/75cd STROBE (CEILING)	7	—	—	0.111	0.777
	15cd STROBE (WALL)	11	—	—	0.043	0.473
	30cd STROBE (WALL)	1	—	—	0.063	0.063
(A)	SPEAKER/15cd STROBE (WALL)	9	—	—	0.043	0.387
		TOTALS		0.466		6.803

TOTAL ALARM CURRENT OF 6.803 x 0.250 (15 MINUTES) = 1.701 A.H.
TOTAL SUPERVISORY CURRENT OF 0.466 x 24 HOURS = 11.184 A.H.
TOTAL AMP HOURS REQUIRED 12.885 A.H.
x 1.25 SAFETY FACTOR
16.106 A.H.

PROVIDE 18.0 AMP HOUR BATTERIES.

(A) THE CURRENT VALUES LISTED ARE FOR THE STROBES ONLY. THE SPEAKER CURRENT IS INCLUDED IN THE VALUES LISTED UNDER THE DIGITAL AMPLIFIER.

SPEAKER dB LOSS CALCULATION

SPEAKER CIRCUIT	SPEAKER VOLTAGE	WIRE SIZE	RESISTANCE PER FOOT	FEET REQUIRED ON CIRCUIT	WIRE RESISTANCE	TOTAL WATTAGE OF SPEAKERS ON CIRCUIT	SPEAKER CURRENT (AMPS)	RESISTANCE OF SPEAKER LOAD	WIRE SIZE	ACTUAL VOLTAGE AT SPEAKER LOAD	ACTUAL WATTS AT SPEAKER LOAD	dB LOSS
S7A	70	18	0.01278	265	3.39	16	0.23	306.25	18	69.23436	15.6519091	-0.10
S7B	70	18	0.01278	220	2.81	11	0.16	445.45	18	69.56095	10.8624451	-0.05
S8A	70	18	0.01278	440	5.62	11	0.16	445.45	18	69.12737	10.7274543	-0.11
S8B	70	18	0.01278	310	3.96	7	0.10	700.00	18	69.60605	6.92143164	-0.05
S8C	70	18	0.01278	300	3.83	9	0.13	544.44	18	69.5105	8.87456974	-0.06
S8D	70	18	0.01278	170	2.17	9	0.13	544.44	18	69.72178	8.92859886	-0.03

NOTE:
CALCULATION IS BASED ON EACH OF THE 'INTERIOR' SPEAKERS TAPPED AT 1 WATT AND EACH OF THE 'EXTERIOR' SPEAKERS TAPPED AT 2 WATTS.

Rose Sing Eastham & Associates
Electrical Consultants
131 S. Dunworth - (559)733-2671
Visalia, California 93292-6705

REGISTERED PROFESSIONAL ENGINEER
JOSEPH KIRK EASTHAM
No. E-19786
Exp. 6/30/25
ELECTRICAL
STATE OF CALIFORNIA

NEW PRESCHOOL AND TK/KINDERGARTEN CLASSROOMS AT SANTA FE ELEMENTARY SCHOOL

PORTERVILLE UNIFIED SCHOOL DISTRICT
286 E ORANGE AVENUE, PORTERVILLE, CA 93257

REVISIONS

MANGINI ARCHITECTURE INGENUITY
BARENG MORRELLI SCOTT
MANGINI ASSOCIATES INC.
4320 West Mineral King Avenue
Visalia, California 93291
www.mangini.us
(559) 627-0530 Office
(559) 627-1926 Fax

TITLE
FIRE ALARM CALCULATIONS

E4.3

PROJECT 23076

Z:\Drafting\Jobs\RSES\SCHOOLS\Portervile\Santa Fe Elementary\E4.3.dwg DATE SAVED: 06/11/24 By: Casey DATE PLOTTED: 06/21/24 JOB # 23-093-U

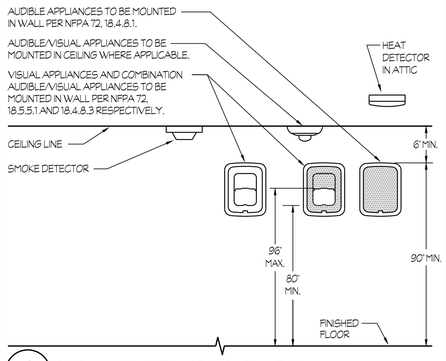

1 FIRE ALARM DEVICES ELEVATION

NTS

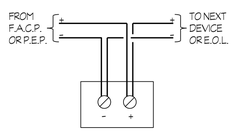

STROBE OR SPEAKER

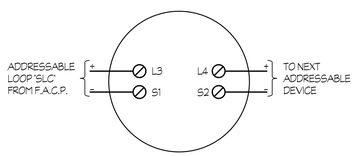

SMOKE OR HEAT DETECTOR

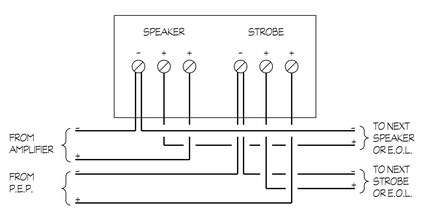

SPEAKER/STROBE

2 FIRE ALARM SYSTEM WIRING DIAGRAMS

NTS

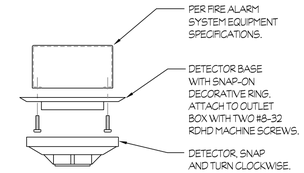

ADDRESSABLE SMOKE OR HEAT DETECTOR

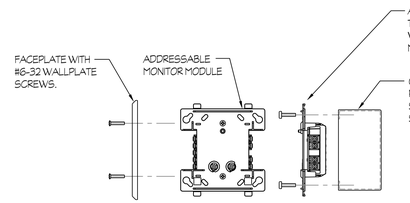

ADDRESSABLE MONITOR MODULE
(SIMILAR MOUNTING FOR ADDRESSABLE DUAL MONITOR, SUPERVISED OUTPUT, AND RELAY CONTROL MODULES)

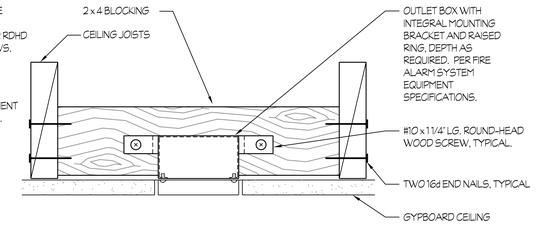

OUTLET BOX MOUNTING AT CEILING JOIST
(SIMILAR MOUNTING FOR OUTLET BOX BETWEEN WOOD STUDS)

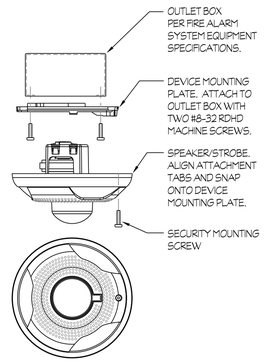

CEILING SPEAKER/STROBE

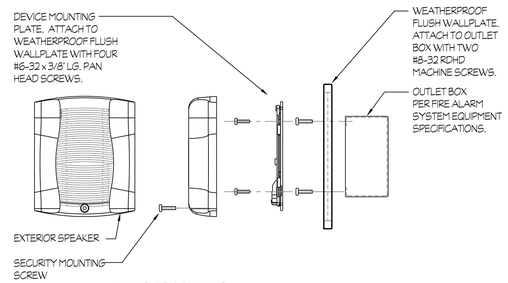

EXTERIOR SPEAKER
(WITH WEATHERPROOF FLUSH WALLPLATE 'WTP')

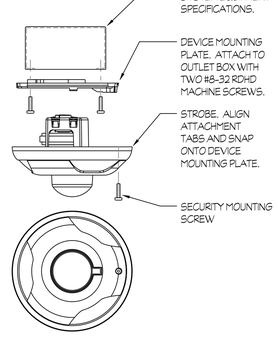

CEILING STROBE

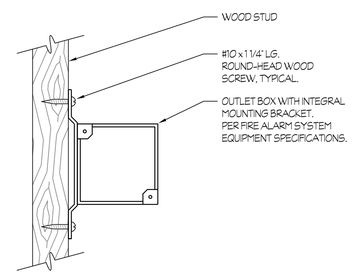

OUTLET BOX MOUNTING ONTO WOOD STUD
(SIMILAR MOUNTING FOR OUTLET BOX AT CEILING JOISTS)

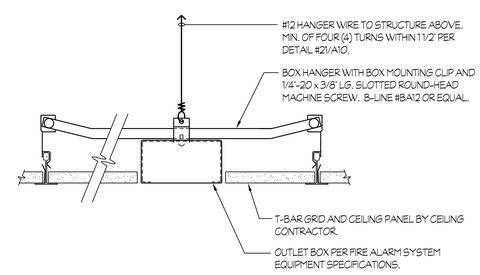

OUTLET BOX MOUNTING AT SUSPENDED T-BAR CEILING

4 FIRE ALARM DEVICES MOUNTING

NTS

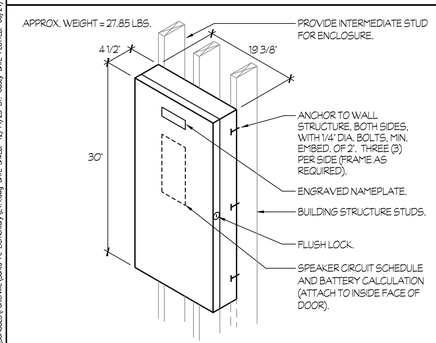

3 FIRE ALARM TRANSPONDER PANEL MOUNTING

NTS

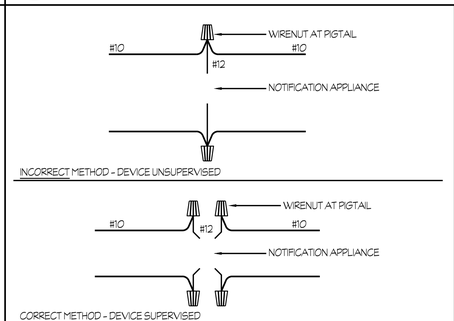

5 PIGTAIL WIRING DETAIL

NTS

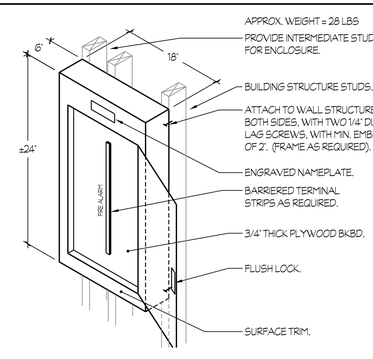

6 FIRE ALARM T.C. "F.A.T.C." MOUNTING

NTS

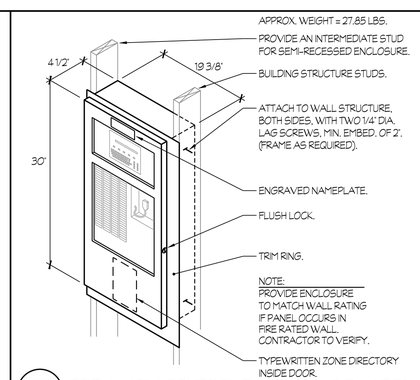

7 FIRE ALARM CONTROL PANEL "F.A.C.P. - 100"

NTS

APPROVALS

FILE # 54-76 | APPLICATION # 02-121996

IDENTIFICATION STAMP
DIV. OF THE STATE ARCHITECT
APP: 02-121996 INC:
REVIEWED FOR
SS ☑ FLS ☑ ACS ☑
DATE: 8/14/2024

LICENSED ARCHITECT
MICHAEL J. SCOTT
No. C-34290
REN. 05-31-25
STATE OF CALIFORNIA

DATE: DECEMBER 31, 2023

NEW PRESCHOOL AND TK/KINDERGARTEN CLASSROOMS AT SANTA FE ELEMENTARY SCHOOL

PORTERVILLE UNIFIED SCHOOL DISTRICT

286 E ORANGE AVENUE, PORTERVILLE, CA 93257

REVISIONS

MANGINI ARCHITECTURE INTERIORS
BARENG MORRELLI SCOTT
MANGINI ASSOCIATES INC.
4320 West Mineral King Avenue
Visalia, California 93291
www.mangini.us
(559) 627-0530 Office
(559) 627-1926 Fax

TITLE
FIRE ALARM DETAILS

E4.4

PROJECT 23076

Rose Sing Eastham & Associates
Electrical Consultants
131 S. Dunworth - (559)733-2671
Visalia, California 93292-6705

REGISTERED PROFESSIONAL ENGINEER
ROSEMARY KIRK EASTHAM
No. E-16766
Exp. 6/30/25
ELECTRICAL
STATE OF CALIFORNIA

Z:\Drafting\Jobs\RSE\534003.3\Portervile\Santa Fe Elementary\E4.4.dwg [XREF: SIMED: 12/14/23 BY: Casey DATE PLOTTED: 10/21/24 JOB #: 23-093-U

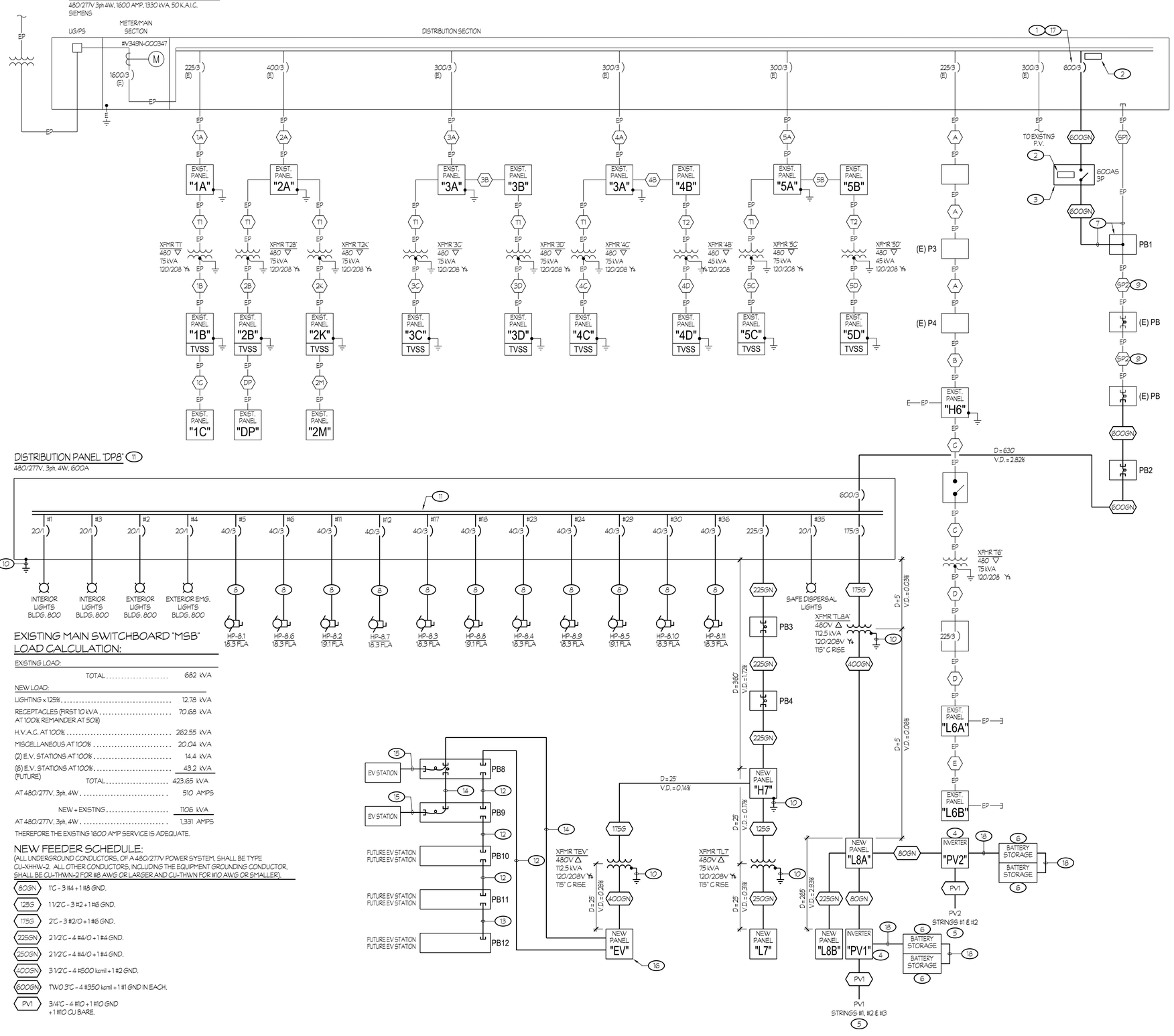

1 ONE LINE DIAGRAM

NTS

NOTES (THIS SHEET ONLY):

1. PROVIDE NEW CIRCUIT BREAKER AS SHOWN. A.I.C. RATING TO MATCH EXISTING.
2. PROVIDE SOLAR NAME PLATE AS REQUIRED BY C.E.C.. SEE SHEET #E5.5. FOR ADDITIONAL INFORMATION.
3. PROVIDE WEATHERPROOF VISIBLE STYLE DISCONNECT SWITCH PER UTILITY REQUIREMENTS.
4. PROVIDE SOL-ARC HYBRID INVERTER #15K-2P-N. CONNECT PV STRING CIRCUITS PER MANUFACTURER REQUIREMENTS.
5. PROVIDE 415W PV MODULES AS MANUFACTUERED BY Q CELLS, MODEL Q.PEAK DUO ML-G10+ AND SOL-ARK OPTIMIZER #0900-80V AT EACH UNIT. REFER TO PLANS FOR QUANTITY AND LOCATION OF MODULES.
6. PROVIDE EG4 ELECTRONICS 15 kWh BATTERY STORAGE SYSTEM. CONNECT TO SYSTEM PER MANUFACTURER REQUIREMENTS.
7. INTERCEPT TWO EXISTING SPARE 3"C WITH NEW PULL BOX AND EXTEND AS SHOWN. PULL IN NEW CONDUCTORS PER FEEDER (600GN).
8. SEE ROOF ELECTRICAL PLAN ON SHEET #E2.3 FOR CONDUIT AND FEEDER INFORMATION.
9. IN TWO EXISTING SPARE 3"C PULL IN NEW CONDUCTORS PER FEEDER (600GN).
10. BONDING AND GROUNDING PER DETAIL #6/E5.3.
11. BUSSING TO BE RATED AT 800 AMPS.
12. TWO 1 1/4"C SPARES (WITH NYLON PULL ROPE) FOR FUTURE E.V. CHARGING STATIONS.
13. 1 1/4"C SPARE (WITH NYLON PULL ROPE) FOR FUTURE E.V. CHARGING STATION.
14. 1"C - 4 #8 + 1 #10 GND.
15. 1"C - 2 #8 + 1 #10 GND.
16. PROVIDE AN ENGRAVED NAMEPLATE THAT READS: FOR EV CHARGING STATIONS ONLY. NO OTHER LOADS PERMITTED.
17. PV BREAKER PLACED IN LAST POSITION, FARTHEST FROM MAIN BREAKER.
18. 1 1/2"C - 3 #4 + 1 #8 GND + 1 #CAT. "5e" CABLE.

EXISTING MAIN SWITCHBOARD "MSB" LOAD CALCULATION:

EXISTING LOAD:

TOTAL	682 kVA

NEW LOAD:

LIGHTING x 125%	12.78 kVA
RECEPTACLES (FIRST 10 kVA AT 100% REMAINDER AT 50%)	70.68 kVA
H.V.A.C. AT 100%	262.55 kVA
MISCELLANEOUS AT 100%	20.04 kVA
(2) E.V. STATIONS AT 100%	14.4 kVA
(6) E.V. STATIONS AT 100% (FUTURE)	43.2 kVA
TOTAL	423.65 kVA
AT 480/277V, 3ph, 4W	510 AMPS
NEW + EXISTING	1106 kVA
AT 480/277V, 3ph, 4W	1,331 AMPS

THEREFORE THE EXISTING 1600 AMP SERVICE IS ADEQUATE.

NEW FEEDER SCHEDULE:

(ALL UNDERGROUND CONDUCTORS, OF A 480/277V POWER SYSTEM, SHALL BE TYPE CU-XHHW-2. ALL OTHER CONDUCTORS, INCLUDING THE EQUIPMENT GROUNDING CONDUCTOR, SHALL BE CU-THWN-2 FOR #5 AWG OR LARGER AND CU-THWN FOR #10 AWG OR SMALLER).

80GN	1"C - 3 #4 + 1 #8 GND.
125G	1 1/2"C - 3 #2 + 1 #6 GND.
175G	2"C - 3 #2/0 + 1 #6 GND.
225GN	2 1/2"C - 4 #4/0 + 1 #4 GND.
250GN	2 1/2"C - 4 #4/0 + 1 #4 GND.
400GN	3 1/2"C - 4 #500 kcmil + 1 #2 GND.
600GN	TWO 3"C - 4 #350 kcmil + 1 #1 GND IN EACH.
PV1	3/4"C - 4 #10 + 1 #10 GND + 1 #10 CU BARE.

EXISTING FEEDER SCHEDULE:

A	EXISTING 3"C - 4 #350 kcmil + 1 #1 GND (CU-XHHW-2).
B	EXISTING 3 1/2"C - 4 #350 kcmil + 1 #1 GND (CU-XHHW-2).
C	EXISTING 1 1/2"C - 3 #1 + 1 #6 GND.
D	EXISTING 2 1/2"C - 4 #4/0 + 1 #4 EQUIP. GND + 1 #4 ISO. GND.
E	EXISTING 1 1/2"C - 4 #2 + 1 #8 GND.
1A	EXISTING 2 1/2"C - 4 #4/0 + 1 #4 GND.
1B	EXISTING 3"C - 3 #4/0 + 2 #4/0 (NEUT) + 1 #4 GND.
1C	EXISTING 2"C - 3 #2 + 1 #3/0 (NEUT) + 1 #8 GND.
2A	EXISTING TWO 2 1/2"C - 4 #3/0 + 1 #2 GND IN EACH.
2B	EXISTING 3"C - 3 #4/0 + 2 #4/0 (NEUT) + 1 #4 GND.
2K	EXISTING 3"C - 3 #4/0 + 2 #4/0 (NEUT) + 1 #4 GND.
3A	EXISTING TWO 2"C - 4 #1/0 + 1 #4 GND IN EACH.
3B	EXISTING 2"C - 4 #1 + 1 #6 GND.
3C	EXISTING 3"C - 3 #4/0 + 2 #4/0 (NEUT) + 1 #4 GND.
3D	EXISTING 3"C - 3 #4/0 + 2 #4/0 (NEUT) + 1 #4 GND.
4A	EXISTING TWO 2 1/2"C - 4 #3/0 + 1 #2 GND IN EACH.
4B	EXISTING 2"C - 4 #1 + 1 #6 GND.
4C	EXISTING 3"C - 3 #4/0 + 2 #4/0 (NEUT) + 1 #4 GND.
4D	EXISTING 3"C - 3 #4/0 + 2 #4/0 (NEUT) + 1 #4 GND.
5A	EXISTING TWO 2"C - 4 #1/0 + 1 #4 GND IN EACH.
5B	EXISTING 2"C - 4 #1 + 1 #6 GND.
5C	EXISTING 3"C - 3 #4/0 + 2 #4/0 (NEUT) + 1 #4 GND.
5D	EXISTING 3"C - 3 #4/0 + 2 #4/0 (NEUT) + 1 #4 GND.
T1	EXISTING 1 1/4"C - 3 #2 + 1 #8 GND.
T2	EXISTING 1 1/4"C - 3 #4 + 1 #10 GND.
SP1	EXISTING FOUR SPARE 3"C.
SP2	EXISTING TWO SPARE 3"C.

APPROVALS

FILE # 54-76 APPLICATION # 02-121996

IDENTIFICATION STAMP
DIV. OF THE STATE ARCHITECT
APP: 02-121996 INC:
REVIEWED FOR
SS ☑ FLS ☑ ACS ☑
DATE: 8/14/2024

LICENSED ARCHITECT MICHAEL J. SCOTT No. C-34290 REN. 05-31-25 STATE OF CALIFORNIA

DATE: DECEMBER 31, 2023

TK/KINDERGARTEN CLASSROOMS AT SANTA FE ELEMENTARY SCHOOL

PORTERVILLE UNIFIED SCHOOL DISTRICT

286 E ORANGE AVENUE, PORTERVILLE, CA 93257

REVISIONS

MANGINI ARCHITECTURE ENGINEERING
BARENG MORRELLI SCOTT
MANGINI ASSOCIATES INC.
4320 West Mineral King Avenue
Visalia, California 93291
www.mangini.us
(559) 627-0530 Office
(559) 627-1926 Fax

TITLE: ONE LINE DIAGRAM

E5.1

PROJECT 23076

REGISTERED PROFESSIONAL ENGINEER KIRK EASTHAM No. E-16766 Exp. 6/30/25 ELECTRICAL STATE OF CALIFORNIA
Rose Sing Eastham & Associates
Electrical Consultants
131 S. Dunworth – (559)733-2671
Visalia, California 93292-6705

Z:\Drafting\Jobs\RSE\SCHOOLS\Portervile\Santa Fe Elementary\E5.1.dwg DATE SAVED: 06/18/24 BY: Casey DATE PLOTTED: 06/21/24 JOB #: 23-093-U

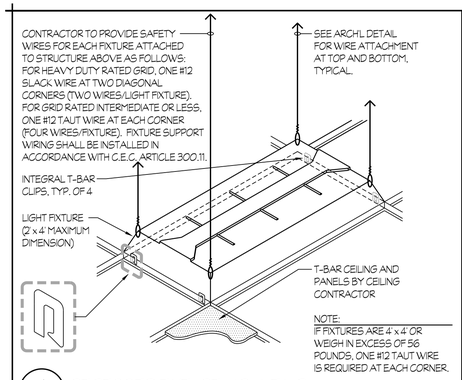

1 RECESSED FIXTURE MOUNTING

NTS

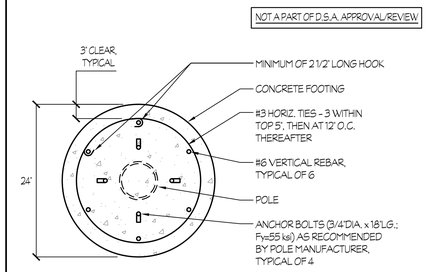

5 CROSS SECTION OF CONCRETE FOOTING

NTS

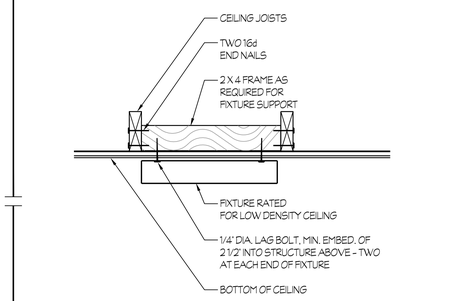

2 SURFACE FIXTURE MOUNTING

NTS

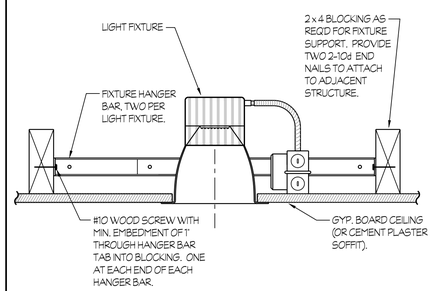

6 RECESSED DOWNLIGHT MOUNTING

NTS

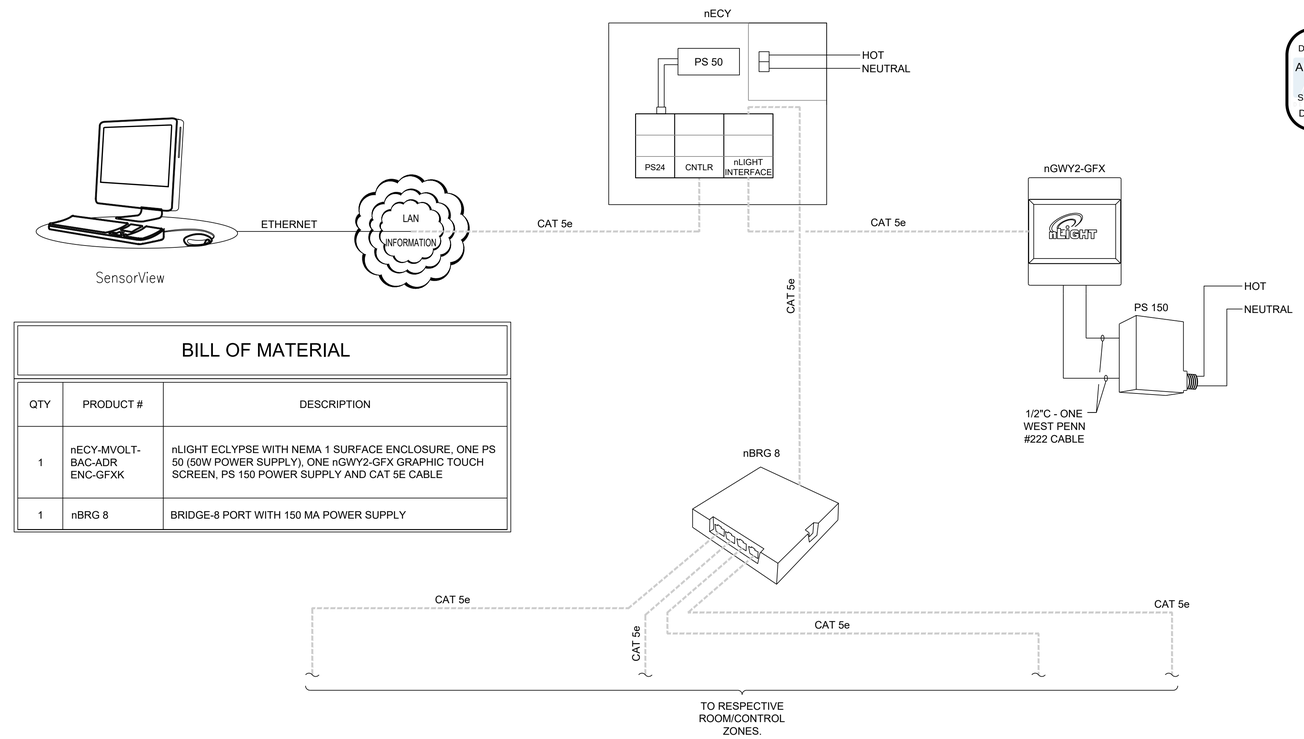

BILL OF MATERIAL

QTY	PRODUCT #	DESCRIPTION
1	nECY-MVOLT-BAC-ADR ENC-GFXK	nLIGHT ECLYPSE WITH NEMA 1 SURFACE ENCLOSURE, ONE PS 50 (50W POWER SUPPLY), ONE nGWY2-GFX GRAPHIC TOUCH SCREEN, PS 150 POWER SUPPLY AND CAT 5E CABLE
1	nBRG 8	BRIDGE-8 PORT WITH 150 MA POWER SUPPLY

8 AUTOMATED DEMAND RESPONSE CLIENT INTERFACE AND NETWORK INTERFACE CONTROLLER

(WIRING DIAGRAM)

NTS

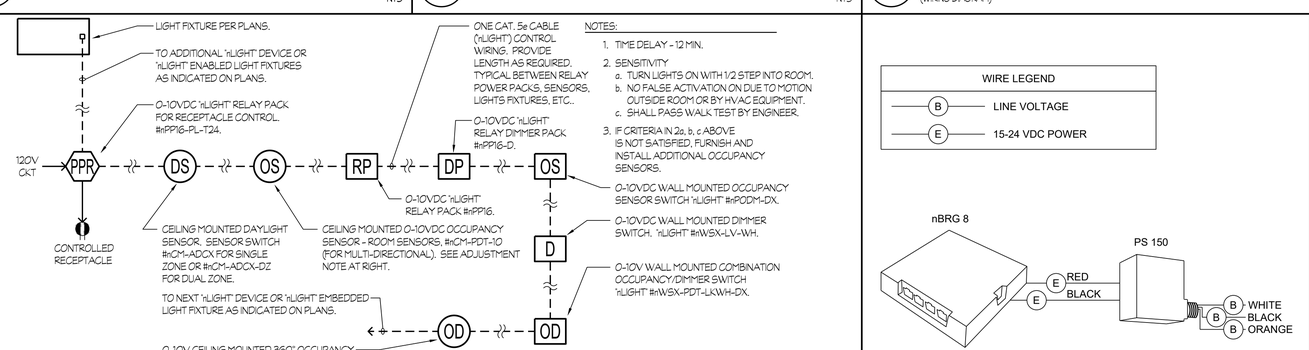

NOTES:

1. TIME DELAY - 12 MIN.
2. SENSITIVITY
   a. TURN LIGHTS ON WITH 1/2 STEP INTO ROOM.
   b. NO FALSE ACTIVATION ON DUE TO MOTION OUTSIDE ROOM OR BY HVAC EQUIPMENT.
   c. SHALL PASS WALK TEST BY ENGINEER.
3. IF CRITERIA IN 2a, b, c ABOVE IS NOT SATISFIED, FURNISH AND INSTALL ADDITIONAL OCCUPANCY SENSORS.

3 SENSOR SWITCH, "nLIGHT" DEVICES WIRING DIAGRAM

(NOTE: ACTUAL SEQUENCE OF DEVICES IS TO BE PER PLANS)

NTS

WIRE LEGEND

B	LINE VOLTAGE
E	15-24 VDC POWER

9 NETWORK INTERFACE BRIDGE KIT

(WIRING DIAGRAM)

NTS

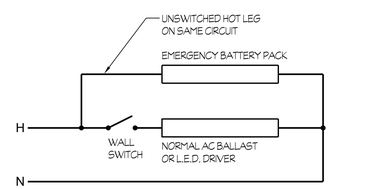

CONNECT LIGHT FIXTURE SO THAT THE L.E.D. DRIVER (OR ALL OF THE LAMPS) ARE CONTROLLED BY THE WALL SWITCH AND THE L.E.D. DRIVER (OR LAMPS) CONNECTED TO THE EMERGENCY BATTERY PACK WILL OPERATE DURING NORMAL POWER OUTAGE REGARDLESS OF THE POSITION OF THE WALL SWITCH.

4 EMERGENCY BATTERY PACK WIRING DIAGRAM

NTS

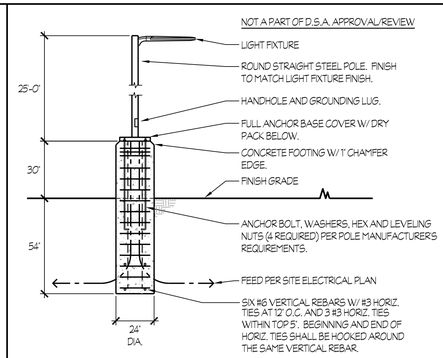

7 POLE LIGHT MOUNTING

NTS

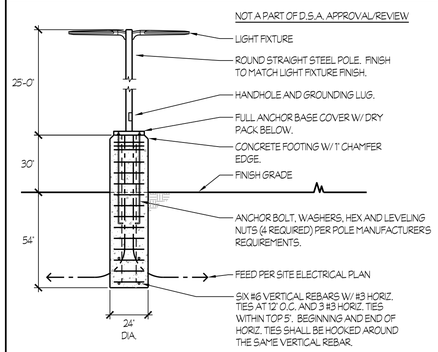

10 POLE LIGHT MOUNTING

NTS

APPROVALS

FILE # 54-76 | APPLICATION # 02-121996

IDENTIFICATION STAMP
DIV. OF THE STATE ARCHITECT
APP: 02-121996 INC:
REVIEWED FOR
SS ☑ FLS ☑ ACS ☑
DATE: 8/14/2024

LICENSED ARCHITECT
MICHAEL J. SCOTT
No. C-34290
REN. 05-31-25
STATE OF CALIFORNIA

DATE: DECEMBER 31, 2023

NEW PRESCHOOL AND TK/KINDERGARTEN CLASSROOMS AT SANTA FE ELEMENTARY SCHOOL

PORTERVILLE UNIFIED SCHOOL DISTRICT

286 E ORANGE AVENUE, PORTERVILLE, CA 93257

REVISIONS

MANGINI ARCHITECTURE INGENUITY
BARENG MORRELLI SCOTT
MANGINI ASSOCIATES INC.
4320 West Mineral King Avenue
Visalia, California 93291
www.mangini.us
(559) 627-0530 Office
(559) 627-1926 Fax

TITLE

DETAILS

E5.2

PROJECT 23076

Rose Sing Eastham & Associates
Electrical Consultants
131 S. Dunworth - (559)733-2671
Visalia, California 93292-6705

REGISTERED PROFESSIONAL ENGINEER
JOSEPH KIRK EASTHAM
No. 19786
Exp. 6/30/25
ELECTRICAL
STATE OF CALIFORNIA

Z:\Drafting\Jobs\RSES\SCHOOLS\Porterville\Santa Fe Elementary\E5.2.dwg DATE SAVED: 12/15/23 By: Casey DATE PLOTTED: 06/21/24 JOB # 23-093-U

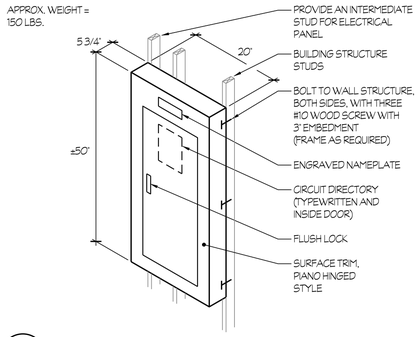

1 SURFACE MOUNTED PANEL

NTS

PULL BOX	PB5-PB7, PB10-PB12, SB4	PB3, PB4, PB8, PB9	PB1, PB2	SB1, SB2, SB3
W	11 3/4"	17 1/8"	24"	17 1/8"
L	22 1/4"	30 1/4"	36"	30 1/4"

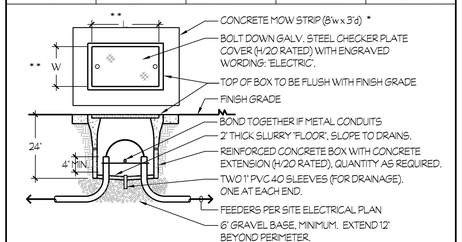

* NOTE: WHERE PULL BOX IS ADJACENT TO CONCRETE WALK, EXTEND MOWSTRIP TO CONNECT WITH WALK. FOAM SEAL ALL CONDUITS IN YARD BOXES.

** NOTE: INTERIOR DIMENSIONS MEASURED AT 'OPENING' OF PULL BOX.

4 PULL BOX MOUNTING

NTS

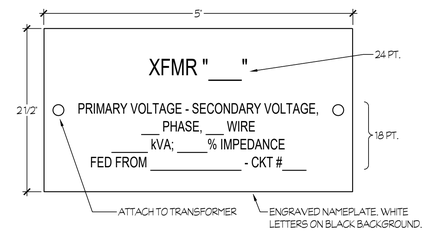

7 XFMR IDENTIFICATION

NTS

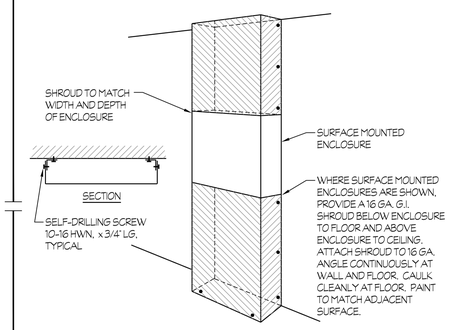

2 SHROUD AT SURFACE MOUNTED PANELS/SIGNAL T.C.'S

(FOR ENCLOSING OF EXPOSED CONDUITS. PROVIDE AT ALL SURFACE MOUNTED ENCLOSURES)

NTS

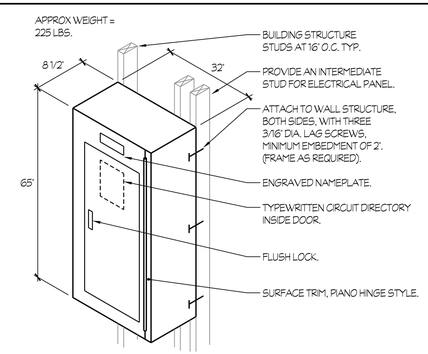

5 DISTRIBUTION PANEL "DP8" MOUNTING

NTS

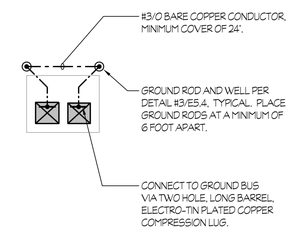

8 XFMR "TL7" AND XFRM "TPV" - GROUNDING & BONDING

NTS

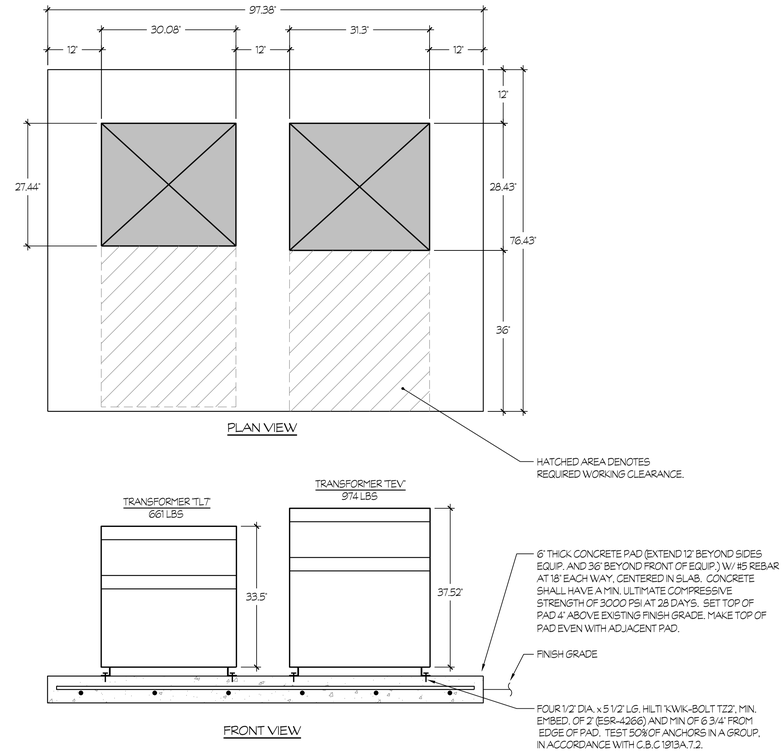

9 XFMR "TL7" AND XFRM "TEV" MOUNTING

NTS

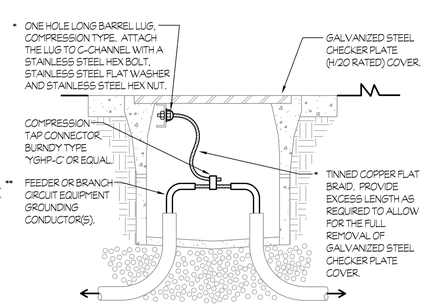

* THIS TYPICAL WORK SHALL BE PROVIDED FOR EACH SECTION OF A MULTIPLE SECTION COVER.

** THIS TYPICAL WORK SHALL BE DONE FOR EACH OF THE LARGEST FEEDER (OR BRANCH CIRCUIT) EQUIPMENT GROUNDING CONDUCTOR, PASSING THRU THE RESPECTIVE PULL BOX, WHICH ORIGINATE FROM SEPARATE SOURCES/VOLTAGES.

MATRIX FOR TINNED COPPER FLAT BRAID

SIZE OF EQUIPMENT GROUNDING CONDUCTOR (g)	ALPHA WIRE PART #	OLYMPIC WIRE AND CABLE PART #
#8	1233	708
#6	1235	710
#4	1239	710
#2 THRU #1/0	1240	713
#2/0 THRU #4/0	1241	714

(g) CONTAINED IN THE LARGEST FEEDER (OR BRANCH CIRCUIT) PASSING THRU THE RESPECTIVE PULL BOX.

3 GROUNDING AND BONDING OF STEEL CHECKER PLATE COVERS

NTS

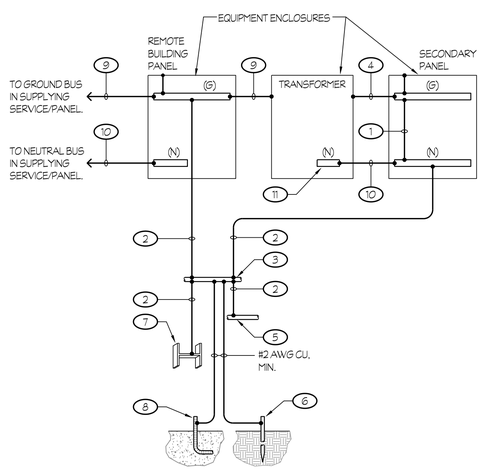

NOTES (THIS DETAIL ONLY):

1. SYSTEM BONDING JUMPER PER C.E.C. 250.30 (A), (1). SIZED PER C.E.C., TABLE 250.102 (C), (1).
2. FULL SIZE GROUNDING ELECTRODE CONDUCTOR PER C.E.C., TABLE 250.66.
3. METAL WATER PIPING PER C.E.C. 250.104 (A).
4. SUPPLY-SIDE BONDING JUMPER PER C.E.C. 250.30 (A), (2). SIZED PER C.E.C., TABLE 250.102 (C), (1).
5. OTHER METAL PIPING SYSTEMS PER C.E.C. 250.104 (B).
6. 5/8" DIA. x 10'-0" LONG COPPER-CLAD ROD ELECTRODE PER C.E.C. 250.52 (A), (5).
7. STRUCTURAL METAL PER C.E.C. 250.104 (C)
8. CONCRETE-ENCASED ELECTRODE PER C.E.C. 250.52 (A), (3).
9. EQUIPMENT GROUNDING CONDUCTOR, SIZED PER C.E.C., TABLE 250.122.
10. NEUTRAL CONDUCTOR PER FEEDER SCHEDULE.
11. NEUTRAL BAR.

LEGEND:

(G) - DENOTES THE GROUND BUS OR BAR.

(N) - DENOTES THE NEUTRAL BUS OR BAR.

(E) - DENOTES EXISTING.

GENERAL NOTE:

ALL MATERIALS AND METHODS USED IN GROUNDING AND BONDING SHALL COMPLY WITH C.E.C. ARTICLE 250.

6 REMOTE BUILDING PANEL, XFMR AND SECONDARY PANEL - GROUNDING AND BONDING

NTS

APPROVALS

FILE # 54-76 APPLICATION # 02-121996

IDENTIFICATION STAMP
DIV. OF THE STATE ARCHITECT
APP: 02-121996 INC:
REVIEWED FOR
SS ☑ FLS ☑ ACS ☑
DATE: 8/14/2024

LICENSED ARCHITECT MICHAEL J. SCOTT No. C-34290 REN. 05-31-25 STATE OF CALIFORNIA

DATE: DECEMBER 31, 2023

NEW PRESCHOOL AND TK/KINDERGARTEN CLASSROOMS AT SANTA FE ELEMENTARY SCHOOL

PORTERVILLE UNIFIED SCHOOL DISTRICT

286 E ORANGE AVENUE, PORTERVILLE, CA 93257

REVISIONS

MANGINI ARCHITECTURE INGENIUM
BARENG MORRELLI SCOTT
MANGINI ASSOCIATES INC.
4320 West Mineral King Avenue
Visalia, California 93291
www.mangini.us
(559) 627-0530 Office
(559) 627-1926 Fax

TITLE DETAILS

E5.3

PROJECT 23076

Rose Sing Eastham & Associates
Electrical Consultants
131 S. Dunworth - (559)733-2671
Visalia, California 93292-6705

REGISTERED PROFESSIONAL ENGINEER ROSEANN KIRK EASTHAM No. 19705 Exp. 6/30/25 ELECTRICAL STATE OF CALIFORNIA

Z:\Drafting\Jobs\RSES\SCHOOLS\Portervile\Santa Fe Elementary\E5.3.dwg DATE SAVED: 06/11/24 By: Casey DATE PLOTTED: 06/21/24 JOB #: 23-093-JJ

APPROVALS

FILE # 54-76 | APPLICATION # 02-121996

IDENTIFICATION STAMP
DIV. OF THE STATE ARCHITECT
APP: 02-121996 INC:
REVIEWED FOR
SS ☑ FLS ☑ ACS ☑
DATE: 8/14/2024

LICENSED ARCHITECT MICHAEL J. SCOTT No. C-34290 REN. 05-31-25 STATE OF CALIFORNIA

DATE: DECEMBER 31, 2023

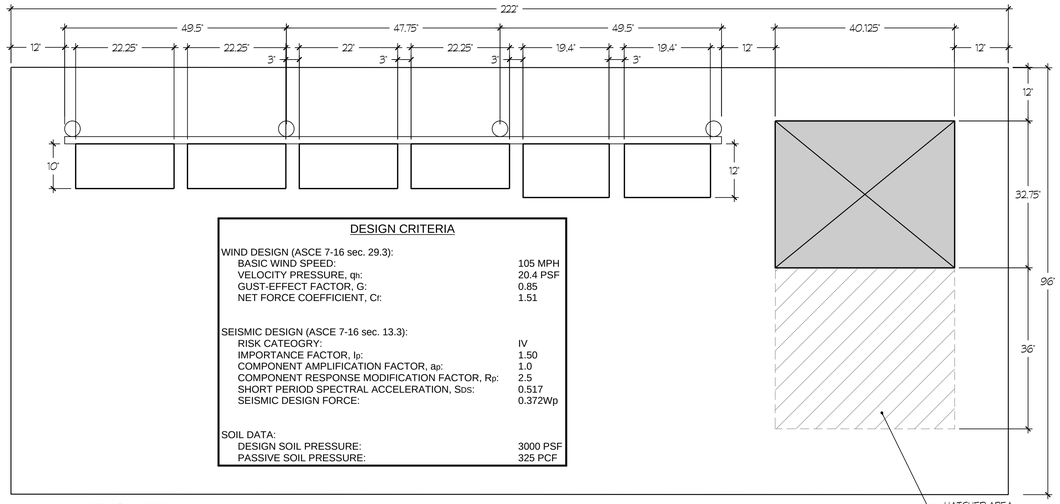

PLAN VIEW

DESIGN CRITERIA	
WIND DESIGN (ASCE 7-16 sec. 29.3):	
BASIC WIND SPEED:	105 MPH
VELOCITY PRESSURE, q_h:	20.4 PSF
GUST-EFFECT FACTOR, G:	0.85
NET FORCE COEFFICIENT, C_f:	1.51
SEISMIC DESIGN (ASCE 7-16 sec. 13.3):	
RISK CATEOGRY:	IV
IMPORTANCE FACTOR, I_p:	1.50
COMPONENT AMPLIFICATION FACTOR, a_p:	1.0
COMPONENT RESPONSE MODIFICATION FACTOR, R_p:	2.5
SHORT PERIOD SPECTRAL ACCELERATION, S_{DS}:	0.517
SEISMIC DESIGN FORCE:	0.372Wp
SOIL DATA:	
DESIGN SOIL PRESSURE:	3000 PSF
PASSIVE SOIL PRESSURE:	325 PCF

GENERAL NOTES:
1. ALL ANCHORS AND SUPPORTS SHALL BE STAINLESS STEEL CORROSION RESISTANT.
2. BATTERY STORAGE SYSTEMS SHALL BE ANCHORED IN ACCORDANCE WITH 2022 CBC AND CFC.

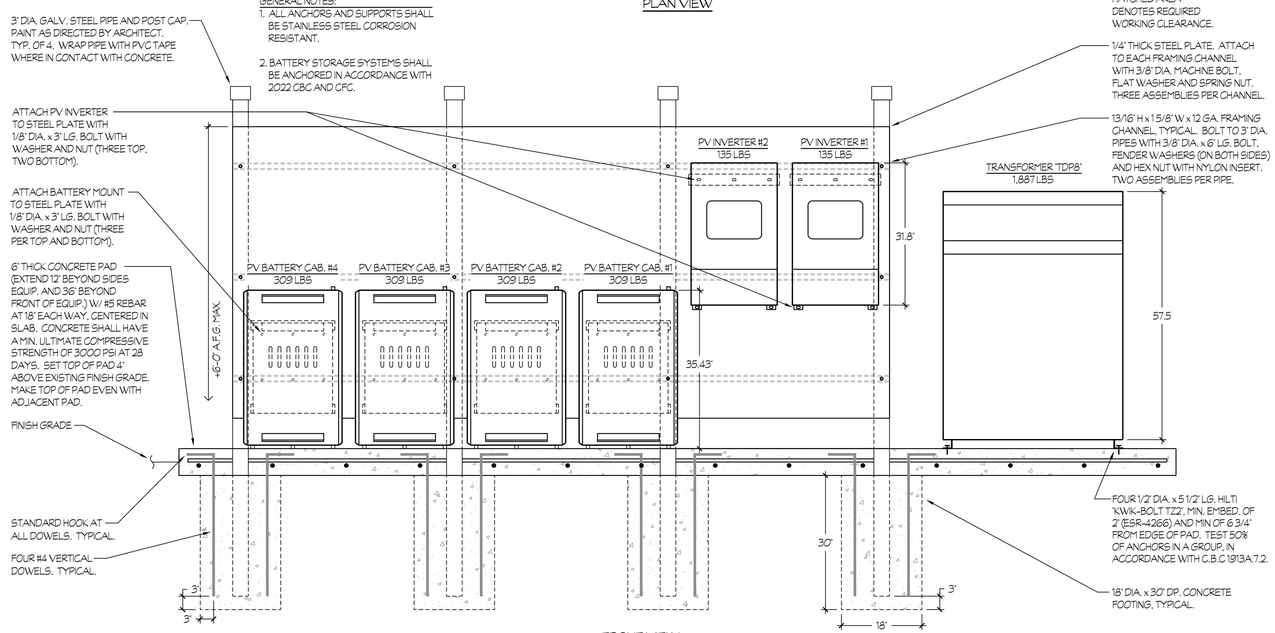

FRONT VIEW

1 XFMR "TDP8", PV INVERTERS AND BATTERY STORAGE MOUNTING

NTS

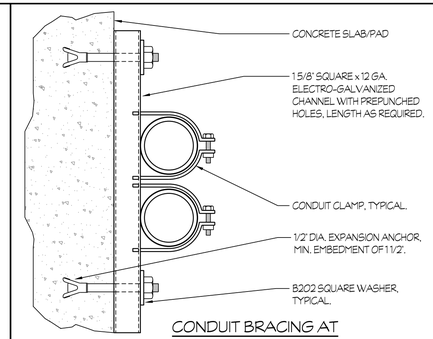

CONDUIT BRACING AT CONCRETE WALL

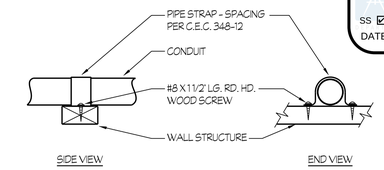

CONDUIT BRACING AT WALL STRUCTURE

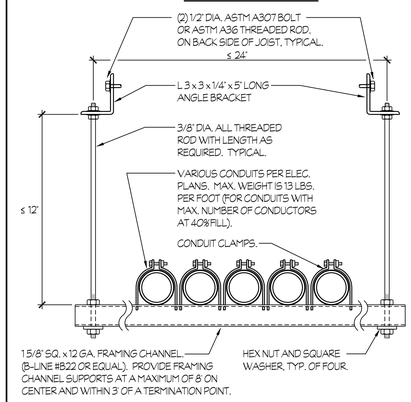

CONDUIT SUPPORT RACK

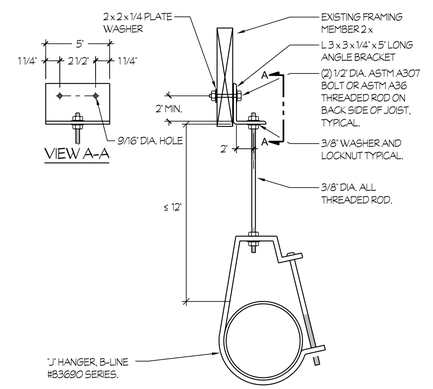

SINGLE CONDUIT BRACING

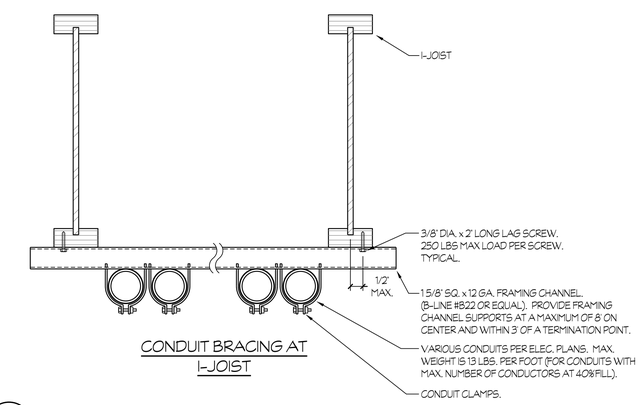

CONDUIT BRACING AT I-JOIST

5 CONDUIT SUPPORT DETAILS

NTS

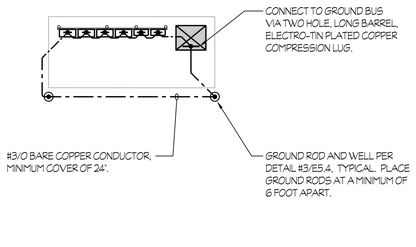

2 XFMR "TDP8", PV INVERTERS AND BATTERY STORAGE - GROUNDING & BONDING

NTS

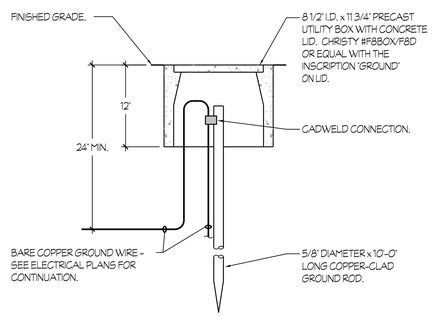

3 GROUND WELL DETAIL

NTS

Rose Sing Eastham & Associates
Electrical Consultants
131 S. Dunworth - (559)733-2671
Visalia, California 93292-6705

REGISTERED PROFESSIONAL ENGINEER JOSHUA KIRK SINGH EASTHAM No. E-19766 Exp. 6/30/25 ELECTRICAL STATE OF CALIFORNIA

NEW PRESCHOOL AND TK/KINDERGARTEN CLASSROOMS AT SANTA FE ELEMENTARY SCHOOL

PORTERVILLE UNIFIED SCHOOL DISTRICT
286 E ORANGE AVENUE, PORTERVILLE, CA 93257

REVISIONS

MANGINI ARCHITECTURE INGENUITY
BARENG MORRELLI SCOTT
MANGINI ASSOCIATES INC.
4320 West Mineral King Avenue
Visalia, California 93291
www.mangini.us
(559) 627.0530 Office
(559) 627.1926 Fax

TITLE DETAILS

E5.4

PROJECT 23076

Z:\Drafting\Jobs\RSE\SCHOOLS\Porterville\Santa Fe Elementary\E5.4.dwg DATE SAVED: 06/17/24 BY: Casey DATE PLOTTED: 06/21/24 JOB # 23-093-JJ

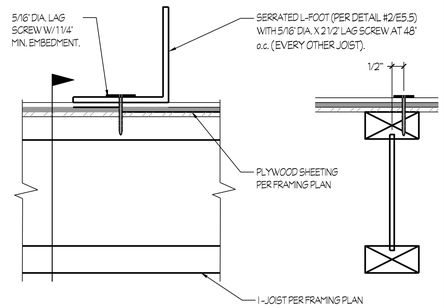

1 SOLAR ATTACHMENT - L FOOT
FOR WOOD FRAME ROOF
NTS

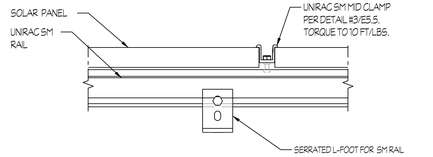

4 SOLAR PANEL MOUNT - SIDE
FOR WOOD FRAME ROOF
NTS

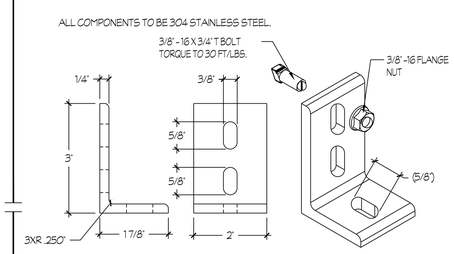

PART # TABLE	
P/N	DESCRIPTION
304001C	L-FOOT SERR W/ T-BOLT CLR

2 SERRATED L-FOOT DETAIL
NTS

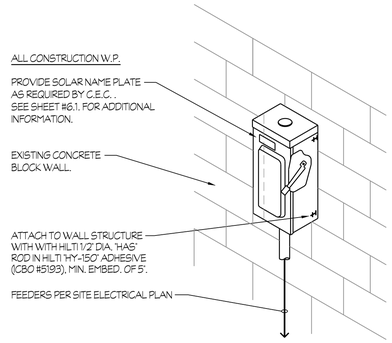

5 PV DISCONNECT MOUNTING
NTS

PHOTOVOLTAIC SOLAR SYSTEMS – GENERAL NOTES

1. THESE DRAWINGS HAVE BEEN PREPARED WITH INFORMATION PROVIDED IN ORIGINAL DESIGN DOCUMENTS AND HAVE NOT BEEN VERIFIED FOR ACCURACY. NEW DESIGN AND REQUIREMENTS WERE BASED ON THE ASSUMPTION OF EXISTING INFORMATION BEING ACCURATE. ANY DISCREPANCIES OR QUESTIONABLE POINTS SHALL BE IMMEDIATELY REPORTED TO THE ENGINEER.
2. ALL ELECTRICAL MATERIALS AND EQUIPMENT SHALL BE NEW AND SHALL BE LISTED BY UNDERWRITER'S LABORATORIES (UL) AND BEAR THEIR LABEL, OR LISTED AND CERTIFIED BY A NATIONALLY RECOGNIZED TESTING AUTHORITY. ALL LIKE EQUIPMENT, MATERIAL, FIXTURES, ETC. SHALL BE OF SAME MANUFACTURER AT ALL TIMES – NO EXCEPTIONS. CUSTOM MADE EQUIPMENT SHALL HAVE COMPLETE TEST DATA SUBMITTED BY THE MANUFACTURER ATTESTING TO ITS SAFETY. IN ADDITION, THE MATERIALS, EQUIPMENT AND INSTALLATION SHALL COMPLY WITH THE REQUIREMENTS, STANDARDS, RULES, AND REGULATIONS OF THE FOLLOWING AND BE MOST SUITABLE TO THE PURPOSE INTENDED:

   AMERICAN SOCIETY OF TESTING MATERIALS (ASTM)
   INSULATED POWER CABLE MANUFACTURERS ASSOCIATION (IPCMA)
   NATIONAL ELECTRICAL MANUFACTURERS ASSOCIATION (NEMA)
   AMERICAN STANDARD ASSOCIATION (ASA)
   NATIONAL FIRE PROTECTION AGENCY (NFPA)
   AMERICAN NATIONAL STANDARD INSTITUTE (ANSI)
   CALIFORNIA ELECTRICAL CODE (CEC), 2022 EDITION
   CALIFORNIA CODE OF REGULATIONS TITLE 24 (CCR)
   INSTITUTE OF ELECTRICAL AND ELECTRONIC ENGINEERS (IEEE)
   NATIONAL ELECTRICAL CODE (NEC), 2020 EDITION
   ELECTRONIC INDUSTRY ASSOCIATION (EIA)
   TELECOMMUNICATIONS INDUSTRY ASSOCIATION (TIA)

3. ELECTRICAL DOCUMENTS ARE DIAGRAMMATIC AND INDICATE THE GENERAL LAYOUT OF THE COMPLETE CONSTRUCTION WORK. DO NOT SCALE THE ELECTRICAL DRAWINGS FOR LOCATIONS OF ANY ELECTRICAL, ARCHITECTURAL, STRUCTURAL, CIVIL, OR MECHANICAL ITEMS OR FEATURES. DUE TO STRUCTURAL CONDITIONS, MECHANICAL DUCTING, OR PIPING REASONS, ELECTRICAL CONTRACTOR MAY DESIRE TO INSTALL THE WORK IN A MANNER DIFFERENT FROM THAT SHOWN. ROUTING OF RACEWAYS SHALL BE AT THE OPTION OF THE CONTRACTOR UNLESS OTHERWISE NOTED AND SHALL BE COORDINATED WITH OTHER SECTIONS.
4. ALL WIRING AND CABLING SHALL BE IN CONDUIT. ALL EXPOSED CONDUITS SHALL BE RIGID, GALVANIZED STEEL OR INTERMEDIATE METAL CONDUITS (IMC) OR ELECTRICAL METALLIC TUBING (EMT). ALL CONDUITS SHALL BE INSTALLED PARALLEL WITH, OR AT RIGHT ANGLES TO THE BUILDING LINES, BEAMS, OR CEILING. ALL LONG CONDUIT RUNS SHALL INCLUDE PULL BOXES AT 100–FOOT INCREMENTS AND SIZED AS REQUIRED OR NOTED. IN ADDITION, ALL CONDUITS CROSSING CEILING STRUCTURE EXPANSIONS SHALL HAVE APPROVED EXPANSION FITTINGS ACCORDINGLY. FLEXIBLE CONDUIT IS PERMITTED ONLY FOR SHORT LENGTHS TO EQUIPMENT TERMINATION AS REQUIRED (NOT TO EXCEED 5' IN LENGTH).
5. ALL CONDUCTORS SHALL BE COPPER. CONDUCTORS #10–AWG AND LARGER SHALL BE STRANDED TYPE WITH "THWN/THHN" INSULATION (75 DEGREES CELSIUS, WET OR DRY). ALUMINUM CONDUCTORS ARE NOT PERMITTED.
6. ALL FINAL CONNECTIONS TO AND INSTALLATION OF FURNISHED BY OTHERS EQUIPMENT SHALL BE MADE BY THE ELECTRICAL CONTRACTOR.
7. UTILITY PENETRATIONS OF ANY KIND IN FIRE AND SMOKE PARTITIONS AND CEILING ASSEMBLIES SHALL BE FIRE STOPPED AND SEALED WITH AN APPROVED MATERIAL SECURELY INSTALLED.
8. THE SEISMIC BRACING AND ANCHORAGE OF ELECTRICAL CONDUITS, WIRE WAY AND CABLE TRAY SHALL BE IN ACCORDANCE WITH THE UNIFORM BUILDING CODE, CHAPTER 23 AND "GUIDELINE FOR SEISMIC RESTRAINTS OF MECHANICAL SYSTEMS AND PLUMBING PIPING SYSTEMS," PUBLISHED BY SMACNA AND PPIC OR THE SUPERSTRUT–SEISMIC RESTRAINT SYSTEM, OR THE KIN–LINE SEISMIC RESTRAINT SYSTEM.
9. SOLAR PANELS AND SUPPORT SYSTEM TO BE GROUNDED PER NEC 250 AND 690.
10. INVERTER INCLUDES INTEGRAL DC DISCONNECT UNLESS OTHERWISE NOTED.
11. SECURELY FASTEN ALL ELECTRICAL EQUIPMENT BY MEANS OF RODS, HANGERS, SUPPORTS, GUIDES, ANCHORS AND SWAY BRACES TO MAINTAIN ALIGNMENT, TO PREVENT EQUIPMENT MOVEMENT, AND TO RESIST SEISMIC FORCES. DO NOT SECURE ANY ELECTRICAL EQUIPMENT TO ACOUSTICAL CEILING SUPPORT WIRES OR NON STRUCTURAL ELEMENTS.
12. STRAIGHT FEEDER, BRANCH CIRCUIT AND CONDUIT RUNS SHALL BE PROVIDED WITH SUFFICIENT PULL BOXES TO LIMIT THE MAXIMUM LENGTH OF ANY SINGLE CABLE PULL TO 100 FEET. PULL BOXES SHALL BE SIZED PER CODE OR AS INDICATED ON DRAWINGS. LOCATIONS SHALL BE DETERMINED IN THE FIELD OR AS INDICATED ON THE DRAWINGS.
13. FEEDERS:

13.A. CONDUITS FOR SOLAR SYSTEMS SHALL BE IDENTIFIED WITH STENCIL MARKINGS AT 100 FOOT INCREMENTS, AT EACH INTERSECTION, AND AT EACH CROSSOVER FROM ONE AREA TO ANOTHER, PENETRATION OF WALLS, AND FLOORS WITH LETTERING 3/4" MINIMUM FOR 1" CONDUIT OR LESS, 1" MINIMUM FOR 2" CONDUIT OR LESS, AND 1–1/2" MINIMUM FOR 4" OR LESS IN THE COLORS AS FOLLOWS:

   208/240 VOLTS: BLACK
   1000 VOLTS: RED

14. ALL CONDUCTORS AND CABLES SHALL BE IDENTIFIED AT EACH JUNCTION BOX, OUTLET BOX, CABINET, PULL BOX, ETC., WITH VINYL SELF–ADHESIVE TAPE SHOWING PANEL AND CIRCUIT NUMBERS, CONTROL WIRE NUMBER OR OTHER APPROPRIATE INFORMATION REGARDING THE SYSTEM IT REPRESENTS.
15. DRAWINGS DO NOT SHOW ALL OFFSETS, BENDS, SPECIFIC FITTINGS, JUNCTION BOXES NOR PULL BOXES NECESSARY TO MEET JOB CONDITIONS. THESE ITEMS SHALL BE PROVIDED WHERE NECESSARY.
16. ALL EXISTING EQUIPMENT, MATERIAL, CONDUCTORS AND CABLES THAT ARE NOT TO BE REUSED IN THEIR PRESENT LOCATIONS SHALL BE CAREFULLY DISCONNECTED (CONDUCTORS AND CABLES REMOVED TO SOURCE OF SUPPLY) AND STORED IN A SAFE PLACE. IT SHALL BE MADE AVAILABLE FOR INSPECTION BY THE OWNER WHO WILL DESIGNATE WHAT IS TO BE STORED BY THE OWNER AND WHAT IS TO BE REMOVED FROM THE PREMISES BY THE ELECTRICAL CONTRACTOR.
17. THE ALTERATION OF THE EXISTING BUILDING IS WORK OF A COMPLEX NATURE WHICH WILL REQUIRE PLANNING, CAREFUL PREPARATION AND EXECUTION, ATTENTION TO DETAIL AND CLOSE SUPERVISION BY THE ELECTRICAL CONTRACTOR. ELECTRICAL CONTRACTOR WILL BE REQUIRED TO DO THIS WORK IN FULL COOPERATION WITH THE OTHER CONSTRUCTION TRADES AND, SUBJECT TO SCHEDULING, ARRANGE TO MINIMIZE DISRUPTION OF THE NORMAL ACTIVITIES OF THE FACILITY. ELECTRICAL CONTRACTOR TO COORDINATE ALL ACTIVITIES WITH OWNER.
18. IN AREAS WHERE THERE ARE NO ALTERATIONS INDICATED, THE EXISTING FACILITIES SHALL REMAIN IN SERVICE. IN CASE OF DOUBT, ASSUME THAT THE EXISTING ELECTRICAL SERVICE IS TO REMAIN IN OPERATION THROUGHOUT THE CONSTRUCTION PERIOD.
19. INSTALLATION OF ALL ELECTRICAL EQUIPMENT SHALL BE CAREFULLY COORDINATED WITH EXISTING CONDITIONS TO AVOID POSSIBLE INTERFERENCE PROBLEMS.
20. OUTDOOR ELECTRICAL EQUIPMENT SHALL BE INSTALLED IN SUITABLE ENCLOSURES AND SHALL BE PROTECTED FROM ACCIDENTAL CONTACT BY UNAUTHORIZED PERSONNEL, OR BY VEHICULAR TRAFFIC, OR BY ACCIDENTAL SPILLAGE OR LEAKAGE FROM PIPING SYSTEMS.
21. REFER TO MANUFACTURERS MOUNTING INSTALLATION REQUIREMENTS FOR PROPER SUPPORT SPACING AND ATTACHMENTS PER CALIFORNIA BUILDING CODE. INSTALL AS REQUIRED.
22. EXACT LOCATION OF SOLAR SYSTEM TO BE FIELD VERIFIED AND INSTALLED AS REQUIRED BY MANUFACTURER AND APPLICABLE CALIFORNIA BUILDING CODE.
23. SOLAR CIRCUIT BREAKERS SHALL BE INSTALLED ON OPPOSITE ENDS OF THE BUS BAR FROM OTHER SOURCE FEEDS (i.e. MAIN CIRCUIT BREAKER).
24. ACCESS AND WORKING SPACE SHALL BE PROVIDED AND MAINTAINED ABOUT ALL ELECTRICAL EQUIPMENT TO PERMIT READY AND SAFE OPERATION AND MAINTENANCE OF SUCH EQUIPMENT. THERE SHALL BE A MINIMUM CLEAR SPACE OF 36" IN FRONT OF EQUIPMENT; THE WIDTH OF CLEAR SPACE SHALL BE 32" AND A HEIGHT OF 6–1/2 FEET FROM GRADE.

CEC 690.13 (B) & 706.15 (C)
PLACE THIS LABEL ON ALL DISCONNECTING MEANS WHERE ENERGIZED IN AN OPEN POSITION

WARNING
ELECTRIC SHOCK HAZARD
DO NOT TOUCH TERMINALS
TERMINALS ON BOTH THE LINE AND LOAD SIDE MAY BE ENERGIZED IN THE OPEN POSITION

CEC 690.53
PLACE THIS LABEL ON ALL PHOTOVOLTAIC DC DISCONNECTING MEANS (ON INVERTER IF INTEGRATED DC DISCONNECTS AND AT SEPARATE DC DISCONNECT IF APPLICABLE)

PHOTOVOLTAIC SYSTEM DISCONNECT	
RATED MAX POWER POINT CURRENT (IMP):	18A
RATED MAX POWER POINT VOLTAGE (VMP):	452V
MAX SYSTEM VOLTAGE (VOC):	533V
SHORT CIRCUIT CURRENT (ISC):	19A

CEC 690.54
PLACE THIS LABEL AT "INTERACTIVE POINT OF INTERCONNECTION" (AT MAIN SERVICE PANEL AND SUBPANEL IF APPLICABLE)

INVERTER "INV-1" INTERACTIVE PHOTOVOLTAIC POWER SOURCE	
RATED AC OUTPUT CURRENT (A):	32A
NOMINAL OPERATING AC VOLTAGE (V):	240V, 1-PH

CEC 705.10(D)(4)
PLACE THIS LABEL AT UTILITY METER.

WARNING
DUAL POWER SOURCES SECOND SOURCE IS PHOTOVOLTAIC SYSTEM

CEC 690.13(B)
PLACE THIS LABEL AT ALL PV DISCONNECTION POINTS.

PV SYSTEM DISCONNECT

CEC 690.56(C)(2)
PLACE THIS LABEL AT PV RAPID SHUTDOWN SWITCH.

RAPID SHUTDOWN SWITCH FOR SOLAR PV SYSTEM

CEC 705.12(B)(3)
PLACE THIS LABEL AT P.O.C. TO SERVICE DISTRIBUTION EQUIPMENT (I.E. MAIN PANEL AND SUBPANEL IF APPLICABLE))

WARNING
POWER SOURCE OUTPUT CONNECTION DO NOT RELOCATE THIS OVERCURRENT DEVICE

CEC 705.10
PLACE A PERMANENT PLAQUE DENOTING ALL ELECTRIC POWER SOURCES ON OR IN THE PREMISES AT THE SERVICE EQUIPMENT LOCATION AND AT ALL ELECTRIC POWER PRODUCTION SOURCES CAPABLE OF INTERCONNECTION

CALIFORNIA STATE FIRE MARSHAL PHOTOVOLTAIC INSTALLATION GUIDELINES LABELS

PLACE ON ALL CONDUIT, LOCATED ON ROOF, INTERIOR AND EXTERIOR, EVERY 5 FEET, AT TURNS AND ABOVE AND/OR BELOW PENETRATIONS AND ALL DC COMBINER AND JUNCTION BOXES, IN ⅜" WHITE LETTERING ON RED BACKGROUND, ON FADE-RESISTANT MATERIAL:

WARNING: PHOTOVOLTAIC POWER SOURCE

PLACE THIS LABEL WITHIN MAIN SERVICE DISCONNECT (OR ON OUTSIDE IF DISCONNECT IS OPERABLE WITH COVER CLOSED)

CAUTION: SOLAR ELECTRIC SYSTEM

REFLECTIVE, WHITE LETTERING ON RED BACKGROUND, TYPICAL UNLESS OTHERWISE NOTED

CAUTION MULTIPLE SOURCES OF POWER

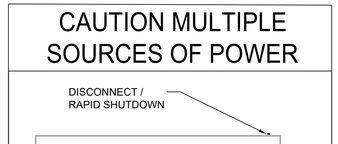

CEC 690.56(C)
PLACE THIS LABEL AT SERVICE EQUIPMENT LOCATION.

SOLAR PV SYSTEM IS EQUIPPED WITH RAPID SHUTDOWN

TURN RAPID SHUTDOWN SWITCH TO THE "OFF" POSITION TO SHUTDOWN PV SYSTEM AND REDUCE SHOCK HAZARD IN ARRAY

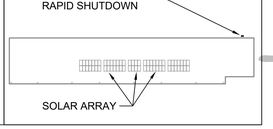

BLACK LETTERING ON YELLOW BACKGROUND

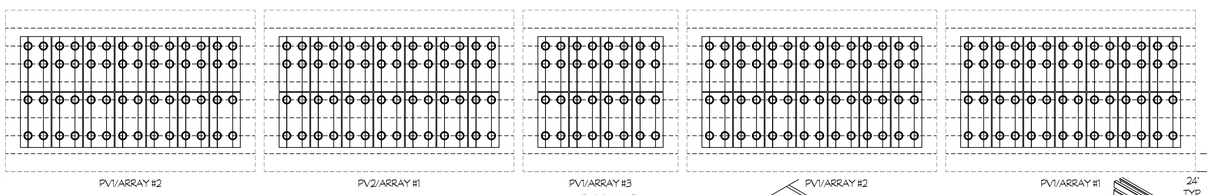

DETAIL D

GENERAL NOTES:
1. CANTILEVER LENGTH L2 SHALL NOT BE LONGER THAN L1/3.
2. SOLAR PANEL ATTACHMENT PER DETAIL #4/E5.5.
3. ALL COMPONANT BOLTS SHALL HAVE A TORQUE VALUE PER THE MANUFACTURER'S SPECIFICATIONS.
4. ALL CLAMPS AND RAILS SHALL BE BARE ALUMINUM.
5. SEE SOLAR PANEL CUT SHEETS ON SHEET #E6.1 FOR SOLAR PANEL DIMENSIONS.
6. ALL CLAMP BOLTS/NUTS SHALL BE 304 SS.

LOADS USED FOR DESIGN	
BUILDING CODE	ASCE 7-16
BASIC WIND SPEED	101.00 mph
GROUND SNOW LOAD	0.00 psf
SEISMIC SS	0.581
ELEVATION	287.00 ft
RISK CATEGORY	III
WIND EXPOSURE	C
TOPOGRAPHICAL FACTOR	1.00
VELOCITY PRESSURE	19.60 psf

UNIRAC SOLAR MOUNT RACKING COMPONENTS				
1	RAIL	320168M	SM RAIL 168" MILL	DETAILS #3/E5.5
2	PRO SERIES END CLAMP	302035M	ENDCLAMP PRO	DETAILS #3/E5.5
3	PRO SERIES MID CLAMP	302030M	MIDCLAMP PRO - MILL	DETAILS #3/E5.5
4	STANDOFF	304001C	L-FOOT SERRATED W/T-BOLT, CLR	DETAILS #1/E5.5

LEGEND					
SOLAR PANELS	ATTACHMENT POINT	RAIL LINES	ROOF STRUCTIRE	DISTRIBUTED DEAD LOAD	AVERAGE ROOF POINT DEAD LOAD
	o	——	-----	2.96 psf	15.59 psf

SOLAR PANEL DIMENSIONS	
WIDTH	41.1"
LENGTH	74.0"
THICKNESS	1.26"
WEIGHT	48.5 LBS.

PANEL LOAD DESIGN PRESSURE (1)			
DESIGN PRESSURES (psf)	1, 2E	2N, 2R, 3E	3R
UP (EXPOSED)	-21.8	-33.6	-40.6
DOWN (EXPOSED)	12.4	12.4	12.4

(1) BASED ON ONE PANEL AS THE EFFECTIVE AREA.

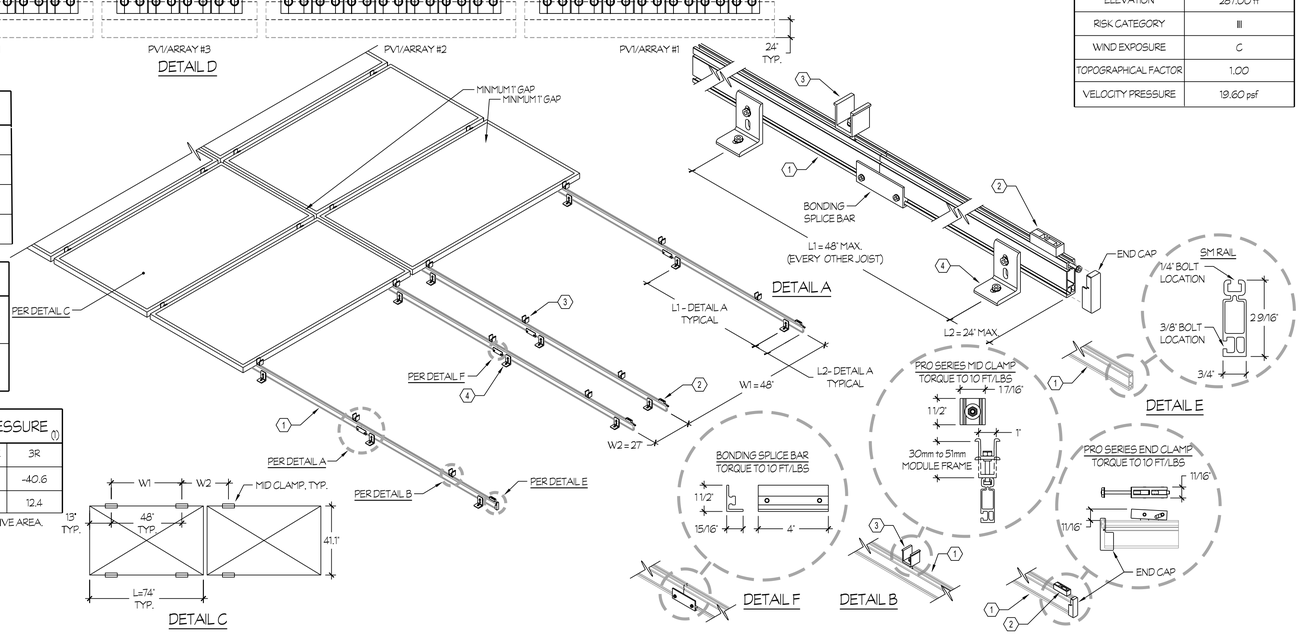

DETAIL C

3 ASSEMBLY ISOMETRIC VIEW
NTS

Rose Sing Eastham & Associates
Electrical Consultants
131 S. Dunworth – (559)733–2671
Visalia, California 93292–6705

REGISTERED PROFESSIONAL ENGINEER
JOHN KIRK EASTHAM
No. E-17966
Exp. 6/30/25
ELECTRICAL
STATE OF CALIFORNIA

APPROVALS
FILE # 54-76
APPLICATION # 02-121996

IDENTIFICATION STAMP
DIV. OF THE STATE ARCHITECT
APP: 02-121996 INC:
REVIEWED FOR
SS ☑ FLS ☑ ACS ☑
DATE: 8/14/2024

LICENSED ARCHITECT
MICHAEL J. SCOTT
No. C-34290
REN. 05-31-25
STATE OF CALIFORNIA
DATE: DECEMBER 31, 2023

NEW PRESCHOOL AND TK/KINDERGARTEN CLASSROOMS AT SANTA FE ELEMENTARY SCHOOL

PORTERVILLE UNIFIED SCHOOL DISTRICT
286 E ORANGE AVENUE, PORTERVILLE, CA 93257

REVISIONS

MANGINI ARCHITECTURE INGENUITY
BARENG MORRELLI SCOTT
MANGINI ASSOCIATES INC.
4320 West Mineral King Avenue
Visalia, California 93291
www.mangini.us
(559) 627-0530 Office
(559) 627-1926 fax

TITLE
SOLAR DETAILS AND NOTES

E5.5

PROJECT 23076

Z:\Drafting\Jobs\RSES\SCHOOLS\Portersville\Santa Fe Elementary\E5.5.dwg DATE SAVED: 06/19/24 By: Casey DATE PLOTTED: 06/21/24 JOB # 23-093-U

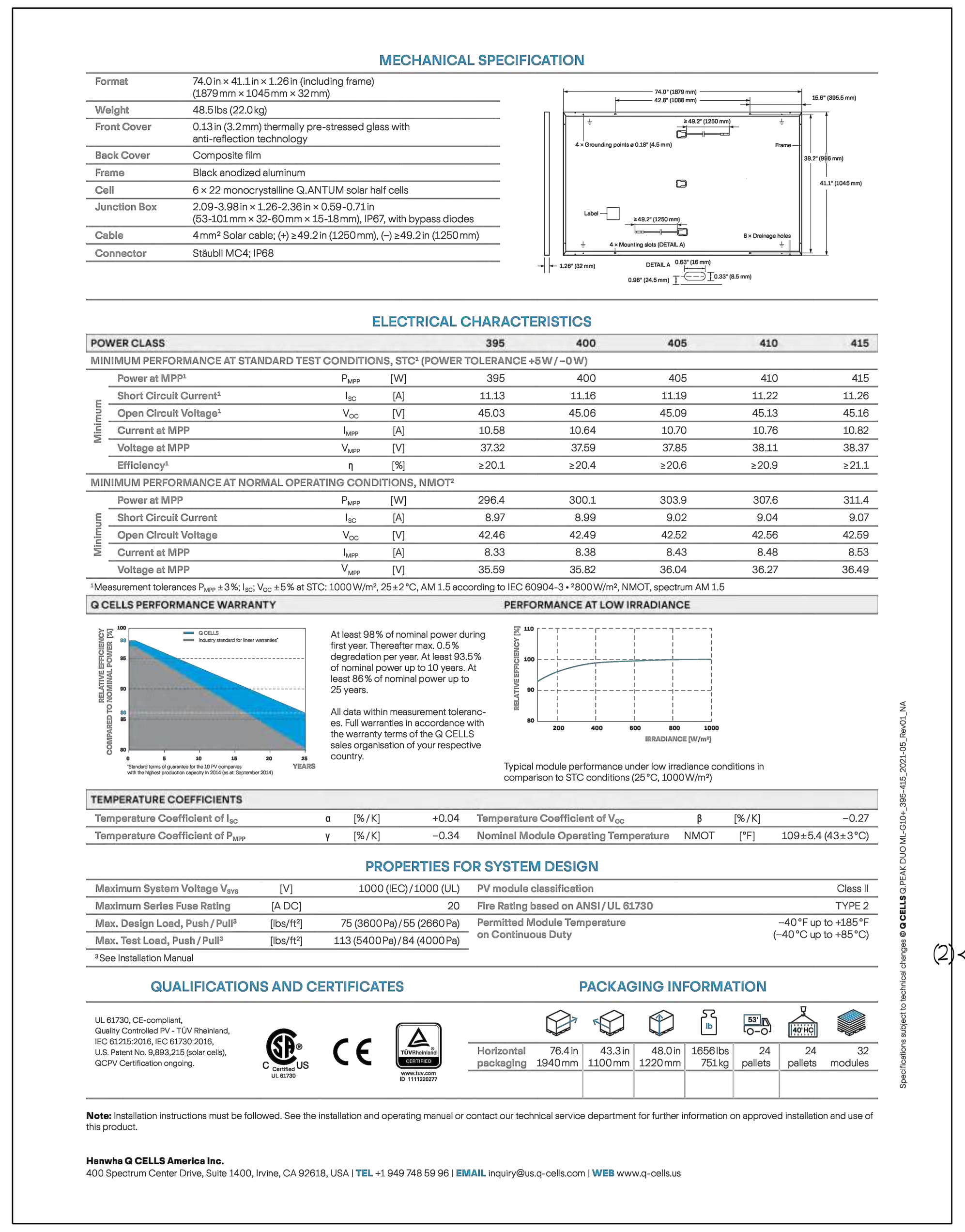

PANEL "H7"

480/277V, 3 PH, 4 W — 225 A. BUSSING — 225 A. MAIN BKR. — 42 CIRCUIT
22K BREAKER A.I.C. — 5 3/4" MAX. ENCL. DEPTH — SURF MOUNTING

CKT	BKR	LOAD: V.A. A	B	C	DESCRIPTION	DESCRIPTION	LOAD: V.A. C	B	A	BKR	CKT
1	20/1	1677			LIGHTS - CLASSRM BLDG	LIGHTS - EXTERIOR			150	20/1	2
3	20/1		1572		LIGHTS - CLASSRM BLDG	LIGHTS - EXTERIOR		250		20/1	4
5	20/1			1242	LIGHTS - PARKING LOT		5070			40/3	6
7	20/1	1242			LIGHTS - PARKING LOT	HP-7.4/ECON, 18.3 FLA			5070		8
9	40/3		5070					5070			10
11				5070	HP-7.1/ECON, 18.3 FLA		5291			40/3	12
13		5070				HP-7.5/ECON, 19.1 FLA			5291		14
15	40/3		5291					5291			16
17				5291	HP-7.2/ECON, 19.1 FLA		5070			40/3	18
19		5291				HP-7.6/ECON, 18.3 FLA			5070		20
21	40/3		5070					5070			22
23				5070	HP-7.3/ECON, 18.3 FLA	LIGHTS - WALKWAY	552				24
25		5070				SPACE					26
27					SPACE	SPACE					28
29					SPACE	SPACE					30
31					SPACE	SPACE					32
33					SPACE	SPACE					34
35					SPACE	SPACE					36
(2) 37	125/3	15471							20480	125/3	38 (2)
39			15471		TRANSFORMER "TL7"	TRANSFORMER "TEV"		20480			40
41				15471			20480				42

LOAD SUMMARY	A	B	C	
CONNECTED LOAD (VA) :	69882	68635	68607	TOTAL CALCULATED
25% LCL/LML (VA) :	767	456	449	LOAD FOR PANEL:
TOTAL LOAD (VA) :	70649	69091	69056	208795 VA
TOTAL LOAD (AMPS) :	147.2	143.9	143.9	

PANEL "L8A"

120/208V, 3 PH, 4 W — 400 A. BUSSING — 400 A. MAIN BKR. — 54 CIRCUIT
22K BREAKER A.I.C. — 5 3/4" MAX. ENCL. DEPTH — SURF MOUNTING

CKT	BKR	LOAD: V.A. A	B	C	DESCRIPTION	DESCRIPTION	LOAD: V.A. C	B	A	BKR	CKT
1	20/1	900			RECEPT - EXTERIOR	RECEPT - COUNTER			1000	20/1	2
3	20/1		360		RECEPT - ELEC. JAN., ETC.	RECEPT - COUNTER		1000		20/1	4
5	20/1			1000	RECEPT- TW.R.	RECEPT - KINDERGARTEN	900			20/1	6
7	20/1	1000			RECEPT - T.W.R.	RECEPT - KINDERGARTEN			720	20/1	8
9	20/1		900		RECEPT - KINDERGARTEN	RECEPT -T.W.R.		1000		20/1	10
11	20/1			720	RECEPT - KINDERGARTEN	REPECT - COPIER	1000			20/1	12
13	20/1	500			RECEPT - T.V.	RECEPT - T.V.			500	20/1	14
15	20/1		1000		RECEPT - COUNTER	RECEPT - COUNTER		1000		20/1	16
17	20/1			1000	RECEPT - COUNTER	RECEPT - COUNTER	1000			20/1	18
19	20/1	800			RECEPT- REFRIGERATOR	RECEPT - STOR., CLEAN			1080	20/1	20
21	20/1		900		RECEPT - KINDERGARTEN	RECEPT - T.V.		500		20/1	22
23	20/1			720	RECEPT - KINDERGARTEN	AUTO DEMAND RESPONSE	100			20/1	24
25	20/1	1250			RECEPT- DATA RACK	F.A. TRANSPONDER PNL			500	20/1	26 (1)
27	20/1		1250		RECEPT- DATA RACK	RECEPT- REFRIGERATOR		800		20/1	28
29	30/1			2500	RECEPT- DATA RACK	RECEPT - COPIER	1000			20/1	30
31	20/1	540			RECEPT - W.P. ON ROOF	RECEPT - T.W.R.			1000	20/1	32
33	40/2		2460		ODU8.1/IDU-8.1, 20.5 FLA	EF-8.4, 4.32 FLA		520		20/1	34
35				2460		EF-8.5, 2.96 FLA	356			20/1	36
37	20/1				SPARE	EMS PANEL			500	20/1	38
39	20/1				SPARE	WATER HEATER		3600		40/1	40
41	20/1				SPARE	WATER HEATER	3600			40/1	42
43	20/1				SPARE	PV INVERTER #1			7470	80/2	44
45	20/1				SPARE			7470			46
47	20/1				SPARE	PV INVERTER #2	5810			80/2	48
(2) 49	225/3	13316							5810		50
51			11106		PANEL "L8B"	SPACE					52
53				13710		SPACE					54

LOAD SUMMARY	A	B	C	
CONNECTED LOAD (VA) :	36886	33866	35876	TOTAL CALCULATED
25% LCL/LML (VA) :	0	0	0	LOAD FOR PANEL:
TOTAL LOAD (VA) :	36886	33866	35876	106628 VA
TOTAL LOAD (AMPS) :	307.4	282.2	299.0	

PANEL "L7"

120/208V, 3 PH, 4 W — 400 A. BUSSING — 250 A. MAIN BKR. — 54 CIRCUIT
22K BREAKER A.I.C. — 5 3/4" MAX. ENCL. DEPTH — SURF MOUNTING

CKT	BKR	LOAD: V.A. A	B	C	DESCRIPTION	DESCRIPTION	LOAD: V.A. C	B	A	BKR	CKT
1	20/1	720			RECEPT - ELEC., JAN	RECEPT - STOR. CLEAN			720	20/1	2
3	20/1		1080		RECEPT- EXTERIOR	RECEPT - COUNTER		1000		20/1	4
5	20/1			500	RECEPT- T.V.	RECEPT - COUNTER	1000			20/1	6
7	20/1	900			RECEPT - CLASSROOM	RECEPT- REFRIGERATOR			800	20/1	8
9	20/1		900		RECEPT - CLASSROOM	RECEPT - T.W.R.		1000		20/1	10
11	20/1			1000	RECEPT - T.W.R.	RECEPT- COPIER	1000			20/1	12
13	20/1	1000			RECEPT - T.W.R.	RECEPT- T.V.			500	20/1	14
15	20/1		900		RECEPT - CLASSROOM	RECEPT- T.V.		500		20/1	16
17	20/1			900	RECEPT - CLASSROOM	RECEPT - CLASSROOM	900			20/1	18
19	20/1	720			RECEPT - STOR. CLEAN	RECEPT - CLASSROOM			900	20/1	20
21	20/1		1000		RECEPT - COUNTER	RECEPT- REFRIGERATOR		800		20/1	22
23	20/1			1000	RECEPT - COUNTER	RECEPT - T.W.R.	1000			20/1	24
25	20/1	1000			RECEPT - T.W.R.	RECEPT- COPIER			1000	20/1	26
27	20/1		1000		RECEPT - T.W.R.	RECEPT - CLASSROOM		900		20/1	28
29	20/1			500	RECEPT- T.V.	RECEPT - CLASSROOM	900			20/1	30
31	20/1	1250			RECEPT- DATA RACK	F.A. TRANSPONDER PNL			500	20/1	32 (1)
33	20/1		1250		RECEPT- DATA RACK	RECEPT -W.P. ON ROOF		720		20/1	34
35	30/1			2500	RECEPT- DATA RACK	EF-7.3, 2.96 FLA	356			20/1	36
37	20/1	520			EF-7.1, 4.32 FLA	EF-7.4, 4.32 FLA			520	20/1	38
39	20/1		520		EF-7.2, 4.32 FLA	CIRC. PUMP		36		20/1	40
41	20/1			500	EMS PANEL	WATER HEATER	3600			40/1	42
43	30/2	2250			WATER HEATER	WATER HEATER			3600	40/1	44
45			2250			FIRE ALARM RISER BELL		100		20/1	46 (1)
47	20/1				SPARE	SPARE				20/1	48
49					SPACE	SPACE					50
51					SPACE	SPACE					52
53					SPACE	SPACE					54

LOAD SUMMARY	A	B	C	
CONNECTED LOAD (VA) :	16900	13956	15656	TOTAL CALCULATED
25% LCL/LML (VA) :	0	0	0	LOAD FOR PANEL:
TOTAL LOAD (VA) :	16900	13956	15656	46512 VA
TOTAL LOAD (AMPS) :	140.8	116.3	130.5	

PANEL "L8B"

120/208V, 3 PH, 4 W — 225 A. BUSSING — NO MAIN BKR. — 42 CIRCUIT
22K BREAKER A.I.C. — 5 3/4" MAX. ENCL. DEPTH — SURF MOUNTING

CKT	BKR	LOAD: V.A. A	B	C	DESCRIPTION	DESCRIPTION	LOAD: V.A. C	B	A	BKR	CKT
1	20/1	1260			RECEPT - ELEC., JAN	RECEPT - STOR. CLEAN			1080	20/1	2
3	20/1		1080		RECEPT- EXTERIOR	RECEPT - COUNTER		1000		20/1	4
5	20/1			500	RECEPT- T.V.	RECEPT - COUNTER	1000			20/1	6
7	20/1	900			RECEPT - TK CLASSROOM	RECEPT- REFRIGERATOR			800	20/1	8
9	20/1		720		RECEPT - TK CLASSROOM	RECEPT- COPIER		1000		20/1	10
11	20/1			1000	RECEPT - T.W.R.	RECEPT - T.W.R.	1000			20/1	12
13	20/1	1000			RECEPT - T.W.R.	RECEPT- T.V.			500	20/1	14
15	20/1		900		RECEPT - TK CLASSROOM	RECEPT- T.V.		500		20/1	16
17	20/1			720	RECEPT - TK CLASSROOM	RECEPT - TK CLASSROOM	900			20/1	18
19	20/1	1080			RECEPT - STOR. CLEAN	RECEPT - TK CLASSROOM			720	20/1	20
21	20/1		1000		RECEPT - COUNTER	RECEPT - W.P. ON ROOF		720		20/1	22
23	20/1			1000	RECEPT - COUNTER	EF-8.3, 4.32 FLA	520			20/1	24
25	20/1	1000			RECEPT - T.W.R.	EF-8.2, 4.32 FLA			520	20/1	26
27	20/1		1000		RECEPT - T.W.R.	RECEPT - TK CLASSROOM		900		20/1	28
29	20/1			500	RECEPT- T.V.	RECEPT - TK CLASSROOM	720			20/1	30
31	20/1	756			EF-8.1, 6.3 FLA	WATER HEATER			3600	30/1	32
33	30/2		2250		WATER HEATER	CIRC. PUMP		36		20/1	34
35				2250		WATER HEATER	3600			30/1	36
(1) 37	20/1	100			FIRE ALARM RISER BELL	SPACE					38
39					SPACE	SPACE					40
41					SPACE	SPACE					42

LOAD SUMMARY	A	B	C	
CONNECTED LOAD (VA) :	13316	11106	13710	TOTAL CALCULATED
25% LCL/LML (VA) :	0	0	0	LOAD FOR PANEL:
TOTAL LOAD (VA) :	13316	11106	13710	38132 VA
TOTAL LOAD (AMPS) :	111.0	92.6	114.3	

PANEL "EV"

120/208V, 3 PH, 4 W — 400 A. BUSSING — 400 A. MAIN BKR. — 30 CIRCUIT
22K BREAKER A.I.C. — 5 3/4" MAX. ENCL. DEPTH — SURF MOUNTING

CKT	BKR	LOAD: V.A. A	B	C	DESCRIPTION	DESCRIPTION	LOAD: V.A. C	B	A	BKR	CKT
1	30/2	3600			EV STATION	FUTURE EV STATION			3600	30/2	2
3			3600					3600			4
5	30/2	3600		3600	EV STATION	FUTURE EV STATION	3600			30/2	6
7									3600		8
9	30/2		3600		FUTURE EV STATION	FUTURE EV STATION		3600		30/2	10
11				3600			3600				12
13	30/2	3600			FUTURE EV STATION	FUTURE EV STATION			3600	30/2	14
15			3600					3600			16
17	20/1				SPARE	SPARE				20/1	18
19	20/1				SPARE	SPARE				20/1	20
21	20/1				SPARE	SPARE				20/1	22
23					SPACE	SPACE					24
25					SPACE	SPACE					26
27					SPACE	SPACE					28
29					SPACE	SPARE					30

LOAD SUMMARY	A	B	C	
CONNECTED LOAD (VA) :	21600	21600	14400	TOTAL CALCULATED
25% LCL/LML (VA) :	0	0	0	LOAD FOR PANEL:
TOTAL LOAD (VA) :	21600	21600	14400	57600 VA
TOTAL LOAD (AMPS) :	180.0	180.0	120.0	

TYPICAL PANEL SCHEDULE NOTES:

(1) PROVIDE A LOCK-ON DEVICE AT THIS CIRCUIT BREAKER, "RED IN COLOR", SPACEAGE #ELOCK-FA OR EQUAL. PROVIDE AN ENGRAVED NAMEPLATE: "FIRE ALARM CIRCUIT", WHITE LETTERS ON A RED BACKGROUND. MOUNT NAMEPLATE ONTO INTERIOR TRIM AND ADJACENT TO CIRCUIT BREAKER.

(2) SUB-FEED CIRCUIT BREAKER.

APPROVALS
FILE # 54-76 APPLICATION # 02-121996

IDENTIFICATION STAMP
DIV. OF THE STATE ARCHITECT
APP: 02-121996 INC:
REVIEWED FOR
SS ☑ FLS ☑ ACS ☑
DATE: 8/14/2024

LICENSED ARCHITECT
MICHAEL J. SCOTT JR.
No. C-34290
REN. 05-31-25
STATE OF CALIFORNIA
DATE: DECEMBER 31, 2023

NEW PRESCHOOL AND TK/KINDERGARTEN CLASSROOMS AT SANTA FE ELEMENTARY SCHOOL

PORTERVILLE UNIFIED SCHOOL DISTRICT
286 E ORANGE AVENUE, PORTERVILLE, CA 93257

REVISIONS

MANGINI | ARCHITECTURE INGENUITY
BARENG MORRELLI SCOTT
MANGINI ASSOCIATES INC.
4320 West Mineral King Avenue
Visalia, California 93291
www.mangini.us
(559) 627.0530 Office
(559) 627.1926 Fax

TITLE
PANEL
SCHEDULES

E6.1

PROJECT 23076

Rose Sing Eastham & Associates
Electrical Consultants
131 S. Dunworth – (559)733–2671
Visalia, California 93292–6705

REGISTERED PROFESSIONAL ENGINEER
STEVEN KIRK EASTHAM
No. E 18786
Exp. 6/30/25
ELECTRICAL
STATE OF CALIFORNIA

Z:\Drafting\Jobs\RSE\SCHOOLS\Porterville\Santa Fe Elementary\E6.1.dwg DATE SAVED: 06/12/24 BY: Casey DATE PLOTTED: 06/21/24 JOB #: 23-093-JJ

APPROVALS

FILE # 54-76 | APPLICATION # 02-121996

IDENTIFICATION STAMP
DIV. OF THE STATE ARCHITECT
APP: 02-121996 INC:
REVIEWED FOR
SS ☑ FLS ☑ ACS ☑
DATE: 8/14/2024

LICENSED ARCHITECT
MICHAEL J. SCOTT
No. C-34290
REN. 05-31-25
STATE OF CALIFORNIA

DATE: DECEMBER 31, 2023

SIGNALS / TELECOMMUNICATIONS APPLICABLE CODES AND STANDARDS

CODES:

2022 CALIFORNIA ELECTRICAL CODE (C.E.C.)

STANDARDS AND GUIDES:

NFPA 72 - NATIONAL FIRE ALARM CODE, (CALIFORNIA AMENDED)

ANSI/BICSI - TELECOMMUNICATIONS DISTRIBUTION METHODS MANUAL (TDMM), 13TH EDITION OR NEWER.

ANSI/BICSI 001-2017 - INFORMATION AND COMMUNICATION TECHNOLOGY SYSTEMS DESIGN AND IMPLEMENTATIONS BEST PRACTICES FOR EDUCATIONAL INSTITUTIONS AND FACILITIES.

ANSI/BICSI 005-2016 - ELECTRONIC SAFETY AND SECURITY (ESS) SYSTEM DESIGN AND IMPLEMENTATIONS BEST PRACTICES.

SIGNALS SYMBOLS

ALL DIMENSIONS TO CENTER OF BOX, U.O.N.

	U.O.N.	UNLESS OTHERWISE NOTED
		TERMINAL CABINET (SIZE AS SHOWN)
		CONDUIT STUB - CAPPED AND LABELED.
(A)		DATA OUTLET IN WALL (+18" U.O.N.)
	WA	DATA OUTLET IN CEILING WIRELESS ACCESS POINT (2 'D' CABLES)
(C)		PUBLIC ADDRESS CLOCK, ON WALL (+96" U.O.N.)
(B)	S	PUBLIC ADDRESS SPEAKER, FLUSH MOUNTED IN T-BAR CEILING
(B)	H	PUBLIC ADDRESS HORN, FLUSH MOUNTED IN WALL +120", U.O.N. (WEATHERPROOF)
(A)	C	IP CAMERA, FLUSH MOUNTED BOX IN WALL +120", U.O.N.
(C)	K	INTRUSION ALARM KEY PAD (+48" U.O.N.)
	X	INTRUSION ALARM DOOR CONTACT IN DOOR FRAMING
(C)	M	INTRUSION ALARM PASSIVE INFRARED DETECTOR ON CEILING
(C)	IS	INTRUSION ALARM SIREN, ON WALL (+96" U.O.N.)
	MC HC	MC/HC LOCATION
(D)		FLUSH OUTLET BOX WITH DATA OUTLET/DEVICE(S) SHOWN

SIGNALS SYMBOLS NOTES:

(A) ELECTRICAL CONTRACTOR SHALL PROVIDE A 5" SQUARE x 2 7/8" DEEP OUTLET BOX WITH SINGLE GANG RAISED RING, DEPTH AS REQUIRED, UNLESS OTHERWISE NOTED. RUN 1-1/4"C FROM OUTLET BOX AND STUB INTO ACCESSIBLE ATTIC SPACE ABOVE T-BAR CEILING. PROVIDE AN INSULATING BUSHING, BRIDGEPORT #TWB-54 OR EQUAL, AT STUB.

(B) ELECTRICAL CONTRACTOR SHALL PROVIDE BACK BOX PER MANUFACTURER'S REQUIREMENTS.

(C) ELECTRICAL CONTRACTOR SHALL PROVIDE A 4-11/6" SQUARE x 2 1/8" DEEP OUTLET BOX WITH SINGLE GANG RAISED RING, DEPTH AS REQUIRED, UNLESS OTHERWISE NOTED. RUN 3/4"C FROM OUTLET BOX AND STUB INTO ACCESSIBLE ATTIC SPACE ABOVE T-BAR CEILING. PROVIDE AN INSULATING BUSHING, BRIDGEPORT #TWB-52 OR EQUAL, AT STUB.

(D) THIS IS THE SAME FLUSH FLOOR BOX AS DENOTED ON THE POWER PLAN.

SIGNALS FEEDER SCHEDULE:

(A) SEE SITE SIGNALS PLAN, #TS1.1 FOR CONDUIT AND WIRING REQUIREMENTS.

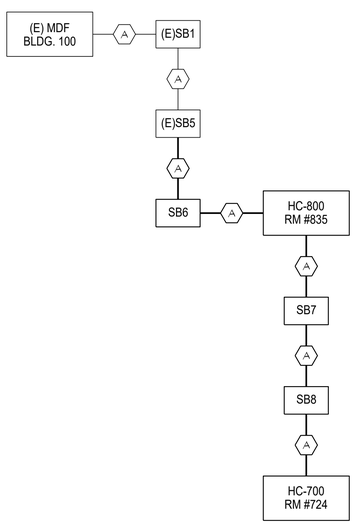

1 SIGNALS WIRING DIAGRAM

NTS

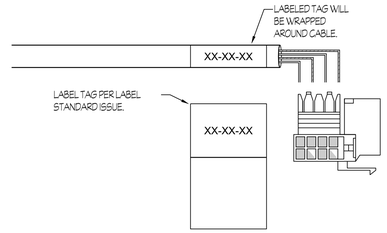

XXXX - XXXX - XXXX

FROM BUILDING DESIGNATION AND RACK DESIGNATION, IF MULTIPLE | PANEL NUMBER | PORT NUMBER

2 CABLE LINK IDENTIFIER LABELING FORMAT

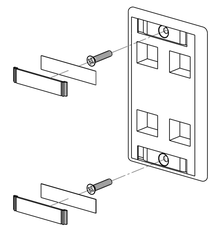

XXXX - XXXX - XXXX

BUILDING DESIGNATION AND RACK DESIGNATION, IF MULTIPLE | PANEL NUMBER | PORT NUMBER

3 DATA OUTLET IDENTIFICATION MATRIX

NTS

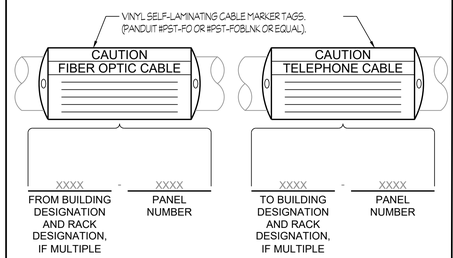

XXXX - XXXX | XXXX - XXXX

FROM BUILDING DESIGNATION AND RACK DESIGNATION, IF MULTIPLE | PANEL NUMBER | TO BUILDING DESIGNATION AND RACK DESIGNATION, IF MULTIPLE | PANEL NUMBER

4 CABLE MARKER TAG

NTS

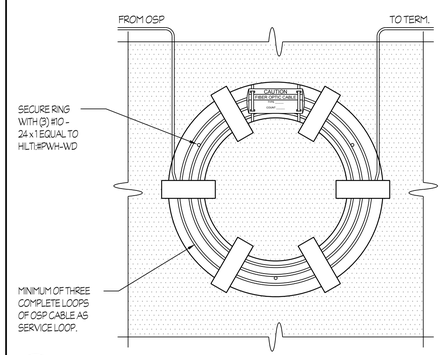

5 STORAGE RING FOR OSP CABLES

NTS

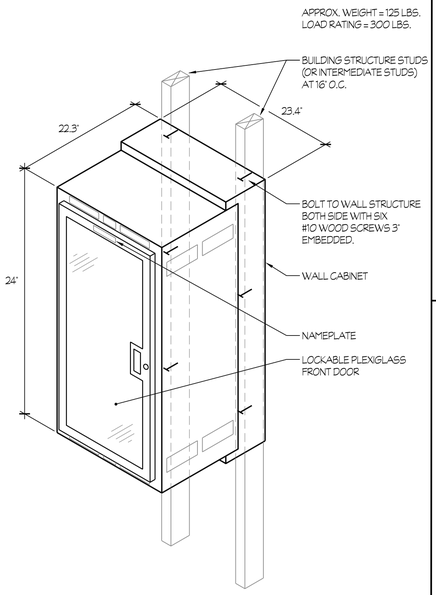

6 HC/IDF CABINET WALL RACK MOUNTING

NTS

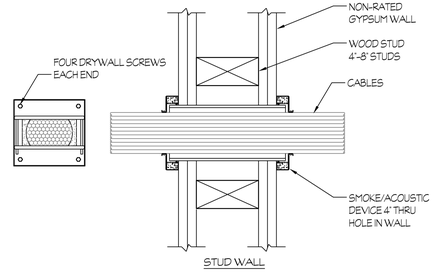

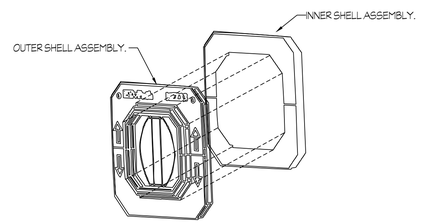

NOTES:

1. Cables - Aggregate cross-sectional area of cables in the sleeve to be 0%to max. 60%of the aggregate cross-sectional area of the sleeve. When there is no cable fill, device cover is to be tightly closed. Cables to be rigidly supported on both sides of the wall assembly.

2. Smoke/Acoustic Device - Device to be installed in accordance with the accompanying installation instructions.

3. STI FIRE STOP DEVICE # NEZDP233

7 SMOKE AND ACOUSTICAL PATHWAY THRU WALL KIT

NTS

PULL BOX	586, 587, 588
W	24"
L	36"

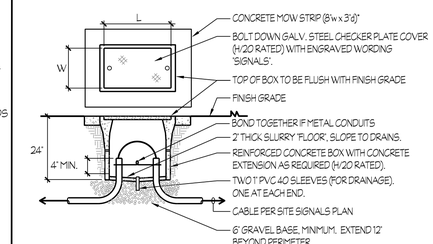

* NOTE: WHERE PULL BOX IS ADJACENT TO CONCRETE WALK, EXTEND MOWSTRIP TO CONNECT WITH WALK. FOAM SEAL ALL CONDUITS IN YARD BOXES.

** NOTE: INTERIOR DIMENSIONS MEASURED AT "OPENING" OF PULL BOX.

8 PULL BOX MOUNTING

NTS

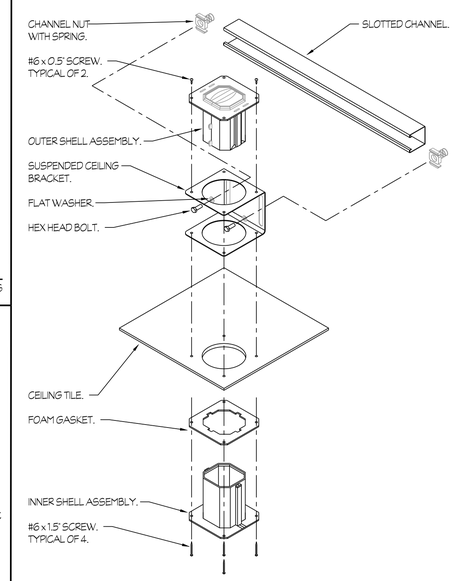

9 SMOKE AND ACOUSTICAL PATHWAY WITH CEILING KIT

NTS

NEW PRESCHOOL AND TK/KINDERGARTEN CLASSROOMS AT SANTA FE ELEMENTARY SCHOOL

PORTERVILLE UNIFIED SCHOOL DISTRICT

286 E ORANGE AVENUE, PORTERVILLE, CA 93257

REVISIONS

MANGINI ARCHITECTURE INGENUITY

BARENG MORRELLI SCOTT

MANGINI ASSOCIATES INC.
4320 West Mineral King Avenue
Visalia, California 93291

www.mangini.us
(559) 627.0530 Office
(559) 627.1926 Fax

TITLE
SIGNALS SYMBOLS, CODES AND NOTES

TG1.1

PROJECT 23076

Rose Sing Eastham & Associates
Electrical Consultants
131 S. Dunworth - (559)733-2671
Visalia, California 93292-6705

REGISTERED PROFESSIONAL ENGINEER
JASON KIRK EASTHAM
No. 19766
Exp. 6/30/25
ELECTRICAL
STATE OF CALIFORNIA

Z:\Drafting\Jobs\RSE\SCHOOLS\Porterville\Santa Fe Elementary\TG1.1.dwg DATE SAVED: 06/21/24 BY: Casey DATE PLOTTED: 06/21/24 JOB #: 23-093-JJ

APPROVALS

FILE #	APPLICATION #
54-76	02-121996

IDENTIFICATION STAMP
DIV. OF THE STATE ARCHITECT
APP: 02-121996 INC:
REVIEWED FOR
SS ☑ FLS ☑ ACS ☑
DATE: 8/14/2024

LICENSED ARCHITECT
MICHAEL J. SCOTT
No. C-34290
REN. 05-31-25
STATE OF CALIFORNIA

DATE: DECEMBER 31, 2023

NOTES (THIS SHEET ONLY):

1. EXISTING TWO 2"C. PULL IN TWO 6 STRAND SINGLE MODE FIBER, TWO 12 PAIR CAT 3.
2. NEW TWO 2"C. PULL IN TWO 6 STRAND SINGLE MODE FIBER, TWO 12 PAIR CAT 3.
3. SAWCUT AND PATCH EXISTING CONCRETE TO UNDERGROUND NEW CONDUITS AS SHOWN.
4. PULL BOX PER DETAIL #8/TG1.1. TYPICAL, U.O.N..

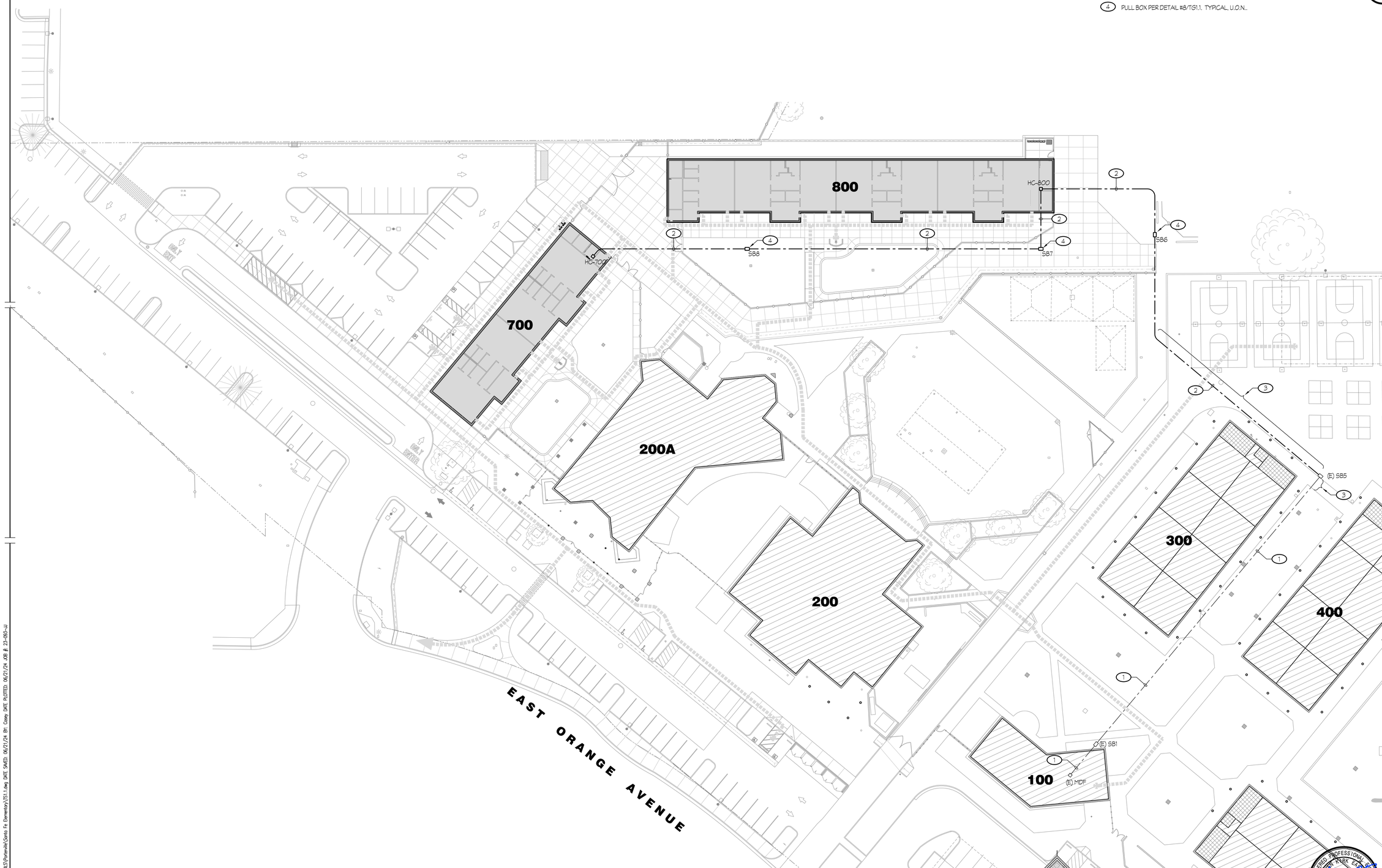

PARTIAL ENLARGED SITE SIGNALS PLAN

1" = 30'-0"

Rose Sing Eastham & Associates
Electrical Consultants
131 S. Dunworth – (559)733-2671
Visalia, California 93292-6705

REGISTERED PROFESSIONAL ENGINEER
ROSSANA KIRK EASTHAM
No. E-19766
Exp. 6/30/25
ELECTRICAL
STATE OF CALIFORNIA

NEW PRESCHOOL AND TK/KINDERGARTEN CLASSROOMS AT SANTA FE ELEMENTARY SCHOOL

PORTERVILLE UNIFIED SCHOOL DISTRICT
286 E ORANGE AVENUE, PORTERVILLE, CA 93257

REVISIONS

MANGINI ARCHITECTURE INGENUITY
BARENG MORRELLI SCOTT
MANGINI ASSOCIATES INC.
4320 West Mineral King Avenue
Visalia, California 93291
www.mangini.us
(559) 627.0530 Office
(559) 627.1926 Fax

TITLE
PARTIAL
ENLARGED SITE
ELECTRICAL
PLAN

TS1.1

PROJECT 23076

Z:\Drafting\Jobs\RSES\SCHOOLS\Porterville\Santa Fe Elementary\TS1.1.dwg DATE SAVED: 06/21/24 BY: Casey DATE PLOTTED: 06/21/24 JOB #: 23-003-JJ

APPROVALS

FILE #	APPLICATION #
54-76	02-121996

IDENTIFICATION STAMP
DIV. OF THE STATE ARCHITECT
APP: 02-121996 INC:
REVIEWED FOR
SS ☑ FLS ☑ ACS ☑
DATE: 8/14/2024

LICENSED ARCHITECT
MICHAEL J. SCOTT
No. C-34290
REN. 05-31-25
STATE OF CALIFORNIA

DATE: DECEMBER 31, 2023

NOTES (THIS SHEET ONLY):

1. DATA OUTLET. PROVIDE TWO CAT. 6 CABLE, JACK AND BLANK IN FOUR PORT SINGLE GANG PLATE. OUTLET BOX SHALL BE 5s TYPE 2 7/8" DEEP, 1G TRIM RING, ONE 1 1/4"C TO ACCESSIBLE SPACE. DELTA # DENOTES NUMBER OF CABLES.
2. CEILING GRID MOUNTED WIRELESS AP. PROVIDE TWO CAT. 6a CABLES AND JACKS IN SURFACE BOX ABOVE GRID. LABEL GRID LOCATION AND OUTLET NUMBER ON GRID TEE.
3. INTERCOM CLOCK. BATTERY OPERATED, WIRELESS, SYNCHRONOUS PROVIDE 4S OUTLET BOX ONE 3/4"C TO ACCESSIBLE SPACE.
4. INTERCOM CEILING SPEAKER. PROVIDE ONE 1C CABLE TO SPECIAL CEILING BOX AND HANGER AS REQUIRED BY AHJ, ONE 3/4"C TO ACCESSIBLE SPACE.
5. INTRUSION KEYPAD. PROVIDE ONE 1N CABLE SINGLE GANG BOX AND RING, ONE 3/4"C TO ACCESSIBLE SPACE.
6. INTRUSION DOOR CONTACT. PROVIDE ONE 1N CABLE, ONE 3/4"C TO ACCESSIBLE SPACE. COORDINATE ROUGH-IN WITH ALL TRADES.
7. NEW "HC-700" CABINET, REFER TO DETAILS #6/TG1.1.
8. CAMERA OUTLET. PROVIDE TWO CAT. 6 CABLES AND JACKS IN TWO PORT SURFACE BOX. OUTLET BOX SHALL BE 4 11/16 SQR TYPE 2 1/8" DEEP, 3/0 FIXTURE TRIM RING, ONE 1C TO ACCESSIBLE SPACE. PROVIDE BLANK COVER.
9. INTERCOM HORN, PROVIDE ONE 1C CABLE IN SPECIAL BOX, ONE 3/4"C TO ACCESSIBLE SPACE.
10. FLUSH FLOOR OUTLET BOX WITH DEVICE(S) SHOWN PER SPECIFICATIONS. TYPICAL, U.O.N..
11. RUN A 1 1/4"C UNDERGROUND OVER TO WALL. THEN TURN UP INSIDE WALL AND STUB INTO ACCESSIBLE ATTIC SPACE ABOVE T-BAR CEILING. PULL IN TWO CAT. 6 CABLES AND CONNECT.

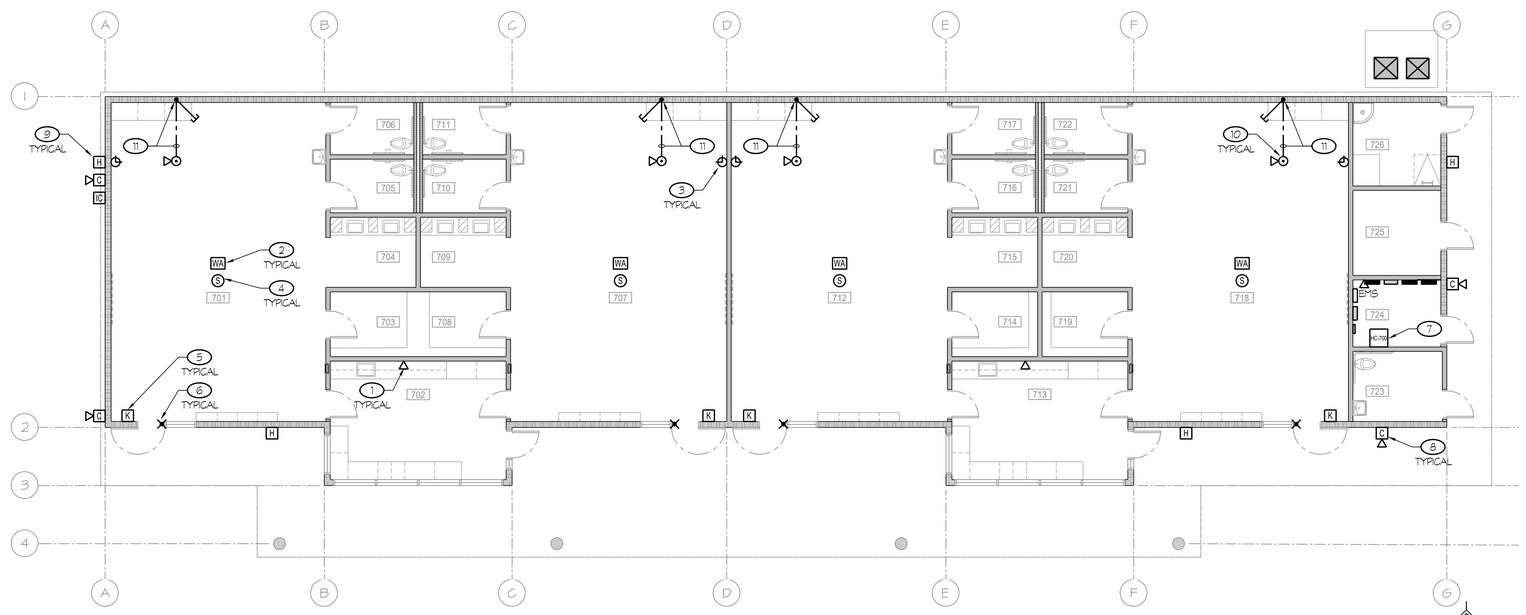

BUILDING 700
OVERALL SIGNALS PLAN

1/8" = 1'-0"

north

ROOM LEGEND		
#	ROOM NAME	CEILING HEIGHT
701	PRESCHOOL CLSRM	+10'-0"
702	TEACHER WORK RM	+10'-0"
703	STORAGE	+9'-0"
704	CLEAN UP	+9'-0"
705	UNISEX	+9'-0"
706	UNISEX	+9'-0"
707	PRESCHOOL CLSRM	+10'-0"
708	STORAGE	+9'-0"
709	CLEAN UP	+9'-0"
710	UNISEX	+9'-0"
711	UNISEX	+9'-0"
712	PRESCHOOL CLSRM	+10'-0"
713	TEACHER WORK RM	+10'-0"
714	STORAGE	+9'-0"
715	CLEAN UP	+9'-0"
716	UNISEX	+9'-0"
717	UNISEX	+9'-0"
718	PRESCHOOL CLSRM	+10'-0"
719	STORAGE	+9'-0"
720	CLEAN UP	+9'-0"
721	UNISEX	+9'-0"
722	CLEAN UP	+9'-0"
723	STAFF TOILET	+9'-0"
724	ELECTRICAL	+9'-0"
725	STORAGE	+9'-0"
726	JANITOR	+9'-0"

Rose Sing Eastham & Associates
Electrical Consultants
131 S. Dunworth - (559)733-2671
Visalia, California 93292-6705

REGISTERED PROFESSIONAL ENGINEER
JOSEPH KIRK EASTHAM
No. E-19786
Exp. 6/30/25
ELECTRICAL
STATE OF CALIFORNIA

NEW PRESCHOOL AND TK/KINDERGARTEN CLASSROOMS AT SANTA FE ELEMENTARY SCHOOL

PORTERVILLE UNIFIED SCHOOL DISTRICT
286 E ORANGE AVENUE, PORTERVILLE, CA 93257

REVISIONS

MANGINI ARCHITECTURE INGENUITY
BARENG MORRELLI SCOTT
MANGINI ASSOCIATES INC.
4320 West Mineral King Avenue
Visalia, California 93291
www.mangini.us
(559) 627-0530 Office
(559) 627-1926 Fax

TITLE
BUILDING 700
OVERALL
SIGNALS PLAN

T1.1

PROJECT 23076

Z:\Drafting\Jobs\RES\SCHOOLS\Porterville\Santa Fe Elementary\T1.1.dwg DATE SAVED: 06/21/24 By: Casey DATE PLOTTED: 06/21/24 JOB # 23-033-JJ

APPROVALS

FILE #	APPLICATION #
54-76	02-121996

IDENTIFICATION STAMP
DIV. OF THE STATE ARCHITECT
APP: 02-121996 INC:
REVIEWED FOR
SS ☑ FLS ☑ ACS ☑
DATE: 8/14/2024

LICENSED ARCHITECT
MICHAEL J. SCOTT
No. C-34290
REN. 05-31-25
STATE OF CALIFORNIA

DATE: DECEMBER 31, 2023

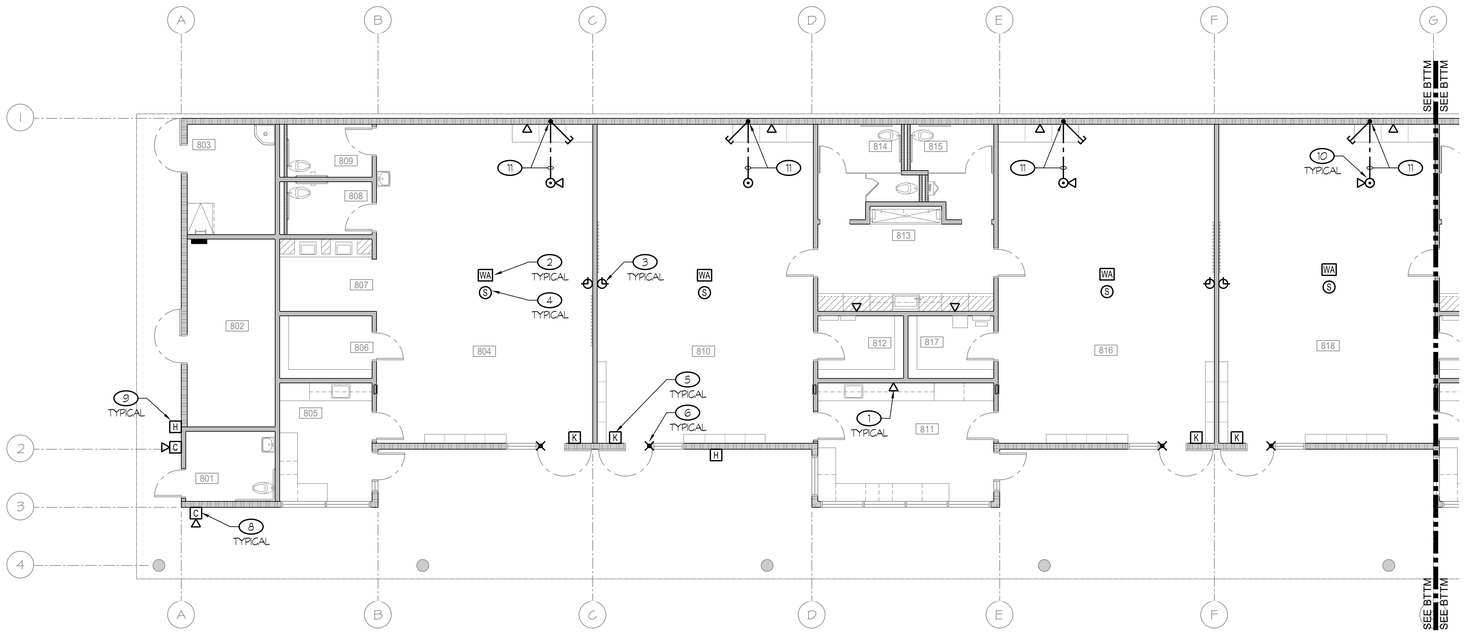

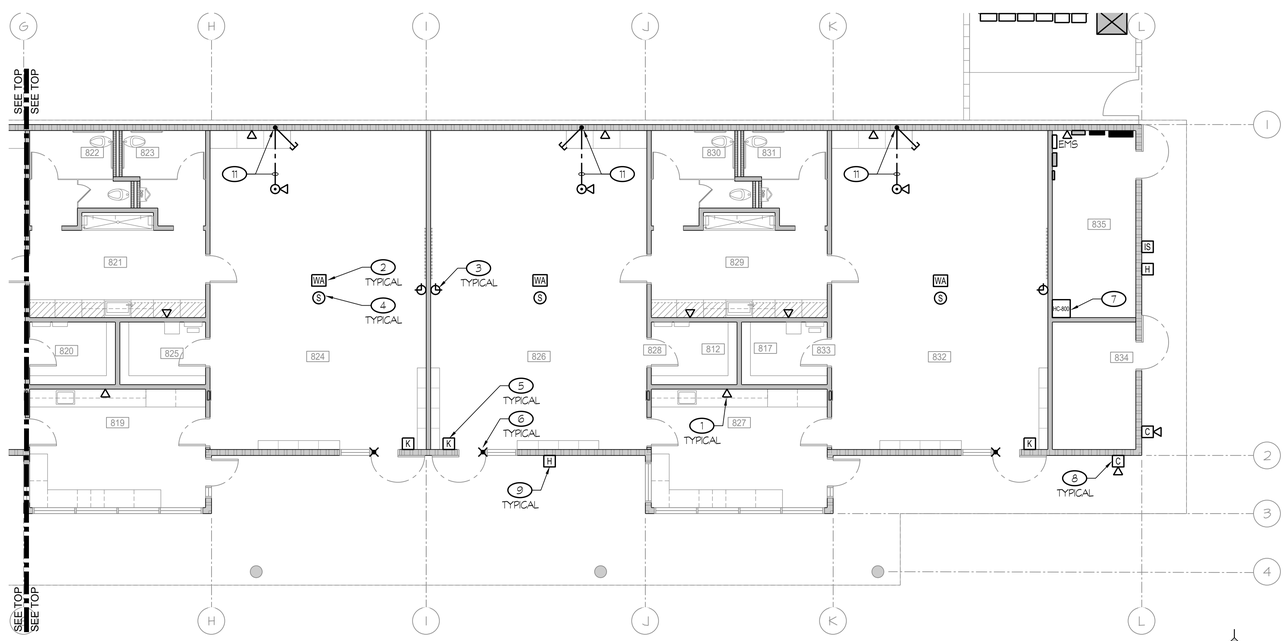

NOTES (THIS SHEET ONLY):

1. DATA OUTLET. PROVIDE TWO CAT. 6 CABLE, JACK AND BLANK IN FOUR PORT SINGLE GANG PLATE. OUTLET BOX SHALL BE 5s TYPE 2 7/8" DEEP, 1G TRIM RING, ONE 1 1/4"C TO ACCESSIBLE SPACE. DELTA # DENOTES NUMBER OF CABLES.
2. CEILING GRID MOUNTED WIRELESS AP. PROVIDE TWO CAT. 6a CABLES AND JACKS IN SURFACE BOX ABOVE GRID. LABEL GRID LOCATION AND OUTLET NUMBER ON GRID TEE.
3. INTERCOM CLOCK. BATTERY OPERATED, WIRELESS, SYNCHRONOUS PROVIDE 4S OUTLET BOX ONE 3/4"C TO ACCESSIBLE SPACE.
4. INTERCOM CEILING SPEAKER. PROVIDE ONE 1C" CABLE TO SPECIAL CEILING BOX AND HANGER AS REQUIRED BY AHJ, ONE 3/4"C TO ACCESSIBLE SPACE.
5. INTRUSION KEYPAD. PROVIDE ONE 1N" CABLE SINGLE GANG BOX AND RING, ONE 3/4"C TO ACCESSIBLE SPACE.
6. INTRUSION DOOR CONTACT. PROVIDE ONE 1N" CABLE, ONE 3/4"C TO ACCESSIBLE SPACE. COORDINATE ROUGH-IN WITH ALL TRADES.
7. NEW "HC-800" CABINET, REFER TO DETAILS #6/TG1.1.
8. CAMERA OUTLET. PROVIDE TWO CAT. 6 CABLES AND JACKS IN TWO PORT SURFACE BOX. OUTLET BOX SHALL BE 4 11/16" SQR TYPE 2 1/8" DEEP, 3/0 FIXTURE TRIM RING, ONE 1C TO ACCESSIBLE SPACE. PROVIDE BLANK COVER.
9. INTERCOM HORN, PROVIDE ONE 1C CABLE IN SPECIAL BOX, ONE 3/4"C TO ACCESSIBLE SPACE.
10. FLUSH FLOOR OUTLET BOX WITH DEVICE(S) SHOWN PER SPECIFICATIONS. TYPICAL, U.O.N.
11. RUN A 1 1/4"C UNDERGROUND OVER TO WALL. THEN TURN UP INSIDE WALL AND STUB INTO ACCESSIBLE ATTIC SPACE ABOVE T-BAR CEILING. PULL IN TWO CAT. 6 CABLES AND CONNECT.

ROOM LEGEND

#	ROOM NAME	CEILING HEIGHT	#	ROOM NAME	CEILING HEIGHT
801	STAFF TOILET	+9'-0"	819	TEACHER WORK RM	+10'-0"
802	STORAGE	+9'-0"	820	STORAGE	+9'-0"
803	JANITOR	+9'-0"	821	CLEAN UP	+9'-0"
804	TK CLASSROOM	+10'-0"	822	GIRLS	+9'-0"
805	TEACHER WORK RM	+10'-0"	823	BOYS	+9'-0"
806	STORAGE	+9'-0"	824	KINDERGARTEN	+10'-0"
807	CLEAN UP	+9'-0"	825	STORAGE	+9'-0"
808	UNISEX	+9'-0"	826	KINDERGARTEN	+10'-0"
809	UNISEX	+9'-0"	827	TEACHER WORK RM	+10'-0"
810	TK CLASSROOM	+10'-0"	828	STORAGE	+9'-0"
811	TEACHER WORK RM	+10'-0"	829	CLEAN UP	+9'-0"
812	STORAGE	+9'-0"	830	GIRLS	+9'-0"
813	CLEAN UP	+9'-0"	831	BOYS	+9'-0"
814	GIRLS	+9'-0"	832	KINDERGARTEN	+10'-0"
815	BOYS	+9'-0"	833	STORAGE	+9'-0"
816	TK CLASSROOM	+10'-0"	834	STORAGE	+9'-0"
817	STORAGE	+9'-0"	835	ELECTRICAL	+9'-0"
818	TK CLASSROOM	+10'-0"			

NEW PRESCHOOL AND TK/KINDERGARTEN CLASSROOMS AT SANTA FE ELEMENTARY SCHOOL

PORTERVILLE UNIFIED SCHOOL DISTRICT
286 E ORANGE AVENUE, PORTERVILLE, CA 93257

REVISIONS

MANGINI ARCHITECTURE INGENUITY
BARENG MORRELLI SCOTT
MANGINI ASSOCIATES INC.
4320 West Mineral King Avenue
Visalia, California 93291
www.mangini.us
(559) 627-0530 Office
(559) 627-1926 Fax

TITLE
BUILDING 800
OVERALL
SIGNALS PLAN

T2.1

PROJECT 23076

BUILDING 800
OVERALL SIGNALS PLAN

1/8" = 1'-0"

north

Rose Sing Eastham & Associates
Electrical Consultants
131 S. Dunworth - (559)733-2671
Visalia, California 93292-6705

REGISTERED PROFESSIONAL ENGINEER
JOSEPH KIRK EASTHAM
No. E-19786
Exp. 6/30/25
ELECTRICAL
STATE OF CALIFORNIA

Z:\Drafting\Jobs\RSES\SCHOOLS\Porterville\Santa Fe Elementary\T2.1.dwg DATE SAVED: 06/21/24 BY: Casey DATE PLOTTED: 06/21/24 JOB # 23-093-ui