MOUNTAIN TRANSIT MAINTENANCE FACILITY

170 BUSINESS CENTER. BIG BEAR LAKE, CALIFORNIA
BIG BEAR LAKE

RUHNAU CLARKE ARCHITECTS

3775 TENTH STREET, RIVERSIDE CALIFORNIA 92501 (951) 684 4664 / 5751 PALMER WAY, SUITE C, CARLSBAD CALIFORNIA 92010 (760) 438 5899

STAMPS

LICENSED ARCHITECT ROGER CLARKE No. C-21340 Exp.10-31-25 STATE OF CALIFORNIA

AGENCY APPROVAL
File No: ########-##-########

CONSULTANT BRANDING

RUHNAU CLARKE ARCHITECTS

CONTACT LIST

Owner
Mountain Area Regional Transit Authority
41939 Fox Farm Road
Big Bear Lake, CA. 92315
Phone: 909-963-7200
Contact: Sandy Benson
sbenson@mountaintransit.org

Structural
RTM Engineering Consultants
9931 Muirlands Blvd.
Irvine, CA 92618
Phone: 949-462-3200
Contact: Larry Kaprielian, S.E., Principal
larry.kaprielian@rtmec.com

Mechanical & Plumbing
Design West Engineering
412 E. Vanderbilt Way
San Bernardion, CA, 92408
Phone: *909.890.3700*
Contact: *Rudy Paramo*
rparamo@designwesteng.com

Architect
Ruhnau Clarke Architects
3775 Tenth St., Riverside, CA 92501
Phone:951.684.4664
Contact: *Bryan Dunaj*
bdunaj@ruhnauclarke.com
Contact: Roger Clarke
rclarke@ruhnauclarke.com

Landscape
Community Works
4649 Brockton Avenue
Riverside, CA 92506
Phone: 951-369-0700
Contact: Scott Rice
scott@cwdg.fun

Electrical
FBA Engineers
150 Paularino Avenue, Suite A120
Costa Mesa, CA 92626
Phone: 949-852-9995
Contact: Alan Bravo, Principal
abravo@fbaengr.com

Hardware Consultant
ASSA ABLOY Openings Solutions
Address:
Phone: (657) 258-7071
Contact: Valarie Harris FCSI CDT CCPR
valarie.harris@assaabloy.com

Specifications
Spec Studio
9783 E. Maplewood Avenue
Englewood, CO 80111
Phone: 909-374-2011
Contact: Richard L. Gonser Jr., AIA, CSI, CCCA, SCIP
spcstudio@icloud.com

Civil
Valued Engineering
600 N. Mountain Avenue, Suite C102. Upland, CA 91786
Phone: 909-982-4601
Contact: Jeff Meiter,
President/ CEO
jeff@valued-eng.com

GEOTEHCNIAL ENGINEER
JOHN R. BYERLY INC.
2257 SOUTH LILAC AVENUE
BLOOMINGTON, CA 92316
Phone: 909-783-1324
Contact: John R. Byerly
john@johnrbyerlyinc.com
Mike Lozano
mike@johnrbyerlyinc.com

Cost Estimating
Dr. Stephen R. Dunn
601 N. Kirby Street, Unit 463. Hemet, CA
Phone: 760-224-9301
Contact: Dr.Stephen R. Dunn, PhD
drsdunnphd1993@gmail.com

TYPICAL ABBREVIATIONS

@	AT	GA	GAUGE	RSLB	RESILIENT BASE
&	AND	GALV	GALVANIZED	RT	RUBBER TREAD
<	ANGLE	GL	GLASS	RWL	RAIN WATER LEADER
		GLU LAM	GLUE LAMINATED		
ACPL	ACOUSTIC PLASTER	GB	GRAB BAR	O	ROUND
ACT	ACOUSTIC TILE	GPL	GYPSUM PLASTER		
AFF	ABOVE FINISHED FLOOR	GWB	GYPSUM WALLBOARD	SRF	SEAMLESS RESILIENT
		GWW	WATER RESISTANT GWB		FLOORING
BLKG	BLOCKING	GC	GENERAL CONTRACTOR	SS	SERVICE SINK/
BD	BOARD				STAINLESS STEEL
BOS	BOTTOM OF STRUCTURE	H	HIGH	SHT	SHEET
BB	BULTTETIN BOARD	HDW	HARDWARE	SHTH	SHEATHING
		HORIZ	HORIZONTAL	SC	SOLID CORE
CAB	CABINET	HR	HOUR	SB	SPLASH BLOCK
CPT	CARPET	HT	HEIGHT	STN	STAIN
CSWK	CASEWORK			STD	STANDARD
CLG	CEILING	ID	INSIDE DIAMETER	STL	STEEL
CEM	CEMENT	INSUL	INSULATION	STR	
CPL	CEMENT PLASTER	INT	INTERIOR		STRUCTURAL/STRUCTUR
CL	CENTERLINE			E	
CT	CERAMIC TILE	JH	JOIST HANGER	SUSP	SUSPENDED
CLF	CHAIN LINK FNECE	JT	JOINT	SM	SHEET METAL
CLR	CLEAR	JST	JOIST	SIM	SIMILAR
COL	COLUMN				
CONC	CONCRETE	LAM	LAMINATE	TB	TACK BOARD
CMU	CONCRETE MASONRY UNIT	LT	LIGHT	TJ	TOOLED JOINT
CJ	COLD JOINT	LVR	LOUVER	TC	TOP OF CONCRETE CURB
CONT	CONTINUOUS			TS	TUBE STEEL
CF	CUBIC FEET	MACH	MACHINE	TW	TOP OF WALK
		MAX	MAXIMUM	TYP	TYPICAL
DP	DEMOUNTABLE PARTITION	MECH	MECHANICAL	TEL	TELEPHONE
DET	DETAIL	MIN	MINIMUM	TEMP	TEMPERATURE
DIM	DIMENSION	MH	MANHOLE	TOC	TOP OF CANOPY
DR	DOOR	MFR	MANUFACTURER	TOR	TOP OF ROOF
DRF	DOOR FRAME	MO	MASONRY OPENING	TOS	TOP OF STRUCTURE
DL	DOOR LOUVER	MTL	METAL	TOP	TOP OF PARAPET
DN	DOWN	ML	METAL LATHE	TOW	TOP OF WALL
DS	DOWN SPOUT	MS	METAL STUD		
DF	DRINKING FOUNTAIN	MTD	MOUNTED	UC	UNDER CUT/
DWGS	DRAWINGS				UNDER COUNTER
		NIC	NOT IN CONTRACT	UNO	UNLESS NOTED
EA	EACH	NTC	NOT IN CONTRACT		
ELEC	ELECTRIC	NTS	NOT TO SCALE		OTHERWISE
EWC	ELECTRIC WATER COOLER	NO	NUMBER		
ELEV	ELEVATION			VERT	VERTICAL
ENCL	ENCLOSURE	OC	ON CENTER	VC	VINYL COATED
EQ	EQUAL	OD	OUTSIDE DIAMETER	VCT	VINYL COMPOSITION
EQUIP	EQUIPMENT	OFCI	OWNER FURNISHED/	TILE	
(E)	EXISTING		CONTRACTOR INSTALLED	VT	VINYL TILE
EXP	EXPANSION/EXPOSED	OFOI	OWNER FURNISHED/	VSF	VINYL SHEET FLOORING
EJ	EXPANSION JOINT		OWNER INSTALLED	VWC	VINYL WALL COVERING
EW	EACH WAY	OH	OPPOSITE HAND/OVERHEAD	VIF	VERIFIED IN FIELD
EXT	EXTERIOR	OPNG	OPENING	VTR	VENT THROUGH ROOF
		OPP	OPPOSITE		
FS	FLOOR SINK			WWF	WELD WIRE FABRIC
FOF	FACE OF FINISH	PA	PLANTING AREA	WI	WOODWORKING
FOM	FACE OF MASONRY	PFIN	PRE FINISHED		
FOS	FACE OF STUD	PL	PLATE/PROPERTY LINE		INSTITUTE
FIN	FINISH	PLAS	PLASTIC	WIN	WINDOW
FC	FINISH CEILING	PLWD	PLYWOOD	W/	WITH
FG	FINISH GRADE	PTD	PAINTED	WD	WOOD
FFE	FINISH FLOOR GRADE	PTN	PARTITION	W/O	WITHOUT
FEC	FIRE EXTINGUISER CABINET				
FHC	FIRE HOSE CABINET	R	RADIUS/RISER		
FRPF	FIREPROOF/FIREPROOFING	RD	ROOF DRAIN		
FD	FLOOR DRAIN	REF	REFERENCE		
FLR	FLOOR	REINF	REINFORCED		
FURN	FURNISH/FURNITURE	REQD	REQUIRED		
		RO	ROUGH OPENING		
		RQMT	REQUIREMENT		

REGIONAL MAP

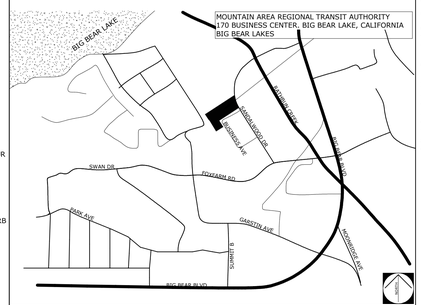

SITE MAP

APPLICABLE CODES

PARTIAL LIST OF APPLICABLE CODES AS OF JANUARY 1, 2023

2022 CALIFORNIA ADMINISTRATIVE CODE, PART 1, TITLE 24 C.C.R.
2022 CALIFORNIA BUILDING CODE (CBC), PART 2, TITLE 24 C.C.R.
(2021 INTERNATIONAL BUILDING CODE VOLUMES 1-2 WITH 2022 CALIFORNIA AMENDMENTS)
2022 CALIFORNIA ELECTRICAL CODE (CEC), PART 3, TITLE 24 C.C.R.
(2023 IS THE CURRENT USE, USE THE CEC BASED ON THE NFPA 70-NEC 2020 EDITION AS MODIFIED)
2022 CALIFORNIA MECHANICAL CODE (CMC) PART 4, TITLE 24 C.C.R.
(2021 UNIFORM MECHANICAL CODE WITH 2022 CALIFORNIA AMENDMENTS)
2022 CALIFORNIA PLUMBING CODE (CPC), PART 5, TITLE 24 C.C.R.
(2021 UNIFORM PLUMBING CODE WITH 2022 CALIFORNIA AMENDMENTS)
2022 CALIFORNIA ENERGY CODE (CENC), PART 6, TITLE 24 C.C.R.
2022 CALIFORNIA FIRE CODE(CFC), PART 9, TITLE 24 C.C.R.
(2021 INTERNATIONAL FIRE CODE WITH 2022 CALIFORNIA AMENDMENTS)
2022 CALIFORNIA GREEN BUILDING STANDARDS CODE, PART 11, TITLE 24 C.C.R.
2022 CALIFORNIA REFERENCED STANDARDS, PART 12, TITLE 24 C.C.R.
TITLE 19 C.C.R., PUBLIC SAFETY, STATE FIRE MARSHAL REGULATIONS.

PARTIAL LIST OF APPLICABLE STANDARDS

NFPA 13	AUTOMATIC FIRE SPRINKLER SYSTEMS	2022 EDITION
NFPA 14	STANDPIPE AND HOSE SYSTEMS	2019 EDITION
NFPA 17	DRY CHEMICAL EXTINGUISHING SYSTEMS	2021 EDITION
NFPA 17A	WET CHEMICAL EXTINGUISHING SYSTEMS	2021 EDITION
NFPA 20	STATIONARY PUMPS FOR FIRE PROTECTION	2022 EDITION
NFPA 22	WATER TANKS FOR PRIVATE FIRE PROTECTION	2023 EDITION
NFPA 24	PRIVATE FIRE MAINS & THEIR APPURTENANCES	2022 EDITION
NFPA 25	STANDARD FOR INSPECTION, TESTING AND MAINTENENANCE OF WATER-BASED FIRE PROTECTION SYSTEMS	2023 EDITION
NFPA 72	NATIONAL FIRE ALARM CODE & SIGNALING CODE	2022 EDITION
NFPA 80	FIRE DOORS AND OTHER OPENING PROTECTIVES	2022 EDITION
NFPA 92	STANDARD FOR SMOKE CONTROL SYSTEMS	2021 EDITION
NFPA 241	STANDARD FOR SAFEGUARDING CONSTRUCTION, ALTERATION, AND DEMOLITION OPERATIONS	2022 EDITION
NFPA 253	CRITICAL RADIANT FLUX OF FLOOR COVERING SYSTEMS	2023 EDITION
NFPA 2001	CLEAN AGENT FIRE EXTINGUISHING SYSTEMS	2022 EDITION
ICC 300	ICC STANDARDS ON BLEACHERS, FOLDING AND TELESCOPING SEATING AND GRAND STANDS	2017 EDITION
UL 300	FIRE TESTING OF FIRE EXTINGUISHING SYSTEMS FOR PROTECTION OF RESTAURANT COOKING AREAS	2005 EDITION
UL 464	AUDIBLE SIGNAL APPLIANCES	2003 EDITION
UL 521	HEAT DETECTORS FOR FIRE PROTECTIVE SIGNALING SYSTEMS	1999 EDITION

REFERENCE CODE SECTION FOR NFPA STANDARDS - 2022 CBC (SFM) CHAPTER 35.
SEE CHAPTER 35 FOR STATE OF CALIFORNIA AMENDMENTS TO NFPA STANDARDS.

ARCHITECTURAL SYMBOLS

BUILDING SECTION
DIRECTION OF VIEW CUT
DIRECTION OF VIEW
VIEW ON SHEET (SIM)
SHEET ON WHICH DETAIL OCCURS (1 / A101)

EXTERIOR ELEVATION
DIRECTION OF VIEW
VIEW ON SHEET (SIM)
SHEET ON WHICH DETAIL OCCURS (1 / A101)

DETAIL REFERENCE TO DRAWINGS
VIEW ON SHEET (SIM)
SHEET ON WHICH DETAIL OCCURS (1 / A101)
DIRECTION OF VIEW

ROOM TAG
ROOM NAME (Room name)
ROOM NUMBER (1001 / B/A1.7.1)
SHEET ON WHICH INTERIOR ELEVATION OCCURS
INTERIOR ELEVATION VIEW

DOOR TAG
DOOR TAG (101)
DOOR RATING (20 MIN.)

WINDOW TAG
WINDOW TAG (1t)

KEYNOTE
CONSTRUCTION KEY NOTE (X.X / X; 1 / A101; SIM)
NUMBER
ASSOCIATED DETAIL REFERENCE

CASEWORK IDENTIFICATION:
DEPTH
HEIGHT (HB / HM / HD)
INDICATES SPECIAL CONDITION
W.I.C. NUMBER
LENGTH
LOCK (M=REVERSE)
EXPLANATION OF SPECIAL CONDITION IF NEEDED

SHEET INDEX

T-0 TITLE SHEET & SHEET INDEX

INCREMENTS 1 & 2

GENERAL
T-1 TITLE SHEET AND SHEET INDEX
T-2 CONDITIONS OF APPROVAL

CIVIL (PER GRADING PERMIT # 23-00074)
1 TITLE SHEET
2 DEMOLITION - PHASE 1
3 PRECISE GRADING - PHASE 1
4 HORIZONTAL CONTROL - PHASE 1
5 UTILITIES - PHASE 1
6 STORM DRAIN - PHASE 1
7 EROSION CONTROL - PHASE 1
8 SECTIONS - PHASE 1
9 STORM DRAIN DETAILS
10 CONSTRUCTION DETAILS
11 CONDITIONS OF APPROVAL
12 CONDITIONS OF APPROVAL

PER PERMIT # 23-00057
LANDSCAPE
LI-1.0 IRRIGATION PLAN
LI-2.0 IRRIGATION DETAILS
LI-3.0 IRRIGATION DETAILS
LP-1.0 PLANTING PLAN
LP-2.0 PLANTING DETAILS

ARCHITECTURE - SITE
AS-1.0 DEMOLITION SITE PLAN
AS-1.1 OVERALL SITE PLAN
AS-1.2 FIRE AUTHORITY PLAN
AS-2.0 ENLARGED SITE PLAN
AS-2.1 ENLARGED PLANS
ASD-1.1 DETAILS
ASD-1.2 DETAILS

ARCHITECTURE
A1-1.1 EGRESS & SIGNAGE PLAN
A1-1.2 FLOOR PLAN
A1-1.3 EQUIPMENT PLAN
A1-2.1 REFLECTED CEILING PLAN
A1-3.1 ROOF PLAN
A1-4.1 BUILDING ELEVATIONS
A1-5.1 BUILDING SECTIONS
A1-6.1 WALL SECTIONS
A1-6.2 WALL SECTIONS
A1-6.3 WALL SECTIONS
A1-6.4 WALL SECTIONS
A1-7.1 ENLARGED PLANS / INTERIOR ELEVS.
A1-7.2 INTERIOR ELEVATIONS
A1-7.3 INTERIOR ELEVATIONS
A1-8.1 DOOR & WINDOW SCHEDULE

INTERIOR DESIGN
ID-1.0 FINISHES PLAN/ SCHED & CMF

ARCHITECTURE - DETAILS
AD-1.0 ACCESSIBILITY & SIGNAGE DETAILS
AD-1.1 ACCESSIBILITY, SIGNAGE, & MISC.
AD-2.0 WALL TYPES
AD-2.1 WALL DETAILS
AD-3.0 ROOF DETAILS
AD-4.0 CEILING DETAILS
AD-5.0 CASEWORK DETAILS
AD-6.0 DOOR & WINDOW DETAILS
AD-6.1 DOOR & WINDOW DETAILS
AD-6.2 DOOR & WINDOW DETAILS

STRUCTURAL
S0-1.1 GENERAL NOTES
S0-1.2 GENERAL NOTES
S0-1.3 TYPICAL CONCRETE AND REINFORCING DETAILS
S0-1.4 TYPICAL METAL STUD DETAILS
S0-1.5 TYPICAL MASONRY AND STEEL DETAILS
S1-1.1 FOUNDATION PLAN
S2-1.1 TRASH & ELEC. YARD FOUNDATION AND ROOF FRAMING
S3-1.1 EQUIPMENT ANCHORAGE DETAILS
S3-1.2 EQUIPMENT ANCHORAGE DETAILS
S3-1.3 EQUIPMENT ANCHORAGE DETAILS
S3-1.4 WASH BAY LIFT ENLARGED PLAN
SD-1.1 FOUNDATION DETAILS
SD-1.2 FOUNDATION DETAILS

MECHANICAL
M0-0.1 MECHANICAL LEGENDS NOTES AND SCHEDULES
M0-0.2 MECHANICAL SCHEDULES CONT.
M0-0.3 ENV T24 COMPLIANCE FORMS
M0-0.4 ENV T24 COMPLIANCE FORMS
M0-0.5 ENV T24 COMPLIANCE FORMS
M0-0.6 MCH T24 COMPLIANCE FORMS
M0-0.7 MCH T24 COMPLIANCE FORMS
M1-1.1 MECHANICAL FLOOR AND ROOF PLANS
M1-1.2 MECHANICAL ENLARGED PLAN
M2-0.1 MECHANICAL DETAILS
M2-0.2 MECHANICAL DETAILS CONT.
M2-0.3 MECHANICAL CONTROLS
M3-0.1 REHAU SNOW MELT SYSTEM
M3-0.2 REHAU SNOW MELT SYSTEM
M3-0.3 REHAU SNOW MELT SYSTEM
MS-1.0 MECHANICAL SITE PLAN

PLUMBING
P0-0.1 PLUMBING LEGEND NOTES AND SCHEDULES
P0-0.2 PLB T24 COMPLIANCE FORMS
P1-1.1 PLUMBING FLOOR AND ROOF PLANS
P1-1.2 PLUMBING FLOOR PLAN AND ENLARGED PLANS
P2-0.1 PLUMBING DETAILS
P2.02 PLUMBING DETAILS

ELECTRICAL
E1-0.1 SYMBOL LIST AND GENERAL NOTES
E1-0.2 ELECTRICAL DETAILS
E1-0.3 SINGLE LINE DIAGRAM AND LIGHT FIXTURE SCHEDULE
E1-1.1 LIGHTING AND POWER PLANS
E1-1.2 ELECTRICAL PLAN
E1-1.3 ROOF ELECTRICAL PLAN
E1-2.1 PANEL SCHEDULES
E1-2.2 PANEL SCHEDULES
E1-3.1 TITLE 24 (INDOOR)
E1-3.2 TITLE 24 OUTDOOR)
ES1-1 OVERALL SITE ELECTRICAL PLAN
ES1-2 SITE LIGHTING PHOTOMETRIC CALCULATIONS

FIRE SPRINKLER
FP0-0.1 FIRE SPRINKLER LEGEND NOTES AND SCHEDULES
FP1-1.1 FIRE SPRINKLER SITE PLAN
FP1-1.2 FIRE SPRINKLER MAINTENANCE BLDG PIPING PLAN

METAL BUILDING
PFB-1 GENERAL INFORMATION
PFB-2 ANCHOR ROD PLAN
PFB-3 ROOF PLAN
PFB-4 ROOF SHEETING PLAN
PFB-5 SIDEWALL ELEVATION
PFB-6 SIDEWALL ELEVATION
PFB-7 ENDWALL ELEVATION
PFB-8 TUNNEL ELEVATION
PFB-9 ENDWALL ELEVATION
PFB-10 CROSS SECTION AT LINE A
PFB-11 CROSS SECTION AT LINE B AND F
PFB-12 CROSS SECTION AT LINE C, D, E
PFB-13 CROSS SECTION AT LINE H
PFB-14 CROSS SECTION AT LINE I
PFB-15 CROSS SECTION AT LINE J AND K
PFB-16 GENERAL DETAILS
PFB-17 GENERAL DETAILS
PFB-18 GENERAL DETAILS
PFB-19 GENERAL DETAILS
PFB-20 GENERAL DETAILS
PFB-21 GENERAL DETAILS
PFB-22 GENERAL DETAILS
PFB-23 GENERAL DETAILS
PFB-24 GENERAL DETAILS
PFB-25 GENERAL DETAILS

† TOTAL SHEET COUNT: 127

BID ALTERNATE #1
INCREMENTS 3

CIVIL (PER GRADING PERMIT # TBD)
1 TITLE SHEET
2 DEMOLITION - PHASE 3
3 PRECISE GRADING - PHASE 3
4 HORIZONTAL CONTROL - PHASE 3
5 UTILITIES - PHASE 2
6 STORM DRAIN - PHASE 3
7 STORM DRAIN DETAILS
8 EROSION CONTROL - PHASE 3
9 SECTIONS - PHASE 3
10 CONSTRUCTION DETAILS
11 CONDITIONS OF APPROVAL
12 CONDITIONS OF APPROVAL

LANDSCAPE (PER GRADING PERMIT # TBD)
LI-1.0 IRRIGATION PLAN
LI-2.0 IRRIGATION DETAILS
LI-2.1 IRRIGATION DETAILS
LP-1.0 LANDSCAPE PLAN
LP-2.0 LANDSCAPE DETAILS
TOTAL SHEET COUNT: 17

GENERAL
T-1 TITLE SHEET & SHEET INDEX
T-2 CONDITIONS OF APPROVAL

PER PERMIT # 23-00743
ARCHITECTURE - SITE
AS-1.1 OVERALL SITE PLAN
AS-1.2 FIRE AUTHORITY PLAN
AS-2.1 ENLARGED SITE PLAN
AS-2.2 ENLARGED SITE PLAN
ASD-1.1 SITE DETAILS
ASD-1.2 SITE DETAILS

ARCHITECTURE
A2-1.1 EGRESS & SIGNAGE PLAN
A2-1.2 FLOOR PLAN
A2-2.1 REFLECTED CEILING PLAN
A2-3.1 ROOF PLAN
A2-4.1 EXTERIOR ELEVATIONS
A2-5.1 BUILDING SECTIONS
A2-5.2 BUILDING SECTIONS
A2-6.1 WALL SECTIONS
A2-6.2 WALL SECTIONS
A2-6.3 WALL SECTIONS
A2-6.4 WALL SECTIONS
A2-6.5 WALL SECTIONS
A2-7.1 ENLARGED PLANS / INT. ELEVATIONS
A2-7.2 ENLARGED PLANS / INT. ELEVATIONS
A2-7.3 ENLARGED PLANS / INT. ELEVATIONS
A2-7.4 ENLARGED PLANS / INT. ELEVATIONS
A2-8.1 DOOR & WINDOW SCHEDULE
A2-8.2 WINDOW SCHEDULE
A2-8.3 WINDOW SCHEDULE

INTERIORS
ID-1.0 FINISHES SCHED & CMF LEGEND

ARCHITECTURE DETAILS
AD-1.0 ACCESSIBILITY & SIGNAGE DETAILS
AD-1.1 ACCESSIBILITY, SIGNAGE, & MISC.
AD-2.0 WALL TYPES
AD-2.1 WALL DETAILS
AD-3.0 ROOF DETAILS
AD-4.0 CEILING DETAILS
AD-5.0 CASEWORK DETAILS
AD-6.0 DOOR & WINDOW DETAILS
AD-6.1 DOOR & WINDOW DETAILS

STRUCTURAL
S0-1.1 GENERAL NOTES
S0-1.2 GENERAL NOTES
S0-2.1 TYPICAL CONCRETE DETAILS
S0-2.2 TYPICAL REINFORCING & MASONRY DETAILS
S0-2.3 TYPICAL STEEL DETAILS
S0-2.4 TYPICAL STEEL DETAILS
S0-2.5 TYPICAL METAL DECK DETAILS
S0-2.6 TYPICAL METAL DECK DETAILS
S0-2.7 TYPICAL METAL STUD DETAILS
S0-2.8 TYPICAL METAL STUD DETAILS
S2-1.1 ADMIN. BUILDING FOUNDATION PLAN
S2-3.1 ADMIN. BUILDING ROOF FRAMING PLAN
S2-5.1 BRACED FRAME ELEVATIONS
S2-5.2 BRACED FRAME ELEVATIONS
S3-1.1 FOUNDATION DETAILS
S3-2.1 ROOF FRAMING DETAILS
S3-2.2 ROOF FRAMING DETAILS
S3-3.1 BRACED FRAME DETAILS
S3-3.2 BRACED FRAME DETAILS

MECHANICAL
M2-0.1 MECHANICAL LEGENDS NOTES & SCHEDULES
M2-0.2 MECHANICAL SCHEDULES
M2-0.3 MECHANICAL SCHEDULES CONT.
M2-0.4 ENERGY COMPLIANCE DOCUMENTS
M2-0.5 ENERGY COMPLIANCE DOCUMENTS CONT.
M2-0.6 ENERGY COMPLIANCE DOCUMENTS CONT.
M2-1.1 MECHANICAL FLOOR PLAN - HVAC
M2-1.2 MECHANICAL FLOOR PLAN - PIPING
M2-3.1 MECHANICAL ROOF PLAN
M2-4.1 MECHANICAL PIPING AND WIRING
M2-4.2 MECHANICAL PIPING AND WIRING CONT.
M2-4.3 MECHANICAL PIPING AND WIRING CONT.
M2-4.4 MECHANICAL PIPING AND WIRING CONT.
MD-1.1 MECHANICAL DETAILS
MD-1.2 MECHANICAL DETAILS CONT.

PLUMBING
P2-0.1 PLUMBING LEGEND NOTES & SCHEDULES
P2-1.1 PLUMBING SITE PLAN
P2-2.1 PLUMBING FOUNDATION PLAN
P2-2.2 PLUMBING PLAN
P2-3.1 PLUMBING ENLARGED PLANS
P2-4.1 PLUMBING ROOF PLAN
PD-1.1 PLUMBING DETAILS

ELECTRICAL
E1-0.1 SYMBOL LIST AND GENERAL NOTES
E1-0.2 ELECTRICAL DETAILS
E1-0.3 SINGLE LINE DIAGRAM AND LIGHTING FIXTURE SCHEDULE
E1-1.1 LIGHTING PLAN
E1-1.2 POWER PLAN
E1-1.3 ELECTRICAL PLAN AND ENLARGED ELECTRICAL ROOM
E1-1.4 ROOF ELECTRICAL PLAN
E1-2.1 PANEL SCHEDULES
E1-2.2 PANEL SCHEDULES
E1-3.1 TITLE 24 (INDOOR)
E1-3.2 TITLE 24 (OUTDOOR)
E1-3.3 TITEL 24 ENERGY DISTRIBUTION FORM
E1-3.4 TITLE 24 SOLAR AND BATTERY ENERGY FORM
ES1-1 SITE ELECTRICAL PLAN
ES1-2 PHOTOMETRIC CALCULATIONS
ES-1.3 PHOTOMETRIC CALCULATIONS - INTERIOR BUILDING

ALUM. CURTAIN WALL, STOREFRONT & DOOR SHOP DWGS.
CW0.01 COVER SHEET
CW0.02 GENERAL NOTES
CW0.03 SECTION PROPERTIES (OPG 1900 AFG451T)
CW0.04 SECTION PROPERTIES (AFG451T, AR600)
CW0.05 SECTION PROPERTIES (AFG451T, AR600)
CW1.01 FLOOR PLAN
CW1.02 EXTERIOR ELEVATIONS
CW1.03 EXTERIOR ELEVATIONS
CW2.01 CURTAIN WALL ELEVATIONS (OPG1900)
CW2.02 CURTAIN WALL ELEVATIONS (OPG1900)
CW2.03 CURTAIN WALL ELEVATIONS (OPG1900)
CW2.04 CURTAIN WALL ELEVATIONS (OPG1900)
CW2.05 CURTAIN WALL ELEVATIONS (OPG1900)
CW2.06 CURTAIN WALL ELEVATIONS (OPG1900)
CW2.07 CURTAIN WALL ELEVATIONS (OPG1900)
CW3.01 EXTERIOR STOREFRONT ELEVATIONS (AFG451T)
CW3.02 EXTERIOR STOREFRONT ELEVATIONS (AFG451T)
CW3.03 EXTERIOR STOREFRONT ELEVATIONS (AFG451T)
CW4.01 INTERIOR STOREFRONT ELEVATIONS (AR600)
CW4.02 INTERIOR STOREFRONT ELEVATIONS (AR600)
CW4.03 INTERIOR STOREFRONT ELEVATIONS (AR600)
CW4.04 INTERIOR STOREFRONT ELEVATIONS (AR600)
CW4.05 INTERIOR STOREFRONT ELEVATIONS (AR600)
CW4.06 INTERIOR STOREFRONT ELEVATIONS (AR600)
CW4.07 INTERIOR STOREFRONT ELEVATIONS (ATL175)
CW5.01 CURTAIN WALL DETAILS (OPG1900, HORZ. MEMBERS)
CW5.01A CURTAIN WALL DETAILS (OPG1900, HORZ. MEMBERS)
CW5.02 CURTAIN WALL DETAILS (OPG1900, HORZ. MEMBERS)
CW5.03 CURTAIN WALL DETAILS (OPG1900, HORZ. MEMBERS)
CW6.01 CURTAIN WALL DETAILS (OPG1900, HORZ. MEMBERS)
CW6.02 CURTAIN WALL DETAILS (OPG1900, HORZ. MEMBERS)
CW7.01 EXT. STOREFRONT DETAILS (AFG451T)
CW7.02 EXT. STOREFRONT DETAILS (AFG451T)
CW7.03 EXT. STOREFRONT DETAILS (AFG451T)
CW7.04 EXT. STOREFRONT DETAILS (AFG451T)
CW7.05 EXT. STOREFRONT DETAILS (AFG451T)
CW7.06 EXT. STOREFRONT DETAILS (AFG451T)
CW8.01 INT. STOREFRONT DETAILS (AR600)
CW8.02 INT. STOREFRONT DETAILS (AR600)
CW8.03 INT. STOREFRONT DETAILS (AR600)
CW9.01 INT. STOREFRONT DETAILS (ATL175)
CW9.02 INT. STOREFRONT DETAILS (ATL175)
TOTAL SHEET COUNT: 136

TOTAL SHEET COUNT: 279

SCOPE OF WORK

INCREMENT #1 - MAINTENANCE BUILDING
SITE GRADING AND UTILITIES

INCREMENT #2 - MAINTENANCE BUILDING
LANDSCAPE, ARCHITECTURE, STRUCTURAL, MECHANICAL, PLUMBING, ELECTRICAL, FIRE SPRINKLER

BID ALTERNATE #1
INCREMENT #3 - ADMINISTRATION BUILDING
ADMIN. BUILDING, SOLAR SHADE STRUCTURES AND ASSOCIATED SITE WORK.

STATEMENT OF GENERAL CONFORMANCE

FOR ARCHITECT/ENGINEERS WHO UTILIZE PLANS, INCLUDING BUT NOT LIMITED TO SHOP DRAWINGS, PREPARED BY OTHER LICENSED DESIGN PROFESSIONALS AND/OR CONSULTANTS

☒ THE DRAWINGS OR SHEETS LISTED ON THE INDEX SHEET

☐ THIS DRAWING, PAGE OF SPECIFITIONS/CALCULATIONS

HAVE BEEN PREPARED BY OTHER DESIGN PROFESSIONALS OR CONSULTANTS WHO ARE LICENSED AND/OR AUTHORIZED TO PREPARE SUCH DRAWINGS IN THIS STATE. IT HAS BEEN EXAMINED BY ME FOR:

1) DESIGN INTENT AND APPEARS TO MEET THE APPROPRIATE REQUIREMENT OF TITLE 24, CALIFORNIA CODE
OF REGUTIATIONS AND THE PROJECT SPECIFICATIONS PREPARED BY ME, AND
2) COORDINATION WITH THE PLANS AND SPECIFICATIONS AND IS ACCEPTABLE FOR INCOPORATION INTO THE
CONSTRUCTION OF THIS PROJECT

THE STATEMENT OF GENERAL CONFORMANCE "SHALL NOT BE CONSTRUED AS RELIEVING ME OF MY RIGHTS, DUTIES, AND RESPONSIBILITIES UNDER SECTIONS 17802 AND 81138 OF THE EDUCATION CODE AND SECTIONS 4-336, 4-341, AND 4-344" OF TITLE 24, PART 1, (TITLE 24, PART 1, SECTION 4-317(b))

I FIND THAT: ☒ ALL DRAWINGS OR SHEETS LISTED ON THE COVER OR INDEX SHEET
☐ THIS DRAWINGS OR PAGE
☒ IS/ARE IN GENERAL CONFORMANCE WITH THE PROJECT DESIGN, AND
☒ HAS/HAVE BEEN COORDINATED WITH THE PROJECT PLANS AND SPECIFICATIONS

SIGNATURE _____ DATE _____

ARCHITECT OR ENGINEER DESIGNATED TO BE IN GENERAL RESPONSIBLE CHARGE

ROGER CLARKE
PRINT NAME

C-21340 LICENSE NUMBER

10-31-25 EXPIRATION DATE

PROJECT No. :50801
2/27/2024 4:03:31 PM

DRAWN BY: CHECKED BY:

ISSUE No.____ DATE____ DESCRIPTION____
ISSUE No.____ DATE____ DESCRIPTION____
ISSUE No.____ DATE____ DESCRIPTION____
ISSUE No.____ DATE____ DESCRIPTION____

REVISION No.____ DATE____ DESCRIPTION____
REVISION No.____ DATE____ DESCRIPTION____
REVISION No.____ DATE____ DESCRIPTION____
REVISION No.____ DATE____ DESCRIPTION____

RUHNAUCLARKE.COM
3775 TENTH STREET, RIVERSIDE CALIFORNIA 92501(951) 684 4664 / 5751 PALMER WAY, SUITE C, CARLSBAD CALIFORNIA 92010(760) 438 5899

MOUNT TRANSIT MAINTENANCE FACILITY
170 BUSINESS CENTER. BIG BEAR LAKE, CALIFORNIA
BIG BEAR LAKE

TITLE SHEET & SHEET INDEX

T-0
50801

MOUNT TRANSIT MAINTENANCE FACILITY: BID SET

MOUNT TRANSIT MAINTENANCE FACILITY

PHASE 1

170 BUSINESS CENTER DR. BIG BEAR LAKES, CA
BIG BEAR LAKES

RUHNAU CLARKE ARCHITECTS

3775 TENTH STREET, RIVERSIDE CALIFORNIA 92501 (951) 684 4664 / 5751 PALMER WAY, SUITE C, CARLSBAD CALIFORNIA 92010 (760) 438 5899

STAMPS

LICENSED ARCHITECT ROGER CLARKE No. C-21340 Ren. 10-31-24 STATE OF CALIFORNIA

AGENCY APPROVAL
File No.: ########-##-########

CONSULTANT BRANDING

RUHNAU CLARKE ARCHITECTS

CONTACT LIST

Owner
Mountain Area Regional Transit Authority
41939 Fox Farm Road
Big Bear Lake, CA, 92315
Phone: *909.963.7200*
Contact: *Sandy Benson*
sbenson@mountaintransit.org

Architect
Ruhnau Clarke Architects
3775 Tenth St., Riverside, CA 92501
Phone:*951.684.4664*
Contact: *PROJECT MANAGER*
EMAIL
Contact: Roger Clarke
rclarke@ruhnauclarke.com

Specifications
Spec Studio
9783 E. Maplewood Avenue
Englewood, CO, 80111
Phone: *909.374.2011*
Contact: *Richard L. Gonsler Jr.*
specstudio@icloud.com

Civil
Valued Engineering, Inc
600 N. Mountain Ave, Suite C102
Upland, CA, 91786
Phone: *9099824601*
Contact: *Jeff Meiter*
jeff@valued-eng.com

Landscape
Community Works Design Group
4649 Brockton Avenue
Riverside, CA, 92506
Phone: *951.369.0700*
Contact: Scott Rive
scott@cwdg.fun

Structural
KNA Stuctural Engineers
9931 Muirlands Boulevard
Irvine, CA, 92618
Phone: *949.462.3200*
Contact: *Larry Kaprielian*
lkaprielian@knaconsulting.com

Mechanical & Plumbing
Design West Engineering
412 E. Vanderbilt Way
San Bernardion, CA, 92408
Phone: *909.890.3700*
Contact: *Carol DeVillier*
CDevillier@designwesteng.com

Electrical
FBA Engineering
150 Paularino Avenue Suite A120
Costa Mesa, CA, 92626
Phone: *949.852.9995*
Contact: *Alan Bravo*
abravo@fbaengr.com

Sprinklers
Design West Engineering
412 E. Vanderbilt Way
San Bernardion, CA, 92408
Phone: *909.890.3700*
Contact: *Carol DeVillier*
CDevillier@designwesteng.com

TYPICAL ABBREVIATIONS

@	AT	GA	GAUGE	RSLB	RESILIENT BASE
&	AND	GALV	GALVANIZED	RT	RUBBER TREAD
<	ANGLE	GL	GLASS	RWL	RAIN WATER LEADER
ACPL	ACOUSTIC PLASTER	GLU LAM	GLUE LAMINATED		
ACT	ACOUSTIC TILE	GB	GRAB BAR	O	ROUND
AFF	ABOVE FINISHED FLOOR	GPL	GYPSUM PLASTER		
		GWB	GYPSUM WALLBOARD	SRF	SEAMLESS RESILIENT
BLKG	BLOCKING	GWW	WATER RESISTANT GWB		FLOORING
BD	BOARD	GC	GENERAL CONTRACTOR	SS	SERVICE SINK/
BOS	BOTTOM OF STRUCTURE				STAINLESS STEEL
BB	BULTTETIN BOARD	H	HIGH	SHT	SHEET
		HDW	HARDWARE	SHTH	SHEATHING
CAB	CABINET	HORIZ	HORIZONTAL	SC	SOLID CORE
CPT	CARPET	HR	HOUR	SB	SPLASH BLOCK
CSWK	CASEWORK	HT	HEIGHT	STN	STAIN
CLG	CEILING			STD	STANDARD
CEM	CEMENT	ID	INSIDE DIAMETER	STL	STEEL
CPL	CEMENT PLASTER	INSUL	INSULATION	STR	
CL	CENTERLINE	INT	INTERIOR		STRUCTURAL/STRUCTUR
CT	CERAMIC TILE			E	
CLF	CHAIN LINK FNECE	JH	JOIST HANGER	SUSP	SUSPENDED
CLR	CLEAR	JT	JOINT	SM	SHEET METAL
COL	COLUMN	JST	JOIST	SIM	SIMILAR
CONC	CONCRETE				
CMU	CONCRETE MASONRY UNIT	LAM	LAMINATE	TB	TACK BOARD
CJ	COLD JOINT	LT	LIGHT	TJ	TOOLED JOINT
CONT	CONTINUOUS	LVR	LOUVER	TC	TOP OF CONCRETE CURB
CF	CUBIC FEET			TS	TUBE STEEL
CMF	COLORS, MATERIALS, AND FINISHED	MACH	MACHINE	TW	TOP OF WALK
		MAX	MAXIMUM	TYP	TYPICAL
		MDF	MEDIUM DENSITY FIBREBOARD	TEL	TELEPHONE
DP	DEMOUNTABLE PARTITION			TEMP	TEMPERATURE
DET	DETAIL	MECH	MECHANICAL	TOC	TOP OF CANOPY
DIM	DIMENSION	MIN	MINIMUM	TOR	TOP OF ROOF
DR	DOOR	MH	MANHOLE	TOS	TOP OF STRUCTURE
DRF	DOOR FRAME	MFR	MANUFACTURER	TOP	TOP OF PARAPET
DL	DOOR LOUVER	MO	MASONRY OPENING	TOW	TOP OF WALL
DN	DOWN	MTL	METAL		
DS	DOWN SPOUT	ML	METAL LATHE	UC	UNDER CUT/
DF	DRINKING FOUNTAIN	MS	METAL STUD		UNDER COUNTER
DSA	DIVISION OF STATE ARCHITECT	MTD	MOUNTED	UNO	UNLESS NOTED
DWGS	DRAWINGS	NIC	NOT IN CONTRACT		OTHERWISE
		NTC	NOT IN CONTRACT		
EA	EACH	NTS	NOT TO SCALE	VERT	VERTICAL
ELEC	ELECTRIC	NO	NUMBER	VC	VINYL COATED
EWC	ELECTRIC WATER COOLER			VCT	VINYL COMPOSITION
ELEV	ELEVATION	OC	ON CENTER	TILE	
ENCL	ENCLOSURE	OD	OUTSIDE DIAMETER	VT	VINYL TILE
EQ	EQUAL	OFCI	OWNER FURNISHED/	VSF	VINYL SHEET FLOORING
EQUIP	EQUIPMENT		CONTRACTOR INSTALLED	VWC	VINYL WALL COVERING
(E)	EXISTING	OFOI	OWNER FURNUSHED/	VIF	VERIFIED IN FIELD
EXP	EXPANSION/EXPOSED		OWNER INSTALLED	VTR	VENT THROUGH ROOF
EJ	EXPANSION JOINT	OH	OPPOSITE HAND/OVERHEAD		
EW	EACH WAY	OPNG	OPENING	WWF	WELD WIRE FABRIC
EXT	EXTERIOR	OPP	OPPOSITE	WI	WOODWORKING
FS	FLOOR SINK	PA	PLANTING AREA		INSTITUTE
FOF	FACE OF FINISH	PFIN	PRE FINISHED	WIN	WINDOW
FOM	FACE OF MASONRY	PL	PLATE/PROPERTY LINE	W/	WITH
FOS	FACE OF STUD	PLAS	PLASTIC	WD	WOOD
FIN	FINISH	PLWD	PLYWOOD	W/O	WITHOUT
FC	FINISH CEILING	PTD	PAINTED		
FG	FINISH GRADE	PTN	PARTITION		
FFE	FINISH FLOOR GRADE				
FEC	FIRE EXTINGUISER CABINET	R	RADIUS/RISER		
FHC	FIRE HOSE CABINET	RD	ROOF DRAIN		
FRPF	FIREPROOF/FIREPROOFING	REF	REFERENCE		
FD	FLOOR DRAIN	REINF	REINFORCED		
FLR	FLOOR	REQD	REQUIRED		
FURN	FURNISH/FURNITURE	RO	ROUGH OPENING		
		RQMT	REQUIREMENT		

ARCHITECTURAL SYMBOLS

BUILDING SECTION
DIRECTION OF VIEW CUT
DIRECTION OF VIEW — SIM — 1 — A101
VIEW ON SHEET
SHEET ON WHICH DETAIL OCCURS

EXTERIOR ELEVATION
DIRECTION OF VIEW — SIM — 1 — A101
VIEW ON SHEET
SHEET ON WHICH DETAIL OCCURS

DETAIL REFERENCE TO DRAWINGS
VIEW ON SHEET — SIM — 1 — A101
SHEET ON WHICH DETAIL OCCURS
DIRECTION OF VIEW

ROOM TAG
ROOM NAME — Room name
ROOM NUMBER — 1001 B/A1-7.3 — 2
SHEET ON WHICH INTERIOR ELEVATION OCCURS — 3
INTERIOR ELEVATION VIEW

DOOR TAG
DOOR TAG — 101
DOOR RATING — 20 MIN.

WINDOW TAG
WINDOW TAG

KEYNOTE
CONSTRUCTION KEY NOTE — X.X / X — 1 — SIM — A101
NUMBER
ASSOCIATED DETAIL
REFERENCE

CASEWORK IDENTIFICATION:
DEPTH
HEIGHT — 40 / 30
INDICATES SPECIAL CONDITION
W.I.C. NUMBER — 100 / 20
LENGTH
LOCK — M=REVERSE
EXPLANATION OF SPECIAL CONDITION IF NEEDED

GENERAL NOTES

1. THE CONTRACTOR IS SOLELY RESPONSIBLE FOR MEANS, METHODS, SEQUENCE, TECHNIQUES OR PROCEDURES NECESSARY FOR PERFORMING, SUPERINTENDING OR COORDINATING ALL PORTIONS OF THE WORK OF CONSTRUCTION IN ACCORDANCE WITH THE CONTRACT DOCUMENTS AND ANY HEALTH OR SAFETY PRECAUTIONS REQUIRED BY ANY REGULATORY AGENCIES.
2. THE CONTRACTOR SHALL COMPLY WITH CALIFORNIA FIRE CODE, CHAPTER 33 FOR FIRE SAFETY DURING CONSTRUCTION.
3. CONTRACTOR WILL BE REQUIRED TO PROVIDE AND INSTALL ALL EQUIPMENT AND RELATED ITEMS AS SHOWN IN THESE DOCUMENTS AND AS SPECIFIED. IT SHALL BE THE CONTRACTOR'S RESPONSIBILITY TO VERIFY ALL EXISTING CONDITIONS IN THE FIELD PRIOR TO BID AND TO DETERMINE THE WORK NECESSARY TO COMPLETE THE PROJECT.
4. ALL WORK SHALL CONFORM TO TITLE 24, CALIFORNIA CODE OF REGULATIONS (C.C.R.) AND CALIFORNIA ADMINISTRATIVE CODE SECTION 4-333.
5. STRUCTURAL MODIFICATIONS SHALL BE MADE BY ADDENDUM OR CONSTRUCTION CHANGE DOCUMENT (C.C.D.) APPROVED BY DSA PER SECTION 4-338, PART 1, TITLE 24.
6. A PROJECT INSPECTOR, EMPLOYED BY THE DISTRICT (OWNER) AND APPROVED BY THE DIVISION OF THE STATE ARCHITECT, SHALL PROVIDE CONTINUOUS INSPECTION OF THE WORK. THE DUTIES OF THE INSPECTOR IS DEFINED IN SECTION 4-342, PART 1, TITLE 24, C.C.R. THE INSPECTOR SHALL BE ESPECIALLY QUALIFIED IN MECHANICAL AND ELECTRICAL WORK AND HAVE SUCCESSFULLY COMPLETED THE REQUIRED DSA CERTIFICATION PROCESS FOR CLASS **2** INSPECTOR OF RECORD AND A R.B.I.P.
7. THE ARCHITECT OF RECORD SHALL HAVE THE RIGHT TO MAKE FINAL JUDGMENTS RELATIVE TO SUBMITTAL DRAWING REVISIONS IN ORDER TO ENSURE COMPLIANCE WITH ENGINEERING STANDARDS, APPLICABLE CODES, AND ARCHITECTURAL INTENT.
8. CONTRACTOR SHALL VERIFY ALL DIMENSIONS AND LOCATIONS OF EXISTING CONDITIONS ON THE JOB SITE PRIOR TO THE START OF ANY WORK. NOTIFY THE ARCHITECT IMMEDIATELY OF ANY DISCREPANCIES BETWEEN ACTUAL FIELD CONDITIONS AND CONSTRUCTION DOCUMENTS. EXISTING CONDITIONS ARE INDICATED AS A RESULT OF INFORMATION SHOWN ON AVAILABLE DOCUMENTS. ANY DAMAGE TO EXISTING CONDITIONS IS THE SOLE RESPONSIBILITY OF THE CONTRACTOR.
9. THE EXISTENCE OR LOCATION OF ANY UNDERGROUND UTILITIES, PIPES, OR STRUCTURE SHOWN ON THESE PLANS WERE OBTAINED BY A SEARCH OF AVAILABLE RECORDS. TO THE BEST OF OUR KNOWLEDGE, EXISTING UTILITIES ARE AS SHOWN ON THESE PLANS. THE CONTRACTOR SHALL ASCERTAIN THE TRUE VERTICAL AND HORIZONTAL LOCATION AND SIZE OF ALL UNDERGROUND UTILITIES AND SHALL BE RESPONSIBLE FOR DAMAGE TO ANY PUBLIC OR PRIVATE UTILITIES SHOWN OR NOT SHOWN HEREON.
10. THE CONTRACTOR SHALL BE SOLELY RESPONSIBLE FOR ADEQUACY AND SAFETY OF THE DESIGN/ERECTION OF BRACING, SHOAING, TEMPORARY SUPPORTS AND SCAFFOLDING.
11. UNDER NO CIRCUMSTANCE SHALL WORKING DIMENSIONS BE SCALED FROM PLANS, SECTIONS, OR DETAILS ON THE DRAWINGS.
12. ALL STANDARDS, MATERIALS AND WORKMANSHIP SHALL COMPLY WITH THE STATE BUILDING CODES, ORDINANCES, REGULATIONS, AND LAWS.
13. WHERE ANY CONFLICT OCCURS BETWEEN THE REQUIREMENTS OF FEDERAL, STATE AND LOCAL LAWS, CODES, ORDINANCES, RULES AND REGULATIONS, THE MOST STRINGENT SHALL GOVERN.
14. ITEMS MARKED "TYP." OR "TYPICAL" SHALL APPLY IN ALL CASES UNLESS SPECIFICALLY INDICATED OTHERWISE.
15. THE CONTRACTOR SHALL BE RESPONSIBLE FOR COORDINATION OF REQUIREMENTS BETWEEN THE DISCIPLINES (ARCHITECTURAL, STRUCTURAL, PLUMBING, MECHANICAL, AND ELECTRICAL, ETC.) AND BETWEEN DRAWING AND SPECIFICATION IN ORDER TO ENSURE THAT ALL ITEMS SHOWN IN RELATIONSHIP TO ONE ANOTHER OR SHOWN IN MULTIPLE LOCATIONS ARE IN AGREEMENT. THE CONTRACTOR SHALL IMMEDIATELY NOTIFY THE ARCHITECT REGARDING ANY DISCREPANCIES, ERRORS, OMISSIONS OR INCONSISTENCIES AND SHALL NOT PROCEED WITH THE WORK UNTIL CLARIFICATION HAS BEEN ISSUED BY THE ARCHITECT.
16. ALL WORK SHALL BE DONE IN ACCORDANCE WITH TITLE 24 CALIFORNIA CODE OF REGULATIONS (CCR)
17. GRADING PLANS DRAINAGE IMPROVEMENTS, ROAD & ACCESS REQUIREMENTS AND ENVIRONMENTAL HEALTH CONSIDERATIONS SHALL COMPLY WITH ALL LOCAL ORDINANCES. INSPECTOR OF RECORD (IOR CLASSIFICATION 1).

APPLICABLE AGENCIES

STATE OF CALIFORNIA

DEPARTMENT OF GENERAL SERVICES
BIG BEAR LAKE CITY HALL
39707 Big Bear Boulevard
Big Bear Lake, CA 92315
TEL. (909) 866-5831

REGIONAL MAP

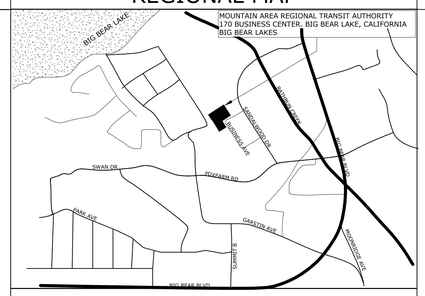

SITE MAP

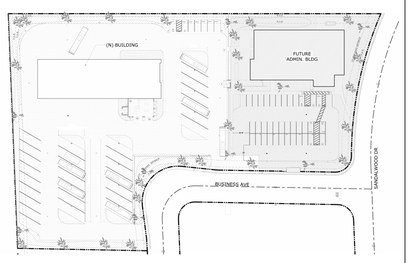

APPLICABLE CODES

PARTIAL LIST OF APPLICABLE CODES AS OF JANUARY 1, 2023
2022 CALIFORNIA ADMINISTRATIVE CODE, PART 1, TITLE 24 C.C.R.
2022 CALIFORNIA BUILDING CODE (CBC), PART 2, TITLE 24 C.C.R.
(2021 INTERNATIONAL BUILDING CODE VOLUMES 1-2 WITH 2022 CALIFORNIA AMENDMENTS)
2022 CALIFORNIA ELECTRICAL CODE (CEC), PART 3, TITLE 24 C.C.R.
(2023 IS THE CURRENT USE, USE THE CEC BASED ON THE NFPA 70-NEC 2020 EDITION AS MODIFIED)
2022 CALIFORNIA MECHANICAL CODE (CMC) PART 4, TITLE 24 C.C.R.
(2021 UNIFORM MECHANICAL CODE WITH 2022 CALIFORNIA AMENDMENTS)
2022 CALIFORNIA PLUMBING CODE (CPC), PART 5, TITLE 24 C.C.R.
(2021 UNIFORM PLUMBING CODE WITH 2022 CALIFORNIA AMENDMENTS)
2022 CALIFORNIA ENERGY CODE (CEnC), PART 6, TITLE 24 C.C.R.
2022 CALIFORNIA FIRE CODE(CFC), PART 9, TITLE 24 C.C.R.
(2021 INTERNATIONAL FIRE CODE WITH 2022 CALIFORNIA AMENDMENTS)
2022 CALIFORNIA GREEN BUILDING STANDARDS CODE, PART 11, TITLE 24 C.C.R.
2022 CALIFORNIA REFERENCED STANDARDS, PART 12, TITLE 24 C.C.R.
TITLE 19 C.C.R., PUBLIC SAFETY, STATE FIRE MARSHAL REGULATIONS.

PARTIAL LIST OF APPLICABLE STANDARDS

NFPA 13	AUTOMATIC FIRE SPRINKLER SYSTEMS	2022 EDITION
NFPA 14	STANDPIPE AND HOSE SYSTEMS	2019 EDITION
NFPA 17	DRY CHEMICAL EXTINGUISHING SYSTEMS	2021 EDITION
NFPA 17A	WET CHEMICAL EXTINGUISHING SYSTEMS	2021 EDITION
NFPA 20	STATIONARY PUMPS FOR FIRE PROTECTION	2022 EDITION
NFPA 22	WATER TANKS FOR PRIVATE FIRE PROTECTION	2023 EDITION
NFPA 24	PRIVATE FIRE MAINS & THEIR APPURTENANCES	2022 EDITION
NFPA 25	STANDARD FOR INSPECTION, TESTING AND MAINTENANCE OF WATER-BASED FIRE PROTECTION SYSTEMS	2023 EDITION
NFPA 72	NATIONAL FIRE ALARM CODE & SIGNALING CODE	2022 EDITION
NFPA 80	FIRE DOORS AND OTHER OPENING PROTECTIVES	2022 EDITION
NFPA 92	STANDARD FOR SMOKE CONTROL SYSTEMS	2021 EDITION
NFPA 241	STANDARD FOR SAFEGUARDING CONSTRUCTION, ALTERATION, AND DEMOLITION OPERATIONS	2022 EDITION
NFPA 253	CRITICAL RADIANT FLUX OF FLOOR COVERING SYSTEMS	2023 EDITION
NFPA 2001	CLEAN AGENT FIRE EXTINGUISHING SYSTEMS	2022 EDITION
ICC 300	ICC STANDARDS ON BLEACHERS, FOLDING AND TELESCOPING SEATING AND GRAND STANDS	2017 EDITION
UL 300	FIRE TESTING OF FIRE EXTINGUISHING SYSTEMS FOR PROTECTION OF RESTAURANT COOKING AREAS	2005 EDITION
UL 464	AUDIBLE SIGNAL APPLIANCES	2003 EDITION
UL 521	HEAT DETECTORS FOR FIRE PROTECTIVE SIGNALING SYSTEMS	1999 EDITION

REFERENCE CODE SECTION FOR NFPA STANDARDS - 2022 CBC (SFM) CHAPTER 35. SEE CHAPTER 35 FOR STATE OF CALIFORNIA AMENDMENTS TO NFPA STANDARDS.

SHEET INDEX

GENERAL		**PLUMBING**	
T-1	TITLE SHEET AND SHEET INDEX	P0-0.1	PLUMBING LEGEND NOTES AND SCHEDULES
T-2	CONDITIONS OF APPROVAL	P0-0.2	PLB T24 COMPLIANCE FORMS
		P1-1.1	PLUMBING FLOOR AND ROOF PLANS
CIVIL		P1-1.2	PLUMBING FLOOR PLAN AND ENLARGED PLANS
1	TITLE SHEET	P2-0.1	PLUMBING DETAILS
2	DEMOLITION - PHASE 1	P2.02	PLUMBING DETAILS
3	PRECISE GRADING - PHASE 1		
4	HORIZONTAL CONTROL - PHASE 1	**ELECTRICAL**	
5	UTILITIES - PHASE 1	E1-0.1	SYMBOL LIST AND GENERAL NOTES
6	STORM DRAIN - PHASE 1	E1-0.2	ELECTRICAL DETAILS
7	EROSION CONTROL - PHASE 1	E1-0.3	SINGLE LINE DIAGRAM AND LIGHT FIXTURE SCHEDULE
8	SECTIONS - PHASE 1	E1-1.1	LIGHTING AND POWER PLANS
9	STORM DRAIN DETAILS	E1-1.2	ELECTRICAL PLAN
10	CONSTRUCTION DETAILS	E1-1.3	ROOF ELECTRICAL PLAN
11	CONDITIONS OF APPROVAL	E1-2.1	PANEL SCHEDULES
12	CONDITIONS OF APPROVAL	E1-2.2	PANEL SCHEDULES
		E1-3.1	TITLE 24 (INDOOR)
LANDSCAPE		E1-3.2	TITLE 24 OUTDOOR)
LI-1.0	IRRIGATION PLAN	ES1-1	OVERALL SITE ELECTRICAL PLAN
LI-2.0	IRRIGATION DETAILS	ES1-2	SITE LIGHTING PHOTOMETRIC CALCULATIONS
LI-3.0	IRRIGATION DETAILS		
LP-1.0	PLANTING PLAN	**FIRE SPRINKLER**	
LP-2.0	PLANTING DETAILS	FP0-0.1	FIRE SPRINKLER LEGEND NOTES AND SCHEDULES
		FP1-1.1	FIRE SPRINKLER SITE PLAN
ARCHITECTURE - SITE		FP1-1.2	FIRE SPRINKLER MAINTENANCE BLDG PIPING PLAN
AS-1.0	DEMOLITION SITE PLAN		
AS-1.1	OVERALL SITE PLAN	**METAL BUILDING**	
AS-1.2	FIRE AUTHORITY PLAN	PFB-1	GENERAL INFORMATION
AS-2.0	ENLARGED SITE PLAN	PFB-2	ANCHOR ROD PLAN
AS-2.1	ENLARGED PLANS	PFB-3	ROOF PLAN
ASD-1.1	DETAILS	PFB-4	ROOF SHEETING PLAN
ASD-1.2	DETAILS	PFB-5	SIDEWALL ELEVATION
		PFB-6	SIDEWALL ELEVATION
ARCHITECTURE		PFB-7	ENDWALL ELEVATION
A1-1.1	EGRESS & SIGNAGE PLAN	PFB-8	TUNNEL ELEVATION
A1-1.2	FLOOR PLAN	PFB-9	ENDWALL ELEVATION
A1-1.3	EQUIPMENT PLAN	PFB-10	CROSS SECTION AT LINE A
A1-2.1	REFLECTED CEILING PLAN	PFB-11	CROSS SECTION AT LINE B AND F
A1-3.1	ROOF PLAN	PFB-12	CROSS SECTION AT LINE C, D, E
A1-4.1	BUILDING ELEVATIONS	PFB-13	CROSS SECTION AT LINE H
A1-5.1	BUILDING SECTIONS	PFB-14	CROSS SECTION AT LINE I
A1-6.1	WALL SECTIONS	PFB-15	CROSS SECTION AT LINE J AND K
A1-6.2	WALL SECTIONS	PFB-16	GENERAL DETAILS
A1-6.3	WALL SECTIONS	PFB-17	GENERAL DETAILS
A1-6.4	WALL SECTIONS	PFB-18	GENERAL DETAILS
A1-7.1	ENLARGED PLANS / INTERIOR ELEVS.	PFB-19	GENERAL DETAILS
A1-7.2	INTERIOR ELEVATIONS	PFB-20	GENERAL DETAILS
A1-7.3	INTERIOR ELEVATIONS	PFB-21	GENERAL DETAILS
A1-8.1	DOOR & WINDOW SCHEDULE	PFB-22	GENERAL DETAILS
		PFB-23	GENERAL DETAILS
INTERIOR DESIGN		PFB-24	GENERAL DETAILS
ID-1.0	FINISHES PLAN/ SCHED & CMF	PFB-25	GENERAL DETAILS
		TOTAL SHEET COUNT: 127	
ARCHITECTURE - DETAILS			
AD-1.0	ACCESSIBILITY & SIGNAGE DETAILS		
AD-1.1	ACCESSIBILITY, SIGNAGE, & MISC.		
AD-2.0	WALL TYPES		
AD-2.1	WALL DETAILS		
AD-3.0	ROOF DETAILS		
AD-4.0	CEILING DETAILS		
AD-5.0	CASEWORK DETAILS		
AD-6.0	DOOR & WINDOW DETAILS		
AD-6.1	DOOR & WINDOW DETAILS		
AD-6.2	DOOR & WINDOW DETAILS		
STRUCTURAL			
S0-1.1	GENERAL NOTES		
S0-1.2	GENERAL NOTES		
S0-1.3	TYPICAL CONCRETE AND REINFORCING DETAILS		
S0-1.4	TYPICAL METAL STUD DETAILS		
S0-1.5	TYPICAL MASONRY AND STEEL DETAILS		
S1-1.1	FOUNDATION PLAN		
S2-1.1	TRASH & ELEC. YARD FOUNDATION AND ROOF FRAMING		
S3-1.1	EQUIPMENT ANCHORAGE DETAILS		
S3-1.2	EQUIPMENT ANCHORAGE DETAILS		
S3-1.3	EQUIPMENT ANCHORAGE DETAILS		
S3-1.4	WASH BAY LIFT ENLARGED PLAN		
SD-1.1	FOUNDATION DETAILS		
SD-1.2	FOUNDATION DETAILS		
MECHANICAL			
M0-0.1	MECHANICAL LEGENDS NOTES AND SCHEDULES		
M0-0.2	MECHANICAL SCHEDULES CONT.		
M0-0.3	ENV T24 COMPLIANCE FORMS		
M0-0.4	ENV T24 COMPLIANCE FORMS		
M0-0.5	ENV T24 COMPLIANCE FORMS		
M0-0.6	MCH T24 COMPLIANCE FORMS		
M0-0.7	MCH T24 COMPLIANCE FORMS		
M1-1.1	MECHANICAL FLOOR AND ROOF PLANS		
M1-1.2	MECHANICAL ENLARGED PLAN		
M2-0.1	MECHANICAL DETAILS		
M2-0.2	MECHANICAL DETAILS CONT.		
M2-0.3	MECHANICAL CONTROLS		
M3-0.1	REHAU SNOW MELT SYSTEM		
M3-0.2	REHAU SNOW MELT SYSTEM		
M3-0.3	REHAU SNOW MELT SYSTEM		
MS-1.0	MECHANICAL SITE PLAN		

BUILDING CODE DATA

- TYPE V-B CONSTRUCTION
- OCCUPANCY TYPES: B, S-1, F-1, H-2
- BUILDING SQUARE FOOTAGE: 11, 462 SQ. SF.
  FOR MORE INFO. SEE CODE ANALYSIS 2/AS-1.1 ON INC. #2

SCOPE OF WORK

INCREMENT #1 - MAINTENANCE BUILDING
SITE GRADING AND UTILITIES

INCREMENT #2 - MAINTENANCE BUILDING
LANDSCAPE, ARCHITECTURE, STRUCTURAL, MECHANICAL, PLUMBING, ELECTRICAL, FIRE SPRINKLER

DEFERRED APPROVALS

PROJECT DATA

Parcel: ..... **2328-021-12 & 2328-021-13**
Zoning: **C-2**
Land Type: ..... **03 = COMMERCIAL**
Access: ..... **1 = Public Paved**
RESPNUNIT: ..... **COM = Commercial Zone or Use**

Project Set-Backs in Feet:
Minimum Lot Area:
Front: ..... **135 ft.**
Street Side Yard: ..... **30 ft.**
Side: ..... **42 ft.**
Rear: ..... **25 ft**

STATEMENT OF GENERAL CONFORMANCE

FOR ARCHITECT/ENGINEERS WHO UTILIZE PLANS, INCLUDING BUT NOT LIMITED TO SHOP DRAWINGS, PREPARED BY OTHER LICENSED DESIGN PROFESSIONALS AND/OR CONSULTANTS

☒ THE DRAWINGS OR SHEETS LISTED ON THE INDEX SHEET

☐ THIS DRAWING, PAGE OF SPECIFICATIONS/CALCULATIONS

HAVE BEEN PREPARED BY OTHER DESIGN PROFESSIONALS OR CONSULTANTS WHO ARE LICENSED AND/OR AUTHORIZED TO PREPARE SUCH DRAWINGS IN THIS STATE. IT HAS BEEN EXAMINED BY ME FOR:

1) DESIGN INTENT AND APPEARS TO MEET THE APPROPRIATE REQUIREMENT OF TITLE 24, CALIFORNIA CODE
OF REGUATIONS AND THE PROJECT SPECIFICATIONS PREPARED BY ME, AND
2) COORDINATION WITH THE PLANS AND SPECIFICATIONS AND IS ACCEPTABLE FOR INCOPORATION INTO THE
CONSTRUCTION OF THIS PROJECT

THE STATEMENT OF GENERAL CONFORMANCE "SHALL NOT BE CONSTRUED AS RELIEVING ME OF MY RIGHTS, DUTIES, AND RESPONSIBILITIES UNDER SECTIONS 17802 AND 81138 OF THE EDUCATION CODE AND SECTIONS 4-336, 4-341, AND 4-344" OF TITLE 24, PART 1, (TITLE 24, PART 1, SECTION 4-317(b))

I FIND THAT: ☒ ALL DRAWINGS OR SHEETS LISTED ON THE COVER OR INDEX SHEET

☐ THIS DRAWINGS OR PAGE

☒ IS/ARE IN GENERAL CONFORMANCE WITH THE PROJECT DESIGN, AND

☒ HAS/HAVE BEEN COORDINATED WITH THE PROJECT PLANS AND SPECIFICATIONS

SIGNATURE — 8.2.23 DATE

ARCHITECT OR ENGINEER DESIGNATED TO BE IN GENERAL RESPONSIBLE CHARGE

ROGER CLARKE PRINT NAME

C-21340 LICENSE NUMBER — **10-31-23** EXPIRATION DATE

PROJECT No. :50801
8/1/2023 4:24:37 PM

DRAWN BY: CHECKED BY:

ISSUE No._____ DATE_____ DESCRIPTION_____
ISSUE No._____ DATE_____ DESCRIPTION_____
ISSUE No._____ DATE_____ DESCRIPTION_____
ISSUE No._____ DATE_____ DESCRIPTION_____

REVISION No._____ DATE_____ DESCRIPTION_____
REVISION No._____ DATE_____ DESCRIPTION_____
REVISION No._____ DATE_____ DESCRIPTION_____
REVISION No._____ DATE_____ DESCRIPTION_____

RUHNAUCLARKE.COM
3775 TENTH STREET, RIVERSIDE CALIFORNIA 92501(951) 684 4664 / 5751 PALMER WAY, SUITE C, CARLSBAD CALIFORNIA 92010(760) 438 5899

MOUNT TRANSIT MAINTENANCE FACILITY
PHASE 1
170 BUSINESS CENTER DR. BIG BEAR LAKES, CA
BIG BEAR LAKES

TITLE SHEET AND SHEET INDEX

T-1

50801

MOUNT TRANSIT MAINTENANCE FACILITY: PHASE 1 - 100% CD

RESOLUTION EXHIBIT C

CONDITIONS OF APPROVAL

CONDITIONAL USE PERMIT 2022-074
160-170 BUSINESS CENTER DRIVE
ASSESSOR'S PARCEL NUMBER'S 2328-021-12, 13

APPROVAL DATE: APRIL 19, 2023
EFFECTIVE DATE: MAY 1, 2023
EXPIRATION DATE: MAY 1, 2026 (Phase 1)

The following abbreviations identify the agency responsible for determining compliance with these conditions. The first group listed has responsibility for compliance at plan check, the second confirms compliance with the condition at final inspection, prior to final occupancy or issuance of a certificate of occupancy, or as specified in the condition. If only one group is identified, they have responsibilities from initial review through compliance verification. The reference number at the end of each condition (e.g. G-1 or MND-BIO2), should be retained for internal use.

RESPONSIBLE DEPARTMENTS/DIVISIONS			
ATTY	City Attorney	BLDG	Building & Safety
DWP	Department of Water	ENG	Engineering Division
PLNG	Planning Division	FIRE	Fire Protection District
PW	Public Works	MND	Mitigated Negative Declaration

GENERAL CONDITIONS

1. Approval of CUP 2022-074 (herein after "project") is granted for property located at 160-170 Business Center Drive, Assessor Parcel Number's 2328-021-12, 13 to to develop a vacant 3.55 acre site with a bus storage/maintenance facility and administrative offices. The project would include a 1-story, 11,470 SF maintenance building for service bays, a bus wash, and other support spaces for drivers and the bus fleet. The administration building, also 1-story, anticipates a 11,200 SF building area. This approval is based on the application and supplemental materials including approved plans stamped as "Received on June 17, 2022" (hereinafter "the plans") on file with the Planning Division. Build-out and use of the development shall conform with the plans, as approved and conditioned herein, and shall not be further altered unless subsequently reviewed and approved by the City. Any future adjustment or modification to the plans shall be considered by the Community Development Director or designee, may require a separate discretionary review application, and shall conform to all City, State, and Federal requirements, including subsequent City Code requirements or policies. (PLNG, G-1)

2. Developer means permit applicant, property owner, operator, permittee, lessee, and/or tenants using the space(s) for the intended use(s). Developer shall comply with project conditions for the life of the project. (ATTY, G-2)

3. Developer shall obtain necessary approvals prior to initiating any new construction or modifications authorized under this permit, including but not limited to temporary construction trailers, temporary staging areas, model home sales offices, placement or construction of advertising signs of any kind, structures, and exterior and/or interior building modifications. (PLNG/BLDG, G-3)

4. If Developer (including but not limited to owner or tenant) fails to comply with any of the permit conditions, then Developer shall be subject to permit revocation or enforcement actions, pursuant to the City Code. All costs associated with any such actions shall be the responsibility of Developer, owner or tenant. (ATTY, G-4)

5. If not appealed, this approval shall become effective on the eleventh (11th) day after the decision date. Should the effective date fall on a non-business day, the decision shall become effective on the next city business day following such 11th day. Failure to file a timely appeal prior to the effective date, or commencement of any activity related to the project, is understood as the Developer's acceptance of all conditions and obligations imposed by this permit and waiving any challenge to the validity of the conditions and obligations stated therein. (ATTY, G-5)

6. This permit shall automatically expire, with Phase 1 becoming null and void, thirty-six (36) months from the effective date unless Developer has inaugurated the project and complied with all conditions of approval, as demonstrated by the issuance of applicable building permits and installation of substantial construction improvements on such permits. Once Phase 1 has been inaugurated, Developer shall initiate Phase 2 no later than forty-eight (48) months from the effective date in the same matter, specifically with the issuance of applicable building permits and installation of substantial construction improvements relating to the Phase 2 development. (PLNG)

7. If a time extension is necessary or desired, Developer is responsible for submitting a completed application form with corresponding fees to the Planning Division at least ninety (90) days prior to the expiration date. Should the ninetieth (90th) day prior to the expiration date fall on a non-business day, the completed application form with corresponding fees must be submitted no later than the first business day prior to the ninetieth (90th) day. Should such time extension request be received in less time, the Planning Division may not be able to process the request in advance of the expiration date. In this situation, the Developer acknowledges that should the permit expire prior to project inauguration, new land use entitlement(s) would need to be requested before the project may commence. (ATTY, G-7)

8. Approval of this application does not relieve Developer from complying with all applicable Federal, State, County or City regulations or requirements. (ATTY, G-8)

9. In the event that exhibits and written conditions are inconsistent, the written conditions shall prevail. (ATTY, G-9)

10. Developer agrees, as part of and in connection with each and any of the application(s), to defend, indemnify, and hold City, any departments, agencies, divisions, boards, and/or commissions of the City, and its elected officials, officers, contractors serving as City officials, agents, employees, and attorneys of the City ("Indemnitees") harmless from liability for damages and/or claims, actions, or proceedings for damages for personal injuries, including death, and claims for property damage, and with respect to all other actions and liabilities for damages caused or alleged to have been caused by reason of the Developer's activities in connection with this project on the project site, and which may arise from the direct or indirect operations of the Developer or those of the Developer's contractors, agents, tenants, employees or any other persons acting on Developer's behalf, which relate to the development and/or construction of the project. This indemnity provision applies to all damages and claims, actions, or proceedings for damages, as described above, regardless of whether the City prepared, supplied, or approved the plans, specifications, or other documents for the project.

In the event of any legal action challenging the validity, applicability, or interpretation of any provision of this approval, or any other supporting document relating to the project, the City will promptly notify Developer of the claim, action, or proceedings and will fully cooperate in the defense of the matter.

a. Once notified, Developer must indemnify, defend and hold harmless the Indemnitees, and each of them, with respect to all liability, costs and expenses incurred by, and/or awarded against, the City or any of the Indemnitees in relation to such action.

b. Within 15 days' notice from the City of any such action, Developer shall provide to City a cash deposit to cover legal fees, costs, and expenses incurred by City in connection with defense of any legal action in an initial amount to be reasonably determined by the City Attorney. City may draw funds from the deposit for such fees, costs, and expenses.

c. Within 5 business days of each and every notice from City that the deposit has fallen below the initial amount, Applicant shall replenish the deposit each and every time in order for City's legal team to continue working on the matter.

d. City shall only refund to Developer any unexpended funds from the deposit within 30 days of: (i) a final, non-appealable decision by a court of competent jurisdiction resolving the legal action; or (ii) full and complete settlement of legal action.

The City shall have the right to select legal counsel of its choice that the Developer reasonably approves. The parties hereby agree to cooperate in defending such action. The City will not voluntarily assist in any such third-party challenge(s) or take any position adverse to the Developer in connection with such third-party challenge(s). In consideration for approval of the project, this condition shall remain in effect if the entitlement(s) related to this project is rescinded or revoked, whether or not at the request of Developer. (ATTY, G-10)

11. Developer is responsible for informing all subcontractors, consultants, engineers, or other business entities providing services related to the project of their responsibilities to comply with all permit conditions and the Big Bear Lake Municipal Code, including but not limited to the requirement that a business license be obtained by all entities doing business in the City. (ATTY, G-11)

12. Developer is responsible to ensure that all plans, specifications, studies, reports, calculations, maps, notes, legal documents, and designs, are be prepared, signed, and stamped (as required) by those individuals legally authorized to do so. (ATTY, G-12)

13. All uses and activities on the subject property must occur inside the buildings and/or structures or locations as approved by this permit, or otherwise allowed under the Big Bear Lake Municipal Code. On-site uses and activities shall be conducted in accordance with State, Federal, and local regulations and shall not create any public nuisances as a result of the operations. (PLNG, G-13)

14. Except as modified by this permit, Developer shall, for the life of the project, maintain off-street parking for all on-site uses in accordance with the Big Bear Lake Municipal Code requirements, including number and type of spaces, stall size, paving, striping, location and access. (PLNG, G-14)

CONDITIONS FOR COMPLIANCE PRIOR TO ISSUANCE OF PERMITS

15. Prior to initiating any construction or activity within the public right-of-way or city-owned property, Developer must obtain the proper approvals, such as but not limited to an encroachment permit, from the Public Works Department. (ENG/P-1)

16. Prior to issuance of grading plans or building permits, whichever comes first, Developer shall submit a stamped, signed, and dated soil investigation report prepared by a geotechnical engineer or civil engineer containing site-specific design recommendations. As appropriate, the Building Official may request additional studies or verification to evaluate soil strength, the effect of moisture variation on soil-bearing capacity, compressibility, liquefaction, seismically induced soil liquefaction, soil instability, and expansiveness. The submittal from the geotechnical engineer or civil engineer shall clarify that:
    a. The plans and specifications substantially conform to the recommendations in the soil investigation; and
    b. The geotechnical engineer or civil engineer who prepared the soil investigation has been retained by Developer to provide soil observations onsite, and provide periodic and final reports to the City of Big Bear Lake. (BLDG, P-4)

17. The proposed location of the project is partially situated in a flood zone AE, development permits for construction on Flood plains must comply with the requirements of the City of Big Bear Lake Municipal Code Chapter 15.64.
    a. Construction materials and methods must comply with FEMA Technical bulletin TB2-93. (ENG)
    b. Anchoring of the Structure must comply with TB-1,2,3 & 7. (ENG)
    c. Utilities such as electrical outlets, heating, ventilation and the similar must be designed and/or located so as to prevent water from entering or accumulating within the components during conditions of flooding. (ENG)
    d. Flood vents must be provided for the structures. (ENG)
    e. Lowest floor elevation must rise 1' from the Base Flood Elevation (ENG)
    f. A LOMR will be only required if the applicant of the project wishes be relieved of the requirement for flood insurance. If so, the property would have to be removed from the flood zone indicated on the FIRM panel. This would require a LOMR. the city submits the application requesting a map revision. The project's engineer would be required to do all hydrologic and hydraulic work, and prepare the reports but the formal application has to be executed by the city within 6 months of project completion. (ENG)
    g. A Final WQMP document must be submitted after planning commission approval and will require additional payment. (ENG) Percolation test showed that infiltration is slow/not feasible, that has to be reflected in the BMP device selection. (ENG)
    h. There is an existing storm drain located in the East side of the property along Sandalwood Dr., the outlet of the BMP devices can be considered to be connected to the existing storm drain system if the water is treated on site, and calculations are shown to demonstrate that the pipe size has enough capacity to carry the extra water runoff produced by the project. (ENG) Plans will need to show all existing and proposed utilities. (ENG)
    i. Grading plans must show contour lines NGVD 29 for benchmark, NAD 83 for bearing, limits of the flood zone elevation, water runoff direction that does not redirect water into the adjacent properties, calculation of cut and fill. (ENG)
    j. The use of flush curbs or curb openings is preferred for ease of plowing and drainage to be captured by the planted areas. (ENG)
    k. Show in the site plan the proposed locations for snow storage and indicate the area in square feet. (ENG)
    l. Need to provide a covered trash enclosure with an adequate concrete pad for loading/unloading the waste collection truck, asphalt usually cracks by fatigue. (ENG)
    m. Need to indicate the method that will be used for the containment of grease, fuels and oils in the maintenance area. (ENG)
    n. A 6" sewer lateral with cleanout will be required for the project. (ENG)
    o. RFP backflow assemblies will be required on all services to be installed at locations approved by the Department of Water and Power. (DWP)

18. Prior to issuance of grading plans, Developer shall submit a combined landscape and lighting plan to verify all project onsite lighting shall be of a type and in a location that does not constitute a hazard to vehicular traffic, either on private property or on public property, including but not limited to streets and roadways. Placement of such lighting shall not conflict with drainage plans, landscape plans, tree locations, parking spaces, or any other such land use and site plan concerns. (PLNG, P-5)

19. Prior to issuance of grading plans or building permits, Developer shall minimize potential construction-related noise impacts by including the following language on any grading, site work, and construction plans issued for the project site. (BLDG, P-6)

"During earth-moving, grading, and construction activities, Developer shall implement the following measures at the project site:
    a. Limit earth-moving, grading, and construction activities to weekdays between 7:00 a.m. and 7:00 p.m., and on Saturdays between 9:00 a.m. and 7:00 p.m. Construction-related noise is prohibited on Sundays and City-observed holidays;
    b. Locate stationary noise-generating equipment as far as possible from sensitive receptors when sensitive receptors adjoin or are near a construction project area;
    c. Construct sound walls or other noise reduction measures prior to developing the project site;
    d. Equip all internal combustion engine driven equipment with intake and exhaust mufflers that are in good condition and appropriate for the equipment;
    e. Prohibit all unnecessary idling of internal combustion engines;
    f. Utilize 'quiet' models of air compressors and other stationary noise sources where technology exists; and
    g. Designate a 'disturbance coordinator' who would be responsible for responding to any complaints about construction noise or activities. The disturbance coordinator shall be responsible for determining the cause of the complaint and immediately implement reasonable measures to correct the problem."

20. Prior to issuance of grading plans or building permits, Developer shall minimize potential construction-related air quality impacts by including the following language on any grading, site work, and construction plans issued for the project site. (BLDG, P-7)

"During earth-moving, grading, and construction activities, Developer shall implement the following measures at the project site:
    a. All exposed surfaces (e.g. parking areas, staging areas, soil piles, graded areas, and unpaved access roads) shall be watered at minimum two times per day;
    b. All haul trucks transporting soil, sand, or other loose material onsite or offsite shall be covered;
    c. All visible mud or dirt tracked out onto adjacent public roads shall be removed using wet power vacuum street sweepers at least once per day. The use of dry power sweeping is prohibited;
    d. All vehicle speeds on unpaved roads, pathways, or surfaces shall be limited to 15 miles per hour;
    e. All roadways, driveways, and sidewalks to be paved shall be completed as soon as possible. Building pads shall be laid as soon as possible after grading unless seeding or soil binders are used to stabilize the soil;
    f. Idling times shall be minimized either by shutting equipment off when not in use or reducing the maximum idling time to 5 minutes (as required by the California airborne toxics control measure Title 13, Section 2485 of California Code of Regulations). Clear signage shall be provided for construction workers at all access points;
    g. All construction equipment shall be maintained and properly tuned in accordance with manufacturer's specifications. All equipment shall be checked by a certified visible emissions evaluator; and
    h. Post a publicly visible sign identifying the City Building Division (909) 866-5831 during normal business hours, and the City Code Compliance Division (909) 866-CODE (909-866-2633) after hours for construction-related complaints. The South Coast Air Quality Management District 1-800-CUT-SMOG (1-800-288-7664) shall also be included to ensure compliance with applicable regulations."

21. Prior to issuance of building permits, Developer shall include on the first sheet after the cover sheet of the plan set, a complete reproduction of all conditions of approval, as adopted by the decision-maker. (PLNG, P-10)

22. Prior to issuance of building permits, the Property Owner shall sign and return to the Planning Division, a notarized deed restriction acknowledging the land use approvals for the property on a form provided by the City. Such deed restriction shall be confirmed as recorded by the County of San Bernardino prior to final inspection sign off. (PLNG, P-11)

23. Prior to issuance of building permits, Developer shall include all exterior building materials and colors, including product and finish, manufacturer name, color name and number, and surface finish type (e.g. stucco with sand finish, plaster with smooth finish) to be used in construction. (PLNG, P-13)

24. Prior to issuance of building permits, Developer shall submit a lighting plan with details of all exterior fixtures and locations. Such plan shall verify that all exterior light fixtures, including parking lot lighting, shall be full cutoff type, directs illumination downward only, is designed to minimize glare and light pollution, and shall not cast light on any adjacent property or roadway. Developer shall recess or conceal any under-canopy lighting elements so they are not directly visible from any public area. (PLNG, P-14)

25. Acceptance or approval of submitted plans does not release Developer from correction of mistakes, errors, or omissions contained therein. If, during the course of construction, the public interest requires a modification or departure from the approved plans, the City shall have the authority to require such modifications or departure and specify the manner in which the same is to be made. (BLDG, P-15)

26. Prior to issuance of a grading or building permit, Developer shall contact the Building Division to schedule a pre-site inspection. (BLDG, P-17)

27. Prior to commencement of any trenching, grading, staging, or construction activities onsite, Developer shall contact the Building Division to schedule a pre-construction meeting for the purpose of reviewing conditions of project approval and expectations throughout the project construction period. (BLDG/PLNG/ENG, P-18)

28. All applicable codes and ordinances shall apply, including but not limited to, the 2019 California Fire Code (CFC); California Code of Regulations, Title 19; and those portions of 2019 California Building Code, adopted by the State Fire Marshal. (FIRE, P-19)

29. A security fence with screening shall protect all construction sites. The fencing and screening shall be maintained at all times to protect pedestrians. All development projects shall submit a construction fencing plan with the construction design plans. Construction projects that have phased occupancy shall be completely separated by a construction fence that is screened and show the adjusted fence locations at each phase. (BLDG, P-23)

CONDITIONS FOR COMPLIANCE DURING ONSITE CONSTRUCTION ACTIVITIES

30. All related construction materials, debris, and equipment shall be stored on the project site. If that is not physically possible, then Developer shall obtain approvals for alternative locations in advance of such placement. For example, an encroachment permit would be required for placement within a public right-of-way, and a temporary use permit would be required for placement on another property. (BLDG, C-1)

31. At all times throughout the construction period, Developer shall maintain all portions of the job site in an organized and professional condition. At minimum, all trash, debris, construction scraps and broken/deteriorated machinery shall be removed from the site at the end of each week. If off-loaded construction materials are not used within 2 weeks, they shall be screened from view. All sidewalks, driveways and public/private roadways fronting the subject site shall be broom cleaned at the end of each construction work day. Construction site cleanup shall be in accordance with Big Bear Lake Municipal Code Chapter 15.50. (BLDG, C-2)

32. At all times during the construction period, Developer shall retain the stamped, approved job copy of the plans and permit card onsite. (BLDG, C-3)

CONDITIONS FOR COMPLIANCE PRIOR TO FINAL SIGNOFF OR OCCUPANCY

33. Prior to final signoff or certificate of occupancy, Developer shall submit to the Building Division a final grading and drainage plan prepared by a licensed civil engineer depicting all final grades (with accurate elevations above sea level indicated) and onsite drainage control measures to prevent storm water runoff onto adjoining properties. (BLDG/ENG, F-1)

34. Prior to final signoff or certificate of occupancy, Developer shall complete all required offsite and onsite improvements for the project, including structures, paving, and landscaping, unless the Community Development Director allows Developer to provide security or an executed agreement approved by the City Attorney to ensure timely completion of such improvements. (PLNG/BLDG, F-2)

35. The applicants shall prepare and submit Landscaping and irrigation plans, including all required WELO checklists and forms, in compliance with the State of California Model Water Efficient Landscape Ordinance (WELO). The landscaping plans must include all water features, pools and spas. The landscaping and irrigation plans must be reviewed by the DWP and Planning Department. (PLNG, F-3)

36. A Lot Merger application shall be submitted to the Engineering Department prior to building permit issuance and the merger shall be recorded prior to occupancy of any building. (PLNG, F-4)

CONDITIONS REGARDING THE MITIGATION MONITORING PROGRAM FOR THE MITIGATED NEGATIVE DECLARATION

Mitigation Measures No. / Implementing Action	Implementation Timing	Party Responsible for Implementation	Party Responsible for Monitoring	Date of Completion /Notes
Biological Resources				
BIO-1: Whenever possible, impacts to native nesting birds will be avoided by not conducting project activities that involve clearing of vegetation, generation of mechanical noise, or ground disturbance during the typical breeding season (February 1 to September 1). If species covered under the Migratory Bird Treaty Act and Fish and Game Code sections 3503, 3503.5, and 3513 are determined to be present. If project activities must be conducted during the nesting bird season, a qualified Avian Biologist will conduct pre-construction Nesting Bird Surveys (NBS) prior to project-related disturbance to nestable vegetation to identify any active nests within a 500-ft radius of the construction area. If no active nests are found, no further action will be required. If an active nest is found, the biologist will set appropriate no-work buffers around the nest which will be based upon the nesting species, its sensitivity to disturbance, nesting stage and expected types, intensity and duration of disturbance. Buffers around active nests will be a minimum of 250 feet, unless the biologist determines that smaller buffers would be sufficient to avoid impacts to nesting birds. The nests and buffer zones shall be field checked weekly by a qualified biological monitor. The approved no-work buffer zone shall be clearly marked in the field, within which no disturbance activity shall commence until the qualified biologist has determined the young birds have successfully fledged and the nest is inactive.	During ground-disturbing activities that involve project activities that involve clearing of vegetation, generation of mechanical noise, or ground disturbance during the typical breeding season (February 1 to September 1).	Project Proponent, Contractor, Biologist	City of Big Bear Lake	
Cultural Resources				
CR-1: In the event that any historic or prehistoric cultural resources are inadvertently discovered, all construction work in the immediate vicinity of the discovery shall stop and a qualified archaeologist shall be engaged to discuss the discovery and determine if further mitigation measures are warranted.	Upon discovery of cultural resources	Contractor, Archaeological Monitor	City of Big Bear Lake	
CR-2: If human remains are discovered, work shall halt in that area until a determination can be made regarding the provenance of the human remains; and the procedures set forth in CEQA Section 15064.5(e), the California PRC (Section 5097.98), and the State Health and Safety Code (Section 7050.5) shall be undertaken.	Upon discovery of human remains	Contractor, Archaeological Monitor	City of Big Bear Lake	
Geology and Soils				
GEO-1: All structures shall be designed to meet the California Building Code provisions in the most current CBC edition and the ASCE Standard 7-16, where applicable. It is the responsibility of both the property owner and project structural engineer to determine the risk factors with respect to using CBC minimum design values for the proposed facilities.	Prior to Building Permit Issuance	Project Proponent/ Contractor	City of Big Bear Lake	
GEO-2: The potential for liquefaction should be properly evaluated by the project Geotechnical Engineer.	Prior to Building Permit Issuance	Project Proponent/ Geotechnical Engineer	City of Big Bear Lake	
GEO-3: Site preparation recommendations as listed in a City-approved Final Geotechnical Investigation report shall be incorporated into project design.	During site preparation	Project Proponent/ Contractor	City of Big Bear Lake	
Tribal Cultural Resources				
N-1: The use of noisy equipment outside or within the repair building shall not be loud, excessive, raucous, disturbing, or exceeding 60db at the property line.	During operations	Project Proponent	City of Big Bear Lake	

STAMPS
LICENSED ARCHITECT ROGER CLARKE No. C-28340 Exp. 10-31-24 STATE OF CALIFORNIA
AGENCY APPROVAL File No: ########-##-########
CONSULTANT BRANDING
RUHNAU CLARKE ARCHITECTS

MOUNT TRANSIT MAINTENANCE FACILITY: PHASE 1 - 100% CD

PRECISE GRADING PLAN – PHASE 1
MOUNTAIN REGIONAL TRANSIT AUTHORITY
NEW ADMINISTRATION BUILDING AND MAINTENANCE FACILITY
160-170 BUSINESS CENTER DRIVE

GRADING NOTES

1. ANY MODIFICATIONS OF OR CHANGES IN APPROVED GRADING PLANS MUST BE APPROVED BY THE CITY BUILDING OFFICIAL.
2. A COPY OF THE GRADING PERMIT AND APPROVED GRADING PLAN MUST BE IN THE POSSESSION OF A RESPONSIBLE PERSON AND AVAILABLE AT THE SITE WHILE WORK IS IN PROGRESS.
3. ENGINEER MUST SET GRADE STAKES FOR ALL DRAINAGE DEVICES AND OBTAIN INSPECTION APPROVAL BEFORE POURING.
4. PROVISIONS SHALL BE MADE FOR CONTRIBUTORY DRAINAGE AT ALL TIMES.
5. SECURE PERMISSION FROM CITY ENGINEER, EASEMENT GRANTEE, STATE HIGHWAY DEPARTMENT, AND/OR HOMEOWNERS ASSOCIATION FOR CONSTRUCTION, GRADING, AND/OR DISCHARGE OF DRAINAGE WITHIN STREET RIGHT-OF-WAY.
6. GRADING SHALL NOT BE STARTED WITHOUT FIRST NOTIFYING THE GRADING INSPECTOR.
7. CUT AND FILL SLOPES SHALL BE NO STEEPER THAN 2 UNITS HORIZONTAL TO 1 UNIT VERTICAL (2:1), EXCEPT WHERE SPECIFICALLY APPROVED OTHERWISE.
8. FILLS SHALL BE COMPACTED THROUGHOUT TO A MINIMUM OF 90% RELATIVE COMPACTION. AGGREGATE BASE FOR ASPHALTIC AREAS SHALL BE COMPACTED TO MINIMUM OF 95% RELATIVE COMPACTION. NO ROCKS GREATER THAN 6 INCHES IN DIAMETER MAY BE PLACED IN FILL.
9. AREAS TO RECEIVE FILL SHALL BE PROPERLY PREPARED AND APPROVED, IN WRITING, BY THE SOIL ENGINEER AND THE BUILDING OFFICIAL PRIOR TO PLACING FILL.
10. FILL SHALL BE BENCHED INTO COMPETENT MATERIAL.
11. ALL EXISTING FILLS SHALL BE APPROVED BY THE BUILDING OFFICIAL OR REMOVED PRIOR TO PLACING ADDITIONAL FILLS.
12. STOCK PILING OF EXCESS MATERIAL SHALL BE APPROVED BY THE BUILDING OFFICIAL PRIOR TO EXCAVATION.
13. CLEAR AND REMOVE FROM SITE ALL DEBRIS, EXCEPTING FOR EXISTING TREES IN DESIGNATED LANDSCAPE AREAS; STRIP SITE OF VEGETATION, LARGE ROOTS, SURFACE TRASH AND ROCKS. UNDER NO CIRCUMSTANCES SHALL THE CLEAN BEAR SITES BE USED FOR DISPOSAL. VIOLATORS ARE SUBJECT TO A $500.00 FINE.
14. ALL TRENCH BACKFILLS SHALL BE TESTED AND APPROVED BY THE SOIL ENGINEER.
15. THE ENGINEERING GEOLOGIST AND SOIL ENGINEER SHALL, AFTER CLEARING AND PRIOR TO THE PLACEMENT OF FILL IN CANYONS, INSPECT EACH CANYON FOR AREAS OF ADVERSE STABILITY AND TO DETERMINE THE PRESENCE OR ABSENCE OF SUBSURFACE WATER OR SPRING FLOW. IF NEEDED, SUBDRAINS WILL BE DESIGNED AND CONSTRUCTED PRIOR TO THE PLACEMENT OF FILL IN EACH RESPECTIVE CANYON.
16. SUBDRAIN OUTLETS SHALL BE COMPLETED AT THE BEGINNING OF THE SUBDRAIN CONSTRUCTION.
17. THE EXACT LOCATION OF THE SUBDRAINS SHALL BE SURVEYED IN THE FIELD FOR LINE/GRADE AND REFLECTED ON AS-GRADED PLANS.
18. ALL CUT SLOPES SHALL BE INVESTIGATED BOTH DURING AND AFTER GRADING BY THE ENGINEERING GEOLOGIST TO DETERMINE IF ANY SLOPE STABILITY PROBLEM EXISTS. SHOULD EXCAVATION DISCLOSE ANY GEOLOGICAL HAZARDS OR POTENTIAL GEOLOGICAL HAZARDS, THE ENGINEERING GEOLOGIST SHALL SUBMIT RECOMMENDED REMEDIATION TO THE BUILDING OFFICIAL FOR APPROVAL.
19. WHERE SUPPORT OR BUTTRESSING OF CUT AND NATURAL SLOPES IS DETERMINED TO BE NECESSARY BY THE ENGINEERING GEOLOGIST AND SOIL ENGINEER, THE SOIL ENGINEER SHALL SUBMIT DESIGN, LOCATIONS, AND CALCULATIONS TO THE BUILDING OFFICIAL PRIOR TO CONSTRUCTION. THE ENGINEERING GEOLOGIST AND SOIL ENGINEER SHALL INSPECT AND CONTROL THE CONSTRUCTION OF THE BUTTRESSING AND CERTIFY TO THE STABILITY OF THE SLOPE AND ADJACENT STRUCTURES UPON COMPLETION.
20. WHEN CUT PADS ARE BROUGHT TO NEAR GRADE, THE ENGINEERING GEOLOGIST SHALL DETERMINE IF THE BEDROCK IS EXTENSIVELY FRACTURED OR FAULTED AND WILL READILY TRANSMIT WATER. IF CONSIDERED NECESSARY BY THE ENGINEERING GEOLOGIST AND SOIL ENGINEER, A COMPACTED FILL BLANKET WILL BE PLACED.
21. THE ENGINEERING GEOLOGIST SHALL PERFORM PERIODIC INSPECTIONS AND SUBMIT A COMPLETE REPORT AND MAP UPON COMPLETION OF THE ROUGH GRADING.
22. THE COMPACTION REPORT AND APPROVAL FROM THE SOIL ENGINEER SHALL INDICATE THE TYPE OF FIELD TESTING PERFORMED, EACH TEST SHALL BE IDENTIFIED WITH THE METHOD OF OBTAINING THE IN-PLACE DENSITY, WHETHER SAND CONE OR NUCLEAR GAUGE, AND SHALL BE SO NOTED FOR EACH TEST.
23. THE GRADING CONTRACTOR SHALL SUBMIT A WRITTEN STATEMENT VERIFYING THAT THE WORK DONE UNDER HIS DIRECTION WAS PERFORMED IN ACCORDANCE WITH THE APPROVED PLANS AND REQUIREMENTS OF APPENDIX 33 OF THE CITY OF BIG BEAR LAKE BUILDING CODE OR DESCRIBING ALL VARIANCES FROM THE APPROVED PLANS AND REQUIREMENTS OF THE CODE.
24. THE UNDERSIGNED DESIGN ENGINEER VERIFIES THAT THIS GRADING PLAN WAS PREPARED UNDER MY SUPERVISION IN ACCORDANCE WITH THE CITY OF BIG BEAR LAKE BUILDING CODE. ALL SOILS ENGINEER AND ENGINEERING GEOLOGY RECOMMENDATIONS WERE INCORPORATED IN THE PLAN. (MUST BE SIGNED AND DATED BY THE DESIGN ENGINEER.)
25. GRADING OPERATIONS MUST BE CONDUCTED UNDER PERIODIC GEOLOGIC INSPECTION WITH INSPECTION REPORTS TO BE SUBMITTED TO THE BUILDING DEPARTMENT.
26. EXPORT SOIL MUST BE TRANSPORTED TO A LEGAL DUMP OR TO A PERMITTED SITE SHOWN CLEARLY ON APPROVED PLANS.
27. SLOPES SHALL BE PLANTED WITH AN APPROVED PLANT MATERIAL AND PROVIDED WITH AN APPROVED IRRIGATION SYSTEM, UNLESS AN ALTERNATIVE HAS BEEN APPROVED BY THE CITY.
28. THE ENGINEER SHALL SUBMIT A LETTER OF CERTIFICATION TO THE BUILDING OFFICIAL STATING THAT THE GRADING WAS DONE IN COMPLIANCE WITH THE APPROVED GRADING PLAN.
29. ANY CONTRACTOR PERFORMING WORK ON THIS PROJECT SHALL FAMILIARIZE HIMSELF WITH THE SITE AND SHALL BE SOLELY RESPONSIBLE FOR ANY DAMAGE TO EXISTING FACILITIES RESULTING DIRECTLY OR INDIRECTLY FORM HIS OPERATION, WHETHER OR NOT SUCH FACILITIES ARE SHOWN ON THESE PLANS. PUBLIC STREETS SHALL BE KEPT CLEAN FROM DIRT AND/OR DEBRIS. THE GRADING CONTRACTOR SHALL BE RESPONSIBLE FOR ALL COSTS INCURRED IN STREET CLEANING NECESSITATED BY HIS OPERATION.
30. ALL ROADS USED BY CONSTRUCTION TRAFFIC SHALL BE KEPT CLEAR OF CONSTRUCTION DEBRIS RELATED TO THE SITE CONSTRUCTION. IF DEBRIS FROM THE PROJECT IS LEFT ON THE ROAD OVERNIGHT, THE CITY MAY CLEAN THE ROAD AND CHARGE THE PERMIT HOLDER A MINIMUM FEE OF $100.00 PLUS $100 PER HOUR SPENT CLEANING THE ROAD.
31. PRELIMINARY SOIL AND GEOLOGY REPORTS AND ALL SUBSEQUENT REPORTS, AS APPROVED BY THE CITY OF BIG BEAR LAKE, ARE CONSIDERED A PART OF THE APPROVED GRADING PLAN. ALL RECOMMENDATIONS CONTAINED ARE TO BE COMPILED WITH OR REVISIONS SUBMITTED FOR REVIEW.
32. ALL EXISTING DRAINAGE COURSES THROUGH THIS SITE SHALL REMAIN OPEN UNTIL FACILITIES TO HANDLE STORM WATER ARE APPROVED AND FUNCTIONAL; HOWEVER, IN ANY CASE, THE PERMITTEE SHALL BE HELD LIABLE FOR ANY DAMAGE DUE TO OBSTRUCTING NATURAL DRAINAGE PATTERNS.
33. ROOF GUTTERS SHALL BE INSTALLED TO PREVENT ROOF DRAINAGE FROM FALLING ON MANUFACTURED SLOPES. GUTTERS SHALL BE CONNECTED TO NON-EROSIVE PIPING OR OTHER METHOD ACCEPTABLE TO THE BUILDING OFFICIAL.
34. ANY EXCAVATIONS ADJACENT TO OTHER PROPERTY OR STRUCTURES ARE SUBJECT TO THE PROVISIONS OF CALIFORNIA CIVIL CODE, SECTION 832, AND IS THE RESPONSIBILITY OF THE PERMITTEE AND/OR OWNER.

PLANTING AND IRRIGATION NOTES

35. ALL CUT AND FILL SLOPES WILL BE PLANTED WITH AN APPROVED GROUND COVER AND PROVIDED WITH AN IRRIGATION SYSTEM AS SOON AS PRACTICAL DURING GRADING. IN ADDITION TO THE GROUND COVER PLANTS SHALL BE INSTALLED ON ALL SLOPES. ALL PLANTING SHALL BE OF A TYPE APPROVED BY THE CITY.
36. THE PLANS FOR A DESIGNED IRRIGATION SYSTEM FOR FULL COVERAGE OF ALL PORTION OF THE SLOPES SHALL BE SUBMITTED AND APPROVED PRIOR TO ROUGH GRADING APPROVAL BY THE CITY.
37. PLANTING AND IRRIGATION PLANS FOR SLOPES MUST BE PREPARED AND SIGNED BY A CIVIL ENGINEER OR LANDSCAPE ARCHITECT.
38. FINISH GRADING WILL BE COMPLETED AND APPROVED AND SLOPE PLANTING AND IRRIGATION SYSTEMS INSTALLED BEFORE OCCUPANCY OF BUILDINGS.

EROSION CONTROL PROVISIONS CERTIFICATE

39. STORM WATER MANAGEMENT PLANS INCORPORATING ALL THE PROVISIONS OF THE CITY OF BIG BEAR LAKE MUNICIPAL CODE SHALL BE SUBMITTED AND APPROVED PRIOR TO PERMIT ISSUANCE. SUCH PLANS ARE TO INCLUDE CONSTRUCTION AND POST CONSTRUCTION PHASE PROVISIONS REFLECTING "BEST MANAGEMENT PRACTICES".
40. SPECIFY ON PLANS: IN CASE OF EMERGENCY CALL: SANDY BENSON (GENERAL MANAGER)
    WORK TELEPHONE NUMBER: (909) 878-5200
    HOME TELEPHONE NUMBER: (909) 586-5073
41. EQUIPMENT AND WORKERS FOR EMERGENCY WORK SHALL BE MADE AVAILABLE AT ALL TIME DURING THE RAINY SEASON. NECESSARY MATERIALS SHALL BE AVAILABLE ON-SITE AND STOCKPILED AT CONVENIENT LOCATIONS TO FACILITATE RAPID CONSTRUCTION OF TEMPORARY DEVICES WHEN RAIN IS IMMINENT.
42. EROSION CONTROL DEVICES SHALL NOT BE MOVED OR MODIFIED WITHOUT THE APPROVAL OF THE CITY BUILDING OFFICIAL.
43. STOCKPILED MATERIALS SHALL BE PLACED TO BE ACCESSIBLE BY VEHICLE DURING PERIODS OF PRECIPITATION AND PROTECTED FROM PRECIPITATION AND RUNOFF AT THE END OF EACH WORKING DAY.
44. ALL REMOVABLE EROSION PROTECTIVE DEVICES SHALL BE IN PLACE AT THE END OF EACH WORKING DAY.
45. AFTER A RAINSTORM ALL SILT AND DEBRIS SHALL BE REMOVED FROM STREETS, CHECK BERMS, AND BASINS. NO STANDING WATER SHALL BE LEFT IN OPEN TRENCHES.
46. GRADED AREAS ON THE PERMITTED AREA PERIMETER MUST DRAIN AWAY FROM THE FACE OF SLOPES AT THE CONCLUSION OF EACH WORKING DAY. DRAINAGE TO BE DIRECTED TOWARD DESILTING FACILITIES.
47. ISSUANCE OF A GRADING PERMIT DOES NOT ELIMINATE THE NEED FOR PERMITS FROM OTHER AGENCIES WITH REGULATORY RESPONSIBILITIES FOR CONSTRUCTION ACTIVITIES ASSOCIATED WITH THE WORK AUTHORIZED ON THIS PLAN.
48. EROSION CONTROL MEASURES AND PLANTING SHALL BE INSTALLED AND MAINTAINED AS SOON AS PRACTICAL, IN AREAS NOT SUBJECT TO FREQUENT TRAFFIC.
49. ALL EROSION CONTROL, DESILTING BASINS, SILT FENCES, AND OTHER STORM WATER AND/OR EROSION CONTROL FEATURES SHALL BE INSPECTED BY THE RESPONSIBLE PARTY, ON A WEEKLY BASIS, CLEANED, AND MAINTAINED TO ENSURE THESE FEATURES FUNCTION AS DESIGNED.
50. THE UNDERSIGNED CIVIL ENGINEER AND CONTRACTOR SHALL INSPECT THE EROSION CONTROL WORK AND ENSURE THAT THE WORK IS IN ACCORDANCE WITH THE APPROVED PLANS.

SIGNATURE: _____ 12/20/2023
ENGINEER DATE

SIGNATURE: _____
CONTRACTOR DATE

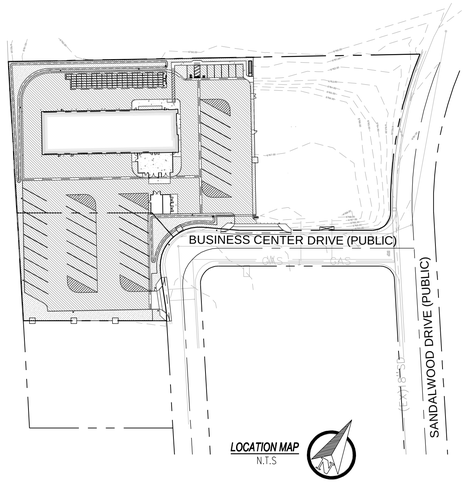

SURVEY MONUMENT NOTE

SURVEY MONUMENTS THAT EXIST AS SHOWN ON RECORDED MAPS, HIGHWAY MAPS OR POINTS THAT PROVIDE SURVEY CONTROL WITHIN THE CONSTRUCTION AREA, SHALL BE LOCATED AND REFERENCED OUT BY A LICENSED LAND SURVEYOR OR REGISTERED CIVIL ENGINEER (AUTHORIZED TO PRACTICE LAND SURVEYING), AND CORNER RECORDS SHALL BE FILED WITH THE COUNTY SURVEYOR PRIOR TO THE START OF CONSTRUCTION. THESE CORNER RECORDS SHALL DESCRIBE THE MONUMENTS FOUND WITH THE DISTANCES TO REFERENCE POINTS FOR RESETTING OF THE SURVEY MONUMENT. WHEN CONSTRUCTION IS COMPLETED, MONUMENTS SHALL BE SET AND CORNER RECORDS SHALL BE FILED WITH THE COUNTY SURVEYOR SHOWING THE NEW MONUMENTS.

ENGINEER'S NOTE TO CONTRACTOR

THE EXISTENCE AND APPROXIMATE LOCATION OF ANY UNDERGROUND UTILITIES OR STRUCTURES SHOWN ON THESE PLANS WERE OBTAINED BY A SEARCH OF AVAILABLE RECORDS. TO THE BEST OF OUR KNOWLEDGE, THERE ARE NO EXISTING UTILITIES OR STRUCTURES EXCEPT AS SHOWN ON THESE PLANS. THE ENGINEER ASSUMES NO LIABILITY AS TO THE EXACT LOCATION OF SAID LINES NOR FOR UTILITIES OR IRRIGATION LINES WHOSE LOCATIONS ARE NOT SHOWN. THE CONTRACTOR SHALL BE RESPONSIBLE FOR NOTIFYING ALL UTILITY AND IRRIGATION COMPANIES PRIOR TO WORK OR EXCAVATION TO DETERMINE EXACT LOCATION OF ALL LINES AFFECTING THIS WORK, WHETHER OR NOT SHOWN HEREON, AND FOR ANY DAMAGE OR PROTECTION OF THESE LINES.

CONTRACTOR'S RESPONSIBILITY FOR SAFETY

CONSTRUCTION CONTRACTOR AGREES THAT IN ACCORDANCE WITH GENERALLY ACCEPTED CONSTRUCTION PRACTICES, CONSTRUCTION CONTRACTOR WILL BE REQUIRED TO ASSUME SOLE AND COMPLETE RESPONSIBILITY FOR JOB SITE CONDITIONS DURING THE COURSE OF CONSTRUCTION OF THE PROJECT, INCLUDING SAFETY OF ALL PERSONS AND PROPERTY; THAT THIS REQUIREMENT SHALL BE MADE TO APPLY CONTINUOUSLY AND NOT BE LIMITED TO NORMAL WORKING HOURS, AND CONSTRUCTION CONTRACTOR FURTHER AGREES TO DEFEND, INDEMNIFY AND HOLD THE OWNER, ENGINEER, AND THE CITY OF BIG BEAR LAKE HARMLESS FROM ANY AND ALL LIABILITY, REAL OR ALLEGED, IN CONNECTION WITH THE PERFORMANCE OF WORK ON THIS PROJECT, EXCEPTING LIABILITY ARISING FROM THE SOLE NEGLIGENCE OF THE OWNER, ENGINEER, OR THE CITY OF BIG BEAR LAKE.

ALL CONTRACTORS AND SUBCONTRACTORS PERFORMING WORK SHOWN ON OR RELATED TO THESE PLANS SHALL CONDUCT THEIR OPERATIONS SO THAT EMPLOYEES ARE PROVIDED A SAFE PLACE TO WORK AND THE PUBLIC IS PROTECTED. ALL CONTRACTORS AND SUBCONTRACTORS SHALL COMPLY WITH THE "OCCUPATIONAL SAFETY AND HEALTH REGULATIONS" OF THE U.S. DEPARTMENT OF LABOR AND WITH THE STATE OF CALIFORNIA DEPARTMENT OF INDUSTRIAL RELATIONS "CONSTRUCTION SAFETY ORDERS". THE CIVIL ENGINEER SHALL NOT BE RESPONSIBLE IN ANY WAY FOR THE CONTRACTOR OR SUBCONTRACTORS COMPLIANCE WITH SAID REGULATIONS AND ORDERS.

DESIGN PROFESSIONAL'S SPECIAL INSPECTIONS STATEMENT

THIS GRADING PLAN WAS PREPARED UNDER MY DIRECTION AND SPECIAL INSPECTIONS ARE IN ACCORDANCE WITH SECTION 1705.6 OF THE CALIFORNIA BUILDING CODE. THE SITE MATERIALS, SYSTEMS, COMPONENTS AND WORK REQUIRED TO HAVE SPECIAL INSPECTION OR TESTS BY BUILDING OFFICIAL OR REGISTERED GEO/SOIL AND CIVIL ENGINEER, WHERE APPICABLE.

VALUED ENGINEERING, INC

SIGNATURE 12/20/2023 DATE | CIVIL ENGINEER TITLE | 64696 RCE #

C.B.C. TABLE 1705.6
REQUIRED SPECIAL INSPECTIONS AND TEST OF SOILS

TYPE	CONTINUOUS SPECIAL INSPECTION	PERIODIC SPECIAL INSPECTION
1. VERIFY MATERIALS BELOW SHALLOW FOUNDATIONS ARE ADEQUATE TO ACHIEVE THE DESIGN BEARING CAPACITY.	---	X
2. VERIFY EXCAVATIONS ARE EXTENDED TO PROPER DEPTH AND HAVE REACHED PROPER MATERIAL.	---	X
3. PERFORM CLASSIFICATION AND TESTING OF COMPACTED FILL MATERIALS.	---	X
4. VERIFY USE OF PROPER MATERIALS, DENSITIES AND LIFT THICKNESSES DURING PLACEMENT AND COMPACTION OF COMPACTED FILL.	X	---
5. PRIOR TO PLACEMENT OF COMPACTED FILL, INSPECT SUBGRADE AND VERIFY THAT SITE HAS BEEN PREPARED PROPERLY.	---	X

LEGEND AND ABBREVIATIONS

AC PAVEMENT
PCC CONCRETE
GRASS/LANDSCAPING
CLEAR AND GRUB
PATH OF TRAVEL
FLOWLINE
A / 16 DETAIL ID / SHEET NUMBER
0.5% DIRECTION OF FLOW

AC	ASPHALTIC PAVEMENT
FD	FOUND
FG	FINISHED GRADE
FL	FLOW LINE
FS	FINISHED SURFACE
GB	GRADE BREAK
HC	HANDICAP
HP	HIGH POINT
HDPE	HIGH-DENSITY POLYETHYLENE
HORIZ	HORIZONTAL
ICV	IRRIGATION CONTROL VALVE
INV	INVERT
L	LENGTH
L/A	LANDSCAPE AREA
LF	LINEAR FEET
LP	LOW POINT
LT	LIGHT
MAX	MAXIMUM
MH	MANHOLE
MIN	MINIMUM
MKD	MARKED
N	NORTHING
NG	NATURAL GROUND
OC	ON CENTER
PCC	PORTLAND CONCRETE CEMENT
PED	PEDESTAL
P/L	PROPERTY LINE
PROP	PROPOSED
R/W	RIGHT OF WAY
SCO	SEWER CLEAN OUT
SF	SQUARE FEET
SMH	SEWER MANHOLE
TC	TOP OF CURB
TF	TOP OF FOOTING
TG	TOP OF GRATE
TOP	TOP OF PIPE
TRW	TOP OF RETAINING WALL
TW	TO OF WALL
TYP	TYPICAL
SPPWC	STANDARD PLANS FOR PUBLIC WORKS CONSTRUCTION

SHEET INDEX

1. TITLE SHEET
2. DEMOLITION
3. GRADING
4. HORIZONTAL CONTROL
5. UTILITY
6. STORM DRAIN
7. EROSION
8. SECTIONS
9. STORM DRAIN DETAILS
10. CONSTRUCTION DETAILS
11. CONDITIONS OF APPROVAL
12. CONDITIONS OF APPROVAL

CONTACT INFORMATION

OWNER:
MOUNTAIN AREA REGIONAL TRANSIT AUTHORITY
41939 FOX FARM ROAD
BIG BEAR LAKE, CA 92315
PHONE:909-878-5200

ARCHITECT:
RHUNAU CLARKE ARCHITECTS
3775 TENTH STREET
RIVERSIDE, CA 92501
PHONE: 951-684-4664

CIVIL ENGINEER:
VALUED ENGINEERING, INC.
1529 W. 13TH STREET, UNIT G
UPLAND, CA 91762
PHONE: 909-982-4601
MR. JEFFEREY D. MEITER

SOILS ENGINEER:
JOHN R. BYERLY, INC.
2257 SOUTH LILAC AVE.
BLOOMINGTON, CA 2316
PHONE: 909-877-1324
MR. JOHN R. BYERLY

SEWER IMPROVEMENT ITEMS

		QUANTITIES
30	FURNISH AND INSTALL 6" PVC SDR 35 SEWER LINE PER MANUFACTURERS SPECIFICATIONS	313 LF
31	FURNISH AND INSTALL 6" PVC SRD 35 SEWER LATERAL CONNECTION PER BIG BEAR CITY COMMUNITY SERVICES DISTRICT STD. DWG. NO. S-11	45 LF
32	FURNISH AND INSTALL SEWER CLEANOUT PER BIG BEAR CITY COMMUNITY SERVICES DISTRICT STD. DWG. NO. S-9	3 EA
33	CONSTRUCT BEDDING AND TRENCHING PER BIG BEAR CITY COMMUNITY SERVICES DISTRICT STD. DWG. NO. S-10 AND W-2	20 LF
34	CONTRACTOR TO POTHOLE AND VERIFY EXISTING PIPE LOCATION, SIZE, CONDITION AND INVERT PRIOR TO CONSTRUCTION/INSTALLATION OF SEWER LINES	1 EA

WATER IMPROVEMENT ITEMS

		QUANTITIES
40	INSTALL HOT TAP LATERAL CONNECTION PER DEPARTMENT OF WATER AND POWER CITY OF BIG BEAR LAKE STANDARD SPECIFICATIONS	1 EA
41	FURNISH AND INSTALL 6" PVC CLASS C900 FIREWATER LINE PER MANUFACTURERS SPECIFICATIONS	486 LF
42	FURNISH AND INSTALL 6" TEE	2 EA
43	FURNISH AND INSTALL 6" 90° BEND	1 EA
44	CONSTRUCT THRUST BLOCK PER DEPARTMENT OF WATER AND POWER CITY OF BIG BEAR LAKE STD. PLAN NO. 3	3 EA
45	FURNISH AND INSTALL FIRE HYDRANT ASSEMBLY PER DEPARTMENT OF WATER AND POWER CITY OF BIG BEAR LAKE STD. PLAN NO. 6	2 EA
46	CONSTRUCT BACKFILL AND TRENCHING PER DEPARTMENT OF WATER AND POWER CITY OF BIG BEAR LAKE STD. PLAN NO. 2	40 LF

GEOTECHNICAL SIGNATURE

THIS PLAN HAS BEEN REVIEWED AND CONFORMS TO THE TO THE RECOMMENDATIONS PROVIDED IN THE SOIL REPORT DATED APRIL 11, 2022

SIGNATURE DATE

GRADING NOTE

ALL OF THE GRADING PROCEDURES, RECOMMENDATIONS, AND SPECIFICATIONS THAT ARE INDICATED ON THE GEOTECHNICAL REPORT NO. 7341, DATED APRIL 11, 2022, PREPARED BY JOHN R. BYERLY INCORPORATED MUST BE ADHERED TO.

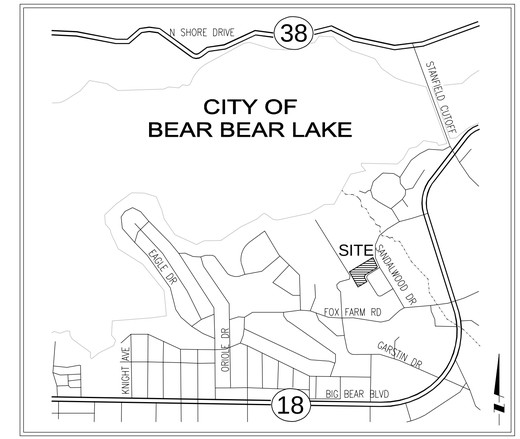

VICINITY MAP
N.T.S

DEMOLITION ITEMS

		QUANTITIES
1	CLEAR, GRUB AND DISPOSE	107,189 SF
99	PROTECT IN PLACE, ITEM PER PLAN	

CONSTRUCTION ITEMS

		QUANTITIES
1	CONSTRUCT (DRIVE AISLE/BUS PARKING) 3" AC OVER 8" CAB SECTION COMPACTED TO 90% PER APPROVED SOILS REPORT	67,853 SF
2	CONSTRUCT (PARKING STALL) 2.5" AC OVER 4" CAB SECTION OVER COMPACTED TO 90% PER APPROVED SOILS REPORT	1,404 SF
3	CONSTRUCT 3.5" PCC OVER OVER 12" COMPACTED NATIVE 90% PER APPROVED SOILS REPORT	1,841 SF
4	CONSTRUCT 6" CURB ONLY PER SPPWC STANDARD PLAN 120-2, TYPE A1-6 AND DETAIL A/10	1,020 LF
5	CONSTRUCT 6" CURB AND GUTTER (18" GUTTER) PER SPPWC STANDARD PLAN 120-2, TYPE A2-6 AND DETAIL A/10	474 LF
6	CONSTRUCT 4" PCC WALKWAY OVER COMPACTED NATIVE	1,350 SF
7	CONSTRUCT (MODIFIED) CURB RAMP PER SPPWC STANDARD PLAN 111-4, CASE E, TYPE 2 AND DETAIL B/10	1 EA
8	CONSTRUCT TRUNCATED DOMES PER DETAIL C/10	27 SF
9	CONSTRUCT 3' WIDE CONCRETE RIBBON GUTTER PER DETAIL D/10	908 LF
10	PAINT ACCESSIBLE PARKING STRIPING	LUMP SUM
11	PAINT 4" SOLID WHITE STRIPING FOR PARKING STALL	LUMP SUM
12	CONSTRUCT TRASH ENCLOSURE PER ARCHITECTURAL PLANS	--
13	CONSTRUCT METAL FENCE PER ARCHITECTURAL PLANS	--
14	CONSTRUCT CMU WALL PER ARCHITECTURAL PLANS	--
15	FURNISH AND INSTALL LIGHT STANDARD PER ARCHITECTURAL PLANS	--
16	FURNISH AND INSTALL SIGN PER ARCHITECTURAL PLANS	--
17	CONSTRUCT BOLLARD PER ARCHITECTURAL PLANS	--
18	CONSTRUCT SCREEN BLOCK WALL PER ARCHITECTURAL PLANS	--
19	CONSTRUCT CURB OPENING PER DETAIL E/10	5 EA
20	CONSTRUCT COMBINATION RETAINING WALL W/ METAL FENCE PER ARCHITECTURAL PLANS	
21	CONSTRUCT COMMERCIAL DRIVE APPROACH PER COUNTY OF SAN BERNARDNIO STD. PLAN NO. 129B PER DETAIL E/10	
97	SEE SHEET 5 FOR UTILITIES	
98	SEE SHEET 6 FOR STORM DRAIN	
99	PROTECT IN PLACE, ITEM PER PLAN	

BENCHMARK

NAVD 88
ELEVATION 6767.23'

CHISEL X AT BACK OF CONCRETE SIDEWALK.

BUILDING CODES

-2022 CBC/2021 IBC
-2022 CRC/2021 IRC
-2022 CPC/2021 UPC
-2022 CALGREEN

PLAN CHECK NO: 22-00074

Know what's below. Call 811 before you dig.

ENGINEER OF RECORD'S SEAL
REGISTERED PROFESSIONAL ENGINEER
JEFFREY D. MEITER
No. 64696
CIVIL
STATE OF CALIFORNIA

VALUED
ENGINEERING, INC
CIVIL ENGINEERING • LAND SURVEYING • LAND PLANNING
1529 W. 13TH STREET, UNIT G, UPLAND, CA 91786
PHONE (909) 982-4601
12/20/2023
JEFFREY D. MEITER R.C.E. No. 64696

CITY OF BIG BEAR LAKE
ENGINEERING DIVISION
39707 BIG BEAR BLVD
BIG BEAR LAKE, CA 92315
PHONE (909) 866-5831
FAX (909) 866-7511

CITY OF BIG BEAR LAKE
BIG BEAR LAKE, CALIFORNIA
APPROVED BY:
DATE
R.C.E. _____ EXP. DATE _____

CITY OF BIG BEAR LAKE
MOUNTAIN AREA REGIONAL TRANSIT AUTHORITY
160-170 BUSINESS CENTER DRIVE
TITLE SHEET

SEPTEMBER 2022
SHEET 1 OF 12
DRAWING NO. --

File: P:\OBS\076102\CAD\SHEETS\GRADING - PHASE 1\762102 PG01 TITLE.dwg Dec 20, 2023 - 2:48pm Kent

DEMOLITION ITEMS

[1] CLEAR, GRUB AND DISPOSE

[99] PROTECT IN PLACE, ITEM PER PLAN

QUANTITIES

107,189 SF

LEGEND

CLEAR AND GRUB

LIMIT OF WORK

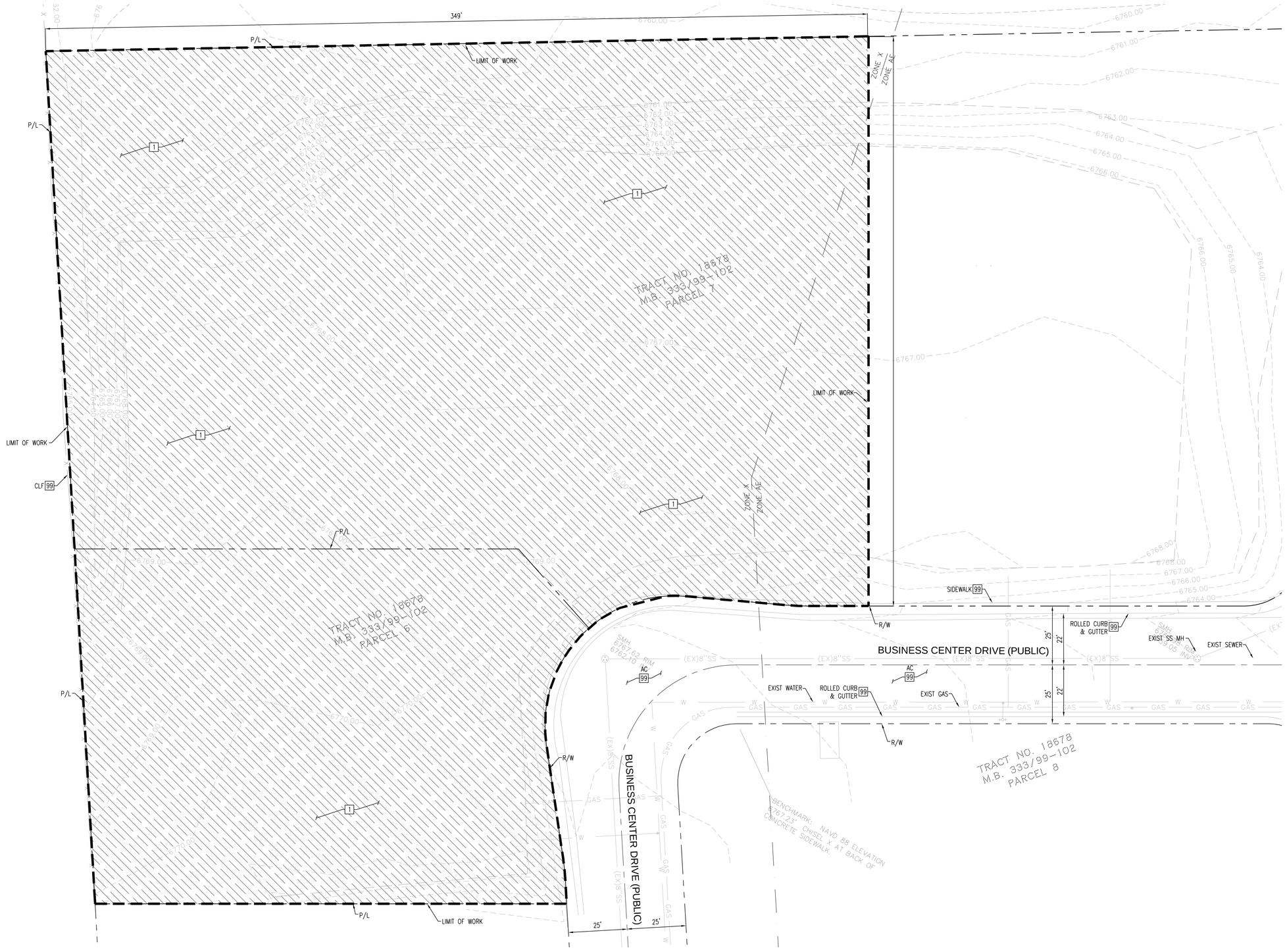

SCALE 1"=20'

0 10' 20' 40'

GRAPHIC SCALE

ROGER CLARK — LICENSED ARCHITECT — No. 10-31-25 — STATE OF CALIFORNIA

Know what's below. Call 811 before you dig.

ENGINEER OF RECORD'S SEAL — REGISTERED PROFESSIONAL ENGINEER — JEFFEREY D. MEITER — No. 64696 — CIVIL — STATE OF CALIFORNIA

VALUED ENGINEERING, INC
CIVIL ENGINEERING • LAND SURVEYING • LAND PLANNING
1529 W. 13TH STREET, UNIT G, UPLAND, CA 91786
PHONE (909) 982-4601
12/20/2023
JEFFREY D. MEITER R.C.E. No. 64696

CITY OF BIG BEAR LAKE
ENGINEERING DIVISION
39707 BIG BEAR BLVD
BIG BEAR LAKE, CA 92315
PHONE (909) 866-5831
FAX (909) 866-7511

CITY OF BIG BEAR LAKE
BIG BEAR LAKE, CALIFORNIA
APPROVED BY:
DATE
R.C.E. _____ EXP. DATE _____

CITY OF BIG BEAR LAKE

MOUNTAIN AREA REGIONAL TRANSIT AUTHORITY
160-170 BUSINESS CENTER DRIVE
DEMOLITION - PHASE 1

SEPTEMBER 2022

SHEET 2 OF 12

DRAWING NO. --

File: P:\JOBS\762102\CAD\SHEETS\GRADING - PHASE 1\762102 PG02 DEMO.dwg Dec 20, 2023 - 2:46pm Kent

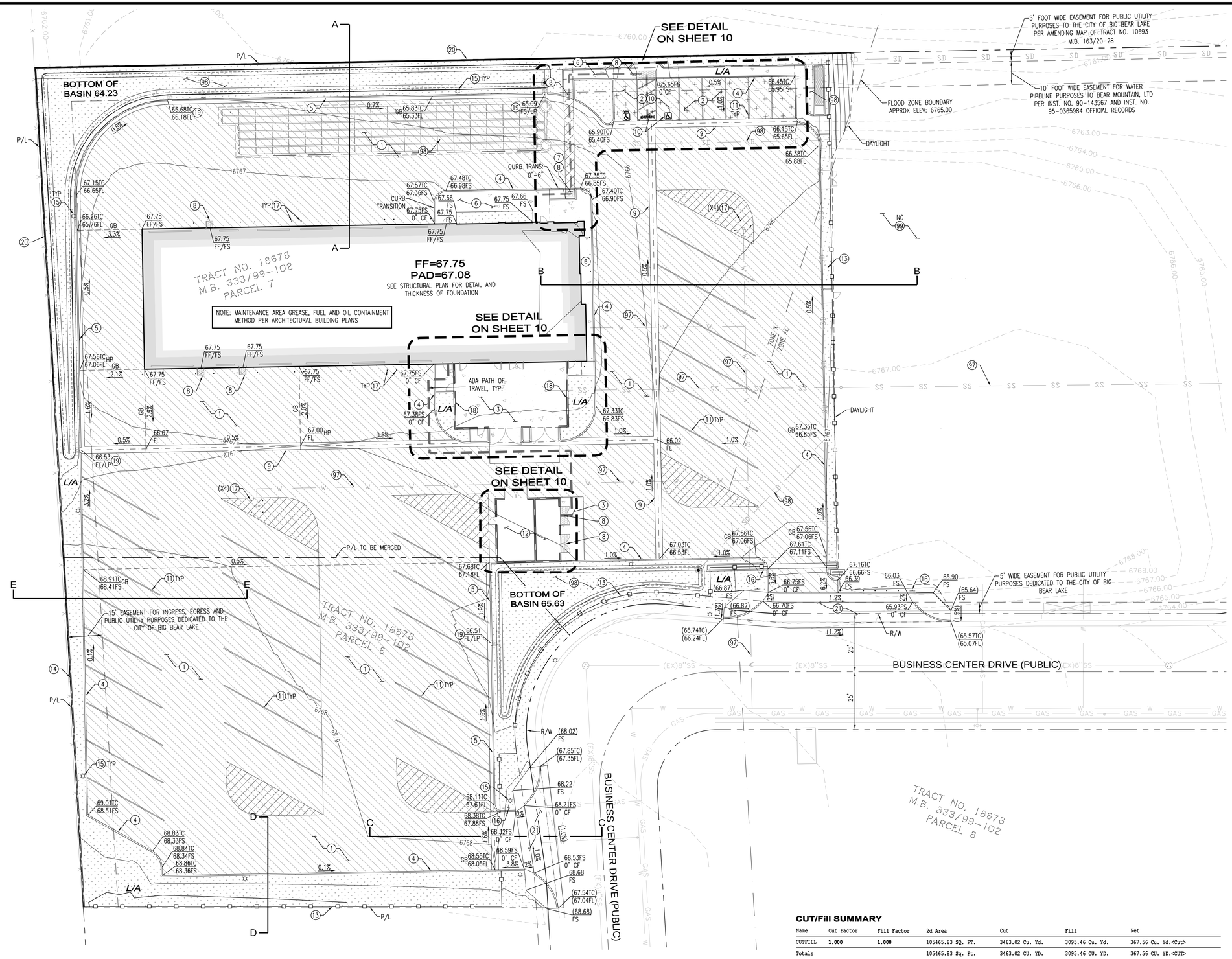

CONSTRUCTION ITEMS

1. CONSTRUCT (DRIVE AISLE/BUS PARKING) 3" AC OVER 8" CAB SECTION COMPACTED TO 90% PER APPROVED SOILS REPORT
2. CONSTRUCT (PARKING STALL) 2.5" AC OVER 4" CAB SECTION OVER COMPACTED TO 90% PER APPROVED SOILS REPORT
3. CONSTRUCT 3.5" PCC OVER OVER 12" COMPACTED NATIVE 90% PER APPROVED SOILS REPORT
4. CONSTRUCT 6" CURB ONLY PER SPPWC STANDARD PLAN 120-2, TYPE A1-6 AND DETAIL A/10
5. CONSTRUCT 6" CURB AND GUTTER (18" GUTTER) PER SPPWC STANDARD PLAN 120-2, TYPE A2-6 AND DETAIL A/10
6. CONSTRUCT 4" PCC WALKWAY OVER COMPACTED NATIVE
7. CONSTRUCT (MODIFIED) CURB RAMP PER SPPWC STANDARD PLAN 111-4, CASE E, TYPE 2 AND DETAIL B/10
8. CONSTRUCT TRUNCATED DOMES PER DETAIL C/10
9. CONSTRUCT 3' WIDE CONCRETE RIBBON GUTTER PER DETAIL D/10
10. PAINT ACCESSIBLE PARKING STRIPING
11. PAINT 4" SOLID WHITE STRIPING FOR PARKING STALL
12. CONSTRUCT TRASH ENCLOSURE PER ARCHITECTURAL PLANS
13. CONSTRUCT METAL FENCE PER ARCHITECTURAL PLANS
14. CONSTRUCT CMU WALL PER ARCHITECTURAL PLANS
15. FURNISH AND INSTALL LIGHT STANDARD PER ARCHITECTURAL PLANS
16. FURNISH AND INSTALL SIGN PER ARCHITECTURAL PLANS
17. CONSTRUCT BOLLARD PER ARCHITECTURAL PLANS
18. CONSTRUCT SCREEN BLOCK WALL PER ARCHITECTURAL PLANS
19. CONSTRUCT CURB OPENING PER DETAIL E/10
20. CONSTRUCT COMBINATION RETAINING WALL W/ METAL FENCE PER ARCHITECTURAL PLANS
21. CONSTRUCT COMMERCIAL DRIVE APPROACH PER COUNTY OF SAN BERNARDNIO STD. PLAN NO. 129B PER DETAIL F/10

97. SEE SHEET 5 FOR UTILITIES
98. SEE SHEET 6 FOR STORM DRAIN
99. PROTECT IN PLACE, ITEM PER PLAN

LEGEND

- PROPOSED BUILDING
- (1) AC PAVEMENT (DRIVE AISLES/BUS PARKING)
- (2) AC PAVEMENT (PARKING STALS)
- (3)(6) PCC PAVEMENT
- L/A GRASS/LANDSCAPING
- PATH OF TRAVEL
- FLOWLINE

NOTE SEE SHEET 8 FOR SECTIONS

NOTE ADD 6700' TO ALL ELEVATIONS

NOTE PROPOSED DETENTION BASINS USED AS SNOW STORAGE AREAS, 5,988 SQUARE-FEET

NOTE SEE SHEET 4, HORIZONTAL CONTROL PLAN, FOR DETAIL OF MONUMENTS AND BEARING AND DISTANCE

NOTE THE TOP OF ANY EXTERIOR FOUNDATION SHALL EXTEND ABOVE THE ELEVATION OF STREET GUTTER AT POINT OF DISCHARGE OR THE INLET OF AN APPROVED DRAINAGE DEVICE A MINIMUM OF 12" PLUS 2%

NOTE PUBLIC SYSTEMS AND ANY PROPOSED WORK IN PUBLIC RIGHT OF WAYS ARE NOT PARTS OF THE CITY OF BIG BEAR, BUILDING DEPARTMENT REVIEW OR APPROVAL

CUT/Fill SUMMARY

Name	Cut Factor	Fill Factor	2d Area	Cut	Fill	Net
CUTFILL	1.000	1.000	105465.83 SQ. FT.	3463.02 Cu. Yd.	3095.46 Cu. Yd.	367.56 Cu. Yd.<Cut>
Totals			105465.83 Sq. Ft.	3463.02 CU. YD.	3095.46 CU. YD.	367.56 CU. YD.<CUT>

LICENSED ARCHITECT — ROGER CLARK — Exp.10-31-25 — STATE OF CALIFORNIA

SCALE 1"=20'

0 10' 20' 40'

GRAPHIC SCALE

811 Know what's below. Call 811 before you dig.

ENGINEER OF RECORD'S SEAL — REGISTERED PROFESSIONAL ENGINEER — JEFFREY D. MEITER — No. 64696 — CIVIL — STATE OF CALIFORNIA

VALUED ENGINEERING, INC
CIVIL ENGINEERING • LAND SURVEYING • LAND PLANNING
1529 W. 13TH STREET, UNIT G, UPLAND, CA 91786
PHONE (909) 982-4601
12/20/2023
JEFFREY D. MEITER R.C.E. No. 64696

CITY OF BIG BEAR LAKE
ENGINEERING DIVISION
39707 BIG BEAR BLVD
BIG BEAR LAKE, CA 92315
PHONE (909) 866-5831
FAX (909) 866-7511

CITY OF BIG BEAR LAKE
BIG BEAR LAKE, CALIFORNIA
APPROVED BY:
DATE
R.C.E. _____ EXP. DATE _____

CITY OF BIG BEAR LAKE
MOUNTAIN AREA REGIONAL TRANSIT AUTHORITY
160-170 BUSINESS CENTER DRIVE
PRECISE GRADING - PHASE 1

SEPTEMBER 2022
SHEET 3 OF 12
DRAWING NO. --

File: P:\JOBS\076212\CAD\SHEETS\GRADING - PHASE 1\076212 PG03 PG.dwg Dec 20, 2023 - 2:46pm Kent

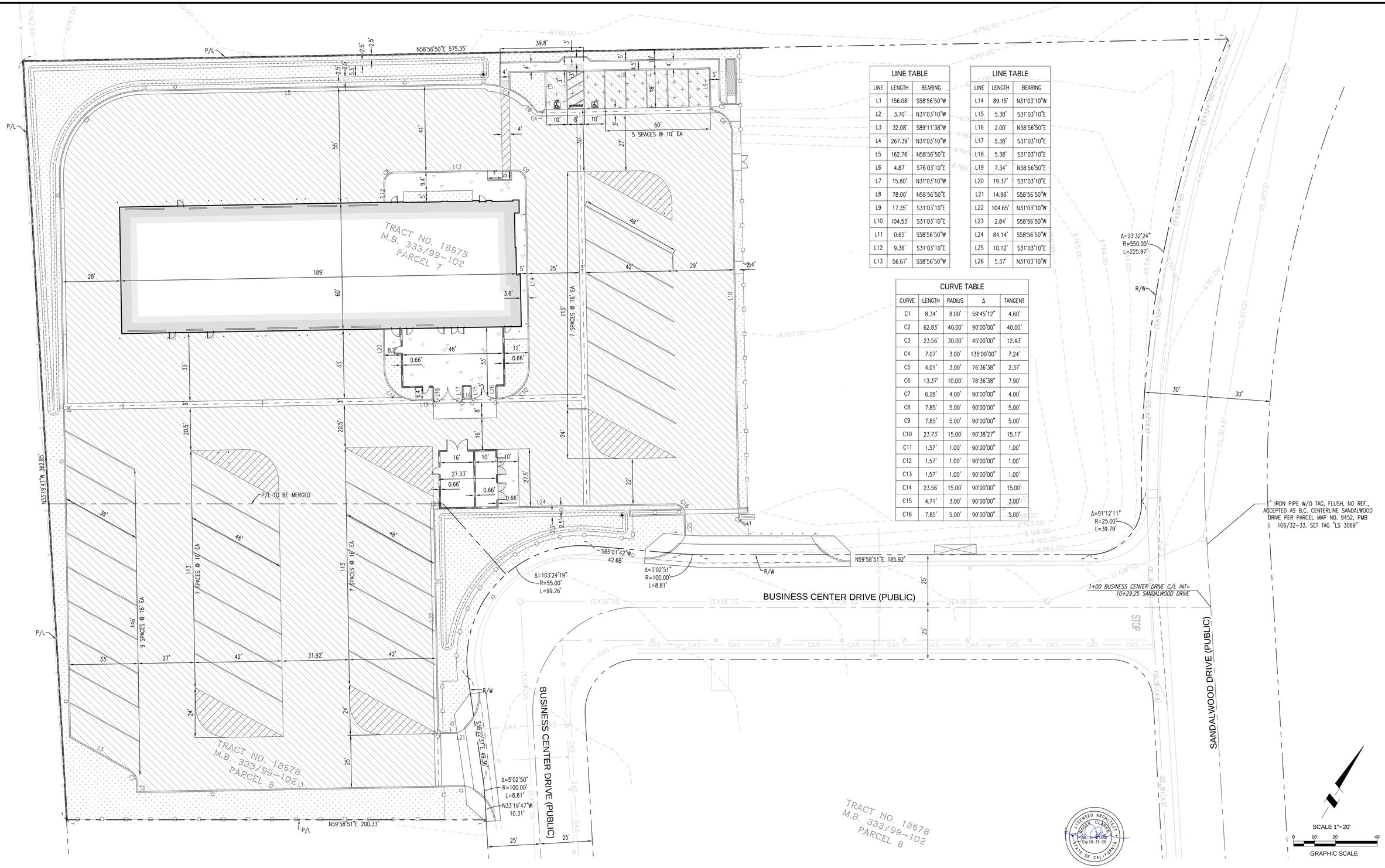

LINE TABLE		
LINE	LENGTH	BEARING
L1	156.08'	S58°56'50"W
L2	3.70'	N31°03'10"W
L3	32.08'	S89°11'38"W
L4	267.39'	N31°03'10"W
L5	162.76'	N58°56'50"E
L6	4.87'	S76°03'10"E
L7	15.80'	N31°03'10"W
L8	78.00'	N58°56'50"E
L9	17.35'	S31°03'10"E
L10	104.53'	S31°03'10"E
L11	0.65'	S58°56'50"W
L12	9.36'	S31°03'10"E
L13	56.67'	S58°56'50"W

LINE TABLE		
LINE	LENGTH	BEARING
L14	89.15'	N31°03'10"W
L15	5.38'	S31°03'10"E
L16	2.00'	N58°56'50"E
L17	5.38'	S31°03'10"E
L18	5.38'	S31°03'10"E
L19	7.34'	N58°56'50"E
L20	19.37'	S31°03'10"E
L21	14.98'	S58°56'50"W
L22	104.65'	N31°03'10"W
L23	2.84'	S58°56'50"W
L24	84.14'	S58°56'50"W
L25	10.12'	S31°03'10"E
L26	5.37'	N31°03'10"W

CURVE TABLE				
CURVE	LENGTH	RADIUS	Δ	TANGENT
C1	8.34'	8.00'	59°45'12"	4.60'
C2	62.83'	40.00'	90°00'00"	40.00'
C3	23.56'	30.00'	45°00'00"	12.43'
C4	7.07'	3.00'	135°00'00"	7.24'
C5	4.01'	3.00'	76°36'38"	2.37'
C6	13.37'	10.00'	76°36'38"	7.90'
C7	6.28'	4.00'	90°00'00"	4.00'
C8	7.85'	5.00'	90°00'00"	5.00'
C9	7.85'	5.00'	90°00'00"	5.00'
C10	23.73'	15.00'	90°38'27"	15.17'
C11	1.57'	1.00'	90°00'00"	1.00'
C12	1.57'	1.00'	90°00'00"	1.00'
C13	1.57'	1.00'	90°00'00"	1.00'
C14	23.56'	15.00'	90°00'00"	15.00'
C15	4.71'	3.00'	90°00'00"	3.00'
C16	7.85'	5.00'	90°00'00"	5.00'

811 Know what's **below.** **Call 811** before you dig.

ENGINEER OF RECORD'S SEAL
REGISTERED PROFESSIONAL ENGINEER
JEFFREY D. MEITER
No. 64696
CIVIL
STATE OF CALIFORNIA

VALUED ENGINEERING, INC
CIVIL ENGINEERING • LAND SURVEYING • LAND PLANNING
1529 W. 13TH STREET, UNIT G, UPLAND, CA 91786
PHONE (909) 982-4601
JEFFREY D. MEITER 12/20/2023 R.C.E. No. 64696

CITY OF BIG BEAR LAKE
ENGINEERING DIVISION
39707 BIG BEAR BLVD
BIG BEAR LAKE, CA 92315
PHONE (909) 866-5831
FAX (909) 866-7511

CITY OF BIG BEAR LAKE
BIG BEAR LAKE, CALIFORNIA
APPROVED BY: _____ DATE _____
R.C.E. _____ EXP. DATE _____

CITY OF BIG BEAR LAKE

MOUNTAIN AREA REGIONAL TRANSIT AUTHORITY
160-170 BUSINESS CENTER DRIVE
HORIZONTAL CONTROL - PHASE 1

SEPTEMBER 2022
SHEET 4 OF 12
DRAWING NO. --

File: P:\OBS\0762102\CAD\SHEETS\GRADING - PHASE 1\762102 PG04 HC.dwg Dec 20, 2023 - 2:45pm Kent

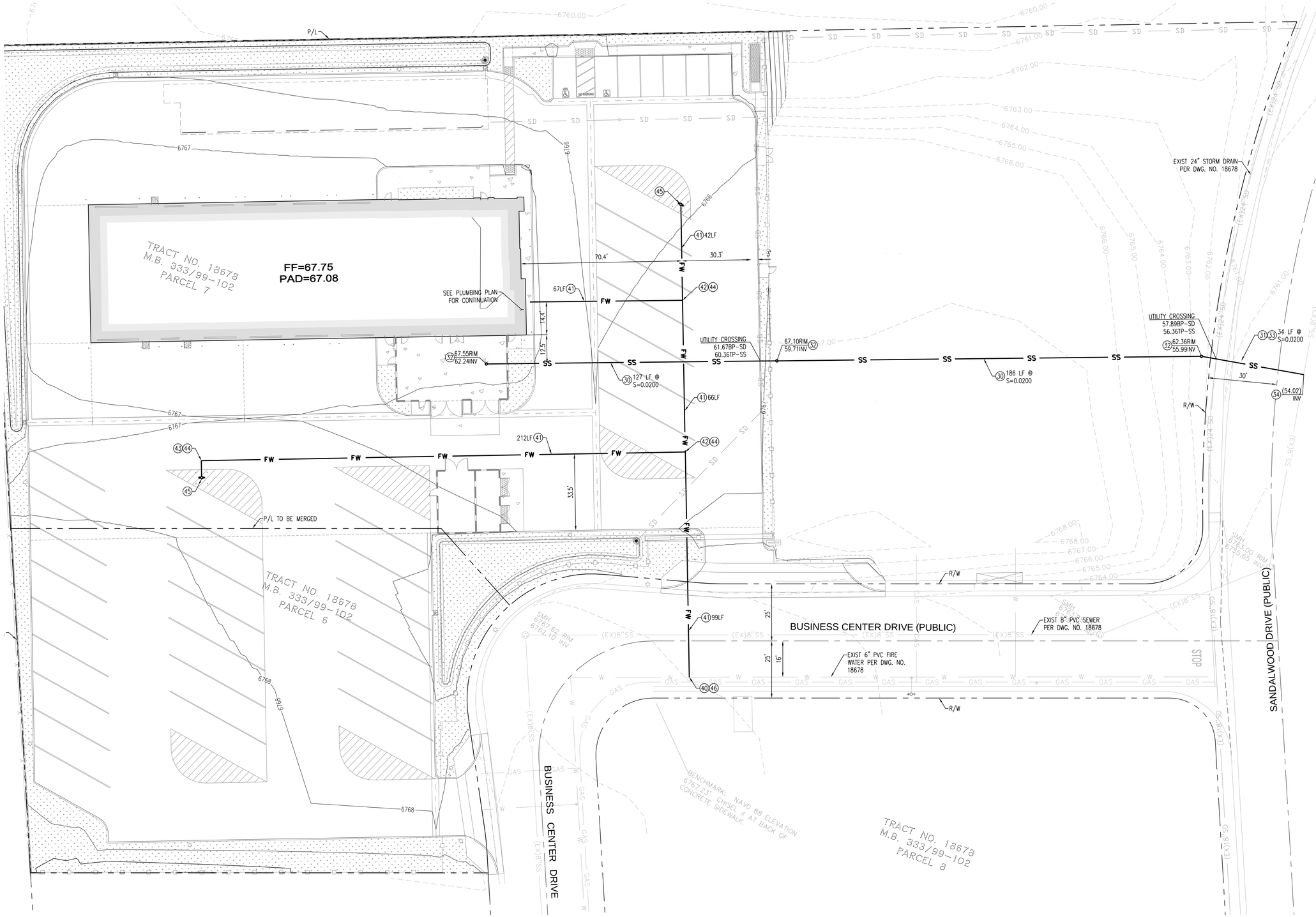

SEWER IMPROVEMENT ITEMS

(30) FURNISH AND INSTALL 6" PVC SDR 35 SEWER LINE PER MANUFACTURERS SPECIFICATIONS

(31) FURNISH AND INSTALL 6" PVC SRD 35 SEWER LATERAL CONNECTION PER BIG BEAR CITY COMMUNITY SERVICES DISTRICT STD. DWG. NO. S-11

(32) FURNISH AND INSTALL SEWER CLEANOUT PER BIG BEAR CITY COMMUNITY SERVICES DISTRICT STD. DWG. NO. S-9

(33) CONSTRUCT BEDDING AND TRENCHING PER BIG BEAR CITY COMMUNITY SERVICES DISTRICT STD. DWG. NO. S-10 AND W-2

(34) CONTRACTOR TO POTHOLE AND VERIFY EXISTING PIPE LOCATION, SIZE, CONDITION AND INVERT PRIOR TO CONSTRUCTION/INSTALLATION OF SEWER LINES

WATER IMPROVEMENT ITEMS

(40) INSTALL HOT TAP LATERAL CONNECTION PER DEPARTMENT OF WATER AND POWER CITY OF BIG BEAR LAKE STANDARD SPECIFICATIONS

(41) FURNISH AND INSTALL 6" PVC CLASS C900 FIREWATER LINE PER MANUFACTURERS SPECIFICATIONS

(42) FURNISH AND INSTALL 6" TEE

(43) FURNISH AND INSTALL 6" 90° BEND

(44) CONSTRUCT THRUST BLOCK PER DEPARTMENT OF WATER AND POWER CITY OF BIG BEAR LAKE STD. PLAN NO. 3

(45) FURNISH AND INSTALL FIRE HYDRANT ASSEMBLY PER DEPARTMENT OF WATER AND POWER CITY OF BIG BEAR LAKE STD. PLAN NO. 6

(46) CONSTRUCT BACKFILL AND TRENCHING PER DEPARTMENT OF WATER AND POWER CITY OF BIG BEAR LAKE STD. PLAN NO. 2

NOTE CONSTRUCTION WITHIN THE PUBLIC RIGHT-OF-WAY, INCLUDING DRIVE APPROACH AND UTILITIES REQUIRES A SEPARATE PERMIT AND APPROVAL

NOTE STORM WATER SHALL NOT BE DRAINED INTO SEWERS INTENDED FOR SANITARY DRAINAGE ONLY.

ALL INLETS AND OUTLETS INTO AND OUT OF THE MANHOLES SHALL INCORPORATE THE USE OF A FLEXIBLE COMPRESSION JOINTS LOCATED BETWEEN 12" AND 36" FROM THE MANHOLE. NO FLEXIBLE COMPRESSION JOINT SHALL BE EMBEDDED IN THE MANHOLE BASE.

THE TWO-WAY CLEANOUT MUST BE MUST BE AN APPROVED TYPE AS DEFINED IN THE CPC SECTION 203.0 AND PER SECTION 707.4 EXCEPTION (4).

LICENSED ARCHITECT ROGER CLARK No. C-41340 Exp.10-31-25 STATE OF CALIFORNIA

811 Know what's below. Call 811 before you dig.

ENGINEER OF RECORD'S SEAL
REGISTERED PROFESSIONAL ENGINEER JEFFREY D. MEITER No. 64696 CIVIL STATE OF CALIFORNIA

VALUED ENGINEERING, INC
CIVIL ENGINEERING • LAND SURVEYING • LAND PLANNING
1529 W. 13TH STREET, UNIT G, UPLAND, CA 91786
PHONE (909) 982-4601
12/20/2023
JEFFREY D. MEITER R.C.E. No. 64696

CITY OF BIG BEAR LAKE
ENGINEERING DIVISION
39707 BIG BEAR BLVD
BIG BEAR LAKE, CA 92315
PHONE (909) 866-5831
FAX (909) 866-7511

CITY OF BIG BEAR LAKE
BIG BEAR LAKE, CALIFORNIA
APPROVED BY:
DATE
R.C.E. _____ EXP. DATE _____

CITY OF BIG BEAR LAKE

MOUNTAIN AREA REGIONAL TRANSIT AUTHORITY
160-170 BUSINESS CENTER DRIVE
UTILITIES - PHASE 1

SEPTEMBER 2022
SHEET 5 OF 12
DRAWING NO. --

File: P:\JOBS\0762102\CAD\SHEETS\GRADING - PHASE 1\762102 PG05 UT.dwg Dec 20, 2023 - 2:44pm kent

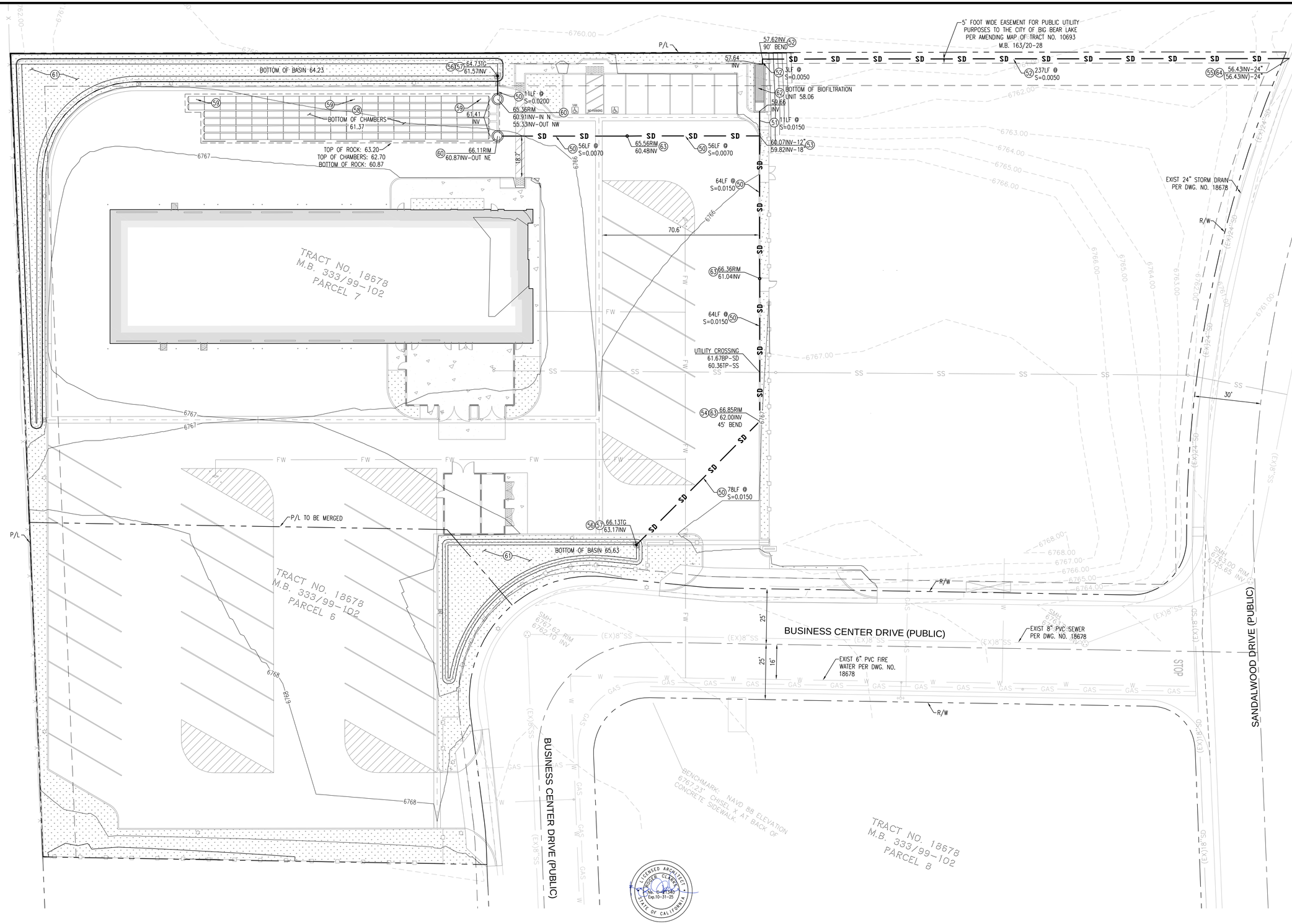

STORM DRAIN ITEMS

(50) FURNISH AND INSTALL 12" HDPE STORM DRAIN PIPE BY ADVANCED DRAINAGE SYSTEMS

(51) FURNISH AND INSTALL 18" HDPE STORM DRAIN PIPE BY ADVANCED DRAINAGE SYSTEMS

(52) FURNISH AND INSTALL 24" HDPE STORM DRAIN BEND, ANGLE PER PLAN

(53) FURNISH AND INSTALL 12"x12"x18" HDPE STORM DRAIN TEE

(54) FURNISH AND INSTALL 12" HDPE STORM DRAIN BEND, ANGLE PER PLAN

(55) FURNISH AND INSTALL 24"x24" CUT-IN WYE AND JOIN TO EXIST SD LINE

(56) FURNISH AND INSTALL 12" (ROUND) FLEXSTORM INLET FILTER (OR APPROVED EQUAL) PER DETAIL A/9

(57) FURNISH AND INSTALL 12" (ROUND) NYLOPLAST DRAIN BASIN, PERFORATED, WITH 12" DOMED GRATE (OR APPROVED EQUAL) PER DETAIL B/9

(58) FURNISH AND INSTALL SC310 UNDERGROUND STORAGE CHAMBERS PER STORMTECH (OR APPROVED EQUAL) PER DETAIL C/9

(59) INSTALL INSPECTION PORT PER DETAIL. CONTRACTOR MAY REVISE LOCATION IN COORDINATION WITH UNDERGROUND CHAMBER MANUFACTURER'S REPRESENTATIVE D/9

(60) FURNISH AND INSTALL 48" MANHOLE PER ADVANCED DRAINAGE SYSTEMS PER DETAIL E/9

(61) CONSTRUCT DETENTION BASIN PER DETAIL F/9

(62) FURNISH AND INSTALL BIO CLEAN STORM WATER BIOFILTRATION SYSTEM UNIT, MODEL #MWS-L-4-21-V, PER MANUFACTURERS SPECIFICATIONS

(63) FURNISH AND INSTALL CLEANOUT PER BIG BEAR CITY COMMUNITY SERVICES DISTRICT STD. DWG. NO. S-9

(64) CONTRACTOR TO POTHOLE AND VERIFY EXISTING PIPE LOCATION, SIZE, CONDITION AND INVERT PRIOR TO CONSTRUCTION/INSTALLATION OF STORM DRAIN LINES

NOTE CONSTRUCTION WITHIN THE PUBLIC RIGHT-OF-WAY, INCLUDING DRIVE APPROACH AND UTILITIES REQUIRES A SEPARATE PERMIT AND APPROVAL

NOTE STORM WATER SHALL NOT BE DRAINED INTO SEWERS INTENDED FOR SANITARY DRAINAGE ONLY.

ALL INLETS AND OUTLETS INTO AND OUT OF THE MANHOLES SHALL INCORPORATE THE USE OF A FLEXIBLE COMPRESSION JOINTS LOCATED BETWEEN 12" AND 36" FROM THE MANHOLE. NO FLEXIBLE COMPRESSION JOINT SHALL BE EMBEDDED IN THE MANHOLE BASE.

THE TWO-WAY CLEANOUT MUST BE MUST BE AN APPROVED TYPE AS DEFINED IN THE CPC SECTION 203.0 AND PER SECTION 707.4 EXCEPTION (4).

LICENSED ARCHITECT ROGER CLARK No. C-41340 Exp.10-31-25 STATE OF CALIFORNIA

811 Know what's below. Call 811 before you dig.

ENGINEER OF RECORD'S SEAL
REGISTERED PROFESSIONAL ENGINEER JEFFEREY D. MEITER No. 64696 CIVIL STATE OF CALIFORNIA

VALUED ENGINEERING, INC
CIVIL ENGINEERING • LAND SURVEYING • LAND PLANNING
1529 W. 13TH STREET, UNIT G, UPLAND, CA 91786
PHONE (909) 982-4601
12/20/2023
JEFFREY D. MEITER R.C.E. No. 64696

CITY OF BIG BEAR LAKE
ENGINEERING DIVISION
39707 BIG BEAR BLVD
BIG BEAR LAKE, CA 92315
PHONE (909) 866-5831
FAX (909) 866-7511

CITY OF BIG BEAR LAKE
BIG BEAR LAKE, CALIFORNIA
APPROVED BY: _____ DATE
R.C.E. _____ EXP. DATE _____

CITY OF BIG BEAR LAKE

MOUNTAIN AREA REGIONAL TRANSIT AUTHORITY
160-170 BUSINESS CENTER DRIVE
STORM DRAIN - PHASE 1

SEPTEMBER 2022
SHEET 6 OF 12
DRAWING NO. --

File: P:\JOBS\0762102\CAD\SHEETS\GRADING - PHASE 1\762102 PG06 SD.dwg Dec 20, 2023 - 2:43pm Kent

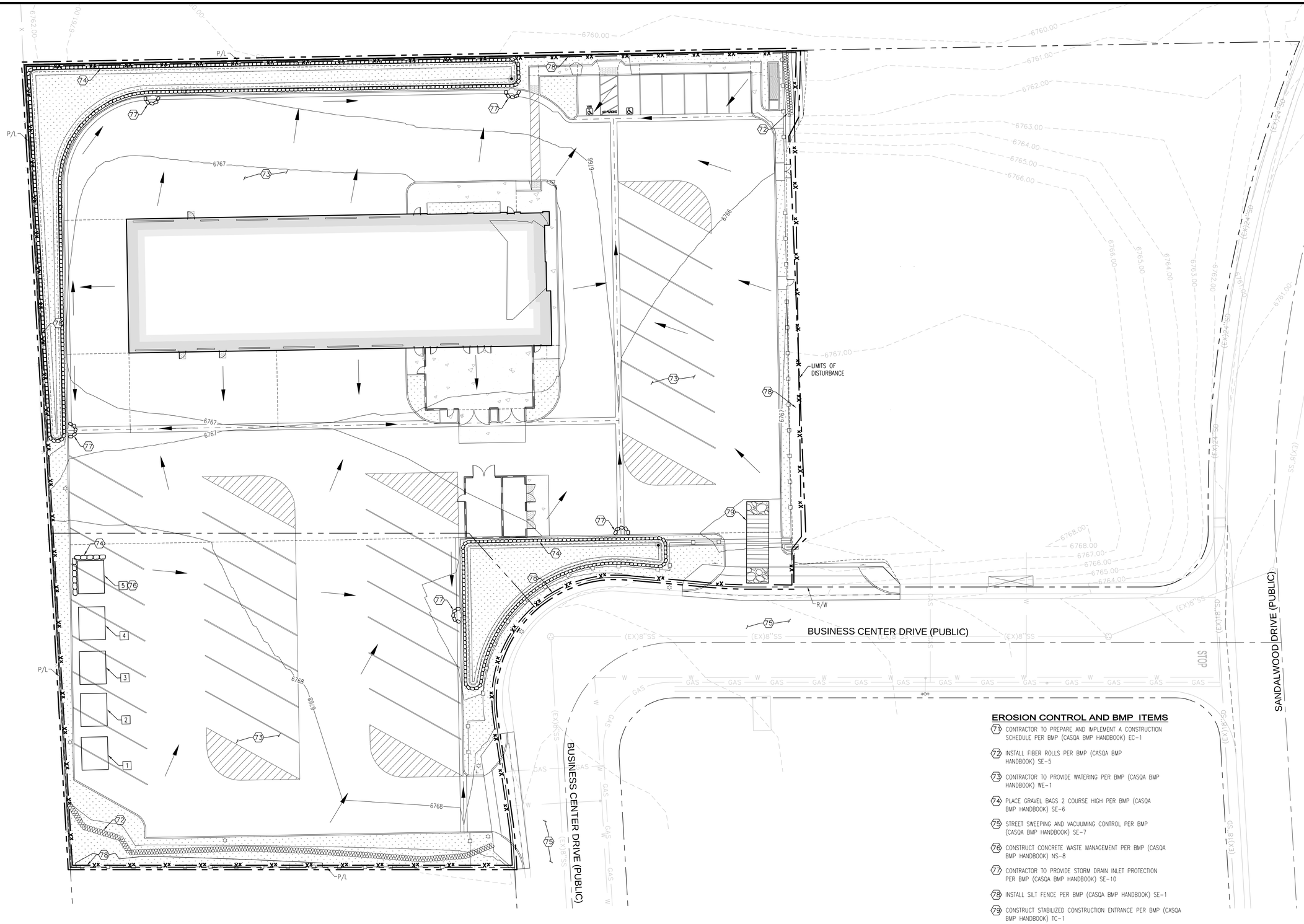

LEGEND:

- CONSTRUCTION ENTRANCE PER BMP TC-1
- SILT FENCE PER SE-1
- FIBER ROLL
- GRAVEL BAGS PER SE-6
- SD INLET PER BMP SE-10
- FLOW DIRECTION
- LIMITS OF DISTURBANCE

BMP AREAS

1. MATERIAL LOADING/UNLOADING AREA (WM-1)
2. SANITARY/WASTE AREA (WM-9)
3. VEHICLE STORAGE AREA (NS-8, NS-10)
4. EQUIPMENT STORAGE AREA (NS-8, NS-10)
5. CONCRETE WASTE MANAGEMENT (WM-8)

NON-STORMWATER MANAGEMENT BMP'S

WATER CONSERVATION PRACTICES (NS-1)
PAVING AND GRINDING OPERATIONS (NS-3)
ILLICIT CONNECTION/DISCHARGE (NS-6)
VEHICLE AND EQUIPMENT CLEANING (NS-8)
VEHICLE AND EQUIPMENT FUELING (NS-9)
VEHICLE AND EQUIPMENT MAINTENANCE (NS-10)
CONCRETE CURING (NS-12)
CONCRETE FINISHING (NS-13)

MATERIAL MANAGEMENT BMP'S

MATERIAL DELIVERY AND STORAGE (WM-1)
MATERIAL USE (WM-2)
STOCKPILE MANAGEMENT (WM-3)
SPILL PREVENTION AND CONTROL (WM-4)
SOLID WASTE MANAGEMENT (WM-5)
HAZARDOUS WASTE MANAGEMENT (WM-6)
CONCRETE WASTE MANAGEMENT (WM-8)
SANITARY/SEPTIC WASTE MANAGEMENT (WM-9)
LIQUID WASTE MANAGEMENT (WM-10)

EROSION CONTROL AND BMP ITEMS

71. CONTRACTOR TO PREPARE AND IMPLEMENT A CONSTRUCTION SCHEDULE PER BMP (CASQA BMP HANDBOOK) EC-1
72. INSTALL FIBER ROLLS PER BMP (CASQA BMP HANDBOOK) SE-5
73. CONTRACTOR TO PROVIDE WATERING PER BMP (CASQA BMP HANDBOOK) WE-1
74. PLACE GRAVEL BAGS 2 COURSE HIGH PER BMP (CASQA BMP HANDBOOK) SE-6
75. STREET SWEEPING AND VACUUMING CONTROL PER BMP (CASQA BMP HANDBOOK) SE-7
76. CONSTRUCT CONCRETE WASTE MANAGEMENT PER BMP (CASQA BMP HANDBOOK) NS-8
77. CONTRACTOR TO PROVIDE STORM DRAIN INLET PROTECTION PER BMP (CASQA BMP HANDBOOK) SE-10
78. INSTALL SILT FENCE PER BMP (CASQA BMP HANDBOOK) SE-1
79. CONSTRUCT STABILIZED CONSTRUCTION ENTRANCE PER BMP (CASQA BMP HANDBOOK) TC-1

LICENSED ARCHITECT ROGER CLARK No. C-27346 Exp.10-31-25 STATE OF CALIFORNIA

SCALE 1"=20'

0 10' 20' 40'

GRAPHIC SCALE

811 Know what's below. Call 811 before you dig.

ENGINEER OF RECORD'S SEAL
REGISTERED PROFESSIONAL ENGINEER JEFFREY D. MEITER No. 64696 CIVIL STATE OF CALIFORNIA

VALUED ENGINEERING, INC
CIVIL ENGINEERING • LAND SURVEYING • LAND PLANNING
1529 W. 13TH STREET, UNIT G, UPLAND, CA 91786
PHONE (909) 982-4601
12/20/2023
JEFFREY D. MEITER R.C.E. No. 64696

CITY OF BIG BEAR LAKE
ENGINEERING DIVISION
39707 BIG BEAR BLVD
BIG BEAR LAKE, CA 92315
PHONE (909) 866-5831
FAX (909) 866-7511

CITY OF BIG BEAR LAKE
BIG BEAR LAKE, CALIFORNIA
APPROVED BY:
DATE
R.C.E. _____ EXP. DATE _____

CITY OF BIG BEAR LAKE

MOUNTAIN AREA REGIONAL TRANSIT AUTHORITY
160-170 BUSINESS CENTER DRIVE
EROSION CONTROL - PHASE 1

SEPTEMBER 2022
SHEET 7 OF 12
DRAWING NO. --

File: P:\JOBS\0762102\CAD\SHEETS\GRADING - PHASE 1\762102 PG07 EC.dwg Dec 20, 2023 - 2:43pm Kent

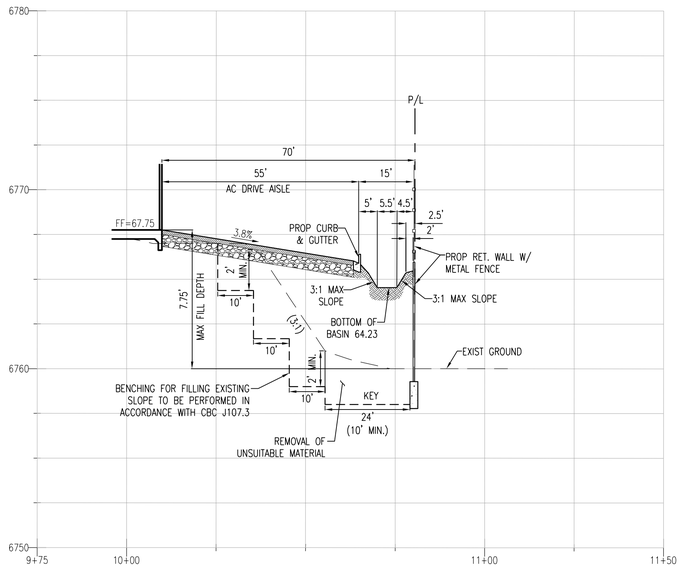

SECTION A-A

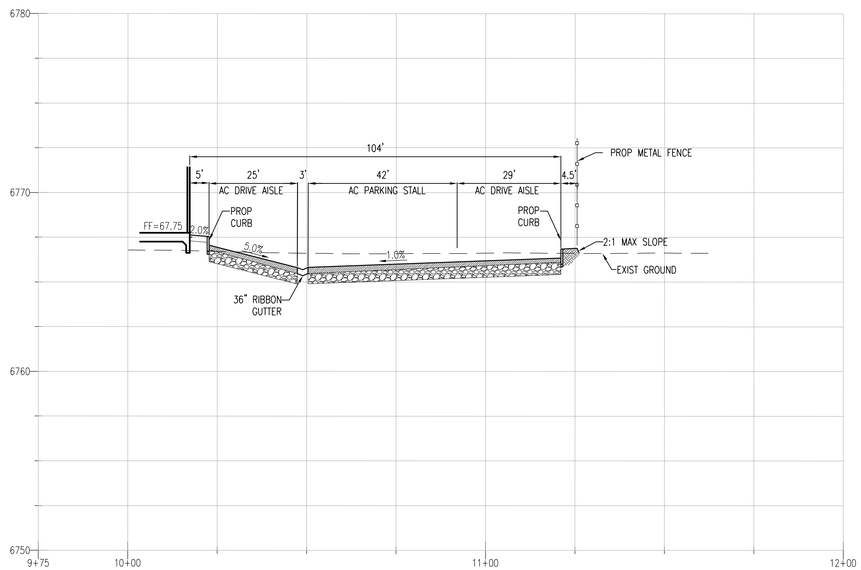

SECTION B-B

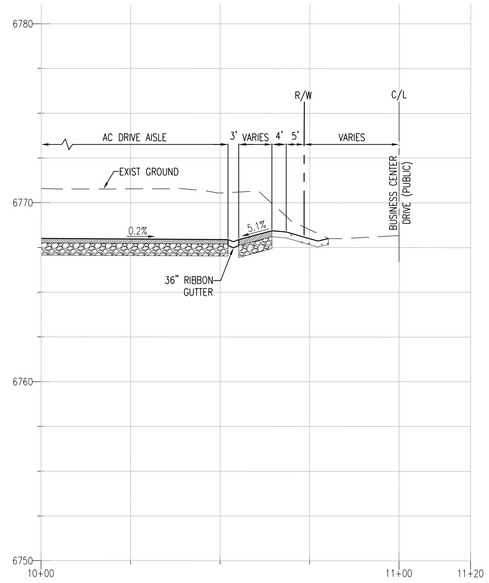

SECTION C-C

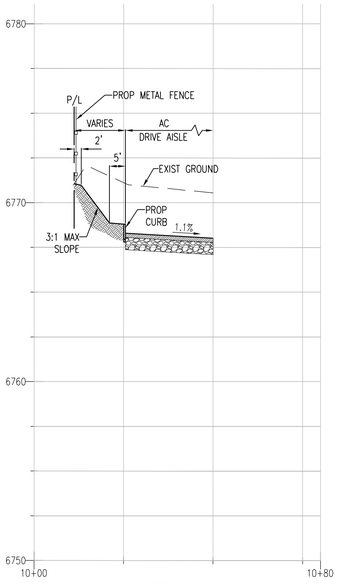

SECTION D-D

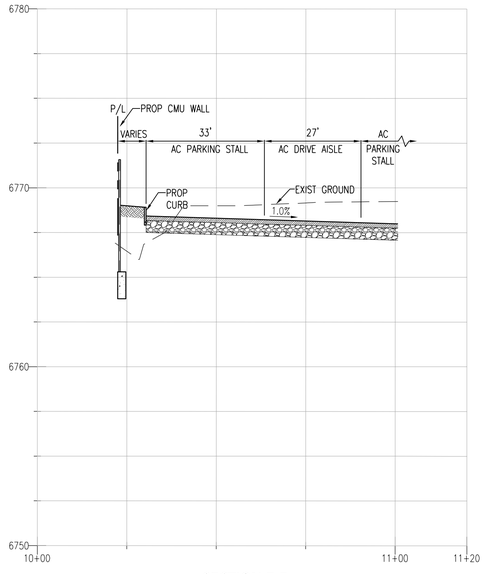

SECTION E-E

LICENSED ARCHITECT ROGER CLARK Exp.10-31-25 STATE OF CALIFORNIA

SCALE
HORIZ: 1"=20'
VERT: 1"=4'

811 Know what's **below.** **Call 811** before you dig.

ENGINEER OF RECORD'S SEAL
REGISTERED PROFESSIONAL ENGINEER JEFFREY D. MEITER No. 64696 CIVIL STATE OF CALIFORNIA

VALUED ENGINEERING, INC
CIVIL ENGINEERING • LAND SURVEYING • LAND PLANNING
1529 W. 13TH STREET, UNIT G, UPLAND, CA 91786
PHONE (909) 982-4601
12/20/2023
JEFFREY D. MEITER R.C.E. No. 64696

CITY OF BIG BEAR LAKE
ENGINEERING DIVISION
39707 BIG BEAR BLVD
BIG BEAR LAKE, CA 92315
PHONE (909) 866-5831
FAX (909) 866-7511

CITY OF BIG BEAR LAKE
BIG BEAR LAKE, CALIFORNIA
APPROVED BY: _____ DATE
R.C.E. _____ EXP. DATE _____

CITY OF BIG BEAR LAKE

MOUNTAIN AREA REGIONAL TRANSIT AUTHORITY
160-170 BUSINESS CENTER DRIVE
SECTIONS - PHASE 1

SEPTEMBER 2022
SHEET 8 OF 12
DRAWING NO. --

File: P:\JOBS\076210Z\CAD\SHEETS\GRADING - PHASE 1\762102 PG08 SECTIONS.dwg Dec 20, 2023 - 2:41pm Kent

FLEXSTORM P/Ns FOR NYLOPLAST ROUND FRAME AND GRATE

INLET TYPE NYLO ROUND IN NYLOPLAST BASIN

Casting Size	FX Bag		Flexstorm Ratings (Flow at 50% of max)			FX+ Bag
	ADS P/N	Bag Depth	Bag Capacity (ft³)	FX/FX+ Flow Rate (CFS)	Total Bypass (CFS)	ADS P/N
8" Drop in	6208NYFX	22"	0.2	0.9	1.3	6208NYFXP
8" Inline	6208NYFX	22"	0.2	0.9	1.3	6208NYFXP
10" Drop in	6210NYFX	22"	0.3	1.2	1.75	6210NYFXP
10" Inline	6210NYFX	22"	0.3	1.2	1.75	6210NYFXP
12" Round	6212NYFX	22"	0.3	1.4	2.0	6212NYFXP
15" Round	6215NYFX	22"	0.6	1.7	2.5	6215NYFXP
18" Round	6218NYFX	22"	0.9	2.1	3.1	6218NYFXP
24" Round	6224NYFX	22"	1.6	2.8	4.3	6224NYFXP
30" Round	6230NYFX	22"	2.8	3.6	5.7	6230NYFXP

Casting Size	PC Bag		Flexstorm Ratings (Flow at 50% of Max)			PC+ Bag
	ADS P/N	Bag Depth	Bag Capacity (ft³)	PC/PC+ Flow Rate (CFS)	Total Bypass (CFS)	ADS P/N
8" Inline	6208NYPC	22"	0.2	0.4	1.3	6208NYPCP
8" Drop in	6208NYPC	22"	0.2	0.4	1.3	6208NYPCP
10" Drop in	6210NYPC	22"	0.3	0.6	1.75	6210NYPCP
12" Round	6212NYPC	22"	0.3	0.9	2.0	6212NYPCP
15" Round	6215NYPC	22"	0.6	1.2	2.5	6215NYPCP
18" Round	6218NYPC	22"	0.9	1.4	3.1	6218NYPCP
24" Round	6224NYPC	22"	1.6	1.9	4.3	6224NYPCP
30" Round	6230NYPC	22"	2.8	2.5	5.7	6230NYPCP

8" and 10" Designs

12" and Plus Designs

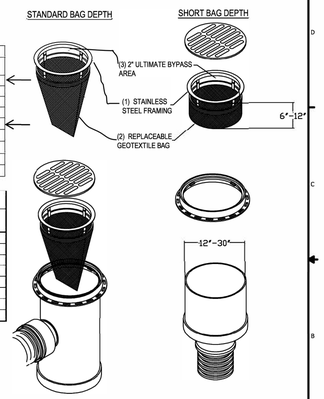

FLEXSTORM INLET PROTECTION PURE

ALL PRODUCTS MANUFACTURED BY INLET & PIPE PROTECTION, INC A DIVISION OF ADS, INC.
WWW.INLETFILTERS.COM
(866) 287-8655 PH
(630) 355-3477 FX
INFO@INLETFILTERS.COM

SIZE C | FRAME TYPE NY | DWG NO NYLOPLAST | REV A | SCALE | SHEET 1 OF 1

A 9 INLET FILTER (ROUND)
FLEXSTORM

NYLOPLAST INLINE DRAIN WITH DOME GRATE

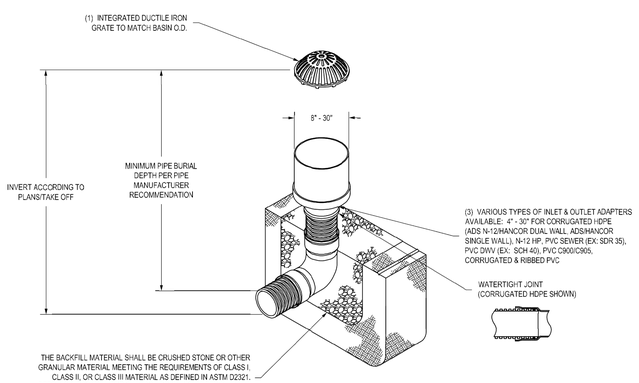

1 - 8" - 30" DOME GRATES SHALL BE DUCTILE IRON PER ASTM A536 GRADE 70-50-05.
2 - DRAINAGE CONNECTION STUB JOINT TIGHTNESS SHALL CONFORM TO ASTM D3212 FOR CORRUGATED HDPE (ADS N-12/ANCOR DUAL WALL), N-12 HP, & PVC SEWER (4" - 24").
3 - 8" - 30" DOME GRATES HAVE NO LOAD RATING

THIS PRINT DISCLOSES SUBJECT MATTER IN WHICH NYLOPLAST HAS PROPRIETARY RIGHTS. THE RECEIPT OR POSSESSION OF THIS PRINT DOES NOT CONFER, TRANSFER, OR LICENSE THE USE OF THE DESIGN OR TECHNICAL INFORMATION SHOWN HEREIN. REPRODUCTION OF THIS PRINT OR ANY INFORMATION CONTAINED HEREIN, OR MANUFACTURE OF ANY ARTICLE HEREFROM, FOR THE DISCLOSURE TO OTHERS IS FORBIDDEN, EXCEPT BY SPECIFIC WRITTEN PERMISSION FROM NYLOPLAST. ©2013 NYLOPLAST

DRAWN BY	EBC	MATERIAL	
DATE	03-25-10		
REVISED BY	NMH	PROJECT NO./NAME	
DATE	03-15-16		
DWG SIZE	A	SCALE 1:40	SHEET 1 OF 1

Nyloplast
3130 VERONA AVE
BUFORD, GA 30518
PHN (770) 932-2443
FAX (770) 932-2490
www.nyloplast-us.com

TITLE: INLINE DRAIN WITH DOME GRATE
QUICK SPEC INSTALLATION DETAIL

DWG NO. 7003-110-057 REV D

B 9 DRAIN BASIN, PERFORATED (ROUND)
NYLOPLAST

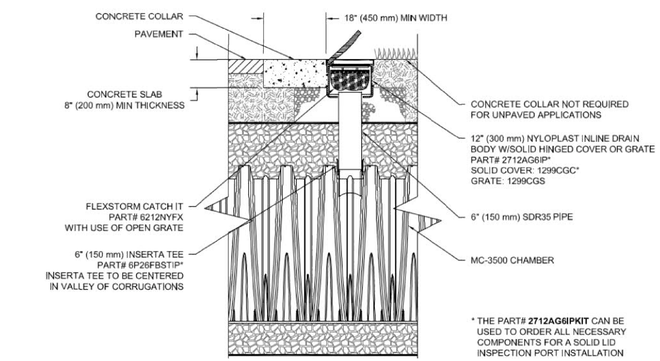

D 9 INSPECTION PORT
STORMTECH

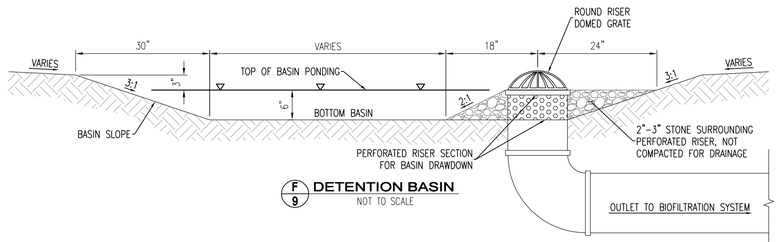

F 9 DETENTION BASIN
NOT TO SCALE

ACCEPTABLE FILL MATERIALS: STORMTECH SC-310 CHAMBER SYSTEMS

	MATERIAL LOCATION	DESCRIPTION	AASHTO MATERIAL CLASSIFICATIONS	COMPACTION / DENSITY REQUIREMENT
D	**FINAL FILL:** FILL MATERIAL FOR LAYER 'D' STARTS FROM THE TOP OF THE 'C' LAYER TO THE BOTTOM OF FLEXIBLE PAVEMENT OR UNPAVED FINISHED GRADE ABOVE. NOTE THAT PAVEMENT SUBBASE MAY BE PART OF THE 'D' LAYER.	ANY SOIL/ROCK MATERIALS, NATIVE SOILS, OR PER ENGINEER'S PLANS. CHECK PLANS FOR PAVEMENT SUBGRADE REQUIREMENTS.	N/A	PREPARE PER SITE DESIGN ENGINEER'S PLANS. PAVED INSTALLATIONS MAY HAVE STRINGENT MATERIAL AND PREPARATION REQUIREMENTS.
C	**INITIAL FILL:** FILL MATERIAL FOR LAYER 'C' STARTS FROM THE TOP OF THE EMBEDMENT STONE ('B' LAYER) TO 18" (450 mm) ABOVE THE TOP OF THE CHAMBER. NOTE THAT PAVEMENT SUBBASE MAY BE A PART OF THE 'C' LAYER.	GRANULAR WELL-GRADED SOIL/AGGREGATE MIXTURES, <35% FINES OR PROCESSED AGGREGATE. MOST PAVEMENT SUBBASE MATERIALS CAN BE USED IN LIEU OF THIS LAYER.	AASHTO M145[1] A-1, A-2-4, A-3 OR AASHTO M43[1] 3, 357, 4, 467, 5, 56, 57, 6, 67, 68, 7, 78, 8, 89, 9, 10	BEGIN COMPACTIONS AFTER 12" (300 mm) OF MATERIAL OVER THE CHAMBERS IS REACHED. COMPACT ADDITIONAL LAYERS IN 6" (150 mm) MAX LIFTS TO A MIN. 95% PROCTOR DENSITY FOR WELL GRADED MATERIAL AND 95% RELATIVE DENSITY FOR PROCESSED AGGREGATE MATERIALS. ROLLER GROSS VEHICLE WEIGHT NOT TO EXCEED 12,000 lbs (53 kN). DYNAMIC FORCE NOT TO EXCEED 20,000 lbs (89 kN).
B	**EMBEDMENT STONE:** FILL SURROUNDING THE CHAMBERS FROM THE FOUNDATION STONE ('A' LAYER) TO THE 'C' LAYER ABOVE.	CLEAN, CRUSHED, ANGULAR STONE	AASHTO M43[1] 3, 357, 4, 467, 5, 56, 57	NO COMPACTION REQUIRED.
A	**FOUNDATION STONE:** FILL BELOW CHAMBERS FROM THE SUBGRADE UP TO THE FOOT (BOTTOM) OF THE CHAMBER.	CLEAN, CRUSHED, ANGULAR STONE	AASHTO M43[1] 3, 357, 4, 467, 5, 56, 57	PLATE COMPACT OR ROLL TO ACHIEVE A FLAT SURFACE.[2,3]

PLEASE NOTE:
1. THE LISTED AASHTO DESIGNATIONS ARE FOR GRADATIONS ONLY. THE STONE MUST ALSO BE CLEAN, CRUSHED, ANGULAR. FOR EXAMPLE, A SPECIFICATION FOR #4 STONE WOULD STATE: "CLEAN, CRUSHED, ANGULAR NO. 4 (AASHTO M43) STONE".
2. STORMTECH COMPACTION REQUIREMENTS ARE MET FOR 'A' LOCATION MATERIALS WHEN PLACED AND COMPACTED IN 6" (150 mm) (MAX) LIFTS USING TWO FULL COVERAGES WITH A VIBRATORY COMPACTOR.
3. WHERE INFILTRATION SURFACES MAY BE COMPROMISED BY COMPACTION, FOR STANDARD DESIGN LOAD CONDITIONS, A FLAT SURFACE MAY BE ACHIEVED BY RAKING OR DRAGGING WITHOUT COMPACTION EQUIPMENT. FOR SPECIAL LOAD DESIGNS, CONTACT STORMTECH FOR COMPACTION REQUIREMENTS.
4. ONCE LAYER 'C' IS PLACED, ANY SOIL/MATERIAL CAN BE PLACED IN LAYER 'D' UP TO THE FINISHED GRADE. MOST PAVEMENT SUBBASE SOILS CAN BE USED TO REPLACE THE MATERIAL REQUIREMENTS OF LAYER 'C' OR 'D' AT THE SITE DESIGN ENGINEER'S DISCRETION.

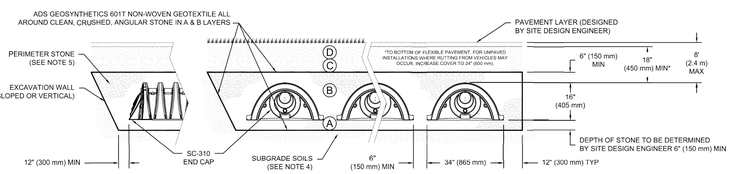

NOTES:

1. CHAMBERS SHALL MEET THE REQUIREMENTS OF ASTM F2922 (POLETHYLENE) OR ASTM F2418 (POLYPROPYLENE), "STANDARD SPECIFICATION FOR CORRUGATED WALL STORMWATER COLLECTION CHAMBERS".
2. SC-310 CHAMBERS SHALL BE DESIGNED IN ACCORDANCE WITH ASTM F2787 "STANDARD PRACTICE FOR STRUCTURAL DESIGN OF THERMOPLASTIC CORRUGATED WALL STORMWATER COLLECTION CHAMBERS".
3. THE SITE DESIGN ENGINEER IS RESPONSIBLE FOR ASSESSING THE BEARING RESISTANCE (ALLOWABLE BEARING CAPACITY) OF THE SUBGRADE SOILS AND THE DEPTH OF FOUNDATION STONE WITH CONSIDERATION FOR THE RANGE OF EXPECTED SOIL MOISTURE CONDITIONS.
4. PERIMETER STONE MUST BE EXTENDED HORIZONTALLY TO THE EXCAVATION WALL FOR BOTH VERTICAL AND SLOPED EXCAVATION WALLS.
5. REQUIREMENTS FOR HANDLING AND INSTALLATION:
   - TO MAINTAIN THE WIDTH OF CHAMBERS DURING SHIPPING AND HANDLING, CHAMBERS SHALL HAVE INTEGRAL, INTERLOCKING STACKING LUGS.
   - TO ENSURE A SECURE JOINT DURING INSTALLATION AND BACKFILL, THE HEIGHT OF THE CHAMBER JOINT SHALL NOT BE LESS THAN 2".
   - TO ENSURE THE INTEGRITY OF THE ARCH SHAPE DURING INSTALLATION, a) THE ARCH STIFFNESS CONSTANT SHALL BE GREATER THAN OR EQUAL TO 400 LBS/FT/%. THE ASC IS DEFINED IN SECTION 6.2.8 OF ASTM F2418. AND b) TO RESIST CHAMBER DEFORMATION DURING INSTALLATION AT ELEVATED TEMPERATURES (ABOVE 73° F / 23° C), CHAMBERS SHALL BE PRODUCED FROM REFLECTIVE GOLD OR YELLOW COLORS.

StormTech® Chamber System
888-892-2694 | WWW.STORMTECH.COM

4640 TRUEMAN BLVD
HILLIARD, OH 43026
1-800-733-7473

ADS

SHEET 3 OF 6

C 9 UNDERGROUND STORAGE CHAMBERS
STORMTECH

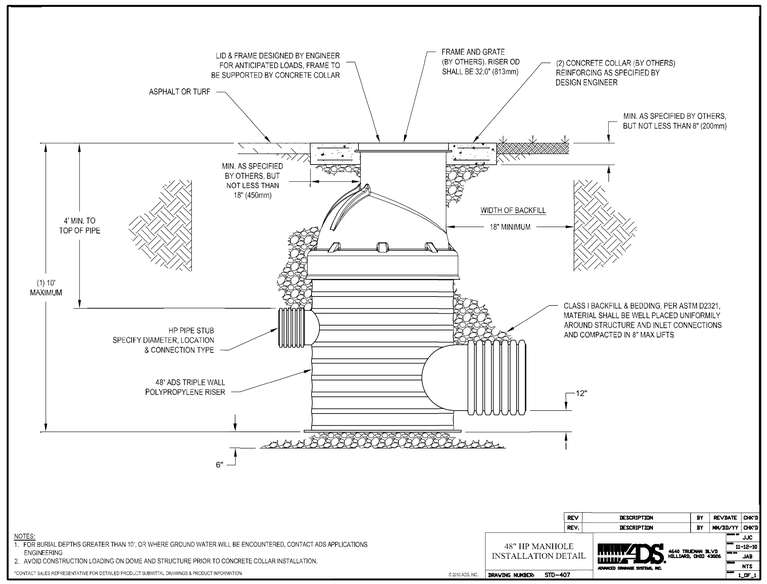

NOTES:
1. FOR BURIAL DEPTHS GREATER THAN 10', OR WHERE GROUND WATER WILL BE ENCOUNTERED, CONTACT ADS APPLICATIONS ENGINEERING.
2. AVOID CONSTRUCTION LOADING ON DOME AND STRUCTURE PRIOR TO CONCRETE COLLAR INSTALLATION.

*CONTACT SALES REPRESENTATIVE FOR DETAILED PRODUCT SUBMITTAL DRAWINGS & PRODUCT INFORMATION.

REV	DESCRIPTION	BY	REVDATE	CHK'D
REV.	DESCRIPTION	BY	MM/DD/YY	CHK'D

48" HP MANHOLE INSTALLATION DETAIL

ADS ADVANCED DRAINAGE SYSTEMS, INC. 4640 TRUEMAN BLVD. HILLIARD, OHIO 43026

DRAWN	LJC
DATE	11-12-20
CHECKED	JAB
SCALE	NTS
SHEET	1 OF 1

DRAWING NUMBER: STD-407

© 2010 ADS, INC.

E 9 48" ADS MANHOLE
ADS

LICENSED ARCHITECT / ENGINEER, CLARK / Exp. 6-30-25 / Exp.10-31-23 / STATE OF CALIFORNIA

811 Know what's below. Call 811 before you dig.

ENGINEER OF RECORD'S SEAL
REGISTERED PROFESSIONAL ENGINEER JEFFREY D. MEITER No. 64696 CIVIL STATE OF CALIFORNIA

VALUED ENGINEERING, INC
CIVIL ENGINEERING • LAND SURVEYING • LAND PLANNING
1529 W. 13TH STREET, UNIT G, UPLAND, CA 91786
PHONE (909) 982-4601
JEFFREY D. MEITER R.C.E. No. 64696 12/20/2023

CITY OF BIG BEAR LAKE
ENGINEERING DIVISION
39707 BIG BEAR BLVD
BIG BEAR LAKE, CA 92315
PHONE (909) 866-5831
FAX (909) 866-7511

CITY OF BIG BEAR LAKE
BIG BEAR LAKE, CALIFORNIA
APPROVED BY:
DATE
R.C.E. _____ EXP. DATE _____

CITY OF BIG BEAR LAKE
MOUNTAIN AREA REGIONAL TRANSIT AUTHORITY
160-170 BUSINESS CENTER DRIVE
STORM DRAIN DETAILS

SEPTEMBER 2022
SHEET 9 OF 12
DRAWING NO. --

0762102 PH1&2 | BIG BEAR LAKE, CA, USA | DRAWN: KK | CHECKED: N/A | PROJECT #: | DESCRIPTION | DRW. | CHK | DATE | DRAWING PRIOR TO CONSTRUCTION. IT IS THE ULTIMATE

File: P:\JOBS\0762102\CAD\SHEETS\GRADING - PHASE 1\762102 PG09 SD DETAILS.dwg Dec 20, 2023 - 2:42pm Kent

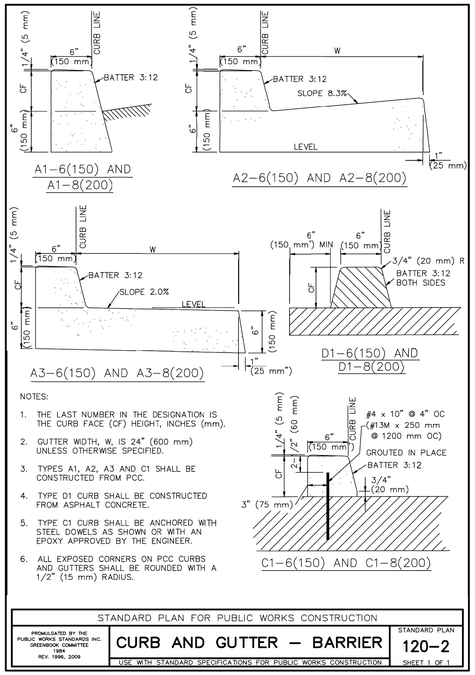

STANDARD PLAN FOR PUBLIC WORKS CONSTRUCTION		
PROMULGATED BY THE PUBLIC WORKS STANDARDS INC. GREENBOOK COMMITTEE 1984 REV. 1998, 2009	CURB AND GUTTER – BARRIER	STANDARD PLAN 120-2
	USE WITH STANDARD SPECIFICATIONS FOR PUBLIC WORKS CONSTRUCTION	SHEET 1 OF 1

A 10 CURB/CURB AND GUTTER
SPPWC STD PLAN 120-2

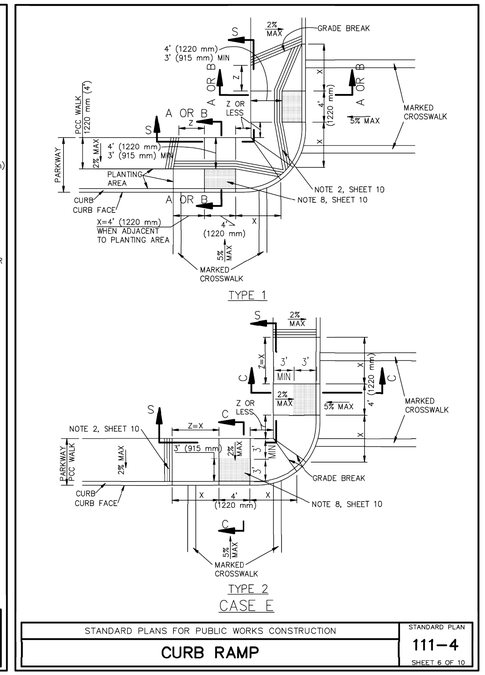

STANDARD PLANS FOR PUBLIC WORKS CONSTRUCTION		
	CURB RAMP	STANDARD PLAN 111-4
		SHEET 6 OF 10

B 10 CURB RAMP
SPPWC STD PLAN 111-4

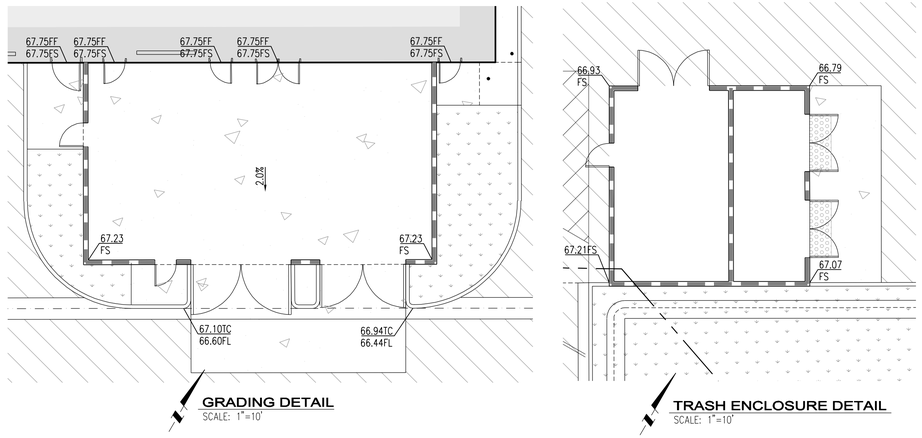

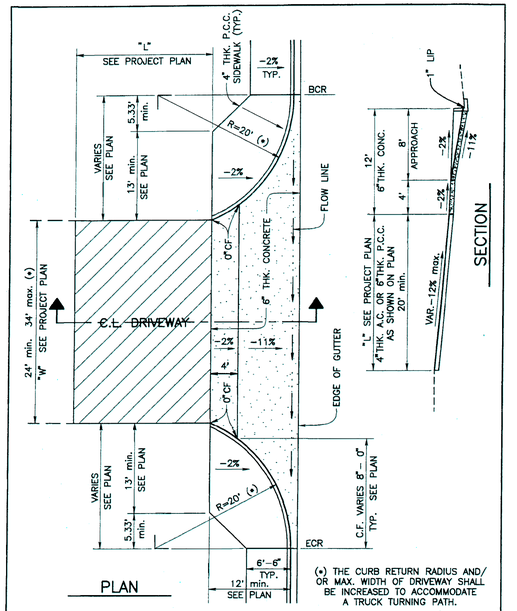

NOTE: FOR GENERAL NOTES SEE COUNTY STANDARD 129

CO. OF SAN BDNO. DEPT. OF PUBLIC WORKS		
REVISED: DATE G.M. 12-05	PATRICK J. MEAD Director of Public Works	COMMERCIAL DRIVEWAY WITH CURB RETURNS
		129B

F 10 COMMERCIAL DRIVE APPROACH
SAN BERNARDINO COUNTY STD PLAN 129B

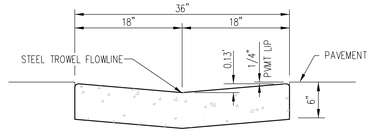

NOTES:
1. CONCRETE WILL BE CLASS 520-C-2500 PER SECTION 201 STANDARD SPECIFICATIONS FOR PUBLIC WORKS CONSTRUCTION
2. CURING COMPOUND SHALL BE TYPE 1-D.
3. ALL EXPOSED CORNERS SHALL BE 1/2" RADIUS.

D 10 36" RIBBON GUTTER
NOT TO SCALE

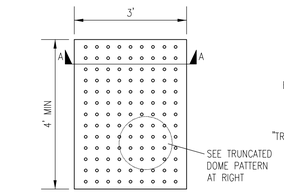

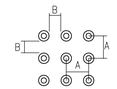

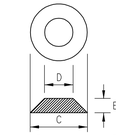

DIM	ADA REQUIREMENT
A	2.30" TO 2.40"
B	0.65" MINIMUM
C	0.90" TO 0.92"
D	0.45" TO 0.47"
E	0.20"

NOTE:
A. ALL THE PEDESTRIAN AREAS WITH ENHANCED SURFACES MUST BE ACCESSIBLE TYPE FOR THE DISABLED PER CBC 11B-301.1, 11B-403.
B. ONLY APPROVED DSA-AC DETECTABLE WARNING PRODUCTS (TRUNCATED DOMES) AND DIRECTIONAL SURFACES SHALL BE INSTALLED AS PROVIDED IN THE CALIFORNIA CODE OF REGULATIONS (CCR), TITLE 24, PART 12, CHAPTERS 11B, SECTION 12-11B.205. FOR BUILDING AND FACILITY ACCESS SPECIFICATIONS FOR PRODUCT APPROVAL FOR DETECTABLE WARNING PRODUCTS AND DIRECTIONAL SURFACES. [CBC 11B-705.3]
C. ALL NEWLY PLACED ACCESSIBLE RAMP DOMES MUST BE CAST IN PLACE.

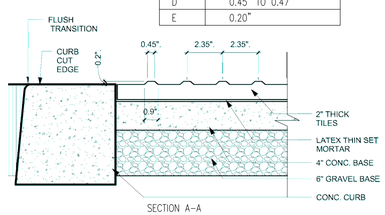

C 10 TRUNCATED DOMES
NOT TO SCALE

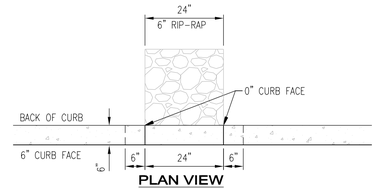

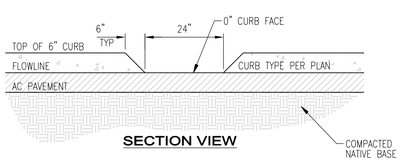

E 10 24" CURB OPENING
NOT TO SCALE

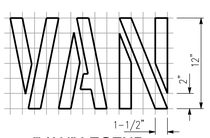

"VAN" LEGEND
NOT TO SCALE

"NO PARKING" LEGEND
NOT TO SCALE

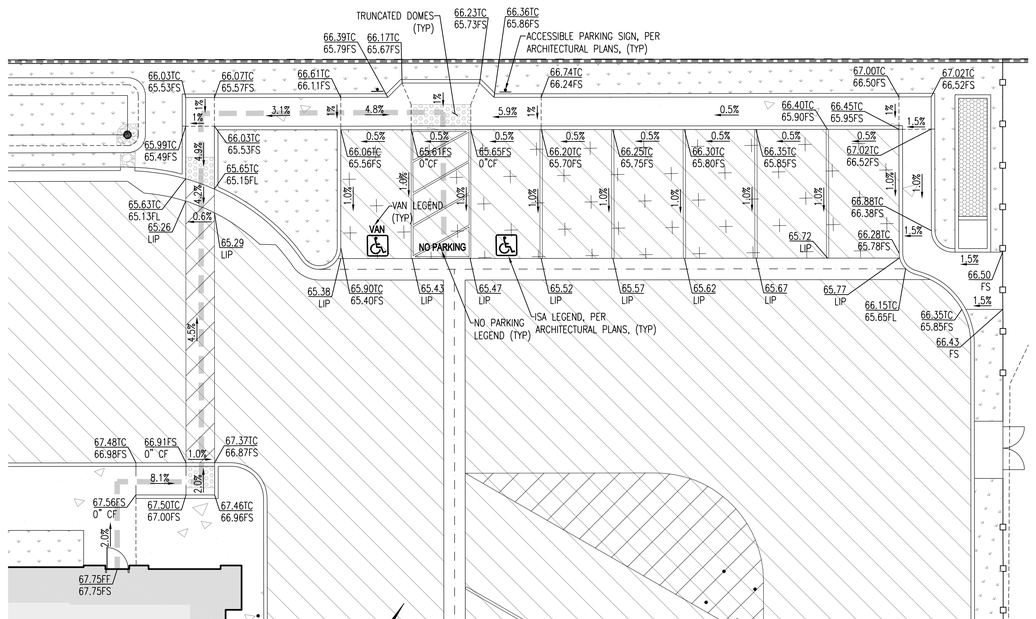

ADA PARKING DETAIL
SCALE: 1"=10'

811 Know what's **below.** **Call 811** before you dig.

ENGINEER OF RECORD'S SEAL
REGISTERED PROFESSIONAL ENGINEER
JEFFEREY D. MEITER
No. 64696
CIVIL
STATE OF CALIFORNIA

VALUED ENGINEERING, INC
CIVIL ENGINEERING • LAND SURVEYING • LAND PLANNING
1529 W. 13TH STREET, UNIT G, UPLAND, CA 91786
PHONE (909) 982-4601
12/20/2023
JEFFERY D. MEITER R.C.E. No. 64696

CITY OF BIG BEAR LAKE
ENGINEERING DIVISION
39707 BIG BEAR BLVD
BIG BEAR LAKE, CA 92315
PHONE (909) 866-5831
FAX (909) 866-7511

CITY OF BIG BEAR LAKE
BIG BEAR LAKE, CALIFORNIA
APPROVED BY:
DATE
R.C.E. _____ EXP. DATE _____

CITY OF BIG BEAR LAKE

MOUNTAIN AREA REGIONAL TRANSIT AUTHORITY
160-170 BUSINESS CENTER DRIVE
CONSTRUCTION DETAILS

SEPTEMBER 2022
SHEET 10 OF 12
DRAWING NO. --

File: P:\JOBS\076210Z\CAD\SHEETS\GRADING - PHASE 1\762102 PG10 DTL.dwg Dec 20, 2023 - 2:34pm Kent

RESOLUTION EXHIBIT C

CONDITIONS OF APPROVAL

CONDITIONAL USE PERMIT 2022-074
160-170 BUSINESS CENTER DRIVE
ASSESSOR'S PARCEL NUMBER'S 2328-021-12, 13

APPROVAL DATE: APRIL 19, 2023
EFFECTIVE DATE: MAY 1, 2023
EXPIRATION DATE: MAY 1, 2026 (Phase 1)

The following abbreviations identify the agency responsible for determining compliance with these conditions. The first group listed has responsibility for compliance at plan check, the second confirms compliance with the condition at final inspection, prior to final occupancy or issuance of a certificate of occupancy, or as specified in the condition. If only one group is identified, they have responsibilities from initial review through compliance verification. The reference number at the end of each condition (e.g. G-1 or MND-BIO2), should be retained for internal use.

RESPONSIBLE DEPARTMENTS/DIVISIONS			
ATTY	City Attorney	BLDG	Building & Safety
DWP	Department of Water	ENG	Engineering Division
PLNG	Planning Division	FIRE	Fire Protection District
PW	Public Works	MND	Mitigated Negative Declaration

GENERAL CONDITIONS

1. Approval of CUP 2022-074 (herein after "project") is granted for property located at 160-170 Business Center Drive, Assessor Parcel Number's 2328-021-12, 13 to to develop a vacant 3.55 acre site with a bus storage/maintenance facility and administrative offices. The project would include a 1-story, 11,470 SF maintenance building for service bays, a bus wash, and other support spaces for drivers and the bus fleet. The administration building, also 1-story, anticipates a 11,200 SF building area. This approval is based on the application and supplemental materials including approved plans stamped as "Received on June 17, 2022" (hereinafter "the plans") on file with the Planning Division. Build-out and use of the development shall conform with the plans, as approved and conditioned herein, and shall not be further altered unless subsequently reviewed and approved by the City. Any future adjustment or modification to the plans shall be considered by the Community Development Director or designee, may require a separate discretionary review application, and shall conform to all City, State, and Federal requirements, including subsequent City Code requirements or policies. (PLNG, G-1)

2. Developer means permit applicant, property owner, operator, permittee, lessee, and/or tenants using the space(s) for the intended use(s). Developer shall comply with project conditions for the life of the project. (ATTY, G-2)

3. Developer shall obtain necessary approvals prior to initiating any new construction or modifications authorized under this permit, including but not limited to temporary construction trailers, temporary staging areas, model home sales offices, placement or construction of advertising signs of any kind, structures, and exterior and/or interior building modifications. (PLNG/BLDG, G-3)

4. If Developer (including but not limited to owner or tenant) fails to comply with any of the permit conditions, then Developer shall be subject to permit revocation or enforcement actions, pursuant to the City Code. All costs associated with any such actions shall be the responsibility of Developer, owner or tenant. (ATTY, G-4)

5. If not appealed, this approval shall become effective on the eleventh (11th) day after the decision date. Should the effective date fall on a non-business day, the decision shall become effective on the next city business day following such 11th day. Failure to file a timely appeal prior to the effective date, or commencement of any activity related to the project, is understood as the Developer's acceptance of all conditions and obligations imposed by this permit and waiving any challenge to the validity of the conditions and obligations stated therein. (ATTY, G-5)

6. This permit shall automatically expire, with Phase 1 becoming null and void, thirty-six (36) months from the effective date unless Developer has inaugurated the project and complied with all conditions of approval, as demonstrated by the issuance of applicable building permits and installation of substantial construction improvements on such permits. Once Phase 1 has been inaugurated, Developer shall initiate Phase 2 no later than forty-eight (48) months from the effective date in the same matter, specifically with the issuance of applicable building permits and installation of substantial construction improvements relating to the Phase 2 development. (PLNG)

7. If a time extension is necessary or desired, Developer is responsible for submitting a completed application form with corresponding fees to the Planning Division at least ninety (90) days prior to the expiration date. Should the ninetieth (90th) day prior to the expiration date fall on a non-business day, the completed application form with corresponding fees must be submitted no later than the first business day prior to the ninetieth (90th) day. Should such time extension request be received in less time, the Planning Division may not be able to process the request in advance of the expiration date. In this situation, the Developer acknowledges that should the permit expire prior to project inauguration, new land use entitlement(s) would need to be requested before the project may commence. (ATTY, G-7)

8. Approval of this application does not relieve Developer from complying with all applicable Federal, State, County or City regulations or requirements. (ATTY, G-8)

9. In the event that exhibits and written conditions are inconsistent, the written conditions shall prevail. (ATTY, G-9)

10. Developer agrees, as part of and in connection with each and any of the application(s), to defend, indemnify, and hold City, any departments, agencies, divisions, boards, and/or commissions of the City, and its elected officials, officers, contractors serving as City officials, agents, employees, and attorneys of the City ("Indemnitees") harmless from liability for damages and/or claims, actions, or proceedings for damages for personal injuries, including death, and claims for property damage, and with respect to all other actions and liabilities for damages caused or alleged to have been caused by reason of the Developer's activities in connection with this project on the project site, and which may arise from the direct or indirect operations of the Developer or those of the Developer's contractors, agents, tenants, employees or any other persons acting on Developer's behalf, which relate to the development and/or construction of the project. This indemnity provision applies to all damages and claims, actions, or proceedings for damages, as described above, regardless of whether the City prepared, supplied, or approved the plans, specifications, or other documents for the project.

    In the event of any legal action challenging the validity, applicability, or interpretation of any provision of this approval, or any other supporting document relating to the project, the City will promptly notify Developer of the claim, action, or proceedings and will fully cooperate in the defense of the matter.

    a. Once notified, Developer must indemnify, defend and hold harmless the Indemnitees, and each of them, with respect to all liability, costs and expenses incurred by, and/or awarded against, the City or any of the Indemnitees in relation to such action.

    b. Within 15 days' notice from the City of any such action, Developer shall provide to City a cash deposit to cover legal fees, costs, and expenses incurred by City in connection with defense of any legal action in an initial amount to be reasonably determined by the City Attorney. City may draw funds from the deposit for such fees, costs, and expenses.

    c. Within 5 business days of each and every notice from City that the deposit has fallen below the initial amount, Applicant shall replenish the deposit each and every time in order for City's legal team to continue working on the matter.

    d. City shall only refund to Developer any unexpended funds from the deposit within 30 days of: (i) a final, non-appealable decision by a court of competent jurisdiction resolving the legal action; or (ii) full and complete settlement of legal action.

    The City shall have the right to select legal counsel of its choice that the Developer reasonably approves. The parties hereby agree to cooperate in defending such action. The City will not voluntarily assist in any such third-party challenge(s) or take any position adverse to the Developer in connection with such third-party challenge(s). In consideration for approval of the project, this condition shall remain in effect if the entitlement(s) related to this project is rescinded or revoked, whether or not at the request of Developer. (ATTY, G-10)

11. Developer is responsible for informing all subcontractors, consultants, engineers, or other business entities providing services related to the project of their responsibilities to comply with all permit conditions and the Big Bear Lake Municipal Code, including but not limited to the requirement that a business license be obtained by all entities doing business in the City. (ATTY, G-11)

12. Developer is responsible to ensure that all plans, specifications, studies, reports, calculations, maps, notes, legal documents, and designs, are be prepared, signed, and stamped (as required) by those individuals legally authorized to do so. (ATTY, G-12)

13. All uses and activities on the subject property must occur inside the buildings and/or structures or locations as approved by this permit, or otherwise allowed under the Big Bear Lake Municipal Code. On-site uses and activities shall be conducted in accordance with State, Federal, and local regulations and shall not create any public nuisances as a result of the operations. (PLNG, G-13)

14. Except as modified by this permit, Developer shall, for the life of the project, maintain off-street parking for all on-site uses in accordance with the Big Bear Lake Municipal Code requirements, including number and type of spaces, stall size, paving, striping, location and access. (PLNG, G-14)

CONDITIONS FOR COMPLIANCE PRIOR TO ISSUANCE OF PERMITS

15. Prior to initiating any construction or activity within the public right-of-way or city-owned property, Developer must obtain the proper approvals, such as but not limited to an encroachment permit, from the Public Works Department. (ENG/P-1)

16. Prior to issuance of grading plans or building permits, whichever comes first, Developer shall submit a stamped, signed, and dated soil investigation report prepared by a geotechnical engineer or civil engineer containing site-specific design recommendations. As appropriate, the Building Official may request additional studies or verification to evaluate soil strength, the effect of moisture variation on soil-bearing capacity, compressibility, liquefaction, seismically induced soil liquefaction, soil instability, and expansiveness. The submittal from the geotechnical engineer or civil engineer shall clarify that:
    a. The plans and specifications substantially conform to the recommendations in the soil investigation; and
    b. The geotechnical engineer or civil engineer who prepared the soil investigation has been retained by Developer to provide soil observations onsite, and provide periodic and final reports to the City of Big Bear Lake. (BLDG, P-4)

17. The proposed location of the project is partially situated in a flood zone AE, development permits for construction on Flood plains must comply with the requirements of the City of Big Bear Lake Municipal Code Chapter 15.64.
    a. Construction materials and methods must comply with FEMA Technical bulletin TB2-93. (ENG)
    b. Anchoring of the Structure must comply with TB-1,2,3 & 7. (ENG)
    c. Utilities such as electrical outlets, heating, ventilation and the similar must be designed and/or located so as to prevent water from entering or accumulating within the components during conditions of flooding. (ENG)
    d. Flood vents must be provided for the structures. (ENG)
    e. Lowest floor elevation must rise 1' from the Base Flood Elevation (ENG)
    f. A LOMR will be only required if the applicant of the project wishes be relieved of the requirement for flood insurance. If so, the property would have to be removed from the flood zone indicated on the FIRM panel. This would require a LOMR. the city submits the application requesting a map revision. The project's engineer would be required to do all hydrologic and hydraulic work, and prepare the reports but the formal application has to be executed by the city within 6 months of project completion. (ENG)
    g. A Final WQMP document must be submitted after planning commission approval and will require additional payment. (ENG) Percolation test showed that infiltration is slow/not feasible, that has to be reflected in the BMP device selection. (ENG)
    h. There is an existing storm drain located in the East side of the property along Sandalwood Dr., the outlet of the BMP devices can be considered to be connected to the existing storm drain system if the water is treated on site, and calculations are shown to demonstrate that the pipe size has enough capacity to carry the extra water runoff produced by the project. (ENG) Plans will need to show all existing and proposed utilities. (ENG)
    i. Grading plans must show contour lines NGVD 29 for benchmark, NAD 83 for bearing, limits of the flood zone elevation, water runoff direction that does not redirect water into the adjacent properties, calculation of cut and fill. (ENG)
    j. The use of flush curbs or curb openings is preferred for ease of plowing and drainage to be captured by the planted areas. (ENG)
    k. Show in the site plan the proposed locations for snow storage and indicate the area in square feet. (ENG)
    l. Need to provide a covered trash enclosure with an adequate concrete pad for loading/unloading the waste collection truck, asphalt usually cracks by fatigue. (ENG)
    m. Need to indicate the method that will be used for the containment of grease, fuels and oils in the maintenance area. (ENG)
    n. A 6" sewer lateral with cleanout will be required for the project. (ENG)
    o. RFP backflow assemblies will be required on all services to be installed at locations approved by the Department of Water and Power. (DWP)

18. Prior to issuance of grading plans, Developer shall submit a combined landscape and lighting plan to verify all project onsite lighting shall be of a type and in a location that does not constitute a hazard to vehicular traffic, either on private property or on public property, including but not limited to streets and roadways. Placement of such lighting shall not conflict with drainage plans, landscape plans, tree locations, parking spaces, or any other such land use and site plan concerns. (PLNG, P-5)

19. Prior to issuance of grading plans or building permits, Developer shall minimize potential construction-related noise impacts by including the following language on any grading, site work, and construction plans issued for the project site. (BLDG, P-6)

    "During earth-moving, grading, and construction activities, Developer shall implement the following measures at the project site:
    a. Limit earth-moving, grading, and construction activities to weekdays between 7:00 a.m. and 7:00 p.m., and on Saturdays between 9:00 a.m. and 7:00 p.m. Construction-related noise is prohibited on Sundays and City-observed holidays;
    b. Locate stationary noise-generating equipment as far as possible from sensitive receptors when sensitive receptors adjoin or are near a construction project area;
    c. Construct sound walls or other noise reduction measures prior to developing the project site;
    d. Equip all internal combustion engine driven equipment with intake and exhaust mufflers that are in good condition and appropriate for the equipment;
    e. Prohibit all unnecessary idling of internal combustion engines;
    f. Utilize 'quiet' models of air compressors and other stationary noise sources where technology exists; and
    g. Designate a 'disturbance coordinator' who would be responsible for responding to any complaints about construction noise or activities. The disturbance coordinator shall be responsible for determining the cause of the complaint and immediately implement reasonable measures to correct the problem."

20. Prior to issuance of grading plans or building permits, Developer shall minimize potential construction-related air quality impacts by including the following language on any grading, site work, and construction plans issued for the project site. (BLDG, P-7)

    "During earth-moving, grading, and construction activities, Developer shall implement the following measures at the project site:
    a. All exposed surfaces (e.g. parking areas, staging areas, soil piles, graded areas, and unpaved access roads) shall be watered at minimum two times per day;
    b. All haul trucks transporting soil, sand, or other loose material onsite or offsite shall be covered;
    c. All visible mud or dirt tracked out onto adjacent public roads shall be removed using wet power vacuum street sweepers at least once per day. The use of dry power sweeping is prohibited;
    d. All vehicle speeds on unpaved roads, pathways, or surfaces shall be limited to 15 miles per hour;
    e. All roadways, driveways, and sidewalks to be paved shall be completed as soon as possible. Building pads shall be laid as soon as possible after grading unless seeding or soil binders are used to stabilize the soil;
    f. Idling times shall be minimized either by shutting equipment off when not in use or reducing the maximum idling time to 5 minutes (as required by the California airborne toxics control measure Title 13, Section 2485 of California Code of Regulations). Clear signage shall be provided for construction workers at all access points;
    g. All construction equipment shall be maintained and properly tuned in accordance with manufacturer's specifications. All equipment shall be checked by a certified visible emissions evaluator; and
    h. Post a publicly visible sign identifying the City Building Division (909) 866-5831 during normal business hours, and the City Code Compliance Division (909) 866-CODE (909-866-2633) after hours for construction-related complaints. The South Coast Air Quality Management District 1-800-CUT-SMOG (1-800-288-7664) shall also be included to ensure compliance with applicable regulations."

21. Prior to issuance of building permits, Developer shall include on the first sheet after the cover sheet of the plan set, a complete reproduction of all conditions of approval, as adopted by the decision-maker. (PLNG, P-10)

22. Prior to issuance of building permits, the Property Owner shall sign and return to the Planning Division, a notarized deed restriction acknowledging the land use approvals for the property on a form provided by the City. Such deed restriction shall be confirmed as recorded by the County of San Bernardino prior to final inspection sign off. (PLNG, P-11)

23. Prior to issuance of building permits, Developer shall include all exterior building materials and colors, including product and finish, manufacturer name, color name and number, and surface finish type (e.g. stucco with sand finish, plaster with smooth finish) to be used in construction. (PLNG, P-13)

24. Prior to issuance of building permits, Developer shall submit a lighting plan with details of all exterior fixtures and locations. Such plan shall verify that all exterior light fixtures, including parking lot lighting, shall be full cutoff type, directs illumination downward only, is designed to minimize glare and light pollution, and shall not cast light on any adjacent property or roadway. Developer shall recess or conceal any under-canopy lighting elements so they are not directly visible from any public area. (PLNG, P-14)

25. Acceptance or approval of submitted plans does not release Developer from correction of mistakes, errors, or omissions contained therein. If, during the course of construction, the public interest requires a modification or departure from the approved plans, the City shall have the authority to require such modifications or departure and specify the manner in which the same is to be made. (BLDG, P-15)

26. Prior to issuance of a grading or building permit, Developer shall contact the Building Division to schedule a pre-site inspection. (BLDG, P-17)

27. Prior to commencement of any trenching, grading, staging, or construction activities onsite, Developer shall contact the Building Division to schedule a pre-construction meeting for the purpose of reviewing conditions of project approval and expectations throughout the project construction period. (BLDG/PLNG/ENG, P-18)

28. All applicable codes and ordinances shall apply, including but not limited to, the 2019 California Fire Code (CFC); California Code of Regulations, Title 19; and those portions of 2019 California Building Code, adopted by the State Fire Marshal. (FIRE, P-19)

29. A security fence with screening shall protect all construction sites. The fencing and screening shall be maintained at all times to protect pedestrians. All development projects shall submit a construction fencing plan with the construction design plans. Construction projects that have phased occupancy shall be completely separated by a construction fence that is screened and show the adjusted fence locations at each phase. (BLDG, P-23)

CONDITIONS FOR COMPLIANCE DURING ONSITE CONSTRUCTION ACTIVITIES

30. All related construction materials, debris, and equipment shall be stored on the project site. If that is not physically possible, then Developer shall obtain approvals for alternative locations in advance of such placement. For example, an encroachment permit would be required for placement within a public right-of-way, and a temporary use permit would be required for placement on another property. (BLDG, C-1)

31. At all times throughout the construction period, Developer shall maintain all portions of the job site in an organized and professional condition. At minimum, all trash, debris, construction scraps and broken/deteriorated machinery shall be removed from the site at the end of each week. If off-loaded construction materials are not used within 2 weeks, they shall be screened from view. All sidewalks, driveways and public/private roadways fronting the subject site shall be broom cleaned at the end of each construction work day. Construction site cleanup shall be in accordance with Big Bear Lake Municipal Code Chapter 15.50. (BLDG, C-2)

32. At all times during the construction period, Developer shall retain the stamped, approved job copy of the plans and permit card onsite. (BLDG, C-3)

CONDITIONS FOR COMPLIANCE PRIOR TO FINAL SIGNOFF OR OCCUPANCY

33. Prior to final signoff or certificate of occupancy, Developer shall submit to the Building Division a final grading and drainage plan prepared by a licensed civil engineer depicting all final grades (with accurate elevations above sea level indicated) and onsite drainage control measures to prevent storm water runoff onto adjoining properties. (BLDG/ENG, F-1)

34. Prior to final signoff or certificate of occupancy, Developer shall complete all required offsite and onsite improvements for the project, including structures, paving, and landscaping, unless the Community Development Director allows Developer to provide security or an executed agreement approved by the City Attorney to ensure timely completion of such improvements. (PLNG/BLDG, F-2)

35. The applicants shall prepare and submit Landscaping and irrigation plans, including all required WELO checklists and forms, in compliance with the State of California Model Water Efficient Landscape Ordinance (WELO). The landscaping plans must include all water features, pools and spas. The landscaping and irrigation plans must be reviewed by the DWP and Planning Department. (PLNG, F-3)

36. A Lot Merger application shall be submitted to the Engineering Department prior to building permit issuance and the merger shall be recorded prior to occupancy of any building. (PLNG, F-4)

LICENSED ARCHITECT — JEFFREY D. MEITER — No. C-34580 — Exp.10-31-25 — STATE OF CALIFORNIA

811 Know what's below. Call 811 before you dig.

ENGINEER OF RECORD'S SEAL — REGISTERED PROFESSIONAL ENGINEER — JEFFREY D. MEITER — No. 64696 — CIVIL — STATE OF CALIFORNIA

VALUED ENGINEERING, INC
CIVIL ENGINEERING • LAND SURVEYING • LAND PLANNING
1529 W. 13TH STREET, UNIT G, UPLAND, CA 91786
PHONE (909) 982-4601
JEFFREY D. MEITER — R.C.E. No. 64696 — 12/20/2023

CITY OF BIG BEAR LAKE
ENGINEERING DIVISION
39707 BIG BEAR BLVD
BIG BEAR LAKE, CA 92315
PHONE (909) 866-5831
FAX (909) 866-7511

CITY OF BIG BEAR LAKE
BIG BEAR LAKE, CALIFORNIA
APPROVED BY: _____ DATE _____
R.C.E. _____ EXP. DATE _____

CITY OF BIG BEAR LAKE
MOUNTAIN AREA REGIONAL TRANSIT AUTHORITY
160-170 BUSINESS CENTER DRIVE
CONDITIONS OF APPROVAL

SEPTEMBER 2022
SHEET 11 OF 12
DRAWING NO. --

File: P:\JOBS\0762102\CAD\SHEETS\GRADING - PHASE 1\762102 PG11 COA.dwg Dec 20, 2023 - 2:33pm Kent

CONDITIONS REGARDING THE MITIGATION MONITORING PROGRAM FOR THE MITIGATED NEGATIVE DECLARATION

Mitigation Measures No. / Implementing Action	Implementation Timing	Party Responsible for Implementation	Party Responsible for Monitoring	Date of Completion /Notes
Biological Resources				
BIO-1: Whenever possible, impacts to native nesting birds will be avoided by not conducting project activities that involve clearing of vegetation, generation of mechanical noise, or ground disturbance during the typical breeding season (February 1 to September 1), if species covered under the Migratory Bird Treaty Act and Fish and Game Code sections 3503, 3503.5, and 3513 are determined to be present. If project activities must be conducted during the nesting bird season, a qualified Avian Biologist will conduct pre-construction Nesting Bird Surveys (NBS) prior to project-related disturbance to nestable vegetation to identify any active nests within a 500-ft radius of the construction area. If no active nests are found, no further action will be required. If an active nest is found, the biologist will set appropriate no-work buffers around the nest which will be based upon the nesting species, its sensitivity to disturbance, nesting stage and expected types, intensity and duration of disturbance. Buffers around active nests will be a minimum of 250 feet, unless the biologist determines that smaller buffers would be sufficient to avoid impacts to nesting birds. The nests and buffer zones shall be field checked weekly by a qualified biological monitor. The approved no-work buffer zone shall be clearly marked in the field, within which no disturbance activity shall commence until the qualified biologist has determined the young birds have successfully fledged and the nest is inactive.	During ground-disturbing activities that involve project activities that involve clearing of vegetation, generation of mechanical noise, or ground disturbance during the typical breeding season (February 1 to September 1).	Project Proponent, Contractor, Biologist	City of Big Bear Lake	
Cultural Resources				
CR-1: In the event that any historic or prehistoric cultural resources are inadvertently discovered, all construction work in the immediate vicinity of the discovery shall stop and a qualified archaeologist shall be engaged to discuss the discovery and determine if further mitigation measures are warranted.	Upon discovery of cultural resources	Contractor, Archaeological Monitor	City of Big Bear Lake	
CR-2: If human remains are discovered, work shall halt in that area until a determination can be made regarding the provenance of the human remains; and the procedures set forth in CEQA Section 15064.5(e), the California PRC (Section 5097.98), and the State Health and Safety Code (Section 7050.5) shall be undertaken.	Upon discovery of human remains	Contractor, Archaeological Monitor	City of Big Bear Lake	
Geology and Soils				
GEO-1: All structures shall be designed to meet the California Building Code provisions in the most current CBC edition and the ASCE Standard 7-16, where applicable. It is the responsibility of both the property owner and project structural engineer to determine the risk factors with respect to using CBC minimum design values for the proposed facilities.	Prior to Building Permit Issuance	Project Proponent/ Contractor	City of Big Bear Lake	
GEO-2: The potential for liquefaction should be properly evaluated by the project Geotechnical Engineer.	Prior to Building Permit Issuance	Project Proponent/ Geotechnical Engineer	City of Big Bear Lake	
GEO-3: Site preparation recommendations as listed in a City-approved Final Geotechnical Investigation report shall be incorporated into project design.	During site preparation	Project Proponent/ Contractor	City of Big Bear Lake	
Tribal Cultural Resources				
N-1: The use of noisy equipment outside or within the repair building shall not be loud, excessive, raucous, disturbing, or exceeding 60db at the property line.	During operations	Project Proponent	City of Big Bear Lake	

Know what's below. Call 811 before you dig.

ENGINEER OF RECORD'S SEAL
REGISTERED PROFESSIONAL ENGINEER
JEFFREY D. MEITER
No. 64696
CIVIL
STATE OF CALIFORNIA

VALUED ENGINEERING, INC
CIVIL ENGINEERING • LAND SURVEYING • LAND PLANNING
1529 W. 13TH STREET, UNIT G, UPLAND, CA 91786
PHONE (909) 982-4601
12/20/2023
JEFFREY D. MEITER R.C.E. No. 64696

CITY OF BIG BEAR LAKE
ENGINEERING DIVISION

39707 BIG BEAR BLVD
BIG BEAR LAKE, CA 92315
PHONE (909) 866-5831
FAX (909) 866-7511

CITY OF BIG BEAR LAKE
BIG BEAR LAKE, CALIFORNIA

APPROVED BY: _____ DATE

R.C.E. _____ EXP. DATE _____

LICENSED ARCHITECT
PIONEER, CLARK
No. C-41320
Exp.10-31-25
STATE OF CALIFORNIA

CITY OF BIG BEAR LAKE

MOUNTAIN AREA REGIONAL TRANSIT AUTHORITY
160-170 BUSINESS CENTER DRIVE

CONDITIONS OF APPROVAL

SEPTEMBER 2022

SHEET 12 OF 12

DRAWING NO.
--

File: P:\JOBS\762102\CAD\SHEETS\GRADING - PHASE 1\762102 PG12 COA.dwg Dec 20, 2023 - 2:33pm Kent

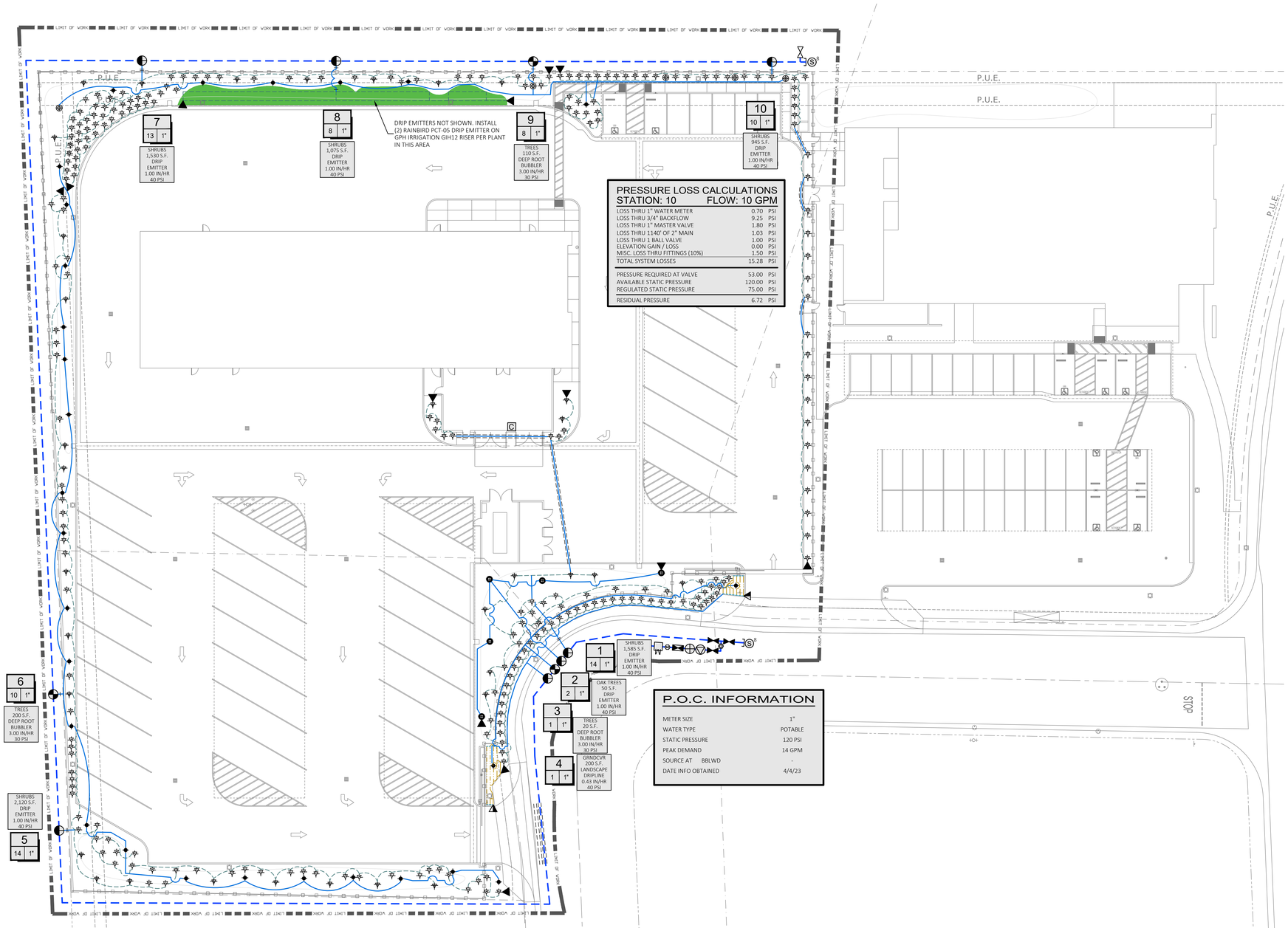

PRESSURE LOSS CALCULATIONS

STATION: 10 FLOW: 10 GPM

LOSS THRU 1" WATER METER	0.70	PSI
LOSS THRU 3/4" BACKFLOW	9.25	PSI
LOSS THRU 1" MASTER VALVE	1.80	PSI
LOSS THRU 1140' OF 2" MAIN	1.03	PSI
LOSS THRU 1 BALL VALVE	1.00	PSI
ELEVATION GAIN / LOSS	0.00	PSI
MISC. LOSS THRU FITTINGS (10%)	1.50	PSI
TOTAL SYSTEM LOSSES	15.28	PSI
PRESSURE REQUIRED AT VALVE	53.00	PSI
AVAILABLE STATIC PRESSURE	120.00	PSI
REGULATED STATIC PRESSURE	75.00	PSI
RESIDUAL PRESSURE	6.72	PSI

P.O.C. INFORMATION

METER SIZE	1"
WATER TYPE	POTABLE
STATIC PRESSURE	120 PSI
PEAK DEMAND	14 GPM
SOURCE AT BBLWD	-
DATE INFO OBTAINED	4/4/23

IRRIGATION PLANS ARE DIAGRAMMATIC IN NATURE. IRRIGATION MAINLINE AND ALL VALVES TO BE LOCATED ON PROJECT PROPERTY, IN PLANTER AREAS WHERE POSSIBLE. NO IRRIGATION EQUIPMENT IS TO BE INSTALLED IN STREETS, DRIVE AISLES OR BUILDINGS.

EQUIPMENT LEGEND

SYMBOL	MANUFACTURER/MODEL #	SIZE	DETAIL	NOTES
M	IRRIGATION WATER METER	1"	N/A	-
C	RAINBIR ESP12-LXMEF IRRIGATION CONTROLLER EQUIPPED WITH ESPLXMSM12 EXPANSION MODULE, LNK WIFI MODULE, AND WR2-RFC-48 RAIN/FREEZE SENSOR INSTALLED IN STRONG BOX SB-18SSW WALL MOUNT ENCLOSURE	24 STA.	'A', LI-2	(1,2)
	FEBCO 825YA REDUCED PRESSURE BACKFLOW PREVENTER LOCATED IN A STRONG BOX SBBC-22ALI VANDAL RESISTANT ENCLOSURE WITH INSULATED BLANKET	1"	'B', LI-2	(4)
	WATTS LFUSB-Z3 WATER PRESSURE REDUCING VALVE. SET TO AN OUTPUT PRESSURE OF 75 PSI AND ADJUST IN THE FIELD AS NECESSARY	1-1/2"	'H', LI-3	(3)
	RAINBIRD 100-EFB-CP NORMALLY CLOSED MASTER VALVE WITH PRS-D DIAL.	1-1/2"	'C', LI-2	(3)
	FLOMEC QS200-15 FLOW METER	1-1/2"	'D', LI-2	(3)
	WINTERIZATION AIR NOZZLE HOOK-UP	LINE SIZE	-	(3)
	NIBCO T-585 BRONZE BALL VALVE	1-1/2"	'E', LI-2	(3)
	NIBCO T-585 BRONZE WINTERIZATION VALVE	1-1/2"	'F', LI-2	(3)
	RAINBIRD #33DLRC SERIES QUICK COUPLING VALVE	3/4"	'G', LI-2	(3)
	RAINBIRD PESB SERIES ELECTRIC CONTROL VALVE	1"	'H', LI-2	(3)
	RAINBIRD XCZ-100-PRB-COM DRIP CONTROL ZONE ASSEMBLY	1"	'I', LI-2	(3)
	SCH. 40 PVC IRRIGATION MAINLINE - 24" MIN. COVER	1-1/2"	'J', LI-2	(3)
	SCH. 40 PVC NON-PRESSURE LATERAL LINE - 12" MIN. COVER	PLAN SIZE	'J', LI-2	(3)
	SCH. 40 PVC DRIP DISTRIBUTION LINE - 9" MIN. COVER	PLAN SIZE	'J', LI-2	(3)
	SCH 40 PVC IRRIGATION PIPE / WIRE SLEEVE - 24" MIN. COVER	SEE CHART	'K', LI-2	(3)
NOT SHOWN	UF RATED CONTROL WIRE, 12 GA COMMON, 14 GA PILOT	12/14 GA	'L', LI-2	-
S[1]	SPARE WIRES PULLED	-	'M', LI-2	-
	SALCO SLV-075-LF AUTOMATIC DRIP FLUSH VALVE	3/4"	'A', LI-3	(3)
	DRIPLINE MANUAL FLUSH VALVE	LINE SIZE	'D', LI-3	(3)
	SCH. 40 PVC DRIPLINE HEADER	3/4"	'J', LI-2 'G', LI-3	(3)
	NETAFIM TLCV6-18 LANDSCAPE DRIPLINE	17 MM	'E'-'G', LI-3	(3)
	STUB-OUT MAINLINE IN VALVE BOX FOR FUTURE EXPANSION	1"	-	(3)

(1) LANDSCAPE CONTRACTOR TO COORDINATE ELECTRICAL POWER WITH ELECTRICAL CONTRACTOR.
(2) INSTALL RAIN/FREEZE SENSOR NEAR TOP OF MECHANICAL ENCLOSURE WALL, FREE FROM ANY OVERHEAD OBSTRUCTIONS.
(3) PIPING AND VALVES ARE SHOWN IN HARDSCAPE FOR CLARITY ONLY.
(4) CONTRACTOR TO LOCATE BACKFLOW PREVENTER IN SHRUB AREA AND SCREEN WHENEVER POSSIBLE.

* = UNLESS OTHERWISE NOTED

SPRINKLER LEGEND

SYMBOL	MANUFACTURER/MODEL #	NOZZLE	RAD.	PSI	FLOW (GPM) Q	T	H	TT	TQ	F	Varı	PRECIP RATE	DETAIL	NOTES
TREE BUBBLERS														
	RAINBIRD RWS-1401-B-C	F		30						0.25		3.00	'N', LI-2	(2)
	RAINBIRD RWS-1402-B-C	F		30						0.50		3.00	'N', LI-2	(3)
	RAINBIRD PCT-07 DRIP EMITTER ON GPH IRRIGATION GIH12 RISER			30						7.00		1.00	'B', LI-3	(4,5)
SHRUB BUBBLERS														
	RAINBIRD PCT-05 DRIP EMITTER ON GPH IRRIGATION GIH12 RISER			30						5.00		1.00	'B'&'C', LI-3	(4,6)
	RAINBIRD PCT-07 DRIP EMITTER ON GPH IRRIGATION GIH12 RISER			30						7.00		1.00	'B'&'C', LI-3	(4,6)

(1) IN PLANTER AREAS, USE BOTTOM INLET ONLY.
(2) EACH TREE TO RECEIVE (2) BUBBLERS FOR A TOTAL OF 0.50 GPM PER SYMBOL. LOCATE BUBBLER ON OPPOSITE SIDES OF TREE, 18"-24" CLEAR OF TRUNK.
(3) EACH TREE TO RECEIVE (2) BUBBLERS FOR A TOTAL OF 1.00 GPM PER SYMBOL. LOCATE BUBBLER ON OPPOSITE SIDES OF TREE, 18"-24" CLEAR OF TRUNK.
(4) FLOW IS GALLONS PER HOUR
(5) EACH TREE IS TO RECEIVE (3) EMITTERS FOR A TOTAL OF 21 GPH PER SYMBOL. EMITTERS TO BE LOCATED EQUIDISTANT AROUND TRUCK, 18" MIN. CLEAR OF TRUNK
(6) EACH SHRUB TO RECEIVE (2) EMITTERS. EMITTERS TO BE LOCATED ON OPPOSITE SIDES OF SHRUB, 6"-12" CLEAR OF PLANT BASE. INSTALL EMITTERS PARALLEL TO SLOPE, 6" UPHILL FROM SHRUB WHERE INSTALLED ON SLOPES.

PIPE SIZING CHART

	3/4" PIPE
	1" PIPE
	1 1/4" PIPE
	1 1/2" PIPE
	2" PIPE
	2 1/2" PIPE
	3" PIPE
	4" PIPE
	6" PIPE
	8" PIPE

SCH 40 PVC SLEEVING CHART

1 1/4" SLEEVE	1-4 WIRES	1/2" PIPE
1 1/2" SLEEVE	5-10 WIRES	3/4" PIPE
2" SLEEVE	11-20 WIRES	1" PIPE
2 1/2" SLEEVE	21-30 WIRES	1 1/4" PIPE
3" SLEEVE	31-40 WIRES	1 1/2" PIPE
4" SLEEVE	41-60 WIRES	2" PIPE
6" SLEEVE	61-99 WIRES	2 1/2"-3" PIPE
8" SLEEVE	100+ WIRES	4" PIPE
10" SLEEVE	N/A	6" PIPE

HYDROZONE AREA
IRRIGATION TYPE
PRECIP RATE
PRESSURE

STATION # / CONTROLLER

FLOW (GPM)	VALVE SIZE

NORTH 0 20' 40' 80'

STAMPS

CONSULTANT BRANDING

RUHNAU CLARKE ARCHITECTS

F:\Mountain Transit Admin Bldg\CD's\Phase 1\Irrigation\dwg Admin Bldg\CD's\Phase 1\Irrigation.dwg
Apr 06, 2023 - 4:22pm kay kite

PROJECT No. : 5-08-01
4/6/2023 4:22 PM

DRAWN BY: CHECKED BY:

ISSUE No.____ DATE____ DESCRIPTION____
REVISION No.____ DATE____ DESCRIPTION____

RUHNAUCLARKE.COM

3775 TENTH STREET, RIVERSIDE CALIFORNIA 92501 (951) 684 4664 / 5751 PALMER WAY, SUITE C, CARLSBAD CALIFORNIA 92010 (760) 438 5899

MOUNT TRANSIT MAINTENANCE FACILITY
INCREMENT #2
170 BUSINESS CENTER. BIG BEAR LAKE, CALIFORNIA
BIG BEAR LAKES

LANDSCAPE
Irrigation Plan

LI-1.0

5-08-01

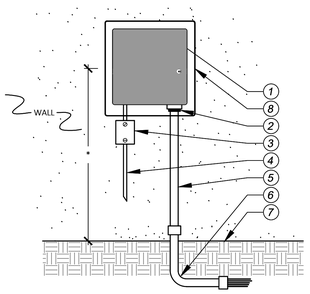

1. WALL MOUNT CONTROLLER - MOUNT PER MANUFACTURER
2. LOCKING NUT
3. ELECTRICAL JUNCTION BOX
4. 120V WIRES IN RIGID CONDUIT PER LOCAL CODES
5. RIGID CONDUIT FOR COMMON / CONTROL WIRES
6. SWEEP ELL - SIZE AS REQUIRED
7. FINISH GRADE (FLOOR SURFACE FOR INDOOR MOUNT)
8. CONTROLLER ENCLOSURE PER LEGEND AND/OR NOTES

* MOUNT CONTROLLER AT "EYE-LEVEL" (+/- 5'-0")

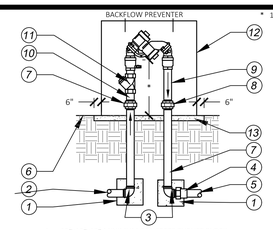

1. 12"x12"x12" MINIMUM CONCRETE THRUST BLOCK
2. TO POINT OF CONNECTION - ADAPT AS NECESSARY
3. BRASS 90 DEGREE ELL - TxT
4. PVC SCH 40 MALE ADAPTER - SIZE AS REQUIRED
5. PVC MAINLINE PER LEGEND - SIZE PER PLAN
6. FINISH GRADE
7. BRASS NIPPLE - TxT - LENGTH AS REQUIRED
8. BRASS UNION - SIZE AS REQUIRED
9. BRASS NIPPLE - TxT - 4" MINIMUM LENGTH
10. BRASS NIPPLE - TxT - 2" MINIMUM LENGTH
11. BRASS Y-STRAINER - 60 MESH SCREEN W/ HOSE BIB
12. VANDAL RESISTANT ENCLOSURE - MODEL PER LEGEND INSTALL PER MANUFACTURER'S REQUIREMENTS
13. INSTALL 4" CONCRETE PAD, EXTEND 6" PAST ENCLOSURE

NOTES:
INSTALL BACKFLOW PREVENTER PER LOCAL CODES, HEALTH DEPARTMENT STANDARDS, AND MANUFACTURER'S DIRECTIONS. VERIFY LOCAL REQUIREMENTS PRIOR TO INSTALLATION. WHERE BACKFLOW DEVICE SIZE IS SMALLER THAN MAINLINE, ENTIRE APPARATUS TO BE SIZE OF MAINLINE. BUSH DOWN ONLY AT THE BACKFLOW DEVICE. FINAL LOCATION OF DEVICE TO BE DETERMINED IN THE FIELD. BACKFLOW TO BE LOCATED IN PLANTER AREA AND SCREENED WITH SHRUBS AS POSSIBLE.

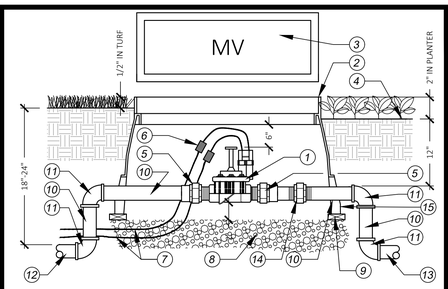

1. ELECTRIC CONTROL VALVE PER LEGEND
2. JUMBO RECTANGULAR VALVE BOX WITH BOLT-DOWN LID AND SS BOLT, LID AND BOX TO BE GREEN
3. HEAT BRAND "MV" ON LID IN 2" HIGH CHARACTERS
4. FINISH GRADE
5. PVC SCH 40 MALE ADAPTER
6. WATERPROOF WIRE CONNECTION W/36" EXPANSION LOOP
7. UF WIRES TO CONTROLLER MASTER VALVE OUTPUT, GAUGE PER LEGEND
8. 3/4" CRUSHED ROCK - 6" DEEP
9. COMMON BRICK - 4 REQUIRED
10. PVC MAINLINE PER LEGEND - LENGTH AS REQUIRED
11. PVC SCH 40 ELL - SxS
12. MAINLINE PIPING FROM POINT OF CONNECTION
13. MAINLINE PIPING TO CONTROL VALVES
14. PVC UNION - SIZE AS REQUIRED
15. VALVE BOX EXTENSION(S) AS REQUIRED

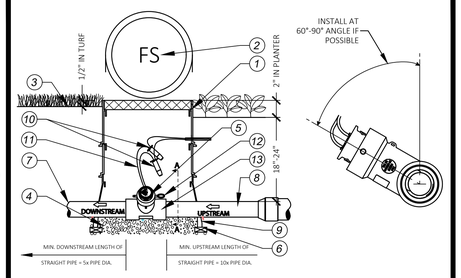

1. 10" ROUND PLASTIC VALVE BOX WITH LOCKING LID AND SS BOLT. BOX AND LID TO BE GREEN
2. HEAT BRAND "FS" ON LID IN 2" HIGH CHARACTERS
3. FINISH GRADE
4. 3/4" CRUSHED ROCK - 4" DEEP
5. FLOW SENSOR INSERT
6. COMMON BRICK - 4 REQUIRED
7. PVC MAINLINE FROM POC - PER LEGEND
8. PVC MAINLINE TO SYSTEM -PER LEGEND
9. VALVE BOX EXTENSIONS AS REQUIRED
10. WATERPROOF WIRE CONNECTORS WITH 36" EXPANSION LOOP
11. CABLE TO TRANSMITTER/CONTROLLER PER MANUFACTURER
12. QUICK RELEASE PIN
13. PVC TEE - SIZE PER PLAN

A Controller

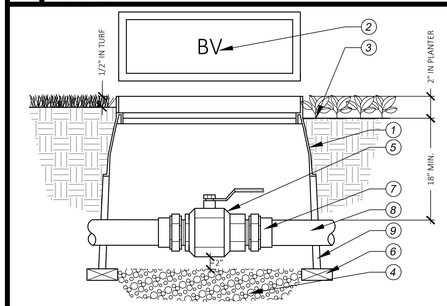

1. RECTANGULAR VALVE BOX WITH BOLT-DOWN LID AND SS BOLT. BOX AND LID TO BE GREEN
2. HEAT BRAND "BV" ON LID IN 2" HIGH CHARACTERS
3. FINISH GRADE
4. 3/4" CRUSHED ROCK - 4" DEPTH
5. BALL VALVE PER IRRIGATION PLAN
6. COMMON BRICK - 4 REQUIRED
7. SCH 40 PVC MALE ADAPTER - 2 REQUIRED
8. MAINLINE PIPING PER IRRIGATION PLAN
9. VALVE BOX EXTENSION(S) AS REQUIRED

NOTE:
USE TEFLON TAPE ON ALL MALE PIPE THREADS.

B Backflow Preventer

1. 10" ROUND PLASTIC VALVE BOX W/ LOCKING LID
2. HEAT BRAND "BV" ON LID IN 2" HIGH LETTERS
3. FINISH GRADE
4. 3/4" CRUSHED ROCK - 6" DEPTH
5. BALL VALVE PER IRRIGATION PLAN
6. COMMON BRICK - 4 REQUIRED
7. SCH 40 PVC MALE ADAPTER
8. MAINLINE PIPING PER IRRIGATION PLAN
9. VALVE BOX EXTENSION(S) AS REQUIRED
10. SCH 40 PVC ELBOW

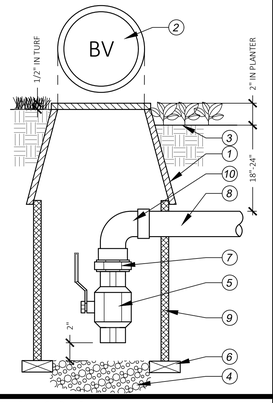

NOTE:
USE TEFLON TAPE ON ALL MALE PIPE THREADS.

MANUAL DRAIN VALVE WINTERIZING:

THE DRAIN VALVE SHOULD BE INSTALLED ON THE MAINLINE AT THE LOWEST POINT OF THE SYSTEM. ADDITIONAL DRAIN VALVES SHOULD BE INSTALLED IF THERE ARE MULTIPLE LOW POINTS ALONG THE RUN OF PIPE WHERE WATER COLLECTION MIGHT OCCUR. PIPING SHOULD BE SLOPED TO ALLOW WATER TO DRAIN OUT.

C Master Valve

NOTE:
USE TEFLON TAPE ON ALL MALE PIPE THREADS.

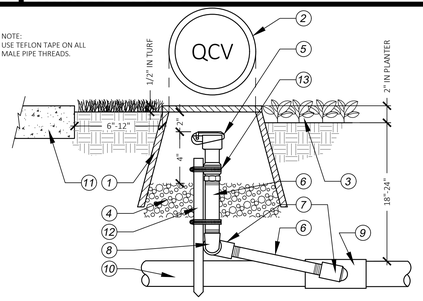

1. 10" ROUND PLASTIC VALVE BOX WITH LOCKING LID AND SS BOLT. BOX AND LID TO BE GREEN
2. HEAT BRAND "QCV" ON LID IN 2" HIGH CHARACTERS
3. FINISH GRADE
4. 3/4" CRUSHED ROCK 4" DEEP
5. QUICK COUPLER PER LEGEND
6. PVC SCH 80 NIPPLE LENGTH AS REQUIRED
7. PVC SCH 40 STREET ELL - TxT
8. PVC SCH 40 ELL - TxT
9. SCH 40 PVC MAINLINE FITTING
10. PVC SCH 40 MAINLINE PIPING PER EQUIPMENT LEGEND
11. WALK, CURB, OR WALL, ETC.
12. #4 REBAR, 18" MINIMUM LENGTH SUPPORT STAKE
13. STAINLESS STEEL CLAMP - 2 REQ.

D Flow Sensor

NOTES:
TEE OFF MAINLINE TO BE SAME SIZE AS LATERAL LINE EXITING VALVE. ONLY REDUCE PIPE AT THE VALVE.

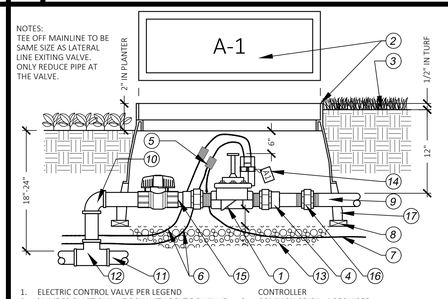

1. ELECTRIC CONTROL VALVE PER LEGEND
2. 'JUMBO' PLASTIC VALVE BOX WITH BOLT DOWN LID AND SS BOLT - HEAT BRAND STATION NUMBER ON LID IN 2" HIGH CHARACTERS. BOX AND LID TO BE GREEN
3. FINISH GRADE
4. PVC SCH 40 MALE ADAPTER - SIZE AS REQUIRED - TYP. OF 2
5. WATERPROOF WIRE CONNECTOR WITH 36" COILED EXPANSION LOOP
6. WIRES FROM CONTROLLER
7. COMMON WIRE TO OTHER VALVES ON SAME CONTROLLER
8. COMMON BRICK - 4 REQUIRED
9. PVC LATERAL LINE PER LEGEND
10. PVC SCH 40 ELL - SxS
11. PVC MAINLINE PER LEGEND
12. SCH 40 PVC MAINLINE FITTING
13. 3/4" GRAVEL - 6" DEEP
14. 'CHRISTY'S' I.D. TAG PER VALVE NUMBER
15. SCH. 80 PVC BALL VALVE - SAME SIZE AS CONTROL VALVE
16. PVC UNION - SIZE AS REQUIRED
17. VALVE BOX EXTENSION(S) AS REQUIRED

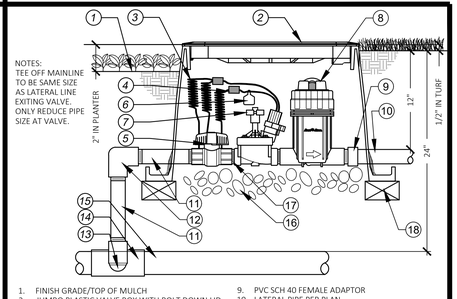

NOTES:
TEE OFF MAINLINE TO BE SAME SIZE AS LATERAL LINE EXITING VALVE. ONLY REDUCE PIPE SIZE AT VALVE.

1. FINISH GRADE/TOP OF MULCH
2. JUMBO PLASTIC VALVE BOX WITH BOLT DOWN LID AND SS BOLT - HEAT BRAND STATION NUMBER ON LID IN 2" HIGH CHARACTERS. BOX COLOR TO BE GREEN
3. 36-INCH LINEAR LENGTH OF WIRE, COILED
4. WATERPROOF WIRE CONNECTION
5. BALL VALVE
6. 'CHRISTYS' I.D. TAG PER VALVE NUMBER
7. REMOTE CONTROL VALVE
8. PRESSURE REGULATING QUICK CHECK BASKET FILTER
9. PVC SCH 40 FEMALE ADAPTOR
10. LATERAL PIPE PER PLAN
11. PVC SCH 80 NIPPLE (LENGTH AS REQUIRED)
12. PVC SCH 40 ELL
13. PVC SCH 80 NIPPLE (2-INCH LENGTH, HIDDEN) AND PVC SCH 40 ELL
14. PVC SCH 40 TEE OR ELL
15. MAINLINE PIPE
16. 3-INCH MINIMUM DEPTH OF 3/4-INCH WASHED GRAVEL
17. PVC SCH 80 NIPPLE
18. COMMON BRICK - 4 REQUIRED

E Ball Valve

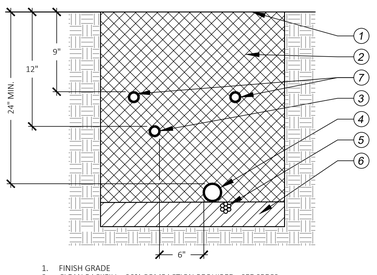

1. FINISH GRADE
2. CLEAN BACKFILL - 90% COMPACTION REQUIRED - SEE SPECS
3. NON-PRESSURE LATERAL LINE PER LEGEND
4. PRESSURE SUPPLY LINE PER LEGEND
5. CONTROL WIRES - INSTALL BELOW PRESSURE SUPPLY LINE
6. PROVIDE 2" OF CLEAN BACKFILL BELOW PRESSURE MAINLINE
7. DRIP DISTRIBUTION LINE PER LEGEND

NOTES:
BUNDLE AND TAPE WIRES AT 12'O.C. PIGTAIL AND LOOP CONTROL WIRES AT ALL 90° CHANGES IN DIRECTION. SPLICING OF WIRE RUNS IS NOT ALLOWED UNLESS APPROVED BY THE OWNER'S REPRESENTATIVE. 36" MIN. COVER IS REQUIRED FOR RECLAIMED WATER MAINLINE (WHERE APPLICABLE). INSTALL 1'x1'X1' THRUST BLOCK AT ALL TERMINAL POINTS ON MAINLINE.

F Manual Drain Valve

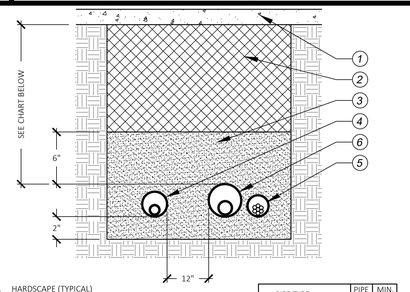

1. HARDSCAPE (TYPICAL)
2. CLEAN BACKFILL - 90% COMPACTION REQUIRED - SEE SPECS
3. SAND (TYPICAL)
4. NON-PRESSURE LATERAL LINE/ SLEEVE (SIZE PER CHART)
5. CONTROL WIRE SLEEVE ADJACENT TO MAINLINE SLEEVE (SIZE PER CHART) 6. PRESSURE SUPPLY LINE / SLEEVE (SIZE PER CHART)

PIPE TYPE	PIPE SIZE	MIN. DEPTH
PRESSURE	<3"	30"
MAINLINE	3"+	36"
NON PRESSURE	<3"	24"
LATERAL	3"+	30"

NOTES:
SIZE ALL SLEEVES PER SLEEVING CHART ON PLANS. EXTEND SLEEVES 12" BEYOND EDGE OF HARDSCAPE ON BOTH ENDS. RECLAIMED WATER SLEEVES TO BE A MINIMUM 42"-48" DEEP (OR PER WATER DISTRICT STANDARDS) WHERE APPLICABLE.

G Quick Coupler Valve

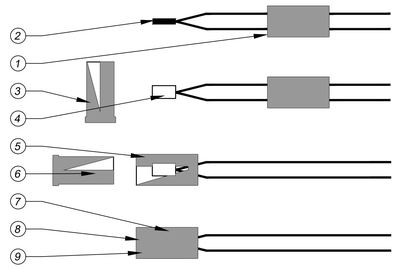

1. SLIP BASE SOCKET OVER END OF WIRES
2. STRIP WIRES APPROX. 5/8" FROM ENDS - TWIST TOGETHER
3. APPLY SEALER TO OUTSIDE OF SEALING PLUG AND FILL CAVITY WITH SEALER
4. PUT CRIMP END OVER WIRE ENDS - CRIMP SLEEVE AND CUT OFF EXCESS WIRE
5. PULL BASE SOCKET OVER END OF WIRES AS FAR AS POSSIBLE
6. PUSH SEALING PLUG INTO BASE SOCKET
7. PUSH WIRES TO END OF BASE SOCKET TO INSURE COMPLETE SEALING OF CONNECTION
8. COMPLETED WATERPROOF WIRE CONNECTION
9. SPEARS DS-100 WIRE CONNECTOR OR APPROVED EQUAL

H Remote Control Valve

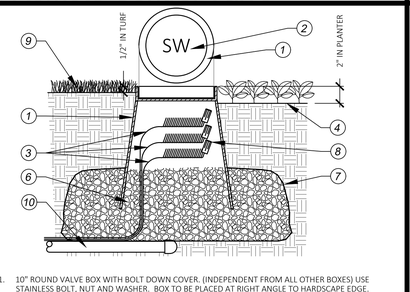

1. 10" ROUND VALVE BOX WITH BOLT DOWN COVER. (INDEPENDENT FROM ALL OTHER BOXES) USE STAINLESS BOLT, NUT AND WASHER. BOX TO BE PLACED AT RIGHT ANGLE TO HARDSCAPE EDGE.
2. HEAT BRAND 'SW' ONTO LID IN 2" CHARACTERS
3. SPARE WIRES (PER PLAN) AND ONE COMMON WIRE CONTINUOUS FROM CONTROLLER. SEE EQUIPMENT LEGEND FOR SIZE AND COLOR.
4. FINISH GRADE IN SHRUB AREAS - 3" BELOW TOP OF BOX
5. PRESSURE SUPPLY LINE PER PLAN
6. 3/4" PEA GRAVEL. FILL TO TOP OF VALVE BOX HOLES
7. LANDSCAPE FABRIC
8. CAP WIRES WITH APPROVED WATERTIGHT WIRE CONNECTOR
9. FINISH GRADE IN TURF AREAS - 1" BELOW TOP OF BOX
10. CAP PRESSURE SUPPLY LINE DIRECTLY BELOW CENTER OF SPARE WIRE VALVE BOX (WHERE OCCURS)

I Drip Control Valve Assembly

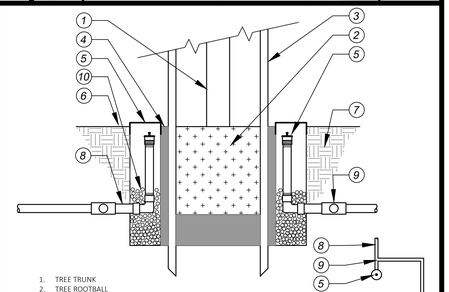

1. TREE TRUNK
2. TREE ROOTBALL
3. TREE SUPPORT STRUCTURE PER PLANTING PLAN
4. PLANT BACKFILL PER PLANTING PLAN
5. BUBBLER ASSEMBLY PER IRRIGATION LEGEND (2 PER TREE)
6. FINISH GRADE
7. UNDISTURBED NATIVE SOIL
8. PVC LATERAL LINE PER LEGEND
9. SCH 40 PVC TEE AROUND PLANTING PIT
10. PEA GRAVEL IN BASE OF DRAIN PIPE

* INSTALL ASSEMBLY WITH CAP FLUSH TO GRADE

J Trenching

K Sleeving

L Wire Connections

M Spare Wire Box

N Tree Bubbler Heads

STAMPS

CONSULTANT BRANDING

RUHNAU CLARKE ARCHITECTS

F:\Mountain Transit Admin Bldg\CD's\Phase 1\irrigation.dwg

PROJECT No. : 5-08-01
6/27/2023 3:48 PM

DRAWN BY: CHECKED BY:

ISSUE No.____ DATE____ DESCRIPTION____
ISSUE No.____ DATE____ DESCRIPTION____
ISSUE No.____ DATE____ DESCRIPTION____
ISSUE No.____ DATE____ DESCRIPTION____

REVISION No.____ DATE____ DESCRIPTION____
REVISION No.____ DATE____ DESCRIPTION____
REVISION No.____ DATE____ DESCRIPTION____
REVISION No.____ DATE____ DESCRIPTION____

RUHNAUCLARKE.COM
3775 TENTH STREET, RIVERSIDE CALIFORNIA 92501 (951) 684 4664 / 5751 PALMER WAY, SUITE C, CARLSBAD CALIFORNIA 92010 (760) 438 5899

MOUNT TRANSIT MAINTENANCE FACILITY
INCREMENT #2
170 BUSINESS CENTER. BIG BEAR LAKE, CALIFORNIA
BIG BEAR LAKES

LANDSCAPE
Irrigation Details
-

LI-2.0

5-08-01

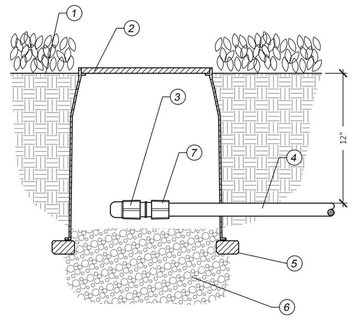

1. FINISH GRADE
2. 6" TAN ROUND VALVE BOX
3. AUTOMATIC FLUSH VALVE PER EQUIPMENT LEGEND
4. SCH. 40 PVC DRIP SUPPLY LINE
5. BRICK SUPPORTS (THREE REQUIRED)
6. 3/4" PEA GRAVEL SUMP
7. 3/4" HOSE THREAD ADAPTER

A Automatic Flush Valve

SCALE:

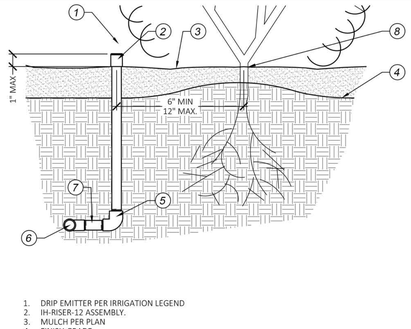

1. DRIP EMITTER PER IRRIGATION LEGEND
2. IH-RISER-12 ASSEMBLY.
3. MULCH PER PLAN
4. FINISH GRADE
5. SCHEDULE 40 PVC ELBOW, TXT
6. PVC TEE SCH. 40 OR ELBOW LINE SIZE
7. SCHEDULE 80 PVC NIPPLE, TXT, MAXIMUM 24" LENGTH.
8. PLANT BASE

B Drip Emitter

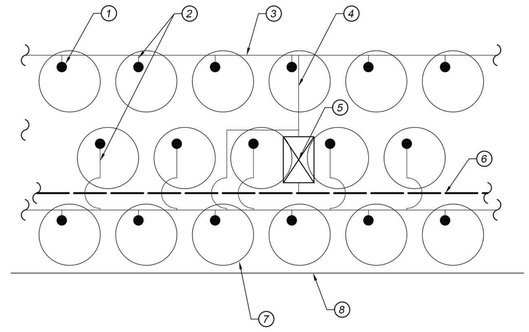

1. DRIP EMITTER PER IRRIGATION EQUIPMENT LEGEND AND EMITTER INSTALLATION DETAIL
2. SCH. 40 PVC NIPPLE - LENGTH AS REQUIRED
3. DRIP SUPPLY LINE PER IRRIGATION PLAN. CONTRACTOR TO ADJUST LATERAL LOCATION IN THE FIELD AS REQUIRED TO LIMIT NIPPLE LENGTHS
4. IRRIGATION LATERAL PER IRRIGATION PLAN
5. DRIP CONTROL VALVE ASSEMBLY PER PLAN
6. IRRIGATION MAINLINE PER PLAN
7. SHRUB PER PLANTING PLAN
8. EDGE OF HARDSCAPE/PLANTER AREA PER PLAN

C Shrub Drip Emitter Layout

SCALE: 1/2"=1'

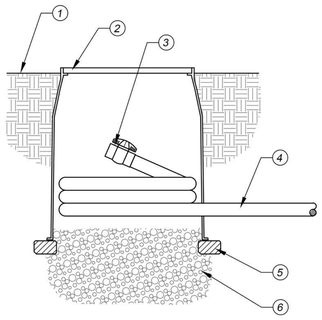

1. FINISH GRADE
2. 6" TAN ROUND VALVE BOX
3. PVC BALL VALVE - LINE SIZE
4. BLANK DRIPLINE
5. BRICK SUPPORTS (THREE REQUIRED)
6. 3/4" PEA GRAVEL SUMP

D Dripline Flush Valve

SCALE:

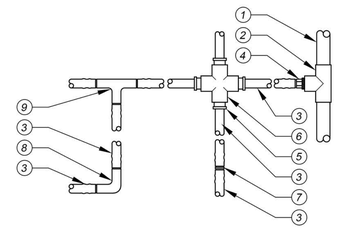

1. PVC PIPE (PER LEGEND)
2. SCH. 40 PVC TEE
3. LANDSCAPE DRIP TUBING (PER LEGEND)
4. SCH. 40 PVC MALE ADAPTER
5. COMPRESSION ADAPTER FITTING
6. SCH. 40 PVC CROSS
7. COMPRESSION COUPLING
8. COMPRESSION ELBOW FITTING
9. COMPRESSION TEE FITTING

NOTES:
ALL PERIMETER LATERALS ARE TO BE 2" TO 4" FROM THE EDGE OF PLANTER AREA. CONTRACTOR TO SIZE PVC SUPPLY MANIFOLD TO COMPENSATE FOR FLUSH VALVE FLOWS. THE TOTAL LENGTH OF ALL INTERCONNECTED DRIP LINE SHALL NOT EXCEED THE MAXIMUM RUN LENGTH.

E Dripline Fittings

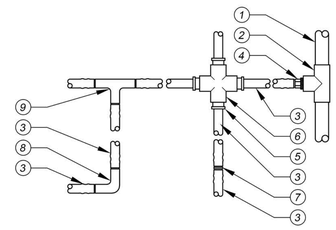

1. PVC PIPE (PER LEGEND)
2. SCH. 40 PVC TEE
3. LANDSCAPE DRIP TUBING (PER LEGEND)
4. SCH. 40 PVC MALE ADAPTER
5. COMPRESSION ADAPTER FITTING
6. SCH. 40 PVC CROSS
7. COMPRESSION COUPLING
8. COMPRESSION ELBOW FITTING
9. COMPRESSION TEE FITTING

NOTES:
ALL PERIMETER LATERALS ARE TO BE 2" TO 4" FROM THE EDGE OF PLANTER AREA. CONTRACTOR TO SIZE PVC SUPPLY MANIFOLD TO COMPENSATE FOR FLUSH VALVE FLOWS. THE TOTAL LENGTH OF ALL INTERCONNECTED DRIP LINE SHALL NOT EXCEED THE MAXIMUM RUN LENGTH.

F Dripline Fittings

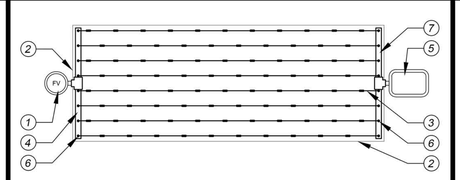

1. AUTOMATIC FLUSH VALVE (PER LEGEND) PLUMBED TO TUBING
2. AREA PERIMETER
3. LANDSCAPE DRIP TUBING (PER LEGEND)
4. PVC FLUSH MANIFOLD
5. REMOTE CONTROL VALVE WITH FILTER AND PRESSURE REGULATOR (SEE RCV DETAIL)
6. MANIFOLD-TO-ELBOW CONNECTION
7. PVC SUPPLY MANIFOLD

NOTES:
ALL PERIMETER LATERALS ARE TO BE 2" TO 4" FROM THE EDGE OF PLANTER AREA.

G Dripline End Connection

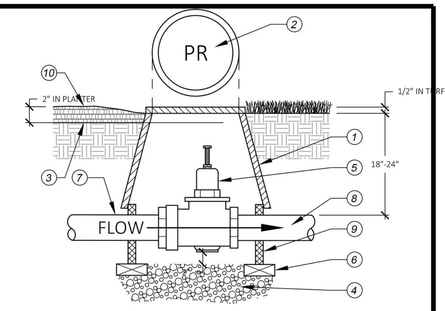

1. 10" ROUND PLASTIC VALVE BOX WITH LOCKING LID AND SS BOLT
2. HEAT BRAND BRAND "PR" ON LID IN 2" HIGH CHARACTERS
3. FINISH GRADE
4. 3/4" CRUSHED ROCK - 4" DEEP
5. PRESSURE REGULATOR PER LEGEND. SET PER PLAN
6. COMMON BRICK - 4 REQUIRED
7. PVC MAINLINE FROM POC - PER LEGEND
8. PVC MAINLINE TO SYSTEM - PER LEGEND
9. VALVE BOX EXTENSIONS AS REQUIRED
10. MULCH PER PLANTING PLAN

H Pressure Regulating Valve

Irrigation Maintenance	January	February	March	April	May	June	July	August	September	October	November	December
Adjust Sprinkler Height		X										
Test Entire System (weekly)	X	X	X	X	X	X	X	X	X	X	X	X
Flush out drip systems	X	X	X	X	X	X	X	X	X	X	X	X
Test Backflow Preventer				X								
Adjust Controller Schedule	X	X	X	X	X	X	X	X	X	X	X	X
Flush Drip Valve Filter	2X	2X	2X	2X	2X	2X	2X	2X	2X	2X	2X	2X
Check for Clogged/Non-Functioning Nozzles	X	X	X	X	X	X	X	X	X	X	X	X
Clean Basket Strainer		X		X		X		X		X		
Clean Wye Strainers		X			X			X			X	
Check all Valves for Leaks		X		X		X		X		X		
Replace Rain Sensor Wafers		X										

I Maintenance Schedule

California Water Efficient Landscape Worksheet						
Reference Evapotranspiration (ET_o)	51.27	Project Type	Non-Residential			0.45
Hydrozone # / Planting Description	Plant Factor (PF)	Irrigation Method	Irrigation Efficiency (IE)	ETAF (PF/IE)	Landscape Area (Sq. Ft.)	ETAF x Area	Estimated Total Water Use (ETWU)
Regular Landscape Areas							
Shrubs	0.3	Drip	0.81	0.37	25,695	9,517	302,510
Trees	0.3	Bubbler	0.81	0.37	9,230	3,419	108,666
				Totals	34,925	12,935	411,176
						ETWU Total	411,176
						Maximum Allowed Water Allowance (MAWA)	499,579

ETAF Calculations	
Regular Landscape Areas	
Total ETAF x Area	12,935
Total Area	34,925
Average ETAF	0.37

J Water Use Calculations

Yearly ET0																	
Jan	Feb	Mar	Apr	May	Jun	Jul	Aug	Sep	Oct	Nov	Dec	ET0					
1.84	2.4	3.91	5.22	6.43	6.99	6.33	5.88	4.81	3.61	2.25	1.6	51.27					
0.29	0.38	0.62	0.82	1.02	1.10	1.00	0.93	0.76	0.57	0.36	0.25						

IRRIGATION CONTROLLER SCHEDULE FOR FIRST SIX MONTHS AFTER PLANTING

CONTROLLER

Station	Flow (gpm)	Sprinkler Type	Plant Type	App.Rate Inches/Hr.	Water Days	Daily Run Time, Min.	Station	Flow (gpm)	Sprinkler Type	Plant Type	App.Rate Inches/Hr.	Water Days	Daily Run Time, Min.
1	12	Emitter	Shrubs	1	4	11	6	10	Bubbler	Trees	3	4	4
2	2	Emitter	Oaks	1	4	18	7	13	Emitter	Shrubs	1	4	11
3	1	Bubbler	Trees	3	4	4	8	8	Emitter	Shrubs	1	4	11
4	1	Dripline	Grndcvr	0.43	4	34	9	8	Bubbler	Trees	3	4	4
5	14	Emitter	Shrubs	1	4	11	10	10	Emitter	Shrubs	1	4	11

IRRIGATION CONTROLLER SCHEDULE AFTER SIX MONTH PLANT ESTABLISHMENT PERIOD

CONTROLLER

Station	Flow (gpm)	Sprinkler Type	Plant Type	App.Rate Inches/Hr.	Water Days	Daily Run Time, Min.	Station	Flow (gpm)	Sprinkler Type	Plant Type	App.Rate Inches/Hr.	Water Days	Daily Run Time, Min.
1	12	Emitter	Shrubs	1	3	11	6	10	Bubbler	Trees	3	3	4
2	2	Emitter	Oaks	1	3	18	7	13	Emitter	Shrubs	1	3	11
3	1	Bubbler	Trees	3	3	4	8	8	Emitter	Shrubs	1	3	11
4	1	Dripline	Grndcvr	0.43	3	34	9	8	Bubbler	Trees	3	3	4
5	14	Emitter	Shrubs	1	3	11	10	10	Emitter	Shrubs	1	3	11

K Controller Schedules

STAMPS

CONSULTANT BRANDING

RUHNAU CLARKE ARCHITECTS

F:\Mountain Transit Admin Bldg\03's\Phase 1\irrigation.dwg

PROJECT No. : 5-08-01
4/6/2023 4:10 PM

DRAWN BY: CHECKED BY:

ISSUE No.	DATE	DESCRIPTION	REVISION No.	DATE	DESCRIPTION
ISSUE No.	DATE	DESCRIPTION	REVISION No.	DATE	DESCRIPTION
ISSUE No.	DATE	DESCRIPTION	REVISION No.	DATE	DESCRIPTION
ISSUE No.	DATE	DESCRIPTION	REVISION No.	DATE	DESCRIPTION

THESE DRAWINGS AND SPECIFICATIONS ARE THE PROPERTY AND COPYRIGHT OF RUHNAU CLARKE ARCHITECTS AND SHALL NOT BE USED IN WHOLE OR IN PART WITHOUT THE WRITTEN PERMISSION OF RUHNAU CLARKE ARCHITECTS

RUHNAUCLARKE.COM
3775 TENTH STREET, RIVERSIDE CALIFORNIA 92501 (951) 684 4664 / 5751 PALMER WAY, SUITE C, CARLSBAD CALIFORNIA 92010 (760) 438 5899

MOUNT TRANSIT MAINTENANCE FACILITY
INCREMENT #2
170 BUSINESS CENTER. BIG BEAR LAKE, CALIFORNIA
BIG BEAR LAKES

LANDSCAPE
Irrigation Details
-

LI-3.0

5-08-01

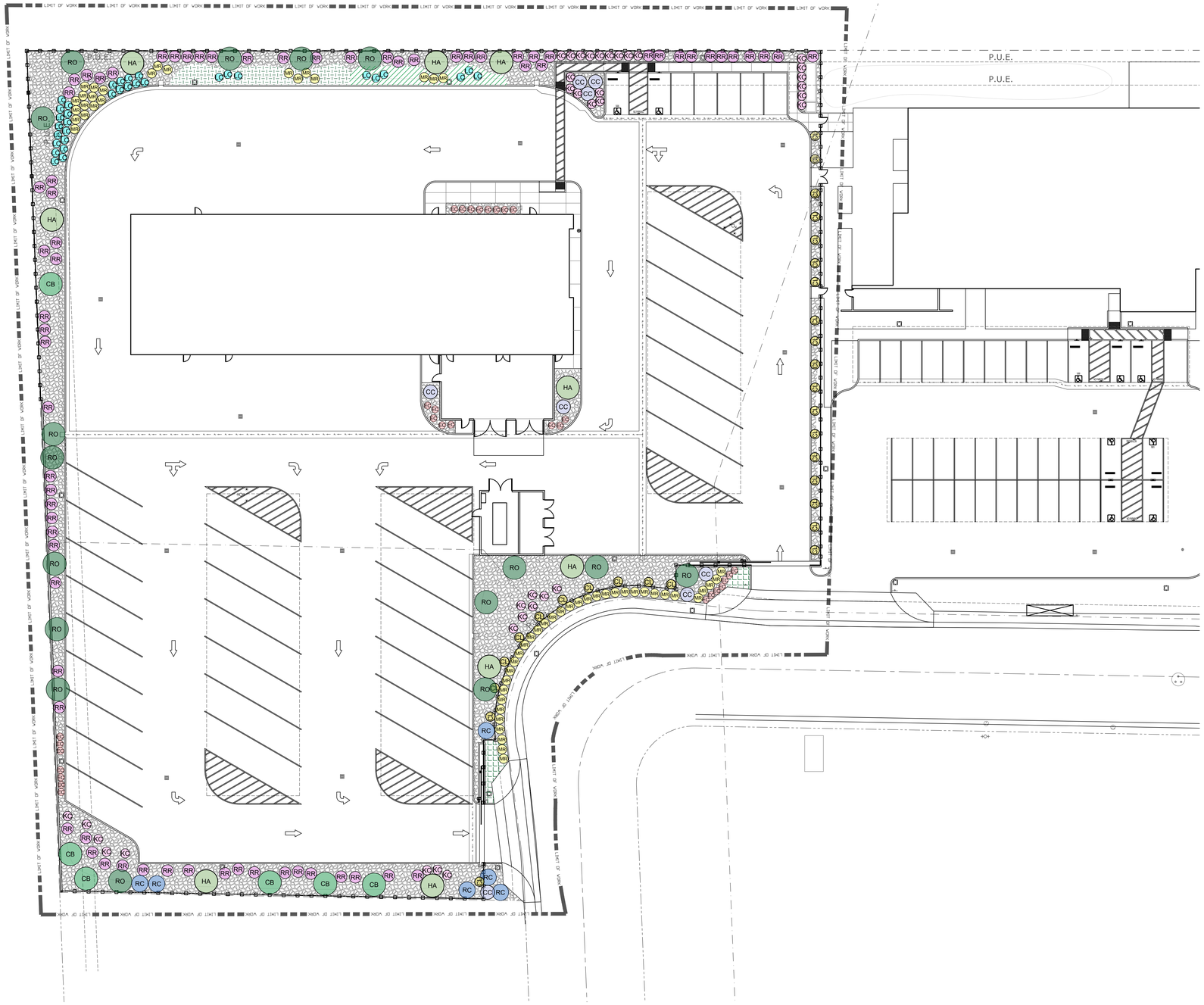

PLANTING LEGEND:

	BOTANIC NAME	COMMON NAME	SIZE	DETAIL	WUCOLS	QNTY
TREES						
	Calocedrus decurrens	INCENSE CEDAR	24" BOX	'A', LP-2	MOD.	5
	Pinus jeffreyi	JEFFREY PINE	15 GAL	'A', LP-2	LOW	16
	Pinus ponderosa	PONDEROSA PINE	15 GAL	'A', LP-2	LOW	7
	Prunus ilicifolia	HOLLYLEAF CHERRY	15 GAL	'A', LP-2	LOW	4
	Quercus kelloggii	BLACK OAK	15 GAL	'A', LP-2	MOD.	3
	Sambucus nigra ssp. caerulea	BLUE ELDERBERRY	24" BOX	'A', LP-2	LOW	3
SHRUBS / VINES						
CB	*Cercocarpus betuloides*	MOUNTAIN MAHOGANY	5 GAL	'C', LP-2	LOW	6
CC	*Ceanothus 'Concha'*	CONCHA WILD LILAC	5 GAL	'C', LP-2	LOW	8
LC	*Elymus condensatus 'Canyon Prince'*	CANYON PRINCE WILD RYE	1 GAL	'C', LP-2	LOW	33
EC	*Epilobium canum*	CALIFORNIA FUSHIA	1 GAL	'C', LP-2	LOW	31
HA	*Heteromeles arbutifolia*	TOYON	5 GAL	'C', LP-2	LOW	9
KC	*Keckiella cordifolia*	CLIMBING PENSTEMON	1 GAL	'C', LP-2	LOW	39
MR	*Muhlenbergia rigens*	DEER GRASS	1 GAL	'C', LP-2	LOW	57
RO	*Rhus ovata*	SUGAR BUSH	5 GAL	'C', LP-2	LOW	18
RR	*Ribes roezlii*	SIERRA GOOSEBERRY	1 GAL	'C', LP-2	LOW	71
RC	*Rosa californica*	CALIFORNIA WILD ROSE	5 GAL	'C', LP-2	LOW	8
CL	*Clematis ligusticifolia*	VIRGIN'S BOWER	1 GAL	'C', LP-2	LOW	29
GROUNDCOVERS						
	Achillea millefolium	YARROW	4" POTS @ 18" O.C.	'C' & 'D', LP-2	LOW	247
	Baccharis pilularis 'Pigeon Point'	PIGEON POINT COYOTE BRUSH	1 GAL @ 72" O.C.	'C' & 'D', LP-2	LOW	20
	Ceanothus maritimus 'Point Sierra'	POINT SIERRA LILAC	1 GAL @ 60" O.C.	'C' & 'D', LP-2	LOW	30
	3" MINIMUM DEPTH 3/4" CRUSHED ROCK. COLOR TO BE 'BARKWOOD'			'F', LP-2		9,300 SF

NOTES:
- ALL TREES WITHIN 6' OF HARDSCAPE TO RECEIVE ROOTBARRIER SEE DETAIL 'B', SHEET LP-2
- ALL PLANTER AREAS TO RECEIVE A 3" MINIMUM DEPTH LAYER OF 3/4" CRUSHED ROCK MULCH. COLOR TO BE 'BARKWOOD'
- PLANT WATER USE VALUES ARE PER WUCOLS IV PLANT LIST
- GRAVEL MULCH TO BE SUPPLEMENTED WITH ROCKS FROM ONSITE

NORTH 0 20' 40' 80'

STAMPS

CONSULTANT BRANDING

RUHNAU CLARKE ARCHITECTS

F:\Mountain Transit Admin Bldg\CD's\Phase 1\planting.dwg

PROJECT No. : 5-08-01
4/6/2023 4:21 PM

DRAWN BY: CHECKED BY:

ISSUE No.____ DATE_____ DESCRIPTION_____
REVISION No.____ DATE_____ DESCRIPTION_____

RUHNAUCLARKE.COM

3775 TENTH STREET, RIVERSIDE CALIFORNIA 91501 (951) 684 4664 / 5751 PALMER WAY, SUITE C, CARLSBAD CALIFORNIA 92010 (760) 438 5899

MOUNT TRANSIT MAINTENANCE FACILITY
INCREMENT #2
170 BUSINESS CENTER. BIG BEAR LAKE, CALIFORNIA
BIG BEAR LAKES

LANDSCAPE
Planting Plan
-

LP-1.0

5-08-01

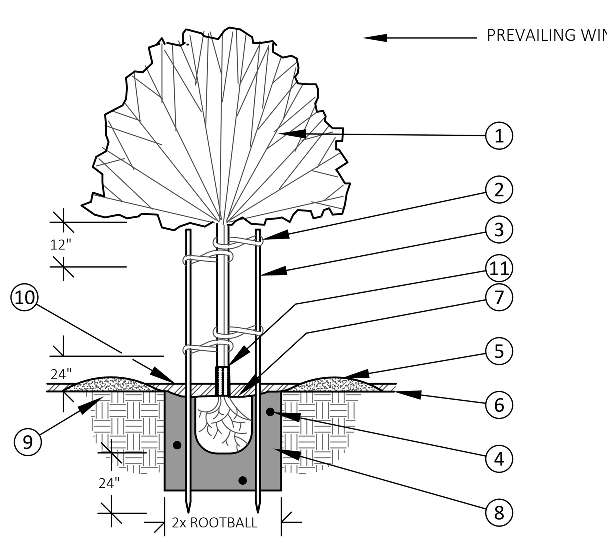

1. TREE PER PLANTING PLAN
2. CINCH TIE (4 PER TREE)
3. (MINIMUM 2) 3" DIA. x 10' LONG LODGE POLE STAKES. INSTALL ALIGNED WITH PREVAILING WIND DIRECTION
4. PLANT TABLETS PER PLANT TABLET DETAIL
5. EARTH WATERING BASIN IN GROUNDCOVER AREAS
6. FINISH GRADE
7. ROOTBALL: SET CROWN 1"-2" ABOVE FINISH GRADE
8. COMPACTED BACKFILL MIX PER PLANTING DETAIL
9. NATIVE SOIL
10. 3" MINIMUM DEEP MULCH PER PLANTING PLAN
11. PLASTIC TRUNK GUARD IN TURF AREAS ONLY

NOTE: 10' LONG LINEAR ROOT BARRIER CENTERED ON TREE TO BE PLACED AT HARDSCAPE EDGE WHEN TREE IS WITHIN 5' OF HARDSCAPE

A Tree Planting

SCALE: N.T.S.

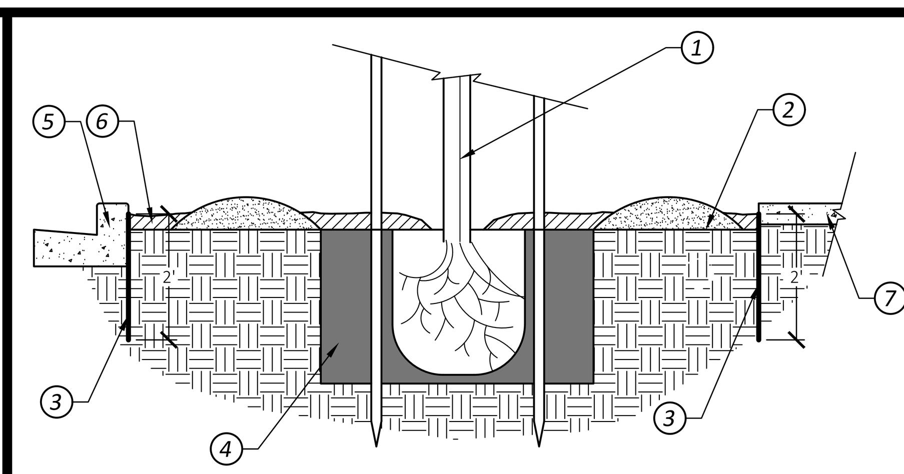

1. TREE PER PLANTING PLAN
2. FINISH GRADE
3. DEEP ROOT BARRIER AT EDGE OF HARDSCAPE - 24" DEEP, 10' LONG CENTERED ON TRUNK
4. TREE PLANTING PIT
5. CONCRETE CURB PER PLAN
6. MULCH - TYPE & DEPTH PER PLANTING PLAN
7. CONCRETE PAVING PER PLAN

NOTES:
1. ROOTBARRIER TO EXTEND 5' TO EITHER SIDE OF TREE TRUNK
2. ROOTBARRIER SHALL NOT ENCIRCLE THE TREE ROOTBALL

B Linear Root Barrier

SCALE: N.T.S.

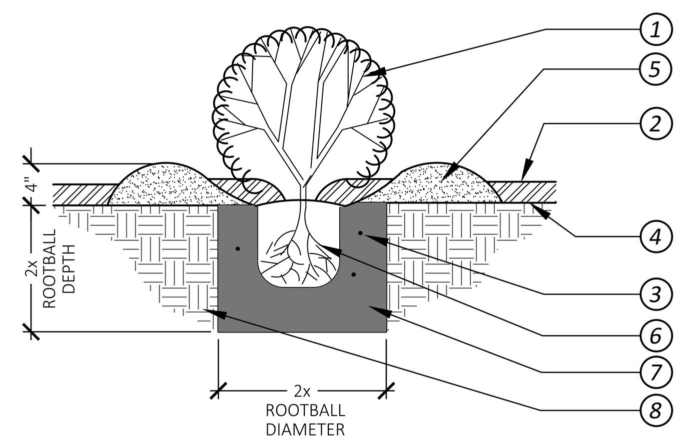

1. SHRUB PER PLANTING PLAN
2. 3" DEPTH OF WOOD MULCH
3. PLANT TABLETS PER PLANT TABLET DETAIL
4. FINISH GRADE
5. EARTH WATERING BASIN (RAKE SMOOTH PRIOR TO PLANTING GROUNDCOVER)
6. ROOTBALL: SET CROWN SLIGHTLY ABOVE FINISH GRADE
7. COMPACT BACKFILL MIX PER PLANTING DETAIL
8. NATIVE SOIL

C Shrub Planting

SCALE: N.T.S.

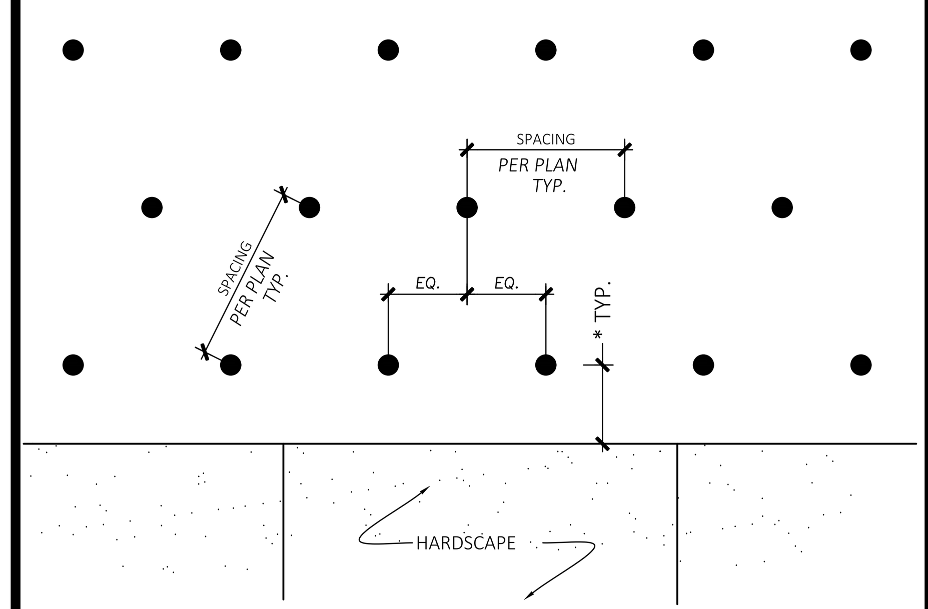

* DIST. FROM HARDSCAPE:
EQUAL TO 1/2 THE O.C. SPACING AS NOTED IN THE PLANTING LEGEND UNLESS OTHERWISE NOTED.

D Groundcover Spacing

SCALE: N.T.S.

-

-

THE RECOMMENDATIONS OF THIS PROJECT'S SOIL REPORTS SHALL TAKE PRECEDENCE OVER THE BELOW MINIMUMS ONLY WHEN THEY EXCEED BELOW BASED ON THE GIVEN NATIVE PLANTS PER PLANS

MINIMUM SOIL PREPARATION
NATIVE PLANTINGS TYPICALLY REQUIRE LITTLE TO NO SOIL AMENDMENTS UNLESS SOIL DAMAGE HAS OCCURRED AND SOIL REMEDIATION IS REQUIRED. MASS SOIL DISTURBANCE IS GENERALLY DESTRUCTIVE TO THE NATURAL CONDITION AND SHOULD BE AVOIDED UNLESS SPECIFICALLY CALLED FOR BY THE RESULTS OF SOIL TESTS.

BACK FILL CONDITIONERS/PREPERATION:
BACKFILL MIX FOR TREES, SHRUBS, AND VINES SHALL BE AS FOLLOWS:

PER CUBIC YARD OF BACK FILL MIX:
5 LBS. TRI-C PREMIUM HUMATE
5 LBS TRI-C ENDO 12

MANUFACTURES INSTRUCTIONS FOR HANDLING, STORAGE, AND APPLICATION MUST BE FOLLOWED

PLANTING TABS:
MYCO TABS PER PLANT CONTAINER SIZE

1 Gallon	5 Gallon	15 Gallon	24" Box	36" Box	48" Box	60" Box	72" Box	84" Box	96" Box
2 tabs	8 tabs	16 tabs	22 tabs	28 tabs	34 tabs	48 tabs	56 tabs	62 tabs	68 tabs

SOIL MAINTENANCE PROGRAM:
THREE (3) TRI-C MYCO REVIVAL PLUS APPLICATIONS ARE TO BE APPLIED EVENLY SPACED TO ALL PLANTINGS DURING THE ESTABLISHMENT PERIOD.

APPLICATION RATES-

1 Gallon	5 Gallon	15 Gallon	24" Box	36" Box	48" Box	60" Box	72" Box	84" Box	96" Box
2 tps	2 tbs	$\frac{1}{3}$ cup	$\frac{2}{3}$ cups	1 cup	1-1/2 cup	2 cup	2-1/2 cup	3 cup	64 cup

APPLY TO SOIL SURFACE AND SCRATCH $\frac{1}{2}$"-1" INTO SOIL- WATER THOROUGHLY AFTER APPLICATION

E Soil Prep / Backfill / Plant Packs

SCALE: N/A

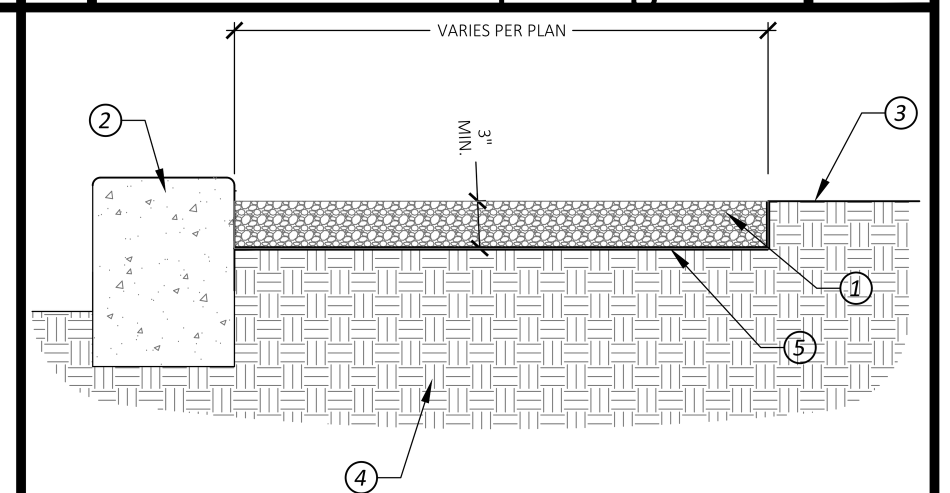

DETAIL NOTES:
1. 3" (MIN.) $\frac{3}{4}$" GRAVEL PER PLAN
2. CURB PER CIVIL PLAN
3. FINISH GRADE IN LANDSCAPE AREAS
4. COMPACTED SUBGRADE PER SOILS REPORT
5. GEOTECH FABRIC OR WEED BARRIER

F Landscape Gravel

SCALE: NTS

-

-

STAMPS

CONSULTANT BRANDING

RUHNAU CLARKE ARCHITECTS

F:\Mountain Transit Admin Bldg\CD's\Phase 1\planting.dwg

PROJECT No. : 5-08-01
4/6/2023 4:21 PM

DRAWN BY: CHECKED BY:
ISSUE No.___ DATE___ DESCRIPTION___ REVISION No.___ DATE___ DESCRIPTION___
ISSUE No.___ DATE___ DESCRIPTION___ REVISION No.___ DATE___ DESCRIPTION___
ISSUE No.___ DATE___ DESCRIPTION___ REVISION No.___ DATE___ DESCRIPTION___
ISSUE No.___ DATE___ DESCRIPTION___ REVISION No.___ DATE___ DESCRIPTION___

RUHNAUCLARKE.COM
3775 TENTH STREET, RIVERSIDE CALIFORNIA 92501 (951) 684 4664 / 5751 PALMER WAY, SUITE C, CARLSBAD CALIFORNIA 92010 (760) 438 5899

MOUNT TRANSIT MAINTENANCE FACILITY
INCREMENT #2
170 BUSINESS CENTER. BIG BEAR LAKE, CALIFORNIA
BIG BEAR LAKES

LANDSCAPE
Planting Details
-

LP-2.0

5-08-01

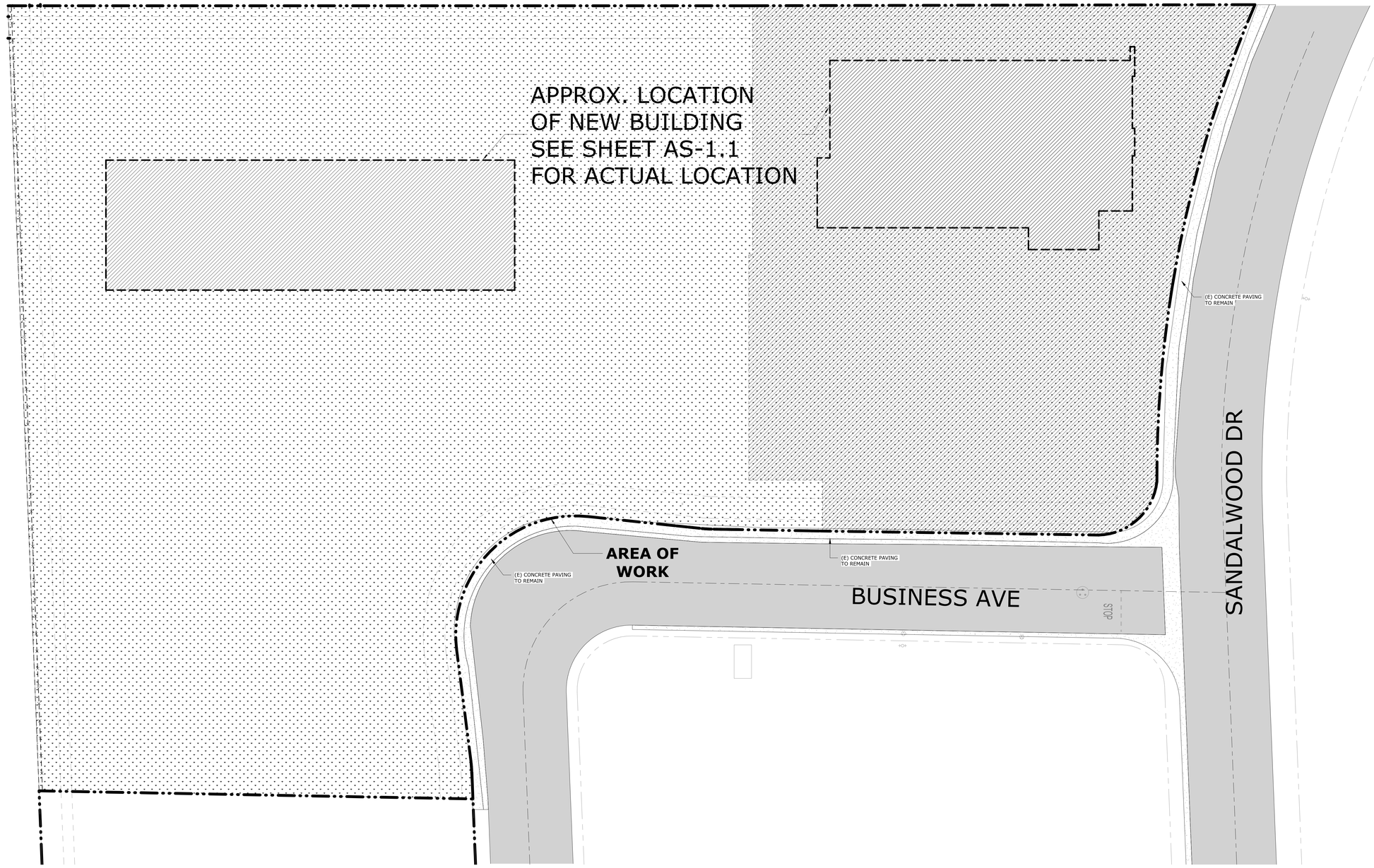

NORTH

OVERALL SITE PLAN_DEMO 1

SCALE: 1" = 20'-0"
REF.: /

STAMPS

LICENSED ARCHITECT
ROGER CLARKE
No. C-31360
Exp. 10-31-24
STATE OF CALIFORNIA

AGENCY APPROVAL
File No: ########-##-########

CONSULTANT BRANDING

RUHNAU
CLARKE
ARCHITECTS

1. VERIFY ALL DIMENSIONS PRIOR TO CONSTRUCTION.
2. THE CONTRACTOR IS RESPONSIBLE FOR THE DEMOLITION OF THE SITE AND IT IS THEIR SOLE RESPONSIBILITY TO VISIT THE SITE AND DETERMINE THE EXTENT OF THE DEMOLITION BASED UPON THE PROPOSED NEW WORK.
3. THE CONTRACTOR IS RESPONSIBLE FOR THE REMOVAL AND DISPOSAL OF ALL ITEMS THAT ARE TO BE DEMOLISHED (ABOVE AND BELOW GROUND). ANY HAZARDOUS MATERIALS ENCOUNTERED SHALL BE BROUGHT TO THE ATTENTION OF THE OWNER AND BE REMOVED AS REQUIRED BY STATE AND LOCAL LAWS.
4. REFER TO SPECIFICATION FOR CONSTRUCTION WASTE MANAGEMENT REQUIREMENTS.
5. PREPARE GRADE FOR INCLUDING BUT NOT LIMITED TO NEW FLOOR SLABS, PAVING, PLANTING, ETC.
6. RESTORE ALL PAVING TO REMAIN AFFECTED BY THE WORK.
7. REMOVE ALL ITEMS REQUIRED FOR A COMPLETE AND PROPER CONSTRUCTION OF THE NEW WORK.
8. RESTORE OR REPLACE TO ORIGINAL CONDITION OR BETTER ANY ITEM BUT NOT LIMITED TO PAVING, LANDSCAPE, TREES, PLANTING, TURF, GRADING, UTILITIES SYSTEMS, INCLUDING IRRIGATION AFFECTED BY THE WORK.
9. PATCH PAVING WHERE AFFECTED BY WORK INCLUDING BUT NOT LIMITED TO UTILITY TRENCHING, SEE CIVIL DWGS. DEMOLISH CONCRETE PAVING AFFECTED BY WORK FROM EXISTING JOINT TO EXISTING JOINT (BETWEEN JOINTS) AND PATCH.
10. RESTORE STAGING AREA INCLUDING, BUT NOT LIMITED TO, FENCING, PAVING AND PAVING MARKINGS.
11. PROVIDE TEMPORARY FENCING FOR PROTECTION OF SITE OCCUPANTS.
12. NO DEMOLITION SHALL BEGIN UNTIL PLANS INCLUDING THE DEMOLITION WORK HAVE BEEN APPROVED BY PLAN CHECK.

GENERAL NOTES

- (E) CONCRETE PAVING TO REMAIN
- EXISTING ASPHALT ROAD TO REMAIN
- DEMO. (E) EXISTING CONCRETE PAVING
- CLEAR AND GRUB (E) LANDSCAPE DISPOSE
- (E) FIRE HYDRANT
- FUTURE INCREMENT #3
- PROPERTY LINE
- (E) CHAIN LINK FENCE TO BE REMOVED IN ITS ENTIRETY

DEMO LEGEND

MOUNT TRANSIT MAINTENANCE FACILITY: PHASE 1 - 100% CD

PROJECT No. :50801
8/1/2023 11:38:29 AM

DRAWN BY: CHECKED BY:

ISSUE No.____ DATE_____ DESCRIPTION_____
ISSUE No.____ DATE_____ DESCRIPTION_____
ISSUE No.____ DATE_____ DESCRIPTION_____
ISSUE No.____ DATE_____ DESCRIPTION_____

REVISION No.____ DATE_____ DESCRIPTION_____
REVISION No.____ DATE_____ DESCRIPTION_____
REVISION No.____ DATE_____ DESCRIPTION_____
REVISION No.____ DATE_____ DESCRIPTION_____

RUHNAUCLARKE.COM
3775 TENTH STREET, RIVERSIDE CALIFORNIA 92501(951) 684 4664 / 5751 PALMER WAY, SUITE C, CARLSBAD CALIFORNIA 92010(760) 438 5899

MOUNT TRANSIT MAINTENANCE FACILITY
PHASE 1
170 BUSINESS CENTER. BIG BEAR LAKE, CALIFORNIA
BIG BEAR LAKES

DEMOLITION SITE PLAN

AS-1.0

50801

BUILDING NAME	BUILDING ANALYSIS						BUILDING AREA (S.F.)		BUILDING AREA MODIFICATION PER SECTION 506		MIXED USE/OCCUPANCY AREA CALCULATION SECTION 508	EXTERIOR WALL PROTECTION PER TABLE 601		OPENING PROTECTION TABLE 705.8	FIRE SPRINKLER	SPECIAL CONSIDERATIONS:
	OCC. TYPE	CONST. TYPE	STORY (ALLOW.) TABLE 504.4	STORY (ACTUAL)	BLDG. HT. (ALLOW.) TABLE 504.3	BLDG. HT. (ACTUAL)	ALLOWABLE BLDG. AREA (TABLE 506.2)	BLDG. AREA (ACTUAL)	FRONTAGE INCREASE CBC 506.3			BEARING	NON-BEARING			
MAINTENANCE BUILDING	B	V-B	3	1	60'-0"	19'-0"	36,000 SF	2,600 SF	-	$A_w=A_1+(NS \times I_f)$	2,600 SF / 36,000 SF = .072	-	-	-	YES	
	S-1	V-B	2	1	60'-0"	19'-0"	36,000 SF	408 SF	-	$A_w=A_1+(NS \times I_f)$	408 SF / 36,000 SF = .013	-	-	-	YES	
	F-1	V-B	2	1	60'-0"	28'-6"	34,000 SF	6,746 SF	-	$A_w=A_1+(NS \times I_f)$	6,746 SF / 34,000 SF = .198	-	-	-	YES	
	H-2	V-B	1	1	40'-0"	28'-6"	3,000 SF	416 SF	-	$A_w=A_1+(NS \times I_f)$	416 SF / 3,000 SF = .012 SUM OF RATIO'S = .3 < 1	-	-	-	YES	

OCCUPANCY S-1

OCCUPANCY H-2

OCCUPANCY F-1

OCCUPANCY B

STAMPS

LICENSED ARCHITECT · LINDSEY CLARKE · No. C-31360 · Exp. 10-31-24 · STATE OF CALIFORNIA

AGENCY APPROVAL
File No.: ########/##-#######

CONSULTANT BRANDING

RUHNAU CLARKE ARCHITECTS

CODE ANALYSIS | - | 2

CODE ANALYSIS LEGEND

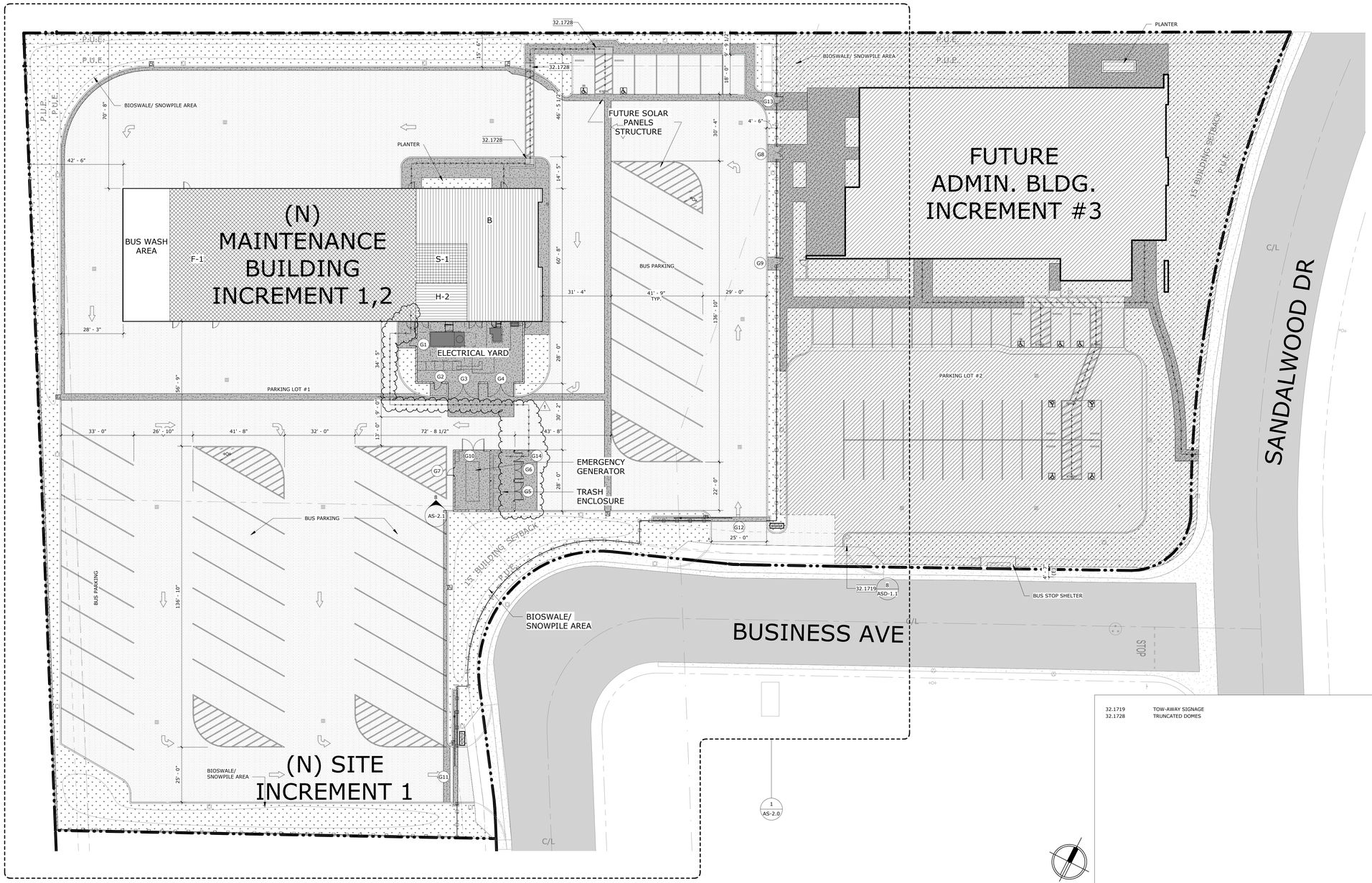

(E) CONCRETE PAVING TO REMAIN

EXISTING ASPHALT ROAD TO REMAIN

NEW BUILDING

NEW LANDSCAPE AREA PER LANDSCAPE DWGS.

NEW ASPHALT PER CIVIL'S DWGS.

NEW CONCRETE PAVING PER CIVIL'S DWGS.
CONTROL JOINTS PER DETAIL 1/ASD-1.1

FUTURE INCREMENT #3

NEW METAL FENCE 15/ASD-1.1

PROPERTY LINE

ACCESSIBLE ROUTE

P.U.E. ACCESSIBLE ROUTE

32.1719 TOW-AWAY SIGNAGE
32.1728 TRUNCATED DOMES

SITE LEGEND

INCREMENT #2

PARKING LOT	NUMBER OF STD. PARKING SPACES	ACCESSIBLE REQUIRED (VAN INCLU.)	ACCESSIBLE PROVIDED (VAN INCLU.)	TOTAL PARKING SPACES
PARKING LOT #1	5	1	2	7

BUS PARKING AREA: NUMBER OF BUS STALLS (30)

FUTURE INCREMENT #3

PARKING LOT	NUMBER OF STD. PARKING SPACES	ACCESSIBLE REQUIRED (VAN INCLU.)	ACCESSIBLE PROVIDED (VAN INCLU.)	TOTAL PARKING SPACES
PARKING LOT #2	31	2	7	38

PARKING COUNT

NO.	SIZE (WxH)	MATERIAL	FINISH	DETAIL	P.H.	HDWR	NOTES
G1	3'-0" x 7'-4"	MTL	P	4/ASD-1.2	P.H.	15.0	2,4,5,6,7,8
G2	3'-0" x 7'-4"	MTL	P	4/ASD-1.2	P.H.	15.0	2,4,5,6,7,8
G3	PR 14'-0" x 7'-4"	MTL	P	3/ASD-1.2	-	16.0	2,3
G4	PR 12'-0" x 7'-4"	MTL	P	3/ASD-1.2	-	16.0	2,3
G5	PR 8'-0" x 8'-0"	MTL	P	3/ASD-1.2	-	16.0	2,3
G6	PR 8'-0" x 8'-0"	MTL	P	3/ASD-1.2	-	16.0	2,3
G7	3'-0" x 8'-0"	MTL	P	4/ASD-1.2	PH	15.0	2,4,5,6,7,8
G8	PR 6'-0" x 6'-0"	MTL	P	20/ASD-1.1	-	16.0	2,3
G9	3'-0" x 6'-0"	MTL	P	21/ASD-1.1	-	16.0	2,3
G10	PR 10'-0" x 8'-0"	MTL	P	3/ASD-1.2	-	16.0	2,3
G11	SLIDING 25'-0" x 6'-0"	MTL	P	9/ASD-1.2	-	18.0	1,2,
G12	SLIDING 25'-0" x 6'-0"	MTL	P	9/ASD-1.2	-	17.0	1,2
G13	3'-0" x 8'-0"	MTL	P	21/ASD-1.1	PH	15.0	2,4,5,6,7,8
G14	3'-6" x 8'-0"	MTL	P	4/ASD-1.1	PH	15.0	2,4,5,6,7,8

NOTES:

1. PROVIDE KEYED KNOX PADLOCK PER CITY OF BIG BEAR LAKE FIRE DEPARTMENT REQUIREMENTS
2. GATE HEIGHTS TO MATCH HEIGHT OF ADJACENT FENCE OR CMU WALL U.N.O.
3. PROVIDE PADLOCKS AS PART OF HARDWARE SET
4. NO PADLOCKS ON EXIT GATES IN THE PATH OF EGRESS
5. NO MANUAL CANE BOLT, MANUALLY LOCKING HARDWARE OR CHAINS ON GATES WITH PANIC HARDWARE
6. CLOSING SPEED: 90 DEGREES TO 12 DEGREES IN 5 SECS.
7. GATES SHALL HAVE 5 LBS MAX. OPERATING PRESSURE.
8. PROVIDE KICK PLATES

GATE SCHEDULE ABBREVIATIONS:

P.H. PANIC HARDWARE
P POWDER COATED
PR PAIR OF GATES
MTL METAL FENCE

OVERALL SITE PLAN | SCALE: 1" = 20'-0" | REF.: / | 1

KEYNOTES

GATE SCHEDULE

MOUNT TRANSIT MAINTENANCE FACILITY: PHASE 1 - 100% CD

PROJECT No. :50801
8/1/2023 4:38:54 PM

DRAWN BY: CHECKED BY:

ISSUE No._____ DATE_____ DESCRIPTION_____
ISSUE No._____ DATE_____ DESCRIPTION_____
ISSUE No._____ DATE_____ DESCRIPTION_____
ISSUE No._____ DATE_____ DESCRIPTION_____

REVISION No. 1 DATE 08/01/23 DESCRIPTION RESUBMITTAL #1
REVISION No._____ DATE_____ DESCRIPTION_____
REVISION No._____ DATE_____ DESCRIPTION_____
REVISION No._____ DATE_____ DESCRIPTION_____

RUHNAUCLARKE.COM
3775 TENTH STREET, RIVERSIDE CALIFORNIA 92501(951) 684 4664 / 5751 PALMER WAY, SUITE C, CARLSBAD CALIFORNIA 92010(760) 438 5899

MOUNT TRANSIT MAINTENANCE FACILITY
PHASE 1
170 BUSINESS CENTER. BIG BEAR LAKE, CALIFORNIA
BIG BEAR LAKES

OVERALL SITE PLAN

AS-1.1

50801

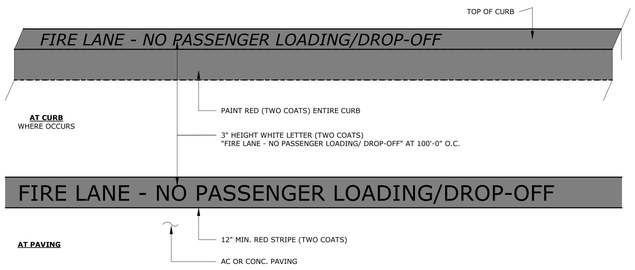

STAMPS

AGENCY APPROVAL
File No.: ########/##-########

CONSULTANT BRANDING

RUHNAU CLARKE ARCHITECTS

FIRE LANE STRIPING

SCALE: 1" = 1'-0"
REF.: /
2

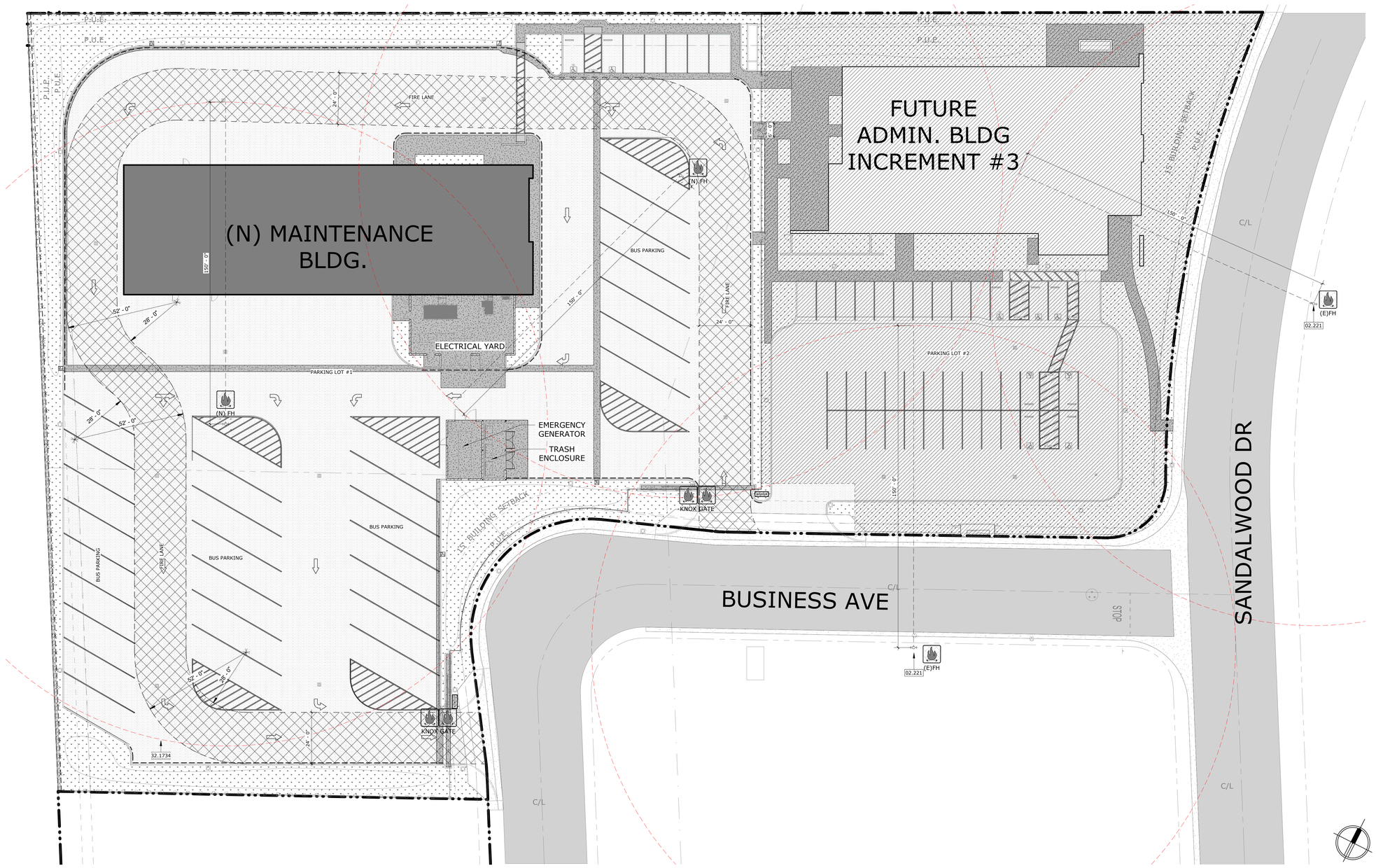

FIRE AUTHORITY PLAN

SCALE: 1" = 20'-0"
REF.: /
1

SITE LEGEND

- (E) CONCRETE PAVING TO REMAIN
- EXISTING ASPHALT ROAD TO REMAIN
- NEW BUILDING
- NEW LANDSCAPE AREA PER LANDSCAPE DWGS.
- NEW ASPHALT PER CIVIL'S DWGS.
- NEW CONCRETE PAVING PER CIVIL'S DWGS.
  CONTROL JOINTS PER DETAIL 1 / ASD-1.1
- FUTURE INCREMENT #3
- NEW METAL FENCE 15 / ASD-1.1
- PROPERTY LINE
- ACCESSIBLE ROUTE
- P.U.E. ACCESSIBLE ROUTE

02.221 (E) FIRE HYDRANT TO REMAIN
32.1734 TRAFFIC CONTROL PAVEMENT MARKING

KEYNOTES

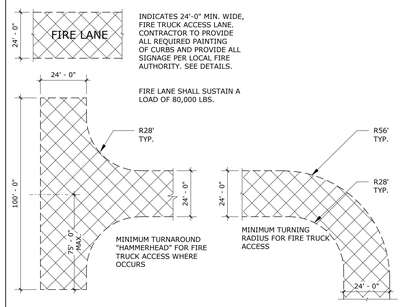

FH FIRE HYDRANT

GATE 20'-0" MIN. WIDE FIRE TRUCK ACCESS GATES.

KNOX APPROVED LOCKBOX (MINIMUM KNOX BOX 3200 SERIES MODEL)

RED PAINTED CURB PER DETAIL 2 / AS-1.2

FIRE ACCESS LEGEND

MOUNT TRANSIT MAINTENANCE FACILITY: PHASE 1 - 100% CD

PROJECT No. :50801
8/1/2023 4:39:56 PM

DRAWN BY: CHECKED BY:

ISSUE No.____ DATE_____ DESCRIPTION_____
ISSUE No.____ DATE_____ DESCRIPTION_____
ISSUE No.____ DATE_____ DESCRIPTION_____
ISSUE No.____ DATE_____ DESCRIPTION_____

REVISION No.____ DATE_____ DESCRIPTION_____
REVISION No.____ DATE_____ DESCRIPTION_____
REVISION No.____ DATE_____ DESCRIPTION_____
REVISION No.____ DATE_____ DESCRIPTION_____

RUHNAUCLARKE.COM
3775 TENTH STREET, RIVERSIDE CALIFORNIA 92501(951) 684-4664 / 5751 PALMER WAY, SUITE C, CARLSBAD CALIFORNIA 92010(760) 438 5899

MOUNT TRANSIT MAINTENANCE FACILITY
PHASE 1
170 BUSINESS CENTER. BIG BEAR LAKE, CALIFORNIA
BIG BEAR LAKES

FIRE AUTHORITY PLAN

AS-1.2

50801

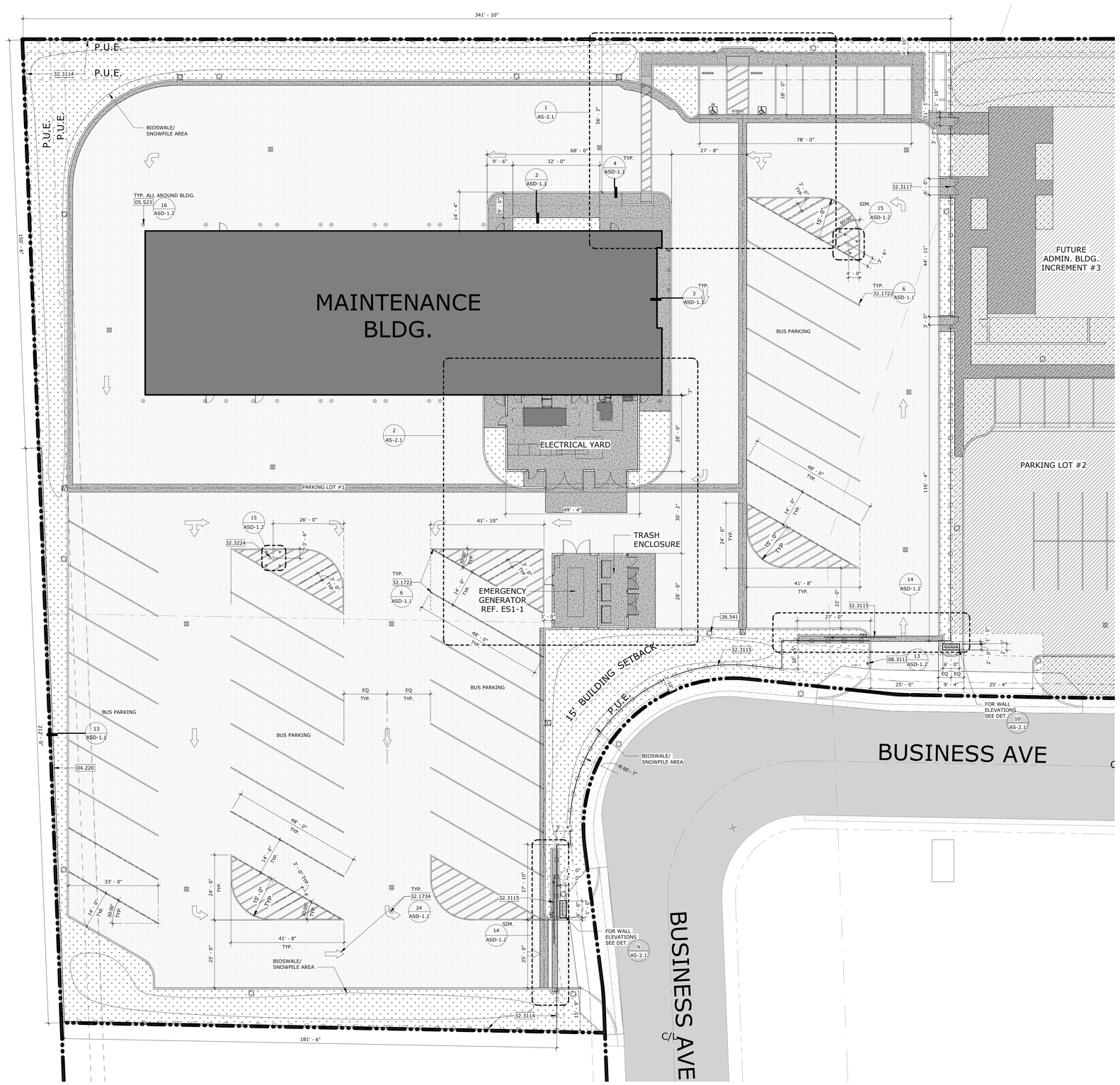

NORTH

GENERAL NOTES

1. VERIFY ALL DIMENSIONS PRIOR TO CONSTRUCTION.

- NEW BUILDING
- NEW LANDSCAPE AREA PER LANDSCAPE DWGS.
- NEW ASPHALT PER CIVIL'S DWGS.
- NEW CONCRETE PAVING PER CIVIL'S DWGS.
  CONTROL JOINTS PER DETAIL 1 / ASD-1.1
- EXISTING ASPHALT ROAD TO REMAIN
- FUTURE INCREMENT #3
- NEW METAL FENCE 15 / ASD-1.1
- PROPERTY LINE
- TRAFFIC CONTROL PAVENMENT MARKING REF. DETAIL 24 / ASD-1.1
- SITE LIGHTING PER ELECTRICAL DWGS.

ENLARGED PLAN LEGEND

04.220	CONCRETE MASONRY UNIT WALL
05.523	METAL PIPE BOLLARD
08.311	ACCESS CONTROL GATE KEYPAD
26.541	SITE LIGHTING PER ELECTRICAL DRWG
32.1722	4" WIDE WHITE STRIPING
32.1734	TRAFFIC CONTROL PAVEMENT MARKING
32.3114	METAL FENCE
32.3115	SLIDING GATE
32.3117	DOUBLE HOLLOW METAL GATE
32.3224	NEW FIRE HYDRANT

KEYNOTES

ENLARGED SITE PLAN — SCALE: 1/16" = 1'-0" — 1

STAMPS

LICENSED ARCHITECT — ROGER CLARKE — No. C-21365 — Exp. 10-31-2024 — STATE OF CALIFORNIA

AGENCY APPROVAL
File No.: ########-##-########

CONSULTANT BRANDING

RUHNAU CLARKE ARCHITECTS

MOUNT TRANSIT MAINTENANCE FACILITY: PHASE 1 - 100% CD

PROJECT No. :50801
8/4/2023 8:41:03 AM

DRAWN BY: _____ CHECKED BY: _____

ISSUE No.:_____ DATE:_____ DESCRIPTION:_____
ISSUE No.:_____ DATE:_____ DESCRIPTION:_____
ISSUE No.:_____ DATE:_____ DESCRIPTION:_____

REVISION No.:_____ DATE:_____ DESCRIPTION:_____
REVISION No.:_____ DATE:_____ DESCRIPTION:_____
REVISION No.:_____ DATE:_____ DESCRIPTION:_____

RUHNAUCLARKE.COM
3775 TENTH STREET, RIVERSIDE CALIFORNIA 92501(951) 684 4664 / 5751 PALMER WAY, SUITE C, CARLSBAD CALIFORNIA 92010(760) 438 5899

MOUNT TRANSIT MAINTENANCE FACILITY
PHASE 1
170 BUSINESS CENTER. BIG BEAR LAKE, CALIFORNIA
BIG BEAR LAKES

ENLARGED SITE PLAN — **AS-2.0**

50801

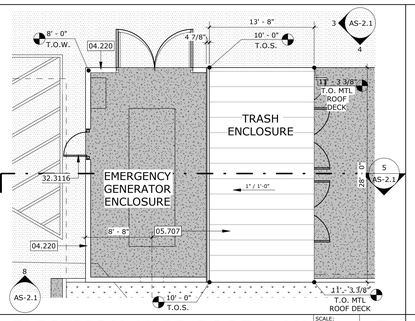

ELECTRICAL YARD ROOF PLAN

SCALE: 1/8" = 1'-0" | REF.: 4/AS-2.0 | 7

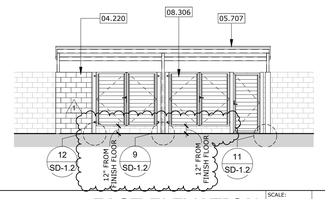

NOTE:
FOR INFORMATION ON THE TRASH ENCLOSURE GATES REFER TO GATES SCHEDULE

EAST ELEVATION

SCALE: 1/8" = 1'-0" | REF.: 2/AS-2.1 | 3

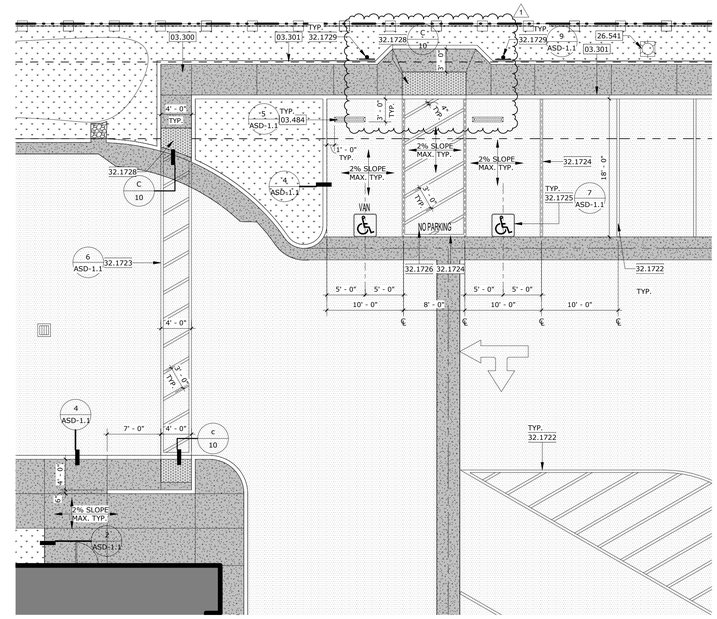

ENLARGED ADA PARKING

SCALE: 1/8" = 1'-0" | REF.: 1/AS-2.0 | 1

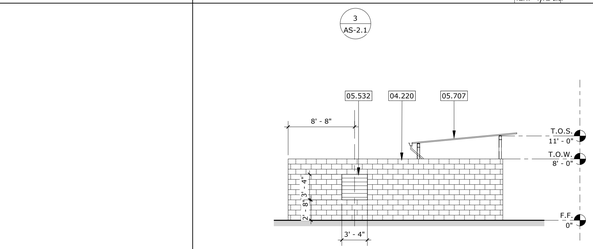

NOTE: FOR CONCRETE MASONRY WALL OPENINGS SEE DET. 15 S0-1.5 FOR MORE INFO.

SOUTH ELEVATION

SCALE: 1/8" = 1'-0" | REF.: 1/AS-1.1 | 8

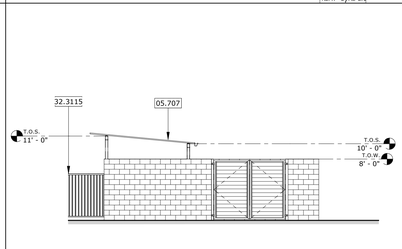

NORTH ELEVATION

SCALE: 1/8" = 1'-0" | REF.: 2/AS-2.1 | 4

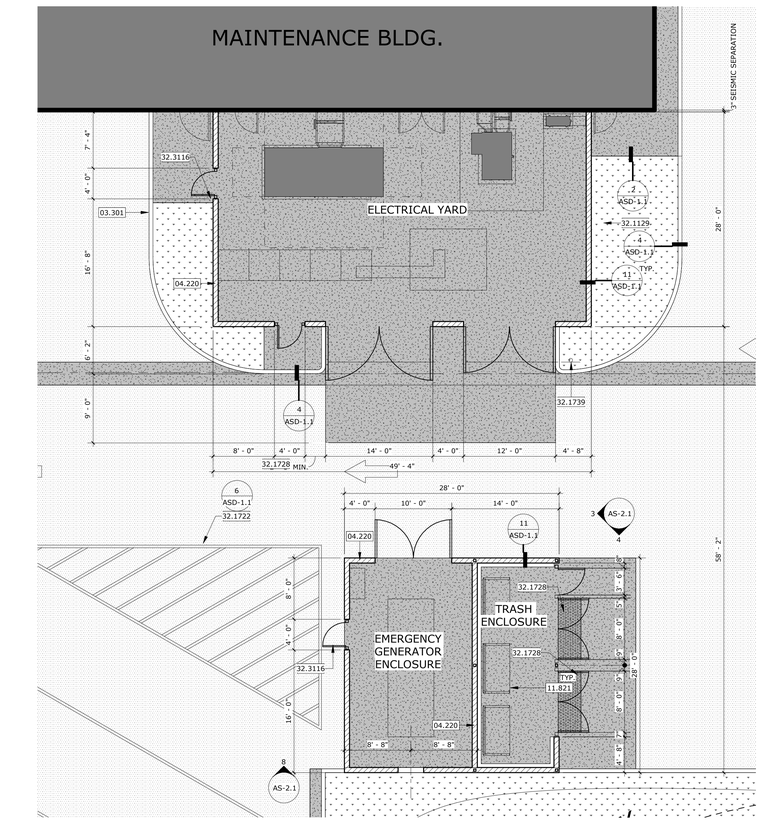

ENLARGED ELECTRICAL YARD

SCALE: 1/8" = 1'-0" | REF.: 1/AS-2.0 | 2

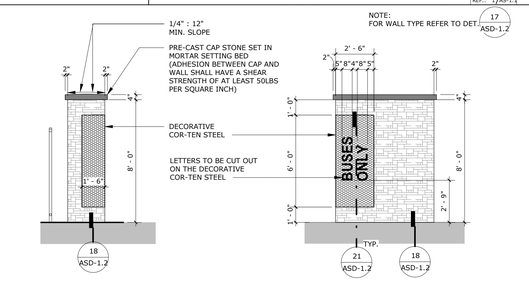

NOTE:
FOR WALL TYPE REFER TO DET. 17 ASD-1.2

EXIT WALL SIGNAGE ELEVATIONS

SCALE: 1/4" = 1'-0" | REF.: 1/AS-1.1 | 9

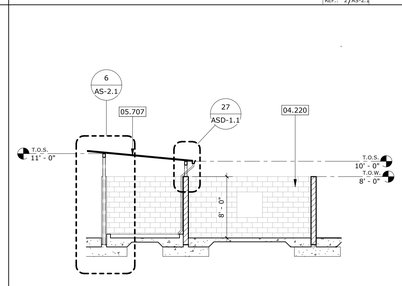

TRASH ENCLOSURE SECTION

SCALE: 1/8" = 1'-0" | REF.: 7/AS-2.1 | 5

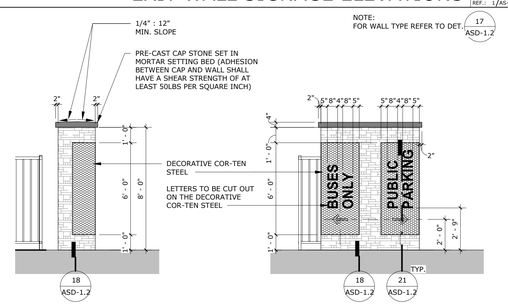

NOTE:
FOR WALL TYPE REFER TO DET. 17 ASD-1.2

ENTRY WALL SIGNAGE ELEVATIONS

SCALE: 1/4" = 1'-0" | REF.: 1/AS-1.1 | 10

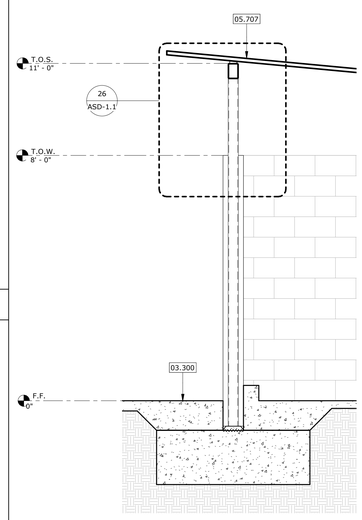

NOTE:
FOR ADDITIONAL STRUCTURAL INFORMATION, SEE DETAIL 10 S0-1.5

ENCLOSURE WALL SECTION

SCALE: 1/2" = 1'-0" | REF.: 5/AS-2.1 | 6

LICENSED ARCHITECT
RUSSELL CLARKE
No. C-31190
Exp. 10-31-24
STATE OF CALIFORNIA

STAMPS

AGENCY APPROVAL
File No.: ########-##-########

RUHNAU CLARKE ARCHITECTS

CONSULTANT BRANDING

1. SLAB ON GRADE: 0'-0" = GLOBAL ELEVATION:65.85'
2. VERIFY ALL EXTERIOR OPENINGS & VENTS WITH MECHANICAL, ELECTRICAL, STRUCTURAL & PLUMBING
3. SEE SHEET 1 ES1-1 & 1 ES1-2 FOR ELECTRICAL LAYOUT
4. ALL EXPOSED STRUCTURE, INCLUDING MECHANICAL & PLUMBING EQUIPMENT TO BE PAINTED

GENERAL NOTES

- NEW BUILDING
- NEW LANDSCAPE AREA PER LANDSCAPE DWGS.
- NEW ASPHALT PER CIVIL'S DWGS.
- NEW CONCRETE PAVING PER CIVIL'S DWGS.
  CONTROL JOINTS PER DETAIL 1 ASD-1.1
- NEW TRASH ENCLOSURE ROOF
- NEW METAL FENCE 15 ASD-1.1
- PROPERTY LINE

ENLARGED PLAN LEGEND

03.300	CAST-IN-PLACE CONCRETE
03.301	CAST-IN-PLACE CONCRETE CURB
03.484	PRECAST CONCRETE WHEEL STOP
04.220	CONCRETE MASONRY UNIT WALL
05.532	METAL LOUVER
05.707	METAL ROOF PANEL
08.306	TRASH ENCLOSURE DOUBLE METAL GATE
11.821	SOLID WASTE BIN
26.541	SITE LIGHTING PER ELECTRICAL DRWG
32.1129	NEW LANDSCAPE PER LANDSCAPE DWG.
32.1722	4" WIDE WHITE STRIPING
32.1723	ACCESSIBILITY CROSSING LANE TO BE WHITE BORDER AND WHITE CROSS STRIPING
32.1724	BORDER TO BE BLUE AT ACCESS AISLE. INTERIOR STRIPING TO CONTRAST PER SURFACE: WHITE ON ASPHALT, BLUE ON CONC., TYP.
32.1725	INTERNATIONAL SYMBOL OF ACCESSIBILITY.
32.1726	12" HIGH WHITE LETTERING WITH NO STRIPING THROUGH TEXT, TYP.
32.1728	TRUNCATED DOMES
32.1729	ACCESSIBILITY PARKING SIGN.
32.1739	ELECTRICAL YARD SIGNAGE
32.3115	SLIDING GATE
32.3116	SINGLE PEDESTRIAN GATE

KEYNOTES

MOUNT TRANSIT MAINTENANCE FACILITY: PHASE 1 - 100% CD

PROJECT No. :50801
8/2/2023 10:14:28 AM

DRAWN BY: CHECKED BY:

ISSUE No.:_____	DATE:_____	DESCRIPTION:_____		REVISION No.:	1	DATE: 08/01/23	DESCRIPTION: RESUBMITTAL #1
ISSUE No.:_____	DATE:_____	DESCRIPTION:_____		REVISION No.:		DATE:_____	DESCRIPTION:_____
ISSUE No.:_____	DATE:_____	DESCRIPTION:_____		REVISION No.:		DATE:_____	DESCRIPTION:_____
ISSUE No.:_____	DATE:_____	DESCRIPTION:_____		REVISION No.:		DATE:_____	DESCRIPTION:_____

RUHNAUCLARKE.COM
3775 TENTH STREET, RIVERSIDE CALIFORNIA 92501(951) 684 4664 / 5751 PALMER WAY, SUITE C, CARLSBAD CALIFORNIA 92010(760) 438 5899

MOUNT TRANSIT MAINTENANCE FACILITY
PHASE 1
170 BUSINESS CENTER. BIG BEAR LAKE, CALIFORNIA
BIG BEAR LAKES

ENLARGED PLANS

AS-2.1

50801

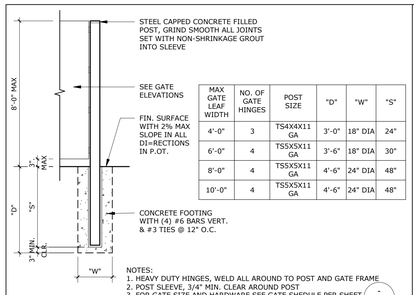

MAX GATE LEAF WIDTH	NO. OF GATE HINGES	POST SIZE	"D"	"W"	"S"
4'-0"	3	TS4X4X11 GA	3'-0"	18" DIA	24"
6'-0"	4	TS5X5X11 GA	3'-6"	18" DIA	30"
8'-0"	4	TS5X5X11 GA	4'-6"	24" DIA	48"
10'-0"	4	TS5X5X11 GA	4'-6"	24" DIA	48"

NOTES:
1. HEAVY DUTY HINGES, WELD ALL AROUND TO POST AND GATE FRAME
2. POST SLEEVE, 3/4" MIN. CLEAR AROUND POST
3. FOR GATE SIZE AND HARDWARE SEE GATE SHEDULE PER SHEET - AS-1.1

STEEL GATE POST SCHEDULE

SCALE: 3/8" = 1'-0" | 25

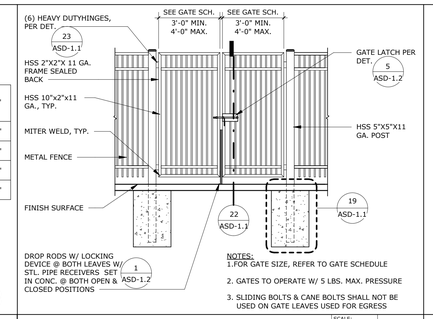

NOTES:
1.FOR GATE SIZE, REFER TO GATE SCHEDULE

2. GATES TO OPERATE W/ 5 LBS. MAX. PRESSURE

3. SLIDING BOLTS & CANE BOLTS SHALL NOT BE USED ON GATE LEAVES USED FOR EGRESS

DOUBLE SERVICE GATE

SCALE: 1/4" = 1'-0" | 20

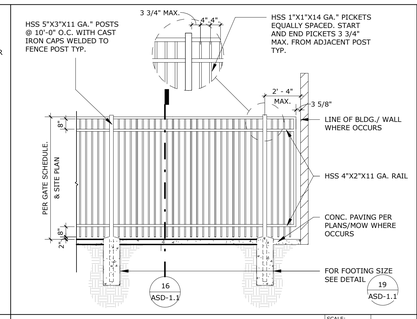

METAL FENCE ELEV.

SCALE: 1/4" = 1'-0" | REF.: | 15

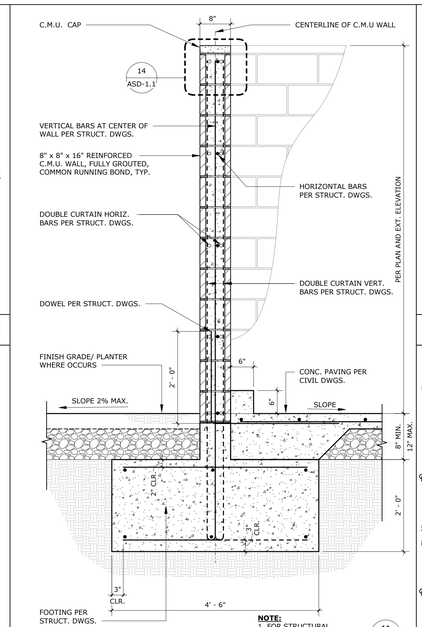

NOTE:
1. FOR STRUCTURAL INFOMATION REFER TO DETAIL 11 SO-1.3

C.M.U WALL - SECTION

SCALE: 3/4" = 1'-0" | 11

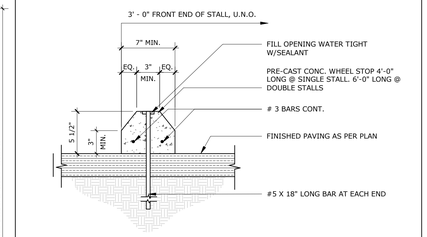

CONCRETE WHEELSTOP

SCALE: 1 1/2" = 1'-0" | 5

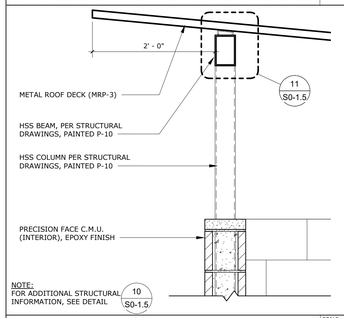

NOTE:
FOR ADDITIONAL STRUCTURAL INFORMATION, SEE DETAIL 10 S0-1.5

ENCLOSURE ROOF EDGE

SCALE: 1" = 1'-0" | REF.: 6/AS-2.1 | 26

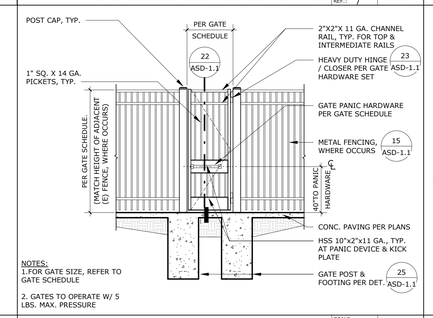

NOTES:
1.FOR GATE SIZE, REFER TO GATE SCHEDULE

2. GATES TO OPERATE W/ 5 LBS. MAX. PRESSURE

METAL GATE W/ PH

SCALE: 1/4" = 1'-0" | 21

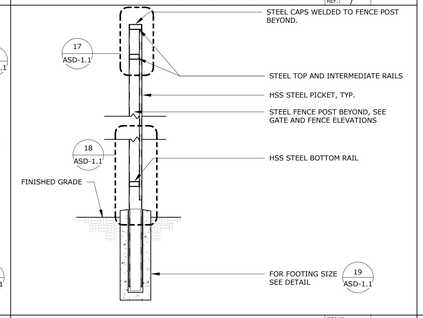

METAL FENCE SECTION

SCALE: 1/2" = 1'-0" | 16

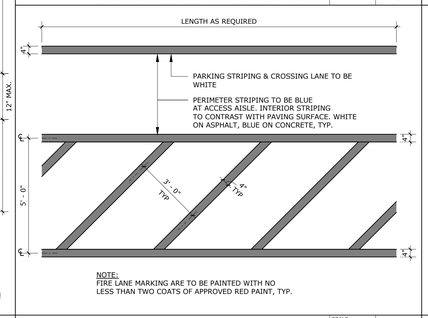

NOTE:
FIRE LANE MARKING ARE TO BE PAINTED WITH NO LESS THAN TWO COATS OF APPROVED RED PAINT, TYP.

TYP. PAVEMENT STRIPING

SCALE: 3/8" = 1'-0" | 6

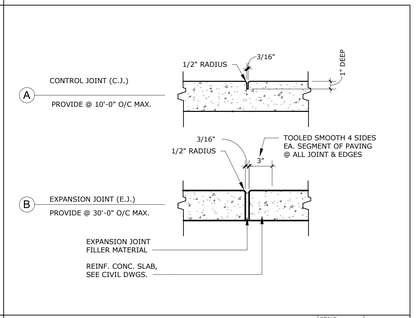

TYP. CONC. JOINT DETAILS

SCALE: 1 1/2" = 1'-0" | 1

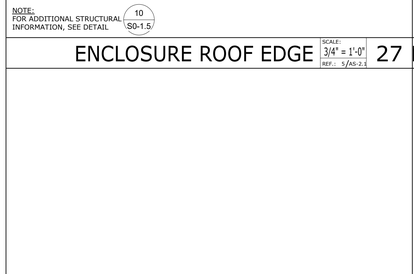

NOTE:
FOR ADDITIONAL STRUCTURAL INFORMATION, SEE DETAIL 10 S0-1.5

ENCLOSURE ROOF EDGE

SCALE: 3/4" = 1'-0" | REF.: 5/AS-2.1 | 27

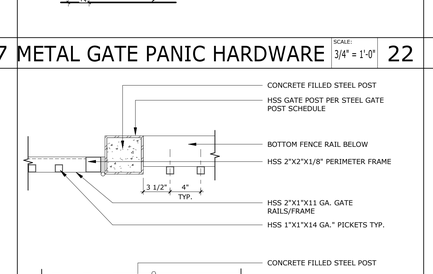

METAL GATE PANIC HARDWARE

SCALE: 3/4" = 1'-0" | 22

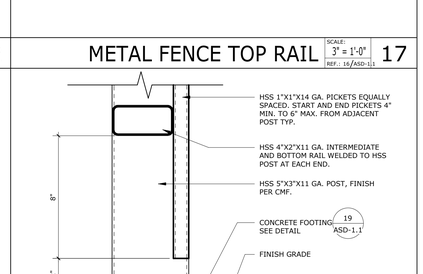

METAL FENCE TOP RAIL

SCALE: 3" = 1'-0" | REF.: 16/ASD-1.1 | 17

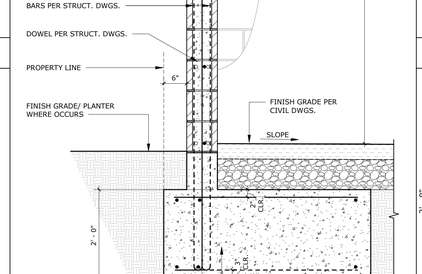

NOTE:
1. FOR STRUCTURAL INFOMATION REFER TO DETAIL 11 SO-1.3

C.M.U. SECTION @ FENCE

SCALE: 3/4" = 1'-0" | REF.: 1/AS-2.0 | 13

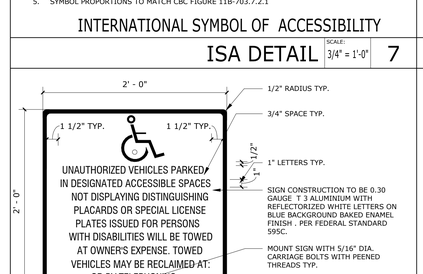

NOTES:
1. STENCIL: BACKGROUND, STENCIL AND BORDER STENCILED ON TO PARKING SURFACE IN EACH ACCESSIBLE STALL.
2. LOCATE PER ACCESSIBLE PARKING STALL DETAIL(S)
3. MINIMUM 2" WIDTH FOR ALL LINES
4. VISUALLY CENTER SYMBOL WITHIN BORDER
5. SYMBOL PROPORTIONS TO MATCH CBC FIGURE 11B-703.7.2.1

INTERNATIONAL SYMBOL OF ACCESSIBILITY

SCALE: 3/4" = 1'-0" | 7

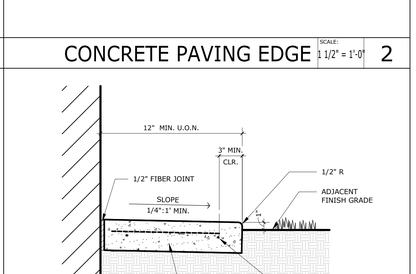

CONCRETE PAVING EDGE

SCALE: 1 1/2" = 1'-0" | 2

METAL GATE HINGE

SCALE: 1 1/2" = 1'-0" | 23

METAL FENCE BOTTOM RAIL

SCALE: 3" = 1'-0" | 18

NOTE :
CONFIRM INFORMATION WITH OWNER

UNAUTHORIZED VEHICLE SIGN

SCALE: 1 1/2" = 1'-0" | 8

NOTE:
PROVIDE MOW STRIP AROUND ALL BUILDINGS AT PLANTER AREAS ONLY

TYP. BUILDING MOW STRIP

SCALE: 1 1/2" = 1'-0" | 3

PAVEMENT DIRECTIONAL SIGN

SCALE: 1/4" = 1'-0" | 24

METAL FENCE POST FOOTING

SCALE: 3/4" = 1'-0" | 19

NOTE:
1. FOR STRUCTURAL INFOMATION REFER TO DETAIL 1 SO-1.5

C.M.U TOP OF WALL

SCALE: 3" = 1'-0" | 14

NOTES:
1. SIGN SHALL BE REFLECTORIZED. PROVIDE PORCELAIN ON STEEL.
2. ALL LETTERS & SYMBOLS SHALL BE WHITE & BACKGROUND SHALL BE BLUE EQUAL TO COLOR #15090 FEDERAL STD. 595C INCLUDE THE STATEMENT "VAN ACCESSIBLE" AT VAN ACCESSIBLE PARKING STALL

ISA PROPORTIONS SHALL MATCH
3. CBC FIG. 11B-703.7.2.1, TYP..

ACCESSIBLE PARKING SIGN

SCALE: 1 1/2" = 1'-0" | 9

CONCRETE CURB AT AC

SCALE: 1 1/2" = 1'-0" | 4

RUHNAU CLARKE ARCHITECTS

CONSULTANT BRANDING

STAMPS

AGENCY APPROVAL
File No.: ########/##-########

PROJECT No. :50801
8/2/2023 3:10:36 PM

DRAWN BY: CHECKED BY:

ISSUE No.	DATE	DESCRIPTION
ISSUE No.	DATE	DESCRIPTION
ISSUE No.	DATE	DESCRIPTION
ISSUE No.	DATE	DESCRIPTION

REVISION No.	DATE	DESCRIPTION
REVISION No.	DATE	DESCRIPTION
REVISION No.	DATE	DESCRIPTION
REVISION No.	DATE	DESCRIPTION

RUHNAUCLARKE.COM

3775 TENTH STREET, RIVERSIDE CALIFORNIA 92501(951) 684 4664 / 5751 PALMER WAY, SUITE C, CARLSBAD CALIFORNIA 92010(760) 438 5899

MOUNT TRANSIT MAINTENANCE FACILITY
PHASE 1
170 BUSINESS CENTER. BIG BEAR LAKE, CALIFORNIA
BIG BEAR LAKES

DETAILS

ASD-1.1

50801

MOUNT TRANSIT MAINTENANCE FACILITY: PHASE 1 - 100% CD

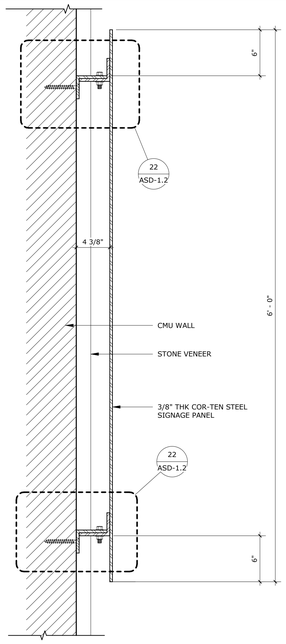

SING ANCHORAGE

SCALE: 1 1/2" = 1'-0" | REF.: 9/AS-2.1 | 21

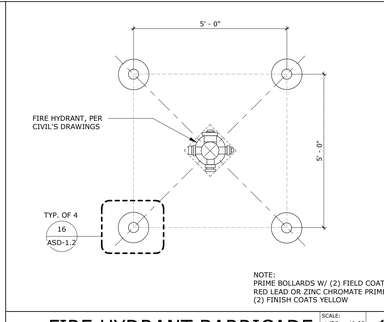

NOTE:
PRIME BOLLARDS W/ (2) FIELD COATS OF RED LEAD OR ZINC CHROMATE PRIMER W/ (2) FINISH COATS YELLOW

FIRE HYDRANT BARRICADE

SCALE: 1/2" = 1'-0" | REF.: 1/AS-2.0 | 15

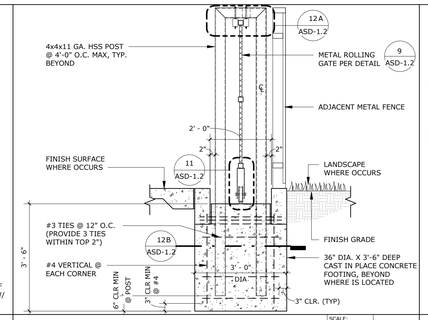

MTL. ROLLING GATE POST FRM.

SCALE: 1/2" = 1'-0" | REF.: 9/ASD-1.2 | 10

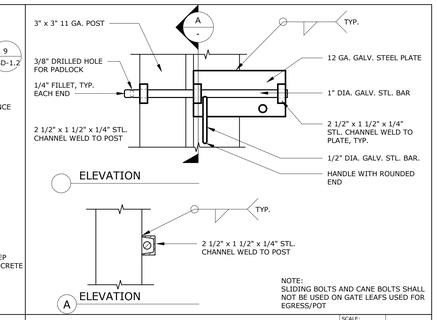

NOTE:
SLIDING BOLTS AND CANE BOLTS SHALL NOT BE USED ON GATE LEAFS USED FOR EGRESS/POT

GATE LATCH

SCALE: 1 1/2" = 1'-0" | REF.: / | 5

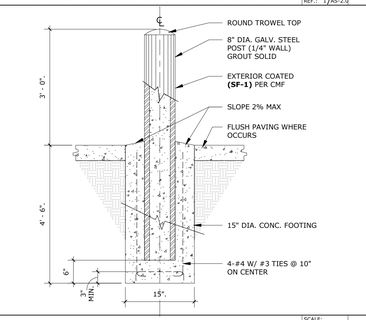

METAL BOLLARD

SCALE: 3/4" = 1'-0" | REF.: 15/ASD-1.2 | 16

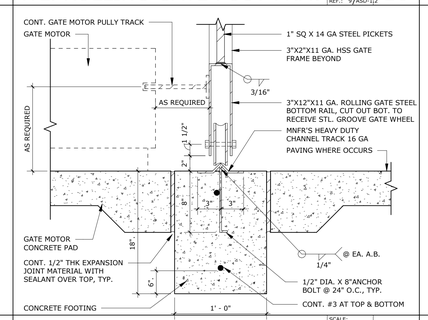

MTL. ROLLING GATE BOT. RAIL

SCALE: 1 1/2" = 1'-0" | REF.: 9/ASD-1.2 | 11

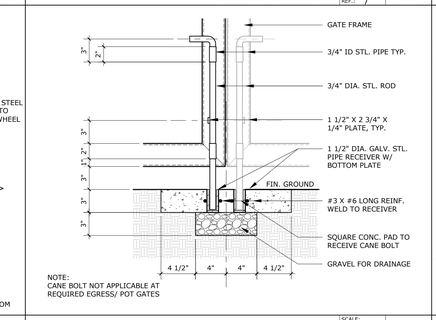

NOTE:
CANE BOLT NOT APPLICABLE AT REQUIRED EGRESS/ POT GATES

GATE DROP LATCH DET.

SCALE: 1 1/2" = 1'-0" | REF.: / | 6

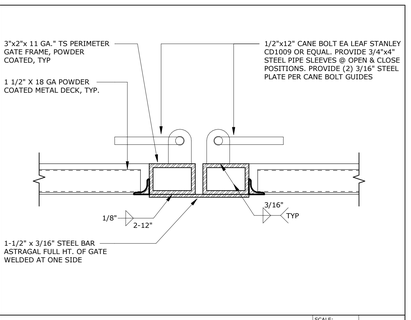

YARD GATE DROP LATCH

SCALE: 3" = 1'-0" | REF.: / | 1

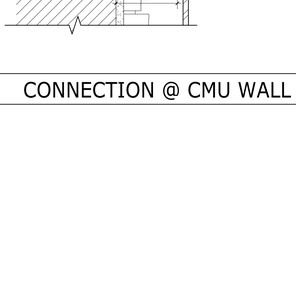

CONNECTION @ CMU WALL

SCALE: 3" = 1'-0" | REF.: 21/ASD-1.2 | 22

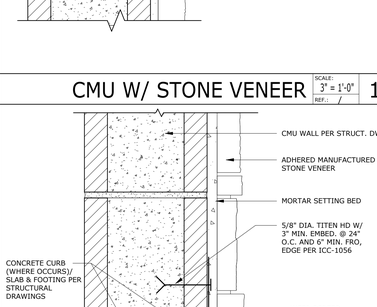

CMU W/ STONE VENEER

SCALE: 3" = 1'-0" | REF.: / | 17

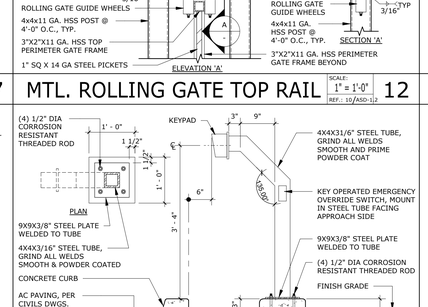

MTL. ROLLING GATE TOP RAIL

SCALE: 1" = 1'-0" | REF.: 10/ASD-1.2 | 12

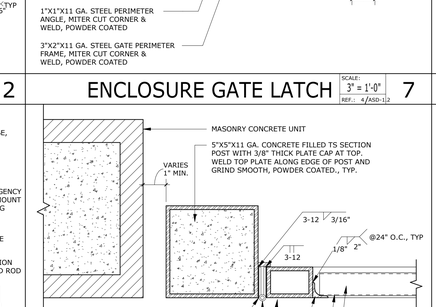

ENCLOSURE GATE LATCH

SCALE: 3" = 1'-0" | REF.: 4/ASD-1.2 | 7

STONE VENEER @ CURB

SCALE: 3" = 1'-0" | REF.: 9/AS-2.1 | 18

GATE KEYPAD MOUNTING DET.

SCALE: 3/4" = 1'-0" | REF.: / | 13

ENCLOSURE GATE JAMB

SCALE: 3" = 1'-0" | REF.: 3/ASD-1.2 | 8

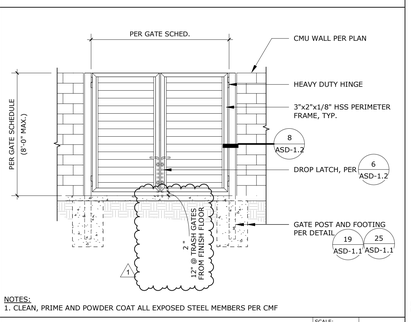

NOTES:
1. CLEAN, PRIME AND POWDER COAT ALL EXPOSED STEEL MEMBERS PER CMF

MTL SERVICE GATE-DBL-ELEV.

SCALE: 1/4" = 1'-0" | REF.: / | 3

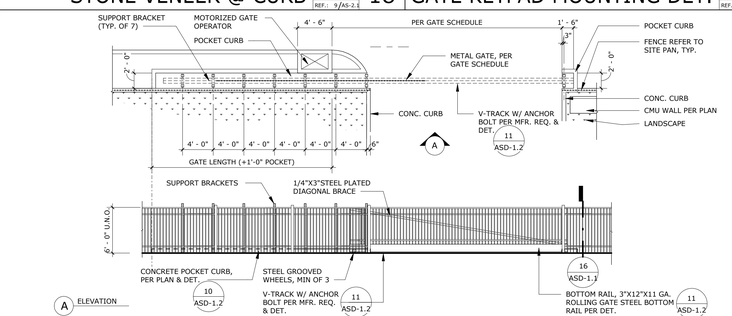

DECORATIVE ROLLING GATE

SCALE: 1/8" = 1'-0" | REF.: 1/AS-2.0 | 14

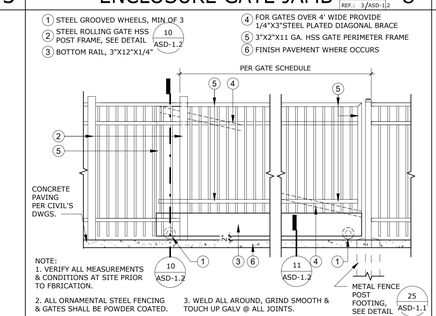

NOTE:
1. VERIFY ALL MEASUREMENTS & CONDITIONS AT SITE PRIOR TO FBRICATION.

2. ALL ORNAMENTAL STEEL FENCING & GATES SHALL BE POWDER COATED.

3. WELD ALL AROUND, GRIND SMOOTH & TOUCH UP GALV @ ALL JOINTS.

METAL ROLLING GATE

SCALE: 3/8" = 1'-0" | REF.: / | 9

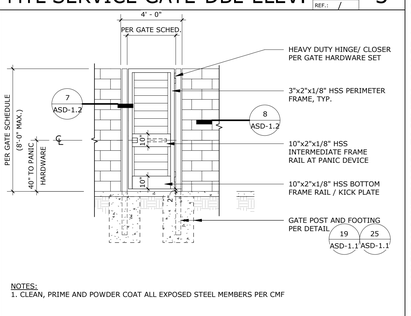

NOTES:
1. CLEAN, PRIME AND POWDER COAT ALL EXPOSED STEEL MEMBERS PER CMF

METAL SERVICE GATE ELEV.

SCALE: 1/4" = 1'-0" | REF.: / | 4

PROJECT No. :50801
8/2/2023 3:11:14 PM

DRAWN BY: CHECKED BY:

ISSUE No.____ DATE____ DESCRIPTION____
ISSUE No.____ DATE____ DESCRIPTION____
ISSUE No.____ DATE____ DESCRIPTION____
ISSUE No.____ DATE____ DESCRIPTION____

REVISION No.1 DATE 08/01/23 DESCRIPTION RESUBMITTAL #1
REVISION No.____ DATE____ DESCRIPTION____
REVISION No.____ DATE____ DESCRIPTION____
REVISION No.____ DATE____ DESCRIPTION____

RUHNAUCLARKE.COM
3775 TENTH STREET, RIVERSIDE CALIFORNIA 92501(951) 684 4664 / 5751 PALMER WAY, SUITE C, CARLSBAD CALIFORNIA 92010(760) 438 5899

MOUNT TRANSIT MAINTENANCE FACILITY
PHASE 1
170 BUSINESS CENTER. BIG BEAR LAKE, CALIFORNIA
BIG BEAR LAKES

DETAILS

ASD-1.2

50801

MOUNT TRANSIT MAINTENANCE FACILITY: PHASE 1 - 100% CD

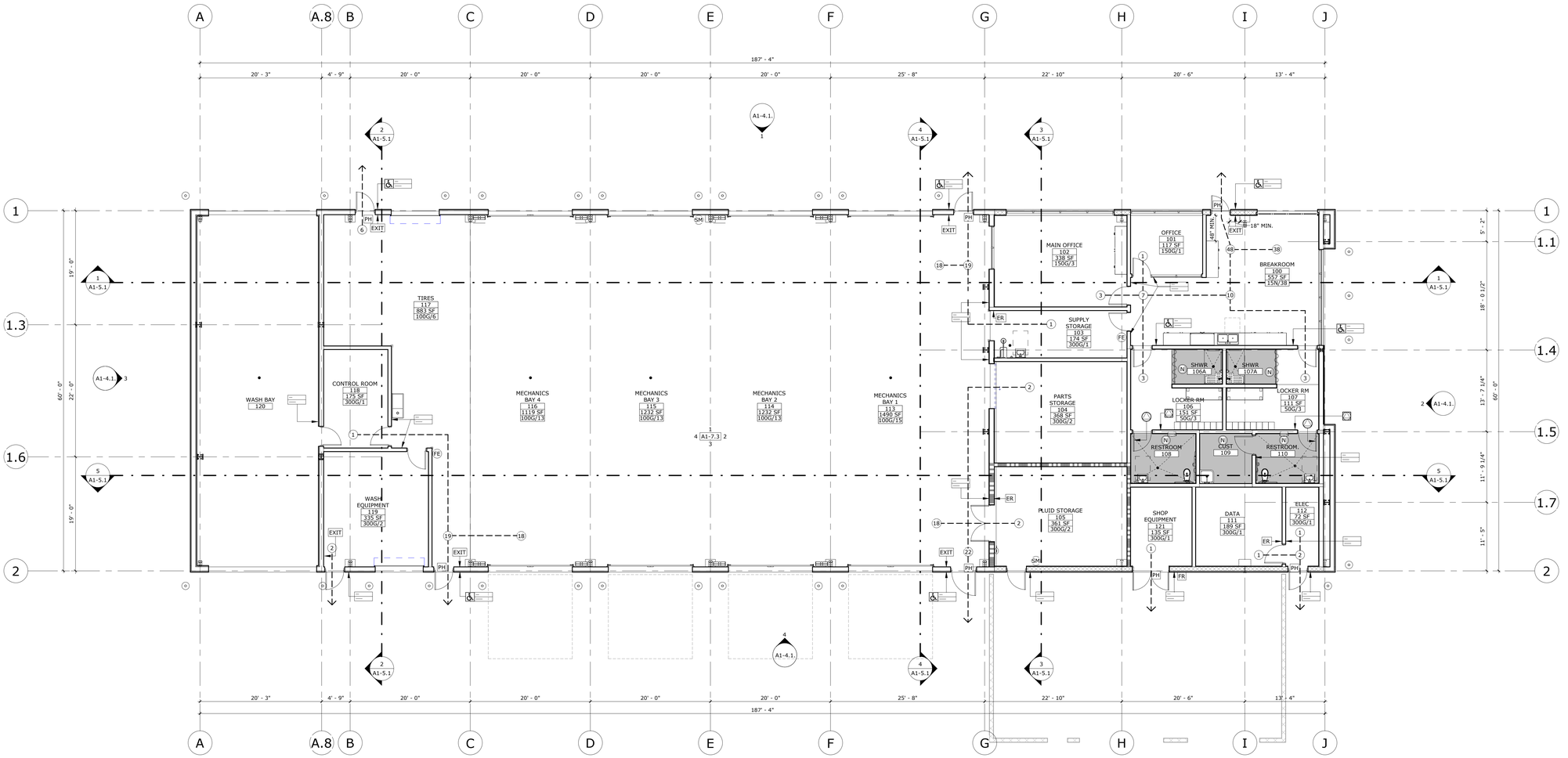

EGRESS & SIGNAGE PLAN | SCALE: 1/8" = 1'-0" | 1

1. SEE SHEET AS-1.1 "OVERALL SITE PLAN" FOR BUILDING CODE ANALYSIS INFORMATION
2. PER SECTION 1008.1.10 IN THE CBC 2022, DOOR SERVING ROOMS OR SPACES WITH AN OCCUPANT LOAD OF 50 OR MORE ARE REQUIRED TO HAVE PANIC HARDWARE OR FIRE EXIT HARDWARE.
3. ROOM OCCUPANT LOADS FACTORED PER CBC 2022 SECTION 1005, TABLE 1004.1.2
4. SEE SHEET AD-1.0 FOR SIGNAGE ATTACHMENTS AND LOCATIONS.
5. ALL DOORS TO HAVE A 90 DEGREE SWING LIMIT WHERE TACTILE SIGNAGE IS LOCATED ON HINGE SIDE OF DOOR.
6. TYPICAL AT PAIRS OF DOORS: WHEN POSSIBLE TACTILE SIGNAGE SHALL BE PLACED AT RIGHT SIDE OF DOORS.

GENERAL EGRESS NOTES

- FE — FIRE EXTINGUISHER - RECESSED (4 AD-1.1)
- SM — FIRE EXTINGUISHER - SURFACE-MOUNTED (3 AD-1.1)
- # — OCCUPANCY DISCHARGE #
- N — NON-OCCUPIED ROOM
- EGRESS PATH
- PH — PANIC HARDWARE

ROOM NAME
000 — ROOM #
000 — SQ.FT.
000 — OCC. LOAD FACTOR

- EXIT — EXIT SIGN (9 AD-1.0)
- ER — EXIT ROUTE (8 AD-1.0)
- FR — FIRE RISER DOOR SIGN (23 AD-1.0)
- UNISEX DOOR SIGN (13 AD-1.0)
- UNISEX WALL SIGN (13 AD-1.0)
- TYP. EXTERIOR WALL
- TYP. INTERIOR WALL
- 2 HR RATED WALL, FIRE BARRIER MARKING SIGN PER DET. SEE (24 AD-1.0)
- ISA (WHERE OCCURS)
- ROOM NUMBER / ROOM NAME (5 AD-1.0)
- OCC. # # — MAXIMUM OCCUPANTS LOAD SIGN / NUMBER OF OCCUPANTS (6 AD-1.0)

EGRESS & LIFE SAFETY LEGEND

KEYNOTES

STAMPS

ROGER CLARKE — LICENSED ARCHITECT — No. C-21360 — Exp. 12-31-2024 — STATE OF CALIFORNIA

AGENCY APPROVAL
File No.: ########-##-########

CONSULTANT BRANDING

RUHNAU CLARKE ARCHITECTS

MOUNT TRANSIT MAINTENANCE FACILITY: PHASE 1 - 100% CD

PROJECT No. :50801
8/3/2023 9:39:09 AM

DRAWN BY: CHECKED BY:

ISSUE No.____ DATE____ DESCRIPTION____
REVISION No.____ DATE____ DESCRIPTION____

RUHNAUCLARKE.COM

3775 TENTH STREET, RIVERSIDE CALIFORNIA 92501 (951) 684-4664 / 5751 PALMER WAY, SUITE C, CARLSBAD CALIFORNIA 92010 (760) 438-5899

MOUNT TRANSIT MAINTENANCE FACILITY
PHASE 1
170 BUSINESS CENTER DR. BIG BEAR LAKES, CA
BIG BEAR LAKES

EGRESS & SIGNAGE PLAN

A1-1.1

50801

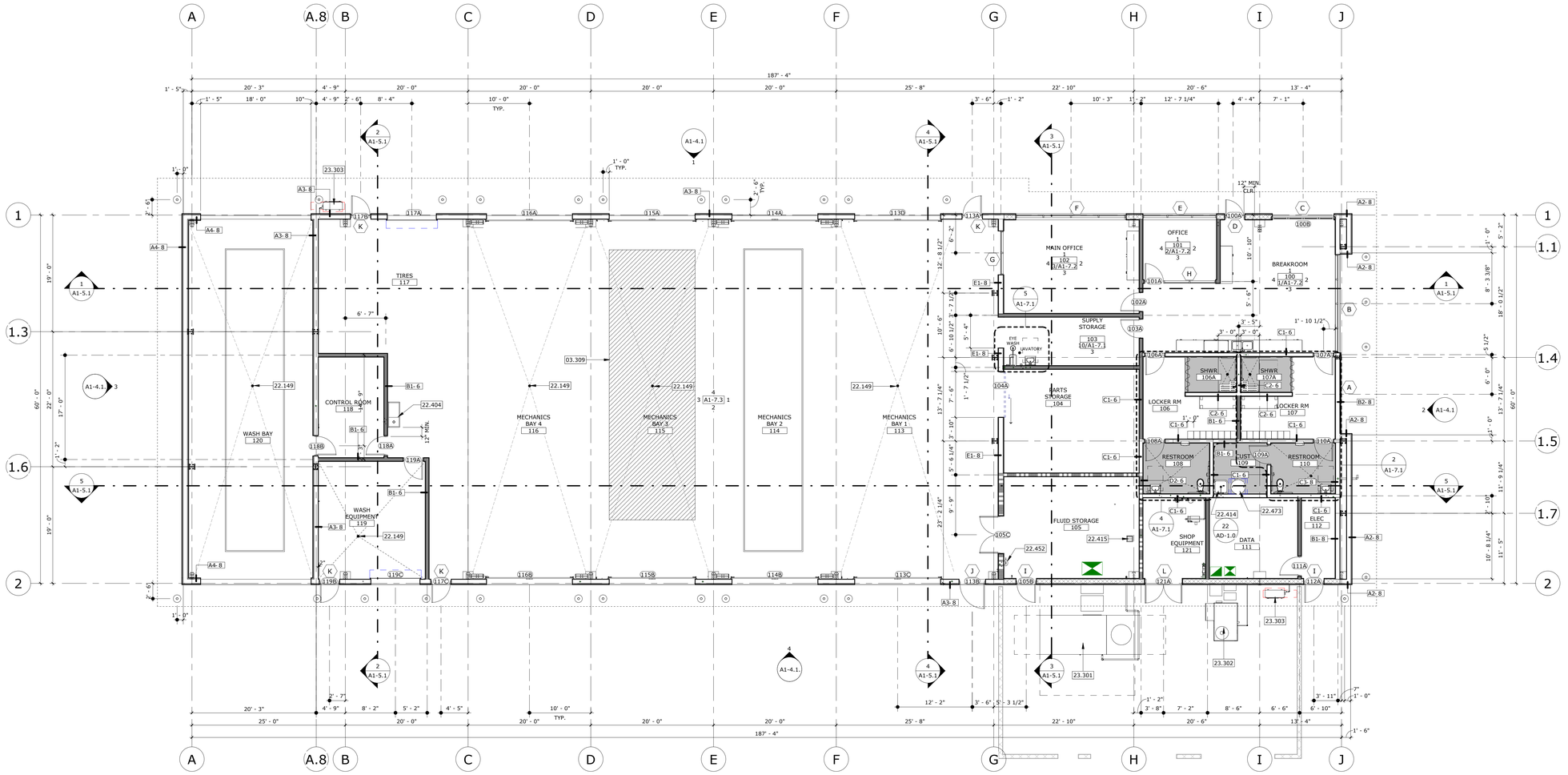

NORTH

FLOOR PLAN SCALE: 1/8" = 1'-0" REF.: 1/A1-4.1 1

GENERAL NOTES

03.309	8" SLAB ON GRADE PER STRUCT. DWGS
22.149	FLOOR DRAIN PER PLUMBING DWGS.
22.404	LAVATORY
22.414	MOP SINK
22.415	FLOOR SINK PER PLUMBING DWGS.
22.452	EYE/FACE WASH EQUIPMENT PER PLUMBING DWGS.
22.473	WATER HEATER PER PLUMBING DWGS.
23.301	MAKE UP AIR UNIT PER MECH. DWGS.
23.302	AC CONDITIONER UNIT PER MECH. DWGS.
23.303	MECH. UNIT PER MECH. DWGS.

1. VERIFY ALL DIMENSIONS PRIOR TO CONSTRUCTION.
2. ALL DIMENSIONS ARE TO FACE OF STUD, CENTERLINE OF COLUMN OR EDGE OF SLAB, U.N.O.
3. SEE SHEET AD-2.0 FOR WALL TYPE INFORMATION.
4. PROVIDE R-23 BATT INSULATION AT ALL EXTERIOR WALLS, U.N.O. GYPSUM BOARD AND INSULATION SHALL EXTEND FULL HEIGHT OF WALL TO UNDERSIDE OF ROOF STRUCTURE.
5. PROVIDE STUD BRACING AND SUPPORT FOR ALL WALL MOUNTED FIXTURES AND ACCESSORIES. PER DETAIL 5/SO-1.4
6. SEE SHEET A1-8.1 FOR DOOR AND WINDOW INFORMATION
7. SET DOORS ADJACENT TO WALLS A MIN. OF 4" AWAY FROM WALL U.N.O.
8. CONCRETE CURBS AT WALLS SHOWN ON STRUCT. DWGS. TO BE 6" HIGH U.N.O.

KEYNOTES

DEPRESSED FLOOR SLAB. NOTE THAT FINISHED FLOOR TO BE 2% SLOPE MAX. IN ALL DIRECTIONS.

WALL TYPE
#-A#-# WALL WIDTH
FIRE RATING (BY HOUR)

0-A1-8	TYP. EXTERIOR WALL	1/AD-2.0
0-B1-6	TYP. INTERIOR WALL	5/AD-2.0
2-D1-6	2 HR RATED WALL	9/AD-2.0

METAL BOLLARD, REF. DETAIL 16/ASD-1.2

WALL TYPES:

A2 - SEE DETAIL	2/AD-2.0
A3 - SEE DETAIL	3/AD-2.0
A4 - SEE DETAIL	4/AD-2.0
B2 - SEE DETAIL	12/AD-2.0
C1 - SEE DETAIL	6/AD-2.0
C2 - SEE DETAIL	7/AD-2.0
C3 - SEE DETAIL	8/AD-2.0
D2 - SEE DETAIL	10/AD-2.0
E1 - SEE DETAIL	11/AD-2.0

FLOOR PLAN LEGEND

STAMPS

LICENSED ARCHITECT ROGER CLARKE No. C-21360 Exp. 12-31-2024 STATE OF CALIFORNIA

AGENCY APPROVAL
File No.: ########-##-########

CONSULTANT BRANDING

RUHNAU CLARKE ARCHITECTS

MOUNT TRANSIT MAINTENANCE FACILITY: PHASE 1 - 100% CD

PROJECT No. :50801
8/3/2023 9:39:34 AM

DRAWN BY: CHECKED BY:

ISSUE No.____	DATE_____	DESCRIPTION_____
ISSUE No.____	DATE_____	DESCRIPTION_____
ISSUE No.____	DATE_____	DESCRIPTION_____
ISSUE No.____	DATE_____	DESCRIPTION_____
REVISION No.____	DATE_____	DESCRIPTION_____
REVISION No.____	DATE_____	DESCRIPTION_____
REVISION No.____	DATE_____	DESCRIPTION_____
REVISION No.____	DATE_____	DESCRIPTION_____

RUHNAUCLARKE.COM
3775 TENTH STREET, RIVERSIDE CALIFORNIA 92501 (951) 684 4664 / 5751 PALMER WAY, SUITE C, CARLSBAD CALIFORNIA 92010 (760) 438 5899

MOUNT TRANSIT MAINTENANCE FACILITY
PHASE 1
170 BUSINESS CENTER DR. BIG BEAR LAKES, CA
BIG BEAR LAKES

FLOOR PLAN A1-1.2

50801

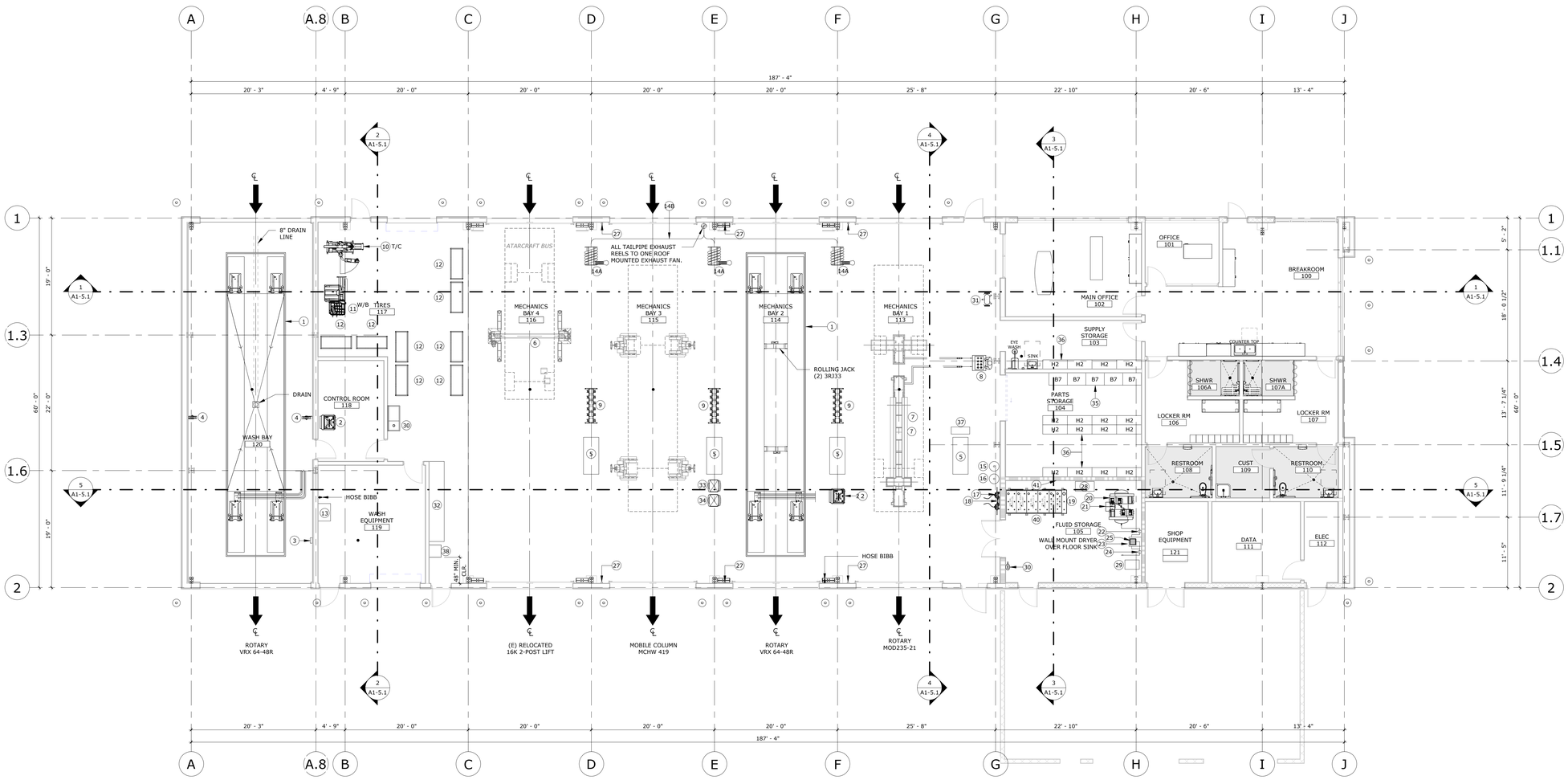

FLOOR PLAN — SCALE: 1/8" = 1'-0" — REF.: 1/A1-4.1 — 1

EQUIPMENT SCHEDULE

KEYNOTE NO.	EQUIPMENT NAME	SHOWN ON PLAN	PURCHASE/ INSTALLATION
1	ROTARY VREX 64/48 RECESS MOUNT REQUIRES DRAIN LINES BY PLUMBING SEUBCONTRACTOR TO CLARIFIER. INCLUDES TWO R3328K 32,000LB. CAPACITY ROLLING JACKS BUILT-IN AIR, LIFT SAFFETY TAPE SWITCH, BOTH INNER & OUTER RAILS. FURNISHED AND INSTALLED BY EQUIPMENT CONTRACTOR.	Y	
2	ROTARY MODEL: VRX6448R CONTROL CONSOLE IN CONTROL ROOM. REQUIRES 20-HP, 230V, 3HP 54FLA, AND 120V.1PH CONTROL POWER, AND 90-110-PSI COMPRESSED AIR.	Y	
3	ROTARY VREX 64/48 CONTROL PANEL IN WASH BAY, MODEL V40011 STAINLESS STEEL NEMA4 CONTROL PANEL. FURNISHED AND INSTALLED BY EQUIPMENT CONTRACTOR.	Y	
4	WALL MOUNTED WATER HOSE REEL IN WASH BAY. RAASM MODEL 8534-350-5S, WITH MODEL 8S3006-5S STAILESS STEEL REEL SWIVEL BRACKET, AND 995.520-5S HIGH PRESSURE HOSE, 22' SS WALL-MOUNTED WAND HOLDER. FURNISHED AND INSTALLED BY EQUIPMENT CONTRACTOR.	Y	
5	STATIONARY WORKBENCH MFG. BY SHURE. WITH STAINLESS STEEL TOP AND ACCESSORY KIT. INCLUDES MODEL #R2, 70"l X 34"D X ADJ. HEIGHT. FURNISHED AND INSTALLED BY EQUIPMENT CONTRACTOR.	Y	
6	EXISTING RELOCATED 16K 2-POST LIFT. (DESCRIPTION TBD) RE-INSTALLED BY EQUIPMENT CONTRACT.	Y	
7	IN-GROUND HEAVY DUTY 2 POST VEHICLE LIFT, MFG. BY ROTARY (VSG), MODEL MOD235X3D28K, HEAVY DUTY 2-POST IN-GROUND LIFT WITH FLEX HAND-HELD WIRELESS REMOTE CONTROL AND SADDLES FOR TRANSIT VEHICLES, 70,000 LB. LIFT CAPACITY 21' MOVEABLE POST. INCLUDES MODEL AK-ULP20-2 ADAPTER KIT. FURNISED AND INSTALLED BY EQUIPMENT CONTRACTOR.	Y	
8	HEAVY DUTY LIFT CONTROL PANEL FOR IN-GROUND MOD LIFT. MFG. BY ROTARY (VSG), MODEL MC235-RC WIRELESS REMOTE WITH PENDANT BACKUP. 2 EACH 5-HP MOTORS. REQUIRES 230V, 3 HP, 30.4 AMPS COMPRESED AIR. PROVIDE GRACO 244844 1/2" REGULATORS & 106149 1/2" FILTERS FOR AIR CONTROLS. FURNISHED AND INSTALLED BY EQUIPMENT CONTRACTOR.	Y	
9	LUBRICATION REEL BANK - EACH BANK CONSISTS OF 2EA. GRACO MODEL SDM65B OIL REELS, ONE EACH SDM65B GEAR OIL REEL. ONE EACH SDM65B ATF, REEL ONE EACH SDL25B COMPRESSED AIR REEL AND ONE EACH SDL25B WATER REEL , 1 EACH, 24Y864 TRI-PLUG GFCI CORD REEL. INCLUDED: GRACO MODEL 25M410. METERS FOR MOTOR OIL REELS, MODEL 25M413, METERS FOR GEAR OIL AND ATF REELS AND 3/8" COUPLER FOR AIR REELS AND HOSE BIBB FOR THE WATER REELS. PROVIDE SHUT-OFF VALVES AND CONNECTING HOSES. FUNISHED AND INSTALLED BY EQUIPMENT CONTRACTOR.	Y	
10	ROTARY TIRE CHANGER #R560 (MODEL RWC26HWSB) 220V, 60Hz, 1PHASE. FUNISHED AND INSTALLED BY EQUIPMENT CONTRATOR.	Y	
11	ROTARY WHEEL BALANCER MODEL R544 PLUS PRO TRUCK 3D WITH LASER. 110V, 60Hz, 1PHASE, NEMA 5-15 AND COMPRESSED AIR. FUNISHED AND INSTALLED BY EQUIPMENT CONTRATOR.	Y	
12	TIRE RACK SHELVING SYSTEM. MFG BY SHURE MODEL #K, 60-1/2"L X 24-1/2"D X 84"H, 2 LEVELS, ADJUSTABLE EVERY 1 1/2" UP OR DOWN THE UPRIGHT. ROTARY WHEEL BALANCER MODEL R544 PLUS PRO TRUCK 3D WITH LASER. 110V, 60Hz, 1PHASE, NEMA 5-15 AND COMPRESSED AIR. FUNISHED AND INSTALLED BY EQUIPMENT CONTRATOR.	Y	
13	ALKOTA HOT/ELECTRIC PRESSURE WASHER MODEL 4308 - GPM 3.5, PSI 3000, PUMP MOTOR: 7.5 HP, 240V, 3 PHASE, 160 AMP, 1" CW SUPPLY LINE.TIRE RACK SHELVING SYSTEM. MFG BY SHURE MODEL #K, 60-1/2"L X 24-1/2"D X 84"H, 2 LEVELS, ADJUSTABLE EVERY 1 1/2" UP OR DOWN THE UPRIGHT. ROTARY WHEEL BALANCER MODEL R544 PLUS PRO TRUCK 3D WITH LASER. 110V, 60Hz, 1PHASE, NEMA 5-15 AND COMPRESSED AIR. FUNISHED AND INSTALLED BY EQUIPMENT CONTRATOR. POWER BY GENERAL CONTRACTOR.	Y	
14a	HARVEY RHR-5R RETRACTING TAILPIPE EXHAUST HOSE REEL, APPROX. 160 LBS., 6" OUTLET. 5" X 24" HI-TEMP (600 F) SILICONE/FIBERGLASS FLEXIBLE RUBBER COATED HOSE. FURNISHED AND INSTALLED BY EQUIPMENT CONTRACTOR.	Y	
14b	HARVEY BD-11 ROOF MOUNTED BLOWER, APPOX. 150 LBS., 2HP, 230, 60Hz, 3 PHASE. NON-FUSE DISCONNECT LOCATED AT FAN. FAN TO BE LOCATED ON ROOF TOP. FINAL LOCATION TO BE DETERMINED. FURNISHED AND INSTALLED BY EQUIPMENT CONTRACT.	Y	
15	MOBILE COOLANT DISPENSER INCLUDES GRACO MODEL 226942 DRUMOMOUNTED FAST-FLO 1:1 PUMP FOR COOLANT WITH ADDITIONAL ACCESSORIES, AS SPECIFIED. FURNISHED AND INSTALLED BY EQUIPMENT CONTRACTOR	Y	
16	MOBILE GREASE DISPENSER GRACO MODEL 225773 CART-MOUNTED GREASE DISPENSOR FOR 35-50 LB PAILS SYSTEM INCLUDES FIREBALL 300 50:1 PUMP, 2 WHEEL HAND TRUCK, DRUM COVER, 16 GAL PAIL, 12' FLUID HOSE, 242056 1/4" PRO-SHOT DISPENSOR VALVE, 202577 Z-SWIVEL, AIR CONNECTION. FUNISHED AND INSTALLED BY EQUIPMENT CONTRACTOR.	Y	
17	WASTE EVACUATION PUMP GRACO MODEL 24E166, 2 EACH, ONE FOR WASTE OIL & ONE FOR WASTE COOLANT. WALL MOUNTED. FURNISHED AND INSTALLED BY EQUIPMENT CONTRACTOR.	Y	
18	WASTE EVACUATION OVERFILL ALARM PANEL, DEDICATED 110V, MODEL PLEB36A-2-PRODUCT OVERFILL ALARM SYSTEM WITH AUTOMATIC CUT-OFF FOR WASTE OIL AND WASTE COOLANT STATIONS. FURNISHED AND INSTALLED BY EQUIPMENT CONTRATOR.	Y	
19	1,100 GALLON STORAGE TANK LUBE CUBE MODEL LC1100DW6C. DOUBLE WALLED, 6 CELL TANK: 2 EACH 125-GAL FOR GEAR OIL AND ATF. FURNISHED AND INSTALLED BY EQUIPMENT CONTRACTOR.	Y	
20	SAYLOR-BEALL DUPLEX AIR COMPRESSOR MODEL #X-755-120-FP (69"L X 51"W X 50" H) 2 EACH 10HP, 230V, 3PH, 28 FLA DUAL STARTERS, AIR COOLED AFTER COOLERS. 120-GAL HORIZONTAL TANK, 68.8 CMF @ 125-PSI IN DUPLEX MODE. FURNISHED AND INSTALLED BY EQUIPMENT CONTRACTOR.	Y	
21	AIR COMPRESSOR TANK MOUNTED FUSE DISCONNECTS (1) PER MOTOR	Y	
22	NORGREN PRE FILTER MODEL #F17-A00-A10A. PORT SIZE: 1 1/2" FURNISHED AND INSTALLED BY EQUIPMENT CONTRACTOR.	Y	
23	GREAT LAKES AIR DRYER MODEL #ERF-100A. WALL MOUNTED APPROX. 250 LBS. 120V 1 PHASE, 5/8-HP. FURNISHED AND INSTALLED BY EQUIPMENT CONTRACTOR.	Y	
24	NORGREN POST FILTER MODEL #F46-A01-A0DA. PORT SIZE: 1-1/4". FURNISHED AND INSTALLED BY EQUIPMENT CONTRACTOR.	Y	
25	FLOOR SINK BY G.C. MUST DRAIN TO OIL/SAND SEPARATOR	Y	
26	NOT USED		
27	AIR DROPS CONSISTING OF GRACO. 244844 1/2" REGULATOR, 106149 1/2" FILTER, 214848 1/2" LUBRICATOR, PREVOST USI081202 3/8" COUPLER, USI111204 1/2" COUPLER, SHUT OFF VALVES.	Y	
28	JUST-RITE EX FLAMMABLE SAFETY CABINET, MODEL #894520 (YELLOW) CAP. 45 GALLONS, 2 ADJUSTABLE SHELVES, 2 SELF-CLOSE DOORS (43"W X 18"D X 65"H) 18 GA. CR STEEL CONSTRUCTION. FURNISHED AND INSTALLED BY EQUIPMENT CONTRACTOR.	Y	
29	FILTER CRUSHER OBERG MODEL P-100WM, 115V, 15A. INCLUDE CS-100 FLOOR STAND, PLE MODEL 80895 16-GAL OIL DRUM FOR DRAINAGE COLLECTION, 80896 DRUM COVER AND GRACO 203622 PORTABLE DOLLY BASE FOR DRUM. FURNISHED AND INSTALLED BY EQUIPMENT CONTRACTOR.	Y	
30	EYEWASH BY OTHERS	Y	
31	GRINDER BALDER MODEL 1021WD, 230W, 3PH, 2.6A AND MODEL GA16 PEDESTAL. FURNISHED AND INSTALLED BY EQUIPMENT CONTRACTOR.		
32	13' WORKBENCH BY SHURE MFG. MODEL RD-3667-91 WITH LED LIGHTS & POWER STRIPS 120V, 1PH. POWER FOR 12 OUTLETS. FURNISHED AND INSTALLED BY EQUIPMENT CONTRACTOR.		
33	WASTE OIL KING GRACO MODEL 238866 AND HGF6 ADAPTER COUPLER PLUG. FURNISHED AND INSTALLED BY EQUIPMENT CONTRACTOR.	Y	
34	WASTE COOLANT KING GRACO MODEL 248632 AND H4F4 ADAPTER AND COUPLER PLUG. FURNISHED AND INSTALLED BY EQUIPMENT CONTRACTOR.		
35	BORROUGHS CABINET (36"W X 24"D X 8'-3"H) MODEL #B7 2 EACH. 6" DRAWERS WITH 25 COMPARTMENTS, 4 EACH 9" DRAWERS WITH 20 COMPARTMENTS, 5 SHELVES (TWO ADJUSTABLE), LOCKING UPPER 1/2" DOORS. BLUE WITH GREY SHELVES AND POSTS. FURNISHED AND INSTALLED BY EQUIPMENT CONTRACTOR.	Y	
36	BORROUGHS (48" X 18 X 7'-3"H) MODEL #H2, SEVEN SHELVES (FIVE ADJUSTABLE) AND TWO BIN FRONTS. BLUE WITH GREY SHELVES AND POSTS. FURNISHED AND INSTALLED BY EQUIPMENT CONTRACTOR.	Y	
37	JET FLOOR DRILL PRESS MODEL #J-2500 (26" X 14" X 64"H) 3/4HP, 115V. 1 HP, 14 SPEEDS. TABLE TILTS 45 DEGREES, 5/8" DRILL HUCK AND ARBOR. FURNISHED AND INSTALLED BY EQUIPMENT CONTRACTOR.	Y	
38	CHOP SAW - MAKITA 14" CUT-OFF SAW, MODEL LW1401. 12V, 1HP 15A MOTOR, 3800-RPM. PROVIDE STAND. FURNISHED AND INSTALLED BY EQUIPMENT CONTRACTOR.		
39	ROTARY MOBILE COLUMN LIFTS, MODEL MCHM419U008K, SET OF 4, 75,200-LB TOTAL LIFT CAPACITY, WIRELESS HAND-HELD REMOTE CONTROL, PLUS OPERATIONS AT ANY COLUMN. REDFIRE WIRELESS TECHNOLOGY, BATTERY POWERED WITH INTERNAL CHARGING SYSTEM, LOWER TO LOCK LIGHT AND DIGITAL WEIGHT GAUGE. FURNISHED AND INSTALLED BY EQUIPMENT CONTRACTOR.		
40	GRACO MODEL 225852 FIREBALL 100 5:1 PUMPS FOR MO, GO AND ATF, INCLUDE MODEL 203688 LOW-OIL CUT-OFF, 237893 THERMAL RELIEF VALVE AND 109075 REGULATOR AND GAUGE.		
41	GRACO MODELS 106149 1/2" AIR FILTER, 214848 1/2" LUBRICATOR AND 244844 1/2" REGULATOR AND GAUGE FOR MAIN AIR SUPPLY TO PUMPS.		
42			

STAMPS

LICENSED ARCHITECT — ROGER CLARKE — No. C-20136 — Exp. 12-31-2024 — STATE OF CALIFORNIA

AGENCY APPROVAL
File No.: ########/##-########

CONSULTANT BRANDING

RUHNAU CLARKE ARCHITECTS

MOUNT TRANSIT MAINTENANCE FACILITY: PHASE 1 - 100% CD

PROJECT No. :50801
8/3/2023 9:39:54 AM

DRAWN BY: _____ CHECKED BY: _____

ISSUE No.____ DATE_____ DESCRIPTION_____
ISSUE No.____ DATE_____ DESCRIPTION_____
ISSUE No.____ DATE_____ DESCRIPTION_____
ISSUE No.____ DATE_____ DESCRIPTION_____

REVISION No.____ DATE_____ DESCRIPTION_____
REVISION No.____ DATE_____ DESCRIPTION_____
REVISION No.____ DATE_____ DESCRIPTION_____
REVISION No.____ DATE_____ DESCRIPTION_____

RUHNAUCLARKE.COM
3775 TENTH STREET, RIVERSIDE CALIFORNIA 92501(951) 684 4664 / 5751 PALMER WAY, SUITE C, CARLSBAD CALIFORNIA 92010(760) 438 5899

MOUNT TRANSIT MAINTENANCE FACILITY
PHASE 1
170 BUSINESS CENTER DR. BIG BEAR LAKES, CA
BIG BEAR LAKES

EQUIPMENT PLAN

A1-1.3

50801

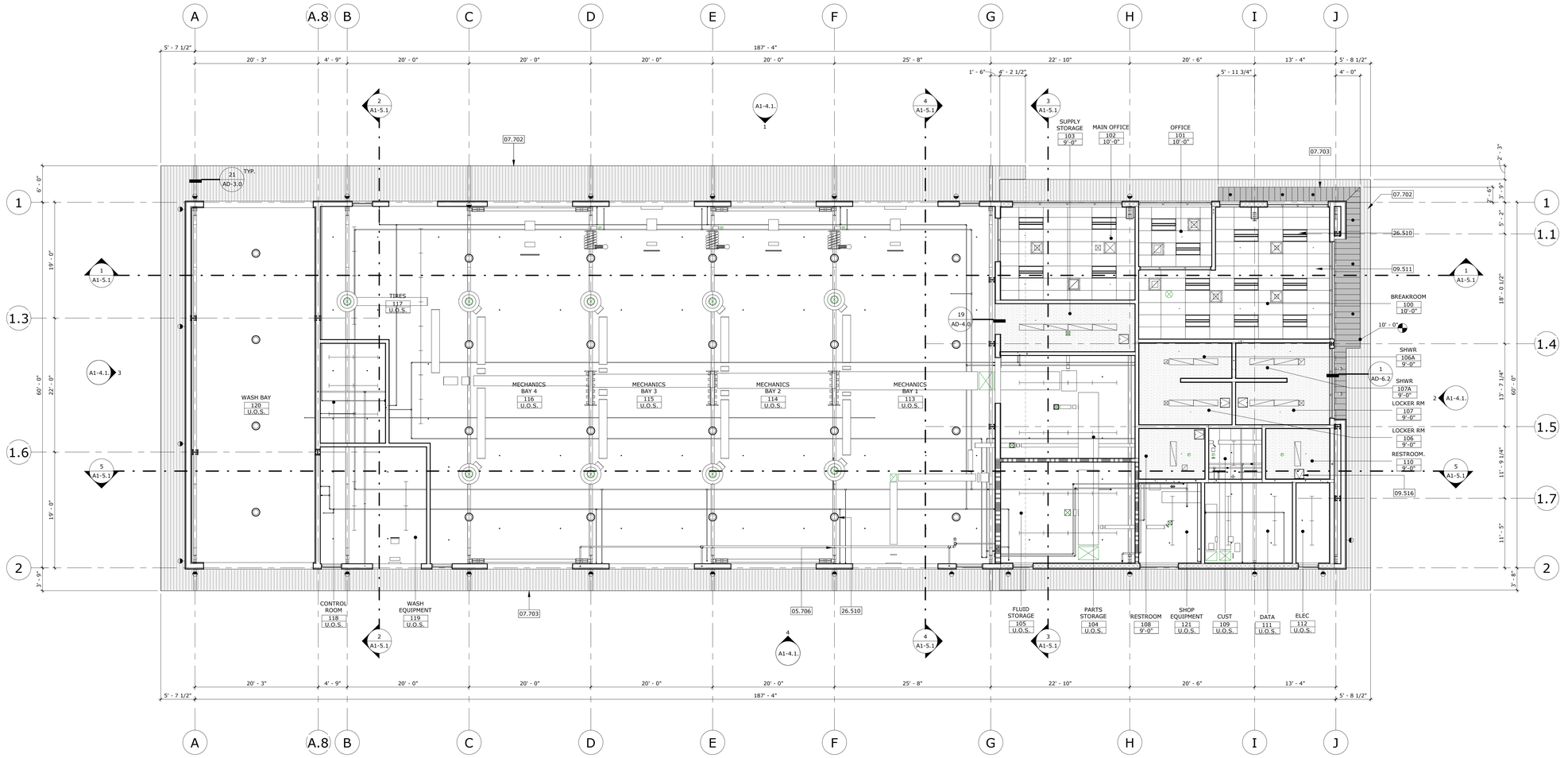

NORTH

REFLECTED CEILING PLAN — SCALE: 1/8" = 1'-0" — REF.: 1/A1-4.1 — 1

GENERAL NOTES

1. ALL LIGHT FIXTURES TO BE CENTERED IN SPACE, U.N.O.
2. ALL CEILING HEIGHTS ARE RELATIVE TO THE FINISH FLOOR DIRECTLY BENEATH.
3. ACOUSTICAL CEILING TILES AND GRID TO BE CENTERED IN ROOM. SEE SHEET - / AD-4.0 FOR SUSPENDED CEILING SEISMIC BRACING DETAILS AND TRAPEZE DETAILS
4. ALL EXPOSED STRUCTURE, INCLUDING MECHANICAL & PLUMBING EQUIPMENT TO BE PAINTED
5. ALL MECHANICAL, ELECTRICAL AND PLUMBING EQUIPMENT TO BE HELD AS TIGHT AS POSSIBLE TO CEILING STRUCTURE
6. ALL CONDUIT IN EXPOSED AREAS WHERE CEILING STRUCTURE IS EXPOSED CAN ONLY PENETRATE WALLS AT ROOF / FLOOR DECK
7. REFER TO ELECTRICAL & MECHANICAL DRAWINGS FOR CEILING COMPONENT CALLOUTS AND FIXTURE TYPES
8. PAINT ALL SUPPLY & RETURNS OF ALL ACCENT PAINTED CEILING AREAS

05.706	PRE-ENGINEERED METAL BUILDING (P.E.M.B.) STRUCTURE
07.702	METAL PANEL SOFFIT
07.703	METAL CANOPY
09.511	ACOUSTICAL PANEL CEILING
09.516	CEILING ACCESS PANEL
26.510	INTERIOR LIGHTING PER ELECTRICAL DRWG

KEYNOTES

- GWB CEILING PER DETAIL 21 / AD-4.0
- 2'-0" x 4'-0" SUSPENDED T-BAR CEILING W/ ACOUSTICAL CEILING PANELS **(ACT-1)** PER DETAIL 7 / AD-4.0
- P.E.M.B. METAL OVERHANG PANEL **(MRP-1)**
- P.E.M.B. METAL CANOPY PANEL **(MRP-2)**
- SUPPLY DIFFUSER PER MECH. DWGS.
- RETURN AIR GRILLE PER MECH. DWGS.
- CEILING ACCESS HATCH PANEL, 300 SQ IN. MIN. PAINT TO MATCH ADJACENT CEILING. PER DETAIL 14 / AD-4.0
- WALL MOUNTED LIGHT FIXTURE, SEE ELEC. DWGS.
- WALL MOUNTED FLOOD LIGHT, SEE ELEC. DWGS.
- 6" RECESSED LIGHT FIXTURE, SEE ELEC. DWGS. 23 / AD-4.0
- PENDANT LIGHT FIXTURES, SEE ELEC. DWGS.
- RECESSED LIGHT FIXTURE, SEE ELEC. DWGS. & DET. 24 / AD-4.0
- RECESSED LIGHT FIXTURE, SEE ELEC. DWGS. 20 / AD-4.0
- LINEAR PENDANT LIGHT FIXTURE, SEE ELEC. DWGS.
- LINEAR PENDANT LIGHT FIXTURE, SEE ELEC. DWGS.
- FIRE SPRINKLER, SEE FIRE PROCTECTION DWGS.
- HARVEY RHR-5R TAILPIPE EXHAUST HOSE REEL. 160 LBS., 6" OUTLET
- LUBRICATION REEL BANK - (6) EA. OPEN REEL - TBD

NOTE:
REFER TO COLORS, MATERIALS AND FINISHES LEGEND FOR ADDITIONAL INFORMATION - / ID-1.0

RCP LEGEND

STAMPS

LICENSED ARCHITECT — ROGER CLARKE — No. C-21360 — Exp. 12-31-2024 — STATE OF CALIFORNIA

AGENCY APPROVAL
File No.: ########/##-########

CONSULTANT BRANDING

RUHNAU CLARKE ARCHITECTS

MOUNT TRANSIT MAINTENANCE FACILITY: PHASE 1 - 100% CD

PROJECT No. :50801
8/3/2023 3:06:19 PM

DRAWN BY: CHECKED BY:

ISSUE No._____ DATE_____ DESCRIPTION_____
ISSUE No._____ DATE_____ DESCRIPTION_____
ISSUE No._____ DATE_____ DESCRIPTION_____
ISSUE No._____ DATE_____ DESCRIPTION_____

REVISION No._____ DATE_____ DESCRIPTION_____
REVISION No._____ DATE_____ DESCRIPTION_____
REVISION No._____ DATE_____ DESCRIPTION_____
REVISION No._____ DATE_____ DESCRIPTION_____

RUHNAUCLARKE.COM
3775 TENTH STREET, RIVERSIDE CALIFORNIA 92501 (951) 684 4664 / 5751 PALMER WAY, SUITE C, CARLSBAD CALIFORNIA 92010 (760) 438 5899

MOUNT TRANSIT MAINTENANCE FACILITY
PHASE 1
170 BUSINESS CENTER DR. BIG BEAR LAKES, CA
BIG BEAR LAKES

REFLECTED CEILING PLAN

A1-2.1

50801

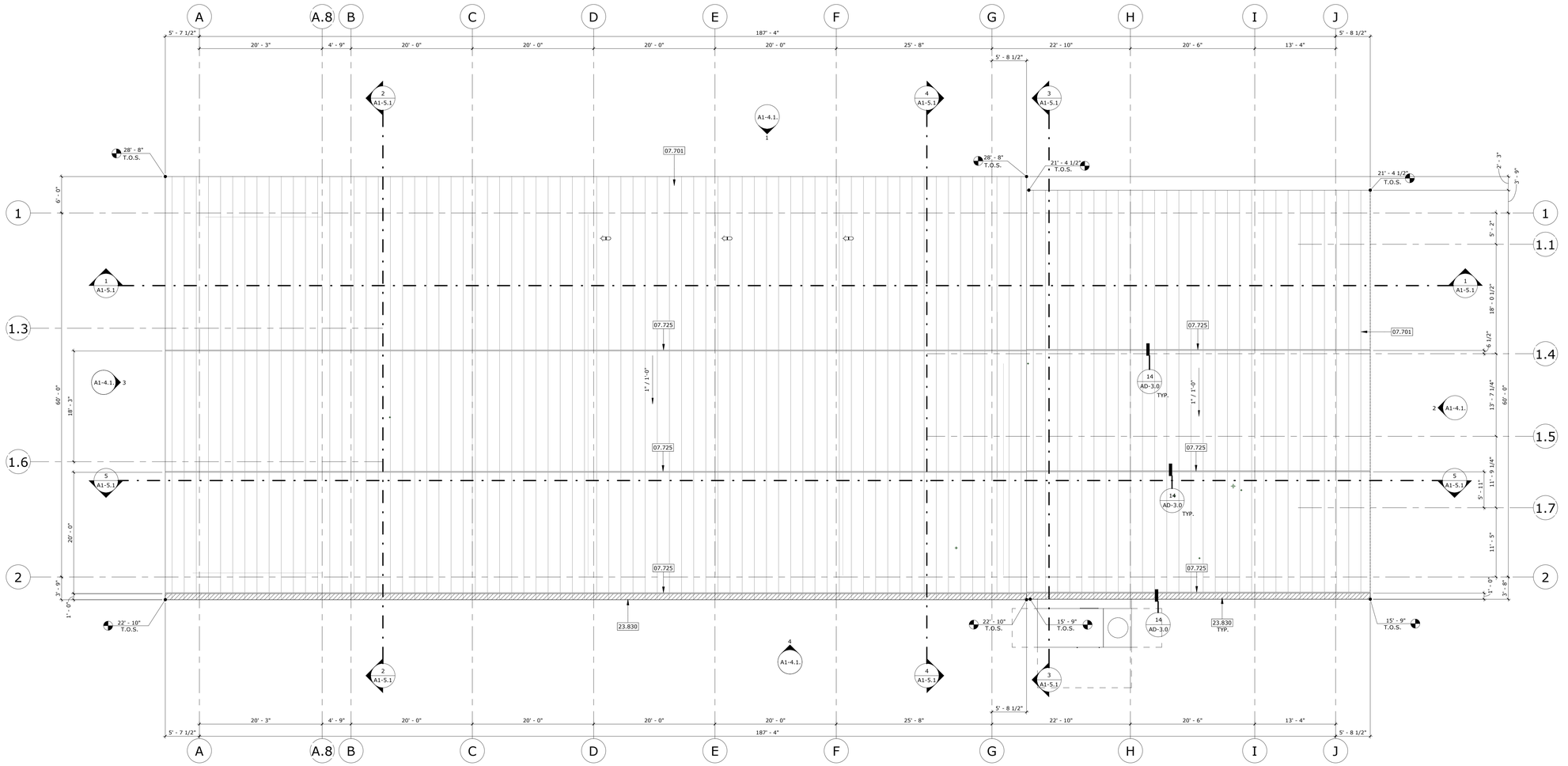

NORTH

ROOF PLAN — SCALE: 1/8" = 1'-0" — REF.: 1/A1-4.1 — 1

1. SEE DETAIL - / AD-3.0 FOR TYPICAL ROOF ASSEMBLY.
2. FOR PIPE VENT PENETRATIONS THROUGH ROOF, REFER TO DETAIL 4 / AD-3.0 FOR TYP. INFO.
3. AT MECHANICAL EQUIPMENT, REFER TO DETAIL 4 / AD-3.0 FOR ROOF CURB

GENERAL NOTES

GRAPHIC PATTERN | **MATERIAL NAME**

P.E.M.B. METAL ROOF PANEL **(MRP-3)** — 1 / AD-3.0

ROOF VENTS PER MECH. DWGS. — 7 / M2-0.2, 4 / AD-3.0, 6 / AD-3.0

NOTE:
REFER TO COLORS, MATERIALS AND FINISHES LEGEND FOR ADDITIONAL INFORMATION - / ID-1.0

ROOF LEGEND

07.701	METAL ROOF PANEL SYSTEM
07.725	SNOW GUARD
23.830	HEAT TRACE ABOVE STANDING SEAM METAL ROOF

KEYNOTES

STAMPS

LICENSED ARCHITECT — ROGER CLARKE — No. C-21360 — Exp. 12-31-2024 — STATE OF CALIFORNIA

AGENCY APPROVAL
File No.: ########/##-#######

CONSULTANT BRANDING

RUHNAU CLARKE ARCHITECTS

MOUNT TRANSIT MAINTENANCE FACILITY: PHASE 1 - 100% CD

PROJECT No. :50801
8/3/2023 9:04:53 AM

DRAWN BY: CHECKED BY:

ISSUE No.____ DATE_____ DESCRIPTION_____
ISSUE No.____ DATE_____ DESCRIPTION_____
ISSUE No.____ DATE_____ DESCRIPTION_____
ISSUE No.____ DATE_____ DESCRIPTION_____

REVISION No.____ DATE_____ DESCRIPTION_____
REVISION No.____ DATE_____ DESCRIPTION_____
REVISION No.____ DATE_____ DESCRIPTION_____
REVISION No.____ DATE_____ DESCRIPTION_____

RUHNAUCLARKE.COM

3775 TENTH STREET, RIVERSIDE CALIFORNIA 92501 (951) 684 4664 / 5751 PALMER WAY, SUITE C, CARLSBAD CALIFORNIA 92010 (760) 438 5899

MOUNT TRANSIT MAINTENANCE FACILITY
PHASE 1
170 BUSINESS CENTER DR. BIG BEAR LAKES, CA
BIG BEAR LAKES

ROOF PLAN

A1-3.1

50801

STAMPS

AGENCY APPROVAL
File No.: ########-##-########

RUHNAU CLARKE ARCHITECTS

CONSULTANT BRANDING

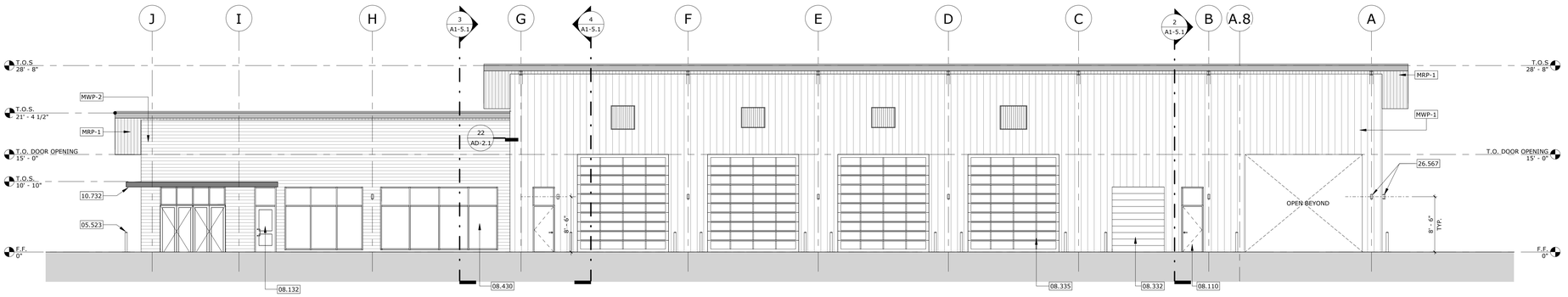

NORTH ELEVATION | SCALE: 1/8" = 1'-0" | REF.: 1/A1-1.2 | 1

1. FOR COLORS, MATERIALS, AND FINISHES SEE SHEET - ID-1.0
2. LIGHT FIXTURE BACKING MATERIAL AND BOX OUT TRIM TO BE SUPPLIED BY PEMB INSTALLER AND APPROVED BY ARCHITECT. INSTALLER TO PROVIDE MOCK-UP FOR APPROVAL OF APPLICATIONS.

GENERAL NOTES

05.523	METAL PIPE BOLLARD
05.706	PRE-ENGINEERED METAL BUILDING (P.E.M.B.) STRUCTURE
08.110	METAL DOOR AND FRAME PER DOOR SCHEDULE
08.132	ALUMINUM DOOR
08.332	OVERHEAD COILING DOOR SEE DOOR SCHEDULE
08.335	SECTIONAL DOOR SEE DOOR SCHEDULE
08.430	STOREFRONT SYSTEM PER WINDOW SCHEDULE
09.943	WALL MOUNTED LETTER SIGN
10.732	CANOPY
26.567	EXTERIOR WALL MOUNTED LIGHT FIXTURE
34.1000	GAS METER

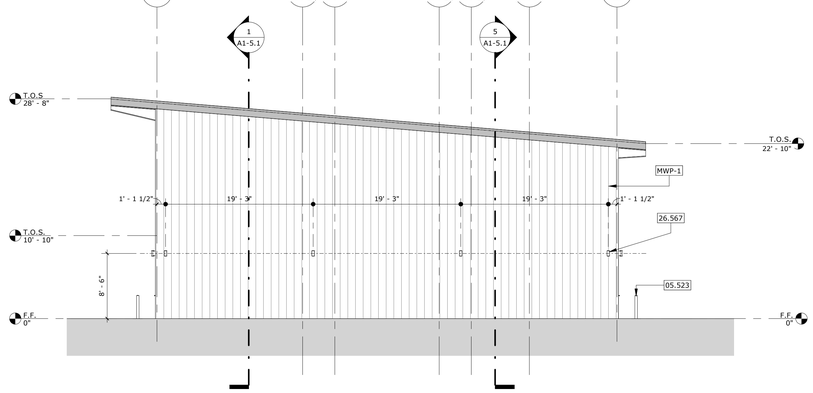

WEST ELEVATION | SCALE: 1/8" = 1'-0" | REF.: 1/50-1.5 | 3

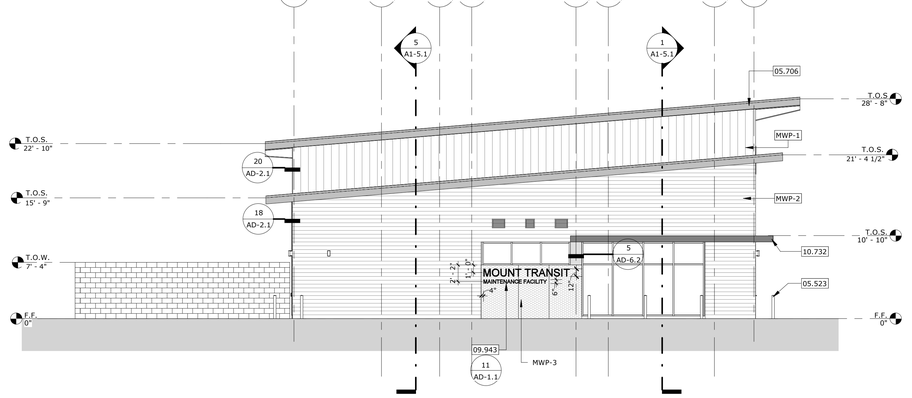

EAST ELEVATION | SCALE: 1/8" = 1'-0" | REF.: 1/A1-1.2 | 2

KEYNOTES

GRAPHIC PATTERN	MATERIAL NAME
	P.E.M.B. METAL WALL PANEL **(MWP-1)**
	P.E.M.B METAL WALL PANEL **(MWP-2)**
	P.E.M.B. METAL UNDERSIDE OF ROOF PANEL **(MRP-1)**
	P.E.M.B. METAL ROOF PANEL **(MRP-3)**
	DECORATIVE COR-TEN STEEL **(MWP-3)**
	P.E.M.B. METAL TRIM **(SMF-1)**
	P.E.M.B. METAL TRIM **(SMF-2)**
	C.M.U. WALL **(CMU-1)**
	EXTERIOR LIGHTING PER ELEC. DWGS.

NOTE:
REFER TO COLORS, MATERIALS AND FINISHES LEGEND FOR ADDITIONAL INFORMATION - ID-1.0

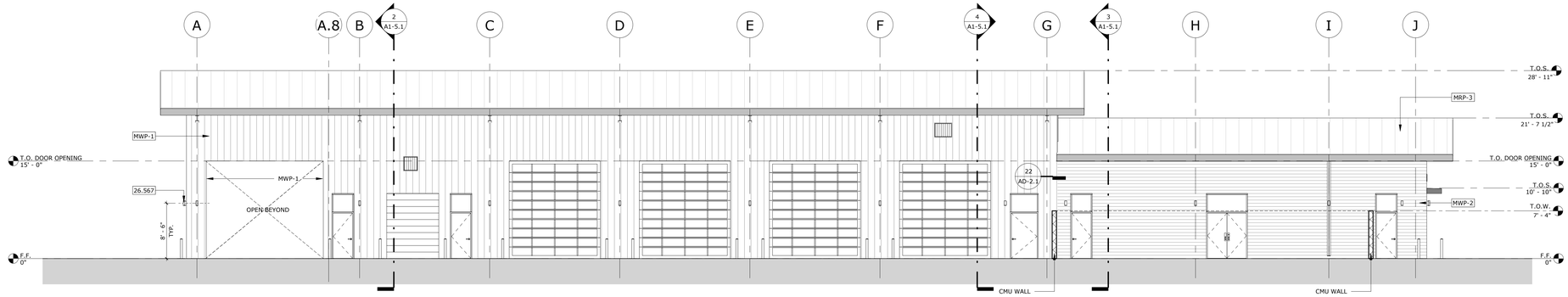

SOUTH ELEVATION | SCALE: 1/8" = 1'-0" | REF.: 1/A1-1.1 | 4

EXTERIOR ELEVATIONS LEGEND

PROJECT No. :50801
8/3/2023 9:38:48 AM

DRAWN BY: CHECKED BY:

ISSUE No.____ DATE____ DESCRIPTION____
ISSUE No.____ DATE____ DESCRIPTION____
ISSUE No.____ DATE____ DESCRIPTION____
ISSUE No.____ DATE____ DESCRIPTION____

REVISION No.____ DATE____ DESCRIPTION____
REVISION No.____ DATE____ DESCRIPTION____
REVISION No.____ DATE____ DESCRIPTION____
REVISION No.____ DATE____ DESCRIPTION____

RUHNAUCLARKE.COM
3775 TENTH STREET, RIVERSIDE CALIFORNIA 92501(951) 684 4664 / 5751 PALMER WAY, SUITE C, CARLSBAD CALIFORNIA 92010(760) 438 5899

MOUNT TRANSIT MAINTENANCE FACILITY
PHASE 1
170 BUSINESS CENTER DR. BIG BEAR LAKES, CA
BIG BEAR LAKES

MOUNT TRANSIT MAINTENANCE FACILITY: PHASE 1 - 100% CD

BUILDING ELEVATIONS | **A1-4.1**

50801

1. SLAB ON GRADE: 0'-0" = GLOBAL ELEVATION:65.85'
2. VERIFY ALL EXTERIOR ROOF OPENINGS & VENTS WITH MECHANICAL, ELECTRICAL, STRUCTURAL & PLUMBING DRAWINGS.
3. SEE DETAIL 4/AD-3.0 FOR TYPICAL ROOF VENT PENETRATION DETAIL.
4. SEE DETAIL 6/AD-3.0 FOR TYPICAL WALL PENETRATION DETAIL.
   SEE DETAIL 1/AD-3.0 FOR TYPICAL ROOF CONSTRUCTION ASSEMBLY.
4. PROVIDE R-23 BATT INSULATION AT ALL EXTERIOR WALLS, U.N.O. GYPSUM BOARD AND INSULATION SHALL EXTEND FULL HEIGHT OF WALL TO UNDERSIDE OF ROOF STRUCTURE
5. ALL EXPOSED STRUCTURE, INCLUDING MECHANICAL & PLUMBING EQUIPMENT TO BE PAINTED

GENERAL NOTES

07.701	METAL ROOF PANEL SYSTEM
07.703	METAL CANOPY
08.335	SECTIONAL DOOR SEE DOOR SCHEDULE
08.430	STOREFRONT SYSTEM PER WINDOW SCHEDULE
09.511	ACOUSTICAL PANEL CEILING
09.515	HARD LID CEILING WITH GYPSUM BOARD CEILING FINISH
09.702	EXTERIOR METAL PANEL SYSTEM

KEYNOTES

STAMPS

LICENSED ARCHITECT · ROGER CLARKE · No. C-31340 · Exp. 12-31-2024 · STATE OF CALIFORNIA

AGENCY APPROVAL
File No.: ########-##-########

CONSULTANT BRANDING

RUHNAU CLARKE ARCHITECTS

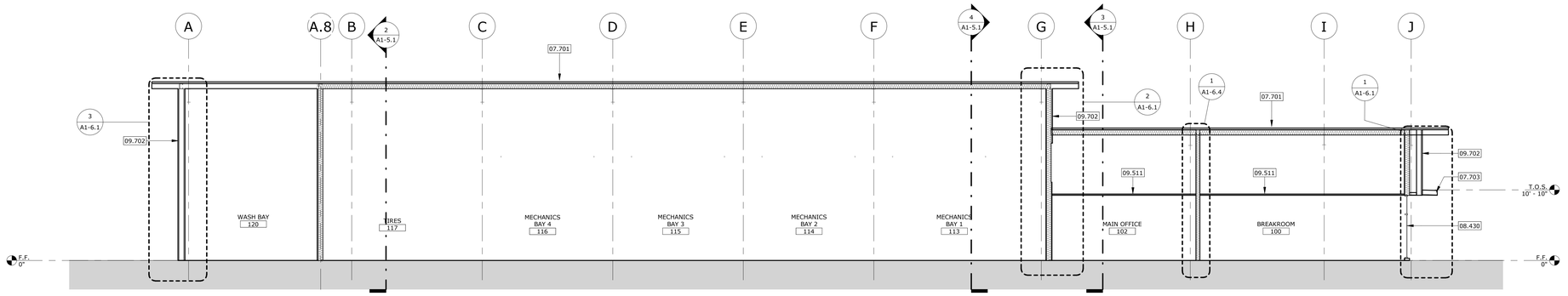

BUILDING SECTION - NORTH-SOUTH SCALE: 1/8" = 1'-0" REF.: 1/A1-1.1 — 1

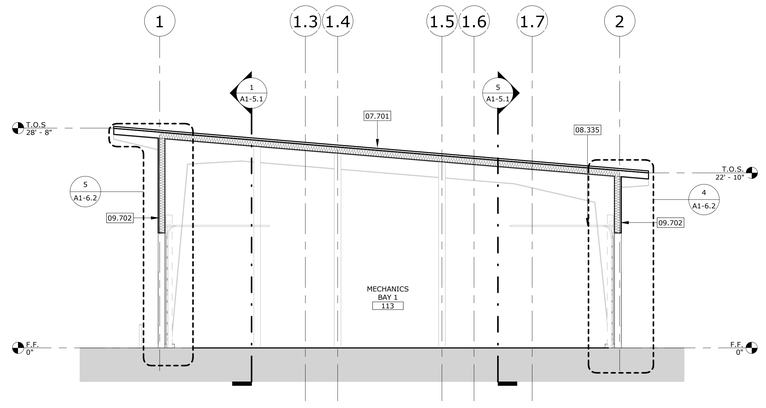

BUILDING SECTION - WEST-EAST SCALE: 1/8" = 1'-0" REF.: 1/A1-1.1 — 4

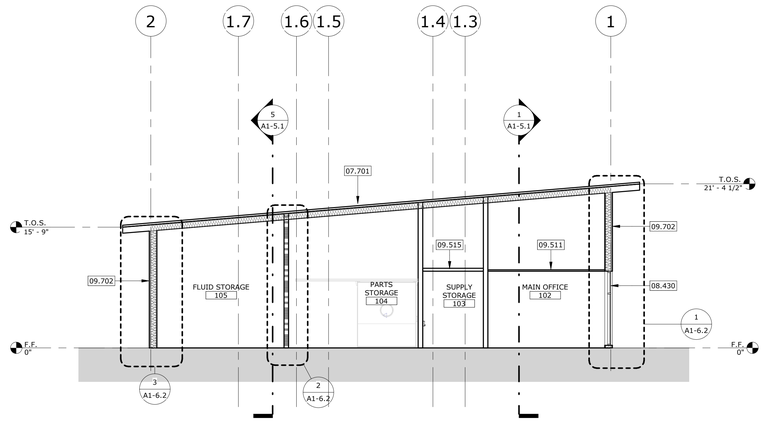

BUILDING SECTION - EAST-WEST SCALE: 1/8" = 1'-0" REF.: 1/A1-1.1 — 3

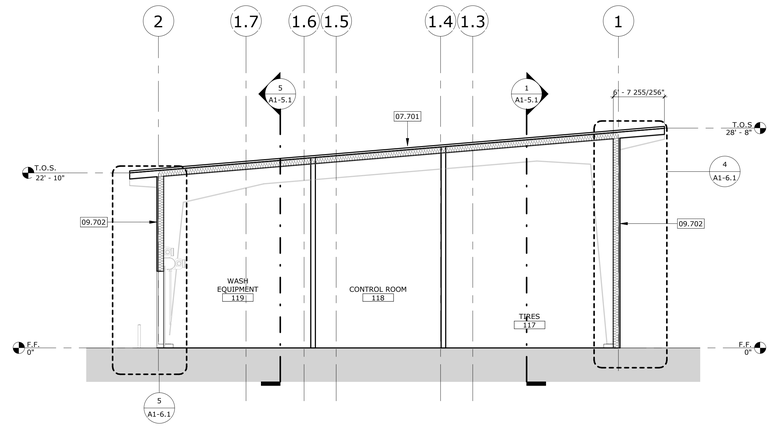

BUILDING SECTION - EAST -WEST SCALE: 1/8" = 1'-0" REF.: 1/A1-1.1 — 2

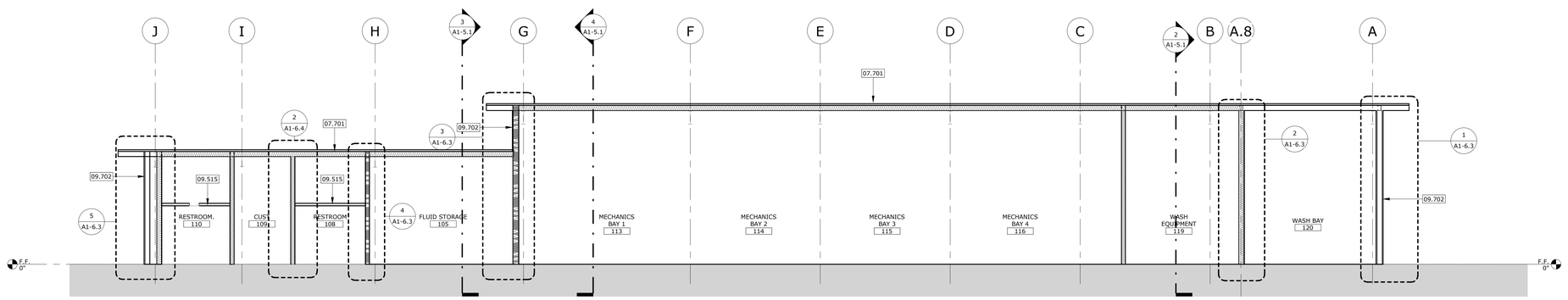

BUILDING SECTION SOUTH-NORTH SCALE: 1/8" = 1'-0" REF.: 1/A1-1.1 — 5

MOUNT TRANSIT MAINTENANCE FACILITY: PHASE 1 - 100% CD

PROJECT No. :50801
8/3/2023 9:13:15 AM

DRAWN BY: CHECKED BY:

ISSUE No.:_____ DATE:_____ DESCRIPTION:_____
ISSUE No.:_____ DATE:_____ DESCRIPTION:_____
ISSUE No.:_____ DATE:_____ DESCRIPTION:_____
ISSUE No.:_____ DATE:_____ DESCRIPTION:_____

REVISION No.:_____ DATE:_____ DESCRIPTION:_____
REVISION No.:_____ DATE:_____ DESCRIPTION:_____
REVISION No.:_____ DATE:_____ DESCRIPTION:_____
REVISION No.:_____ DATE:_____ DESCRIPTION:_____

RUHNAUCLARKE.COM
3775 TENTH STREET, RIVERSIDE CALIFORNIA 92501(951) 684 4664 / 5751 PALMER WAY, SUITE C, CARLSBAD CALIFORNIA 92010(760) 438 5899

MOUNT TRANSIT MAINTENANCE FACILITY
PHASE 1
170 BUSINESS CENTER DR. BIG BEAR LAKES, CA
BIG BEAR LAKES

BUILDING SECTIONS

A1-5.1

50801

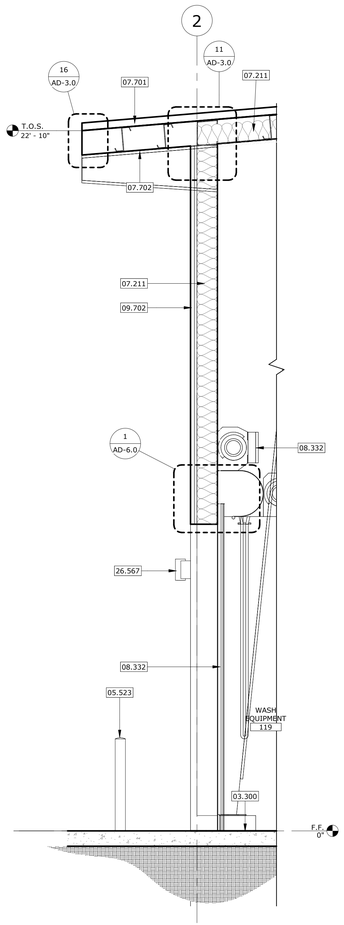

WALL SECTION — SCALE: 1/2" = 1'-0" — REF.: 2/A1-5.1 — 5

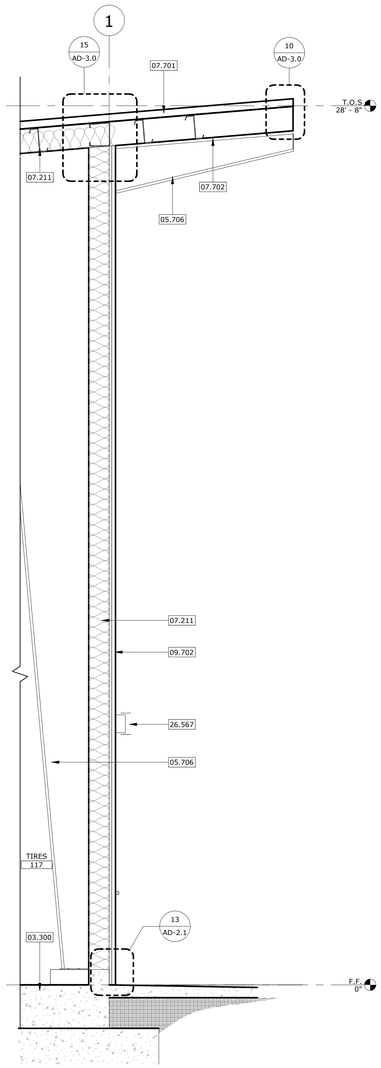

WALL SECTION — SCALE: 1/2" = 1'-0" — REF.: 2/A1-5.1 — 4

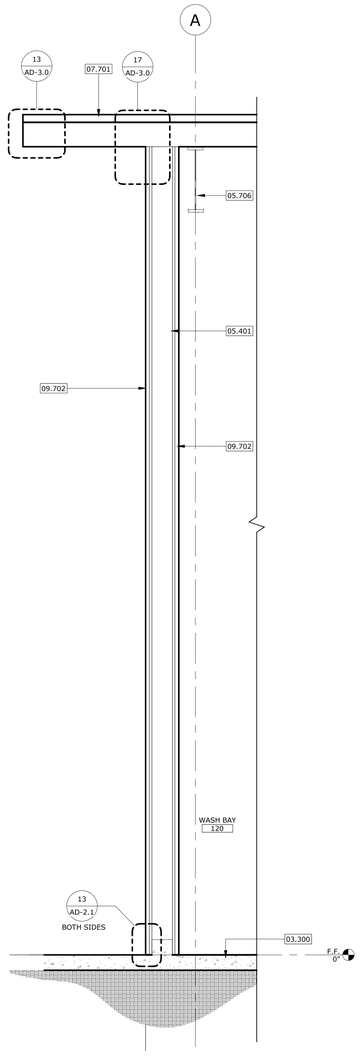

WALL SECTION 1 — SCALE: 1/2" = 1'-0" — REF.: 1/A1-5.1 — 3

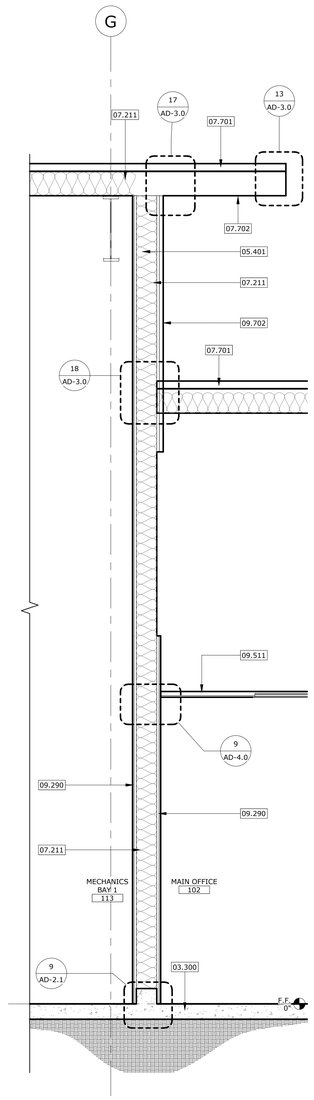

WALL SECTION — SCALE: 1/2" = 1'-0" — REF.: 1/A1-5.1 — 2

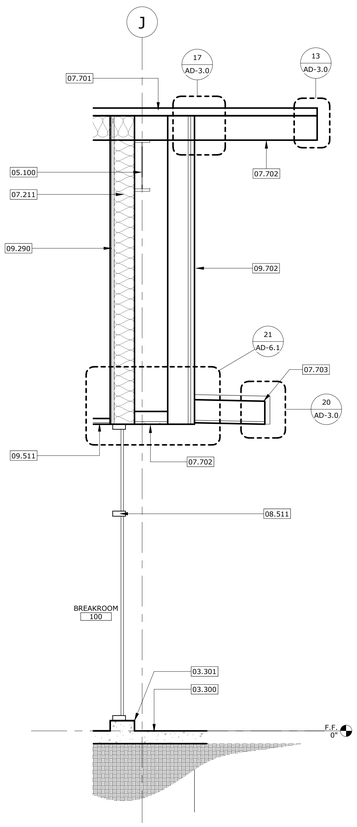

WALL SECTION — SCALE: 1/2" = 1'-0" — REF.: 1/A1-5.1 — 1

STAMPS

LICENSED ARCHITECT — ROGER CLARKE — No. C-21360 — Exp. 10-31-2024 — STATE OF CALIFORNIA

AGENCY APPROVAL
File No.: ########/##-########

CONSULTANT BRANDING

RUHNAU CLARKE ARCHITECTS

1. SLAB ON GRADE: 0'-0" = GLOBAL ELEVATION:65.85'
2. VERIFY ALL EXTERIOR ROOF OPENINGS & VENTS WITH MECHANICAL, ELECTRICAL, STRUCTURAL & PLUMBING DRAWINGS.
3. SEE DETAIL 4/AD-3.0 FOR TYPICAL ROOF VENT PENETRATION DETAIL.
4. SEE DETAIL 6/AD-3.0 FOR TYPICAL WALL PENETRATION DETAIL.

   SEE DETAIL 1/AD-3.0 FOR TYPICAL ROOF CONSTRUCTION ASSEMBLY.
4. PROVIDE R-23 BATT INSULATION AT ALL EXTERIOR WALLS, U.N.O. GYPSUM BOARD AND INSULATION SHALL EXTEND FULL HEIGHT OF WALL TO UNDERSIDE OF ROOF STRUCTURE
5. ALL EXPOSED STRUCTURE, INCLUDING MECHANICAL & PLUMBING EQUIPMENT TO BE PAINTED

GENERAL NOTES

03.300	CAST-IN-PLACE CONCRETE
03.301	CAST-IN-PLACE CONCRETE CURB
05.100	STRUCTURAL STEEL FRAMING
05.401	METAL STUD FRAMING
05.523	METAL PIPE BOLLARD
05.706	PRE-ENGINEERED METAL BUILDING (P.E.M.B.) STRUCTURE
07.211	BATT INSULATION
07.701	METAL ROOF PANEL SYSTEM
07.702	METAL PANEL SOFFIT
07.703	METAL CANOPY
08.332	OVERHEAD COILING DOOR SEE DOOR SCHEDULE
08.511	ALUMINUM WINDOW PER WINDOW SCHEDULE
09.290	GYPSUM WALL BOARD
09.511	ACOUSTICAL PANEL CEILING
09.702	EXTERIOR METAL PANEL SYSTEM
26.567	EXTERIOR WALL MOUNTED LIGHT FIXTURE

KEYNOTES

MOUNT TRANSIT MAINTENANCE FACILITY: PHASE 1 - 100% CD

PROJECT No. :50801
8/4/2023 1:46:03 PM

DRAWN BY: CHECKED BY:

ISSUE No._____ DATE_____ DESCRIPTION_____
ISSUE No._____ DATE_____ DESCRIPTION_____
ISSUE No._____ DATE_____ DESCRIPTION_____
ISSUE No._____ DATE_____ DESCRIPTION_____

REVISION No._____ DATE_____ DESCRIPTION_____
REVISION No._____ DATE_____ DESCRIPTION_____
REVISION No._____ DATE_____ DESCRIPTION_____
REVISION No._____ DATE_____ DESCRIPTION_____

RUHNAUCLARKE.COM
3775 TENTH STREET, RIVERSIDE CALIFORNIA 92501(951) 684 4664 / 5751 PALMER WAY, SUITE C, CARLSBAD CALIFORNIA 92010(760) 438 5899

MOUNT TRANSIT MAINTENANCE FACILITY
PHASE 1
170 BUSINESS CENTER DR. BIG BEAR LAKES, CA
BIG BEAR LAKES

WALL SECTIONS

A1-6.1

50801

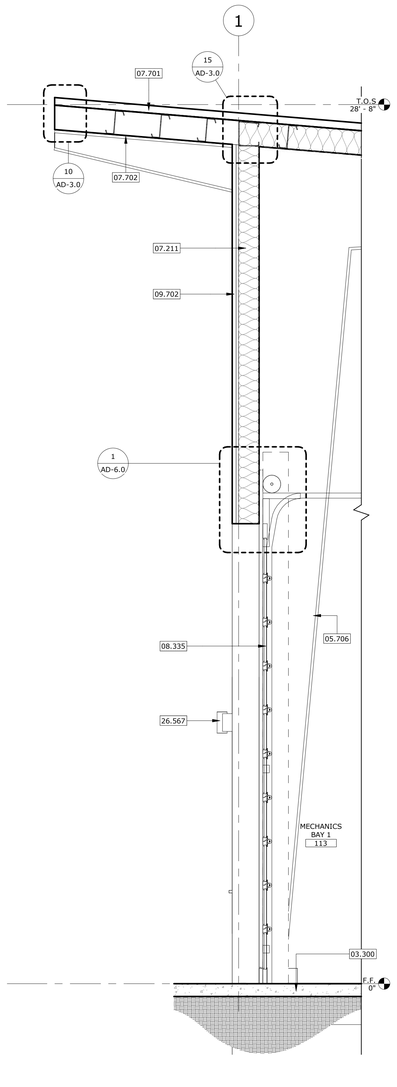

WALL SECTION SCALE: 1/2" = 1'-0" REF.: 4/A1-5.1 5

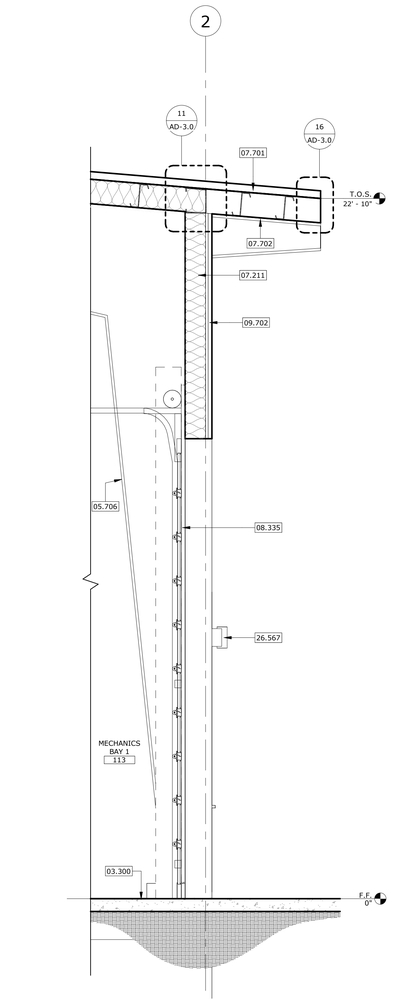

WALL SECTION SCALE: 1/2" = 1'-0" REF.: 4/A1-5.1 4

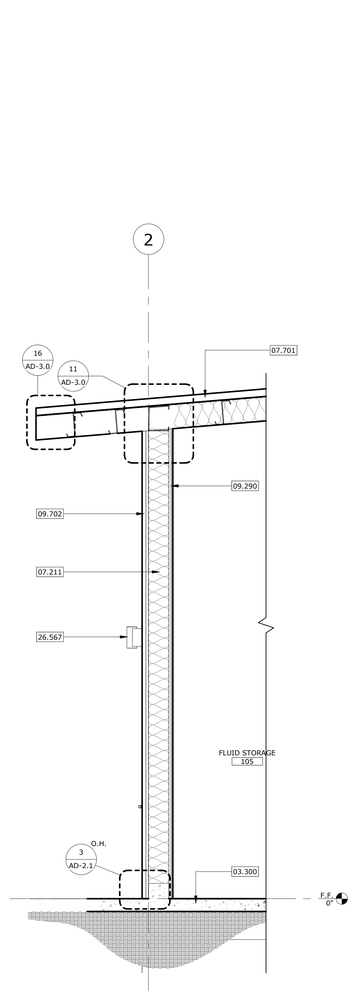

WALL SECTION SCALE: 1/2" = 1'-0" REF.: 3/A1-5.1 3

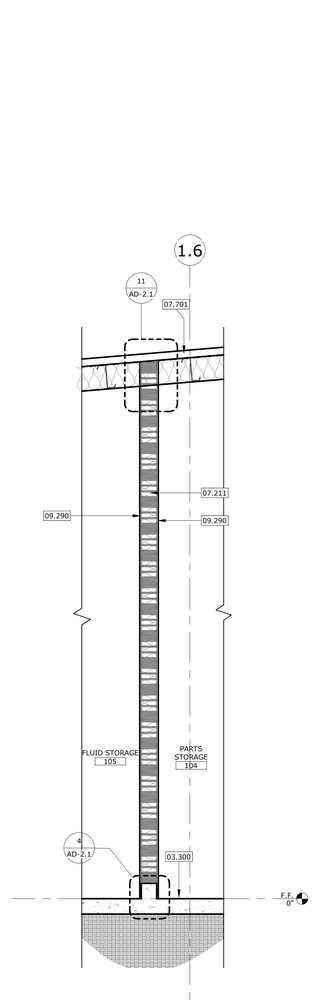

WALL SECTION SCALE: 1/2" = 1'-0" REF.: 3/A1-5.1 2

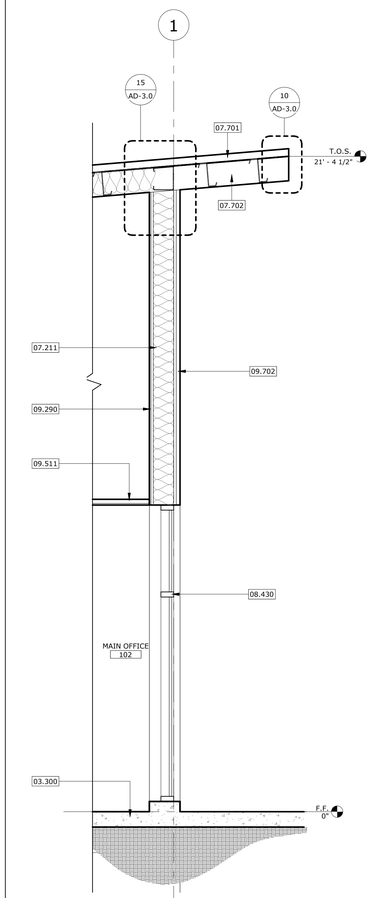

WALL SECTION SCALE: 1/2" = 1'-0" REF.: 3/A1-5.1 1

STAMPS

AGENCY APPROVAL
File No.: ########-##-########

CONSULTANT BRANDING

RUHNAU
CLARKE
ARCHITECTS

1. SLAB ON GRADE: 0'-0" = GLOBAL ELEVATION:65.85'
2. VERIFY ALL EXTERIOR ROOF OPENINGS & VENTS WITH MECHANICAL, ELECTRICAL, STRUCTURAL & PLUMBING DRAWINGS.
3. SEE DETAIL 4/AD-3.0 FOR TYPICAL ROOF VENT PENETRATION DETAIL.
4. SEE DETAIL 6/AD-3.0 FOR TYPICAL WALL PENETRATION DETAIL.
   SEE DETAIL 1/AD-3.0 FOR TYPICAL ROOF CONSTRUCTION ASSEMBLY.
4. PROVIDE R-23 BATT INSULATION AT ALL EXTERIOR WALLS, U.N.O. GYPSUM BOARD AND INSULATION SHALL EXTEND FULL HEIGHT OF WALL TO UNDERSIDE OF ROOF STRUCTURE
5. ALL EXPOSED STRUCTURE, INCLUDING MECHANICAL & PLUMBING EQUIPMENT TO BE PAINTED

GENERAL NOTES

03.300	CAST-IN-PLACE CONCRETE
05.706	PRE-ENGINEERED METAL BUILDING (P.E.M.B.) STRUCTURE
07.211	BATT INSULATION
07.701	METAL ROOF PANEL SYSTEM
07.702	METAL PANEL SOFFIT
08.335	SECTIONAL DOOR SEE DOOR SCHEDULE
08.430	STOREFRONT SYSTEM PER WINDOW SCHEDULE
09.290	GYPSUM WALL BOARD
09.511	ACOUSTICAL PANEL CEILING
09.702	EXTERIOR METAL PANEL SYSTEM
26.567	EXTERIOR WALL MOUNTED LIGHT FIXTURE

KEYNOTES

MOUNT TRANSIT MAINTENANCE FACILITY: PHASE 1 - 100% CD

PROJECT No. :50801
8/3/2023 4:46:59 PM

DRAWN BY: CHECKED BY:

ISSUE No.:_____	DATE:_____	DESCRIPTION:_____	REVISION No.:_____	DATE:_____	DESCRIPTION:_____
ISSUE No.:_____	DATE:_____	DESCRIPTION:_____	REVISION No.:_____	DATE:_____	DESCRIPTION:_____
ISSUE No.:_____	DATE:_____	DESCRIPTION:_____	REVISION No.:_____	DATE:_____	DESCRIPTION:_____
ISSUE No.:_____	DATE:_____	DESCRIPTION:_____	REVISION No.:_____	DATE:_____	DESCRIPTION:_____

RUHNAUCLARKE.COM
3775 TENTH STREET, RIVERSIDE CALIFORNIA 92501(951) 684 4664 / 5751 PALMER WAY, SUITE C, CARLSBAD CALIFORNIA 92010(760) 438 5899

MOUNT TRANSIT MAINTENANCE FACILITY
PHASE 1
170 BUSINESS CENTER DR. BIG BEAR LAKES, CA
BIG BEAR LAKES

WALL SECTIONS

A1-6.2

50801

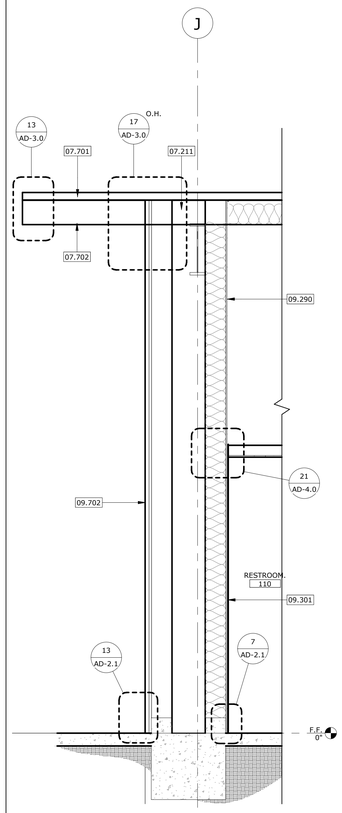

WALL SECTION SCALE: 1/2" = 1'-0" REF.: 5/A1-5.1 5

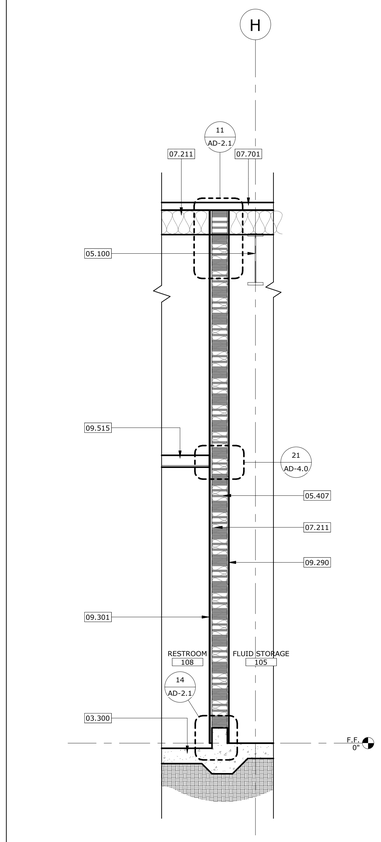

WALL SECTION SCALE: 1/2" = 1'-0" REF.: 5/A1-5.1 4

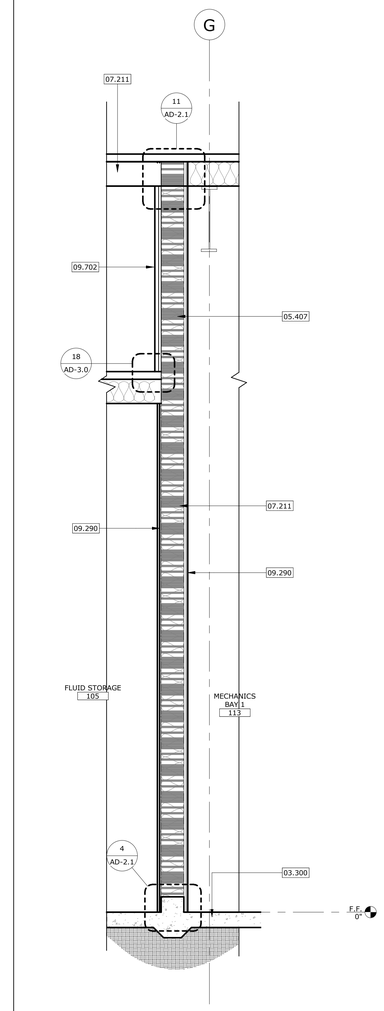

WALL SECTION SCALE: 1/2" = 1'-0" REF.: 5/A1-5.1 3

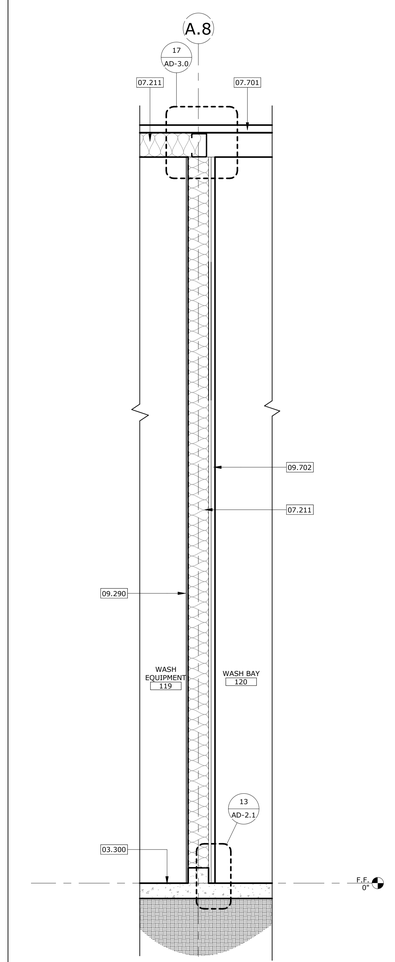

WALL SECTION SCALE: 1/2" = 1'-0" REF.: 5/A1-5.1 2

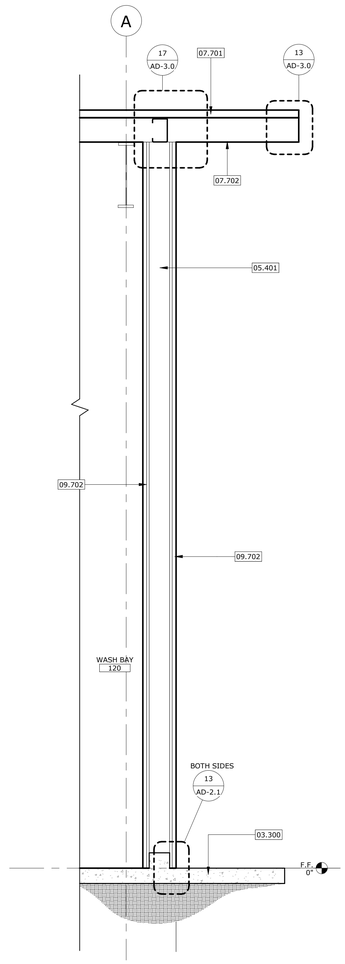

WALL SECTION SCALE: 1/2" = 1'-0" REF.: 5/A1-5.1 1

STAMPS

ROGER CLARKE — LICENSED ARCHITECT — No. C-31360 — Exp. 12-31-2024 — STATE OF CALIFORNIA

AGENCY APPROVAL
File No.: ########/##-#######

CONSULTANT BRANDING

RUHNAU CLARKE ARCHITECTS

1. SLAB ON GRADE: 0'-0" = GLOBAL ELEVATION:65.85'
2. VERIFY ALL EXTERIOR ROOF OPENINGS & VENTS WITH MECHANICAL, ELECTRICAL, STRUCTURAL & PLUMBING DRAWINGS.
3. SEE DETAIL 4/AD-3.0 FOR TYPICAL ROOF VENT PENETRATION DETAIL.
4. SEE DETAIL 6/AD-3.0 FOR TYPICAL WALL PENETRATION DETAIL.
   SEE DETAIL 1/AD-3.0 FOR TYPICAL ROOF CONSTRUCTION ASSEMBLY.
4. PROVIDE R-23 BATT INSULATION AT ALL EXTERIOR WALLS, U.N.O. GYPSUM BOARD AND INSULATION SHALL EXTEND FULL HEIGHT OF WALL TO UNDERSIDE OF ROOF STRUCTURE
5. ALL EXPOSED STRUCTURE, INCLUDING MECHANICAL & PLUMBING EQUIPMENT TO BE PAINTED

GENERAL NOTES

03.300	CAST-IN-PLACE CONCRETE
05.100	STRUCTURAL STEEL FRAMING
05.401	METAL STUD FRAMING
05.407	2HR RATED METAL STUD FRAMING
07.211	BATT INSULATION
07.701	METAL ROOF PANEL SYSTEM
07.702	METAL PANEL SOFFIT
09.290	GYPSUM WALL BOARD
09.301	CERAMIC TILE
09.515	HARD LID CEILING WITH GYPSUM BOARD CEILING FINISH
09.702	EXTERIOR METAL PANEL SYSTEM

KEYNOTES

MOUNT TRANSIT MAINTENANCE FACILITY: PHASE 1 - 100% CD

PROJECT No. :50801
8/3/2023 4:35:56 PM

DRAWN BY: CHECKED BY:

ISSUE No.____ DATE_____ DESCRIPTION_____
ISSUE No.____ DATE_____ DESCRIPTION_____
ISSUE No.____ DATE_____ DESCRIPTION_____
ISSUE No.____ DATE_____ DESCRIPTION_____

REVISION No.____ DATE_____ DESCRIPTION_____
REVISION No.____ DATE_____ DESCRIPTION_____
REVISION No.____ DATE_____ DESCRIPTION_____
REVISION No.____ DATE_____ DESCRIPTION_____

RUHNAUCLARKE.COM
3775 TENTH STREET, RIVERSIDE CALIFORNIA 92501(951) 684-4664 / 5751 PALMER WAY, SUITE C, CARLSBAD CALIFORNIA 92010(760) 438 5899

MOUNT TRANSIT MAINTENANCE FACILITY
PHASE 1
170 BUSINESS CENTER DR. BIG BEAR LAKES, CA
BIG BEAR LAKES

WALL SECTIONS

A1-6.3

50801

STAMPS

AGENCY APPROVAL
File No.: ########-##-########

CONSULTANT BRANDING

RUHNAU
CLARKE
ARCHITECTS

1. SLAB ON GRADE: 0'-0" = GLOBAL ELEVATION:65.85'
2. VERIFY ALL EXTERIOR ROOF OPENINGS & VENTS WITH MECHANICAL, ELECTRICAL, STRUCTURAL & PLUMBING DRAWINGS.
3. SEE DETAIL 4/AD-3.0 FOR TYPICAL ROOF VENT PENETRATION DETAIL.
4. SEE DETAIL 6/AD-3.0 FOR TYPICAL WALL PENETRATION DETAIL.
   SEE DETAIL 1/AD-3.0 FOR TYPICAL ROOF CONSTRUCTION ASSEMBLY.
4. PROVIDE R-23 BATT INSULATION AT ALL EXTERIOR WALLS, U.N.O. GYPSUM BOARD AND INSULATION SHALL EXTEND FULL HEIGHT OF WALL TO UNDERSIDE OF ROOF STRUCTURE
5. ALL EXPOSED STRUCTURE, INCLUDING MECHANICAL & PLUMBING EQUIPMENT TO BE PAINTED

GENERAL NOTES

03.300	CAST-IN-PLACE CONCRETE
05.100	STRUCTURAL STEEL FRAMING
07.211	BATT INSULATION
07.701	METAL ROOF PANEL SYSTEM
09.290	GYPSUM WALL BOARD
09.301	CERAMIC TILE
09.511	ACOUSTICAL PANEL CEILING
09.515	HARD LID CEILING WITH GYPSUM BOARD CEILING FINISH

KEYNOTES

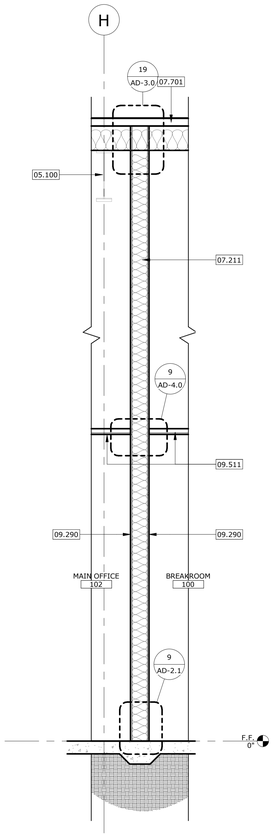

WALL SECTION 1 — SCALE: 1/2" = 1'-0" — REF.: 1/A1-5.1

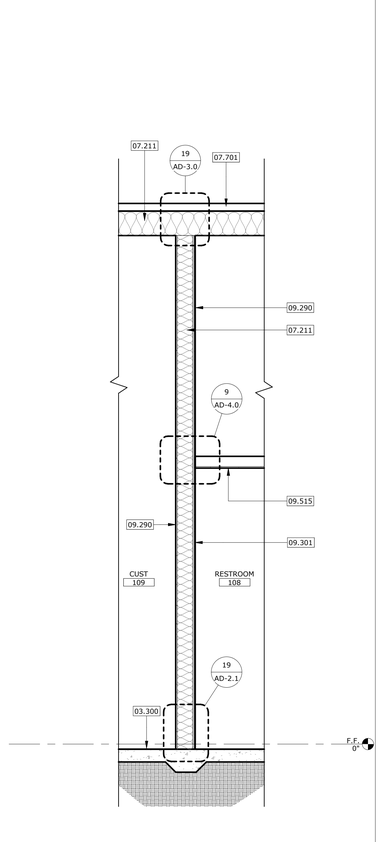

WALL SECTION 2 — SCALE: 1/2" = 1'-0" — REF.: 5/A1-5.1

MOUNT TRANSIT MAINTENANCE FACILITY: PHASE 1 - 100% CD

PROJECT No. :50801
8/1/2023 2:44:15 PM

DRAWN BY: CHECKED BY:

ISSUE No.____ DATE_____ DESCRIPTION_____
ISSUE No.____ DATE_____ DESCRIPTION_____
ISSUE No.____ DATE_____ DESCRIPTION_____
ISSUE No.____ DATE_____ DESCRIPTION_____

REVISION No.____ DATE_____ DESCRIPTION_____
REVISION No.____ DATE_____ DESCRIPTION_____
REVISION No.____ DATE_____ DESCRIPTION_____
REVISION No.____ DATE_____ DESCRIPTION_____

RUHNAUCLARKE.COM
3775 TENTH STREET, RIVERSIDE CALIFORNIA 92501(951) 684 4664 / 5751 PALMER WAY, SUITE C, CARLSBAD CALIFORNIA 92010(760) 438 5899

MOUNT TRANSIT MAINTENANCE FACILITY
PHASE 1
170 BUSINESS CENTER DR. BIG BEAR LAKES, CA
BIG BEAR LAKES

WALL SECTIONS

A1-6.4

50801

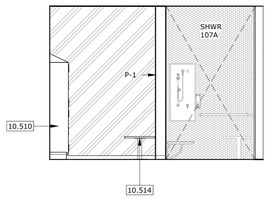

4 | 107

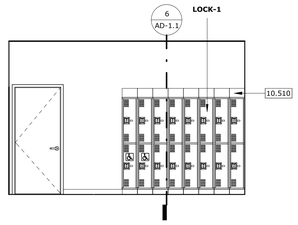

107 / 3

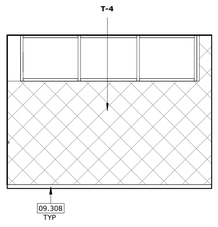

107 | 2

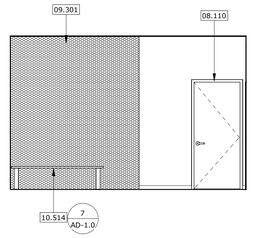

1 | 107

INTERIOR ELEVATIONS - LOCKER RM #107

SCALE: 1/4" = 1'-0" | 6

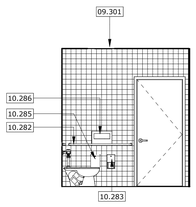

4 | 110

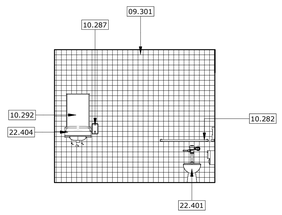

110 / 3

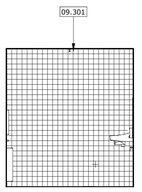

110 | 2

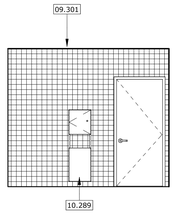

1 | 110

NOTE: SEE SHEET ID-1.0 FOR TYPICAL WALL TILE PATTERNS

INTERIOR ELEVATIONS - RESTROOM #110

SCALE: 1/4" = 1'-0" | REF.: / | 7

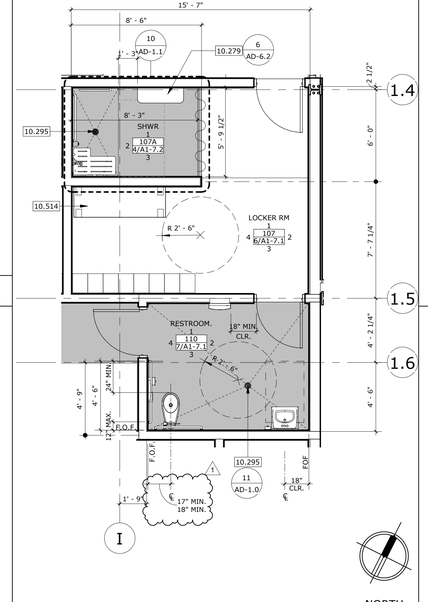

NORTH

LOCKER #107 & RR #110

SCALE: 1/4" = 1'-0" | REF.: 1/A1-1.2 | 2

1. ALL DIMENSIONS SHOWN ON THIS SHEET INDICATE FIXTURES AND ACCESSORIES MINIMUM REQUIREMENTS FOR ACCESSIBILITY. REFER TO BOTH PLANS AND ELEVATIONS FOR LOCATIONS AND INFORMATION.
2. REFER TO DETAIL 21 / AD-1.0 FOR TYPICAL MOUNTING HEIGHTS FOR TOILET ACCESSORIES & PLUMBING FIXTURES
3. ALL WATER AND DRAIN PIPES UNDER LAVATORY SHALL BE INSULATED. THERE SHALL BE NO SHARP OR ABRASIVE OBJECTS OR SURFACES UNDER THE LAVATORY. PER CBC 2022 11B-606.5
4. CONTRACTOR SHALL PATCH AND REPAIR ALL FINISHES DAMAGED DURING CONSTRUCTION.
5. SELF-CLOSING FAUCET CONTROL VALVES ARE ALLOWED IF THE FAUCET REMAINS OPEN FOR AT LEAST 10 SECONDS. PER CBC 2022 11B-606.4
6. A CLEAR FLOOR SPACE 30" BY 48" COMPLY WITH CBC 2022 11B-305.3 SHALL BE PROVIDED IN FRONT OF A LAVATORY TO ALLOW FORWARD APPROACH. SUCH CLEAR FLOOR SPACE SHALL ADJOIN OR OVERLAP AN ACCESSIBLE ROUTE. PER CBC 2022 11B-305
7. WATER CLOSET AND URINAL FLUSH VALVE CONTROLS, AND FAUCET AND OPERATING MECHANISM CONTROLS, SHALL BE OPERABLE WITH ONE HAND, SHALL NOT REQUIRE TIGHT GRASPING, PINCHING, OR TWISTING OF THE WRIST, AND SHALL BE MOUNTED NO MORE THAN 44" ABOVE THE FLOOR (PER CBC 2022 11B-308) AND REQUIRE A FORCE TO OPERATE TO BE NO GREATER THAN 5 LBF. MAX. (PER CBC 2022 11B-309.4). CONTRACTOR TO FIELD VERIFY EXISTING CONDITIONS AND CORRECT AS NECESSARY TO COMPLY WITH CODE.

GENERAL NOTES

08.110	METAL DOOR AND FRAME PER DOOR SCHEDULE
09.290	GYPSUM WALL BOARD
09.301	CERAMIC TILE
09.308	TILE BASE
09.701	RUBBER BASE
10.279	SHOWER STAINLESS STEEL SHELF
10.282	GRAB BAR
10.283	TOILET PAPER DISPENSER
10.285	SANITARY NAPKIN DISPOSAL
10.286	TOILET SEAT COVER DISPENSER
10.287	SOAP DISPENSER
10.289	PAPER TOWEL DISPENSER / WASTE RECEPTACLE
10.292	GLASS MIRROR
10.295	FLOOR DRAIN
10.510	METAL LOCKER
10.514	LOCKER ROOM BENCH
10.561	METAL STORAGE SHELVING
22.401	WATER CLOSET
22.404	LAVATORY
22.451	EMERGENCY SHOWER

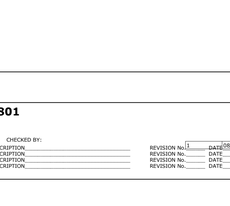

4 | #106

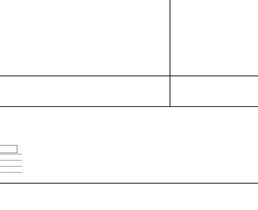

#106 / 3

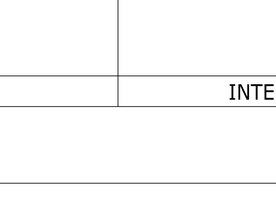

#106 | 2

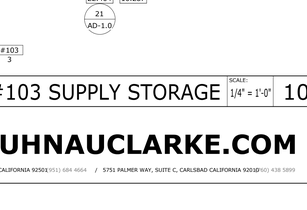

1 | #106

INTERIOR ELEVATIONS - LOCKER RM #106

SCALE: 1/4" = 1'-0" | 8

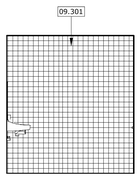

4 | #108

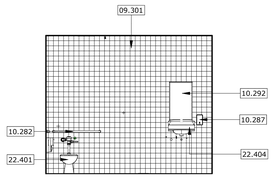

#108 / 3

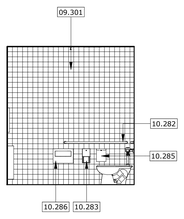

#108 | 2

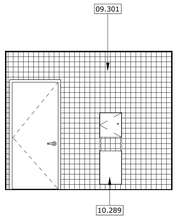

1 | #108

NOTE: SEE SHEET ID-1.0 FOR TYPICAL WALL TILE PATTERNS

INTERIOR ELEVATIONS - RESTROOM #108

SCALE: 1/4" = 1'-0" | REF.: / | 9

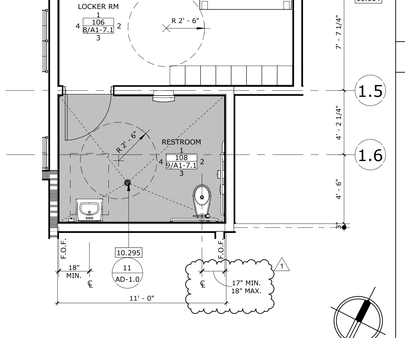

NORTH

#106 LOCKER RESTROOM

SCALE: 1/4" = 1'-0" | REF.: 1/A1-1.2 | 4

KEYNOTES

PAINT

- P-1
- P-2
- P-3
- P-4
- P-5
- P-6

TILING

- T-3
- T-4

HIGH-PERFORMANCE COATING

- P-10

NOTE:
REFER TO COLORS, MATERIALS AND FINISHES LEGEND FOR ADDITIONAL INFORMATION - / ID-1.0

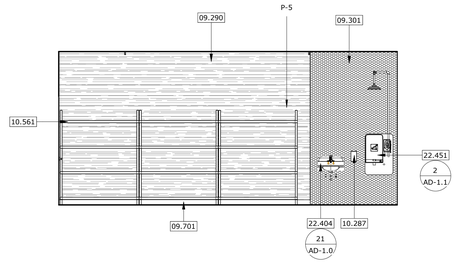

#103 / 3

INTERIOR ELEV - #103 SUPPLY STORAGE

SCALE: 1/4" = 1'-0" | 10

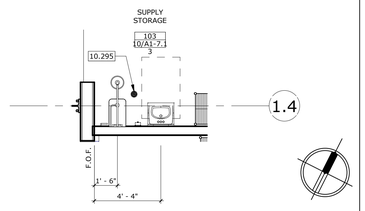

NORTH

#103 SUPPLY STORAGE

SCALE: 1/4" = 1'-0" | REF.: 1/A1-1.2 | 5

INTERIOR ELEVATIONS LEGEND

AGENCY APPROVAL
File No.: ########-##-########

STAMPS

CONSULTANT BRANDING

RUHNAU CLARKE ARCHITECTS

MOUNT TRANSIT MAINTENANCE FACILITY: PHASE 1 - 100% CD

PROJECT No. :50801
8/1/2023 2:44:22 PM

DRAWN BY: CHECKED BY:

ISSUE No.____ DATE____ DESCRIPTION____

REVISION No. 1 DATE 08/01/23 DESCRIPTION RESUBMITTAL #1

RUHNAUCLARKE.COM

3775 TENTH STREET, RIVERSIDE CALIFORNIA 92501(951) 684-4664 / 5751 PALMER WAY, SUITE C, CARLSBAD CALIFORNIA 92010(760) 438 5899

MOUNT TRANSIT MAINTENANCE FACILITY
PHASE 1
170 BUSINESS CENTER DR. BIG BEAR LAKES, CA
BIG BEAR LAKES

ENLARGED PLANS / INTERIOR ELEVS.

A1-7.1

50801

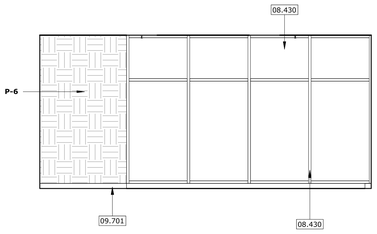

100 2

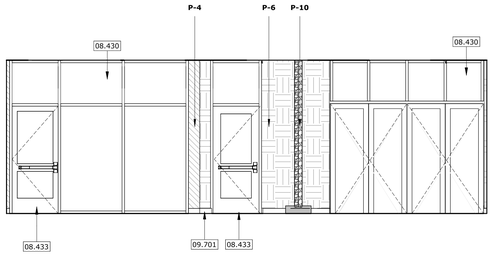

1
100

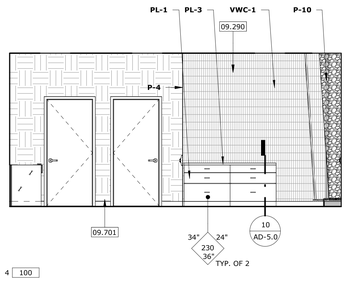

4 100

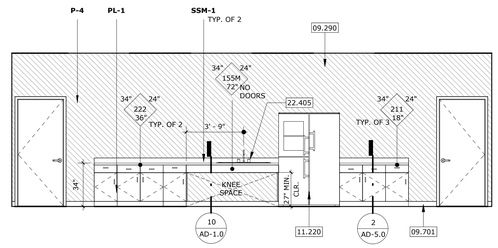

100
3

#100 BREAK ROOM INTERIOR ELEVATIONS

SCALE: 1/4" = 1'-0" REF.: / 1

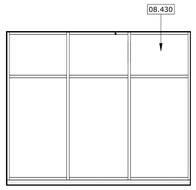

1
100

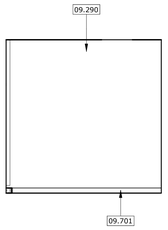

100 2

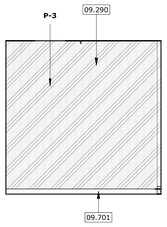

4 100

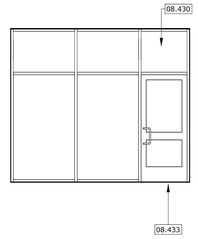

100
3

OFFICE ELEVATIONS

SCALE: 1/4" = 1'-0" REF.: / 2

1. VERIFY ALL DIMENSIONS PRIOR TO CONSTRUCTION.
2. ALL DIMENSIONS ARE TO FACE OF STUD, CENTERLINE OF COLUMN OR EDGE OF SLAB, U.N.O.
3. PROVIDE STUD BRACING AND SUPPORT FOR ALL WALL MOUNTED FIXTURES AND ACCESSORIES. PER DETAIL 5 / SO-1.4
4. PROVIDE GROMMETS AND RINGS IN COUNTER TOPS 60"O.C. FOR POWER AND DATA
5. FOR MOUNTING HEIGHTS AND ACCESSIBILITY INFORMATION, SEE DETAIL 21 / AD-1.0
6. SEE SPECIFICATION SECTION ARCHITECTURAL WOOD CASEWORK-HARDWARE, FOR CASEWORK LOCKING REQUIREMENTS.
7. FOR TILE COLORS & PATTERNS, SEE SHEET - / ID-1.0

GENERAL NOTES

05.100	STRUCTURAL STEEL FRAMING
06.412	PLASTIC LAMINATE COUNTERTOP
08.430	STOREFRONT SYSTEM PER WINDOW SCHEDULE
08.433	ALUMINUM DOOR PER DOOR SCHEDULE
09.290	GYPSUM WALL BOARD
09.301	CERAMIC TILE
09.701	RUBBER BASE
10.282	GRAB BAR
10.287	SOAP DISPENSER
10.297	SHOWER AND SHOWER HEAD
10.299	ADA COMPLIANT FOLDING SHOWER SEAT
11.220	REFRIGERATOR O.F.C.I.
22.405	SINK

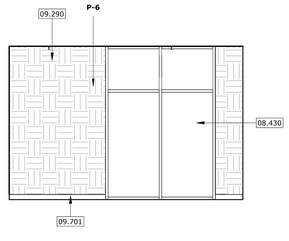

4 102

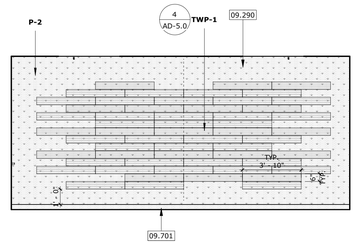

100
3

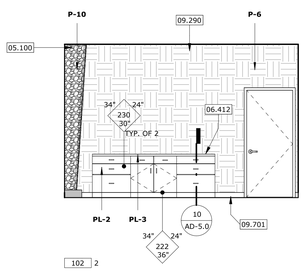

102 2

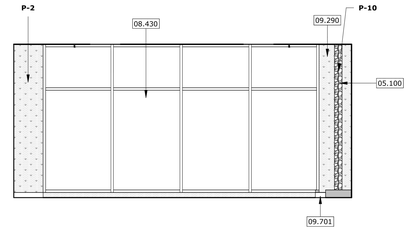

1
100

MAIN OFFICE ELEVATIONS

SCALE: 1/4" = 1'-0" REF.: / 3

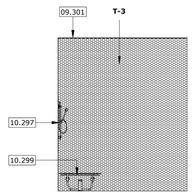

NOTE: FOR MOUNTING HEIGHT REF. TO DETAIL 21 / AD-1.0

107A
3

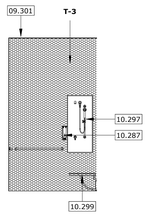

107A 2

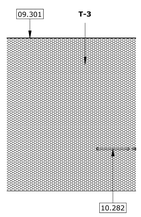

1
106A

INTERIOR ELEVATIONS - SHOWER RM#106A

SCALE: 1/4" = 1'-0" REF.: 1/A1-2.1A 5.

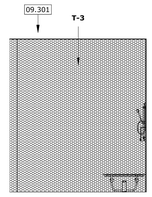

NOTE: FOR MOUNTING HEIGHT REF. TO DETAIL 21 / AD-1.0

107A
3

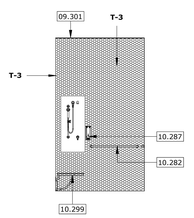

2 107A

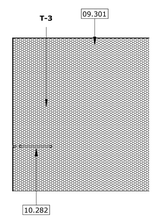

1
107A

INTERIOR ELEVATIONS - SHOWER RM#107A

SCALE: 1/4" = 1'-0" REF.: 1/A1-2.1A 4

KEYNOTES

PAINT

- P-1
- P-2
- P-3
- P-4
- P-5
- P-6

HIGH-PERFORMANCE COATING

- P-10

VINYL WALLCOVERINGS

- VWC-1

TACKABLE WALL PANEL

- TWP-1

NOTE: REFER TO COLORS, MATERIALS AND FINISHES LEGEND FOR ADDITIONAL INFORMATION - / ID-1.0

INTERIOR ELEVATIONS LEGEND

STAMPS

LICENSED ARCHITECT ROGER CLARKE No. C-21360 Ren. 10-31-2024 STATE OF CALIFORNIA

AGENCY APPROVAL File No.: ########/##-########

CONSULTANT BRANDING

RUHNAU CLARKE ARCHITECTS

MOUNT TRANSIT MAINTENANCE FACILITY: PHASE 1 - 100% CD

PROJECT No. :50801
8/1/2023 2:44:28 PM

DRAWN BY: CHECKED BY:

ISSUE No._____ DATE_____ DESCRIPTION_____
ISSUE No._____ DATE_____ DESCRIPTION_____
ISSUE No._____ DATE_____ DESCRIPTION_____
ISSUE No._____ DATE_____ DESCRIPTION_____

REVISION No._____ DATE_____ DESCRIPTION_____
REVISION No._____ DATE_____ DESCRIPTION_____
REVISION No._____ DATE_____ DESCRIPTION_____
REVISION No._____ DATE_____ DESCRIPTION_____

RUHNAUCLARKE.COM
3775 TENTH STREET, RIVERSIDE CALIFORNIA 92501(951) 684 4664 / 5751 PALMER WAY, SUITE C, CARLSBAD CALIFORNIA 92010(760) 438 5899

MOUNT TRANSIT MAINTENANCE FACILITY
PHASE 1
170 BUSINESS CENTER DR. BIG BEAR LAKES, CA
BIG BEAR LAKES

INTERIOR ELEVATIONS **A1-7.2**

50801

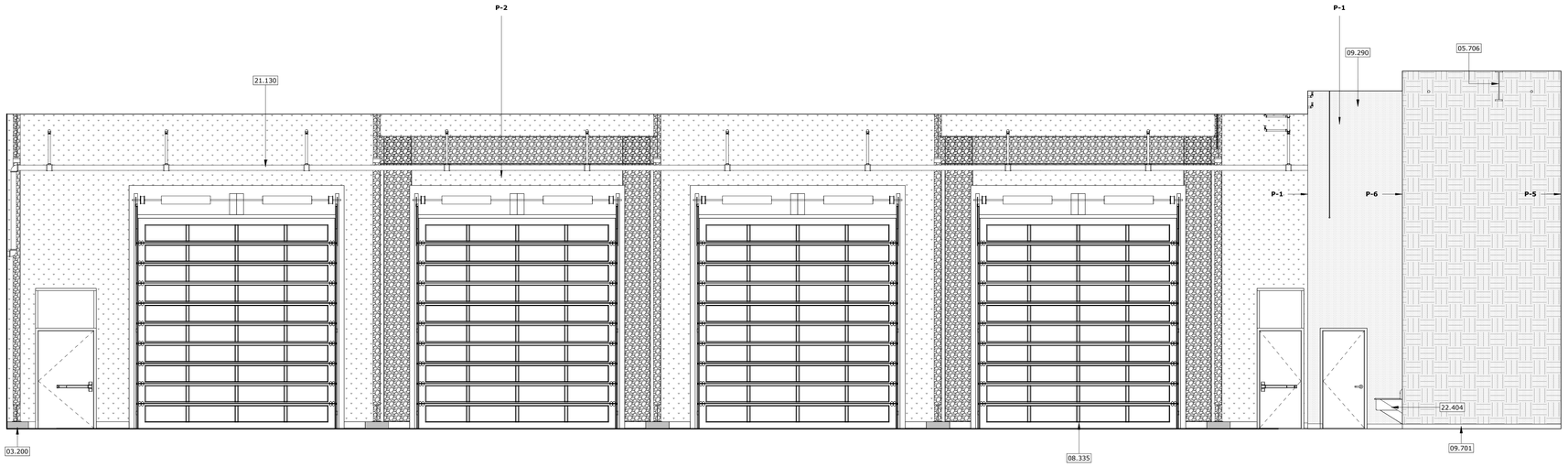

SOUTH ELEVATION — SCALE: 1/4" = 1'-0" — REF.: / — 2

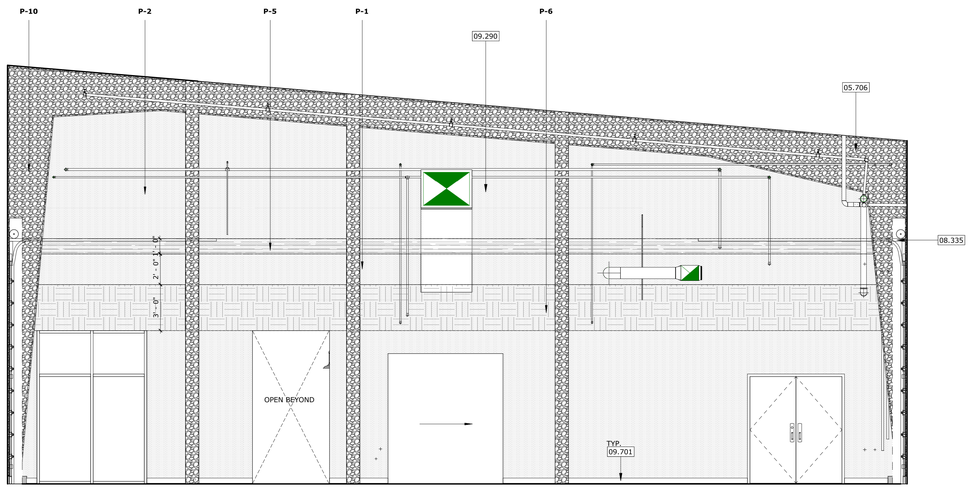

WEST ELEVATION — SCALE: 1/4" = 1'-0" — REF.: / — 1

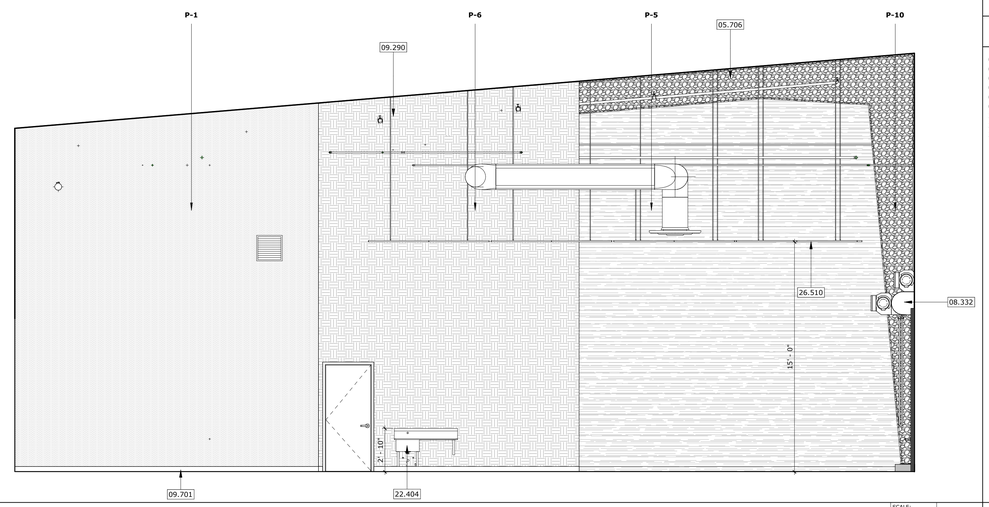

EAST ELEVATION — SCALE: 1/4" = 1'-0" — REF.: / — 3

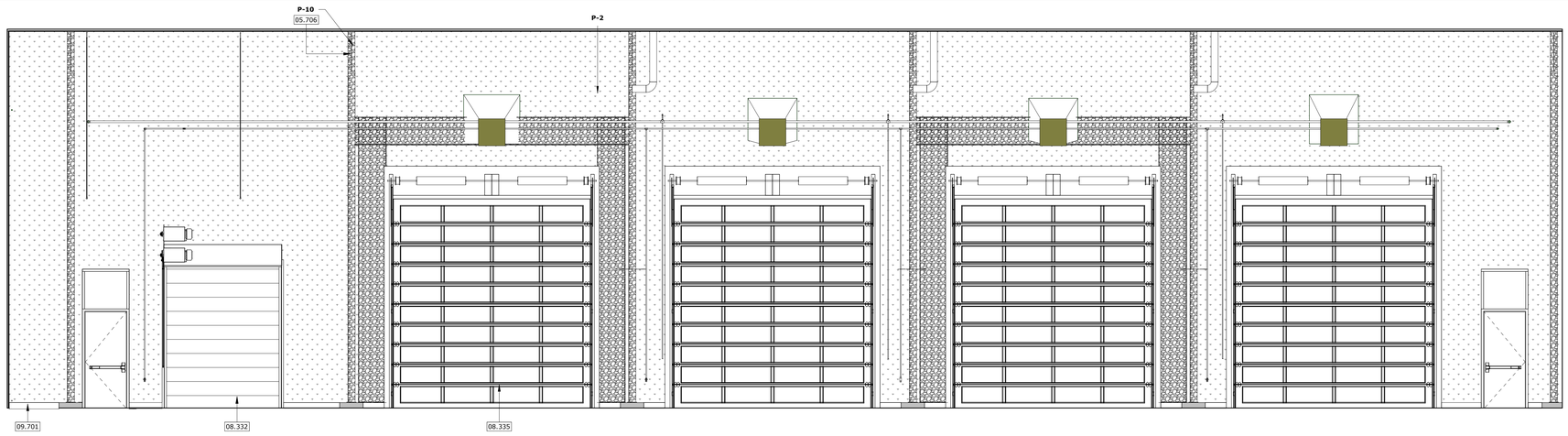

NORTH ELEVATION — SCALE: 1/4" = 1'-0" — REF.: / — 4

STAMPS

ROGER CLARKE — LICENSED ARCHITECT — No. C-21365 — Exp. 12-31-2024 — STATE OF CALIFORNIA

AGENCY APPROVAL
File No.: ########/##-########

CONSULTANT BRANDING

RUHNAU CLARKE ARCHITECTS

1. VERIFY ALL DIMENSIONS PRIOR TO CONSTRUCTION.
2. ALL DIMENSIONS ARE TO FACE OF STUD, CENTERLINE OF COLUMN OR EDGE OF SLAB, U.N.O.
3. PROVIDE STUD BRACING AND SUPPORT FOR ALL WALL MOUNTED FIXTURES AND ACCESSORIES. PER DETAIL 5/SO-1.4
4. PROVIDE GROMMETS AND RINGS IN COUNTER TOPS 60"O.C. FOR POWER AND DATA
5. FOR MOUNTING HEIGHTS AND ACCESSIBILITY INFORMATION, SEE DETAIL 21/AD-1.0
6. SEE SPECIFICATION SECTION ARCHITECTURAL WOOD CASEWORK-HARDWARE, FOR CASEWORK LOCKING REQUIREMENTS.
7. FOR TILE COLORS & PATTERNS, SEE SHEET -/ID-1.0

GENERAL NOTES

03.200	CONCRETE REINFORCING
05.706	PRE-ENGINEERED METAL BUILDING (P.E.M.B.) STRUCTURE
08.332	OVERHEAD COILING DOOR SEE DOOR SCHEDULE
08.335	SECTIONAL DOOR SEE DOOR SCHEDULE
09.290	GYPSUM WALL BOARD
09.701	RUBBER BASE
21.130	FIRE-SUPPRESSION SPRINKLER SYSTEM
22.404	LAVATORY
26.510	INTERIOR LIGHTING PER ELECTRICAL DRWG

KEYNOTES

PAINT

- P-1
- P-2
- P-3
- P-4
- P-5
- P-6

HIGH-PERFORMANCE COATING

- P-10

VINYL WALLCOVERINGS

- VWC-1

TACKABLE WALL PANEL

- TWP-1

NOTE:
REFER TO COLORS, MATERIALS AND FINISHES LEGEND FOR ADDITIONAL INFORMATION -/ID-1.0

INTERIOR ELEVATIONS LEGEND

PROJECT No. :50801
8/4/2023 1:35:03 PM

DRAWN BY: CHECKED BY:

ISSUE No.____ DATE____ DESCRIPTION____
ISSUE No.____ DATE____ DESCRIPTION____
ISSUE No.____ DATE____ DESCRIPTION____
ISSUE No.____ DATE____ DESCRIPTION____
REVISION No.____ DATE____ DESCRIPTION____
REVISION No.____ DATE____ DESCRIPTION____
REVISION No.____ DATE____ DESCRIPTION____
REVISION No.____ DATE____ DESCRIPTION____

RUHNAUCLARKE.COM
3775 TENTH STREET, RIVERSIDE CALIFORNIA 92501(951) 684 4664 / 5751 PALMER WAY, SUITE C, CARLSBAD CALIFORNIA 92010(760) 438 5899

MOUNT TRANSIT MAINTENANCE FACILITY
PHASE 1
170 BUSINESS CENTER DR. BIG BEAR LAKES, CA
BIG BEAR LAKES

INTERIOR ELEVATIONS **A1-7.3**

50801

MOUNT TRANSIT MAINTENANCE FACILITY: PHASE 1 - 100% CD

BUILDING DOOR SCHEDULE

DOOR NO.	DOOR							FRAME										DOOR NO.
	DOOR TYPE	WIDTH	HEIGHT	THICKNESS	MATERIAL	FINISH	COLOR	MATERIAL	FINISH	COLOR	HEAD	JAMB	SILL/THRESHOLD	PANIC HARDWARE	HARDWARE GROUP	FIRE RATING	REMARKS	
100A	B	3' - 0"	7' - 0"	1 3/4"	ALUM	FF	ALUM-1	ALUM	FF	ALUM-1	18/AD-6.0	23/AD-6.1	19/AD-6.0	PH	1.0	-		100A
100B	C	10' - 0"	8' - 0"	2 3/8"	ALUM	FF	ALUM-2	ALUM	FF	ALUM-2	10/AD-6.0	11/AD-6.0	12/AD-6.0		14.0	-		100B
101A	B	3' - 0"	7' - 0"	1 3/4"	ALUM	FF	ALUM-1	ALUM	FF	ALUM-1	22/AD-6.1	15 & 18 /AD-6.1	3/AD-6.1	-	9.0			101A
102A	A	3' - 0"	7' - 0"	1 3/4"	HM	PSG	P-11	HM	PSG	P-11	13/AD-6.0	14/AD-6.0	3/AD-6.1	-	9.0			102A
103A	A	3' - 0"	7' - 0"	1 3/4"	HM	PSG	P-11	HM	PSG	P-11	13/AD-6.0	14/AD-6.0	3/AD-6.1	-	6.0			103A
104A	D	7' - 6"	8' - 6"	2 3/8"	PER MANUF.	FF	PC-2	PER MANUF.	FF	PC-1	29/AD-6.0	2/AD-6.2	3/ AD-6.1	-	14.0		'BARN TYPE' SLIDING DOOR	104A
105B	A	3' - 0"	7' - 0"	1 3/4"	HM	PSG	P-11	HM	PSG	P-11	12/AD-6.1	9/AD-6.1	4/AD-6.1		4.0			105B
105C	A	6' - 0"	7' - 0"	1 3/4"	HM	PSG	P-11	HM	PSG	P-11	25/AD-6.0	26/AD-6.0	3/AD-6.1	-	7.0	90 MIN		105C
106A	A	3' - 0"	7' - 0"	1 3/4"	HM	PSG	P-11	HM	PSG	P-11	13/AD-6.0	14/AD-6.0	3/AD-6.1	-	13.0	-		106A
107A	A	3' - 0"	7' - 0"	1 3/4"	HM	PSG	P-11	HM	PSG	P-11	13/AD-6.0	14/AD-6.0	3/AD-6.1	-	13.0	-		107A
108A	A	3' - 0"	7' - 0"	1 3/4"	HM	PSG	P-11	HM	PSG	P-11	20/AD-6.0	21/AD-6.0	3/AD-6.1	-	12.0	-	1" UNDERCUT	108A
109A	A	3' - 0"	7' - 0"	1 3/4"	HM	PSG	P-11	HM	PSG	P-11	20/AD-6.0	21/AD-6.0	3/AD-6.1	-	8.0	-		109A
110A	A	3' - 0"	7' - 0"	1 3/4"	HM	PSG	P-11	HM	PSG	P-11	20/AD-6.0	21/AD-6.0	3/AD-6.1	-	12.0	-	1" UNDERCUT	110A
111A	A	3' - 0"	7' - 0"	1 3/4"	HM	PSG	P-11	HM	PSG	P-11	13/AD-6.0	14/AD-6.0	3/AD-6.1	-	8.0	-		111A
112A	A	3' - 0"	7' - 0"	1 3/4"	HM	PSG	P-11	HM	PSG	P-11	12/AD-6.1	9/AD-6.1	4/AD-6.1	-	4.0			112A
113A	A	3' - 0"	7' - 0"	1 3/4"	HM	PSG	P-11	HM	PSG	P-11	12/AD-6.1	8/AD-6.1	4/AD-6.1	PH	2.0			113A
113B	A	4' - 0"	7' - 0"	1 3/4"	HM	PSG	P-11	HM	PSG	P-11	12/AD-6.1	8/AD-6.1	4/AD-6.1	PH	2.0			113B
113C	E	14' - 0"	15' - 0"	1/4"	PER MANUF.	FF	PC-1	PER MANUF.	FF	PC-2	3/AD-6.2	4/AD-6.2	-	-	14.0	-	SECTIONAL DOOR	113C
113D	E	14' - 0"	15' - 0"	1/4"	PER MANUF.	FF	PC-1	PER MANUF.	FF	PC-2	3/AD-6.2	4/AD-6.2	-	-	14.0	-	SECTIONAL DOOR	113D
114A	E	14' - 0"	15' - 0"	1/4"	PER MANUF.	FF	PC-1	PER MANUF.	FF	PC-2	3/AD-6.2	4/AD-6.2	-	-	14.0	-	SECTIONAL DOOR	114A
114B	E	14' - 0"	15' - 0"	1/4"	PER MANUF.	FF	PC-1	PER MANUF.	FF	PC-2	3/AD-6.2	4/AD-6.2	-	-	14.0	-	SECTIONAL DOOR	114B
115A	E	14' - 0"	15' - 0"	1/4"	PER MANUF.	FF	PC-1	PER MANUF.	FF	PC-2	3/AD-6.2	4/AD-6.2	-	-	14.0	-	SECTIONAL DOOR	115A
115B	E	14' - 0"	15' - 0"	1/4"	PER MANUF.	FF	PC-1	PER MANUF.	FF	PC-2	3/AD-6.2	4/AD-6.2	-	-	14.0	-	SECTIONAL DOOR	115B
116A	E	14' - 0"	15' - 0"	1/4"	PER MANUF.	FF	PC-1	PER MANUF.	FF	PC-2	3/AD-6.2	4/AD-6.2	-	-	14.0	-	SECTIONAL DOOR	116A
116B	E	14' - 0"	15' - 0"	1/4"	PER MANUF.	FF	PC-1	PER MANUF.	FF	PC-2	3/AD-6.2	4/AD-6.2	-	-	14.0	-	SECTIONAL DOOR	116B
117A	D	8' - 0"	10' - 0"	2 3/8"	PER MANUF.	FF	PC-2	PER MANUF.	FF	PC-1	1/AD-6.0	2/AD-6.0	3/AD-6.0	-	14.0	-	OVERHEAD COILING DOOR	117A
117B	A	3' - 0"	7' - 0"	1 3/4"	HM	PSG	P-11	HM	PSG	P-11	12/AD-6.1	8/AD-6.1	4/AD-6.1	PH	2.0			117B
117C	A	3' - 0"	7' - 0"	1 3/4"	HM	PSG	P-11	HM	PSG	P-11	12/AD-6.1	8/AD-6.1	4/AD-6.1	PH	2.0			117C
118A	A	3' - 0"	7' - 0"	1 3/4"	HM	PSG	P-11	HM	PSG	P-11	13/AD-6.0	14/AD-6.0	3/AD-6.1		10.0			118A
118B	A	3' - 0"	7' - 0"	1 3/4"	HM	PSG	P-11	HM	PSG	P-11	7/AD-6.1	8/AD-6.1	4/AD-6.1	-	11.0			118B
119A	A	3' - 0"	7' - 0"	1 3/4"	HM	PSG	P-11	HM	PSG	P-11	13/AD-6.0	14/AD-6.0	3/AD-6.1	-	8.0	-		119A
119B	A	3' - 0"	7' - 0"	1 3/4"	HM	PSG	P-11	HM	PSG	P-11	12/AD-6.1	8/AD-6.1	4/AD-6.1	-	5.0		NO CLOSER PROVIDED	119B
119C	D	8' - 0"	10' - 0"	2 3/8"	PER MANUF.	FF	PC-2	PER MANUF.	FF	PC-1	1/AD-6.0	2/AD-6.0	3/AD-6.0	-	14.0	-	OVERHEAD COILING DOOR	119C
121A	A	6' - 0"	7' - 0"	1 3/4"	HM	PSG	P-11	HM	PSG	P-11	12/AD-6.1	9/AD-6.1	4/AD-6.1		3.0			121A

DOOR TYPES

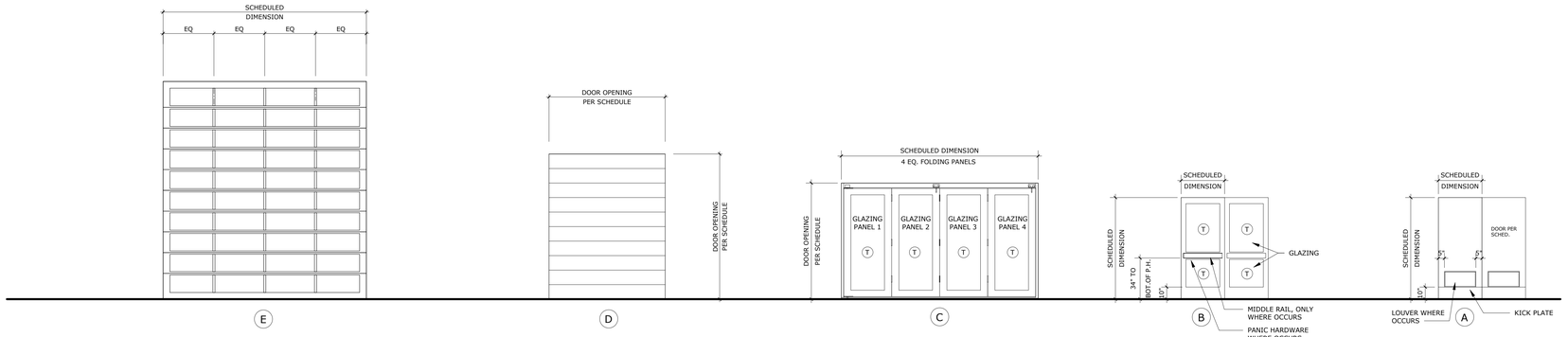

WINDOW SCHEDULE

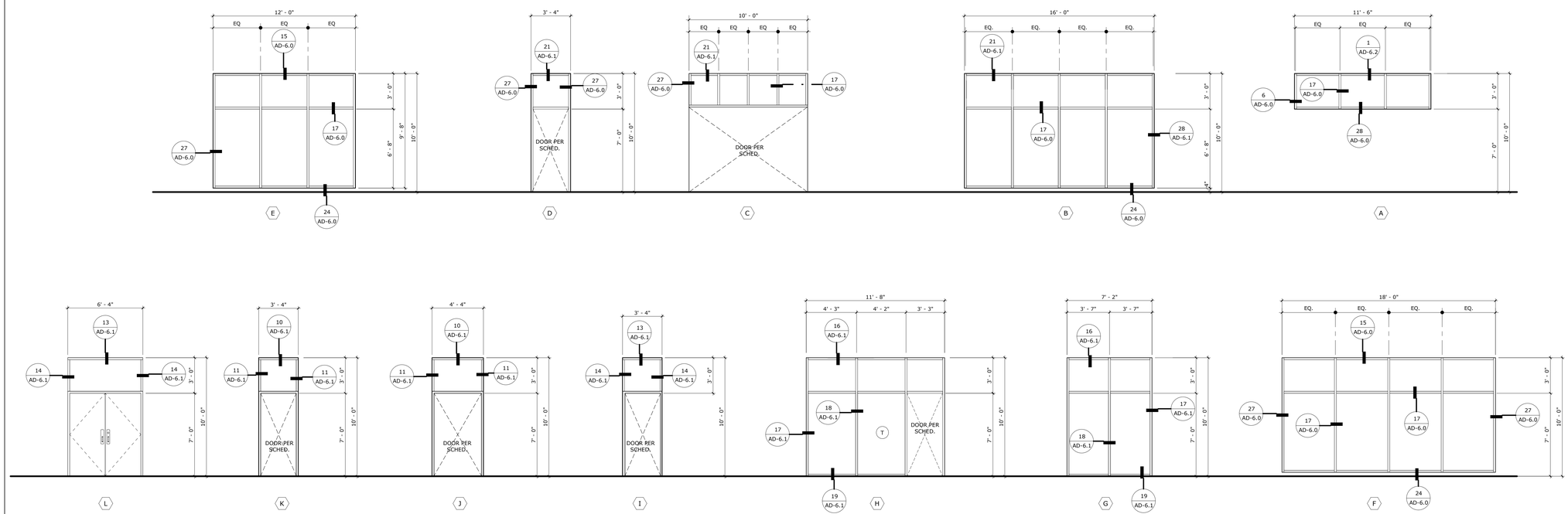

GENERAL NOTES

1. SEE SHEET AD-6.0 FOR HOLLOW METAL FRAME DETAILS
2. SET DOORS ADJACENT TO WALLS A MIN. OF 4" AWAY FROM WALL U.N.O.
3. ALL GLAZING IN DOORS, AND WINDOWS BELOW 8'-0" A.F.F., ARE TEMPERED OR AS REQUIRED BY SECTION 2406 OF THE 2022 CBC
4. PROVIDE DOOR STOPS AT ALL INTERIOR DOORS. PROVIDE BACKING PLATE PER DETAIL 5 / SO-1.4
5. ALL EXTERIOR DOORS ARE TO SWING OUT AND OPEN TO A MIN. OF 110 DEGREES FROM ITS CLOSED POSITION WHERE POSSIBLE, U.N.O.
   - EXCEPTION: WHERE TACTILE SIGNAGE IS LOCATED ON HINGE SIDE OF DOOR, DOORS TO HAVE A 90 DEGREE SWING LIMIT
6. ALL EXTERIOR DOORS SHALL HAVE A POLYSTYRENE CORE (THERMAL RESISTANCE)
7. PROVIDE AIR SEALS/WEATHER STRIPPING AT ALL EXTERIOR DOORS TO CONDITIONED SPACES.
8. ALL FLOOR MATERIAL CHANGE SHALL BE LOCATED UNDER THE CENTERLINE OF DOOR WHERE OCCURS, TYP.
9. ALL EXTERIOR DOORS SHALL BE OPERABLE FROM THE INTERIOR WITHOUT THE USE OF A KEY OR ANY SPECIAL KNOWLEDGE OR EFFORT. DEAD BOLTS ARE ONLY PERMITTED WHEN OPERABLE WITH A SINGLE EFFORT LEVER TYPE HARDWARE.
10. HAND ACTIVATED DOOR OPENING HARDWARE SHALL BE MOUNTED 34"-44" A.F.F.
11. ALL DOORS SHALL BE LOCKABLE FROM THE INTERIOR SIDE
12. PER SECTION 1008.1.10 IN THE CBC 2022, DOOR SERVING ROOMS OR SPACES WITH AN OCCUPANT LOAD OF 50 OR MORE ARE REQUIRED TO HAVE PANIC HARDWARE OR FIRE EXIT HARDWARE.
13. PER CBC 2022 11B-404.2.5, THRESHOLDS SHALL BE 1/2" HIGH MAX., SEE DETAIL 19 / AD-6.0 AND 4 / AD-6.1
14. THE BOTTOM 10" OF ALL DOORS EXTENDING THE FULL WIDTH SHALL HAVE A SMOOTH UNINTERRUPTED SURFACE TO ALLOW THE DOOR TO BE OPENED BY A WHEELCHAIR FOOTREST WITHOUT CREATING A TRAP OR HAZARDOUS CONDITION. CBC 2022 11B-404.2.10
15. MAXIMUM EFFORT TO OPERATE ALL DOORS SHALL NOT EXCEED 5 LBS FOR BOTH EXTERIOR AND INTERIOR DOORS. FIRE DOORS SHALL NOT EXCEED 15 LBS. CBC 2022 11B-404.2.9
16. REFER TO SPECIFICATION SECTION 08 06 71 AND 08 71 00(VERIFY) FOR DOOR HARDWARE INFORMATION

GLAZING NOTES

GLAZING TYPES

1. TYPE GL-1: SINGLE VISION GLAZING
2. TYPE GL-2: SEALED INSULATED GLASS UNIT
T. TEMPERED GLAZING

GENERAL GLAZING NOTES

1. VERIFY ALL DIMENSIONS AND ROUGH OPENINGS IN FIELD PRIOR TO FABRICATION.
2. ALL EXTERIOR GLAZING TO RECEIVE TYPE 2 GLAZING, U.N.O.
3. GLAZING TO BE TEMPERED, T SHALL INCLUDE:
   - ALL GLAZING IN DOORS
   - ALL DOOR SIDELIGHTS WITHIN 24" OF DOOR FRAME AND WITH BOT. EDGES LESS THAN 60" AFF.
   - ALL DOOR TRANSOMS
   - ALL WINDOW GLAZING WITHIN A DISTANCE OF 36" HORIZONTALLY FROM A WALKING PATH AND UP TO 60" FROM FINISH GRADE
   - ALL GLAZING WITHIN THE SWING OF A DOOR
4. ALL INTERIOR GLAZING TO RECEIVE TYPE 1 GLAZING, U.N.O.

REFER TO SPECIFICATION SECTION **08 80 00** FOR ADDITIONAL INFORMATION.

ABBREVIATIONS

ALUM	ALUMINUM
AN	ANODOZIED
HM	HOLLOW METAL
HC	HOLLOW CORE
FF	FACTORY FINISH
GALV	GALVANIZED
STL	STEEL
PSG	PAINT: SEMI-GLOSS

STAMPS

I CERTIFIED ARCHITECT ROGER CLARKE No. C-31360 Rev. 12-31-2024 STATE OF CALIFORNIA

AGENCY APPROVAL
File No.: ########-##-########

CONSULTANT BRANDING

RUHNAU CLARKE ARCHITECTS

MOUNT TRANSIT MAINTENANCE FACILITY: PHASE 1 - 100% CD

PROJECT No. :50801
8/1/2023 2:44:38 PM

DRAWN BY: CHECKED BY:

ISSUE No._____ DATE_____ DESCRIPTION_____
ISSUE No._____ DATE_____ DESCRIPTION_____
ISSUE No._____ DATE_____ DESCRIPTION_____
ISSUE No._____ DATE_____ DESCRIPTION_____

REVISION No._____ DATE_____ DESCRIPTION_____
REVISION No._____ DATE_____ DESCRIPTION_____
REVISION No._____ DATE_____ DESCRIPTION_____
REVISION No._____ DATE_____ DESCRIPTION_____

RUHNAUCLARKE.COM
3775 TENTH STREET, RIVERSIDE CALIFORNIA 92501(951) 684 4664 / 5751 PALMER WAY, SUITE C, CARLSBAD CALIFORNIA 92010(760) 438 5899

MOUNT TRANSIT MAINTENANCE FACILITY
PHASE 1
170 BUSINESS CENTER DR. BIG BEAR LAKES, CA
BIG BEAR LAKES

DOOR & WINDOW SCHEDULE

A1-8.1

50801

ROOM FINISH SCHEDULE

ROOM NO.	ROOM NAME	FLOOR	BASE		ELEVATION 1			ELEVATION 2			ELEVATION 3			ELEVATION 4			CEILING			REMARKS	ROOM NO.
		MATERIAL	MATERIAL	COLOR	MATERIAL	FINISH	COLOR	MATERIAL	FINISH	COLOR	MATERIAL	FINISH	COLOR	MATERIAL	FINISH	COLOR	MATERIAL	FINISH	COLOR		
100	BREAKROOM	CONC	CONC-2,3	RB	RB-1	GWB	PES	P-4,6,10	GWB	PES	P-6	GWB	PES	P-4	GWB/ VWC	PES/ FF	P-6,10/ VWC-1	ACT	FF	ACT-1	P-10 @ EXPOSED STRUCTURAL MEMBERS, MECH DUCTS, PLUMBING	100
101	OFFICE	CONC	CONC-3	RB	RB-1	GWB	PES	P-1	GWB	PES	P-1	GWB	PES	P-1	GWB	PES	P-3	ACT	FF	ACT-1		101
102	MAIN OFFICE	CONC	CONC-3	RB	RB-1	GWB	PES	P-2,10	GWB	PES	P-6,10	GWB/ TWP	PES/ FF	P-2/ TWP-1	GWB	PES	P-6	ACT	FF	ACT-1	P-10 @ EXPOSED STRUCTURAL MEMBERS, MECH DUCTS, PLUMBING	102
103	SUPPLY STORAGE	P	P-8,9	RB/ TB	RB-1/ TB-1	GWB	PSG	P-1	GWB	PSG	P-1	GWB/ T	PSG/ FF	P-5/ T-3	GWB	PSG	P-1	GWB	PSG	P-1	TILE @ EYE WASH	103
104	PARTS STORAGE	CONC	CONC-1	RB	RB-1	GWB	PSG	P-1	GWB	PSG	P-6	GWB	PSG	P-1	GWB	PSG	P-1	UOS	PSG	P-10		104
105	FLUID STORAGE	CONC	CONC-1	RB	RB-1	GWB	PSG	P-1	GWB	PSG	P-1	GWB	PSG	P-1	GWB	PSG	P-1	UOS	PSG	P-10		105
106	LOCKER RM	T	T-1	T/ TB	T-1/ TB-1	GWB/ T	PSG/ FF	P-1/ T-3	GWB/ T	PSG/ FF	P-1,3/ T-3	GWB	PSG	P-1	T	FF	T-4	GWB	PSG	P-1		106
106A	SHWR	T	T-3	TB	TB-1	T	FF	T-3	T	FF	T-3	T	FF	T-3	-	-	-	GWWB	PSG	P-1		106A
107	LOCKER RM	T	T-1	T	T-1	GWB/ T	PSG/ FF	P-1/ T-3	T	FF	T-4	GWB	PSG	P-1	GWB/ T	PSG/ FF	P-1,3/ T-3	GWB	PSG	P-1		107
107A	SHWR	T	T-3	TB	TB-1	T	FF	T-3	-	-	-	T	FF	T-3	T	FF	T-3	GWWB	PSG	P-1		107A
108	RESTROOM	T	T-1	T	T-1	T	FF	T-1	T	FF	T-1	T	FF	T-2	T	FF	T-1	GWWB	PSG	P-1	SEE SHEET ID-1.0 FOR WALL TILE PATTERNS	108
109	CUST	T	T-1	T	T-1	GWB	PSG	P-1	GWB	PSG	P-1	GWB/ FRP	PSG/ FF	P-1/ FRP-1	GWB/ FRP	PSG/ FF	P-1/ FRP-1	UOS	PSG	P-10	FRP @ MOP SINK	109
110	RESTROOM.	T	T-1	T	T-1	T	FF	T-1	T	FF	T-1	T	FF	T-2	T	FF	T-1	GWWB	PSG	P-1	SEE SHEET ID-1.0 FOR WALL TILE PATTERNS	110
111	DATA	CONC	CONC-1	RB	RB-1	GWB	PF	P-1	GWB	PF	P-1	GWB	PF	P-1	GWB	PF	P-1	UOS	PSG	P-10		111
112	ELEC	CONC	CONC-1	RB	RB-1	GWB	PF	P-1	GWB	PF	P-1	GWB	PF	P-1	GWB	PF	P-1	UOS	PSG	P-10		112
113	MECHANICS BAY 1	P	P-7,8,9	RB	RB-1	GWB	PSG	P-2,10	GWB	PSG	P-1,2,5,6,10	GWB	PSG	P-2,10	-	-	-	UOS	PSG	P-10	P-10 @ EXPOSED STRUCTURAL MEMBERS, MECH DUCTS, PLUMBING	113
114	MECHANICS BAY 2	P	P-7,8,9	RB	RB-1	GWB	PSG	P-2,10	-	-	-	GWB	PSG	P-2,10	-	-	-	UOS	PSG	P-10	P-10 @ EXPOSED STRUCTURAL MEMBERS, MECH DUCTS, PLUMBING	114
115	MECHANICS BAY 3	P	P-7,8,9	RB	RB-1	GWB	PSG	P-2,10	-	-	-	GWB	PSG	P-2,10	-	-	-	UOS	PSG	P-10	P-10 @ EXPOSED STRUCTURAL MEMBERS, MECH DUCTS, PLUMBING	115
116	MECHANICS BAY 4	P	P-7,8,9	RB	RB-1	GWB	PSG	P-2,10	-	-	-	GWB	PSG	P-1,2,10	GWB	PSG	P-1,5,6,10	UOS	PSG	P-10	P-10 @ EXPOSED STRUCTURAL MEMBERS, MECH DUCTS, PLUMBING	116
117	TIRES	P	P-8,9	RB	RB-1	GWB	PSG	P-2,10	-	-	-	GWB	PSG	P-1,6,10	GWB	PSG	P-5,6,10	UOS	PSG	P-10	P-10 @ EXPOSED STRUCTURAL MEMBERS, MECH DUCTS, PLUMBING	117
118	CONTROL ROOM	CONC	CONC-1	RB	RB-1	GWB	PSG	P-1	GWB	PSG	P-1	GWB	PSG	P-1	GWB	PSG	P-1	UOS	PSG	P-10		118
119	WASH EQUIPMENT	CONC	CONC-1	RB	RB-1	GWB	PSG	P-1	GWB	PSG	P-1	GWB	PSG	P-1	GWB	PSG	P-1	UOS	PSG	P-10		119
120	WASH BAY	CONC	CONC-4	-	-	-	-	-	-	-	-	-	-	-	-	-	-	UOS	PSG	P-10	WALL FINISHES PER EXTERIOR ELEVATIONS	120
121	SHOP EQUIPMENT	CONC	CONC-1	RB	RB-1	GWB	PSG	P-1	GWB	PSG	P-1	GWB	PSG	P-1	GWB	PSG	P-1	UOS	PSG	P-10		121

COLORS, MATERIALS AND FINISHES LEGEND

ITEM	MATERIAL	LOCATION
03 35 11- CONCRETE FLOOR FINISHES		
CONC-1	SEALED NATURAL CONCRETE	TYPICAL @ UTILITY
CONC-2	SIKA USA, SIKACEM-102 FIRST SEAL,W/ INTEGRALLY COLORED CONCRETE SIKA COLOR-100P, 'SIENNA' #U37	TYPICAL @ BREAK ROOM
CONC-3	SIKA USA, SIKACEM-102 FIRST SEAL,W/ INTEGRALLY COLORED CONCRETE SIKA COLOR-100P, 'PEWTER' #U14	ACCENT @ BREAK ROOM/ TYPICAL @ OFFICES
04 20 00- UNIT MASONRY		
CMU-1	ANGELES BLOCK, PRECISION BLOCK, 'NATURAL GRAY' W/ #446 SPEC MIX MORTAR	TYPICAL @ EXTERIOR BLDG
04 73 00 - MANUFACTURED STONE MASONRY		
SV-1	EL DORADO,HILLSTONE, 'LUCERA', HEIGHT: 1"-11.5", LENGTH: 3"-16", AVERAGE THICKNESS 1-1/2" W/ CORRESPONDING CORNER PIECES	ACCENT @ EXT. WAYFINDING SIGNAGE MONUMENT
05 50 00 - METAL FABRICATIONS		
SF-1	ENCORE COMMERCIAL PRODUCTS, POST GUARD BOLLARD, 'CANADIAN GREY'	TYPICAL
06 41 00- ARCHITECTURAL WOOD CASEWORK		
PL-1	WILSONART, STANDARD HPL FINISH, 'NIGHTFALL' #5023-19 (LENO WEAVE FINISH AEON)	CASEWORK @ BREAK ROOM
PL-2	FORMICA, 'PLANKED URBAN OAK' #9312-NG (NATURAL GRAIN FINISH)	TYPICAL CASEWORK
06 83 16- FIBERGLASS REINFORCED PANELING		
FRP-1	PANOLAM, CLASS A, SMOOTH, CLASSIC COLOR 'GRAY'	TYPE AS NOTED IN DRAWINGS
07 41 13- METAL ROOF PANELS		
MRP-1	METALLIC, ARTISAN SERIES L-12 (WITHOUT BEADS) PANEL, SIGNATURE 300 METALLIC 'COPPER METALLIC', COVERAGE WIDTH 12" W/ MATCHING TRIM	PEMB TYPICAL METAL CANOPY PANEL
MRP-2	METALLIC, ARTISAN SERIES L-12 (WITHOUT BEADS) PANEL, SIGNATURE 300 STANDARD 'MIDNIGHT BRONZE', COVERAGE WIDTH 12" W/ MATCHING TRIM	PEMB ACCENT METAL CANOPY PANEL
MRP-3	METALLIC, ULTRA-DEK STANDING SEAM ROOF PANEL, SIGNATURE 300 STANDARD 'MIDNIGHT BRONZE', COVERAGE WIDTH 24"	PEMB METAL ROOF PANEL/ TRASH ENCLOSURE
07 42 13 - METAL WALL PANELS		
MWP-1	METALLIC, PBC PANEL, SIGNATURE 300 STANDARD 'SLATE GRAY', COVERAGE WIDTH 32"	TYPICAL EXTERIOR WALL
MWP-2	METALLIC, DESIGNER SERIES 16.0 FLUTED PANEL, SIGNATURE 300 STANDARD 'BROWNSTONE', COVERAGE WIDTH 16"	ACCENT EXTERIOR WALL
MWP-3	WESTERN STATES METAL ROOFING, RUSTWALL, COR-TEN WALL PANELS	ACCENT SIGNAGE PANEL @ EXTERIOR
07 62 00 - SHEET METAL FLASHING AND TRIM		
SMF-1	METALLIC, TRIM PANEL FINISH TO MATCH MRP-1	TYPICAL P.E.M.B. METAL TRIM
SMF-2	METALLIC, TRIM PANEL FINISH TO MATCH MRP-2	ACCENT P.E.M.B. METAL TRIM
08 32 23 - SLIDING AND FOLDING GLAZED WALLS AND DOORS		
ALUM-2	ARCADIA, OASIS 10000 BIFOLDING GLASS DOOR, ANODIZED ALUMINUM 'BLACK AB-8' #85	BREAKROOM
08 33 23- OVERHEAD COILING DOORS		
PC-2	TRAC-RITE, COMMERCIAL ROLL-UP DOORS 988WL SERIES (WINDLOCK), FINISH: 'BURNISHED SLATE'	PARTS STORAGE/ TIRES/ WASH EQUIPMENT
08 36 13 - SECTIONAL DOORS		
PC-1	C.H.I. COMMERICAL DOORS, FULL-VIEW ALUMINUM, STANDARD COLOR, RAL POWDER COAT #9011	MECHANICS BAYS
08 43 13 - ALUMINUM-FRAMED STOREFRONTS		
ALUM-1	ARCADIA, ANODIZED ALUMINUM 'BLACK AB-8' #85	TYPICAL STOREFRONTS
09 30 00- TILING		
T-1	AMERICAN OLEAN, MERIT, RECTANGLE 12"x24", 'COOL BEIGE' #ME07 FINISH: MATTE (STAGGERED INSTALL/VERTICAL LAYOUT ON WALL; STACKED INSTALL AT FLOORS) W/ COVE BASE #943C9, 3"x12"	TYPICAL FLOOR @ RESTROOMS/ LOCKER ROOM/ CUSTODIAN/ TYPICAL WALL @ RESTROOMS
T-2	TILEBAR, NATURE MICRO 'RAJA BLEND' PEBBLE MOSIAC TILE, 12"X12" COLOR: MULTICOLOR	ACCENT WALL @ RESTROOMS
T-3	DALTILE, COLORBODY PORCELAIN, FAMED, 'ICONIC' #FM11, PENNY ROUNDS, 3"/4"x3"/4" FINISH: MATTE W/ MICROBAN TECHNOLOGY	SHOWER FLOORS/ WALLS/ SUPPLY STORAGE EYE WASH
T-4	DALTILE, COLORBODY PORCELAIN, EMERSON WOOD, 'BUTTER PECAN' #EP01 SHAPE: 3D CUBE (HEX), 12"x12" (MATTE FINISH)	ACCENT WALL TILE @ LOCKER ROOM
09 30 00- TILING (ACCESSORY)		
TB-1	SCHLUTER, DILEX-AHX PROFILE IN 'ANODIZED ALUMINUM'	BASE @ SHOWERS/ SUPPLY STORAGE EYE WASH
09 30 00- TILING (GROUT)		
G-1	CUSTOM BUILDING PRODUCTS, 'URBAN PUTTY' #172	TYPICAL
09 51 00- ACOUSTICAL CEILINGS		
ACT-1	ARMSTRONG, LYRA PB, SQUARE LAY-IN #8373PB-WH, WHITE, 24"x48"x1" WITH 15/16" PRELUDE SUSPENSION SYSTEM, NRC: 0.95	TYPICAL CEILING PANEL
09 65 00- RESILIENT FLOORING (RUBBER BASE)		
RB-1	TARKETT, JOHNSONITE, 'EITHER ORE' #55	TYPICAL
09 72 00- WALL COVERINGS		
VWC-1	WOLF GORDON, COLLECTION: CONTRACT, SKU: SRR 5215, SERRA, 'COPPER' #GOH 13727388	ACCENT @ BREAK ROOM
09 91 23- INTERIOR PAINTING		
P-1	SHERWIN WILLIAMS, IVORY LACE #SW7013	TYPICAL WALL COLOR/GYP. CEILINGS
P-2	SHERWIN WILLIAMS, SILVER STRAND #SW7057	TYPICAL @ MECHANICS BAYS
P-3	SHERWIN WILLIAMS, URBAN JUNGLE #SW9117	ACCENT @ OFFICES/ LOCKER ROOMS
P-4	SHERWIN WILLIAMS, URBAN PUTTY #SW7532	ACCENT @ BREAK ROOM
P-5	SHERWIN WILLIAMS, LABRADORITE #SW7619	ACCENT @ SUPPLY STORAGE
P-6	SHERWIN WILLIAMS, IN THE NAVY #SW9178	ACCENT @ BREAK ROOM/ MAIN OFFICE
09 96 00- HIGH-PERFORMANCE COATINGS		
P-7	TNEMEC, 'TNEMEC WHITE' #00WH	ACCENT PAINT @ MECHANICS BAY FLOOR/ WALL MOUNTED LETTER SIGN
P-8	TNEMEC, 'NAVY BLUE' #63BL	ACCENT PAINT @ MECHANICS BAY FLOOR
P-9	TNEMEC, 'WINTER SLUSH' #65BL	TYPICAL PAINT @ MECHANICS BAY FLOOR
P-10	TNEMEC, CUSTOM COLORS TO MATCH DUNN EDWARDS 'URBANE BRONZE' #SW7048	EXPOSED STRUCTURAL STEEL FRAMING & UOS
P-11	TNEMEC, CUSTOM COLORS TO MATCH DUNN EDWARDS 'ANONYMOUS' #SW7046	HM DOORS/ FRAMES
10 11 00 - VISUAL DISPLAY UNITS		
TWP-1	CARNEGIE FABRICS, XOREL STRIE #6423, 'W829' W/ QUIET-CORE PLUS ACOUSTICAL SUBTRATE: PLANK SHAPE, 6"x46 NRC:0.80, 1 1/8" THICKNESS	MAIN OFFICE
10 14 23 - PANEL SIGNAGE		
SIGN-1	WOOD SUBSTRATE TO MATCH PL-1 WITH DIE CUT ACRYLIC TEXT IN 'BLACK'	OFFICE/ROOM SIGNAGE
10 26 00- WALL AND DOOR PROTECTION		
CG-1	KOROSEAL, KOROGARD CORNER GUARD #GS10, STAINLESS STEEL TYPE 304 WITH #4 SATIN FINISH, ADHESIVE MOUNTED (NO TAPE OR SCREWS), 1" LEG	WHERE NOTED IN PLANS
10 51 13- METAL LOCKERS		
LOCK-1	PENCO 2 TIER-METAL LOCKERS W/ ZEE BASE/SLOPE TOP KITS, 'LIGHT PUTTY' #723	LOCKERS
12 24 00 - WINDOW SHADES		
RS-1	MECHOSHADE, SOHO ELEVATE 1680 SERIES, 'SLATE' #1686, 5% OPENNESS	TYPICAL
12 36 00- COUNTERTOPS		
PL-3	WILSONART, STANDARD HPL FINISH, 'ORTENSIA' #5038K-15 (FIELDSTONE FINISH) W/ AEON SCRATCH RESISTANCE	TYPICAL COUNTER
SSM-1	STARON SOLID SURFACES, 'SANDED WHITE PEPPER' #WP410 1/2" THICKNESS	COUNTERTOP W/ SINK @ BREAK ROOM
32 13 13 - SITE CONCRETE		
CONC-4	NATURAL CONCRETE 'GRAY' MEDIUM BROOM BRUSHED	TYPICAL @ SITE
32 31 19 - DECORATIVE METAL FENCES AND GATES		
OF-1	AMERISTAR, ECHELON II ALUMINUM W/ INTERNAL REINFORCING WEB, 'BLACK'	SITE FENCING/ GATES

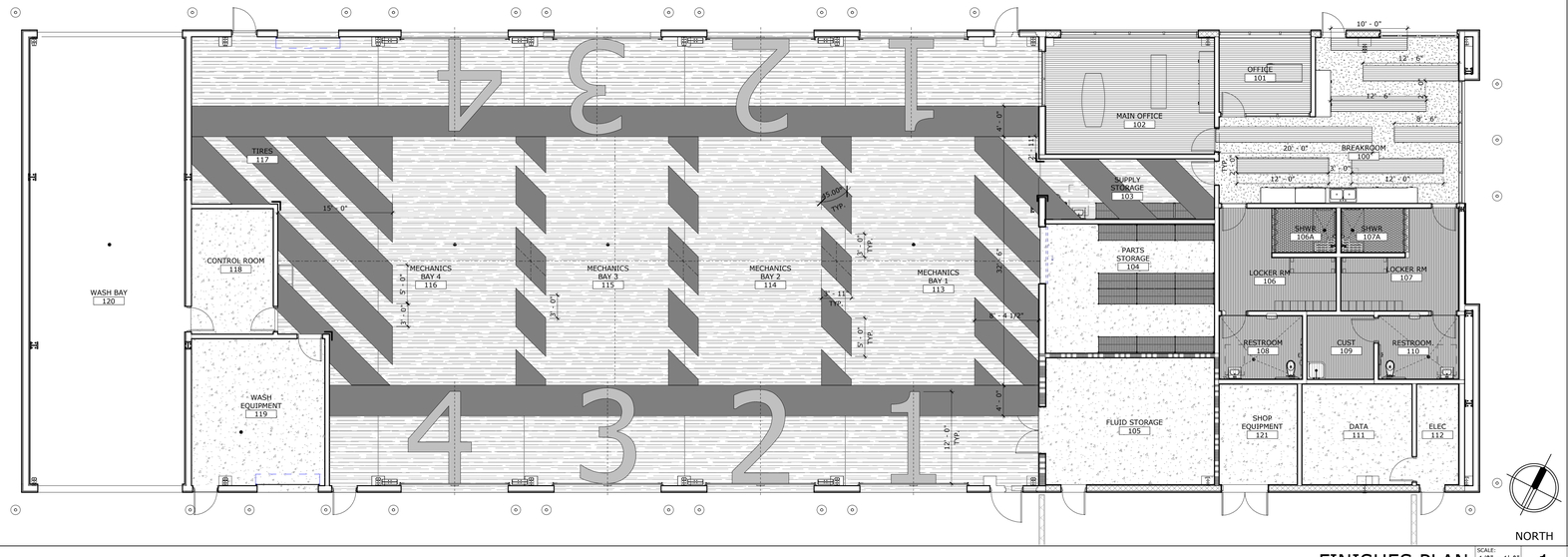

FINISHES PLAN — SCALE: 1/8" = 1'-0" — REF.: 1/A1-4.1 — 1

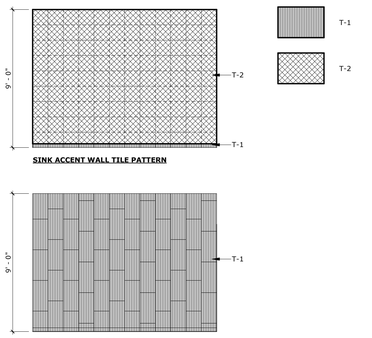

NOTE:
REFER TO COLORS, MATERIALS AND FINISHES LEGEND FOR ADDITIONAL INFORMATION (ID-1.0)

RESTROOM WALL TILE PATTERNS

1. ALL FINISHES SHALL COMPLY WITH CBC CHAPTERS 3, 8, & 10, CFC AND CCR TITLE 19 AND STATE OF CALIFORNIA TECHNICAL BULLETIN 117-2013.
2. WALL AND CEILING MATERIALS SHALL NOT EXCEED THE FLAME SPREAD CLASSIFICATIONS IN CBC TABLE 803.13.
3. ALL ADJACENT DISSIMILAR FINISH MATERIALS TO RECEIVE SEALANT PER MFR INSTRUCTIONS, U.N.O.
4. SEE INTERIOR ELEVATION SHEETS FOR ACCENT PAINT LOCATIONS.
5. ALL EXPOSED STEEL, LOUVERS, ACCESS PANELS AND WALL GRILLES TO BE PAINTED TO MATCH ADJACENT SURFACE, U.N.O.
6. TOILET ROOM, TOILET ROOM VESTIBULES, AND FOOD SERVICE AREA WALLS AND CEILINGS NOT COVERED BY EITHER TILE OR F.R.P. TO HAVE MOISTURE RESISTANT GYPSUM BOARD, U.N.O.
7. COORDINATE FINISHES WITH MECHANICAL FOR PLUMBING FIXTURES.
8. FOR EXTENT AND PATTERN OF CEILING FINISH, SEE REFLECTED CEILING PLAN. REFER TO RCP GENERAL NOTE #4 FOR FINISH AT U.O.S.
9. AT COVE BASE, PROVIDE CONTINUOUS 3/8" RADIUS
10. FOR TYPICAL CERAMIC TILE DETAILS, REFER TO DETAIL 10/AD-2.1
11. SEE SHEET **AD-6.1** FOR ALL TRANSITION DETAILS IF IT IS NOT A FLUSH TRANSITION BETWEEN ANY TWO FLOOR FINISHES.
12. ALL WALL BASE SHOULD BE INSTALLED USING WHOLE UNITS. NO PIECE SHALL BE SMALLER THAN 1'-0". PREFORMED CORNERS STANDARDIZED.
13. FOR MORE INFORMATION ON COLORS, MATERIALS, & FINISHES, REFER TO SHEET -/ID-1.0
14. ALL FLOOR FINISHES SHALL BE STABLE, FIRM, & SLIP RESISTANT PER CBC SECTION 11B-302.1.
15. CARPET / CARPET TILE FLOORING SHALL BE SECURELY ATTACHED WITH FIRM BACKING AND PILE HEIGHT OF 1/2" MAX. PER CBC SECTION 11B-302.2. CARPET EDGES SHALL COMPLY WITH CBC SECTION 11B-303.
16. ALL FLOOR FINISHES SHALL EXTEND BELOW ACCESSIBLE WORKSTATIONS, SINKS, ETC. FOR THE REQUIRED TOE/KNEE CLEARANCE.
17. EPOXY FLOORING AT FOOD SERVICE AREAS IS GREASE/ ACID RESISTANT AND USDA APPROVED.
18. REFER TO CORRESPONDING SPECIFICATIONS FOR BURNING CHARACTERISTICS AND TESTING REQ.

FINISH NOTES

ACT	ACOUSTICAL CEILING TILE
AWP	ACOUSTIC WALL PANEL
CG	CORNER GUARD
CMU	CONCRETE MASONRY UNIT
CONC	CONCRETE
CPL	CEMENT PLASTER
CPT	CARPET
ECO	ECORESIN PANEL
EPOXY	EPOXY FLOOR
EXP	EXPOSED
FF	FACTORY FINISH
FRP	FIBERGLASS REINFORCED PANEL
G	GROUT
GPL	GYPSUM PLASTER
GWB	GYPSUM WALLBOARD
GWWB	WATER RESISTANT GWB
LVT	LUXURY VINYL TILE
MESH	METAL MESH SYSTEM
MPS	METAL PANEL SYSTEM
OP	OPERABLE PARTITION
PCPL	PORTLAND CEMENT PLASTER OVER METAL LATH, SAND FINISH
PES	PAINT - EGGSHELL
PL	PLASTIC LAMINATE
PLAS	PLASTER
P	PAINT
PF	PAINT, FLAT
PG	PAINT, GLOSS
PSG	PAINT, SEMI-GLOSS
QT	QUARRY TILE
RB	RUBBER BASE
RES	RESINOUS/EPOXY FLOORING
RF	RUBBER FLOORING
RS	ROLLER SHADE SYSTEM
S	SEAL
SAF	SYNTHETIC ATHLETIC FLOORING
SCW	SOLID CORE WOOD
SEAL	SEALED CONCRETE
SSM	SOLID SURFACE MATERIAL
ST	STAIN WOOD COLOR
STV	STONE TILE VENEER
SV	SHEET VINYL
T	TILE
TB	TILE BASE
TWP	TACKABLE WALL PANEL
U.O.S.	UNDERSIDE OF STRUCTURE
VCT	VINYL COMPOSITION TILE
VWC	VINYL WALL COVERING
WAF	WOOD ATHLETE FLOORING
WD	WOOD
WDM	WOOD MASIVE FLOORING
WP	WALL PADDING
WS	WALL SYSTEM

FINISH ABBREVIATIONS

CONCRETE
CONC-1
CONC-2
CONC-3

TILING
T-1
T-3

HIGH-PERFORMANCE COATINGS
P-7
P-8
P-9

CORNER GUARDS
CG-1
PER SPEC SECTION 10 26 00

NOTE:
REFER TO COLORS, MATERIALS AND FINISHES LEGEND FOR ADDITIONAL INFORMATION (ID-1.0)

FLOOR FINISH LEGEND

STAMPS

AGENCY APPROVAL
File No.: ########/ER-########

RUHNAU CLARKE ARCHITECTS

CONSULTANT BRANDING

MOUNT TRANSIT MAINTENANCE FACILITY: PHASE 1 - 100% CD

PROJECT No. :50801
8/1/2023 4:15:47 PM

DRAWN BY: CHECKED BY:

ISSUE No._____ DATE_____ DESCRIPTION_____
ISSUE No._____ DATE_____ DESCRIPTION_____
ISSUE No._____ DATE_____ DESCRIPTION_____
ISSUE No._____ DATE_____ DESCRIPTION_____

REVISION No._____ DATE_____ DESCRIPTION_____
REVISION No._____ DATE_____ DESCRIPTION_____
REVISION No._____ DATE_____ DESCRIPTION_____
REVISION No._____ DATE_____ DESCRIPTION_____

RUHNAUCLARKE.COM
3775 TENTH STREET, RIVERSIDE CALIFORNIA 92501(951) 684 4664 / 5751 PALMER WAY, SUITE C, CARLSBAD CALIFORNIA 92010(760) 438 5899

MOUNT TRANSIT MAINTENANCE FACILITY
PHASE 1
170 BUSINESS CENTER DR. BIG BEAR LAKES, CA
BIG BEAR LAKES

FINISHES PLAN/ SCHED & CMF

ID-1.0

50801

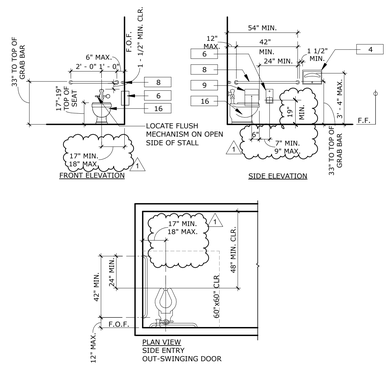

ACCESSIBLE TOILET ROOM STALL

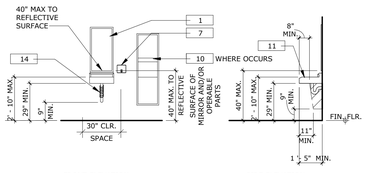

ACCESSIBLE TOILET ROOM FIXTURES & ACCESSORIES

MOUNTING HEIGHTS & LOCATIONS

DIMENSIONS:	ADULTS
TOILET CENTERLINE FROM WALL FINISH	17" - 18"
TOILET SEAT HEIGHT	17" - 19"
GRAB BAR HEIGHT TO TOP OF GRAB	33"
GRAB BAR (DISTANCE FROM REAR WALL) (SIDE)	12" MAX
TOILET PAPER HEIGHT (TO DELIVERY)	19"
TOILET PAPER IN FRONT OF TOILET (TO CL)	7"-9"
NAPKIN DISPOSAL IN FRONT OF TOILET	12" MAX.*
DISPENSER SEAT COVERS, PAPER TOWELS	40" MAX.
REFLECTING SURFACE / SOAP DISPENSER	40" MAX.
LAVATORY/SINK TOP HEIGHT	34" MAX.
LAVATORY KNEE CLEARNACE	29" MAX.
SINK KNEE CLEARANCE	27" MAX.
URINAL LIP HEIGHT	17" MAX.
URINAL FLUSH HANDLE HEIGHT	44" MAX.

NOTE:
CONTRACTOR TO PROVIDE MOUNTING HEIGHTS INDICATED. VERIFY INTENDED USE OF EACH RESTROOM PRIOR TO ROUGH IN. PROVIDE BACKING PER STRUCT. AS REQUIRED, SEE DETAIL 5 SO-1.4

* DISPOSAL UNITS ARE TO BE LOCATED ON THE SIDEWALL BETWEEN THE REAR WALL OF THE TOILET AND THE TOILET PAPER DISPENSER, ADJACENT TO THE TOILET PAPER DISPENSER. CBC 11B-604.7.2

ACCESSORY AND EQUIPMENT KEYNOTES

ACCESSORIES

1. NEW 18" X 30" TEMPERED GLASS MIRROR WITH STAINLESS STEEL ANGLE FRAME AND SHELF.
2. NOT USED
3. NOT USED
4. NEW SURFACE MOUNTED TOILET SEAT COVER DISPENSER - STAINLESS STEEL WITH SATIN FINISH.
5. NOT USED
6. NEW RECESSED MULTI-ROLL TOILET TISSUE DISPENSER - STAINLESS STEEL WITH SATIN FINISH (3" MAX. PROJECTION FROM FINISH FACE OF WALL)
7. NEW SURFACE MOUNTED SOAP DISPENSER FOR LIQUID SOAP - STAINLESS STEEL WITH SATIN FINISH. INSTALLED AT +40" A.F.F. (OVER OBSTRUCTION)
8. NEW GRAB BARS (SIDE = 48" L. X 1-1/2" DIA., REAR = 36" L. X 1-1/2" DIA.) - STAINLESS STEEL FOR ANCHORAGE SEE DETAILS 28 AD-1.0
9. NEW SURFACE MOUNTED FEMININE NAPKIN DISPOSAL (WOMENS ONLY) - STAINLESS STEEL WITH SATIN FINISH. - 3" MAX PROJECTION
10. NEW RECESSED CONVERTIBLE PAPER TOWEL DISPENSER AND WASTE RECEPTACLE- STAINLESS STEEL WITH SATIN FINISH. 4" MAX. PROJECTION

EQUIPMENT

11. NEW ACCESSIBLE LAVATORY.
12. NEW ACCESSIBLE WATER CLOSET.
13. NEW ACCESSIBLE URINAL.

MECHANICAL / PLUMBING

14. INSULATE DRAIN AND ALL WATER PIPING TO PREVENT CONTACT. THERE SHALL BE NO SHARP OR ABRASIVE SURFACES UNDER THE LAVATORY, PER CBC 11B-606.5

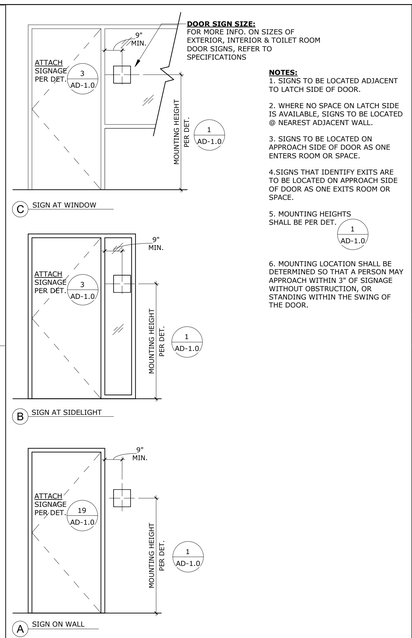

DOOR SIGN SIZE:
FOR MORE INFO. ON SIZES OF EXTERIOR, INTERIOR & TOILET ROOM DOOR SIGNS, REFER TO SPECIFICATIONS

NOTES:
1. SIGNS TO BE LOCATED ADJACENT TO LATCH SIDE OF DOOR.

2. WHERE NO SPACE ON LATCH SIDE IS AVAILABLE; SIGNS TO BE LOCATED @ NEAREST ADJACENT WALL.

3. SIGNS TO BE LOCATED ON APPROACH SIDE OF DOOR AS ONE ENTERS ROOM OR SPACE.

4.SIGNS THAT IDENTIFY EXITS ARE TO BE LOCATED ON APPROACH SIDE OF DOOR AS ONE EXITS ROOM OR SPACE.

5. MOUNTING HEIGHTS SHALL BE PER DET. 1 AD-1.0

6. MOUNTING LOCATION SHALL BE DETERMINED SO THAT A PERSON MAY APPROACH WITHIN 3" OF SIGNAGE WITHOUT OBSTRUCTION, OR STANDING WITHIN THE SWING OF THE DOOR.

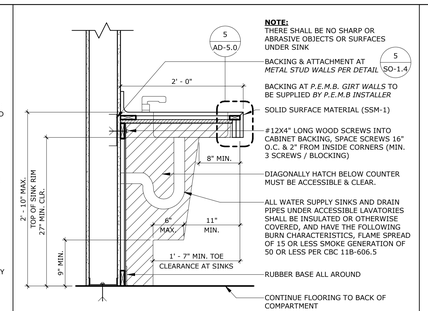

NOTE:
THERE SHALL BE NO SHARP OR ABRASIVE OBJECTS OR SURFACES UNDER SINK

BACKING & ATTACHMENT AT *METAL STUD WALLS PER DETAIL* 5 SO-1.4

BACKING AT *P.E.M.B. GIRT WALLS* TO BE SUPPLIED *BY P.E.M.B INSTALLER*

SOLID SURFACE MATERIAL (SSM-1)

#12X4" LONG WOOD SCREWS INTO CABINET BACKING, SPACE SCREWS 16" O.C. & 2" FROM INSIDE CORNERS (MIN. 3 SCREWS / BLOCKING)

DIAGONALLY HATCH BELOW COUNTER MUST BE ACCESSIBLE & CLEAR.

ALL WATER SUPPLY SINKS AND DRAIN PIPES UNDER ACCESSIBLE LAVATORIES SHALL BE INSULATED OR OTHERWISE COVERED, AND HAVE THE FOLLOWING BURN CHARACTERISTICS, FLAME SPREAD OF 15 OR LESS SMOKE GENERATION OF 50 OR LESS PER CBC 11B-606.5

RUBBER BASE ALL AROUND

CONTINUE FLOORING TO BACK OF COMPARTMENT

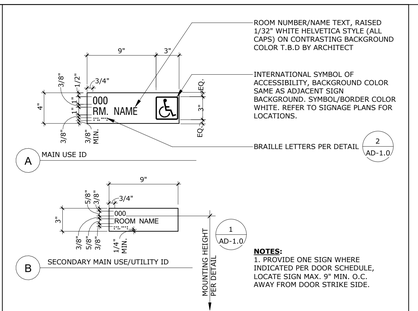

ROOM NUMBER/NAME TEXT, RAISED 1/32" WHITE HELVETICA STYLE (ALL CAPS) ON CONTRASTING BACKGROUND COLOR T.B.D BY ARCHITECT

INTERNATIONAL SYMBOL OF ACCESSIBILITY, BACKGROUND COLOR SAME AS ADJACENT SIGN BACKGROUND. SYMBOL/BORDER COLOR WHITE. REFER TO SIGNAGE PLANS FOR LOCATIONS.

BRAILLE LETTERS PER DETAIL 2 AD-1.0

NOTES:
1. PROVIDE ONE SIGN WHERE INDICATED PER DOOR SCHEDULE, LOCATE SIGN MAX. 9" MIN. O.C. AWAY FROM DOOR STRIKE SIDE.

RUHNAU CLARKE ARCHITECTS

CONSULTANT BRANDING

STAMPS

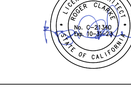

AGENCY APPROVAL
File No.: ########-##-########

SINK CLEARANCE

SCALE: 1" = 1'-0" REF.: / 1/A1-7.2 — 10

ROOM SIGNS

SCALE: 1 1/2" = 1'-0" REF.: / — 5

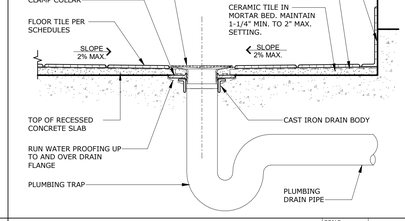

FLOOR DRAIN

SCALE: 1 1/2" = 1'-0" REF.: / — 11

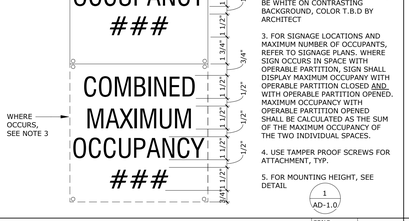

NOTES:
1. 1-1/2" HIGH LETTERS PORCELAIN OR BAKED ON ENAMEL ON STEEL OR 0.050 GA. T-3 ALUM. NO VINYL OR STICK ON LETTERING, TYP. INFORMATION SHALL BE A PERMANENT PART OF SIGN FABRICATION.

2. LETTERS TO COMLY WITH DET. 1/- BE WHITE ON CONTRASTING BACKGROUND, COLOR T.B.D BY ARCHITECT

3. FOR SIGNAGE LOCATIONS AND MAXIMUM NUMBER OF OCCUPANTS, REFER TO SIGNAGE PLANS. WHERE SIGN OCCURS IN SPACE WITH OPERABLE PARTITION, SIGN SHALL DISPLAY MAXIMUM OCCUPANCY WITH OPERABLE PARTITION CLOSED AND WITH OPERABLE PARTITION OPENED. MAXIMUM OCCUPANCY WITH OPERABLE PARTITION OPENED SHALL BE CALCULATED AS THE SUM OF THE MAXIMUM OCCUPANCY OF THE TWO INDIVIDUAL SPACES.

4. USE TAMPER PROOF SCREWS FOR ATTACHMENT, TYP.

5. FOR MOUNTING HEIGHT, SEE DETAIL 1 AD-1.0

MAX. OCCUPANCY SIGN

SCALE: 3" = 1'-0" REF.: / — 6

CHARACTER TYPE: CHARACTERS ON SIGNS SHALL BE RAISED 1/32" MINIMUM AND SHALL BE SANS SERIF UPPERCASE CHARACTERS ACCOMPANIED BY CONTRACTED GRADE 2 BRAILLE.

CHARACTER SIZE: RAISED CHARACTERS SHALL BE A MINIMUM OF 5/8" AND A MAXIMUM OF 2" HIGH.

FINISH AND CONTRAST: CONTRAST BETWEEN CHARACTERS, SYMBOLS, AND THEIR BACKGROUNDS MUST BE 70% MINIMUM AND HAVE A NON-GLARE FINISH.

PROPORTIONS: VISUAL CHARACTERS ON SIGNS SHALL BE SELECTED FROM FONTS WHERE THE WIDTH OF THE UPPERCASE LETTER "O" IS 60 PERCENT MINIMUM AND 110 PERCENT MAXIMUM OF THE HEIGHT OF THE UPPERCASE LETTER "I". STROKE THICKNESS OF THE UPPERCASE LETTER "I" SHALL BE 10 PERCENT MINIMUM AND 15 PERCENT MAXIMUM OF THE HEIGHT OF THE CHARACTER. (CBC 11B-703.2.6)

BRAILLE: CONTRACTED CALIFORNIA GRADE 2 BRAILLE SHALL BE USED WHENEVER CONTRACTED BRAILLE IS REQUIRED. FOR MORE INFO SEE DET. 2 AD-1.0

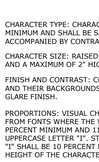

MOUNTING HEIGHT : SIGNS WITH RAISED CHARACTERS AND BRAILLE SHALL BE LOCATED 48" MINIMUM ABOVE THE FINISH FLOOR OR GROUND SURFACE MEASURED FROM THE BASELINE OF THE LOWEST LINE OF BRAILLE, AND 60" MAXIMUM ABOVE THE FINISH FLOOR OR GROUND SURFACE MEASURED FROM THE BASELINE OF THE HIGHEST LINE OF RAISED CHARACTERS.

SIGNAGE REQUIREMENTS

SCALE: 1" = 1'-0" REF.: / — 1

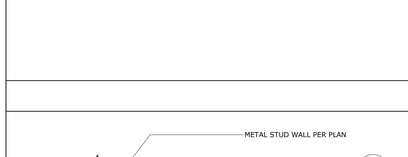

TYP. CUSTODIAL ELEVATIONS

SCALE: 1/4" = 1'-0" REF.: / — 22

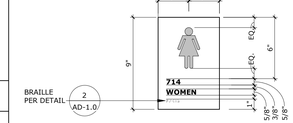

BOY'S /MEN'S WALL SIGN

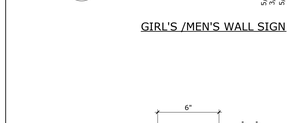

GIRL'S /MEN'S WALL SIGN

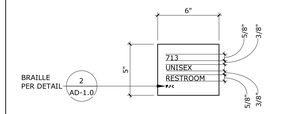

UNISEX WALL SIGN
(USE FOR ALL SINGLE -USER RESTROOMS)

DOOR SIGN ATTACHMENT

SCALE: 3/8" = 1'-0" REF.: / — 16

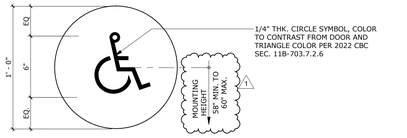

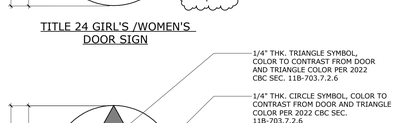

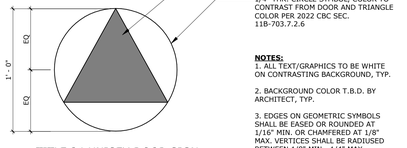

NOTES:
1. ALL TEXT/GRAPHICS TO BE WHITE ON CONTRASTING BACKGROUND, TYP.

2. BACKGROUND COLOR T.B.D. BY ARCHITECT, TYP.

3. EDGES ON GEOMETRIC SYMBOLS SHALL BE EASED OR ROUNDED AT 1/16" MIN. OR CHAMFERED AT 1/8" MAX. VERTICES SHALL BE RADIUSED BETWEEN 1/8" MIN - 1/4" MAX.

4. FOR MORE INFO. ON SIGN PLACEMENT, REFER TO DETAIL 14 AD-1.0

RESTROOM SIGN

SCALE: 2" = 1'-0" REF.: / — 13

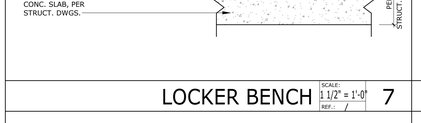

LOCKER BENCH

SCALE: 1 1/2" = 1'-0" REF.: / — 7

TABLE PER CBC 11B-703.3.1 - BRAILLE DIMENSIONS

MEASURMENT RANGE	MIN. TO MAX IN INCHES
DOT BASE DIA.	.059 - .063
DISTANCE BETWEEN DOTS IN SAME CELL	.100
DISTANCE BETWEEN CORRESPONDING DOTS IN ADJACENT CELLS	.300
DOT HEIGHT	.025 - .037
DISTANCE BETWEEN CORRESPONDING DOTS FROM ONE CELL DIRECTLY BELOW	.395 - .400

1. MEASURED CENTER TO CENTER

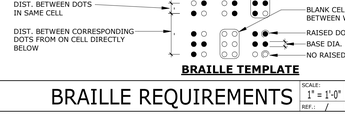

BRAILLE TEMPLATE

BRAILLE REQUIREMENTS

SCALE: 1" = 1'-0" REF.: / — 2

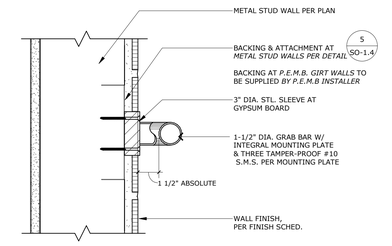

NOTE:
REFERENCE TO TOILET STALL ELEVATIONS FOR MOUNTING HEIGHT OR PER TITLE 24, 2-511

GRAB BAR @ METAL BACKING

SCALE: 3" = 1'-0" REF.: / — 28

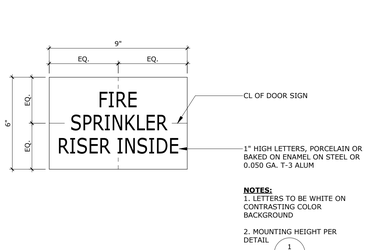

NOTES:
1. LETTERS TO BE WHITE ON CONTRASTING COLOR BACKGROUND

2. MOUNTING HEIGHT PER DETAIL

FIRE RISER DOOR SIGN

SCALE: 3" = 1'-0" REF.: / — 23

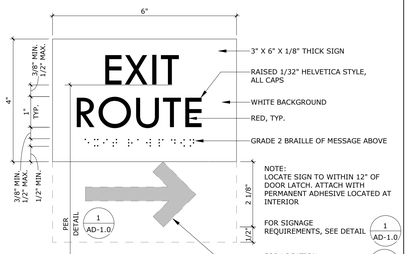

EXIT ROUTE SIGN

SCALE: 6" = 1'-0" REF.: / — 8

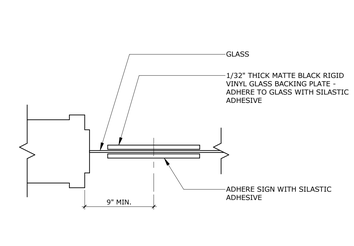

SIGN ATTACHMENT AT GLASS

SCALE: 1 1/2" = 1'-0" REF.: / — 3

NOTES:
1. LETTERS TO BE WHITE ON CONTRASTING COLOR BACKGROUND

2. SING TO BE LOCATED ABOVE THE CEILING WITHIN 15' OF THE END OF THE WALL AND AT INTERVAL OF 30' MAX. MEASURED HORIZONTALLY ALONG THE WALL

FIRE BARRIER MARKING SIGN

SCALE: 1 1/2" = 1'-0" REF.: / — 24

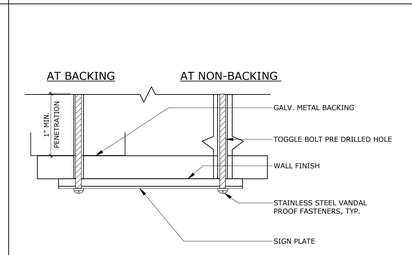

SIGN ATTACH. FRAMED WALL

SCALE: 3" = 1'-0" REF.: / — 19

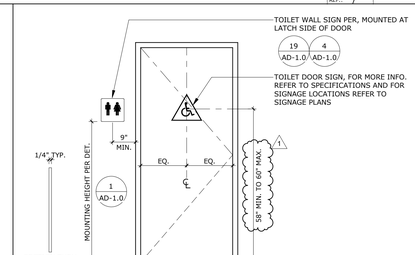

TOILET SIGNS

SCALE: 1/2" = 1'-0" REF.: / — 14

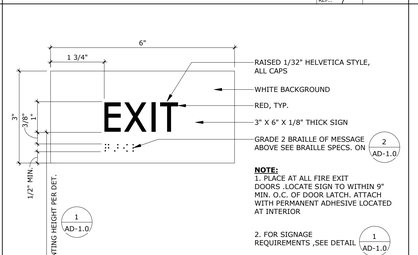

NOTE:
1. PLACE AT ALL FIRE EXIT DOORS .LOCATE SIGN TO WITHIN 9" MIN. O.C. OF DOOR LATCH. ATTACH WITH PERMANENT ADHESIVE LOCATED AT INTERIOR

2. FOR SIGNAGE REQUIREMENTS ,SEE DETAIL 1 AD-1.0

3. FOR LOCATION REQUIREMENTS ,SEE DETAIL 16 AD-1.0

EXIT SIGN

SCALE: 6" = 1'-0" REF.: / — 9

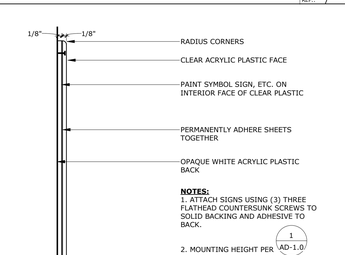

NOTES:
1. ATTACH SIGNS USING (3) THREE FLATHEAD COUNTERSUNK SCREWS TO SOLID BACKING AND ADHESIVE TO BACK.

2. MOUNTING HEIGHT PER 1 AD-1.0

3. SIGNS ARE TO BE DISTINCTLY DIFFERENT FROM THE WALL IN COLOR AND CONTRAST.

TOILET SIGN

SCALE: 6" = 1'-0" REF.: / — 4

MOUNT TRANSIT MAINTENANCE FACILITY: PHASE 1 - 100% CD

PROJECT No. :50801
8/1/2023 4:14:44 PM

DRAWN BY: CHECKED BY:

ISSUE No.____ DATE____ DESCRIPTION____
ISSUE No.____ DATE____ DESCRIPTION____
ISSUE No.____ DATE____ DESCRIPTION____

REVISION No.1 DATE 08/01/23 DESCRIPTION RESUBMITTAL #1
REVISION No.____ DATE____ DESCRIPTION____
REVISION No.____ DATE____ DESCRIPTION____
REVISION No.____ DATE____ DESCRIPTION____

RUHNAUCLARKE.COM
3775 TENTH STREET, RIVERSIDE CALIFORNIA 92501(951) 684 4664 / 5751 PALMER WAY, SUITE C, CARLSBAD CALIFORNIA 92010(760) 438 5899

MOUNT TRANSIT MAINTENANCE FACILITY
PHASE 1
170 BUSINESS CENTER DR. BIG BEAR LAKES, CA
BIG BEAR LAKES

DETAILS ACCESSIBILITY & SIGNAGE DETAILS

AD-1.0

50801

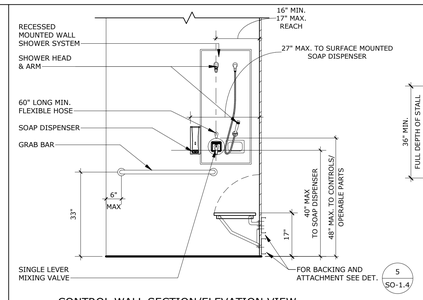

CONTROL WALL SECTION/ELEVATION VIEW

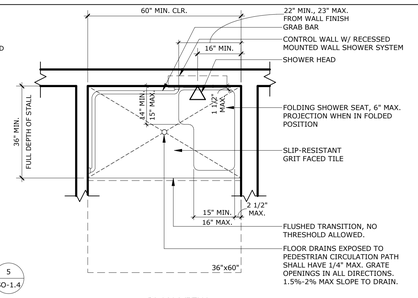

PLAN VIEW

ACCESSIBLE SHOWER STALL 10

SCALE: 1/2" = 1'-0" REF.: 2/A1-7.1

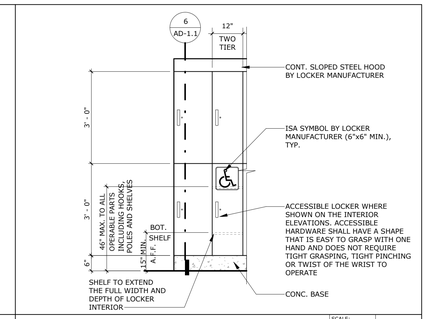

LOCKERS ELEVATION

SCALE: 1/2" = 1'-0" REF.: /

5

STAMPS

AGENCY APPROVAL
File No.: ########/##-########

CONSULTANT BRANDING

RUHNAU CLARKE ARCHITECTS

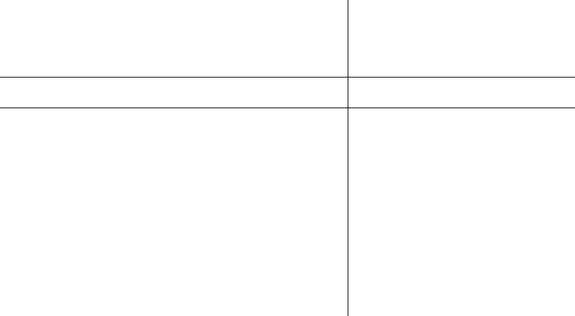

WALL-MOUNTED LETTERS/LOGO 11

SCALE: 1 1/2" = 1'-0" REF.: /

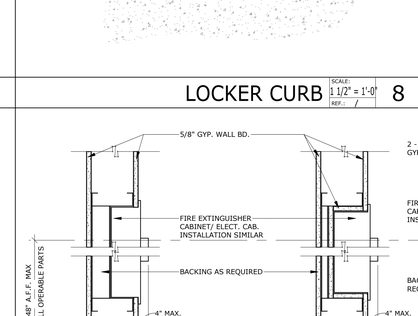

LOCKER SECTION 6

SCALE: 1/2" = 1'-0" REF.: 12/A1-7.1

TYP. BACKING @ STUD WALL 12

SCALE: 1 1/2" = 1'-0" REF.: /

LOCKER ATTACHMENT 7

SCALE: 1 1/2" = 1'-0" REF.: 6/AD-1.1

EMERGENCY SHOWER/WASH 2

SCALE: 1" = 1'-0" REF.: /

LOCKER CURB 8

SCALE: 1 1/2" = 1'-0" REF.: /

SURF. MOUNTED FIRE EXTING. 3

SCALE: 1 1/2" = 1'-0" REF.: /

RECESSED FIRE CABINET FRAMING 4

SCALE: 1 1/2" = 1'-0" REF.: /

MOUNT TRANSIT MAINTENANCE FACILITY: PHASE 1 - 100% CD

PROJECT No. :50801
8/1/2023 4:14:45 PM

DRAWN BY: CHECKED BY:

ISSUE No.____ DATE____ DESCRIPTION____
ISSUE No.____ DATE____ DESCRIPTION____
ISSUE No.____ DATE____ DESCRIPTION____
ISSUE No.____ DATE____ DESCRIPTION____

REVISION No.____ DATE____ DESCRIPTION____
REVISION No.____ DATE____ DESCRIPTION____
REVISION No.____ DATE____ DESCRIPTION____
REVISION No.____ DATE____ DESCRIPTION____

RUHNAUCLARKE.COM
3775 TENTH STREET, RIVERSIDE CALIFORNIA 92501(951) 684 4664 / 5751 PALMER WAY, SUITE C, CARLSBAD CALIFORNIA 92010(760) 438 5899

MOUNT TRANSIT MAINTENANCE FACILITY
PHASE 1
170 BUSINESS CENTER DR. BIG BEAR LAKES, CA 92315
BIG BEAR LAKES

ACCESSIBILITY, SIGNAGE, & MISC.

AD-1.1

50801

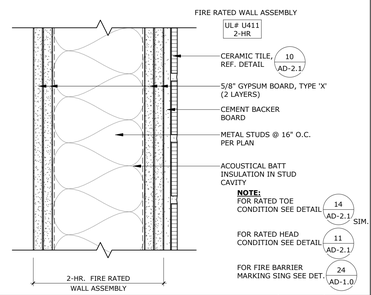

WALL TYPE D2 — SCALE: 3" = 1'-0" — REF.: / — 10

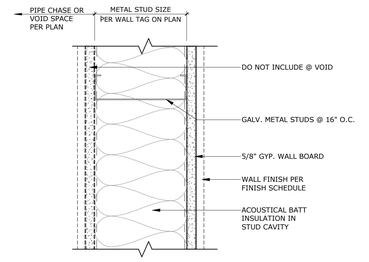

WALL TYPE - B1 — SCALE: 3" = 1'-0" — REF.: / — 5

STAMPS

AGENCY APPROVAL
File No.: ########-##-########

RUHNAU CLARKE ARCHITECTS

CONSULTANT BRANDING

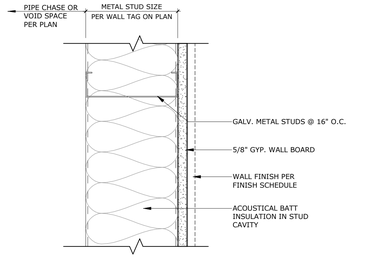

WALL TYPE - E1 — SCALE: 3" = 1'-0" — REF.: / — 11

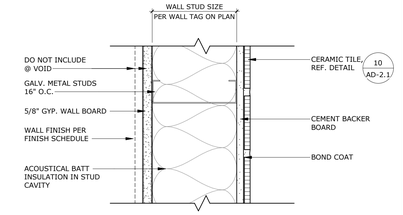

WALL TYPE C1 — SCALE: 3" = 1'-0" — REF.: / — 6

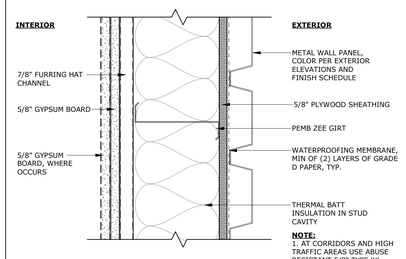

WALL TYPE A1 — SCALE: 3" = 1'-0" — REF.: / — 1

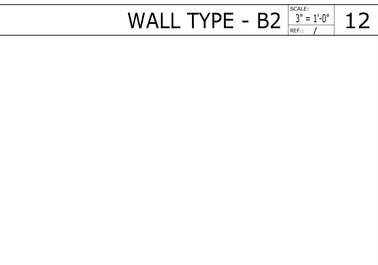

WALL TYPE - B2 — SCALE: 3" = 1'-0" — REF.: / — 12

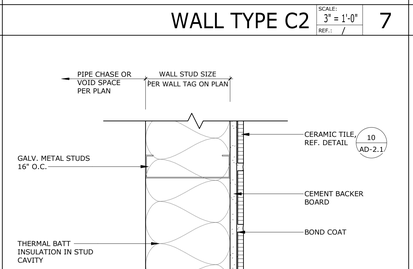

WALL TYPE C2 — SCALE: 3" = 1'-0" — REF.: / — 7

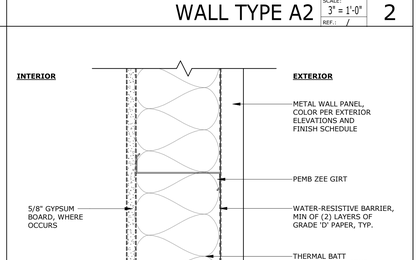

WALL TYPE A2 — SCALE: 3" = 1'-0" — REF.: / — 2

WALL TYPE C3 — SCALE: 3" = 1'-0" — REF.: / — 8

WALL TYPE A3 — SCALE: 3" = 1'-0" — REF.: / — 3

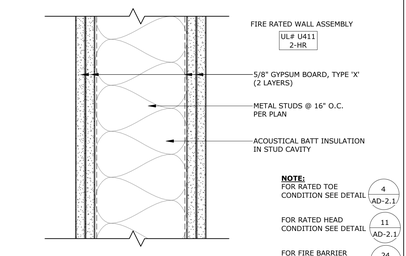

WALL TYPE D1 — SCALE: 3" = 1'-0" — REF.: / — 9

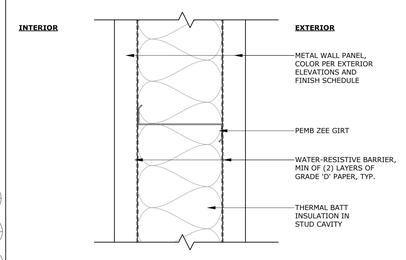

WALL TYPE A4 — SCALE: 3" = 1'-0" — REF.: / — 4

MOUNT TRANSIT MAINTENANCE FACILITY: PHASE 1 - 100% CD

PROJECT No. :50801
8/2/2023 3:49:32 PM

DRAWN BY: CHECKED BY:

ISSUE No.	DATE	DESCRIPTION
ISSUE No.	DATE	DESCRIPTION
ISSUE No.	DATE	DESCRIPTION
ISSUE No.	DATE	DESCRIPTION

REVISION No.	DATE	DESCRIPTION
REVISION No.	DATE	DESCRIPTION
REVISION No.	DATE	DESCRIPTION
REVISION No.	DATE	DESCRIPTION

RUHNAUCLARKE.COM
3775 TENTH STREET, RIVERSIDE CALIFORNIA 92501(951) 684 4664 / 5751 PALMER WAY, SUITE C, CARLSBAD CALIFORNIA 92010(760) 438 5899

MOUNT TRANSIT MAINTENANCE FACILITY
PHASE 1
170 BUSINESS CENTER DR. BIG BEAR LAKES, CA
BIG BEAR LAKES

DETAILS
WALL TYPES

AD-2.0

50801

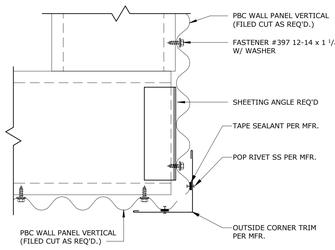

OUTSIDE CORNER @ V. MWP

SCALE: 3" = 1'-0" | REF.: 2/A1-4.1 | 20

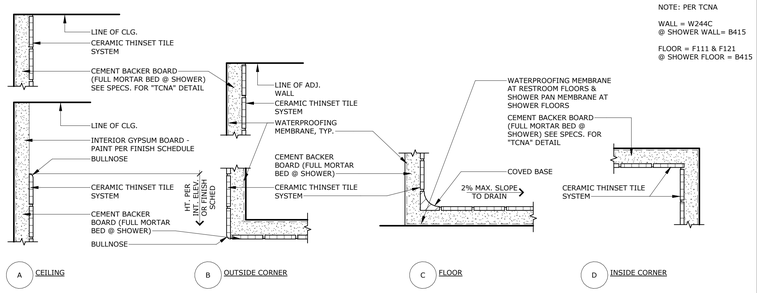

CERAMIC TILE DETAILS

SCALE: 3" = 1'-0" | 10

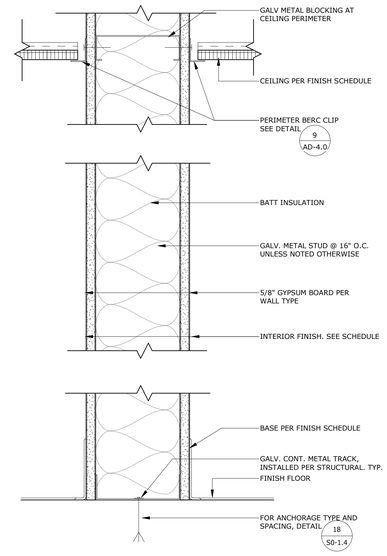

TYPICAL INTERIOR WALL

SCALE: 3" = 1'-0" | 6

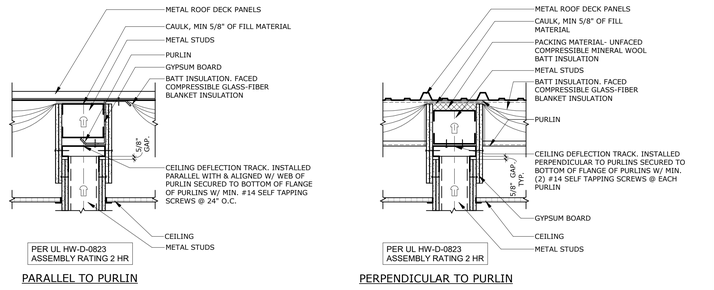

INTERIOR FIRE RATED WALL DETAIL

SCALE: 1" = 1'-0" | 11

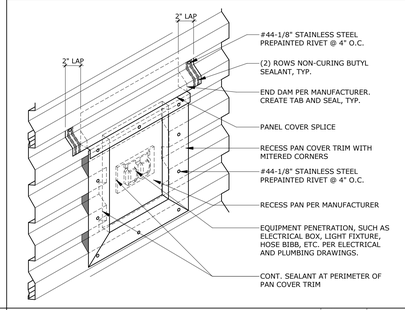

MWP PENETRATION DETAIL

SCALE: 1 1/2" = 1'-0" | 1

PANEL TRANSITION @ H. & V.

SCALE: 3" = 1'-0" | REF.: 1/A1-4.1 | 22

NON-BEARING MTL STUD PART. TOP (FULL HEIGHT WALL)

SCALE: 3/4" = 1'-0" | 12

CURB WALL DETAIL

SCALE: 3" = 1'-0" | 7

METAL WALL @ CURB-VERT.

SCALE: 3" = 1'-0" | 2

OUTSIDE CORNER @ H. MWP

SCALE: 3" = 1'-0" | REF.: 2/A1-4.1 | 18

EXT. METAL WALL

SCALE: 3" = 1'-0" | 13

INTERIOR WALL CURB @ TILE

SCALE: 1 1/2" = 1'-0" | 8

METAL WALL @ CURB- HORIZ.

SCALE: 3" = 1'-0" | 3

INTERIOR WALL CURB @ TILE

SCALE: 1 1/2" = 1'-0" | REF.: 2/A1-6.4 | 19

FIRE RATED BASE ASSEMBLY

SCALE: 3" = 1'-0" | REF.: 4/A1-6.3 | 14

TYP. INT. WALL BASE

SCALE: 3" = 1'-0" | 9

FIRE RATED BASE ASSEMBLY

SCALE: 3" = 1'-0" | 4

STAMPS

AGENCY APPROVAL
File No.: ########-##-########

CONSULTANT BRANDING

RUHNAU CLARKE ARCHITECTS

PROJECT No. :50801
8/1/2023 4:14:47 PM

DRAWN BY: CHECKED BY:

ISSUE No.____ DATE____ DESCRIPTION____
REVISION No.____ DATE____ DESCRIPTION____

RUHNAUCLARKE.COM

3775 TENTH STREET, RIVERSIDE CALIFORNIA 92501(951) 684 4664 / 5751 PALMER WAY, SUITE C, CARLSBAD CALIFORNIA 92010(760) 438 5899

MOUNT TRANSIT MAINTENANCE FACILITY
PHASE 1
170 BUSINESS CENTER DR. BIG BEAR LAKES, CA
BIG BEAR LAKES

WALL DETAILS

AD-2.1

50801

MOUNT TRANSIT MAINTENANCE FACILITY: PHASE 1 - 100% CD

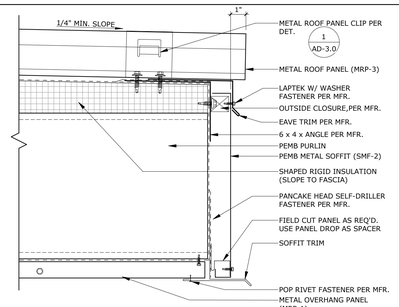

CANOPY FASCIA

SCALE: 3" = 1'-0" REF.: 1/A1-6.1 — 20

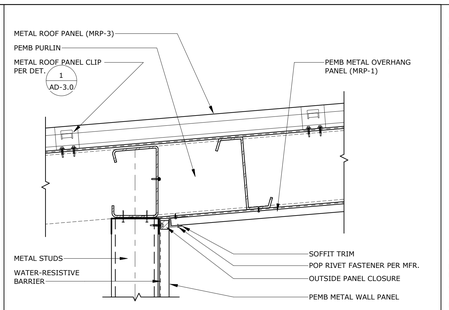

STUD AT EAVE STRUT

SCALE: 1 1/2" = 1'-0" REF.: 1/A1-6.1 — 15

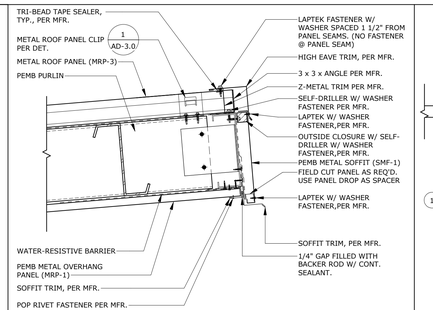

EAVE HIGH TRIM DETAIL

SCALE: 1 1/2" = 1'-0" REF.: 4/A1-6.1 — 10

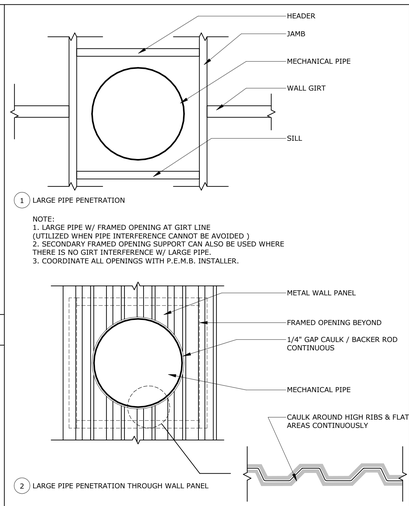

PEMB W. PANEL PENETRATIONS

SCALE: 1 1/2" = 1'-0" — 6

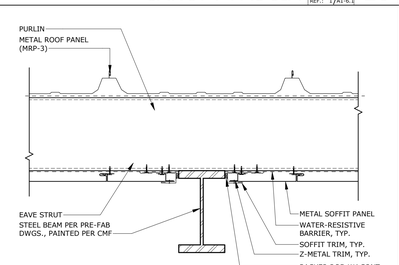

BEAM AT SOFFIT METAL FINISH

SCALE: 1 1/2" = 1'-0" REF.: 1/A1-2.1 — 21

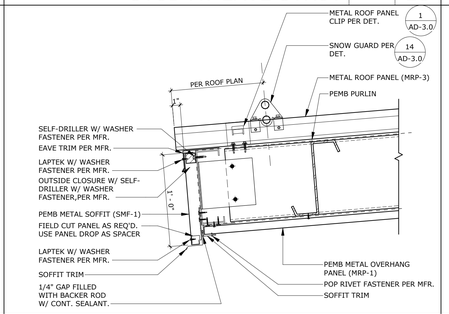

EAVE TRIM DETAIL

SCALE: 1 1/2" = 1'-0" REF.: 5/A1-6.1 — 16

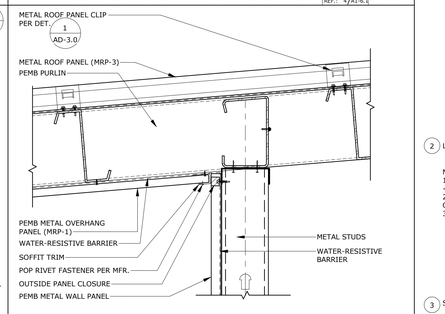

STUD AT EAVE STRUT.

SCALE: 1 1/2" = 1'-0" REF.: 5/A1-6.1 — 11

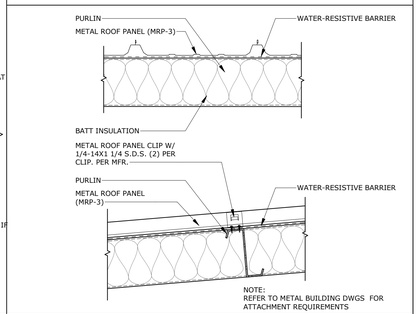

TYPICAL ROOF ASSEMBLY

SCALE: 1" = 1'-0" REF.: / — 1

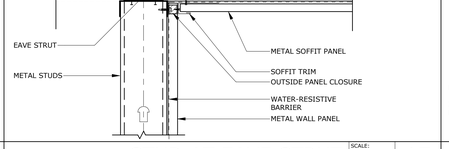

STUD AT EAVE STRUT

SCALE: 1 1/2" = 1'-0" REF.: 1/A1-6.4 — 17

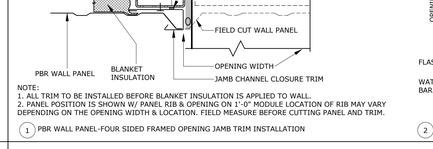

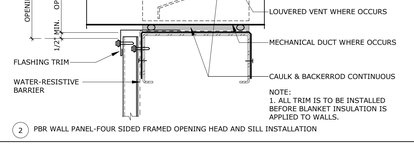

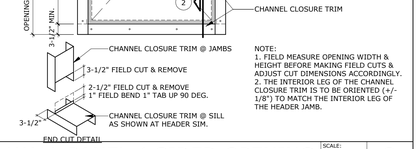

PBR WALL PANEL 4 SIDED OPENING

SCALE: 3" = 1'-0" — 2

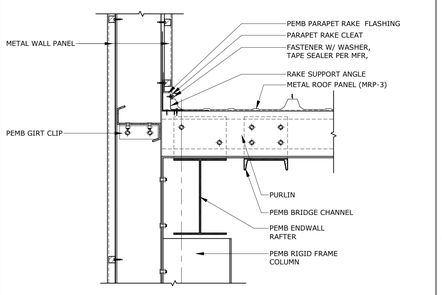

INT. WALL ROOF STRUCT.

SCALE: 1" = 1'-0" — 18

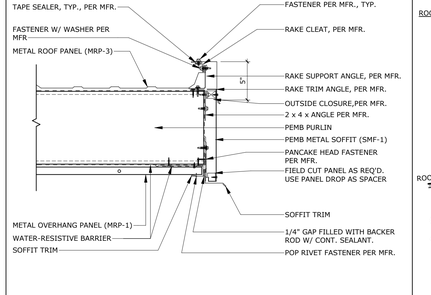

TYP. INT. & END WALL CONN.

SCALE: 1 1/2" = 1'-0" REF.: 1/A1-6.1 — 13

ROOF CURBS WHEN NOT SUPPLIED BY BUILDING MANUFACTURER

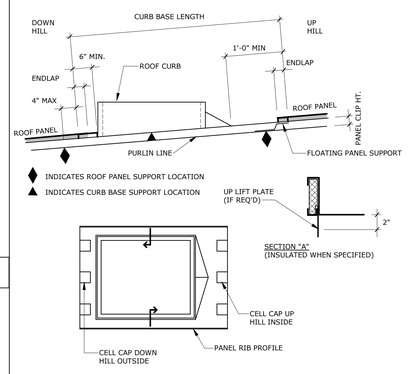

THE CURB DETAILS SHOWN ILLUSTRATE THE BUILDING MANUFACTURERS RECOMMENDED CURB STYLE AND INSTALLATION METHOD. IT IS THE ERECTOR/INSTALLERS RESPONSIBILITY TO PROVIDE THE PROPER CURB STYLE AND INSTALL THEM IN ACCORDANCE WITH THE PROCEDURES ESTABLISHED BY THESE DETAILS. FAILURE BY THE ERECTOR/INSTALLER TO FOLLOW THESE RECOMMENDATIONS MAY RESULT IN THE CURBS DAMAGING THE ROOF SYSTEM OR EXCLUDED FROM WARRANTIES.

ALL ROOF CURBS TO BE:
1. 0.080 ALUMINUM OR 18 GA. STAINLESS STEEL (NO GALVALUME OR GALVANIZED.)
2. PANEL RIB TO PANEL RIB (NO FLAT SKIRT OR LAY-OVER CURBS).
3. INSTALLED WITH DOWN HILL END OVER PANEL AND UP HILL END UNDER PANEL APPLICATION FOR WATER FLOW AT PANEL SPLICE.
4. UP LIFT PREVENTION FOR CLIP APPLIED ROOF SYSTEMS ARE REQUIRED IF;
A. WIND LOADS EXCEED 110 MPH.
B. CURB BASE CROSSES A PURLIN.
5. SUPPORTED ON (4) SIDES BY PRIMARY OR SECONDARY FRAMING.
6. MAX SINGLE CURB WEIGHT RECOMMENDED IS 1500 LBS.

ROOF JACK INSTALLATION WHEN NOT SUPPLIED BY BUILDING MANUFACTURER

GENERAL INSTALLATION NOTES

DO NOT USE GALVANIZED JACKS, LEAD HATS, OR OTHER RESIDENTIAL GRADE ROOF JACKS. THESE ROOF JACKS DO NOT HAVE 20 YEAR SERVICE LIFE AND IN CASE OF LEAD HATS WILL CAUSE GALVANIC CORROSION OF THE ROOF PANEL.

USE EPDM RUBBER ROOF JACKS WITH AN INTEGRAL ALUMINUM BAND BONDED INTO THE PERIMETER OF THE BASE. EPDM ROOF JACKS HAVE A TEMPERATURE RANGE FROM -65 DEG F TO 212 DEG F. USE SILICONE ROOF JACKS FOR HIGH TEMPERATURES. SILICONE ROOF JACKS HAVE A TEMPERATURE RANGE OF -100 DEG F TO 437 DEG F.

RETROFIT ROOF JACKS ARE AVAILABLE FOR APPLICATIONS IN WHICH THE TOP OF THE PIPE IS INACCESSIBLE, ELIMINATING THE POSSIBILITY OF SLIDING THE ROOF JACK OVER THE TOP OF THE PIPE.

DO NOT USE TUBE SEALANT TO SEAL THE ROOF JACK TO THE ROOF PANELS. USE ROLL TAPE SEALER BETWEEN THE ROOF JACK AND THE ROOF PANEL AND ATTACH THE ROOF JACK TO THE ROOF PANEL WITH FASTENER #4-1/4 - 14 X 7/8" LL SD W/ WASHER AT 1" O.C. AROUND THE BASE OF THE ROOF JACK.

TRIM THE TOP OF THE ROOF JACK TO FIT OVER THE PIPE, ROLL DOWN THE ROOF JACK OVER THE PIPE AND APPLY TAPE SEALER FOR THE PERIMETER OF THE ROOF JACK BASE BETWEEN THE ROOF JACK AND THE ROOF PANEL. APPLY TAPE SEALER AROUND THE PIPE AND INSTALL A STAINLESS STEEL CLAMP (NOT BY BLDG. MFR.) OVER THE TOP OF THE ROOF JACK AND FIRMLY TIGHTEN TO FORM A SECURE COMPRESSION SEAL.

IF THE PIPE DIAMETER IS SO LARGE TO BLOCK THE FLOW OF WATER DOWN THE ROOF PANEL, A FLAT BASE ROOF CURB MUST BE INSTALLED INTO THE ROOF AND THE ROOF JACK WILL BE SEALED TO THE CURB. A TWO PIECE CURB MAY BE REQUIRED WHEN THE TOP OF THE PIPE IS INACCESSIBLE.

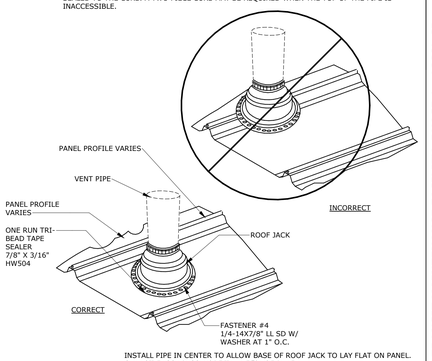

INSTALL PIPE IN CENTER TO ALLOW BASE OF ROOF JACK TO LAY FLAT ON PANEL. CANNOT ENCOMPASS MORE THAN 75% OF PANEL.

PEMB ROOF DETAIL

SCALE: 12" = 1'-0" — 4

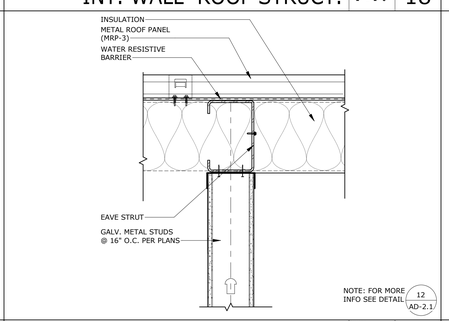

STUD AT EAVE STRUT

SCALE: 1 1/2" = 1'-0" REF.: 1/A1-6.4 — 19

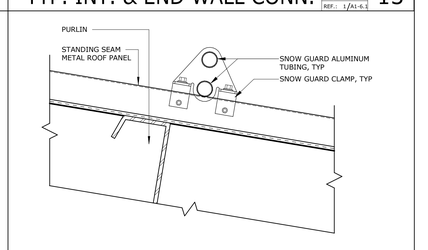

MTL R. SNOW GRD SIDE VIEW

SCALE: 3" = 1'-0" REF.: 1/A1-3.1 — 14

MOUNT TRANSIT MAINTENANCE FACILITY: PHASE 1 - 100% CD

PROJECT No. :50801
8/3/2023 3:08:04 PM

DRAWN BY: CHECKED BY:

ISSUE No._____ DATE_____ DESCRIPTION_____
ISSUE No._____ DATE_____ DESCRIPTION_____
ISSUE No._____ DATE_____ DESCRIPTION_____
ISSUE No._____ DATE_____ DESCRIPTION_____

REVISION No._____ DATE_____ DESCRIPTION_____
REVISION No._____ DATE_____ DESCRIPTION_____
REVISION No._____ DATE_____ DESCRIPTION_____
REVISION No._____ DATE_____ DESCRIPTION_____

RUHNAUCLARKE.COM
3775 TENTH STREET, RIVERSIDE CALIFORNIA 92501(951) 684 4664 / 5751 PALMER WAY, SUITE C, CARLSBAD CALIFORNIA 92010(760) 438 5899

MOUNT TRANSIT MAINTENANCE FACILITY
PHASE 1
170 BUSINESS CENTER DR. BIG BEAR LAKES, CA
BIG BEAR LAKES

DETAILS
ROOF DETAILS

AD-3.0

50801

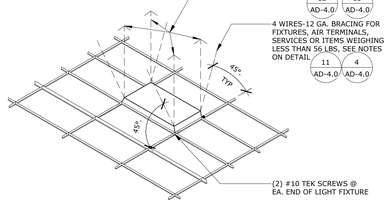

FIXTURE SUPPORT

SCALE: 1/4" = 1'-0" | 20

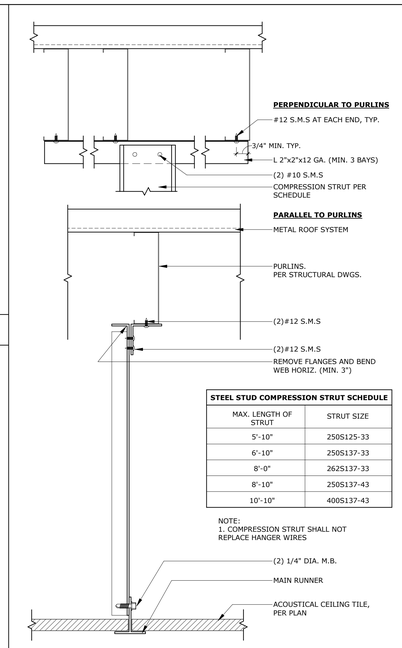

STEEL STUD COMPRESSION STRUT SCHEDULE	
MAX. LENGTH OF STRUT	STRUT SIZE
5'-10"	250S125-33
6'-10"	250S137-33
8'-0"	262S137-33
8'-10"	250S137-43
10'-10"	400S137-43

NOTE:
1. COMPRESSION STRUT SHALL NOT REPLACE HANGER WIRES

(2) 1/4" DIA. M.B.
MAIN RUNNER
ACOUSTICAL CEILING TILE, PER PLAN

COMPRESSION STRUT

SCALE: 3" = 1'-0" | 16

NOTE:
SEE DETAILS
11 AD-4.0
12 AD-4.0
13 AD-4.0
FOR CONNECTIONS OF BRACING & HANGER WIRES TO THE STRUCTURE ABOVE

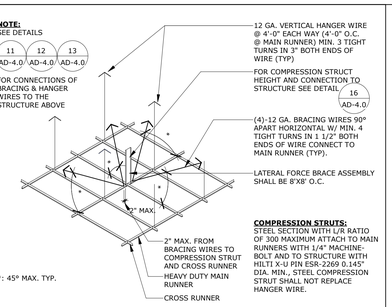

*: 45° MAX. TYP.

COMPRESSION STRUTS:
STEEL SECTION WITH L/R RATIO OF 300 MAXIMUM ATTACH TO MAIN RUNNERS WITH 1/4" MACHINE-BOLT AND TO STRUCTURE WITH HILTI X-U PIN ESR-2269 0.145" DIA. MIN., STEEL COMPRESSION STRUT SHALL NOT REPLACE HANGER WIRE.

SUSPEN. CEILING BRACING

SCALE: 3" = 1'-0" | 5

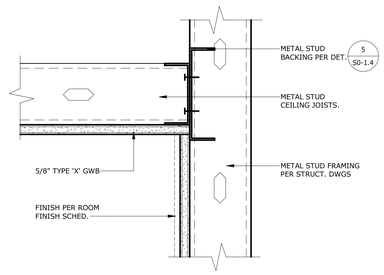

FRAMED GYP BOARD CEILING

SCALE: 3" = 1'-0" | 21

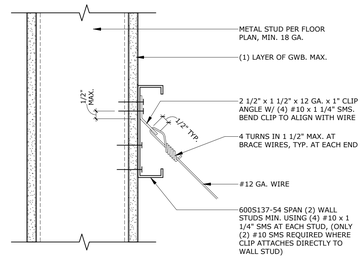

BRACING WIRE TO WALL

SCALE: 3" = 1'-0" | 11

HANGER WIRE ONLY

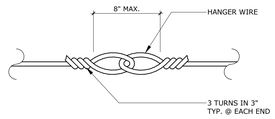

HANGER OR BRACE WIRE

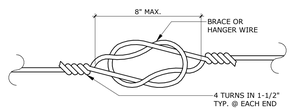

CEILING WIRE SPLICES

SCALE: 6" = 1'-0" | 6

METAL SUSPENSION SYSTEMS FOR LAY-IN PANEL CEILINGS : 2022 CBC

1. CEILING SYSTEM GENERAL NOTES:

1.01 CEILING SYSTEM COMPONENTS SHALL COMPLY WITH ASTM C635-07 AND SECTION 5.1 OF ASTM E580-10A
1.02 THE CEILING GRID SYSTEM MUST BE RATED HEAVY DUTY AS DEFINED BY ASTM C635-08.
1.03 CEILING SYSTEMS. THE FOLLOWING CEILING SYSTEM(S) IS/ARE PART OF THE SCOPE OF THIS PROJECT:
ACT ONLY:
MANUFACTURER'S NAME: ARMSTRONG WORLD INDUSTRIES
PRODUCT EVALUATION REPORT TYPE AND NUMBER: ICC ESR-1308
MANUFACTURER'S MODEL NUMBER - MAIN RUNNER: 7301
MANUFACTURER'S CATALOG NUMBER - CROSS RUNNER: XL7342, XL7328
FOR OTHER SYSTEMS, SEE SPEC SECTION 09 51 00
1.04 SEISMIC WALL CLIP:
MANUFACTURER'S MODEL: BERC2
1.05 CEILING PANELS SHALL NOT SUPPORT ANY LIGHT FIXTURES, AIR TERMINALS OR DEVICES.
1.06 FOR CEILING INSTALLATIONS UTILIZING ACOUSTICAL TILE PANELS OF MINERAL OR GLASS FIBER, IT IS NOT MANDATORY TO PROVIDE 3/4" CLEARANCE BETWEEN THE ACOUSTICAL TILE PANELS AND THE WALL ON THE SIDES OF THE CEILING WHICH ARE FREE TO SLIP. FOR ALL OTHER CEILING PANEL TYPES, PROVIDE 3/4" CLEARANCE BETWEEN THE CEILING PANEL AND THE WALL ON THE SIDES OF THE CEILING FREE TO SLIP.

2. MATERIALS:

2.01 CEILING WIRE SHALL BE CLASS 1 ZINC COATED (GALVANIZED) CARBON STEEL CONFORMING TO ASTM A641-09A. WIRE SHALL BE #12 GAGE (0.106" DIAMETER) WITH SOFT TEMPER AND MINIMUM TENSILE STRENGTH = 70 KSI.
2.02 GALVANIZED SHEET STEEL (INCLUDING THAT USED FOR METAL STUD AND TRACK COMPRESSION STRUTS/POST) SHALL CONFORM TO ASTM A653-11, OR OTHER EQUIVALENT SHEET STEEL LISTED IN SECTION A2.1 OF THE NORTH AMERICAN SPECIFICATION FOR THE DESIGN OF COLD-FORMED STEEL STRUCTURAL MEMBERS 2007, INCLUDING SUIPPLEMENT 2 DATED 2010 (AISI S100-07/S2-10). MATERIAL 43 MIL (18 GAGE) AND LIGHTER SHALL HAVE MINIMUM YIELD STRENGTH OF 33 KSI. MATERIAL 54 MIL (16 GAGE) AND HEAVIER SHALL HAVE A MINIMUM YIELD STRENGTH OF 50 KSI.
2.03 ELECTRICAL METALLIC TUBE (EMT) SHALL BE ANSI C80.3/UL 797 CARBON STEEL WITH G90 GALVANIZING. EMT SHALL HAVE MINIMUM YIELD STRENGTH (Fy) OF 30 KSI AND MINIMUM ULTIMATE STRENGTH (Fu) OF 48 KSI.

3. ATTACHMENT OF HANGER AND BRACING WIRES:

3.01 SEPARATE ALL CEILING HANGER AND BRACING WIRES AT LEAST SIX (6) INCHES FROM ALL UNBRACED DUCTS, PUPES, CONDUIT, ETC.
3.02 HANGER AND BRACING WIRES SHALL NOT ATTACH TO OR BEND AROUND OBSTRUCTIONS INCLUDING BUT NOT LIMITED TO: PIPING, DUCTWORK, CONDUIT AND EQUIPMENT.
3.03 HANGER WIRES THAT ARE MORE THAN ONE (HORIZONTAL) IN SIX (VERTICAL) OUT OF PLUMB SHALL HAVE COUNTER-SLOPING WIRES.
3.04 SLACK SAFETY WIRES SHALL BE CONSIDERED HANGER WIRES FOR INSTALLATION AND TESTING REQUIREMENTS.
3.05 HANGER AND BRACING WIRE ANCHORAGE TO THE STRUCTURE SHALL BE INSTALLED IN SUCH A MANNER THAT THE DIRECTION OF THE ANCHORAGE ALIGNS CLOSELY WITH THE DIRECTION OF THE WIRE. (E.G. BRACING WIRE CEILING CLIPS MUST BE BENT AS SHOWN IN THE DETAILS AND ROTATED AS REQUIRED TO ALIGN CLOSELY WITH THE DIRECTION OF THE WIRE, SCREW EYES IN WOOD MUST BE INSTALLED SO THEY ALIGN CLOSELY WITH THE DIRECTION OF THE WIRE, ETC.)

4. FASTENERS AND WELDING:

4.01 SHEET METAL SCREWS SHALL COMPLY WITH ASTM C1513-10, ASME B18.6.4-89 (R2005). PENETRATION OF SCREWS THROUGH JOINED MATERIAL SHALL NOT BE LESS THAN THREE EXPOSED THREADS.
4.02 EXPANSION ANCHORS SHALL BE: N/A
4.03 POWER-ACTUATED FASTENERS SHALL BE: N/A
4.04 IF NOT OTHERWISE SPECIFIED IN THE EVALUATION REPORT, POWER-ACTUATED FASTENERS INSTALLED IN STEEL SHALL BE INSTALLED SO THE ENTIRE POINTED END OF THE FASTENER IS DRIVEN THROUGH THE STEEL MEMBER.
4.05 POWER-ACTUATED FASTENERS IN CONCRETE ARE NOT PERMITTED FOR BRACING WIRES.
4.06 CONCRETE REINFORCEMENT AND PRESTRESSING TENDONS SHALL BE LOCATED BY NON-DESTRUCTIVE MEANS PRIOR TO INSTALLING POST - INSTALLED ANCHOR.
4.07 WELDING SHALL BE IN ACCORDANCE WITH AWS D1.3 USING E60XX SERIES ELECTRODES.

5. TESTING: ALL FIELD TESTING MUST BE PERFORMED IN THE PRESENCE OF THE PROJECT INSPECTOR.

5.01 POST-INSTALLED ANCHORS IN CONCRETE USED TO SUPPORT HANGER WIRES SHALL BE TESTED AT A FREQUENCY OF 10 PERCENT. POWER ACTUATED FASTENERS IN CONCRETE SHALL BE FIELD TESTED FOR 200 LBS. IN TENSION. ALL OTHER POST-INSTALLED ANCHORS IN CONCRETE SHALL BE TESTED IN ACCORDANCE WITH CBC SECTION 1910A.5.
5.02 POST-INSTALLED ANCHORS IN CONCRETE USED TO ATTACH BRACING WIRES SHALL BE TESTED AT A FREQUENCY OF 50 PERCENT IN ACCORDANCE WITH CBC SECTION 1910A.5.

6. LIGHT FIXTURES:

6.01 ALL LIGHT FIXTURES SHALL BE POSITIVELY ATTACHED TO THE CEILING SUSPENSION SYSTEMS BY MECHANICAL MEANS TO RESIST A HORIZONTAL FORCE EQUAL TO THE WEIGHT OF THE FIXTURE. A MINIMUM OF TWO SCREWS OR APPROVED FASTENERS ARE QREUIRED AT EACH LIGHT FIXTURE, PER ASTM E580, SECTION 5.3.1.
6.02 SURFACE-MOUNTED LIGHT FIXTURES SHALL BE ATTACHED TO THE MAIN RUNNER WITH AT LEAST TWO POSITIVE CLAMPING DEVICES. THE CLAMPING DEVICE SHALL COMPLETELY SORROUND THE SUPPORTING CEILING RUNNER AND BE MADE OF STEEL WITH A MINIMUM THICKNESS OF #14 GAGE. ROTATIONAL SPRING CATCHES DO NOT COMPLY.
6.03 LIGHT FIXTURES WEIGHING LESS THAT OR EQUAL TO 10 L.B. SHALL HAVE A MINIMUM OF ONE (1) #12 GAGE SLACK SAFETY WIRE CONNECTED FROM THE FIXTURE HOUSING TO THE STRUCTURE ABOVE.
6.04 LIGHT FIXTURES WEIGHING GREATER THAN 10 LB. BUT LESS THAN OR EQUAL TO 56 LBS. MAY BE SUPPORTED DIRECTLY ON THE CEILING RUNNERS, BUT THEY SHALL HAVE A MINIMUM OF TWO (2) #12 GAGE SLACK SAFETY WIRES CONNECTED FROM THE FIXTURE HOUSING AT DIAGONAL CORNERS TO THE STRUCTURE ABOVE.
6.05 ALL LIGHT FIXTURES WEIGHING GREATER THAN 56 LB. SHALL BE INDEPENDENTLY SUPPORTED BY NOT LESS THAN FOUR (4) TAUT #12 GAGE HANGER WIRES (ONE AT EACH CORNER) ATTACHED FROM THE FIXTURE HOUSING TO THE STRUCTURE ABOVE OR OTHER APPROVED HANGERS. THE FOUR (4) TAUT #12 GAGE WIRES OR OTHER APPROVED HANGERS, INCLUDING THEIR ATTACHMENT TO THE STRUCTURE ABOVE, SHALL BE CAPABLE OF SUPPORTING FOUR (4) TIMES THE WEIGHT OF THE FIXTURE.

7. SERVICES WITHIN THE CEILING:

7.01 ALL FLEXIBLE SPRINKELER HOSE FITTING MOUNTING BRACKETS, CEILING MOUNTED AIR TERMINALS OR OTHER SERVICES SHALL BE POSITIVELY ATTACHED TO THE CEILING SUSPENSION SYSTEMS BY MECHANICAL MEANS, SCREWS OR APPROVED FASTENERS ARE REQUIRED. A MINIMUM OF TWO ATTACHMENTS ARE REQUIRED AT EACH COMPONENT.
7.02 CEILING-MOUNTED AIR TERMINALS OR OTHER SERVICES WEIGHING LESS THAN OR EQUAL TO 20 LB. SHALL HAVE ONE (1) #12 GAGE SLACK SAFETY WIRE ATTACHED FROM THE TERMINAL OR SERVICE TO THE STRUCTURE ABOVE.
7.03 FLEXIBLE SPRINKELER HOSE FITTINGS, CEILING-MOUNTED AIR TERMINALS OR OTHER SERVICES WEIGHING MORE THAN 20 LB. BUT LESS THAN OR EQUAL TO 56 LB. SHALL HAVE TWO (2) #12 GAGE SLACK SAFETY WIRES (AT DIAGONAL CORNERS) CONNECTED FROM THE TERMINAL OR SERVICE TO THE STRUCTURE ABOVE.
7.04 FLEXIBLE SPRINKELER HOSE FITTINGS, CEILING-MOUNTED AIR TERMINALS OR OTHER SERVICES WEIGHING MORE THAN 56 LB. SHALL BE SUPPORTED DIRECTLY FROM THE STRUCTURE ABOVE BY NOT LESS THAN FOUR (4) TAUT #12 GAGE HANGER WIRES ATTACHED FROM THE TERMINAL OR SERVICE TO THE STRUCTURE ABOVE OR OTHER APPROVED HANGERS.

8. OTHER DEVICES WITHIN THE CEILING:

8.01 ALL LIGHTWEIGHT MISCELLANEOUS DEVICES, SUCH AS STROBE LIGHTS, OCCUPANCY SENSORS, SPEAKERS, EXIT SIGNS, ETC., SHALL BE ATTACHED TO THE CEILING GRID, IN ADDITION, DEVICES WEIGHING MORE THAN 10 LBS. SHALL HAVE A #12 GAGE SLACK SAFETY WIRE ANCHORED TO THE STRUCTURE ABOVE. DEVICES WEIGHING MORE THAN 20 LB. SHALL BE SUPPORTED INDEPENDENTLY FROM THE STRUCTURE ABOVE.

CEILING REQUIREMENTS

SCALE: 1 1/2" = 1'-0" | 4

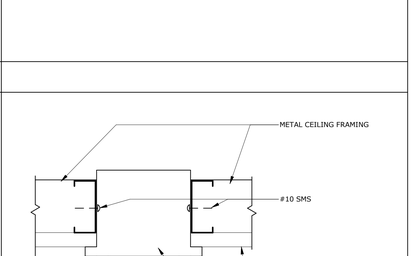

RECESSED LIGHT @ SOFFIT

SCALE: 3" = 1'-0" | REF.: / | 23

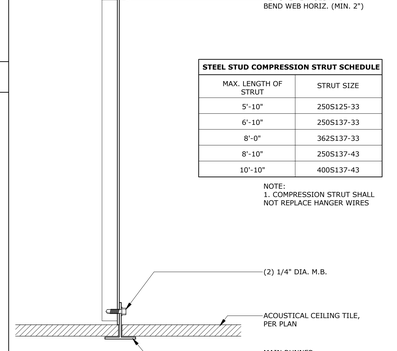

STEEL STUD COMPRESSION STRUT SCHEDULE	
MAX. LENGTH OF STRUT	STRUT SIZE
5'-10"	250S125-33
6'-10"	250S137-33
8'-0"	362S137-33
8'-10"	250S137-43
10'-10"	400S137-43

NOTE:
1. COMPRESSION STRUT SHALL NOT REPLACE HANGER WIRES

(2) 1/4" DIA. M.B.
ACOUSTICAL CEILING TILE, PER PLAN
MAIN RUNNER

COMPRESSION STRUT.

SCALE: 3" = 1'-0" | 18

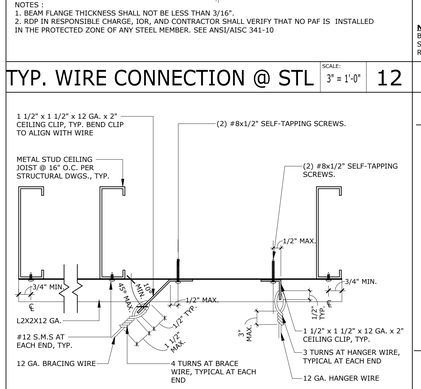

NOTES :
1. BEAM FLANGE THICKNESS SHALL NOT BE LESS THAN 3/16".
2. RDP IN RESPONSIBLE CHARGE, IOR, AND CONTRACTOR SHALL VERIFY THAT NO PAF IS INSTALLED IN THE PROTECTED ZONE OF ANY STEEL MEMBER. SEE ANSI/AISC 341-10

TYP. WIRE CONNECTION @ STL

SCALE: 3" = 1'-0" | 12

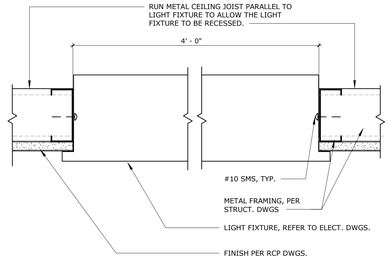

RECESSED LIGHT @ HARD LID

SCALE: 3" = 1'-0" | REF.: / | 24

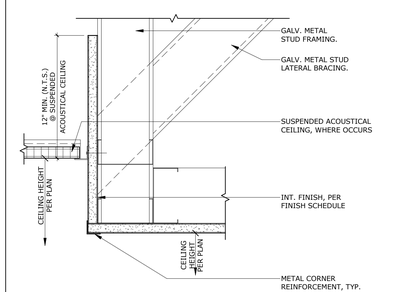

ACT-TO-GWB TRANSITION

SCALE: 3" = 1'-0" | 19

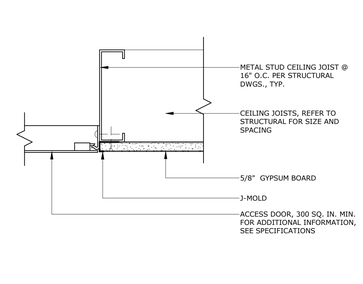

ACCESS DOOR @ GWB

SCALE: 3" = 1'-0" | 14

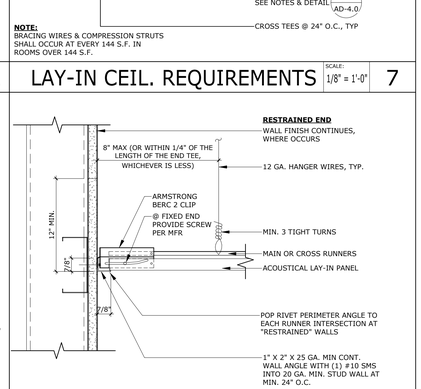

NOTE:
BRACING WIRES & COMPRESSION STRUTS SHALL OCCUR AT EVERY 144 S.F. IN ROOMS OVER 144 S.F.

LAY-IN CEIL. REQUIREMENTS

SCALE: 1/8" = 1'-0" | 7

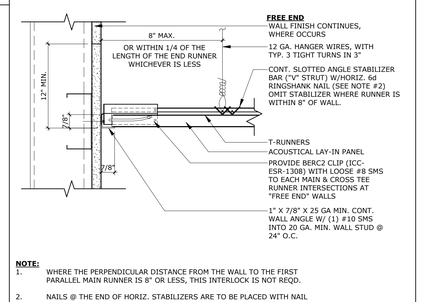

NOTE:
1. WHERE THE PERPENDICULAR DISTANCE FROM THE WALL TO THE FIRST PARALLEL MAIN RUNNER IS 8" OR LESS, THIS INTERLOCK IS NOT REQD.
2. NAILS @ THE END OF HORIZ. STABILIZERS ARE TO BE PLACED WITH NAIL HEAD TOWARD CENTERLINE OF SPAN OF STRUT.

PERIMETER WALL ANGLES

SCALE: 3" = 1'-0" | 9

WIRE CONN. @ METAL JOIST

SCALE: 3" = 1'-0" | 13

STAMPS
AGENCY APPROVAL
File No: ########/##-########
CONSULTANT BRANDING
RUHNAU CLARKE ARCHITECTS

PROJECT No. :50801
8/1/2023 4:14:50 PM

DRAWN BY: CHECKED BY:

ISSUE No.____ DATE____ DESCRIPTION____
REVISION No.____ DATE____ DESCRIPTION____

RUHNAUCLARKE.COM
3775 TENTH STREET, RIVERSIDE CALIFORNIA 92501(951) 684 4664 / 5751 PALMER WAY, SUITE C, CARLSBAD CALIFORNIA 92010(760) 438 5899

MOUNT TRANSIT MAINTENANCE FACILITY
PHASE 1
170 BUSINESS CENTER DR. BIG BEAR LAKES, CA
BIG BEAR LAKES

DETAILS
CEILING DETAILS

AD-4.0

50801

MOUNT TRANSIT MAINTENANCE FACILITY: PHASE 1 - 100% CD

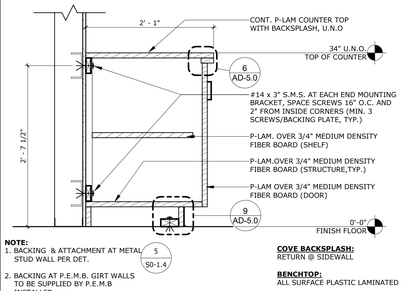

NOTE:
1. BACKING & ATTACHMENT AT METAL STUD WALL PER DET. 5 S0-1.4

2. BACKING AT P.E.M.B. GIRT WALLS TO BE SUPPLIED BY P.E.M.B INSTALLER

COVE BACKSPLASH:
RETURN @ SIDEWALL

BENCHTOP:
ALL SURFACE PLASTIC LAMINATED

P-LAM BASE CABINET

SCALE: 1" = 1'-0" | REF.: 9/A1-7.2 | 10

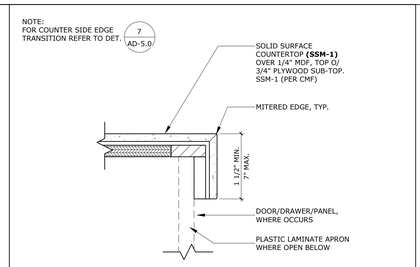

SSM COUNTERTOP EDGE

SCALE: 3" = 1'-0" | REF.: 10/AD-1.0 | 5

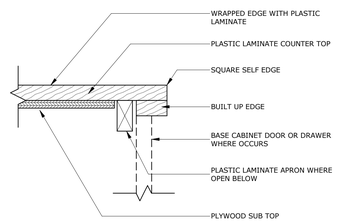

P-LAM COUNTERTOP EDGE

SCALE: 3" = 1'-0" | REF.: 10/AD-5.0 | 6

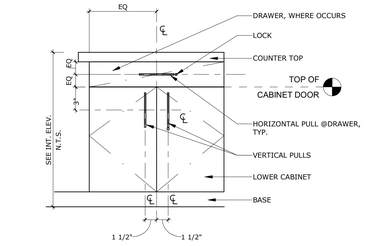

TYP. CABINET PULLS

SCALE: 1 1/2" = 1'-0" | REF.: / | 1

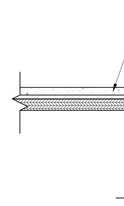

COUNTER SIDE TYP. EDGE

SCALE: 3" = 1'-0" | REF.: / | 7

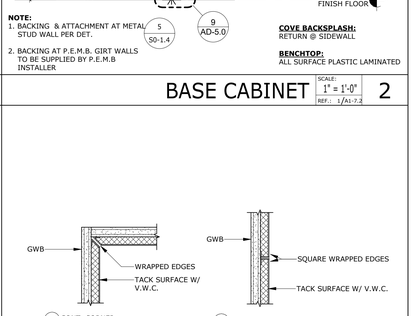

NOTE:
1. BACKING & ATTACHMENT AT METAL STUD WALL PER DET. 5 S0-1.4

2. BACKING AT P.E.M.B. GIRT WALLS TO BE SUPPLIED BY P.E.M.B INSTALLER

COVE BACKSPLASH:
RETURN @ SIDEWALL

BENCHTOP:
ALL SURFACE PLASTIC LAMINATED

BASE CABINET

SCALE: 1" = 1'-0" | REF.: 1/A1-7.2 | 2

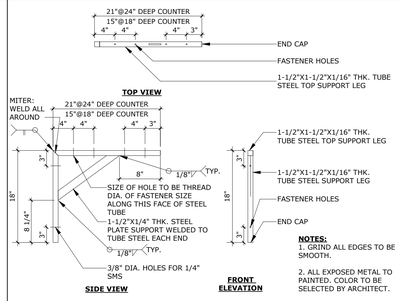

COUNTERTOP BRACKET

SCALE: 1" = 1'-0" | REF.: / | 8

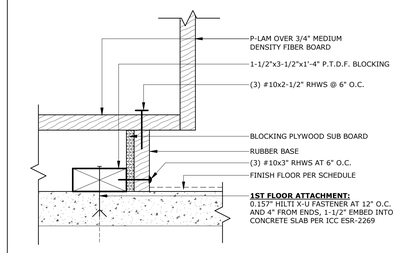

FRONT CABINET ANCHOR

SCALE: 3" = 1'-0" | REF.: 2/AD-5.0 | 9

TACK SURFACE PANEL

SCALE: 1/4" = 1'-0" | REF.: / | 4

LICENSED ARCHITECT ROGER CLARKE No. C-31360 Exp. 10-31-2024 STATE OF CALIFORNIA

STAMPS

AGENCY APPROVAL
File No.: ########/##-########

RUHNAU CLARKE ARCHITECTS

CONSULTANT BRANDING

PROJECT No. :50801
8/1/2023 4:14:51 PM

DRAWN BY: CHECKED BY:

ISSUE No._____ DATE_____ DESCRIPTION_____
ISSUE No._____ DATE_____ DESCRIPTION_____
ISSUE No._____ DATE_____ DESCRIPTION_____
ISSUE No._____ DATE_____ DESCRIPTION_____

REVISION No._____ DATE_____ DESCRIPTION_____
REVISION No._____ DATE_____ DESCRIPTION_____
REVISION No._____ DATE_____ DESCRIPTION_____
REVISION No._____ DATE_____ DESCRIPTION_____

RUHNAUCLARKE.COM
3775 TENTH STREET, RIVERSIDE CALIFORNIA 92501(951) 684 4664 / 5751 PALMER WAY, SUITE C, CARLSBAD CALIFORNIA 92010(760) 438 5899

MOUNT TRANSIT MAINTENANCE FACILITY
PHASE 1
170 BUSINESS CENTER DR. BIG BEAR LAKES, CA
BIG BEAR LAKES

DETAILS
CASEWORK DETAILS

AD-5.0

50801

MOUNT TRANSIT MAINTENANCE FACILITY: PHASE 1 - 100% CD

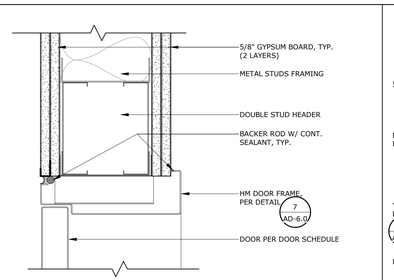

INT. DOOR HEAD @ 2-HR

SCALE: 3" = 1'-0" REF.: / 25

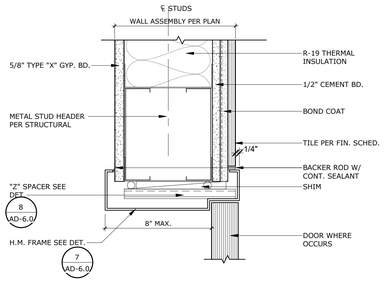

INT. HM. DOOR HEAD W/ TILE

SCALE: 3" = 1'-0" REF.: / 20

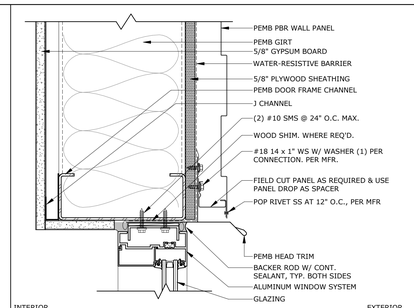

PEMB WIN. HEAD

SCALE: 3" = 1'-0" REF.: 2/A1-8.1 15

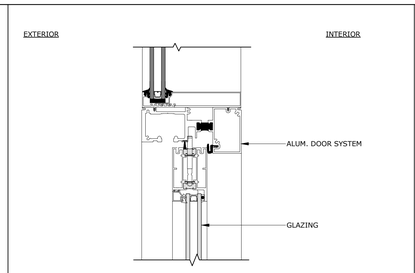

EXT. ALUM. BI-FOLD DR HEAD

SCALE: 3" = 1'-0" REF.: 3/A1-8.1 10

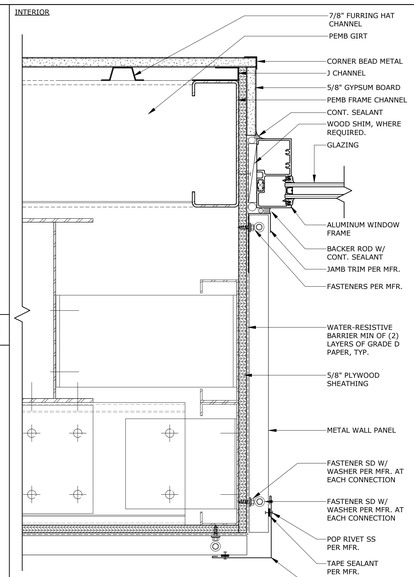

ALUM. WIND. JAMB @ COR-TEN

SCALE: 3" = 1'-0" REF.: 14/A1-8.1 6

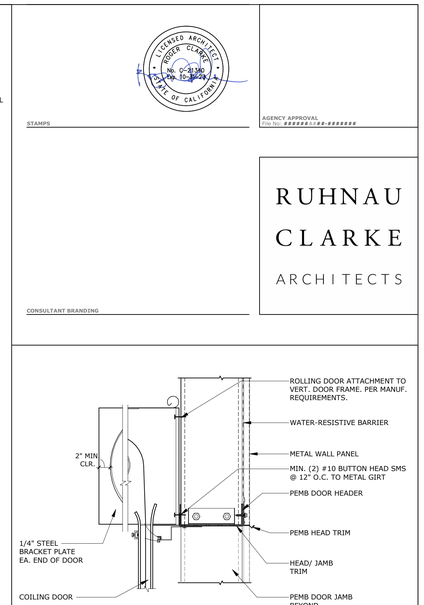

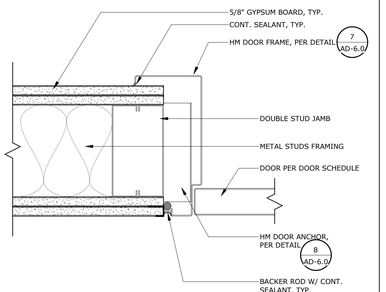

INT. DOOR JAMB @ 2-HR

SCALE: 3" = 1'-0" REF.: / 26

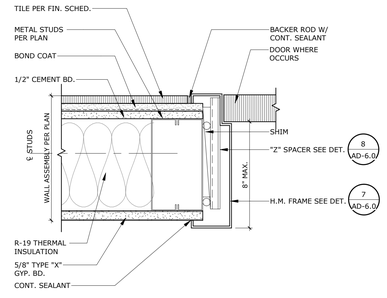

INT. HM. DOOR JAMB W/ TILE

SCALE: 3" = 1'-0" REF.: / 21

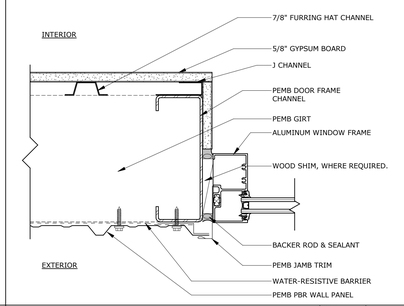

PEMB WIN. JAMB

SCALE: 3" = 1'-0" REF.: / 16

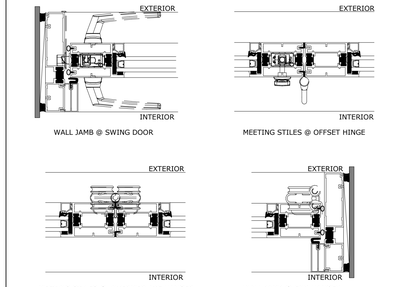

EXT. ALUM. BI-FOLD DR JAMB

SCALE: 3" = 1'-0" REF.: 3/A1-8.1 11

COILING DOOR HEAD

SCALE: 1 1/2" = 1'-0" REF.: 5/A1-6.1 1

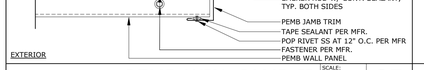

PEMB WIN. JAMB II

SCALE: 3" = 1'-0" REF.: 1/A1-8.1 27

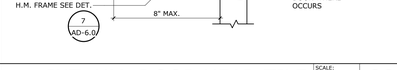

INT. HM. DOOR HEAD TILE

SCALE: 3" = 1'-0" REF.: / 22

EXT. ALUM. WINDOW MULLION

SCALE: 3" = 1'-0" REF.: 2/A1-8.1 17

EXT. ALUM. BI-FOLD DR SILL

SCALE: 3" = 1'-0" REF.: / 12

H.M. DOOR & WINDOW FRAME.

SCALE: 6" = 1'-0" REF.: / 7

COILING DOOR JAMB

SCALE: 3" = 1'-0" REF.: / 2

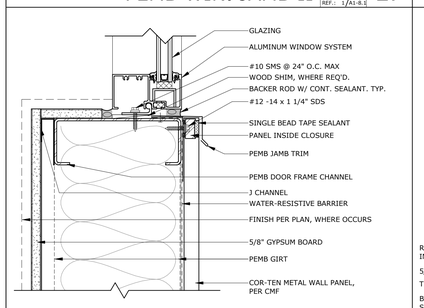

PEMN. WIN SILL

SCALE: 3" = 1'-0" REF.: 14/A1-8.1 28

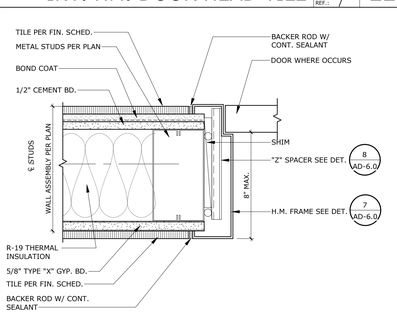

INT. HM. DOOR JAMB TILE

SCALE: 3" = 1'-0" REF.: / 23

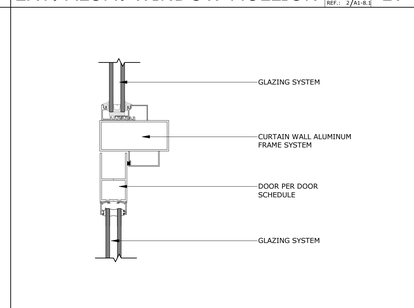

ALUM. DR HEADER@TRANSOM

SCALE: 3" = 1'-0" REF.: / 18

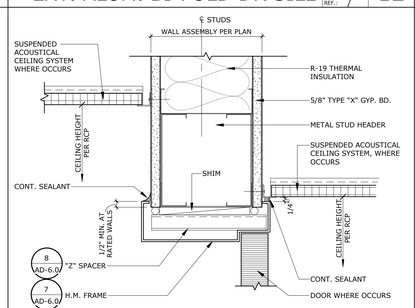

INT. HM. DOOR HEAD

SCALE: 3" = 1'-0" REF.: / 13

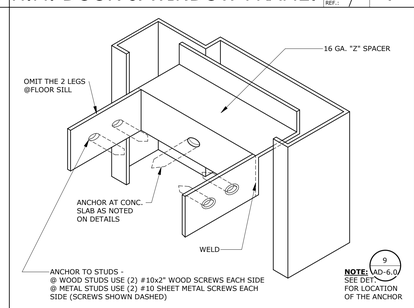

H.M. FRAME ANCHOR

SCALE: 12" = 1'-0" REF.: / 8

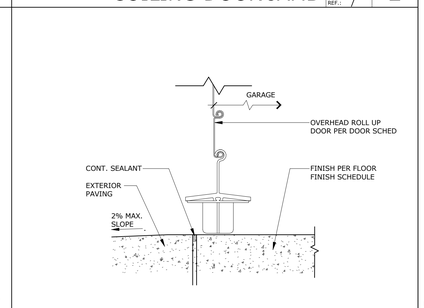

ROLL UP DR. THRESHOLD

SCALE: 3" = 1'-0" REF.: / 3

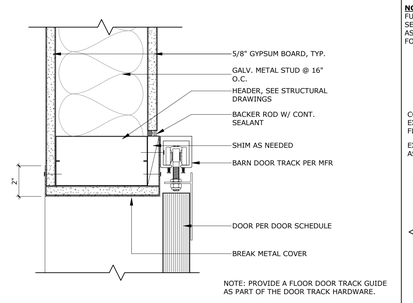

BARN SLIDING DOOR HEADER

SCALE: 3" = 1'-0" REF.: / 29

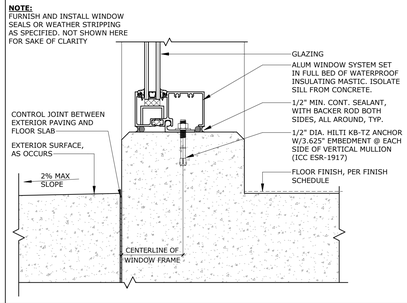

EXT. ALUM. WINDOW SILL

SCALE: 3" = 1'-0" REF.: 2/A1-8.1 24

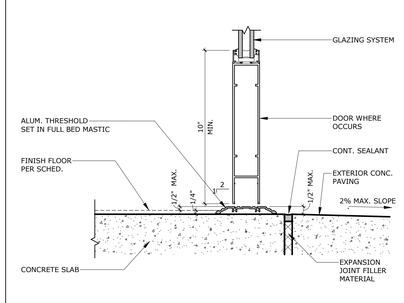

ALUM. DOOR THRESHOLD

SCALE: 3" = 1'-0" REF.: / 19

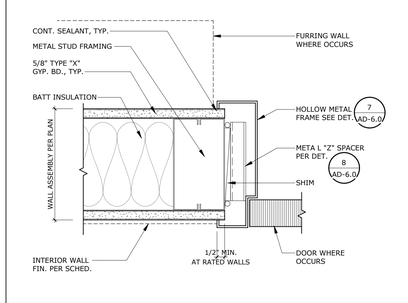

INT. HM. DOOR JAMB

SCALE: 3" = 1'-0" REF.: / 14

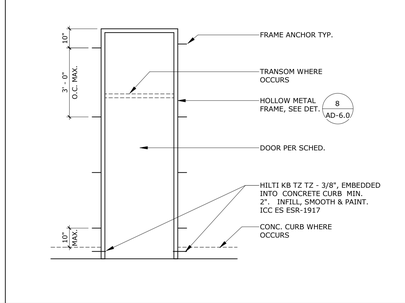

HM. DOOR FRAME

SCALE: 3/8" = 1'-0" REF.: / 9

PROJECT No. :50801
8/1/2023 4:14:54 PM

DRAWN BY: CHECKED BY:

ISSUE No.____ DATE____ DESCRIPTION____
REVISION No.____ DATE____ DESCRIPTION____

RUHNAUCLARKE.COM
3775 TENTH STREET, RIVERSIDE CALIFORNIA 92501(951) 684 4664 / 5751 PALMER WAY, SUITE C, CARLSBAD CALIFORNIA 92010(760) 438 5899

MOUNT TRANSIT MAINTENANCE FACILITY
PHASE 1
170 BUSINESS CENTER DR. BIG BEAR LAKES, CA
BIG BEAR LAKES

DETAILS
DOOR & WINDOW DETAILS

AD-6.0

50801

MOUNT TRANSIT MAINTENANCE FACILITY: PHASE 1 - 100% CD

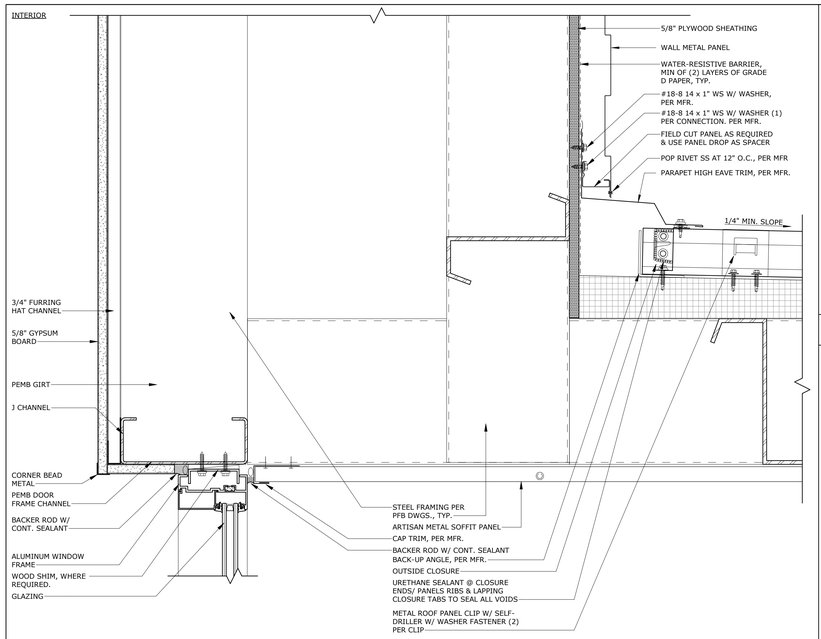

PEMB WIN. HEAD INSET

SCALE: 3" = 1'-0" | REF.: 15/A1-8.1 | 21

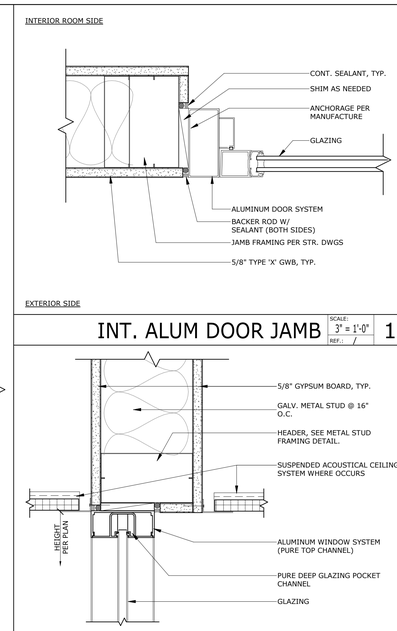

INT. ALUM DOOR JAMB

SCALE: 3" = 1'-0" | REF.: / | 15

INT. ALUM. WINDOW HEAD

SCALE: 3" = 1'-0" | REF.: 7/A1-8.1 | 16

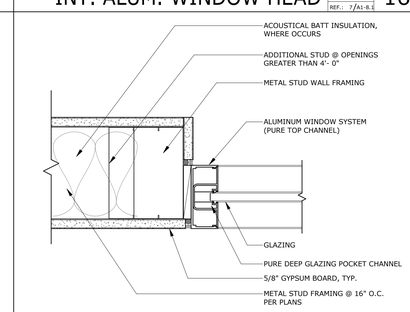

PEMB WIN. JAMB INSET

SCALE: 3" = 1'-0" | REF.: 15/A1-8.1 | 28

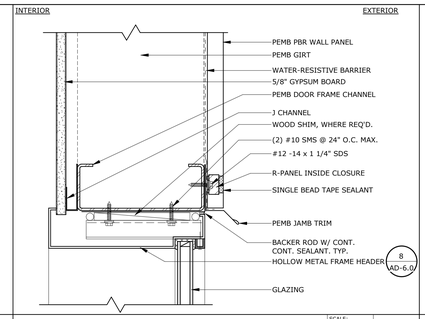

EXT. HM DOOR JAMB

SCALE: 3" = 1'-0" | REF.: 3/A1-8.1 | 11

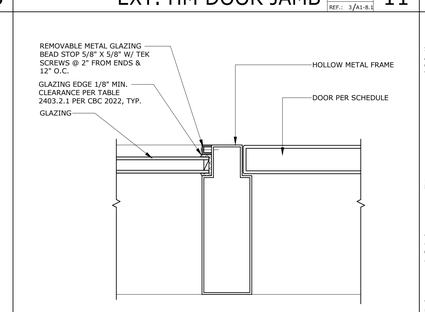

EXT. HM DOOR HEAD 2

SCALE: 3" = 1'-0" | REF.: 9/A1-8.1 | 13

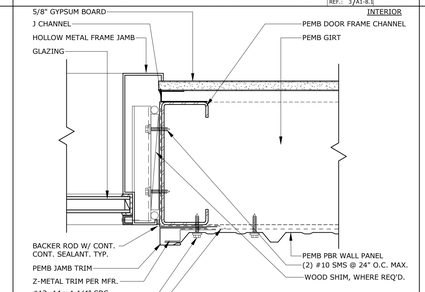

EXT. HM DOOR HEAD

SCALE: 3" = 1'-0" | REF.: / | 10

EXT. HM DOOR JAMB

SCALE: 3" = 1'-0" | REF.: / | 8

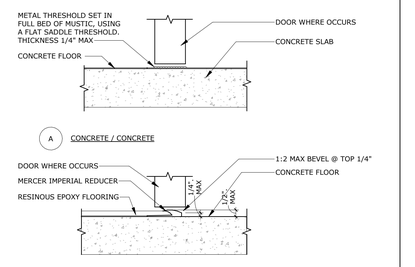

NOTE: FURNISH & INSTALL DOOR SEALS OR WEATHER STRIPPING AS SPECIFIED.

FLOOR TRANSITIONS

SCALE: 3" = 1'-0" | REF.: / | 3

EXT. H.M. DOOR HEAD/JAMB

SCALE: 3" | REF.: / | 12

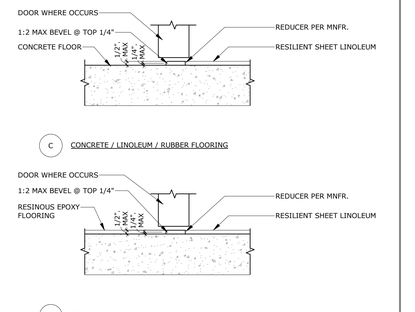

EXT. HM. DOOR HEAD

SCALE: 3" = 1'-0" | REF.: / | 7

EXT. HM. DOOR JAMB

SCALE: 3" = 1'-0" | REF.: / | 8

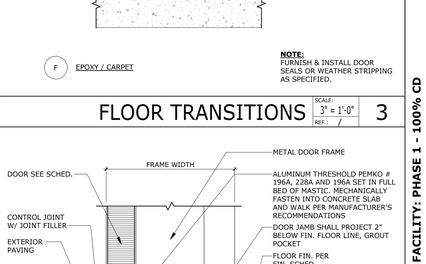

TYP. HM THRESHOLD

SCALE: 3" = 1'-0" | REF.: / | 4

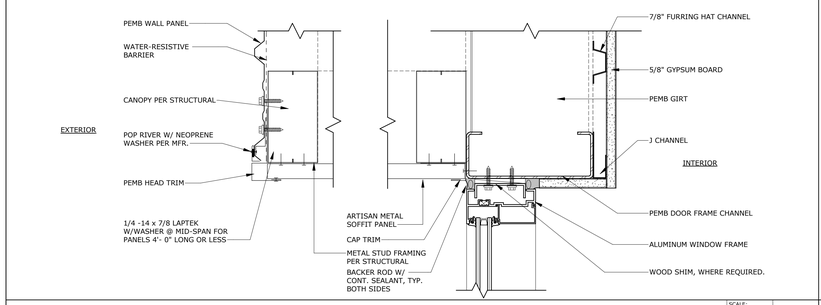

PEMB WIN. CANOPY

SCALE: 3" = 1'-0" | REF.: 1/A1-8.1 | 24

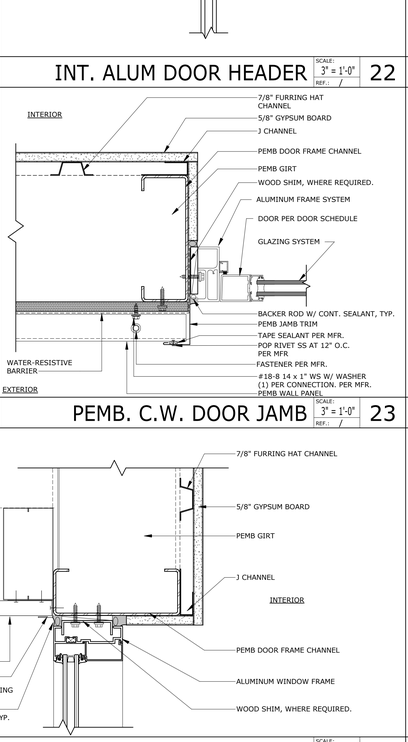

INT. ALUM DOOR HEADER

SCALE: 3" = 1'-0" | REF.: 7/A1-8.1 | 22

PEMB. C.W. DOOR JAMB

SCALE: 3" = 1'-0" | REF.: / | 23

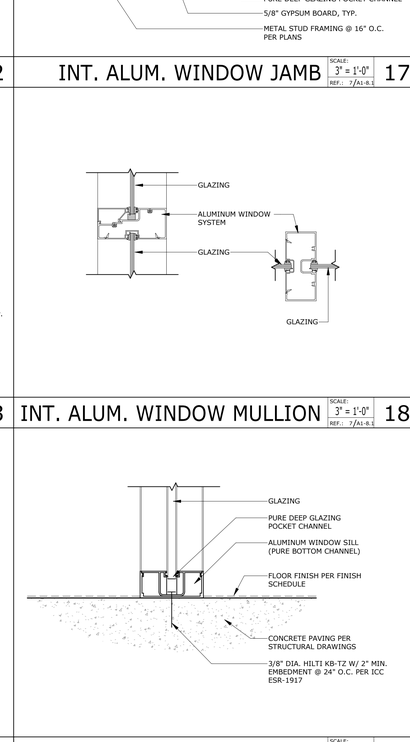

INT. ALUM. WINDOW JAMB

SCALE: 3" = 1'-0" | REF.: 7/A1-8.1 | 17

INT. ALUM. WINDOW MULLION

SCALE: 3" = 1'-0" | REF.: 7/A1-8.1 | 18

INT. ALUM. WINDOW SILL

SCALE: 3" = 1'-0" | REF.: 7/A1-8.1 | 19

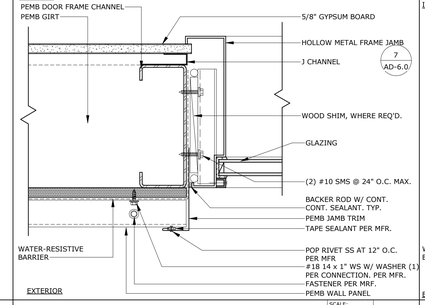

EXT. H.M. WINDOW JAMB 2

SCALE: 3" = 1'-0" | REF.: 9/A1-8.1 | 14

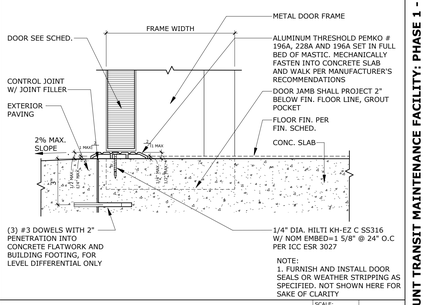

EXT. HM. DOOR JAMB 2

SCALE: 3" = 1'-0" | REF.: / | 9

RUHNAU CLARKE ARCHITECTS

CONSULTANT BRANDING

STAMPS

AGENCY APPROVAL
File No.: ########-##-########

PROJECT No. :50801
8/1/2023 4:14:56 PM

DRAWN BY: CHECKED BY:

ISSUE No.:_____ DATE:_____ DESCRIPTION:_____
ISSUE No.:_____ DATE:_____ DESCRIPTION:_____
ISSUE No.:_____ DATE:_____ DESCRIPTION:_____
ISSUE No.:_____ DATE:_____ DESCRIPTION:_____

REVISION No.:_____ DATE:_____ DESCRIPTION:_____
REVISION No.:_____ DATE:_____ DESCRIPTION:_____
REVISION No.:_____ DATE:_____ DESCRIPTION:_____
REVISION No.:_____ DATE:_____ DESCRIPTION:_____

RUHNAUCLARKE.COM

3775 TENTH STREET, RIVERSIDE CALIFORNIA 92501(951) 684 4664 / 5751 PALMER WAY, SUITE C, CARLSBAD CALIFORNIA 92010(760) 438 5899

MOUNT TRANSIT MAINTENANCE FACILITY

PHASE 1
170 BUSINESS CENTER DR. BIG BEAR LAKES, CA
BIG BEAR LAKES

DOOR & WINDOW DETAILS

AD-6.1

50801

MOUNT TRANSIT MAINTENANCE FACILITY: PHASE 1 - 100% CD

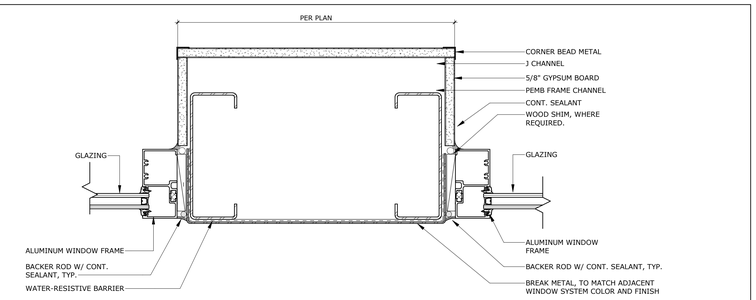

ALUM. WINDOW TO ALUM WINDOW JAMB

SCALE: 3" = 1'-0" | REF.: 2/A1-4.1 | 5

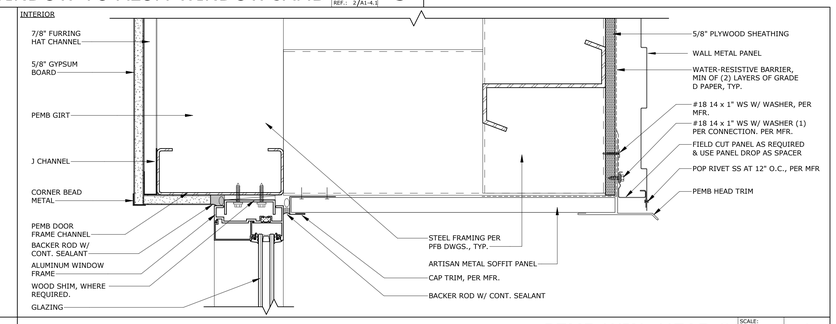

PEMB WIN. HEAD 2

SCALE: 3" = 1'-0" | REF.: 1/A1-2.1 | 1

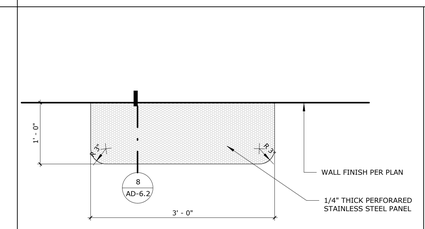

SHOWER SHELF PLAN VEW

SCALE: 1" = 1'-0" | REF.: / | 6

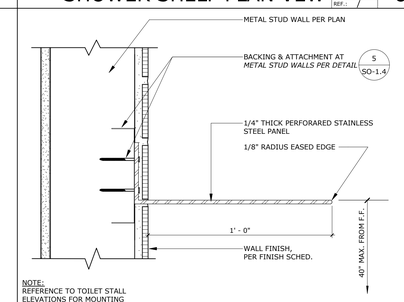

SHOWER SHELF

SCALE: 3" = 1'-0" | REF.: 6/AD-6.2 | 8

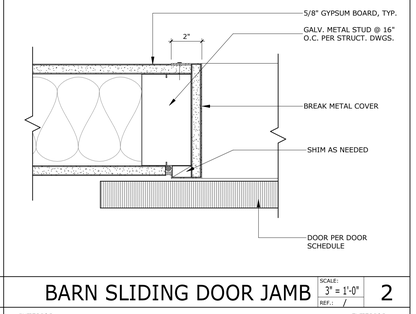

BARN SLIDING DOOR JAMB

SCALE: 3" = 1'-0" | REF.: / | 2

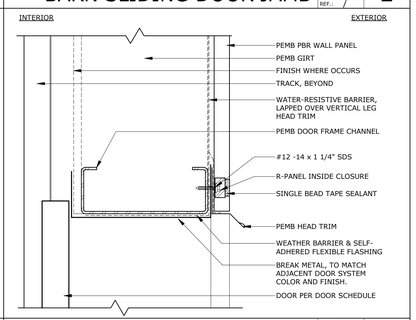

SECTIONAL DOOR HEAD

SCALE: 3" = 1'-0" | REF.: / | 3

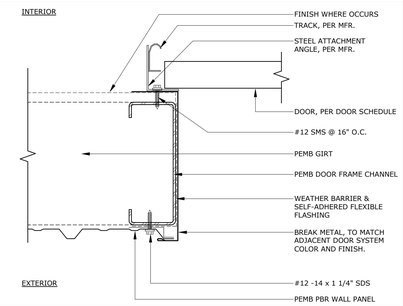

SECTIONAL DOOR JAMB

SCALE: 3" = 1'-0" | REF.: / | 4

STAMPS

AGENCY APPROVAL
File No.: ########/##-########

CONSULTANT BRANDING

RUHNAU CLARKE ARCHITECTS

MOUNT TRANSIT MAINTENANCE FACILITY: PHASE 1 - 100% CD

PROJECT No. :50801
8/1/2023 4:14:57 PM

DRAWN BY: CHECKED BY:

ISSUE No._____ DATE_____ DESCRIPTION_____
ISSUE No._____ DATE_____ DESCRIPTION_____
ISSUE No._____ DATE_____ DESCRIPTION_____
ISSUE No._____ DATE_____ DESCRIPTION_____

REVISION No._____ DATE_____ DESCRIPTION_____
REVISION No._____ DATE_____ DESCRIPTION_____
REVISION No._____ DATE_____ DESCRIPTION_____
REVISION No._____ DATE_____ DESCRIPTION_____

RUHNAUCLARKE.COM
3775 TENTH STREET, RIVERSIDE CALIFORNIA 92501(951) 684 4664 / 5751 PALMER WAY, SUITE C, CARLSBAD CALIFORNIA 92010(760) 438 5899

MOUNT TRANSIT MAINTENANCE FACILITY
PHASE 1
170 BUSINESS CENTER DR. BIG BEAR LAKES, CA
BIG BEAR LAKES

DOOR & WINDOW DETAILS

AD-6.2

50801

LIST OF ABBREVIATIONS

ADD'L.	ADDITIONAL
ALT.	ALTERNATE
ACI	AMERICAN CONCRETE INSTITUTE
APA	AMERICAN PLYWOOD ASSOCIATION
ASTM	AMERICAN SOCIETY FOR TESTING AND MATERIALS
AWS	AMERICAN WELDING SOCIETY
A.B.	ANCHOR BOLT(S)
APPROX.	APPROXIMATELY
ARCH.	ARCHITECT / ARCHITECTURAL
@	AT
B. PL.	BASE PLATE
BM.	BEAM
BRG.	BEARING
BTWN.	BETWEEN
BLK.	BLOCK
BLKG.	BLOCKING
B.E.	BOTH ENDS
BOT. OR BOTT.	BOTTOM
B.N.	BOUNDARY NAILS
BLDG.	BUILDING
C	CAMBER
CBC	CALIFORNIA BUILDING CODE
CIP	CAST IN PLACE
CLG.	CEILING
CJ	CEILING JOIST OR CONSTRUCTION JOINT OR CONTROL JOINT
CJP	COMPLETE JOINT PENETRATION WELD
℄	CENTER LINE
CLR.	CLEAR
COL.	COLUMN
CONC.	CONCRETE
CMU	CONCRETE MASONRY UNIT
COND.	CONDITION
CONN.	CONNECTION
CONSTR.	CONSTRUCTION
CONT'D	CONTINUED
CONT.	CONTINUOUS
CONTR.	CONTRACTOR
CSK.	COUNTERSINK
DL	DEAD LOAD
DP.	DEEP
DEMO.	DEMOLISH
DTL. OR DET.	DETAIL
DIAG.	DIAGONAL
DIA. OR ø	DIAMETER
DIM.	DIMENSION
DO	DITTO
DBL.	DOUBLE
D.F.	DOUGLAS FIR
DWL.	DOWEL
DN.	DOWN
DWG.	DRAWING
EA.	EACH
E.F.	EACH FACE
E.S.	EACH SIDE
E.W.	EACH WAY
E.N.	EDGE NAIL(S)
ELEC.	ELECTRICAL
ELEV.	ELEVATION
EMBED.	EMBEDMENT
ENG.	ENGINEER
EQ.	EQUAL
EQUIP.	EQUIPMENT
EXCAV.	EXCAVATION
(E)	EXISTING
EXP.	EXPANSION
EJ	EXPANSION JOINT
EXT.	EXTERIOR
F.O.C.	FACE OF CONCRETE
F.O.M.	FACE OF MASONRY
F.O.S.	FACE OF STUD OR FACE OF SLAB
F.S.	FAR SIDE
FIN.	FINISH
F.F.	FINISHED FLOOR
FHWS	FLAT HEAD WOOD SCREW
FLR.	FLOOR
FD	FLOOR DRAIN
FTG.	FOOTING
FNDN.	FOUNDATION
FRMG.	FRAMING
GALV.	GALVANIZE
GA.	GAUGE
GLU-LAM	GLUED LAMINATED
GLB	GLUED LAMINATED BEAM
GR.	GRADE
HGR.	HANGER
HR	HARDROCK
HDR.	HEADER
HT.	HEIGHT
HD	HOLD DOWN
HSS	HOLLOW STRUCTURAL SECTION
HORIZ.	HORIZONTAL
INFO.	INFORMATION
I.D.	INSIDE DIAMETER
INT.	INTERIOR
IBC	INTERNATIONAL BUILDING CODE
ICC	INTERNATIONAL CODE COUNCIL
INV.	INVERT
JST.	JOIST
KP	KING POST
KSI	KIPS PER SQUARE INCH
LAM.	LAMINATED
LDGR.	LEDGER
LT. WT. OR LW	LIGHT WEIGHT
LL	LIVE LOAD
LG.	LONG OR LENGTH
LLH	LONG LEG HORIZONTAL
LLV	LONG LEG VERTICAL
LO-HY	LOW HYDROGEN
M.B.	MACHINE BOLT(S)
MFR.	MANUFACTURER
MAS.	MASONRY
M.O.	MASONRY OPENING
MATL.	MATERIAL
MAX.	MAXIMUM
MECH.	MECHANICAL
MTL.	METAL
MIN.	MINIMUM
MISC.	MISCELLANEOUS
MU	MECHANICAL UNIT
N.F.	NEAR FACE
N.S.	NEAR SIDE
NSA	NELSON STUD ANCHOR
(N)	NEW
NIC.	NOT IN CONTRACT
NTS.	NOT TO SCALE
NO. OR #	NUMBER
O.C.	ON CENTER
OPNG.	OPENING
OPP.	OPPOSITE
O.H.	OPPOSITE HAND
O.D.	OUTSIDE DIAMETER
PHWS	PAN HEAD WOOD SCREW
P.J.	PANEL JOINT
d	PENNY
PIL.	PILASTER
PL. OR ℄	PLATE (STEEL OR WOOD)
PLY.	PLYWOOD
PWJ	PLYWOOD WEB JOIST
PCF	POUNDS PER CUBIC FOOT
PSF	POUNDS PER SQUARE FOOT
PSI	POUNDS PER SQUARE INCH
PT	PRESSURE TREATED
PTDF	PRESSURE TREATED DOUGLAS FIR
PL	PROPERTY LINE

LIST OF ABBREVIATIONS (CONT'D)

RAD.	RADIUS
RFTR.	RAFTER
REF.	REFERENCE
REINF.	REINFORCING
REQ'D	REQUIRED
REQMT.	REQUIREMENT
RF.	ROOF
R.D.	ROOF DRAIN
RO.	ROUGH
R.O.	ROUGH OPENING
SCHED.	SCHEDULE
SEC.	SECTION
SEL.	SELECT
SEP.	SEPARATION
SHTG.	SHEATHING
SHT.	SHEET
S.M.	SHEET METAL
SMS	SHEET METAL SCREWS
SIM.	SIMILAR
SIMP.	SIMPSON
SPCG.	SPACING
SPECS.	SPECIFICATION
SQ.	SQUARE
STGR.	STAGGER
S.S.	STAINLESS STEEL
SPC	STANDARD PIPE COLUMN
STD.	STANDARD
STL.	STEEL
STIFF.	STIFFENER
STIRR.	STIRRUP
STRUCT.	STRUCTURAL
SYM.	SYMMETRICAL
TSG	TAPERED STEEL GIRDER
THK.	THICK
K OR KIP	1,000 POUNDS
THRU	THROUGH
TN	TOE NAIL
T&G	TONGUE AND GROOVE
T&B	TOP AND BOTTOM
T.O.F.	TOP OF FOOTING
T.O.L.	TOP OF LEDGER
T.O.S.	TOP OF STEEL OR TOP OF SHEATHING
T.O.W.	TOP OF WALL
TL	TOTAL LOAD
TS	TUBE STEEL
TYP.	TYPICAL
U.N.O.	UNLESS NOTED OTHERWISE
VIF	VERIFY IN FIELD
VERT.	VERTICAL
WT.	WEIGHT
WWF	WELDED WIRE FABRIC
W/	WITH
W/O	WITHOUT
WD.	WOOD
WIJ	WOOD-I-JOIST
WP	WORK POINT
W.S.	WOOD SCREW

GENERAL

1. THESE STRUCTURAL DRAWINGS AND SPECIFICATIONS, INCLUDING ANY ADDENDA (COLLECTIVELY "THE PLANS") INCORPORATE ALL LEGAL AND INDUSTRY REQUIREMENTS AND STANDARDS INCLUDING WITHOUT LIMITATION THE FOLLOWING:
   - CALIFORNIA BUILDING CODE, 2022 EDITION
   - OTHER REGULATING AGENCIES WHICH MAY HAVE AUTHORITY OVER ANY PORTION OF THE WORK, INCLUDING THE STATE OF CALIFORNIA DIVISION OF INDUSTRIAL SAFETY, AND THOSE CODES AND STANDARDS LISTED IN THESE NOTES AND SPECIFICATIONS.
   - THE FUNCTIONALITY STANDARDS SET FORTH IN TITLE 7 OF THE CALIFORNIA CIVIL CODE (THE "RIGHT TO REPAIR ACT").
   - THE MANUFACTURER'S REQUIREMENTS OR RECOMMENDATIONS FOR ANY INCORPORATED PRODUCTS.
2. THE PLANS REPRESENT ONLY THE FINISHED STRUCTURE, AND THEY ARE NOT INTENDED TO INDICATE OR REQUIRE ANY CONSTRUCTION MEANS, METHODS, TECHNIQUES, SEQUENCES OR PROCEDURES. IN PARTICULAR AND WITHOUT LIMITATION, THE CONTRACTOR SHALL BE FULLY AND SOLELY RESPONSIBLE FOR ANY AND ALL EXCAVATION, DEMOLITION, SHORING AND ERECTION PROCEDURES AND FOR ANY AND ALL SAFETY PROGRAMS AND PRECAUTIONS.
3. IN USING THE PLANS FOR BIDDING OR CONSTRUCTION PURPOSES, THE CONTRACTOR IS REQUIRED TO REVIEW ALL OF THE PROJECT'S CONSTRUCTION DOCUMENTS AS A WHOLE IN ORDER TO IDENTIFY ALL REQUIREMENTS THAT DIRECTLY OR INDIRECTLY AFFECT ITS PORTION OF THE STRUCTURAL WORK, EVEN REQUIREMENTS LOCATED IN SECTIONS DESIGNATED AS APPLICABLE TO OTHER TRADES. IN CASE OF CONFLICTS, THE CONTRACTOR SHALL EITHER OBTAIN DIRECTION FROM AN APPROPRIATE OWNER REPRESENTATIVE OR OTHERWISE APPLY THE MORE STRINGENT REQUIREMENT.
4. IN INTERPRETATING THE PLANS, THE FOLLOWING GENERAL RULES APPLY:
   - WRITTEN DIMENSIONS SHALL TAKE PRECEDENCE OVER SCALED DRAWINGS.
   - SPECIFIC NOTES AND DETAILS SHALL TAKE PRECEDENCE OVER GENERAL NOTES AND TYPICAL DETAILS.
   - WORK NOT PARTICULARLY SHOWN OR SPECIFIED SHALL BE THE SAME AS SIMILAR PARTS THAT ARE SHOWN OR SPECIFIED.
   - SCALED DIMENSIONS AND GRAPHICALLY SHOWN LOCATIONS ARE TO BE CONSIDERED ONLY APPROXIMATE.
5. IN IMPLEMENTING THE PLANS, THE FOLLOWING GENERAL RULES APPLY:
   - BECAUSE THE PLANS ARE INTENDED TO SET FORTH THE REQUIREMENTS FOR CONSTRUCTION IN ONLY AN INDUSTRY-STANDARD LEVEL OF QUALITY AND DETAIL, AND THEREFORE ARE INTENDED TO BE SUPPLEMENTED BY APPROPRIATE REQUESTS FOR CLARIFICATION AND INFORMATION, ERRORS AND OMISSIONS ARE TO BE EXPECTED AND ANTICIPATED; AND THE CONTRACTOR IS REQUIRED TO CAREFULLY REVIEW THE PLANS FOR ERRORS AND OMISSIONS AND TO BRING THESE ERRORS AND OMISSIONS TO THE ATTENTION OF AN APPROPRIATE OWNER REPRESENTATIVE IN A TIMELY MANNER AND ASSUMES THE RISK OF THE CONSEQUENCES OF FAILING TO DO SO BEFORE BIDDING OR OTHERWISE PROCEEDING.
   - THE CONTRACTOR SHALL REVIEW AND VERIFY ALL DIMENSIONS PRIOR TO STARTING CONSTRUCTION, AND NOTIFY THE ARCHITECT IMMEDIATELY OF ANY DISCREPANCIES OR INCONSISTENCIES.
6. SUBMITTALS WILL BE REVIEWED BY THE STRUCTURAL ENGINEER, IF AT ALL, ONLY PURSUANT TO THE INDUSTRY-STANDARD PROTOCOL SET FORTH IN AIA DOCUMENT A201, AND IN NO EVENT WILL THE SUBMITTAL REVIEW PROCESS RELIEVE OR LESSEN THE SUBMITTING CONTRACTOR'S RESPONSIBILITY FOR AN INAPPROPRIATE SUBMITTAL.
7. IN NO EVENT WILL ANY SITE VISITS BY THE STRUCTURAL ENGINEER CONCERN CONSTRUCTION MEANS AND METHODS OR CONSTRUCTION SAFETY, AND ALL SUCH MATTERS SHALL REMAIN THE SOLE RESPONSIBILITY OF THE CONTRACTOR.
8. COPIES OF THE PLANS PROVIDED IN ANY ELECTRONIC FORM ARE SUBJECT TO THE SAME PROVISIONS AS THE OTHER INSTRUMENTS OF SERVICE PREPARED BY OR ON BEHALF OF STRUCTURAL ENGINEER FOR THE PROJECT, INCLUDING WITHOUT LIMITATION THE ENGINEER'S COMMON LAW, STATUTORY OR OTHER RESERVED RIGHTS, INCLUDING COPYRIGHTS. A RECIPIENT IS GRANTED AT MOST A TRANSFERABLE NONEXCLUSIVE LICENSE TO REUSE THE PLANS SOLELY FOR PROJECT PURPOSES; AND NO RECIPIENT IS AUTHORIZED TO USE OR TO ALLOW THE USE OF ALL OR ANY PORTION OF THESE PLANS FOR ANY OTHER PURPOSE, AND ANY USE FOR ANY OTHER PURPOSE WOULD CONSTITUTE ACTIONABLE PLAGIARISM. STRUCTURAL ENGINEER PROVIDES DOCUMENTS IN AN ELECTRONIC FORM ONLY IN ITS STANDARD FORMATS AND CONVENTIONS AND WITH NO GUARANTEE OF COMPATIBILITY WITH ANY RECIPIENT'S SOFTWARE OR HARDWARE, AND ANY USE WITH OR CONVERSION TO OTHER FORMATS OR CONVENTIONS, OR THE USE WITH ANY PARTICULAR SOFTWARE OR HARDWARE, IS AT THE RECIPIENT'S SOLE RISK.

PROJECT DESIGN CRITERIA

1. BASIC DESIGN LIVE LOADS:

   ROOF: 100 PSF
2. WIND LOADS

   RISK CATEGORY: II
   EXPOSURE CATEGORY: C
   ULTIMATE DESIGN WIND SPEED (3-SECOND GUST), V_{ULT} = 97 MPH
   NOMINAL DESIGN WIND SPEED, V_{ASD} = 75 MPH
   VELOCITY PRESSURE EXPOSURE COEFFICIENT, K_z = 0.97
   TOPOGRAPHIC FACTOR, K_{zt} = 1.0
   WIND DIRECTIONALITY FACTOR, K_D = 0.85

   A. MWFRS - DIRECTIONAL PROCEDURE (ASCE 7-16, CH. 27)

   $q_z = 0.00256\ K_z\ K_{zt}\ K_D\ V_{ULT}^2 = 20$ PSF

   $P = qG\,C_p - q_i(GC_{pi})$

   GUST EFFECT FACTOR, G = 0.85
   EXTERNAL PRESSURE COEFFICIENT, C_p = [FIG. 27.4-1 THRU 27.4-3]
   INTERNAL PRESSURE COEFFICIENT, (GC_{pi}) = TABLE 26.11-1

   B. COMPONENTS & CLADDING (ASCE 7-16, CH. 30)

   $q_h = 0.00256\ K_z\ K_{zt}\ K_e\ V_{ULT}^2 = 20$ PSF

   $P = q_h\ [(GC_p) - (GC_{pi})]$

   GUST EFFECT FACTOR, G = 0.85
   EXTERNAL PRESSURE COEFFICIENT, (G_{CP}) = [FIG. 30.4-1 THRU 30.4-7]
3. EARTHQUAKE LOADS

   SEISMIC DESIGN CRITERIA

   S_S = 1.642g
   S_1 = 0.568g
   SITE CLASS: D
   F_a = 1.0
   F_v = 1.732
   S_{DS} = 1.210g
   S_{D1} = 0.760g
   I = 1.0
   REDUNDANCY FACTOR RHO ρ=1.3 IN BOTH DIRECTION.
   OCCUPANCY CATEGORY: II
   SEISMIC DESIGN CATEGORY: D
4. ALLOWED DRIFT LIMIT FOR WIND, SEISMIC= 0.020 h_{SX}/ρ

EXISTING UNDERGROUND UTILITIES

1. THE ARCHITECT AND ENGINEERS ARE NOT RESPONSIBLE FOR THE LOCATIONS OF EXISTING UNDERGROUND UTILITIES WHETHER OR NOT SHOWN ON THE DRAWINGS. THE LOCATION OF ANY EXISTING UNDERGROUND UTILITIES SHOWN ON THE DRAWINGS, IF ANY, IS APPROXIMATE. THE CONTRACTOR SHALL EXERCISE EXTREME CAUTION IN EXCAVATING AND TRENCHING ON THE SITE. THE CONTRACTOR SHALL IMMEDIATELY NOTIFY THE ARCHITECT SHOULD ANY SUCH UNIDENTIFIED CONDITIONS BE DISCOVERED.
2. THE CONTRACTOR SHALL BE RESPONSIBLE FOR ANY DAMAGES WHICH MAY RESULT FROM HIS FAILURE TO EXACTLY LOCATE AND PRESERVE ALL EXISTING UNDERGROUND UTILITIES.

FOUNDATION

1. ALL PORTIONS OF WORK PERTAINING TO EXCAVATIONS, FOUNDATIONS AND RETAINING WALLS SHALL CONFORM TO THE CALIFORNIA BUILDING CODE, CHAPTER 18.
2. THE FOUNDATION DESIGN IS BASED ON A GEOTECHNICAL REPORT INCLUDING ALL ADDENDUM BY:

   JOHN R. BYERLY, INC.
   BIG BEAR LAKE, CA
   DATED: AUGUST 11, 2022
   RPT NO.: 7341
   FILE NO.: S-14447
3. A COEFFICIENT OF FRICTION BETWEEN CONCRETE AND SOIL OF 0.35 AND AN ALLOWABLE SOIL BEARING PRESSURE OF 2500 PSF WAS USED FOR DESIGN. ALLOWABLE SOIL BEARING PRESSURE WAS INCREASED BY 500 PFS FOR EACH FOOT OF DEPTH BEYOND THE MINIMUM AND 300 PSF FOR EACH FOOT OF WIDTH GREATER THAN 2'-0" TO A MAXIMUM OF 3500 PSF. BOTTOM OF FOOTINGS SHALL BE 2'-0" MINIMUM BELOW LOWEST ADJACENT GRADE AND BEAR ON APPROVED NATURAL GRADE OR COMPACTED FILL.

   CLASS OF MATERIALS: SURFICIAL ALLUVIAL SOILS.
4. SEE SPECIFICATIONS FOR EARTHWORK OPERATIONS.
5. THE CONTRACTOR SHALL PROVIDE FOR DE-WATERING OF EXCAVATIONS FROM EITHER SURFACE WATER, GROUND WATER OR SEEPAGE.
6. THE CONTRACTOR SHALL PROVIDE FOR THE DESIGN, APPROVALS, PERMITS, INSTALLATION AND MONITORING OF ALL CRIBBING, SHEATHING AND SHORING REQUIRED TO SAFELY RETAIN TEMPORARY EXCAVATIONS.
7. EXCAVATIONS FOR FOOTINGS SHALL BE APPROVED BY THE GEOTECHNICAL ENGINEER PRIOR TO PLACING CONCRETE AND REINFORCING. THE CONTRACTOR SHALL NOTIFY THE GEOTECHNICAL ENGINEER WHEN EXCAVATIONS ARE READY FOR INSPECTION. THE GEOTECHNICAL ENGINEER SHALL SUBMIT A LETTER OF COMPLIANCE TO THE OWNER.
8. ALL EXCAVATIONS SHALL BE PROPERLY BACKFILLED. DO NOT PLACE BACKFILL BEHIND RETAINING WALLS BEFORE CONCRETE HAS ATTAINED FULL DESIGN STRENGTH. THE CONTRACTOR SHALL BRACE OR PROTECT ALL BUILDING AND PIT WALLS BELOW GRADE FROM LATERAL LOADS UNTIL ATTACHING FLOORS ARE COMPLETELY IN PLACE AND HAVE ATTAINED FULL DESIGN STRENGTH. THE CONTRACTOR SHALL PROVIDE FOR DESIGN, PERMITS AND INSTALLATION AND REMOVAL OF SUCH BRACING.
9. FOOTING BACKFILL AND UTILITY TRENCH BACKFILL WITHIN BUILDING AREA SHALL BE MECHANICALLY COMPACTED IN LAYERS, TO THE APPROVAL OF THE GEOTECHNICAL ENGINEER. FLOODING WILL NOT BE PERMITTED.
10. ALL ABANDONED FOOTINGS, UTILITIES, ETC., THAT INTERFERE WITH NEW CONSTRUCTION, SHALL BE REMOVED.
11. THE CONTRACTOR SHALL IMMEDIATELY NOTIFY THE ARCHITECT SHOULD ANY BURIED STRUCTURES, SUCH AS CESSPOOLS, CISTERNS, FOUNDATIONS, ETC., BE FOUND.

REINFORCING STEEL

1. ALL PORTIONS OF WORK PERTAINING TO FABRICATION AND PLACEMENT OF REINFORCING STEEL SHALL CONFORM TO THE CALIFORNIA BUILDING CODE, CHAPTER 19 AND ACI 318-14 SECTIONS FOR REINFORCEMENT DETAILING.
2. REINFORCING BARS SHALL CONFORM TO ASTM A-615 GRADE 60, EXCEPT #3 BARS MAY BE GRADE 40. REINFORCING BARS THAT ARE TO BE WELDED SHALL CONFORM TO ASTM A-706, GRADE 60.
3. WELDING OF REINFORCEMENT SHALL BE WITH LOW HYDROGEN ELECTRODES AND SHALL CONFORM TO STRUCTURAL WELDING CODE - REINFORCING STEEL, AWS D1.4, BY THE AMERICAN WELDING SOCIETY AND CBC SEC. 1903.8. WELDING RODS USED FOR THE WELDING OF REINFORCING SHALL BE E80XX. ALL WELDING SHALL BE PERFORMED BY CERTIFIED WELDERS.
4. ALL REINFORCING BAR BENDS SHALL BE MADE COLD. ALL #5 OR LARGER REINFORCING BARS SHALL NOT BE RE-BENT.
5. TIES/STIRRUP BARS IN FUSION WELDED ASSEMBLIES SHALL CONFORM TO ASTM A-706, AND LONGITUDINAL HOLDING WIRES SHALL CONFORM TO ASTM-1064.
6. WELDED WIRE FABRIC SHALL CONFORM TO ASTM A-185, AND SHALL BE LAPPED 1½" SPACES AND 12" MINIMUM.
7. DOWELS BETWEEN FOOTINGS AND WALLS OR COLUMNS SHALL BE THE SAME GRADE, SIZE, SPACING AND NUMBER AS THE VERTICAL REINFORCEMENT, RESPECTIVELY.
8. REINFORCING SPLICES SHALL BE MADE AS INDICATED ON THE DRAWINGS.
9. ALL VERTICAL REINFORCING SHALL BE CONTINUOUS BETWEEN TWO DIAPHRAGM LEVELS, UNLESS NOTED OTHERWISE.

CONCRETE

1. ALL PORTIONS OF WORK PERTAINING TO CONCRETE CONSTRUCTION SHALL CONFORM TO THE CALIFORNIA BUILDING CODE, CHAPTER 19.
2. CONCRETE MIXES SHALL BE DESIGNED BY A QUALIFIED TESTING LABORATORY. MIX DESIGNS SHALL CONFORM TO ACI 318 SEC. 26.4, AND CBC SEC. 1903 &1904. MIX DESIGNS SHALL INCORPORATE THE FOLLOWING CRITERIA:
   - MINIMUM OF 5 SACKS OF CEMENT PER CUBIC YARD OF CONCRETE. MAXIMUM OF 7 SACKS OF CEMENT PER YARD OF CONCRETE.
   - MAXIMUM WATER/CEMENT RATIO (BY WEIGHT) OF CONCRETE IN CONTACT WITH SOIL SHALL BE 0.45.
   - MAXIMUM SLUMP SHALL NOT EXCEED 3" ± 1" FOR FOOTINGS, SLABS ON GRADE, AND MASS CONCRETE; AND 4" ± 1" FOR OTHER CONCRETE. SLUMP LIMITATIONS NOTED SHALL APPLY TO CONCRETE MIX PRIOR TO THE ADDITION OF ANY WATER-REDUCING ADMIXTURES OR SUPER-PLASTICIZERS.
   - CALCIUM CHLORIDE OR ADMIXTURES CONTAINING CHLORIDE(S) SHALL NOT BE USED.
3. SCHEDULE OF STRUCTURAL CONCRETE 28 DAY MINIMUM STRENGTHS AND TYPES:
   - FOOTINGS, CAISSONS, GRADE BEAMS 145 PCF, f'c = 4500 PSI*
   - SLABS ON GRADE 145 PCF, f'c = 4500 PSI*
   - ELSEWHERE UNLESS NOTED 145 PCF, f'c = 4500 PSI*
   - *NOTE: 2,500 PSI USED FOR STRUCTURAL DESIGN - SPECIAL INPSECTIONS AND TEST SHALL NOT BE REQUIRED, PER CBC SEC. 1705 EXCEPTION
4. PORTLAND CEMENT SHALL CONFORM TO ASTM C-150, TYPE II. CEMENT USED FOR CONCRETE IN CONTACT WITH SOIL SHALL CONFORM TO ASTM C-150, TYPE V.
5. AGGREGATE FOR NORMALWEIGHT CONCRETE SHALL CONFORM TO ASTM C-33. COMBINED AGGREGATE GRADATION OF ⅜" MAXIMUM (PEA GRAVEL) SHALL NOT BE USED.
6. READY MIXED CONCRETE SHALL CONFORM TO ASTM C-94.
7. PLACEMENT OF CONCRETE SHALL CONFORM TO ACI 304. CLEAN AND ROUGHEN TO ¼" AMPLITUDE ALL CONCRETE SURFACES AGAINST WHICH CONCRETE IS TO BE PLACED.
8. ALL REINFORCING BARS, ANCHOR BOLTS AND OTHER CONCRETE INSERTS SHALL BE SECURED IN POSITION PRIOR TO PLACING CONCRETE.
9. PROVIDE SLEEVES FOR PLUMBING AND ELECTRICAL OPENINGS IN CONCRETE BEFORE PLACING. DO NOT CUT ANY REINFORCING WHICH MAY CONFLICT. CORING IN CONCRETE IS NOT PERMITTED EXCEPT AS SHOWN. NOTIFY THE STRUCTURAL ENGINEER, IN ADVANCE, OF CONDITIONS NOT SHOWN ON THE STRUCTURAL DRAWINGS.
10. THE FOLLOWING MINIMUM CONCRETE COVER SHALL BE PROVIDED FOR REINFORCEMENT:
    - CONCRETE CAST AGAINST AND PERMANENTLY EXPOSED TO EARTH.....3"
    - CONCRETE EXPOSED TO EARTH OR WEATHER:
      #6 THROUGH #18 BARS.....2"
      #5 BARS, W31 OR D31 WIRE, AND SMALLER.....1½"
    - CONCRETE NOT EXPOSED TO WEATHER OR IN CONTACT WITH GROUND:
      SLABS, WALLS, JOISTS:
      #14 AND #18 BARS.....1½"
      #11 BAR AND SMALLER.....¾"
      BEAMS, COLUMNS:
      PRIMARY REINFORCEMENT STIRRUPS, TIES, SPIRALS.....1½"
11. CONDUITS OR PIPES SHALL NOT BE EMBEDDED WITHIN A SLAB, WALL, BEAM, OR COLUMN, UNLESS SPECIFICALLY DETAILED.
12. SEE ARCHITECTURAL AND STRUCTURAL DRAWINGS FOR ALL MOLDS, GROOVES, REVEALS, ORNAMENTS AND GROUNDS TO BE CAST IN CONCRETE.
13. DRYPACK WHERE NOTED ON DRAWINGS SHALL CONSIST OF 1 PART PORTLAND CEMENT AND 2½ PARTS OF FINE AGGREGATE CONFORMING TO ASTM C-33 WITH ENOUGH WATER TO FORM A BALL WHEN SQUEEZED IN THE HAND. THE SPACE BETWEEN TWO SURFACES REQUIRING DRYPACK SHALL BE PACKED WITH THE DRYPACK MATERIAL BY TAMPING OR RAMMING WITH A BAR OR ROD UNTIL THE VOIDS ARE COMPLETELY FILLED.
14. NON-SHRINK GROUT WHERE NOTED ON DRAWINGS SHALL BE A PRE-MIXED COMPOUND CONSISTING OF NON-METALLIC AGGREGATE, CEMENT, WATER REDUCING AND PLASTICIZING ADDITIVES, CAPABLE OF DEVELOPING A MINIMUM COMPRESSIVE STRENGTH OF 8,000 PSI AT 28 DAYS. WHERE APPLICATION THICKNESS EXCEEDS MANUFACTURER'S LIMITATIONS, EXTEND WITH ⅜" (GRAVEL) AGGREGATE IN ACCORDANCE WITH MANUFACTURER'S RECOMMENDATIONS.

CONCRETE BLOCK MASONRY (f'm = 2,000 PSI)

1. ALL PORTIONS OF WORK PERTAINING TO CONCRETE BLOCK MASONRY CONSTRUCTION SHALL CONFORM TO THE CALIFORNIA BUILDING CODE, CHAPTER 21.
2. THE STRENGTH OF CONCRETE BLOCK MASONRY CONSTRUCTION SHALL BE DETERMINED BY THE UNIT STRENGTH METHOD IN ACCORDANCE WITH TMS 602 ARTICLE 1.4B.2.b.
3. CONCRETE BLOCKS SHALL BE HOLLOW LOAD-BEARING CONCRETE MASONRY UNITS CONFORMING TO ASTM C-90, MEDIUM WEIGHT UNITS, NET COMPRESSIVE STRENGTH OF 2,000 PSI. USE OPEN END UNITS AT VERTICAL REINFORCING.
4. CEMENT SHALL BE AS SPECIFIED FOR CONCRETE.
5. MORTAR SHALL CONFORM TO ASTM C-270 FOR TYPE S MORTAR. MORTAR SHALL ATTAIN A MINIMUM COMPRESSIVE STRENGTH OF 1800 PSI AT 28 DAYS.
6. GROUT SHALL CONFORM TO ARTICLE 2.2 OF TMS 602/ACI 5301/ASCE 6, FOR COARSE GROUT. USE SUFFICIENT WATER FOR GROUT TO FLOW INTO ALL CELLS WITHOUT SEGREGATION. SIKA GROUT AID ADMIXTURE, OR APPROVED EQUAL, SHALL BE USED. GROUT SHALL ATTAIN A MINIMUM COMPRESSIVE STRENGTH OF 2000 PSI AT 28 DAYS.
7. PROVIDE A MINIMUM ONE BAR DIAMETER OF GROUT BETWEEN MAIN REINFORCING AND MASONRY UNITS. PROVIDE A MINIMUM OF 1" OF GROUT AROUND ALL BOLTS EMBEDDED IN MASONRY.
8. CELLS SHALL BE IN VERTICAL ALIGNMENT. DOWELS IN FOOTINGS SHALL BE SET TO ALIGN WITH CORES CONTAINING VERTICAL REINFORCING.
9. ALL REINFORCING BARS, ANCHOR BOLTS, STEEL PLATES, AND OTHER CMU INSERTS SHALL BE SECURED IN POSITION PRIOR TO PLACING GROUT, TO PREVENT MOVEMENT DURING GROUT PLACEMENT AND CONSOLIDATION WITH MECHANICAL VIBRATOR DIRECTLY ADJACENT.
10. ALL CELLS IN CONCRETE BLOCKS SHALL BE SOLIDLY FILLED WITH GROUT.
11. LOW-LIFT GROUTED CONSTRUCTION SHALL CONFORM TO TMS 602 ARTICLE 3.5D. MAXIMUM GROUT POUR HEIGHT FOR LOW-LIFT CONSTRUCTION SHALL BE 4 FEET.
12. HIGH-LIFT GROUTED CONSTRUCTION SHALL CONFORM TO TMS 602 ARTICLE 3.5D. MAXIMUM GROUT POUR HEIGHT SHALL NOT EXCEED 12 FEET. PROVIDE CLEANOUT OPENINGS AND ADEQUATE PROVISIONS TO PREVENT FACE SHELL DAMAGE (BLOW-OUT) AT THE BOTTOM OF EACH POUR OF GROUT.
13. GROUT POURS SHALL BE CONSOLIDATED BY MECHANICAL VIBRATION AND RECONSOLIDATED AFTER EXCESS MOISTURE HAS BEEN ABSORBED, BUT BEFORE WORKABILITY IS LOST.
14. HORIZONTAL REINFORCING SHALL BE PLACED IN BOND BEAM UNITS.
15. REFER TO ARCHITECTURAL DRAWINGS FOR SURFACE TEXTURE, HEIGHT OF MASONRY UNITS, LAYING PATTERN AND JOINT TYPE. USE RUNNING BOND PATTERN, UNLESS NOTED OTHERWISE.
16. NO PIPES OR DUCTS SHALL BE PLACED IN MASONRY CONSTRUCTION UNLESS SPECIFICALLY NOTED OR DETAILED.
17. ELECTRICAL CONDUIT MAY BE ROUTED IN MASONRY WALLS AS FOLLOWS:
    A. MAXIMUM SIZE AND QUANTITY OF CONDUIT PER CELL (EXCEPT AT JUNCTION BOXES) SHALL BE AS FOLLOWS: FOR 8" BLOCK, ONE-1" DIAMETER OR TWO-¾" DIAMETER; FOR 12" BLOCK, TWO - 1" DIAMETER OR FOUR-¾" DIAMETER. MULTIPLE CONDUITS SHALL BE BUNDLED TOGETHER.
    B. CONDUIT SHALL NOT BE PLACED IN A MASONRY CELL CONTAINING REINFORCING.
    C. CONDUIT SHALL NOT BE PLACED IN A PILASTER.
    D. CONDUIT SHALL BE PLACED AT THE CENTERLINE OF THE WALL.
18. ALL STRUCTURAL MASONRY WORK SHALL BE CONTINUOUSLY INSPECTED DURING LAYING AND GROUTING BY A SPECIAL INSPECTOR SPECIFICALLY APPROVED BY THE ENFORCEMENT AGENCY FOR THAT PURPOSE.

REGISTERED PROFESSIONAL ENGINEER - LAWRENCE P. KNA - No. 2785 Exp. 9-30-23 - STRUCTURAL - STATE OF CALIFORNIA

LICENSED ARCHITECT - RUSSELL CLARKE - No. C-31365 Exp. 10-31-24 - STATE OF CALIFORNIA

STAMPS

AGENCY APPROVAL
File No.: # CFP

KNA STRUCTURAL ENGINEERS
9931 Muirlands Boulevard, Irvine, CA 92618
Tel (949) 462-3200, Fax (949) 462-3201
KNA JOB NO: 203.653 CONSULTANT

RUHNAU CLARKE ARCHITECTS

MOUNTAIN AREA REGIONAL TRANSIT AUTHORITY:CITY SUBMITTAL 07/28/2023

STRUCTURAL TESTS AND INSPECTIONS

1. IN ADDITION TO THE REQUIRED INSPECTIONS, THE OWNER SHALL EMPLOY ONE OR MORE SPECIAL INSPECTORS WHO SHALL PROVIDE INSPECTIONS DURING CONSTRUCTION ON THE TYPES OF WORK LISTED BELOW.

2. THE SPECIAL INSPECTOR SHALL BE A QUALIFIED PERSON WHO SHALL DEMONSTRATE COMPETENCE, TO THE SATISFACTION OF THE BUILDING OFFICIAL, FOR INSPECTION OF THE PARTICULAR TYPE OF CONSTRUCTION OR OPERATION REQUIRING SPECIAL INSPECTION.

3. THE SPECIAL INSPECTOR SHALL OBSERVE THE WORK ASSIGNED FOR CONFORMANCE WITH THE APPROVED DESIGN DRAWINGS AND SPECIFICATIONS.

4. THE SPECIAL INSPECTOR SHALL FURNISH INSPECTION REPORTS TO THE BUILDING OFFICIAL, THE STRUCTURAL ENGINEER, AND OTHER DESIGNATED PERSONS. ALL DISCREPANCIES SHALL BE BROUGHT TO THE IMMEDIATE ATTENTION OF THE CONTRACTOR FOR CORRECTION, THEN, IF UNCORRECTED, TO THE STRUCTURAL ENGINEER AND TO THE ENFORCEMENT AGENCY.

5. THE SPECIAL INSPECTOR SHALL SUBMIT A FINAL SIGNED REPORT STATING WHETHER THE WORK REQUIRING SPECIAL INSPECTION, WAS, TO THE BEST OF THE INSPECTOR'S KNOWLEDGE, IN CONFORMANCE WITH THE APPROVED PLANS AND SPECIFICATIONS AND THE APPLICABLE WORKMANSHIP PROVISIONS OF THE CODE.

6. SPECIAL INSPECTIONS SHALL NOT BE REQUIRED WHEN THE WORK IS DONE ON THE PREMISES OF A FABRICATOR REGISTERED AND APPROVED BY THE ENFORCEMENT AGENCY TO PERFORM SUCH WORK WITHOUT SPECIAL INSPECTION.

7. THE FOLLOWING TYPES OF WORK SHALL BE INSPECTED BY A SPECIAL INSPECTOR:

STEEL CONSTRUCTION
(SEE SECTION 1705.2 FOR ADDITIONAL INFORMATION)

MATERIAL VERIFICATION OF HIGH-STRENGTH BOLTS, NUTS, AND WASHERS:
IDENTIFICATION MARKINGS TO CONFORM TO ASTM STANDARDS SPECIFIED IN APPROVED CONSTRUCTION DOCUMENTS
MANUFACTURER'S CERTIFICATE OF COMPLIANCE REQUIRED

INSPECTION OF HIGH-STRENGTH BOLTING

INSPECTION OF WELDING
STRUCTURAL STEEL
REINFORCING STEEL

VERIFICATION OF WELDABILITY OF REINFORCING STEEL OTHER THAN ASTM A-706
BOUNDARY ELEMENTS OF SPECIAL REINFORCED CONCRETE SHEAR WALLS
SHEAR REINFORCEMENT
OTHER REINFORCING STEEL

INSPECTION OF STEEL FRAME JOINTS FOR COMPLIANCE WITH APPROVED CONSTRUCTION DOCUMENTS

CONCRETE CONSTRUCTION
(SEE SECTION 1705.3 AND TABLE 1705.3 FOR ADDITIONAL INFORMATION)

INSPECTION OF REINFORCING STEEL PLACEMENT

INSPECT BOLTS TO BE INSTALLED IN CONCRETE PRIOR TO AND DURING PLACEMENT OF CONCRETE WHERE ALLOWABLE LOADS HAVE BEEN INCREASED

VERIFYING USE OF REQUIRED MIX DESIGN

AT THE TIME FRESH CONCRETE IS SAMPLED TO FABRICATE SPECIMENS FOR STRENGTH TESTS, PERFORM SLUMP AND AIR CONTENT TESTS, AND DETERMINE THE TEMPERATURE OF CONCRETE

INSPECT CONCRETE PLACEMENT FOR PROPER TECHNIQUES

INSPECTION FOR MAINTENANCE OF SPECIFIED CURING TEMPERATURE AND TECHNIQUES

INSPECT FORMWORK FOR SHAPE, LOCATION AND DIMENSIONS OF THE CONCRETE MEMBER BEING FORMED

MASONRY CONSTRUCTION – LEVEL A (OCCUPANCY CATEGORIES I, II & III)
(SEE SECTION 1705.4 FOR ADDITIONAL INFORMATION)

AS MASONRY CONSTRUCTION BEGINS, THE FOLLOWING SHALL BE VERIFIED TO ENSURE COMPLIANCE:
PROPORTIONS OF SITE-PREPARED MORTAR
CONSTRUCTION OF MORTAR JOINTS
LOCATION OF REINFORCEMENT AND CONNECTORS

THE INSPECTION PROGRAM SHALL VERIFY:
SIZE AND LOCATION OF STRUCTURAL ELEMENTS
TYPE, SIZE AND LOCATION OF ANCHORS, INCLUDING OTHER DETAILS OF ANCHORAGE OF MASONRY TO STRUCTURAL MEMBERS, FRAMES OR OTHER CONSTRUCTION
SPECIFIED SIZE, GRAND AND TYPE OF REINFORCING
WELDING OF REINFORCING BARS
PROTECTION OF MASONRY DURING COLD WEATHER OR HOT WEATHER

PRIOR TO GROUTING, THE FOLLOWING SHALL BE VERIFIED TO ENSURE COMPLIANCE:
GROUT SPACE IS CLEAN
PLACEMENT OF REINFORCEMENT AND CONNECTORS
CONSTRUCTION OF MORTAR JOINTS

GROUT PLACEMENT SHALL BE VERIFIED TO ENSURE COMPLIANCE WITH CODE AND CONSTRUCTION DOCUMENT PROVISIONS

PREPARATION OF ANY REQUIRED GROUT SPECIMENS, MORTAR SPECIMENS AND/OR PRISMS SHALL BE OBSERVED

COMPLIANCE WITH REQUIRED INSPECTION PROVISIONS OF THE CONSTRUCTION DOCUMENTS AND THE APPROVED SUBMITTALS SHALL BE VERIFIED

SOILS
(SEE SECTION 1705.6 AND TABLE 1705.6 FOR ADDITIONAL INFORMATION)

VERIFY MATERIALS BELOW FOOTINGS ARE ADEQUATE TO ACHIEVE THE DESIGN BEARING CAPACITY

VERIFY EXCAVATIONS ARE EXTENDED TO PROPER DEPTH AND HAVE REACHED PROPER MATERIAL

PERFORM CLASSIFICATION AND TESTING OF CONTROLLED FILL MATERIALS

VERIFY USE OF PROPER MATERIALS, DENSITIES AND LIFT THICKNESSES DURING PLACEMENT AND COMPACTION OF CONTROLLED FILL

PRIOR TO PLACEMENT OF CONTROLLED FILL, OBSERVE SUBGRADE AND VERIFY THAT SITE HAS BEEN PREPARED PROPERLY

STRUCTURAL OBSERVATION

1. THE OWNER SHALL EMPLOY KNA CONSULTING ENGINEERS (KNA), OR OTHER ENGINEER DESIGNATED BY KNA, TO PERFORM STRUCTURAL OBSERVATION AS DEFINED IN CALIFORNIA BUILDING CODE, SECTION 1704.6. OBSERVED DEFICIENCIES SHALL BE REPORTED IN WRITING TO THE OWNER'S REPRESENTATIVE, SPECIAL INSPECTOR, CONTRACTOR AND THE BUILDING OFFICIAL. THE STRUCTURAL OBSERVER SHALL SUBMIT TO THE BUILDING OFFICIAL A WRITTEN STATEMENT THAT THE SITE VISITS HAVE BEEN MADE AND IDENTIFYING ANY REPORTED DEFICIENCIES THAT, TO THE BEST OF THE STRUCTURAL OBSERVER'S KNOWLEDGE, HAVE NOT BEEN RESOLVED.

2. AS DEFINED IN CALIFORNIA BUILDING CODE CHAPTER 2, STRUCTURAL OBSERVATION MEANS "THE VISUAL OBSERVATION OF THE STRUCTURAL SYSTEM BY A REGISTERED DESIGN PROFESSIONAL FOR GENERAL CONFORMANCE TO THE APPROVED CONSTRUCTION DOCUMENTS".

SITE OBSERVATION SCHEDULE

SCHEDULED VISIT NO.	OBSERVATION	ELEMENTS
1	REINFORCING STEEL PLACEMENT IN FOOTING TRENCHES	FOOTING REINFORCING
2	STEEL & STUD FRAMING (SUBSTANTIALLY COMPLETE)	STRUCTURAL STEEL FRAMING, METAL STUD FRAMING, AND GENERAL FRAMING

REGISTERED PROFESSIONAL ENGINEER — LAWRENCE K. KNAPP — No. 2785 Exp. 9-30-23 — STRUCTURAL — STATE OF CALIFORNIA

LICENSED ARCHITECT — ROGER CLARKE — No. C-31,190 Exp. 10-31-24 — STATE OF CALIFORNIA

STAMPS

AGENCY APPROVAL
File No: #
JURISDICTION

KNA STRUCTURAL ENGINEERS
9931 Muirlands Boulevard, Irvine, CA 92618
Tel (949) 462-3200, Fax (949) 462-3201
KNA JOB NO: 203.653
CONSULTANT

RUHNAU CLARKE ARCHITECTS

MOUNTAIN AREA REGIONAL TRANSIT AUTHORITY:CITY SUBMITTAL 07/28/2023

17 REINFORCING DEVELOPMENT AND SPLICE LENGTHS

TYPE	BAR LOCATION	CONCRETE TYPE	CONCRETE STRENGTH	BAR SIZE #3 ℓ_d	#3 ℓ_s	#3 ℓ_{dh}	#4 ℓ_d	#4 ℓ_s	#4 ℓ_{dh}	#5 ℓ_d	#5 ℓ_s	#5 ℓ_{dh}	#6 ℓ_d	#6 ℓ_s	#6 ℓ_{dh}	#7 ℓ_d	#7 ℓ_s	#7 ℓ_{dh}	#8 ℓ_d	#8 ℓ_s	#8 ℓ_{dh}	#9 ℓ_d	#9 ℓ_s	#9 ℓ_{dh}	#10 ℓ_d	#10 ℓ_s	#10 ℓ_{dh}	#11 ℓ_d	#11 ℓ_s	#11 ℓ_{dh}
1	VERT. REINF. IN CONC WALL	NWC	fc'>4ksi	14	18	6	19	25	7	24	31	9	28	37	10	42	54	12	47	62	14	54	70	15	61	79	17	67	87	19
2	HORIZ. REINF. IN CONC. WALL, FTGS., BEAMS, MISC. (SEE NOTE 5)	NWC	fc'>4ksi	18	24	6	25	32	7	31	40	9	37	48	10	54	70	12	62	80	14	70	91	15	79	102	17	87	113	19
3	SLAB ON GRADE (SEE NOTE 6)	NWC	fc'>4ksi	14	18	6	19	25	7	24	31	9	28	37	10	42	54	12	47	62	14	54	70	15	61	79	17	67	87	19
4	CONC. ROOF OR FLOOR DIAPHRAGMS	LWC	fc'≥3ksi	23	30	8	30	39	12	37	48	12	44	57	13	65	84	16	74	96	19	83	108	20	93	121	23	104	135	25

NOTES:

1. ℓ_d = DEVELOPMENT

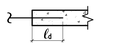

ℓ_s = LAP SPLICE LENGTH

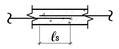

ℓ_{dh} = HOOK DEVELOPMENT LENGTH

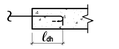

2. THE ABOVE DEVELOPMENT & SPLICE LENGTHS ARE CLASS B & APPLY TO ALL REINF. U.N.O. ON DWGS.
3. FOR NONCONTACT LAP SPLICES AND ALL SPLICES IN SHOTCRETE WALLS, ADD 6" TO THE LENGTHS IN THE TABLE ABOVE.
4. WHEN SPLICING BARS OF DIFFERENT SIZE, USE THE LAP SPLICE LENGTH OF LARGER BAR.
5. TYPE 2 VALUES NOTED HAVE ALREADY BEEN INCREASED BY 1.3, ASSUMING A "TOP BAR" CONDITION.
6. FOR SLABS OR CURBS THICKER THAN 12", THE REBAR LAPS SHALL BE INCREASED TO COMPLY WITH TYPE 2 VALUES.

C415–0 SCALE: NO SCALE

9 CONCRETE BASE FOR EQUIPMENT

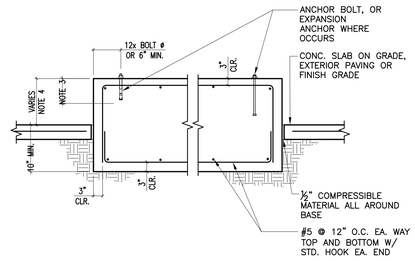

NOTES:
SEE MECHANICAL AND ELECTRICAL DRAWINGS FOR THE FOLLOWING:
1. LOCATION AND DIMENSIONS OF BASES.
2. LOCATION, NUMBER, SIZE AND TYPE OF BOLTS.
3. EMBEDMENT OF EXPANSION ANCHORS WHERE OCCURS.
4. CURB HEIGHT, 4" MIN.

C209–0 SCALE: NO SCALE

REGISTERED PROFESSIONAL ENGINEER — KEVIN NAKAMURA — No. 2785 Exp. 9-30-23 — STRUCTURAL — STATE OF CALIFORNIA

LICENSED ARCHITECT — ROGER CLARKE — No. C-31366 Exp. 10-31-24 — STATE OF CALIFORNIA

STAMPS

AGENCY APPROVAL
File No.: #
Date:

KNA STRUCTURAL ENGINEERS
9931 Muirlands Boulevard, Irvine, CA 92618
Tel (949) 462-3200, Fax (949) 462-3201
KNA JOB NO: 203.653 CONSULTANT

RUHNAU CLARKE ARCHITECTS

18 NON-BEARING METAL STUD BOTT.

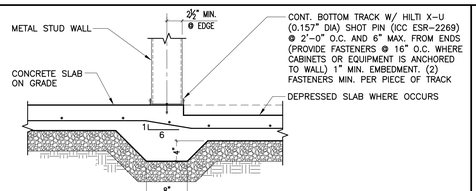

AT SLAB ON GRADE

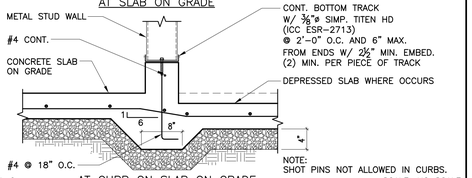

NOTE: SHOT PINS NOT ALLOWED IN CURBS.

AT CURB ON SLAB ON GRADE

S704–0 SCALE: NO SCALE

14 BAR BENDS

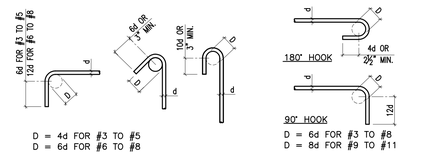

D = 4d FOR #3 TO #5
D = 6d FOR #6 TO #8

TIE OR STIRRUP

D = 6d FOR #3 TO #8
D = 8d FOR #9 TO #11

PRINCIPAL REINFORCING

MAXIMUM OFFSET BEND

NOTES:
1. ALL BAR BENDS SHALL BE MADE COLD.
2. ALL REINFORCING BARS #5 & LARGER SHALL NOT BE RE–BENT.

C409–0 SCALE: NO SCALE

10 METHOD OF POURING S.O.G.

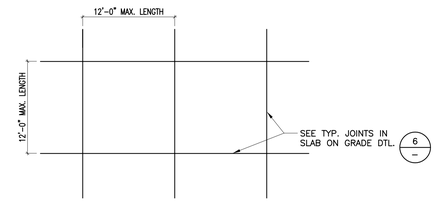

NOTES:
1. PANELS SHALL BE DIVIDED BY CONTROL JOINTS AND CONSTRUCTION JOINTS.
2. PROVIDE CONTROL JOINTS PERPENDICULAR TO CONSTRUCTION JOINTS.
3. IN AREAS WHERE COLUMNS DO NOT OCCUR PROVIDE CONSTRUCTION OR CONTROL JOINTS AT 12'–0" MAX.
4. BETWEEN 1:1 TO 2:1 PANEL SHALL NOT EXCEED 200 SQUARE FEET IN AREA.
5. SEE PLANS FOR LOCATIONS WHERE ADDITIONAL JOINTS MAY BE REQUIRED.
6. THE CONTRACTOR SHALL SUBMIT A PROPOSED LAYOUT OF JOINTS FOR APPROVAL PRIOR TO POURING SLABS.
7. PROVIDE JOINTS @ ALL RE–ENTRANT CORNERS IN SLAB CONSTRUCTION.

C201–0 SCALE: NO SCALE

6 PIPES PARALLEL TO FOOTINGS

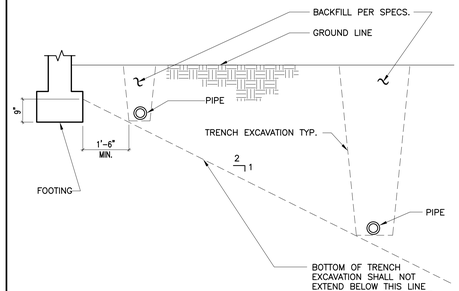

NOTES:
1. CONTRACTOR SHALL COORDINATE ALL PIPE LOCATIONS WITH BUILDING FOUNDATION REQUIREMENTS.

C102–0 SCALE: NO SCALE

19

15 8" SLAB TRANSITION

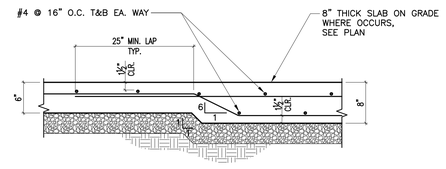

SLAB THICKNESS INCREASE

MMT–053 SCALE: 1"=1'–0"

11 JOINT IN SLAB ON GRADE

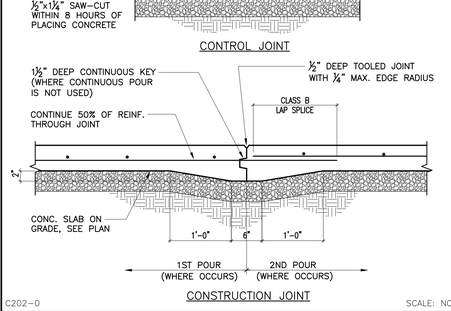

CONSTRUCTION JOINT

C202–0 SCALE: NO SCALE

7 PIPES PERPENDICULAR TO FOOTINGS

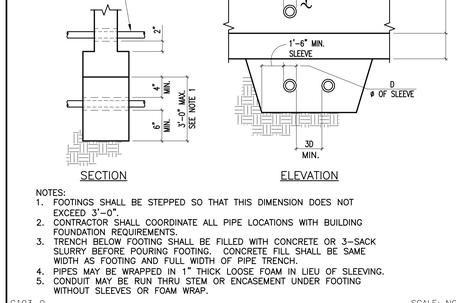

SECTION ELEVATION

NOTES:
1. FOOTINGS SHALL BE STEPPED SO THAT THIS DIMENSION DOES NOT EXCEED 3'–0".
2. CONTRACTOR SHALL COORDINATE ALL PIPE LOCATIONS WITH BUILDING FOUNDATION REQUIREMENTS.
3. TRENCH BELOW FOOTING SHALL BE FILLED WITH CONCRETE OR 3–SACK SLURRY BEFORE POURING FOOTING. CONCRETE FILL SHALL BE SAME WIDTH AS FOOTING AND FULL WIDTH OF PIPE TRENCH.
4. PIPES MAY BE WRAPPED IN 1" THICK LOOSE FOAM IN LIEU OF SLEEVING.
5. CONDUIT MAY BE RUN THRU STEM OR ENCASEMENT UNDER FOOTING WITHOUT SLEEVES OR FOAM WRAP.

C103–0 SCALE: NO SCALE

20

16

12 DEPRESSED S.O.G. AND SLAB EDGE

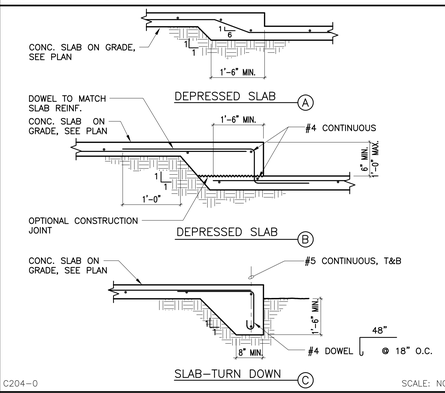

SLAB–TURN DOWN C

C204–0 SCALE: NO SCALE

8 CONCRETE CURBS AND PADS

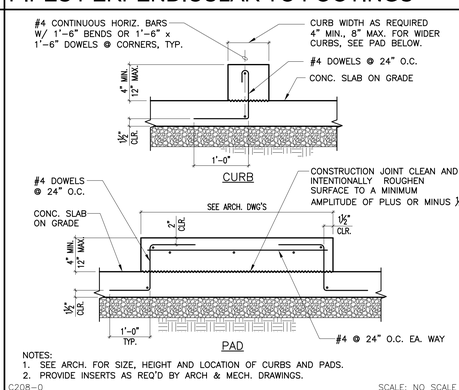

PAD

NOTES:
1. SEE ARCH. FOR SIZE, HEIGHT AND LOCATION OF CURBS AND PADS.
2. PROVIDE INSERTS AS REQ'D BY ARCH & MECH. DRAWINGS.

C208–0 SCALE: NO SCALE

3

MOUNTAIN AREA REGIONAL TRANSIT AUTHORITY:CITY SUBMITTAL 07/28/2023

PROJECT No. :50801
7/28/2023 7:23:47 AM

DRAWN BY: CHECKED BY:

ISSUE No.____ DATE____ DESCRIPTION____
ISSUE No.____ DATE____ DESCRIPTION____
ISSUE No.____ DATE____ DESCRIPTION____
ISSUE No.____ DATE____ DESCRIPTION____

REVISION No. #1 DATE 7/28/2023 DESCRIPTION City Resubmittal
REVISION No.____ DATE____ DESCRIPTION____
REVISION No.____ DATE____ DESCRIPTION____
REVISION No.____ DATE____ DESCRIPTION____

RUHNAUCLARKE.COM
3775 TENTH STREET, RIVERSIDE CALIFORNIA 92501 (951) 684 4664 / 5751 PALMER WAY, SUITE C, CARLSBAD CALIFORNIA 92010 (760) 438 5899

MOUNTAIN TRANSIT MAINTENANCE FACILITY
170 BUSINESS CENTER DR. BIG BEAR LAKES, CA
BIG BEAR LAKES

TYPICAL CONCRETE AND REINFORCING DETAILS

S0-1.3

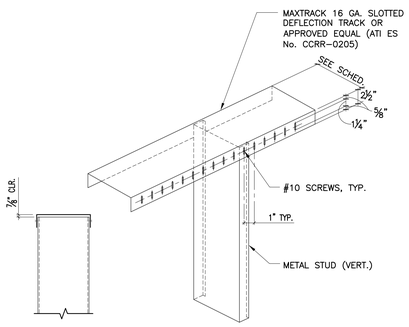

SECTION ISOMETRIC VIEW

S711-0 SCALE: NO SCALE

METAL STUD TOP TRACK 17

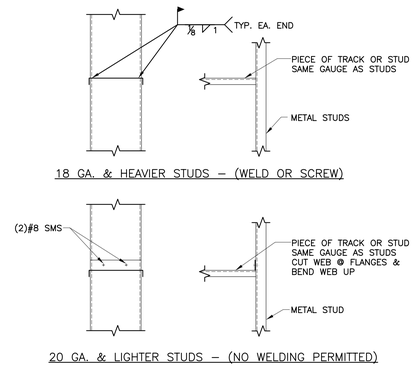

18 GA. & HEAVIER STUDS – (WELD OR SCREW)

20 GA. & LIGHTER STUDS – (NO WELDING PERMITTED)

S617-0 SCALE: NO SCALE

METAL STUD BLOCKING 13

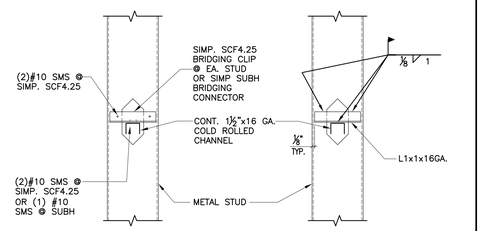

AT SCREWABLE STUD AT WELDED STUD

S619-0 SCALE: NO SCALE

METAL STUD BRIDGING 9

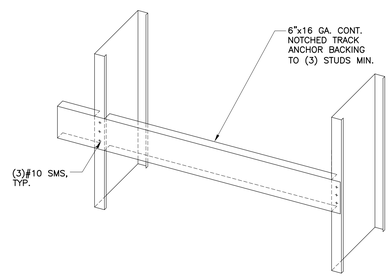

NOTE:
USE #10 SMS WHEN ATTACHING ITEMS TO BACKING, U.N.O.

S620-0 SCALE: NO SCALE

BACKING AT METAL STUDS 5

STAMPS

AGENCY APPROVAL File No.: # Date

KNA STRUCTURAL ENGINEERS
9931 Muirlands Boulevard, Irvine, CA 92618
Tel (949) 462-3200, Fax (949) 462-3201
KNA JOB NO: 203.653 CONSULTANT

RUHNAU CLARKE ARCHITECTS

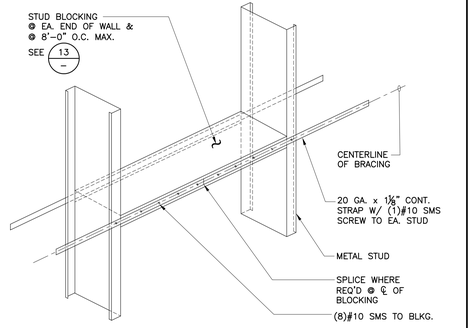

S618-0 SCALE: NO SCALE

METAL STUD BRACING 18

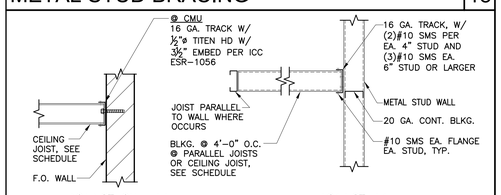

AGAINST CMU WALL AGAINST WALL

CEILING JOIST SCHEDULE	
JOIST SIZE	MAX. SPAN
4"x20 GA. @ 16" O.C.	7'-6"
6"x20 GA. @ 16" O.C.	9'-0"
6"x18 GA. @ 16" O.C.	16'-0" (NOTE 2)

NOTES:
1. THIS DETAIL IS INTENDED FOR CEILING JOISTS THAT SPAN FROM WALL TO WALL @ CONTRACTORS OPTION.
2. CONT. MIDSPAN BLKG. REQ'D.

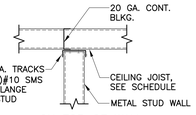

ON TOP OF WALL

S712-0 SCALE: NO SCALE

CEILING JOIST SCHEDULE & DETAILS 19

STUD SCHEDULE							
DEPTH O.D.	DEPTH	GAUGE	B	AREA (IN^2)	I (IN^4)	S (IN^3)	MAX. INTERIOR STUD WALL HT.*	SSMA DESIGNATION
B	2½"	20	1⅝"	.223	.235	.188	12'-0"	250S162-33
		18	1⅝"	.289	.302	.242	13'-0"	250S162-43
		16	1⅝"	.358	.370	.296	15'-0"	250S162-54
	4"	20	1⅝"	.275	.692	.346	18'-11"	400S162-33
		18	1⅝"	.357	.892	.446	20'-7"	400S162-43
		16	1⅝"	.443	1.098	.549	22'-1"	400S162-54
	6"	20	1⅝"	.344	1.793	.598	26'-0"	600S162-33
		18	1⅝"	.447	2.316	.772	28'-4"	600S162-43
		16	1⅝"	.556	2.860	.953	30'-4"	600S162-54
	8"	20	1⅝"	.413	3.582	.896	32'-9"	800S162-33
	10"	16	2"	.839	11.278	2.256	38'-4"	1000S200-54
	12"	14	2"	1.192	21.947	3.658	38'-4"	1200S200-68

* MAX. HEIGHT PER SCHEDULE BASED ON SSMA CATALOG FOR INTERIOR, NON-BEARING WALLS WITH 5 PSF LATERAL LOAD @ L/240 @ 16" O.C.

TRACK SCHEDULE						
DEPTH O.D.	DEPTH	GAUGE	B	AREA (IN^2)	I (IN^4)	S (IN^3)	SSMA DESIGNATION
B	2½"	20	1½"	.190	.221	.167	250T150-33
		18	1½"	.248	.289	.217	250T150-43
		16	1½"	.311	.368	.273	250T150-54
	4"	20	1½"	.242	.622	.300	400T150-33
		18	1½"	.315	.811	.390	400T150-43
		16	1½"	.396	1.025	.489	400T150-54
	6"	20	1½"	.311	1.590	.517	600T150-33
		18	1½"	.405	2.072	.673	600T150-43
		16	1½"	.509	2.611	.843	600T150-54
	8"	20	1½"	.380	3.180	.781	800T150-33
		16	1½"	.622	5.214	1.272	800T150-54
		14	1½"	.783	6.594	1.599	800T150-68
	10"	16	1½"	.735	9.061	1.777	1000T150-54
	12"	14	1½"	1.068	18.148	2.963	1200T150-68

NOTES:
1. SEE ARCHITECTURAL AND STRUCTURAL DRAWINGS FOR SIZE AND GAUGE OF STUDS. PROVIDE MIN. 20 GA. STUDS FOR INTERIOR CONDITIONS, AND 16 GA. FOR EXTERIOR, U.N.O.
2. DIMENSIONS, PROPERTIES AND TYPES NOTED ARE BASED ON METAL STUDS AND TRACKS BY STEEL STUD MANUFACTURERS ASSOCIATION (SSMA), ICC ER-3064P, U.N.O.

S615-0 SCALE: NO SCALE

METAL STUD AND TRACK SCHEDULES 15

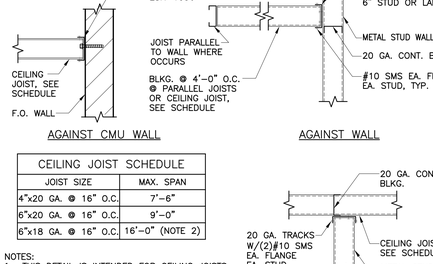

S810-0 SCALE: NO SCALE

NON-BEARING METAL STUD PARTITION TOP (FULL HEIGHT WALL) 20

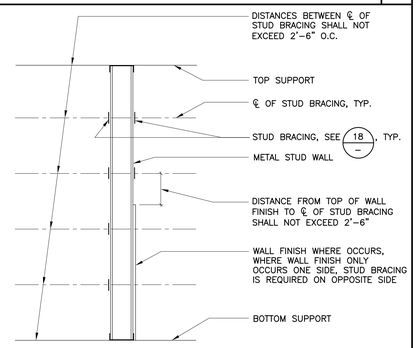

NOTE:
WHERE WALL FINISH OCCURS BOTH SIDES OF WALL, FOR FULL HEIGHT OF STUD, BRACING IS NOT REQUIRED, U.N.O.

S616-0 SCALE: NO SCALE

WALL STUD BRACING LOCATION 16

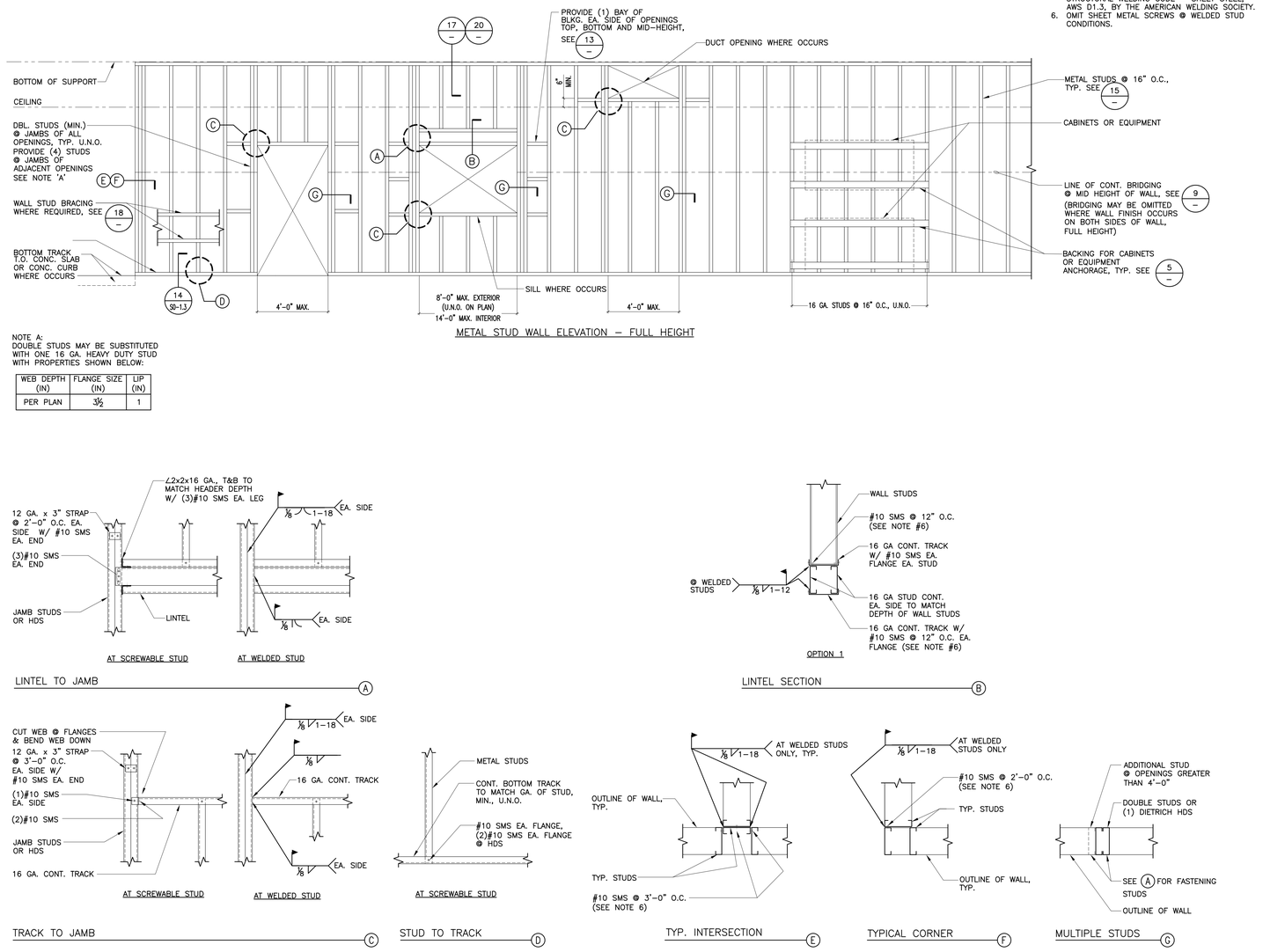

METAL STUD WALL ELEVATION – FULL HEIGHT

NOTES:
1. SEE "METAL STUD AND TRACK SCHEDULES" ON THIS SHEET FOR ADDITIONAL INFORMATION.
2. SEE ARCHITECTURAL AND STRUCTURAL DRAWINGS FOR SIZE OF STUDS.
3. ALL TOP AND BOTTOM TRACKS SHALL BE SAME GAUGE AS STUDS, U.N.O.
4. ALL STUDS AT JAMBS OF DOOR AND WINDOW OPENINGS SHALL BE 16 GAUGE, U.N.O.
5. WELDING SHALL BE IN ACCORDANCE WITH STRUCTURAL WELDING CODE – SHEET STEEL, AWS D1.3, BY THE AMERICAN WELDING SOCIETY.
6. OMIT SHEET METAL SCREWS @ WELDED STUD CONDITIONS.

NOTE A:
DOUBLE STUDS MAY BE SUBSTITUTED WITH ONE 16 GA. HEAVY DUTY STUD WITH PROPERTIES SHOWN BELOW:

WEB DEPTH (IN)	FLANGE SIZE (IN)	LIP (IN)
PER PLAN	3½	1

AT SCREWABLE STUD AT WELDED STUD

LINTEL TO JAMB (A)

AT SCREWABLE STUD AT WELDED STUD

TRACK TO JAMB (C)

AT SCREWABLE STUD

STUD TO TRACK (D)

OPTION 1

LINTEL SECTION (B)

TYP. INTERSECTION (E) TYPICAL CORNER (F) MULTIPLE STUDS (G)

S604-0 SCALE: NO SCALE

METAL STUD WALL FRAMING 3

MOUNTAIN AREA REGIONAL TRANSIT AUTHORITY:CITY SUBMITTAL 07/28/2023

PROJECT No. :50801
7/28/2023 7:23:47 AM

DRAWN BY: CHECKED BY:

ISSUE No.:_____	DATE:_____	DESCRIPTION:_____	
ISSUE No.:_____	DATE:_____	DESCRIPTION:_____	
ISSUE No.:_____	DATE:_____	DESCRIPTION:_____	
REVISION No.: #1	DATE:7/28/2023	DESCRIPTION:City Resubmittal	
REVISION No.:_____	DATE:_____	DESCRIPTION:_____	
REVISION No.:_____	DATE:_____	DESCRIPTION:_____	

ROOF CONSTRUCTION SCHEDULE		
MARK	DECK CONSTRUCTION	DETAIL
D1	2"x18 GA. EPIC METALS TORIS ROOF DECK	18 / –

S415-0 SCALE: NO SCALE

ROOF CONST. SCHEDULE 17

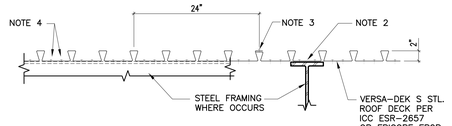

NOTES:

1. ↑ INDICATES SCREW LOCATION.
2. WHERE DECK RIBS ARE PARALLEL TO SUPPORTS USE SIMPSON X SCREWS (#12 SCREW), TWO EA. DOWN FLUTE, TYP. (ICC ESR-3006).
3. SEAM ATTACHMENT TO BE SIMPSON X SCREWS (#12 SCREW) @ 24" O.C. (ICC ESR-3006).
4. DECK IS TO BE FASTENED TO SUPPORTS BY SIMPSON X SCREWS (#12 SCREW) AS SHOWN, (2) MIN. PER DOWNFLUTE.

MINIMUM DECK PROPERTIES		
	D1 (NON-ACOUSTICAL)	D1A ACOUSTICAL
GAUGE	18 GA.	18 GA.
I in^4	0.658	0.620
S+ (in^3)	0.485	0.477
S- (in^3)	0.462	0.463

MMT-058 SCALE: NO SCALE

ROOF DECK FASTENING & SEC. PROP. 18

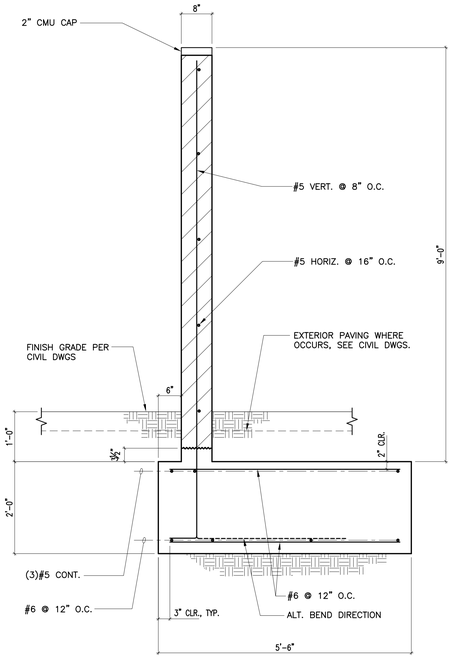

FOR ADDITIONAL INFORMATION SEE DETAIL 1 / –

MMT-059 SCALE: 3/4"=1'-0"

CMU SITE WALL 14

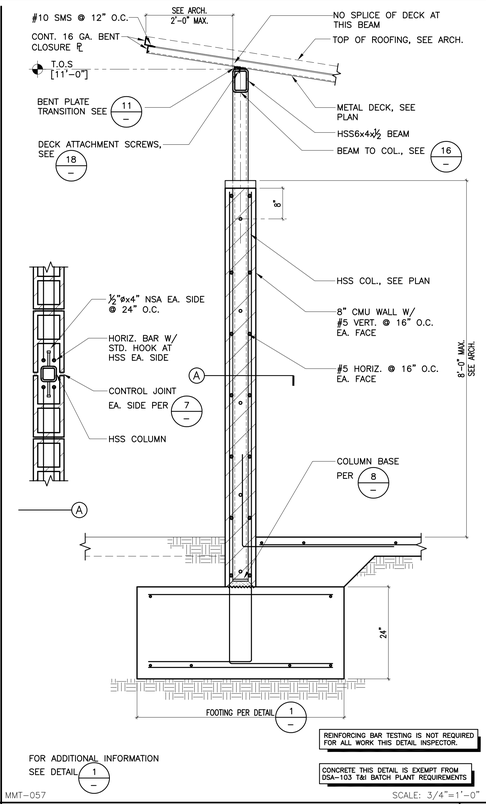

FOR ADDITIONAL INFORMATION SEE DETAIL 1 / –

MMT-057 SCALE: 3/4"=1'-0"

CMU CANOPY ENCLOSURE WALL 10

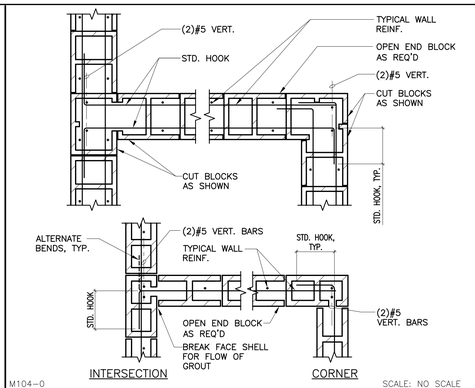

M104-0 SCALE: NO SCALE

CONC. MAS. WALL INTERSECTIONS 5

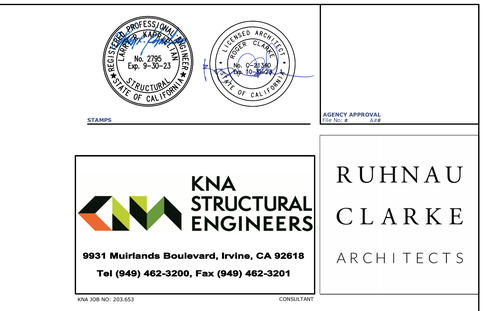

FREESTANDING CMU WALL REINFORCING SCHEDULE						
H***	W	D	(A)	(B) *	(C)	WALL THICKNESS (NOMINAL)
1'-0" TO 2'-0"	1'-6"	12"	#5 @ 24" O.C.	#5 @ 24" O.C.	–	8"
2'-1" TO 3'-0"	2'-0"	12"	#5 @ 24" O.C.	#5 @ 24" O.C.	–	8"
3'-1" TO 4'-0"	2'-6"	12"	#5 @ 24" O.C.	#5 @ 24" O.C.	#5 @ 24" O.C.	8"
4'-1" TO 5'-0"	2'-6"	12"	#5 @ 24" O.C.	#5 @ 24" O.C.	#5 @ 24" O.C.	8"
5'-1" TO 6'-0"	3'-0"	12"	#5 @ 24" O.C.	#5 @ 24" O.C.	#5 @ 24" O.C.	8"
6'-1" TO 7'-0"	3'-6"	12"	#5 @ 24" O.C.	#5 @ 24" O.C.	#5 @ 24" O.C.	8"
7'-1" TO 8'-0"	4'-0"	12"	#5 @ 24" O.C.	#5 @ 24" O.C.	#5 @ 24" O.C.	8"
8'-1" TO 9'-0"	5'-0"	24"	#5 @ 24" O.C.	#5 @ 16" O.C.	#5 @ 16" O.C.	8"

* SPACE VERTICAL REINFORCING @ 16" O.C. WHERE STACK BOND PATTERN OCCURS.
** 3'-8" MAX. AT SOIL RETAINING LOCATIONS WITH LESS HEIGHT (H) OF 4'-0" OR LESS.
*** SEE ARCHITECTURAL OR CIVIL DRAWINGS FOR HEIGHT.

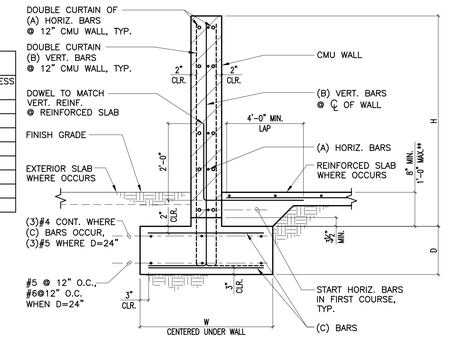

M108-0 SCALE: NO SCALE

FREESTANDING CMU WALL SCHEDULE 1

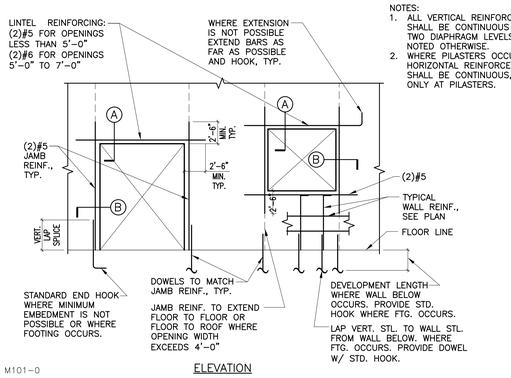

M101-0 ELEVATION

NOTES:
1. ALL VERTICAL REINFORCING SHALL BE CONTINUOUS BETWEEN TWO DIAPHRAGM LEVELS, UNLESS NOTED OTHERWISE.
2. WHERE PILASTERS OCCUR, ALL HORIZONTAL REINFORCEMENT SHALL BE CONTINUOUS, SPLICED ONLY AT PILASTERS.

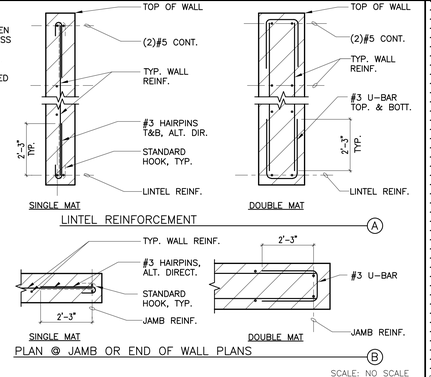

SCALE: NO SCALE

MINIMUM REINFORCING AT CONCRETE MASONRY WALL OPENINGS 15

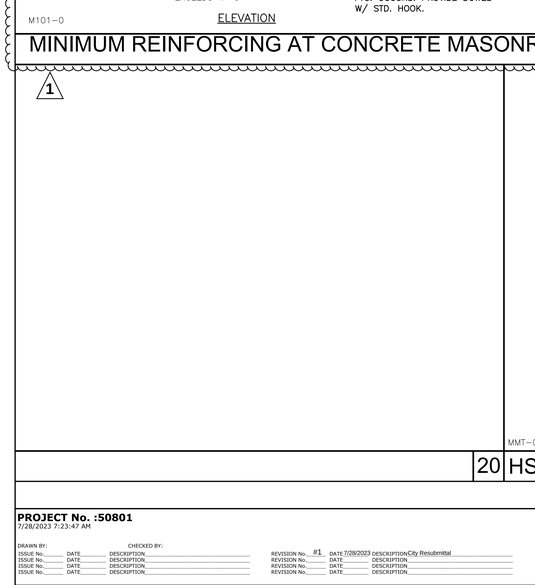

20

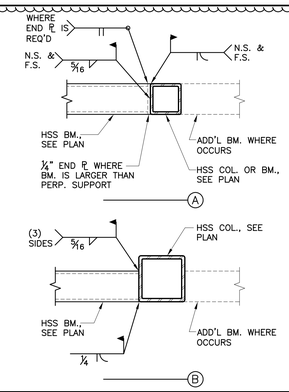

MMT-060

HSS TO HSS CONNECTION 12

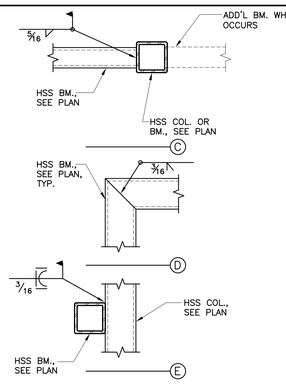

SCALE: 1"=1'-0"

BEAM SLOPE TRANSITION PLATES 11

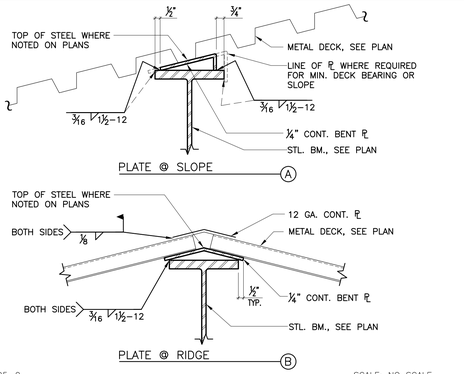

SS05-0 SCALE: NO SCALE

TYP. CONTROL JOINT IN CMU WALL 7

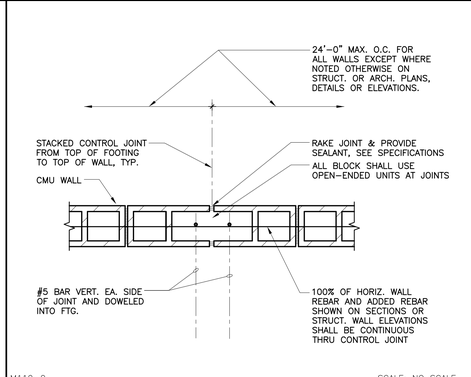

M110-0 SCALE: NO SCALE

VERT. REINF. LAP SPLICE-MASONRY 2

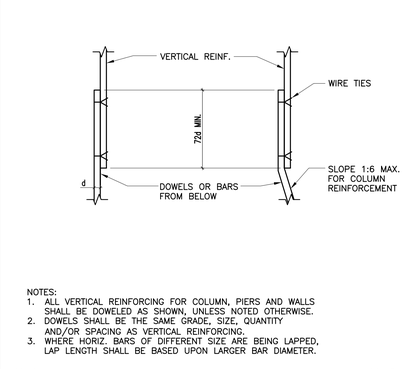

NOTES:
1. ALL VERTICAL REINFORCING FOR COLUMN, PIERS AND WALLS SHALL BE DOWELED AS SHOWN, UNLESS NOTED OTHERWISE.
2. DOWELS SHALL BE THE SAME GRADE, SIZE, QUANTITY AND/OR SPACING AS VERTICAL REINFORCING.
3. WHERE HORIZ. BARS OF DIFFERENT SIZE ARE BEING LAPPED, LAP LENGTH SHALL BE BASED UPON LARGER BAR DIAMETER.

M102-0 SCALE: NO SCALE

8

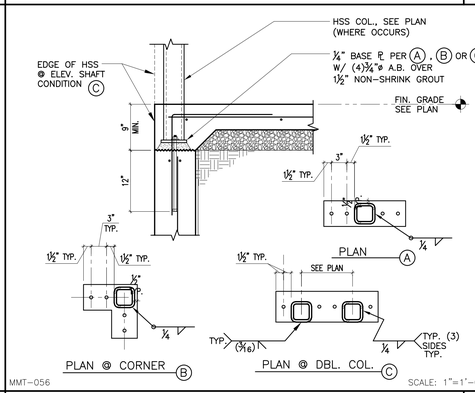

MMT-056 SCALE: 1"=1'-0"

DETAIL 8

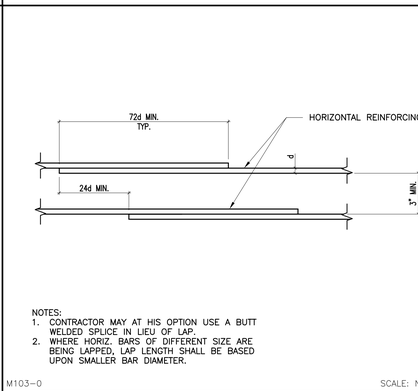

NOTES:
1. CONTRACTOR MAY AT HIS OPTION USE A BUTT WELDED SPLICE IN LIEU OF LAP.
2. WHERE HORIZ. BARS OF DIFFERENT SIZE ARE BEING LAPPED, LAP LENGTH SHALL BE BASED UPON SMALLER BAR DIAMETER.

M103-0 SCALE: NO SCALE

HORIZ. REINF. LAP SPLICE - MASONRY 3

PROJECT No. :50801
7/28/2023 7:23:47 AM

DRAWN BY: CHECKED BY:

ISSUE No.____ DATE:____ DESCRIPTION:____
ISSUE No.____ DATE:____ DESCRIPTION:____
ISSUE No.____ DATE:____ DESCRIPTION:____
ISSUE No.____ DATE:____ DESCRIPTION:____

REVISION No. #1 DATE 7/28/2023 DESCRIPTION City Resubmittal
REVISION No.____ DATE:____ DESCRIPTION:____
REVISION No.____ DATE:____ DESCRIPTION:____
REVISION No.____ DATE:____ DESCRIPTION:____

RUHNAUCLARKE.COM
3775 TENTH STREET, RIVERSIDE CALIFORNIA 92501 (951) 684 4664 / 5751 PALMER WAY, SUITE C, CARLSBAD CALIFORNIA 92010 (760) 438 5899

MOUNTAIN TRANSIT MAINTENANCE FACILITY
170 BUSINESS CENTER DR. BIG BEAR LAKES, CA
BIG BEAR LAKES

TYPICAL MASONRY AND STEEL DETAILS

S0-1.5

MOUNTAIN AREA REGIONAL TRANSIT AUTHORITY:CITY SUBMITTAL 07/28/2023

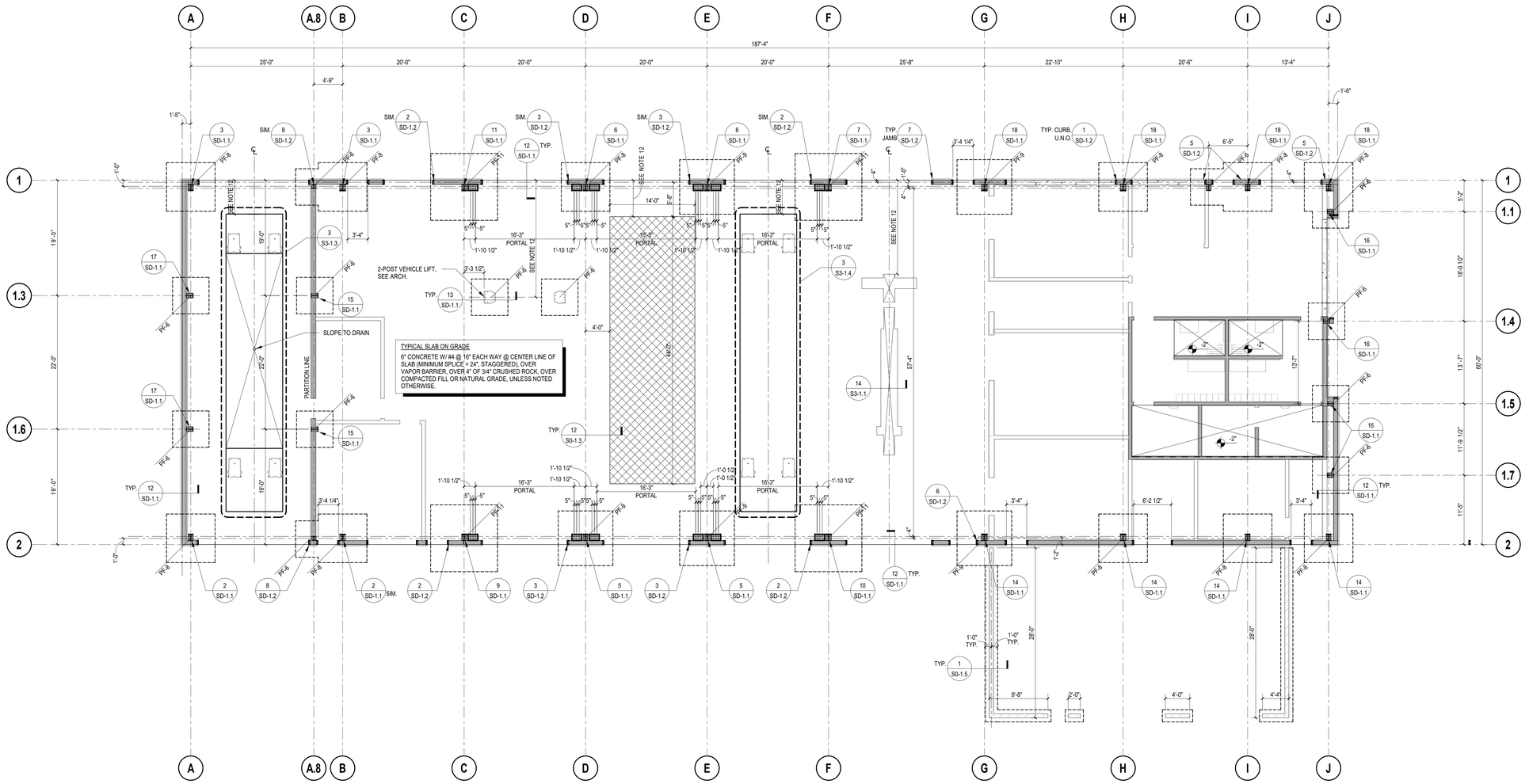

FOUNDATION PLAN

SCALE: 1/8" = 1'-0"

REGISTERED PROFESSIONAL ENGINEER — LAUREN K. KNA-CHAN — No. 2795 Exp. 9-30-23 — STRUCTURAL — STATE OF CALIFORNIA

LICENSED ARCHITECT — ROGER CLARKE — No. C-31360 Exp. 10-31-24 — STATE OF CALIFORNIA

STAMPS

AGENCY APPROVAL File No.: 3.0

KNA STRUCTURAL ENGINEERS
9931 Muirlands Boulevard, Irvine, CA 92618
Tel (949) 462-3200 Fax (949) 462-3201
www.KNAstructural.com

KNA Job No.: 203.653

CONSULTANT BRANDING

RUHNAU CLARKE ARCHITECTS

FOUNDATION PLAN NOTES

1. SEE SHEETS S0-1.1 THROUGH S0-1.5 FOR GENERAL NOTES AND TYPICAL DETAILS.
2. SEE SPECIFICATIONS FOR ALL SITE AND SUBGRADE PREPARATIONS.
3. SEE ARCHITECTURAL AND/OR CIVIL DRAWINGS FOR FINISH FLOOR ELEVATIONS.
4. SEE ARCHITECTURAL AND CIVIL DRAWINGS FOR ALL EXTERIOR CONCRETE PAVING, SLABS, BASES, CURBS, SITE WALLS, ETC.
5. FOR ANY DIMENSIONAL INFORMATION NOT SHOWN, SEE ARCHITECTURAL DRAWINGS.
6. SEE PLANS AND ARCHITECTURAL DRAWINGS FOR DEPRESSIONS AND/OR SLOPES IN CONCRETE SLABS.
7. ALL DIMENSIONS SHOWN ARE FROM FACE OF STUD, CENTER LINE OF COLUMN, OR CENTER LINE OF WALL, UNLESS NOTED OTHERWISE. ALL COLUMNS ARE CENTERED IN STUD WALL, UNLESS NOTED OTHERWISE.
8. SEE ARCHITECTURAL DRAWINGS FOR SIZE AND LOCATION OF ALL DOOR AND WINDOW OPENINGS IN BEARING AND NON-BEARING WALLS.
9. SEE ARCHITECTURAL DRAWINGS FOR LOCATION OF INTERIOR NON-BEARING PARTITIONS. INTERIOR NON-BEARING PARTITION WALLS THAT DO NOT REQUIRE CONCRETE CURBS ARE NOT SHOWN ON STRUCTURAL DRAWINGS.
10. SEE ARCHITECTURAL, PLUMBING, MECHANICAL, ELECTRICAL, AND KITCHEN DRAWINGS FOR ADDITIONAL EMBEDDED ITEMS AND SLAB PENETRATIONS.
11. FOR TYPICAL SLAB JOINTS, SEE DETAIL 7/SO-1.3.
12. SEE ARCHITECTURAL DRAWINGS FOR EXACT LOCATIONS OF VEHICLE LIFT AND EQUIPMENT.

LEGEND

PF-2 (-1'-0") : INDICATES CONCRETE FOOTING. SEE DETAIL 1/SD-1.1 FOR ADDITIONAL INFORMATION.
: INDICATES DEPTH OF TOP OF FOOTING BELOW FINISH FLOOR.

: INDICATES CONCRETE CURB. SEE PLANS AND DETAIL 3/SO-1.3 FOR ADDITIONAL INFORMATION.

: INDICATES 8" MASONRY WALL. SEE DETAIL 11/S0-1.3 FOR REINFORCING.

: INDICATES TOP OF SLAB ELEVATION (WHERE INDICATED).

: INDICATES 8" SLAB ON GRADE. SEE PLAN AND DETAIL 12/S0-1.3 FOR ADDITIONAL INFORMATION.

:INDICATES 4" TALL CONCRETE CURB. SEE PLANS, ARCHITECT, AND DETAIL 3/S0-1.3 FOR ADDITIONAL INFORMATION.

MOUNTAIN AREA REGIONAL TRANSIT AUTHORITY: CITY SUBMITTAL 07/28/2023

PROJECT No. :
7/27/2023 3:32:49 PM

DRAWN BY: CHECKED BY:

ISSUE No.____ DATE____ DESCRIPTION____
ISSUE No.____ DATE____ DESCRIPTION____
ISSUE No.____ DATE____ DESCRIPTION____
ISSUE No.____ DATE____ DESCRIPTION____

REVISION No. #1 DATE 7/28/2023 DESCRIPTION City Resubmittal
REVISION No.____ DATE____ DESCRIPTION____
REVISION No.____ DATE____ DESCRIPTION____
REVISION No.____ DATE____ DESCRIPTION____

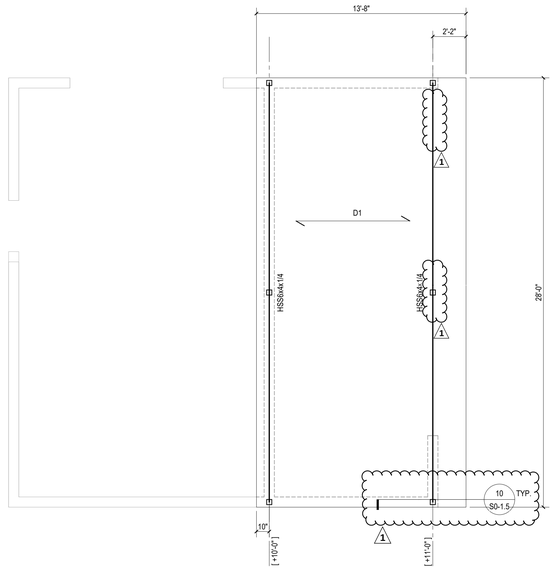

ROOF FRAMING PLAN

SCALE: 1/4" = 1'-0"

2

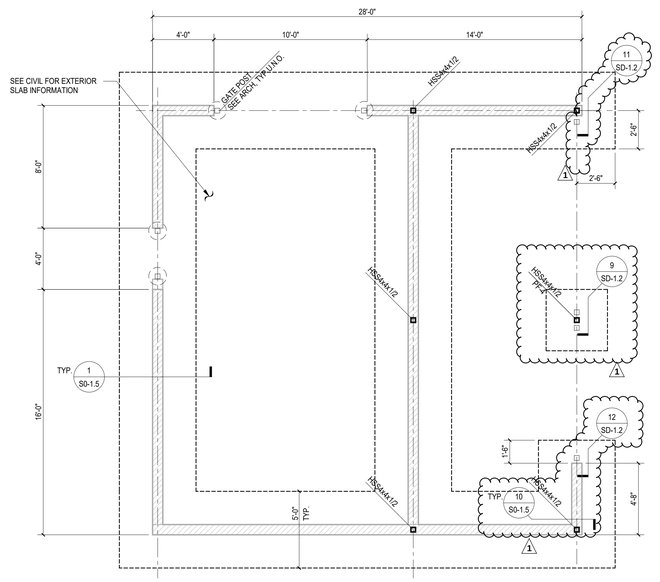

FOUNDATION PLAN

SCALE: 1/4" = 1'-0"

1

KNA STRUCTURAL ENGINEERS
9931 Muirlands Boulevard, Irvine, CA 92618
Tel (949) 462-3200 Fax (949) 462-3201
www.KNAstructural.com

KNA Job No.: 203.653

CONSULTANT BRANDING

RUHNAU CLARKE ARCHITECTS

STAMPS

REGISTERED PROFESSIONAL LANDSCAPE ARCHITECT / CIVIL ENGINEER / STRUCTURAL ENGINEER — No. 2795 Exp. 9-30-23 — STATE OF CALIFORNIA

LICENSED ARCHITECT — ROGER CLARKE — No. C-31340 Exp. 10-31-2024 — STATE OF CALIFORNIA

AGENCY APPROVAL

File No.: n.a.

FOUNDATION PLAN NOTES

1. SEE SHEETS S0-1.1 THROUGH S0-1.5 FOR GENERAL NOTES AND TYPICAL DETAILS.
2. SEE SPECIFICATIONS FOR ALL SITE AND SUBGRADE PREPARATIONS.
3. SEE ARCHITECTURAL AND/OR CIVIL DRAWINGS FOR FINISH FLOOR ELEVATIONS.
4. SEE ARCHITECTURAL AND CIVIL DRAWINGS FOR ALL EXTERIOR CONCRETE PAVING, SLABS, BASES, CURBS, SITE WALLS, ETC.
5. FOR ANY DIMENSIONAL INFORMATION NOT SHOWN, SEE ARCHITECTURAL DRAWINGS.
6. SEE PLANS AND ARCHITECTURAL DRAWINGS FOR DEPRESSIONS AND/OR SLOPES IN CONCRETE SLABS.
7. ALL DIMENSIONS SHOWN ARE FROM FACE OF STUD, CENTER LINE OF COLUMN, OR CENTER LINE OF WALL, UNLESS NOTED OTHERWISE. ALL COLUMNS ARE CENTERED IN STUD WALL, UNLESS NOTED OTHERWISE.
8. SEE ARCHITECTURAL DRAWINGS FOR SIZE AND LOCATION OF ALL DOOR AND WINDOW OPENINGS IN BEARING AND NON-BEARING WALLS.
9. SEE ARCHITECTURAL DRAWINGS FOR LOCATION OF INTERIOR NON-BEARING PARTITIONS. INTERIOR NON-BEARING PARTITION WALLS THAT DO NOT REQUIRE CONCRETE CURBS ARE NOT SHOWN ON STRUCTURAL DRAWINGS.
10. SEE ARCHITECTURAL, PLUMBING, MECHANICAL, ELECTRICAL, AND KITCHEN DRAWINGS FOR ADDITIONAL EMBEDDED ITEMS AND SLAB PENETRATIONS.
11. FOR TYPICAL SLAB JOINTS, SEE DETAIL 7/S0-1.3.
12. SEE ARCHITECTURAL DRAWINGS FOR EXACT LOCATIONS OF VEHICLE LIFT AND EQUIPMENT.

LEGEND

PF-2 (-1'-0") : INDICATES CONCRETE FOOTING. SEE DETAIL 1/SD-1.1 FOR ADDITIONAL INFORMATION.

: INDICATES DEPTH OF TOP OF FOOTING BELOW FINISH FLOOR.

: INDICATES CONCRETE CURB. SEE PLANS AND DETAIL 3/S0-1.3 FOR ADDITIONAL INFORMATION.

: INDICATES 8" MASONRY WALL. SEE DETAIL 11/S0-1.3 FOR REINFORCING.

: INDICATES TOP OF SLAB ELEVATION (WHERE INDICATED).

: INDICATES 8" SLAB ON GRADE. SEE PLAN AND DETAIL 12/S0-1.3 FOR ADDITIONAL INFORMATION.

:INDICATES 4" TALL CONCRETE CURB. SEE PLANS, ARCHITECT, AND DETAIL 3/S0-1.3 FOR ADDITIONAL INFORMATION.

ROOF FRAMING PLAN NOTES

1. SEE SHEETS S0-1.1 THROUGH S0-1.5 FOR GENERAL NOTES AND TYPICAL DETAILS.
2. FOR ANY DIMENSIONAL INFORMATION NOT SHOWN, SEE ARCHITECTURAL DRAWINGS.
3. ALL BEAMS SHALL BE EQUALLY SPACED BETWEEN COLUMNS, UNLESS NOTED OTHERWISE.

LEGEND

[+ ##'-##"] : INDICATES TOP OF STEEL ELEVATION.

: INDICATES SPAN OF METAL DECK. SEE 17/S0-1.5 FOR MORE INFORMATION.

MOUNTAIN AREA REGIONAL TRANSIT AUTHORITY: CITY SUBMITTAL 07/28/2023

PROJECT No. :
7/27/2023 3:32:49 PM

DRAWN BY: CHECKED BY:

ISSUE No.____ DATE____ DESCRIPTION____
ISSUE No.____ DATE____ DESCRIPTION____
ISSUE No.____ DATE____ DESCRIPTION____
ISSUE No.____ DATE____ DESCRIPTION____

REVISION No. #1 DATE 7/28/2023 DESCRIPTION City Resubmittal
REVISION No.____ DATE____ DESCRIPTION____
REVISION No.____ DATE____ DESCRIPTION____
REVISION No.____ DATE____ DESCRIPTION____

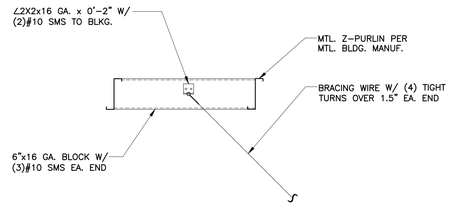

MMT-002 SCALE: 1"=1'-0"

16 BRACING WIRE ATTACHMENT

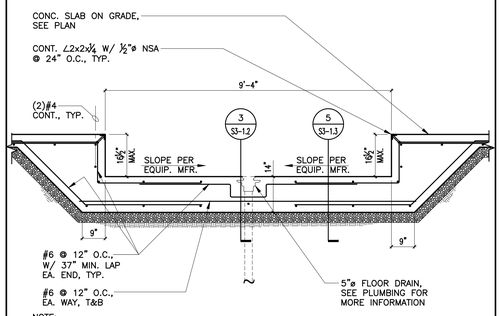

NOTE:
CONTRACTOR TO COORDINATE ALL PIT DIMENSIONS WITH MFR.

MMT-007 SCALE: 1/2"=1'-0"

12 WASH BAY LIFT TRENCH

8

4

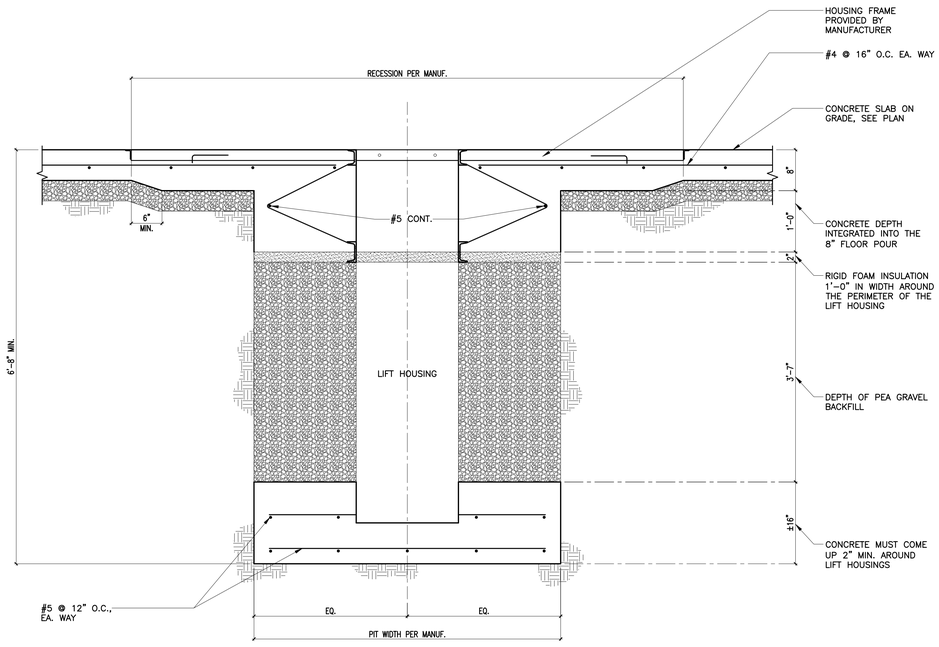

NOTES:
1. CONCRETE MUST BE VIBRATED TO ENSURE CONCRETE FLOWS FREELY UNDER HOUSINGS AND TO REMOVE AIR POCKETS.
2. CONTRACTOR TO COORDINATE ALL PIT DIMENSIONS WITH MANUFACTURER.

MMT-011 SCALE: 1"=1'-0"

14 HEAVY DUTY 2 POST LIFT ANCHORAGE

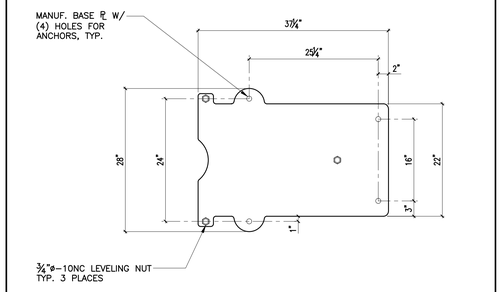

MMT-008 SCALE: 1"=1'-0"

9 WASH BAY LIFT ANCHOR PLATE

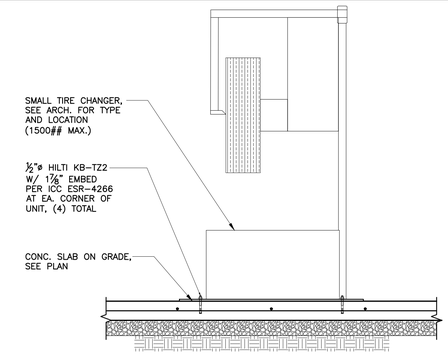

MMT-005 SCALE: ¾"=1'-0"

5 TIRE CHANGER ANCHORAGE

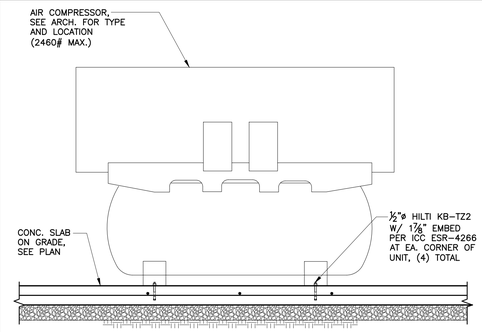

MMT-001 SCALE: ¾"=1'-0"

1 AIR COMPRESSOR ANCHORAGE

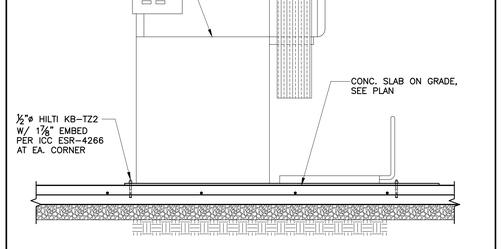

MMT-009 SCALE: ¾"=1'-0"

10 TIRE BALANCER ANCHORAGE

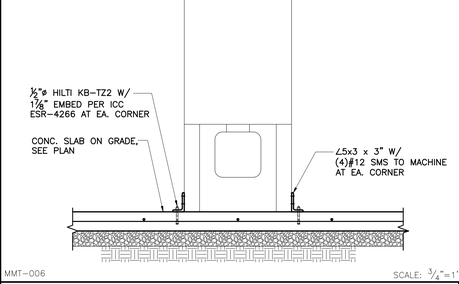

MMT-006 SCALE: ¾"=1'-0"

6 PARTICULATE MACHINE ANCHORAGE

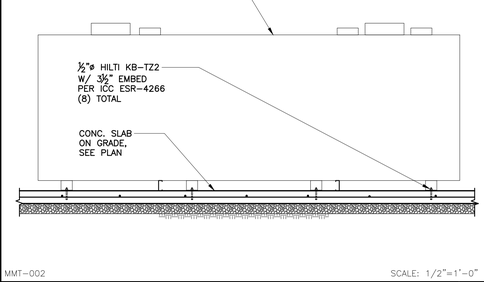

MMT-002 SCALE: 1/2"=1'-0"

2 BULK OIL STORAGE TANK ANCHORAGE

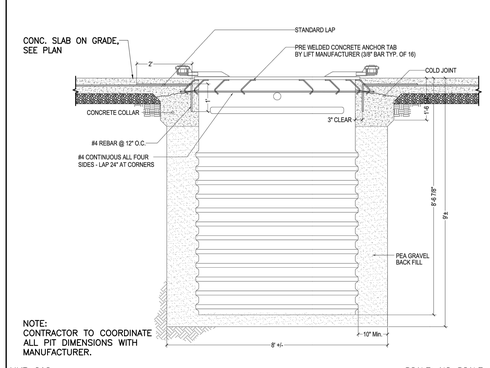

NOTE:
CONTRACTOR TO COORDINATE ALL PIT DIMENSIONS WITH MANUFACTURER.

MMT-012 SCALE: NO SCALE

19 LIGHT DUTY 2 POST LIFT "FRONT VIEW"

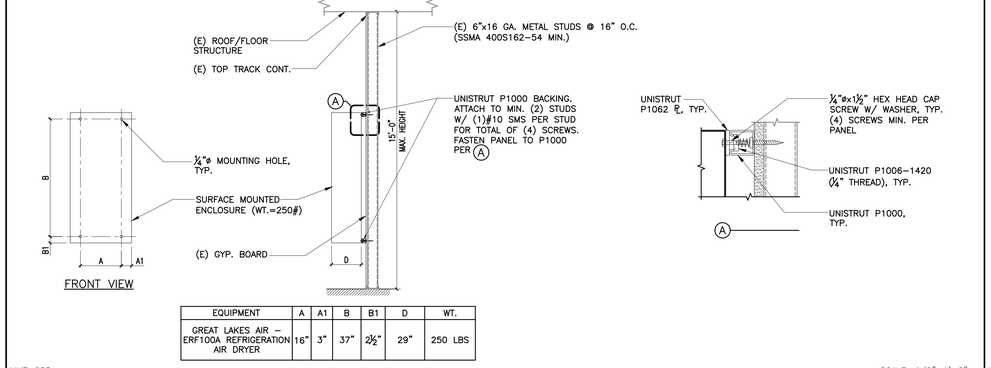

EQUIPMENT	A	A1	B	B1	D	WT.
GREAT LAKES AIR – ERF100A REFRIGERATION AIR DRYER	16"	3"	37"	2½"	29"	250 LBS

MMT-055 SCALE: 1/2"=1'-0"

11 MOUNTING DETAIL FOR REFRIGERATION AIR DRYER

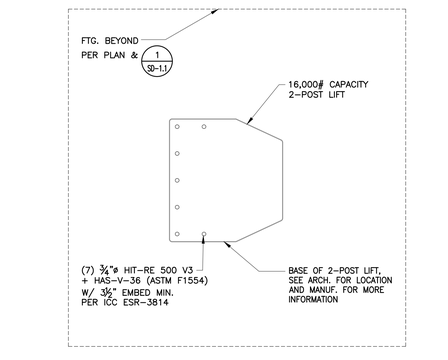

MMT-054 SCALE: 1"=1'-0"

7 2-POST LIFT ANCHORAGE

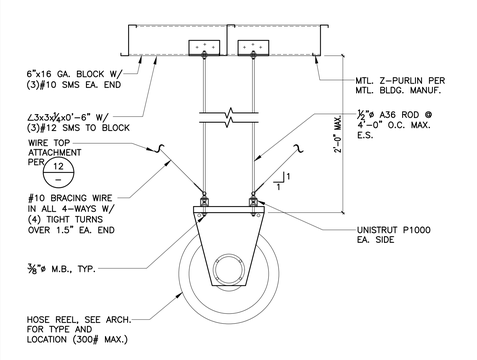

MMT-003 SCALE: 1"=1'-0"

3 HOSE REEL ANCHORAGE

KNA STRUCTURAL ENGINEERS
9931 Muirlands Boulevard, Irvine, CA 92618
Tel (949) 462-3200, Fax (949) 462-3201
KNA JOB NO: 203.653 CONSULTANT

RUHNAU CLARKE ARCHITECTS

STAMPS

REGISTERED PROFESSIONAL ENGINEER LAURENCE K. KNA No. 2785 Exp. 9-30-23 STRUCTURAL STATE OF CALIFORNIA

LICENSED ARCHITECT ROGER CLARKE No. C-21340 Exp. 10-31-24 STATE OF CALIFORNIA

AGENCY APPROVAL
File No.: #

MOUNTAIN AREA REGIONAL TRANSIT AUTHORITY:CITY SUBMITTAL 07/28/2023

PROJECT No. :50801
7/28/2023 7:23:47 AM

DRAWN BY: CHECKED BY:

ISSUE No.____ DATE____ DESCRIPTION____
ISSUE No.____ DATE____ DESCRIPTION____
ISSUE No.____ DATE____ DESCRIPTION____
ISSUE No.____ DATE____ DESCRIPTION____

REVISION No. #1 DATE 7/28/2023 DESCRIPTION City Resubmittal
REVISION No.____ DATE____ DESCRIPTION____
REVISION No.____ DATE____ DESCRIPTION____
REVISION No.____ DATE____ DESCRIPTION____

RUHNAUCLARKE.COM
3775 TENTH STREET, RIVERSIDE CALIFORNIA 92501 (951) 684 4664 / 5751 PALMER WAY, SUITE C, CARLSBAD CALIFORNIA 92010 (760) 438 5899

MOUNTAIN TRANSIT MAINTENANCE FACILITY
170 BUSINESS CENTER DR. BIG BEAR LAKES, CA
BIG BEAR LAKES

EQUIPMENT ANCHORAGE DETAILS

S3-1.1

				5
				6
				9
				10
				13
				14
				17
				18

REGISTERED PROFESSIONAL ENGINEER — No. 2795 Exp. 9-30-23 — STRUCTURAL — STATE OF CALIFORNIA

LICENSED ARCHITECT — ROGER CLARKE — No. C-31340 Exp. 10-31-2024 — STATE OF CALIFORNIA

STAMPS

AGENCY APPROVAL
File No.: #

KNA STRUCTURAL ENGINEERS
9931 Muirlands Boulevard, Irvine, CA 92618
Tel (949) 462-3200, Fax (949) 462-3201
KNA JOB NO: 203.653
CONSULTANT

RUHNAU CLARKE ARCHITECTS

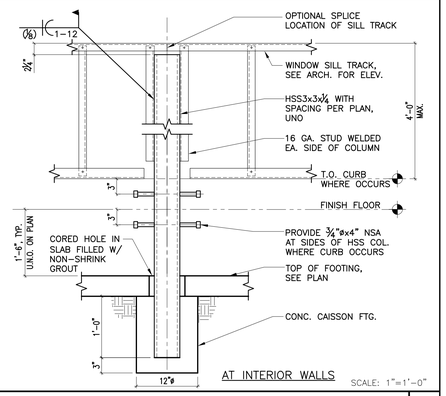

MTT-017

AT INTERIOR WALLS

SCALE: 1"=1'-0"

LOW WALL SUPPORT POST

1

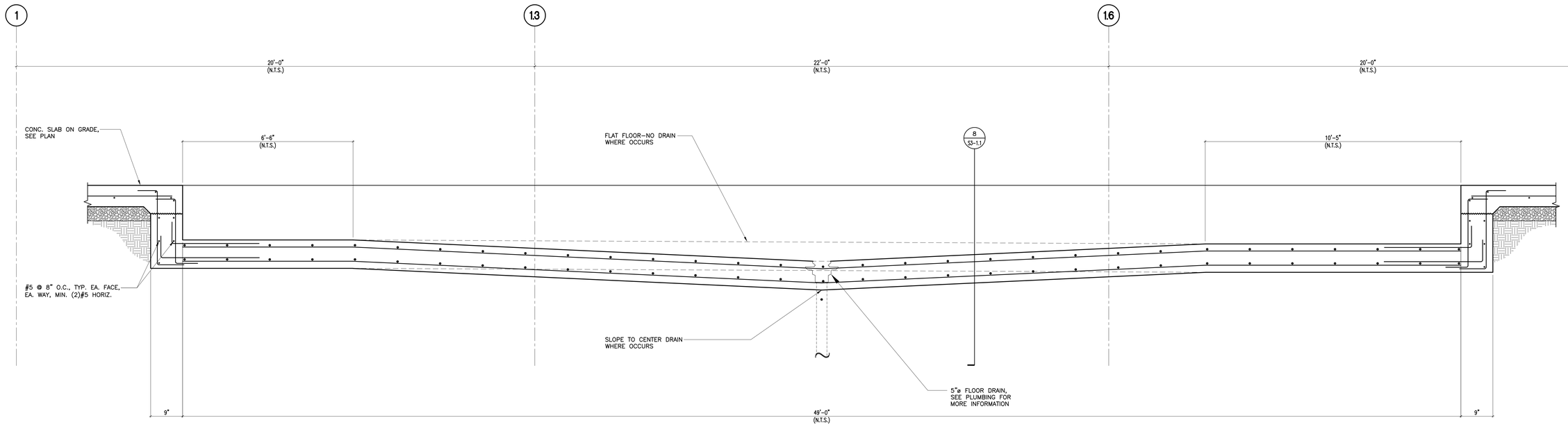

NOTE:
CONTRACTOR TO COORDINATE ALL PIT DIMENSIONS WITH LIFT MANUFACTURER.

FOR ADDITIONAL INFORMATION
SEE DETAIL 5 / S3-1.1

MMT-019

SCALE: 1"=1'-0"

WASH BAY LIFT AND SUMP PIT SECTION

3

PROJECT No. :50801
7/28/2023 7:23:47 AM

DRAWN BY: CHECKED BY:

ISSUE No.____	DATE____	DESCRIPTION____		REVISION No.__#1__	DATE 7/28/2023	DESCRIPTION City Resubmittal	
ISSUE No.____	DATE____	DESCRIPTION____		REVISION No.____	DATE____	DESCRIPTION____	
ISSUE No.____	DATE____	DESCRIPTION____		REVISION No.____	DATE____	DESCRIPTION____	
ISSUE No.____	DATE____	DESCRIPTION____		REVISION No.____	DATE____	DESCRIPTION____	

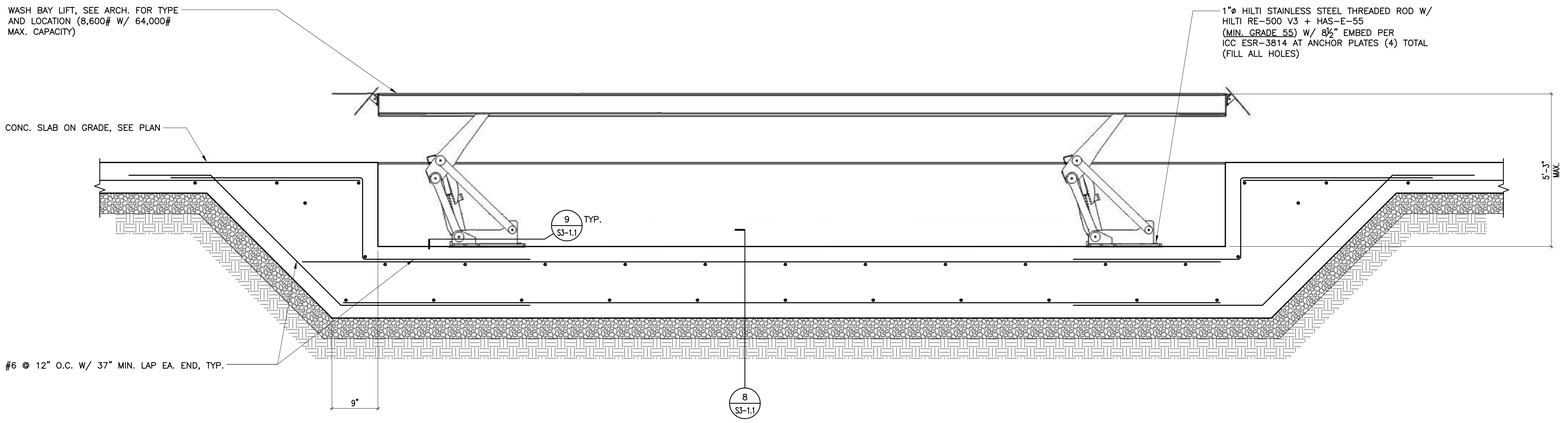

NOTE:
CONTRACTOR TO COORDINATE ALL PIT DIMENSIONS WITH LIFT MANUFACTURER.

MMT-014

SCALE: NO SCALE

WASH BAY LIFT ANCHORAGE

5

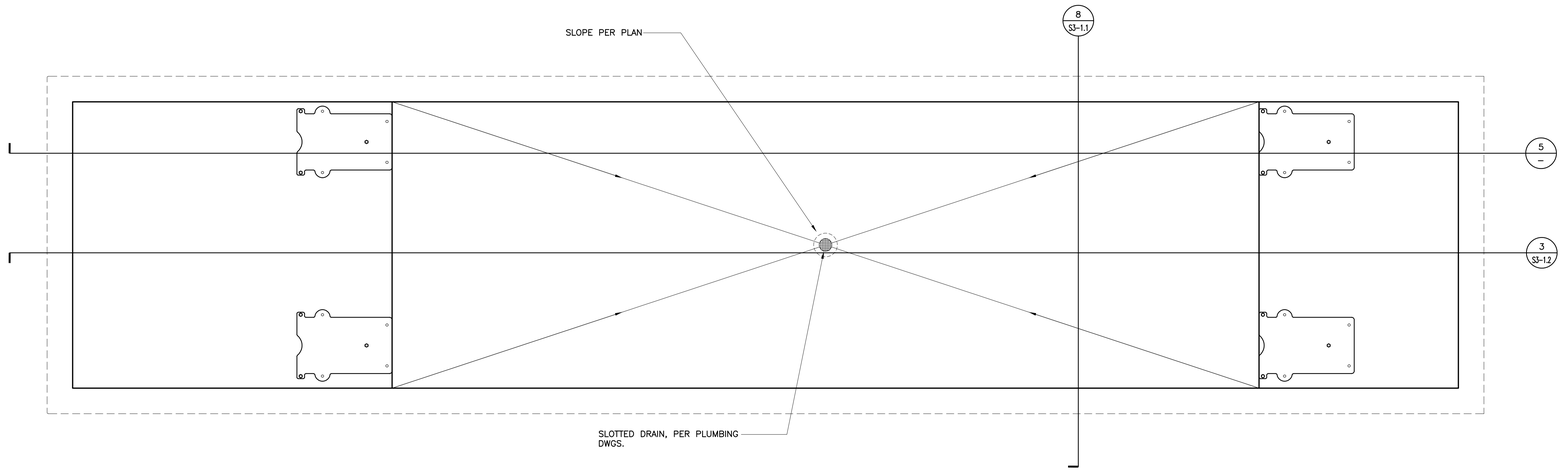

MMT-015

SCALE: ½"=1'-0"

WASH BAY LIFT ENLARGED PLAN

3

1

STAMPS

REGISTERED PROFESSIONAL ENGINEER — LAURENCE K. KNA — No. 2795 Exp. 9-30-23 — STRUCTURAL — STATE OF CALIFORNIA

LICENSED ARCHITECT — ROGER CLARKE — No. C-31340 Exp. 10-31-24 — STATE OF CALIFORNIA

AGENCY APPROVAL
File No.: #

KNA STRUCTURAL ENGINEERS
9931 Muirlands Boulevard, Irvine, CA 92618
Tel (949) 462-3200, Fax (949) 462-3201
KNA JOB NO: 203.653
CONSULTANT

RUHNAU CLARKE ARCHITECTS

MOUNTAIN AREA REGIONAL TRANSIT AUTHORITY:CITY SUBMITTAL 07/28/2023

PROJECT No. :50801
7/28/2023 7:23:47 AM

DRAWN BY: CHECKED BY:

ISSUE No.____ DATE____ DESCRIPTION____
ISSUE No.____ DATE____ DESCRIPTION____
ISSUE No.____ DATE____ DESCRIPTION____
ISSUE No.____ DATE____ DESCRIPTION____

REVISION No. #1 DATE 7/28/2023 DESCRIPTION City Resubmittal
REVISION No.____ DATE____ DESCRIPTION____
REVISION No.____ DATE____ DESCRIPTION____
REVISION No.____ DATE____ DESCRIPTION____

RUHNAUCLARKE.COM

3775 TENTH STREET, RIVERSIDE CALIFORNIA 92501 (951) 684 4664 / 5751 PALMER WAY, SUITE C, CARLSBAD CALIFORNIA 92010 (760) 438 5899

MOUNTAIN TRANSIT MAINTENANCE FACILITY
170 BUSINESS CENTER DR. BIG BEAR LAKES, CA
BIG BEAR LAKES

EQUIPMENT ANCHORAGE
DETAILS

S3-1.3

16	12	8	4	
17	13	9	5	1

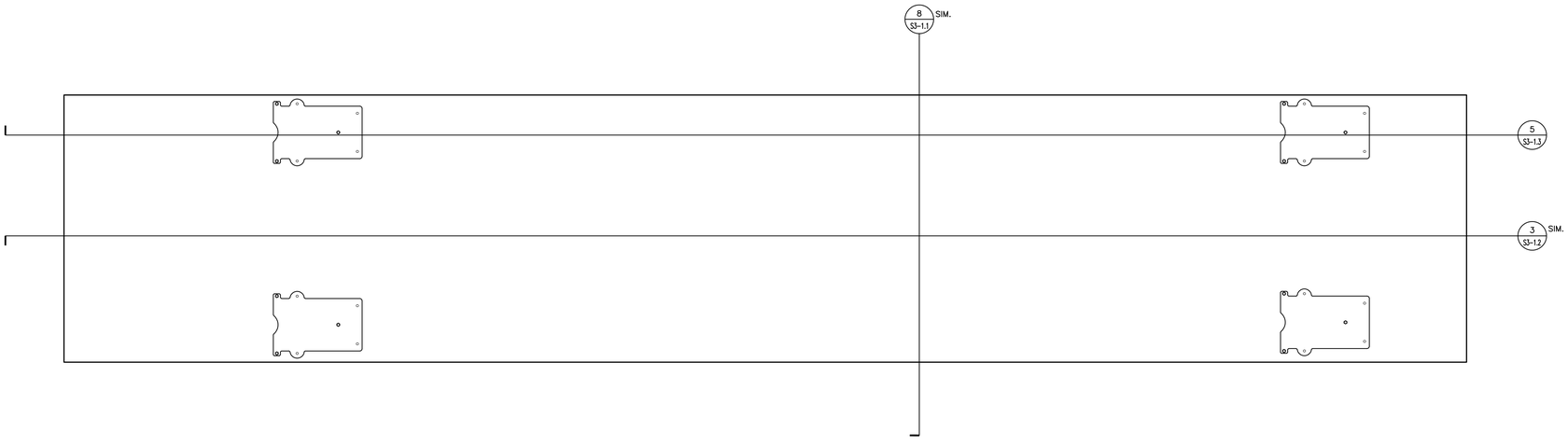

MTT-016

SCALE: 1/2"=1'-0"

MECHANICS BAY #2 LIFT ENLARGED PLAN

3

KNA STRUCTURAL ENGINEERS
9931 Muirlands Boulevard, Irvine, CA 92618
Tel (949) 462-3200, Fax (949) 462-3201
KNA JOB NO: 203.653
CONSULTANT

RUHNAU CLARKE ARCHITECTS

STAMPS

REGISTERED PROFESSIONAL ENGINEER — No. 2795 Exp. 9-30-23 — STRUCTURAL — STATE OF CALIFORNIA

LICENSED ARCHITECT — ROGER CLARKE — No. C-31340 Exp. 10-31-2024 — STATE OF CALIFORNIA

AGENCY APPROVAL
File No: #

MOUNTAIN AREA REGIONAL TRANSIT AUTHORITY:CITY SUBMITTAL 07/28/2023

PROJECT No. :50801
7/28/2023 7:23:47 AM

DRAWN BY: CHECKED BY:

ISSUE No._____ DATE_____ DESCRIPTION_____
ISSUE No._____ DATE_____ DESCRIPTION_____
ISSUE No._____ DATE_____ DESCRIPTION_____
ISSUE No._____ DATE_____ DESCRIPTION_____

REVISION No.__#1__ DATE 7/28/2023 DESCRIPTION City Resubmittal
REVISION No._____ DATE_____ DESCRIPTION_____
REVISION No._____ DATE_____ DESCRIPTION_____
REVISION No._____ DATE_____ DESCRIPTION_____

RUHNAUCLARKE.COM

3775 TENTH STREET, RIVERSIDE CALIFORNIA 92501 (951) 684 4664 / 5751 PALMER WAY, SUITE C, CARLSBAD CALIFORNIA 92010 (760) 438 5899

MOUNTAIN TRANSIT MAINTENANCE FACILITY
170 BUSINESS CENTER DR. BIG BEAR LAKES, CA
BIG BEAR LAKES

MECHANICS BAY #2 LIFT
ENLARGED PLAN

S3-1.4

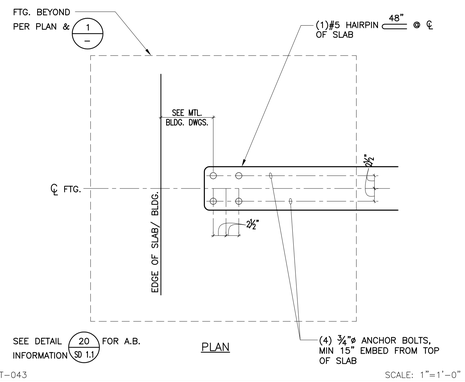

MMT–043 SCALE: 1"=1'–0"

DETAIL 17

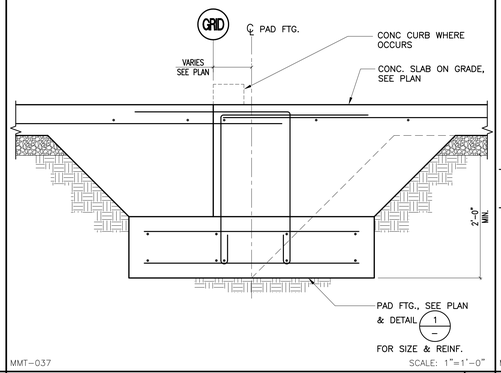

MMT–037 SCALE: 1"=1'–0"

DETAIL 13

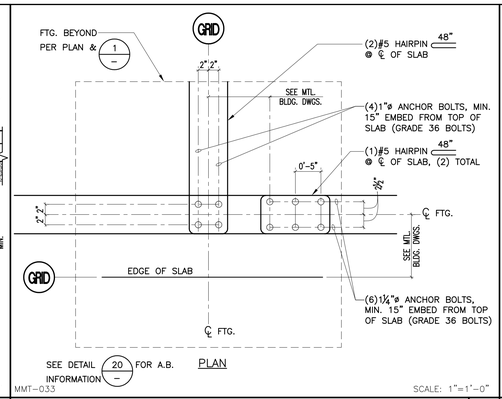

MMT–033 SCALE: 1"=1'–0"

DETAIL 9

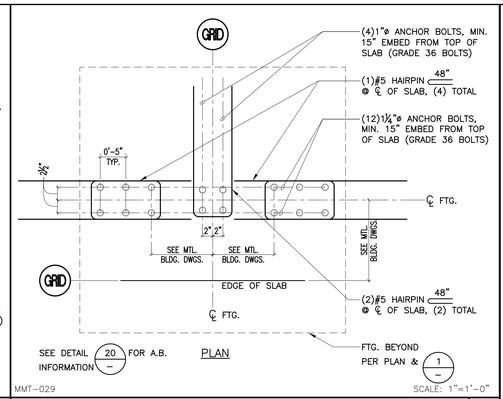

MMT–029 SCALE: 1"=1'–0"

DETAIL 5

STAMPS

REGISTERED PROFESSIONAL ENGINEER — STRUCTURAL — No. 2785 Exp. 9-30-23 — STATE OF CALIFORNIA

LICENSED ARCHITECT — ROGER CLARKE — No. C-31340 Exp. 10-31-2024 — STATE OF CALIFORNIA

AGENCY APPROVAL
File No.: # ###

KNA STRUCTURAL ENGINEERS
9931 Muirlands Boulevard, Irvine, CA 92618
Tel (949) 462-3200, Fax (949) 462-3201
KNA JOB NO: 203.653 CONSULTANT

RUHNAU CLARKE ARCHITECTS

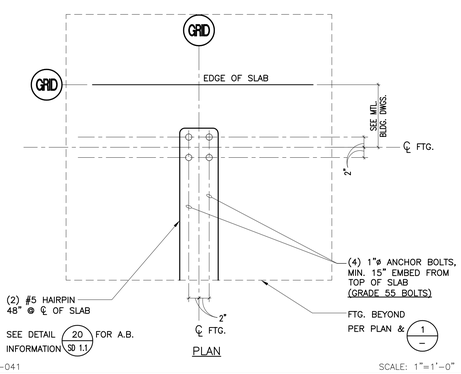

MMT–041 SCALE: 1"=1'–0"

DETAIL 18

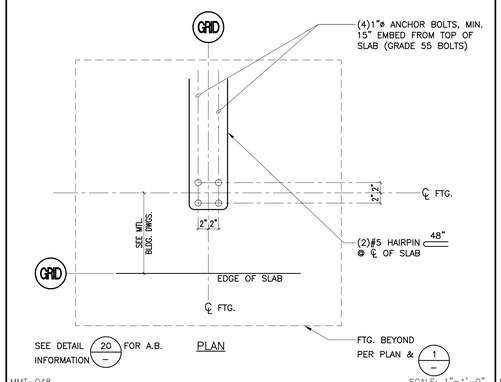

MMT–048 SCALE: 1"=1'–0"

DETAIL 14

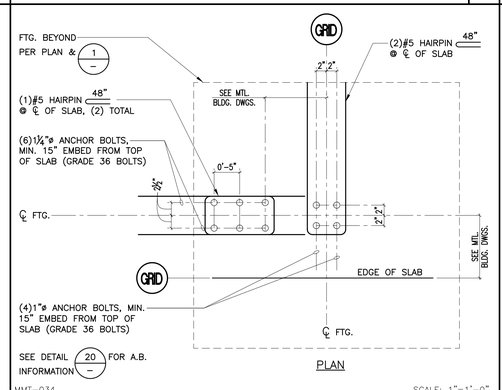

MMT–034 SCALE: 1"=1'–0"

DETAIL 10

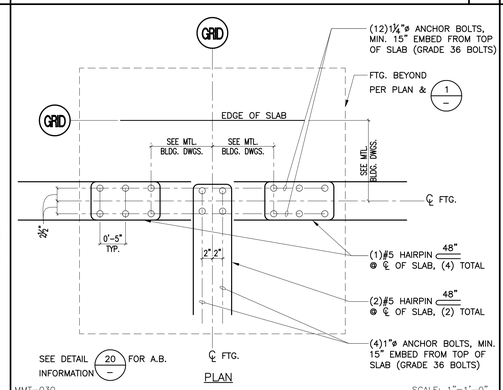

MMT–030 SCALE: 1"=1'–0"

DETAIL 6

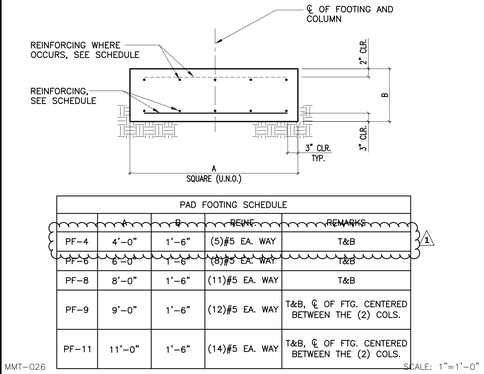

PAD FOOTING SCHEDULE				
	A	B	REINF.	REMARKS
PF–4	4'–0"	1'–6"	(5)#5 EA. WAY	T&B
PF–6	6'–0"	1'–6"	(8)#5 EA. WAY	T&B
PF–8	8'–0"	1'–6"	(11)#5 EA. WAY	T&B
PF–9	9'–0"	1'–6"	(12)#5 EA. WAY	T&B, ℄ OF FTG. CENTERED BETWEEN THE (2) COLS.
PF–11	11'–0"	1'–6"	(14)#5 EA. WAY	T&B, ℄ OF FTG. CENTERED BETWEEN THE (2) COLS.

MMT–026 SCALE: 1"=1'–0"

PAD FOOTING SCHEDULE 1

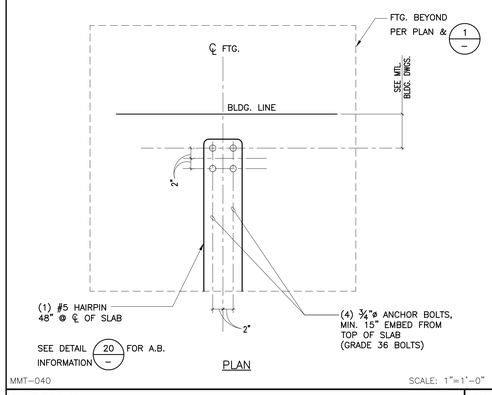

MMT–040 SCALE: 1"=1'–0"

DETAIL 19

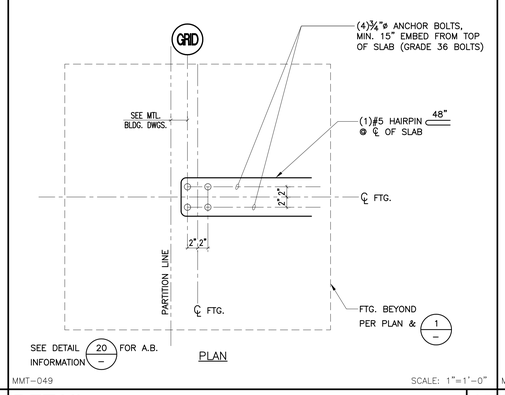

MMT–049 SCALE: 1"=1'–0"

DETAIL 15

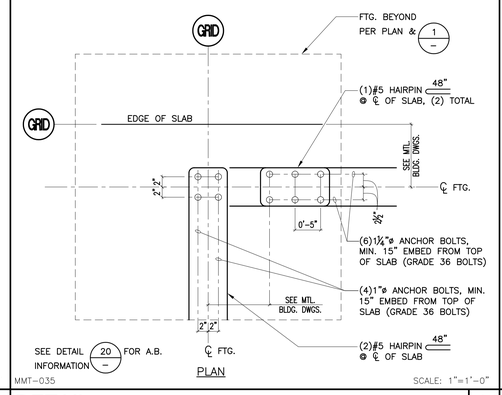

MMT–035 SCALE: 1"=1'–0"

DETAIL 11

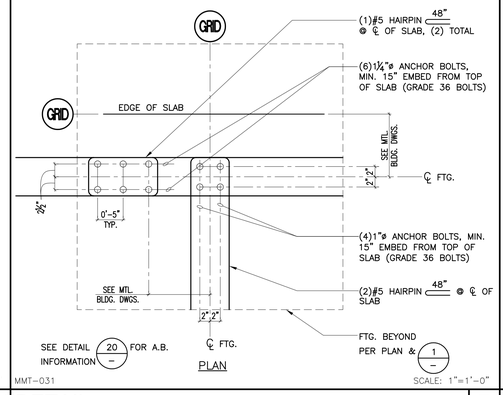

MMT–031 SCALE: 1"=1'–0"

DETAIL 7

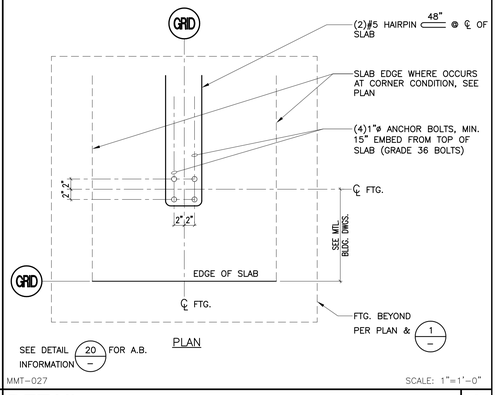

MMT–027 SCALE: 1"=1'–0"

DETAIL 2

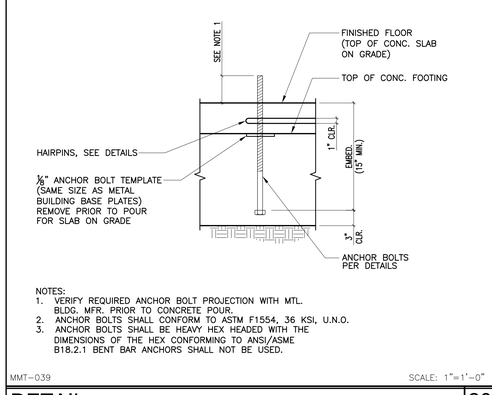

MMT–039 SCALE: 1"=1'–0"

DETAIL 20

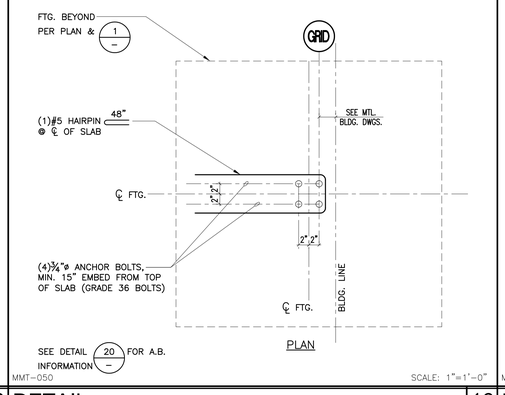

MMT–050 SCALE: 1"=1'–0"

DETAIL 16

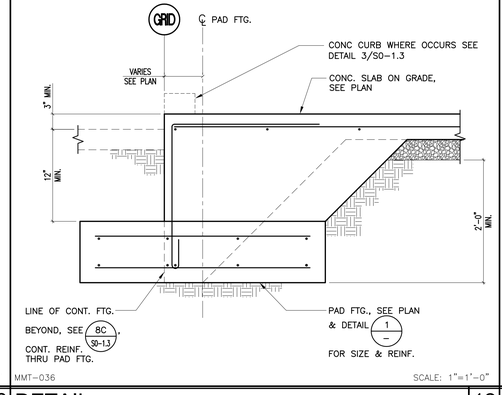

MMT–036 SCALE: 1"=1'–0"

DETAIL 12

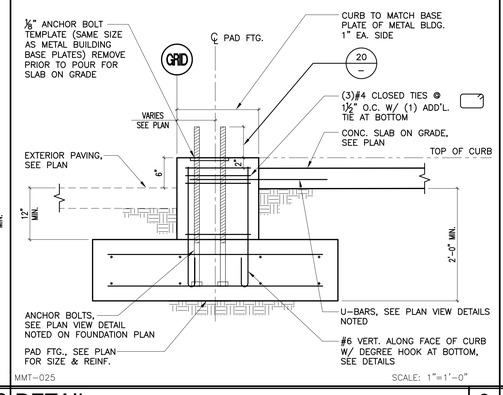

MMT–025 SCALE: 1"=1'–0"

DETAIL 8

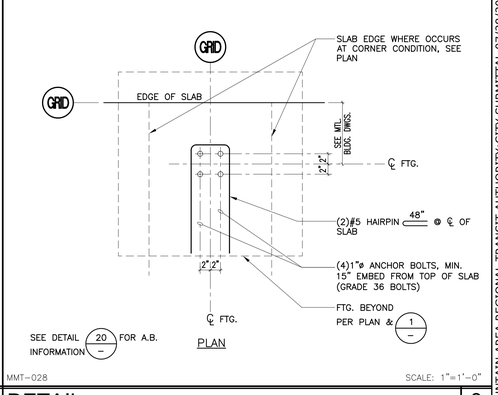

MMT–028 SCALE: 1"=1'–0"

DETAIL 3

MOUNTAIN AREA REGIONAL TRANSIT AUTHORITY:CITY SUBMITTAL 07/28/2023

PROJECT No. :50801
7/28/2023 7:23:47 AM

DRAWN BY: CHECKED BY:

ISSUE No.____	DATE____	DESCRIPTION____	
ISSUE No.____	DATE____	DESCRIPTION____	
ISSUE No.____	DATE____	DESCRIPTION____	
ISSUE No.____	DATE____	DESCRIPTION____	
REVISION No. #1	DATE 7/28/2023	DESCRIPTION City Resubmittal	
REVISION No.____	DATE____	DESCRIPTION____	
REVISION No.____	DATE____	DESCRIPTION____	
REVISION No.____	DATE____	DESCRIPTION____	

RUHNAUCLARKE.COM
3775 TENTH STREET, RIVERSIDE CALIFORNIA 92501 (951) 684 4664 / 5751 PALMER WAY, SUITE C, CARLSBAD CALIFORNIA 92010 (760) 438 5899

MOUNTAIN TRANSIT MAINTENANCE FACILITY
170 BUSINESS CENTER DR. BIG BEAR LAKES, CA
BIG BEAR LAKES

FOUNDATION DETAILS

SD-1.1

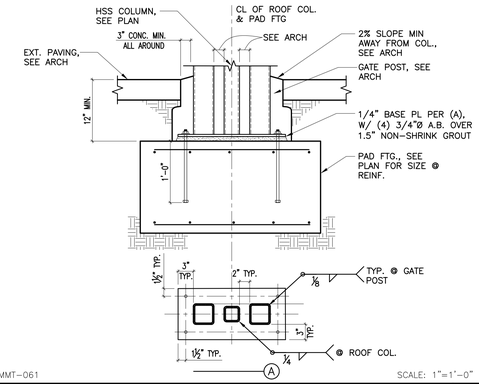

MMT-061 SCALE: 1"=1'-0"

DETAIL 13 | 9

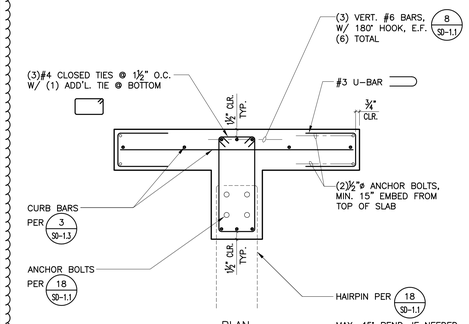

MMT-045 SCALE: 1"=1'-0"

DETAIL 5

STAMPS

AGENCY APPROVAL
File No.: #
Date:

KNA STRUCTURAL ENGINEERS
9931 Muirlands Boulevard, Irvine, CA 92618
Tel (949) 462-3200, Fax (949) 462-3201
KNA JOB NO: 203.653 CONSULTANT

RUHNAU CLARKE ARCHITECTS

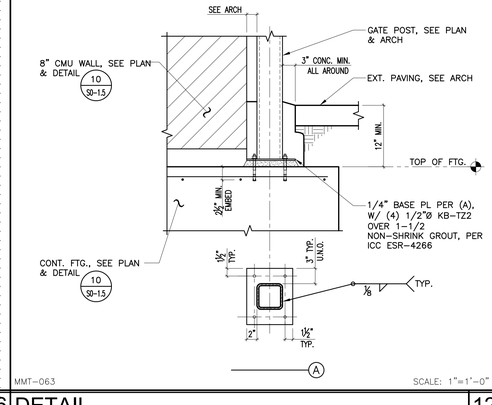

MMT-062 SCALE: 1"=1'-0"

DETAIL 14 | 10

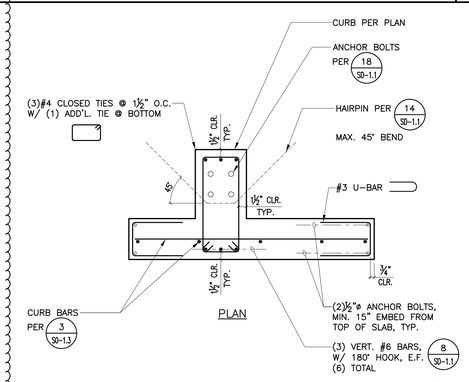

MMT-046 SCALE: 1"=1'-0"

DETAIL 6 | 1

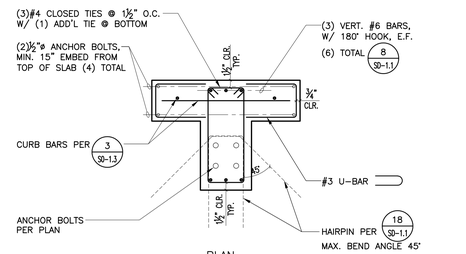

MMT-042 SCALE: 1"=1'-0"

DETAIL 2

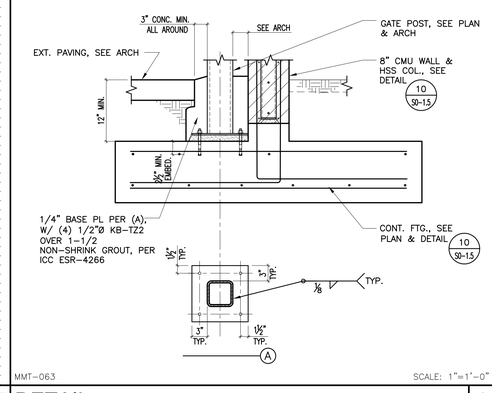

MMT-063 SCALE: 1"=1'-0"

DETAIL 15 | 11

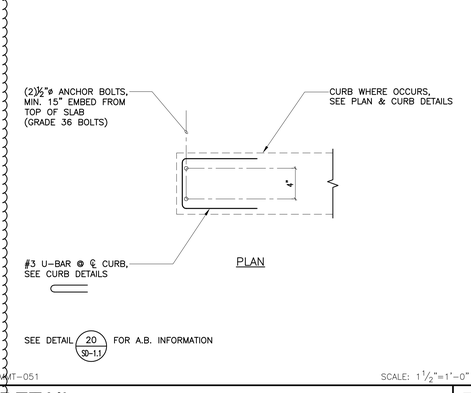

MMT-051 SCALE: 1½"=1'-0"

DETAIL 7

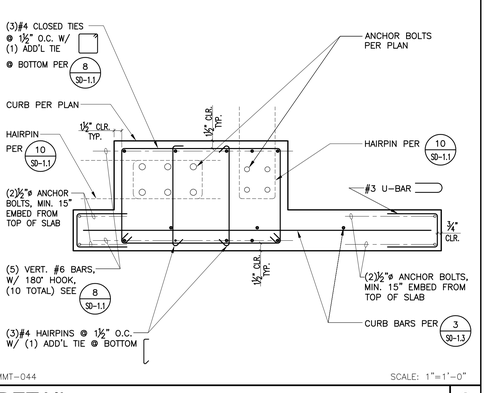

MMT-044 SCALE: 1"=1'-0"

DETAIL 3 | 2

MMT-063 SCALE: 1"=1'-0"

DETAIL 16 | 12

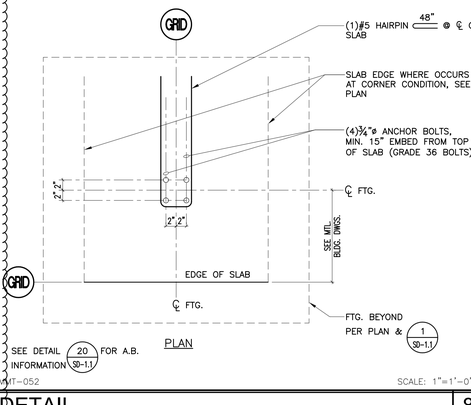

MMT-052 SCALE: 1"=1'-0"

DETAIL 8

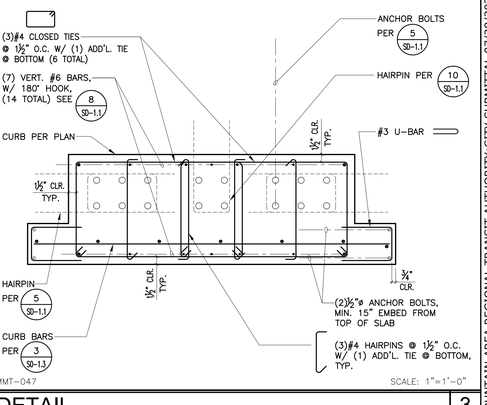

MMT-047 SCALE: 1"=1'-0"

DETAIL 1 | 3

MOUNTAIN AREA REGIONAL TRANSIT AUTHORITY:CITY SUBMITTAL 07/28/2023

PROJECT No. :50801
7/28/2023 7:23:47 AM

DRAWN BY: CHECKED BY:

ISSUE No.____ DATE____ DESCRIPTION____
ISSUE No.____ DATE____ DESCRIPTION____
ISSUE No.____ DATE____ DESCRIPTION____
ISSUE No.____ DATE____ DESCRIPTION____

REVISION No. #1 DATE 7/28/2023 DESCRIPTION City Resubmittal
REVISION No.____ DATE____ DESCRIPTION____
REVISION No.____ DATE____ DESCRIPTION____
REVISION No.____ DATE____ DESCRIPTION____

1

MECHANICAL BASIS OF DESIGN

A. OUTDOOR DESIGN CONDITIONS:

1. SUMMER: 85°F DB/62°F WB
2. WINTER: -1°F
3. ELEVATION: 6,745 FEET

B. DESIGN CONDITIONS:

OCCUPANT SPACE	OCC DENSITY	LIGHTING DENSITY	COOLING TEMPERATURE	HEATING TEMPERATURE	RELATIVE HUMIDITY	VENTILATION RATE
OFFICE	100 SF/OCC	0.7 W/SF	74°F+/-2°F	70°F+/-2°F	50%	0.15 CFM/SQFT
STORAGE	N/A	N/A	76°F	65°F	N/A	N/A
REPAIR BAY	N/A	N/A	76°F	65°F	N/A	N/A
ELECTRICAL ROOM	N/A	N/A	90°F MAX	N/A	N/A	N/A
DATA/ TELECOM	N/A	N/A	80°F	65°F	N/A	N/A

C. HVAC CONTROL METHOD:

1. PROGRAMMABLE T-STAT.

D. CALIFORNIA VENTILATION CRITERIA:

1. COMPLY WITH CALIFORNIA BUILDING ENERGY EFFICIENCY STANDARD.

E. EXHAUST TO OUTDOORS (MINIMUM RATES)

1. RESTROOMS: 70 CFM/(WC or U)

F. BUILDING ENVELOPE:

1. REFER TO THE ARCHITECTURAL DRAWINGS AND SPECIFICATIONS FOR ENVELOPE REQUIREMENTS

G. DUCTWORK DESIGN CRITERIA (MAXIMUM ALLOWABLE AIR PRESSURE DROPS AND AIR VELOCITIES) TO MEET HIGH EFFICIENCY OPERATION WITH MINIMAL ACOUSTICAL NOISE. DUCT STATIC PRESSURE FRICTION LOSS SHALL NOT EXCEED 0.2" PER 100 FEET IN MECHANICAL ROOMS. LOW PRESSURE SUPPLY AND EXHAUST DUCT STATIC PRESSURE FRICTION LOSS BASED ON A MAXIMUM OF 0.08" PER 100 FEET. LOW PRESSURE RETURN DUCT STATIC PRESSURE FRICTION LOSS BASED ON A MAXIMUM OF 0.05" PER 100 FEET.

1. IN ADDITION, MAXIMUM SUPPLY, RETURN AND EXHAUST DUCT AIR FLOW VELOCITIES, REGARDLESS OF PRESSURE DROP, SHALL NOT EXCEED THE FOLLOWING CRITERIA:
   - A. MAINS ABOVE CEILING: 1750 FPM
   - B. MAINS ABOVE OPEN OCCUPIED SPACES: 1450 FPM
   - C. BRANCHES ABOVE CEILING: 1400 FPM
   - D. BRANCHES ABOVE OPEN OCCUPIED SPACES: 1150 FPM
   - E. RUN-OUTS TO DIFFUSERS: 725 FPM
   - F. IN SHAFTS: 2500 FPM
   - G. IN MECHANICAL ROOMS: 3000 FPM

H. ACOUSTICAL

1. THE FOLLOWING NOISE NC/RC CRITERIA LEVELS WILL BE DESIGNED AS DEFINED IN THE ASHRAE HVAC APPLICATIONS HANDBOOK. THESE LEVELS ADDRESS THE MECHANICAL SYSTEMS ONLY. ACTUAL SOUND PERFORMANCE REQUIREMENTS FOR EACH SPACE MUST BE VERIFIED WITH ACOUSTICAL CONSULTANT.
   - A. OFFICES: 30

MECHANICAL PIPE INSULATION SCHEDULE

FLUID TEMPERATURE RANGE (°F)	CONDUCTIVITY RANGE (IN BTU-INHR PER SQFT/°F)	INSULATION MEAN RATING TEMPERATURE (°F)		PIPE SIZE (IN. DIA>)				
				< 1	1 to < 1.5	1.5 to < 4	4 to < 8	8 AND LARGER
				REQUIRED INSULATION THICKNESS (IN.)				
HOT WATER SYSTEMS								
105° - 140°	0.22 - 0.28	100°	INCHES	1.0	1.5	1.5	1.5	1.5
			R-VALUE	R-7.7	R-12.5	R-11	R-9	R-8
SPACE COOLING SYSTEMS (REFRIGERANT)								
40° - 60°	0.21 - 0.27	75°	INCHES	NONRES 0.5 / RES 0.75	NONRES 0.5 / RES 0.75	1.0	1.0	1.0
			R-VALUE	NONRES R-3 / RES R-6	NONRES R-3 / RES R-5	R-7	R-6	R-5
BELOW 40°	0.20 - 0.26	50°	INCHES	1.0	1.5	1.5	1.5	1.5
			R-VALUE	R-8.5	R-14	R-12	R-10	R-9

NOTE: WHERE INSULATED PIPING IS EXPOSED OUTDOORS, IT SHALL BE COVERED. COVER OUTDOOR EXPOSED INSULATED PIPING WITH 0.016 INCH THICK CORRUGATED ALUMINUM JACKET. PROVIDE VALVE STEM EXTENSIONS SUCH THAT INSULATION IS NOT DAMAGED WHEN VALVE IS CYCLED

MECHANICAL PIPE MATERIAL SCHEDULE

SERVICE	PIPE MATERIAL	JOINT TYPES	FITTINGS MATERIAL	PRESSURE RATING	VALVE TYPES
HEATING HOT WATER (LESS THAN 2")	COPPER TYPE "L"	SOLDERED	CAST BRONZE WROUGHT COPPER	125 PSI	BALL BUTTERFLY CHECK
REFRIGERATION PIPE SIZES 1/4" TO 3/4" (OD)	NITROGENIZED ACR-ANNEALED COPPER TYPE "K"	BRAZED FLARE	COPPER TYPE "K" BRASS	700 PSI	BALL SOLENOID TXV
REFRIGERATION PIPE SIZES 7/8" TO 1-5/8" (OD)	NITROGENIZED ACR-DRAWN TEMPER COPPER TYPE "K"	BRAZED FLARE	COPPER TYPE "K" BRASS	700 PSI	BALL SOLENOID TXV
SNOW MELT PIPING BEYOND MANIFOLD	PEXa	COMPRESSION	BRASS OR STAINLESS STEEL	100 PSI	BALL SOLENOID TXV

MECHANICAL GENERAL NOTES

1. THE TOTAL INSTALLATION SHALL COMPLY WITH ANY AND REQUIREMENTS OF THE LEGALLY CONSTITUTED AUTHORITIES HAVING JURISDICTION INCLUDING 2022 CBC (CALIFORNIA BUILDING CODE), 2022 CMC/CPC (CALIFORNIA MECHANICAL AND PLUMBING CODE), 2022 CAL GREEN REQUIREMENTS AND THE 2022 TITLE 24 ENERGY CODE.
2. THE CONTRACTOR SHALL VISIT THE SITE PRIOR TO BID AND SHALL THOROUGHLY FAMILIARIZE THEMSELVES WITH THE EXISTING CONDITIONS UNDER WHICH HE WILL BE REQUIRED TO WORK.
3. ALL INDICATED DIMENSIONS ARE APPROXIMATE AND ARE GIVEN FOR ESTIMATE PURPOSES ONLY. BEFORE PROCEEDING WITH THE WORK THIS CONTRACTOR SHALL CAREFULLY CHECK AND VERIFY DIMENSIONS, SIZES, REQUIRED CLEARANCES AND SHALL ASSUME FULL RESPONSIBILITY FOR THE FITTING OF EQUIPMENT AND MATERIALS HEREIN REQUIRED TO OTHER PARTS OF THE WORK OF OTHER TRADES. DUCT DIMENSIONS SHOWN ON PLANS ARE NET INSIDE CLEAR.
4. THE DRAWINGS ARE ESSENTIALLY DIAGRAMMATIC TO THE EXTENT THAT OFFSETS, BENDS, SPECIAL FITTINGS AND LOCATIONS ARE NOT EXACTLY LOCATED. DUCTWORK DIMENSIONS SHOWN ON THE DRAWINGS ARE NET INSIDE DIMENSIONS. DO NOT FABRICATE DUCTWORK FROM THESE DRAWINGS. THE MECHANICAL CONTRACTOR IS RESPONSIBLE FOR SUPPLYING SHOP DRAWINGS WHICH REFLECT THE PROPOSED INSTALLATION. THE SHOP DRAWINGS MUST BE APPROVED BY THE ENGINEER PRIOR TO ANY SHEET METAL FABRICATION. THE MECHANICAL CONTRACTOR IS RESPONSIBLE FOR PROVIDING ACCURATE AS-BUILT DRAWINGS AT THE COMPLETION OF THE PROJECT AND SUBMITTING THEM TO THE ENGINEER AND OWNER.
5. IN THE PREPARATION OF THESE DOCUMENTS, CERTAIN ASSUMPTIONS ARE MADE REGARDING EXISTING CONDITIONS. SOME OF THESE ASSUMPTIONS MAY NOT BE VERIFIABLE WITHOUT EXPENDING ADDITIONAL SUMS OF MONEY OR DESTROYING OTHERWISE ADEQUATE OR SERVICEABLE PORTIONS OF EXISTING BUILDINGS AND/OR EQUIPMENT. THEREFORE, THE ENGINEER SHALL NOT BE HELD RESPONSIBLE FOR ANY CHANGES OR ADDITIONAL COSTS INCURRED DUE TO EXISTING CONDITIONS.
6. THE CONTRACTOR SHALL COMPLY WITH CONTRACT DOCUMENTS IN LAYING OUT HIS WORK AND EQUIPMENT. HE SHALL COORDINATE THE WORK OF THIS SECTION WITH THE WORK OF OTHER TRADES AND JOB CONDITIONS.
7. THE INSTALLATION OF ACCESS PANELS OR OTHER INDICATING EQUIPMENT OR SPECIALTIES REQUIRING READING, ADJUSTMENT, INSPECTION, REPAIRS, REMOVAL OR REPLACEMENT SHALL BE CONVENIENTLY LOCATED WITH REFERENCE TO THE FINISHED BUILDING.
8. WHERE MATERIAL IS SHOWN ON THE DRAWINGS BUT NOT SPECIFIED, IT SHALL BE OF THE SAME TYPE AND QUALITY AS EXISTING MATERIAL.
9. PROVIDE MANUAL VOLUME DAMPERS AT UPSTREAM PORTION OF TERMINAL AIR BRANCHES. THESE SHALL BE OF THE LOCKING QUADRANT TYPE. WHERE LOCATED OVER SLOPED OR HARD CEILINGS, PROVIDE DURO-DYNE ANGLE GEAR DRIVE OR BOWDEN CABLE CONTROL SYSTEM OR PROVIDE UNITED ENERTECH POWER/BALANCE SYSTEM. REMOTE PLATE LOCATIONS TO BE LOCATED AS DETERMINED BY ARCHITECT.
10. PROVIDE MINIMUM 1" ACOUSTICAL LINING IN DUCTWORK WITHIN 10 FEET OF AIR MOVING EQUIPMENT. PROVIDE DURO-DYNE FLEXIBLE CONNECTION AT DUCT AT EQUIPMENT LOCATIONS.
11. DUCTS IN AN UNCONDITIONED SPACE OR EXTERIOR DUCT WORK SHALL HAVE A MIN. OF R-8 INSULATION. DUCTS WITHIN THE CONDITIONED ENVELOPE ABOVE A CEILING SHALL HAVE A MIN. OF R-4.2 INSULATION. EXTERIOR DUCTWORK SHALL NOT HAVE INSULATION EXPOSED TO THE ENVIRONMENT.
12. WHERE NOT SPECIFICALLY INDICATED OTHERWISE, DUCTWORK AND EQUIPMENT SHALL BE SUPPORTED PER THE SMACNA GUIDELINES FOR SEISMIC RESTRAINT AND CURRENT APPLICABLE UNIFORM MECHANICAL CODE.
13. WHEN A FIRE ALARM SYSTEM WITH FULL COVERAGE SMOKE DETECTORS ARE PROVIDED, DUCT SMOKE DETECTORS MAY BE ELIMINATED. FIRE ALARM CONTRACTOR SHALL WIRE SMOKE/FIRE DAMPER ACTIVATORS TO AREA SMOKE DETECTORS.
14. TESTING, ADJUSTING, AND BALANCING (TAB) OF THE AIR CONDITIONING SYSTEMS AND RELATED ANCILLARY EQUIPMENT WILL BE PERFORMED BY A CERTIFIED, INDEPENDENT THIRD PARTY, AABC AGENCY PROCURED BY THE MECHANICAL CONTRACTOR. A COMPLETE AIR BALANCE REPORT TO BE SUBMITTED TO THE ADMINISTRATIVE AUTHORITY AND TO THE MECHANICAL ENGINEER AND APPROVED PRIOR TO FINAL PAYMENT.
15. AIR HANDLING DUCT SYSTEMS SHALL BE CONSTRUCTED, INSTALLED AND INSULATED AS PROVIDED IN CHAPTER 6 OF 2022 CMC.
16. MATERIALS EXPOSED WITHIN DUCTS OR PLENUMS SHALL BE NONCOMBUSTIBLE OR SHALL HAVE FLAME SPREAD INDEX NOT GREATER THAN 25 AND A SMOKE DEVELOPED INDEX NOT GREATER THAN 50 (2022 CMC SECTION 602.2).
17. ALL DUCTWORK SHALL BE HARD DUCT. FLEXIBLE AIR DUCTS AND CONNECTORS SHALL BE NOT MORE THAN 5' IN LENGTH AND SHALL NOT BE USED IN LIEU OF RIDGED ELBOWS OR FITTINGS. FLEXIBLE AIR DUCTS SHALL BE PERMITTED TO BE USED AS AN ELBOW AT A TERMINAL DEVICE (SEC 603.4.1 CMC).
18. ANY SUBSTITUTION MADE BY THE CONTRACTOR THAT IS DIFFERENT FROM WHAT IS SPECIFIED ON THE DRAWINGS SHALL BE CLEARLY INDICATED ON THE SUBMITTAL AS TO THAT IS BEING SUBSTITUTED.
19. THERMOSTATS SHALL COMPLY WITH THE 2022 ENERGY COMMISSION AND SHALL BE WIFI ENABLED.
20. AT THE TIME OF ROUGH INSTALLATION, OR DURING STORAGE ON THE CONSTRUCTION SITE AND UNTIL FINAL STARTUP OF THE HEATING AND COOLING EQUIPMENT, DUCT AND OTHER RELATED AIR DISTRIBUTION COMPONENT OPENINGS SHALL BE COVERED WITH TAPE, PLASTIC, SHEET METAL OR OTHER METHOIDS ACCEPTABLE TO THE ENFORCING AGENCY TO REDUCE THE AMOUNT OF DUCT OR DEBRIS WHICH MAY COLLECT IN THE SYSTEM.
21. WHERE MORE THAN ONE HEATING, COOLING, VENTILATING, OR REFRIGERATING SYSTEM IS INSTALLED ON THE ROOF OF A BUILDING OR WITHIN A BUILDING, IT SHALL BE PERMANENTLY IDENTIFIED AS TO THE AREA OR SPACE SERVED BY THE EQUIPMENT. (CMC 303.8) PROVIDE PERMANENT LABELING AND IDENTIFICATION FOR HVAC UNIT (SINGLE SYSTEM OR MULTIPLE) AND THERMOSTATS. IDENTIFICATION FOR THE THERMOSTATS SHALL CORRELATE TO THE HVAC UNIT THAT IT SERVES.
22. AIR CONDITIONING REFRIGERATION SERVICE PORTS LOCATED OUTDOORS SHALL BE FITTED WITH LOCKING TYPE TAMPER RESISTANT CAP OR SHALL BE PROTECTED FROM UNAUTHORIZED ACCESS BY A MEANS ACCEPTABLE TO THE BUILDING DEPARTMENT PER CMC SECTION 1106.14.

AIR DISTRIBUTION SCHEDULE

SYMBOL	DESCRIPTION	MANUFACTURER & MODEL NO.	FINISH	ACCESSORIES
CD	CEILING DIFFUSER	"KRUEGER" MODEL 1240	BRITISH WHITE	-
CE / CR	CEILING REGISTER	"KRUEGER" MODEL S80	BRITISH WHITE	-
SG	SUPPLY SIDEWALL GRILLE	"KRUEGER" MODEL 880	BRITISH WHITE	-
RG	RETURN SIDEWALL GRILLE	"KRUEGER" MODEL S85	BRITISH WHITE	-
RD	ROUND DIFFUSER	"KRUEGER" MODEL RA2	BRITISH WHITE	-
EG	EXHAUST SIDEWALL GRILLE	"KRUEGER" MODEL S85	BRITISH WHITE	-

(1) AT ALL HARD LID CEILINGS, CONTRACTOR SHALL PROVIDE FOR "MAT" CABLE DRIVEN DAMPERS. MODEL RT-150. CABLE SHALL BE ROUTED BEHIND GRILLE OPENING AND INSTALLED PER MANUFACTURER'S REQUIREMENTS.

HVAC LEGEND

SYMBOLS	ABBREVIATIONS	DESCRIPTIONS
		SQ., RECT., OR ROUND DUCT SIZE AS NOTED
		DUCT WITH ACOUSTICAL LINER
		FLEXIBLE DUCT
	CD	CEILING DIFFUSER, SUPPLY
	CR / CE	CEILING REGISTER, RETURN / EXHAUST
		SECTION THROUGH DUCT
		DUCT DOWN
		RECTANGULAR TO ROUND TRANSITION
		DUCT ACCESS DOOR
		MITERED DUCT ELBOW WITH TURNING VANES
	SFD	COMBINATION SMOKE / FIRE DAMPER WITH ACCESS DOOR
	MVD	MANUAL VOLUME DAMPER, LOCKING QUADRANT TYPE FOR ROUND DUCT OR OPPOSED BLADE TYPE FOR RECT DUCT.
DETAIL No. / SHEET No.		SECTION REFERENCE
DETAIL No.		DETAIL REFERENCE
EQUIPMENT ID. No.		EQUIPMENT DESIGNATION AND NUMBER
	OBD	OPPOSED BLADE DAMPER
		PARALLEL DAMPER
T	T'STAT	THERMOSTAT
CO2	CO2 SENSOR	CO2 SENSOR
CO/NO2	CO/NO2 SENSOR	GAS DETECTION SENSOR
DD		DUCT DETECTOR
RS		REMOTE SENSOR
	A.F.F.	ABOVE FINISHED FLOOR
	CFM	CUBIC FEET OF AIR PER MINUTE
	CFMS	CFM SUPPLY
	CFMR	CFM RETURN
	CFME	CFM EXHAUST
	O.S.A.	OUTSIDE AIR
	30"x10"	INDICATES RECTANGULAR DUCT SIZE: WIDTH x HEIGHT
	12"Ø	INDICATES ROUND DUCT SIZE: DIAMETER
	POC	POINT OF CONNECTION
	POD	POINT OF DEMOLITION
	REFR.	REFRIGERANT LINES
	SA	SUPPLY AIR
	RA	RETURN AIR
	EA	EXHAUST AIR

ANCHORAGE AND BRACING NOTES

1. PIPES, DUCTS AND CONDUITS SHALL BE SUPPORTED AND BRACED PER THE 2006 SMACNA "GUIDELINES FOR SEISMIC RESTRAINTS OF MECHANICAL SYSTEMS AND PLUMBING SYSTEMS", THE "SUPERSTRUT SEISMIC RESTRAINT SYSTEM" FOR PIPES AND CONDUITS ONLY.

APPLICABLE NOTES

1. 2022 BUILDING STANDARDS ADMINISTRATIVE CODE, PART 1, TITLE 24 C.C.R.
2. 2022 CALIFORNIA BUILDING CODE (CBC),PART 2, TITLE 24 C.C.R. (IBC WITH AMENDMENTS)
3. 2022 CALIFORNIA ELECTRICAL CODE (CEC), PART 3, TITLE 24 C.C.R. (NEC WITH AMENDMENTS)
4. 2022 CALIFORNIA MECHANICAL CODE (CMC), PART 4, TITLE 24 C.C.R. (UMC WITH AMENDMENTS)
5. 2022 CALIFORNIA PLUMBING CODE (CPC), PART 5, TITLE 24 C.C.R. (UPC WITH AMENDMENTS)
6. 2022 CALIFORNIA FIRE CODE, PART 9, TITLE 24 C.C.R. (IFC WITH AMENDMENTS)
7. 2022 CALIFORNIA REFERENCED STANDARDS, PART 12, TITLE 24 C.C.R.
8. 2022 TITLE 19 C.C.R., PUBLIC SAFETY, STATE FIRE MARSHAL REGULATIONS.
9. 2022 CALIFORNIA ENERGY CODE (PART 6, TITLE 24 C.C.R.)
10. 2022 CALIFORNIA GREEN BUILDING STANDARDS CODE (CGBSC), PART 11, TITLE 24 C.C.R.

MECHANICAL SHEET INDEX

SHEET #	SHEET NAME
M0-0.1	MECHANICAL LEGENDS NOTES & SCHEDULES
M0-0.2	MECHANICAL SCHEDULES CONT.
M0-0.3	ENV T24 COMPLIANCE FORMS
M0-0.4	ENV T24 COMPLIANCE FORMS
M0-0.5	ENV T24 COMPLIANCE FORMS
M0-0.6	MCH T24 COMPLIANCE FORMS
M0-0.7	MCH T24 COMPLIANCE FORMS
M0-1.0	MECHANICAL SITE PLAN
M1-1.1	MECHANICAL FLOOR & ROOF PLANS
M1-1.2	MECHANICAL ENLARGED PLAN
M2-0.1	MECHANICAL DETAILS
M2-0.2	MECHANICAL DETAILS CONT.
M2-0.3	MECHANICAL CONTROLS
M3-0.1	REHAU SNOW MELT SYSTEM
M3-0.2	REHAU SNOW MELT SYSTEM
M3-0.3	REHAU SNOW MELT SYSTEM

REGISTERED PROFESSIONAL ENGINEER — No. 33209 — EXP. 9-30-2023 — MECHANICAL — STATE OF CALIFORNIA

LICENSED ARCHITECT — RENEW 08/31/2024 — No. C-31345 — Exp. 10-31-2024 — STATE OF CALIFORNIA

STAMPS

AGENCY APPROVAL
File No.: n.a

MECHANICAL ELECTRICAL AND ENERGY CONSULTANTS

DESIGN WEST ENGINEERING

412 E. Vanderbilt Way
San Bernardino, CA 92408
Tel: 909-890-3700
Fax: 909-890-3770
Email: cadd@designwesteng.com

CONSULTANT BRANDING

RUHNAU CLARKE ARCHITECTS

MOUNT TRANSIT MAINTENANCE FACILITY:

PRINTED: 7/26/2023 1:32:52 PM
PATH: R:\Projects\50801_MMTF\21061_Mountain Transit Maintenance Facility_CD\Mech\M0-0.1.dwg

PROJECT No. :50801
7/26/2023 1:32:52 PM

DRAWN BY: CHECKED BY:

ISSUE No.____ DATE____ DESCRIPTION____
REVISION No.____ DATE____ DESCRIPTION____

AC UNIT SCHEDULE

TAG	MANUFACTURER & MODEL NO.	AREA SERVED	FAN SYSTEM						COOLING PERFORMANCE					HEATING PERFORMANCE				UNIT ELECTRICAL		POWER EXHAUST ELECTRICAL (3)			SMOKE DETECTOR FOR SHUTDOWN	WEIGHT (LBS.)	FILTER	REFRIG. TYPE	ANCHORAGE DETAIL REFERENCE	UNIT CONFIG.	REMARKS (SEE EQUIPMENT NOTES BELOW)
			CFM	ESP	RPM	DRIVE	PWR	MIN. OSA	MAX. OSA	ENTERING DB/WB	LEAVING DB/WB	SENSIBLE (MBH)	TOTAL (MBH)	EFFICIENCY	EAT °F	LAT °F	CAPACITY (MBH)	EFFICIENCY	V-PH-HZ	AMPS	V-PH-HZ	AMPS	HP	CFM						
AC 1	CARRIER 48CGGM06A3A5-0A0A0	OFFICE 101 & 102 BREAKROOM 100 SHO/LOCK 106 & 107	2,000	1.2	2,484	DIRECT	1.25 BHP	350	560	78.5 / 59.5	52.6 / 47.5	58.19	43.62	16.1 SEER	46.5 °F	67.5°F	43.2 INPUT 35.3 OUTPUT	81%	208-3-60	29 MCA 40 MOCP	208-3-60	8.0 MCA 14.4 MOCP	1	2,000	YES	UNIT: 635 CURB: OSA PWR EXH 191 **TOTAL: 826**	MERV 13	R-410a	13 M2-0.1	HORIZONTAL SUPPLY & RETURN	3 4 5 6 7 8 9 10 11

EQUIPMENT NOTES:

1. POWER EXHAUST TO RECEIVE SEPARATE POWER.
2. -
3. MICROMETL MODULATING ECONOMIZER AND MODULATING POWER EXHAUST.
4. FACTORY INSTALLED SYSTEMVU CONTROLS.
5. OSA DAMPER TO ACTUATE TO ALLOW MAX. OSA (NON ECONOMY CYCLE) WHEN CO2 SENSOR READS 1,000 P.P.M. AND ABOVE. OTHERWISE, OSA DAMPER TO BE AT MINIMUM POSITION.
6. ECONOMIZER OUTSIDE AIR TEMPERATURE SENSOR TO BE LOCATED AWAY FROM DIRECT SUNLIGHT.
7. PROGRAMMABLE THERMOSTAT.
8. HAIL GUARD
9. HINGED DOORS
10. SEE VVT DAMPER SCHEDULE THIS SHEET.

MAKEUP AIR UNIT SCHEDULE

TAG	MANUFACTURER & MODEL NO.	AREA SERVED	FAN SYSTEM					COOLING PERFORMANCE					HEATING PERFORMANCE				UNIT ELECTRICAL		SMOKE DETECTOR FOR SHUTDOWN	WEIGHT (LBS.)	FILTER	REFRIG. TYPE	ANCHORAGE DETAIL REFERENCE	UNIT CONFIG.	REMARKS (SEE EQUIPMENT NOTES BELOW)
			CFM	ESP	RPM	DRIVE	PWR	ENTERING DB/WB	LEAVING DB/WB	SENSIBLE (MBH)	TOTAL (MBH)	EFFICIENCY	EAT °F	RISE °F	CAPACITY (MBH)	EFFICIENCY	V-PH-HZ	AMPS							
MAU 1	DAIKIN DPS020A	MAINT BAY 113 - 116, TIRES 117, STOR. 103, 104, 105, EQUIP 111, EQUIP 119	10,000	0.55	1,635	DIRECT	7.5 HP 5.57 BHP	85 / 62.0	54 / 51.9	264.439	264.439	11 EER	-1 °F	48.5°F	600 MBH INPUT 480 MBH OUTPUT	80%	208-3-60	113.4 MCA 175 MOCP	YES	UNIT: 3,900 CURB: N/A OSA PWR EXH N/A **TOTAL: 3,900**	MERV 13	R-410a	13 M2-0.1	HORIZONTAL SUPPLY	1 2 3 4 5 6 7 8

EQUIPMENT NOTES:

1. DDC SPACE SENSOR WITH SETPOINT ADJUST AND TENANT OVERRIDE
2. POWER BLOCK - ELECTRICAL FIELD CONNECTION
3. SUCTION AND DISCHARGE ISOLATION VALVES
4. DUAL GAS CONNECTIONS INSIDE UNIT
5. 2" ONLY FILTER RACK WITH MERV 13 FILTERS
6. 2" INJECTED FOAM, R-13, GALV. STEEL LINER CABINET
7. INTERCONNECT TO GAS DETECTION SYSTEM
8. BACNET CARD

DUCTLESS MINI-SPLIT SCHEDULE

INDOOR UNIT

TAG	MANUFACTURER & MODEL NO.	AREA SERVED	AIR QUANTITY CFM	EXT. S.P.	REFRIG. PIPE SIZES LIQUID/GAS	ELECTRICAL (2)		AREA SMOKE DETECTOR SHUTDOWN	OPER. WT. (LBS)	ANCHORAGE DETAIL REFERENCE	REMARKS (SEE EQUIPMENT NOTES BELOW)
						V-PH-HZ	AMPS				
IU 1	CARRIER 40MAHBQ09XA3	CONTROL 118	382	N/A	1/4" / 3/8"	208-1-60	0.3125 MCA	NO	23	12 M2-0.2	4
IU 2	CARRIER 40MAHBQ36XA3	DATA 111	843	N/A	3/8" / 5/8"	208-1-60	0.625 MCA	NO	44	12 M2-0.2	4

OUTDOOR UNIT

TAG	MANUFACTURER & MODEL NO.	UNIT SERVED	DESIGN COOLING CONDITION			HEATING CAPACITY (MBH)			UNIT ELECT.		UNIT WEIGHT (LBS)	ANCHORAGE DETAIL REFERENCE	REMARKS (SEE EQUIPMENT NOTES BELOW)
			AMBIENT DB/WB	TOTAL (MBH)	EFFICIENCY	AMB. TEMP.°F	CAPACITY	EFFICIENCY	V-PH-HZ	AMPS			
OU 1	CARRIER 38MARBQ09AA3	IU 1	85.0 / 62.0	9.0	28.1SEER 16.2 EER	-1	11,800 BTU/HR @ 47°F	N/A	208-1-60	15 MCA 15 MOCP	135	12 M2-0.1	1
OU 2	CARRIER 38MARBQ36AA3	IU 2	85.0 / 62.0	36.0	17.5 SEER 8.5 EER	N/A	N/A (3)	N/A (3)	208-1-60	28 MCA 35 MOCP	135	12 M2-0.1	1

1. COMPLETE WITH LOW AMBIENT ACCESSORIES. 2. INDOOR UNIT POWERED THRU OUTDOOR UNIT. 3. DISABLE HEATING FUNCTIONALITY. 4. COMPLETE WITH CONDENSATE PUMP (MINI AQUA UNIVOLT FP1035/RS)

SNOW MELT SYSTEM SCHEDULES

HEATING HOT WATER PUMP SCHEDULE

TAG	MANUFACTURER & MODEL NO.	SERVICE	CAPACITY		ELECTRICAL	FLUID TYPE	RPM	HP	OPER. WEIGHT	ANCHORAGE DETAIL REFERENCE
			GPM	HEAD (FT.)	V-PH-HZ					
HWP 1	TACO MODEL 2450	B 1	15.7	33	120-1-60	50% PROPLYNE GLYCOL 50% WATER	3450	0.5	16.5 LBS	3 M2-0.2

EXPANSION TANK SCHEDULE

TAG	MANUFACTURER & MODEL NO.	LOCATION	SYSTEM SERVED	ACCEPTANCE VOLUME (GAL)	MAX PRESS. (PSI)	MAX TEMP. (°F)	OPER. WEIGHT	ANCHORAGE DETAIL REFERENCE	REMARKS
ET 1	WATTS DETA 80	SHOP EQUIPMENT 121	B 1	23.5	150	240	372 LBS	11 M2-0.2	1" CW CONNECTION

BOILER SCHEDULE

TAG	MANUFACTURER & MODEL NO.	AREA SERVED	CAPACITY		FLUID TYPE	LVG. WATER TEMP (°F)	ENT. WATER TEMP (°F)	GPM	ELECTRICAL		OPER. WEIGHT	ANCHORAGE DETAIL REFERENCE	REMARKS
			INPUT	EFFICIENCY					V-PH-HZ	AMPS			
B 1	HTP EL-220N	SNOW MELT SYSTEM	220,000 BTU/H	95 % AFUE	50% PROPLYNE GLYCOL 50% WATER	95	70	15.7	120-1-60	<12A	90 LBS	14 M2-0.1	1 2

EQUIPMENT NOTES:

1. CONDENSATE NETRALIZER KIT
2. CONCENTRIC VENT KIT

ACCESSORIES SCHEDULE

TAG	MANUFACTURER & MODEL NO.	AREA SERVED	LOCATION	DESCTRIPTION	CIRCUITS	FLOW RATE	ELECTRICAL	REMARKS
-	REHAU 315839-001	SNOW MELT SYSTEM	SHOP EQUIPMENT 121	SINGLE ZONE SIM CONTROL (645) LOW VOLTAGE	-	-	24 VOLT	1
-	REHAU PRO-BALANCE 343377-001	SNOW MELT SYSTEM	LANDSCAPING	1-1/4" STAINLESS STEEL MANIFOLD WITH GAUGES	6	14.40	-	1
-	REHAU PRO-BALANCE 381101-001	SNOW MELT SYSTEM	MECHANICAL BAY 1 113	1" STAINLESS STEEL MANIFOLD WITH GAUGES AND STAINLESS STEEL SURFACE MOUNTED MANIFOLD CABINET	1	1.27	-	1

EQUIPMENT NOTES:

1. REFER TO SHEET M3- 03 FOR A LIST OF ADDITIONAL ACCESSORIES

DAMPER SCHEDULE

TAG	AREA SERVED	AC UNIT	AIR FLOW PERFORMANCE			DAMPER DATA			ELECTRICAL			OPER. WEIGHT	ANCHORAGE DETAIL REFERENCE	REMARKS
			MIN. CFM	MAX. CFM	APD	MAKE	MODEL	INLET SIZE	V-PH-HZ	KW	AMPS			
VVT 1	MAIN OFFICE 102	AC 1	580	735	0.02" WG	CARRIER	35EN3300L140D	14"	208-1-60	9.5	57.09 MCA 60.0 MOCP	70 LBS	6 M2-0.1	PROVIDE PROPORTIONAL ELECTRIC HEAT (L2X)
VVT 2	OFFICE 101	AC 1	425	440	0.018" WG	CARRIER	35EN3300L120D	12"	208-1-60	9.5	57.09 MCA 60.0 MOCP	60 LBS	6 M2-0.1	PROVIDE PROPORTIONAL ELECTRIC HEAT (L2X)
VVT 3	BREAKROOM 100 SHO/LOCK 106 & 107	AC 1	580	825	0.02" WG	CARRIER	35EN3300L140D	14"	208-1-60	9.5	57.09 MCA 60.0 MOCP	70 LBS	6 M2-0.1	PROVIDE PROPORTIONAL ELECTRIC HEAT (L2X)
BP 1	-	AC 1	1585	2,000	0.156" WG	CARRIER	35JN3-0L12	12"	N/A	N/A	N/A	33 LBS	6 M2-0.1	-

SNOW MELT SYSTEM - BOILER SCHEDULE

TAG	MANUFACTURER & MODEL NO.	AREA SERVED	CAPACITY		FLUID TYPE	LVG. WATER TEMP (°F)	ENT. WATER TEMP (°F)	GPM	ELECTRICAL		OPER. WEIGHT	ANCHORAGE DETAIL REFERENCE	REMARKS
			INPUT	EFFICIENCY					V-PH-HZ	AMPS			
B 1	HTP EL-220N	SNOW MELT SYSTEM	220,000 BTU/H	95 % AFUE	50% PROPLYNE GLYCOL 50% WATER	95	70	15.7	120-1-60	<12A	90 LBS	14 M2-0.1	1 2

EQUIPMENT NOTES:

1. CONDENSATE NETRALIZER KIT
2. CONCENTRIC VENT KIT

EXHAUST FAN SCHEDULE

TAG	MANUFACTURER & MODEL NO.	AREA SERVED	TYPE	FAN SYSTEM							SONES	OPER. WT. W/ ACCESSORIES (LBS)	ANCHORAGE DETAIL REFERENCE	REMARKS (SEE EQUIPMENT NOTES BELOW)
				CFM	ESP	RPM	PWR	WATTS	TIP SPEED	V-PH-HZ				
EF 1	GREENHECK SQ-140-VG	MAINTENANCE BAY 116	INLINE	2,710	0.408"	1,566	1 HP 0.74 BHP	N/A	5,971	120-1-60	16.0 INLET 7.9 RADIATED	105	11 M2-0.1	3 11 5 6 10
EF 2 THRU EF 3	GREENHECK SQ-140-VG	MAINTENANCE BAY 114 & 115	INLINE	1,850	0.324"	1,132	3/4 HP 0.29 BHP	N/A	4,316	120-1-60	9.9 INLET 4.8 RADIATED	105	11 M2-0.1	3 11 5 6 10
EF 4	GREENHECK SQ-140-VG	MAINTENANCE BAY 113, SUPPLY STOR. 103	INLINE	2,305	0.364"	1,359	3/4 HP 0.49 BHP	N/A	5,182	120-1-60	12.8 INLET 6.3 RADIATED	105	11 M2-0.1	3 11 5 6 10
EF 5	GREENHECK SQ-99-VG	STORAGE 104, 105 SHOP EQUIPMENT 111	INLINE	860	0.682"	1,894	3/4 HP 0.38 BHP	N/A	5,546	120-1-60	16.6 INLET 9.4 RADIATED	66	11 M2-0.1	3 4 5 6 7
EF 6 EF 7	GREENHECK SP-B80	RESTROOM 107 &110	CEILING	75	0.263	900	N/A	15	N/A	120-1-60	0.4	15	11 M2-0.1	1 2 5 8 9
EF 8	GREENHECK SP-B90	CUST 109	CEILING	75	0.263	900	N/A	15	N/A	120-1-60	0.4	15	11 M2-0.1	1 2 5 9
EF 9	GREENHECK SQ-60-VG	SHOWER/LOCKER 106	INLINE	100	0.258	1,551	1/15 HP 0.02 BHP	N/A	3,300	120-1-60	4.0 INLET 1.7 RADIATED	33	11 M2-0.1	3 4 5 6 8
EF 10	GREENHECK SQ-80-VG	SHOWER/LOCKER 107	INLINE	235	0.264	1,305	1/10 HP 0.03 BHP	N/A	3,714	120-1-60	5.4 INLET 2.7 RADIATED	57	11 M2-0.1	3 4 5 6 8
EF 11	GREENHECK SQ-140-VG	WASH EQUIPMENT 119	INLINE	715	0.261	686	3/4 HP 0.06 BHP	N/A	2,614	120-1-60	3.3 INLET 2.0 RADIATED	105	11 M2-0.1	3 4 5 6 7

EQUIPMENT NOTES:

1. ROUND DUCT CONNECTION
2. WHITE ALUM GRILLE
3. VARI-GREEN EC MOTOR
4. VARI-GREEN DIAL ON EXTERIOR OF FAN HOUSING
5. BACKDRAFT DAMPER
6. INSULATED HOUSING, 1"
7. PROVIDE THERMOSTAT
8. INTERCONNECT TO LIGHT SWITCH
9. MOUNTING BRACKET
10. INTERCONNECT TO GAS DETECTION SYSTEM
11. VARI-GREEN CONSTANT PRESSURE, INTEGRAL TRANSDUCER, ROOM TAP

REGISTERED PROFESSIONAL ENGINEER — No. 33209 — EXP. 9-30-2023 — MECHANICAL — STATE OF CALIFORNIA

LICENSED ARCHITECT — No. C-31345 — Exp. 10-31-24 — STATE OF CALIFORNIA

STAMPS

AGENCY APPROVAL
File No: n.a

MECHANICAL ELECTRICAL AND ENERGY CONSULTANTS

DESIGN WEST ENGINEERING
412 E. Vanderbilt Way
San Bernardino, CA 92408
Tel: 909-890-3700
Fax: 909-890-3770
Email: cadd@designwesteng.com

CONSULTANT BRANDING

RUHNAU CLARKE ARCHITECTS

MOUNT TRANSIT MAINTENANCE FACILITY:

PRINTED: 7/26/2023 1:32:52 PM
PATH: BIM 360://50801_MMTF_HTMP\21061_Mountain Transit Maintenance Facility_22066_22066.rvt

PROJECT No. :50801
7/26/2023 1:32:52 PM

DRAWN BY: CHECKED BY:

ISSUE No.____ DATE_____ DESCRIPTION_____
ISSUE No.____ DATE_____ DESCRIPTION_____
ISSUE No.____ DATE_____ DESCRIPTION_____
ISSUE No.____ DATE_____ DESCRIPTION_____

REVISION No.____ DATE_____ DESCRIPTION_____
REVISION No.____ DATE_____ DESCRIPTION_____
REVISION No.____ DATE_____ DESCRIPTION_____
REVISION No.____ DATE_____ DESCRIPTION_____

STATE OF CALIFORNIA
Envelope Component Approach
CALIFORNIA ENERGY COMMISSION

CERTIFICATE OF COMPLIANCE		NRCC-ENV-E
Project Name:	Mountain Transit Admin & Maintenance Facility	Report Page: (Page 3 of 20)
Project Address:	160-170 Business Center Drive	Date Prepared: 2/10/2023

F. ROOF ASSEMBLY SCHEDULE

Metal Building Roof Assemblies

Tag/Plan Detail ID	Name/Description	Status	Exception to Roof Insulation Requirements in 141.0(b)2Biii (Alts. Only)	Occupancy Type
SW Roof	Metal Building Roof, R-38	New		Nonresidential/ Relocatable 1 CZNonresidential
SW Roof	Metal Building Roof, R-38	New		Nonresidential/ Relocatable 1 CZNonresidential
SW Roof	Metal Building Roof, R-38	New		Nonresidential/ Relocatable 1 CZNonresidential
SW Roof	Metal Building Roof, R-38	New		Nonresidential/ Relocatable 1 CZNonresidential
Roof	Metal Building Roof, R-38	New		Nonresidential/ Relocatable 1 CZNonresidential
Roof	Metal Building Roof, R-38	New		Nonresidential/ Relocatable 1 CZNonresidential
Roof	Metal Building Roof, R-38	New		Nonresidential/ Relocatable 1 CZNonresidential
Roof	Metal Building Roof, R-38	New		Nonresidential/ Relocatable 1 CZNonresidential
Roof	Metal Building Roof, R-38	New		Nonresidential/ Relocatable 1 CZNonresidential
Roof	Metal Building Roof, R-38	New		Nonresidential/ Relocatable 1 CZNonresidential

STATE OF CALIFORNIA
Envelope Component Approach
CALIFORNIA ENERGY COMMISSION

CERTIFICATE OF COMPLIANCE		NRCC-ENV-E
Project Name:	Mountain Transit Admin & Maintenance Facility	Report Page: (Page 2 of 20)
Project Address:	160-170 Business Center Drive	Date Prepared: 2/10/2023

B. PROJECT SCOPE

[1]*FOOTNOTE: Doors that are more than 25% glass in area are considered Glazed Doors and should be documented on table K with fenestration.*
[2]*Roof recovers and replacements must also check "Roof Assembly" box and document compliance with insulation requirements in Table F. Roof recoats may document compliance with roof material only in Table G.*

C. COMPLIANCE RESULTS

Results in this table are automatically calculated from data input and calculations in Tables F through L. Note: If any cell on this table says "COMPLIES with Exceptional Conditions" refer to Table D. Exceptional Conditions for guidance or see the applicable table referenced below.

Opaque Envelope Components					Fenestration	Daylighting Spaces > 5,000ft²	Compliance Results
Roof Assembly	Roofing Materials	Walls	Floors	Doors			
01	02	03	04	05	06	07	08
(See Table F)	(See Table G)	(See Table H)	(See Table I)	(See Table J)	(See Table K)	(See Table L)	COMPLIES
Yes	Yes	Yes		Yes	Yes		

D. EXCEPTIONAL CONDITIONS

This table is auto-filled with uneditable comments because of selections made or data entered in tables throughout the form.

E. ADDITIONAL REMARKS

This table includes remarks made by the permit applicant to the Authority Having Jurisdiction.

F. ROOF ASSEMBLY SCHEDULE

This table demonstrates compliance for prescriptive roof assembly requirements in 140.3(a)1B/ 170.2(a)1B for new construction, 141.0(a)/ 180.1 for additions, or 141.0(b)2Biii/ 180.2 for alterations,

01	Indicate roof types included in the project:	☐ Framed	☐ Framed-Multifamily	☐ SIPS	☐ Span Deck & Concrete	☐ Metal Panels	☒ Metal Building

Metal Building Roof Assemblies

01	☒	Calculate Area-Weighted Average U-factor for Metal Building Roof[1]		
02	03	04	05	06

STATE OF CALIFORNIA
Envelope Component Approach
CALIFORNIA ENERGY COMMISSION

CERTIFICATE OF COMPLIANCE		NRCC-ENV-E
Project Name:	Mountain Transit Admin & Maintenance Facility	Report Page: (Page 1 of 20)
Project Address:	160-170 Business Center Drive	Date Prepared: 2/10/2023

This document is used to demonstrate compliance with mandatory requirements in 110.8(g) and 120.7(b)/ 160.1 for newly constructed nonresidential, hotel/ motel, multifamily and mixed-use buildings, and 141.0(b)1/ 180.2 for alterations, related to roof, wall and floor assemblies. It is also used to demonstrate compliance with prescriptive requirements in 140.3/ 170.2 for newly constructed buildings, and 141.0/ 180.1/ 180.2 for additions and alterations, related to roof, wall, floor, door, fenestration and daylighting requirements.

A. GENERAL INFORMATION

01	Project Location (city)	Big Bear Lake	05	# of Stories (Habitable Above Grade)	1
02	Zipcode	92315	06	Total Conditioned Floor Area (ft²)	9312
03	Climate Zone	16	07	Total Unconditioned Floor Area (ft²)	72
04	Occupancy Types Within Project: (select all that apply): If one occupancy constitutes >= 80% of the conditioned floor area, the entire building envelope may be designed to comply with the provisions of that occupancy per 100.0(f).		08	☐ Project includes unconditioned enclosed space(s) > 5,000 ft² under a roof with a ceiling height of at least 15 ft.[1]	

● Office ● All Other Occupancies

[1] *FOOTNOTE: Enclosed spaces > 5,000 ft² directly under roof with ceiling height > 15 ft in climate zones 2 through 15 are required to meet the minimum daylighting requirements defined in 140.3(c)/ 170.2(b). Compliance with 140.3(c)/ 170.2(b) is documented in Table L. This is the only prescriptive requirement which applies to unconditioned spaces.*

B. PROJECT SCOPE

This table specifies project envelope components within the permit application demonstrating compliance using the prescriptive paths outlined in 140.3/ 170.2 and 141.0(a)1/ 180.1 and 141.0(b)1 and 2/ 180.2 for additions and alterations.

My project consists of (check all that apply)		Component Types					
01		02					
☒	New Construction or Newly Conditioned Space	☒	Roof	☒	Walls	☒	Exterior Opaque Doors
☐	One or more enclosed spaces > 5,000 ft² directly under roof with ceiling height > 15ft	☐		☐	Floors	☒	Fenestration/ Glazed Doors[1]
☐	Addition of conditioned space	☐	Roof	☐	Walls	☐	Exterior Opaque Doors
☐	One or more enclosed spaces > 5,000 ft² directly under roof with ceiling height > 15ft						
☐	Addition is <=700 ft²			☐	Floors	☐	Fenestration/ Glazed Doors[1]
☐	Addition is >700 ft²						
☐	Alteration of conditioned space	☐	Roof Assembly	☐	Walls		Exterior Opaque Doors NA. for Alts.
☐	One or more enclosed spaces > 5,000 ft² directly under roof with ceiling height > 15ft and lighting system installed for the first time	☐	Roofing Material[2]	☐	Floors	☐	Fenestration

STATE OF CALIFORNIA
Envelope Component Approach
CALIFORNIA ENERGY COMMISSION

CERTIFICATE OF COMPLIANCE		NRCC-ENV-E
Project Name:	Mountain Transit Admin & Maintenance Facility	Report Page: (Page 6 of 20)
Project Address:	160-170 Business Center Drive	Date Prepared: 2/10/2023

F. ROOF ASSEMBLY SCHEDULE

07	08	09	10	11	12	13	14		15
Tag/Plan Detail ID	How Design U-factor was determined	Insulation System	Cavity Insulation per Design[2]	Continuous Insulation per Design[2]	Thermal Performance Unit	Required Thermal Performance[3]	U-factor per Design		Net Area[4] ft²
Roof	JA4 Tables	Filled Cavity	29	9	U-factor	0.041	per JA4		361
							per Software/ Other	0.03	
Roof	JA4 Tables	Filled Cavity	29	9	U-factor	0.041	per JA4		135
							per Software/ Other	0.03	
Roof	JA4 Tables	Filled Cavity	29	9	U-factor	0.041	per JA4		883
							per Software/ Other	0.03	
Roof	JA4 Tables	Filled Cavity	29	9	U-factor	0.041	per JA4		335
							per Software/ Other	0.03	
Roof	JA4 Tables	Filled Cavity	29	9	U-factor	0.041	per JA4		557
							per Software/ Other	0.03	
Roof	JA4 Tables	Filled Cavity	29	9	U-factor	0.041	per JA4		150
							per Software/ Other	0.03	
Roof	JA4 Tables	Filled Cavity	29	9	U-factor	0.041	per JA4		48
							per Software/ Other	0.03	
Roof	JA4 Tables	Filled Cavity	29	9	U-factor	0.041	per JA4		108
							per Software/ Other	0.03	

STATE OF CALIFORNIA
Envelope Component Approach
CALIFORNIA ENERGY COMMISSION

CERTIFICATE OF COMPLIANCE		NRCC-ENV-E
Project Name:	Mountain Transit Admin & Maintenance Facility	Report Page: (Page 5 of 20)
Project Address:	160-170 Business Center Drive	Date Prepared: 2/10/2023

F. ROOF ASSEMBLY SCHEDULE

Metal Building Roof Assemblies

Roof	Metal Building Roof, R-38	New		Nonresidential/ Relocatable 1 CZNonresidential
Roof	Metal Building Roof, R-38	New		Nonresidential/ Relocatable 1 CZNonresidential

07	08	09	10	11	12	13	14		15
Tag/Plan Detail ID	How Design U-factor was determined	Insulation System	Cavity Insulation per Design[2]	Continuous Insulation per Design[2]	Thermal Performance Unit	Required Thermal Performance[3]	U-factor per Design		Net Area[4] ft²
SW Roof	JA4 Tables	Filled Cavity	29	9	U-factor	0.041	per JA4		1490
							per Software/ Other	0.03	
SW Roof	JA4 Tables	Filled Cavity	29	9	U-factor	0.041	per JA4		1232
							per Software/ Other	0.03	
SW Roof	JA4 Tables	Filled Cavity	29	9	U-factor	0.041	per JA4		1232
							per Software/ Other	0.03	
SW Roof	JA4 Tables	Filled Cavity	29	9	U-factor	0.041	per JA4		1119
							per Software/ Other	0.03	
Roof	JA4 Tables	Filled Cavity	29	9	U-factor	0.041	per JA4		174
							per Software/ Other	0.03	
Roof	JA4 Tables	Filled Cavity	29	9	U-factor	0.041	per JA4		368
							per Software/ Other	0.03	

STATE OF CALIFORNIA
Envelope Component Approach
CALIFORNIA ENERGY COMMISSION

CERTIFICATE OF COMPLIANCE		NRCC-ENV-E
Project Name:	Mountain Transit Admin & Maintenance Facility	Report Page: (Page 4 of 20)
Project Address:	160-170 Business Center Drive	Date Prepared: 2/10/2023

F. ROOF ASSEMBLY SCHEDULE

Metal Building Roof Assemblies

Roof	Metal Building Roof, R-38	New		Nonresidential/ Relocatable 1 CZNonresidential
Roof	Metal Building Roof, R-38	New		Nonresidential/ Relocatable 1 CZNonresidential
Roof	Metal Building Roof, R-38	New		Nonresidential/ Relocatable 1 CZNonresidential
Roof	Metal Building Roof, R-38	New		Nonresidential/ Relocatable 1 CZNonresidential
Roof	Metal Building Roof, R-38	New		Nonresidential/ Relocatable 1 CZNonresidential
Roof	Metal Building Roof, R-38	New		Nonresidential/ Relocatable 1 CZNonresidential
Roof	Metal Building Roof, R-38	New		Nonresidential/ Relocatable 1 CZNonresidential
Roof	Metal Building Roof, R-38	New		Nonresidential/ Relocatable 1 CZNonresidential
Roof	Metal Building Roof, R-38	New		Nonresidential/ Relocatable 1 CZNonresidential
Roof	Metal Building Roof, R-38	New		Nonresidential/ Relocatable 1 CZNonresidential

STATE OF CALIFORNIA
Envelope Component Approach
CALIFORNIA ENERGY COMMISSION

CERTIFICATE OF COMPLIANCE		NRCC-ENV-E
Project Name:	Mountain Transit Admin & Maintenance Facility	Report Page: (Page 9 of 20)
Project Address:	160-170 Business Center Drive	Date Prepared: 2/10/2023

H. WALL ASSEMBLY SCHEDULE

This table demonstrates compliance with prescriptive wall assembly requirements in 140.3(a)/ 170.2(a) for new constructions, 141.0(a)/ 180.1 for additions and 141.0(b)1B/ 180.2 for alterations.

01	Indicate wall types included in the project:[1]	☐ Framed	☐ Mass (new only)	☐ Concrete Sandwich Panel (new only)	☐ SIPS	☐ ICF (new only)
		☐ Metal Panels	☒ Metal Building	☐ Spandrel/ Curtain Wall	☐ Straw Bale	☐ Log Home (new only)

[1] *FOOTNOTES: Wall types indicated above as "(new only)" do not have Title 24, Part 6 requirements for alterations. New construction and additions do have requirements and should be clicked above and compliance demonstrated within this table.*

Metal Building Walls

01	☒	Calculate Area-Weighted Average U-factor for Metal Building Walls[1]

02	03	04	05	06	07	08	09	10		11
Calculate Area-Weighted Average U-factor for Metal Building Walls[1]	Occupancy & Status	How Design U-factor was determined	Insulation System	Cavity Insulation per Design	Continuous Insulation per Design	Thermal Performance Unit	Required Thermal Performance	U-factor per Design		Net Area[3] ft²
NE Wall 25.75x27.3	Nonresidential/ Relocatable 1 CZ: New	JA4 Tables	Double layer - Batt w/R 10+R 13	23	0	U-factor	0.061	per JA4	0.061	468.5
								per Software/ Other		
SW Wall 25.75x22.3	Nonresidential/ Relocatable 1 CZ: New	JA4 Tables	Double layer - Batt w/R 10+R 13	23	0	U-factor	0.061	per JA4	0.061	336.2
								per Software/ Other		
upper SE Wall 60.4x6.3	Nonresidential/ Relocatable 1 CZ: New	JA4 Tables	Double layer - Batt w/R 10+R 13	23	0	U-factor	0.061	per JA4	0.061	380.5
								per Software/ Other		

STATE OF CALIFORNIA
Envelope Component Approach
CALIFORNIA ENERGY COMMISSION

CERTIFICATE OF COMPLIANCE		NRCC-ENV-E
Project Name:	Mountain Transit Admin & Maintenance Facility	Report Page: (Page 8 of 20)
Project Address:	160-170 Business Center Drive	Date Prepared: 2/10/2023

F. ROOF ASSEMBLY SCHEDULE

07	08	09	10	11	12	13	14	15
Tag/Plan Detail ID	How Design U-factor was determined	Insulation System	Cavity Insulation per Design[2]	Continuous Insulation per Design[2]	Thermal Performance Unit	Required Thermal Performance[3]	U-factor per Design	Net Area[4] ft²

[1] *FOOTNOTES: If any individual assembly is non-compliant, assemblies may show compliance using an area-weighted calculation. Metal building roofs may not be combined with other roof types. The area-weighted compliance option is not available for alterations demonstrating compliance with R-values in Table 141.0-C.*
[2] *For alterations using U-factor as the Thermal Performance Unit, at least R-10 insulation must be above deck.*
[3] *If "R-value" is shown in cell 12 as the Thermal Performance Unit, the R-value shown here is for continuous insulation per Table 141.0-C.*
[4] *Roof area minus any fenestration/ skylight area*

Area-Weighted Average U-factor Compliance Calculation for Metal Building Roof

01	02	03	04	05
Roof Type	Total Area of Roof Type (ft²)	Area-weighted U-factor for Roof Type		Compliance Results Using Area-Weighted Calculation Option
		Required	Designed	
Metal Building	**9312**	**0.041**	**0.03**	**COMPLIES**

G. RATED ROOFING MATERIAL (COOL ROOF)

This table demonstrates compliance with prescriptive roof material requirements in 140.3(a)1A/ 170.2(a)1A for new construction, 141.0(a)/ 180.1 for additions, and 141.0(b)2B/ 180.2 for alterations. Roof recovers and replacements must also document compliance with insulation requirements in Table F. Roof recoats may document compliance with roof material only in Table G.

01	02	03	04	05	06	07	08		09		10
Tag/Plan Detail ID	Name/ Description/ Location	Status	Occupancy Type	Roof Slope	Roof Material	Compliance Method	Required Minimum Material Performance		Designed Material Performance		U-factor / R-value of Assembly
Metal Building Roof, R-38	SW Roof	New	Nonresidential	Low slope	To Be Determined	Aged solar reflectance and thermal emittance	Reflectance	0.63	Reflectance[1]	0.63	
							Emittance	0.75	Emittance	0.75	
							SRI		SRI		

STATE OF CALIFORNIA
Envelope Component Approach
CALIFORNIA ENERGY COMMISSION

CERTIFICATE OF COMPLIANCE		NRCC-ENV-E
Project Name:	Mountain Transit Admin & Maintenance Facility	Report Page: (Page 7 of 20)
Project Address:	160-170 Business Center Drive	Date Prepared: 2/10/2023

F. ROOF ASSEMBLY SCHEDULE

07	08	09	10	11	12	13	14		15
Tag/Plan Detail ID	How Design U-factor was determined	Insulation System	Cavity Insulation per Design[2]	Continuous Insulation per Design[2]	Thermal Performance Unit	Required Thermal Performance[3]	U-factor per Design		Net Area[4] ft²
Roof	JA4 Tables	Filled Cavity	29	9	U-factor	0.041	per JA4		51
							per Software/ Other	0.03	
Roof	JA4 Tables	Filled Cavity	29	9	U-factor	0.041	per JA4		90
							per Software/ Other	0.03	
Roof	JA4 Tables	Filled Cavity	29	9	U-factor	0.041	per JA4		73
							per Software/ Other	0.03	
Roof	JA4 Tables	Filled Cavity	29	9	U-factor	0.041	per JA4		87
							per Software/ Other	0.03	
Roof	JA4 Tables	Filled Cavity	29	9	U-factor	0.041	per JA4		338
							per Software/ Other	0.03	
Roof	JA4 Tables	Filled Cavity	29	9	U-factor	0.041	per JA4		117
							per Software/ Other	0.03	
Roof	JA4 Tables	Filled Cavity	29	9	U-factor	0.041	per JA4		175
							per Software/ Other	0.03	
Roof	JA4 Tables	Filled Cavity	29	9	U-factor	0.041	per JA4		189
							per Software/ Other	0.03	

STAMPS

AGENCY APPROVAL
File No: A-#

MECHANICAL ELECTRICAL AND ENERGY CONSULTANTS
DESIGN WEST ENGINEERING
412 E. Vanderbilt Way
San Bernardino, CA 92408
Tel: 909-890-3700
Fax: 909-890-3770
Email: cadd@designwesteng.com
CONSULTANT BRANDING

RUHNAU CLARKE ARCHITECTS

MOUNT TRANSIT MAINTENANCE FACILITY:

PRINTED: 7/26/2023 1:33:04 PM
PATH: R:\P_50801\50801_MMTF_MTMF\21061_Mountain Transit Maintenance Facility_50801_Central.rvt

PROJECT No. :50801
7/26/2023 1:33:04 PM

DRAWN BY: CHECKED BY:

ISSUE No.:_____ DATE:_____ DESCRIPTION:_____
REVISION No.:_____ DATE:_____ DESCRIPTION:_____

H. WALL ASSEMBLY SCHEDULE

02	03	04	05	06	07	08	09	10		11
Calculate Area-Weighted Average U-factor for Metal Building Walls[1]	Occupancy & Status	How Design U-factor was determined	Insulation System	Cavity Insulation per Design	Continuous Insulation per Design	Thermal Performance Unit	Required Thermal Performance	U-factor per Design		Net Area[3] ft²
NW Wall 20.4x23.1	Nonresidential/ Relocatable 1 CZ: New	JA4 Tables	Double layer - Batt w/R 10+R 13	23	0	U-factor	0.061	per JA4	0.061	471.2
								per Software/ Other		
NE Wall 19.8x20.25	Nonresidential/ Relocatable 1 CZ: New	JA4 Tables	Double layer - Batt w/R 10+R 13	23	0	U-factor	0.061	per JA4	0.061	268
								per Software/ Other		
SE Wall 23x19.275	Nonresidential/ Relocatable 1 CZ: New	JA4 Tables	Double layer - Batt w/R 10+R 13	23	0	U-factor	0.061	per JA4	0.061	283.3
								per Software/ Other		
SE Wall 14x17.85	Nonresidential/ Relocatable 1 CZ: New	JA4 Tables	Double layer - Batt w/R 10+R 13	23	0	U-factor	0.061	per JA4	0.061	249.9
								per Software/ Other		
SE Wall 8.9x16.85	Nonresidential/ Relocatable 1 CZ: New	JA4 Tables	Double layer - Batt w/R 10+R 13	23	0	U-factor	0.061	per JA4	0.061	150
								per Software/ Other		
NE Wall 22.8x20.25	Nonresidential/ Relocatable 1 CZ: New	JA4 Tables	Double layer - Batt w/R 10+R 13	23	0	U-factor	0.061	per JA4	0.061	281.7
								per Software/ Other		

STATE OF CALIFORNIA
Envelope Component Approach CALIFORNIA ENERGY COMMISSION

CERTIFICATE OF COMPLIANCE			NRCC-ENV-E
Project Name:	Mountain Transit Admin & Maintenance Facility	Report Page:	(Page 11 of 20)
Project Address:	160-170 Business Center Drive	Date Prepared:	2/10/2023

H. WALL ASSEMBLY SCHEDULE

02	03	04	05	06	07	08	09	10		11
Calculate Area-Weighted Average U-factor for Metal Building Walls[1]	Occupancy & Status	How Design U-factor was determined	Insulation System	Cavity Insulation per Design	Continuous Insulation per Design	Thermal Performance Unit	Required Thermal Performance	U-factor per Design		Net Area[3] ft²
SW Wall 22.8x15.25	Nonresidential/ Relocatable 1 CZ: New	JA4 Tables	Double layer - Batt w/R 10+R 13	23	0	U-factor	0.061	per JA4	0.061	246.7
								per Software/ Other		
SW Wall 10.8x15.25	Nonresidential/ Relocatable 1 CZ: New	JA4 Tables	Double layer - Batt w/R 10+R 13	23	0	U-factor	0.061	per JA4	0.061	116.7
								per Software/ Other		
NE Wall 25.3x27.3	Nonresidential/ Relocatable 1 CZ: New	JA4 Tables	Double layer - Batt w/R 10+R 13	23	0	U-factor	0.061	per JA4	0.061	589.7
								per Software/ Other		
SW Wall 6.67x22.3	Nonresidential/ Relocatable 1 CZ: New	JA4 Tables	Double layer - Batt w/R 10+R 13	23	0	U-factor	0.061	per JA4	0.061	127.7
								per Software/ Other		
NW Wall 23.08x26.525	Nonresidential/ Relocatable 1 CZ: New	JA4 Tables	Double layer - Batt w/R 10+R 13	23	0	U-factor	0.061	per JA4	0.061	612.2
								per Software/ Other		
SW Wall 18.67x22.3	Nonresidential/ Relocatable 1 CZ: New	JA4 Tables	Double layer - Batt w/R 10+R 13	23	0	U-factor	0.061	per JA4	0.061	315.3
								per Software/ Other		

Registration Number: | Generated Date/Time: | Documentation Software: EnergyPro
CA Building Energy Efficiency Standards - 2022 Nonresidential Compliance | Report Version: 2022.0.000 Schema Version: rev 20220101 | Compliance ID: EnergyPro-4473-0223-0221 Report Generated: 2023-02-10 13:11:33

STATE OF CALIFORNIA
Envelope Component Approach CALIFORNIA ENERGY COMMISSION

CERTIFICATE OF COMPLIANCE			NRCC-ENV-E
Project Name:	Mountain Transit Admin & Maintenance Facility	Report Page:	(Page 10 of 20)
Project Address:	160-170 Business Center Drive	Date Prepared:	2/10/2023

H. WALL ASSEMBLY SCHEDULE

02	03	04	05	06	07	08	09	10		11
Calculate Area-Weighted Average U-factor for Metal Building Walls[1]	Occupancy & Status	How Design U-factor was determined	Insulation System	Cavity Insulation per Design	Continuous Insulation per Design	Thermal Performance Unit	Required Thermal Performance	U-factor per Design		Net Area[3] ft²
NE Wall 21x27.3	Nonresidential/ Relocatable 1 CZ: New	JA4 Tables	Double layer - Batt w/R 10+R 13	23	0	U-factor	0.061	per JA4	0.061	363.3
								per Software/ Other		
SW Wall 21x22.3	Nonresidential/ Relocatable 1 CZ: New	JA4 Tables	Double layer - Batt w/R 10+R 13	23	0	U-factor	0.061	per JA4	0.061	258.3
								per Software/ Other		
NE Wall 21x27.3	Nonresidential/ Relocatable 1 CZ: New	JA4 Tables	Double layer - Batt w/R 10+R 13	23	0	U-factor	0.061	per JA4	0.061	363.3
								per Software/ Other		
SW Wall 21x22.3	Nonresidential/ Relocatable 1 CZ: New	JA4 Tables	Double layer - Batt w/R 10+R 13	23	0	U-factor	0.061	per JA4	0.061	258.3
								per Software/ Other		
NE Wall 19.08x27.3	Nonresidential/ Relocatable 1 CZ: New	JA4 Tables	Double layer - Batt w/R 10+R 13	23	0	U-factor	0.061	per JA4	0.061	310.9
								per Software/ Other		
SW Wall 19.08x22.3	Nonresidential/ Relocatable 1 CZ: New	JA4 Tables	Double layer - Batt w/R 10+R 13	23	0	U-factor	0.061	per JA4	0.061	215.5
								per Software/ Other		

Registration Number: | Generated Date/Time: | Documentation Software: EnergyPro
CA Building Energy Efficiency Standards - 2022 Nonresidential Compliance | Report Version: 2022.0.000 Schema Version: rev 20220101 | Compliance ID: EnergyPro-4473-0223-0221 Report Generated: 2023-02-10 13:11:33

STATE OF CALIFORNIA
Envelope Component Approach CALIFORNIA ENERGY COMMISSION

CERTIFICATE OF COMPLIANCE			NRCC-ENV-E
Project Name:	Mountain Transit Admin & Maintenance Facility	Report Page:	(Page 15 of 20)
Project Address:	160-170 Business Center Drive	Date Prepared:	2/10/2023

K. FENESTRATION AND GLAZED DOOR SCHEDULE

Vertical Fenestration and Glazed Doors- Total Building & West Facing Area (New Construction & Additions Only)

01		02	03	04		05
Elevation Item Tag/ Description		Orientation (Azimuth)[1]	Gross Exterior Wall Area[2] (ft²)	Display Perimeter Length[2] (ft)	Total Vertical Fenestration (ft²) per design- West Facing	Vertical Fenestration Area per Design[3] (ft²)
08	Maximum Allowed Vertical Fenestration (ft²)- West Facing		602.2	09		0

[1] FOOTNOTES: Orientation between 226 deg and 315 deg are considered "West Facing". A diagram has been provided in the Nonresidential Compliance Manual for visual reference.
[2] Do not include demising walls per 140.3(a)5 .
[3] Includes glazed door fenestration area .

Vertical Fenestration And Glazed Doors- U-factor, Solar Heat Gain Coefficient (RSHGC/ SHGC), Visible Transmittance (VT)

01	☒	Calculate Area-Weighted Average U-factor for Vertical Fenestration and Glazed Doors[1]
02	☒	Calculate Area-Weighted Average (R)SHGC for Vertical Fenestration and Glazed Doors[1]
03	☒	Calculate Area-Weighted Average VT for Vertical Fenestration and Glazed Doors[1]

Vertical Fenestration And Glazed Doors- U-factor, Solar Heat Gain Coefficient (RSHGC/ SHGC), Visible Transmittance (VT)

04	05	06	07	08	09		10	11	12	13
Tag/Plan Detail ID	Fenestration Type	Occupancy & Status	U-factor/ (R)SHGC Compliance Method	VT Compliance Method	Calculation Method for Performance Values per Design[2]		Product Performance Unit	Required Product Performance	Product Performance per Design	Area ft²
Garage Door Window 14x15	Glazed door	Nonresidential/ Relocatable 1 CZ: : New			NFRC Certified		U-factor (max)	0.45	0.45	210
					☐	Overhang/ Slats used for RSHGC	(R)SHGC (max)	0.23	0.23	
							VT (min)	0.17	0.5	
Garage Door Window 14x15	Glazed door	Nonresidential/ Relocatable 1 CZ: : New			NFRC Certified		U-factor (max)	0.45	0.45	210
					☐	Overhang/ Slats used for RSHGC	(R)SHGC (max)	0.23	0.23	
							VT (min)	0.17	0.5	

Registration Number: | Generated Date/Time: | Documentation Software: EnergyPro
CA Building Energy Efficiency Standards - 2022 Nonresidential Compliance | Report Version: 2022.0.000 Schema Version: rev 20220101 | Compliance ID: EnergyPro-4473-0223-0221 Report Generated: 2023-02-10 13:11:33

STATE OF CALIFORNIA
Envelope Component Approach CALIFORNIA ENERGY COMMISSION

CERTIFICATE OF COMPLIANCE			NRCC-ENV-E
Project Name:	Mountain Transit Admin & Maintenance Facility	Report Page:	(Page 14 of 20)
Project Address:	160-170 Business Center Drive	Date Prepared:	2/10/2023

I. FLOOR ASSEMBLY SCHEDULE

This section does not apply to this project.

J. EXTERIOR DOOR SCHEDULE

This table demonstrates compliance with prescriptive exterior door requirements in 140.3(a)7/ 170.2(a)4 for new construction or additions. Doors which are being replaced (alterations) do not need to be documented in this table because there are no Title 24, Part 6 requirements that apply. Exterior doors separate conditioned space from unconditioned space or from ambient air. Doors that are more than 25% glass in area are considered Glazed Doors and should be documented on Table K with fenestration per Table 8.

01	02	03	04	05	06	07	
Tag/Plan Detail ID	Name/Description	Occupancy Type	Door Type	Door Insulation	Maximum Allowed U-factor	U-factor per Design	
	Insulated Door	Nonresidential	Swinging	Any other wood door	0.7	per JA4	0.2
	Garage Door	Nonresidential	Swinging	Any other wood door	0.7	per JA4	1

K. FENESTRATION AND GLAZED DOOR SCHEDULE

This table demonstrates compliance with prescriptive fenestration requirements in 140.3(a)5/ 170.2(a)3 for new constructions, 141.0(a)/ 180.1 for additions, or 141.0(b)2A/ 180.2 for alterations. Exterior doors that are more than 25% glass in area are considered Glazed Doors and should be documented on this table with fenestration.

01	Indicate fenestration types included in the project:[1]	☐	Vertical (alterations)	☒	Vertical (new)	☐	Skylights	☐	Glazed Doors (new only)

[1] FOOTNOTES: Fenestration types indicated above as "(new only)" do not have Title 24, Part 6 requirements for alterations. New construction and additions do have requirements and should be clicked above and compliance demonstrated within this table.

Vertical Fenestration and Glazed Doors- Total Building & West Facing Area (New Construction & Additions Only)

01	02	03	04	05
Elevation Item Tag/ Description	Orientation (Azimuth)[1]	Gross Exterior Wall Area[2] (ft²)	Display Perimeter Length[2] (ft)	Vertical Fenestration Area per Design[3] (ft²)
North	North Facing	4178.6	0	1273
East	East Facing	1223.7	0	160
South	South Facing	3242.5	0	840
West	West Facing	1505.5	0	0
06	Maximum Allowed Vertical Fenestration (ft²)- All Orientations	3881.9	07	Total Vertical Fenestration (ft²) per design- All Orientations 2273

Registration Number: | Generated Date/Time: | Documentation Software: EnergyPro
CA Building Energy Efficiency Standards - 2022 Nonresidential Compliance | Report Version: 2022.0.000 Schema Version: rev 20220101 | Compliance ID: EnergyPro-4473-0223-0221 Report Generated: 2023-02-10 13:11:33

STATE OF CALIFORNIA
Envelope Component Approach CALIFORNIA ENERGY COMMISSION

CERTIFICATE OF COMPLIANCE			NRCC-ENV-E
Project Name:	Mountain Transit Admin & Maintenance Facility	Report Page:	(Page 13 of 20)
Project Address:	160-170 Business Center Drive	Date Prepared:	2/10/2023

H. WALL ASSEMBLY SCHEDULE

02	03	04	05	06	07	08	09	10		11
Calculate Area-Weighted Average U-factor for Metal Building Walls[1]	Occupancy & Status	How Design U-factor was determined	Insulation System	Cavity Insulation per Design	Continuous Insulation per Design	Thermal Performance Unit	Required Thermal Performance	U-factor per Design		Net Area[3] ft²
NE Wall 12.58x20.25	Nonresidential/ Relocatable 1 CZ: New	JA4 Tables	Double layer - Batt w/R 10+R 13	23	0	U-factor	0.061	per JA4	0.061	134.8
								per Software/ Other		
NW Wall 17x24.825	Nonresidential/ Relocatable 1 CZ: New	JA4 Tables	Double layer - Batt w/R 10+R 13	23	0	U-factor	0.061	per JA4	0.061	401
								per Software/ Other		
SW Wall 15x15.25	Nonresidential/ Relocatable 1 CZ: New	JA4 Tables	Double layer - Batt w/R 10+R 13	23	0	U-factor	0.061	per JA4	0.061	228.8
								per Software/ Other		

[1] FOOTNOTES: If any individual assembly is non-compliant, assemblies may show compliance using an area-weighted calculation. Metal Building walls may not be combined with other wall types. The area-weighted compliance option is not available for alterations demonstrating compliance with R-values in 141.0(b)1B1.
[2] If "R-value" is shown in cell 08 as the Thermal Performance Unit, the R-value shown here is for cavity insulation per 141.0(b)1B1.
[3] Wall area minus any fenestration area

Area-Weighted Average U-factor Compliance Calculation for Metal Building Walls

01	02	03	04	05
Wall Type	Total Area of Wall Type (ft²)	Area-weighted U-factor for Wall Type		Compliance Results Using Area-Weighted Calculation Option
		Required	Designed	
Metal Building	7431.8	0.061	0.061	COMPLIES

Registration Number: | Generated Date/Time: | Documentation Software: EnergyPro
CA Building Energy Efficiency Standards - 2022 Nonresidential Compliance | Report Version: 2022.0.000 Schema Version: rev 20220101 | Compliance ID: EnergyPro-4473-0223-0221 Report Generated: 2023-02-10 13:11:33

STATE OF CALIFORNIA
Envelope Component Approach CALIFORNIA ENERGY COMMISSION

CERTIFICATE OF COMPLIANCE			NRCC-ENV-E
Project Name:	Mountain Transit Admin & Maintenance Facility	Report Page:	(Page 18 of 20)
Project Address:	160-170 Business Center Drive	Date Prepared:	2/10/2023

K. FENESTRATION AND GLAZED DOOR SCHEDULE

[1] FOOTNOTES: If any individual fenestration product is non-compliant, products may show compliance using an area-weighted calculation. Chromogenic glazing is not included in area-weighted calculations. Area-weighted calculation shown in separate area-weighted table below.
[2] The NA6 Default Calculation can only be used for alterations or dwelling units in buildings with <= 3 habitable stories. Alterations are limited to 200ft² of site built glazing and dwelling units are limited to 250ft² or 5% of conditioned floor area. If the fenestration does not meet these conditions, the only options for determining fenestration values are NFRC Certification or the Default Tables in 110.6.
[3] Overhangs must extend past the left and right window the same distance as the depth of the overhang or greater to show an affect on the RSHGC. If an overhang does not meet this requirement, the affect of the overhang will be ignored.
[4] Projecting includes casement and awning windows.

Area-Weighted Average U-factor, SHGC, VT Compliance Calculation for Vertical Fenestration And Glazed Doors

01	02	03	04	05
Product Performance Unit	Total Area of Fenestration (ft²)	Area-weighted Calculation for Fenestration		Compliance Results Using Area-Weighted Calculation Option
		Required	Designed	
U-Factor	2273	0.442	0.442	COMPLIES
(R)SHGC	2273	0.236	0.236	COMPLIES
VT	2273	0.17	0.5	COMPLIES

L. DAYLIGHT IN LARGE ENCLOSED SPACES

This section does not apply to this project.

M. DECLARATION OF REQUIRED CERTIFICATES OF INSTALLATION

Form/Title
NRCI-ENV-01-E - Must be submitted for all buildings

Registration Number: | Generated Date/Time: | Documentation Software: EnergyPro
CA Building Energy Efficiency Standards - 2022 Nonresidential Compliance | Report Version: 2022.0.000 Schema Version: rev 20220101 | Compliance ID: EnergyPro-4473-0223-0221 Report Generated: 2023-02-10 13:11:33

STATE OF CALIFORNIA
Envelope Component Approach CALIFORNIA ENERGY COMMISSION

CERTIFICATE OF COMPLIANCE			NRCC-ENV-E
Project Name:	Mountain Transit Admin & Maintenance Facility	Report Page:	(Page 17 of 20)
Project Address:	160-170 Business Center Drive	Date Prepared:	2/10/2023

K. FENESTRATION AND GLAZED DOOR SCHEDULE

Vertical Fenestration And Glazed Doors- U-factor, Solar Heat Gain Coefficient (RSHGC/ SHGC), Visible Transmittance (VT)

04	05	06	07	08	09		10	11	12	13
Tag/Plan Detail ID	Fenestration Type	Occupancy & Status	U-factor/ (R)SHGC Compliance Method	VT Compliance Method	Calculation Method for Performance Values per Design[2]		Product Performance Unit	Required Product Performance	Product Performance per Design	Area ft²
Bi-fold Door 10x10	Glazed door	Nonresidential/ Relocatable 1 CZ: : New			NFRC Certified		U-factor (max)	0.45	0.45	100
					☐	Overhang/ Slats used for RSHGC	(R)SHGC (max)	0.23	0.23	
							VT (min)	0.17	0.5	
Door 3.3x10	Glazed door	Nonresidential/ Relocatable 1 CZ: : New			NFRC Certified		U-factor (max)	0.45	0.45	33
					☐	Overhang/ Slats used for RSHGC	(R)SHGC (max)	0.23	0.23	
							VT (min)	0.17	0.5	
Window 16x10	Curtain wall	Nonresidential/ Relocatable 1 CZ: : New			NFRC Certified		U-factor (max)	0.41	0.41	160
					☐	Overhang/ Slats used for RSHGC	(R)SHGC (max)	0.26	0.26	
							VT (min)	0.46	0.5	
Window 18x10	Curtain wall	Nonresidential/ Relocatable 1 CZ: : New			NFRC Certified		U-factor (max)	0.41	0.41	180
					☐	Overhang/ Slats used for RSHGC	(R)SHGC (max)	0.26	0.26	
							VT (min)	0.46	0.5	
Window 12x10	Curtain wall	Nonresidential/ Relocatable 1 CZ: : New			NFRC Certified		U-factor (max)	0.41	0.41	120
					☐	Overhang/ Slats used for RSHGC	(R)SHGC (max)	0.26	0.26	
							VT (min)	0.46	0.5	

Registration Number: | Generated Date/Time: | Documentation Software: EnergyPro
CA Building Energy Efficiency Standards - 2022 Nonresidential Compliance | Report Version: 2022.0.000 Schema Version: rev 20220101 | Compliance ID: EnergyPro-4473-0223-0221 Report Generated: 2023-02-10 13:11:33

STATE OF CALIFORNIA
Envelope Component Approach CALIFORNIA ENERGY COMMISSION

CERTIFICATE OF COMPLIANCE			NRCC-ENV-E
Project Name:	Mountain Transit Admin & Maintenance Facility	Report Page:	(Page 16 of 20)
Project Address:	160-170 Business Center Drive	Date Prepared:	2/10/2023

K. FENESTRATION AND GLAZED DOOR SCHEDULE

Vertical Fenestration And Glazed Doors- U-factor, Solar Heat Gain Coefficient (RSHGC/ SHGC), Visible Transmittance (VT)

04	05	06	07	08	09		10	11	12	13
Tag/Plan Detail ID	Fenestration Type	Occupancy & Status	U-factor/ (R)SHGC Compliance Method	VT Compliance Method	Calculation Method for Performance Values per Design[2]		Product Performance Unit	Required Product Performance	Product Performance per Design	Area ft²
Garage Door Window 14x15	Glazed door	Nonresidential/ Relocatable 1 CZ: : New			NFRC Certified		U-factor (max)	0.45	0.45	210
					☐	Overhang/ Slats used for RSHGC	(R)SHGC (max)	0.23	0.23	
							VT (min)	0.17	0.5	
Garage Door Window 14x15	Glazed door	Nonresidential/ Relocatable 1 CZ: : New			NFRC Certified		U-factor (max)	0.45	0.45	210
					☐	Overhang/ Slats used for RSHGC	(R)SHGC (max)	0.23	0.23	
							VT (min)	0.17	0.5	
Garage Door Window 14x15	Glazed door	Nonresidential/ Relocatable 1 CZ: : New			NFRC Certified		U-factor (max)	0.45	0.45	210
					☐	Overhang/ Slats used for RSHGC	(R)SHGC (max)	0.23	0.23	
							VT (min)	0.17	0.5	
Garage Door Window 14x15	Glazed door	Nonresidential/ Relocatable 1 CZ: : New			NFRC Certified		U-factor (max)	0.45	0.45	210
					☐	Overhang/ Slats used for RSHGC	(R)SHGC (max)	0.23	0.23	
							VT (min)	0.17	0.5	
Garage Door Window 14x15	Glazed door	Nonresidential/ Relocatable 1 CZ: : New			NFRC Certified		U-factor (max)	0.45	0.45	210
					☐	Overhang/ Slats used for RSHGC	(R)SHGC (max)	0.23	0.23	
							VT (min)	0.17	0.5	

Registration Number: | Generated Date/Time: | Documentation Software: EnergyPro
CA Building Energy Efficiency Standards - 2022 Nonresidential Compliance | Report Version: 2022.0.000 Schema Version: rev 20220101 | Compliance ID: EnergyPro-4473-0223-0221 Report Generated: 2023-02-10 13:11:33

STAMPS
AGENCY APPROVAL File No: 4.4
MECHANICAL ELECTRICAL AND ENERGY CONSULTANTS
DESIGN WEST ENGINEERING
412 E. Vanderbilt Way
San Bernardino, CA 92408
Tel: 909-890-3700
Fax: 909-890-3770
Email: cadd@designwesteng.com
CONSULTANT BRANDING
RUHNAU CLARKE ARCHITECTS

MOUNT TRANSIT MAINTENANCE FACILITY:

PRINTED: 7/26/2023 1:33:17 PM
PATH: BIM 360/250801_MMTA_MTMF\21061_Mountain Transit Maintenance and Admin Facility_CENTRAL.rvt

PROJECT No. :50801
7/26/2023 1:33:17 PM

DRAWN BY: CHECKED BY:

ISSUE No.:_____ DATE:_____ DESCRIPTION:_____
REVISION No.:_____ DATE:_____ DESCRIPTION:_____

STATE OF CALIFORNIA
Envelope Component Approach
CALIFORNIA ENERGY COMMISSION

CERTIFICATE OF COMPLIANCE			NRCC-ENV-E
Project Name:	Mountain Transit Admin & Maintenance Facility	**Report Page:**	**(Page 20 of 20)**
Project Address:	160-170 Business Center Drive	**Date Prepared:**	2/10/2023

DOCUMENTATION AUTHOR'S DECLARATION STATEMENT

I certify that this Certificate of Compliance documentation is accurate and complete.

Documentation Author Name: Steven Johnson	Documentation Author Signature: Steven Johnson
Company: Design West Engineering	Signature Date: 2023-02-10
Address: 412 E. Vanderbilt Way	CEA/ HERS Certification Identification (if applicable):
City/State/Zip: San Bernardino CA 92408	Phone:

RESPONSIBLE PERSON'S DECLARATION STATEMENT

I certify the following under penalty of perjury, under the laws of the State of California:

1. The information provided on this Certificate of Compliance is true and correct.
2. I am eligible under Division 3 of the Business and Professions Code to accept responsibility for the building design or system design identified on this Certificate of Compliance (responsible designer)
3. The energy features and performance specifications, materials, components, and manufactured devices for the building design or system design identified on this Certificate of Compliance conform to the requirements of Title 24, Part 1 and Part 6 of the California Code of Regulations.
4. The building design features or system design features identified on this Certificate of Compliance are consistent with the information provided on other applicable compliance documents, worksheets, calculations, plans and specifications submitted to the enforcement agency for approval with this building permit application.
5. I will ensure that a completed signed copy of this Certificate of Compliance shall be made available with the building permit(s) issued for the building, and made available to the enforcement agency for all applicable inspections. I understand that a completed signed copy of this Certificate of Compliance is required to be included with the documentation the builder provides to the building owner at occupancy.

Responsible Designer Name: Roger Clarke	Responsible Designer Signature:
Company: Ruhnau Clarke Architects	Date Signed: 2023-02-10
Address: 3775 Tenth Street	License: C-21340
City/State/Zip: Riverside CA 92501	Phone: 951-684-4664

Registration Number:

CA Building Energy Efficiency Standards - 2022 Nonresidential Compliance

Generated Date/Time:

Report Version: 2022.0.000
Schema Version: rev 20220101

Documentation Software: EnergyPro

Compliance ID: EnergyPro-4473-0223-0221
Report Generated: 2023-02-10 13:11:33

STATE OF CALIFORNIA
Envelope Component Approach
CALIFORNIA ENERGY COMMISSION

CERTIFICATE OF COMPLIANCE			NRCC-ENV-E
Project Name:	Mountain Transit Admin & Maintenance Facility	**Report Page:**	**(Page 19 of 20)**
Project Address:	160-170 Business Center Drive	**Date Prepared:**	2/10/2023

N. DECLARATION OF REQUIRED CERTIFICATES OF ACCEPTANCE

Form/Title	Systems/Spaces To Be Field Verified
NRCA-ENV-02-F must be submitted for all new, added or altered fenestration.	

O. DECLARATION OF REQUIRED CERTIFICATES OF VERIFICATION

There are no forms required for this project.

Registration Number:

CA Building Energy Efficiency Standards - 2022 Nonresidential Compliance

Generated Date/Time:

Report Version: 2022.0.000
Schema Version: rev 20220101

Documentation Software: EnergyPro

Compliance ID: EnergyPro-4473-0223-0221
Report Generated: 2023-02-10 13:11:33

STAMPS

REGISTERED PROFESSIONAL ENGINEER — MECHANICAL — STATE OF CALIFORNIA — No. 33209 — EXP. 9-30-2023

LICENSED ARCHITECT — ROGER CLARKE — No. C-21340 — Exp. 10-31-24 — STATE OF CALIFORNIA

MECHANICAL ELECTRICAL AND ENERGY CONSULTANTS

DESIGN WEST ENGINEERING
412 E. Vanderbilt Way
San Bernardino, CA 92408
Tel: 909-890-3700
Fax: 909-890-3770
Email: cadd@designwesteng.com

CONSULTANT BRANDING

AGENCY APPROVAL
File No: 4.4

RUHNAU CLARKE ARCHITECTS

PRINTED: 7/26/2023 1:33:21 PM
PATH: R:\M_Jobs\50801_MMTF_MTMF\21061_Mountain Transit Maintenance Facility_Revit_Central.rvt

PROJECT No. :50801
7/26/2023 1:33:21 PM

DRAWN BY: CHECKED BY:

ISSUE No._____ DATE_____ DESCRIPTION_____
ISSUE No._____ DATE_____ DESCRIPTION_____
ISSUE No._____ DATE_____ DESCRIPTION_____
ISSUE No._____ DATE_____ DESCRIPTION_____

REVISION No._____ DATE_____ DESCRIPTION_____
REVISION No._____ DATE_____ DESCRIPTION_____
REVISION No._____ DATE_____ DESCRIPTION_____
REVISION No._____ DATE_____ DESCRIPTION_____

STATE OF CALIFORNIA
Mechanical Systems
CALIFORNIA ENERGY COMMISSION

CERTIFICATE OF COMPLIANCE		NRCC-MCH-E
Project Name:	Mountain Transit Admin & Maintenance Facility	**Report Page:** (Page 3 of 17)
Project Address:	160-170 Business Center Drive	**Date Prepared:** 2/16/2023

F. HVAC SYSTEM SUMMARY (DRY & WET SYSTEMS)

Dry System Equipment Sizing (includes air conditioners, condensers, heat pumps, VRF, furnaces and unit heaters and DOAS systems)

01	02	03	04	05	06	07	08	09	10	11
Name or Item Tag	Equipment Category per Tables 110.2, 140.4(a)2 and 170.2(c)3ai	Equipment Type per Tables 110.2 and Title 20	Smallest Size Available[1] 140.4(a) and 170.2(c)1	Equipment Sizing per Mechanical Schedule (kBtu/h) 140.4(a&b), 170.2(c)1 & 170.2(c)2						
				Heating Output[2,3]			Cooling Output[2,3]		Load Calculations[3,4]	
				Per Design (kBtu/h)	Rated (kBtu/h)	Supp. Heating Output (kBtu/h)	Sensible Per Design (kBtu/h)	Rated (kBtu/h)	Total Heating Load (kBtu/h)	Total Sensible Cooling Load (kBtu/h)
MAU-1	Unitary AC/ Condensers	AC, air-cooled pkg (3 phase)	Yes	600	600	0	286.96	313.56	1006.51	228.11
AC-1	Unitary AC/ Condensers	AC, air-cooled pkg (3 phase)	Yes	49	49	0	58.77	48.3	79.85	49.82
IU/OU-1	Unitary Heat Pumps	Air-cooled, split (3 phase)	Yes	19.04	11.8	0	9.65	9	4.1	3.82
IU/OU-2	Unitary Heat Pumps	Air-cooled, split (3 phase)	Yes	8.07	36	0	32.8	36	2.31	31.12

[1] *FOOTNOTES: Equipment shall be the smallest size, within the available options of the desired equipment line, necessary to meet the design heating and cooling loads of the building per 140.4(a) and 170.2(c)1. Healthcare facilities are excepted.*
[2] *It is common practice to show rated output capacity on the equipment schedule. Sensible cooling output comes from specification sheet tables.*
[3] *If equipment is heating only, leave cooling output and load blank. If equipment is cooling only, leave heating output and load blank.*
[4] *Authority Having Jurisdiction may ask for load calculations used for compliance per 140.4(b) and 170.2(c).*

Dry System Equipment Efficiency (other than Package Terminal Air Conditioners (PTAC) and Package Terminal Heat Pumps (PTHP), DX-DOAS and Dual Fuel Heat Pumps)

01	02	03	04	05	06	07	08	09
Name or Item Tag	Size Category (Btu/h)	Heating Mode				Cooling Mode		
		Rating Condition (°F)	Efficiency Unit	Minimum Efficiency Required per Tables 110.2 / Title 20	Design Efficiency	Efficiency Unit	Minimum Efficiency Required per Tables 110.2 / Title 20	Design Efficiency
MAU-1	>=240,000		Combustion Efficiency	0.8	0.8	EER IEER	9.8 13	11 20.4
AC-1	<65,000		AFUE	0.8	0.81	SEER	13.0	16.1

STATE OF CALIFORNIA
Mechanical Systems
CALIFORNIA ENERGY COMMISSION

CERTIFICATE OF COMPLIANCE		NRCC-MCH-E
Project Name:	Mountain Transit Admin & Maintenance Facility	**Report Page:** (Page 6 of 17)
Project Address:	160-170 Business Center Drive	**Date Prepared:** 2/16/2023

H. FAN SYSTEMS & AIR ECONOMIZERS

System Name	AC-1	Quantity	1	Fan System Status	New	System Zoning	all other systems	Serving Dwelling Units	Not Serving Dwelling Units	Fan System Airflow (cfm)	2,000	Site Elevation	6,745	Economizer	NA: Special OA filtration
01	02	03	04						05	06	07	08	09	10	11
Fan Name or Item Tag	Fan Type	Qty	Component						Airflow through Component (%)	Water Gauge (w.g)	Allowance		Design		
											Component Allowance	Fan Allowance (watt/cfm)[3]	Design Electrical Input Power Method	Motor Nameplate Horsepower	Design Electrical Input Power (kW)
SF	Supply	1	Base Allowance for system serving spaces <=6 floors away						2,000		464		Manufacturer provided		0.89
			MERV 13-16 Filter upstream of thermal conditioning equipment						2,000		278				
			Gas heat						2,000		116				
			Hydronic/DX cooling coil or heat pump coil						2,000		278				
									Fan System Allowance (kW)[3]				Fan System Electrical Output (kW)		

STATE OF CALIFORNIA
Mechanical Systems
CALIFORNIA ENERGY COMMISSION

CERTIFICATE OF COMPLIANCE		NRCC-MCH-E
Project Name:	Mountain Transit Admin & Maintenance Facility	**Report Page:** (Page 9 of 17)
Project Address:	160-170 Business Center Drive	**Date Prepared:** 2/16/2023

Fan Energy Index (FEI)

Name or Item Tag	FEI Exception	FEI

I. SYSTEM CONTROLS

This table is used to demonstrate compliance with mandatory controls in 110.2 and 120.2 and prescriptive controls in 140.4(f) and (n), 170.2(c)4D 170.2(c)4L or requirements in 141.0(b)2E 180.2(b)2 for altered space conditioning systems.

01	02	03	04	05	06	07	08	09
System Name	System Zoning	Conditioned Floor Area Being Served (ft^2)	Thermostats 110.2(b) & (c)[1], 120.2(a) 160.3(a)2A or 141.0(b)2E & 180.2(b)2	Shut-Off Controls 120.2(e) & 160.3(a)2D	Isolation Zone Controls 120.2(g) & 160.3(a)2F	Demand Response 110.12 120.2(b) & 160.3(a)2B	Supply Air Temp. Reset 140.4(f) & 170.2(c)4D	Window Interlocks per 140.4(n) & 170.2(c)4D
MAU-1	Single zone	<= 25,000 ft^2	Setback	Auto Timer Switch	4 Hour Timer	DR Tstat per 110.12	NA: Single Zone	Provided
AC-1	Single zone	<= 25,000 ft^2	Setback	Auto Timer Switch	4 Hour Timer	DR Tstat per 110.12	NA: Single Zone	Provided
IU/OU-1	Single zone	<= 25,000 ft^2	Setback	NA: 7 day per 120.2(e)1	NA: Continuous Heat/Cool	DR Tstat per 110.12	NA: Single Zone	Provided
IU/OU-2	Single zone	<= 25,000 ft^2	Setback	NA: 7 day per 120.2(e)1	NA: Continuous Heat/Cool	DR Tstat per 110.12	NA: Single Zone	Provided

[1] *FOOTNOTES: Gravity gas wall heaters, gravity floor heaters, gravity room heaters, non-central electric heaters, fireplaces or decorative gas appliances, wood stoves are not required to have setback thermostats.*

STATE OF CALIFORNIA
Mechanical Systems
CALIFORNIA ENERGY COMMISSION

CERTIFICATE OF COMPLIANCE		NRCC-MCH-E
Project Name:	Mountain Transit Admin & Maintenance Facility	**Report Page:** (Page 2 of 17)
Project Address:	160-170 Business Center Drive	**Date Prepared:** 2/16/2023

C. COMPLIANCE RESULTS

Table C will indicate if the project data input into the compliance document is compliant with mechanical requirements. This table is not editable by the user. If this table says "DOES NOT COMPLY" or "COMPLIES with Exceptional Conditions" refer to Table D., or the table indicated as not compliant for guidance.

01		02		03		04		05		06		07		08	09
System Summary 110.1, 110.2, 140.4, 170.2(c)	AND	Pumps 140.4(k), 170.2(c)4I	AND	Fans/ Economizers 140.4(c), 140.4(e), 170.2(c)	AND	System Controls 110.2, 120.2, 140.4(f), 170.2(c)	AND	Ventilation 120.1, 160.2	AND	Terminal Box Controls 140.4(d), 170.2(c)4B	AND	Distribution 120.3, 140.4(l), 160.2, 160.3	AND	Cooling Towers 110.2(e)2	Compliance Results
(See Table F)		(See Table G)		(See Table H)		(See Table I)		(See Table J)		(See Table K)		(See Table L)		(See Table M)	
Yes	AND		AND	Yes	AND	Yes	AND	Yes	AND		AND	Yes	AND		COMPLIES
Mandatory Measures Compliance (See Table Q for Details)												COMPLIES			

D. EXCEPTIONAL CONDITIONS

This table is auto-filled with uneditable comments because of selections made or data entered in tables throughout the form.

E. ADDITIONAL REMARKS

This table includes remarks made by the permit applicant to the Authority Having Jurisdiction.

F. HVAC SYSTEM SUMMARY (DRY & WET SYSTEMS)

Space Conditioning System Information

01	02	03	04	05	06
System Name	Quantity	System Serving	System Status	Space Type	Utilizing Recovered Heat
MAU-1	1	Single zone	New/ Addition		☐
AC-1	1	Single zone	New/ Addition		☐
IU/OU-1	1	Single zone	New/ Addition		☐
IU/OU-2	1	Single zone	New/ Addition		☐

STATE OF CALIFORNIA
Mechanical Systems
CALIFORNIA ENERGY COMMISSION

CERTIFICATE OF COMPLIANCE		NRCC-MCH-E
Project Name:	Mountain Transit Admin & Maintenance Facility	**Report Page:** (Page 5 of 17)
Project Address:	160-170 Business Center Drive	**Date Prepared:** 2/16/2023

H. FAN SYSTEMS & AIR ECONOMIZERS

This table is used to demonstrate compliance with prescriptive requirements found in 140.4(c), 140.4(e), 140.4(m), 170.2(c)3, and 170.2(c)4A for fan systems. Fan systems serving only process loads are exempt from these requirements and do not need to be included in Table H.

System Name	MAU-1	Quantity	1	Fan System Status	New	System Zoning	all other systems	Serving Dwelling Units	Not Serving Dwelling Units	Fan System Airflow (cfm)	10,000	Site Elevation	6,745	Economizer	Differential Temperature
01	02	03	04						05	06	07	08	09	10	11
Fan Name or Item Tag	Fan Type	Qty	Component						Airflow through Component (%)	Water Gauge (w.g)	Allowance		Design		
											Component Allowance	Fan Allowance (watt/cfm)[3]	Design Electrical Input Power Method	Motor Nameplate Horsepower	Design Electrical Input Power (kW)
SF	Supply	1	Base Allowance for system serving spaces <=6 floors away						10,000		2,560		Manufacturer provided		5.03
			MERV 13-16 Filter upstream of thermal conditioning equipment						10,000		1,200				
			Gas heat						10,000		600				
			Hydronic/DX cooling coil or heat pump coil						10,000		1,200				
			100% outdoor air system						10,000		1,000				
									Fan System Allowance (kW)[3]		5.25		Fan System Electrical Output (kW)		5.03

[3] *FOOTNOTES: Fans serving spaces with design background noise goals below NC35*
[2] *Low-turndown single-zone VAV fan system must be capable of and configured to reduce airflow to 50 percent of design airflow and use no more than 30 percent of the design wattage at that airflow. No more than 10 percent of the design load served by the equipment shall have fixed loads.*

H. EXHAUST AIR HEAT RECOVERY 140.4(q), 170.2(c)4O

01	02	03	04	05	06	07	08	09	10	11
Fan System Name	Qty	Hours of Operation per Year	Design Supply Airflow Rate	Outdoor Airflow	% Outdoor Air at Full Design Airflow	Exemptions to Exhaust Air Heat Recovery Requirement per 140.4(q) & 170.2(c)4O	Exhaust Air Heat Recovery 140.4(q) & 170.2(c)4O	Type Of Heat Recovery Rating	Required Recovery Ratio	Energy Recovery Bypass

Fan Energy Index (FEI)

01	02	03

STATE OF CALIFORNIA
Mechanical Systems
CALIFORNIA ENERGY COMMISSION

CERTIFICATE OF COMPLIANCE		NRCC-MCH-E
Project Name:	Mountain Transit Admin & Maintenance Facility	**Report Page:** (Page 8 of 17)
Project Address:	160-170 Business Center Drive	**Date Prepared:** 2/16/2023

H. FAN SYSTEMS & AIR ECONOMIZERS

System Name	IU/OU-2	Quantity	1	Fan System Status	New	System Zoning	all other systems	Serving Dwelling Units	Not Serving Dwelling Units	Fan System Airflow (cfm)	843	Site Elevation	6,745	Economizer	NA: Special OA filtration
01	02	03	04						05	06	07	08	09	10	11
Fan Name or Item Tag	Fan Type	Qty	Component						Airflow through Component (%)	Water Gauge (w.g)	Allowance		Design		
											Component Allowance	Fan Allowance (watt/cfm)[3]	Design Electrical Input Power Method	Motor Nameplate Horsepower	Design Electrical Input Power (kW)
SF	Supply	1	Base Allowance for system serving spaces <=6 floors away						843		196		Manufacturer provided		0.04
			MERV 13-16 Filter upstream of thermal conditioning equipment						843		117				
			Hydronic/DX cooling coil or heat pump coil						843		117				
									Fan System Allowance (kW)[3]				Fan System Electrical Output (kW)		

STATE OF CALIFORNIA
Mechanical Systems
CALIFORNIA ENERGY COMMISSION

CERTIFICATE OF COMPLIANCE		NRCC-MCH-E
Project Name:	Mountain Transit Admin & Maintenance Facility	**Report Page:** (Page 7 of 17)
Project Address:	160-170 Business Center Drive	**Date Prepared:** 2/16/2023

H. FAN SYSTEMS & AIR ECONOMIZERS

System Name	IU/OU-1	Quantity	1	Fan System Status	New	System Zoning	all other systems	Serving Dwelling Units	Not Serving Dwelling Units	Fan System Airflow (cfm)	382	Site Elevation	6,745	Economizer	NA: <=33 kBtu/h cooling
01	02	03	04						05	06	07	08	09	10	11
Fan Name or Item Tag	Fan Type	Qty	Component						Airflow through Component (%)	Water Gauge (w.g)	Allowance		Design		
											Component Allowance	Fan Allowance (watt/cfm)[3]	Design Electrical Input Power Method	Motor Nameplate Horsepower	Design Electrical Input Power (kW)
SF	Supply	1	Base Allowance for system serving spaces <=6 floors away						382		89		Manufacturer provided		0.02
			MERV 13-16 Filter upstream of thermal conditioning equipment						382		53				
			Hydronic/DX cooling coil or heat pump coil						382		53				
									Fan System Allowance (kW)[3]				Fan System Electrical Output (kW)		

STATE OF CALIFORNIA
Mechanical Systems
CALIFORNIA ENERGY COMMISSION

CERTIFICATE OF COMPLIANCE		NRCC-MCH-E
Project Name:	Mountain Transit Admin & Maintenance Facility	**Report Page:** (Page 1 of 17)
Project Address:	160-170 Business Center Drive	**Date Prepared:** 2/16/2023

This document is used to demonstrate compliance for mechanical systems that are within the scope of the permit application and are demonstrating compliance using the prescriptive path outlined in 140.4, or 141.0(b)2 for alterations.

A. GENERAL INFORMATION

01	Project Location (city)	Big Bear Lake	04 Total Conditioned Floor Area	9312
02	Climate Zone	16	05 Total Unconditioned Floor Area	72
03	Occupancy Types Within Project:		06 # of Stories (Habitable Above Grade)	1

● Office ● Support Areas ● All Other Occupancies

B. PROJECT SCOPE

This table Includes mechanical systems or components that are within the scope of the permit application and are demonstrating compliance using the prescriptive path outlined in 140.4, 170.2(b) or 141.0(b)2 and 180.2(b)2 for alterations.

01	02	03
Air System(s)	Wet System Components	Dry System Components
☒ Heating Air System	☐ Water Economizer	☐ Air Economizer
☒ Cooling Air System	☐ Pumps	☐ Electric Resistance Heat
Mechanical Controls	☐ System Piping	☒ Fan Systems
☒ Mechanical Controls (existing to remain, altered or new)	☐ Cooling Towers	☒ Ductwork (existing to remain, altered or new)
	☐ Chillers	☒ Ventilation
	☐ Boilers	☐ Zonal Systems/ Terminal Boxes

STATE OF CALIFORNIA
Mechanical Systems
CALIFORNIA ENERGY COMMISSION

CERTIFICATE OF COMPLIANCE		NRCC-MCH-E
Project Name:	Mountain Transit Admin & Maintenance Facility	**Report Page:** (Page 4 of 17)
Project Address:	160-170 Business Center Drive	**Date Prepared:** 2/16/2023

F. HVAC SYSTEM SUMMARY (DRY & WET SYSTEMS)

Dry System Equipment Efficiency (other than Package Terminal Air Conditioners (PTAC) and Package Terminal Heat Pumps (PTHP), DX-DOAS and Dual Fuel Heat Pumps)

01	02	03	04	05	06	07	08	09
Name or Item Tag	Size Category (Btu/h)	Heating Mode				Cooling Mode		
		Rating Condition (°F)	Efficiency Unit	Minimum Efficiency Required per Tables 110.2 / Title 20	Design Efficiency	Efficiency Unit	Minimum Efficiency Required per Tables 110.2 / Title 20	Design Efficiency
IU/OU-1	<65,000		HSPF	8.2	13	SEER	13.0	28.1
IU/OU-2	<65,000		HSPF	8.2	9	SEER	13.0	17.5

G. PUMPS

This section does not apply to this project.

STAMPS

AGENCY APPROVAL
File No: 4.4

MECHANICAL ELECTRICAL AND ENERGY CONSULTANTS
DESIGN WEST ENGINEERING
412 E. Vanderbilt Way
San Bernardino, CA 92408
Tel: 909-890-3700
Fax: 909-890-3770
Email: cadd@designwesteng.com
CONSULTANT BRANDING

RUHNAU CLARKE ARCHITECTS

MOUNT TRANSIT MAINTENANCE FACILITY:

PRINTED: 7/26/2023 1:33:34 PM
PATH: R:\Jobs\50801_MMTF_MMTF_MTMF21061_Mountain Transit Maintenance Facility\Revit\50801_CMMTF_Central.rvt

PROJECT No. :50801
7/26/2023 1:33:34 PM

DRAWN BY: CHECKED BY:

ISSUE No.:_____ DATE:_____ DESCRIPTION:_____
ISSUE No.:_____ DATE:_____ DESCRIPTION:_____
ISSUE No.:_____ DATE:_____ DESCRIPTION:_____
ISSUE No.:_____ DATE:_____ DESCRIPTION:_____

REVISION No.:_____ DATE:_____ DESCRIPTION:_____
REVISION No.:_____ DATE:_____ DESCRIPTION:_____
REVISION No.:_____ DATE:_____ DESCRIPTION:_____
REVISION No.:_____ DATE:_____ DESCRIPTION:_____

J. VENTILATION AND INDOOR AIR QUALITY

17	Total System Required Min OA CFM				347	18	Ventilation for this System Complies?	Yes

04	05				06			07	
System Name	IU/OU-1	System Design OA CFM Airflow[1]		26	System Design Transfer Air CFM		0	Air Filtration per 120.1(c) 141.0(b)2 and 160.2(c)21[2] Provided	
08	09	10	11	12	13	14	15	16	
Space Name or Item Tag	Mechanical Ventilation Required per 120.1(c)[3] & 160.2(c)3					Exh. Vent per 120.1(c)4 & 160.2(c)4		DCV or Sensor Controls per 120.1(d)3, 120.1(d)5, and 120.1(e)[3] 160.2(c)5D 160.2(c)5E 160.2(c)5D	
	Occupancy Type[4]	Conditioned Floor Area (ft²)	# of Shower heads/ toilets	# of people[5]	Required Min OA CFM	Required Min CFM	Provided per Design CFM		
Office	Office space	175			26.2	0	0	DCV	NA: Not required per §120.1(d)3
								Occ Sensor	NA: Not required space type

17	Total System Required Min OA CFM				26	18	Ventilation for this System Complies?	Yes	

04	05				06			07	
System Name	IU/OU-2	System Design OA CFM Airflow[1]		0	System Design Transfer Air CFM		0	Air Filtration per 120.1(c) 141.0(b)2 and 160.2(c)21[2] Provided	
08	09	10	11	12	13	14	15	16	
Space Name or Item Tag	Mechanical Ventilation Required per 120.1(c)[3] & 160.2(c)3					Exh. Vent per 120.1(c)4 & 160.2(c)4		DCV or Sensor Controls per 120.1(d)3, 120.1(d)5, and 120.1(e)[3] 160.2(c)5D 160.2(c)5E 160.2(c)5D	
	Occupancy Type[4]	Conditioned Floor Area (ft²)	# of Shower heads/ toilets	# of people[5]	Required Min OA CFM	Required Min CFM	Provided per Design CFM		
Equipment Room	All others	189			0	0	0	DCV	NA: Not required per §120.1(d)3
								Occ Sensor	NA: Not required space type

Registration Number: | Generated Date/Time: | Documentation Software: EnergyPro

CA Building Energy Efficiency Standards - 2022 Nonresidential Compliance | Report Version: 2022.0.000 Schema Version: rev 20220101 | Compliance ID: EnergyPro-4473-0223-0246 Report Generated: 2023-02-16 14:45:19

J. VENTILATION AND INDOOR AIR QUALITY

04	05				06			07	
System Name	AC-1	System Design OA CFM Airflow[1]		347	System Design Transfer Air CFM		0	Air Filtration per 120.1(c) 141.0(b)2 and 160.2(c)21[2] Provided	
08	09	10	11	12	13	14	15	16	
Space Name or Item Tag	Mechanical Ventilation Required per 120.1(c)[3] & 160.2(c)3					Exh. Vent per 120.1(c)4 & 160.2(c)4		DCV or Sensor Controls per 120.1(d)3, 120.1(d)5, and 120.1(e)[3] 160.2(c)5D 160.2(c)5E 160.2(c)5D	
	Occupancy Type[4]	Conditioned Floor Area (ft²)	# of Shower heads/ toilets	# of people[5]	Required Min OA CFM	Required Min CFM	Provided per Design CFM		
Restroom	Toilet, private	250	2		0	100	0	DCV	NA: Not required per §120.1(d)3
								Occ Sensor	NA: Not required space type
Shower	Shower room	99	2		0	100	0	DCV	NA: Not required per §120.1(d)3
								Occ Sensor	NA: Not required space type
Locker	Locker room (athletic facility)	258			0	129	0	DCV	NA: Not required per §120.1(d)3
								Occ Sensor	NA: Not required space type
Breakroom	Break room	557			278.5	0	0	DCV	Provided per §120.1(d)4
								Occ Sensor	NA: Not required space type
Office	Office space	455			68.2	0	0	DCV	NA: Not required per §120.1(d)3
								Occ Sensor	NA: Not required space type

Registration Number: | Generated Date/Time: | Documentation Software: EnergyPro

CA Building Energy Efficiency Standards - 2022 Nonresidential Compliance | Report Version: 2022.0.000 Schema Version: rev 20220101 | Compliance ID: EnergyPro-4473-0223-0246 Report Generated: 2023-02-16 14:45:19

J. VENTILATION AND INDOOR AIR QUALITY

This table is used to demonstrate compliance with mandatory ventilation requirements in 120.1 120.2(e)3B 140.4(p) and 140.4(q) for all nonresidential and hotel/motel and d:t24refnolink/160.2, 160.3(a)3D, 170.2(o)4N, 170.2(o)4O for high-rise residential occupancies. For alterations, only ventilation systems being altered within the scope of the permit application need to be documented in this table. In lieu of this table, the required outdoor ventilation rates and airflows may be shown on the plans or the calculations can be presented in a spreadsheet.

01	☐	Check the box if the project is showing ventilation calculations on the plans, or attaching the calculations instead of completing this table.
02	☒	Check this box if the project included Nonresidential, Hotel/Motel Spaces or Multifamily Common Use Spaces
	☐	
03	☐	Check the box if the project is using natural ventilation in any nonresidential or hotel/motel spaces to meet required ventilation rates per 120.1(c)2.

Nonresidential and Hotel/ Motel Multifamily Common Use Ventilation Systems

04	05				06			07	
System Name	MAU-1	System Design OA CFM Airflow[3]		10000	System Design Transfer Air CFM		0	Air Filtration per 120.1(c) 141.0(b)2 and 160.2(c)21[2] Provided	
08	09	10	11	12	13	14	15	16	
Space Name or Item Tag	Mechanical Ventilation Required per 120.1(c)[3] & 160.2(c)3					Exh. Vent per 120.1(c)4 & 160.2(c)4		DCV or Sensor Controls per 120.1(d)3, 120.1(d)5, and 120.1(e)[3] 160.2(c)5D 160.2(c)5E 160.2(c)5D	
	Occupancy Type[4]	Conditioned Floor Area (ft²)	# of Shower heads/ toilets	# of people[5]	Required Min OA CFM	Required Min CFM	Provided per Design CFM		
Maintenance Bays	Auto-repair room	5073			0	7609.5	10000	DCV	NA: Not required per §120.1(d)3
								Occ Sensor	NA: Not required space type
Storage	Warehouse	2256			338.4	0	0	DCV	NA: Not required per §120.1(d)3
								Occ Sensor	NA: Not required space type
17	Total System Required Min OA CFM				338	18	Ventilation for this System Complies?		Yes

Registration Number: | Generated Date/Time: | Documentation Software: EnergyPro

CA Building Energy Efficiency Standards - 2022 Nonresidential Compliance | Report Version: 2022.0.000 Schema Version: rev 20220101 | Compliance ID: EnergyPro-4473-0223-0246 Report Generated: 2023-02-16 14:45:19

L. DISTRIBUTION (DUCTWORK and PIPING)

		Dwelling Units: Total duct leakage of duct system shall not exceed 12% or duct system to outside shall not exceed 6% per RA3.1.4 required for systems?	Yes
		Duct leakage testing per CMC Section 603.10.1 required for these systems?	No

11	false	
12	Yes	Duct system provides conditioned air to an occupiable space for a constant volume, single zone, space-conditioning system.
13	Yes	The space conditioning system serves less than 5,000 ft² of conditioned floor area.
14	No	The combined surface area of the ducts is more than 25% of the total surface area of the entire duct system:
15		The scope of the project includes extending an existing duct system, which is constructed, insulated or sealed with asbestos.
16	No	The scope of the project includes an existing duct system that is documented to have been previously sealed as confirmed through field verification and diagnostic testing in accordance with procedures in the Reference Nonresidential Appendix NA2.
17		All Ductwork and plenums with pressure class ratings shall be constructed to Seal Class A
18		All ductwork is an extension of an existing duct system
19		Ductwork serving individual dwelling unit
20		< 25 ft of new or replacement space conditioning ducts installed
21	R-8	Dust Insulation R-value

M. COOLING TOWERS

This section does not apply to this project.

N. DECLARATION OF REQUIRED CERTIFICATES OF INSTALLATION

Form/Title
NRCI-MCH-01-E - Must be submitted for all buildings

Registration Number: | Generated Date/Time: | Documentation Software: EnergyPro

CA Building Energy Efficiency Standards - 2022 Nonresidential Compliance | Report Version: 2022.0.000 Schema Version: rev 20220101 | Compliance ID: EnergyPro-4473-0223-0246 Report Generated: 2023-02-16 14:45:19

K. TERMINAL BOX CONTROLS

This section does not apply to this project.

L. DISTRIBUTION (DUCTWORK and PIPING)

This table is used to show compliance with mandatory pipe insulation requirements found in 120.3 and mandatory requirements found in 120.4(g) for duct sealing.

01	☐	Insulation shall be protected from damage, including that due to sunlight, moisture, equipment maintenance, and wind. Insulation exposed to weather shall be installed with a cover suitable for outdoor service. Insulation covering chilled water piping and refrigerant suction piping located outside the conditioned space shall have a Class I or Class II vapor retarder. All penetrations and joints of which shall be sealed.

Duct Leakage Testing

The answers to the questions below apply to the following duct systems:	MAU-1	**NR/ Common Use:** Duct leakage testing shall not exceed 6% per NA7.5.3 required for these systems?	Yes
		Dwelling Units: Total duct leakage of duct system shall not exceed 12% or duct system to outside shall not exceed 6% per RA3.1.4 required for systems?	Yes
		Duct leakage testing per CMC Section 603.10.1 required for these systems?	No

11	false	
12	Yes	Duct system provides conditioned air to an occupiable space for a constant volume, single zone, space-conditioning system.
13	No	The space conditioning system serves less than 5,000 ft² of conditioned floor area.
14	No	The combined surface area of the ducts is more than 25% of the total surface area of the entire duct system:
15		The scope of the project includes extending an existing duct system, which is constructed, insulated or sealed with asbestos.
16	No	The scope of the project includes an existing duct system that is documented to have been previously sealed as confirmed through field verification and diagnostic testing in accordance with procedures in the Reference Nonresidential Appendix NA2.
17		All Ductwork and plenums with pressure class ratings shall be constructed to Seal Class A
18		All ductwork is an extension of an existing duct system
19		Ductwork serving individual dwelling unit
20		< 25 ft of new or replacement space conditioning ducts installed
21	R-8	Dust Insulation R-value

The answers to the questions below apply to the following duct systems:	AC-1	**NR/ Common Use:** Duct leakage testing shall not exceed 6% per NA7.5.3 required for these systems?	Yes

Registration Number: | Generated Date/Time: | Documentation Software: EnergyPro

CA Building Energy Efficiency Standards - 2022 Nonresidential Compliance | Report Version: 2022.0.000 Schema Version: rev 20220101 | Compliance ID: EnergyPro-4473-0223-0246 Report Generated: 2023-02-16 14:45:19

J. VENTILATION AND INDOOR AIR QUALITY

17	Total System Required Min OA CFM	0	18	Ventilation for this System Complies?	Yes

[1] *FOOTNOTES: System CFM should include both mechanical and natural ventilation for the zone/system*

[2] *Air filtration requirements apply to the following three system types per 120.1(c)1A: space conditioning systems utilizing ducts to supply air to occupiable space; supply-only ventilation systems providing outside air to occupiable space; supply side of balanced ventilation systems including heat recovery and energy recovery ventilation systems providing outside air to occupiable space.*

[3] *Uniform Mechanical Code may have more stringent ventilation requirements; the most stringent code requirement takes precedence.*

[4] *See Standards Tables 120.1-A and 120.1-B.*

[5] *For lecture halls with fixed seating, the expected number of occupants shall be determined in accordance with the California Building Code.*

[6] *120.2(e)3 requires systems serving rooms that are required by 130.1(c) to have lighting occupancy sensing controls to also have occupancy sensing zone controls for ventilation. Examples of spaces which require lighting occupancy sensors include offices 250ft² or smaller, multipurpose rooms less than 1,000 ft², classrooms, conference rooms, restrooms, aisles and open areas in warehouses, library book stack aisles, corridors, stairwells, parking garages, and loading and unloading zones, unless excepted by 130.1(c).*

Multifamily Dwelling Unit Ventilation Systems

☐	Check the box if the system is using continuous ventilation to meet the ventilation requirements per 160.2(b)2Alvb2							
19	20	21	22	23	24	25	26	27
Space Name or Item Tag	Mechanical Ventilation Required per 120.1(b) & 160.2(b)2				Ventilation per Design		Local Exhaust	Air Filtration per 120.1(c) & 160.2(b)1
	Conditioned Floor Area (ft²)	# of Bedrooms	# of Dwelling Units	Required Min OA CFM[1]	Supply Air CFM	Exhaust CFM		
28	Is this a balanced system[4]				29	Meeting Outside Air Requirements?		

[1] *FOOTNOTES: Uniform Mechanical Code may have more stringent ventilation requirements; the most stringent code requirement takes precedence.*

[2] *Kitchen range hood will be verified per NA7.18.1 to confirm model is rated by HVI or AHAM.*

[3] *Air filtration requirements apply to the following three system types per 120.1(c)1A: space conditioning systems utilizing ducts to supply air to occupiable space; supply-only ventilation systems providing outside air to occupiable space; supply side of balanced ventilation systems including heat recovery and energy recovery ventilation systems providing outside air to occupiable space.*

[4] *A balanced ventilation system provides ventilation airflow to each dwelling-unit at a rate equal to or greater than the required minimum rate, but not more than twenty percent.*

Registration Number: | Generated Date/Time: | Documentation Software: EnergyPro

CA Building Energy Efficiency Standards - 2022 Nonresidential Compliance | Report Version: 2022.0.000 Schema Version: rev 20220101 | Compliance ID: EnergyPro-4473-0223-0246 Report Generated: 2023-02-16 14:45:19

DOCUMENTATION AUTHOR'S DECLARATION STATEMENT

I certify that this Certificate of Compliance documentation is accurate and complete.

Documentation Author Name: Steven Johnson	Documentation Author Signature: Steven Johnson
Company: Design West Engineering	Signature Date: 2023-02-16
Address: 412 E. Vanderbilt Way	CEA/ HERS Certification Identification (if applicable):
City/State/Zip: San Bernardino CA 92408	Phone:

RESPONSIBLE PERSON'S DECLARATION STATEMENT

I certify the following under penalty of perjury, under the laws of the State of California:

1. The information provided on this Certificate of Compliance is true and correct.
2. I am eligible under Division 3 of the Business and Professions Code to accept responsibility for the building design or system design identified on this Certificate of Compliance (responsible designer)
3. The energy features and performance specifications, materials, components, and manufactured devices for the building design or system design identified on this Certificate of Compliance conform to the requirements of Title 24, Part 1 and Part 6 of the California Code of Regulations.
4. The building design features or system design features identified on this Certificate of Compliance are consistent with the information provided on other applicable compliance documents, worksheets, calculations, plans and specifications submitted to the enforcement agency for approval with this building permit application.
5. I will ensure that a completed signed copy of this Certificate of Compliance shall be made available with the building permit(s) issued for the building, and made available to the enforcement agency for all applicable inspections. I understand that a completed signed copy of this Certificate of Compliance is required to be included with the documentation the builder provides to the building owner at occupancy.

Responsible Designer Name: Steven Johnson	Responsible Designer Signature: Steven Johnson
Company: Design West Engineering	Date Signed: 2023-02-16
Address: 412 E. Vanderbilt Way	License: M-33209
City/State/Zip: San Bernardino CA 92408	Phone: 909-890-3700

Registration Number: | Generated Date/Time: | Documentation Software: EnergyPro

CA Building Energy Efficiency Standards - 2022 Nonresidential Compliance | Report Version: 2022.0.000 Schema Version: rev 20220101 | Compliance ID: EnergyPro-4473-0223-0246 Report Generated: 2023-02-16 14:45:19

O. DECLARATION OF REQUIRED CERTIFICATES OF ACCEPTANCE

Form/Title	Systems/Spaces To Be Field Verified
NRCA-MCH-02-A - Outdoor Air must be submitted for all newly installed HVAC units. Note: MCH-02-A can be performed in conjunction with MCH-07-A Supply Fan VFD Acceptance (if applicable) since testing activities overlap.	Daikin DPS020A gas heat; Carrier 48GCGM06; Carrier 38MARBQ09; Carrier 38MARBQ36;
NRCA-MCH-03-A - Constant Volume Single Zone HVAC NOTE: This form does not automatically move to 'Yes'. If Constant Volume Single Zone HVAC Systems are included in the scope, permit applicant should move this form to "Yes".	Daikin DPS020A gas heat; Carrier 48GCGM06; Carrier 38MARBQ09; Carrier 38MARBQ36;
NRCA-MCH-06-A Demand Control Ventilation Systems must be submitted for all systems required to employ demand controlled ventilation (refer to 120.1(c)3) can vary outside ventilation flow rates based on maintaining interior carbon dioxide (CO_2) concentration setpoints.	Carrier 48GCGM06;
NRCA-MCH-07-A Supply Fan Variable Flow Controls	Carrier 48GCGM06;

P. DECLARATION OF REQUIRED CERTIFICATES OF VERIFICATION

There are no NRCV forms required for this project.

Q. MANDATORY MEASURES DOCUMENTATION LOCATION

This table is used to indicate where mandatory measures are documented in the plan set or construction documentation.

01		02
Compliance with Mandatory Measures documented through MCH Mandatory Measures Note Block	Yes	Plan sheet or construction document location: M-Sheets

Registration Number: | Generated Date/Time: | Documentation Software: EnergyPro

CA Building Energy Efficiency Standards - 2022 Nonresidential Compliance | Report Version: 2022.0.000 Schema Version: rev 20220101 | Compliance ID: EnergyPro-4473-0223-0246 Report Generated: 2023-02-16 14:45:19

REGISTERED PROFESSIONAL ENGINEER — No. 33209 — EXP. 9-30-2023 — MECHANICAL — STATE OF CALIFORNIA

LICENSED ARCHITECT — No. C-31260 — Exp. 10-31-2024 — STATE OF CALIFORNIA

STAMPS

AGENCY APPROVAL File No.: n.a

MECHANICAL ELECTRICAL AND ENERGY CONSULTANTS

DESIGN WEST ENGINEERING
412 E. Vanderbilt Way
San Bernardino, CA 92408
Tel: 909-890-3700
Fax: 909-890-3770
Email: cadd@designwesteng.com

CONSULTANT BRANDING

RUHNAU CLARKE ARCHITECTS

PRINTED: 7/26/2023 1:33:46 PM
PATH: R:\Projects\50801_MARTA_MTMF\21061_Mountain Transit Maintenance Facility_Bldg_Rev_Cntrct.rvt

PROJECT No. :50801
7/26/2023 1:33:46 PM

DRAWN BY: CHECKED BY:

ISSUE No.:_____ DATE:_____ DESCRIPTION:_____
ISSUE No.:_____ DATE:_____ DESCRIPTION:_____
ISSUE No.:_____ DATE:_____ DESCRIPTION:_____
ISSUE No.:_____ DATE:_____ DESCRIPTION:_____

REVISION No.:_____ DATE:_____ DESCRIPTION:_____
REVISION No.:_____ DATE:_____ DESCRIPTION:_____
REVISION No.:_____ DATE:_____ DESCRIPTION:_____
REVISION No.:_____ DATE:_____ DESCRIPTION:_____

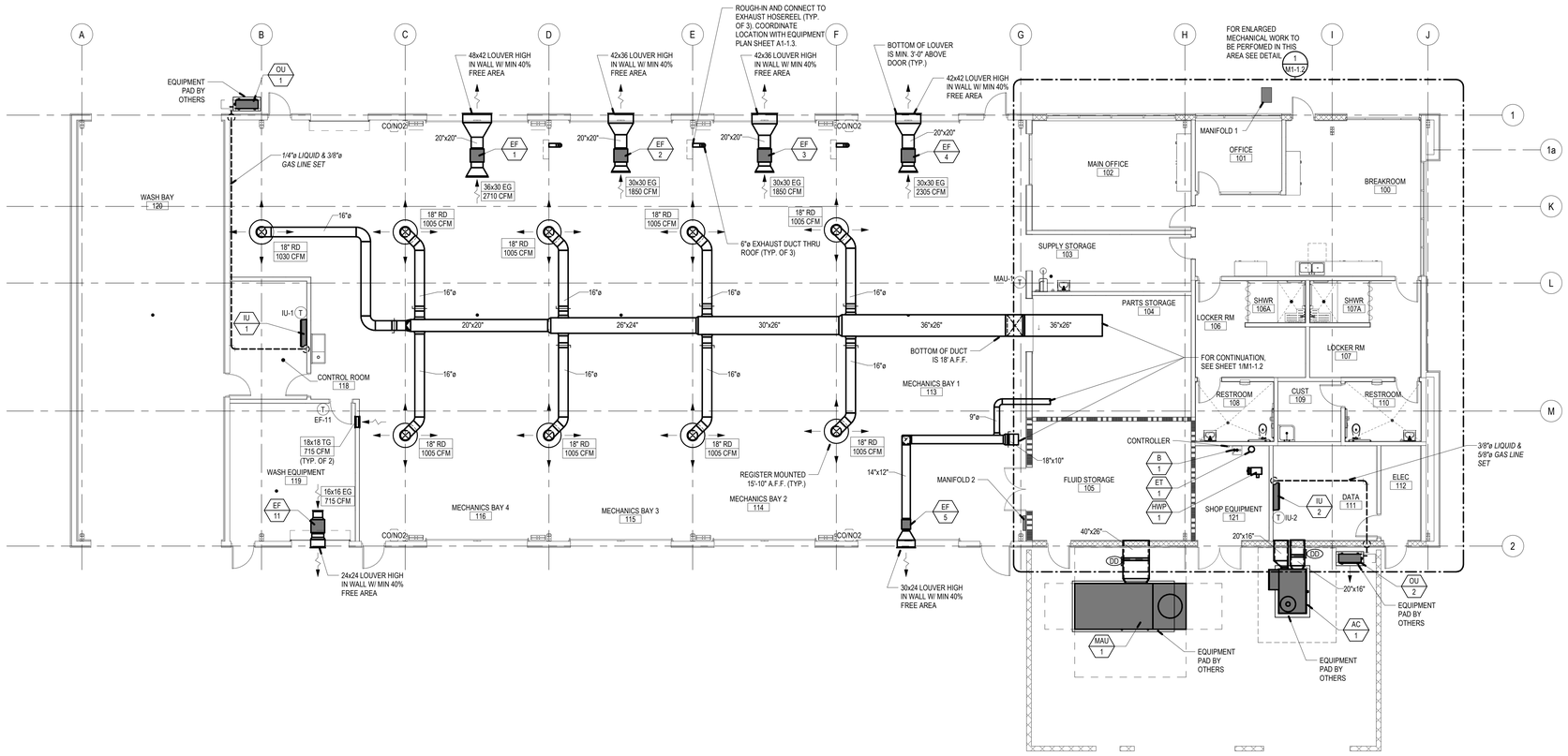

MECHANICAL FLOOR PLAN | 1/8" = 1'-0" | 1

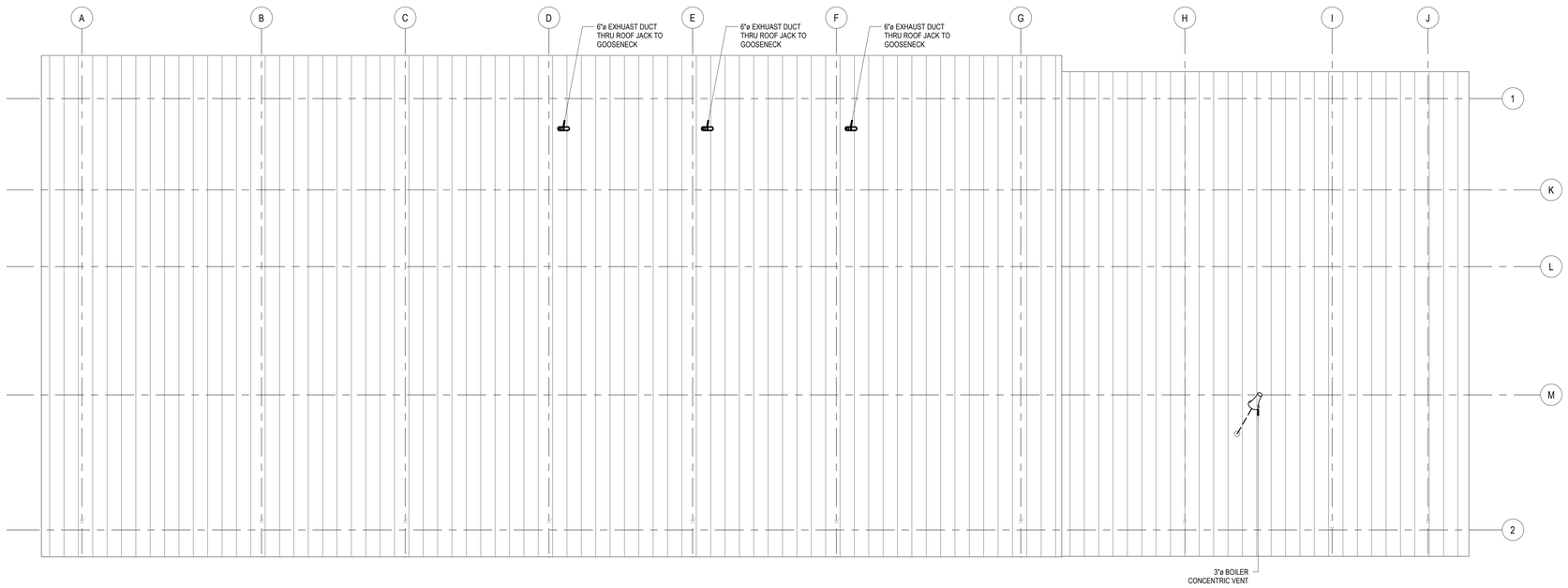

MECHANICAL ROOF PLAN | 1/8" = 1'-0" | 2

REGISTERED PROFESSIONAL ENGINEER
No. 33209
EXP. 9-30-2023
MECHANICAL
STATE OF CALIFORNIA

LICENSED ARCHITECT
ROGER CLARKE
No. C-21245
Exp. 10-31-24
STATE OF CALIFORNIA

STAMPS

AGENCY APPROVAL
File No: n.a

MECHANICAL ELECTRICAL AND ENERGY CONSULTANTS

DESIGN WEST ENGINEERING

412 E. Vanderbilt Way
San Bernardino, CA 92408
Tel: 909-890-3700
Fax: 909-890-3770
Email: cadd@designwesteng.com

CONSULTANT BRANDING

RUHNAU CLARKE ARCHITECTS

GENERAL NOTES

1. FOR LINE TYPES, SYMBOLS & ABBREVIATIONS SEE LEGEND ON SHEET M0-0.1.
2. FOR EQUIPMENT REFERENCES, SEE EQUIPMENT SCHEDULE ON SHEET M0-0.2.
3. SPIN-IN OR TAP TYPE DUCT CONNECTIONS SHALL BE PROVIDED WITH AN EXTRACTOR.
4. T-STATS SHALL NOT BE MOUNTED IN DIRECT LINE OF ANY SUPPLY DIFFUSER OR NEAR ANY HEAT REJECTION EQUIPMENT.
5. DUCT DIMENSIONS ARE NET INSIDE CLEAR
6. DUCTWORK SHALL BE HARD DUCT. FLEX DUCT MAY BE USED ONLY AT SUPPLY & RETURN OUTLETS AT A MAX. LENGTH OF 5'-0".
7. VENTING SHALL HAVE A MIN. OF 10' CLEARANCE FROM ANY FORCED AIR INLET W/ A MIN. OF 3' CLEARANCE ABOVE & A MIN OF 4' CLEARANCE FROM ANY PROPERTY LINE EXCEPT A PUBLIC WAY. PER SEC. 906
8. DUCTWORK SHALL BE MOUNTED HIGH AND TIGHT TO ROOF STRUCTURE AS POSSIBLE.
9. PROVIDE 1" ACOUSTICAL LINING IN DUCTWORK WITHIN 10 FEET OF ALL AIR MOVING EQUIPMENT. PROVIDE DURO-DYNE FLEXIBLE CONNECTION AT DUCT TO EQUIPMENT LOCATIONS.
10. ALL THERMOSTATS SHALL BE PROGRAMMED TO RUN IN FAN MODE DURING OCCUPIED HOURS AND SHALL COORDINATE HOURS WITH OWNER. COOLING/ HEATING MODE SHALL RUN AS NEED, PER TEMPERATURE SET POINT AND OCCUPANT LOAD.
11. COORDINATE DUCT RUNS WITH FIRE SPRINKLER CONTRACTOR.
12. RESTROOM DOORS SHALL HAVE A 1" UNDERCUT.
13. COORDINATE WITH GENERAL CONTRACTOR FOR BUILDING TO BE PURGED UPON COMPLETION AND PRIOR TO OCCUPANCY. FILTERS SHALL BE REPLACED BEFORE PURGE AND UPON COMPLETION OF PURGE CYCLE.
14. AT HARD LID CEILINGS, PROVIDE FOR "MAT" CABLE DRIVEN DAMPERS. MODEL RT-150. CABLE SHALL BE ROUTED BEHIND GRILLE OPENING AND INSTALLED PER MANUFACTURER'S REQUIREMENTS.
15. FOR DUCT SUPPORT, SEE DETAIL 5 6 7 (M2-0.1)
16. FOR AIR DISTRIBUTION, SEE DETAIL 1 2 3 4 15 (M2-0.1)
17. FOR THERMOSTAT MOUNTING, SEE DETAIL 6 (M2-0.2)
18. FOR DUCT CONNECTION TO WALL LOUVER, SEE DETAIL 16 (M2-0.1)
19. FOR ENGINE EXHAUST DUCT THRU ROOF, SEE DETAIL 7 (M2-0.2)
20. FOR REFRIGERANT LINE SET PIPE SUPPORT, SEE DETAIL 8 9 (M2-0.1)
21. FOR BOILER CONCENTRIC VENT THRU ROOF, SEE DETAIL 8 (M2-0.2)
22. FOR GAS DETECTION SYSTEM SENSOR MOUNTING, SEE DETAIL 5 (M2-0.2)
23. FOR SMOKE DUCT DETECTOR MOUNTING, SEE DETAIL 9 (M2-0.2)
24. FOR EXHAUST FAN MOUNTING, SEE DETAIL 11 (M2-0.1)
25. FOR OUTDOOR UNIT MOUNTING, SEE DETAIL 12 (M2-0.1)
26. FOR AC OR MAU UNIT MOUNTING, SEE DETAIL 13 (M2-0.1)
27. FOR PUMP MOUNTING, SEE DETAIL 3 (M2-0.2)
28. FOR EXPANSION TANK MOUNTING, SEE DETAIL 11 (M2-0.2)
29. FOR INDOOR UNIT MOUNTING, SEE DETAIL 12 (M2-0.2)
30. FOR DUCT THRU WALL, SEE DETAIL 13 (M2-0.2)

PRINTED: 7/26/2023 1:33:49 PM
PATH: BIM 360://50801_MMTA_HTMP21061_Mountain Transit Maintenance Facility_Model_central.rvt

PROJECT No. :50801
7/26/2023 1:33:46 PM

DRAWN BY: CHECKED BY:

ISSUE No.____ DATE____ DESCRIPTION____
REVISION No.____ DATE____ DESCRIPTION____

RUHNAUCLARKE.COM

3775 TENTH STREET, RIVERSIDE CALIFORNIA 92501 (951) 684 4664 / 5751 PALMER WAY, SUITE C, CARLSBAD CALIFORNIA 92010 (760) 438 5899

MOUNT TRANSIT MAINTENANCE FACILITY

170 BUSINESS CENTER DR. BIG BEAR LAKES, CA
BIG BEAR LAKES

MECHANICAL FLOOR & ROOF PLANS **M1-1.1**

50801

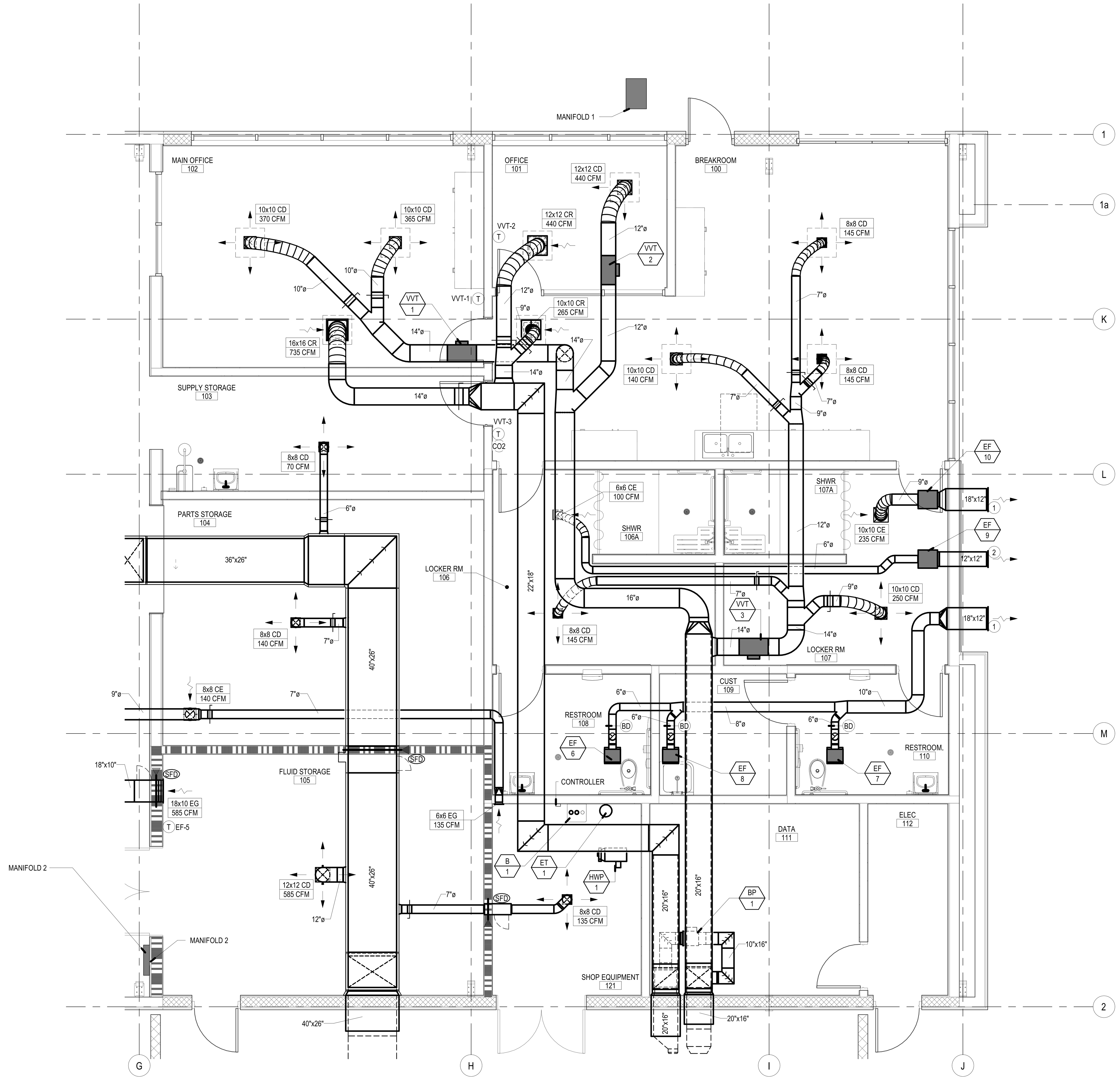

NORTH

ENLARGED MECHANICAL FLOOR PLAN 1/4" = 1'-0" 1

GENERAL NOTES

1. FOR LINE TYPES, SYMBOLS & ABBREVIATIONS SEE LEGEND ON SHEET M0-0.1.
2. FOR EQUIPMENT REFERENCES, SEE EQUIPMENT SCHEDULE ON SHEET M0-0.2.
3. SPIN-IN OR TAP TYPE DUCT CONNECTIONS SHALL BE PROVIDED WITH AN EXTRACTOR.
4. T-STATS SHALL NOT BE MOUNTED IN DIRECT LINE OF ANY SUPPLY DIFFUSER OR NEAR ANY HEAT REJECTION EQUIPMENT.
5. DUCT DIMENSIONS ARE NET INSIDE CLEAR
6. DUCTWORK SHALL BE HARD DUCT. FLEX DUCT MAY BE USED ONLY AT SUPPLY & RETURN OUTLETS AT A MAX. LENGTH OF 5'-0".
7. DUCTWORK SHALL BE MOUNTED HIGH AND TIGHT TO ROOF STRUCTURE AS POSSIBLE.
8. PROVIDE 1" ACOUSTICAL LINING IN DUCTWORK WITHIN 10 FEET OF ALL AIR MOVING EQUIPMENT. PROVIDE DURO-DYNE FLEXIBLE CONNECTION AT DUCT TO EQUIPMENT LOCATIONS.
9. THERMOSTATS SHALL BE PROGRAMMED TO RUN IN FAN MODE DURING OCCUPIED HOURS AND SHALL COORDINATE HOURS WITH OWNER. COOLING/ HEATING MODE SHALL RUN AS NEED, PER TEMPERATURE SET POINT AND OCCUPANT LOAD.
10. COORDINATE DUCT RUNS WITH FIRE SPRINKLER CONTRACTOR.
11. RESTROOM DOORS SHALL HAVE A 1" UNDERCUT.
12. AT HARD LID CEILINGS, PROVIDE FOR "MAT" CABLE DRIVEN DAMPERS. MODEL RT-150. CABLE SHALL BE ROUTED BEHIND GRILLE OPENING AND INSTALLED PER MANUFACTURER'S REQUIREMENTS.
13. FOR DUCT SUPPORT, SEE DETAIL 5/M2-0.1, 6/M2-0.1, 7/M2-0.1
14. FOR AIR DISTRIBUTION, SEE DETAIL 1/M2-0.1, 2/M2-0.1
15. FOR THERMOSTAT MOUNTING, SEE DETAIL 6/M2-0.2
16. FOR DUCT CONNECTION TO WALL LOUVER, SEE DETAIL 16/M2-0.1
17. FOR SMOKE FIRE DAMPER MOUNTING, SEE DETAIL 10/M2-0.2
18. FOR DUCT THRU WALL, SEE DETAIL 13/M2-0.2

CONSTRUCTION NOTES

1. 18x12 LOUVER HIGH IN WALL W/ MIN 40% FREE AREA
2. 12x12 LOUVER HIGH IN WALL W/ MIN 40% FREE AREA

STAMPS

AGENCY APPROVAL

MECHANICAL ELECTRICAL AND ENERGY CONSULTANTS
DESIGN WEST ENGINEERING
412 E. Vanderbilt Way
San Bernardino, CA 92408
Tel: 909-890-3700
Fax: 909-890-3770
Email: cadd@designwesteng.com
CONSULTANT BRANDING

RUHNAU CLARKE ARCHITECTS

MOUNT TRANSIT MAINTENANCE FACILITY:

PROJECT No. :50801
7/26/2023 1:33:50 PM

PRINTED: 7/26/2023 1:33:50 PM
PATH: BIM 360://50801_MARTA_MTMF/21061_Mountain Transit Maintenance Facility_MEP_Central.rvt

DRAWN BY: CHECKED BY:

RUHNAUCLARKE.COM

3775 TENTH STREET, RIVERSIDE CALIFORNIA 92501 (951) 684 4664 / 5751 PALMER WAY, SUITE C, CARLSBAD CALIFORNIA 92010 (760) 438 5899

MOUNT TRANSIT MAINTENANCE FACILITY

170 BUSINESS CENTER DR. BIG BEAR LAKES, CA
BIG BEAR LAKES

MECHANICAL ENLARGED PLAN

M1-1.2

22-066
50801

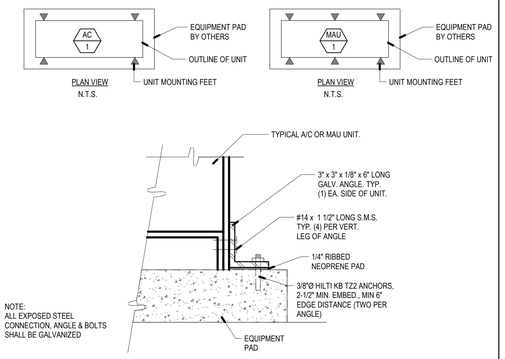

AC UNIT OR MAU MOUNTING 13

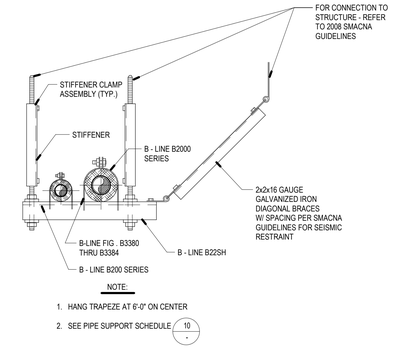

REFRIGERANT PIPE SUPPORT 9

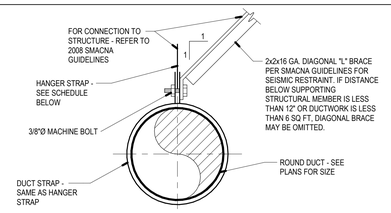

NOTE: PER 2020 SMACNA HVAC DUCT CONSTRUCTION STANDARDS AND 2022 CMC SECTION 602 & 603

10'-0" SPACING HANGER STRAP SCHEDULE			
DUCT SIZE	HANGER SIZE	MAX. SPACING	MATERIAL
UP THRU 10"	1" x 22 GA.	10'-0" O/C	G.I. STEEL
11" TO 20"	1" x 22 GA.	10'-0" O/C	G.I. STEEL
21" TO 40"	1" x 20 GA.	10'-0" O/C	G.I. STEEL
12'-0" SPACING HANGER STRAP SCHEDULE			
DUCT SIZE	HANGER SIZE	MAX. SPACING	MATERIAL
UP THRU 10"	2" x 18 GA.	12'-0" O/C	G.I. STEEL
11" TO 20"	2" x 16 GA.	12'-0" O/C	G.I. STEEL
21" TO 40"	1/8" STEEL x 1-1/2"	12'-0" O/C	G.I. STEEL

DUCT SUPPORT - ROUND DUCT 5

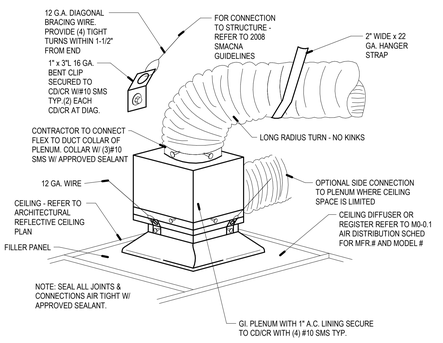

AIR DISTRIBUTION - CEILING, ROUND DUCT 1

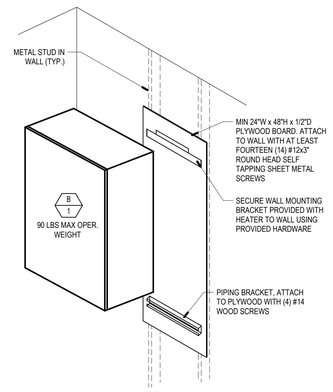

SNOW MELT BOILER MOUNTING 14

PIPE SIZE IN INCHES	MAXIMUM SPAN BETWEEN SUPPORT HANGERS O.C.		HANGER ROD DIAMETER SIZE	MAX. ROD LENGTH, NO STIFFNER	MAX. ROD LENGTH, WITH STIFFNER	LONGITUDINAL ANGLE BRACE (2)	VERTICAL HANGER ANGLE (STIFFENER) (1)	TRANSVERSE ANGLE BRACE (2)	BOLT SIZE
	STEEL	COPPER							
REFRIGERANT PIPE									
1/2 & 3/4	6'-0"	5'-0"	3/8"	16"	68"	1-1/2 x 1-1/2 x 18 GA @ 80'-0" O.C.	1 x 1 x 18GA	1-1/2 x 1-1/2 x 18 GA @ 40'-0" O.C.	1/4"
1 THRU 1-1/2	6'-0"	10'-0"	3/8"	16"	68"	1-1/2 x 1-1/2 x 18 GA @ 80'-0" O.C.	1 x 1x 18GA	1-1/2 x 1-1/2 x 18 GA @ 40'-0" O.C.	1/4"
2	10'-0"	10'-0"	3/8"	16"	68"	1-1/2 x 1-1/2 x 18 GA @ 80'-0" O.C.	1 x 1 x 18GA	1-1/2 x 1-1/2 x 18 GA @ 40'-0" O.C.	1/4"

NOTES
(1) VERTICAL ANGLE ONLY REQUIRED WHEN ROD MAXIMUM LENGTH IS EXCEEDED.
(2) BRACING MAY BE OMITTED WHERE TOP OF PIPE IS 12" OR LESS FROM BOTTOM OF HANGER SUPPORT CONNECTED TO STRUCTURE

DX PIPE SUPPORT SCHEDULE 10

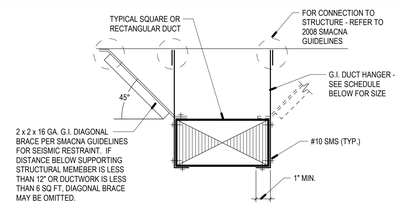

NOTE: PER 2020 SMACNA HVAC DUCT CONSTRUCTION STANDARDS AND 2022 CMC SECTION 602 & 603

10'-0" SPACING HANGER STRAP SCHEDULE			
DUCT SIZE	HANGER SIZE	MAX. SPACING	MATERIAL
UP THRU 18"	1" x 18 GA.	10'-0" O/C	G.I. STEEL
19" TO 30"	1" x 18 GA.	10'-0" O/C	G.I. STEEL
31" TO 48"	1" x 1/8"	10'-0" O/C	G.I. STEEL
12'-0" SPACING HANGAR STRAP SCHEDULE			
DUCT SIZE	HANGER SIZE	MAX. SPACING	MATERIAL
UP THRU 24"	1" x 1/8" STRAP	12'-0" O/C	G.I. STEEL
25" TO 36"	1" x 1" x 1/8" ANGLE	12'-0" O/C	G.I. STEEL
37" TO 48"	1-1/8" x 1-1/8" x 1/8" ANGLE	12'-0" O/C	G.I. STEEL

DUCT SUPPORT - RECT. DUCT 6

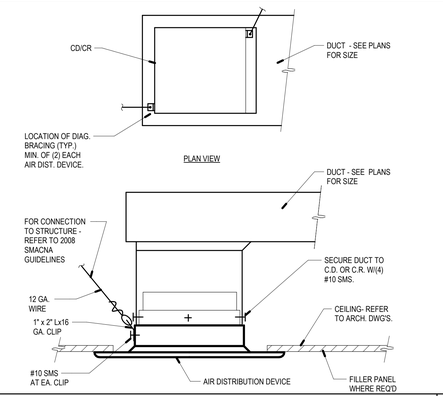

AIR DISTRIBUTION - CEILING, RECT. DUCT 2

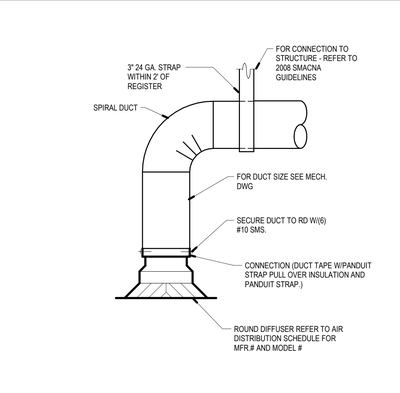

AID DISTRIBUTION - ROUND EXPOSED 15

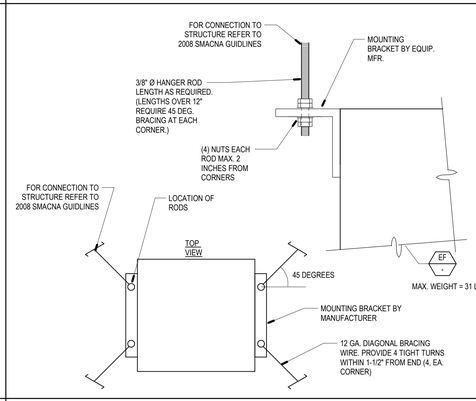

INLINE EXHAUST FAN MOUNTING 11

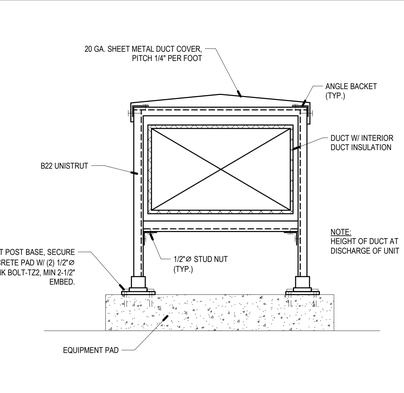

DUCT SUPPORT - ON GRADE 7

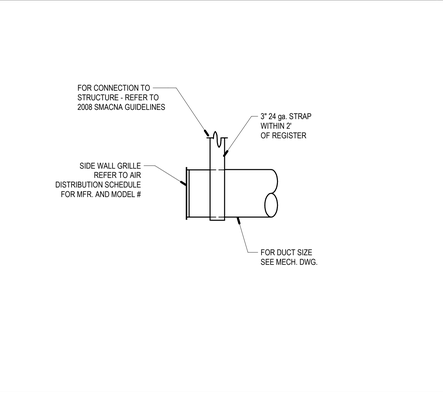

AIR DISTRIBUTION - DUCT MOUNTED 3

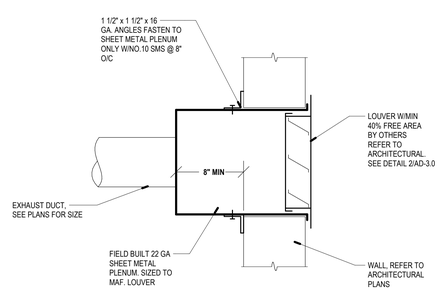

DUCT CONNECTION TO WALL LOUVER 16

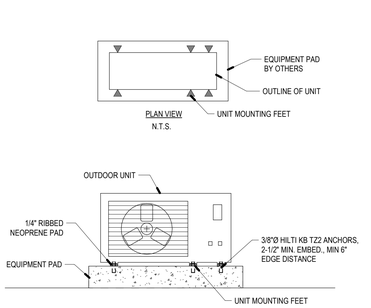

OUTDOOR UNIT MOUNTING 12

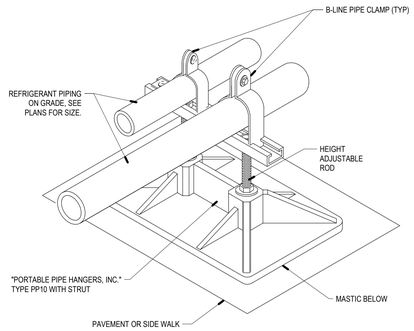

REFRIGERANT PIPE SUPPORT - ON GRADE 8

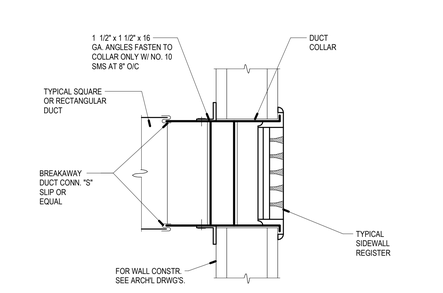

AIR DISTRIBUTION - SIDE WALL 4

STEVEN W. VAN BRUNT
No. 33209
EXP. 9-30-2023
MECHANICAL
STATE OF CALIFORNIA
REGISTERED PROFESSIONAL ENGINEER

LICENSED ARCHITECT
ROGER CLARKE
No. C-21360
Exp. 10-31-24
STATE OF CALIFORNIA

STAMPS

AGENCY APPROVAL
File No.: n.a

MECHANICAL
ELECTRICAL
AND ENERGY
CONSULTANTS

DESIGN WEST ENGINEERING

412 E. Vanderbilt Way
San Bernardino, CA 92408
Tel: 909-890-3700
Fax: 909-890-3770
Email: cadd@designwesteng.com

CONSULTANT BRANDING

RUHNAU
CLARKE
ARCHITECTS

MOUNT TRANSIT MAINTENANCE FACILITY:

PRINTED: 7/26/2023 1:33:51 PM
PATH: BIM 360://3801_MMTL HTM#21061_Mountain Transit Maintenance Fac_22066.rvt

PROJECT No. :50801
7/26/2023 1:33:51 PM

DRAWN BY: CHECKED BY:

ISSUE No.	DATE	DESCRIPTION
ISSUE No.	DATE	DESCRIPTION
ISSUE No.	DATE	DESCRIPTION
ISSUE No.	DATE	DESCRIPTION

REVISION No.	DATE	DESCRIPTION
REVISION No.	DATE	DESCRIPTION
REVISION No.	DATE	DESCRIPTION
REVISION No.	DATE	DESCRIPTION

MOUNT TRANSIT MAINTENANCE FACILITY
170 BUSINESS CENTER DR. BIG BEAR LAKES, CA
BIG BEAR LAKES

MECHANICAL DETAILS

M2-0.1

22-066
50801

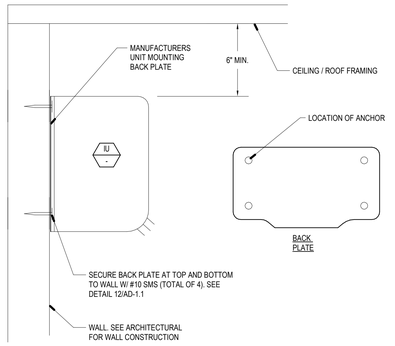

INDOOR UNIT MOUNTING 12

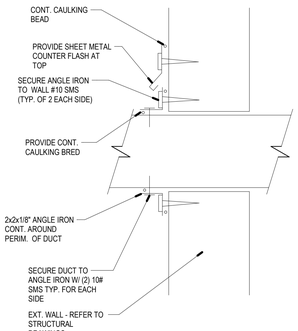

DUCT THRU WALL 13

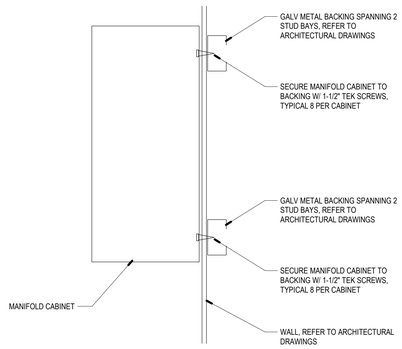

MANIFOLD CABINET MOUNTING 14

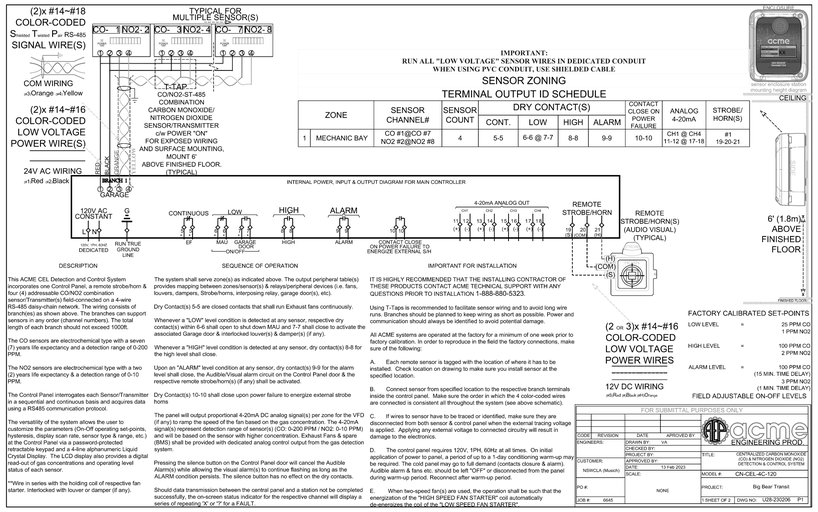

IMPORTANT:
RUN ALL "LOW VOLTAGE" SENSOR WIRES IN DEDICATED CONDUIT WHEN USING PVC CONDUIT, USE SHIELDED CABLE

SENSOR ZONING
TERMINAL OUTPUT ID SCHEDULE

ZONE		SENSOR CHANNEL#	SENSOR COUNT	DRY CONTACT(S) CONT.	LOW	HIGH	ALARM	CONTACT CLOSE ON POWER FAILURE	ANALOG 4-20mA	STROBE/ HORN(S)
1	MECHANIC BAY	CO #1@CO #7 NO2 #2@NO2 #8	4	5-5	6-6 @ 7-7	8-8	9-9	10-10	CH1 @ CH4 11-12 @ 17-18	#1 19-20-21

DESCRIPTION

This ACME CEL Detection and Control System incorporates one Control Panel, a remote strobe/horn & four (4) addressable CO/NO2 combination sensor/Transmitter(s) field-connected on a 4-wire RS-485 daisy-chain network. The wiring consists of branch(es) as shown above. The branches can support sensors in any order (channel numbers). The total length of each branch should not exceed 1000ft.

The CO sensors are electrochemical type with a seven (7) years life expectancy and a detection range of 0-200 PPM.

The NO2 sensors are electrochemical type with a two (2) years life expectancy & a detection range of 0-10 PPM.

The Control Panel interrogates each Sensor/Transmitter in a sequential and continuous basis and acquires data using a RS485 communication protocol.

The versatility of the system allows the user to customize the parameters (On-Off, operating set-points, etc.) and display scale (ppm, percentage & range, etc.) at the Control Panel via a password-protected retractable keypad and a 4-line alphanumeric Liquid Crystal Display. The LCD display also provides a digital read-out of gas concentrations and operating level status of each sensor.

**Wire in series with the holding coil of respective fan starter. Interlocked with louver or damper (if any).

SEQUENCE OF OPERATION

The system shall serve zone(s) as indicated above. The output peripheral table(s) provides mapping between zones/sensor(s) & relays/peripheral devices (i.e. fans, louvers, dampers, strobe/horns, interposing relay, garage door(s), etc).

Dry Contact(s) 5-5 are closed contacts that shall run Exhaust fans continuously.

Whenever a "LOW" level condition is detected at any sensor, respective dry contact(s) within 6-6 shall open to shut down MAU and 7-7 shall close to activate the associated Garage door & interlocked louver(s) & damper(s) (if any).

Whenever a "HIGH" level condition is detected at any sensor, dry contact(s) 8-8 for the high level shall close.

Upon an "ALARM" level condition at any sensor, dry contact(s) 9-9 for the alarm level shall close, the Audible/Visual alarm circuit on the Control Panel door & the respective remote strobe/horn(s) (if any) shall be activated.

Dry Contact(s) 10-10 shall close upon power failure to energize external strobe horns

The panel will output proportional 4-20mA DC analog signal(s) per zone for the VFD (if any) to ramp the speed of the fan based on the gas concentration. The 4-20mA signal(s) represent detection range of sensor(s) (CO: 0-200 PPM / NO2: 0-10 PPM) and will be based on the sensor with higher concentration. Exhaust Fans & spare (BMS) shall be provided with dedicated analog control output from the gas detection system.

Pressing the silence button on the Control Panel door will cancel the Audible Alarm(s) while allowing the visual alarm(s) to continue flashing as long as the ALARM condition persists. The silence button has no effect on the dry contacts.

Should data transmission between the central panel and a station not be completed successfully, the on-screen status indicator for the respective channel will display a series of repeating "X" or "?" for a FAULT.

IMPORTANT FOR INSTALLATION

IT IS HIGHLY RECOMMENDED THAT THE INSTALLING CONTRACTOR OF THESE PRODUCTS CONTACT ACME TECHNICAL SUPPORT WITH ANY QUESTIONS PRIOR TO INSTALLATION 1-888-880-5323.

Using T-Tape is recommended to facilitate sensor wiring and to avoid long wire runs. Branches should be planned to keep wiring as short as possible. Power and communication should always be identified to avoid potential damage.

All ACME systems are operated at the factory for a minimum of one week prior to factory calibration. In order to reproduce in the field the factory connections, make sure of the following:

A. Each remote sensor is tagged with the location of where it has to be installed. Check location on drawing to make sure you install sensor at the specified location.

B. Connect sensor from specified location to the respective branch terminals inside the control panel. Make sure the order in which the 4 color-coded wires are connected is consistent all throughout the system (see above schematic).

C. If wires to sensor have to be traced or identified, make sure they are disconnected from both sensor & control panel when the external tracing voltage is applied. Applying any external voltage to connected circuitry will result in damage to the electronics.

D. The control panel requires 120V, 1PH, 60Hz at all times. On initial application of power to panel, a period of up to a 1-day conditioning warm-up may be required. The cold panel may go to full demand (contacts closure & alarm). Audible alarm & fans etc. should be left "OFF" or disconnected from the panel during warm-up period. Reconnect after warm-up period.

E. When two-speed fan(s) are used, the operation shall be such that the energization of the "HIGH SPEED FAN STARTER" coil automatically de-energizes the coil of the "LOW SPEED FAN STARTER".

FACTORY CALIBRATED SET-POINTS

LOW LEVEL	=	25 PPM CO 1 PPM NO2
HIGH LEVEL	=	100 PPM CO 2 PPM NO2
ALARM LEVEL	=	100 PPM CO (15 MIN. TIME DELAY) 3 PPM NO2 (1 MIN. TIME DELAY)

FIELD ADJUSTABLE ON-OFF LEVELS

FOR SUBMITTAL PURPOSES ONLY

CODE	REVISION	DATE	APROVED BY
ENGINEERS:		DRAWN BY: VA	
		CHECKED BY:	
CUSTOMER:		PROJECT BY:	
NSWCLA (Mod)/5		APPROVED BY:	
		DATE: 13 Feb 2023	
PO #		SCALE: NONE	
JOB #	6645		

acme ENGINEERING PROD.

TITLE: CENTRALIZED CARBON MONOXIDE (CO) & NITROGEN DIOXIDE (NO2) DETECTION & CONTROL SYSTEM

MODEL #: CN-CEL-4C-120

PROJECT: Big Bear Transit

SHEET OF 2 | DWG NO: U28-230206 P1

GAS DETECTION SYSTEM 5

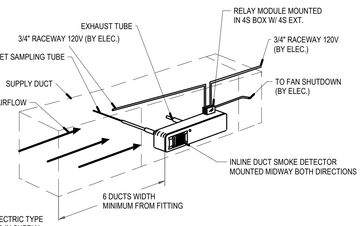

NOTE:
1. DUCT DETECTOR MUST BE PHOTOELECTRIC TYPE
2. DUCT DETECTOR SHALL BE MOUNTED IN SUPPLY DUCT PRIOR TO ANY TRANSITION OR TURNS
3. DUCT DETECTOR IS SYSTEM SENSOR INNOVAIR D4120 AIR VELOCITY 100 TO 4000 FPS CSFM LISTING # 3242-1653:207
4. WHERE DUCT SMOKE DETECTORS ARE NOT RE-SETTABLE FROM THE PROTECTED FIRE ALARM SYSTEM, A LISTED ALARM/SUPERVISORY INDICATOR WITH IN INTEGRAL RESET SWITCH SHALL BE PROVIDED IN AN ACCESSIBLE LOCATION

DUCT DETECTOR MOUNTING 9

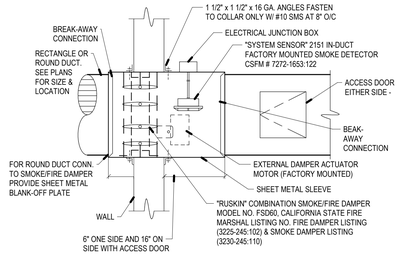

SFM NOTES:
1. FIRE DAMPER DETAIL FOR REFERENCE ONLY.
2. FIRE DAMPER SHALL BE STATE FIRE MARSHAL APPROVED AND INSTALLED STRICTLY PER MANUFACTURER'S PRINTED INSTRUCTIONS.
3. MANUFACTURER'S INSTALLATION INSTRUCTIONS SHALL BE MADE AVAILABLE TO THE INSPECTION AUTHORITIES.
4. SUBMIT SHOP DRAWINGS FOR APPROVAL PRIOR TO INSTALLATION.
5. FIRE DAMPER SHALL CONFORM TO CBC CHAPTER 7
6. FIRE DAMPER SHALL CONFORM TO NFPA 90A
7. DUCT DETECTOR SHALL BE INSTALLED WITHIN 5 FEET OF THE DAMPER WITH NO AIR OUTLETS OR INLETS BETWEEN THE DETECTOR AND THE DAMPER.
8. SMOKE/FIRE DAMPER SHALL BE INSTALLED PER THE REQUIREMENTS OF SMACNA'S FIRE SMOKE AND RADIATION DAMPER INSTALLATION GUIDE FOR HVAC SYSTEMS.

SMOKE FIRE DAMPER MOUNTING 10

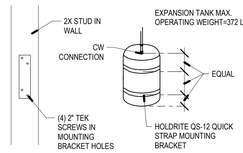

EXPANSION TANK MOUNTING 11

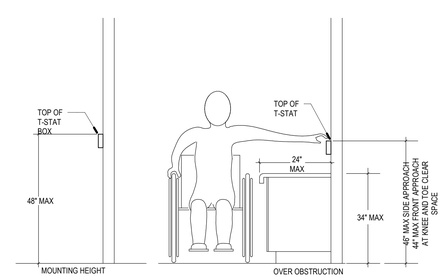

NOTE:
PROVIDE A 30"W x 27"H x 19"D MIN. TOE/KNEE CLEARANCE FOR FRONT APPROACH OVER OBSTRUCTION

THERMOSTAT MOUNTING 6

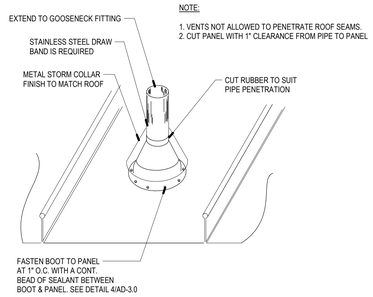

NOTE:
1. VENTS NOT ALLOWED TO PENETRATE ROOF SEAMS.
2. CUT PANEL WITH 1" CLEARANCE FROM PIPE TO PANEL

EXHAUST DUCT THRU ROOF 7

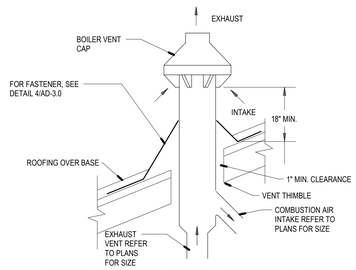

COMBUSTION-AIR AND VENT PIPES AND FITTINGS MUST CONFORM TO ANSI & ASTM STANDARDS D1785 (SCHEDULE 40 PVC), 02665 (PVC-DVW), D2441 (SDR-21 AND SDR-26 PVC), D2661 (ABS-DVW) OR F628 (SCHEDULE 40 ABS). PIPE CEMENT AND PRIMER MUST CONFORM TO ASTM STANDARDS D2564 (PVC) OR D2235 (ABS).

BOILER CONCENTRIC VENT THRU ROOF 8

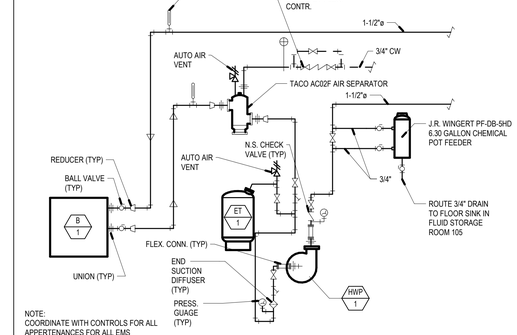

NOTE:
COORDINATE WITH CONTROLS FOR ALL APPERTENANCES FOR ALL EMS SENSORS

SNOW MELT BOILER PIPING DIAGRAM 1

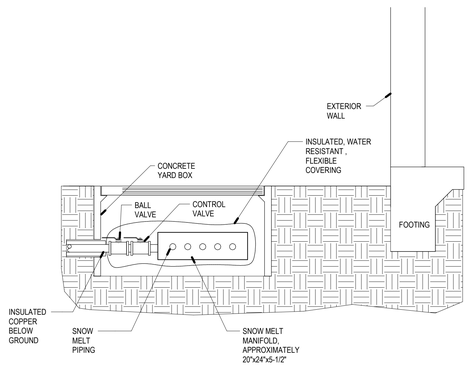

SNOW MELT MANIFOLD 2

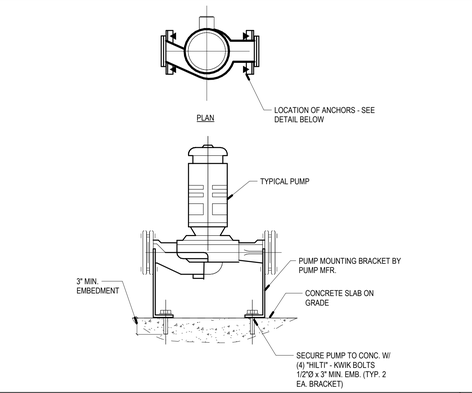

PUMP MOUNTING 3

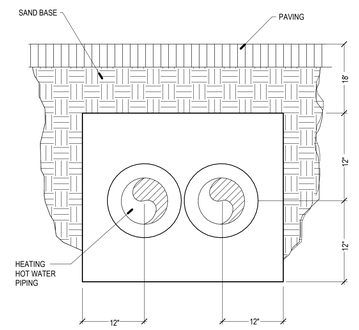

PIPES BELOW GRADE 4

REGISTERED PROFESSIONAL ENGINEER — No. 33209 — EXP. 9-30-2023 — MECHANICAL — STATE OF CALIFORNIA
LICENSED ARCHITECT — No. C-31345 — Exp. 10-31-2024 — STATE OF CALIFORNIA
STAMPS

AGENCY APPROVAL
File No: n.a

MECHANICAL ELECTRICAL AND ENERGY CONSULTANTS
DESIGN WEST ENGINEERING
412 E. Vanderbilt Way
San Bernardino, CA 92408
Tel: 909-890-3700
Fax: 909-890-3770
Email: cadd@designwesteng.com
CONSULTANT BRANDING

RUHNAU CLARKE ARCHITECTS

MOUNT TRANSIT MAINTENANCE FACILITY:

PRINTED: 7/26/2023 1:33:52 PM
PATH: BIM 360://50801_MATF_MTMF21060_Mountain Transit Maintenance Facility_CENTRAL.rvt

PROJECT No. :50801
7/26/2023 1:33:52 PM

DRAWN BY: CHECKED BY:

ISSUE No.	DATE	DESCRIPTION	REVISION No.	DATE	DESCRIPTION
ISSUE No.	DATE	DESCRIPTION	REVISION No.	DATE	DESCRIPTION
ISSUE No.	DATE	DESCRIPTION	REVISION No.	DATE	DESCRIPTION
ISSUE No.	DATE	DESCRIPTION	REVISION No.	DATE	DESCRIPTION

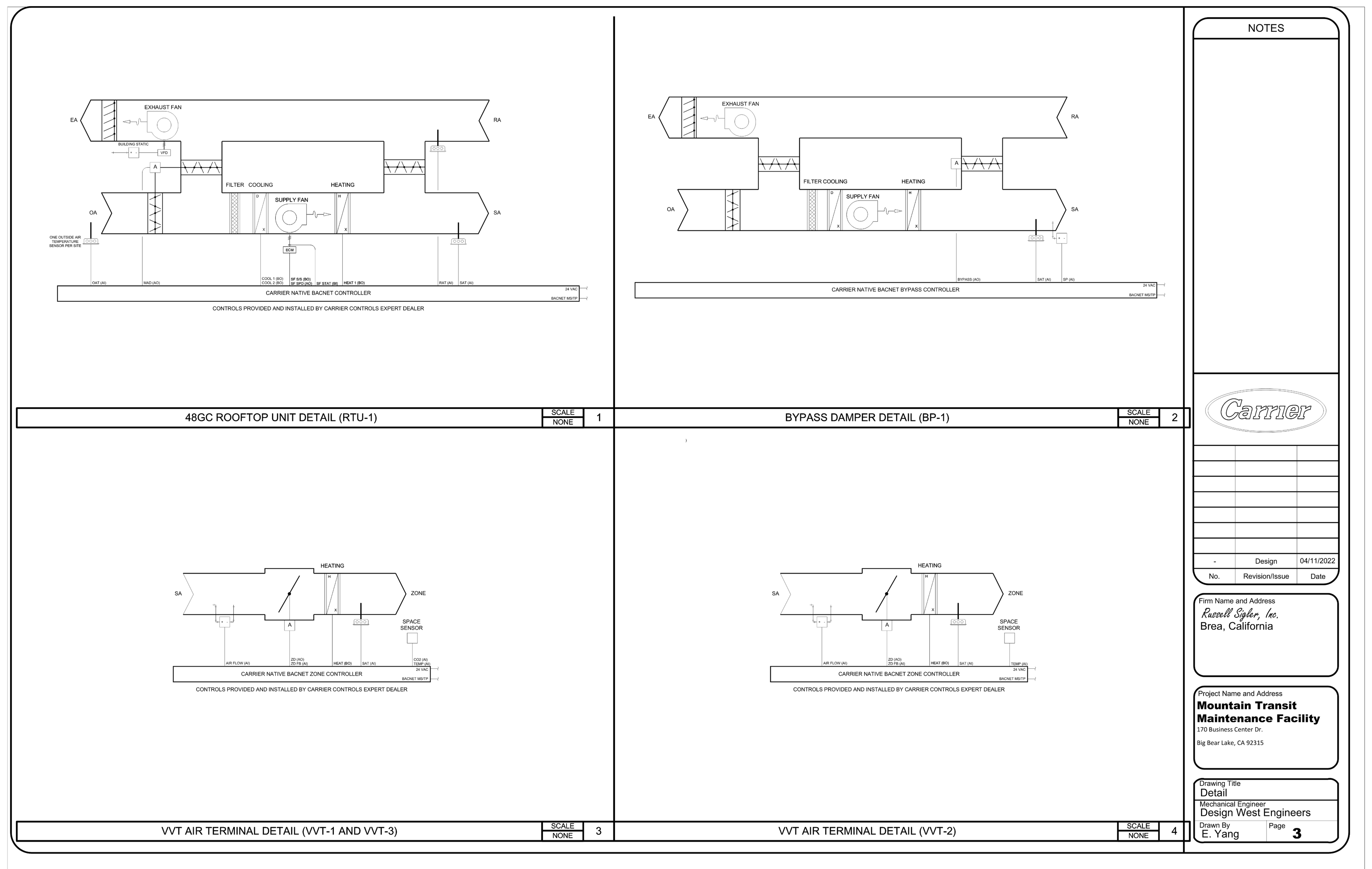

CONTROL DIAGRAMS 3

COMMON ABBREVIATIONS

ABBREVIATION	DESCRIPTION
AC	AIR CONDITIONING
ACU	AIR CONDITIONING UNIT
AHU	AIR HANDLING UNIT
AI	ANALOG INPUT
AO	ANALOG OUTPUT
AUTO	AUTOMATIC
AUX	AUXILIARY
BI	BINARY INPUT
BO	BINARY OUTPUT
C	COMMON
CHW	CHILLED WATER
CHWP	CHILLED WATER PUMP
CHWR	CHILLED WATER RETURN
CHWS	CHILLED WATER SUPPLY
COND	CONDENSER
CW	CONDENSER WATER
CWP	CONDENSER WATER PUMP
CWR	CONDENSER WATER RETURN
CWS	CONDENSER WATER SUPPLY
DA	DISCHARGE AIR
DI	DIGITAL INPUT
DO	DIGITAL OUTPUT
EA	EXHAUST AIR
EF	EXHAUST FAN
EVAP	EVAPORATOR
F	FAHRENHEIT
FCU	FAN COIL UNIT
HOA	HAND/OFF/AUTO
HP	HEAT PUMP
HRU	HEAT RECOVERY UNIT
HTEX	HEAT EXCHANGER
HW	HOT WATER
HWP	HOT WATER PUMP
HWR	HOT WATER RETURN
HWS	HOT WATER SUPPLY
MAX	MAXIMUM
MIN	MINIMUM
MISC	MISCELLANEOUS
NC	NORMALLY CLOSED
NO	NORMALLY OPEN
OA	OUTDOOR AIR
RA	RETURN AIR
RF	RETURN FAN
RH	RELATIVE HUMIDITY
RTU	ROOFTOP UNIT
SA	SUPPLY AIR
SF	SUPPLY FAN
SP	STATIC PRESSURE
TEMP	TEMPERATURE
UH	UNIT HEATER
UV	UNIT VENTILATOR
VAV	VARIABLE AIR VOLUME
VAVTU	VARIABLE AIR VOLUME TERMINAL UNIT
VVT	VARIABLE VOLUME & TEMPERATURE
W/	WITH
W/O	WITHOUT
WSHP	WATER SOURCE HEAT PUMP

SYMBOL LEGEND

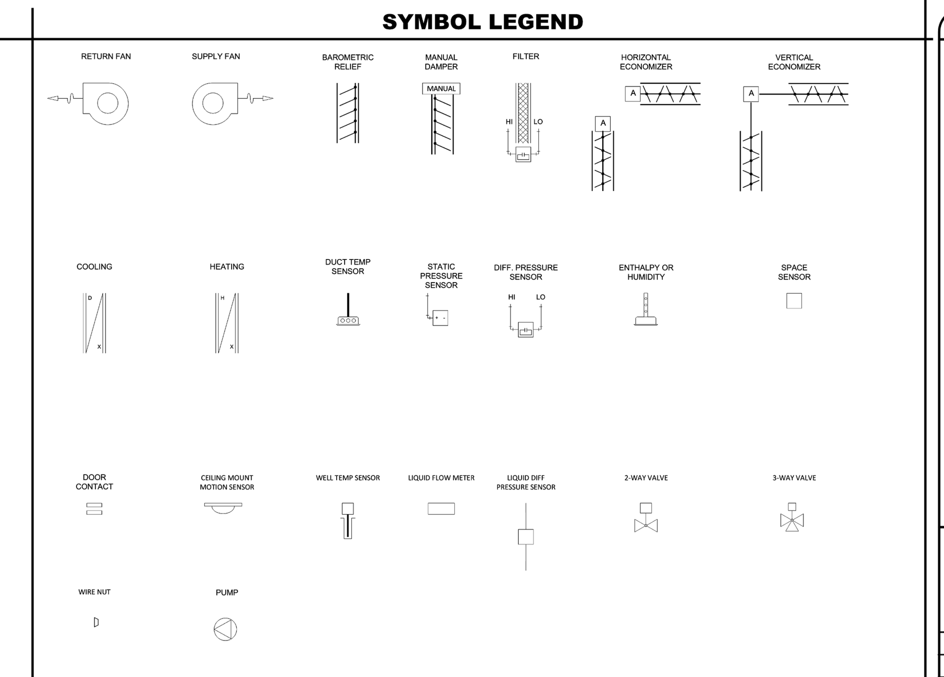

GENERAL INFORMATION

COMMUNICATION BUS SPECIFICATION
1. A 24 AWG 2-conductor-shielded-stranded cable (plenum rated as required) must be daisy chained from controller to controller. It should be color coded (red, black, white).
2. The communication cable operates at up to 5 VDC. Verify with the local code authority and specs regarding conduit requirements.
3. No "T" tap or "star" type connections are permitted.
4. Terminate the shields on the designated terminal at each device.
5. 30 controller's maximum per communication bus segment. 60 controller's maximum per network router.
6. A repeater is required every 2000 ft. or 30 devices. Maximum of 4 repeaters per bus for a total of 10,000 ft.

POWER TO VVT AND VAV DAMPER ACTUATORS/CONTROLLERS
1. Each zone requires a 24 VAC, 40 VA transformer (more in some cases depending on the valve or electric heater requirements).
2. It is recommended that each zone have its own transformer, however zones may be grouped up to 100 VA and still remain in UL Class 2 conformance.
3. Be careful of voltage drop. The damper will operate in a power range of 22 to 26 VAC. The damper will not operate at voltages less than 22 vac.

GENERAL NOTES
1. The 2 conductor communication cable and sensor cables must always be in a separate jacket from one another. Never run these cables in the same conduit as, or bundle them with, AC power wiring of any voltage. Do not strap these cables along any conduits that contain AC power wiring of any voltage. Do not run these cables in rings or conduit with fire, life, safety, security, network, telephone, power, or other wiring. When running communication and sensor wiring parallel to other cabling or conduit maintain a 12 in. distance.
2. Ethernet and/or Internet connection to i-Vu are supplied and maintained by building owner/operator.

INSTALLATION COORDINATION NOTES
1. Installer shall coordinate all power and data connection requirements with the GC onsite.
2. Install all components in accordance with the specification, applicable codes and manufacturer's literature

NOTES

Design 04/11/2022

Firm Name and Address: Russell Sigler, Inc. Brea, California

Project Name and Address: Mountain Transit Maintenance Facility, 170 Business Center Dr, Big Bear Lake, CA 92315

Drawing Title: Legend
Mechanical Engineer: Design West Engineers
Drawn By: E. Yang — Page 1

CONTROLS LEGEND & GENERAL INFO 1

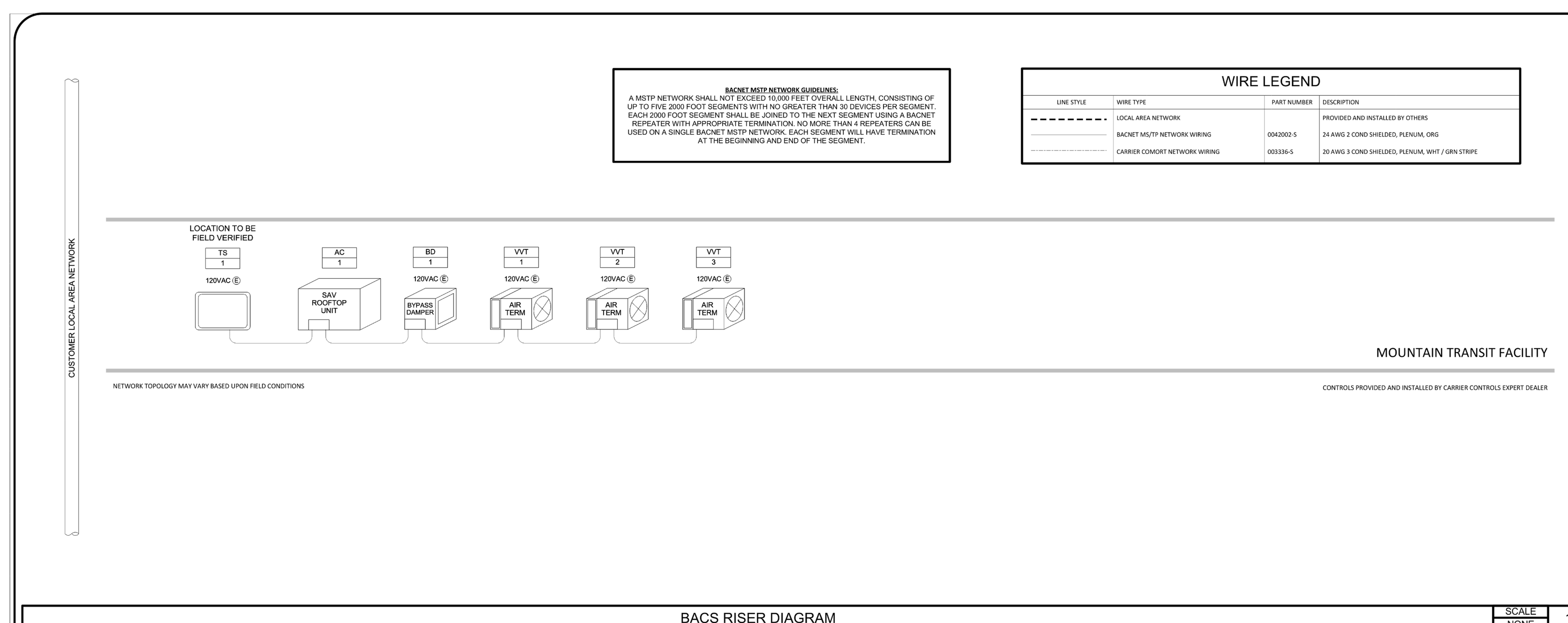

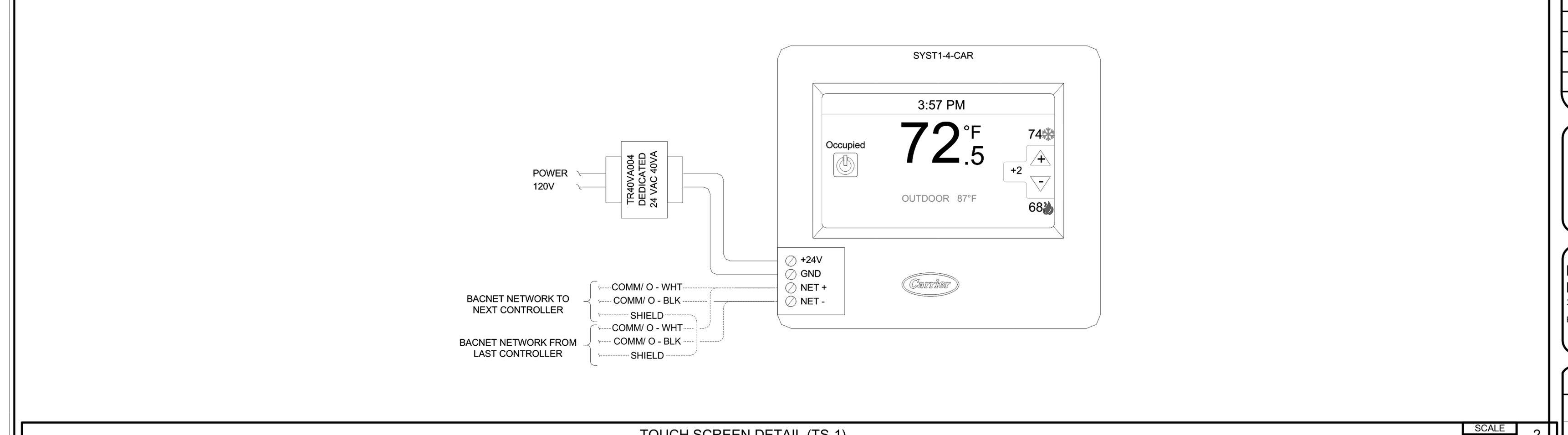

NOTES

Design 04/11/2022

Firm Name and Address: Russell Sigler, Inc. Brea, California

Project Name and Address: Mountain Transit Maintenance Facility, 170 Business Center Dr, Big Bear Lake, CA 92315

Drawing Title: BACS Riser & Detail
Mechanical Engineer: Design West Engineers
Drawn By: E. Yang — Page 2

BACS RISER DIAGRAM 2

STAMPS

AGENCY APPROVAL

MECHANICAL ELECTRICAL AND ENERGY CONSULTANTS
DESIGN WEST ENGINEERING
412 E. Vanderbilt Way
San Bernardino, CA 92408
Tel: 909-890-3700
Fax: 909-890-3770
Email: cadd@designwesteng.com

CONSULTANT BRANDING

RUHNAU CLARKE ARCHITECTS

PROJECT No. :50801
7/26/2023 1:33:57 PM

DRAWN BY: CHECKED BY:

ISSUE No. DATE DESCRIPTION
REVISION No. DATE DESCRIPTION

RUHNAUCLARKE.COM
3775 TENTH STREET, RIVERSIDE CALIFORNIA 92501 (951) 684 4664 / 5751 PALMER WAY, SUITE C, CARLSBAD CALIFORNIA 92010 (760) 438 5899

MOUNT TRANSIT MAINTENANCE FACILITY
170 BUSINESS CENTER DR. BIG BEAR LAKES, CA
BIG BEAR LAKES

MECHANICAL CONTROLS

M2-0.3

22-066
50801

MOUNT TRANSIT MAINTENANCE FACILITY:

PRINTED: 7/26/2023 1:33:57 PM
PATH: BIM 360://50801_MARTA_MTMF/21061_Mountain Transit Maintenance Facility_MEP_Central.rvt

REHAU
Unlimited Polymer Solutions

Snow Melt System Design Report

Project # RCP-22/04-11263
February 23, 2023

Project Information

Project #: RCP-22/04-11263
Name: Mountain Transit Maintenance Facility
Location: Big Bear Lake, CA

Notes: REV1: Revise design based on updated Mechanical Site Plan and phone conversation.
Design based on information provided by Design West Engineering, specifically marked-up sheet A-2.0 and Design Request form and email correspondence.
No Snow & Ice Melt load calculations were performed by REHAU Construction LLC.
Load of 150 btu/sqft including back-loss was assumed for design.
Flow rates and head losses based on 50% propylene glycol mixture and 25°F deltaT.
4" concrete panel structure assumed, engineer to confirm.
Installing contractor shall coordinate with all trades during construction in efforts to avoid damage to RAUPEX.

Design Conditions and Summary

Method: Specify Loads Manually

Fluid Type: 50% Propylene Glycol
Total Flowrate: 15.67 USGPM
Max. Head Loss: 20.2 ft water
Design Temp. Drop: 25.0 °F
Total Area: 1,157 ft²

Total Circuit Lengths:
3/4" RAUPEX O2 Barrier Pipe 1,625 ft
Total Circuits: 7
Total Manifolds: 2
Total Tubing Volume: 30.75 USG
Glycol Volume: 15.38 USG

Total Snow Melt Load: 173,528 Btu/hr

Snow Melt System Design

Snow Melt 1

Total Area: 1,063 ft²
Heated Area: 1,063 ft²
Construction: Snow Melt - Concrete
Slab Depth: 4.0 in
Insulation Rv: 10.0 hr·ft²·°F/btu

Tubing: 3/4" RAUPEX O2 Barrier Pipe
Total Circuits: 6
Avg. Circuit Length: 248 ft
Total Length in panel: 1,426 ft
Avg. Tube Spacing: 9 in
Min Supply Temp: 93 °F

Design Load: 132,857 Btu/hr
Downward Loss: 26,571 Btu/hr
Total Heat Load: 159,428 Btu/hr
(User Specified Load)

Snow Melt 2

Total Area: 94 ft²
Heated Area: 94 ft²
Construction: Snow Melt - Concrete
Slab Depth: 4.0 in
Insulation Rv: 10.0 hr·ft²·°F/btu

Tubing: 3/4" RAUPEX O2 Barrier Pipe
Total Circuits: 1
Avg. Circuit Length: 138 ft
Total Length in panel: 118 ft
Avg. Tube Spacing: 10 in
Min Supply Temp: 95 °F

Design Load: 11,750 Btu/hr
Downward Loss: 2,350 Btu/hr
Total Heat Load: 14,100 Btu/hr
(User Specified Load)

Manifold Summary

Manifold Name	Circuits	Flowrate	Supplied Temp.	Max Temp. Drop	Manifold Type	S/R Length¹	S/R Pipe	Manifold Head Loss	Circuit Head Loss	S/R Head Loss	Total Head Loss²
Manifold 1	6	14.40	95	26	PRO-BALANCE 1-1/4" Stainless Steel Manifold With Gauges	-	-	5.3	14.8	0.0	20.2
Manifold 2	1	1.27	95	25	PRO-BALANCE 1" Stainless Steel Manifold With Gauges	-	-	0.3	1.9	0.0	2.2
Total	7	15.67	-	-	-	-	-	5.3	14.8	0.0	20.2

(1) S/R Length = one way, (2) Total Head loss includes manifold, circuits and supply/return piping if specified.

Manifold 1

Circuit	Areas Served	Total Length	Tube Spacing	Area Covered	Tubing	Flowrate	Head Loss¹	Temp Drop²	Load³
M1.1	Snow Melt 1	245		177	3/4" RAUPEX O2 Barrier Pipe	2.40	13.6	25	26,603
M1.2	Snow Melt 1	245		174	3/4" RAUPEX O2 Barrier Pipe	2.39	13.2	25	26,151
M1.3	Snow Melt 1	256		182	3/4" RAUPEX O2 Barrier Pipe	2.47	14.8	25	27,306
M1.4	Snow Melt 1	245		174	3/4" RAUPEX O2 Barrier Pipe	2.36	13.2	25	26,134
M1.6	Snow Melt 1	245		174	3/4" RAUPEX O2 Barrier Pipe	2.35	13.2	25	26,058
M1.7	Snow Melt 1	252		181	3/4" RAUPEX O2 Barrier Pipe	2.45	14.5	25	27,176
Total	-	1,487	-	1,063	-	14.40	14.8	-	159,428

(1) Head loss for circuit tubing only. (2) Design Temp Drop (Estimated Actual Drop). (3) Required load. Includes panel back losses. Does not reflect maximum capacity of the circuit.

Manifold 2

Circuit	Areas Served	Total Length	Tube Spacing	Area Covered	Tubing	Flowrate	Head Loss¹	Temp Drop²	Load³
M2.1	Snow Melt 2	138	9	94	3/4" RAUPEX O2 Barrier Pipe	1.27	1.9	25	14,100
Total	-	138	-	94	-	1.27	1.9	-	14,100

(1) Head loss for circuit tubing only. (2) Design Temp Drop (Estimated Actual Drop). (3) Required load. Includes panel back losses. Does not reflect maximum capacity of the circuit.

STAMPS

REGISTERED PROFESSIONAL ENGINEER — Stephen L. Dekker — No. 33209 — EXP. 9-30-2023 — MECHANICAL — STATE OF CALIFORNIA

LICENSED ARCHITECT — STEPHEN L. DEKKER — No. C-21360 — Exp. 10-31-24 — STATE OF CALIFORNIA

AGENCY APPROVAL
File No: n.a

MECHANICAL ELECTRICAL AND ENERGY CONSULTANTS

DESIGN WEST ENGINEERING

412 E. Vanderbilt Way
San Bernardino, CA 92408
Tel: 909-890-3700
Fax: 909-890-3770
Email: cadd@designwesteng.com

CONSULTANT BRANDING

RUHNAU CLARKE ARCHITECTS

It is the full responsibility of the user to thoroughly review these suggested drawings and determine the suitability of the drawing for user's intended use prior to ordering materials or the installation of the project. The user shall assume all risk and liability in connection therewith, including that the user must seek their own licensed local professional advice for any particular project.

All REHAU Technical Information and Instructions are available at na.rehau.com/resourcecenter.

The heat loss calculation was based on the following information. See attached calculation report for detailed information.

Description	Value
Outside Design Temperature	NA
Inside Design Temperature	NA
Exterior Wall	NA
Interior Ceiling	NA
Exterior Ceiling	NA
Basement Floor	NA
Main Level Floor	NA
Upper Level Floor	NA
Windows	NA
Air Change Rate	NA

* Provided by customer
** Assumed by designer

The included design was based on the following information.

Description	Value
Supply Temperature Range	95.4 °F calculated
Supply/ Return Delta-T	25 °F **
Fluid Type	50% Propylene Glycol **
Floor Temperature Range	NA
Floor Coverings	Bare concrete *
Pipe Size	3/4" RAUPEX® O2 Barrier Pipe **
Pipe Spacing	9 in **
Basement Level Floor Structure	NA
Main Level Floor Structure	Snow Melt - Concrete *
Upper Level Floor Structure	NA
Backloss	Manual 20% **

* Provided by customer
** Assumed by designer

Notes:

REV1: Revise design based on updated Mechanical Site Plan and phone conversation.
Design based on information provided by Design West Engineering, specifically marked-up sheet A-2.0 and Design Request form and email correspondence.
No Snow & Ice Melt load calculations were performed by REHAU Construction LLC.
Load of 150 btuh/sqft including back-loss was assumed for design.
Flow rates and head losses based on 50% propylene glycol mixture and 25*F deltaT.
4" concrete panel structure assumed, engineer to confirm.
Installing contractor shall coordinate with all trades during construction in efforts to avoid damage to RAUPEX.

General Installation Notes

1. Installers should be properly trained by REHAU or a REHAU Authorized Representative.

2. In addition to all local and national codes, installers must follow all REHAU Technical Guidelines including but not limited to; technical manuals installation guides, technical bulletins and product submittals. The most current and applicable versions of all the technical literature is available on the REHAU North America website at **na.rehau.com/resourcecenter.**

3. PEXa pipe should not be stored outdoors. Keep PEXa pipe in its orginal packaging, until time of use to protect pipe from sunlight, dirt, damage, etc.

4. PEXa pipe should not be dragged accross rough surfaces or objects.

5. Protect PEXa pipe from oil, grease, oil-based paints and other incompatible substances.

6. Do not apply adhesives tape to PEXa pipe, unless approved directly by REHAU.

7. Do not bury PEXa pipe in contaminated soils.

8. Cutting - Use a pipe cutter designed for plastic pipe that is sharp and produces clean, square cuts. Do not cut RAUPEX with a saw blade, as the rough edges will interfere with fitting connections. A clean, square cut is required.

9. Keep pipe at least 6" (15 cm) from the edges of slabs, walls or other permanent objects.

10. Label pipes as they are installed. Record this information on the manifold, near the manifold, or with tabs on the pipe. Record actual circuit lengths along with circuit numbers.

11. The manifold should be securely mounted in it's final position. Protect the manifold from damage and vandalism during and after construction.

12. Securing RAUPEX- All sizes of RAUPEX should be secured every 2' to 3' (0.6m to 0.9 m) on straight runs and n the start, finish and midpoint of any turns, to hold the established laying pattern. Pipe bends should be carefully formed to prevent kinking.

13. A pressure test must always be performed on the system prior to and during the installation of the thermal mass to ensure that PEXa pipe and connections are leak-free. For dry systems such as joist space applications, a pressure test must be performed after installation and up to the time that the system is put into operation. Please see REHAU Technical Installation Guide for the detailed information including the specific requirements.

14. Tests of hydronic heating systems shall comply with local codes, and where required, shall be witnessed by the building official.

15. Pressure tests must be done with all circuit valves on the manifold fully open. All pipes and the manifolds must be tested together.

16. Pressure gauges must show pressure increments of 1 PSIG and should be located at or near the lowest point in the distribution system. Use an air test if water could potentially freeze in the system. Do not exceed 150 PSIG (pounds per square inch gauge) [1030 kPa].

REHAU

REHAU Construction, LLC
1501 Edwards Ferry Rd NE
Leesburg, VA 20176
Tel:(703) 777-5255
Fax:(703) 777-5035

IMPORTANT NOTICE
This technical information is provided only for general quotation purposes and is based in part on information you provided. No representations, guarantees or warranties are made regarding the suitability of this technical information to meet requirements for any particular project. This technical information is not intended to be used for final drawings or specifications, or to prepare cost calculations. The user will determine suitability of the information for user's intended use by employing a licensed local professional to convert this technical information into a final specification that meets the fuctional, financial aesthetic needs of the project, as well as complying with all applicable codes and local climate conditions
Copyright REHAU 2022

PROJECT: Mountain Transit Maintenance Facility
CUSTOMER: Design West Engineering

REFERENCE NO.: RCP-22/04-11263
SCALE:
DRAWN BY: JMB
CHECKED BY: SLD

ISSUE DATES:

0	4/8/2022	ORIGINAL
1	2/23/2023	REV1
2		
3		
4		
5		

DRAWING TITLE: Project Summary

DRAWING NO.: R1

SHEET 1 OF 3

MOUNT TRANSIT MAINTENANCE FACILITY:

PRINTED: 7/26/2023 1:33:59 PM
PATH: BIM 360://50801_MMTF/21060_Mountain Transit Maintenance Facility_CENTRAL

PROJECT No. :50801
7/26/2023 1:33:59 PM

DRAWN BY: CHECKED BY:

ISSUE No.	DATE	DESCRIPTION	REVISION No.	DATE	DESCRIPTION
ISSUE No.	DATE	DESCRIPTION	REVISION No.	DATE	DESCRIPTION
ISSUE No.	DATE	DESCRIPTION	REVISION No.	DATE	DESCRIPTION
ISSUE No.	DATE	DESCRIPTION	REVISION No.	DATE	DESCRIPTION

RUHNAUCLARKE.COM
3775 TENTH STREET, RIVERSIDE CALIFORNIA 92501 (951) 684 4664 / 5751 PALMER WAY, SUITE C, CARLSBAD CALIFORNIA 92010 (760) 438 5899

MOUNT TRANSIT MAINTENANCE FACILITY
170 BUSINESS CENTER DR. BIG BEAR LAKES, CA
BIG BEAR LAKES

REHAU SNOW MELT SYSTEM

M3-0.1

22-066
50801

STAMPS

AGENCY APPROVAL
File No: A#

MECHANICAL
ELECTRICAL
AND ENERGY
CONSULTANTS

DESIGN WEST ENGINEERING

412 E. Vanderbilt Way
San Bernardino, CA 92408
Tel: 909-890-3700
Fax: 909-890-3770
Email: cadd@designwesteng.com

CONSULTANT BRANDING

RUHNAU
CLARKE
ARCHITECTS

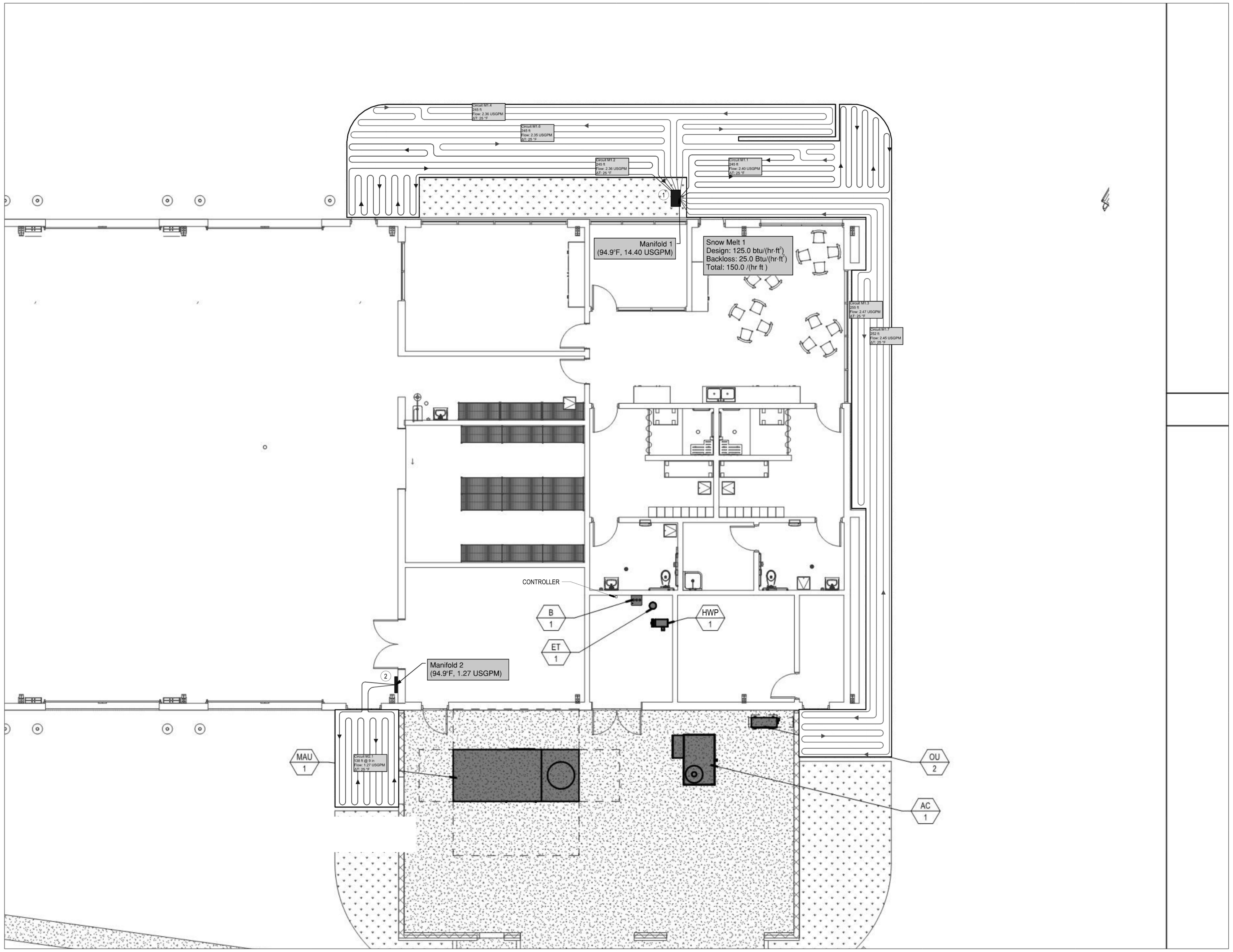

REHAU

REHAU Construction, LLC
1501 Edwards Ferry Rd NE
Leesburg, VA 20176
Tel:(703) 777-5255
Fax:(703) 777-5035

IMPORTANT NOTICE

This technical information is provided only for general quotation purposes and is based in part on information you provided. No representations, guarantees or warranties are made regarding the suitability of this technical information to meet requirements for any particular project. This technical information is not intended to be used for final drawings or specifications, or to prepare cost calculations. The user will determine suitability of the information for user's intended use by employing a licensed local professional to convert this technical information into a final specification that meets the functional, financial aesthetic needs of the project, as well as complying with all applicable codes and local climate conditions.

Copyright REHAU 2022

PROJECT: Mountain Transit Maintenance Facility

CUSTOMER: Design West Engineering

REFERENCE NO.: RCP-22/04-11263

SCALE: 3/16"=1'

DRAWN BY: JMB

CHECKED BY: SLD

ISSUE DATES:

◯	4/8/2022	ORIGINAL
1	2/23/2023	REV1
2		
3		
4		
5		

DRAWING TITLE: Snow Melt

DRAWING NO.: R2

SHEET 2 OF 3

CONSTRUCTION NOTES

1. SNOW MELT MANIFOLD LOCATED BELOW GRADE, SEE DETAIL 2/M2-0.2
2. FOR CABINET MOUNTING, SEE DENTAL 14/M2-0.2

MOUNT TRANSIT MAINTENANCE FACILITY:

PRINTED: 7/26/2023 1:33:59 PM
PATH: BIM 360://50801_MARTA_MTMF/21061_Mountain Transit Maintenance Facility_MEP_Central.rvt

PROJECT No. :50801
7/26/2023 1:33:59 PM

DRAWN BY: ______ CHECKED BY: ______

ISSUE No.____	DATE____	DESCRIPTION____	REVISION No.____	DATE____	DESCRIPTION____
ISSUE No.____	DATE____	DESCRIPTION____	REVISION No.____	DATE____	DESCRIPTION____
ISSUE No.____	DATE____	DESCRIPTION____	REVISION No.____	DATE____	DESCRIPTION____
ISSUE No.____	DATE____	DESCRIPTION____	REVISION No.____	DATE____	DESCRIPTION____

RUHNAUCLARKE.COM

3775 TENTH STREET, RIVERSIDE CALIFORNIA 92501 (951) 684 4664 / 5751 PALMER WAY, SUITE C, CARLSBAD CALIFORNIA 92010 (760) 438 5899

MOUNT TRANSIT MAINTENANCE FACILITY

170 BUSINESS CENTER DR. BIG BEAR LAKES, CA
BIG BEAR LAKES

REHAU SNOW MELT SYSTEM

M3-0.2

22-066
50801

REGISTERED PROFESSIONAL ENGINEER
No. 33209
EXP. 9-30-2023
MECHANICAL
STATE OF CALIFORNIA

LICENSED ARCHITECT
No. C-31345
Exp. 10-31-24
STATE OF CALIFORNIA

STAMPS

AGENCY APPROVAL
File No: n.a

MECHANICAL
ELECTRICAL
AND ENERGY
CONSULTANTS

DESIGN WEST ENGINEERING

412 E. Vanderbilt Way
San Bernardino, CA 92408
Tel: 909-890-3700
Fax: 909-890-3770
Email: cadd@designwesteng.com

CONSULTANT BRANDING

RUHNAU
CLARKE
ARCHITECTS

Snow and Ice Melt Installation Notes

1. Subsoil Requirements -Installers should inspect the subsoil underneath the SIM thermal mass to ensure the following conditions: Subsoil is clean and compacted. Subsoil is dry and will not allow ground water to within 3' (0.9m) of the SIM pipe. If the subsoil contains bedrock within 1' (0.3m) of the SIM pipe then insulation should be installed over the bedrock formation. Subsoil should be graded with proper aggregate sizes to minimize frost heave.

2. Insulation - The critical factors to be concerned with when installing insulation are: Insulation is of sufficient density to withstand the compression to which it will be subjected. Insulation must be capable of withstanding the moisture conditions of the site. If using board insulation, all joints should be taped with moisture-proof insulation tape. If pipe is installed with Insulation Screw Clips, a minimum of 1" (25 mm) thick insulation must be used. With board insulation, the subsurface should be flat and compacted to prevent the insulation from cracking due to uneven support when it's stepped on.

3. Securing RAUPEX-All sizes of RAUPEX should be secured every 2' to 3' (0.6m to 0.9m) on straight runs and on the start, finish and midpoint of any turns, to hold the established laying pattern.

4. Damaged Pipe-If the wall of the pipe has been scored or cut by a sharp object, remove the damaged section and replace with a new section connecting (joining) with the EVERLOC fittings (wrap the brass fitting with a covering to protect it from a possible corrosive reaction with concrete), or remove and replace the entire pipe circuit.

5. Sleeve Material-REHAU Protective Sleeves should cover all RAUPEX that either penetrates the thermal mass, or crosses a control or expansion joint. Install and secure the protection sleeve to ensure it does not move during the thermal mass installation. Protective Sleeves are also used to protect the PEXa from ultraviolet (UV) light exposure. Allow enough Protective Sleeve to extend a minimum of 12" (30.5 cm) beyond the area you intend to protect in both directions.

6. Thermal Mass-The following items should be addressed: Pipe circuits must be planned and installed to minimize passes through expansion joints, saw cuts or other "movement" joints in the thermal mass. Ensure that the thermal mass structure is constructed as planned during the design process. This will include all layers above and below the pipe. Ensure that the depths of the material applied are the same as those used to calculate the pickup load. During the installation of the thermal mass ensure that the pipe is pressurized with an attendant watching the pressure gauge for a sudden loss of pressure due to a leak in the system. Watch to ensure that the pipe is protected from sharp objects during the thermal mass installation. Also ensure that the materials making up the thermal mass, such as stone, will not damage the pipe during any compaction processes that may occur after the installation of the mass. Pipe must not overlap when encased in thermal mass, as this will reduce the thickness of the thermal mass at that point, possible leading to thermal mass damage and/or "hot spots".

7. When asphalt and other hot mix thermal mass materials are planned, ensure that the proper steps have been taken to protect the pipe from the extreme exposure temperatures. Ensure that the installation take place at a lower temperature [230°F (110°C)]. Flush cold water through the pipe during the installation to minimize the chance of damage occurring. If there is any water left in the pipe it will be subject to freezing and should be removed.

8. Loose fill or fill with a large aggregate size will incorporate air pockets which will lead to inefficiency in the thermal mass design. Unless you properly designed for it, do not allow a thermal mass with a significant amount of air space.

9. Heat Transfer Fluid Requirements -The following items should be addressed: Check the antifreeze just after installation and document the values obtained per the manufacturer's recommendations. Check the antifreeze before the start of every melting season at a minimum. Do not allow water to be added to the system without rechecking the antifreeze levels. Charging the antifreeze with a mechanical charging pump is an efficient way to introduce the antifreeze. Once the antifreeze has been installed, be sure to circulate it thoroughly through all pipe circuits, until all air is removed and the antifreeze is completely mixed into solution.

10. Air Pressure Testing - An air test is done when it is difficult to fill the system with the heat transfer fluid due to site conditions. Check all exposed joints and compression fittings for leaks with leak detection fluid.

11. Heat Transfer Fluid Pressure Testing - In order to use heat transfer fluid to pressure test the RAUPEX, it will be necessary to purge all circuits of air. Test pressure is one and one-half times the working pressure.

12. Control systems; For controls systems that use senors, ensure that all sensors are accessible for repair and replacement. All snow sensors, placed within the thermal mass, can be installed with wiring in conduit (minimal bends). During installation of control sensor wiring, all wires should be checked for continuity prior to installation of the thermal mass. Controls will need to be checked and thoroughly tested.

13. System Commissioning - Every SIM system should be thoroughly tested and evaluated. If weather conditions do not permit operation, the installer can simulate weather conditions by warming and cooling the sensors.

14. If EVERLOC fittings and sleeves will be installed and encased in a thermal mass, they must be completely wrapped in waterproof, adhesive-free tape or RAUCROSS heat shrink tubing to help reduce corrosion caused by the surrounding environment - check local codes for compliance. Locations are to be noted on plans.

PartNumber	Description	Qty	Pkg
236117	Protection Sleeve for 5/8" & 3/4" Pipe	50	Ft
236357-001	090 Snow/Ice Sensor (65 ft. / 19.8 m jacketed cable)	1	Ea
236367-001	091 Snow/Ice Sensor Socket	1	Ea
315839-001	Single-Zone SIM Control Low Voltage (654)	1	Ea
136051-000	3/4" RAUPEX O2 Barrier Pipe, 1000' Coil (304.8 m)	1	Coil
136051-500	3/4" RAUPEX O2 Barrier Pipe, 500' Coil (152.4 m)	1	Coil
136051-300	3/4" RAUPEX O2 Barrier Pipe, 300' Coil (91.4 m)	1	Coil
250218-001	Mini Thermometer for NPT Valve w/ housing	2	Ea
316257-002	1"Air Vent/Boiler Drain Combination Set w/gaskets, Nickel Plated	1	Set
343628-001	1 1/4 in. BSPP Female x 1" BSPP Male Manifold Adapter, Painted Brass	1	Set
343377-001	PRO-BALANCE 1 1/4in. Stainless Steel Manifold with Gauges, 6 stations	1	Ea
381101-001	PRO-BALANCE 1" Stainless Steel Manifold with Gauges, 1 Station	1	Ea
418319-001	3/4" RAUPEX x R-20 Nickel Plated Manifold Outlet	7	2 pcs/Bag
724448-001	Nylon Pipe Ties	1	1000 pcs/Bag
266175-001	5/8" and 3/4" PVC Bend Guide	14	Ea
316853-512	Stainless Steel Surface Mount Manifold Cabinet 16W (Up to 3 Stations)	1	Ea

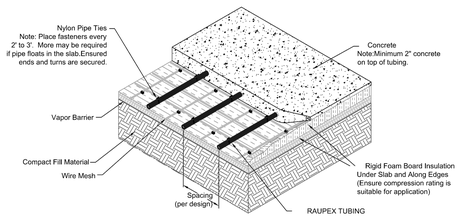

SIM INSTALLATION-CONCRETE
Nylon Pipe Ties

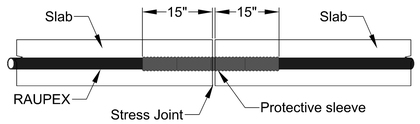

Slab Installation
Protective Sleeve in Cold and/or Expansion Joints

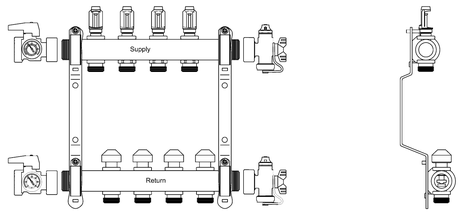

REHAU PRO-BALANCE® Manifold

REHAU Construction, LLC
1501 Edwards Ferry Rd NE
Leesburg, VA 20176
Tel:(703) 777-5255
Fax:(703) 777-5035

IMPORTANT NOTICE

This technical information is provided only for general quotation purposes and is based in part on information you provided. No representations, guarantees or warranties are made regarding the suitability of this technical information to meet requirements for any particular project. This technical information is not intended to be used for final drawings or specifications, or to prepare cost calculations. The user will determine suitability of the information for user's intended use by employing a licensed local professional to convert this technical information into a final specification that meets the fucitional, financial aesthetic needs of the project, as well as complying with all applicable codes and local climate conditions

Copyright REHAU 2022

PROJECT: Mountain Transit Maintenance Facility

CUSTOMER: Design West Engineering

REFERENCE NO.: RCP-22/04-11263

SCALE:

DRAWN BY: JMB

CHECKED BY: SLD

ISSUE DATES:

0	4/8/2022	ORIGINAL
1	2/23/2023	REV1
2		
3		
4		
5		

DRAWING TITLE: Notes, BOM, Details

DRAWING NO.: R3

SHEET 3 OF 3

MOUNT TRANSIT MAINTENANCE FACILITY:

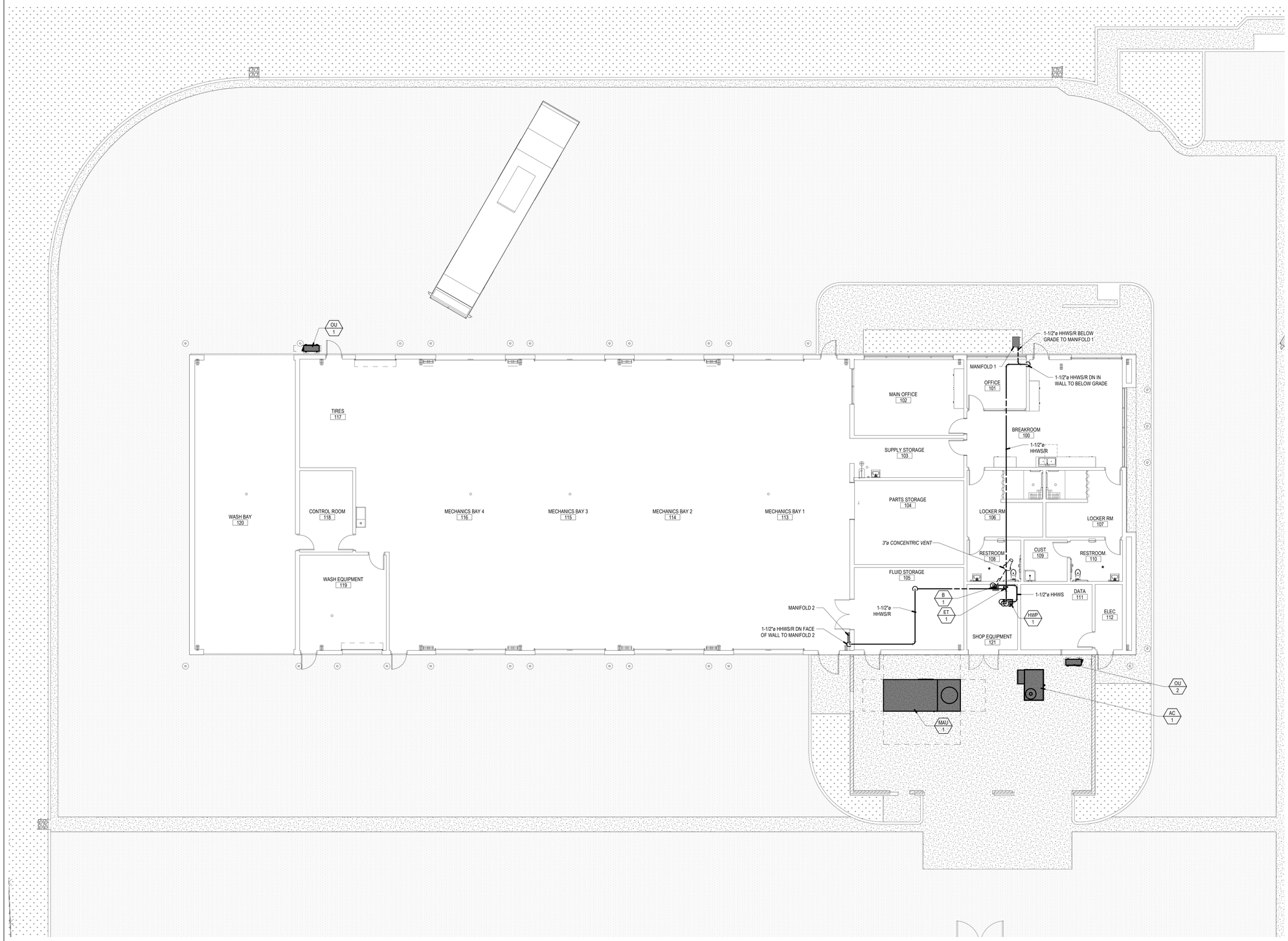

NORTH

MECHANICAL SITE PLAN | 1/8" = 1'-0" | 1

GENERAL NOTES

1. FOR LINE TYPES, SYMBOLS & ABBREVIATIONS SEE LEGEND ON SHEET M0-0.1.
2. FOR SNOWMELT PIPING IN SIDEWALKS, SEE SHEETS M3-0.1, M3-0.2 & M3-0.3
3. FOR BOILER PIPING DIAGRAM, SEE DETAIL 1/M2-0.2
4. FOR SNOW MELT MANIFOLD, SEE DETAIL 2/M2-0.2
5. FOR PIPE SUPPORT, SEE DETAIL 9/M2-0.1
6. FOR BOILER CONCENTRIC VENT THRU ROOF, SEE DETAIL 8/M2-0.2
7. FOR PIPES BELOW GRADE, SEE DETAIL 4/M2-0.2

STAMPS

REGISTERED PROFESSIONAL ENGINEER — MECHANICAL — No. 33209 — EXP. 9-30-2023 — STATE OF CALIFORNIA

LICENSED ARCHITECT — ENGINEER CLARKE — No. C-31345 Exp. 10-31-24 — STATE OF CALIFORNIA

AGENCY APPROVAL
File No: n.a

MECHANICAL ELECTRICAL AND ENERGY CONSULTANTS

DESIGN WEST ENGINEERING

412 E. Vanderbilt Way
San Bernardino, CA 92408
Tel: 909-890-3700
Fax: 909-890-3770
Email: cadd@designwesteng.com

CONSULTANT BRANDING

RUHNAU CLARKE ARCHITECTS

PROJECT No. :50801
7/26/2023 1:34:12 PM

DRAWN BY: CHECKED BY:

ISSUE No.____ DATE_____ DESCRIPTION_____
ISSUE No.____ DATE_____ DESCRIPTION_____
ISSUE No.____ DATE_____ DESCRIPTION_____
ISSUE No.____ DATE_____ DESCRIPTION_____

REVISION No.____ DATE_____ DESCRIPTION_____
REVISION No.____ DATE_____ DESCRIPTION_____
REVISION No.____ DATE_____ DESCRIPTION_____
REVISION No.____ DATE_____ DESCRIPTION_____

RUHNAUCLARKE.COM
3775 TENTH STREET, RIVERSIDE CALIFORNIA 92501 (951) 684 4664 / 5751 PALMER WAY, SUITE C, CARLSBAD CALIFORNIA 92010 (760) 438 5899

MOUNT TRANSIT MAINTENANCE FACILITY

170 BUSINESS CENTER DR. BIG BEAR LAKES, CA
BIG BEAR LAKES

MECHANICAL SITE PLAN

MS-1.0

22-066
50801

MOUNT TRANSIT MAINTENANCE FACILITY:

PRINTED: 7/26/2023 1:34:12 PM
PATH: R:\M Projects\50801_MMRTA_MTMF\21060_Mountain Transit Maintenance Facility_CONSULT.rvt

PLUMBING FIXTURE SCHEDULE

TAG	SPECIFICATION	CONNECTION SIZE: WASTE	TRAP	VENT	CW	HW	ELEC.
EEW 1	EMERGENCY EYE WASH: HAWS 8356WCC, BARRIER FREE RECESSED SHOWER AND EYE/FACE WASH, DRENCH SHOWER & EYEWASH W/ STAINLESS STEEL 20 GPM SHOWERHEAD, 4.2 GPM EYE/FACE WASH, STAINLESS STEEL CABINET. INDOOR APPLICATIONS REQUIRE A FLOOR DRAIN FD-1 WITH TRAP PRIMER TP-1. HAWS 9201E THERMOSTATIC MIXING VALVE.	2"	1-1/4"	1-1/2"	1-1/4"	1"	-
EEW 2	EMERGENCY EYE WASH: HAWS 7656WCC, BARRIER FREE RECESSED EYE/FACE WASH, EYEWASH W/ STAINLESS STEEL 4.2 GPM EYE/FACE WASH, STAINLESS STEEL CABINET. HAWS 9201E THERMOSTATIC MIXING VALVE.	2"	1-1/4"	1-1/2"	1-1/4"	1"	-
FD 1	FLOOR DRAIN: JOSAM 30002-5A FLOOR DRAIN W/LOC CAST IRON BODY W/CLAMP RING, FLANGE, ADJUSTABLE NIKALOY STRAINER, POLISHED BRONZE GRATE. PROVIDED WITH TRAP PRIMER CONNECTION FOR TP-1.	2"	2"	1-1/2"	-	-	-
FD 2	FLOOR DRAIN: JOSAM 30003-5A FLOOR DRAIN W/LOC CAST IRON BODY W/CLAMP RING, FLANGE, ADJUSTABLE NIKALOY STRAINER, POLISHED BRONZE GRATE. PROVIDED WITH TRAP PRIMER CONNECTION FOR TP-1.	3"	3"	1-1/2"	-	-	-
FD 3	FLOOR DRAIN: JOSAM 30004-5A FLOOR DRAIN W/LOC CAST IRON BODY W/CLAMP RING, FLANGE, ADJUSTABLE NIKALOY STRAINER, POLISHED BRONZE GRATE. PROVIDED WITH TRAP PRIMER CONNECTION FOR TP-1.	4"	4"	2"	-	-	-
FS 1	FLOOR SINK: JOSAM 49322 FLOOR SINK, 8" SQUARE TOP-MEDIUM RECEPTOR, 5-7/8" DEEP SUMP, ACID RESISTANT COATED INTERIOR AND GRATE. PROVIDED WITH TRAP PRIMER CONNECTION FOR TP-1.	2"	2"	1-1/2"	-	-	-
HB 1	HOSE BIBB: WOODFORD 65P-1-4 RECESSED ANTI-SIPHON FREEZELESS WALL HYDRANT, CHROME FINISH WITH VACUUM BREAKER, METAL WHEEL HANDLE AND LOOSE TEE KEY OPERATED CONTROL VALVE.	-	-	-	3/4"	-	-
JS 1	SERVICE/JAN. SINK: KOHLER "WHITBY" K6710 WHITE ENAMEL CAST IRON FLOOR-MOUNTED CORNER BASIN MOP SINK W/ K-8940 SINK RIM GUARD. CHICAGO 897-CP WALL MOUNTED 8" BODY, SERVICE SINK FAUCET W/ VACUUM BREAKER, HOSE THREADED OUTLET, PAIL HOOK, INTEGRAL STOPS & WALL BRACE.	3"	3"	1-1/2"	1/2"	1/2"	-
L 1	LAVATORY: KOHLER "KINGSTON" K-2005, WHITE VITREOUS CHINA, WALL HUNG LAVATORY W/ FAUCET HOLE ON CENTER. SLOAN 3362133 DECK MOUNTED SINGLE HOLE E-TRONIC TRADITIONAL SINK FAUCET HARD WIRED DUAL BEAM INFRARED SENSOR, W/ 0.5 GPM AERATOR, THERMOSTATIC MIXING VALVE, PROVIDE ASSE 1070 APPROVED TMV SET TO 110°, GRID STRAINER DRAIN W/ 1-1/2" CAST BRASS P-TRAP WITH CHROME FINISH, ANGLE STOPS W/ RIGID RISER. PROVIDE JOSAM 17000 SERIES WALL CARRIER. ON ADA COMPLIANT PROVIDE TRUEBRO LAV GUARD PER ADA CODE SEC. 606.5 & CBC SEC. 11B-606.5	2"	1-1/2"	1-1/2"	1/2"	1/2"	120V
S 1	TWO COMPARTMENT SINK: ELKAY "LUSTERTONE" LRAD3319S6PD, 33" X 19-1/2" X 6-1/2" STAINLESS STEEL DOUBLE BOWL SINK, 18 GAUGE. SELF RIM, FAUCET HOLES ON 4" CENTERS, CHICAGO 2300-8E34ABCP DECK MOUNTED 8" FIXED CENTERS SINGLE LEVER W/ 1.5 GPM AERATOR, PROVIDE ASSE 1070 APPROVED TMV SET TO 110°, CHROME BASKET STRAINERS W/ 1-1/2" CAST BRASS L.A. PATTERN P-TRAP WITH CHROME FINISH, ANGLE STOPS W/ RIGID RISER.	2"	1-1/2"	1-1/2"	1/2"	1/2"	-
S 2	ONE COMPARTMENT SINK: ELKAY ESS4924RFC 49-1/2" X 24" X 10" STAINLESS STEEL SINGLE BOWL SINK W/ BUFFED SATIN FINISH, 14 GAUGE, WALL MOUNTED, LK39BC FOOT CONTROL, LK35SA SPOUT, LK18B GRID DRAIN, CENTER DRAIN PLACEMENT. PROVIDE ASSE 1070 APPROVED TMV SET TO 110°, CHROME BASKET STRAINERS W/ 1-1/2" CAST BRASS L.A. PATTERN P-TRAP WITH CHROME FINISH, ANGLE STOPS W/ RIGID RISER.	2"	1-1/2"	1-1/2"	1/2"	1/2"	-
SH 1	SHOWER: ARCHITECT SPECIFICATIONS. BRADLEY HN200-TMV-SF-HS-VL-LBJ-ST-SB-NS-SC, RECESS MOUNTED ADA COMPLIANT WALL SHOWER, SHOWERHEAD HEIGHT 6'-0", THERMOSTATIC MIXING VALVE SET TO 120°, DELUXE SHOWERHEAD W/ BALL JOINT (1.50 GPM), HAND SHOWER HEAD, 60" FLEX HOSE, WALL HOOK, VACUUM BREAKER AND QUICK DISCONNECT, VALVE ON LEFT SIDE, LOCKABLE BALL JOINT, STOPS IN EACH SUPPLY, 24" SLIDE BAR, NO SEAT (SEAT ARCHITECT SPECIFICATIONS), STANDARD SCREWS. JOSAM 30000-A-5A-CP-Z FLOOR DRAIN, CHROME PLATED STRAINER, NO-HUB OUTLET. INSTALL PER CPC (SEC. 411.10)	2"	2"	1-1/2"	1/2"	1/2"	-
SH 2	SHOWER: ARCHITECT SPECIFICATIONS. BRADLEY HN200-TMV-SF-HS-VL-LBJ-ST-SB-NS-SC, RECESS MOUNTED ADA COMPLIANT WALL SHOWER, SHOWERHEAD HEIGHT 6'-0", THERMOSTATIC MIXING VALVE SET TO 120°, DELUXE SHOWERHEAD W/ BALL JOINT (1.50 GPM), HAND SHOWER HEAD, 60" FLEX HOSE, WALL HOOK, VACUUM BREAKER AND QUICK DISCONNECT, VALVE ON RIGHT SIDE, LOCKABLE BALL JOINT, STOPS IN EACH SUPPLY, 24" SLIDE BAR, NO SEAT (SEAT ARCHITECT SPECIFICATIONS), STANDARD SCREWS. JOSAM 30000-A-5A-CP-Z FLOOR DRAIN, CHROME PLATED STRAINER, NO-HUB OUTLET. INSTALL PER CPC (SEC. 411.10)	2"	2"	1-1/2"	1/2"	1/2"	-
TD 1	TRENCH DRAIN: JOSAM PRO PLUS 100C - SMC/GRP TRENCH DRAIN CHANNELS 100C THRU 100C-03, BOTTOM OUTLET, END CAPS. 100-GRP-C CLASS C HEAL PROOF TRENCH DRAIN GRATE. GREEN DRAIN GD2 TRAP PRIMER.	3"	3"	1-1/2"	-	-	-
TP 1	TRAP PRIMER: MIFAB. MODEL "M-500" 1/2" INLET AND 1/2" OUTLET WITH OPTIONAL DISTRIBUTION UNIT, MAY BE LOCATED AS INDICATED ON DRAWINGS OR AS REQUIRED BY CODE. UPC LISTED. PROVIDED WITH A 12"X 12" ACCESS PANEL OR LARGER DEPENDING ON THE REQUIRED ACCESS TO THE EQUIPMENT AND SHUT-OFF VALVE. (CONTRACTOR TO VERIFY).	-	-	-	1/2"	-	-
TP 2	TRAP PRIMER: MIFAB. MODEL "M-100-5-500-120VAC" 1/2" INLET AND 1/2" OUTLET, HARD WIRED POWERED, MAY BE LOCATED AS INDICATED ON DRAWINGS OR AS REQUIRED BY CODE. UPC LISTED. PROVIDED WITH A 12"X 12" ACCESS PANEL OR LARGER DEPENDING ON THE REQUIRED ACCESS TO THE EQUIPMENT AND SHUT-OFF VALVE. (CONTRACTOR TO VERIFY).	-	-	-	1/2"	-	120V
WC 1	WATERCLOSET: KOHLER "HIGHCLIFF ULTRA" K-96057, ADA COMPLIANT, 16-5/8" HIGH RIM, (1.28 GPF), FLOOR MOUNTED, ELONGATED BOWL, SIPHON JET, 1-1/2" TOP SPUD, WHITE VITREOUS CHINA. SLOAN 111-SFSM-1.28-HW EXPOSED SENSOR FLUSH VALVE (1.28 GPF) , BEMIS PLASTIC SEAT MODEL 2L215ST, ELONGATED, OPEN FRONT, STAIN & CHEMICAL RESISTANT.	3"	INT.	2"	1"	-	120V
WHA 1	WATER HAMMER ARRESTOR: MIFAB, INC. MODEL "MWH" (SEE PLANS FOR SIZE). INSTALLED ON ALL QUICK CLOSING VALVES AND ALL VALVES WHICH CLOSE WITH THE FLOW OF FLUID, OR ON HEADERS SERVING MORE THAN ONE FIXTURE. PROVIDED WITH A 12"X 12" ACCESS PANEL.	-	-	-	-	-	-

SAND OIL INTERCEPTOR SCHEDULE

TAG	MANUFACTURER & MODEL NO.	CAPACITY	ACCESSORIES
OI 1	JENSEN PRECAST JP750EE-TP	750 GALLONS	W/ TRAFFIC RATED LIDS AND RISER RINGS AS REQ'D TO FLUSH W/ GRADE INSPECTION STATION

EXPANSION TANK SCHEDULE

TAG	MANUFACTURER & MODEL NO.	CAPACITY	AIR PRE-CHARGE	WATER SIDE VOLUME	WEIGHT
ET 1	WATTS PLT-12	4.5 GALLONS	20 PSI	3.42 GALLONS	10 LBS DRY 39 LBS WET

GARBAGE DISPOSAL SCHEDULE

TAG	MANUFACTURER & MODEL NO.	CONSTRUCTION	ELECTRICAL	WEIGHT	REMARKS
GD 1	IN-SINK ERATOR BADGER 5	GALVANIZED STEEL	120V-1a-60Hz 6.9 AMPS 1/2 HP	15 LBS	QUIET DURA-DRIVE INDUCTION MOTOR

PIPE MATERIAL SCHEDULE

SERVICE	PIPE MATERIAL & WEIGHT	TYPE OF JOINTS	PRESSURE FITTINGS MATERIAL	SHUT-OFF RATINGS PSI-SwP	VALVE
COLD WATER ABV GROUND	COPPER L TUBE	SOLDERED	CAST BRONZE/ WROUGHT COPPER	125	BALL GATE CHECK
COLD WATER BELOW GROUND TO 5' OUTSIDE BUILDING	COPPER K TUBE	BRAZED	CAST BRONZE/ WROUGHT COPPER	125	BALL GATE
COLD WATER BELOW GROUND BEYOND 5'-0"	SCHEDULE 80 PVC	SOLVENT-WELD	PVC	125	GATE
HOT WATER ABV GROUND	COPPER L TUBE	SOLDERED	CAST BRONZE/ WROUGHT COPPER	125	BALL CHECK
FUEL GAS	STEEL 40, BLACK STEEL 40, BLACK POLYETHYLENE PIPING STAINLESS STEEL TUBING	SCREWED WELDED PER MANF.	MALL. IRON STEEL WELD STAINLESS STEEL TUBING	150 150 PER MANF.	SQR HEAD COCK PER MANF.
VENT	NO-HUB CAST IRON	NO-HUB	N/A	N/A	N/A
WASTE, SOIL & ROOF DRAINS BELOW GRADE	SCHEDULE 40 ABS	SOLVENT-WELD	ABS	N/A	N/A
WASTE, SOIL & ROOF DRAINS BELOW GRADE	NO-HUB CAST IRON	NO-HUB	N/A	N/A	N/A
CONDENSATE	COPPER L TUBE	SOLDERED	BRONZE	125	N/A
AIR SYSTEMS	COPPER L TUBE	BRAZED	CAST BRONZE/ WROUGHT COPPER	125	BALL

NOTE: ALL EXPOSED FUEL GAS PIPING SHALL BE PRIME AND PAINTED, COORDINATE COLOR WITH ARCHITECT.

GAS LOAD SCHEDULE

SYMBOL	ITEM	LOCATION	DEMAND (IN CFH)
AC-1	AIR CONDITIONER	MECHANICAL YARD	43.2
B-1	BOILER	SHOP EQUIPMENT 121	220
MAU-1	MAKE UP AIR UNIT	MECHANICAL YARD	600
WH-1	WATER HEATER	CUST 109	125

TOTAL GAS LOAD 988.2 CFH

LONGEST DEVELOPED PIPE LENGTH (LOW PRESSURE GAS) <150 FT.

COLD WATER SCHEDULE

PLUMBING SYSTEM FRICTION LOSS

F.U.'S : 41.5 GPM: 47

MIN. FRICTION LOSS (PSI)	A=	35	(35 PSI FOR FLUSHVALVE & PRESSURE ASSISTED TANK)
ELEV. ABOVE ST. MAIN (FT.)	B=	21.5	(FOR CIVIL PLANS)
DAILY ST. HIGH PRESSURE (PSI)	C=	120	(FROM LOCAL WATER DISTRICT)
DIST. FROM ST. TO HIGHEST FIXTURE	D=	494	(FROM PLANS, IN FEET)
1-1/2" METER PRESSURE LOSS (PSI)	E=	5.4	(UPC APPENDIX A.1)
BACKFLOW DEVICE LOSS (PSI)	F=	13	
PRV DEVICE LOSS (PSI)	G=	6	
SYSTEM STATIC PRESSURE LOSS (FT. HD.)	H=	9.245	H= (B) (0.43)
FRICTION LOSS AVAILABLE TO SYSTEM	I=	51.355	I = C - A - E - F - G - H
TOTAL DEVELOPED LENGTH = DIST. FROM ST. TO HIGHEST FIXTURE PLUS FITTING LOSS	J=	691.6	J=(D) (1.4)
FRICTION LOSS/100 FT.	K=	7.426	K= (I/J) (100)

MAXIMUM VELOCITY NOT TO EXCEED 8 FPS. (MAX. FRICTION LOSS ALLOWABLE)

PLUMBING SIZING FORM

PIPE SIZE IS BASED ON CHART A 105.1(1) @ 3.0 P.S.I. / 100 FT.

FIXTURE UNITS ARE BASED ON TABLE A 103.1(2) FROM APPENDIX A

PIPE SIZE SCHEDULE

SIZE	FIXTURE UNITS F. TANK	F. VALVE	GPM	VELOCITY
1/2"	1	0	1.8	2.5
3/4"	5	0	4.8	3.0
1"	13	0	10	4.0
1-1/4"	24	0	17	4.5
1-1/2"	47	10	27	5.0
2"	158	64	56	6.0
2-1/2"	380	250	100	7.5
3"	850	800	160	8.0
4"	1750	1750	230	8.0

FIXTURE UNITS

NUMBER	FIXTURE	UNIT	TOTAL
2	WC	5	10
3	L	1	3
2	SH	2	4
1	S-1	1.5	1.5
1	S-2	1.5	1.5
1	JS	3	3
1	1st HB	2.5	2.5
6	2nd HB	1	6
1	WASHBAY	10	10
	TOTAL FIXTURE UNITS		41.5
	TOTAL G.P.M.		47

VELOCITY FOR COLD WATER PIPING LESS THAN 8 FT. PER SECOND

VELOCITY FOR HOTWATER PIPING LESS THAN 5 FT. PER SECOND

COMPRESSED AIR SCHEDULE

PIPE SIZE	FLOW RATE (@ 175 PSIG)	PRESSURE DROP RANGE
1/2"	0-20 SCFM	0-0.833 PSI/100 FT
3/4"	8-45 SCFM	0.03-0.952 PSI/100 FT
1"	15-80 SCFM	0.28-0.794 PSI/100 FT
1-1/4"	25-175 SCFM	0.19-0.902 PSI/100 FT
1-1/2"	126-197 SCFM	0.40-1.0 PSI/100 FT

NOTE: THE ABOVE CAPACITIES ARE BASED ON A MAXIMUM PRESSURE DROP OF 1 PSI PER 100 FT. TO DETERMINE CFM OF AIR AT 100 PSIG, MULTIPLY BY 14.7/114.7 - 0.128 (FOR EXAMPLE, 1,000 CFM OF FREE AIR WILL BE 128 CFM AT 100 PSIG)

GENERAL NOTES

1. THE TOTAL INSTALLATION SHALL COMPLY WITH ANY AND REQUIREMENTS OF THE LEGALLY CONSTITUTED AUTHORITIES HAVING JURISDICTION INCLUDING 2022 CBC (CALIFORNIA BUILDING CODE), 2022 CAL GREEN REQUIREMENTS AND 2022 CMC/CPC (CALIFORNIA MECHANICAL AND PLUMBING CODE).
2. THE CONTRACTOR SHALL VISIT THE SITE PRIOR TO BID AND SHALL THOROUGHLY FAMILIARIZE HIMSELF WITH THE EXISTING CONDITIONS UNDER WHICH HE WILL BE REQUIRED TO WORK. INDICATED DIMENSIONS ARE APPROXIMATE AND ARE GIVEN FOR ESTIMATE PURPOSES ONLY.
3. BEFORE PROCEEDING WITH THE WORK THIS CONTRACTOR SHALL CAREFULLY CHECK AND VERIFY DIMENSIONS, SIZES, REQUIRED CLEARANCES AND SHALL ASSUME FULL RESPONSIBILITY FOR THE FITTING OF EQUIPMENT AND MATERIALS HEREIN REQUIRED TO OTHER PARTS OF THE WORK OF OTHER TRADES.
4. THE DRAWINGS ARE ESSENTIALLY DIAGRAMMATIC TO THE EXTENT THAT OFFSETS, BENDS, SPECIAL FITTINGS AND LOCATIONS ARE NOT EXACTLY LOCATED. IN THE PREPARATION OF THESE DOCUMENTS, CERTAIN ASSUMPTIONS ARE MADE REGARDING EXISTING CONDITIONS. SOME OF THESE ASSUMPTIONS MAY NOT BE VERIFIABLE WITHOUT EXPENDING ADDITIONAL SUMS OF MONEY OR DESTROYING OTHERWISE ADEQUATE OR SERVICEABLE PORTIONS OF EXISTING BUILDINGS AND/OR EQUIPMENT. THEREFORE, THE ENGINEER SHALL NOT BE HELD RESPONSIBLE FOR ANY CHANGES OR ADDITIONAL COSTS INCURRED DUE TO EXISTING CONDITIONS.
5. ITEMS RELATED TO PLUMBING UTILITIES AND/OR OTHER SERVICE(S); MATERIALS, LABOR, PERMITS, FEES, ETC., SHALL BE VERIFIED WITH THE RESPECTIVE SERVING UTILITY COMPANY PRIOR TO SUBMISSION OF A BID. THE ACT OF SUBMITTING A BID SHALL CONSTITUTE FULL RESPONSIBILITY OF THE CONTRACTOR TO INSTALL SERVICE(S) IN COMPLIANCE WITH THE REQUIREMENTS OF THE SERVING UTILITY COMPANY AND THE MECHANICAL ENGINEER. THE CONTRACTOR SHALL BE RESPONSIBLE FOR CHARGES LEVIED BY THE SERVING UTILITY COMPANY EXCEPTING THE FIRST BILLING DEPOSIT.
6. THE CONTRACTOR SHALL COMPLY WITH CONTRACT DOCUMENTS IN LAYING OUT THEIR WORK AND EQUIPMENT. THEY SHALL COORDINATE THE WORK OF THIS SECTION WITH THE WORK OF OTHER TRADES AND JOB CONDITIONS.
7. THE INSTALLATION OF ACCESS PANELS OR OTHER INDICATING EQUIPMENT OR SPECIALTIES REQUIRING READING, ADJUSTMENT, INSPECTION, REPAIRS, REMOVAL OR REPLACEMENT SHALL BE CONVENIENTLY LOCATED WITH REFERENCE TO THE FINISHED BUILDING.
8. EQUIPMENT AND FIXTURES INSTALLED UNDER THIS CONTRACT SHALL BE HUNG OR ANCHORED IN ACCORDANCE WITH 2022 CPC/CBC.
9. THE INTENT OF THE DRAWINGS AND SPECIFICATIONS IS TO CONSTRUCT THE PROJECT IN ACCORDANCE WITH TITLE 24, CALIFORNIA CODE OF REGULATIONS.
10. WHERE MATERIAL IS SHOWN ON THE DRAWINGS BUT NOT SPECIFIED, IT SHALL BE OF THE SAME TYPE AND QUALITY AS EXISTING MATERIAL.
11. THE FIRE PROTECTION CONTRACTOR SHALL PROVIDE REQUIRED HYDRAULIC CALCULATIONS AND FIRE SPRINKLER HEAD LOCATION IN ACCORDANCE WITH NFPA 13 TO THE LOCAL FIRE DEPARTMENT FOR REVIEW AND APPROVAL OF THE FIRE PROTECTION SYSTEM.
12. TEST SYSTEM(S) IN ACCORDANCE WITH REQUIREMENTS OF THE GOVERNING AUTHORITIES.
13. CLEANOUTS SHALL BE INSTALLED WHERE READILY ACCESSIBLE AND LOCATED AS PER CODE REQUIREMENTS THE CONTRACTOR SHALL COORDINATE CLEANOUT LOCATIONS WITH EQUIPMENT CABINETS, ETC. AND THE ARCHITECT PRIOR TO ANY INSTALLATION.
14. THE CONTRACTOR SHALL BE RESPONSIBLE FOR PATCHING AND REPAIRING PAVED AREAS WHICH ARE EXCAVATED AND/OR DAMAGED BY THEIR OPERATIONS. IN ADDITION, THE CONTRACTOR SHALL RESTORE TO ORIGINAL CONDITION PLANTED AREAS DAMAGED BY THEIR OPERATIONS.
15. CONNECTIONS TO EXISTING SERVICES SHALL BE MADE SUCH THAT INTERRUPTION TIME WILL BE AS SHORT AS POSSIBLE. THE CONTRACTOR SHALL GIVE THE OWNERS REPRESENTATIVE SUFFICIENT NOTICE OF SUCH INTERRUPTIONS AND THE ACTUAL SHUT-DOWN TIME SHALL BE AT A TIME DESIGNATED BY THE OWNERS REPRESENTATIVE.
16. EXTERIOR WATER SHUT-OFF VALVES BELOW GROUND SHALL BE INSTALLED IN YARD BOXES WITH COVERS CONSPICUOUSLY MARKED "WATER SHUT-OFF" RESPECTIVELY.
17. WHEN REQUIRED BY THE AUTHORITY HAVING JURISDICTION, POTABLE WATER SYSTEMS SHALL BE DISINFECTED AND FLUSHED PRIOR TO USE BY WATER-CHLORINATION SOLUTION AND HAVE BACTERIOLOGICAL EXAMINATION MADE BY AN APPROVED AGENCY PER 2022 CPC SEC. 609.9 AND AS PRESCRIBED IN AWWA C651. METHODS OF CLEANING/ DISINFECTING FOR NEW OR REPAIR PIPING AS DESCRIBED IN C651 OR NFPA 24.
18. PLUMBING PIPE, FITTINGS AND FIXTURES USED TO CONVEY OR DISPENSE WATER FOR HUMAN CONSUMPTION SHALL COMPLY WITH AB 1953.
19. ANY SUBSTITUTION MADE BY THE CONTRACTOR THAT IS DIFFERENT FROM WHAT IS SPECIFIED ON THE DRAWINGS SHALL BE CLEARLY INDICATED ON THE SUBMITTAL AS TO THAT IS BEING SUBSTITUTED.
20. SHUT-OFF VALVES SHALL BE PROVIDED IN MAIN BRANCHES, RUNS TO RISERS AND WHERE INDICATED ON DRAWINGS.
21. NEW NON-RESIDENTIAL WATER CLOSETS SHALL COMPLY WITH 2022 CAL-GREEN 5.303.3.1 AND SHALL NOT EXCEED 1.28 GALLONS PER FLUSH. TANK-TYPE WATER CLOSETS SHALL BE CERTIFIED TO THE PERFORMANCE CRITERIA OF THE U.S. EPA WATERSENSE SPECIFICATION FOR TANK-TYPE TOILETS.
22. NEW NON-RESIDENTIAL LAVATORY FAUCETS SHALL COMPLY WITH 2022 CAL-GREEN 5.303.3.4 AND SHALL NOT EXCEED 0.5 GALLONS PER MINUTE AT 60 PSI.

APPLICABLE CODES

1. 2022 CALIFORNIA ADMINISTRATIVE CODE (CAC), PART 1, TITLE 24 CCR
2. 2022 CALIFORNIA BUILDING CODE (CBC), PART 2, TITLE 24 CCR (2018 INTERNATIONAL BUILDING CODE, VOL. 1 & 2, AND 2022 CALIFORNIA AMENDMENTS)
3. 2022 CALIFORNIA ELECTRICAL CODE (CEC), PART 3, TITLE 24 CCR (2017 NATIONAL ELECTRICAL CODE AND 2022 CALIFORNIA AMENDMENTS)
4. 2022 CALIFORNIA MECHANICAL CODE (CMC), PART 4, TITLE 24 CCR (2018 IAPMO UNIFORM MECHANICAL CODE AND 2022 CALIFORNIA AMENDMENTS)
5. 2022 CALIFORNIA PLUMBING CODE (CPC), PART 5, TITLE 24 CCR (2018 IAPMO UNIFORM PLUMBING CODE AND 2022 CALIFORNIA AMENDMENTS)
6. 2022 CALIFORNIA ENERGY CODE (CEC), PART 6, TITLE 24 CCR
7. 2022 CALIFORNIA FIRE CODE (CFC), PART 9, TITLE 24 CCR (2018 INTERNATIONAL FIRE CODE AND 2022 CALIFORNIA AMENDMENTS)
8. 2022 CALIFORNIA EXISTING BUILDING CODE (CEBC), PART 10, TITLE 24 CCR (2018 INTERNATIONAL EXISTING BUILDING CODE AND 2022 CALIFORNIA AMENDMENTS)
9. 2022 CALIFORNIA GREEN BUILDING STANDARDS CODE (CALGREEN), PART 11, TITLE 24 CCR
10. 2022 CALIFORNIA REFERENCED STANDARDS CODE, PART 12, TITLE 24 CCR
11. TITLE 19 CCR, PUBLIC SAFETY, STATE FIRE MARSHALL REGULATIONS

PIPE INSULATION SCHEDULE

FLUID TEMPERATURE RANGE (°F)	CONDUCTIVITY RANGE (IN BTU-IN/HR PER SQFT/°F)	INSULATION MEAN RATING TEMPERATURE (°F)		PIPE SIZE (IN. DIA>)				
				< 1	1 to < 1.5	1.5 to < 4	4 to < 8	8 AND LARGER
				REQUIRED INSULATION THICKNESS (IN.)				
DOMESTIC HOT WATER HEATING								
105° - 140°	0.22 - 0.28	100°	INCHES	1.0	1.5	1.5	1.5	1.5
			R-VALUE	R-7.7	R-12.5	R-11	R-9	R-8

NOTE: WHERE INSULATED PIPING IS EXPOSED OUTDOORS, IT SHALL BE COVERED. COVER OUTDOOR EXPOSED INSULATED PIPING WITH 0.016 INCH THICK CORRUGATED ALUMINUM JACKET. PROVIDE VALVE STEM EXTENSIONS SUCH THAT INSULATION IS NOT DAMAGED WHEN VALVE IS CYCLED

PLUMBING LEGEND SYMBOLS

SYMBOL	ABBREVIATIONS	DESCRIPTION
DETAIL No. / SHEET No.		DETAIL REFERENCE
EQUIPMENT ID. No.		EQUIPMENT REFERENCE
	CW	COLD WATER
	HW	HOT WATER
	HWR	HOT WATER RETURN
	-	POP-OFF DRAIN LINE OR HIDDEN WATER LINE
	S or W	SOIL or WASTE BELOW GRADE (or FLOOR)
OW	OW	OIL WASTE BELOW GRADE (or FLOOR)
RD/OD	RD/OD	ROOF & OVERFLOW DRAIN ABOVE & BELOW GRADE (or FLOOR)
SD	SD	STORM DRAIN
	S or W	SOIL or WASTE ABOVE GRADE (or FLOOR)
	V	PLUMBING VENT
COND	COND	CONDENSATE DRAIN
SEC COND	SEC COND	SECONDARY CONDENSATE DRAIN
G	G	GAS LOW PRESSURE
MPG	MPG	GAS MEDIUM PRESSURE
CA	CA	COMPRESSED AIR
CA	CAO	COMPRESSED AIR OUTLET
	BV	BALL VALVE
	SOV	SHUT OFF VALVE
	SOV or GC	SHUT OFF VALVE OR GAS COCK ON RISER
	CV	SWING CHECK VALVE
	PRV	PRESSURE REDUCING VALVE
	PTR	PRESSURE-TEMPERATURE RELIEF VALVE
	RPBFP	REDUCED PRESSURE BACKFLOW PREVENTER
	DN	PIPE DOWN
	UP	PIPE UP
	DN	TEE DOWN
	UP	TEE UP
		PIPE RISER & PIPE DROP (UP AND DOWN)
	FCO	FLOOR CLEANOUT
	WCO	WALL CLEANOUT
	CO	CLEANOUT PLUG
	COTG	YARD CLEANOUT or CLEANOUT TO GRADE
		CAP ON END OF PIPE
	HB	HOSE BIBB WITH VACUUM BREAKER
	WHA & TP	WATER HAMMER ARRESTOR & TRAP PRIMER
	CS	CIRCUIT SETTER
	GR	GAS REGULATOR
	GC	GAS COCK (or GAS STOP)
	AP	ACCESS PANEL
	ABV	ABOVE
	BEL	BELOW
	AGA	AMERICAN GAS ASSOCIATION
	CONN	CONNECTION
	CONT	CONTINUATION
	(E)	EXISTING
	(N)	NEW
	DN	DOWN
	ADA	AMERICAN DISABILITY ACT
	IE	INVERT ELEVATION
	(TYP)	TYPICAL
	U.O.N.	UNLESS OTHER NOTED
	VTR	VENT THROUGH ROOF
	W/	WITH
	FU	PLUMBING FIXTURE UNIT
	SEC COND	SECONDARY CONDENSATE
	B.F.F.	BELOW FINISH FLOOR
	R.I.C.	ROUGH IN CONNECT
CCO	CCO	CONDENSATE CLEAN OUT

ANCHORAGE AND BRACING NOTES

1. PIPES, DUCTS AND CONDUITS SHALL BE SUPPORTED AND BRACED PER THE SMACNA "GUIDELINES FOR SEISMIC RESTRAINTS OF MECHANICAL SYSTEMS AND PLUMBING SYSTEMS", THE "SUPERSTRUT SEISMIC RESTRAINT SYSTEM" FOR PIPES AND CONDUITS ONLY.

PLUMBING SHEET INDEX

SHEET #	SHEET NAME
P0-0.1	PLUMBING LEGEND NOTES & SCHEDULES
P0-0.2	PLB T24 COMPLIANCE FORMS
P1-1.1	PLUMBING FLOOR & ROOF PLANS
P1-1.2	PLUMBING FLOOR PLAN & ENLARGED PLANS
P2-0.1	PLUMBING DETAILS
P2.02	PLUMBING DETAILS

CIRCULATING PUMP SCHEDULE

TAG	SYSTEM	MANUFACTURER & MODEL NO.	LOCATION	CAPACITY	CONSTRUCTION	MOTOR HP	MOTOR RPM	ELECTRICAL V-PH-HZ	ELECTRICAL AMPS	WEIGHT (LBS.)	ANCHORAGE DETAIL REFERENCE
CP 1	WH-1	TACO 007-F5-5	CUST 109	3 GPM @ 9' TDH	STAINLESS STEEL	1/25	3250	120V-1a-60Hz	0.76	8	12 / P2-0.1

WATER HEATER SCHEDULE

TAG	MANUFACTURER & MODEL NO.	LOCATION	INPUT RATING	CAPACITY	RECOVERY	THERMAL EFFICIENCY	ELECTRICAL V-PH-HZ	ELECTRICAL AMPS	WEIGHT	ACCESSORIES	ANCHORAGE DETAIL REFERENCE
WH 1	BRADFORD WHITE UCG-80H-125-3N	CUST 109	125,000 BTU/H	80 GALLONS	155 GAL./HR. @ 80 DEG. TEMP. RISE	82%	120V-1a-60Hz	1.8	535 LBS. (DRY) 1,203 LBS. (WET)	(1)	12 / P2-0.1

(1) 5" INTAKE VENT

REGISTERED PROFESSIONAL ENGINEER — MECHANICAL — No. 33209 — EXP. 9-30-2023 — STATE OF CALIFORNIA

LICENSED ARCHITECT — REGISTERED PROFESSIONAL ENGINEER — No. C-21362 Exp. 10-31-2024 — STATE OF CALIFORNIA

STAMPS

AGENCY APPROVAL File No.: n.a

MECHANICAL ELECTRICAL AND ENERGY CONSULTANTS

DESIGN WEST ENGINEERING

412 E. Vanderbilt Way
San Bernardino, CA 92408
Tel: 909-890-3700
Fax: 909-890-3770
Email: cadd@designwesteng.com

CONSULTANT BRANDING

RUHNAU CLARKE ARCHITECTS

MOUNT TRANSIT MAINTENANCE FACILITY:

PRINTED: 7/28/2023 8:48:55 AM
PATH: BIM 360://50801_MATH_MTMF21061_Mountain Transit Maintenance Facility_CENTRAL

PROJECT No. :50801
7/28/2023 8:48:55 AM

DRAWN BY: CHECKED BY:

ISSUE No.:_____ DATE:_____ DESCRIPTION:_____
REVISION No.:_____ DATE:_____ DESCRIPTION:_____

STATE OF CALIFORNIA
Domestic Water Heating System
CALIFORNIA ENERGY COMMISSION

CERTIFICATE OF COMPLIANCE		NRCC-PLB-E
Project Name:	Mountain Transit Admin & Maintenance Facility	**Report Page:** (Page 3 of 6)
Project Address:	160-170 Business Center Drive	**Date Prepared:** 2/10/2023

G. DOMESTIC HOT WATER DISTRIBUTION SYSTEM

This table is used to demonstrate compliance for nonresidential occupancies with distribution requirements in 120.3 and 140.5. For multifamily and hotel/motel occupancies, compliance is demonstrated with requirements 110.3(c), 160.4, 170.2(d).

Mandatory Pipe Insulation All Occupancies		
13	☐	For systems serving dwelling units, pipe insulation must meet the minimum insulation requirements in Table 160.4-A (see blow) except: • Piping that penetrates framing members shall not be required to have pipe insulation for the distance of the framing penetration. Piping that penetrates metal framing shall use grommets, plugs, wrapping or other insulating material to assure that no contact is made with the metal framing. Insulation shall abut securely against all framing members • Piping installed in interior or exterior walls shall not be required to have pipe insulation if all of the requirements are met for compliance with Quality Insulation Installation (QII) as specified in the Reference Residential Appendix RA3.5. • Piping surrounded with a minimum of 1 inch of wall insulation, 2 inches of crawlspace insulation, or 4 inches of attic insulation, shall not be required to have pipe insulation.
14	☒	For systems serving nonresidential spaces, pipe insulation for the following applications is specified to comply with Table 120.3-A (see below) per 120.3: • Recirculating system piping, including supply and return piping of the water heater • The first 8 ft of hot and cold outlet piping, including between storage tank and heat trap, for a nonrecirculating storage system • Pipes that are externally heated
15	☐	Insulation shall be protected from damage, including that due to sunlight, moisture, equipment maintenance, and wind. Insulation exposed to weather shall be installed with a cover suitable for outdoor service per 120.3(b) / 160.4(f). Pipe insulation buried below grade must be installed in a water proof and non-crushable casing or sleeve.

TABLE 120.3-A / 160.4-A PIPE INSULATION THICKNESS

Fluid Temperature Range (°F)	Conductivity Range (Btu-in per hour per ft² per °F)	Insulation Mean Rating Temp (°F)	Nominal Pipe Diameter (in)			
			< 1	1 to < 1.5	1.5 to < 4	1.5 to < 4 Multifamily & Hotel/Motel
			Minimum Insulation Required			
105-140	0.22 - 0.28	100	1.0 in or R-7.7	1.5 in or R-12.5	1.5 in or R-11	2.0 in or R-16

STATE OF CALIFORNIA
Domestic Water Heating System
CALIFORNIA ENERGY COMMISSION

CERTIFICATE OF COMPLIANCE		NRCC-PLB-E
Project Name:	Mountain Transit Admin & Maintenance Facility	**Report Page:** (Page 2 of 6)
Project Address:	160-170 Business Center Drive	**Date Prepared:** 2/10/2023

E. ADDITIONAL REMARKS

This table includes remarks made by the permit applicant to the Authority Having Jurisdiction.

F. DOMESTIC HOT WATER EQUIPMENT

This table is used to demonstrate compliance with mandatory equipment requirements in 110.1 and 110.3. Compliance with prescriptive requirements in 140.5(c) / 170.2(d) must also be demonstrated and with 141.0 / 180.1/ 180.2 for addition and alteration scopes.

Equipment Schedule: Water Heating Efficiency and Standby Loss

03	04			05		06	
System Name	Bradford White UCG-80H-3N	Exception to 140.5(c)/ 170.2(d)3		☐	Gas Service Water Heating System >= 1MMBtu/h[1]	Capacity-weighted Average Efficiency %	

07	08	09	10		11	12	13	14	15
Name or Item Tag	Equipment Type	Volume (gal)	Rated Input Capacity (Btu/h)	Max GPM/ First Hour Rating (FHR)	Rated Efficiency	Minimum Efficiency Required	Efficiency Unit	Designed Standby Loss	Maximum Standby Loss
Bradford White UCG-80H-3N	Commercial Package Gas Hot Water Supply Boilers (300k - <1MMBtu/h)	80	125,000	FHR >=75	0.82	0.59	UEF		

[1]*FOOTNOTE: In systems >= 1MMBtu/h with multiple units, gas water heaters with input capacity > 100,000 Btu/h may meet 90% Et requirements via an input capacity-weighted average.*

Water Heating Equipment All Occupancies

	Yes	No	Not Applicable	Requirement
18	☐	☐	☒	Unfired storage tank insulation shall have Internal + External >=R-16 OR External >=R-3.5. Label required per 110.3(c)3
19	☐	☐	☒	New state buildings 60% of energy for service water heating from site solar energy or recovered energy per 110.3(c)5
20	☐	☐	☒	Isolation valves for instantaneous water heater with input rating >6.8 kBTUH or 2 kW has been specified per 110.3(c)6
21	☐	☐	☒	School buildings < 25,000 ft² and < 4 stories must install a heat pump water heating system per 140.5(a)1. Water heating systems serving an individual bathroom space may be an instantaneous electric water heater.

STATE OF CALIFORNIA
Domestic Water Heating System
CALIFORNIA ENERGY COMMISSION

CERTIFICATE OF COMPLIANCE		NRCC-PLB-E
Project Name:	Mountain Transit Admin & Maintenance Facility	**Report Page:** (Page 1 of 6)
Project Address:	160-170 Business Center Drive	**Date Prepared:** 2/10/2023

A. GENERAL INFOMATION

01	Project Location (city)	Big Bear Lake	02	Climate Zone	16
03	Occupancy Types Within Project (select all that apply):				

● Office ● All Other Occupancies

B. PROJECT SCOPE

This table includes domestic water heating systems that are within the scope of the permit application and are demonstrating compliance using the prescriptive paths outlined in 140./ 170.2(d) and 141.0(a)/ 180.1, or 141.0(b)2N / 180.2 for additions or alterations. Solar water heating systems are documented on the NRCC-SAB compliance document. Combined hydronic water heating systems are documented on the NRCC-MCH compliance document.

01	02	03
My project consists of (check all that apply):	System Type[1,2]	System Components
☒ New system (DHW system being installed for the first time in newly constructed building)	Individual System (serving nonresidential spaces)	☒ Equipment ☒ Distribution ☒ Controls
☐ System Alteration (equipment, distribution or controls)		☐ Equipment ☐ Distribution ☐ Controls

[1]*FOOTNOTES: Point of use water heaters, or other non-central systems used to serve nonresidential spaces, are considered individual systems.*
[2] *Dwelling units refers to hotel/motel guest rooms and units in a multi/family residential occupancy.*
[3] *DHW systems serving 2 or more dwelling units are considered "Central Systems" for multi/family occupancies*

C. COMPLIANCE RESULTS

Table C will indicate if the project data input into the compliance document is compliant with water heating requirements. If this table says "DOES NOT COMPLY" or "COMPLIES with Exceptional Conditions" refer to Table D. or the table indicated as not compliant for guidance.

01	02	03	04
Domestic Hot Water Equipment	Distribution Systems	Controls	**Compliance Results**
Table F	Table G	Table H	
Yes	Yes	Yes	COMPLIES

D. EXCEPTIONAL CONDITIONS

This table is auto-filled with uneditable comments because of selections made or data entered in tables throughout the form.

STATE OF CALIFORNIA
Domestic Water Heating System
CALIFORNIA ENERGY COMMISSION

CERTIFICATE OF COMPLIANCE		NRCC-PLB-E
Project Name:	Mountain Transit Admin & Maintenance Facility	**Report Page:** (Page 6 of 6)
Project Address:	160-170 Business Center Drive	**Date Prepared:** 2/10/2023

DOCUMENTATION AUTHOR'S DECLARATION STATEMENT

I certify that this Certificate of Compliance documentation is accurate and complete.

Documentation Author Name:	Documentation Author Signature:
Steven Johnson	Steven Johnson
Company:	Signature Date:
Design West Engineering	2023-02-10
Address: 412 E. Vanderbilt Way	CEA/ HERS Certification Identification (if applicable):
City/State/Zip: San Bernardino CA 92408	Phone:

RESPONSIBLE PERSON'S DECLARATION STATEMENT

I certify the following under penalty of perjury, under the laws of the State of California:

1. The information provided on this Certificate of Compliance is true and correct.
2. I am eligible under Division 3 of the Business and Professions Code to accept responsibility for the building design or system design identified on this Certificate of Compliance (responsible designer)
3. The energy features and performance specifications, materials, components, and manufactured devices for the building design or system design identified on this Certificate of Compliance conform to the requirements of Title 24, Part 1 and Part 6 of the California Code of Regulations.
4. The building design features or system design features identified on this Certificate of Compliance are consistent with the information provided on other applicable compliance documents, worksheets, calculations, plans and specifications submitted to the enforcement agency for approval with this building permit application.
5. I will ensure that a completed signed copy of this Certificate of Compliance shall be made available with the building permit(s) issued for the building, and made available to the enforcement agency for all applicable inspections. I understand that a completed signed copy of this Certificate of Compliance is required to be included with the documentation the builder provides to the building owner at occupancy.

Responsible Designer Name:	Responsible Designer Signature:
Steven Johnson	Steven Johnson
Company:	Date Signed:
Design West Engineering	2023-02-10
Address: 412 E. Vanderbilt Way	License: M-33209
City/State/Zip: San Bernardino CA 92408	Phone: 909-890-3700

STATE OF CALIFORNIA
Domestic Water Heating System
CALIFORNIA ENERGY COMMISSION

CERTIFICATE OF COMPLIANCE		NRCC-PLB-E
Project Name:	Mountain Transit Admin & Maintenance Facility	**Report Page:** (Page 5 of 6)
Project Address:	160-170 Business Center Drive	**Date Prepared:** 2/10/2023

J. DECLARATION OF REQUIRED CERTIFICATES OF ACCEPTANCE

There are no forms required for this project.

K. DECLARATION OF REQUIRED CERTIFICATES OF VERIFICATION

There are no forms required for this project.

STATE OF CALIFORNIA
Domestic Water Heating System
CALIFORNIA ENERGY COMMISSION

CERTIFICATE OF COMPLIANCE		NRCC-PLB-E
Project Name:	Mountain Transit Admin & Maintenance Facility	**Report Page:** (Page 4 of 6)
Project Address:	160-170 Business Center Drive	**Date Prepared:** 2/10/2023

H. DOMESTIC HOT WATER CONTROLS

This table is used to demonstrate compliance with control requirements in 110.3 for all occupancies. For multifamily residential and hotel/motel occupancies, compliance is also demonstrated with requirements in 160.4(e) / 170.2(d).

	Yes	No	Not Applicable	Requirement
01	☒	☐	☐	Construction documents require manufacturer certification that service water-heating systems are equipped with automatic temperature controls capable of adjusting temperature settings per 110.3(a).
02	☐	☐	☒	Systems with capacity > 167,000 BTUH equipped with outlet temperature controls per 110.3(c) unless covered by California Plumbing Code 613.0.
03	☐	☐	☒	Controls for circulating pumps or electrical heat trace systems are capable of automatically turning off the system per §110.3(c)2 unless systems serves healthcare facility.
04	☐	☐	☒	For recirculation systems serving multiple dwelling units, design includes automatic pump controls per 170.2(d) or 180.1(b)3 for additions.
05	☐	☐	☒	For recirculation systems serving individual dwelling units, design includes manual on/off controls as specified in Reference Appendix RA4.4.9 per 170.2(d).
06	☐	☐	☒	Combustion air positive shut-off shall be provided per 160.4(3).on all newly installed commercial boilers as follows: • Boilers with input capacity >= 2.5 MMBtu/h, in which the boiler is designed to operate with a nonpositive vent static pressure • Boilers where one stack serves two or more boilers with a total combined input capacity per stack of 2.5 MMBtu/h.
07	☐	☐	☒	Boiler combustion air fans with motor >= 10 hp shall meet one of the following • The fan motor shall be driven by a variable speed drive OR • The fan motor shall include controls that limit the fan motor demand to <=30% of the total design wattage at 50% of the design air volume.
08	☐	☐	☒	Newly installed boilers with an input capacity (d:gte/) 5MMBtu/h and a steady state full-load combustion efficiency < 90% shall maintain excess (stack-gas) oxygen concentrations <= 5% by volume on a dry basis over firing rates of 20-100%. Combustion air volume shall be controlled with respect to firing rate or flue gas oxygen concentration. Use of a common gas and combustion air control linkage or jack shaft is prohibited.

I. DECLARATION OF REQUIRED CERTIFICATES OF INSTALLATION

Form/Title
NRCI-PLB-E - Must be submitted for all buildings

STAMPS

AGENCY APPROVAL
File No: 4.4

MECHANICAL ELECTRICAL AND ENERGY CONSULTANTS
DESIGN WEST ENGINEERING
412 E. Vanderbilt Way
San Bernardino, CA 92408
Tel: 909-890-3700
Fax: 909-890-3710
Email: cadd@designwesteng.com
CONSULTANT BRANDING

RUHNAU CLARKE ARCHITECTS

PRINTED: 7/28/2023 8:49:05 AM
PATH: J:\DW\50801_MMTF\21061_ Mountain Transit Maintenance Center\Rvt\P_CENTER.rvt

PROJECT No. :50801
7/28/2023 8:49:05 AM

DRAWN BY: CHECKED BY:

ISSUE No._____ DATE_____ DESCRIPTION_____
ISSUE No._____ DATE_____ DESCRIPTION_____
ISSUE No._____ DATE_____ DESCRIPTION_____
ISSUE No._____ DATE_____ DESCRIPTION_____

REVISION No._____ DATE_____ DESCRIPTION_____
REVISION No._____ DATE_____ DESCRIPTION_____
REVISION No._____ DATE_____ DESCRIPTION_____
REVISION No._____ DATE_____ DESCRIPTION_____

RUHNAUCLARKE.COM
3775 TENTH STREET, RIVERSIDE CALIFORNIA 92501 (951) 684 4664 / 5751 PALMER WAY, SUITE C, CARLSBAD CALIFORNIA 92010 (760) 438 5899

MOUNT TRANSIT MAINTENANCE FACILITY
170 BUSINESS CENTER DR. BIG BEAR LAKES, CA
BIG BEAR LAKES

PLB T24 COMPLIANCE FORMS

P0-0.2

22-066
50801

MOUNT TRANSIT MAINTENANCE FACILITY:

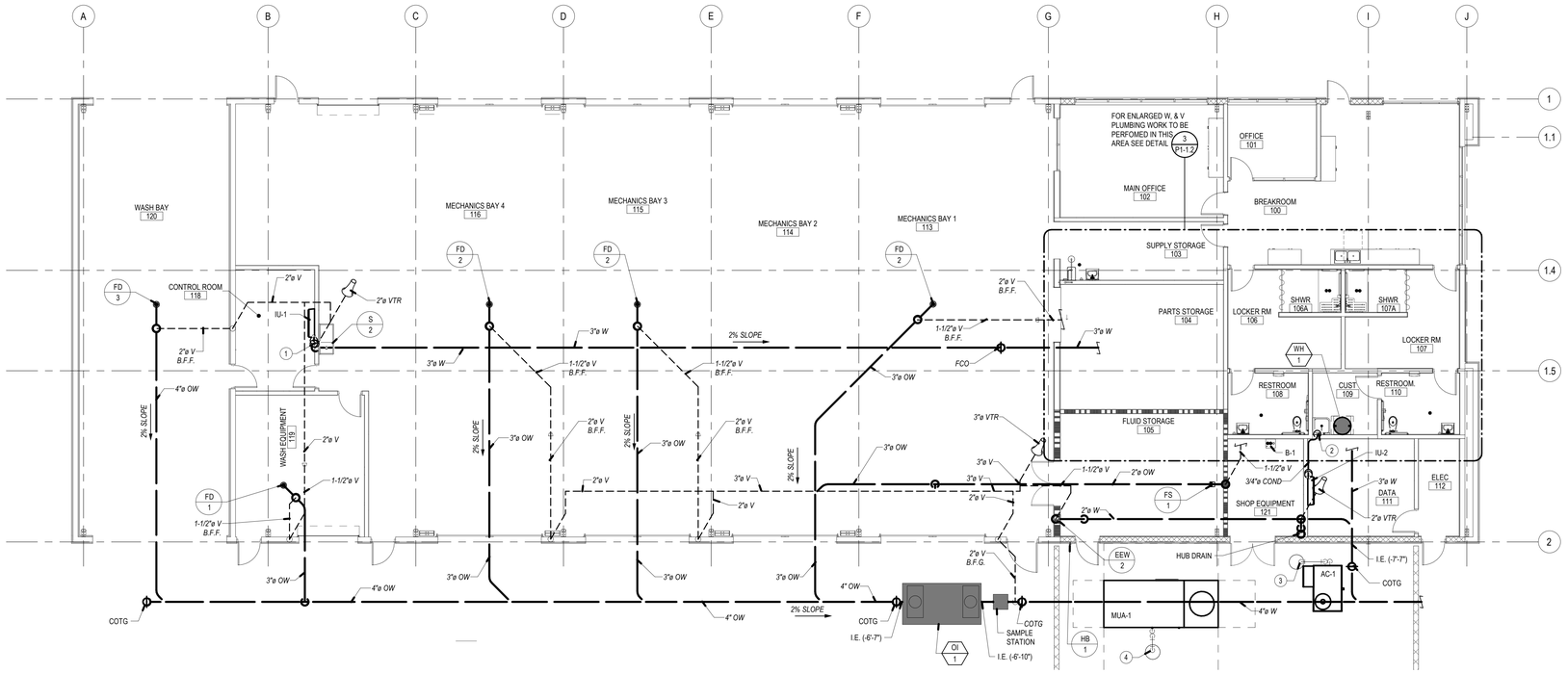

NORTH

PLUMBING FLOOR PLAN - WASTE, VENT & CONDENSATE | 1/8" = 1'-0" | 1

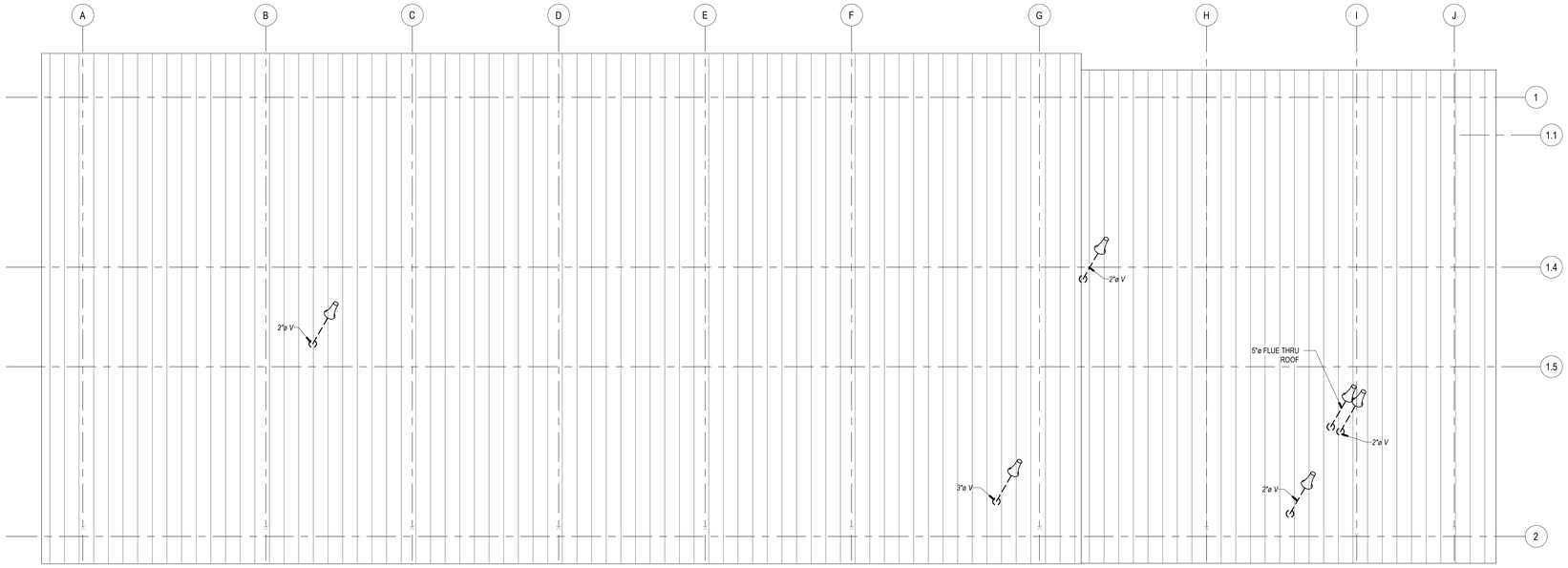

NORTH

PLUMBING ROOF PLAN | 1/8" = 1'-0" | 2

GENERAL NOTES

1. FOR LINE TYPES, SYMBOLS & ABBREVIATIONS SEE LEGEND ON P0-0.1.
2. ALL VENTING SHALL HAVE A MIN. OF 10' CLEARANCE FROM ANY FORCED AIR INLET W/ A MIN. OF 3' CLEARANCE ABOVE & A MIN OF 4' CLEARANCE FROM ANY PROPERTY LINE EXCEPT A PUBLIC WAY PER CPC SEC. 906.
3. COORDINATE EXACT LOCATION OF SAND OIL INTERCEPTOR WITH ARCHITECT.
4. CONDENSATE LINES SHALL HAVE A MINIMUM 1% SLOPE.
5. WASTE LINES SHALL HAVE A MINIMUM 2% SLOPE.
6. FOR PIPE SUPPORT SEE DETAILS 1 P2-0.1, 5 P2-0.1, 6 P2-0.1
7. FOR VENT THROUGH ROOF SEE DETAIL 2 P2-0.1
8. FOR CLEAN OUT SEE DETAIL 3 P2-0.1
9. FOR SAND-OIL INTERCEPTOR SEE DETAIL 1 P2.02
10. FOR CONDENSATE CONNECTION SEE DETAIL 13 P2-0.1, 14 P2-0.1, 15 P2-0.1

CONSTRUCTION NOTES

1. 3/4" COND DN IN WALL TO SINK TAILPIECE.
2. 3/4" COND DN IN WALL TO 1" MINIMUM AIR BREAK ABOVE JANITORS SINK.
3. 3/4" COND ROUTED TO DRYWELL.
4. 1" COND ROUTED TO DRY WELL.

STAMPS

REGISTERED PROFESSIONAL ENGINEER — No. 33209 — EXP. 9-30-2023 — MECHANICAL — STATE OF CALIFORNIA

LICENSED ARCHITECT — ENDER CLARKE — No. C-21345 — Exp. 10-31-24 — STATE OF CALIFORNIA

AGENCY APPROVAL
File No: n.a

MECHANICAL ELECTRICAL AND ENERGY CONSULTANTS

DESIGN WEST ENGINEERING

412 E. Vanderbilt Way
San Bernardino, CA 92408
Tel: 909-890-3700
Fax: 909-890-3770
Email: cadd@designwesteng.com

CONSULTANT BRANDING

RUHNAU CLARKE ARCHITECTS

PRINTED: 7/28/2023 8:49:12 AM
PATH: R:\R Projects\50801_Mountain Transit Maintenance Facility\Revit\50801_CentralA_MTMF21061_Mountain Transit Maintenance Facility_R23.rvt

PROJECT No. :50801
7/28/2023 8:49:12 AM

DRAWN BY: CHECKED BY:

ISSUE No._____ DATE_____ DESCRIPTION_____
ISSUE No._____ DATE_____ DESCRIPTION_____
ISSUE No._____ DATE_____ DESCRIPTION_____
ISSUE No._____ DATE_____ DESCRIPTION_____

REVISION No._____ DATE_____ DESCRIPTION_____
REVISION No._____ DATE_____ DESCRIPTION_____
REVISION No._____ DATE_____ DESCRIPTION_____

MOUNT TRANSIT MAINTENANCE FACILITY

170 BUSINESS CENTER DR. BIG BEAR LAKES, CA
BIG BEAR LAKES

PLUMBING FLOOR & ROOF PLANS

P1-1.1

22-066
50801

MOUNT TRANSIT MAINTENANCE FACILITY:

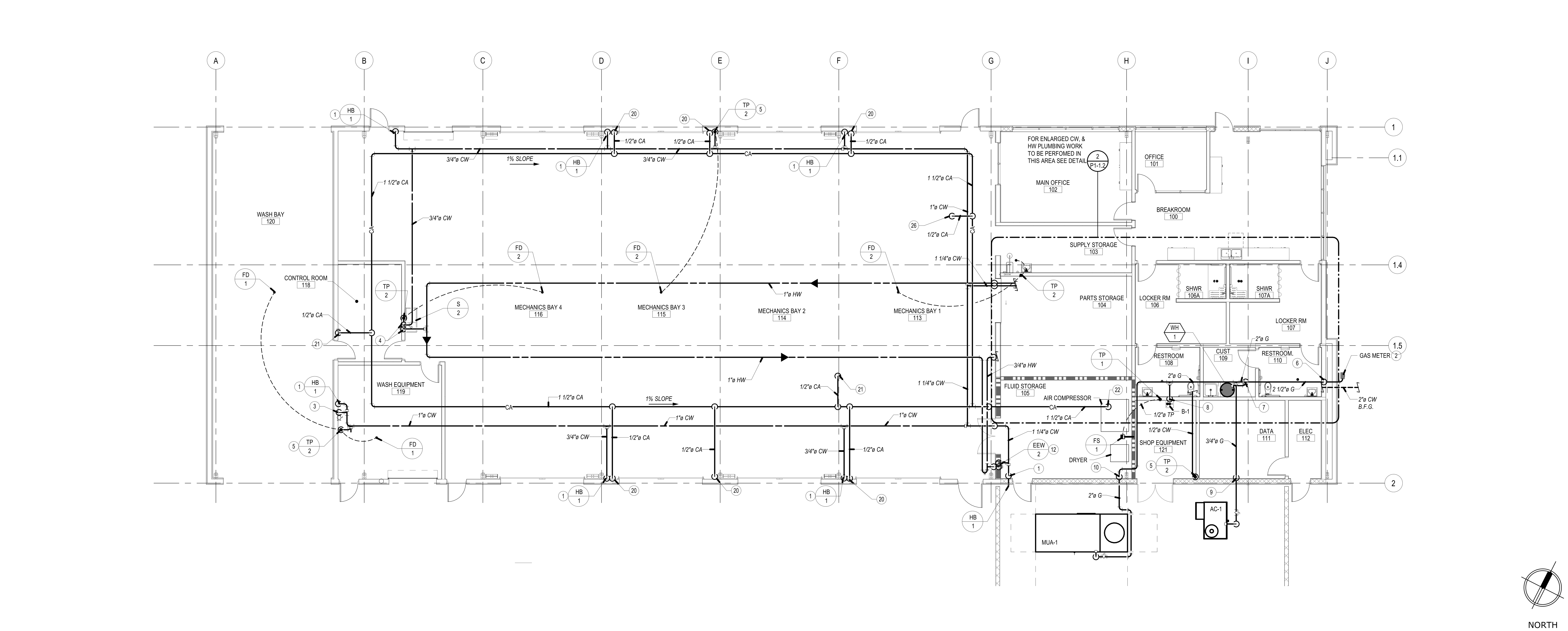

PLUMBING FLOOR PLAN - DOMESTIC WATER, COMPRESSED AIR & GAS

1/8" = 1'-0" 1

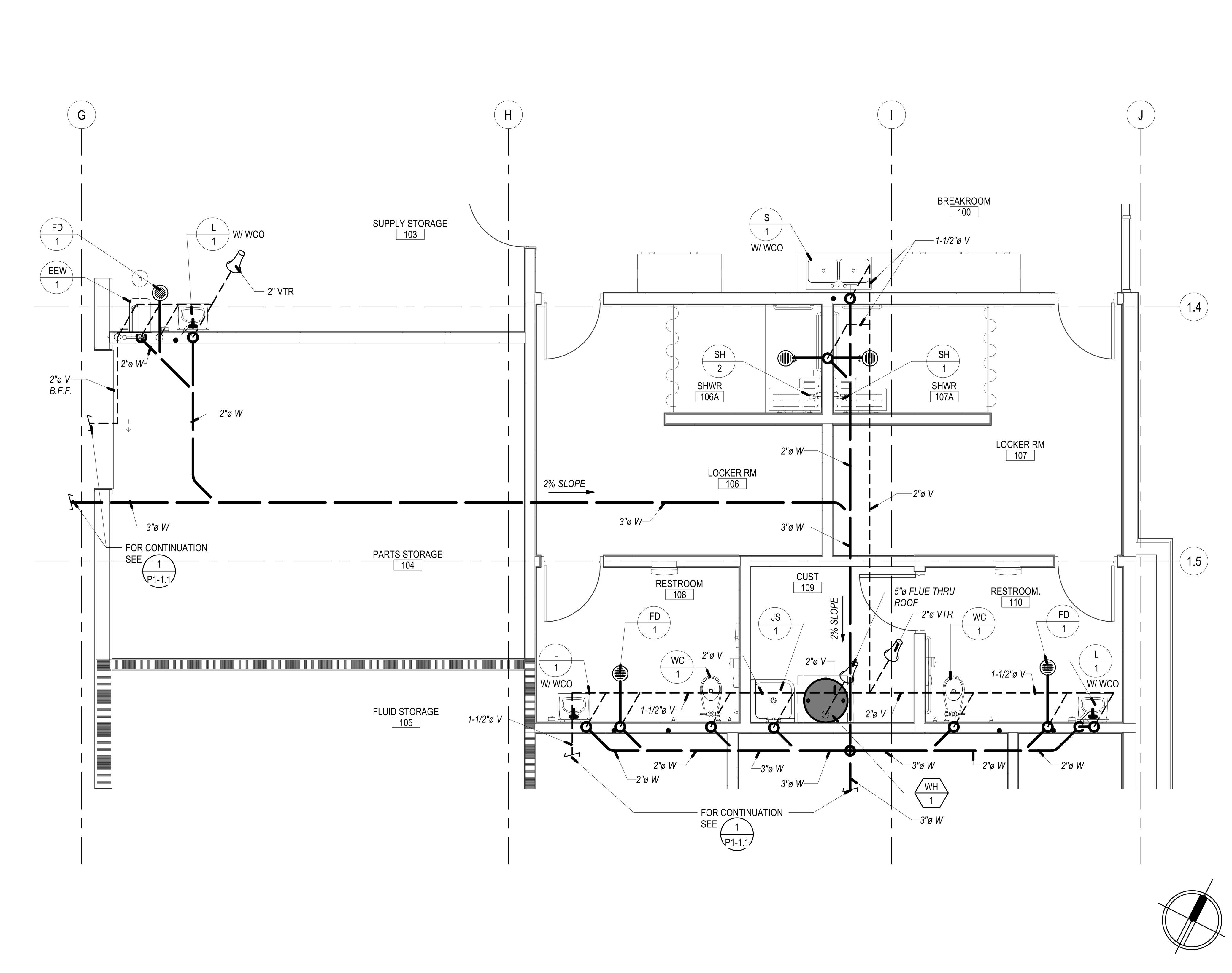

ENLARGED PLUMBING WASTE AND VENT

1/4" = 1'-0" 3

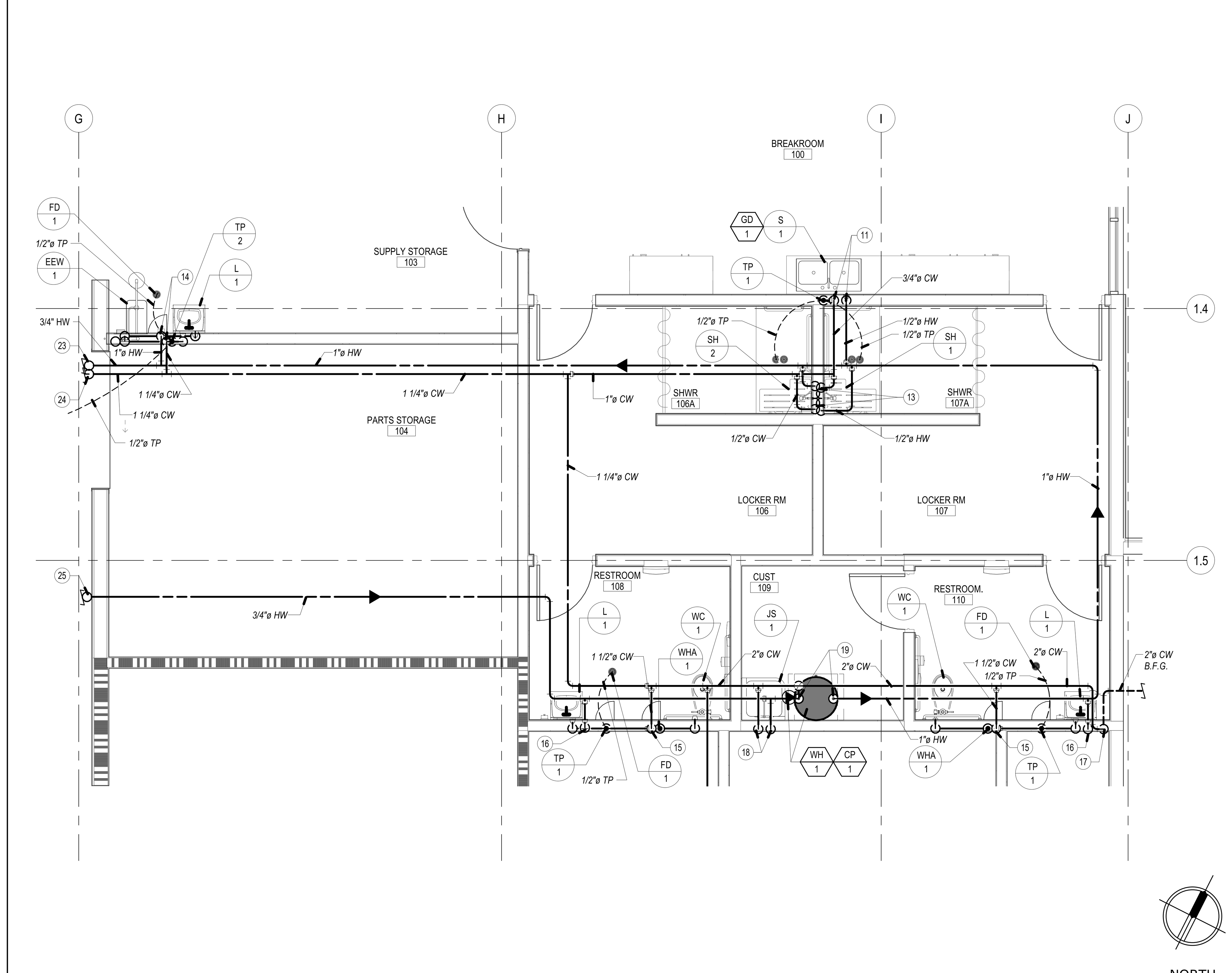

ENLARGED PLUMBING DOMESTIC WATER

1/4" = 1'-0" 2

STAMPS

AGENCY APPROVAL

MECHANICAL ELECTRICAL AND ENERGY CONSULTANTS

DESIGN WEST ENGINEERING

412 E. Vanderbilt Way
San Bernardino, CA 92408
Tel: 909-890-3700
Fax: 909-890-3770
Email: cadd@designwesteng.com

CONSULTANT BRANDING

RUHNAU CLARKE ARCHITECTS

GENERAL NOTES

1. FOR LINE TYPES, SYMBOLS & ABBREVIATIONS SEE LEGEND ON P0-0.1.
2. ROUTE HOT WATER LOOP AS CLOSE AS POSSIBLE TO ALL FIXTURES.
3. VENTING SHALL HAVE A MIN. OF 10' CLEARANCE FROM ANY FORCED AIR INLET W/ A MIN. OF 3' CLEARANCE ABOVE & A MIN OF 4' CLEARANCE FROM ANY PROPERTY LINE EXCEPT A PUBLIC WAY PER CPC SEC. 906.
4. NEW POTABLE WATER SYSTEMS SHALL BE DISINFECTED PRIOR TO USE, ACCORDING TO THE METHOD SET IN SECTION 609.9 OF THE CPC.
5. SHUT-OFF VALVES SHALL BE PROVIDED ON ALL MAIN BRANCHES, RUNS TOO RISERS AND WHERE SHOWN ON DRAWING. LOCATE SHUT-OFF VALVES OVER T-BAR CEILING WHEN POSSIBLE. PROVIDE ACCESS PANELS WHEN SHUT-OFF VALVES ARE LOCATED OVER HARD LID CEILINGS.
6. ALL WASTE LINES SHALL HAVE A MINIMUM 2% SLOPE.
7. FOR PIPE SUPPORT SEE DETAILS 1/P2-0.1, 5/P2-0.1, 6/P2-0.1
8. FOR VENT THROUGH ROOF SEE DETAIL 2/P2-0.1
9. FOR CLEAN OUT SEE DETAIL 3/P2-0.1
10. FOR WATER HAMMER ARRESTOR SEE DETAIL 11/P2-0.1
11. FOR FIRE SPRINKLER HUB DRAIN SEE DETAIL 4/P2-0.1
12. FOR TRAP PRIMER CONNECTION SEE DETAIL 8/P2-0.1, 16/P2-0.1
13. FOR WATER HEATER SEE DETAIL 12/P2-0.1
14. COMPRESSED AIR (CA) PIPES SHALL BE SLOPED AT 1% BACK TO AIR COMPRESSOR
15. COMPRESSED AIR BRANCH LINES SHALL CONNECT AT TOP OF MAIN PIPE
16. ALL WATER PIPING IN THE MAINTENANCE BAYS AND WASH EQUIPMENT ROOM SHALL HAVE HEAT TRACING AND INSULATION.
17. FOR AIR COMPRESSOR PIPING DIAGRAM SEE DETAIL 3/P2.02
18. FOR COMPRESSOR AIR QUICK DISCONNECT PIPING DIAGRAM SEE 2/P2.02

CONSTRUCTION NOTES

(1) 3/4" CW DN FACE OF WALL TO HOSE BIBB.
(2) OWNER TO MAKE APPLICATION & PAY ALL FEES TO LOCAL GAS CO. FOR NEW GAS METER ASSEMBLY. OWNER/CONTRACTOR TO COORDINATE WITH LOCAL GAS CO. TO PROVIDE GAS PIPING FROM STREET MAIN TO METER (988.2 CFH)
(3) 1" CW ROUTED DN FACE OF WALL & CAPPED W/ SOV FOR WASH EQUIPMENT ITEM #13. COORDINATE LOCATION WITH EQUIPMENT PLAN SHEET A1-1.3.
(4) 3/4" CW & HW DN IN WALL TO FIXTURE W/ 1/2" CW TAP-OFF TO TP-2.
(5) 1/2" CW DN FACE OF WALL TO TP-2.
(6) 2-1/2" GAS (988.2 CFH) UP IN WALL TO ABOVE CEILING.
(7) 1" GAS (125 CFH) DN TO WATER HEATER.
(8) 1-1/4" GAS (220 CFH) DN IN WALL TO BOILER.
(9) 3/4" GAS (43.2 CFH) DN FACE OF WALL TO ABOVE GRADE.
(10) 2" GAS (600 CFH) DN FACE OF WALL TO ABOVE GRADE.
(11) 3/4" CW & 1/2" HW DN IN WALL TO FIXTURE AND TRAP PRIMER.
(12) 1-1/4" CW & 1" HW DN IN WALL TO EMERGENCY EYE WASH TMV.
(13) 1/2" CW & HW DN IN WALL TO SHOWER VALVE.
(14) 1-1/4" CW & 1" HW DN IN WALL TO FULL SIZE HEADER.
(15) 1-1/2" CW DN IN WALL TO FULL SIZE HEADER.
(16) 1/2" HW DN IN WALL TO FIXTURE.
(17) 2" CW UP IN WALL TO ABOVE CEILING.
(18) 3/4" CW & HW DN IN WALL TO FIXTURE.
(19) 1" CW, 1" HW & 3/4" HWR TO WATER HEATER.
(20) 1/2" CA DN FACE OF WALL TO QUICK DISCONNECT.
(21) 1/2" CA DN FACE OF WALL TO CONTROL CONSOLE ITEM #2. COORDINATE LOCATION WITH EQUIPMENT PLAN SHEET A1-1.3.
(22) 1-1/2" CA UP FROM COMPRESSOR, ITEM #20. COORDINATE LOCATION WITH EQUIPMENT PLAN SHEET A1-1.3.
(23) 3/4" HW UP FACE OF WALL TO ABOVE.
(24) 1-1/4" CW UP FACE OF WALL TO ABOVE.
(25) 3/4" HW DN FACE OF WALL FROM ABOVE.
(8) 1/2" CA DN TO LIFT CONTROL CONSOLE ITEM #8. COORDINATE LOCATION WITH EQUIPMENT PLAN SHEET A1-1.3.

MOUNT TRANSIT MAINTENANCE FACILITY:

PRINTED: 7/28/2023 8:49:21 AM
PATH: BIM 360://50801_MARTA_MTMF/21061_Mountain Transit Maintenance Facility_MEP_Central.rvt

PROJECT No. :50801
7/28/2023 8:49:21 AM

DRAWN BY: CHECKED BY:

ISSUE No.____ DATE____ DESCRIPTION____
REVISION No.____ DATE____ DESCRIPTION____

RUHNAUCLARKE.COM

3775 TENTH STREET, RIVERSIDE CALIFORNIA 92501 (951) 684 4664 / 5751 PALMER WAY, SUITE C, CARLSBAD CALIFORNIA 92010 (760) 438 5899

MOUNT TRANSIT MAINTENANCE FACILITY

170 BUSINESS CENTER DR. BIG BEAR LAKES, CA
BIG BEAR LAKES

PLUMBING FLOOR PLAN & ENLARGED PLANS

P1-1.2

22-066
50801

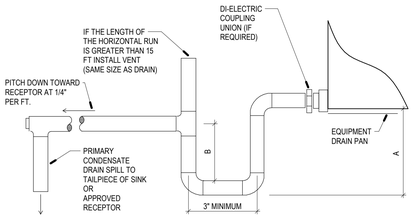

UNIT TYPE	A	B
DRAW THRU	SPx1.5+2"	SPx1.0+1"
BLOW THRU	SPx1.5+2"	SPx1.5+2"

SP = EXTERNAL STATIC PRESSURE OF A/C UNIT

DIMENSION "B" SHALL NOT BE LESS THAN 3"

DRAIN LINE SHALL BE SIZED AS FOLLOWS	
0-20 TONS	3/4"
21-40 TONS	1"
41-90 TONS	1-1/4"
91-125 TONS	1-1/2"
126-250 TONS	2"

* NOT LESS THAN FULL SIZE OF UNIT CONNECTION

CONDENSATE CONNECTION | 13

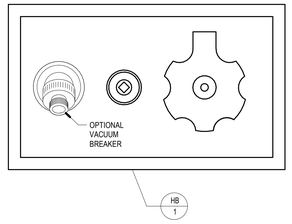

HOSE BIBB | 9

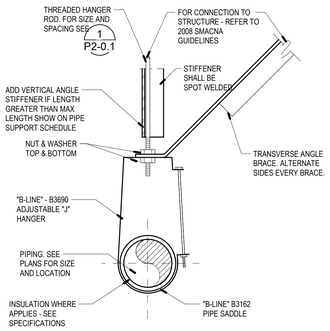

NOTE:

1. DETAIL APPLIES TO PIPES 2" I.D. AND SMALLER
2. REFER TO PIPE SUPPORT SCHEDULE FOR ADDITIONAL INFORMATION

PIPE SUPPORT | 5

PIPE SIZE IN INCHES	MAXIMUM SPAN BETWEEN SUPPORT HANGERS O.C. HORIZ	VERT	HANGER ROD DIAMETER SIZE	MAX. LENGTH FOR RODS	LONGITUDINAL ANGLE BRACE (2)	VERTICAL HANGER ANGLE (STIFFENER) (1)	TRANSVERSE ANGLE BRACE (2)	BOLT SIZE
COPPER TUBE & PIPE								
1/2 & 3/4	6'-0"	10'-0"	3/8"	37"	1-1/2 x 1-1/2 x 18 GA @ 80'-0" O.C.	1 x 1 x 18GA	1-1/2 x 1-1/2 x 18 GA @ 40'-0" O.C.	3/8"
1 THRU 1-1/2	6'-0"	10'-0"	3/8"	37"	1-1/2 x 1-1/2 x 18 GA @ 80'-0" O.C.	1 x 1 x 18GA	1-1/2 x 1-1/2 x 18 GA @ 40'-0" O.C.	3/8"
2	10'-0"	10'-0"	3/8"	37"	1-1/2 x 1-1/2 x 18 GA @ 80'-0" O.C.	1 x 1 x 18GA	2-1/2 x 2-1/2 x 16 GA @ 40'-0" O.C.	3/8"
STEEL PIPE FOR GAS								
1/2 & 3/4	10'-0"	10'-0"	3/8"	37"	1-1/2 x 1-1/2 x 18 GA @ 80'-0" O.C.	1 x 1 x 18GA	1-1/2 x 1-1/2 x 18 GA @ 40'-0" O.C.	3/8"
1	8'-0"	8'-0"	3/8"	37"	1-1/2 x 1-1/2 x 18 GA @ 80'-0" O.C.	1 x 1 x 18GA	1-1/2" x 1-1/2 x 18 GA @ 40'-0" O.C.	3/8"
1-1/4 THRU 2	10'-0"	10'-0"	3/8"	37"	2-1/2 x 2-1/2 x 16 GA @ 80'-0" O.C.	1 x 1 x 18GA	2-1/2 x 2-1/2 x 16 GA @ 40'-0" O.C.	3/8"
SCHEDULE 40 PVC & ABS DWV (3)								
1/2 & 3/4	4'-0"	10'-0"	3/8"	37"	1-1/2 x 1-1/2 x 18 GA @ 80'-0" O.C.	1 x 1 x 18GA	1-1/2 x 1-1/2 x 18 GA @ 40'-0" O.C.	3/8"
1 THRU 2	4'-0"	10'-0"	3/8"	37"	1-1/2 x 1-1/2 x 18 GA @ 80'-0" O.C.	1 x 1 x 18GA	1-1/2 x 1-1/2 x 18 GA @ 40'-0" O.C.	3/8"
CAST IRON HUBLESS (NO HUB)								
1-1/2 & 2	(A)	15'-0"	3/8"	37"	1-1/2 x 1-1/2 x 18 GA @ 80'-0" O.C.	1 x 1 x 18GA	1-1/2 x 1-1/2 x 18 GA @ 40'-0"	3/8"
3 THRU 6	(A)	REFER TO SMACNA GUIDELINES IN SCHEDULE BELOW						
(A) SUPPORT EVERY JOINT. SUPPORT SHALL BE WITHIN 18 INCHES OF JOINT ON BOTH SIDES. (SUPPORT ALSO REQUIRED AT EACH HORIZONTAL JOINT CONNECTION)								
ALL PIPING 2-1/2" AND LARGER PER THE FOLLOWING SMACNA GUIDELINES								
2-1/2	10'-0"	10'-0"	1/2"	25"	2-1/2 x 2-1/2 x 16 GA @ 80'-0" O.C.	2 x 2 x 16GA	2-1/2 x 2-1/2 x 16 GA @ 40'-0" O.C.	3/8"
3	10'-0"	10'-0"	1/2"	25"	2-1/2 x 2-1/2 x 16 GA @ 80'-0"	2 x 2 x 16GA	2-1/2 x 2-1/2 x 16 GA @ 40'-0" O.C.	3/8"
4	10'-0"	10'-0"	5/8"	31"	2-1/2 x 2-1/2 x 16 GA @ 80'-0" O.C.	2 x 2 x 16GA	2-1/2 x 2-1/2 x 16 GA @ 40'-0" O.C.	1/2"
5	10'-0"	10'-0"	5/8"	31"	2-1/2 x 2-1/2 x 16 GA @ 80'-0" O.C.	2 x 2 x 16GA	2-1/2 x 2-1/2 x 16 GA @ 40'-0" O.C.	1/2"
6	10'-0"	10'-0"	5/8"	37"	2-1/2 x 2-1/2 x 16 GA @ 40'-0" O.C.	2 x 2 x 16GA	2-1/2 x 2-1/2 x 16 GA @ 40'-0" O.C.	1/2"

NOTES

(1) VERTICAL ANGLE ONLY REQUIRED WHEN ROD MAXIMUM LENGTH IS EXCEEDED.
(2) BRACING MAY BE OMITTED WHERE TOP OF PIPE IS 12" OR LESS FROM BOTTOM OF HANGER SUPPORT CONNECTED TO STRUCTURE
(3) ALLOW FOR EXPANSION EVERY 30'-0"

PIPE SUPPORT SCHEDULE | 1

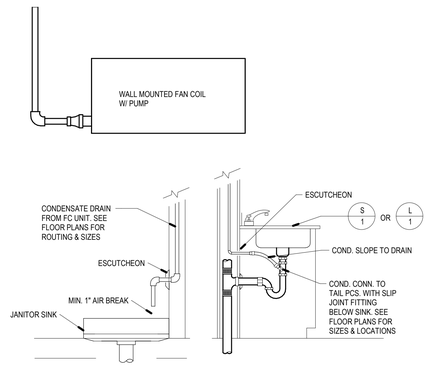

CONDENSATE CONNECTION | 14

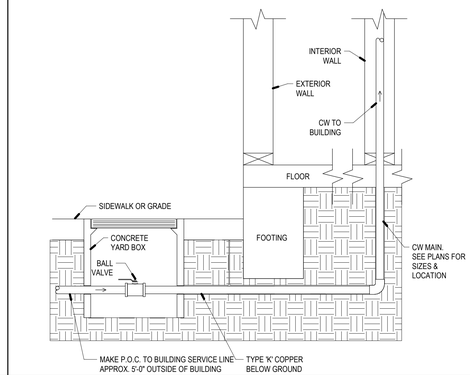

COLD WATER RISER | 10

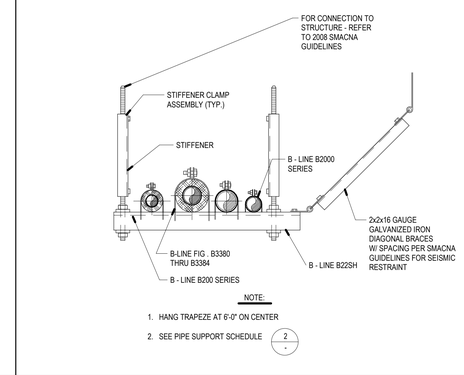

NOTE:

1. HANG TRAPEZE AT 6'-0" ON CENTER
2. SEE PIPE SUPPORT SCHEDULE (2 / -)

PIPE SUPPORT | 6

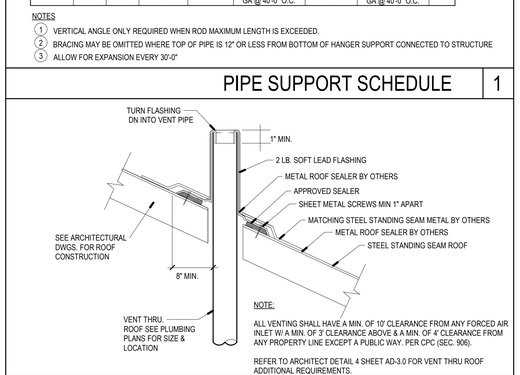

NOTE:

ALL VENTING SHALL HAVE A MIN. OF 10' CLEARANCE FROM ANY FORCED AIR INLET W/ A MIN. OF 3' CLEARANCE ABOVE & A MIN. OF 4' CLEARANCE FROM ANY PROPERTY LINE EXCEPT A PUBLIC WAY. PER CPC (SEC. 906).

REFER TO ARCHITECT DETAIL 4 SHEET AD-3.0 FOR VENT THRU ROOF ADDITIONAL REQUIREMENTS.

VENT THRU ROOF | 2

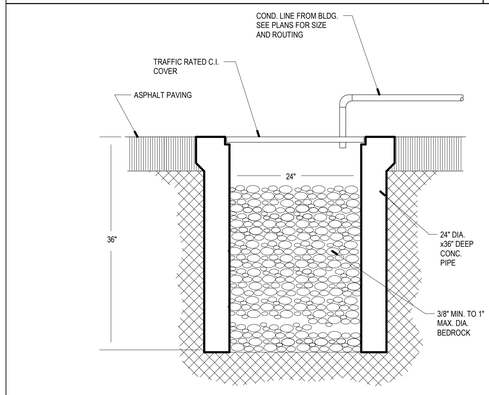

CONDENSATE CONNECTION | 15

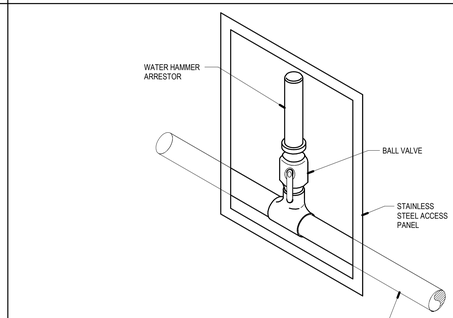

WATER HAMMER ARRESTOR | 11

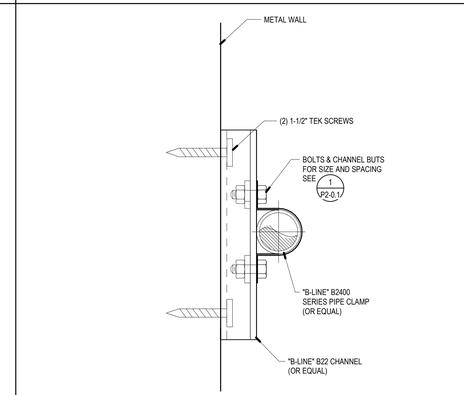

PIPE SUPPORT 12" = 1'-0" | 7

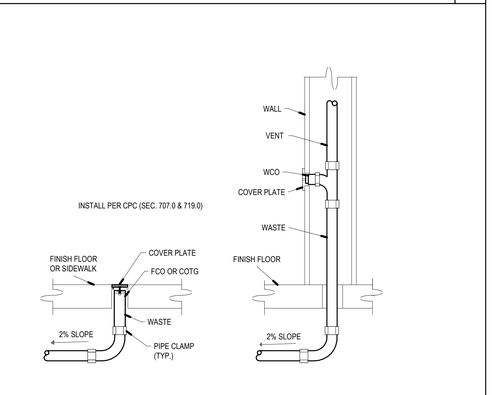

CLEAN OUT | 3

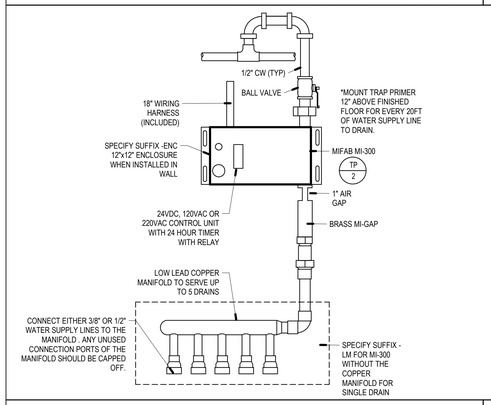

ELECTRONIC TRAP PRIMER | 16

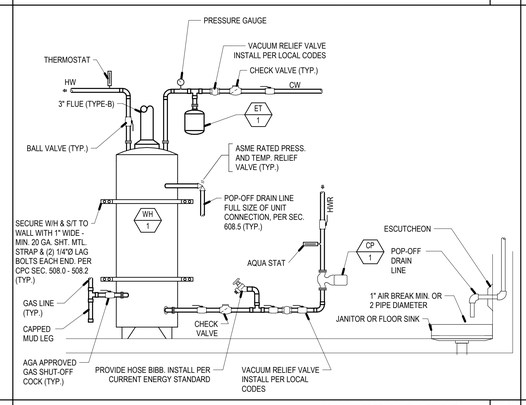

WATER HEATER | 12

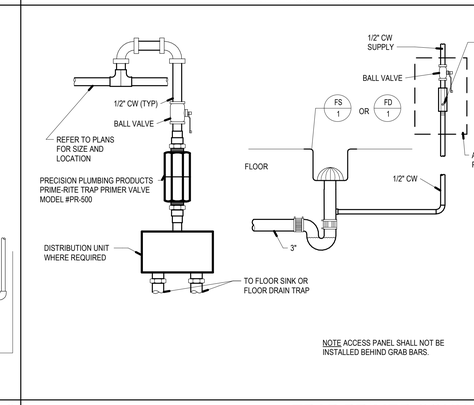

NOTE ACCESS PANEL SHALL NOT BE INSTALLED BEHIND GRAB BARS.

TRAP PRIMER CONN | 8

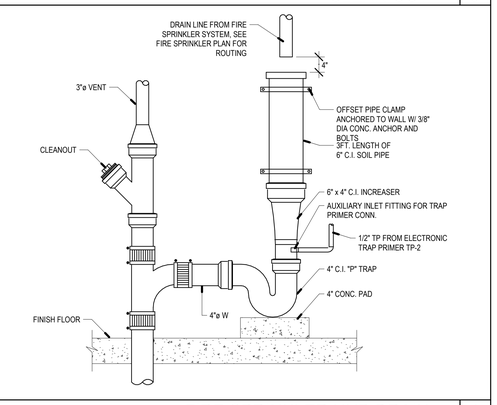

FIRE SPRINKLER HUB DRAIN | 4

REGISTERED PROFESSIONAL ENGINEER
JOHN STEVEN DARNELL
No. 33209
EXP. 9-30-2023
MECHANICAL
STATE OF CALIFORNIA

LICENSED ARCHITECT
ROGER CLARKE
No. C-21345
Exp. 10-31-24
STATE OF CALIFORNIA

STAMPS

AGENCY APPROVAL
File No: n.a

MECHANICAL ELECTRICAL AND ENERGY CONSULTANTS
DESIGN WEST ENGINEERING
412 E. Vanderbilt Way
San Bernardino, CA 92408
Tel: 909-890-3700
Fax: 909-890-3770
Email: cadd@designwesteng.com
CONSULTANT BRANDING

RUHNAU CLARKE ARCHITECTS

MOUNT TRANSIT MAINTENANCE FACILITY:

PRINTED: 7/28/2023 8:49:24 AM
PATH: BIM 360://3801_MMTF_MTMF\21061_Mountain Transit Maintenance Facility_22066_50801.rvt

PROJECT No. :50801
7/28/2023 8:49:24 AM

DRAWN BY: CHECKED BY:

ISSUE No.____ DATE____ DESCRIPTION____
ISSUE No.____ DATE____ DESCRIPTION____
ISSUE No.____ DATE____ DESCRIPTION____
ISSUE No.____ DATE____ DESCRIPTION____

REVISION No.____ DATE____ DESCRIPTION____
REVISION No.____ DATE____ DESCRIPTION____
REVISION No.____ DATE____ DESCRIPTION____
REVISION No.____ DATE____ DESCRIPTION____

RUHNAUCLARKE.COM
3775 TENTH STREET, RIVERSIDE CALIFORNIA 92501 (951) 684 4664 / 5751 PALMER WAY, SUITE C, CARLSBAD CALIFORNIA 92010 (760) 438 5899

MOUNT TRANSIT MAINTENANCE FACILITY
170 BUSINESS CENTER DR. BIG BEAR LAKES, CA
BIG BEAR LAKES

PLUMBING DETAILS

P2-0.1

22-066
50801

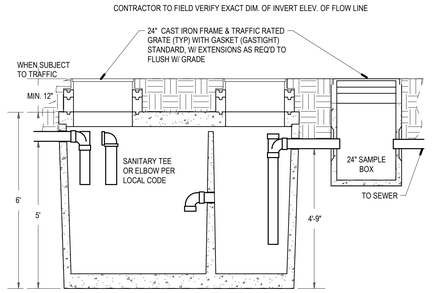

SAND-OIL INTERCEPTOR | 1

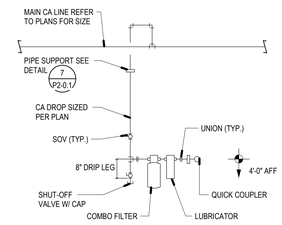

COMPRESSED AIR PIPING DIAGRAM | 2

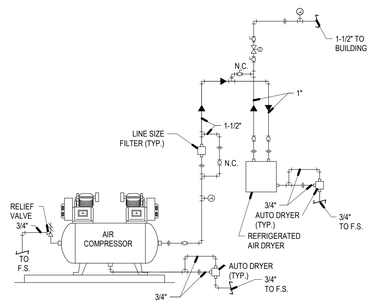

COMPRESSED AIR PIPING DIAGRAM | 3

STAMPS

MECHANICAL ELECTRICAL AND ENERGY CONSULTANTS

DESIGN WEST ENGINEERING

412 E. Vanderbilt Way
San Bernardino, CA 92408
Tel: 909-890-3700
Fax: 909-890-3770
Email: cadd@designwesteng.com

CONSULTANT BRANDING

RUHNAU CLARKE ARCHITECTS

AGENCY APPROVAL
File No: n.a

MOUNT TRANSIT MAINTENANCE FACILITY:

PROJECT No. :50801
7/28/2023 8:49:24 AM

DRAWN BY: CHECKED BY:

ISSUE No.____ DATE____ DESCRIPTION____
REVISION No.____ DATE____ DESCRIPTION____

MOUNT TRANSIT MAINTENANCE FACILITY

170 BUSINESS CENTER DR. BIG BEAR LAKES, CA
BIG BEAR LAKES

PLUMBING DETAILS

P2.02

22-066
50801

PRINTED: 7/28/2023 8:49:24 AM
PATH: BIM 360://50801_MMTF_MTMF\21061_Mountain Transit Maintenance Facility_22066_detailP.rvt

GENERAL NOTES

1. THESE DRAWINGS AND SPECIFICATIONS ARE INTENDED TO COVER A COMPLETE INSTALLATION OF SYSTEMS. THE OMISSION OR EXPRESSED REFERENCE TO ANY ITEM OF LABOR OR MATERIALS REQUIRED FOR THE PROPER EXECUTION OF THE WORK IN ACCORDANCE WITH PRESENT PRACTICE OF THE TRADE SHALL NOT RELIEVE THE CONTRACTOR FROM PROVIDING SUCH ADDITIONAL LABOR AND MATERIALS.

2. THIS PROJECT IS A COMPLETE A NEW BUILDING CONSTRUCTION. REFER TO THE ARCHITECTURAL DRAWINGS FOR NOTES AND OTHER ELECTRICAL REQUIREMENT NOT SHOWN ON THE ELECTRICAL DRAWINGS. IF THERE ARE OMISSIONS OR CONFLICTS BETWEEN THE ELECTRICAL DOCUMENTS AND THE DOCUMENTS OF OTHER TRADES, CLARIFY THESE POINTS WITH THE ARCHITECT BEFORE SUBMITTING A BID. NO EXTRA PAYMENT WILL BE ALLOWED FOR FAILURE TO OBTAIN THIS INFORMATION.

3. THESE PLANS, SPECIFICATIONS, AND ALL MATERIALS SHALL BE IN FULL ACCORDANCE WITH ALL LEGAL AND INDUSTRY REQUIREMENTS, AND STANDARDS INCLUDING WITHOUT LIMITATION TO THE FOLLOWING:

1

   A. CALIFORNIA CODE OF REGULATIONS TITLE 24, PARTS 1 AND 2 (CALIFORNIA BUILDING CODE), 2022 EDITION.

   B. CALIFORNIA CODE OF REGULATIONS TITLE 24, PART 3 (CALIFORNIA ELECTRICAL CODE), 2022 EDITION.

   C. CALIFORNIA CODE OF REGULATIONS TITLE 24, PART 6 (CALIFORNIA ENERGY CODE), 2022 EDITION.

   D. CALIFORNIA CODE OF REGULATIONS TITLE 24, PART 9 (CALIFORNIA FIRE CODE), 2022 EDITION.

   E. OTHER REGULATING AGENCIES WHICH MAY HAVE AUTHORITY OVER ANY PORTION OF THE WORK, INCLUDING THE STATE OF CALIFORNIA DIVISION OF INDUSTRIAL SAFETY, AND THOSE CODES AND STANDARDS LISTED IN THESE NOTES AND SPECIFICATIONS.

   F. THE ELECTRICAL SYSTEMS FUNCTIONALITY STANDARDS SET FORTH IN TITLE 7 OF THE CALIFORNIA CIVIL CODE (THE "RIGHT TO REPAIR.

   G. THE MANUFACTURER'S REQUIREMENTS OR RECOMMENDATIONS FOR ANY INCORPORATED PRODUCTS.

   H. THE MOST CURRENT APPROVED ISSUES OF ANY NOTED SPECIFICATIONS, CODES AND STANDARDS, INCLUDING SUPPLEMENTS, UNLESS NOTED OTHERWISE.

4. IN USING THE PLANS FOR BIDDING OR CONSTRUCTION PURPOSES, THE CONTRACTOR IS REQUIRED TO REVIEW ALL OF THE PROJECT'S CONSTRUCTION DOCUMENTS AS A WHOLE IN ORDER TO IDENTIFY ALL REQUIREMENTS THAT DIRECTLY OR INDIRECTLY AFFECT ITS PORTION OF THE ELECTRICAL WORK, EVEN REQUIREMENTS LOCATED IN SECTIONS DESIGNATED AS APPLICABLE TO OTHER TRADES. IN CASE OF CONFLICTS, THE CONTRACTOR SHALL EITHER OBTAIN DIRECTION FROM AN APPROPRIATE OWNER REPRESENTATIVE OR OTHERWISE APPLY THE MORE STRINGENT REQUIREMENT.

5. THE PLANS REPRESENT ONLY THE FINISHED ELECTRICAL, FIRE ALARM, AND LOW VOLTAGE SYSTEMS, AND THEY ARE NOT INTENDED TO INDICATE OR REQUIRE ANY CONSTRUCTION MEANS, METHODS, TECHNIQUES, SEQUENCES OR PROCURES.

6. WHEN INTERPRETING THE PLANS, THE FOLLOWING GENERAL RULES APPLY:

   A. WRITTEN DIMENSIONS SHALL TAKE PRECEDENCE OVER SCALED DRAWINGS.

   B. SCALED DIMENSIONS AND GRAPHICALLY SHOWN LOCATIONS ARE TO BE CONSIDERED ONLY APPROXIMATE. FIELD VERIFY DIMENSIONS PRIOR TO BID.

7. IN IMPLEMENTING THE PLANS, THE FOLLOWING GENERAL RULES APPLY:

   A. BECAUSE THE PLANS ARE INTENDED TO SET FORTH THE REQUIREMENTS FOR CONSTRUCTION IN ONLY AN INDUSTRY-STANDARD LEVEL OF QUALITY AND DETAIL, AND THEREFORE ARE INTENDED TO BE SUPPLEMENTED BY APPROPRIATE REQUESTS FOR CLARIFICATION AND INTERPRETATION, ERRORS AND OMISSIONS ARE TO BE EXPECTED AND ANTICIPATED; AND THE CONTRACTOR IS REQUIRED TO CAREFULLY REVIEW THE PLANS FOR ERRORS AND OMISSIONS AND TO BRING THESE ERRORS AND OMISSIONS TO THE ATTENTION OF AN APPROPRIATE OWNER REPRESENTATIVE IN A TIMELY MANNER AN ASSUMES THE RISK OF THE CONSEQUENCES OF FAILING TO DO SO BEFORE BIDDING OR OTHERWISE PROCEEDING.

   B. THE CONTRACTOR SHALL REVIEW AND VERIFY ALL DIMENSIONS PRIOR TO STARTING CONSTRUCTION, AND NOTIFY THE ARCHITECT IMMEDIATELY OF ANY DISCREPANCIES OR INCONSISTENCIES.

8. SUBMITTALS WILL BE REVIEWED BY THE ELECTRICAL ENGINEER, IF AT ALL, ONLY PURSUANT TO THE INDUSTRY STANDARD PROTOCOL SET FORTH IN AIA DOCUMENT A201, AND IN NO EVENT WILL THE SUBMITTAL REVIEW PROCESS RELIEVE OR LESSEN THE SUBMITTING CONTRACTOR'S RESPONSIBILITY FOR AN INAPPROPRIATE SUBMITTAL.

9. IN NO EVENT WILL ANY SITE VISITS BY THE ELECTRICAL ENGINEER CONCERN CONSTRUCTION MEANS AND METHODS OR CONSTRUCTION SAFETY, AND ALL SUCH MATTERS SHALL REMAIN THE SOLE RESPONSIBILITY OF THE CONTRACTOR.

10. COPIES OF THE PLANS PROVIDED IN ANY ELECTRONIC FORM ARE SUBJECT TO THE SAME PROVISIONS AS THE OTHER INSTRUMENTS OF SERVICE PREPARED BY OR ON BEHALF OF ELECTRICAL ENGINEER FOR THE PROJECT, INCLUDING WITHOUT LIMITATION THE ENGINEER'S COMMON LAW, STATUTORY OR OTHER RESERVED RIGHTS, INCLUDING COPYRIGHTS. A RECIPIENT IS GRANTED AT MOST A TRANSFERABLE NONEXCLUSIVE LICENSE TO RE-USE THE PLANS SOLELY FOR PROJECT PURPOSES; AND NO RECIPIENT IS AUTHORIZED TO USE OR TO ALLOW THE USE OF ALL OR ANY PORTION OF THESE PLANS FOR NAY OTHER PURPOSE, AND ANY USE FOR ANY OTHER PURPOSE WOULD CONSTITUTE ACTIONABLE PLAGIARISM. ELECTRICAL ENGINEER PROVIDES DOCUMENTS IN AN ELECTRONIC FORM ONLY IN ITS STANDARD FORMATS AND CONVENTIONS AND WITH NO GUARANTEE OF COMPATIBILITY WITH ANY RECIPIENT'S SOFTWARE OR HARDWARE, AND ANY USE WITH OR CONVERSION TO OTHER FORMATS OR CONVENTIONS, OR THE USE WITH ANY PARTICULAR SOFTWARE OR HARDWARE, IS AT THE RECIPIENT'S SOLE RISK.

11. REFER TO THE DRAWINGS AND SHOP DRAWINGS OF OTHER TRADES FOR ADDITIONAL DETAILS WHICH AFFECT THE PROPER INSTALLATION OF THIS

12. BEFORE SUBMITTING A BID, THE CONTRACTOR SHALL FAMILIARIZE HIMSELF WITH ALL FEATURES OF THE EXISTING BUILDINGS AND SITE, AND ALL DRAWINGS WHICH MAY AFFECT THE EXECUTION OF THE WORK. NO EXTRA PAYMENT WILL BE ALLOWED FOR FAILURE TO OBTAIN THIS INFORMATION.

13. PROTECT ALL WORK, MATERIALS AND EQUIPMENT FROM DAMAGE FROM ANY CAUSE WHATEVER AND PROVIDE ADEQUATE AND PROPER STORAGE FACILITIES DURING THE PROGRESS OF THE WORK. PROVIDE FOR THE SAFETY AND GOOD CONDITION OF ALL THE WORK UNTIL FINAL ACCEPTANCE OF THE WORK BY THE OWNER AND REPLACE ALL DAMAGED OR DEFECTIVE WORK, MATERIALS AND EQUIPMENT BEFORE REQUESTING FINAL ACCEPTANCE.

14. THE DRAWINGS INDICATE IN A DIAGRAMMATIC MANNER, THE DESIRED LOCATIONS OF ARRANGEMENT OF THE COMPONENTS OF ELECTRICAL WORK. DETERMINE EXACT CONDUIT ROUTING, CONDUIT BENDS, AUXILIARY JUNCTION BOXES, SUPPORTS, AND UNDEFINED CONSTRUCTION DETAILS AS A JOB CONDITION TO BE INSTALLED IN ACCORDANCE WITH THE APPLICABLE CODE REQUIREMENTS. PROPER JUDGEMENT MUST BE EXERCISED IN EXECUTING THE WORK SO AS TO SECURE THE BEST POSSIBLE INSTALLATION IN THE AVAILABLE SPACE, AND TO OVERCOME LOCAL DIFFICULTIES DUE TO SPACE LIMITATIONS OR INTERFERENCE OF CONDITIONS ENCOUNTERED.

15. IN THE EVENT CHANGES IN THE INDICATED LOCATIONS OR ARRANGEMENTS ARE NECESSARY, DUE TO DEVELOPED CONDITIONS IN THE BUILDING CONSTRUCTION OR REARRANGEMENT OF EQUIPMENT, SUCH CHANGES SHALL BE MADE WITHOUT COST PROVIDING THE CHANGE IS ORDERED BEFORE THE CONDUIT RUNS, ETC., AND WORK DIRECTLY CONNECTED TO SAME IS INSTALLED AND NO EXTRA MATERIALS ARE REQUIRED.

16. THE DRAWINGS INDICATE APPROXIMATE LOCATIONS OF EXISTING CONDUITS. THE EXACT ROUTING SHALL BE VERIFIED IN FIELD AND LENGTH OF CONDUCTORS SHALL BE ADJUSTED TO THE LENGTH REQUIRED.

17. PERFORM CUTTING AND PATCHING ON THE CONSTRUCTION WORK WHICH MAY BE REQUIRED FOR THE PROPER INSTALLATION OF THE ELECTRICAL WORK. PATCHING SHALL BE OF THE SAME MATERIAL, WORKMANSHIP AND FINISH AS SPECIFIED AND ACCURATELY MATCH SURROUNDING WORK TO SATISFACTION OF THE ARCHITECT.

18. PROVIDE ALL EQUIPMENT WITH ENCLOSURES LISTED OR LABELED FOR USE AND LOCATION WHERE SUCH EQUIPMENT IS INSTALLED.

19. PROVIDE UL LISTED FIRE STOP FOR ALL PENETRATIONS THROUGH FIRE RATED WALLS AND CEILINGS TO MAINTAIN ALL FIRE RATINGS. THE FIRE STOP MATERIALS SHALL BE RE-ENTERABLE AND REUSABLE.

20. PROVIDE COORDINATED SHOP DRAWINGS. INDICATING DIMENSIONED LOCATIONS AND SIZES OF ALL CORE DRILLS FOR REVIEW AND APPROVAL. ALL CORE DRILL LOCATIONS SHALL BE VERIFIED AND APPROVED WITH OWNERS REPRESENTATIVE, STRUCTURAL AND ARCHITECT PRIOR TO CORE DRILL. UTILIZE X-RAY EQUIPMENT TO LOCATE AND VERIFY EXISTING STRUCTURAL ELEMENTS WITHIN SLAB.

21. WHERE EXISTING CIRCUITS ARE SHOWN ON PLANS, THE INFORMATION WAS OBTAINED FROM RECORD DRAWINGS. WHERE NEW CIRCUITS ARE SHOWN IN EXISTING PANELBOARD(S), THE CONTRACTOR SHALL VERIFY THAT THE INDICATED CIRCUITS ARE AVAILABLE IN THE EXISTING PANELBOARD(S). THE CONTRACTOR SHALL RELOCATE SUCH CIRCUITS TO AN AVAILABLE SPACE IN THE EXISTING PANELBOARD(S), AND "AS BUILT" PLANS. IF NO CIRCUIT SPACE IS AVAILABLE IN THE EXISTING PANELBOARD(S), THE CONTRACTOR SHALL REPORT THE DISCREPANCY TO THE ARCHITECT.

22. GROUNDING SHALL BE EXECUTED IN ACCORDANCE WITH ALL APPLICABLE CODES AND REGULATIONS, BOTH OF THE STATE OF CALIFORNIA AND LOCAL AUTHORITIES HAVING JURISDICTION.

23. PROVIDE GROUND WIRE IN EACH CONDUIT CONTAINING CIRCUITS FEEDING RECEPTACLES. THE CONDUIT SHALL NOT BE PERMITTED TO SERVE AS THE ONLY ELECTRICAL GROUND RETURN PATH.

24. WHERE CIRCUIT CHANGES OR ADDITIONS OCCUR IN EXISTING PANELBOARDS, UPDATE PANEL DIRECTORY CARDS WITH NEW TYPEWRITTEN CARDS INDICATING DESCRIPTION OF ALL CIRCUITS.

25. PROVIDE HANDLE TIES AT CIRCUIT BREAKERS TO SIMULTANEOUSLY DISCONNECT ALL UNGROUNDED CONDUCTORS OF MULTI-WIRE BRANCH CIRCUITS WITH A SHARED NEUTRAL.

26. UNLESS NOTED OTHERWISE ALL 120 VOLT HOMERUNS OVER 100 FEET SHALL BE #10 AWG MINIMUM. ADJUST CONDUIT SIZE ACCORDINGLY.

27. UNLESS NOTED OTHERWISE ALL 277 VOLT HOMERUNS OVER 200 FEET SHALL BE #10 AWG MINIMUM, OVER 300 FEET SHALL BE #8 AWG MINIMUM. ADJUST CONDUIT SIZE ACCORDINGLY.

28. CONDUIT FOR DATA/ VOICE CABLING SHALL COMPLY WITH THE FOLLOWING ADDITIONAL REQUIREMENTS:

   A. INSIDE BEND RADIUS SHALL BE AT LEAST 10 TIMES ITS INTERNAL DIAMETER.

   B. PROVIDE PULL BOXES WHENEVER CONDUIT LENGTH EXCEEDS 150 FEET AND WHEN COMBINED BENDS ARE GREATER THAN 180 DEGREES.

   C. ALL CONDUIT SHALL BE PROVIDED WITH INSULATED BUSHINGS.

   D. MAINTAIN A MINIMUM CLEARANCE OF 4 FEET FROM MOTORS AND TRANSFORMERS.

   E. MAINTAIN A MINIMUM CLEARANCE OF 12 INCHES FROM POWER CIRCUITS.

   F. MAINTAIN A MINIMUM CLEARANCE OF 12 INCHES FROM LIGHT FIXTURES.

29. COORDINATE MOUNTING HEIGHTS OF RECEPTACLES, SWITCHES, A/V DEVICES, SECURITY DEVICES, ETC. MOUNTED ON COMMON WALLS SO THAT ALL OUTLETS ARE MOUNTED TO ALIGN HORIZONTALLY.

30. NOTIFY THE ARCHITECT IN WRITING WHEN INSTALLATION IS COMPLETE AND THAT A FINAL INSPECTION OF THIS WORK CAN BE PERFORMED. IN THE EVENT DEFECTS OR DEFICIENCIES ARE FOUND DURING THIS FINAL INSPECTION, THEY SHALL BE CORRECTED TO THE SATISFACTION OF THE ARCHITECT BEFORE FINAL ACCEPTANCE CAN BE ISSUED.

31. SHOULD, AT ANY GIVEN TIME DURING CONSTRUCTION, THE FIRE ALARM SYSTEM IS INOPERABLE, THE CONTRACTOR SHALL PROVIDE A FIRE WATCH DURING THE ENTIRE DOWNTIME. INCLUDE ALL COSTS IN BID TO COMPLY WITH THIS PROVISION.

FIRE ALARM SYSTEM SYMBOLS

- FIRE ALARM SMOKE DETECTOR ON FLUSH CEILING OUTLET BOX.
- HEAT DETECTOR ON SURFACE OUTLET BOX LOCATED IN ATTIC SPACE.
- FIRE ALARM VISUAL ON FLUSH WALL OUTLET BOX AT +80".
- FIRE ALARM VISUAL STROBE ON FLUSH CEILING MOUNTED OUTLET BOX.
- FIRE ALARM HORN/STROBE- ON FLUSH CEILING MOUNTED OUTLET BOX.
- FIRE ALARM CONTROL PANEL AND/OR EXPANDER PANEL SURFACE MOUNTED ON WALL + 72" A.F.F. TO TOP OF CABINET.
- FIRE ALARM PULL STATION ON FLUSH WALL MOUNTED OUTLET BOX, AT +48"
- FIRE ALARM EXTERIOR WEATHERPROOF HORN ON FLUSH WALL MOUNTED OUTLET BOX, AT +90".

FIRE ALARM SYSTEM GENERAL NOTE

1. THE FIRE ALARM SYSTEM IS NOT BEING PERMITTED VIA THIS BUILDING PERMIT AND IS A DEFERRED SUBMITTAL. ANY NOTES REFERENCING A FIRE ALARM AND DEVICES ARE NOT BEING REVIEWED OR PERMITTED AND ARE SOLELY AS REFERENCE.

ELECTRICAL MOUNTING REACH RANGES

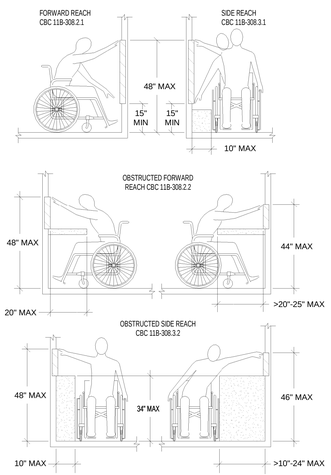

SYMBOL LIST

(ALL SYMBOLS NOT NECESSARILY USED ON THESE DRAWINGS) ALL SYMBOL DESCRIPTIONS ARE SUBJECT TO MODIFICATION AS NOTED ON THE DRAWINGS. VERIFY EXACT LOCATIONS AND HEIGHTS OF OUTLETS WITH ARCHITECTURAL INTERIOR ELEVATIONS PRIOR TO ROUGH-IN.

K	INTRUSION DETECTION SYSTEM KEY PAD, ON FLUSH WALL MOUNTED OUTLET BOX, +45". WITH 1" CONDUIT TO ACCESSIBLE CEILING SPACE, U.N.O.
ID	INTRUSION DETECTION SYSTEM - 1"C., WITH CONDUCTORS AS SPECIFIED.
T1	TELEPHONE SYSTEM 3/4"C. WITH ONE (1)SET OF SPECIFIED CONDUCTORS. T2 - 1"C. WITH TWO (2)SET OF SPECIFIED CONDUCTORS. T3 - 1 1/4"C. WITH THREE (3)SET OF SPECIFIED CONDUCTORS. T4 - 1 1/2"C. WITH FOUR (4)SET OF SPECIFIED CONDUCTORS.
P1	PUBLIC ADDRESS SYSTEM - 3/4"C.WITH ONE (1)SET OF SPECIFIED CONDUCTORS. P2 - 3/4"C. WITH TWO (2)SET OF SPECIFIED CONDUCTORS. P3 - 1"C. WITH THREE (3)SET OF SPECIFIED CONDUCTORS. P4 - 1"C. WITH FOUR (4)SET OF SPECIFIED CONDUCTORS. P5 - 1 1/4"C. WITH FIVE (5)SET OF SPECIFIED CONDUCTORS. P6 - 1 1/4"C. WITH FIVE (5)SET OF SPECIFIED CONDUCTORS.
D1	COMPUTER/DATA PROCESSING SYSTEM - 3/4"C. WITH (1) SET OF SPECIFIED CABLING. D2 - 1"C. WITH (2) SETS OF SPECIFIED CABLING. D3 - 1"C. WITH (3) SETS OF SPECIFIED CABLING. D4 - 1"C. WITH (4) SETS OF SPECIFIED CABLING. D5 - 1 1/4"C. WITH (5) SETS OF SPECIFIED CABLING. D6 - 1 1/4"C. WITH (6) SETS OF SPECIFIED CABLING.
AV	AUDIO/ VISUAL SYSTEM - 1"C. WITH SPECIFIED CONDUCTORS.
M1	MICROPHONE SYSTEM - 3/4"C. WITH CONDUCTORS AS SPECIFIED. M2 - 1"C. WITH CONDUCTORS AS SPECIFIED. M3 - 1 1/4"C. WITH CONDUCTORS AS SPECIFIED.
P1	AUTONOMOUS PUBLIC ADDRESS SYSTEM CONDUCTORS-3/4"C. WITH(1) SET OF SPECIFIED CABLING. P2 - 3/7C. WITH (2) SETS OF SPECIFIES CABLING. P3 - 1"C. WITH (3) SETS OF SPECIFIES CABLING. P4 - 1 1/4"C. WITH (4) SETS OF SPECIFIES CABLING.
LC	LIGHTING SYSTEM - 1"C. WITH SPECIFIED CONDUCTORS.
PS	PRIORITY PAGE SENSOR KIT IN A SINGLE GANG OUTLET BOX LOCATED ABOVE ACCESSIBLE CEILING.
PJ UST	WALL MOUNT ULTRA SHORT THROW PROJECTOR. VERIFY EXACT MOUNTING LOCATION PRIOR TO INSTALLATION.
PJ LT	CEILING MOUNT LONG THROW PROJECTOR. VERIFY EXACT MOUNTING LOCATION PRIOR TO INSTALLATION.
S	CEILING MOUNTED SPEAKER AND GRILLE ON FLUSH IN CEILING BACK BOX. PROVIDE ONE SET OF CAT6A CABLE ON J-HOOKS AND CONDUIT SLEEVES TO BUILDING DATA CABINET/RACK AND CONNECT AS REQUIRED.
S	FLUSH WALL MOUNTED SPEAKER AND GRILLE WITH BACK BOX FOR PUBLIC ADDRESS SYSTEM. CABLE ROUTED VIA CONDUIT SLEEVES TO BUILDING DATA CABINET/RACK AND CONNECT AS REQUIRED.
WP S	EXTERIOR SPEAKER AND VANDELPROOF GRILLE ON FLUSH IN WALL BACKBOX, +90" WITH 1" CONDUIT TO ACCESSIBLE CEILING SPACE. PROVIDE SPECIFIED CABLE FROM SPEAKER THROUGH CONDUIT, J-HOOKS AND CONDUIT SLEEVES TO BUILDING'S PA BACKBOARD IN DATA ROOM.
OS	LIGHTING CONTROL SYSTEM OCCUPANCY MOTION SENSOR ON FLUSH CEILING MOUNTED OUTLET BOX.
CS	STANDARD SIZE COMBINATION IP/SPEAKER UNIT ON FLUSH IN WALL BACKBOX,+90" AFF WITH 1" CONDUIT TO ACCESSIBLE CEILING SPACE U.N.O. PROVIDE TWO (2) SETS OF CAT 6A CABLES THROUGH CONDUIT, J-HOOKS AND CONDUIT SLEEVES TO BUILDING MDF/IDF CABINET FOR INFORMATION.
C	IP CLOCK ON FLUSH IN WALL BACKBOX, 90" AFF WITH 1" CONDUIT ACCESSIBLE CEILING SPACE U.N.O. PROVIDE ONE (1) CAT 6A CABLE THROUGH CONDUIT,J-HOOKS AND CONDUIT SLEEVES TO BUILDING MDF/IDF CABINET FOR TERMINATION.
	INTRUSION DETECTION SYSTEM MOTION SENSOR, ON FLUSH WALL MOUNTED OUTLET BOX, +90". WITH 1" CONDUIT TO ACCESSIBLE CEILING SPACE, U.N.O.
	INTRUSION DETECTION SYSTEM MOTION SENSOR, ON FLUSH WALL MOUNTED OUTLET BOX, +90". WITH 1" CONDUIT TO CABLE TRAY, U.N.O.
RC	RECEPTACLE CONTROLLER. SEE LIGHTING CONTROL DRAWINGS FOR ADDITIONAL INFORMATION.
RC	ROOM LIGHTING CONTROLLER ON FLUSH WALL MOUNTED OUTLET BOX AT +90"A.F.F.WITH COVER PLATE. U.N.O. VERIFY TYPE OF THE BOX.
RC	ROOM LIGHTING CONTROLLER IN ACCESSIBLE CEILING SPACE.
DDV	DOUBLE DATA DROP LOCATION ON FLUSH MOUNTED OUTLET BOX WITH CONNECTOR AND 1" CONDUIT STUB-OUT TO ACCESSIBLE CEILING SPACE. PROVIDE CONNECTOR AND 20 FEET OF SLACK CABLES.
WI	WIRELESS MIC IR RECEIVER (EXTRON VOICELIFT) MOUNTED ON A SINGLE GANG FLUSH IN CEILING OUTLET BOX.
WP C	STANDARD SIZE COMBINATION IP/SPEAKER UNIT ON FLUSH IN WALL BACKBOX,+90" AFF WITH 1" CONDUIT TO FLUSH WALL MOUNTED WEATHERPROOF OUTLET BOX WITH DATA CONNECTOR AND 3 FEET OF SLACK CABLE INSIDE OUTLET BOX FOR FUTURE CONNECTION TO IP BASED SURVEILLANCE CAMERA EQUIPMENT BY DISTRICT.
C	DOUBLE DATA DROP LOCATION WITH CONNECTOR AND 20 FEET OF SLACK CABLE LOCATED IN ACCESSIBLE CEILING SPACE ADJACENT TO EXTERIOR WALL OF BUILDING FOR EXTERIOR CCTV CAMERA EQUIPMENT. CABLE SHALL BE COILED-UP AND BUNDLED AT THE LOCATION INDICATED FOR FUTURE CONNECTION TO EXTERIOR CCTV CAMERA EQUIPMENT BY THE DISTRICT.
C	COMPUTER/DATA OUTLET, WITH A SINGLE COMPUTER CONNECTOR, ON FLUSH WALL MOUNTED OUTLET BOX . PROVIDE 1" CONDUIT TO ACCESSIBLE CEILING SPACE UNLESS NOTED OTHERWISE, "C" INDICATES HORIZONTAL IN FLUSH WALL MOUNTED OUTLET BOX +6" ABOVE COUNTER SPLASH.
M	COMPUTER OUTLET WITH A SINGLE COMPUTER CONNECTOR, AND ONE HDMI CONNECTOR ON FLUSH MOUNTED OUTLET BOX, INSTALLED BEHIND FLAT SCREEN TV AT +44" UNLESS NOTED OTHERWISE. VERIFY EXACT LOCATION OF OUTLET PRIOR TO ROUGH-IN. PROVIDE 1" CONDUIT FROM OUTLET INTO ACCESSIBLE CEILING SPACE FOR EXTENSION OF DATA AND HDMI CABLES.
C	COMPUTER/DATA OUTLET, WITH TWO (2) COMPUTER CONNECTORS, ON FLUSH WALL MOUNTED OUTLET BOX . PROVIDE 1" CONDUIT TO CABLE TRAY, UNLESS NOTED OTHERWISE, "C" INDICATES HORIZONTAL IN FLUSH WALL MOUNTED OUTLET BOX +6" ABOVE COUNTER SPLASH.
C	COMPUTER/DATA OUTLET, WITH FOUR (4) COMPUTER CONNECTORS, ON FLUSH WALL MOUNTED OUTLET BOX PROVIDE 1 1/4" CONDUIT TO ACCESSIBLE CEILING SPACE, UNLESS NOTED OTHERWISE, "C" INDICATES HORIZONTAL IN FLUSH WALL MOUNTED OUTLET BOX +6" ABOVE COUNTER SPLASH.
C	COMPUTER OUTLET WITH THREE (3) COMPUTER CONNECTORS, ON FLUSH WALL MOUNTED OUTLET BOX AT + 18", UNLESS NOTED OTHERWISE. PROVIDE 1" CONDUIT TO ACCESSIBLE CEILING SPACE. "C" INDICATES HORIZONTAL FLUSH WALL MOUNTED OUTLET BOX AT +6" ABOVE COUNTER SLASH.
P	COMPUTER OUTLET WITH ONE (1) COMPUTER CONNECTOR, ON SURFACE MOUNTED OUTLET BOX LOCATED IN ACCESSIBLE CEILING SPACE FOR PROJECTOR EQUIPMENT.
R	COMPUTER OUTLET, "R" INDICATES RECESSED FLOOR BOX WITH MULTI-SERVICE FITTINGS. PROVIDE ONE (1) COMPUTER CONNECTOR WITH REQUIRED MOUNTING HARDWARE AND COVERPLATES.
R	COMPUTER OUTLET, "R" INDICATES RECESSED FLOOR BOX WITH MULTI-SERVICE FITTINGS. PROVIDE TWO (2) COMPUTER CONNECTORS WITH REQUIRED MOUNTING HARDWARE AND COVERPLATES.
R	COMPUTER/VOICE OUTLET, "R" INDICATES RECESSED FLOOR BOX WITH MULTI-SERVICE FITTINGS. PROVIDE ONE (1) COMPUTER CONNECTOR AND ONE (1) VOICE CONNECTOR WITH REQUIRED MOUNTING HARDWARE AND COVERPLATES.
	COMPUTER/VOICE OUTLET WITH ONE (1) COMPUTER CONNECTOR AND ONE (1) VOICE CONNECTOR, ON FLUSH WALL MOUNTED OUTLET BOX AT + 18", UNLESS NOTED OTHERWISE. PROVIDE 1" CONDUIT TO ACCESSIBLE CEILING SPACE. "C" INDICATES HORIZONTAL FLUSH WALL MOUNT MOUNTED OUTLET BOX +6" ABOVE COUNTER SPLASH.
	COMPUTER/VOICE OUTLET WITH TWO (2) COMPUTER CONNECTORS AND ONE (1) VOICE CONNECTOR, ON FLUSH WALL MOUNTED OUTLET BOX AT + 18", UNLESS NOTED OTHERWISE. PROVIDE 1" CONDUIT TO ACCESSIBLE CEILING SPACE. "C" INDICATES HORIZINTAL FLUSH WALL MOUNT MOUNTED OUTLET BOX +6" ABOVE COUNTER SPLASH.
VC	VIDEO CONTROL OUTLET WITH TOUCH SCREEN CONTROLLER ON 3-GANG WALL PLASTER RING AT +45", UNLESS NOTED OTHERWISE. PROVIDE 1 1/4" CONDUIT FROM THE BOX TO ACCESSIBLE CEILING.
AV	AUDIO VIDEO OUTLET WITH AUDIO VIDEO INPUTS IN FLUSH WALL MOUNTED OUTLET BOX AT +18", UNLESS NOTED OTHERWISE. PROVIDE 1 1/4" CONDUIT FROM THE BOX TO ACCESSIBLE CEILING.
AV	AUDIO/VIDEO SYSTEM FLUSH IN CEILING SPEAKER (EXTRON # FF120). VERIFY EXACT LOCATION OF SPEAKER IN ROOM WITH MANUFACTURER PRIOR TO INSTALLATION.
ALS	ASSISTIVE LISTENING OUTLET BOX AT 45" FOR AUDIO/VIDEO SYSTEM SOUND OUTPUT TO ALS TRANSMITTER., PROVIDE 1" CONDUIT FROM THE BOX TO ACCESSIBLE CEILING.
VS	AUDIO/VISUAL SYSTEM MOUNTING ASSEMBLY AND EQUIPMENT ENCLOSURE. MOUNTED FLUSH IN CEILING. VERIFY EXACT LOCATION PRIOR TO INSTALLATION.
WAP W	CFCI DOUBLE DATA OUTLET WITH TWO SETS OF CAT6A CABLING TO NEAREST IDF CABINET VIA CABLE TRAY FOR WIRELESS ACCESS POINT. PROVIDE WIRELESS DEVICES MODEL MERAKI MR52. VERIFY THE TYPE WITH THE DISTRICT.
WAP	DATA DROP LOCATION WITH CONNECTORS AND 15 FEET OF SLACK CABLES LOCATED IN ACCESSIBLE CEILING SPACE ADJACENT TO EXTERIOR WALL OF BUILDING FOR EXTERIOR WIRELESS ACCESS POINT EQUIPMENT. PROVIDE TWO SETS OF DATA CABLES TO BUILDING'S IDF RACK/CABINET. PROVIDE WIRELESS DEVICES MERAKI MR84. VERIFY THE TYPE WITH THE DISTRICT.

	LIGHTING FIXTURE, RECESS MOUNTED, WITH OUTLET BOX.
	LIGHTING FIXTURE, SURFACE OR PENDANT MOUNTED ON FLUSH MOUNTED OUTLET BOX.
	LIGHTING FIXTURE, SURFACE, CHAIN OR PENDANT MOUNTED ON FLUSH MOUNTED OUTLET BOX.
	LIGHTING FIXTURE, SURFACE OR PENDANT MOUNTED, ON FLUSH CEILING MOUNTED OUTLET BOX.
	LIGHTING FIXTURE, RECESS MOUNTED, WITH OUTLET BOX.
	LIGHTING FIXTURE, SURFACE OR FLUSH MOUNTED AS INDICATED ON FIXTURE SCHEDULE, ON WALL MOUNTED OUTLET BOX, +90". STEM INDICATES WALL MOUNTED OUTLET BOX, TYPICAL.
	OUTLET ON EMERGENCY OR NIGHT LIGHT LIGHTING CIRCUIT.
	POST TOP LIGHTING STANDARD, POLE MOUNTED LUMINAIRE AND POLE SUPPORT BASE.
	LIGHTING FIXTURE WITH LAMPS ON NORMAL AND EMERGENCY LIGHTING CIRCUITS, PROVIDE SEPARATE LAMP BALLASTS AS REQUIRED.
E	LIGHTING FIXTURE RECESSED MOUNTED WITH OUTLET BOX AND REMOTE MOUNTED JUNCTION BOX CONCEALED ABOVE ACCESSIBLE CEILING. PROVIDE FLEXIBLE CONDUIT CONNECTION 6 FT. MAXIMUM LENGTH, 1/2" DIAMETER MINIMUM, FROM JUNCTION BOX TO FIXTURE OUTLET. PROVIDE CONDUCTORS IN CONDUIT, QUANTITY AS REQUIRED FOR INDICATED CIRCUITS AND SWITCHING CONTROLS, #12 (AWG) MINIMUM.
	EXIT SIGN SINGLE FACE, ON FLUSH CEILING MOUNTED OUTLET BOX. ARROW INDICATES DIRECTIONAL ARROW ON EXIT SIGN FACE.
	EXIT SIGN DOUBLE FACE, ON FLUSH CEILING MOUNTED OUTLET BOX.
	EXIT SIGN, ON FLUSH WALL MOUNTED OUTLET BOX, +90".
OS	LIGHTING CONTROL OCCUPANCY MOTION SENSOR ON FLUSH CEILING MOUNTED OUTLET BOX. MOUNT CENTERED IN CEILING TILE.
LC	LIGHTING LEVEL CONTROLLER (PHOTO SENSOR) ON FLUSH CEILING MOUNTED OUTLET BOX. MOUNT CENTERED IN CEILING TILE.
S 2,P A,B	SINGLE POLE TOGGLE SWITCH, ON FLUSH WALL MOUNTED OUTLET BOX, +45". INSTALL MULTIPLE SWITCHES UNDER COMMON COVER PLATE. SUBSCRIPT OR SUPERSCRIPT AT SWITCH SYMBOL INDICATES THE FOLLOWING: 2 - DOUBLE POLE 3 - THREE WAY 4 - FOUR WAY P - PILOT LIGHT M - MANUAL MOTOR STARTERS K - KEY OPERATED R - SPDT MOMENTARY CONTACT RELAY SWITCH V - VAPOR PROOF a,b,c,d, ETC. - MULTIPLE SWITCHES WITH IDENTIFICATION OF OUTLET CONTROLLED
2 100	FIXTURE SCHEDULE DESIGNATION: "2" INDICATES FIXTURE TYPE, "100" INDICATES FIXTURE TOTAL WATTAGE.
OS	LIGHTING CONTROL OCCUPANCY SENSOR ON FLUSH WALL MOUNTED OUTLET BOX, +45".
	SWITCH FOR CONTROL OF LOW VOLTAGE LIGHTING RELAY(S), ON FLUSH WALL MOUNTED OUTLET BOX, +45". INSTALL MULTIPLE SWITCHES UNDER COMMON COVER PLATE.
S	SINGLE GANG WALL TOGGLE SWITCH ON WALL MOUNTED OUTLET BOX, +45"
3 S	SINGLE G

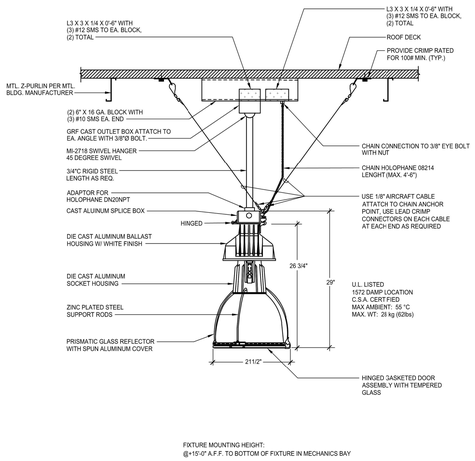

FIXTURE MOUNTING HEIGHT:
@+15'-0" A.F.F. TO BOTTOM OF FIXTURE IN MECHANICS BAY

FIXTURE TYPE F

PENDANT MOUNTING ANCHORAGE DETAIL - FIXTURE F N.T.S. 8

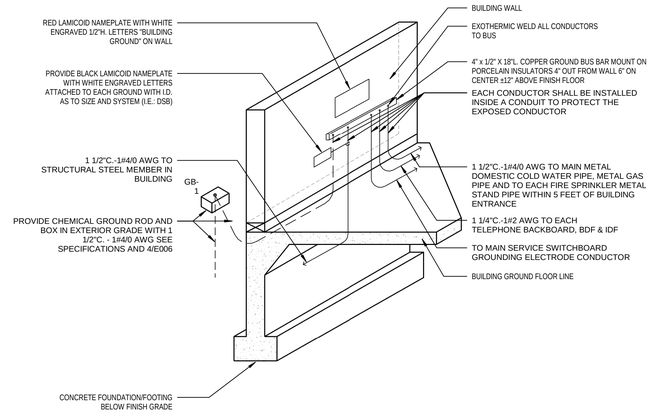

BUILDING ELECTRICAL SERVICE GROUND BUS N.T.S. 6

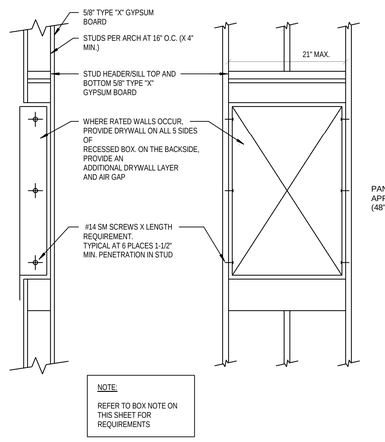

PANELBOARD
APPROX. WEIGHT: 100 LBS
(48"H X 20"W X 5.79"D)

PANELBOARD/ TERMINAL CABINET ANCHORAGE-FLUSH N.T.S. 3

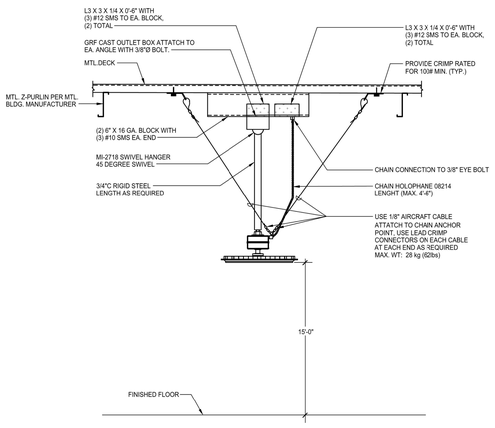

FIXTURE MOUNTING HEIGHT:
@+15'-0" A.F.F. TO BOTTOM OF FIXTURE IN WASH BAY

FIXTURE TYPE H

PENDANT MOUNTING ANCHORAGE DETAIL - FIXTURE H N.T.S. 9

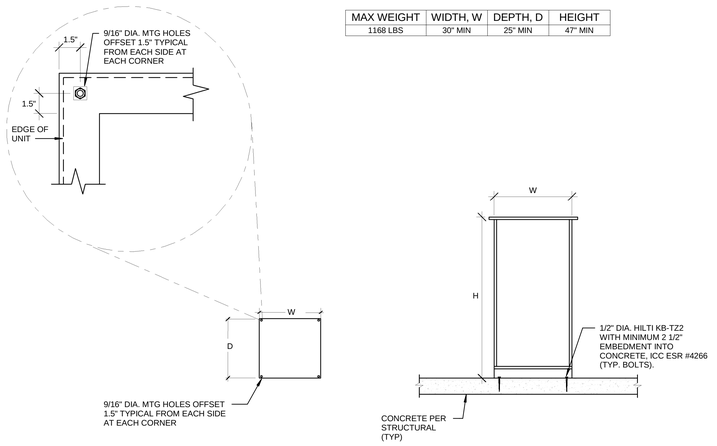

MAX WEIGHT	WIDTH, W	DEPTH, D	HEIGHT
1168 LBS	30" MIN	25" MIN	47" MIN

PLAN VIEW

ELEVATION

INVERTER ANCHORAGE N.T.S. 5

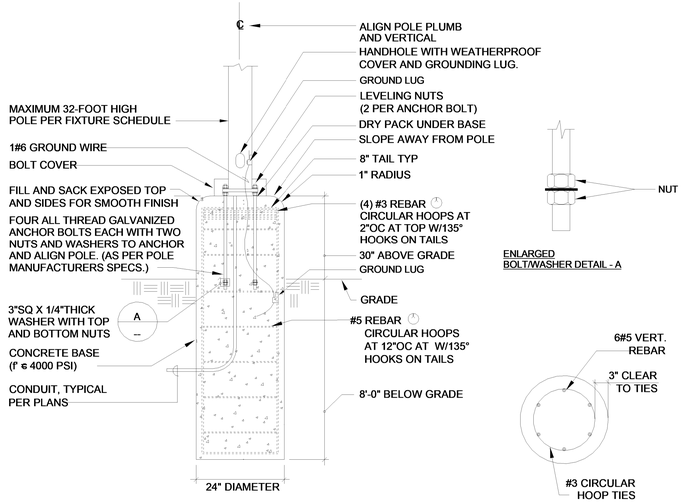

RAISED POLE BASE DETAIL (MAX 32' POLE) N.T.S. 7

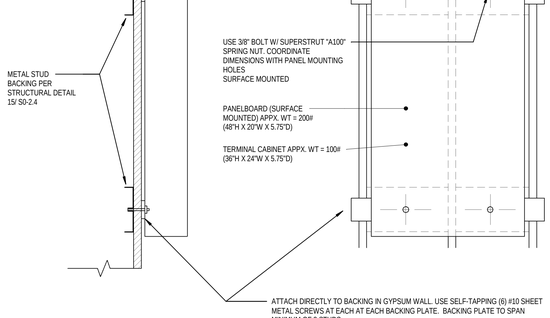

SURFACE MOUNTED PANELBOARD/TERMINAL CABINET ANCHORAGE N.T.S. 4

1. WALL ASSEMBLY -- THE 1 OR 2 HR FIRE-RATED GYPSUM WALLBOARD/STUD WALL ASSEMBLY SHALL BE CONSTRUCTED THE MATERIALS AND IN THE MANNER SPECIFIED IN OF THE INDIVIDUAL U300 OR U400 SERIES WALL AND PARTITION DESIGNS IN THE UL FIRE RESISTANCE DIRECTORY AND SHALL INCLUDE THE FOLLOWING CONSTRUCTION FEATURES:

1A. STUDS -- WALL FRAMING MAY CONSIST OF EITHER WOOD STUDS OR STEEL CHANNEL STUDS. WOOD STUDS TO CONSIST OF NOM 2 BY 4 IN. LUMBER SPACED 16 IN. OC. STEEL STUDS TO BE MIN 2-1/2 IN. WIDE AND SPACED MAX 24 IN. OC. WHEN STEEL STUDS ARE USED AND THE DIAM OF OPENING EXCEEDS THE WIDTH OF STUD CAVITY, THE OPENING SHALL BE FRAMED ON ALL SIDES USING LENGTHS OF STEEL STUD INSTALLED BETWEEN THE VERTICAL STUDS AND SCREW-ATTACHED TO THE STEEL STUDS AT EACH END. THE FRAMED OPENING IN THE WALL SHALL BE 4 TO 6 IN. WIDER AND 4 TO 6 IN. HIGHER THAN THE DIAM. OF THE PENETRATING ITEM SUCH THAT WHEN THE PENETRATING ITEM IS INSTALLED IN THE OPENING, A 2 TO 3 IN. CLEARANCE IS PRESENT BETWEEN THE PENETRATING ITEM AND THE FRAMING ON ALL FOUR SIDES.

1B. GYPSUM BOARD* -- 5/8 IN. THICK, 4 FT WIDE WITH SQUARE OR TAPERED EDGES. THE GYPSUM BOARD TYPE, THICKNESS, NUMBER OF LAYERS, FASTENER TYPE AND SHEET ORIENTATION SHALL BE AS SPECIFIED IN THE INDIVIDUAL U300 OR U400 SERIES DESIGN IN THE UL FIRE RESISTANCE DIRECTORY. MAX DIAM OF OPENING IS 32-1/4 IN. FOR STEEL STUD WALLS. MAX DIAM OF OPENING IS 14-1/2 IN. FOR WOOD STUD WALLS. THE F RATING OF THE FIRESTOP SYSTEM IS EQUAL TO THE FIRE RATING OF THE WALL ASSEMBLY.

2. THROUGH-PENETRANTS -- ONE METALLIC PIPE, CONDUIT OR TUBING TO BE INSTALLED EITHER CONCENTRICALLY OR ECCENTRICALLY WITHIN THE FIRESTOP SYSTEM. THE ANNULAR SPACE SHALL BE MIN 0 IN. TO MAX 2-1/4 IN. PIPE MAY BE INSTALLED WITH CONTINUOUS POINT CONTACT. PIPE, CONDUIT OR TUBING MAY BE INSTALLED AT AN ANGLE NOT GREATER THAN 45 DEGREES FROM PERPENDICULAR. PIPE, CONDUIT OR TUBING TO BE RIGIDLY SUPPORTED ON BOTH SIDES OF WALL ASSEMBLY. THE FOLLOWING TYPES AND SIZES OF METALLIC PIPES, CONDUITS OR TUBING MAY BE USED:

A. STEEL PIPE -- NOM 30 IN. DIAM (OR SMALLER) SCHEDULE 10 (OR HEAVIER) STEEL PIPE.

B. IRON PIPE -- NOM 30 IN. DIAM (OR SMALLER) CAST OR DUCTILE IRON PIPE.

C. COPPER PIPE -- NOM 6 IN. DIAM (OR SMALLER) REGULAR (OR HEAVIER) COPPER PIPE.

D. COPPER TUBING -- NOM 6 IN. DIAM (OR SMALLER) TYPE L (OR HEAVIER) COPPER TUBING.

E. CONDUIT -- NOM 6 IN. DIAM (OR SMALLER) STEEL CONDUIT.

F. CONDUIT -- NOM 4 IN. DIAM (OR SMALLER) STEEL ELECTRICAL METALLIC TUBING (EMT).

3. FILL, VOID OR CAVITY MATERIAL* -- SEALANT -- MIN 5/8 IN. THICKNESS OF FILL MATERIAL APPLIED WITHIN THE ANNULUS, FLUSH WITH BOTH SURFACES OF WALL. AT THE POINT OR CONTINUOUS CONTACT LOCATIONS BETWEEN PIPE AND WALL, A MIN 1/2 IN. DIAM BEAD OF FILL MATERIAL SHALL BE APPLIED AT THE PIPE WALL INTERFACE ON BOTH SURFACES OF WALL .

HILTI CONSTRUCTION CHEMICALS, DIV OF
HILTI INC -- FS-ONE SEALANT
*BEARING THE UL CLASSIFICATION MARK

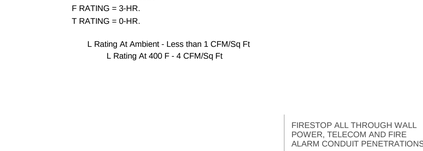

SECTION A-A

System No. C-AJ-1226
F RATING = 3-HR.
T RATING = 0-HR.

L Rating At Ambient - Less than 1 CFM/Sq Ft
L Rating At 400 F - 4 CFM/Sq Ft

FIRESTOP ALL THROUGH WALL POWER, TELECOM AND FIRE ALARM CONDUIT PENETRATIONS

RATED CONCRETE FLOOR/WALL SINGLE CONDUIT FIRE STOP N.T.S. 2

1. WALL ASSEMBLY -- THE 1 OR 2 HR FIRE-RATED GYPSUM WALLBOARD/STUD WALL ASSEMBLY SHALL BE CONSTRUCTED THE MATERIALS AND IN THE MANNER SPECIFIED IN OF THE INDIVIDUAL U300 OR U400 SERIES WALL AND PARTITION DESIGNS IN THE UL FIRE RESISTANCE DIRECTORY AND SHALL INCLUDE THE FOLLOWING CONSTRUCTION FEATURES:

1A. STUDS -- WALL FRAMING MAY CONSIST OF EITHER WOOD STUDS OR STEEL CHANNEL STUDS. WOOD STUDS TO CONSIST OF NOM 2 BY 4 IN. LUMBER SPACED 16 IN. OC. STEEL STUDS TO BE MIN 2-1/2 IN. WIDE AND SPACED MAX 24 IN. OC. WHEN STEEL STUDS ARE USED AND THE DIAM OF OPENING EXCEEDS THE WIDTH OF STUD CAVITY, THE OPENING SHALL BE FRAMED ON ALL SIDES USING LENGTHS OF STEEL STUD INSTALLED BETWEEN THE VERTICAL STUDS AND SCREW-ATTACHED TO THE STEEL STUDS AT EACH END. THE FRAMED OPENING IN THE WALL SHALL BE 4 TO 6 IN. WIDER AND 4 TO 6 IN. HIGHER THAN THE DIAM. OF THE PENETRATING ITEM SUCH THAT WHEN THE PENETRATING ITEM IS INSTALLED IN THE OPENING, A 2 TO 3 IN. CLEARANCE IS PRESENT BETWEEN THE PENETRATING ITEM AND THE FRAMING ON ALL FOUR SIDES.

1B. GYPSUM BOARD* -- 5/8 IN. THICK, 4 FT WIDE WITH SQUARE OR TAPERED EDGES. THE GYPSUM BOARD TYPE, THICKNESS, NUMBER OF LAYERS, FASTENER TYPE AND SHEET ORIENTATION SHALL BE AS SPECIFIED IN THE INDIVIDUAL U300 OR U400 SERIES DESIGN IN THE UL FIRE RESISTANCE DIRECTORY. MAX DIAM OF OPENING IS 32-1/4 IN. FOR STEEL STUD WALLS. MAX DIAM OF OPENING IS 14-1/2 IN. FOR WOOD STUD WALLS. THE F RATING OF THE FIRESTOP SYSTEM IS EQUAL TO THE FIRE RATING OF THE WALL ASSEMBLY.

2. THROUGH-PENETRANTS -- ONE METALLIC PIPE, CONDUIT OR TUBING TO BE INSTALLED EITHER CONCENTRICALLY OR ECCENTRICALLY WITHIN THE FIRESTOP SYSTEM. THE ANNULAR SPACE SHALL BE MIN 0 IN. TO MAX 2-1/4 IN. PIPE MAY BE INSTALLED WITH CONTINUOUS POINT CONTACT. PIPE, CONDUIT OR TUBING MAY BE INSTALLED AT AN ANGLE NOT GREATER THAN 45 DEGREES FROM PERPENDICULAR. PIPE, CONDUIT OR TUBING TO BE RIGIDLY SUPPORTED ON BOTH SIDES OF WALL ASSEMBLY. THE FOLLOWING TYPES AND SIZES OF METALLIC PIPES, CONDUITS OR TUBING MAY BE USED:

A. STEEL PIPE -- NOM 30 IN DIAM (OR SMALLER) SCHEDULE 10 (OR HEAVIER) STEEL PIPE.

B. IRON PIPE -- NOM 30 IN. DIAM (OR SMALLER) CAST OR DUCTILE IRON PIPE.

C. CONDUIT -- NOM 4 IN DIAM (OR SMALLER) STEEL ELECTRICAL METALLIC TUBING OR 6 IN. DIAM STEEL CONDUIT.

D. COPPER TUBING -- NOM 6 IN. DIAM (OR SMALLER) TYPE L (OR HEAVIER) COPPER TUBING.

E. COPPER PIPE -- NOM 6 IN. DIAM (OR SMALLER) REGULAR (OR HEAVIER) COPPER PIPE.

3. FILL, VOID OR CAVITY MATERIAL* -- SEALANT -- MIN 5/8 IN. THICKNESS OF FILL MATERIAL APPLIED WITHIN THE ANNULUS, FLUSH WITH BOTH SURFACES OF WALL. AT THE POINT OR CONTINUOUS CONTACT LOCATIONS BETWEEN PIPE AND WALL, A MIN 1/2 IN. DIAM BEAD OF FILL MATERIAL SHALL BE APPLIED AT THE PIPE WALL INTERFACE ON BOTH SURFACES OF WALL .

HILTI CONSTRUCTION CHEMICALS, DIV OF
HILTI INC -- FS-ONE SEALANT
*BEARING THE UL CLASSIFICATION MARK

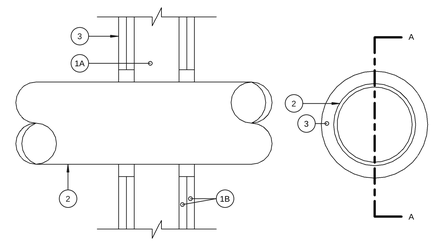

SECTION A-A

System No. W-L-1054
F Ratings - 1 and 2 Hr (See Items 1 and 3)
T Rating - 0 Hr

L Rating At Ambient - Less Than 1 CFM/Sq Ft
L Rating At 400 F - 4 CFM/Sq Ft

FIRESTOP ALL THROUGH WALL POWER, TELECOM AND FIRE ALARM CONDUIT PENETRATIONS

RATED STUD WALL FIRE STOP N.T.S. 1

FBAEngineering
Consulting Electrical Engineers
150 Paularino Avenue Suite A120
Costa Mesa, CA 92626
949.852.9995 • 949.852.1657 (fax)
fbaengr.com
FBA Job Number: 874.1055

CONSULTANT BRANDING

STAMPS

AGENCY APPROVAL
File No.: n.a.

RUHNAU CLARKE ARCHITECTS

MOUNT TRANSIT MAINTENANCE FACILITY :100% CD

PROJECT No. :50801
8/7/2023 9:03:53 AM

DRAWN BY: FBA CHECKED BY: FBA

ISSUE No._____ DATE_____ DESCRIPTION_____
ISSUE No._____ DATE_____ DESCRIPTION_____
ISSUE No._____ DATE_____ DESCRIPTION_____
ISSUE No._____ DATE_____ DESCRIPTION_____

REVISION No._____ DATE_____ DESCRIPTION_____
REVISION No._____ DATE_____ DESCRIPTION_____
REVISION No._____ DATE_____ DESCRIPTION_____
REVISION No._____ DATE_____ DESCRIPTION_____

RUHNAUCLARKE.COM
3775 TENTH STREET, RIVERSIDE CALIFORNIA 92501 (951) 684 4664/ 5751 PALMER WAY, SUITE C, CARLSBAD CALIFORNIA 92010 (760) 438 5899

MOUNT TRANSIT MAINTENANCE FACILITY
170 BUSINESS CENTER DR. BIG BEAR LAKES, CA
BIG BEAR LAKES

ELECTRICAL DETAILS

E1-0.2

50801

ADDITIONAL SUBMITTAL REQUIREMENT FOR LED LIGHT FIXTURES

PART 1: THE MANUFACTURERS AND MODEL NUMBER OF THE LED LUMINAIRE INDICATED IN THE LUMINAIRE SCHEDULE HAS BEEN SPECIFIED BECAUSE THE PERFORMANCE OF THE LUMINAIRE HAS BEEN ANALYZED IN DETAIL AND DETERMINED TO ADEQUATELY MEET THE REQUIREMENTS OF THE PROJECT. LUMINAIRES OTHER THE SPECIFIED ITEM MAY BE PROPOSED AS EQUAL, PROVIDED THE CONTRACTOR COMPLIES WITH THE FOLLOWING ADDITIONAL REQUIREMENTS:

A. AS PART OF THE SHOP DRAWINGS SUBMITTAL PROCESS, CONTRACTOR SHALL PROVIDE DOCUMENTATION FOR APPROVAL IN ACCORDANCE WITH PART 2 BELOW. ALL SUBMITTALS SHALL BE MADE IN A TIMELY MANNER TO ALLOW AT LEAST TWO WEEKS OF ENGINEERING REVIEW WITHOUT JEOPARDIZING THE PROJECT SCHEDULE.

B. CONTRACTOR SHALL NOT ACQUIRE THE PROPOSED EQUAL LUMINAIRE BEFORE OBTAINING WRITTEN APPROVAL OF SUBMITTALS.

C. CONTRACTOR SHALL REMOVE AND REPLACE WITHOUT CHANGE TO CONTRACT PRICE, ANY INSTALLED LUMINAIRE WHICH DO NOT PERFORM AS INDICATED IN THE CONTRACTOR'S APPROVED SUBMITTALS.

PART 2: SHOULD THE CONTRACTOR CHOOSE TO PROPOSE AN LED LUMINAIRE OTHER THAN THE SPECIFIED ITEM, CONTRACTOR SHALL PREPARE AND SUBMIT FOR APPROVAL OF THE FOLLOWING ITEMS IN ADDITION TO MANUFACTURERS SPECIFICATION SHEETS:

A. FOR INTERIOR LUMINAIRES, SCALED DRAWINGS OF EACH ROOM WHERE THE LUMINAIRE(S) ARE TO BE INSTALLED SHOWING COMPUTER GENERATED POINT-BY POINT CALCULATIONS OF THE MAINTAINED HORIZONTAL FOOTCANDLE LEVELS AT 30-INCHES ABOVE THE FLOOR. FOR CLASSROOMS, SUBMITTALS SHALL ALSO INDICATE VERTICAL FOOTCANDLE LEVELS ON THE PRIMARY TEACHING WALL / WHITE BOARD IN EACH ROOM. THE CALCULATIONS SHALL BE BASED ON THE IES LIGHT DISTRIBUTION FOR THE LUMINAIRE(S) PROPOSED USING 80% CEILING REFLECTANCE, 20% WALL REFLECTANCE, AND 10% FLOOR REFLECTANCE.

FIXTURE NOTES:

(NOTE: REFER TO SPECIFICATIONS FOR ADDITIONAL REQUIREMENTS)

1. FIXTURES LOCATED OUTDOORS SHALL BE RATED FOR STARTING AND OPERATING TEMPERATURES BELOW 0-DEGREES FAHRENHEIT.
2. FIXTURES WITH THE SAME TYPE # SHALL BE THE PRODUCTS OF THE SAME MANUFACTURER, I.E., TYPE #1, 1A, 1B, ETC., SHALL BE THE SAME MANUFACTURER).
3. THE CONTRACTOR SHALL VERIFY ACTUAL CEILING AND WALL CONSTRUCTION TYPE AS DEFINED ON THE ARCHITECTURAL DRAWINGS AND FURNISH LIGHTING FIXTURES WITH THE CORRECT AND COMPLETE MOUNTING HARDWARE AND MOUNTING DEVICES TO ACCOMMODATE BUILDING CONSTRUCTION AT EACH INSTALL LOCATION, WHETHER OR NOT SUCH VARIATIONS ARE INDICATED BY THE FIXTURE CATALOG NUMBER.
4. THE CONTRACTOR SHALL VERIFY DEPTH OF ALL RECESSED LIGHTING FIXTURES WITH ARCHITECTURAL DRAWINGS PRIOR TO ORDERING FIXTURES. ANY DISCREPANCIES THAT WILL CAUSE RECESSED FIXTURES NOT TO FIT INTO CEILING/ WALL SPACES SHALL BE REPORTED TO THE OWNER'S REPRESENTATIVE PRIOR TO SUBMITTING SHOP DRAWINGS AND PRIOR TO ORDERING FIXTURES.
5. LIGHT FIXTURES RECESSED IN CEILING OR WALL WITH A ONE HOUR OR MORE FIRE RATING BUILDING CONSTRUCTION, EACH FIXTURE SHALL BE ENCLOSED IN A BOX WHICH HAS A FIRE RATING EQUAL TO THAT OF THE BUILDING CONSTRUCTION. PROVIDE MINIMUM OF 3" CLEAR FROM ALL SIDES AND TOP OF RECESSED LIGHT FIXTURES.
6. WALL AND CEILING INSULATION SHALL BE INSTALLED TO ALLOW 3" MINIMUM CLEARANCE FROM BOTTOM, SIDES AND TOP OF RECESSED LIGHT FIXTURES.
7. VERIFY MOUNTING HEIGHT OF ALL WALL MOUNTED FIXTURES WITH ARCHITECT PRIOR TO ROUGH-IN.
8. REFER TO ARCHITECTURAL REFLECTED CEILING PLANS AND WALL ELEVATIONS FOR EXACT INSTALL LOCATION OF ALL FIXTURES.
9. VERIFY VOLTAGE BEING SUPPLIED TO FIXTURES PRIOR TO SUBMITTING SHOP DRAWINGS AND PRIOR TO ORDERING FIXTURE VOLTAGE SHALL MATCH BRANCH CIRCUITS CONNECTING TO RESPECTIVE FIXTURE.
10. SUSPENDED MOUNT LIGHT FIXTURES THAT MAY STRIKE STRUCTURAL ELEMENTS, WALL OR MECHANICAL DUCT WORK IF SWIVELED AT +45-DEGREES SHALL BE SWAY BRACED WITH AIR CRAFT CABLE TO PREVENT STRIKING SAID APPURTENANCES DURING SEISMIC EVENTS, AS REQUIRED.
11. OCCUPANCY MOTION SENSOR SYSTEM SHALL BE PROVIDED IN EVERY ROOM/ SPACE LOCATION THROUGHOUT THE FACILITY AND AS DESCRIBED IN THE SPECIFICATIONS, WHETHER SYMBOLS ARE SHOWN OR NOT SHOWN ON THE PLANS.
12. PROVIDE TESTING CERTIFICATION AND COMMISSIONING OF LIGHTING FIXTURES, INSTALLATION, LIGHTING CONTROL SYSTEM AND LIGHTING SYSTEM OPERATION.
13. CONTRACTOR SHALL COORDINATE INSTALLATION OF RECESSED LIGHTING FIXTURES IN HARD LID OR STUCCO CEILING AREAS WITH FRAMING CONTRACTOR.
14. ALL "EDGE-LIT" EXIT SIGN SHALL BE EQUIPPED WITH MIRRORED BACKGROUND.
15. ALL LED DRIVERS SHALL BE COMPATIBLE WITH THE SPECIFIED LIGHTING CONTROLS.
16. PROVIDE 3/4"C. BETWEEN ALL LUMINAIRES AND CONTROL DEVICES LOCATED IN NON-ACCESSIBLE CEILING SPACES.

LIGHTING FIXTURE SCHEDULE

IMAGE	TYPE	DESCRIPTION	MANUFACTURER NAME	MANUFACTURER CATALOG NO.	LAMP TYPE	LAMP LUMENS	LAMP CCT	LAMP CRI (MIN)	POWER VOLTAGE	POWER INPUT WATTAGE	MOUNTING TYPE	NOTES
	A	2' X 4' LED RECESSED T-BAR MOUNT; END CAPS DIE-FORMED CODE-GAUGE COLD-ROLLED STEEL HOUSING, REGRESSED ALUMINUM HINGED DOORFRAME ASSEMBLY RETAINS, PATTERN 12 ACRYLIC LENS, 0.125" NOMINAL, STANDARD DIMMING 0-10V.	COLUMBIA LIGHTING	LJT24 SERIES OR EQUAL	LED	5526	4000	80	120	45	RECESSED T-BAR	CONFIRM HOUSING FINISH WITH ARCHITECT
	B	1' X 4' LED RECESSED LUMINAIRE, END CAPS DIE-FORMED CODE-GAUGE COLD-ROLLED STEEL HOUSING, SUITABLE FOR WET LOCATION. REGRESSED ALUMINUM HINGED DOORFRAME ASSEMBLY RETAINS, PATTERN 12 ACRYLIC LENS, 0.125" NOMINAL, STANDARD DIMMING 0-10V.	COLUMBIA LIGHTING	LJT14 SERIES OR EQUAL	LED	4834	4000	80	120	45	RECESSED	CONFIRM HOUSING FINISH WITH ARCHITECT
	C	4' LED MARINE GRADE ALUMINUM WITH DIE-CAST END CAPS, MATTE WHITE POLYESTER POWDER COAT FINISHED, PEARLESCENT POLYCARBONATE LENS, DIMMING CONSTANT CURRENT (LED).	KENALL	MLHA 12 SERIES OR EQUAL	LED	5341	4000	80	120	49	SURFACE	CONFIRM HOUSING FINISH WITH ARCHITECT
	D	LED STRIPLIGHT 48" LENGTH, CODE-GAUGE STEEL WIREWAY HOUSING, CURVE AND FROSTED ACRYLIC LENS, WIDE DSTRIBUTION, STANDARD 0-10V DIMMIN.	COLUMBIA LIGHTING	MPS SERIES OR EQUAL	LED	2080	4000	80	120	26.7	SURFACE/ CHAIN HUNG	CONFIRM HOUSING FINISH WITH ARCHITECT
	E	4' LED LINEAR ENCLOSED AND GASKETED, UL 5VA FIBERGLASS HOUSING, LINEAL RIBBED FROSTED ACRYLIC LENS, STANDARD DIMMING 0-10V.	COLUMBIA LIGHTING	LXEM SERIES OR EQUAL	LED	6500	4000	80	120	47	PENDANT @ 12'-0" AND 15'-0" A.F.F.	CONFIRM HOUSING FINISH WITH ARCHITECT
	F	LED PENDANT HIGH BAYS, DIE-CAST HOUSING, FROSTED ACRYLIC LENS, STANDARD DIMMING 0-10V.	PEACHTREE LIGHTING	UTB2 HIGH BAY SERIES OR EQUAL	LED	17971	4000	80	120	119	PENDANT @ 15'-0" A.F.F.	CONFIRM HOUSING FINISH WITH ARCHITECT
	G	LED SURFACE CANOPY LUMINAIRE, STANDARD DIMMING 0-10V.	LITHONIA LIGHTING	D SERIES GARAGE OR EQUAL	LED	5409	4000	80	120	46	SURFACE	CONFIRM HOUSING FINISH WITH ARCHITECT
	H	PENDANT MOUNTED COMPACT WET LOCATION HIGH BAY LED LIGHT FIXTURE, IP66 RATED WITH DIE-CAST ALUMINUM HOUSING AND POLYCARBONATE LENS.	HUBBEL LIGHTING	CRB-40MM-EDU SERIES OR EQUAL	LED	21349	N/A	N/A	120	152	PENDANT @ 15'-0" A.F.F.	CONFIRM HOUSING FINISH WITH ARCHITECT
	I	6" DIAMETER RECESSED DOWN LIGHT, WITH MEDIUM SPREAD BEAM, GALVAIZED STEEL FRAME WITH INTEGRAL JUNCTION BOX. THE FIXTURE SHALL BE U.L. LISTED FOR WET LOCATION UNDER CANOPY.	VANTAGELED	VVR6VEFLED-U-30-40K-VVRL601 4P-WHT OR EQUAL	LED	40000	3000	80	120	30	RECESS	CONFIRM HOUSING FINISH WITH ARCHITECT
	SP1	LED AREA LIGHT WITH DIE-CAST ALUMINUM HOUSING, ACRYLIC LENSES, TYPE 3M LIGHT DISTRIBUTION, MOUNTED TO 30-FEET HIGH X 5-INCH DIAMETER NON-TAPERED STEEL POLE, ALL FINISHED WITH COLOR AS SELECTED BY ARCHITECT. ENTIRE ASSEMBLY RATED FOR STEADY 90MPH WIND WITH 1.3 GUST FACTOR.	LITHONIA LIGHTING	DSX1-SERIES OR EQUAL	LED	19049	4000	80	120	163	POST	CONFIRM HOUSING FINISH WITH ARCHITECT
	SP2	SAME AS TYPE SP1 EXCEPT TWO LIMINAIRES MOUNTED 90-DEGREES APART.	LITHONIA LIGHTING	DSX1-SERIES OR EQUAL	LED	19049	4000	80	120	326	POST	CONFIRM HOUSING FINISH WITH ARCHITECT
	SP3	SAME AS TYPE SP1 EXCEPT TWO LIMINAIRES MOUNTED 180-DEGREES APART.	LITHONIA LIGHTING	DSX1-SERIES OR EQUAL	LED	19049	4000	80	120	326	POST	CONFIRM HOUSING FINISH WITH ARCHITECT
	WP1	LED WALL SCONCE WITH DIE-CAST ALUMINUM HOUSING AND DOOR FRAME, FULLY GASKETED, UL LISTED FOR WET LOCATIONS, CUSTOM COLOR AS SELECTRED BY ARCHITECT.	LITHONIA LIGHTING	WDGE2 LED SERIES OR EQUAL	LED	5567	4000	80	120	52	SURFACE	CONFIRM HOUSING FINISH WITH ARCHITECT
	WP2	MINI LED LIGHT FIXTURE WALL PACK WITH INJECTION MOLDED POLYCABONATE ENCLOSURE.	BARRON LIGHTING	BARRON SERIES OR EQUAL	LED	-	35000	1839	120	16	SURFACE/ WALL	CONFIRM HOUSING FINISH WITH ARCHITECT
	X1	LED EDGE-LIT EXIT SIGN FIXTURE WITH EXTRUDED BRUSHED ALUMINUM FINISH, CLEAR ACRYLIC PANELS, GREEN LETTERS, OR DOUBLE FACES AS INDICATED ON PLANS	EVENLITE	RAZOR MK3 SERIES OR EQUAL	LED	-	N/A	N/A	120	3	SURFACE/ WALL	CONFIRM HOUSING FINISH WITH ARCHITECT

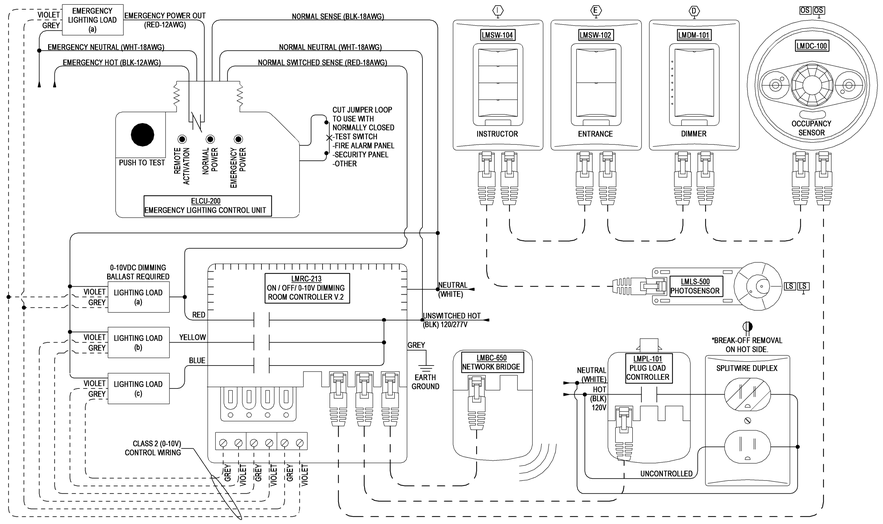

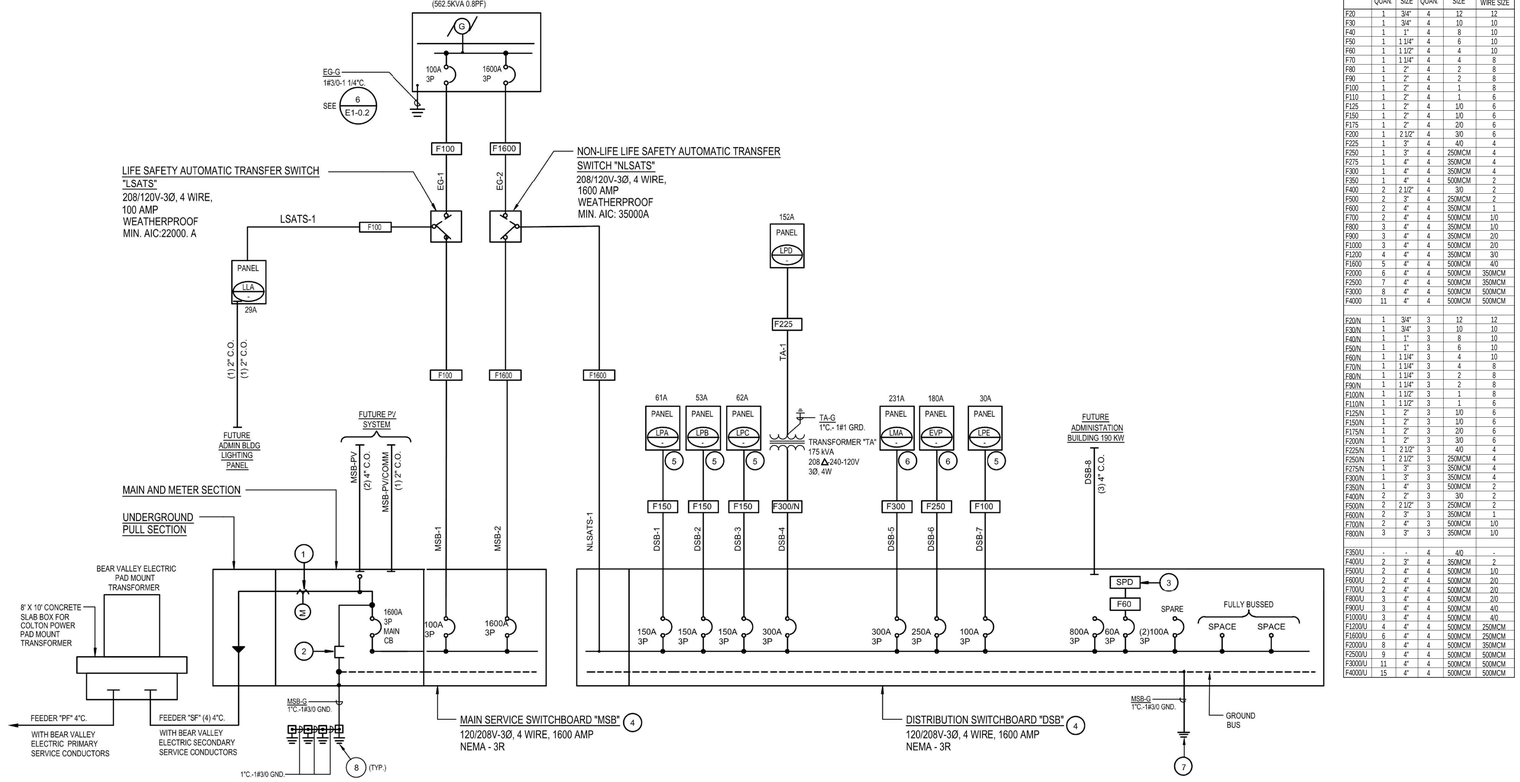

FEEDER SCHEDULE					
COPPER CONDUCTORS THW 600V (AWG)					
FEEDER TYPE	CONDUIT SIZE AND QUANTITY		CONDUCTORS IN EACH CONDUIT		
			PHASE/NEUTRAL		EQUIPMENT GROUND WIRE SIZE
	QUAN.	SIZE	QUAN.	SIZE	
F20	1	3/4"	4	12	12
F30	1	3/4"	4	10	10
F40	1	1"	4	8	10
F50	1	1 1/4"	4	6	10
F60	1	1 1/2"	4	4	10
F70	1	1 1/4"	4	4	8
F80	1	2"	4	2	8
F90	1	2"	4	2	8
F100	1	2"	4	1	8
F110	1	2"	4	1	6
F125	1	2"	4	1/0	6
F150	1	2"	4	1/0	6
F175	1	2"	4	2/0	6
F200	1	2 1/2"	4	3/0	6
F225	1	3"	4	4/0	4
F250	1	3"	4	250MCM	4
F275	1	4"	4	350MCM	4
F300	1	4"	4	350MCM	4
F350	1	4"	4	500MCM	2
F400	2	2 1/2"	4	3/0	2
F500	2	3"	4	250MCM	2
F600	2	4"	4	350MCM	1
F700	2	4"	4	500MCM	1/0
F800	3	4"	4	350MCM	1/0
F900	3	4"	4	350MCM	2/0
F1000	3	4"	4	500MCM	2/0
F1200	4	4"	4	350MCM	3/0
F1600	5	4"	4	500MCM	4/0
F2000	6	4"	4	500MCM	350MCM
F2500	7	4"	4	500MCM	350MCM
F3000	8	4"	4	500MCM	500MCM
F4000	11	4"	4	500MCM	500MCM
F20/N	1	3/4"	3	12	12
F30/N	1	3/4"	3	10	10
F40/N	1	1"	3	8	10
F50/N	1	1"	3	6	10
F60/N	1	1 1/4"	3	4	10
F70/N	1	1 1/4"	3	4	8
F80/N	1	1 1/4"	3	2	8
F90/N	1	1 1/4"	3	2	8
F100/N	1	1 1/2"	3	1	8
F110/N	1	1 1/2"	3	1	6
F125/N	1	2"	3	1/0	6
F150/N	1	2"	3	1/0	6
F175/N	1	2"	3	2/0	6
F200/N	1	2"	3	3/0	6
F225/N	1	2 1/2"	3	4/0	4
F250/N	1	3"	3	250MCM	4
F275/N	1	3"	3	350MCM	4
F300/N	1	3"	3	350MCM	4
F350/N	1	4"	3	500MCM	2
F400/N	2	2"	3	3/0	2
F500/N	2	2 1/2"	3	250MCM	2
F600/N	2	3"	3	350MCM	1
F700/N	2	4"	3	500MCM	1/0
F800/N	3	3"	3	350MCM	1/0
F350/U	-	-	4	4/0	-
F400/U	2	3"	4	350MCM	2
F500/U	2	4"	4	500MCM	1/0
F600/U	2	4"	4	500MCM	2/0
F700/U	2	4"	4	500MCM	2/0
F800/U	3	4"	4	500MCM	2/0
F900/U	3	4"	4	500MCM	4/0
F1000/U	3	4"	4	500MCM	4/0
F1200/U	4	4"	4	500MCM	250MCM
F1600/U	6	4"	4	500MCM	250MCM
F2000/U	8	4"	4	500MCM	350MCM
F2500/U	9	4"	4	500MCM	500MCM
F3000/U	11	4"	4	500MCM	500MCM
F4000/U	15	4"	4	500MCM	500MCM

MOUNT TRANSIT MAINTENANCE FACILITY MAIN SERVICE LOAD CALCULATION

LOAD DESCRIPTION	CONNECTED LOAD (kA)	CONNECTED CURRENT (A)
PANEL LLA	29	10440
PANEL LPA	81	29160
PANEL LPB	53	19080
PANEL LPC	62	22320
PANEL LPD	175	63000
PANEL LMA	231	83160
PANEL EVP	180	64800
FUTURE ADMIN BUILDING	528	190000
TOTAL CONNECTED LOADS	1339	481960
PROPOSED SERVICE SIZE: 208/120V-3PHASE-4W-1600A		

STAMPS

AGENCY APPROVAL
File No.: n.a.

FBA Engineering
Consulting Electrical Engineers
150 Paularino Avenue Suite A120
Costa Mesa, CA 92626
949.852.9995 • 949.852.1657 (fax)
fbaengr.com
FBA Job Number: 874.1055

RUHNAU CLARKE ARCHITECTS
CONSULTANT BRANDING

PLAN NOTES

1. METERING PROVISIONS SHALL COMPLY WITH CITY OF BEAR VALLEY POWER COMPANY SERVICE REQUIREMENTS.
2. NEUTRAL TO GROUND REMOVABLE BUS LINK FOR SERVICE ENTRANCE EQUIPMENT.
3. SURGE PROTECTION DEVICE SHALL BE MOUNTED AS PART OF THE SWITCHBOARD ASSEMBLY.
4. THE SWITCHBOARD AND ITS CIRCUIT BREAKERS SHALL BE RATED FOR MINIMUM OF 39,000A.
5. PANELBOARD SHALL BE RATED FOR MINIMUM OF 14,000A.
6. PANELBOARD SHALL BE RATED FOR MINIMUM OF 22,000A.
7. CONNECT TO MAIN SWITCHBOARD GROUNDING SYSTEM.
8. PROVIDE 12" X 12" X 12"D. BOTTOMLESS CONCRETE PULL BOX WITH PEA GRAVEL BASE AND CHEMICAL ASSEMBLY GROUND ROD. MOUNT PULL BOX FLUSH ON GRADE AND ENGRAVE COVER "GROUND"; QUANTITY AS REQUIRED TO ACHIEVE 25 OHMS TO GROUND MAXIMUM.

MOUNT TRANSIT MAINTENANCE FACILITY :100% CD

LIGHTING CONTROL WIRING DIAGRAM | N.T.S. | 2

PROJECT No. :50801
8/7/2023 9:03:55 AM

DRAWN BY: _____ CHECKED BY: _____

ISSUE No.____ DATE____ DESCRIPTION____
ISSUE No.____ DATE____ DESCRIPTION____
ISSUE No.____ DATE____ DESCRIPTION____
ISSUE No.____ DATE____ DESCRIPTION____

REVISION No.____ DATE____ DESCRIPTION____
REVISION No.____ DATE____ DESCRIPTION____
REVISION No.____ DATE____ DESCRIPTION____
REVISION No.____ DATE____ DESCRIPTION____

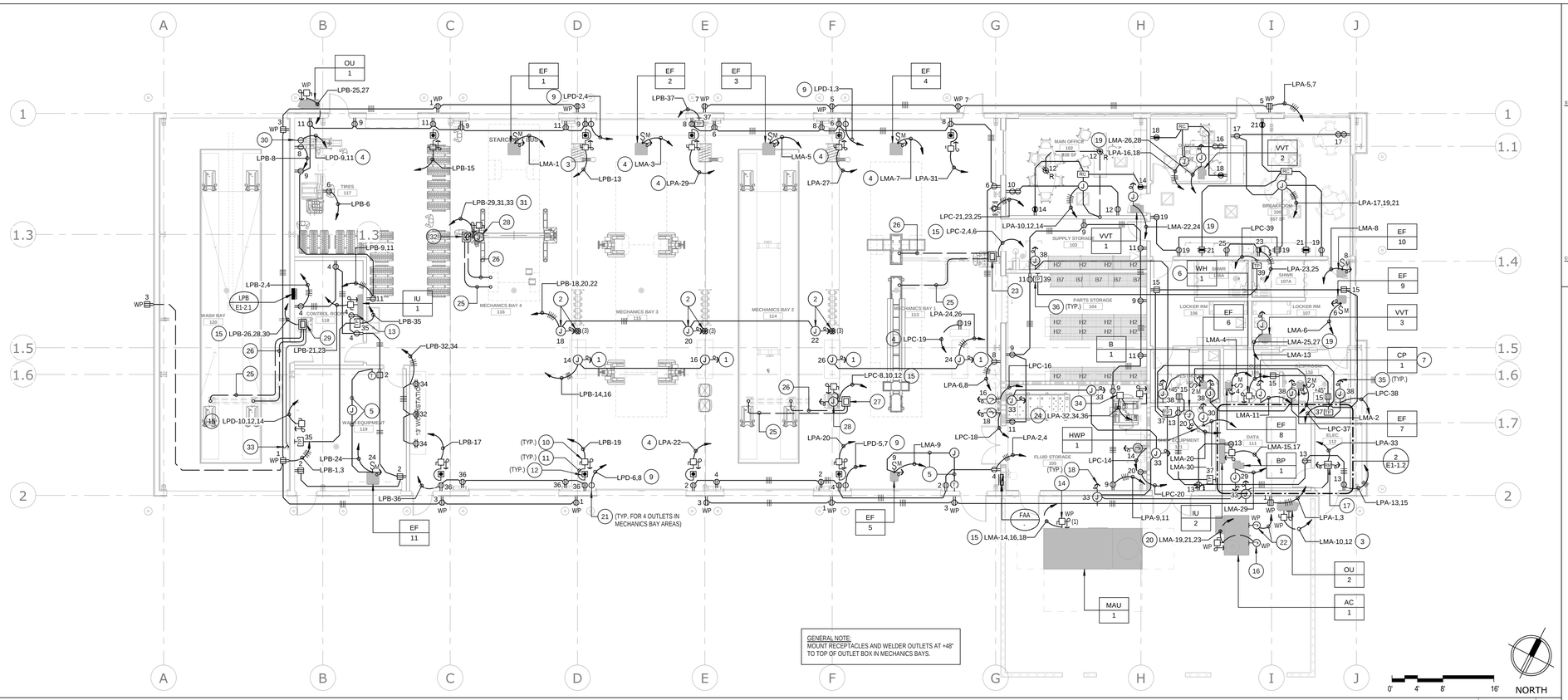

POWER PLAN | 1/8" = 1'-0" | 2

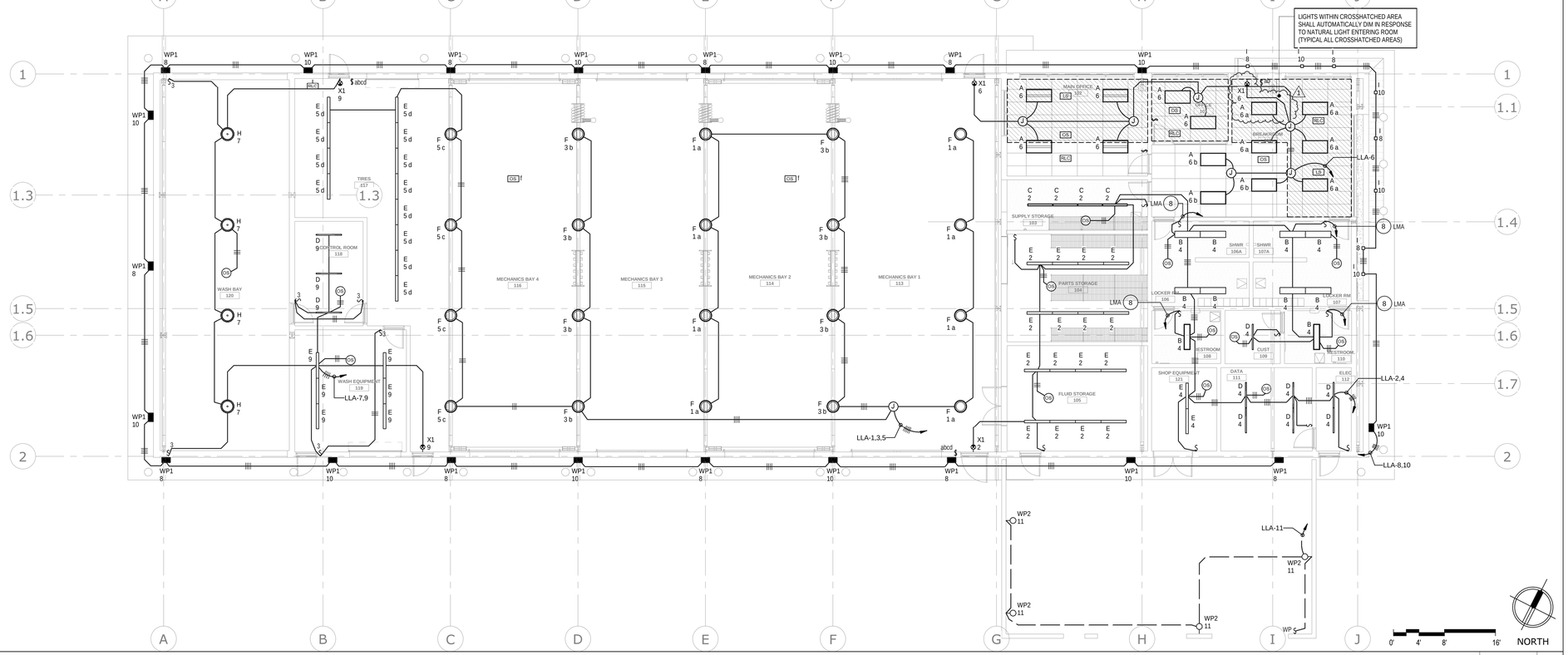

LIGHTING PLAN | 1/8" = 1'-0" | 1

STAMPS

AGENCY APPROVAL
File No.: n.a.

FBAEngineering
Consulting Electrical Engineers
150 Paularino Avenue Suite A120
Costa Mesa, CA 92626
949.852.9995 • 949.852.1657 (fax)
fbaengr.com
FBA Job Number: 874.1055

CONSULTANT BRANDING

RUHNAU CLARKE ARCHITECTS

PLAN NOTES

1. PROVIDE 120V CONNECTION TO MOTORIZED HOSE REEL ASSEMBLY FOR STATIONARY WORKBENCH AS PER MANUFACTURER REQUIREMENTS.
2. PROVIDE 120V CONNECTION OUTLET WITH TRI-PLUG GFCI RECEPTACLE POWER TO MOTORIZED DROP REEL SD CORD AND LIGHT REELS MODEL GRACO #24Y864 FOR THE MOBILE COLUMN LIFT'S BATTERY CHARGING. REFER TO LUBRICATION REEL BANK SPECIFICATION FOR MANUFACTURER REQUIREMENTS.
3. PROVIDE 3/4"C.- 2#8, 1#10 GRD.
4. PROVIDE 3/4"C.- 2#10, 1#10 GRD.
5. PROVIDE 3/4" CONDUIT FROM THE THERMOSTAT TO THE ROOM EXHAUST FAN IN THE ROOM. CONTROL WIRING PROVIDED BY MECHANICAL CONTRACTOR. REFER TO MECHANICAL DRAWINGS FOR EXACT LOCATION AND REQUIREMENTS.
6. CONNECT POWER TO WATER HEATER AS REQUIRED. VERIFY EXACT LOCATION AND REQUIREMENTS WITH PLUMBING DRAWINGS PRIOR TO ANY ROUGH-IN.
7. CONNECT POWER TO WATER HEATER CIRCULATION PUMP, ROUTED THROUGH MECHANICAL OVERRIDE TIMER AS REQUIRED. VERIFY EXACT LOCATION WITH PLUMBING DRAWINGS PRIOR TO ANY ROUGH-IN.
8. PROVIDE 3/4"C.- 2#12, 1#12 GRD. TO RELAY FOR ROOM'S EXHAUST FAN IN THE PANEL INDICATED. SEE PANEL "LMA" ON SHEET E1-2.2 FOR MORE INFORMATION.
9. PROVIDE 1"C.- 2#4, 1#8 GRD.
10. CONNECT POWER TO ROLL-UP DOOR.
11. PROVIDE 3/4"C. WITH CONTROL WIRING.
12. PROVIDE AND INSTALL CONTROL STATION FOR ROLL-UP DOOR AND CONNECT AS REQUIRED.
13. CONNECT RECEPTACLE TO THE SIDE OF THE UNIT FOR CONDENSING PUMP. VERIFY LOCATION WITH PUMP INSTALLER.
14. PROVIDE NEW FUSED COMBINATION MAGNETIC MOTOR STARTER NEMA SIZE 1. REFER TO MECHANICAL PLANS FOR MORE INFORMATION.
15. PROVIDE 1 1/4"C.- 3#2, 1#6 GRD.
16. PROVIDE A J-BOX WITH 3/4"C. AND CONNECT TO POWER EXHAUST.
17. ROUTE SMOKE FIRE DAMPER POWER THROUGH FIRE ALARM CONTROL RELAY MODULE. SEE SHEET E1-1.2 FOR MORE INFORMATION.
18. CONNECT POWER TO SMOKE FIRE DAMPER/ZONE DAMPER ON HVAC DUCT.
19. PROVIDE 1 1/4"C.- 2#2, 1#6 GRD.
20. PROVIDE 1"C.- 3#6, 1#10 GRD.
21. POWER OUTLETS FOR THE WELDERS WILL BE PROVIDED THROUGHOUT THE SERVICE AREA SO THAT THE WELDER WITH 25'-0" LONG POWER CORD CAN BE USED IN ALL AREAS. PROVIDE 240V-2P-60A TWIST LOCK SPECIAL TYPE RECEPTACLE (NEMA L15-60) FOR THE WELDER(S) THAT WILL BE UTILIZED FOR THE ENTIRE FACILITY.
22. PROVIDE A J-BOX WITH 3/4" CONDUIT FROM THE AC UNIT TO THE PROGRAMMABLE THERMOSTAT LOCATED IN THE BUILDING. CONTROL WIRING PROVIDED BY MECHANICAL CONTRACTOR. REFER TO MECHANICAL DRAWINGS FOR EXACT LOCATION AND REQUIREMENTS.
23. PROVIDE AND INSTALL WALL MOUNTED CONTROL CONSOLE FOR HEAVY DUTY LIFT. SEE EQUIPMENT SCHEDULE OF "PACIFIC LIFT" EQUIPMENT COMPANY FOR MANUFACTURER'S REQUIREMENTS.
24. PROVIDE 1"C.- 3#8, 1#10 GRD.
25. UNDERGROUND CONDUITS FOR POWER CONNECTION PROVIDED BY "PACIFIC LIFT AND EQUIPMENT COMPANY". SEE "ROTARY (VSG) VEHICLE LIFT" DRAWINGS FOR MORE INFORMATION.
26. UNDERGROUND CONDUITS FOR FOR CONTROL CONNECTION PROVIDED BY "PACIFIC LIFT AND EQUIPMENT COMPANY". SEE "" ROTARY (VSG) VEHICLE LIFT CONTROL" DRAWINGS FOR MORE INFORMATION.
27. PROVIDE AND INSTALL IN-GROUND CONTROL CONSOLE FOR ROTARY LIFT. SEE EQUIPMENT SCHEDULE OF "PACIFIC LIFT" EQUIPMENT COMPANY FOR MANUFACTURER'S REQUIREMENTS.
28. PROVIDE 208/120V-3 PHASE CONNECTION TO MOTORIZED DROP REEL TO ROTARY CONTROL CONSOLE. POWER SHOULD BE DROPED DOWN FROM OVERHEAD TO A DISCONNECT ATTACHED TO THE SIDE OF THE CONSOLE. SEE EQUIPMENT SCHEDULE OF "PACIFIC LIFT" EQUIPEMENT COMPANY FOR MANUFACTURE'S REQUIREMENTS.
29. PROVIDE AND INSTALL WALL MOUNTED CONTROL CONSOLE IN CONTROL ROOM FOR ROTARY LIFT. SEE EQUIPMENT SCHEDULE OF "PACIFIC LIFT" EQUIPMENT COMPANY FOR MANUFACTURER'S REQUIREMENTS.
30. PROVIDE 240V-2P-20A TWIST LOCK SPECIAL TYPE RECEPTACLE (NEMA L6-20P) FOR THE ROTARY TIRE CHANGER MACHINE INDICATED.
31. PROVIDE 3/4"C.- 3#10, 1#10 GRD.
32. INSTALL RELOCATED IN-GROUND CONTROL CONSOLE FOR VEHICLE LIFT. SEE EQUIPMENT SCHEDULE OF "PACIFIC LIFT" EQUIPMENT COMPANY FOR MANUFACTURER'S REQUIREMENTS.
33. PROVIDE ON/OFF SWITCH IN WASH BAY AREA FOR ROTARY LIFT.
34. PROVIDE 1' X 1' X 6"D. PULL BOX FOR ROUTING UNDERGROUND POWER FROM WALL MOUNTED DISCONNECT TO AIR COMPRESSOR EQUIPMENT.
35. PROVIDE A J-BOX AND CONNECT POWER TO LAVATORY SENSOR AND WATER CLOSET SENSOR AS REQUIRED. REFER TO PLUMBING DRAWINGS FOR EXACT LOCATION AND REQUIREMENTS.
36. PROVIDE A J-BOX AND CONNECT POWER TO TRAP PRIMER AS REQUIRED. REFER TO PLUMBING DRAWINGS FOR EXACT LOCATION AND REQUIREMENTS .

MOUNT TRANSIT MAINTENANCE FACILITY :100% CD

PROJECT No. :50801
7/29/2023 9:59:17 AM

DRAWN BY: CHECKED BY:

ISSUE No._____ DATE_____ DESCRIPTION_____
ISSUE No._____ DATE_____ DESCRIPTION_____
ISSUE No._____ DATE_____ DESCRIPTION_____
ISSUE No._____ DATE_____ DESCRIPTION_____

REVISION No.1 DATE07.28.23 DESCRIPTIONRevision 1
REVISION No._____ DATE_____ DESCRIPTION_____
REVISION No._____ DATE_____ DESCRIPTION_____
REVISION No._____ DATE_____ DESCRIPTION_____

RUHNAUCLARKE.COM
3775 TENTH STREET, RIVERSIDE CALIFORNIA 92501 (951) 684 4664/ 5751 PALMER WAY, SUITE C, CARLSBAD CALIFORNIA 92010 (760) 438 5899

MOUNT TRANSIT MAINTENANCE FACILITY
170 BUSINESS CENTER DR. BIG BEAR LAKES, CA
BIG BEAR LAKES

LIGHTING AND POWER PLANS

E1-1.1

50801

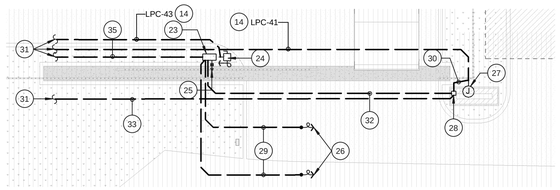

0' 4' 8' 16' NORTH

ENTRY GATE ENLARGED ELECTRICAL PLAN | 1/8" = 1'-0" | 4

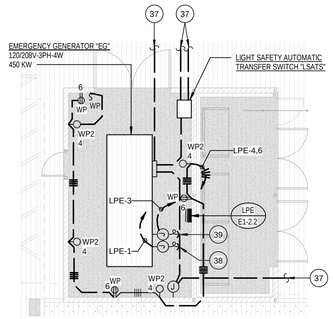

0' 4' 8' 16' NORTH

ELECTRICAL EMERGENCY ENCLOSURE | 1/8" = 1'-0" | 5

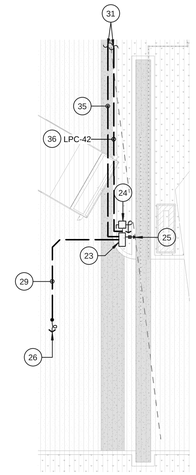

0' 4' 8' 16' NORTH

EXIT GATE ENLARGED ELECTRICAL PLAN | 1/8" = 1'-0" | 3

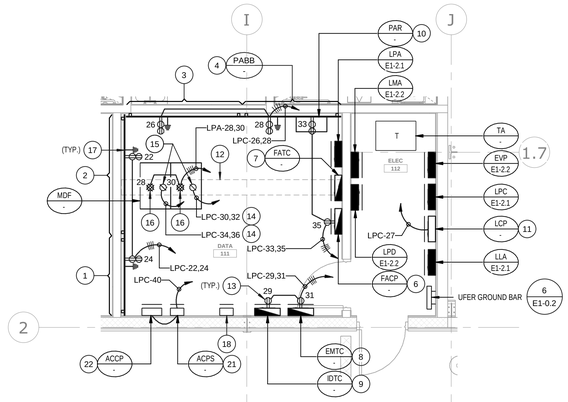

0' 2' 4' 8' NORTH

ENLARGED ELECTRICAL ROOM | 1/4" = 1'-0" | 2

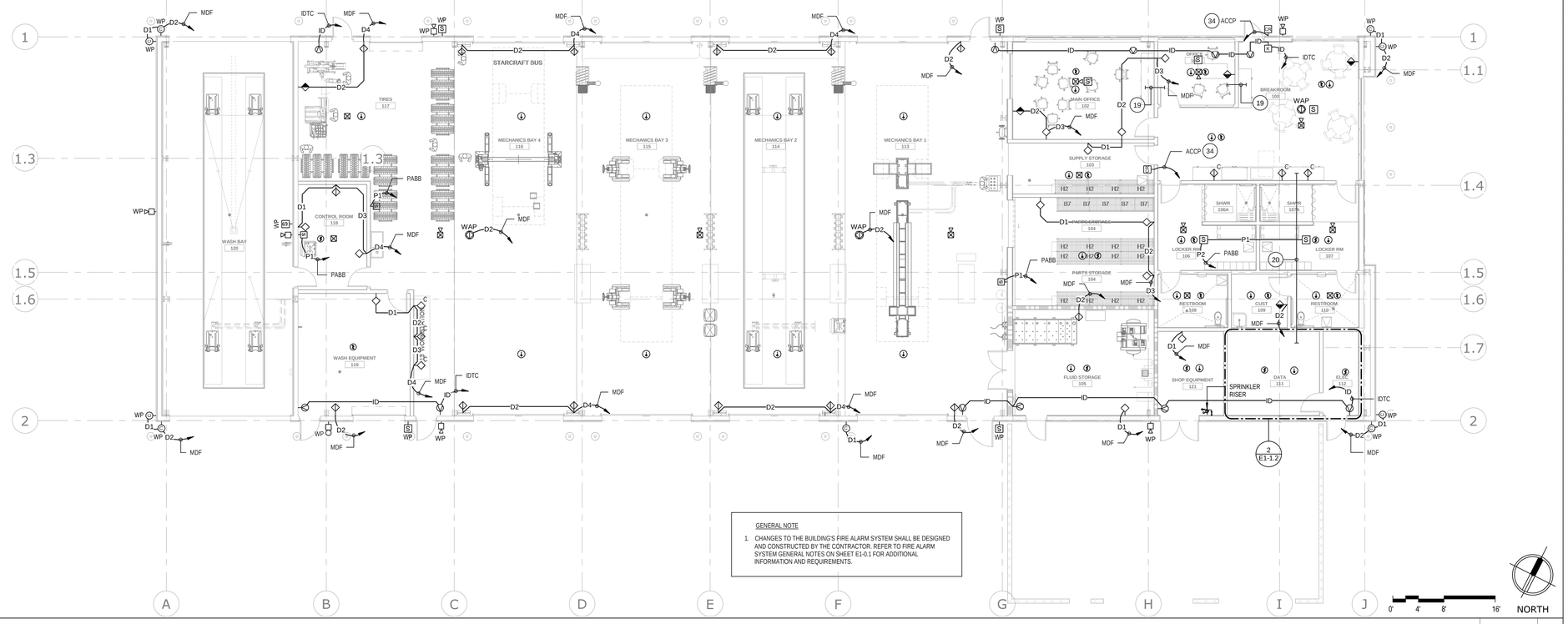

0' 4' 8' 16' NORTH

SIGNAL PLAN AND FIRE ALARM PLANS | 1/8" = 1'-0" | 1

GENERAL NOTE

1. CHANGES TO THE BUILDING'S FIRE ALARM SYSTEM SHALL BE DESIGNED AND CONSTRUCTED BY THE CONTRACTOR. REFER TO FIRE ALARM SYSTEM GENERAL NOTES ON SHEET E1-0.1 FOR ADDITIONAL INFORMATION AND REQUIREMENTS.

STAMPS

AGENCY APPROVAL
File No.: n.a.

FBAEngineering
Consulting Electrical Engineers
150 Paularino Avenue Suite A120
Costa Mesa, CA 92626
949.852.9995 • 949.852.1657 (fax)
fbaengr.com
FBA Job Number: 874.1055

CONSULTANT BRANDING

RUHNAU CLARKE ARCHITECTS

PLAN NOTES

1. PROVIDE 5' X 8' X 3/4" PLYWOOD BACKBOARD FOR INTERNET SERVICE CONDUIT TERMINATION.
2. PROVIDE 8' X 8' X 3/4" PLYWOOD BACKBOARD FOR DATA NETWORK CONDUIT TERMINATION.
3. PROVIDE 5' X 8' X 3/4" PLYWOOD BACKBOARD FOR DATA/VOICE NETWORK CONDUIT TERMINATION.
4. PROVIDE 4' X 8' X 3/4" PLYWOOD BACKBOARD FOR PUBLIC ADDRESS/PAGING SYSTEM CONDUIT TERMINATION.
5. PROVIDE TWO (2) FLOOR STANDING, 4-PORT, DATA/ VOICE NETWORK MAIN DISTRIBUTION FRAME "MDF" EQUIPMENT RACKS.
6. FIRE ALARM CONTROL PANEL.
7. PROVIDE 24" X 24" X 6"D. TERMINAL CABINET FOR FIRE ALARM SYSTEM CONDUIT TERMINATION.
8. PROVIDE 24" X 24" X 6"D. TERMINAL CABINET FOR ENERGY MANAGEMENT SYSTEM CONDUIT TERMINATION.
9. PROVIDE 24" X 24" X 6"D. TERMINAL CABINET FOR INSTRUSION DETECTION SYSTEM CONDUIT TERMINATION.
10. WALL MOUNTED PUBLIC ADDRESS/PAGING SYSTEM EQUIPMENT RACK.
11. LIGHTING CONTROL SYSTEM CABINET.
12. PROVIDE CABLE TRAY AS INDICATED.
13. MOUNT RECEPTACLE INSIDE TERMINAL CABINET.
14. PROVIDE 3/4"C. - 2#10, 1#10 GRD.
15. PROVIDE 208V-3P-30A TWIST LOCK TYPE RECEPTACLE (NEMA L5-30R) FOR MDF RACK. MOUNT RECEPTACLE ON THE CABLE TRAY.
16. MOUNT RECEPTACLE ON THE CABLE TRAY FOR MDF RACK INDICATED.
17. PROVIDE 1"C. - 1#6 GRD. TO BUILDING'S MAIN GROUNDING SYSTEM.
18. HEAT TRACE CHROMA-RG-OD CONTROL PANEL FOR ROOF AND GUTTER DE-ICING APPLICATION. WHEN THE SNOW SENSOR SENSES A TEMPERATURE BELOW THE SET-POINT, IT ACTIVATES THE CONTACTOR ENERGIZING THE HEATING ELEMENTS.
19. PROVIDE TWO (2) 3" CONDUIT SLEEVES FOR ROUTING SIGNAL SYSTEM CONDUCTOR.
20. PROVIDE THREE (3) 3" CONDUIT SLEEVES FOR ROUTING SIGNAL SYSTEM CONDUCTOR.
21. PROVIDE ACCESS CONTROL SYSTEM'S POWER SUPPLY AND CONNECT POWER AS REQUIRED.
22. PROVIDE ACCESS CONTROL PANEL FOR ACCESS CONTROL SYSTEM.
23. SLIDE GATE OPERATOR CONTROLLER. VERIFY EXACT LOCATION WITH ARCHITECTURAL PLANS
24. CONNECT POWER TO GATE CONTROLLER AS REQUIRED.
25. PROVIDE 12" X 12" X 12" DEEP BOTTOMLESS CONCRETE PULL BOX WITH 12" DEEP PEA-GRAVEL BASE AND 10' LONG X 3/4" DIAMETER COPPER GROUND ROD. MOUNT PULL BOX FLUSH WITH FINISH GRADE AND ENGRAVE COVER: "GROUND".
26. POWER CONDUIT STUB-OUT TO OBSTRUCTION LOOP. VERIFY EXACT LOCATION.
27. PROVIDE WEATHERPROOF JUNCTION BOX MOUNTED AT +24" WITH DUPLEX GFCI RECEPTACLE AND POWER SUPPLY FOR RF CARD READER.
28. PROVIDE LONG-RANGE GATE KEYPAD/RF CARD READER 1833-80 SERIES TELEPHONE ENTRY SYSTEM MOUNTED TO POLE ON REINFORCED CONCRETE BASE. VERIFY EXACT LOCATION PRIOR TO ROUGH-IN. PROVIDE MOUNTING HARDWARE KIT FOR READER TO ATTACH TO POLE. POLE SHALL BE 4-INCHES ROUND X 31/8" STEEL TUBE, GRIND ALL WELDS SMOOTH AND PRIME POWDER COAT WITH (4) 1/2" DIA. THREAD ROD. ANCHOR BASE AND COLOR FINISH TO MATCH PARKING LOT LIGHTS. PROVIDE 12" DIA. REINFORCED CONCRETE ANCHOR BASE SET 18-INCHES DEEP INTO GRADE AND 3" ABOVE GRADE.
29. PROVIDE 3/4" CONDUIT FROM GATE CONTROLLER TO OBSTRUCTION LOOP INSTALLED BY GATE CONTROLLER.
30. PROVIDE 3/4"C.- 2#12, 1#12 GRD. FOR LOW VOLTAGE POWER DUPPLY TO RF CARD READER.
31. SEE SHEET ES1-1 SITE ELECTRICAL PLAN FOR CONTINUATION.
32. PROVIDE 3/4"C.- WITH 2#12 FOR GATE CONTROLLER.
33. PROVIDE 1" CONDUIT WITH ONE (1) CAT6 CABLE TO TWO WAY COMMNUNICATION CONTROLLER IN MAIN OFFICE ROOM #102. SEE NOTE #23 ON SHEET ES1-1 FOR MORE INFORMATION.
34. PROVIDE 3/4" CONDUIT AND CABLE FROM DOOR'S CARD READER TO CARD READER ACCESS CONTROL IN DATA ROOM #111.
35. PROVIDE 1"C.- WITH 2#12, 1#12 GRD. FROM ACCESS CONTROL IN DATA ROOM #111 TO GATE OPERATING MECHANISM.
36. PROVIDE 3/4"C. - 2#8, 1#10 GRD.
37. SEE SITE PLAN ON SHEET ES1-1 FOR CONTINUATION.
38. CONNECT POWER TO BATTERY CHARGER.
39. CONNECT POWER TO JACKET WATER HEATER.
40. GENERATOR'S CONTROL PANEL. VERIFY EXACT LOCATION.

MOUNT TRANSIT MAINTENANCE FACILITY :100% CD

PROJECT No. :50801
7/29/2023 9:59:23 AM

DRAWN BY: CHECKED BY:

ISSUE No._____ DATE_____ DESCRIPTION_____
ISSUE No._____ DATE_____ DESCRIPTION_____
ISSUE No._____ DATE_____ DESCRIPTION_____
ISSUE No._____ DATE_____ DESCRIPTION_____

REVISION No._____ DATE_____ DESCRIPTION_____
REVISION No._____ DATE_____ DESCRIPTION_____
REVISION No._____ DATE_____ DESCRIPTION_____
REVISION No._____ DATE_____ DESCRIPTION_____

RUHNAUCLARKE.COM
3775 TENTH STREET, RIVERSIDE CALIFORNIA 92501 (951) 684 4664/ 5751 PALMER WAY, SUITE C, CARLSBAD CALIFORNIA 92010 (760) 438 5899

MOUNT TRANSIT MAINTENANCE FACILITY
170 BUSINESS CENTER DR. BIG BEAR LAKES, CA
BIG BEAR LAKES

ELECTRICAL PLAN AND ENLARGED ELECTRICAL ROOM

E1-1.2

50801

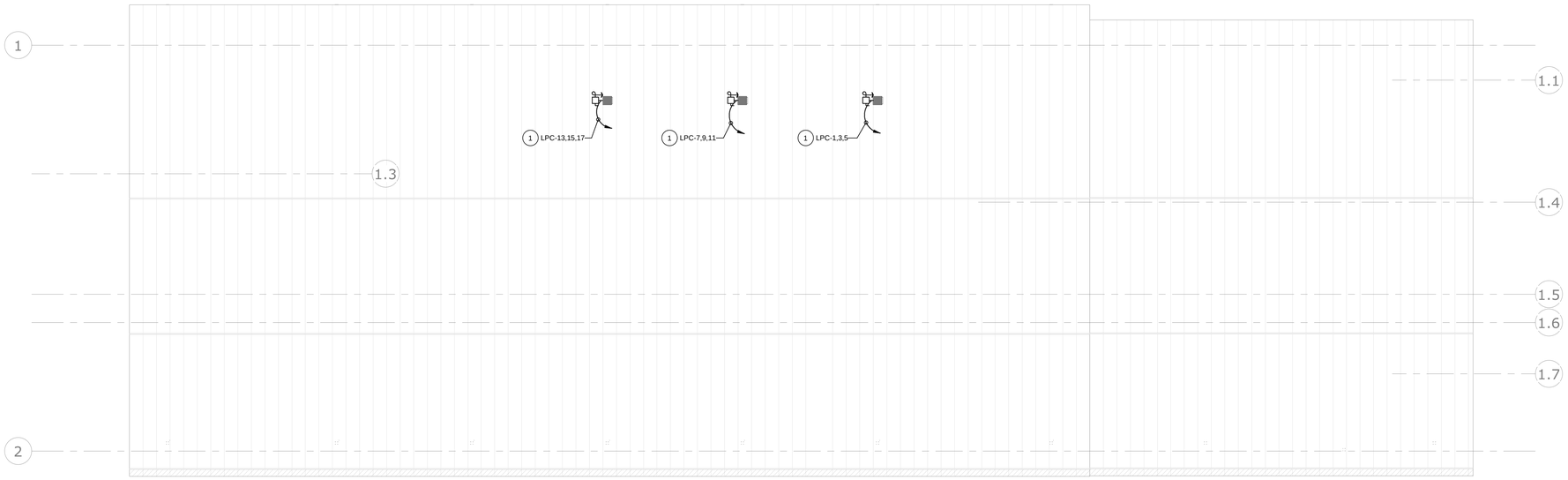

0' 4' 8' 16' NORTH

ROOF ELECTRICAL PLAN | 1/8" = 1'-0" | 1

STAMPS

AGENCY APPROVAL
File No.: n.a.

FBAEngineering
Consulting Electrical Engineers
150 Paularino Avenue Suite A120
Costa Mesa, CA 92626
949.852.9995 • 949.852.1657 (fax)
fbaengr.com
FBA Job Number: 874.1055

CONSULTANT BRANDING

RUHNAU CLARKE ARCHITECTS

PLAN NOTES

1 PROVIDE 3/4" C.- 3#10, 1#10 GRD.

PROJECT No. :50801
7/29/2023 9:59:24 AM

DRAWN BY: CHECKED BY:

ISSUE No.____ DATE_____ DESCRIPTION_____
ISSUE No.____ DATE_____ DESCRIPTION_____
ISSUE No.____ DATE_____ DESCRIPTION_____
ISSUE No.____ DATE_____ DESCRIPTION_____

REVISION No.____ DATE_____ DESCRIPTION_____
REVISION No.____ DATE_____ DESCRIPTION_____
REVISION No.____ DATE_____ DESCRIPTION_____
REVISION No.____ DATE_____ DESCRIPTION_____

RUHNAUCLARKE.COM
3775 TENTH STREET, RIVERSIDE CALIFORNIA 92501 (951) 684 4664/ 5751 PALMER WAY, SUITE C, CARLSBAD CALIFORNIA 92010 (760) 438 5899

MOUNT TRANSIT MAINTENANCE FACILITY
170 BUSINESS CENTER DR. BIG BEAR LAKES, CA
BIG BEAR LAKES

ROOF ELECTRICAL PLAN

E1-1.3

50801

MOUNT TRANSIT MAINTENANCE FACILITY :100% CD

Branch Panel: LPB

MOUNT TRANSIT MAINTENANCE FACILITY

Location: CONTROL ROOM 118
Supply From:
Mounting: Flush
Volts: 120/208 Wye
Phases: 3
Wires: 4
Isolated Ground Bus:
A.I.C. Rating: 14,000
Mains Type:
Mains Rating: 150 A
MCB Rating: 225 A

CKT	Circuit Description	Note	Quan	Trip	Pole	A	B	C	A	B	C	Pole	Trip	Quan	Note	Circuit Description	CKT
1	EXTERIOR RECEPT.		3	20 A	1	540 VA			540 VA			1	20 A	3		WASH EQUIPMENT RECEPT.	2
3	EXTERIOR RECEPT.		4	20 A	1		720 VA			720 VA		1	20 A	4		CONTROL ROOM RECEPT.	4
5	Spare		--	20 A	1			0 VA			1500...	1	20 A	1		WHEEL BALLANCER - ITEM #11	6
7	Spare		--	20 A	1	0 VA			1800...			1	20 A	1		TIRE CHANGER - ITEM #10	8
9	MECHANICS BAY RECEPT.		4	20 A	1		720 VA			0 VA		1	20 A	--		Spare	10
11	MECHANICS BAY RECEPT.		4	20 A	1			720 VA			0 VA	1	20 A	--		Spare	12
13	MECHANICS BAY - ROLL UP DOOR		1	20 A	1	250 VA			600 VA			1	20 A	1		WORKBENCH REEL POWER	14
15	MECHANICS BAY - ROLL UP DOOR		1	20 A	1		250 VA			600 VA		1	20 A	1		WORKBENCH REEL POWER	16
17	MECHANICS BAY - ROLL UP DOOR *		1	20 A	1			250 VA			1200...	1	20 A	1		LIFT BATTERY CHARGER REEL...	18
19	MECHANICS BAY - ROOL UP DOOR		1	20 A	1	250 VA			1200...			1	20 A	1		LIFT BATTERY CHARGER REEL...	20
21	IU-1 (INDOOR UNIT)		1	20 A	2		26 VA			1200...		1	20 A	1		LIFT BATTERY CHARGER REEL...	22
23	--		--	--	--			26 VA			1587...	1	20 A	1		EF-11	24
25	OU-1 (OUTDOOR UNIT)		1	30 A	2	1248...			7128...			3	100 A	1		WASH BAY - ITEM #2	26
27	--		--	--	--		1248...			7128...		--	--	--		--	28
29	RELOCATED VEHICLE LIFT - ITEM #6		1	40 A	3			2004...			7128...	--	--	--		--	30
31	--		--	--	--	2004...			500 VA			1	20 A	1		CUT OFF SAW - ITEM #38	32
33	--		--	--	--		2004...			500 VA		1	20 A	2		MECHANICS BAY RECEPT.	34
35	TRAP PRIMER		2	20 A	1			100 VA			720 VA	1	20 A	4		MECHANICS BAY RECEPT.	36
37	TRAP PRIMER		1	20 A	1	50 VA			0 VA			1	20 A	--		Spare	38
39	Spare		--	20 A	1		0 VA			0 VA		1	20 A	--		Spare	40
41	Spare		--	20 A	1			0 VA			0 VA	1	20 A	--		Spare	42
43	Spare		--	20 A	1	0 VA			0 VA			1	20 A	--		Spare	44
45	Spare		--	20 A	1		0 VA			0 VA		1	20 A	--		Spare	46
47	Spare		--	20 A	1			0 VA			0 VA	1	20 A	--		Spare	48
49	Space		--	--	1	--			--			1	--	--		Space	50
51	Space		--	--	1		--			--		1	--	--		Space	52
53	Space		--	--	1			--			--	1	--	--		Space	54
				Total Load:		16110 VA		15116 VA			15235 VA						
				Total Amps:		134 A		126 A			127 A						

Legend:

Load Classification	Connected Load	Demand Factor	Estimated Demand	Panel Totals	
HVAC	3548 VA	100.00%	3548 VA		
Motor	3600 VA	100.00%	3600 VA	**Total Conn. Load:**	19065 VA
Power	2937 VA	100.00%	2937 VA	**Total Est. Demand:**	19065 VA
R-Receptacle	8980 VA	100.00%	8980 VA	**Total Conn.:**	53 A
				Total Est. Demand:	53 A

Notes:
* - INDICATES THE CIRCUIT IS CONTROLLED BY 120V-1P-20A RELAY OPERATED BY GAS DETECTION SYSTEM. MOUNT RELAY IN SEPARATE COMPARTMENT ABOVE PANEL. PROVIDE 3/4"C.-2#12, 1#12 GRD. FROM RELAY COIL TO BUILDING PANEL. REFER TO MECHANICAL DRAWINGS FOR MORE INFORMATION.

Branch Panel: LLA

MOUNT TRANSIT MAINTENANCE FACILITY

Location: ELEC 112
Supply From:
Mounting: Surface
Volts: 120/208 Wye
Phases: 3
Wires: 4
Isolated Ground Bus:
A.I.C. Rating: 10,000
Mains Type:
Mains Rating: 100 A
MCB Rating: 100 A

CKT	Circuit Description	Note	Quan	Trip	Pole	A	B	C	A	B	C	Pole	Trip	Quan	Note	Circuit Description	CKT
1	MECHANIC BAY LTS.		8	20 A	1	952 VA					951 VA	1	20 A	21		SUPPLY/PART/FLUID STORAGE LTS.	2
3	MECHANIC BAY LTS.		8	20 A	1		952 VA				733 VA	1	20 A	19		LOCKER/RESTRM/UTILITY LTS.	4
5	MECHANIC BAY LTS.		16	20 A	1			1040...				636 VA	1	20 A	22		OFFICE/BREAKROOM LTS.	6
7	WASH BAY 120 LTS		4	20 A	1	608 VA				640 VA			1	20 A	14		(R) EXTERIOR LTS.	8
9	CONTROL/WASH EQUIPMENT LTS.		11	20 A	1		369 VA				692 VA		1	20 A	15		(R) EXTERIOR LTS.	10
11	ELECTRICAL ENCLOSURE LTS.		4	20 A	1			64 VA				815 VA	1	20 A	5		(R) PARKING LTS.	12
13	Spare		--	20 A	1	0 VA				276 VA			1	20 A	6		(R) PARKING/CANOPY LTS.	14
15	(R) PARKING LOT LTS.		4	20 A	1		652 VA				0 VA		1	20 A	--		Spare	16
17	(R) PARKING/CANOPY LTS.		10	20 A	1			460 VA				0 VA	1	20 A	--		Spare	18
19	Spare		--	20 A	1	0 VA				0 VA			1	20 A	--		Spare	20
21	Spare		--	20 A	1		0 VA				0 VA		1	20 A	--		Spare	22
23	Spare		--	20 A	1			0 VA				0 VA	1	20 A	--		Spare	24
25	Spare		--	20 A	1	0 VA				0 VA			1	20 A	--		Spare	26
27	Spare		--	20 A	1		0 VA				0 VA		1	20 A	--		Spare	28
29	Spare		--	20 A	1			0 VA				0 VA	1	20 A	--		Spare	30
				Total Load:		3427 VA			3398 VA			3015 VA					
				Total Amps:		29 A			29 A			25 A					

Legend:

Load Classification	Connected Load	Demand Factor	Estimated Demand	Panel Totals	
Lighting	5205 VA	100.00%	5205 VA		
Lighting - Dwelling Unit	646 VA	100.00%	646 VA	**Total Conn. Load:**	9840 VA
Other	64 VA	100.00%	64 VA	**Total Est. Demand:**	10637 VA
Power	736 VA	100.00%	736 VA	**Total Conn.:**	27 A
L-LIGHTING (LCL)	1467 VA	125.00%	1834 VA	**Total Est. Demand:**	30 A
L-Lighting(LCL)	1722 VA	125.00%	2153 VA		

Notes:
R - INDICATES THE CIRCUIT IS CONTROLLED BY 120V-1P-20A RELAY OPERATED BY ENERGY MANAGEMENT SYSTEM. MOUNT RELAY IN A SEPARATED COMPARTMENT AVBOVE PANEL. PROVIDE 3/4"C.- 2#12, 1#12 GRD.FROM RELAY COIL TO BUILDING EMS PANEL.

Branch Panel: LPC

MOUNT TRANSIT MAINTENANCE FACILITY

Location: ELEC 112
Supply From:
Mounting: Surface
Volts: 120/208 Wye
Phases: 3
Wires: 4
Isolated Ground Bus:
A.I.C. Rating: 14,000
Mains Type:
Mains Rating: 150 A
MCB Rating: 225 A

CKT	Circuit Description	Note	Quan	Trip	Pole	A	B	C	A	B	C	Pole	Trip	Quan	Note	Circuit Description	CKT
1	EXHAUST FAN ON ROOF - ITEM #14		1	20 A	3	900 VA			6600...			3	100 A	1		MECHANICS BAY 1 - ITEM #8	2
3	--		--	--	--		900 VA			6600...		--	--	--		--	4
5	--		--	--	--			900 VA			6600...	--	--	--		--	6
7	EXHAUST FAN ON ROOF - ITEM #14		1	20 A	3	900 VA			7128...			3	100 A	1		MECHANICS BAY 2 - ITEM #2	8
9	--		--	--	--		900 VA			7128...		--	--	--		--	10
11	--		--	--	--			900 VA			7128...	--	--	--		--	12
13	EXHAUST FAN ON ROOF - ITEM #14		1	20 A	3	900 VA			1127...			1	20 A	1		AIR DRYER - ITEM #23	14
15	--		--	--	--		900 VA			200 VA		1	20 A	1		WASTE EVAC. PUMP - ITEM #17	16
17	--		--	--	--			900 VA			500 VA	1	20 A	1		WASTE EVAC. OVERFILL - ITEM #18	18
19	FLOOR DRILL PRESS - ITEM #37		1	30 A	1	1587...			250 VA			1	20 A	1		FILTER CRUSHER - ITEM #29	20
21	GRINDER - ITEM #31		1	20 A	3		684 VA			1000...		1	20 A	1		DATA SYSTEM BACKBOARD	22
23	--		--	--	--			684 VA			500 VA	1	20 A	1		INTERNET SERVICE BACKBOARD	24
25	--		--	--	--	684 VA			1000...			1	20 A	1		DATA/VOICE BACKBOARD	26
27	LIGHTING CONTROL PANEL "LC"		1	20 A	1		200 VA			500 VA		1	20 A	1		PABB (PUBLIC ADDRESS...	28
29	IDTC (INTRUSION TERM. CABINET)		1	20 A	1			200 VA			1000...	2	30 A	1		MDF (MAIN DATA FRAME)	30
31	EMTC (EMS TERM. CABINET)		1	20 A	1	200 VA			1000...			--	--	--		--	32
33	PAR (PUBLIC ADDRESS RACK)		1	20 A	1		500 VA			1000...		2	30 A	1		MDF (MAIN DATA FRAME)	34
35	FACP (FIRE ALARM CONTROL PANE...		1	20 A	1			200 VA			1000...	--	--	--		--	36
37	TRAP PRIMER		3	20 A	1	150 VA			150 VA			1	20 A	5		SINK/TOILET SENSORS	38
39	TRAP PRIMER		2	20 A	1		100 VA			500 VA		1	20 A	1		ACCP (ACCESS CONTROL PANEL)	40
41	ENTRY GATE CARD READER		1	20 A	1			200 VA			1164...	1	30 A	1		EXIT GATE CONTROLLER	42
43	ENTRY GATE CONTROLLER		1	30 A	1	1164...			0 VA			1	20 A	--		Spare	44
45	Spare		--	20 A	1		0 VA			0 VA		1	20 A	--		Spare	46
47	Spare		--	20 A	1			0 VA			0 VA	1	20 A	--		Spare	48
49	Space		--	--	1	--			--			1	--	--		Space	50
51	Space		--	--	1		--			--		1	--	--		Space	52
53	Space		--	--	1			--			--	1	--	--		Space	54
				Total Load:		23740 VA		21112 VA			21876 VA						
				Total Amps:		199 A		176 A			183 A						

Legend:

Load Classification	Connected Load	Demand Factor	Estimated Demand	Panel Totals	
HVAC	10428 VA	100.00%	10428 VA		
Other	200 VA	100.00%	200 VA	**Total Conn. Load:**	25044 VA
Power	2427 VA	100.00%	2427 VA	**Total Est. Demand:**	25044 VA
Receptacle	6052 VA	100.00%	6052 VA	**Total Conn.:**	70 A
R-Receptacle	5937 VA	100.00%	5937 VA	**Total Est. Demand:**	70 A

Notes:
* - PROVIDE APPROVED CIRCUIT BREAKER LOCK-ON DEVICE, RED IN COLOR. LABEL "FIRE ALARM CONTROL CIRCUIT".

Branch Panel: LPA

MOUNT TRANSIT MAINTENANCE FACILITY

Location: Space B228
Supply From:
Mounting: Surface
Volts: 120/208 Wye
Phases: 3
Wires: 4
Isolated Ground Bus:
A.I.C. Rating: 14,000
Mains Type:
Mains Rating: 150 A
MCB Rating: 225 A

CKT	Circuit Description	Note	Quan	Trip	Pole	A	B	C	A	B	C	Pole	Trip	Quan	Note	Circuit Description	CKT
1	EXTERIOR RECEPT.		2	20 A	1	360 VA			540 VA			1	20 A	3		MECHANICS BAY RECEPT.	2
3	EXTERIOR RECEPT.		2	20 A	1		360 VA			540 VA		1	20 A	3		MECHANICS BAY RECEPT.	4
5	EXTERIOR RECEPT.		2	20 A	1			360 VA			540 VA	1	20 A	3		MECHANICS BAY RECEPT.	6
7	EXTERIOR RECEPT.		2	20 A	1	360 VA			720 VA			1	20 A	4		MECHANICS BAY RECEPT.	8
9	STORAGE RECEPT.		5	20 A	1		900 VA			600 VA		1	20 A	1		OFFICE RECEPT.	10
11	STORAGE RECEPT.		4	20 A	1			720 VA			540 VA	1	20 A	3		OFFICE RECEPT.	12
13	SHOP EQUIPMENT/UTILITY RECEPT.		5	20 A	1	900 VA			0 VA			1	20 A	2		OFFICE RECEPT.	14
15	LOCKER/RESTROOM RECEPT.		5	20 A	1		900 VA			600 VA		1	20 A	1		OFFICE RECEPT.	16
17	BREAKROOM 100 RECEPT.		2	20 A	1			540 VA			0 VA	1	20 A	3		OFFICE RECEPT.	18
19	BREAKROOM 100 RECEPT.		4	20 A	1	720 VA			250 VA			1	20 A	1		MECHANICS BAY - ROLL UP DOOR	20
21	BREAKROOM 100 RECEPT.		3	20 A	1		360 VA			250 VA		1	20 A	1		MECHNICS BAY - ROLL UP DOOR	22
23	GARBAGE DISPOSAL		1	20 A	1			1000...			600 VA	1	20 A	1		WORKBENCH REEL POWER	24
25	REFRIGERATOR		1	20 A	1	1000...			600 VA			1	20 A	1		WORKBENCH REEL POWER	26
27	MECHANICS - ROLL UP DOOR		1	20 A	1		250 VA			1500...		1	20 A	1		MDF (MAIN DATA FRAME)	28
29	MECHANICS - ROLL UP DOOR		1	20 A	1			250 VA			1500...	1	20 A	1		MDF (MAIN DATA FRAME)	30
31	MECHANICS - ROLL UP DOOR		1	20 A	1	250 VA			3696...			3	70 A	1		AIR COMPRESSOR - ITEM #20	32
33	SMOKE FIRE DAMPERS *		5	20 A	1		250 VA			3696...		--	--	--		--	34
35	Spare		--	20 A	1			0 VA			3696...	--	--	--		--	36
37	Space		--	--	1	--			--			1	--	--		Space	38
39	Space		--	--	1		--			--		1	--	--		Space	40
41	Space		--	--	1			--			--	1	--	--		Space	42
				Total Load:		9396 VA		10206 VA			9746 VA						
				Total Amps:		78 A		85 A			82 A						

Legend:

Load Classification	Connected Load	Demand Factor	Estimated Demand	Panel Totals	
Equipment	150 VA	100.00%	150 VA		
HVAC	12338 VA	100.00%	12338 VA	**Total Conn. Load:**	29348 VA
Motor	0 VA	0.00%	0 VA	**Total Est. Demand:**	28428 VA
Power	4300 VA	100.00%	4300 VA	**Total Conn.:**	81 A
Receptacle	720 VA	100.00%	720 VA	**Total Est. Demand:**	79 A
R-Receptacle	11840 VA	92.23%	10920 VA		

Notes:
* - PROVIDE APPROVED CIRCUIT BREAKER LOCK-ON DEVICE. RED IN COLOR. LABEL "FIRE ALARM CONTROL CIRCUIT".

STAMPS

AGENCY APPROVAL
File No.: n.a.

FBAEngineering
Consulting Electrical Engineers
150 Paularino Avenue Suite A120
Costa Mesa, CA 92626
949.852.9995 • 949.852.1657 (fax)
fbaengr.com
FBA Job Number: 874.1055

CONSULTANT BRANDING

RUHNAU CLARKE ARCHITECTS

MOUNT TRANSIT MAINTENANCE FACILITY :100% CD

Branch Panel: EVP

MOUNT TRANSIT MAINTENANCE FACILITY

Location: ELEC 112 | **Supply From:** | **Mounting:** Surface
Volts: 120/208 Wye | **Phases:** 3 | **Wires:** 4 | **Isolated Ground Bus:**
A.I.C. Rating: 22,000 | **Mains Type:** | **Mains Rating:** 250 A | **MCB Rating:** 400 A

CKT	Circuit Description	Note	Quan	Trip	Pole	A	B	C	A	B	C	Pole	Trip	Quan	Note	Circuit Description	CKT
1	FUTURE CHARGING STATION		1	50 A	3	3600...			3600...			3	50 A	1		FUTURE CHARGING STATION	2
3	--		--	--	--		3600...			3600...		--	--	--		--	4
5	--		--	--	--			3600...			3600...	--	--	--		--	6
7	FUTURE CHARGING STATION		1	50 A	3	3600...			3600...			3	50 A	1		FUTURE CHARGING STATION	8
9	--		--	--	--		3600...			3600...		--	--	--		--	10
11	--		--	--	--			3600...			3600...	--	--	--		--	12
13	FUTURE CHARGING STATION		1	50 A	3	3600...			3600...			3	50 A	1		FUTURE CHARGING STATION	14
15	--		--	--	--		3600...			3600...		--	--	--		--	16
17	--		--	--	--			3600...			3600...	--	--	--		--	18
19	SPARE		--	50 A	3	0 VA			0 VA			3	50 A	--		SPARE	20
21	--		--	--	--		0 VA			0 VA		--	--	--		--	22
23	--		--	--	--			0 VA			0 VA	--	--	--		--	24
25	SPARE		--	50 A	3	0 VA			0 VA			3	50 A	--		SPARE	26
27	--		--	--	--		0 VA			0 VA		--	--	--		--	28
29	--		--	--	--			0 VA			0 VA	--	--	--		--	30
31	Spare		--	20 A	1	0 VA			0 VA			1	20 A	--		Spare	32
33	Spare		--	20 A	1		0 VA			0 VA		1	20 A	--		Spare	34
35	Spare		--	20 A	1			0 VA			0 VA	1	20 A	--		Spare	36
37	Space		--	--	1	--			--			1	--	--		Space	38
39	Space		--	--	1		--			--		1	--	--		Space	40
41	Space		--	--	1			--			--	1	--	--		Space	42
					Total Load:	21600 VA			21600 VA			21600 VA					
					Total Amps:	180 A			180 A			180 A					

Legend:

Load Classification	Connected Load	Demand Factor	Estimated Demand	Panel Totals	
Other	64800 VA	100.00%	64800 VA		
				Total Conn. Load:	64800 VA
				Total Est. Demand:	64800 VA
				Total Conn.:	180 A
				Total Est. Demand:	180 A

Notes:

Branch Panel: LPD

MOUNT TRANSIT MAINTENANCE FACILITY

Location: ELEC 112 | **Supply From:** | **Mounting:** Surface
Volts: 120/240 Wye | **Phases:** 3 | **Wires:** 4
A.I.C. Rating: 10,000 | **Mains Type:** 300A | **Bus:** 400A

CKT	Circuit Description	Trip	Pole	A	B	C	A	B	C	Pole	Trip	Circuit Description	CKT
1	MECHANICS BAY - WELDER	60 A	2	4000...			4000...			2	60 A	MECHANICS BAY - WELDER	2
3	--	--	--		4000...			4000...		--	--	--	4
5	MECHANICS BAY - WELDER	60 A	2			4000...			4000...	2	60 A	MECHANICS BAY - WELDER	6
7	--	--	--	4000...			4000...			--	--	--	8
9	TIRE CHARGER - ITEM #10	30 A	2		1500...			9440...		3	150 A	PRESSURE WASHER - ITEM #13	10
11	--	--	--			1500...			9440...	--	--	--	12
13	Spare	20 A	1	0 VA			9440...			--	--	--	14
15	Spare	20 A	1		0 VA			0 VA		1	20 A	Spare	16
17	Spare	20 A	1			0 VA			0 VA	1	20 A	Spare	18
19	Spare	20 A	1	0 VA			0 VA			1	20 A	Spare	20
21	Spare	20 A	1		0 VA			0 VA		1	20 A	Spare	22
23	Spare	20 A	1			0 VA			0 VA	1	20 A	Spare	24
25	Spare	20 A	1	0 VA			0 VA			1	20 A	Spare	26
27	Spare	20 A	1		0 VA			0 VA		1	20 A	Spare	28
29	Spare	20 A	1			0 VA			0 VA	1	20 A	Spare	30
31	Spare	20 A	1	0 VA			0 VA			1	20 A	Spare	32
33	Spare	20 A	1		0 VA			0 VA		1	20 A	Spare	34
35	Spare	20 A	1			0 VA			0 VA	1	20 A	Spare	36
37	Space	--	1	--			--			1	--	Space	38
39	Space	--	1		--			--		1	--	Space	40
41	Space	--	1			--			--	1	--	Space	42
			Total Load:	25440 VA			18940 VA			18940 VA			
			Total Amps:	122 A			91 A			91 A			

Legend:

Load Classification	Connected Load	Demand Factor	Estimated Demand	Panel Totals	
HVAC	28320 VA	100.00%	28320 VA		
Receptacle	35000 VA	64.29%	22500 VA		
				Total Conn. Load:	63320 VA
				Total Est. Demand:	50820 VA
				Total Conn.:	152 A
				Total Est. Demand:	122 A

Notes:

Branch Panel: LPE

MOUNT TRANSIT MAINTENANCE FACILITY

Location: EMERGENCY ENCLOSURE | **Supply From:** | **Mounting:** Surface
Volts: 120/208 Wye | **Phases:** 3 | **Wires:** 4
A.I.C. Rating: 10,000 | **Mains Type:** 100A | **Bus:** 100A

CKT	Circuit Description	Trip	Pole	A	B	C	A	B	C	Pole	Trip	Circuit Description	CKT
1	GENERATOR BATTERY CHARGER	20 A	1	1200...			0 VA			1	20 A	Spare	2
3	JACKET WATER HEATER	20 A	1		2800...			64 VA		1	20 A	EMERGENCY ENCLOSURE LTS.	4
5	Spare	20 A	1			0 VA			540 VA	1	20 A	EMERGENCY ENCLOSURE RECEPT.	6
7	Spare	20 A	1	0 VA			0 VA			1	20 A	Spare	8
9	Spare	20 A	1		0 VA			0 VA		1	20 A	Spare	10
11	Spare	20 A	1			0 VA			0 VA	1	20 A	Spare	12
13	Spare	20 A	1	0 VA			0 VA			1	20 A	Spare	14
15	Spare	20 A	1		0 VA			0 VA		1	20 A	Spare	16
17	Spare	20 A	1			0 VA			0 VA	1	20 A	Spare	18
19	Space	--	1	--			--			1	--	Space	20
21	Space	--	1		--			--		1	--	Space	22
23	Space	--	1			--			--	1	--	Space	24
			Total Load:	1200 VA		2864 VA			540 VA				
			Total Amps:	11 A		25 A			5 A				

Legend:

Load Classification	Connected Load	Demand Factor	Estimated Demand	Panel Totals	
Other	64 VA	100.00%	64 VA		
Power	4000 VA	100.00%	4000 VA	**Total Conn. Load:**	4604 VA
R-Receptacle	540 VA	100.00%	540 VA	**Total Est. Demand:**	4604 VA
				Total Conn.:	13 A
				Total Est. Demand:	13 A

Notes:

Branch Panel: LMA

MOUNT TRANSIT MAINTENANCE FACILITY

Location: ELEC 112 | **Supply From:** | **Mounting:** Surface
Volts: 120/208 Wye | **Phases:** 3 | **Wires:** 4 | **Isolated Ground Bus:**
A.I.C. Rating: 22,000 | **Mains Type:** | **Mains Rating:** 300 A | **MCB Rating:** 400 A

CKT	Circuit Description	Note	Quan	Trip	Pole	A	B	C	A	B	C	Pole	Trip	Quan	Note	Circuit Description	CKT
1	EF-1 *		1	60 A	1	1840...			30 VA			1	20 A	2		EF-6 AND EF-7	2
3	EF-2 *		1	30 A	1		1587...			15 VA		1	20 A	1		EF-8	4
5	EF-3 *		1	30 A	1			1587...			207 VA	1	20 A	1		EF-9	6
7	EF-4 *		1	30 A	1	1587...			288 VA			1	20 A	1		EF-10	8
9	EF-5		1	20 A	1		1587...			2330...		2	40 A	1		IO-2 (OUTDOOR UNIT)	10
11	CP-1 (CIRCULATION PUMP)		1	20 A	1			184 VA			2330...	--	--	--		--	12
13	WH-1 (WATER HEATER)		1	20 A	1	500 VA			1056...			3	175 A	1		MAU-1 (MAKEUP AIR UNIT) **	14
15	IU-2 (INDOOR UNIT)		1	20 A	2		52 VA			1056...		--	--	--		--	16
17	--		--	--	--			52 VA			1056...	--	--	--		--	18
19	AC-1 (AC UNIT) & POWER EXHAUST		2	50 A	3	3552...			1200...			1	20 A	1		B-1 (BOILER)	20
21	--		--	--	--		3552...			4750...		2	90 A	1		VVT - 1 (VVT DAMPER)	22
23	--		--	--	--			3552...			4750...	--	--	--		--	24
25	VVT-3 (VVT DAMPER)		1	90 A	2	4750...			4750...			2	90 A	1		VVT-2 (VVT DAMPER)	26
27	--		--	--	--		4750...			4750...		--	--	--		--	28
29	BP-1 (ZONE DAMPER)		1	20 A	1			184 VA			1127...	1	20 A	1		HWP-1 (HEATING WATER PUMP)	30
31	Spare		--	20 A	1	0 VA			0 VA			1	20 A	--		Spare	32
33	Spare		--	20 A	1		0 VA			0 VA		1	20 A	--		Spare	34
35	Spare		--	20 A	1			0 VA			0 VA	1	20 A	--		Spare	36
37	Space		--	--	1	--			--			1	--	--		Space	38
39	Space		--	--	1		--			--		1	--	--		Space	40
41	Space		--	--	1			--			--	1	--	--		Space	42
					Total Load:	29057 VA			33933 VA			24533 VA					
					Total Amps:	248 A			289 A			204 A					

Legend:

Load Classification	Connected Load	Demand Factor	Estimated Demand	Panel Totals	
HVAC	45295 VA	100.00%	45295 VA		
Power	42227 VA	100.00%	42227 VA	**Total Conn. Load:**	87522 VA
				Total Est. Demand:	87522 VA
				Total Conn.:	243 A
				Total Est. Demand:	243 A

Notes:
* - INDICATES THE CIRCUIT IS CONTROLLED BY 120V-1P-20A RELAY OPERATED BY GAS DETECTION SYSTEM. MOUNT RELAY IN A SEPARATE COMPARTMENT ABOVE PANEL. PROVIDE 3/4"C.- 2#12, 1#12 GRD. FROM RELAY COIL TO BUILDING PANEL. REFER TO MECHANICAL DRAWINGS FOR MORE INFORMATION.
** - INDICATES THE CIRCUIT IS CONTROOLED BY 240V-3P-150A CONTACTOR OPERATED BY GAS DETECTION SYSTEM. MOUNT CONTACTOR IN A SEPARATE COMPARTMENT ABOVE PANEL. PROVIDE 1 1/4"C.- 3#12, 1#6 GRD. FROM CONTACTOR COIL TO BUILDING PANEL. REFER TO MECHANICAL DRAWINGS FOR MORE INFORMATION.

STAMPS

AGENCY APPROVAL
File No.: n.a.

FBAEngineering
Consulting Electrical Engineers
150 Paularino Avenue Suite A120
Costa Mesa, CA 92626
949.852.9995 • 949.852.1657 (fax)
fbaengr.com
FBA Job Number: 874.1055

CONSULTANT BRANDING

RUHNAU CLARKE ARCHITECTS

MOUNT TRANSIT MAINTENANCE FACILITY :100% CD

PROJECT No. :50801
7/29/2023 9:59:26 AM

DRAWN BY: CHECKED BY:
ISSUE No._____ DATE_____ DESCRIPTION_____
ISSUE No._____ DATE_____ DESCRIPTION_____
ISSUE No._____ DATE_____ DESCRIPTION_____
ISSUE No._____ DATE_____ DESCRIPTION_____
REVISION No._____ DATE_____ DESCRIPTION_____
REVISION No._____ DATE_____ DESCRIPTION_____
REVISION No._____ DATE_____ DESCRIPTION_____
REVISION No._____ DATE_____ DESCRIPTION_____

STATE OF CALIFORNIA
Indoor Lighting
CALIFORNIA ENERGY COMMISSION

CERTIFICATE OF COMPLIANCE		NRCC-LTI-E
Project Name:	Mount Trnsit Maintenance Facility	Report Page: (Page 1 of 8)
Project Address:	170 Business Center Drive	Date Prepared: 4/4/2023

This document is used to demonstrate compliance with requirements in 110.9, 110.12(c), 130.0, 130.1, 140.6 and 141.0(b)2 for indoor lighting scopes using the prescriptive path for nonresidential and hotel/motel occupancies. It is also used to document compliance with requirements in 160.5, 170.2(e) and 180.2(b)4 for indoor lighting scopes using the prescriptive path for multifamily occupancies. Multifamily includes dormitory and senior living facilities.

A. GENERAL INFORMATION

01	Project Location (city)	Big Bear Lakes	04	Total Conditioned Floor Area (ft²)	11,590
02	Climate Zone	16	05	Total Unconditioned Floor Area (ft²)	0
03	Occupancy Types Within Project (select all that apply):		06	# of Stories (Habitable Above Grade)	1

● Data Center ● Office ● Support Areas ● Warehouse ● All Other Occupancies

B. PROJECT SCOPE

This table includes any lighting systems that are within the scope of the permit application and are demonstrating compliance using the prescriptive path outlined in 140.6 / 170.2(e) or 141.0(b)2 / 180.2(b)4 for alterations.

Scope of Work	Conditioned Spaces		Unconditioned Spaces	
01	02	03	04	05
My Project Consists of (check all that apply):	Calculation Method	Area (ft²)	Calculation Method	Area (ft²)
☒ New Lighting System	Area Category Method	11590	Area Category Method	0
☐ New Lighting System - Parking Garage				
Total Area of Work (ft²)	11590		0	

STATE OF CALIFORNIA
Indoor Lighting
CALIFORNIA ENERGY COMMISSION

CERTIFICATE OF COMPLIANCE		NRCC-LTI-E
Project Name:	Mount Trnsit Maintenance Facility	Report Page: (Page 2 of 8)
Project Address:	170 Business Center Drive	Date Prepared: 4/4/2023

C. COMPLIANCE RESULTS

If any cell on this table says "DOES NOT COMPLY" or "COMPLIES with Exceptional Conditions" refer to Table D. for guidance.

Lighting in conditioned and unconditioned spaces must not be combined for compliance per 140.6(b)1 / 170.2(e)	Allowed Lighting Power per 140.6(b) / 170.2(e) (Watts)						Adjusted Lighting Power per 140.6(a) / 170.2(e) (Watts)				Compliance Results
	01	02	03	04		05	06	07		08	09
	Complete Building 140.6(c)1	Area Category 140.6(c)2 / 170.2(e)4	Area Category Additional 140.6(c)2G / 170.2(e)4Av (+)	Tailored 140.6(c)3 / 170.2(e)4B (+)	=	**Total Allowed** (Watts)	Total Designed (Watts)	Adjustments PAF Lighting Control Credits 140.6(a)2 / 170.2(e)1B (-)	=	**Total Adjusted** (Watts) *Includes Adjustments	**05 must be >= 08 140.6 / 170.2(e)**
	(See Table I)	(See Table I)	(See Table J)	(See Table K)			(See Table F)	(See Table P)			
Conditioned		6,236.1	0		=	6,236	≥ 6,216	0	=	6216	COMPLIES
Unconditioned					=		≥		=		
Controls Compliance (See Table H for Details)											COMPLIES
Rated Power Reduction Compliance (See Table Q for Details)											

D. EXCEPTIONAL CONDITIONS

This table is auto-filled with uneditable comments because of selections made or data entered in tables throughout the form.

E. ADDITIONAL REMARKS

This table includes remarks made by the permit applicant to the Authority Having Jurisdiction.

Registration Number: | Generated Date/Time: | Documentation Software: EnergyPro
CA Building Energy Efficiency Standards - 2022 Nonresidential Compliance | Report Version: 2022.0.000 Schema Version: rev 20220101 | Compliance ID: EnergyPro-7526-0423-0063 Report Generated: 2023-04-04 15:50:25

STATE OF CALIFORNIA
Indoor Lighting
CALIFORNIA ENERGY COMMISSION

CERTIFICATE OF COMPLIANCE		NRCC-LTI-E
Project Name:	Mount Trnsit Maintenance Facility	Report Page: (Page 3 of 8)
Project Address:	170 Business Center Drive	Date Prepared: 4/4/2023

F. INDOOR LIGHTING FIXTURE SCHEDULE

This table includes all planned permanent and portable lighting other than dwelling unit/ hotel/ motel room lighting. Multifamily dwelling unit and hotel/motel room lighting is documented in Table T. If using Table T to document lighting in multifamily common use areas providing shared provisions for living, eating, cooking or sanitation, those luminaires are not included here.

Designed Wattage: Conditioned Spaces

01	02	03	04	05	06	07	08	09	10	
Name or Item Tag	Complete Luminaire Description	Modular (Track) Fixture	Small Aperture & Color Change[1]	Watts per luminaire[2]	How is Wattage determined	Total Number of Luminaires	Excluded per 140.6(a)3 / 170.2(e)2C	Design Watts	Field Inspector	
									Pass	Fail
A	A - 2 X 4 LED Recessed Fixture	No	NA	45	Mfr. Spec	14	No	630	☐	☐
B	B - 1 X 4 LED Recessed Fixture	No	NA	45	Mfr. Spec	10	No	450	☐	☐
C	C - 4' LED Surface Fixture	No	NA	49	Mfr. Spec	4	No	196	☐	☐
D	D - 4' LED Surface Strip Fixture	No	NA	26	Mfr. Spec	10	No	260	☐	☐
E	E - 4' LED Pendant Fixture	No	NA	47	Mfr. Spec	36	No	1,692	☐	☐
F	F - LED Pendant High Bay Fixture	No	NA	119	Mfr. Spec	20	No	2,380	☐	☐
H	H - LED Pendant High Bay Fixture	No	NA	152	Mfr. Spec	4	No	608	☐	☐
						Total Designed Watts: CONDITIONED SPACES		6,216		

[1]*FOOTNOTE: Design Watts for small aperture and color changing luminaires which qualify per 140.6(a)4B / 170.2(e)2D is adjusted to be 75% /80% of their rated wattage. Table F automatically makes this adjustment, the permit applicant should enter full rated wattage in column 05.*

[2]*Authority Having Jurisdiction may ask for Luminaire cut sheets to confirm wattage used for compliance per 130.0(c) / 160.5(b). Wattage used must be the maximum rated for the luminaire, not the lamp.*

G. MODULAR LIGHTING SYSTEMS

This section does not apply to this project.

Registration Number: | Generated Date/Time: | Documentation Software: EnergyPro
CA Building Energy Efficiency Standards - 2022 Nonresidential Compliance | Report Version: 2022.0.000 Schema Version: rev 20220101 | Compliance ID: EnergyPro-7526-0423-0063 Report Generated: 2023-04-04 15:50:25

STATE OF CALIFORNIA
Indoor Lighting
CALIFORNIA ENERGY COMMISSION

CERTIFICATE OF COMPLIANCE		NRCC-LTI-E
Project Name:	Mount Trnsit Maintenance Facility	Report Page: (Page 4 of 8)
Project Address:	170 Business Center Drive	Date Prepared: 4/4/2023

H. INDOOR LIGHTING CONTROLS (Not including PAFs)

This table includes lighting controls for conditioned and unconditioned spaces.

Building Level Controls

01	02	03	
		Field Inspector	
		Pass	Fail
Mandatory Demand Response 110.12(c)	Shut-off controls 130.1(c) / 160.5(b)4C	☐	☐
Required >= 4,000W subject to multilevel	Whole Building Auto Time Switch	☐	☐

Area Level Controls

04	05	06	07	08	09	10	11	12	
Area Description	Complete Building or Area Category Primary Function Area	Manual Area Controls 130.1(a) / 160.5(b)4A	Multi-Level Controls 130.1(b) / 160.5(b)4B	Shut-Off Controls 130.1(c) // 160.5(b)4C	Primary/Sky lit Daylighting 130.1(d) / 160.5(b)4D	Secondary Daylighting 130.1(d) / 160.5(b)4D	Interlocked Systems 140.6(a)1/ 170.2(e)2A	Field Inspector	
								Pass	Fail
Offices > 250 sq ft	Office (>250 square feet)	Readily Accessible	Dimmer	Occupancy Sensor	Included	Included	No	☐	☐
Offices < 250 sq ft	Office (<=250 square feet)	Readily Accessible	Dimmer	Occupancy Sensor	Included	Included	No	☐	☐
Auto Maintenance	Auto Repair	Readily Accessible	Multilevel Switch	Occupancy Sensor	Included	Included	No	☐	☐
Breakroom	Lounge	Readily Accessible	Dimmer	Occupancy Sensor	Included	Included	No	☐	☐
							13		
							Plan Sheet Showing Daylit Zones:		

I. LIGHTING POWER ALLOWANCE: COMPLETE BUILDING OR AREA CATEGORY METHODS

Each area complying using the Complete Building or Area Category Methods per 140.6(b) are included in this table. Column 06 indicates if additional lighting power allowances per 140.6(c) or adjustments per 140.6(a) are being used .

Conditioned Spaces

Registration Number: | Generated Date/Time: | Documentation Software: EnergyPro
CA Building Energy Efficiency Standards - 2022 Nonresidential Compliance | Report Version: 2022.0.000 Schema Version: rev 20220101 | Compliance ID: EnergyPro-7526-0423-0063 Report Generated: 2023-04-04 15:50:25

STATE OF CALIFORNIA
Indoor Lighting
CALIFORNIA ENERGY COMMISSION

CERTIFICATE OF COMPLIANCE		NRCC-LTI-E
Project Name:	Mount Trnsit Maintenance Facility	Report Page: (Page 5 of 8)
Project Address:	170 Business Center Drive	Date Prepared: 4/4/2023

I. LIGHTING POWER ALLOWANCE: COMPLETE BUILDING OR AREA CATEGORY METHODS

01	02	03	04	05	06	
Area Description	Complete Building or Area Category Primary Function Area	Allowed Density (W/ft²)	Area (ft²)	Allowed Wattage (Watts)	Additional Allowance / Adjustment	
					Area Category	PAF
Breakroom	Lounge	0.55	600	330	No	No
Office > 250 sq ft	Office (>250 square feet)	0.6	600	360	No	No
Office < 250 sq ft	Office (<=250 square feet)	0.65	350	227.5	No	No
Storage	Commercial Industrial Warehouse	0.4	925	370	No	No
Fluid Storage	Commercial Industrial Warehouse	0.4	390	156	No	No
Locker Rooms	Locker/Dressing Room	0.45	550	247.5	No	No
Restrooms	Restroom	0.65	375	243.8	No	No
Electric Room	Electrical Mechancial Telephone Room	0.4	150	60	No	No
Mechanics Bays	Auto Repair	0.55	7,425	4,083.8	No	No
Data Room	Copy Room	0.7	225	157.5	No	No
		TOTALS:	11,590	6,236.1	See Tables J, or P for detail	

J. ADDITIONAL ALLOWANCE: AREA CATEGORY METHOD QUALIFYING LIGHTING SYSTEM

This section does not apply to this project.

K. TAILORED METHOD GENERAL LIGHTING POWER ALLOWANCE

This section does not apply to this project.

L. ADDITIONAL LIGHTING ALLOWANCE: TAILORED WALL DISPLAY

This section does not apply to this project.

Registration Number: | Generated Date/Time: | Documentation Software: EnergyPro
CA Building Energy Efficiency Standards - 2022 Nonresidential Compliance | Report Version: 2022.0.000 Schema Version: rev 20220101 | Compliance ID: EnergyPro-7526-0423-0063 Report Generated: 2023-04-04 15:50:25

STATE OF CALIFORNIA
Indoor Lighting
CALIFORNIA ENERGY COMMISSION

CERTIFICATE OF COMPLIANCE		NRCC-LTI-E
Project Name:	Mount Trnsit Maintenance Facility	Report Page: (Page 6 of 8)
Project Address:	170 Business Center Drive	Date Prepared: 4/4/2023

M. ADDITIONAL LIGHTING ALLOWANCE: TAILORED FLOOR AND TASK LIGHTING

This section does not apply to this project.

N. ADDITIONAL LIGHTING ALLOWANCE: TAILORED DECORATIVE /SPECIAL EFFECTS

This section does not apply to this project.

O. ADDITIONAL LIGHTING ALLOWANCE: TAILORED VERY VALUABLE MERCHANDISE

This section does not apply to this project.

P. POWER ADJUSTMENT: LIGHTING CONTROL CREDIT (POWER ADJUSTMENT FACTOR (PAF))

This section does not apply to this project.

Q. RATED POWER REDUCTION COMPLIANCE FOR ONE-FOR-ONE ALTERATIONS

This section does not apply to this project.

R. 80% LIGHTING POWER FOR ALL ALTERATIONS - CONTROLS EXCEPTIONS

This section does not apply to this project.

S. DAYLIGHT DESIGN POWER ADJUSTMENT FACTOR (PAF)

This section does not apply to this project.

T. DWELLING UNIT LIGHTING

This section does not apply to this project.

Registration Number: | Generated Date/Time: | Documentation Software: EnergyPro
CA Building Energy Efficiency Standards - 2022 Nonresidential Compliance | Report Version: 2022.0.000 Schema Version: rev 20220101 | Compliance ID: EnergyPro-7526-0423-0063 Report Generated: 2023-04-04 15:50:25

STATE OF CALIFORNIA
Indoor Lighting
CALIFORNIA ENERGY COMMISSION

CERTIFICATE OF COMPLIANCE		NRCC-LTI-E
Project Name:	Mount Trnsit Maintenance Facility	Report Page: (Page 7 of 8)
Project Address:	170 Business Center Drive	Date Prepared: 4/4/2023

U. DECLARATION OF REQUIRED CERTIFICATES OF INSTALLATION

Form/Title
NRCI-LTI-E - Must be submitted for all buildings

V. DECLARATION OF REQUIRED CERTIFICATES OF ACCEPTANCE

Form/Title	Systems/Spaces To Be Field Verified
NRCA-LTI-02-A - Must be submitted for occupancy sensors and automatic time switch controls.	Whole Building Time Switch; Offices > 250 sq ft; Offices < 250 sq ft; Auto Maintenance; Breakroom;
NRCA-LTI-03-A - Must be submitted for automatic daylight controls.	Offices > 250 sq ft; Offices < 250 sq ft; Auto Maintenance; Breakroom;
NRCA-LTI-04-A - Must be submitted for demand responsive lighting controls.	Whole Building Demand Response;

Registration Number: | Generated Date/Time: | Documentation Software: EnergyPro
CA Building Energy Efficiency Standards - 2022 Nonresidential Compliance | Report Version: 2022.0.000 Schema Version: rev 20220101 | Compliance ID: EnergyPro-7526-0423-0063 Report Generated: 2023-04-04 15:50:25

STATE OF CALIFORNIA
Indoor Lighting
CALIFORNIA ENERGY COMMISSION

CERTIFICATE OF COMPLIANCE		NRCC-LTI-E
Project Name:	Mount Trnsit Maintenance Facility	Report Page: (Page 8 of 8)
Project Address:	170 Business Center Drive	Date Prepared: 4/4/2023

DOCUMENTATION AUTHOR'S DECLARATION STATEMENT

I certify that this Certificate of Compliance documentation is accurate and complete.

Documentation Author Name: Stephen R. Zajicek P.E.	Documentation Author Signature:
Company: FBA Engineering	Signature Date: 2023-04-04
Address: 150 Paularino Avenue Suite A120	CEA/ HERS Certification Identification (if applicable): E10372
City/State/Zip: Costa Mesa CA 92626	Phone: 9498529995

RESPONSIBLE PERSON'S DECLARATION STATEMENT

I certify the following under penalty of perjury, under the laws of the State of California:

1. The information provided on this Certificate of Compliance is true and correct.
2. I am eligible under Division 3 of the Business and Professions Code to accept responsibility for the building design or system design identified on this Certificate of Compliance (responsible designer)
3. The energy features and performance specifications, materials, components, and manufactured devices for the building design or system design identified on this Certificate of Compliance conform to the requirements of Title 24, Part 1 and Part 6 of the California Code of Regulations.
4. The building design features or system design features identified on this Certificate of Compliance are consistent with the information provided on other applicable compliance documents, worksheets, calculations, plans and specifications submitted to the enforcement agency for approval with this building permit application.
5. I will ensure that a completed signed copy of this Certificate of Compliance shall be made available with the building permit(s) issued for the building, and made available to the enforcement agency for all applicable inspections. I understand that a completed signed copy of this Certificate of Compliance is required to be included with the documentation the builder provides to the building owner at occupancy.

Responsible Designer Name: Stephen R. Zajicek P.E.	Responsible Designer Signature:
Company: FBA Engineering	Date Signed: 2023-04-04
Address: 150 Paularino Ave, Suite A120	License: E10372
City/State/Zip: Costa Mesa CA 92626	Phone: 949-852-9995

Registration Number: | Generated Date/Time: | Documentation Software: EnergyPro
CA Building Energy Efficiency Standards - 2022 Nonresidential Compliance | Report Version: 2022.0.000 Schema Version: rev 20220101 | Compliance ID: EnergyPro-7526-0423-0063 Report Generated: 2023-04-04 15:50:25

STAMPS

AGENCY APPROVAL
File No.: n.a.

FBA Engineering
Consulting Electrical Engineers
150 Paularino Avenue Suite A120
Costa Mesa, CA 92626
949.852.9995 • 949.852.1657 (fax)
fbaengr.com
FBA Job Number: 874.1055

CONSULTANT BRANDING

RUHNAU CLARKE ARCHITECTS

MOUNT TRANSIT MAINTENANCE FACILITY :100% CD

PROJECT No. :50801
7/29/2023 9:59:29 AM

DRAWN BY: CHECKED BY:

ISSUE No._____ DATE_____ DESCRIPTION_____
ISSUE No._____ DATE_____ DESCRIPTION_____
ISSUE No._____ DATE_____ DESCRIPTION_____
ISSUE No._____ DATE_____ DESCRIPTION_____

REVISION No._____ DATE_____ DESCRIPTION_____
REVISION No._____ DATE_____ DESCRIPTION_____
REVISION No._____ DATE_____ DESCRIPTION_____
REVISION No._____ DATE_____ DESCRIPTION_____

RUHNAUCLARKE.COM
3775 TENTH STREET, RIVERSIDE CALIFORNIA 92501 (951) 684 4664/ 5751 PALMER WAY, SUITE C, CARLSBAD CALIFORNIA 92010 (760) 438 5899

MOUNT TRANSIT MAINTENANCE FACILITY
170 BUSINESS CENTER DR. BIG BEAR LAKES, CA
BIG BEAR LAKES

TITLE 24 (INDOOR)

E1-3.1

50801

STATE OF CALIFORNIA
Outdoor Lighting
CALIFORNIA ENERGY COMMISSION

CERTIFICATE OF COMPLIANCE		NRCC-LTO-E
Project Name:	Mount Trnsit Maintenance Facility	Report Page: (Page 1 of 9)
Project Address:	170 Business Center Drive	Date Prepared: 4/4/2023

This document is used to demonstrate compliance with requirements in 110.9, 130.0, 130.2, 140.7, and 141.0(b)2I for outdoor lighting scopes using the prescriptive path for nonresidential and hotel/motel occupancies. It is also used to document compliance with requirements in 160.5, 170.2(e)6, 180.1(a) and 180.2(b)4Bv for outdoor lighting scopes using the prescriptive path for multifamily and mixed-use occupancies. Multifamily includes dormitory and senior living facilities.

A. GENERAL INFORMATION

01	Project Location (city)	Big Bear Lakes	04	Total Illuminated Hardscape Area (ft²)	0
02	Climate Zone	16			
03	Outdoor Lighting Zone per Title 24 Part 1	10,11,14 or as designated by Authority Having Jurisdiction (AHJ):			

☐ LZ-0: Very Low - Undeveloped Parkland ☒ LZ-2: Moderate - Urban Clusters ☐ LZ-4: High - Must be reviewed by CA Energy Commission for Approval
☐ LZ-1: Low - Rural Areas ☐ LZ-3: Moderately High - Urban Areas

05 Occupancy Types within Project

● Data Center ● Office ● Support Areas ● Warehouse ● Warehouse

B. PROJECT SCOPE

This table includes outdoor lighting systems that are within the scope of the permit application and are demonstrating compliance using the prescriptive path outlined in 140.7 / 170.2(e)6 or 141.0(b)2I, / 180.2(b)4Bv for alterations.

My Project Consists of:

01	02		
☒ New Lighting System	Must Comply with Allowances from 140.7 / 170.2(e)6		
☐ Altered Lighting System	Is your alteration increasing the connected lighting load (Watts)?	○ Yes	○ No

03	04	05
% of Existing Luminaires Being Altered[1]	Sum Total of Luminaires Being Added or Altered	Calculation Method
☐ < 10% ☐ >= 10% and < 50% ☐ >= 50%		

Please proceed to Table F. Outdoor Lighting Fixture Schedule to define the project's luminaires.

[1] FOOTNOTES: % of Existing Luminaires Being Altered = (Sum Total of Luminaires Being Added or Altered / Existing Luminaires within the Scope of the Permit Application) x 100.

Registration Number: | Generated Date/Time: | Documentation Software: EnergyPro
CA Building Energy Efficiency Standards - 2022 Nonresidential Compliance | Report Version: 2022.0.000 Schema Version: rev 20220101 | Compliance ID: EnergyPro-7526-0423-0063 Report Generated: 2023-04-04 15:50:25

STATE OF CALIFORNIA
Outdoor Lighting
CALIFORNIA ENERGY COMMISSION

CERTIFICATE OF COMPLIANCE		NRCC-LTO-E
Project Name:	Mount Trnsit Maintenance Facility	Report Page: (Page 2 of 9)
Project Address:	170 Business Center Drive	Date Prepared: 4/4/2023

C. COMPLIANCE RESULTS

Results in this table are automatically calculated from data input and calculations in Tables F through N. Note: If any cell on this table says "COMPLIES with Exceptional Conditions" refer to Table D. Exceptional Conditions for guidance or see applicable Table referenced below.

Calculations of Total Allowed Lighting Power (Watts) 140.7 / 170.2(e)6 or 141.0(b)2L / 180.2(b)4Bv												Compliance Results		
01		02		03		04		05	OR	06	=	07	08	09
General Hardscape Allowance 140.7(d)1 / 170.2(e)6 (See Table I)	+	Per Application 140.7(d)2 / 170.2(e)6 (See Table J)	+	Sales Frontage 140.7(d)2 (See Table K)	+	Ornamental 140.7(d)2 / 170.2(e)6 (See Table L)	+	Per Specific Area 140.7(d)2 / 170.2(e)6 (See Table M)		Existing Power Allowance 141.0(b)2L / 180.2(b)4Bv (See Table N)		**Total Allowed** (Watts)	≥	**Total Actual** (Watts)	**07 must be >= 08**
0	+	---	+	---	+	---	+	5,399	OR	---	=	5,399	≥	5,399	COMPLIES

Shielding Compliance (See Table G for Details)	COMPLIES
Controls Compliance (See Table H for Details)	Not applicable

D. EXCEPTIONAL CONDITIONS

This table is auto-filled with uneditable comments because of selections made or data entered in tables throughout the form.

E. ADDITIONAL REMARKS

This table includes remarks made by the permit applicant to the Authority Having Jurisdiction.

Registration Number: | Generated Date/Time: | Documentation Software: EnergyPro
CA Building Energy Efficiency Standards - 2022 Nonresidential Compliance | Report Version: 2022.0.000 Schema Version: rev 20220101 | Compliance ID: EnergyPro-7526-0423-0063 Report Generated: 2023-04-04 15:50:25

STATE OF CALIFORNIA
Outdoor Lighting
CALIFORNIA ENERGY COMMISSION

CERTIFICATE OF COMPLIANCE		NRCC-LTO-E
Project Name:	Mount Trnsit Maintenance Facility	Report Page: (Page 3 of 9)
Project Address:	170 Business Center Drive	Date Prepared: 4/4/2023

F. OUTDOOR LIGHTING FIXTURE SCHEDULE

For new or altered lighting systems demonstrating compliance with 140.7 / 170.2(e)6 all new luminaires being installed and any existing luminaires remaining or being moved within the spaces covered by the permit application are included in the Table below. For altered lighting systems using the Existing Power method per 141.0(b)2L only new luminaires being installed and replacement luminaires being installed as part of the project scope are included (ie, existing luminaires remaining or existing luminaires being moved are not included). Outdoor lighting attached to multifamily buildings and controlled from the inside of a dwelling unit are included in Table H. and are not included here. All other multifamily outdoor lighting is included here.

Designed Wattage:

01	02		03	04	05	06	07	08	09	10	
Name or Item Tag	Complete Luminaire Description		Watts per luminaire[1, 2]	How is Wattage determined	Total Number Luminaires[2]	Luminaire Status[3]	Excluded per 140.7(a) / 170.2(e)6A	Design Watts	Cutoff Req. > 6,200 initial lumen output 130.2(b) / 160.5(c)1[4]	Field Inspector	
										Pass	Fail
G	G - LED Surface Canopy Fixture	☐ Linear	46	Mfr. Spec	21	New	☐	966	NA: < 6200 lumens	☐	☐
I	I - 6" LED Recessed Down Light Fixture	☐ Linear	30	Mfr. Spec	6	New	☐	180	NA: < 6200 lumens	☐	☐
SP1	SP1 - Pole Mounted LED Area Light Single Head Fixture	☐ Linear	163	Mfr. Spec	13	New	☐	2,119	Provided	☐	☐
SP2	SP2 - Pole Mounted LED Area Light Twin Head 90 Degree Fixture	☐ Linear	326	Mfr. Spec	2	New	☐	652	Provided	☐	☐
SP3	SP3 - Pole Mounted LED Area Light Twin Head 180 Degree Fixture	☐ Linear	326	Mfr. Spec	1	New	☐	326	Provided	☐	☐
WP1	WP1 - LED Wall Sconce Fixture	☐ Linear	52	Mfr. Spec	21	New	☐	1,092	NA: < 6200 lumens	☐	☐
WP2	WP2 - LED Mini Wall Sconce Fixture	☐ Linear	16	Mfr. Spec	4	New	☐	64	NA: < 6200 lumens	☐	☐
							Total Design Watts:	5399			

* NOTES: Selections with a * require a note in the space below explaining how compliance is achieved.
EX: Luminaire is lighting a statue; EXCEPTION 2 to 130.2(b)

Registration Number: | Generated Date/Time: | Documentation Software: EnergyPro
CA Building Energy Efficiency Standards - 2022 Nonresidential Compliance | Report Version: 2022.0.000 Schema Version: rev 20220101 | Compliance ID: EnergyPro-7526-0423-0063 Report Generated: 2023-04-04 15:50:25

STATE OF CALIFORNIA
Outdoor Lighting
CALIFORNIA ENERGY COMMISSION

CERTIFICATE OF COMPLIANCE		NRCC-LTO-E
Project Name:	Mount Trnsit Maintenance Facility	Report Page: (Page 4 of 9)
Project Address:	170 Business Center Drive	Date Prepared: 4/4/2023

F. OUTDOOR LIGHTING FIXTURE SCHEDULE

For new or altered lighting systems demonstrating compliance with 140.7 / 170.2(e)6 all new luminaires being installed and any existing luminaires remaining or being moved within the spaces covered by the permit application are included in the Table below. For altered lighting systems using the Existing Power method per 141.0(b)2L only new luminaires being installed and replacement luminaires being installed as part of the project scope are included (ie, existing luminaires remaining or existing luminaires being moved are not included). Outdoor lighting attached to multifamily buildings and controlled from the inside of a dwelling unit are included in Table H. and are not included here. All other multifamily outdoor lighting is included here.

Designed Wattage:

01	02	03	04	05	06	07	08	09	10

[1] FOOTNOTES: Authority Having Jurisdiction may ask for Luminaire cut sheets to confirm wattage used for compliance per 130.0(c) / 160.5(b)
[2] For linear luminaires, wattage should be indicated as W/lf instead of Watts/luminaire. Total linear feet should be indicated in column 05 instead of number of luminaires.
[3] Select "New" for new luminaires in a new outdoor lighting project, or for added luminaires in an alteration. Select "Altered" for replacement luminaires in an alteration. Select "Existing to Remain" for existing luminaires within the project scope that are not being altered and are remaining. Select "Existing Reinstalled" for existing luminaires which are being removed and reinstalled as part of the project scope.
[4] Compliance with mandatory shielding requirements is required for luminaires with initial lumen output >= 6,200 unless exempted by 130.2(b)/ 160.5(c)

Registration Number: | Generated Date/Time: | Documentation Software: EnergyPro
CA Building Energy Efficiency Standards - 2022 Nonresidential Compliance | Report Version: 2022.0.000 Schema Version: rev 20220101 | Compliance ID: EnergyPro-7526-0423-0063 Report Generated: 2023-04-04 15:50:25

STATE OF CALIFORNIA
Outdoor Lighting
CALIFORNIA ENERGY COMMISSION

CERTIFICATE OF COMPLIANCE		NRCC-LTO-E
Project Name:	Mount Trnsit Maintenance Facility	Report Page: (Page 5 of 9)
Project Address:	170 Business Center Drive	Date Prepared: 4/4/2023

G. SHIELDING REQUIREMENTS (BUG)

This table includes fixtures of >=6,200 initial lumens indicated on Table F as needing to comply with Shielding Requirements. Maximum lumens can be found in Title 24, Part 11, Section 5.106.8.

01	02	03	04	05	06	07	08	09	10	11	12	
		Backlight Rating[2]			Uplight Rating[2]			Glare Rating (Lumens)[2]			Field Inspector	
Name or Item Tag	Complete Luminaire Description	Mounting Height[1]	Max Allowable Backlight Rating[3]	Backlight Rating Per Design	Lighting type	Max Allowable Uplight Rating[3]	Uplight Rating Per Design	Mounting Height[1]	Max Allowable Glare Rating[3]	Glare Rating Per Design	Pass	Fail
SP1	SP1 - Pole Mounted LED Area Light Single Head Fixture	2 MH from property line	No Limit	B3	All other outdoor lighting, including decorative	U2	U0	2 MH from property line	G2	G3	☐	☐
SP2	SP2 - Pole Mounted LED Area Light Twin Head 90 Degree Fixture	2 MH from property line	No Limit	B3	All other outdoor lighting, including decorative	U2	U0	2 MH from property line	G2	G3	☐	☐
SP3	SP3 - Pole Mounted LED Area Light Twin Head 180 Degree Fixture	2 MH from property line	No Limit	B3	All other outdoor lighting, including decorative	U2	U0	2 MH from property line	G2	G3	☐	☐

[1] FOOTNOTES: Mounting Height is labeled MH in this table.
[2] Authority Having Jurisdiction may ask for Luminaire cut sheets or other documentation to confirm luminaire type, uplight ratings and glare ratings used for compliance per 130.2(b)/ 160.5(c)
[3] BUG ratings with a lower number than the 'Max Allowable' are compliant. Ex. If Max Allowable is Bug Rating B4, then B0, B1, B2 and B3 are all compliant.

Registration Number: | Generated Date/Time: | Documentation Software: EnergyPro
CA Building Energy Efficiency Standards - 2022 Nonresidential Compliance | Report Version: 2022.0.000 Schema Version: rev 20220101 | Compliance ID: EnergyPro-7526-0423-0063 Report Generated: 2023-04-04 15:50:25

STATE OF CALIFORNIA
Outdoor Lighting
CALIFORNIA ENERGY COMMISSION

CERTIFICATE OF COMPLIANCE		NRCC-LTO-E
Project Name:	Mount Trnsit Maintenance Facility	Report Page: (Page 6 of 9)
Project Address:	170 Business Center Drive	Date Prepared: 4/4/2023

H. OUTDOOR LIGHTING CONTROLS

This table demonstrates compliance with controls requirements for all new or altered luminaires installed as part of the permit application. For alteration projects, luminaires which are existing to remain (ie untouched) and luminaires which are removed and reinstalled (wiring only) do not need to be included in this table even if they are within the spaces covered by the permit application.
Outdoor lighting for nonresidential buildings, parking garages and common service areas in multifamily buildings must be documented separately from outdoor lighting attached to multifamily buildings and controlled from the inside of a dwelling unit

Mandatory Controls for Nonresidential Occupancies, Parking Garages & Common Areas in Multifamily Buildings

01	02	03	04	05	
Area Description	Shut-Off 130.2(c)1 / 160.5(c)	Auto-Schedule 130.2(c)2 / 160.5(c)	Motion Sensor 130.2(c)3 / 160.5(c)	Field Inspector	
				Pass	Fail

[1] FOOTNOTE: Text has been abbreviated, please refer to Table 160.5-A to confirm compliance with the specific light source technologies listed.
[2] Authority having jurisdiction may ask for cutsheets or other documentation to confirm compliance of light source.
[3] Recessed luminaires marked for use in fire-rated installations, and recessed luminaires installed in non-insulated ceilings are excepted from ii and iii.

I. LIGHTING POWER ALLOWANCE (per 140.7 / 170.2(e))

This table includes areas using allowance calculations per 140.7 / 170.2(e). General Hardscape Allowance is per Table 140.7-A/Table 170.2-R while "Use it or lose it" Allowances are per Table 140.7-B /Table 170.2-S. Indicate which allowances are being used to expand sections for user input. Luminaires that qualify for one of the "Use it or lose it" allowances shall not qualify for another "Use it or lose it" allowance.
Outdoor lighting attached to multifamily buildings and controlled from the inside of a dwelling unit are included in Table H. and are not included here. All other multifamily outdoor lighting is included here.

	01				
	"Use it or lose it" Allowance (select all that apply) (select all that apply)				
☐ General Hardscape Allowance Table I (below)	☐ Per Application Table J	☐ Sales Frontage Table K	☐ Ornamental Table L	☒ Per Specific Area Table M

J. LIGHTING ALLOWANCE: PER APPLICATION

This section does not apply to this project.

K. LIGHTING ALLOWANCE: SALES FRONTAGE

This section does not apply to this project.

Registration Number: | Generated Date/Time: | Documentation Software: EnergyPro
CA Building Energy Efficiency Standards - 2022 Nonresidential Compliance | Report Version: 2022.0.000 Schema Version: rev 20220101 | Compliance ID: EnergyPro-7526-0423-0063 Report Generated: 2023-04-04 15:50:25

STATE OF CALIFORNIA
Outdoor Lighting
CALIFORNIA ENERGY COMMISSION

CERTIFICATE OF COMPLIANCE		NRCC-LTO-E
Project Name:	Mount Trnsit Maintenance Facility	Report Page: (Page 7 of 9)
Project Address:	170 Business Center Drive	Date Prepared: 4/4/2023

L. LIGHTING ALLOWANCE: ORNAMENTAL

This section does not apply to this project.

M. LIGHTING ALLOWANCE: PER SPECIFIC AREA

This table includes areas using the wattage allowance per specific area from Table 140.7-B /Table 170.2-S. More than one specific area allowance may be taken in a single project, if applicable. However, multiple specific area allowances may not be taken for the exact same area on the site.

01	02	03	04	05	06	07	08	09	10
		CALCULATED ALLOWANCE (Watts)			DESIGN WATTS				
Area Description	Specific Area Type per Table 140.7-B	Specific Area (ft²)[1]	Allowed Density (W/ft²)	Extra Allowance (Watts)	Luminaire Name or Item Tag	Watts per Luminaire	# of Luminaires	Design Watts	Additional Allowance (Watts)
Parking Lot	ServiceStationHardscape	112080	0.1	7621.4	WP1	52	21	1,092	5399
					WP2	16	4	64	
					I	30	6	180	
					SP1	163	13	2,119	
					SP2	326	2	652	
					SP3	326	1	326	
					G	46	21	966	
					Total Design Watts for this Area:			5399	
					Total Allowance (Watts) All Areas:				5399

[1] FOOTNOTES: See Table 140.7-B /Table 170.2-S for rules for calculating the specific areas (ft²) for these additional lighting allowances.
[2] For luminaires indicated in Table F as linear, wattage in column 07 is W/lf instead of Watts/luminaire. Total linear feet should be indicated in column 08 instead of number of luminaires.

Registration Number: | Generated Date/Time: | Documentation Software: EnergyPro
CA Building Energy Efficiency Standards - 2022 Nonresidential Compliance | Report Version: 2022.0.000 Schema Version: rev 20220101 | Compliance ID: EnergyPro-7526-0423-0063 Report Generated: 2023-04-04 15:50:25

STATE OF CALIFORNIA
Outdoor Lighting
CALIFORNIA ENERGY COMMISSION

CERTIFICATE OF COMPLIANCE		NRCC-LTO-E
Project Name:	Mount Trnsit Maintenance Facility	Report Page: (Page 8 of 9)
Project Address:	170 Business Center Drive	Date Prepared: 4/4/2023

N. EXISTING CONDITIONS POWER ALLOWANCE (alterations only)

This section does not apply to this project.

O. DECLARATION OF REQUIRED CERTIFICATES OF INSTALLATION

Form/Title
NRCI-LTO-E - Must be submitted for all buildings

P. DECLARATION OF REQUIRED CERTIFICATES OF ACCEPTANCE

There are no NRCA forms required for this project.

Registration Number: | Generated Date/Time: | Documentation Software: EnergyPro
CA Building Energy Efficiency Standards - 2022 Nonresidential Compliance | Report Version: 2022.0.000 Schema Version: rev 20220101 | Compliance ID: EnergyPro-7526-0423-0063 Report Generated: 2023-04-04 15:50:25

STATE OF CALIFORNIA
Outdoor Lighting
CALIFORNIA ENERGY COMMISSION

CERTIFICATE OF COMPLIANCE		NRCC-LTO-E
Project Name:	Mount Trnsit Maintenance Facility	Report Page: (Page 9 of 9)
Project Address:	170 Business Center Drive	Date Prepared: 4/4/2023

DOCUMENTATION AUTHOR'S DECLARATION STATEMENT

I certify that this Certificate of Compliance documentation is accurate and complete.

Documentation Author Name: Stephen R. Zajicek P.E.	Documentation Author Signature:
Company: FBA Engineering	Signature Date: 2023-04-04
Address: 150 Paularino Avenue Suite A120	CEA/ HERS Certification Identification (if applicable): E10372
City/State/Zip: Costa Mesa CA 92626	Phone: 9498529995

RESPONSIBLE PERSON'S DECLARATION STATEMENT

I certify the following under penalty of perjury, under the laws of the State of California:

1. The information provided on this Certificate of Compliance is true and correct.
2. I am eligible under Division 3 of the Business and Professions Code to accept responsibility for the building design or system design identified on this Certificate of Compliance (responsible designer)
3. The energy features and performance specifications, materials, components, and manufactured devices for the building design or system design identified on this Certificate of Compliance conform to the requirements of Title 24, Part 1 and Part 6 of the California Code of Regulations.
4. The building design features or system design features identified on this Certificate of Compliance are consistent with the information provided on other applicable compliance documents, worksheets, calculations, plans and specifications submitted to the enforcement agency for approval with this building permit application.
5. I will ensure that a completed signed copy of this Certificate of Compliance shall be made available with the building permit(s) issued for the building, and made available to the enforcement agency for all applicable inspections. I understand that a completed signed copy of this Certificate of Compliance is required to be included with the documentation the builder provides to the building owner at occupancy.

Responsible Designer Name: Stephen R. Zajicek P.E.	Responsible Designer Signature:
Company: FBA Engineering	Date Signed: 2023-04-04
Address: 150 Paularino Ave, Suite A120	License: E10372
City/State/Zip: Costa Mesa CA 92626	Phone: 949-852-9995

Registration Number: | Generated Date/Time: | Documentation Software: EnergyPro
CA Building Energy Efficiency Standards - 2022 Nonresidential Compliance | Report Version: 2022.0.000 Schema Version: rev 20220101 | Compliance ID: EnergyPro-7526-0423-0063 Report Generated: 2023-04-04 15:50:25

STAMPS

AGENCY APPROVAL
File No.: n.a.

FBA Engineering
Consulting Electrical Engineers
150 Paularino Avenue Suite A120
Costa Mesa, CA 92626
949.852.9995 • 949.852.1657 (fax)
fbaengr.com
FBA Job Number: 874.1055

CONSULTANT BRANDING

RUHNAU CLARKE ARCHITECTS

MOUNT TRANSIT MAINTENANCE FACILITY :100% CD

PROJECT No. :50801
7/29/2023 9:59:32 AM

DRAWN BY: CHECKED BY:

ISSUE No.____ DATE_____ DESCRIPTION_____
ISSUE No.____ DATE_____ DESCRIPTION_____
ISSUE No.____ DATE_____ DESCRIPTION_____
ISSUE No.____ DATE_____ DESCRIPTION_____

REVISION No.____ DATE_____ DESCRIPTION_____
REVISION No.____ DATE_____ DESCRIPTION_____
REVISION No.____ DATE_____ DESCRIPTION_____
REVISION No.____ DATE_____ DESCRIPTION_____

RUHNAUCLARKE.COM
3775 TENTH STREET, RIVERSIDE CALIFORNIA 92501 (951) 684 4664/ 5751 PALMER WAY, SUITE C, CARLSBAD CALIFORNIA 92010 (760) 438 5899

MOUNT TRANSIT MAINTENANCE FACILITY
170 BUSINESS CENTER DR. BIG BEAR LAKES, CA
BIG BEAR LAKES

TITLE 24 (OUTDOOR)

E1-3.2

50801

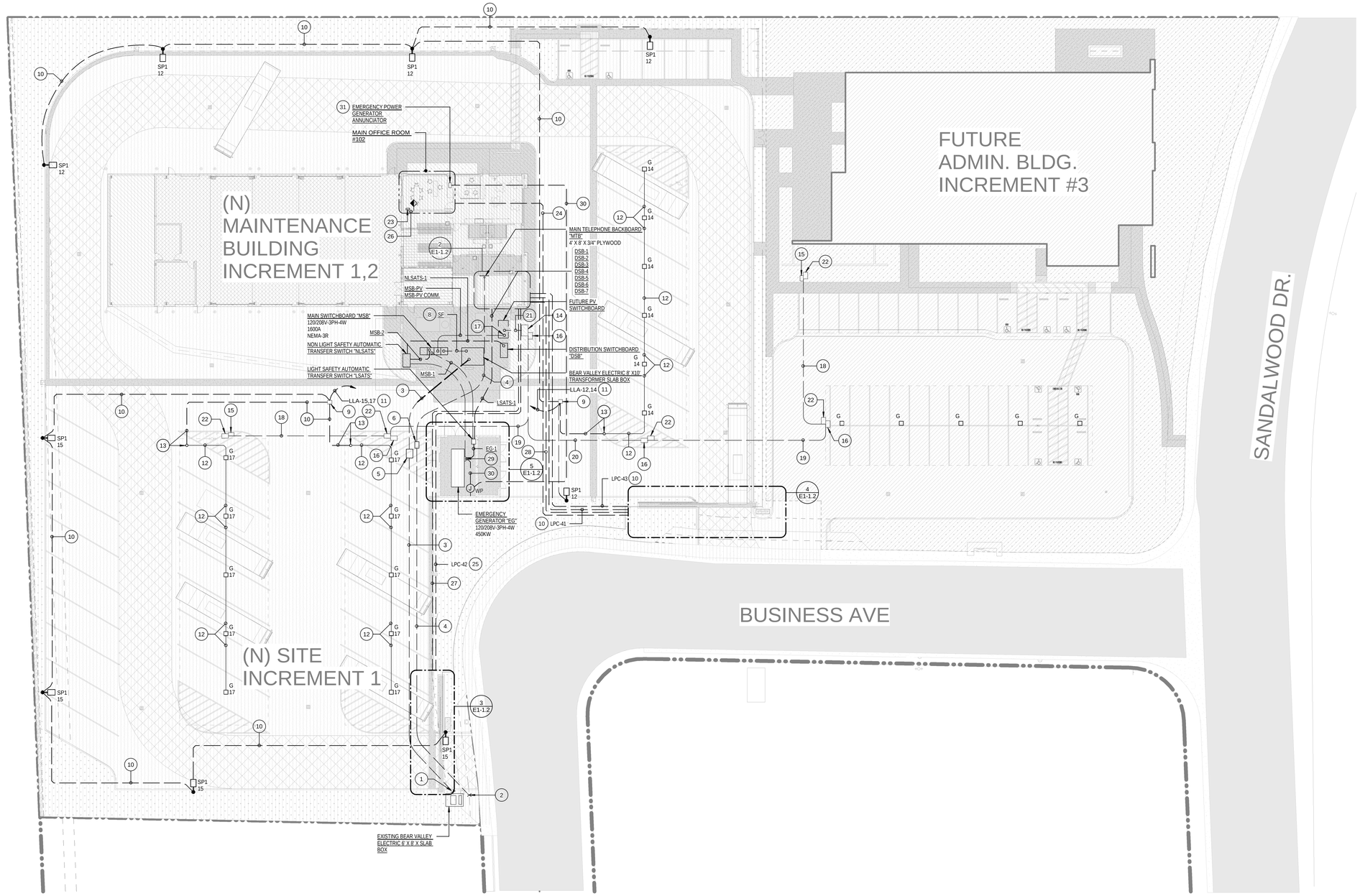

SITE ELECTRICAL PLAN | 1" = 20'-0" | 1

STAMPS

AGENCY APPROVAL
File No.: n.a.

FBAEngineering
Consulting Electrical Engineers
150 Paularino Avenue Suite A120
Costa Mesa, CA 92626
949.852.9995 • 949.852.1657 (fax)
fbaengr.com
FBA Job Number: 874.1055

RUHNAU CLARKE ARCHITECTS

CONSULTANT BRANDING

PLAN NOTES

1. INTERCEPT EXISTING CONCRETE SLAB BOX AS PER BEAR VALLEY SERVICE REQUIREMENTS AND EXTEND NEW CONDUITS AS INDICATED.
2. INTERCEPT EXISTING SPECTRUM COMMUNICATIONS SERVICE CONDUITS AND EXTEND AS INDICATED. COMPLY WITH ALL SPECTRUM COMMUNICATIONS SERVICE REQUIREMENTS.
3. PROVIDE TWO (2) 5"C. WITH BEAR VALLEY ELECTRIC PRIMARY SERVICE CONDUCTORS.
4. PROVIDE TWO (2) 4"C. WITH SPECTRUM COMMUNICATIONS SERVICE CONDUCTORS.
5. PROVIDE 3' X 5' X 4'D. CONCRETE PULLBOX WITH BOLT-DOWN TRAFFIC RATED COVER. COMPLY WITH ALL BEAR VALLEY ELECTRIC SERVICE REQUIREMENTS.
6. PROVIDE 2' X 3' X 3'D. CONCRETE PULLBOX WITH BOLT-DOWN TRAFFIC RATED COVER. COMPLY WITH ALL SPECTRUM COMMUNICATIONS SERVICE REQUIREMENTS.
7. CONCRETE TRENCH WITH TRAFFIC RATED DIAMOND PLATE COVER FOR ROUTING OF BEAR VALLEY ELECTRIC SECONDARY SERVICE CONDUCTORS. COMPLY WITH ALL BEAR VALLEY ELECTRIC SERVICE REQUIREMENTS.
8. SECONDARY FEEDER CONDUIT PER UTILITY COMPANY.
9. PROVIDE 18" X 12" X 24" DEEP CONCRETE PULL BOX WITH BOLT-DOWN TRAFFIC RATED COVER ENGRAVED: "LIGHTING".
10. PROVIDE 3/4"C.- 2#10, 1#10 GRD.
11. PROVIDE 3/4"C. - 4#10, 1#10 GRD.
12. PROVIDE 3/4"C. - 2#10, 1#10 GRD. LIGHTING CONDUIT ON THE CANOPY. REFER TO CANOPY STRUCTURE FOR CANOPY STRUCTURE'S MANUFACTURER REQUIREMENTS.
13. ROUTE CONDUIT DOWN INSIDE THE CANOPY COLUMN AND EXTEND UNDERGROUND CONDUIT TO THE LIGHTING PULL BOX INDICATED. REFER TO CANOPY STRUCTURE FOR CANOPY STRUCTURER'S MANUFACTURER REQUIREMENTS.
14. PROVIDE 3' X 5' X 3' DEEP CONCRETE PULL BOX WITH BOLT-DOWN TRAFFIC RATED COVER ENGRAVED: "PV-POWER". INSTALL PULL BOX LID AND COVER FLUSH WITH THE ADJACENT FINISH GRADE.
15. PROVIDE 18" X 30" X 24" DEEP CONRETE PULL BOX WITH BOLT-DOWN TRAFFIC GRATED COVER ENGRAVE: "PV-COMM". INSTALL PULL BOX LID AND COVER FLUSH WITH THE ADJACENT FINISH GRADE.
16. PROVIDE 2' X 3' X 2' DEEP CONCRETE PULL BOX WITH BOLT-DOWN TRAFFIC RATED COVER ENGRAVE: "PV-COMM". INSTALL PULL BOX LID AND COVER FLUSH WITH THE ADJACENT FINISH GRADE.
17. INDICATED CONDUITS SHALL EXTEND INTO THE ENCLOSURE BELOW GRADE, STUB UP AND CAP AT FUTURE PV SYSTEM SWITCHBOARD. VERIFY THE EXACT LOCATION PRIOR TO ROUGH-IN.
18. PROVIDE ONE (1) 4"C.O. FOR FUTURE PV POWER CONDUCTORS AND ONE (1) 2"C.O. FOR PV COMMUNICATIONS.
19. PROVIDE TWO (2) 4"C.O. FOR FUTURE PV POWER CONDUCTORS AND TWO (2) 2"C.O. FOR PV COMMUNICATIONS.
20. PROVIDE THREE (3) 4"C.O. FOR FUTURE PV POWER CONDUCTORS AND THREE (3) 2"C.O. FOR PV COMMUNICATIONS.
21. PROVIDE FIVE (5) 4"C.O. FOR FUTURE PV POWER CONDUCTORS AND FIVE (5) 2"C.O. FOR PV COMMUNICATIONS.
22. PROVIDE 2' X 3' X 2' DEEP CONCRETE PULL BOX WITH BOLT-DOWN TRAFFIC RATED COVER ENGRAVED: "PV-POWER". INSTALL PULL BOX LID AND COVER FLUSH WITH THE ADJAENT FINISH GRADE.
23. PROVIDE AND INSTALL DKS 1833-80 SERIES CONTROLLER FOR ENTRY GATE TWO WAY COMMUNICTION SYSTEM.
24. PROVIDE 1" CONDUIT WITH 2#12, 1#12 GRD. FROM GATE OPERATOR TO TWO WAY COMMUNICATION IN MAIN OFFICE ROOM #102. SEE DETAIL "4" ON SHEET E1-1.2 FOR CONTINUATION.
25. PROVIDE 3/4"C. - 2#8, 1#10 GRD.
26. INTERCONNECT THE CONTROLLER WITH PHONE SYSTEM.
27. PROVIDE 1"C.- WITH 2#12, 1#12 GRD. FROM ACCESS CONTROL IN DATA ROOM #111 TO GATE OPERATING MECHANISM. SEE DETAL "3" ON SHEET E1-1.2 FOR CONTINUATION.
28. PROVIDE 1"C.- WITH 2#12, 1#12 GRD. FROM ACCESS CONTROL IN DATA ROOM #111 TO GATE OPERATING MECHANISM. SEE DETAL "4" ON SHEET E1-1.2 FOR CONTINUATION.
29. GENERATOR'S CONTROL PANEL. VERIFY EXACT LOCATION.
30. PROVIDE 1"C. WITH GENERATOR'S ANNUNCIATOR WIRING.
31. PROVIDE EMERGENCY POWER GENERATOR ANNUNCIATOR AS INDICATED. VERIFY EXACT LOCATION.

MOUNT TRANSIT MAINTENANCE FACILITY :100% CD

PROJECT No. :50801
7/29/2023 9:59:37 AM

DRAWN BY: CHECKED BY:

ISSUE No.	DATE	DESCRIPTION
ISSUE No.	DATE	DESCRIPTION
ISSUE No.	DATE	DESCRIPTION
ISSUE No.	DATE	DESCRIPTION

REVISION No.	DATE	DESCRIPTION
REVISION No.	DATE	DESCRIPTION
REVISION No.	DATE	DESCRIPTION
REVISION No.	DATE	DESCRIPTION

RUHNAUCLARKE.COM
3775 TENTH STREET, RIVERSIDE CALIFORNIA 92501 (951) 684 4664/ 5751 PALMER WAY, SUITE C, CARLSBAD CALIFORNIA 92010 (760) 438 5899

MOUNT TRANSIT MAINTENANCE FACILITY
170 BUSINESS CENTER DR. BIG BEAR LAKES, CA
BIG BEAR LAKES

SITE ELECTRICAL PLAN

ES1-1

50801

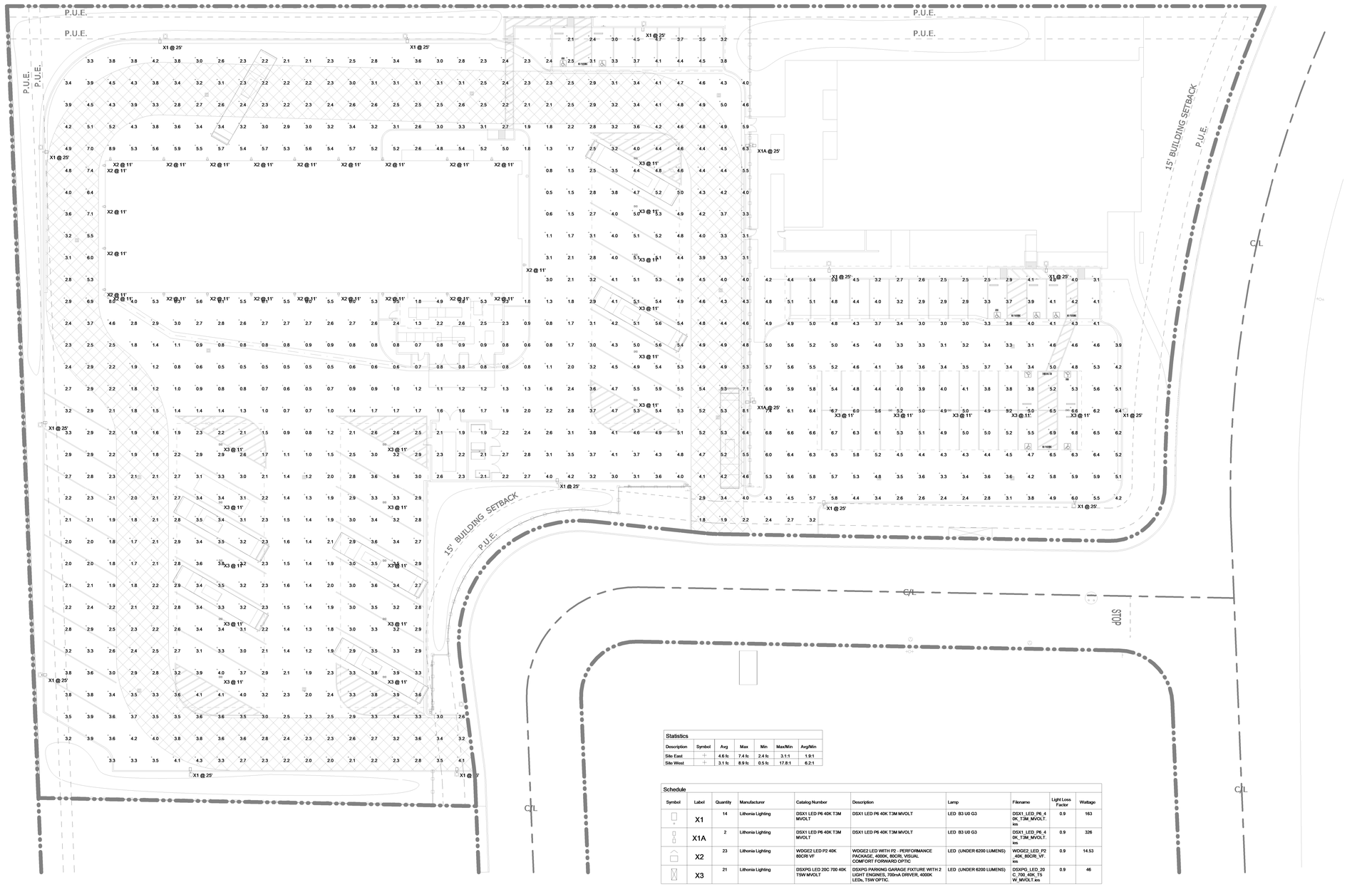

Statistics						
Description	Symbol	Avg	Max	Min	Max/Min	Avg/Min
Site East	+	4.6 fc	7.4 fc	2.4 fc	3.1:1	1.9:1
Site West	+	3.1 fc	8.9 fc	0.5 fc	17.8:1	6.2:1

Schedule									
Symbol	Label	Quantity	Manufacturer	Catalog Number	Description	Lamp	Filename	Light Loss Factor	Wattage
	X1	14	Lithonia Lighting	DSX1 LED P6 40K T3M MVOLT	DSX1 LED P6 40K T3M MVOLT	LED B3 U0 G3	DSX1_LED_P6_40K_T3M_MVOLT.ies	0.9	163
	X1A	2	Lithonia Lighting	DSX1 LED P6 40K T3M MVOLT	DSX1 LED P6 40K T3M MVOLT	LED B3 U0 G3	DSX1_LED_P6_40K_T3M_MVOLT.ies	0.9	326
	X2	23	Lithonia Lighting	WDGE2 LED P2 40K 80CRI VF	WDGE2 LED WITH P2 - PERFORMANCE PACKAGE, 4000K, 80CRI, VISUAL COMFORT FORWARD OPTIC	LED (UNDER 6200 LUMENS)	WDGE2_LED_P2_40K_80CRI_VF.ies	0.9	14.53
	X3	21	Lithonia Lighting	DSXPG LED 20C 700 40K TSW MVOLT	DSXPG PARKING GARAGE FIXTURE WITH 2 LIGHT ENGINES, 700mA DRIVER, 4000K LEDs, TSW OPTIC.	LED (UNDER 6200 LUMENS)	DSXPG_LED_20C_700_40K_TSW_MVOLT.ies	0.9	46

SITE PLAN PHOTOMETRIC CALCULATIONS | 1" = 20'-0" | 1

STAMPS

AGENCY APPROVAL
File No: n.a.

FBAEngineering
Consulting Electrical Engineers
150 Paularino Avenue Suite A120
Costa Mesa, CA 92626
949.852.9995 • 949.852.1657 (fax)
fbaengr.com
FBA Job Number: 874.1055

CONSULTANT BRANDING

RUHNAU CLARKE ARCHITECTS

MOUNT TRANSIT MAINTENANCE FACILITY :100% CD

PROJECT No. :50801
7/29/2023 9:59:39 AM

DRAWN BY: CHECKED BY:

ISSUE No._____ DATE_____ DESCRIPTION_____
ISSUE No._____ DATE_____ DESCRIPTION_____
ISSUE No._____ DATE_____ DESCRIPTION_____
ISSUE No._____ DATE_____ DESCRIPTION_____

REVISION No._____ DATE_____ DESCRIPTION_____
REVISION No._____ DATE_____ DESCRIPTION_____
REVISION No._____ DATE_____ DESCRIPTION_____
REVISION No._____ DATE_____ DESCRIPTION_____

RUHNAUCLARKE.COM
3775 TENTH STREET, RIVERSIDE CALIFORNIA 92501 (951) 684 4664/ 5751 PALMER WAY, SUITE C, CARLSBAD CALIFORNIA 92010 (760) 438 5899

MOUNT TRANSIT MAINTENANCE FACILITY
170 BUSINESS CENTER DR. BIG BEAR LAKES, CA
BIG BEAR LAKES

SITE LIGHTING PHOTOMETRIC CALCULATIONS

ES1-2

50801

FIRE PROTECTION EQUIPMENT SCHEDULE

ROOM NAME	DESCRIPTION	MANUFACTURER & SERIES	ELECTRICAL		NOTES
			MOTOR HP	VOLT/ PHASE	
SHOP EQUIPMENT 107B	TANK MOUNTED AIR COMPRESSOR	GENERAL AIR OLT PLUS (OR APPROVED EQUAL)	TBD	TBD	AIR MAINTENANCE DEVICE TO BE INCLUDED

NOTES:
1. CONTRACTOR TO VERIFY ALL EQUIPMENT SELECTIONS AND TO PROVIDE EQUAL OR BETTER EQUIPMENT.
2. AIR COMPRESSOR TO BE SIZED FOR VOLUME OF LARGEST PREACTION OR DRY SYSTEM.

NFPA 13 HANGER NOTES

1. UNSUPPORTED LENGTH BETWEEN THE END SPRINKLER AND THE LAST HANGER ON THE LINE PER NFPA 13, SECTION 9.2.3.4.
2. UNSUPPORTED ARMOVER LENGTH TO A SPRINKLER PER NFPA 13, SECTION 9.2.3.5.

PIPE HANGER NOTES

1. HANGER SYMBOLS AS SHOWN ON PIPING PLAN DO NOT REFLECT ACTUAL FIELD INSTALLATION. FINAL HANGER LOCATION SHALL BE IN ACCORDANCE WITH NFPA 13.
2. MAXIMUM LENGTH OF UNSUPPORTED STEEL PIPE IS TO BE 24".
3. 3" MINIMUM CLEARANCE FROM UPRIGHT SPRINKLER TO HANGER PER NFPA 13.

HANGER SPACING REQUIREMENTS

PIPE DIAMETER (IN.)	PIPE TYPE	HANGER SPACING	MAX. DISTANCE FROM END OF LINE SPRINKLER HEAD
1	SCHEDULE 40	12'-0" MAX.	36" MAX
1 1/4	SCHEDULE 40	12'-0" MAX.	48" MAX
1 1/2	SCHEDULE 40	15'-0" MAX.	60" MAX
2	SCHEDULE 40	15'-0" MAX.	60" MAX
2.5	SCHEDULE 10	15'-0" MAX.	60" MAX
3	SCHEDULE 10	15'-0" MAX.	60" MAX
4	SCHEDULE 10	15'-0" MAX.	60" MAX

BRANCHLINE RESTRAINT REQUIREMENTS

1. BRANCHLINE RESTRAINT NOT REQUIRED WHERE HANGER ROD ≤ 6" MEASURED BETWEEN TOP OF PIPE AND STRUCTURE.
2. PROVIDE BRANCHLINE RESTRAINT WHERE HANGER ROD > 6" MEASURED BETWEEN TOP OF PIPE AND STRUCTURE.

NFPA 13 MAXIMUM SPACING (ft) OF STEEL LINE RESTRAINT

PIPE DIAMETER (IN.)	SEISMIC COEFFICIENT (Cp) - REFERENCE SEISMIC BRACING REQUIREMENTS		
	$C_P \leq 0.50$	$0.5 < C_P \leq 0.71$	$C_P > 0.71$
1	43	36	26
1 1/4	46	39	27
1 1/2	49	41	29
2	53	45	31

3. PROVIDE LATERAL RESTRAINT AT SPRIG-UPS GREATER THAN 4'-0".
4. WHERE REQUIRED, RESTRAINTS TO BE PROVIDED IN AN APPROVED MANNER AS SPECIFIED BY NFPA 13.

SEISMIC BRACING REQUIREMENTS

FORCE FACTOR C_P = 0.7494

1. EARTHQUAKE BRACING TO BE PROVIDED IN ACCORDANCE WITH NFPA 13.
2. SITE CONDITIONS
   - MAPPED SPECTRAL ACCELERATION FOR SHORT PERIODS S_S = 1.642
   - MAPPED SPECTRAL ACCELERATION FOR A 1-SECOND PERIOD S_1 = 0.568
   - SITE CLASS = D
   - RISK CATEGORY = III
   - MAXIMUM SPECTRAL RESPONSE ACCELERATION AT SHORT PERIODS S_{DS} = 1.313
   - MAXIMUM SPECTRAL RESPONSE ACCELERATION AT 1-SECOND PERIODS S_{D1} = NULL

SEISMIC PROTECTION REQUIREMENTS

- PROVIDE CLEARANCE AT ALL PIPING EXTENDING THROUGH WALLS, FLOORS, PLATFORMS, AND FOUNDATIONS; UNLESS, PROVISIONS OF NFPA 13 ALLOW AN ALTERNATIVE.
- NO CLEARANCE REQUIRED WHERE PIPING PASSES THROUGH FRANGIBLE CONSTRUCTION (SUCH AS GYPSUM BOARD OR EQUAL) THAT IS NOT REQUIRED TO HAVE A FIRE RESISTANCE RATING OR OTHER NFPA 13 EXCEPTIONS.

NFPA 13 PIPE CLEARANCE PROVISIONS

PIPE DIAMETER (IN.)	1	1 1/4	1 1/2	2	2 1/2	3	4	6	8
HOLE SIZE (IN.) (CORE DRILL/SLEEVE)	3	4	4	4	6	6	8	10	12

- PROVIDE SEISMIC SEPARATION ASSEMBLY WHERE PIPING, REGARDLESS OF SIZE, CROSSES BUILDING SEISMIC SEPARATION JOINTS (REFERENCE STRUCTURAL DRAWINGS FOR LOCATION).
- PROVIDE EXPANSION JOINTS WHERE PIPING, REGARDLESS OF SIZE, CROSSES BUILDING EXPANSION JOINTS (REFERENCE STRUCTURAL DRAWINGS FOR LOCATION AND TOLERANCE).
- PROVIDE FLEXIBLE PIPE COUPLINGS ON 2-1/2" AND LARGER PIPE, JOINING GROOVED END PIPE, IN ACCORDANCE WITH NFPA 13 REQUIREMENTS.

FIRE SPRINKLER HEAD SCHEDULE

	RESPONSE TYPE	GENERAL DESCRIPTION	TEMPERATURE RATING, °F
○	QUICK	STANDARD COVERAGE K-5.6, UPRIGHT (SSU)	INTERMEDIATE
◀K	QUICK	EXTENDED COVERAGE K-5.6, HORIZONTAL SIDEWALL	INTERMEDIATE
◉	QUICK	STANDARD COVERAGE K-5.6, PENDENT (SSP)	ORDINARY

GENERAL OVERHEAD NOTES

1. THE CONTRACTOR SHALL VISIT THE SITE PRIOR TO BID AND SHALL THOROUGHLY FAMILIARIZE HIMSELF WITH THE EXISTING CONDITIONS UNDER WHICH HE WILL BE REQUIRED TO WORK.
2. BEFORE PROCEEDING WITH THE WORK THIS CONTRACTOR SHALL CAREFULLY CHECK AND VERIFY ALL DIMENSIONS, SIZES, REQUIRED CLEARANCES AND SHALL ASSUME FULL RESPONSIBILITY FOR THE FITTING OF ALL EQUIPMENT AND MATERIALS HEREIN REQUIRED TO OTHER PARTS OF THE WORK OF THEIR TRADES.
3. IN THE PREPARATION OF THESE DOCUMENTS, CERTAIN ASSUMPTIONS ARE MADE REGARDING EXISTING CONDITIONS. SOME OF THESE ASSUMPTIONS MAY NOT BE VERIFIABLE WITHOUT EXPENDING ADDITIONAL SUMS OF MONEY OR DESTROYING OTHERWISE ADEQUATE OR SERVICEABLE PORTIONS OF EXISTING BUILDINGS AND/OR EQUIPMENT. THEREFORE, THE ENGINEER SHALL NOT BE HELD RESPONSIBLE FOR ANY CHANGES OR ADDITIONAL COSTS INCURRED DUE TO EXISTING CONDITIONS.
4. ITEMS RELATED TO SITE UTILITIES AND/OR OTHER SERVICE(S); MATERIALS, LABOR, PERMITS, FEES, ETC., SHALL BE VERIFIED WITH THE RESPECTIVE SERVING UTILITY COMPANY PRIOR TO SUBMISSION OF A BID. THE ACT OF SUBMITTING A BID SHALL CONSTITUTE FULL RESPONSIBILITY OF THE CONTRACTOR TO INSTALL SERVICE(S) IN COMPLIANCE WITH THE REQUIREMENTS OF THE SERVING UTILITY COMPANY AND THE MECHANICAL ENGINEER. THE CONTRACTOR SHALL BE RESPONSIBLE FOR ALL CHARGES LEVIED BY THE SERVING UTILITY COMPANY EXCEPTING THE FIRST BILLING DEPOSIT.
5. THE CONTRACTOR SHALL COMPLY WITH ALL CONTRACT DOCUMENTS IN LAYING OUT HIS WORK AND EQUIPMENT. HE SHALL COORDINATE THE WORK OF THIS SECTION WITH THE WORK OF OTHER TRADES AND ALL JOB CONDITIONS.
6. THE INSTALLATION OF ACCESS PANELS OR OTHER INDICATING EQUIPMENT OR SPECIALTIES REQUIRING READING, ADJUSTMENT, INSPECTION, REPAIRS, REMOVAL OR REPLACEMENT SHALL BE CONVENIENTLY LOCATED WITH REFERENCE TO THE FINISHED BUILDING.
7. WHERE MATERIAL IS SHOWN ON THE DRAWINGS BUT NOT SPECIFIED, IT SHALL BE OF THE SAME TYPE AND QUALITY AS EXISTING MATERIAL.
8. TEST SYSTEM(S) IN ACCORDANCE WITH REQUIREMENTS OF THE AUTHORITY HAVING JURISDICTION (AHJ).
9. ALL MATERIAL INSTALLED SHALL BE NEW AND U.L. LISTED.
10. PROPRIETARY AND CENTRAL STATION MONITORING ARE NOT PART OF THIS SCOPE OF WORK
11. ELECTRICAL HIGH AND LOW VOLTAGE WIRING AND SIGNAL WIRING ARE NOT IN THIS SCOPE OF WORK
12. MINIMUM DEPTH FOR BURIED PIPE SHALL BE IN ACCORDANCE WITH NFPA AND THE RESPECTIVE LOCATION.
13. RISER NIPPLES AND OUTLETS ON SCHEDULE 10 PIPING ARE TO BE WELDED ONLY
14. SPRINKLER SYSTEMS SHALL BE DESIGNED, INSTALLED, TESTED, AND FLUSHED IN ACCORDANCE WITH:
    - ADOPTED BUILDING CODES
    - LOCAL AMENDMENTS
    - NFPA 13 (STANDARD FOR THE INSTALLATION OF SPRINKLER SYSTEMS)
15. NO INSTALLATION OF ANY PIPING OR EQUIPMENT IS TO BEGIN PRIOR TO APPROVAL OF PLANS BY THE AUTHORITY HAVING JURISDICTION AND THE OWNER'S REPRESENTATIVE.
16. FIRE SPRINKLER SYSTEM SHALL BE SUPERVISED IN ACCORDANCE WITH THE CALIFORNIA BUILDING CODE AND NFPA 72 (NATIONAL FIRE ALARM CODE).
17. CUTTING OF STRUCTURAL AND/OR ARCHITECTURAL MEMBERS TO BE DONE ONLY WITH THE WRITTEN APPROVAL OF THE APPROVING ENGINEER.
18. ALL WIRING SHALL BE ACCOMPLISHED UNDER THE ELECTRICAL CONTRACT.
19. AUTOMATIC FIRE SPRINKLER SYSTEM(S) SHALL BE DESIGNED BY HYDRAULIC CALCULATIONS.
20. CONTRACTOR IS RESPONSIBLE FOR ALL NECESSARY AND ASSOCIATED PERMITTING FEES.
21. CONTRACTOR TO PROVIDE A LISTED FIRESTOPPING SYSTEMS ASSEMBLY AT ALL PIPE AND THROUGH PENETRATIONS PASSING THROUGH RATED CONSTRUCTION (FIRE RATED WALLS, PARTITIONS, FLOORS, AND CEILING FLOOR ASSEMBLIES).
22. ALL EQUIPMENT TO BE INSTALLED IN ACCORDANCE WITH THE EQUIPMENT MANUFACTURE'S RECOMMENDATIONS.
23. CONTRACTOR SHALL PROVIDE ALL NECESSARY TEST CONNECTIONS/DRAINS AND PIPED TO DISCHARGE AT AN APPROVED LOCATION.
24. ALL SYSTEM PIPING SHALL BE HYDROSTATICALLY TESTED AT 200 PSI OR AT 50 PSI ABOVE THE SYSTEM OPERATING PRESSURE, WHICHEVER IS GREATER AND WITNESSED BY OWNERS REPRESENTATIVE AND AHJ.
25. CONTRACTOR SHALL PROVIDE SPRINKLER GUARDS AT ALL HEADS SUBJECT TO DAMAGE.
26. FINISHED SPRINKLER HEAD LOCATIONS TO BE APPROVED BY ARCHITECT PRIOR TO INSTALLATION.
27. SPRINKLER HEAD AND ESCUTCHEON FINISHES TO BE COORDINATED WITH ARCHITECT UNLESS OTHERWISE INDICATED.
28. SCOPE OF WORK SHALL INCLUDE ALL HANGERS, BRACING AND BRANCHLINE RESTRAINTS REQUIRED BY CODE.
29. SCOPE OF WORK SHALL INCLUDE ALL LOW-POINT DRAINS, AUXILIARY DRAINS AND AIR PRESSURE RELIEF VALVES. COORDINATE DRAIN REQUIREMENTS WITH PLUMBING AS NEEDED.
30. FIELD VERIFY EXISTING CONDITIONS PRIOR TO BEGINNING WORK.
31. ALL SPRINKLER PIPING SHALL COMPLY WITH NFPA 13 STANDARDS, EXCEPT THAT PLASTIC PIPE AND COPPER TUBING WILL NOT BE PERMITTED. ALL PIPE SHALL BE STEEL.
32. PROVIDE FIRE SPRINKLER PROTECTION UNDER FIXED OBSTRUCTIONS OVER 4 FT. WIDE (FOR EXAMPLE, DUCTS, OVERHEAD DOORS, OPEN GRATE FLOORING, CONVEYORS OR SIMILAR) WHERE REQUIRED BY NFPA 13.
33. FINAL FIRE SPRINKLER DRAWINGS FOR APPROVAL TO BE SUBMITTED AS A DEFERRED SUBMITTAL BY CONTRACTOR.
34. DRAWINGS ARE DIAGRAMMATIC AND ARE INTENDED TO SHOW GENERAL ARRANGEMENT OF SYSTEM(S). FINAL SIZE AND LOCATION MUST MEET APPLICABLE CODES AND DESIGN REQUIREMENTS.
35. THESE DRAWINGS REPRESENT SCHEMATIC SYSTEMS.
36. DESIGN SHALL BE COMPLETED BY AN INDIVIDUAL WHO IS CERTIFIED AS A LEVEL III OR IV TECHNICIAN BY NATIONAL INSTITUTE FOR CERTIFICATION IN ENGINEERING TECHNOLOGIES (NICET) IN THE AUTOMATIC SPRINKLER SYSTEM LAYOUT SUBFIELD OF FIRE PROTECTION ENGINEERING TECHNOLOGY AND STAMPED AND APPROVED BY LICENSED PROFESSIONAL ENGINEER.
37. PROVIDE A COMPLETE AUTOMATIC FIRE SPRINKLER SYSTEM THROUGHOUT ALL AREAS AND SUBMIT DRAWINGS AND ASSOCIATED CALCULATIONS TO THE ENGINEER FOR APPROVAL.
38. CONTRACTOR SHALL BE RESPONSIBLE FOR SUBMITTING SHOP DRAWINGS AND CALCULATIONS TO THE AHJ AND RECEIVING APPROVAL PRIOR TO STARTING CONSTRUCTION.
39. SEISMIC BRACING AND ASSOCIATED CALCULATIONS TO BE PERFORMED IN ACCORDANCE WITH NFPA 13. REFERENCE STRUCTURAL DRAWINGS TO DETERMINE THE RELATIVE C_P FACTOR.

FIRE PROTECTION DESIGN CRITERIA

SPRINKLER DESIGN DEMANDS FOR HAZARD CLASSIFICATION					
AREA	HAZARD CLASS	MINIMUM DENSITY (GPM/FT²)	MIN. HYDRAULIC DESIGN AREA (FT²)		HOSE DEMAND (GPM)
			WET	DRY	
	LIGHT HAZARD (LH)	0.10	1500	1950	100
	ORDINARY HAZARD GROUP 1 (OH1)	0.15	1500	1950	250
	ORDINARY HAZARD GROUP 2 (OH2)	0.20	1500	1950	250
	EXTRA HAZARD GROUP 1 (EH1)	0.30	2500	3250	500

- FIRE SPRINKLER INSTALLATION, SIZING, AND LOCATION TO MEET THE REQUIREMENTS OF NFPA 13, LOCAL CODES, AND INSURANCE REQUIREMENTS.
- HYDRAULIC CALCULATIONS SHALL BE BASED ON THE DESIGN DENSITY ASSOCIATED WITH THE HAZARD CLASSIFICATION OF THE SPACE.
- VERIFY ALL STORAGE ARRANGEMENTS, COMMODITIES, AND QUANTITIES WITH THE OWNER. STORAGE AREAS SHALL BE DESIGNED FOR CLASS I- IV COMMODITY STORED UP TO 12' IN HEIGHT AND GROUP A PLASTICS SHALL BE LIMITED TO 5' IN HEIGHT OR LESS.
- CALCULATIONS SHALL BE BASED ON A WATER SUPPLY WATER FLOW TEST THAT WAS PERFORMED IN ACCORDANCE WITH NFPA 291 NO MORE THAN 6 MONTHS PRIOR TO SUBMISSION OF THE CALCULATIONS.
- HYDRAULIC CALCULATIONS SHALL INCLUDE A 10% SAFETY FACTOR.

FIRE SPRINKLER LEGEND AND SYMBOLS

SYMBOL	ABBREVIATION	DESCRIPTION
DETAIL No. / SHEET No.		DETAIL REFERENCE
		SECTION REFERENCE
STACK/RISER / P. No.		PLUMBING STACK OR RISER REFERENCE
EQUIPMENT / P. No.		EQUIPMENT REFERENCE
	PHY	PRIVATE HYDRANT ONE HOSE OUTLET
	HYD	PUBLIC HYDRANT TWO HOSE OUTLETS
	FDC	SIAMESE FIRE DEPARTMENT CONNECTION
	PIV	POST INDICATOR VALVE
	DCVA	DOUBLE CHECK VALVE ASSEMBLY
	RPDA	REDUCED PRESSURE DETECTOR ASSEMBLY
	OS&Y	OUTSIDE SCREW AND YOKE, RISING STEM
	T.B.	THRUST BLOCK OR MECHANICAL JOINT RESTRAINT
	PRV	PRESSURE RELIEF VALVE
	BFV	INDICATING BUTTERFLY VALVE
	AV	ALARM CHECK VALVE
	DPV	DRY PIPE VALVE
	ASR	AUTOMATIC SPRINKLER RISER
	VA	VALVE, GENERAL
	CV	CHECK VALVE
	ITV	INSPECTOR TEST VALVE
	DN	PIPE DOWN
	UP	PIPE UP
	DN	TEE DOWN
	UP	TEE UP
		PIPE RISER & PIPE DROP (UP AND DOWN)
	SSP	SEMI RECESSED PENDENT SPRINKLER HEAD
	SSU	UPRIGHT SPRINKLER HEAD
	SSP	CONCEALED PENDENT SPRINKLER HEAD
		PIPE HANGER
		END OF LINE RESTRAINT
		LATERAL SEISMIC BRACING
		LONGITUDINAL SEISMIC BRACING
		"4" WAY BRACING
		PIPE CAP
		SEISMIC FLEXIBLE JOINT
	NODE	HYDRAULIC CALCULATION NODE
	P.O.D.	POINT OF DEMOLITION
	AP	ACCESS PANEL
	ABV	ABOVE
	BEL	BELOW
	CONN	CONNECTION
	CONT	CONTINUATION
	(E)	EXISTING
	(N)	NEW
	DN	DOWN
	(TYP)	TYPICAL
	U.O.N.	UNLESS OTHER NOTED
	W/	WITH
	ATR	ALL THREAD ROD

APPLICABLE CODES AND STANDARDS

APPLICABLE CODES:
2022 CALIFORNIA BUILDING CODE (CBC), PART 2, TITLE 24 CCR
2022 CALIFORNIA FIRE CODE (CFC), PART 9, TITLE 24 CCR
TITLE 19 CCR, PUBLIC SAFETY, STATE FIRE MARSHAL REGULATIONS

PARTIAL LIST OF APPLICABLE STANDARDS:
NFPA 13 2022 STANDARD FOR THE INSTALLATION OF SPRINKLER SYSTEMS (CA AMENDED)
NFPA 24 2019 STANDARD FOR THE INSTALLATION OF PRIVATE FIRE SERVICE MAINS AND THEIR APPURTENANCES (CA AMENDED)
NFPA 72 2022 NATIONAL FIRE ALARM AND SIGNALING CODE (CA AMENDED)

FIRE SPRINKLER SHEET INDEX

Sheet Number	Sheet Name
FP0-0.1	FIRE SPRINKLER LEGEND NOTES & SCHEDULES
FP1-1.1	FIRE SPRINKLER SITE PLAN
FP1-1.2	FIRE SPRINKLER MAINTENANCE BLDG PIPING PLAN

REGISTERED PROFESSIONAL ENGINEER MICHAEL STEWART 1997 Signed: 07/28/2023 FIRE PROTECTION STATE OF CALIFORNIA

LICENSED ARCHITECT ROGER CLARKE No. C-21360 Exp. 10-30-24 STATE OF CALIFORNIA

STAMPS

AGENCY APPROVAL File No.: ########-##-########

MECHANICAL ELECTRICAL AND ENERGY CONSULTANTS

DESIGN WEST ENGINEERING
412 E. Vanderbilt Way
San Bernardino, CA 92408
Tel: 909-890-3700
Fax: 909-890-3770
Email: cadd@designwesteng.com

CONSULTANT BRANDING

RUHNAU CLARKE ARCHITECTS

PRINTED: 7/28/2023 10:13:34 PM
PATH: RUHNAUCLARKE_Corp\14 - 50801_MATP_MTP\21066_Mountain Transit Maintenance

PROJECT No. :50801
7/28/2023 10:13:34 PM

DRAWN BY: _____ CHECKED BY: _____

ISSUE No.____ DATE____ DESCRIPTION_____
ISSUE No.____ DATE____ DESCRIPTION_____
ISSUE No.____ DATE____ DESCRIPTION_____
ISSUE No.____ DATE____ DESCRIPTION_____

REVISION No.____ DATE____ DESCRIPTION_____
REVISION No.____ DATE____ DESCRIPTION_____
REVISION No.____ DATE____ DESCRIPTION_____
REVISION No.____ DATE____ DESCRIPTION_____

MOUNTAIN AREA REGIONAL TRANSIT AUTHORITY
SCHOOL NAME
170 BUSINESS CENTER DR. BIG BEAR LAKES, CA
BIG BEAR LAKES

FIRE SPRINKLER LEGEND NOTES & SCHEDULES

FP0-0.1

50801

MOUNTAIN AREA REGIONAL TRANSIT AUTHORITY:

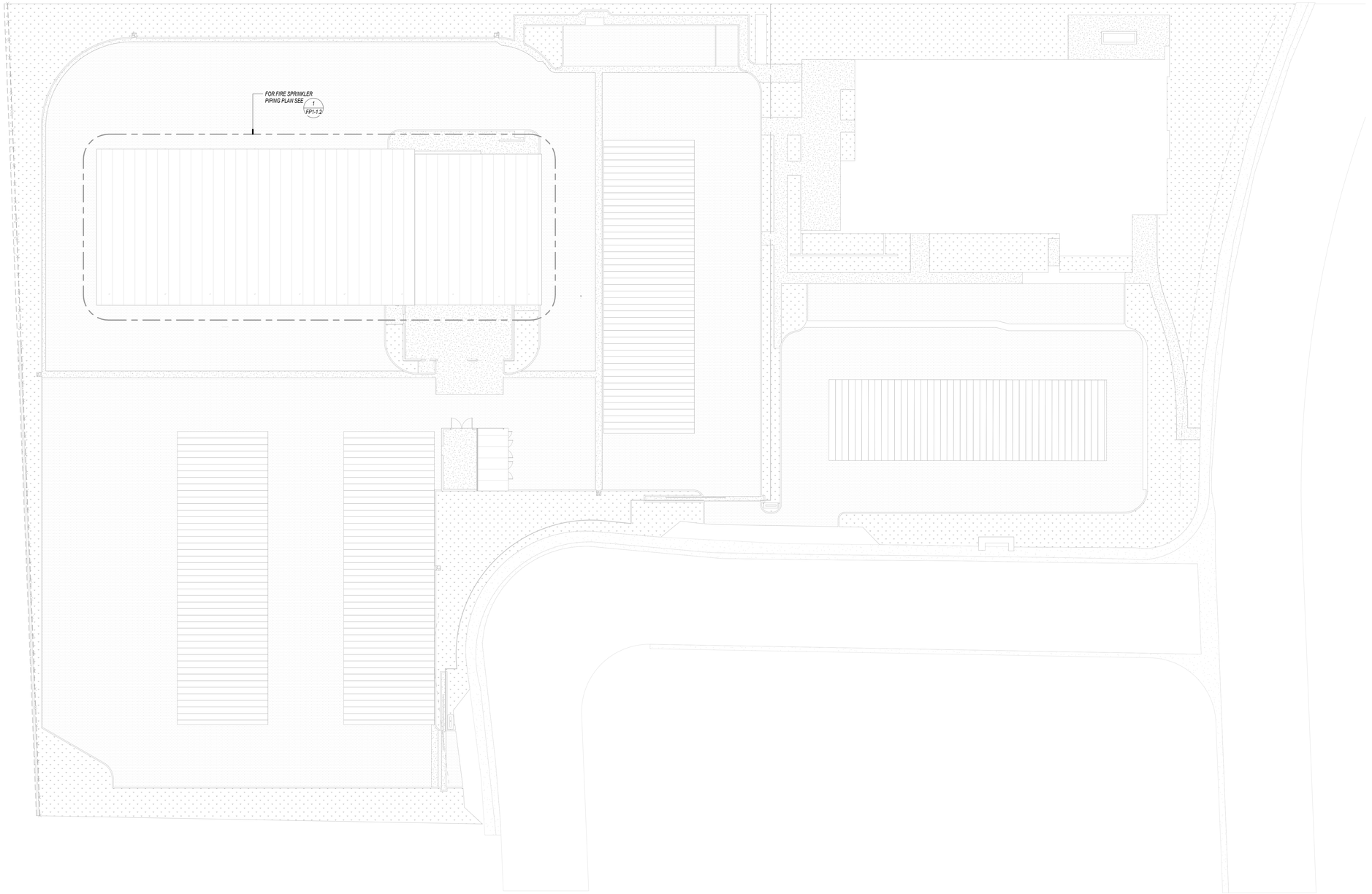

FOR FIRE UNDERGROUND
WORK TO BE PERFORMED
ON SITE SEE CIVIL PLANS

FIRE SPRINKLER SITE PLAN | 1" = 20'-0" | 1

STAMPS

REGISTERED PROFESSIONAL ENGINEER
MICHAEL STEWART
1997
Signed: 07/28/2023
FIRE PROTECTION
STATE OF CALIFORNIA

LICENSED ARCHITECT
ROGER CLARKE
No. C-21360
Exp. 10-30-24
STATE OF CALIFORNIA

AGENCY APPROVAL
File No.: ########-##-########

MECHANICAL
ELECTRICAL
AND ENERGY
CONSULTANTS

DESIGN WEST ENGINEERING

- 412 E. Vanderbilt Way
- San Bernardino, CA 92408
- Tel: 909-890-3700
- Fax: 909-890-3770
- Email: cadd@designwesteng.com

CONSULTANT BRANDING

RUHNAU
CLARKE
ARCHITECTS

GENERAL NOTES

CONSTRUCTION NOTES

MOUNTAIN AREA REGIONAL TRANSIT AUTHORITY:

PROJECT No. :50801
7/28/2023 10:13:36 PM

DRAWN BY: CHECKED BY:

ISSUE No._____ DATE_____ DESCRIPTION_____
ISSUE No._____ DATE_____ DESCRIPTION_____
ISSUE No._____ DATE_____ DESCRIPTION_____
ISSUE No._____ DATE_____ DESCRIPTION_____

REVISION No._____ DATE_____ DESCRIPTION_____
REVISION No._____ DATE_____ DESCRIPTION_____
REVISION No._____ DATE_____ DESCRIPTION_____
REVISION No._____ DATE_____ DESCRIPTION_____

MOUNTAIN AREA REGIONAL TRANSIT AUTHORITY
SCHOOL NAME
170 BUSINESS CENTER DR. BIG BEAR LAKES, CA
BIG BEAR LAKES

FIRE SPRINKLER SITE PLAN

FP1-1.1

50801

PRINTED: 7/28/2023 10:13:36 PM
PATH: 2024 Jobs\50801_MATA_MTMF21065_Mountain Transit Maintenance Addition\Cad\Sheets\FP1-1.1.dwg

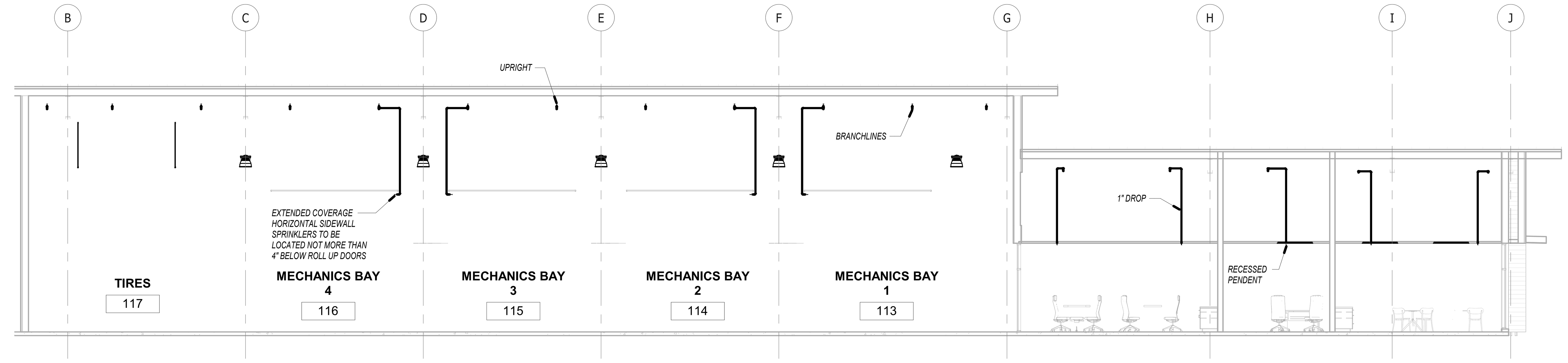

BUILDING SECTION | 1/8" = 1'-0" | 3

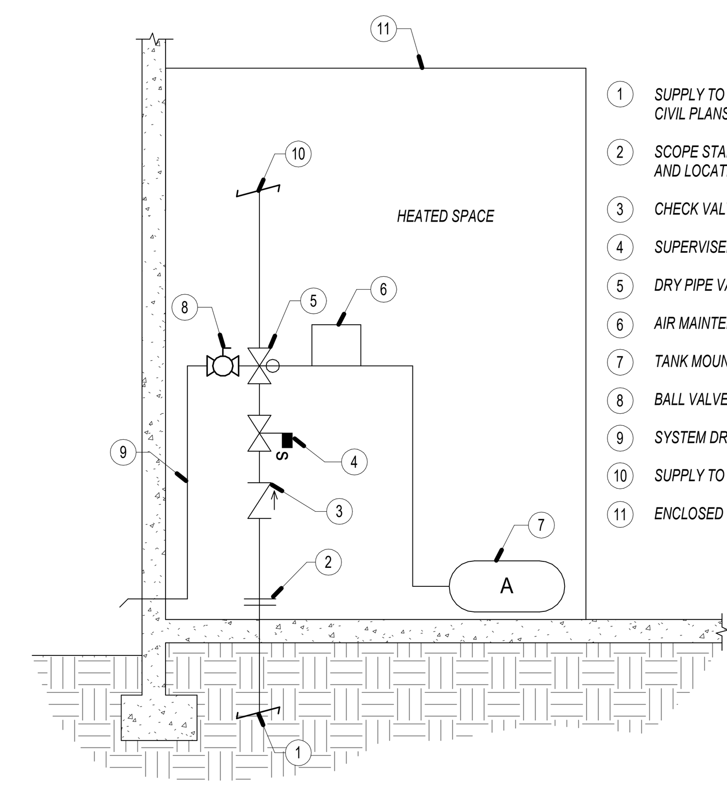

1. SUPPLY TO FACILITY SYSTEM FOR CONTINUATION SEE CIVIL PLANS (NOT IN SCOPE).
2. SCOPE STARTS AT FLANGED FITTING. COORDINATE SIZE AND LOCATION WITH CIVIL PLANS.
3. CHECK VALVE
4. SUPERVISED CONTROL VALVE
5. DRY PIPE VALVE
6. AIR MAINTENANCE DEVICE
7. TANK MOUNTED AIR COMPRESSOR
8. BALL VALVE
9. SYSTEM DRAIN. TERMINATES EXTERIOR OF THE BUILDING.
10. SUPPLY TO DRY SYSTEM.
11. ENCLOSED FIRE RISER ROOM (HEATED)

DRY SYSTEM RISER SCHEMATIC | 2

STAMPS

1997
Signed: 07/28/2023
FIRE PROTECTION
STATE OF CALIFORNIA

LICENSED ARCHITECT
ROGER CLARKE
No. C-21340
Exp. 10-31-23
STATE OF CALIFORNIA

AGENCY APPROVAL
File No: ######A##-#######

MECHANICAL ELECTRICAL AND ENERGY CONSULTANTS

DESIGN WEST ENGINEERING

412 E. Vanderbilt Way
San Bernardino, CA 92408
Tel: 909-890-3700
Fax: 909-890-3770
Email: cadd@designwesteng.com

CONSULTANT BRANDING

RUHNAU CLARKE ARCHITECTS

GENERAL NOTES

1. REFERENCE FP0-0.1 FOR HAZARD CLASSIFICATIONS.
2. ALL MAINS AND BRANCHLINES TO BE SLOPED IN ACCORDANCE WITH NFPA 13.
3. ALL PIPING REQUIRING SUPPORT THAT IS PARALLEL TO STRUCTURE SHALL BE SUPPORTED WITH TRAPEZE STYLE HANGERS TO BE CONNECTED TO STRUCTURAL MEMBERS AND IN ACCORDANCE WITH NFPA 13. FASTENING TO ROOF DECK NOT ACCEPTABLE UNLESS OTHERWISE APPROVED.
4. CONTRACTOR SHALL PROVIDE SPRINKLER GUARDS AT ALL HEADS SUBJECT TO DAMAGE.

U.L. SYSTEM NO. WL1054
METAL PIPE THROUGH WALL ASSEMBLY
F RATING = 1-HR. OR 2-HR.
T RATING = 0-HR.
L RATING AT AMBIENT = LESS THAN 1 CFM/SQ. FT.
L RATING AT 400°F = LESS THAN 4 CFM/SQ. FT.

FRONT VIEW | SECTION A-A

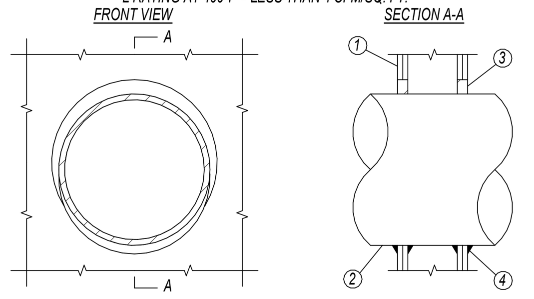

1. GYPSUM WALL ASSEMBLY (1-HR. OR 2-HR. FIRE RATING)(2-HR. SHOWN).
2. PENETRATING ITEM TO BE ONE OF THE FOLLOWING:
   A. MAXIMUM 30" DIAMETER STEEL PIPE (SCHEDULE 10 OR HEAVIER).
   B. MAXIMUM 6" DIAMETER COPPER PIPE.
   C. MAXIMUM 6" DIAMETER STEEL CONDUIT.
   D. MAXIMUM 4" DIAMETER STEEL EMT.
3. a. MINIMUM 5/8" DEPTH HILTI FS-ONE FIRESTOP SEALANT = 1-HR. FIRE-RATING
   b. MINIMUM 1-1/4" DEPTH HILTI FS-ONE FIRESTOP SEALANT - 2HR. FIRE RATING.
4. MINIMUM 1/2" BEAD HILTI FS-ONE FIRESTOP SEALANT FOR POINT OF CONTACT.

NOTES: 1. MAXIMUM DIAMETER OF OPENING = 22-1/4".
2. ANNULAR SPACE = MINIMUM 0", MAXIMUM 2-1/4".

{ } SYMBOL DENOTES LOCATION OF PROTECTED PENETRATIONS

INSTALLATION INSTRUCTIONS FOR UL NO. WL 1054
STEP 1 - PREPARTATION: All surfaces must be clean, sound, dry and frost free prior to application of firestopping materials
STEP 2 - FIRESTOP SEALANT: Apply a minimum 5/8" or 1-1/4" depth of FS-ONE in the annular space around the penetrating item. Tool excess sealant beyond perimeter of the opening 1/2" onto wall surface. Leave completed seal undis-turbed for 48 hours.

FIRESTOP | 4

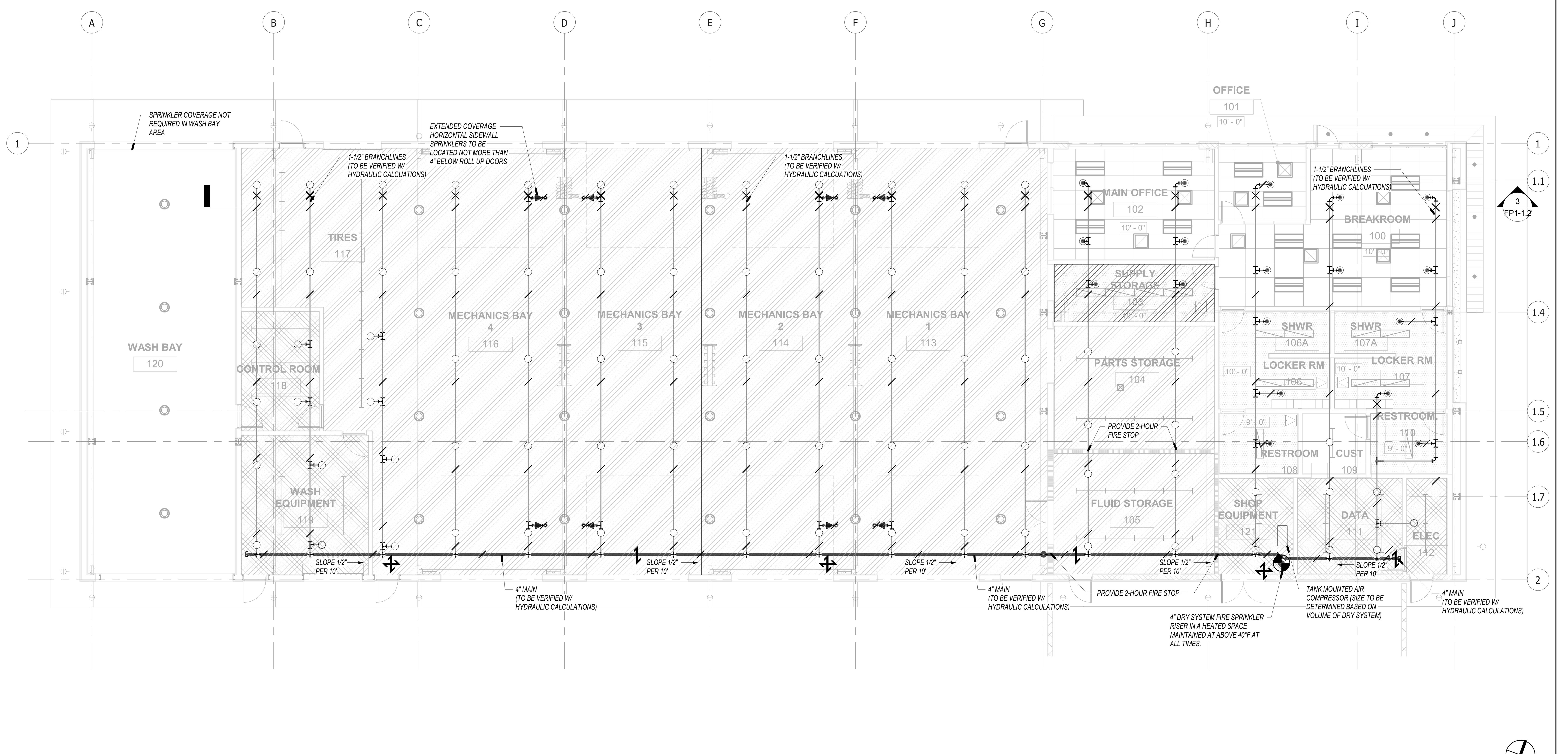

FIRE SPRINKLER MAINTENANCE BLDG PIPING PLAN | 1/8" = 1'-0" | 1

PRINTED :7/28/2023 10:13:40 PM
PATH: BIM 360://50801_MARTA_MTMF/21066_Mountain Transit Maintenance Facility_Fire_Central.rvt

PROJECT No. :50801
7/28/2023 10:13:40 PM

DRAWN BY: CHECKED BY:

ISSUE No.___ DATE___ DESCRIPTION___ REVISION No.___ DATE___ DESCRIPTION___
ISSUE No.___ DATE___ DESCRIPTION___ REVISION No.___ DATE___ DESCRIPTION___
ISSUE No.___ DATE___ DESCRIPTION___ REVISION No.___ DATE___ DESCRIPTION___
ISSUE No.___ DATE___ DESCRIPTION___ REVISION No.___ DATE___ DESCRIPTION___

RUHNAUCLARKE.COM

3775 TENTH STREET, RIVERSIDE CALIFORNIA 92501 (951) 684 4664 / 5751 PALMER WAY, SUITE C, CARLSBAD CALIFORNIA 92010 (760) 438 5899

MOUNTAIN AREA REGIONAL TRANSIT AUTHORITY
SCHOOL NAME
170 BUSINESS CENTER DR. BIG BEAR LAKES, CA
BIG BEAR LAKES

FIRE SPRINKLER MAINTENANCE BLDG PIPING PLAN

FP1-1.2

50801

MOUNTAIN AREA REGIONAL TRANSIT AUTHORITY:

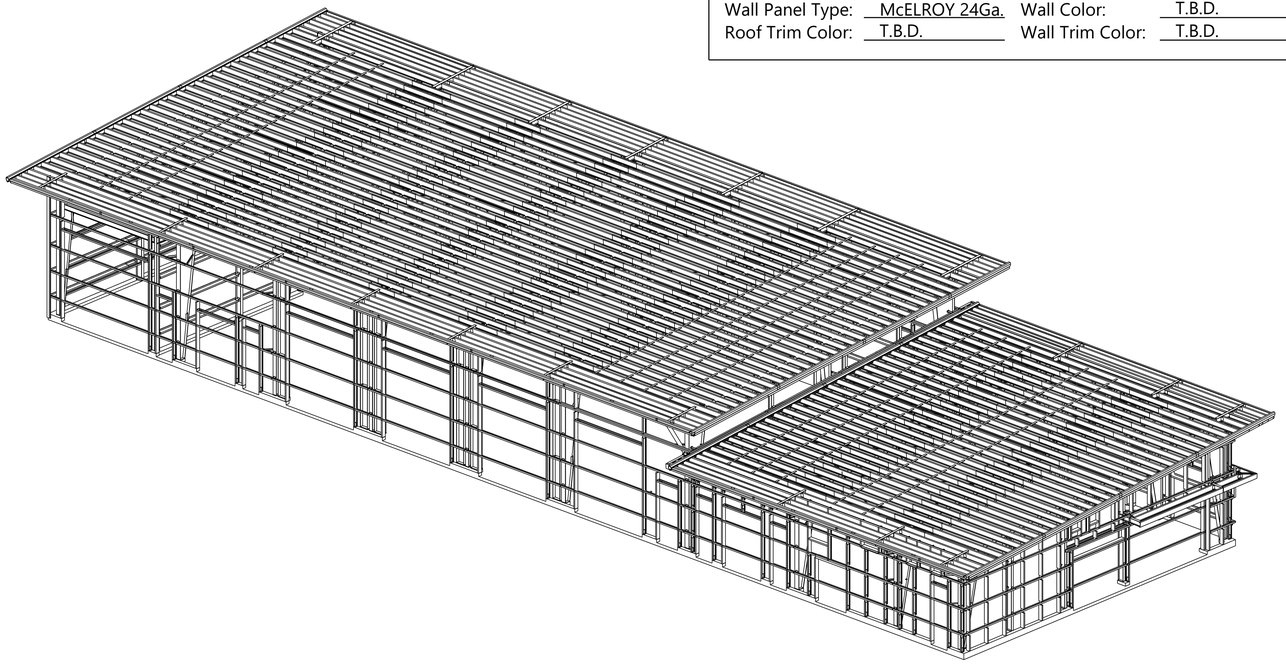

Building Information - MAINTENANCE

Building Width:	60'-0	Front Eave Ht.:	23'-1
Building Length:	133'-3	Back Eave Ht.:	28'-1
Roof Panel Type:	M.S. 24Ga.	Roof Color:	T.B.D.
Wall Panel Type:	McELROY 24Ga.	Wall Color:	T.B.D.
Liner Panel Type:	26Ga. 'R'	Liner Color:	T.B.D.
Roof Trim Color:	T.B.D.	Wall Trim Color:	T.B.D.

Building Information - OFFICE

Building Width:	60'-0	Front Eave Ht.:	16'-1
Building Length:	57'-0	Back Eave Ht.:	21'-1
Roof Panel Type:	M.S. 24Ga.	Roof Color:	T.B.D.
Wall Panel Type:	McELROY 24Ga.	Wall Color:	T.B.D.
Roof Trim Color:	T.B.D.	Wall Trim Color:	T.B.D.

Special Notes

- ALL THE McELROY PANELS ARE NOT BY CBC
- THE McELROY WALL PANEL IS CONSIDERED AS SCREW-DOWN PANEL FOR GIRT DESIGN
- THE McELROY ROOF PANEL IS CONSIDERED AS STANDING SEAM FOR PURLIN DESIGN

GLOSSARY OF ABBREVIATIONS

A.B. = Anchor Bolts	H.S.B. = High Strength Bolts	PL. = Plate
B.S. = Both Sides	Ht. = Height	Req'd = Required
B.U. = Built-Up	M.B = Machine bolts	Rev. = Revision
Dia. Diameter	Max. = Maximum	Stiff. = Stiffener
Flg. = Flange	Min. = Minimum	T.B.D. = To Be Determined
F.S. = Far Side	N.S. = Near Side	Typ. = Typical
Ga. = Gauge	O.C. = On Center	U.N.O. = Unless Noted Otherwise

?? = Part Mark to be determined and will be updated on For Construction drawings

Special Bolting Connection Inspection Req. (Made with A325 Bolts)

1) Pre-tensioning of A325 bolts is required on primary framing, bolted bracing, and strut connections if located in seismic performance/ design category "D", "E" or "F".

2) Slip critical connections are not required by CBC Steel Buildings

3) ½" A325 bolts do not require pre-tensioning unless noted.

Material Specifications

1. Primary Framing:
Web Plates, ASTM A529, A572, A1011, Grade 55
Flanges, ASTM A529, A572, Grade 55

2. Secondary Framing:
Galvanized 16Ga, 15Ga. 14Ga, 13Ga, 12Ga, ASTM A653 G90, Grade 55, Min. Yield 55 ksi.

3. Roof & Wall Covering:
26Ga Painted and Unpainted ZA., ASTM A792 AZ50, Grade 50 & 80
24Ga Painted and Unpainted ZA., ASTM A792 AZ50, Grade 50
26Ga Painted Galvanized, ASTM A653 G90, AZ55 Grade 50 & 80
24Ga Painted Galvanized, ASTM A653 G90, AZ55 Grade 50

4. Bracing:
Cables, ASTM A475 Extra High Strength Grade.
Angles, ASTM A36, Min. Yield 36 ksi.
Rods , A529 Grade 50

5. Bracing and Columns:
Pipe, ASTM A53 Grade B, Min. Yield 35 ksi.
Round HSS, ASTM A500 Grade B, Min. Yield 42 ksi.
Rect. HSS, ASTM A500 Grade B, Min. Yield 46 ksi.

6. Bolts:
High Strength Bolts, ASTM A325-N, Washer under turning element. Machine Bolts, ASTM A307.
Anchor Bolts (Not By CBC) Sized Based on A36 Material.

7. Shop Coating:
All Steel members except galvanized secondary framing, cables, bolts and screws shall receive one shop coat.

Product Certifications

1. IAS International Accreditation Services, Inc. Approved Fabricator AC-472, MB-152.

2. City of Los Angeles, CA. Approved Type I Fabricator No. 1436.

3. City of Riverside, CA. Approved Type I Fabricator No. SP07-0091.

4. Clark County, Approved Steel Fabricator No. 404.

Codes & Specifications

The design of this structure is in compliance with the CBC specifications and standards, utilizing the pertinent provisions and recommendations of the following Codes.

1. California Building Code, 2022 Edition (CBC 2022).

2. American Institute of Steel Construction, Fifteenth Edition (AISC 360-16 & AISC 341-16).

3. American Iron and Steel Institute, 2016 Edition (AISI S100-16).

4. Metal Building Manufacturers Association, 2018 Edition (MBMA, 2018).

5. American Welding Society, Structural Welding Code (AWS D1.1, 2015).

Inspections

1. Shop Welding inspection is not required according to the approved status of the above Certifications.
No field welding is required by CBC Steel Buildings. However, if any field welding is required due to any field modifications, special inspection is required.
2. Special inspection is required for high strength bolts. The Turn of the Nut method of tightening is recommended, under the supervision of an independent testing laboratory. Alternate methods of tightening may be used as permitted in the Specification for Structural Joints Using ASTM A325 or A490 Bolts (AISC Fifteenth Edition). CBC Steel Buildings shall not be responsible for administration or costs associated with the inspection process.
3. Special inspections and testing that may be required by governmental or other authority during construction and/or steel fabrication (collectively, "inspections") are not the responsibility of CBC, and to the extent required it shall be the responsibility of the builder and/or owner. In the event the inspections are required, the builder and/or owner shall employ a third-party quality assurance testing agency approved by the relevant authority. If such requirements are not specifically included in CBC sales documents, no inspections by CBC or at any Nucor facility shall be made. All CBC/NBG facilities are accredited by IAS AC472.

Design Loads

This steel building is designed utilizing the following loads, in compliance with the pertinent provisions of the California Building Code, 2022 Edition (CBC 2022).

All accessories such as doors, windows, etc. not by CBC Steel Buildings, must be designed as Structural Components in accordance with the Wind Load provisions of the applicable Codes and Specifications referenced on this page.

The Builder and/or the Engineer of Record must confirm that the following loads meet the requirements of the local building department. CBC Steel Buildings and the undersigned are "NOT the Engineer of Record for the entire project.

Building Dead Load _____ 7.0 psf (Total)
Collateral Load _____ 8.0 psf
Live Load _____ 20.0 psf
Live Load Reduction Allowed ____ No
Snow Load, Roof _____ 100 psf
Snow Load, Ground _____ 100 psf
Ce _____ 0.9
Impt. Factor _____ 1.0

Wind Load, Speed _____ Vult: 110 mph Vasd: 85 mph
Exposure _____ C
Wind Enclosure _____ Enclosed
Impt. Factor _____ 1.0
Kzt _____ 1.0

Earthquake Load
Risk Category: II
Impt. Factor: 1.0
Ss = 164.20 % S1 = 56.80 %
Sds = 1.31 Sd1 = 0.66
Seismic Site Class: D
Seismic Design Category: D

Equivalent Lateral Force Procedure
Lateral Direction:
Ordinary Moment Frame (OMF)
R = 3.5, Omega = 2.5, V = CsW
Longitudinal Direction:
Ordinary Moment Frame (OMF)
R = 3.5, Omega = 2.5, V = CsW

Other Loads:

Drawing Status

☐ Preliminary:
These drawings are conceptual only and are not to be used for the permit or construction process.

☒ For Permit
These drawings are Final and are for review by the building official or others. This set is not intended for construction, as piece markings have not been identified, nor is it intended for the ANCHOR BOLT PLAN to be poured.

☐ For Construction
Erection drawings, identified as "Detailed for Fabrication".

CBC JOB No. C22I0141A
DEALER: SHOOK BLDG. SYSTEMS, INC.
SHEET 1 OF 25
ENGR. APR. ED
DRAWN TDM
DATE 8/18/2022
SCALE

GENERAL INFORMATION

CUSTOMER: MARTA MAINTENANCE BLDG
LOCATION: BIG BEAR LAKE, CA 92315

PLOT DATES:

CBC STEEL BUILDINGS
A NUCOR Company
IAS ACCREDITED MBMA
P.O. BOX 1009, LATHROP, CA 95330
OFFICE/PLANT: 1700 E. LOUISE AVE
(209) 983-1910 FAX (209) 858-2354

REGISTERED PROFESSIONAL ENGINEER
No. 81257
EXP. 6/30/23
CIVIL
STATE OF CALIFORNIA
07/18/23

REV	BY	DATE
A	RA	7/18/23
	TDM	08/18/2022
		DATE

PLANS FOR PERMITS
Revised building code from IBC2018/CBC2019 to IBC2021/CBC2022.

Detail - A

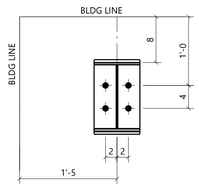

Plate : ½" x 8" x 1'-1" W/ 1" Dia. A.B.'s

Detail - B

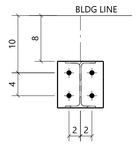

Plate : ⅜" x 8" x 8 ⅛" W/ ¾" Dia. A.B.'s

Detail - C or C*

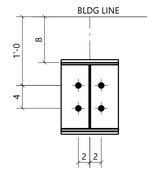

Plate : ⅝" x 8" or *10" x 1'-1" W/ 1" Dia. A.B.'s

Detail - D

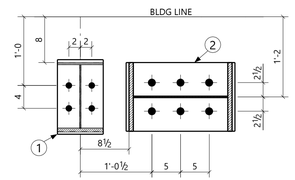

1 Plate : ⅝" x 8" x 1'-1" W/ 1" Dia. A.B.'s
2 Plate : 1 ¼" x 1'-0" x 1'-7" W/ 1 ¼" Dia. A.B.'s

Detail - E

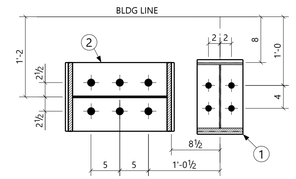

1 Plate : ⅝" x 8" or *10" x 1'-1" W/ 1" Dia. A.B.'s
2 Plate : 1 ¼" x 1'-0" x 1'-7" W/ 1 ¼" Dia. A.B.'s

Detail - F

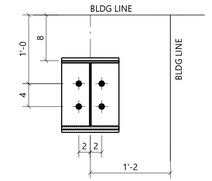

Plate : ¾" x 10" x 1'-1" W/ 1" Dia. A.B.'s

Detail - G

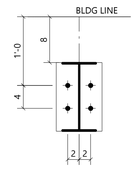

Plate : ⅜" x 8" x 1'-0" W/ ¾" Dia. A.B.'s

Detail - H

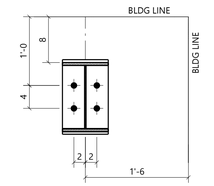

Plate : ⅝" x 8" x 1'-1" W/ 1" Dia. A.B.'s

Detail - J

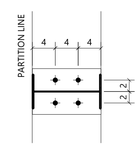

Plate : ⅜" x 8" x 1'-0 W/ ¾" Dia. A.B.'s

Detail - K

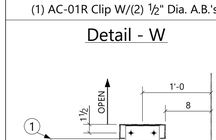

Plate : ⅜" x 8" x 1'-1" W/ ¾" Dia. A.B.'s

Detail - L

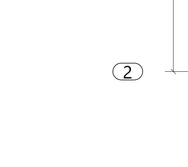

Plate : ½" x 8" x 1'-1" W/ 1" Dia. A.B.'s

Detail - M

Plate : ⅜" x 8" x 8 ⅛" W/ ¾" Dia. A.B.'s

Detail - N or N*

Plate : ⅝" x 8" or *10" x 1'-1" W/ 1" Dia. A.B.'s

Detail - O

1 Plate : ⅝" x 8" x 1'-1" W/ 1" Dia. A.B.'s
2 Plate : 1 ¼" x 1'-0" x 1'-7" W/ 1 ¼" Dia. A.B.'s

Detail - P

1 Plate : ⅝" x 10" x 1'-1" W/ 1" Dia. A.B.'s
2 Plate : 1 ¼" x 1'-0" x 1'-7" W/ 1 ¼" Dia. A.B.'s

Detail - Q

Plate : ¾" x 10" x 1'-1" W/ 1" Dia. A.B.'s

Detail - R

Plate : ⅝" x 8" x 1'-1" W/ 1" Dia. A.B.'s

Detail - S

Plate : ⅜" x 8" x 1'-0 W/ ¾" Dia. A.B.'s

Detail - T

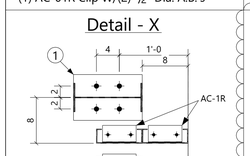

Plate : ⅜" x 8" x 1'-0" W/ ¾" Dia. A.B.'s

Detail - U

(1) AC-01R Clip W/(2) ½" Dia. A.B.'s

Detail - V

(1) AC-01R Clip W/(2) ½" Dia. A.B.'s

Detail - W

1 Plate : ⅜" x 8" x 1'-0" W/ ¾" Dia. A.B.'s
(1) AC-01R Clip W/(2) ½" Dia. A.B.'s

Detail - X

1 Plate : ⅜" x 8" x 1'-0" W/ ¾" Dia. A.B.'s
(1) AC-01R Clip W/(2) ½" Dia. A.B.'s

Detail - Y

1 Plate : ⅝" x 8" x 1'-1" W/ 1" Dia. A.B.'s
2 Plate : 1 ¼" x 1'-0" x 1'-7" W/ 1 ¼" Dia. A.B.'s

ALL FRAMED OPENINGS ARE FIELD LOCATED

SEE CALCS FOR REACTIONS

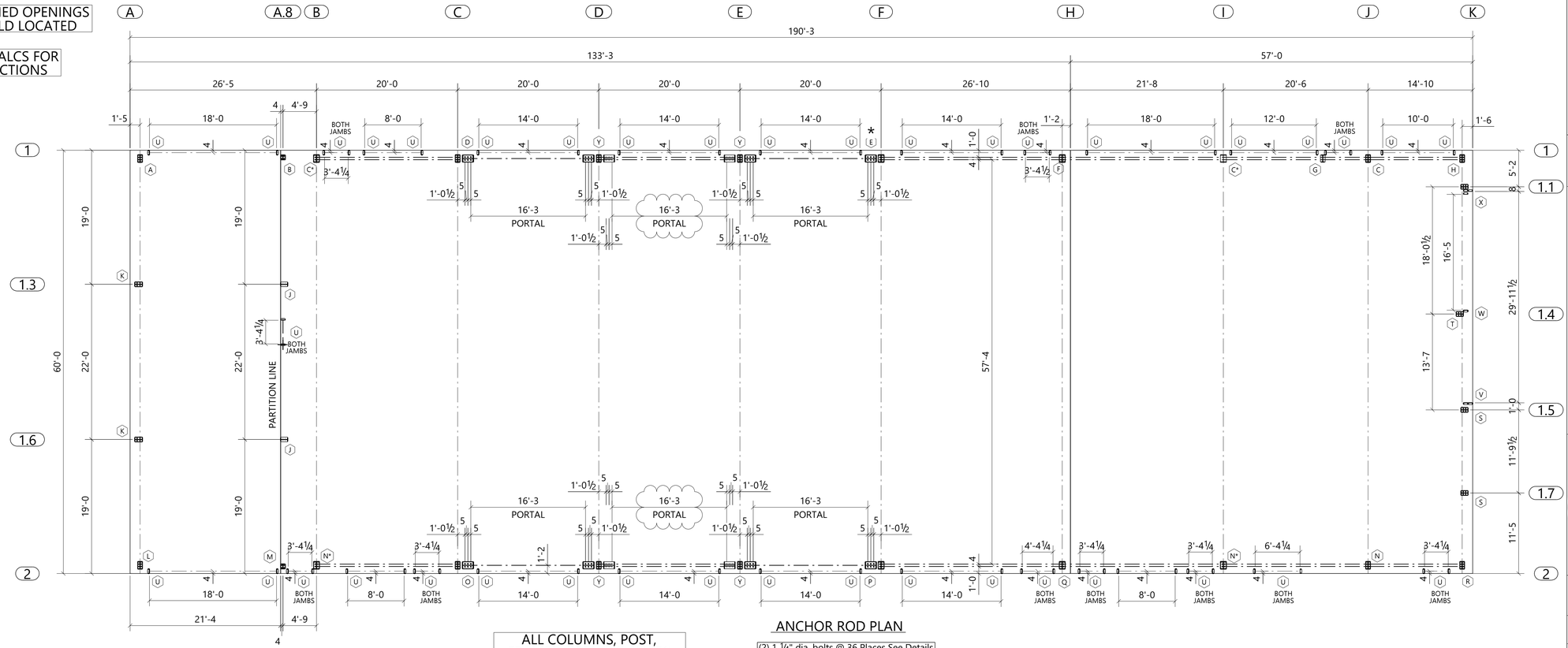

ALL COLUMNS, POST, FRAMED OPENING JAMBS SIT ON 6" CURB OR PEDESTAL

ANCHOR ROD PLAN

(2) 1 ¼" dia. bolts @ 36 Places See Details
(2) 1" dia. bolts @ 40 Places See Details
(2) ¾" dia. bolts @ 22 Places See Details
(2) ½" dia. bolts @ 59 Places See Details

Anchor Rod Plan General Notes:

AN1: THE SPECIFIED ANCHOR ROD DIAMETER ASSUMES F1554 GRADE 36 UNLESS NOTED OTHERWISE, ANCHOR ROD MATERIAL OF EQUAL DIAMETER MEETING OR EXCEEDING THE STRENGTH REQUIREMENTS SET FORTH ON THESE DRAWINGS MAY BE UTILIZED AT THE DISCRETION OF THE FOUNDATION DESIGN ENGINEER. ANCHOR ROD EMBEDMENT LENGTH SHALL BE DETERMINED BY THE FOUNDATION DESIGN ENGINEER.

AN2: METAL BUILDING MANUFACTURER IS NOT RESPONSIBLE FOR PROJECT FOUNDATION DESIGN. THE FOUNDATION DESIGN IS THE RESPONSIBILITY OF A REGISTERED PROFESSIONAL ENGINEER, FAMILIAR WITH LOCAL SITE CONDITIONS.

AN3: ANCHOR RODS, NUTS, FLAT WASHERS FOR ANCHOR RODS, EXPANSION BOLTS, AND CONCRETE/MASONRY EMBEDMENT PLATES ARE NOT BY METAL BUILDING MANUFACTURER.

AN4: THE ANCHOR ROD LOCATIONS PROVIDED BY METAL BUILDING MANUFACTURER SATISFY PERTINENT REQUIREMENTS FOR THE DESIGN OF THE MATERIALS SUPPLIED BY THE METAL BUILDING MANUFACTURER. IT IS THE RESPONSIBILITY OF THE FOUNDATION ENGINEER TO MAKE CERTAIN THAT SUFFICIENT EDGE DISTANCE IS PROVIDED FOR ALL ANCHOR RODS IN THE DETAILS OF THE FOUNDATION DESIGN

AN5: DRAWINGS ARE NOT TO SCALE. SEE DETAILS FOR COLUMN ORIENTATION.

AN6: THE ANCHOR ROD PLAN INDICATES WHERE THE ANCHOR RODS ARE TO BE PLACED AS WELL AS THE FOOTPRINT OF THE METAL BUILDING. IT IS ESSENTIAL THAT THESE ANCHOR ROD PATTERNS BE FOLLOWED IF THESE SETTINGS DIFFER FROM THE ARCHITECTURAL FOUNDATION PLANS, THE METAL BUILDING MANUFACTURER MUST BE CONTACTED IMMEDIATELY – BEFORE CONCRETE IS PLACED

AN7: ALL DIMENSIONS ARE OUT TO OUT OF STEEL. IF CONCRETE NOTCH IS REQUIRED THEN THE REQUIRED DIMENSION SHOULD BE ADDED TO OBTAIN THE OUT TO OUT OF CONCRETE DIMENSIONS.

AN8: FINISHED FLOOR ELEVATION = 100'-0" BOTTOM OF BASE PLATE = 100'-0" UNLESS NOTED OTHERWISE

CBC JOB No. C22I0141A

DEALER: SHOOK BLDG. SYSTEMS, INC.

SHEET 2 OF 25

ENGR. APR. ED

DRAWN TDM

DATE 8/18/2022

SCALE

PLOT DATES:

ANCHOR ROD PLAN

CUSTOMER: MARTA MAINTENANCE BLDG

LOCATION: BIG BEAR LAKE, CA 92315

CBC STEEL BUILDINGS
A NUCOR Company
P.O. BOX 1009, LATHROP, CA 95330
OFFICE/PLANT: 1700 E LOUISE AVE
(209) 983-1910 • FAX: (209) 858-2354

REGISTERED PROFESSIONAL ENGINEER
YIA DOU
No. 81257
EXP. 6/30/23
STATE OF CALIFORNIA
07/18/23

REV	DATE	BY
⚠	PLANS FOR PERMITS	
	08/18/2022	TDM

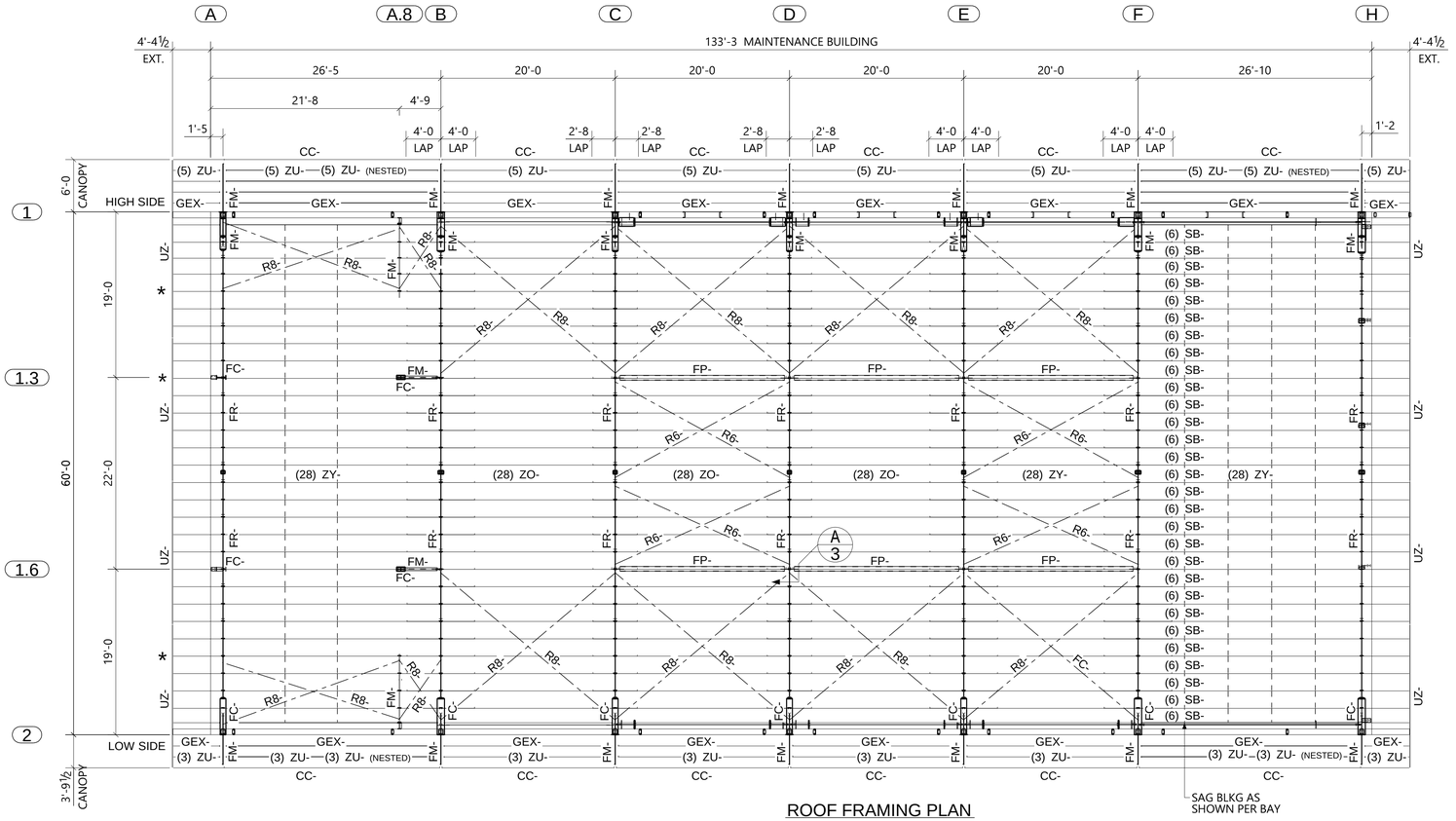

ROOF FRAMING PLAN
MAINTENANCE BUILDING

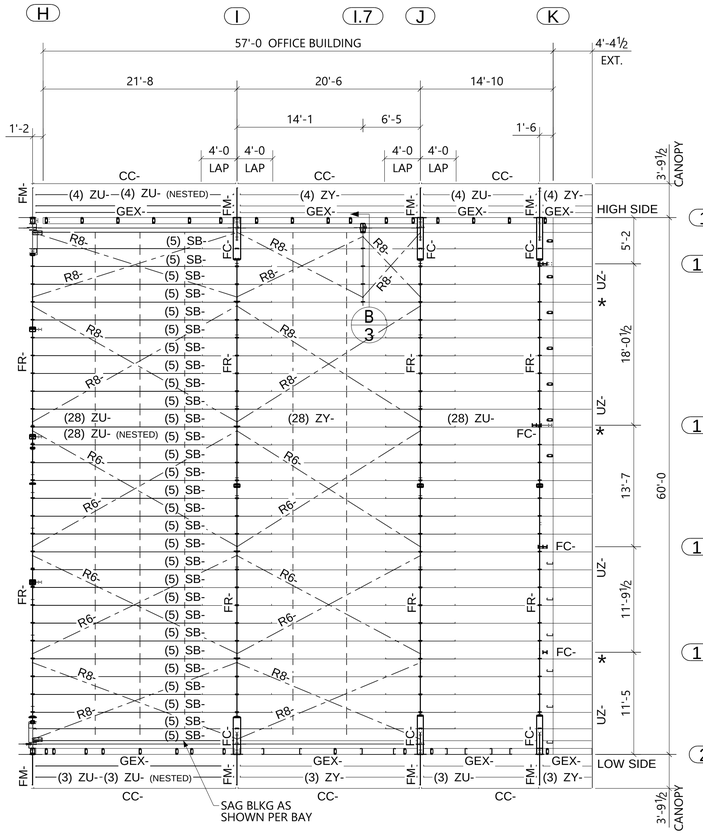

ROOF FRAMING PLAN
OFFICE BUILDING

PIPE STRUT (FP-): HSS6.625x0.188

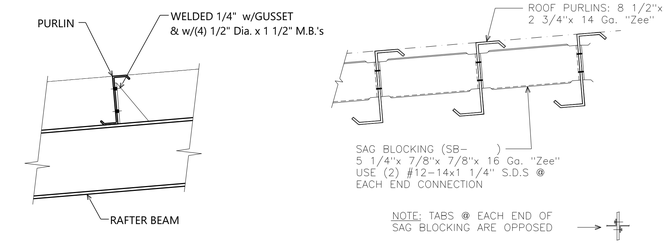

ANTI-ROLL CLIP DETAIL

SAG BLOCKING DETAIL

* - DENOTES CLIP DETAIL @ PURLIN RUN SHOWN

MATERIAL DESCRIPTION

NOTE: ALL LIGHT Ga. MAT'L GALVANIZED

GE8-	EAVE STRUT 8"x 8"x 16 Ga. "Gee"	FC-	STRUCTURAL BUILT-UP COLUMNS
GEX-	EAVE STRUT 9 1/2"x 8"x 14 Ga. "Gee"	FR-	STRUCTURAL BUILT-UP RAFTERS
GP8-	CORNER POSTS 8"x 8"x 16 Ga. "Gee"		STRUCTURAL BUILT-UP MISCELLANEOUS
RA-1	RAKE ANGLE 5"x 2" 16 Ga. 55 ksi.	FM-	WALL SUPPORT BEAM & STRUTS
FB-	FLANGE BRACE 2"x 2" 16 Ga. 55 ksi.	FA-	STRUCTURAL ANGLES
WA-	WINDOW FRAME ANGLE 2"x 2" 16 Ga.	FP-	STRUCTURAL PIPES
PA-	ROOF/WALL SHEETING 26 Ga. "R" PANEL	FT-	STRUCTURAL TUBES
PB-	ROOF/WALL SHEETING 24 Ga. "R" PANEL	FJ-	10 GA. PRESS BROKE MEMBERS
RC-	RIDGE CAP 26 Ga. "R" PANEL	MC-	STRUCTURAL CHANNELS
RD-	RIDGE CAP 24 Ga. "R" PANEL	SB-	SAG BLOCKING 5 1/4"x7/8"x7/8"x16 Ga. "Zee"
PH-	WALL SHEETING 26 Ga. REVERSE "R" PANEL	RB-	RIDGE SAG BLOCKING 5 1/4"x7/8"x7/8"x16 Ga. "Zee"
PJ-	WALL SHEETING 24 Ga. REVERSE "R" PANEL		
PD-	WALL SHEETING 26 Ga. "A" PANEL	BC-	BRACE CABLE 3/8"Ø
PE-	WALL SHEETING 24 Ga. "A" PANEL	RS-	BRACE RODS 5/8"Ø
S2P-	ROOF SHEETING STANDING SEAM S5-24 PANEL	R6-	BRACE RODS 3/4"Ø
S3P-	ROOF SHEETING STANDING SEAM MS-24 PANEL	R8-	BRACE RODS 1"Ø
		R10-	BRACE RODS 1 1/4"Ø
H9320	TRANSLUCENT "R" PANEL 3' x 10'-8	R12-	BRACE RODS 1 1/2"Ø
H9318	INSULATED TRANSLUCENT "R" PANEL 3' x 10'-8		

8" DEEP MEMBER DESCRIPTIONS

ZS-	ROOF PURLINS / WALL GIRTS 8"x 2 1/2"x 12 Ga. (0.099) "Zee"
ZX-	ROOF PURLINS / WALL GIRTS 8"x 2 1/2"x 13 Ga. (0.089) "Zee"
ZZ-	ROOF PURLINS / WALL GIRTS 8"x 2 1/2"x 14 Ga. (0.075) "Zee"
ZT-	ROOF PURLINS / WALL GIRTS 8"x 2 1/2"x 15 Ga. (0.067) "Zee"
ZW-	ROOF PURLINS / WALL GIRTS 8"x 2 1/2"x 16 Ga. (0.060) "Zee"
CS-	DOOR HEADERS/JAMBS & END POSTS 8"x 2 1/2"x 12 Ga. (0.099) "Cee"
CX-	DOOR HEADERS/JAMBS & END POSTS 8"x 2 1/2"x 13Ga. (0.089) "Cee"
CZ-	DOOR HEADERS/JAMBS & END POSTS 8"x 2 1/2"x 14 Ga. (0.075) "Cee"
CT-	DOOR HEADERS/JAMBS & END POSTS 8"x 2 1/2"x 15 Ga. (0.067) "Cee"
CW-	DOOR HEADERS/JAMBS & END POSTS 8"x 2 1/2"x 16 Ga. (0.060) "Cee"
DX-	DOUBLE CEE RAKE BEAM (2) 8"x 2 1/2"x 13 Ga. (0.089) "Cee"
US-	CAP CHANNEL 8 1/4" x 3" x 12 Ga.
UX-	CAP CHANNEL 8 1/4" x 3" x 13 Ga.
UZ-	CAP CHANNEL 8 1/4" x 3" x 14 Ga.
UT-	CAP CHANNEL 8 1/4" x 3" x 15 Ga.
UW-	CAP CHANNEL 8 1/4" x 3" x 16 Ga.
UR-	"WRAP" HEADER CHANNEL 8" x 8 1/4" x 4" 14 Ga.

9 1/2" DEEP MEMBER DESCRIPTIONS

ZY-	ROOF PURLINS / WALL GIRTS 9 1/2"x 3"x 12 Ga. (0.099) "Zee"
ZU-	ROOF PURLINS / WALL GIRTS 9 1/2"x 3"x 13 Ga. (0.089) "Zee"
ZI-	ROOF PURLINS / WALL GIRTS 9 1/2"x 3"x 14 Ga. (0.075) "Zee"
ZO-	ROOF PURLINS / WALL GIRTS 9 1/2"x 3"x 15 Ga. (0.067) "Zee"
CC-	DOOR HEADERS/JAMBS & END POSTS 9 1/2"x 2 1/2"x 12 Ga. (0.099) "Cee"
CR-	DOOR HEADERS/JAMBS & END POSTS 9 1/2"x 2 1/2"x 15 Ga. (0.067) "Cee"
UY-	CAP CHANNEL 9 3/4" x 3" x 12 Ga.
UU-	CAP CHANNEL 9 3/4" x 3" x 13 Ga.
UI-	CAP CHANNEL 9 3/4" x 3" x 14 Ga.
UO-	CAP CHANNEL 9 3/4" x 3" x 15 Ga.

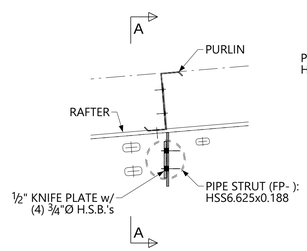

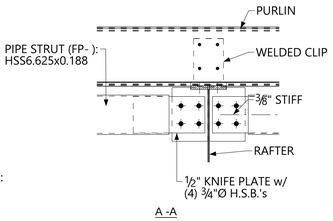

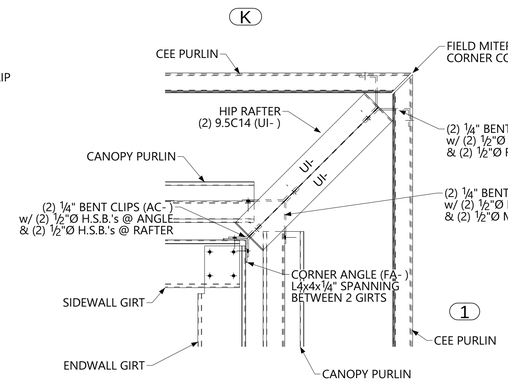

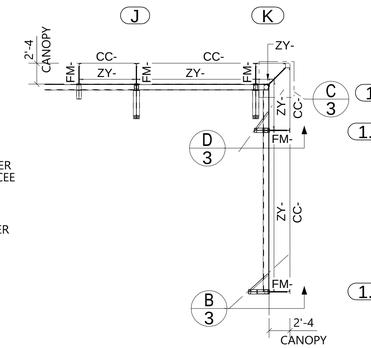

ROOF FRAMING PLAN
BELOW EAVE CANOPY

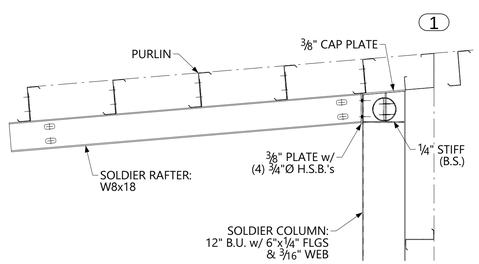

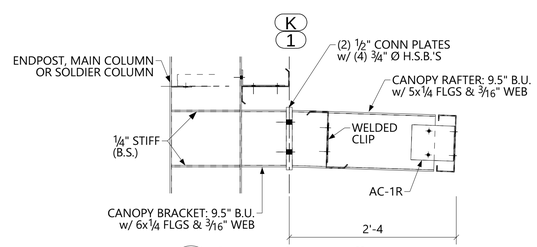

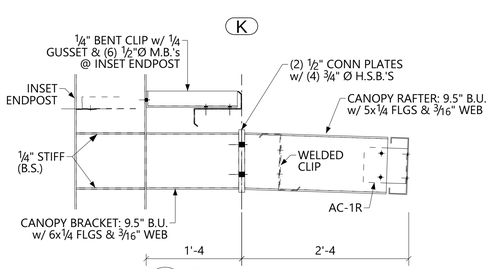

CBC JOB No. C22I0141A

ROOF PLAN

CUSTOMER: MARTA MAINTENANCE BLDG

LOCATION: BIG BEAR LAKE, CA 92315

PLOT DATES:

DEALER: SHOOK BLDG. SYSTEMS, INC.

SHEET 3 OF 25

ENGR. APR. ED

DRAWN TDM

DATE 8/18/2022

SCALE

STEEL BUILDINGS
A NUCOR Company
CBC
P.O. BOX 1009, LATHROP, CA 95330
OFFICE@PLANIT.1700 E LOUISE AVE
(209) 983-0910 FAX: (209) 858-2354

REGISTERED PROFESSIONAL ENGINEER
KIA DOU
No. 81257
EXP. 6/30/23
STRUCTURAL
07/18/23

REV	DATE	BY
1	08/18/2022	TDM

PLANS FOR PERMITS

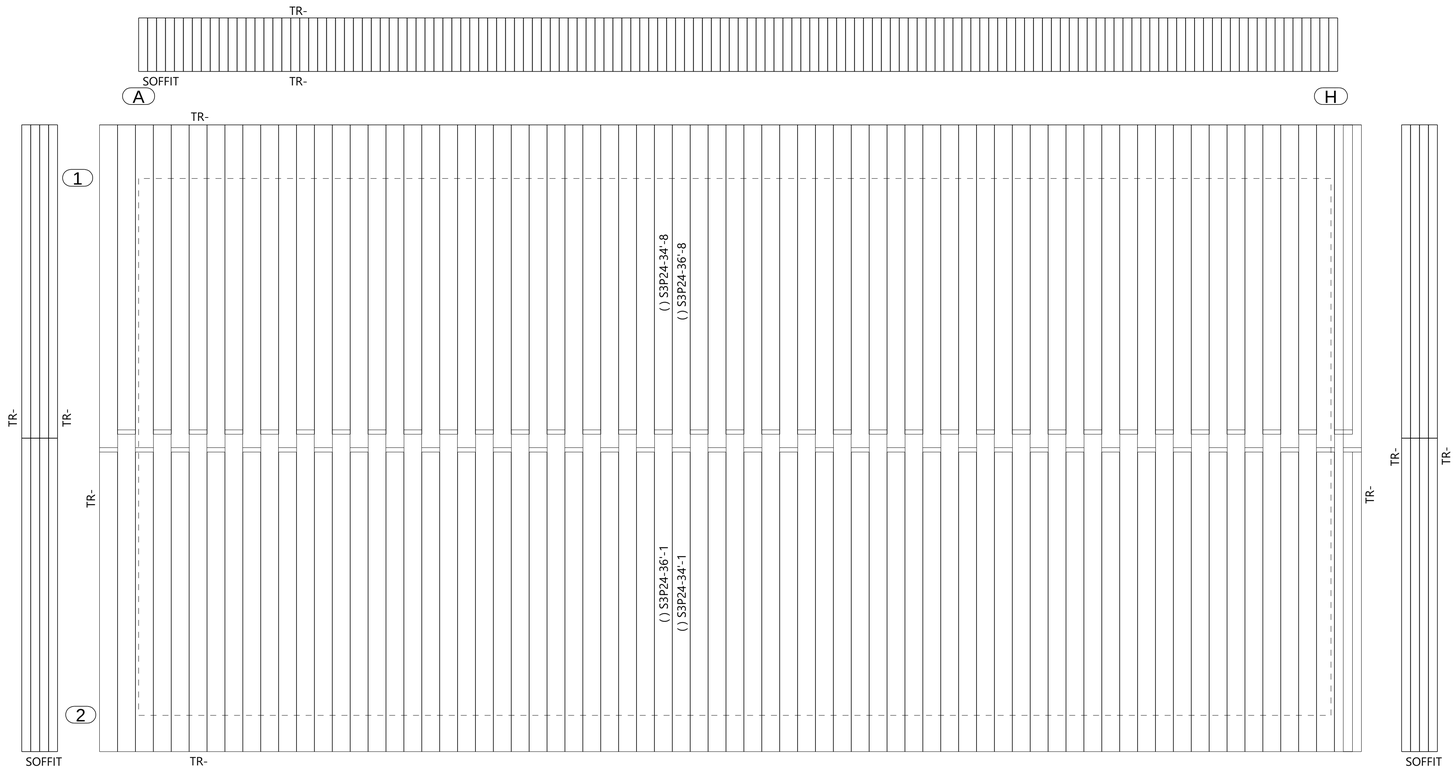

ROOF SHEETING PLAN

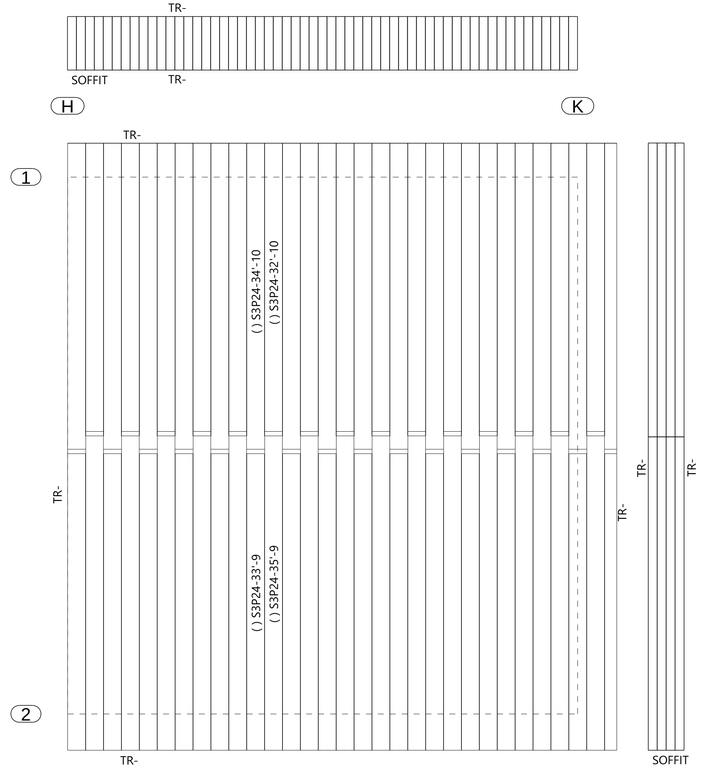

ROOF SHEETING PLAN

PANELS FOR MAINTANCE BUILDING & OFFICE BUILDING

ROOF: 24GA MECHANICALLY SEAMED SS PANEL
COLOR: T.B.D.

SOFFIT: 24GA FW-120 PANEL BY McELROY METALS
COLOR: METALLIC COPPER PENNY FINISH

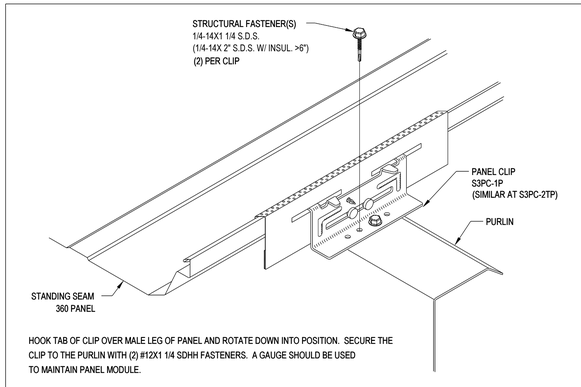

HOOK TAB OF CLIP OVER MALE LEG OF PANEL AND ROTATE DOWN INTO POSITION. SECURE THE CLIP TO THE PURLIN WITH (2) #12X1 1/4 SDHH FASTENERS. A GAUGE SHOULD BE USED TO MAINTAIN PANEL MODULE.

TYPICAL PERIMETER CLIP ATTACHMENT TO PURLIN — RC17B
STANDING SEAM 360 (M.S.) — TA

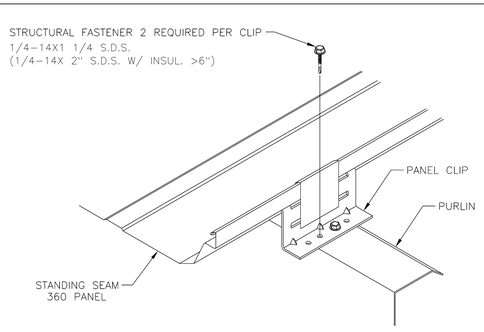

HOOK TAB OF CLIP OVER MALE LEG OF PANEL AND ROTATE DOWN INTO POSITION. SECURE THE CLIP TO THE PURLIN WITH TWO 1/4-14x1 1/4" S.D. FASTENERS. A GAUGE SHOULD BE USED TO MAINTAIN PANEL MODULE.

TYPICAL CLIP ATTACHMENT TO PURLIN — RC17
STANDING SEAM 360 (M.S.) — TA

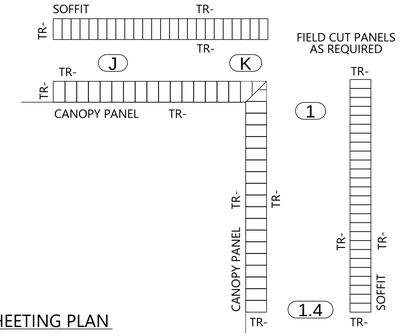

ROOF SHEETING PLAN
BELOW EAVE CANOPY

CANOPY: 24GA 16" WIDE MAXIMA STANDING SEAM ROOF PANEL BY McELROY METALS
COLOR: STANDARD KYNAR FINISH

SOFFIT: 24GA 12" WIDE FW-120 PANEL BY McELROY METALS
COLOR: METALLIC COPPER PENNY FINISH

CBC JOB No. C22I0141A

ROOF SHEETING PLAN

CUSTOMER: MARTA MAINTENANCE BLDG
LOCATION: BIG BEAR LAKE, CA 92315

DEALER: SHOOK BLDG. SYSTEMS, INC.
SHEET 4 OF 25
ENGR. APR. ED
DRAWN TDM
DATE 8/18/2022
SCALE

PLOT DATES:

CBC STEEL BUILDINGS
A NUCOR Company
P.O. BOX 1009, LATHROP, CA 95330
OFFICES/PLANT: 1700 E. LOUISE AVE
(209) 983-0950 FAX (209) 858-2354

REGISTERED PROFESSIONAL ENGINEER
VY DOU
No. 81257
EXP. 12/31/23
MECHANICAL
07/18/23

REV.	DATE	BY
1	08/18/2022	TDM

PLANS FOR PERMITS

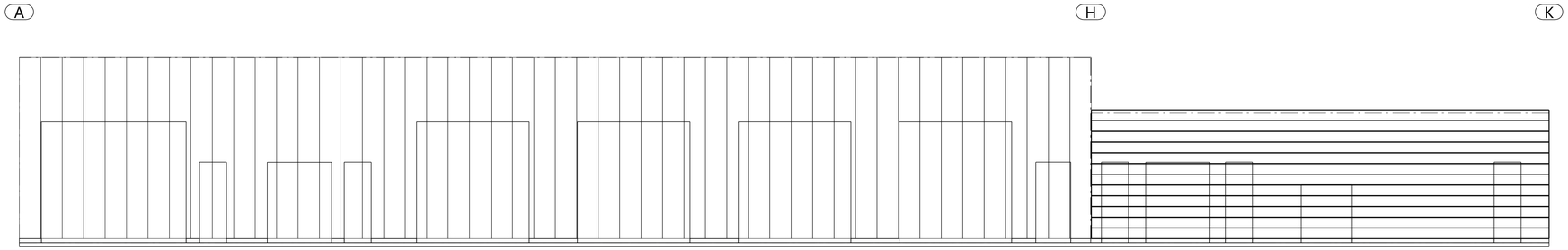

SIDEWALL ELEVATION AT LINE 2

VERTICAL WALL PANELS:
24GA 32" WIDE MULTI-COR PANEL BY McELROY METALS
COLOR: STANDARD KYNAR FINISH

HORTIZONTAL WALL PANELS:
24GA 16" WIDE MSR PANEL BY McELROY METALS
COLOR: STANDARD KYNAR FINISH

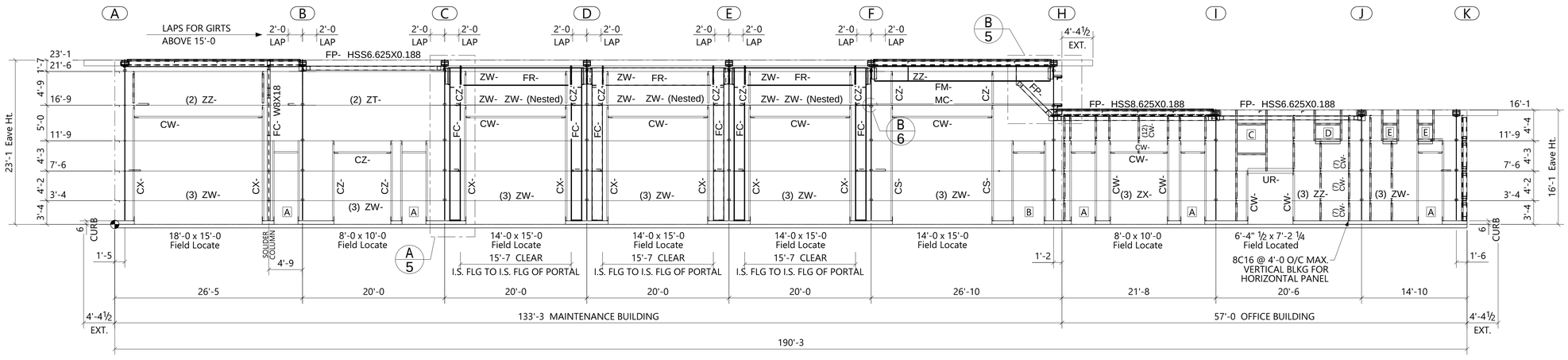

SIDEWALL ELEVATION AT LINE 2

SUPPORT BEAM (FM-): 26" B.U. w/ 10" x ½" FLGS & ⅜" WEB
F.O. SUPPORT (MC-): C8x18.75
PIPE STRUT (FP-): SIZE SHOWN ON ELEVATION

- A (5) 3'-4" ½ x 10'-0 ¼ (FIELD LOCATED)
  HEADER: CW-
  (2) JAMBS: CW-
- B (1) 4'-4" ½ x 10'-0 ¼ (FIELD LOCATED)
  HEADER: CW-
  (2) JAMBS: CW-
- C (1) 4'-0 x 4'-0 (FIELD LOCATED)
  HEADER: CW-
  SILL: CW- (SILL @ 10'-0)
  (2) JAMBS: CW-
- D (1) 3'-6 x 1'-8 (FIELD LOCATED)
  HEADER: CW-
  SILL: UR- (SILL @ 12'-0)
  (2) JAMBS: CW-
- E (2) 2'-0 x 2'-0 (FIELD LOCATED)
  HEADER: CW-
  SILL: UR- (SILL @ 12'-0)
  (2) JAMBS: CW-

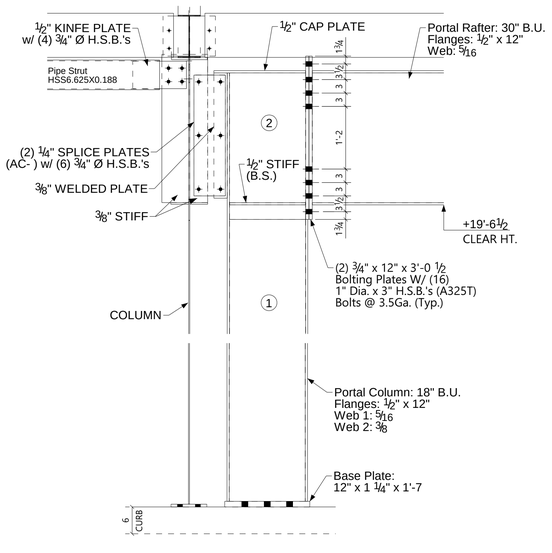

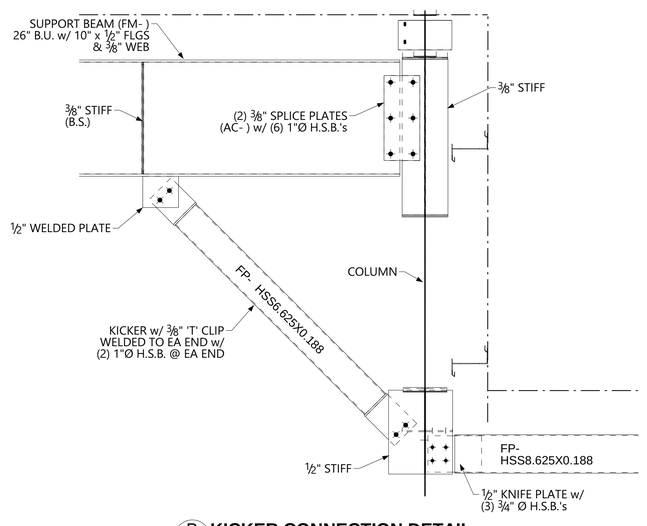

CBC STEEL BUILDINGS
A NUCOR Company
P.O. BOX 1009, LATHROP, CA 95330
OFFICES/PLANT: 1700 E. LOUISE AVE
(209) 983-0960 FAX: (209) 858-2354
IAS ACCREDITED
MBMA METALS

REGISTERED PROFESSIONAL ENGINEER
VIA DOU
No. 81257
EXP. 12/31/23
STATE OF CALIFORNIA
07/18/23

DATE	BY
08/18/2022	TDM

PLANS FOR PERMITS

PLOT DATES:

SIDEWALL ELEVATION

CUSTOMER: MARTA MAINTENANCE BLDG

LOCATION: BIG BEAR LAKE, CA 92315

CBC JOB No. C22I0141A

DEALER: SHOOK BLDG. SYSTEMS, INC.

SHEET	OF
5	25

ENGR. APR.	DRAWN	DATE	SCALE
ED	TDM	8/18/2022	

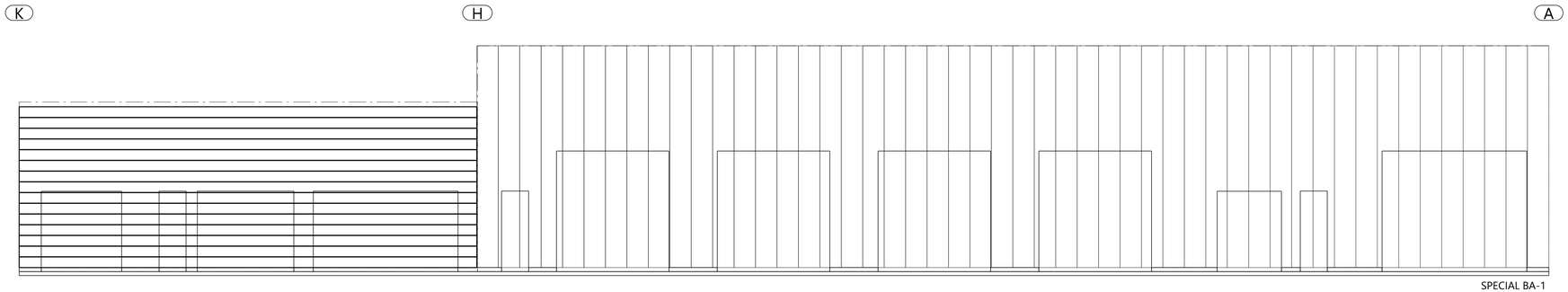

VERTICAL WALL PANELS:
24GA 32" WIDE MULTI-COR PANEL BY McELROY METALS
COLOR: STANDARD KYNAR FINISH

HORTIZONTAL WALL PANELS:
24GA 16" WIDE MSR PANEL BY McELROY METALS
COLOR: STANDARD KYNAR FINISH

SIDEWALL ELEVATION AT LINE 1

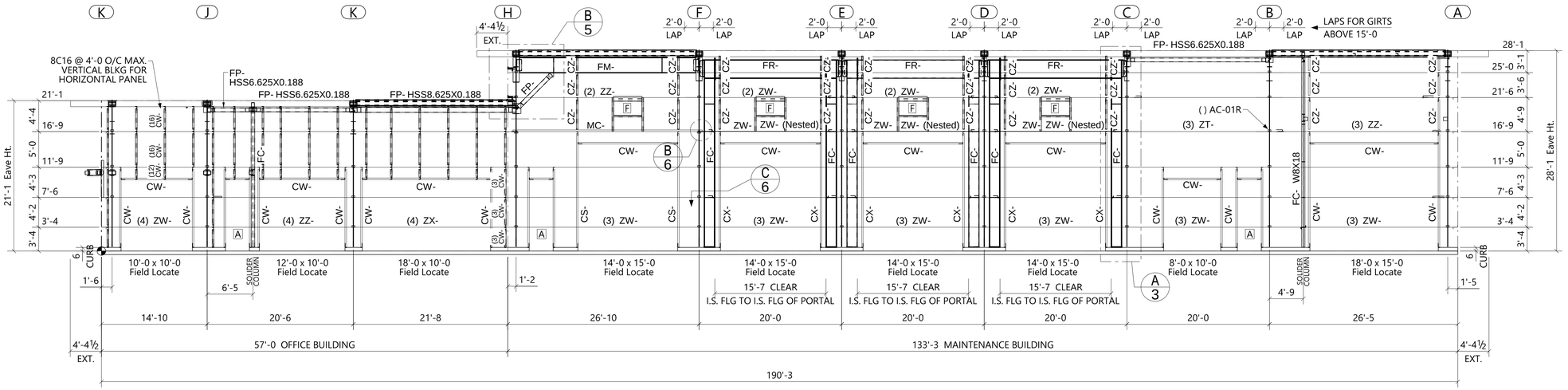

SIDEWALL ELEVATION AT LINE 1

SUPPORT BEAM (FM-): 26" B.U. w/ 10" x ½" FLGS & ⅜" WEB
F.O. SUPPORT (MC-): C8x18.75
PIPE STRUT (FP-): SIZE SHOWN ON ELEVATION

A (3) 3'-4" ½ x 10'-0 ¼ (FIELD LOCATED)
HEADER: CW-
(2) JAMBS: CW-

F (4) 2'-0 x 2'-0 (FIELD LOCATED)
HEADER: UR-
SILL: CW- (SILL @ 19'-0)
(2) JAMBS: CW-

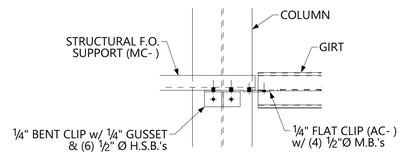

B 6 **Connection Detail**

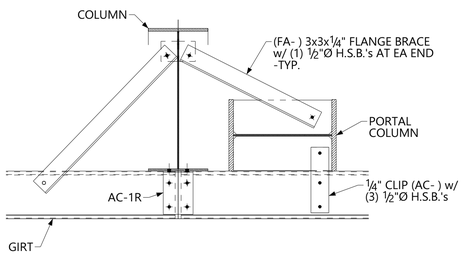

C 6 **PORTAL FLANGE BRACE**

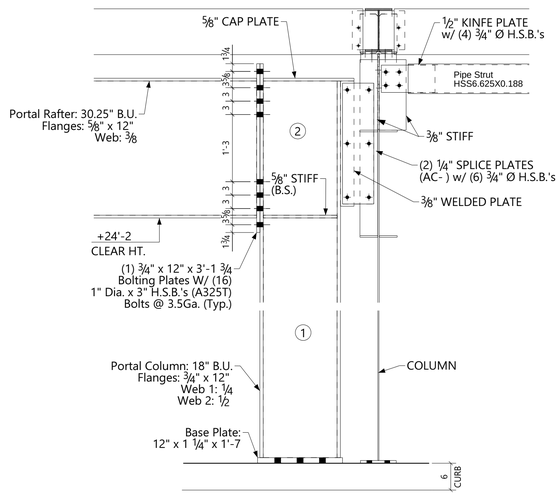

A 6 **PORTAL FRAME DETAIL**

CBC JOB No. C22I0141A
DEALER: SHOOK BLDG. SYSTEMS, INC.
SHEET 6 OF 25
ENGR. APR. ED
DRAWN TDM
DATE 8/18/2022
SCALE

SIDEWALL ELEVATION
CUSTOMER: MARTA MAINTENANCE BLDG
LOCATION: BIG BEAR LAKE, CA 92315

PLOT DATES:

CBC STEEL BUILDINGS
A NUCOR Company
P.O. BOX 1009, LATHROP, CA 95330
OFFICES/PLANT: 1700 E. LOUISE AVE
(209) 983-0910 FAX (209) 858-2354

REGISTERED PROFESSIONAL ENGINEER
No. 81257
EXP. 12/31/23
MECHANICAL
07/18/23

REV.	DATE	BY
1	08/18/2022	TDM
PLANS FOR PERMITS		

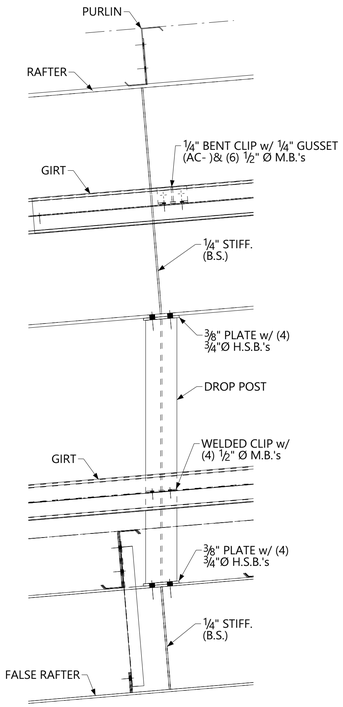

A/7 **HANG POST DETAIL**

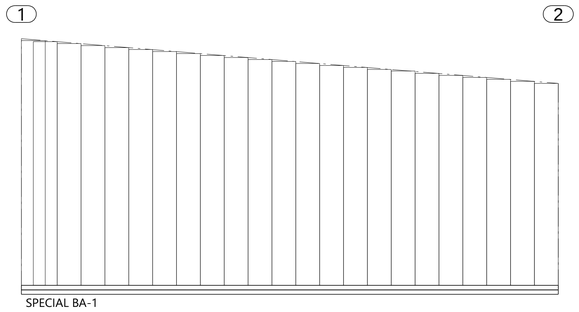

ENDWALL ELEVATION AT LINE A

VERTICAL WALL PANELS:
24GA 32" WIDE MULTI-COR PANEL BY McELROY METALS
COLOR: STANDARD KYNAR FINISH

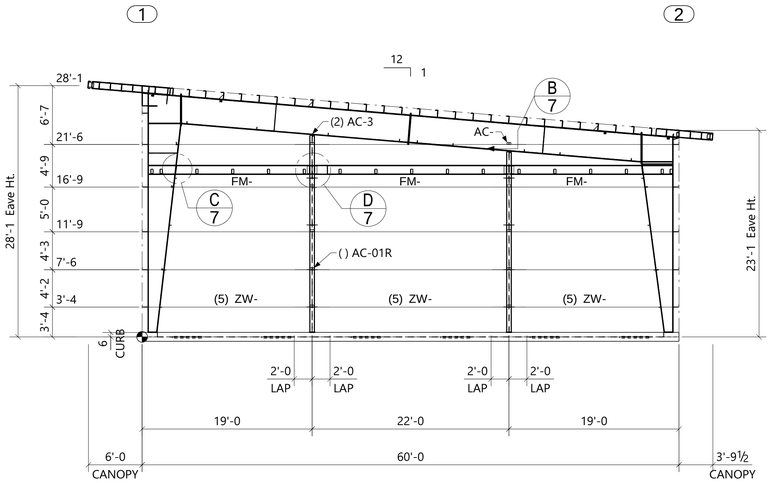

ENDWALL ELEVATION AT LINE A

End Post: 13" B.U. W/ 6" x ¼"FLG.'s & 10 Ga. WEB PL.
Ceiling Support Beam (FM-): 12" B.U. W/ 5" x ¼"FLG.'s & 10 Ga. WEB PL.

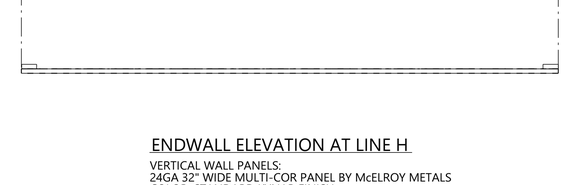

ENDWALL ELEVATION AT LINE H

VERTICAL WALL PANELS:
24GA 32" WIDE MULTI-COR PANEL BY McELROY METALS
COLOR: STANDARD KYNAR FINISH

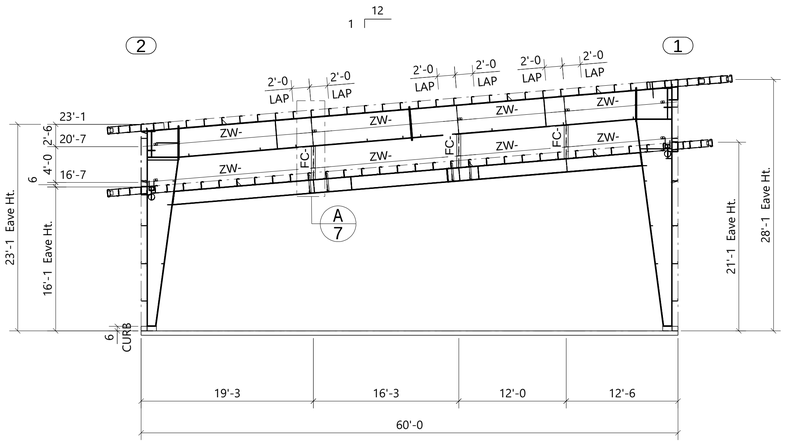

ENDWALL ELEVATION AT LINE H

Hang Post: W8X18

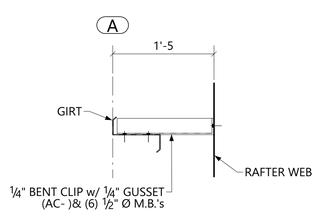

B/7 **Connection Detail**

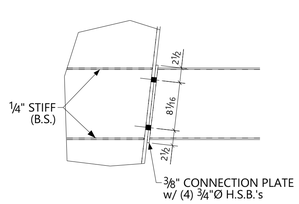

C/7 **Connection Detail**

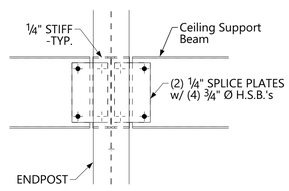

D/7 **Connection Detail**

CBC JOB No. C22I0141A

ENDWALL ELEVATION

CUSTOMER: MARTA MAINTENANCE BLDG

LOCATION: BIG BEAR LAKE, CA 92315

DEALER: SHOOK BLDG. SYSTEMS, INC.

SHEET 7 OF 25

ENGR. APR. ED

DRAWN TDM

DATE 8/18/2022

SCALE

PLOT DATES:

CBC STEEL BUILDINGS
A NUCOR Company
P.O. BOX 1009, LATHROP, CA 95330
OFFICES/PLANT: 1700 E. LOUISE AVE
(209) 983-0910 FAX (209) 858-2354

IAS ACCREDITED AC472

MBMA METAL BUILDING MANUFACTURERS ASSOCIATION

REGISTERED PROFESSIONAL ENGINEER
No. 81257
EXP. 12/31/23
STATE OF WISCONSIN
DOU YU

07/18/23

BY	DATE
TDM	08/18/2022

⚠ PLANS FOR PERMITS

REV.

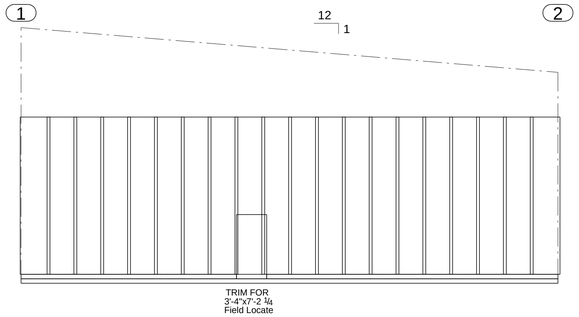

INSIDE TUNNEL SHEETING AT LINE A.8

LINER PANEL: 26GA 'R' PANEL
COLOR: STANDARD KYNAR FINISH

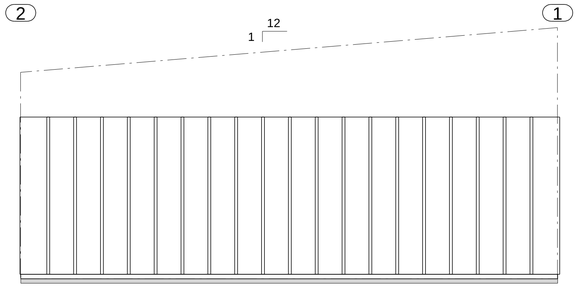

INSIDE TUNNEL SHEETING AT LINE A

LINER PANEL: 26GA 'R' PANEL
COLOR: STANDARD KYNAR FINISH

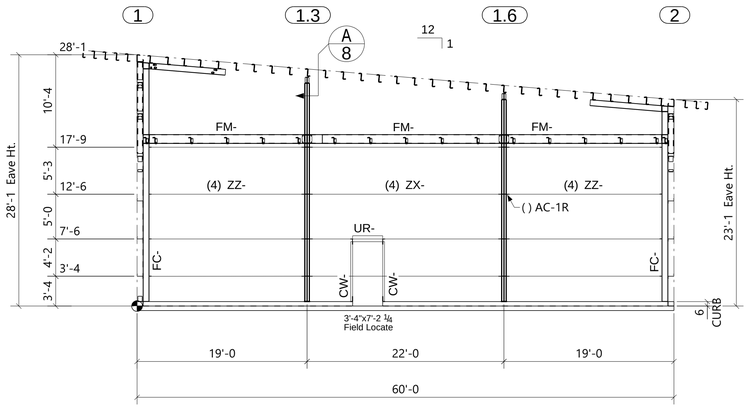

ENDWALL ELEVATION AT LINE A.8

CEILING SUPPORT (FM-): 12" B.U. w/ 5" x ¼" FLG'S & 10Ga WEB

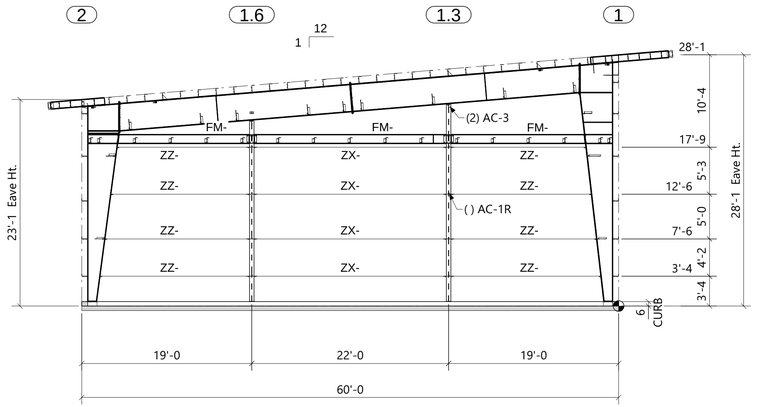

INSIDE ENDWALL ELEVATION AT LINE A

End Posts: 1'-1" B.U. W/ 6" x ¼" FLG.'s & 10Ga WEB PL.
CEILING SUPPORT (FM-): 12" B.U. w/ 5" x ¼" FLG'S & 10Ga WEB

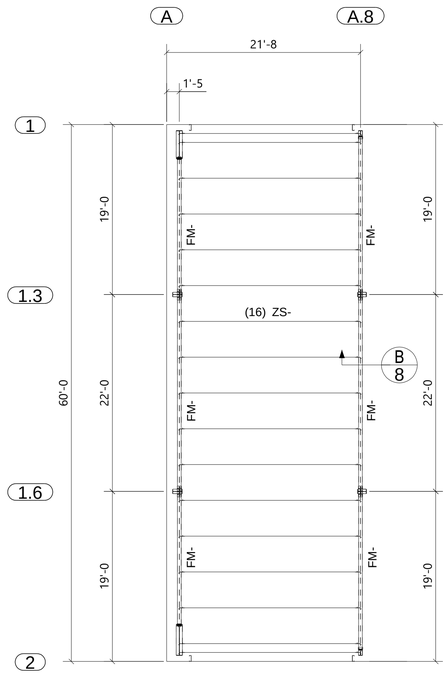

ROOF FRAMING PLAN
TUNNEL

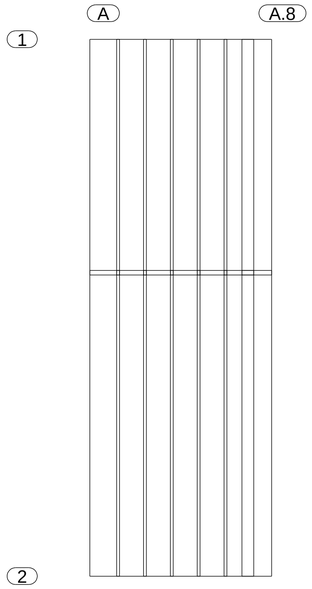

INSIDE TUNNEL ROOF SHEETING

LINER PANEL: 26GA 'R' PANEL
COLOR: STANDARD KYNAR FINISH

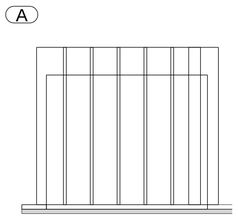

INSIDE TUNNEL SHEETING AT LINE 1

LINER PANEL: 26GA 'R' PANEL
COLOR: STANDARD KYNAR FINISH

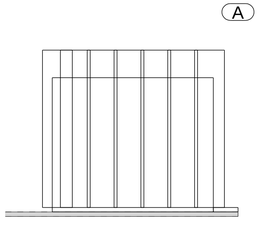

INSIDE TUNNEL SHEETING AT LINE 2

LINER PANEL: 26GA 'R' PANEL
COLOR: STANDARD KYNAR FINISH

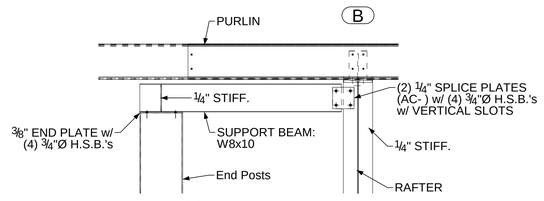

A 8 **Connection Detail**

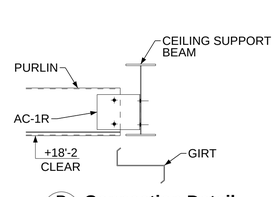

B 8 **Connection Detail**

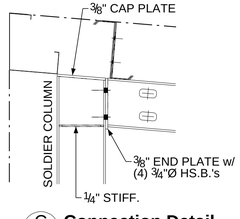

C 8 **Connection Detail**

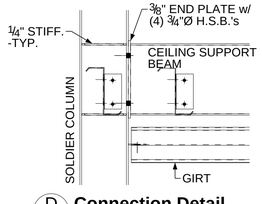

D 8 **Connection Detail**

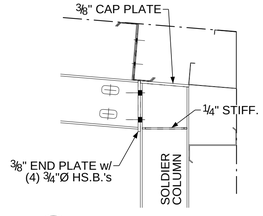

E 8 **Connection Detail**

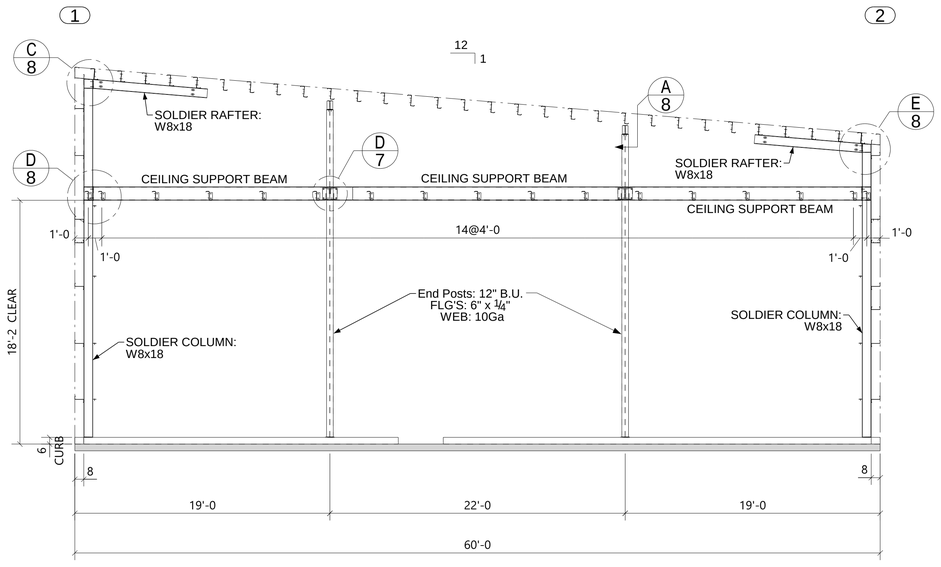

CROSS SECTION AT LINE A.8

STEEL BUILDINGS
A NUCOR Company
CBC
P.O. BOX 1009, LATHROP, CA 95330
OFFICE(S)/PLANT: 17700 E. LOUISE AVE
(209) 983-0970 FAX: (209) 858-2354
IAS ACCREDITED
MBMA

REGISTERED PROFESSIONAL ENGINEER
KIA DOU
No. 81257
EXP. 06/30/23
STATE OF CALIFORNIA
07/18/23

REV	BY	DATE
1	TDM	08/18/2022
PLANS FOR PERMITS		

PLOT DATES:

TUNNEL ELEVATION

CUSTOMER: MARTA MAINTENANCE BLDG
LOCATION: BIG BEAR LAKE, CA 92315

CBC JOB No. C22I0141A
DEALER: SHOOK BLDG. SYSTEMS, INC.
SHEET 8 OF 25
ENGR. APR. ED
DRAWN TDM
DATE 8/18/2022
SCALE

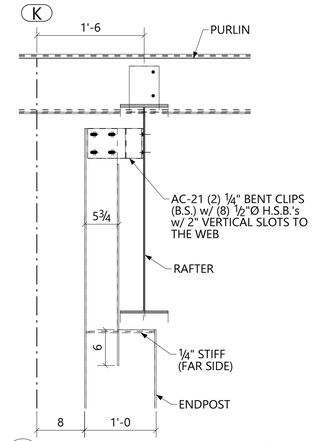

A/9 **ENDPOST CONNECTION DETAIL**

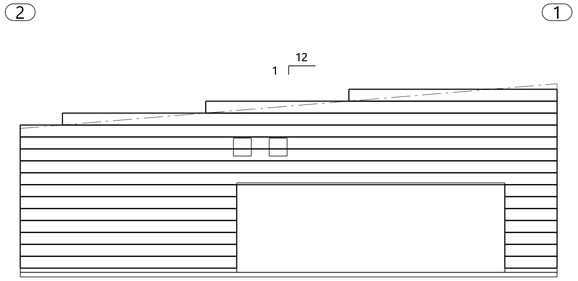

ENDWALL SHEETING AT LINE K

HORTIZONTAL WALL PANELS:
24GA 16" WIDE MSR PANEL BY McELROY METALS
COLOR: STANDARD KYNAR FINISH

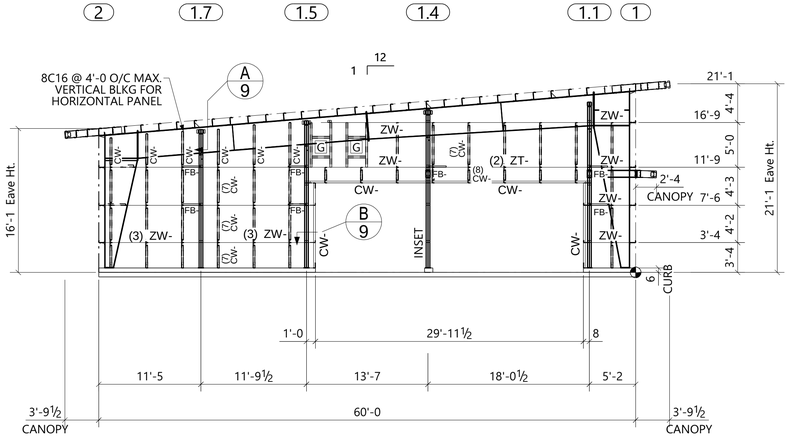

G (2) 2'-0 x 2'-0 (FIELD LOCATED)
HEADER: CW-
SILL: CW- (SILL @ 13'-0) ABOVE INSET AREA
(2) JAMBS: CW-

ENDWALL ELEVATION AT LINE K
End Post: 1'-0" B.U. W/ 5" x ¼"FLG.'s & 10 Ga. WEB PL.

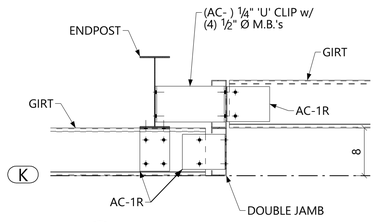

B/9 **INSET JAMB DETAIL**

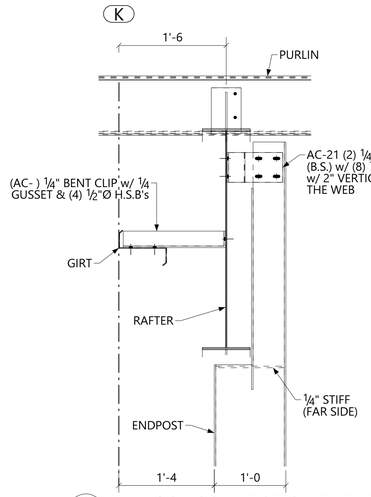

C/9 **ENDPOST CONNECTION DETAIL**

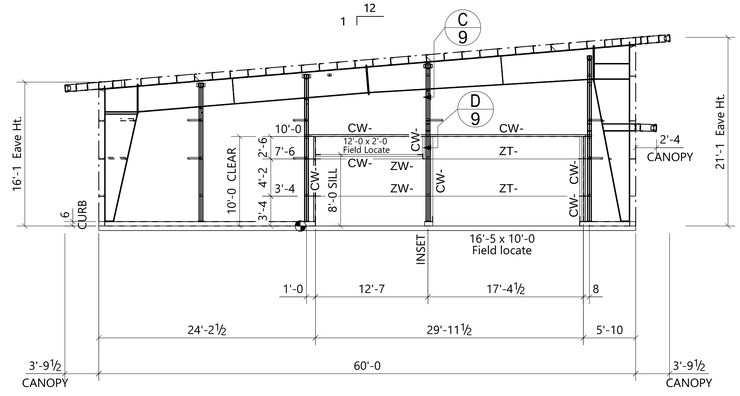

ENDWALL ELEVATION AT LINE K
INSET 8" FROM BUILDING LINE
INSET End Post: 1'-0" B.U. W/ 5" x ¼"FLG.'s & 10 Ga. WEB PL.

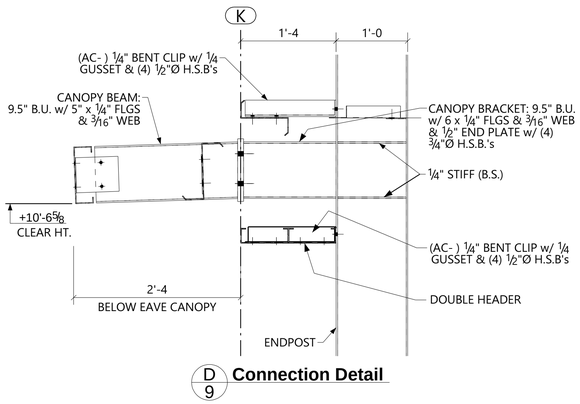

D/9 **Connection Detail**

CBC JOB No. C22I0141A

ENDWALL ELEVATION

CUSTOMER: MARTA MAINTENANCE BLDG

LOCATION: BIG BEAR LAKE, CA 92315

DEALER: SHOOK BLDG. SYSTEMS, INC.

SHEET 9 OF 25

ENGR. APR. ED

DRAWN TDM

DATE 8/18/2022

SCALE

PLOT DATES:

CBC STEEL BUILDINGS
A NUCOR Company
P.O. BOX 1009, LATHROP, CA 95330
OFFICE(S)/PLANT: 1700 E. LOUISE AVE
(209) 983-0970 FAX: (209) 858-2354
IAS ACCREDITED
MBMA METAL BUILDING MANUFACTURERS ASSOCIATION

REGISTERED PROFESSIONAL ENGINEER
KIA DOU
No. 81257
EXP. 6/30/23
STATE OF CALIFORNIA
07/18/23

REV	BY	DATE
0	TDM	08/18/2022
1	PLANS FOR PERMITS	

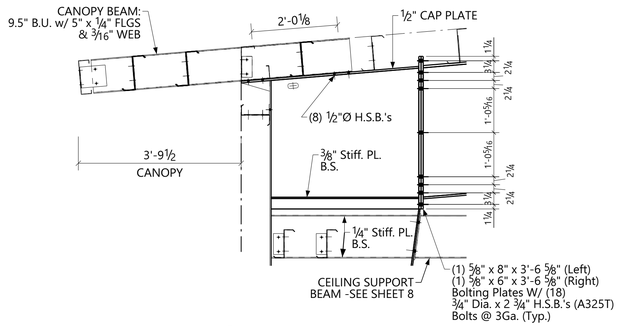

A 10 **Connection Detail**

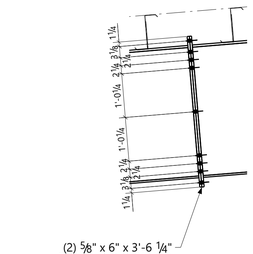

B 10 **Connection Detail**

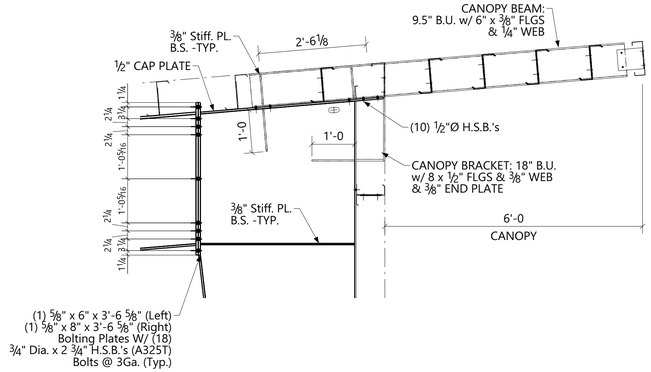

C 10 **Connection Detail**

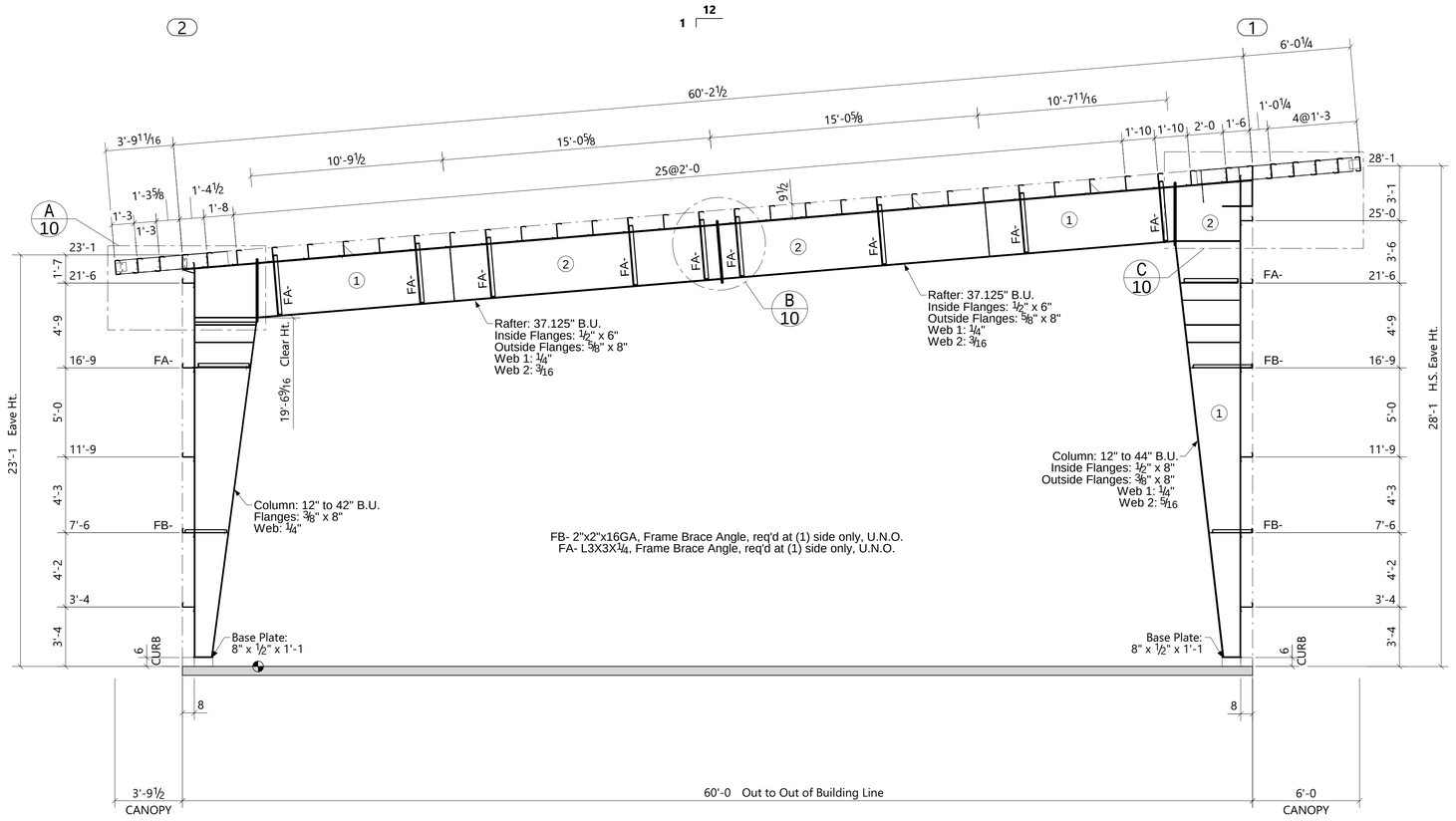

CROSS SECTION AT LINE A

CBC JOB No. C22I0141A

CROSS SECTION AT LINE A

CUSTOMER: MARTA MAINTENANCE BLDG

LOCATION: BIG BEAR LAKE, CA 92315

DEALER: SHOOK BLDG. SYSTEMS, INC.

SHEET 10 OF 25

ENGR. APR. ED

DRAWN TDM

DATE 8/18/2022

SCALE

PLOT DATES:

STEEL BUILDINGS
A NUCOR Company
CBC
P.O. BOX 1009, LATHROP, CA 95330
OFFICE@PLANT: 1700 E LOUISE AVE
(209) 983-0910 FAX: (209) 858-2354
IAS ACCREDITED
MBMA

REGISTERED PROFESSIONAL ENGINEER
KIA DOU
No. 81257
EXP. 6/30/23
STATE OF CALIFORNIA
07/18/23

REV	DATE	BY
⚠ PLANS FOR PERMITS	08/18/2022	TDM

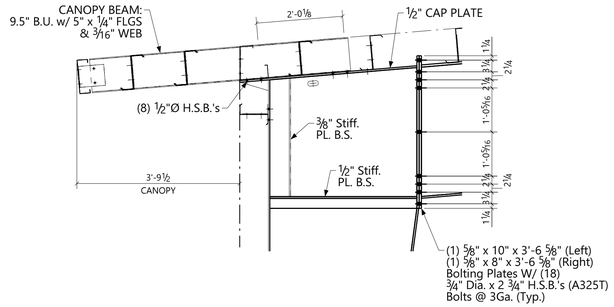

A/11 **Connection Detail**

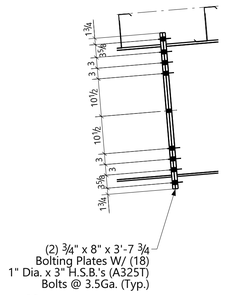

B/11 **Connection Detail**

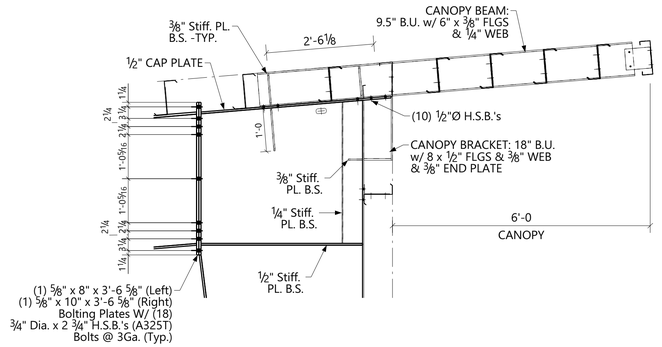

C/11 **Connection Detail**

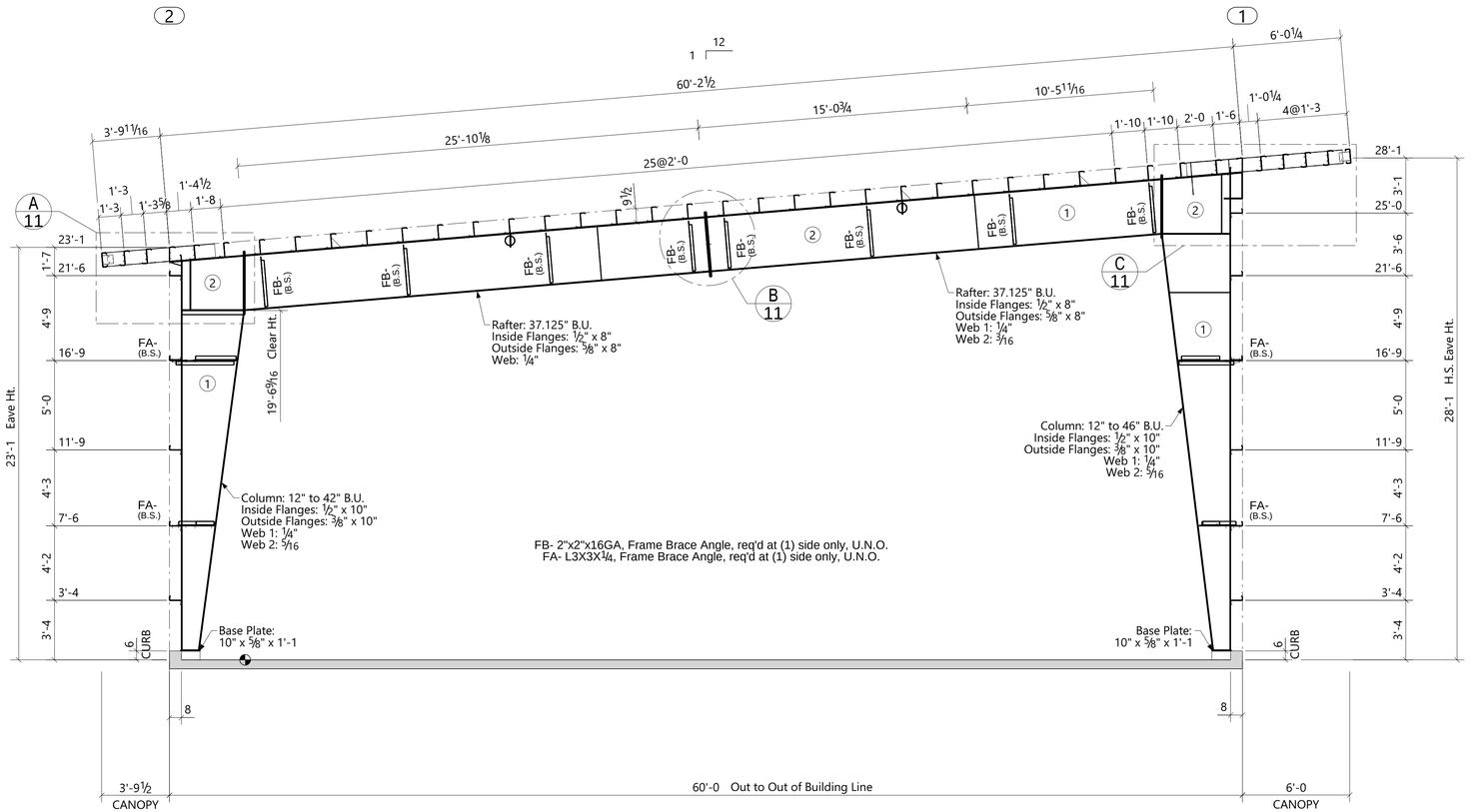

CROSS SECTION AT LINES B & F

CBC JOB No. C22I0141A

CROSS SECTION AT LINE B & F

CUSTOMER: MARTA MAINTENANCE BLDG

LOCATION: BIG BEAR LAKE, CA 92315

DEALER: SHOOK BLDG. SYSTEMS, INC.

SHEET 11 OF 25

ENGR. APR. ED

DRAWN TDM

DATE 8/18/2022

SCALE

PLOT DATES:

STEEL BUILDINGS
A NUCOR Company
P.O. BOX 1009, LATHROP, CA 95330
OFFICES/PLANT 1700 E. LOUISE AVE
(209) 983-0970 FAX (209) 858-2354

REGISTERED PROFESSIONAL ENGINEER
No. 81257
EXP. 12/31/23
CIVIL
STATE OF CALIFORNIA
07/18/23

REV	DATE	BY
⚠ PLANS FOR PERMITS	08/18/2022	TDM

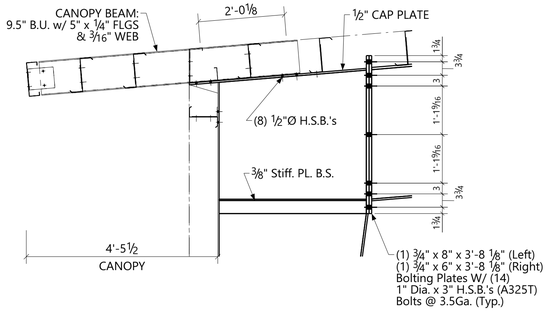

A 12 **Connection Detail**

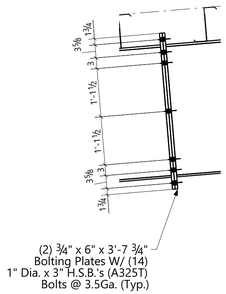

B 12 **Connection Detail**

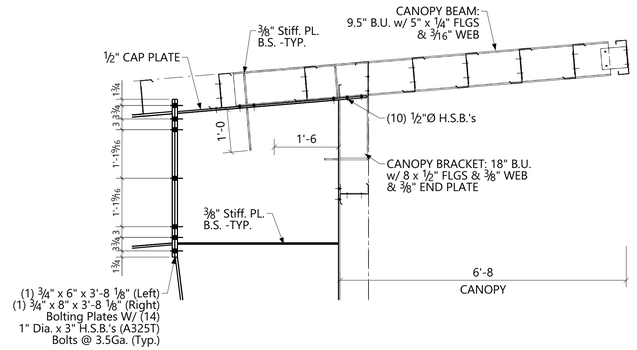

C 12 **Connection Detail**

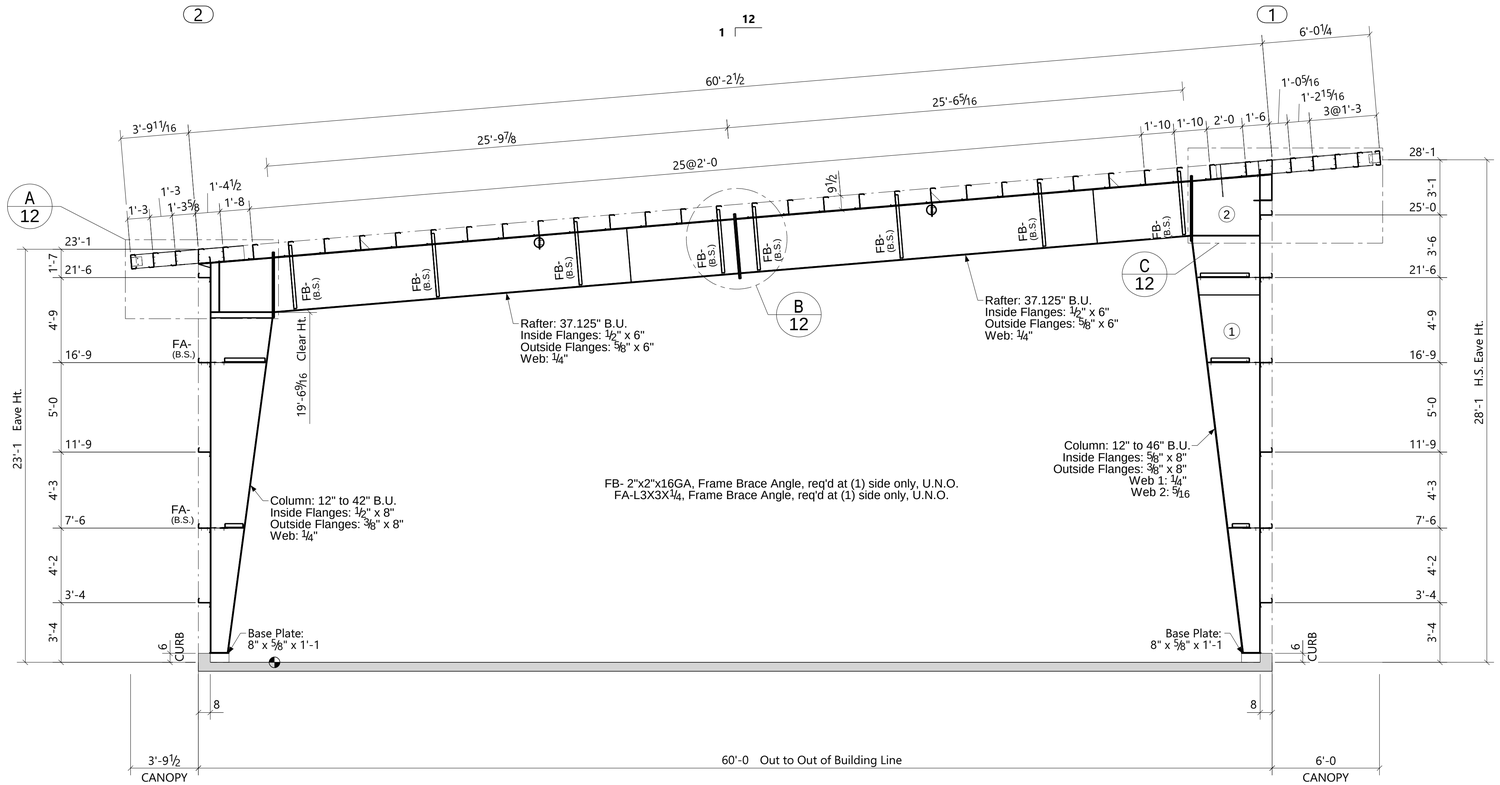

CROSS SECTION AT LINES C, D, E

CBC JOB No. C22I0141A

CROSS SECTION AT LINE C, D, E

CUSTOMER: MARTA MAINTENANCE BLDG

LOCATION: BIG BEAR LAKE, CA 92315

DEALER: SHOOK BLDG. SYSTEMS, INC.

SHEET 12 OF 25

ENGR. APPR. ED

DRAWN TDM

DATE 8/18/2022

SCALE

PLOT DATES:

STEEL BUILDINGS
A NUCOR Company
CBC
P.O. BOX 1009, LATHROP, CA 95330
OFFICES/PLANT 1700 E. LOUISE AVE
(209) 983-0970 FAX (209) 858-2354

REGISTERED PROFESSIONAL ENGINEER
No. 81257
EXP. 06/30/23
CIVIL
STATE OF CALIFORNIA
07/18/23

REV	DATE	BY
⚠ PLANS FOR PERMITS	08/18/2022	TDM

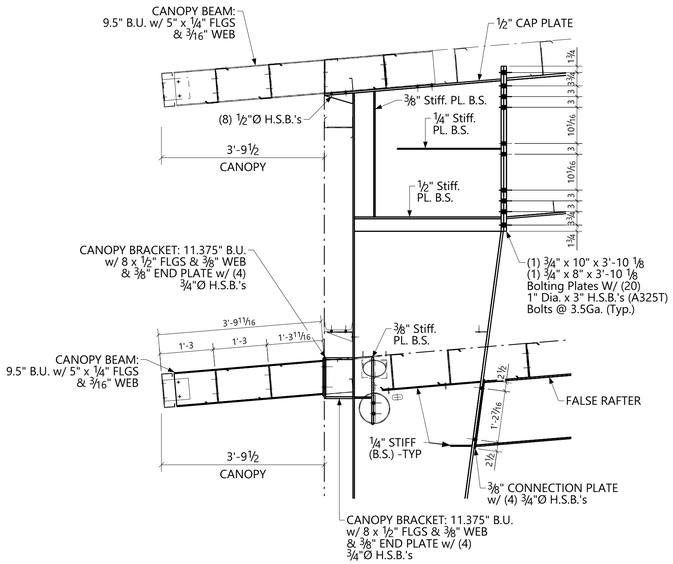

A 13 **Connection Detail**

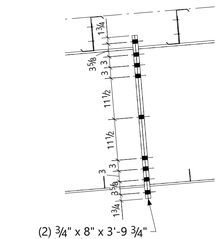

B 13 **Connection Detail**

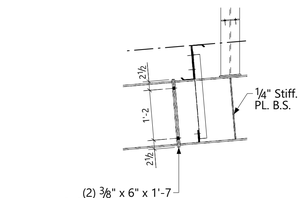

C 13 **Connection Detail**

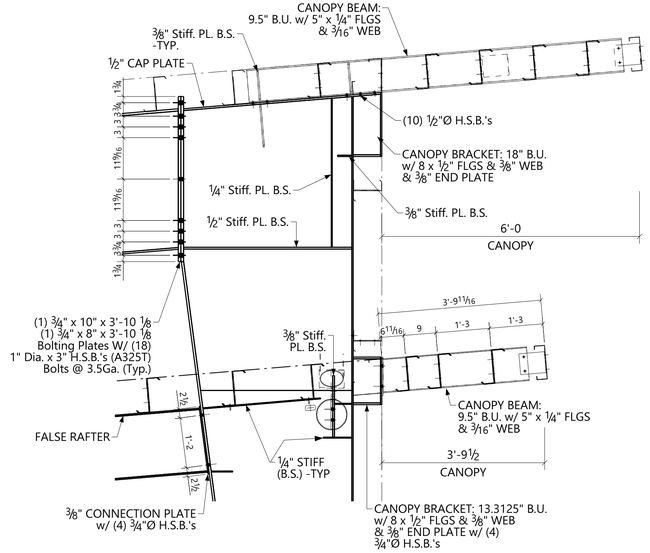

D 13 **Connection Detail**

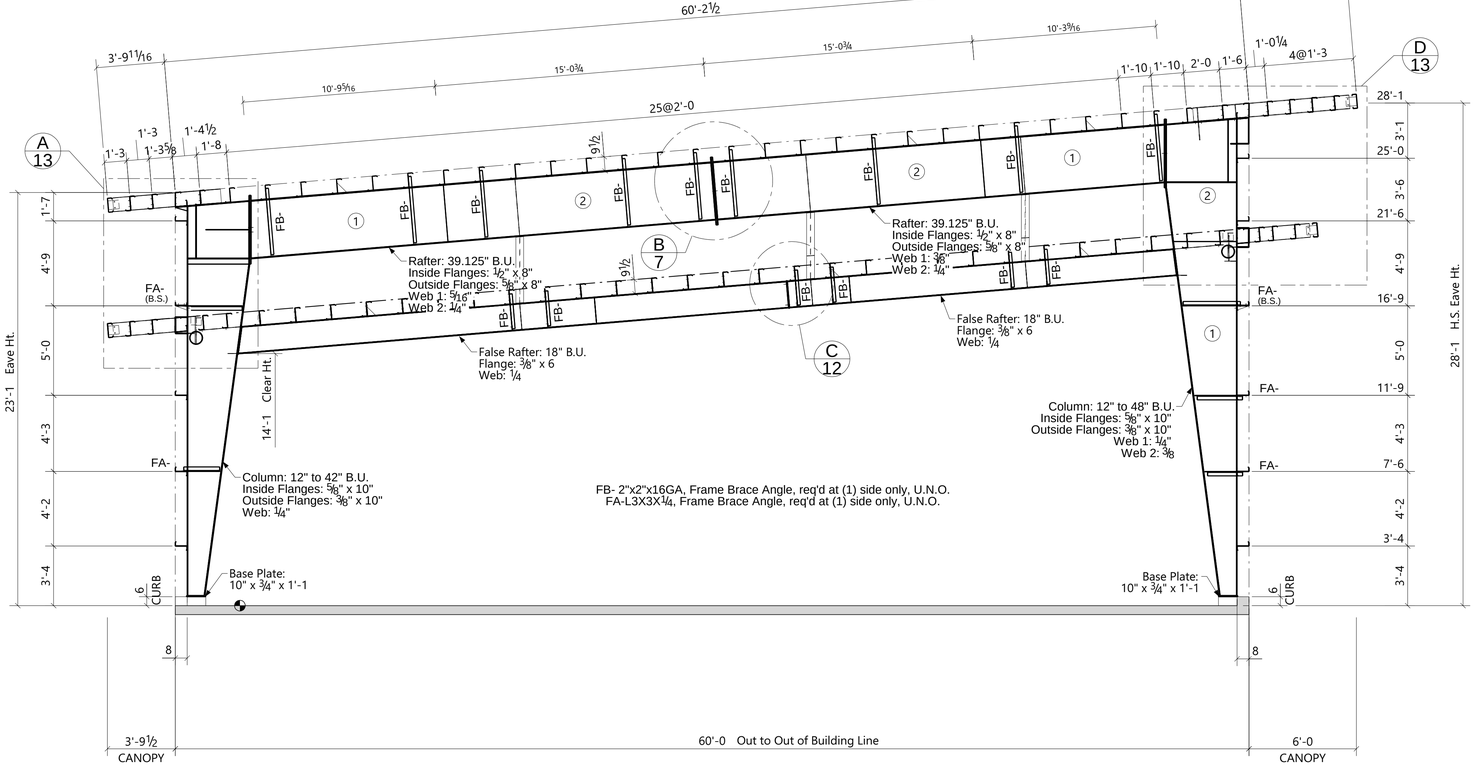

CROSS SECTION AT LINE H

CBC JOB No. C22I0141A

CROSS SECTION AT LINE H

CUSTOMER: MARTA MAINTENANCE BLDG

LOCATION: BIG BEAR LAKE, CA 92315

DEALER: SHOOK BLDG. SYSTEMS, INC.

SHEET 13 OF 25

ENGR. APR. ED

DRAWN TDM

DATE 8/18/2022

SCALE

PLOT DATES:

STEEL BUILDINGS
A NUCOR Company
CBC
P.O. BOX 1009, LATHROP, CA 95330
OFFICE/PLANT: 17001 E LOUISE AVE
(209) 983-0910 FAX: (209) 858-2354

REGISTERED PROFESSIONAL ENGINEER
KYA DOU
No. 81257
EXP. 6/30/23
CIVIL
STATE OF CALIFORNIA
07/18/23

REV	BY	DATE
⚠	TDM	08/18/2022

PLANS FOR PERMITS

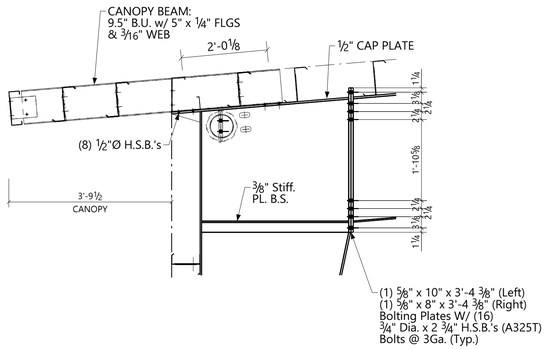

A 14 **Connection Detail**

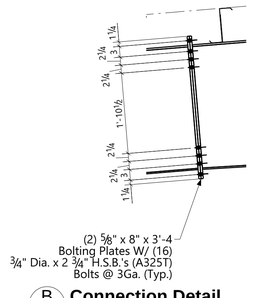

B 14 **Connection Detail**

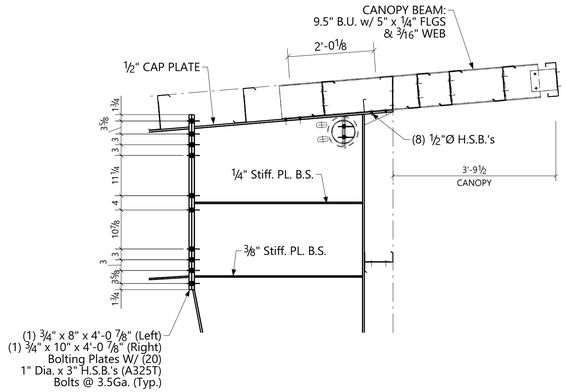

C 14 **Connection Detail**

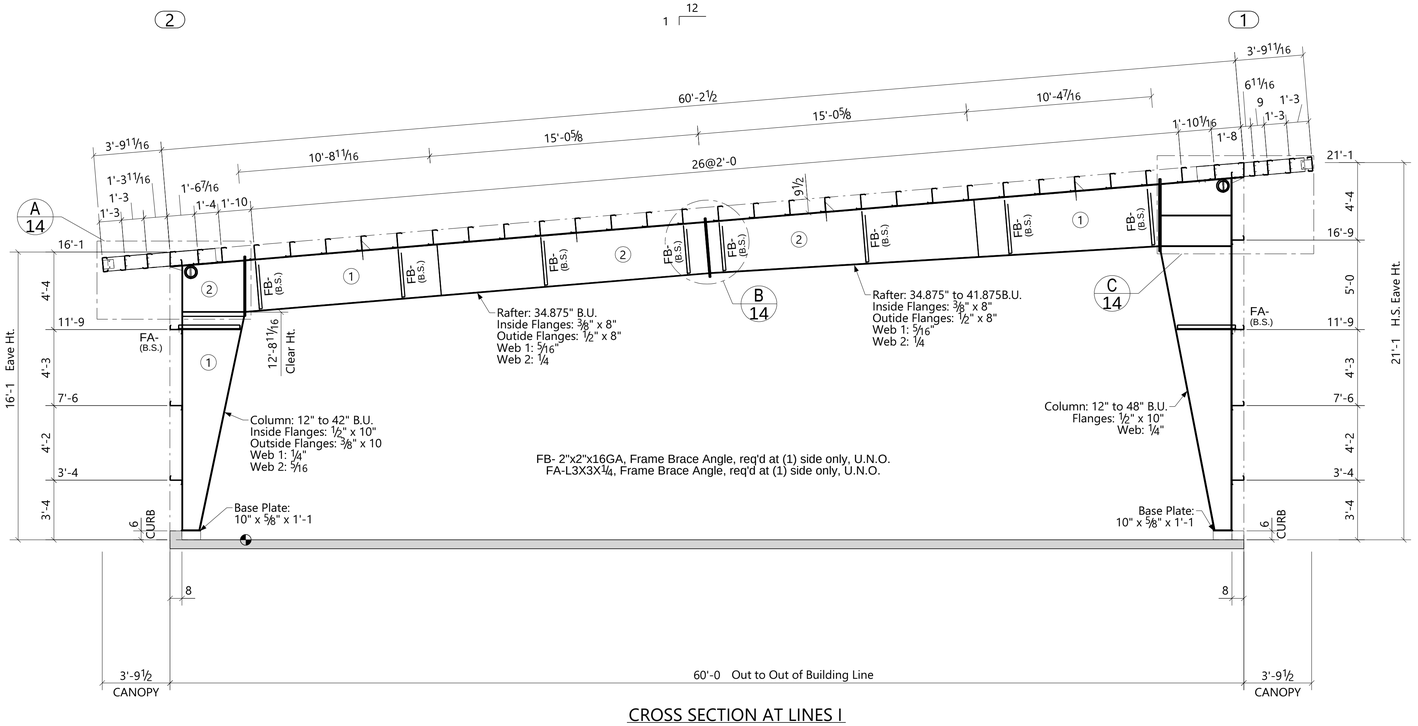

CROSS SECTION AT LINES I

CBC JOB No. C22I0141A

CROSS SECTION AT LINE I

CUSTOMER: MARTA MAINTENANCE BLDG

LOCATION: BIG BEAR LAKE, CA 92315

DEALER: SHOOK BLDG. SYSTEMS, INC.

SHEET 14 OF 25

ENGR. APR. ED

DRAWN TDM

DATE 8/18/2022

SCALE

PLOT DATES:

STEEL BUILDINGS
A NUCOR Company
CBC
P.O. BOX 1009, LATHROP, CA 95330
OFFICES/PLANT 1700 E. LOUISE AVE
(209) 983-0910 FAX (209) 858-2354
IAS ACCREDITED
MBMA

REGISTERED PROFESSIONAL ENGINEER
DOU VU
No. 81257
EXP. 6/30/23
STRUCTURAL
07/18/23

REV	DESCRIPTION	BY	DATE
1	PLANS FOR PERMITS	TDM	08/18/2022

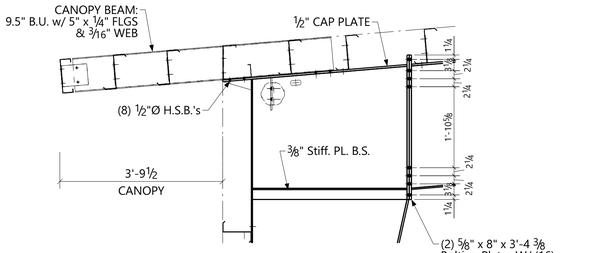

A 15 **Connection Detail**

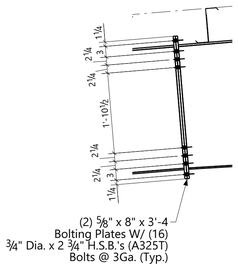

B 15 **Connection Detail**

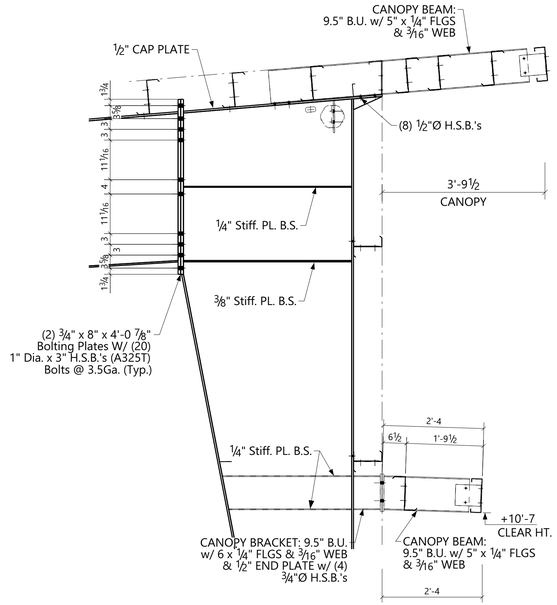

C 15 **Connection Detail**

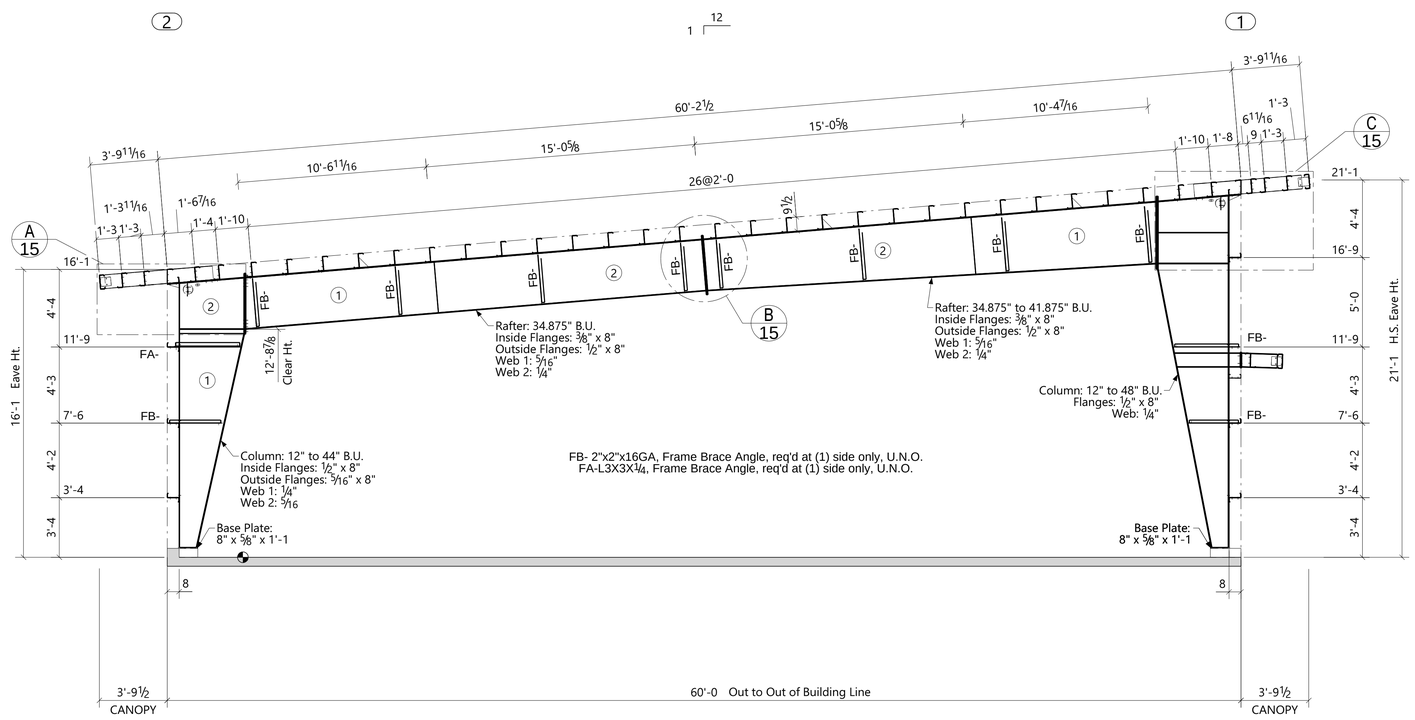

CROSS SECTION AT LINES J & K

PLOT DATES:

CBC JOB No. C2210141A

CROSS SECTION AT LINE J & K

CUSTOMER: MARTA MAINTENANCE BLDG

LOCATION: BIG BEAR LAKE, CA 92315

DEALER: SHOOK BLDG. SYSTEMS, INC.

SHEET 15 OF 25

ENGR. APR. ED

DRAWN TDM

DATE 8/18/2022

SCALE

STEEL BUILDINGS
A NUCOR Company

CBC
P.O. BOX 1009 LATHROP, CA 95330
OFFICES/PLANT: 1700 E. LOUISE AVE
(209) 983-0970 FAX (209) 838-2354

IAS ACCREDITED

MBMA

REGISTERED PROFESSIONAL ENGINEER
VIN DOU
No. 81257
EXP. 12/31/23
STRUCTURAL

07/18/23

REV.	DATE	BY
1	PLANS FOR PERMITS	08/18/2022	TDM

1 TYPICAL WASHER REQUIREMENTS

TYPICAL MACHINE BOLT WASHER REQUIREMENTS
(UNLESS NOTED OTHERWISE ON DRAWINGS)
WASHERS ARE NOT REQUIRED AT PURLIN-GIRT LAP BOLTS!

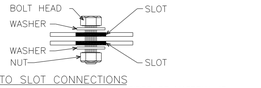

SLOT TO SLOT CONNECTIONS
WASHERS ARE REQUIRED ON BOTH SIDES OF MATERIAL IF SLOTS ARE USED ON BOTH SIDES.

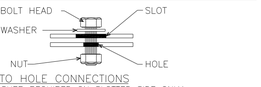

SLOT TO HOLE CONNECTIONS
ONE WASHER REQUIRED ON SLOTTED SIDE ONLY.

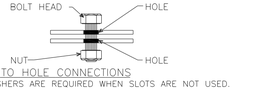

HOLE TO HOLE CONNECTIONS
NO WASHERS ARE REQUIRED WHEN SLOTS ARE NOT USED.

2 CONTINUOUS PURLINS

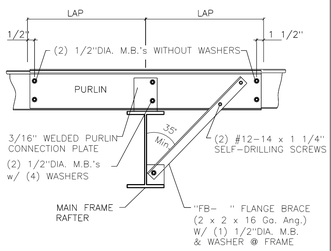

NOTE: SEE ROOF FRAMING PLAN OR CROSS SECTION FOR FLANGE BRACE LOCATIONS

3 CONTINUOUS PURLINS

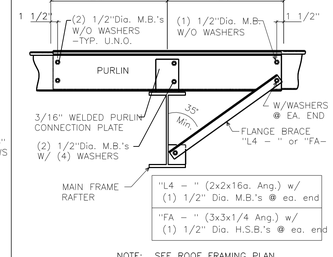

NOTE: SEE ROOF FRAMING PLAN OR CROSS SECTION FOR FLANGE BRACE LOCATIONS

4 RAKEBEAM PURLINS

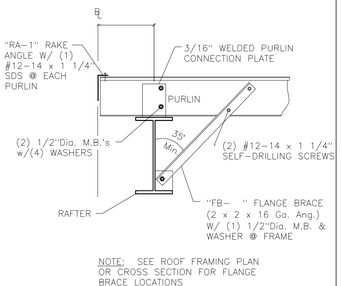

NOTE: SEE ROOF FRAMING PLAN OR CROSS SECTION FOR FLANGE BRACE LOCATIONS

5 RAKEBEAM PURLINS

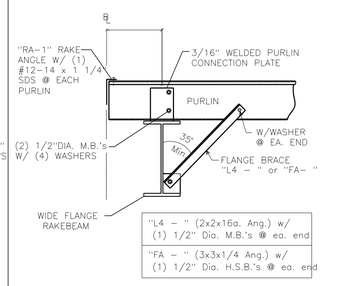

NOTE: SEE ROOF FRAMING PLAN OR CROSS SECTION FOR FLANGE BRACE LOCATIONS

6 CONTINUOUS GIRTS

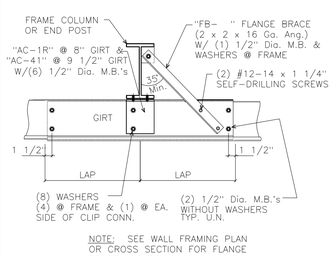

NOTE: SEE WALL FRAMING PLAN OR CROSS SECTION FOR FLANGE BRACE LOCATIONS

7 (4) BOLT BASE DETAIL

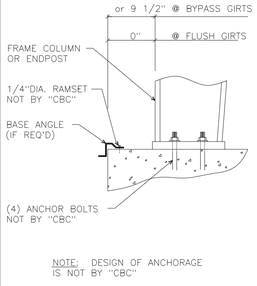

NOTE: DESIGN OF ANCHORAGE IS NOT BY "CBC"

NOTE: SEE ANCHOR BOLT PLAN FOR DIAMETER, GAGE, AND LOCATION OF ANCHOR BOLTS

8 CONTINUOUS GIRTS

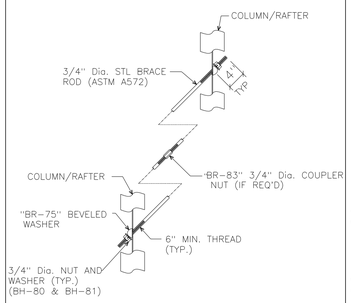

9 SIMPLE SPAN GIRTS

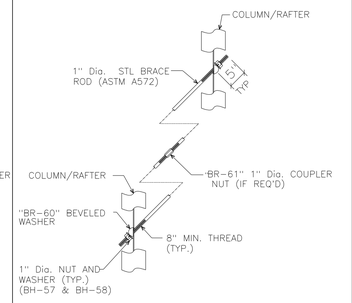

10 SIMPLE SPAN GIRTS

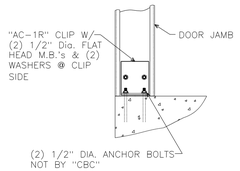

NOTE: SEE WALL FRAMING PLAN OR CROSS SECTION FOR FLANGE BRACE LOCATIONS

NOTE: SEE ANCHOR BOLT PLAN FOR GAGE AND LOCATION OF ANCHOR BOLTS

11 COPED "ZEE" GIRT

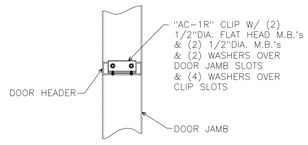

12 GIRT / RAFTER BEAM

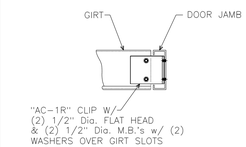

13 DOOR JAMB/EAVE STRUT

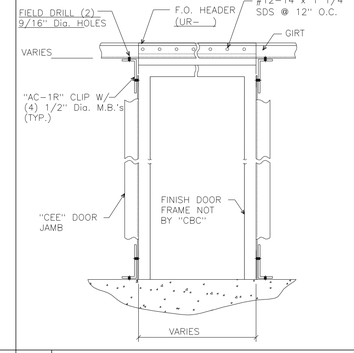

14 DOOR JAMB/WALL GIRT

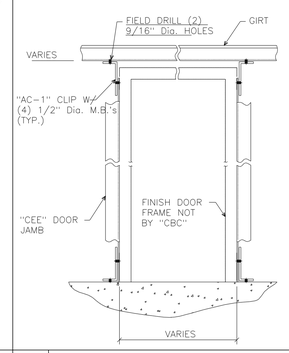

15 3/4" ROD BRACING

16 1" ROD BRACING

17 DOOR JAMB BASE

18 DOOR JAMB / HEADER

19 DOOR JAMB / GIRT

20 WALK DOOR OPENING

21 WALK DOOR OPENING

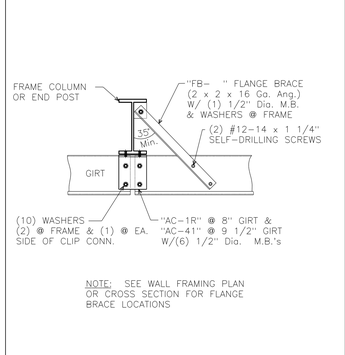

NOTE: SEE WALL FRAMING PLAN OR CROSS SECTION FOR FLANGE BRACE LOCATIONS

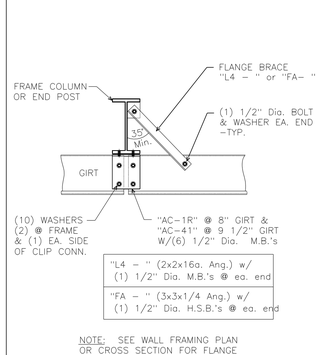

NOTE: SEE WALL FRAMING PLAN OR CROSS SECTION FOR FLANGE BRACE LOCATIONS

NOTE: SEE WALL FRAMING PLAN OR CROSS SECTION FOR FLANGE BRACE LOCATIONS

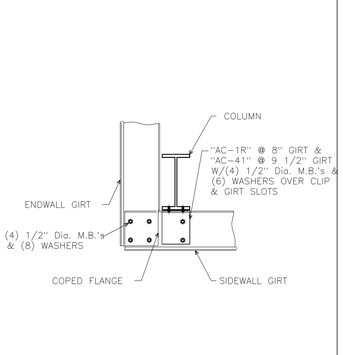

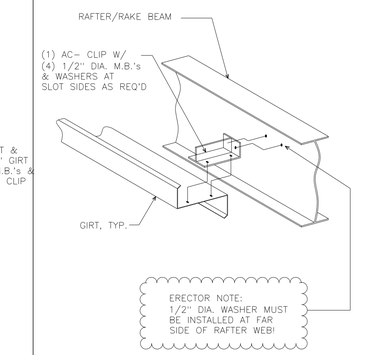

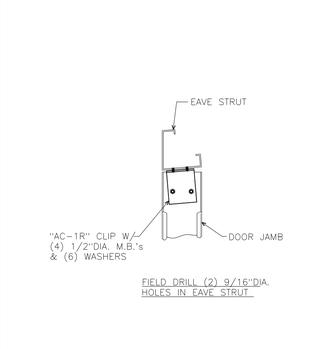

FIELD DRILL (2) 9/16"DIA. HOLES IN EAVE STRUT

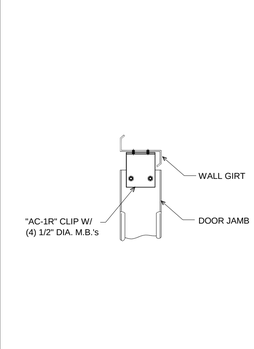

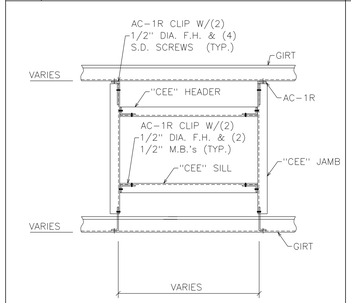

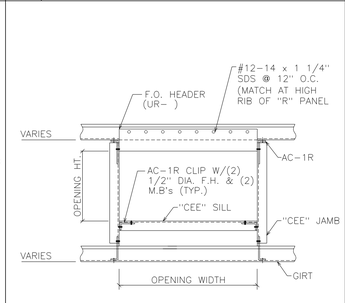

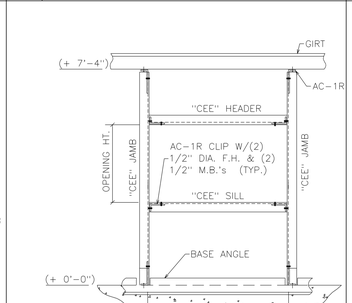

*REFER TO ELEVATION PLANS IF F.O. IS FIELD LOC. FIELD CUT GIRTS MAY BE REQ'D

22 CEE WINDOW FRAMING

23 CEE WINDOW FRAMING

24 CEE WINDOW FRAMING

25

26

27

28

CBC JOB No. C2210141A
DEALER: SHOOK BLDG. SYSTEMS, INC.
SHEET 16 OF 25
ENGR. APR. ED
DRAWN TDM
DATE 8/18/2022
SCALE

GENERAL DETAILS

CUSTOMER: MARTA MAINTENANCE BLDG
LOCATION: BIG BEAR LAKE, CA 92315

PLOT DATES:

CBC STEEL BUILDINGS
A NUCOR Company
P.O. BOX 1009, LATHROP, CA 95330
OFFICE/PLANT: 1700 E LOUISE AVE
(209) 983-1910 FAX: (209) 858-2354

IAS ACCREDITED AC472
MBMA METAL BUILDING MANUFACTURERS ASSOCIATION

REGISTERED PROFESSIONAL ENGINEER
XIA DOU
No. 81257
EXP. 6/30/23
STATE OF CALIFORNIA
07/18/23

REV	BY	DATE
⚠	TDM	08/18/2022

PLANS FOR PERMITS

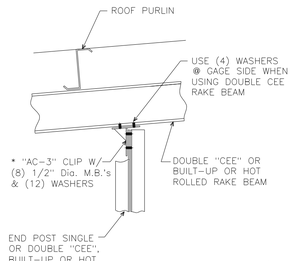

1 END POST/RAKE BEAM

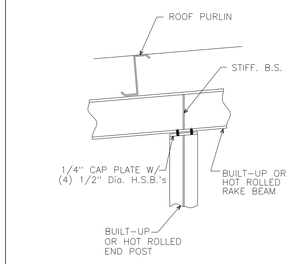

2 END POST/RAKE BEAM

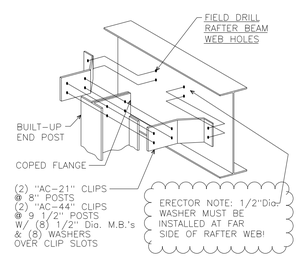

3 END POST RAFTER BEAM

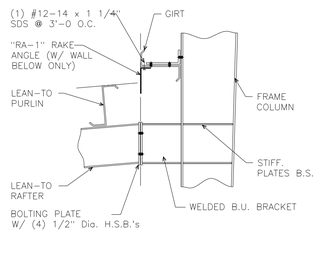

4 LEAN-TO w/ WALL PANEL

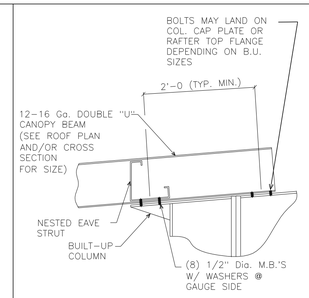

5 PIGGYBACK CANOPY

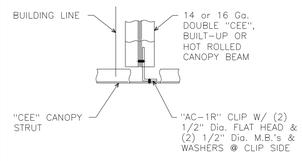

6 CANOPY STRUT

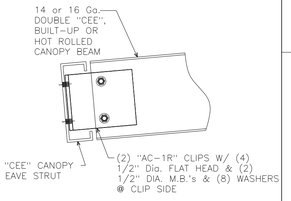

7 CANOPY STRUT

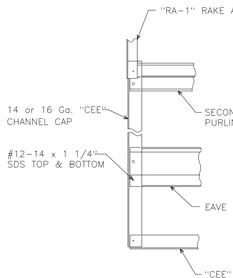

8 CANOPY @ ROOF EXT.

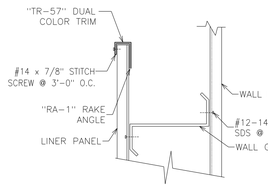

9 WALL LINER PANEL

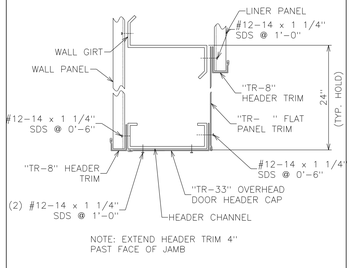

10 O.H. DOOR HEADER TRIM W/LINER PANEL

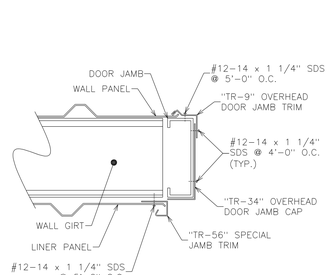

11 O.H. DOOR JAMB TRIM W/LINER PANEL

8"-"CEE" SECTION		8"-"ZEE" SECTION		9 1/2"-"CEE" SECTION		9 1/2"-"ZEE" SECTION	
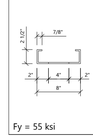	16 GA. (0.060)	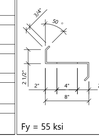	16 GA. (0.060)	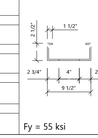	16 GA. (0.060)	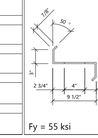	16 GA. (0.060)
	Sxc = 1.87 IN 3		Sxc = 1.72 IN 3		Sxc = 2.11 IN 3		Sxc = 2.16 IN 3
	Ae = 0.50 IN 2		Ae = 0.44 IN 2		Ae = 0.49 IN 2		Ae = 0.48 IN 2
	15 GA. (0.067)		15 GA. (0.067)		15 GA. (0.067)		15 GA. (0.067)
	Sxc = 2.05 IN 3		Sxc = 1.97 IN 3		Sxc = 2.57 IN 3		Sxc = 2.57 IN 3
	Ae = 0.55 IN 2		Ae = 0.52 IN 2		Ae = 0.58 IN 2		Ae = 0.56 IN 2
	14 GA. (0.075)		14 GA. (0.075)		14 GA. (0.075)		14 GA. (0.075)
	Sxc = 2.52 IN 3		Sxc = 2.33 IN 3		Sxc = 3.19 IN 3		Sxc = 3.17 IN 3
	Ae = 0.74 IN 2		Ae = 0.65 IN 2		Ae = 0.73 IN 2		Ae = 0.69 IN 2
	13 GA. (0.089)		13 GA. (0.089)		13 GA. (0.089)		13 GA. (0.089)
	Sxc =2.84 IN 3		Sxc = 2.74 IN 3		Sxc = 3.70 IN 3		Sxc = 3.71 IN 3
	Ae = 0.85 IN 2		Ae = 0.80 IN 2		Ae = 0.89 IN 2		Ae = 0.86 IN 2
	12 GA. (0.099)		12 GA. (0.099)		12 GA. (0.099)		12 GA. (0.099)
	Sxc = 3.23 IN 3		Sxc = 3.15 IN 3		Sxc = 4.32 IN 3		Sxc = 4.29 IN 3
Fy = 55 ksi	Ae = 1.02 IN 2	Fy = 55 ksi	Ae = 0.97 IN 2	Fy = 55 ksi	Ae = 1.10 IN 2	Fy = 55 ksi	Ae = 1.03 IN 2

12"-"CEE" SECTION		12"-"ZEE" SECTION		"ZEE" RAKEBEAM SECTION		8"-"GEE" SECTION		9 1/2"-"GEE" SECTION	
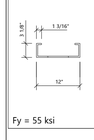	13 GA. (0.089)	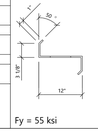	13 GA. (0.089)	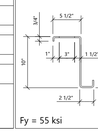	14 GA. (0.075)	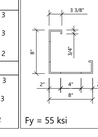	16 GA. (0.060)	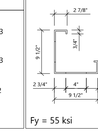	14 GA. (0.075)
	Sx = 5.80 IN 3		Sx = 5.34 IN 3		Sxc = 3.956 IN 3 (TOP IN COMP.)		Sxc = 1.74 IN 3 (TOP IN COMP.)		Sxc = 2.88 IN 3 (TOP IN COMP.)
	Ae = 1.76 IN 2		Ae = 1.76 IN 2		Sxc = 3.740 IN 3 (BOTTOM IN COMP.)		Sxc = 2.51 IN 3 (BOTTOM IN COMP.)		Sxc = 4.66 IN 3 (BOTTOM IN COMP.)
	12 GA. (0.099)		12 GA. (0.099)		Ae = 0.668 IN 2		Ae = 0.63 IN 2		Ae = 0.93 IN 2
	Sx = 6.64 IN 3		Sx = 6.21 IN 3		12 GA. (0.099)				
	Ae = 1.96 IN 2		Ae = 1.96 IN 2		Sxc = 6.057 IN 3 (TOP IN COMP.)				
	11 GA.		11 GA.		Sxc = 5.219 IN 3 (BOTTOM IN COMP.)				
	Sx = 7.96 IN 3		Sx = 7.81 IN 3		Ae = 1.141 IN 2				
	Ae = 2.37 IN 2		Ae = 2.37 IN 2						
Fy = 55 ksi		Fy = 55 ksi		Fy = 55 ksi		Fy = 55 ksi		Fy = 55 ksi	

12 STRUCTURAL PROPERTIES

SS24 / MS24 PANEL PROPERTIES							
GAGE	Fy	Design Thickness	Weight (P.S.F.)	TOP IN COMPRESSION Ix (in⁴ / ft.)	TOP IN COMPRESSION Sx (in³ / ft.)	BOTTOM IN COMPRESSION Ix (in⁴ / ft.)	BOTTOM IN COMPRESSION Sx (in³ / ft.)
24	50 ksi	.0225	1.20	0.276	0.111	0.126	0.079
22	50 ksi	.030	1.58	0.371	0.152	0.177	0.108

ROOF PANELS

R PANEL PROPERTIES							
GAGE	Fy	Design Thickness	Weight (P.S.F.)	TOP IN COMPRESSION Ix	TOP IN COMPRESSION Sx	BOTTOM IN COMPRESSION Ix	BOTTOM IN COMPRESSION Sx
26	80 ksi	.0177	0.97	0.0393	0.0398	0.032	0.0463
24	50 ksi	.0225	1.18	0.0567	0.0589	0.044	0.060

WALL PANELS

15 SHEETING PROPERTIES

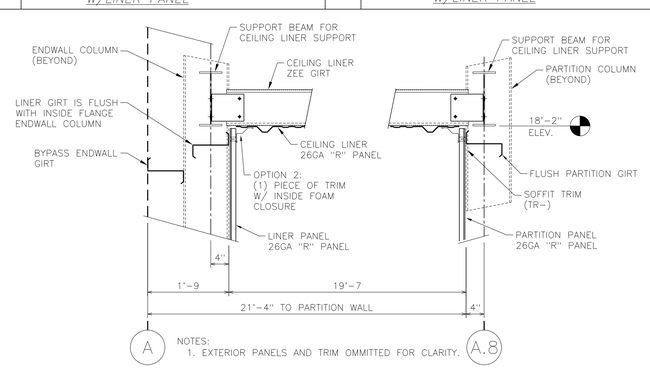

17 WASH BAY PANEL AND TRIM DETAIL

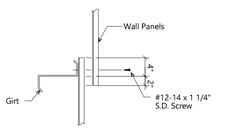

A END LAP DETAIL

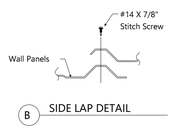

B SIDE LAP DETAIL

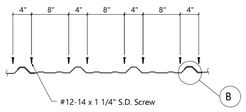

Fastener Spacing @ End Laps, Eave Strut, & Base Angle

See Roof General Details for attachment info, including fastener type, pattern, etc.

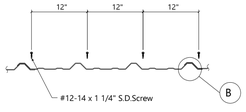

Fastener Spacing @ Intermediate Girts

ALL STANDARD FLASHING LAPS, INCLUDING GUTTERS, ARE 3"

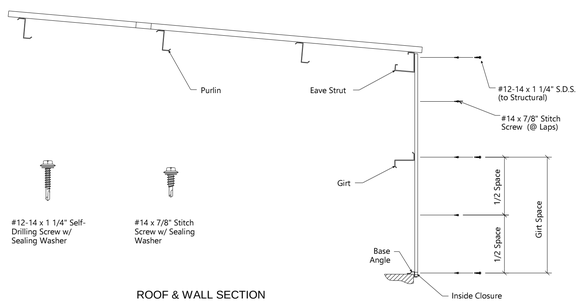

ROOF & WALL SECTION

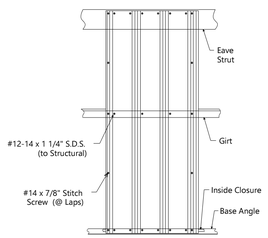

WALL ELEVATION

22 | 23 | 24 | 25 | 26 FASTENER PLACEMENT

CBC JOB No. C22I0141A

DEALER: SHOOK BLDG. SYSTEMS, INC.

SHEET 17 OF 25

ENGR. APR. ED

DRAWN TDM

DATE 8/18/2022

SCALE

CUSTOMER: MARTA MAINTENANCE BLDG

LOCATION: BIG BEAR LAKE, CA 92315

PLOT DATES:

GENERAL DETAILS

CBC STEEL BUILDINGS A NUCOR Company

P.O. BOX 1009 LATHROP, CA 95330
OFFICES/PLANT 1700 E LOUISE AVE
(209) 983-0970 FAX (209) 838-2354

IAS ACCREDITED AC 472

MBMA METAL BUILDING MANUFACTURERS ASSOCIATION

REGISTERED PROFESSIONAL ENGINEER YA DOU No. 81257 EXP. 06/30/23 STRUCTURAL CIVIL OF CALIFORNIA

07/18/23

REV	BY	DATE
1 PLANS FOR PERMITS	TDM	08/18/2022

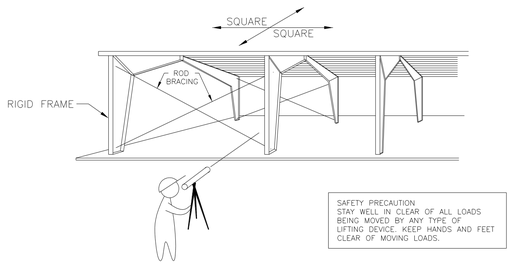

SAFETY PRECAUTION
STAY WELL IN CLEAR OF ALL LOADS BEING MOVED BY ANY TYPE OF LIFTING DEVICE. KEEP HANDS AND FEET CLEAR OF MOVING LOADS.

THE FIRST STEP IN THE SUCCESSFUL INSTALLATION OF THE ROOF OR WALLS IS TO HAVE THE PRIMARY FRAMING PLUMB AND SQUARE. FOR BEST RESULTS, IT IS RECOMMENDED THAT A TRANSIT BE USED WHEN ERECTING THE STRUCTURAL STEEL.
BE SURE TO READ THE GENERAL ERECTION GUIDE PRIOR TO COMMENCING ERECTION.

BUILDING ALIGNMENT — GE01 AA

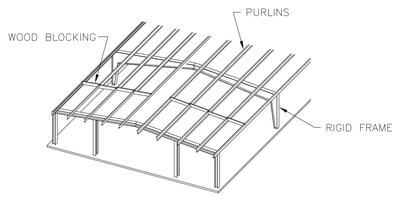

Straight purlins are a necessity. Zee sections have a natural tendency to roll out of plane and deflect horizontally. This must be corrected by forcing the purlins into proper plane and spacing. Wood blocking is recommended as one method to accomplish this.

Purlin Blocking

Before installing the roof panels and insulation, be certain that the purlins are straight and at 90? to the slope of the roof. Use wood blocking to assist with purlin alignment if adjustment is needed. Start with one row of temporary blocking in the center of the bay. Use additional rows of blocking if needed to maintain straight purlins. As sheeting progresses to within one panel width of the blocking it should hold the purlins in alignment allowing the blocking to be removed. Move blocking to next bay as the erection progresses.

SAFETY PRECAUTION
DON'T ALLOW BLOCKING TO BE A FALLING HAZARD TO THOSE BENEATH THE ROOF. WORKERS SHOULD WEAR OSHA APPROVED HARD HATS.

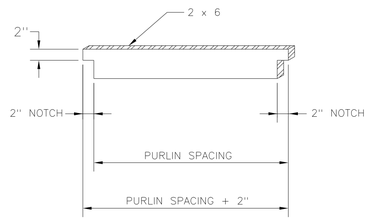

Typical construction of wood blocking is shown above. A 2 x 6 minimum board size should be used. Refer to the cross section framing drawings that accompanied the building to determine the purlin size and spacing. Measure the purlin flange and cut notch in board accordingly.

PURLIN BLOCKING — GE02 AA

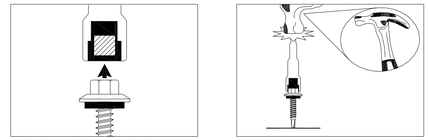

1. Put the top of the fastener into the nut setter. Note: for painted Fasteners, place a single or doubled layer of plastic between the fastener head and the nut setter.

2. Place the point of the fastener onto a hard surface and firmly hit the top of the nut setter 2-3 times.

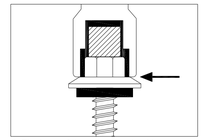

3. The base of the nut setter should now be contacting the top of the head of the fastener with no gaps.

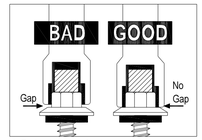

4. Bad set vs. good set.

INSTRUCTIONS FOR PROPER MAGNET SETTING FOR NUT SETTER BIT — GE05 AA

FASTENERS

SAFETY NOTES:

THE METAL BUILDING SUPPLIER STRONGLY RECOMMENDS THAT SAFE WORKING CONDITIONS AND ACCIDENT PREVENTION PRACTICES BE THE TOP PRIORITY ON ANY JOB SITE.

LOCAL, STATE AND FEDERAL SAFETY AND HEALTH STANDARDS SHOULD ALWAYS BE FOLLOWED TO HELP ENSURE WORKER SAFETY.

MAKE CERTAIN ALL EMPLOYEES KNOW THE SAFEST AND MOST PRODUCTIVE WAY OF ERECTING A BUILDING. EMERGENCY TELEPHONE NUMBERS, LOCATIONS OF FIRST AID STATIONS AND EMERGENCY PROCEDURES SHOULD BE KNOWN TO ALL EMPLOYEES.

DAILY MEETINGS HIGHLIGHTING SAFETY PROCEDURES, THE USE OF HARD HATS, RUBBER SOLE SHOES FOR ROOF WORK, PROPER EQUIPMENT FOR HANDLING MATERIAL AND SAFETY NETS WHERE POSSIBLE ARE RECOMMENDED ERECTION PRACTICES.

THE METAL BUILDING SUPPLIER INTENDS THAT THESE DRAWINGS BE INTERPRETED AND ADMINISTERED WITH SOUND JUDGMENT CONSISTENT WITH GOOD SAFETY PRACTICES.

ALL SAFETY PRECAUTIONS, OSHA SAFETY REQUIREMENTS, OR ANY OTHER APPROPRIATE SAFETY REQUIREMENTS, CUSTOMARY OR STATUTORY, MUST BE ADHERED TO, TO ENSURE MAXIMUM WORKER SAFETY.

IF OIL OR OTHER SLIPPERY SUBSTANCES ARE SPILLED ON THE ROOF/DECK PANELS, WIPE THEM OFF IMMEDIATELY TO PREVENT SLIPPING OR FALLING.

YOU SHOULD MAINTAIN A FIRM, SAFE POSITION WHEN USING ANY TOOL.

YOU SHOULD MAINTAIN A CONSTANT AWARENESS OF YOUR LOCATION IN RELATION TO THE ROOF EDGE WHEN USING TOOLS AND MACHINES OR PERFORMING ANY OTHER FUNCTION ON THE ROOF AREA.

DO NOT UNDER ANY CIRCUMSTANCES STEP OR WALK ON THE SURFACE OF ANY FIBERGLASS SKYLIGHT. IF FOOT TRAFFIC IS NECESSARY OVER SKYLIGHT, USE WALK BOARDS THAT ARE PROPERLY SUPPORTED BY THE BUILDING PURLINS.

SAFETY COMMITMENT — GE70 AA

USE WOOD BLOCKING TO ELEVATE AND SLOPE THE PANELS IN A MANNER THAT WILL ALLOW MOISTURE TO DRAIN. WOOD BLOCKING PLACED BETWEEN PANEL BUNDLES WILL PROVIDE ADDITIONAL AIR CIRCULATION. COVER THE AREA BENEATH PANELS WITH POLYETHYLENE OR A TARPAULIN TO PREVENT DIRT AND DEBRIS FROM ENTERING FEMALE SEAM.

SAFETY PRECAUTION
MAINTAIN A CLEAN AND ORDERLY WORK AREA.

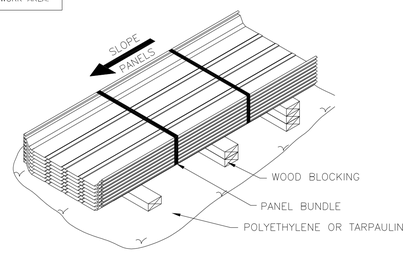

PANEL STORAGE — RC51 SA

STANDING SEAM

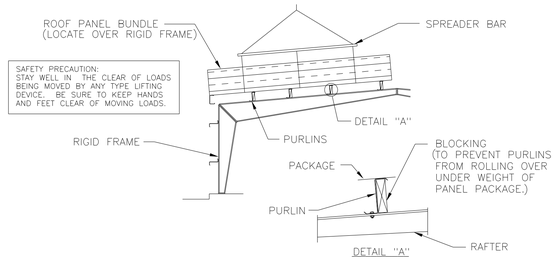

TO FACILITATE THE HANDLING OF THE ROOF PANELS, PANEL BUNDLES CAN BE LIFTED AND PLACED ON THE ROOF IF LOCATED AT A RIGID FRAME AND WITH BLOCKING IN PLACE TO PREVENT THE PURLINS FROM ROLLING OVER. DO NOT SLIDE BUNDLED PANELS ALONG ROOF FRAMING. WHEN LIFTING BUNDLED SHEETS, MAKE CERTAIN THAT THE BUNDLE IS ADEQUATELY SUPPORTED. AS A RULE WHEN LIFTING, NO MORE THAN 1/3 OF THE LENGTH OF THE PANEL SHOULD BE LEFT UNSUPPORTED.
REFER TO ERECTION DRAWINGS FOR THE ROOF PANEL MARKINGS AND STAGE BUNDLES ACCORDINGLY. THIS WILL MINIMIZE PANEL HANDLING AND SPEED THE ERECTION PROCEDURE.

PANEL STORAGE ON ROOF — RC54 AA

THE STANDING SEAM GAUGE BAR CAN BE USED IN ADDITIONTO THE PANEL MODULARITY INSTALLATION DETAILS (RC71SA, RC72SA, RC73SA).

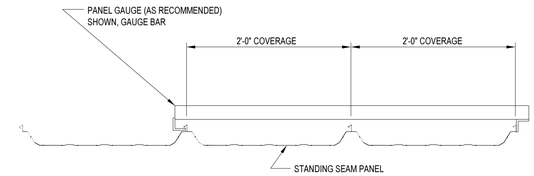

SAFETY PRECAUTION
WIPE OIL AND OTHER SLIPPERY SUBSTANCES FROM ROOF PANELS. DO NOT STEP ON RIB OF PANEL OR WITHIN 5 FEET OF UNSECURED PANEL END. USE OSHA APPROVED TIE OFFS, NETTINGS OR RAILS WHEN WORKING ON ROOF.

PANEL COVERAGE GAUGES SUCH AS SHOWN ABOVE WILL HELP TO MAINTAIN CORRECT COVERAGE. PLACE ONE AT EACH END OF THE PANEL, GAUGE EACH PURLIN RUN AND ABOVE OR BELOW THE ENDLAP.

A STRING LINE SET AT THE NEXT RAFTER IS RECOMMENDED FOR TAKING MEASUREMENTS BACK TO THE PANELS TO ENSURE THAT THEY ARE RUNNING STRAIGHT AND SQUARE.

PANEL GAUGING — RC41 SA

STANDING SEAM PANEL

THE STANDING SEAM GAUGE BAR CAN BE USED IN ADDITIONO THE PANEL MODULARITY INSTALLATION DETAILS (RC71SA, RC72SA, RC73SA).

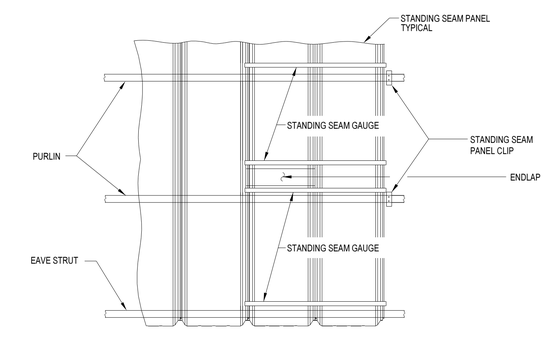

STANDING SEAM PANEL GAUGE LOCATIONS — RC42 SA

THE STANDING SEAM GAUGE BAR CAN BE USED IN ADDITION TO THE PANEL MODULARITY INSTALLATION DETAILS (RC71SA, RC72SA, RC73SA).

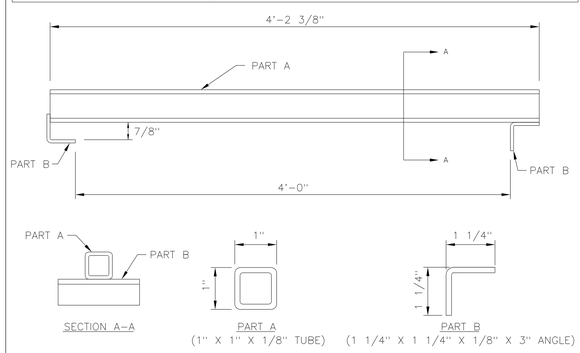

STANDING SEAM GAUGE BAR ASSEMBLY DETAIL — RC43 SA

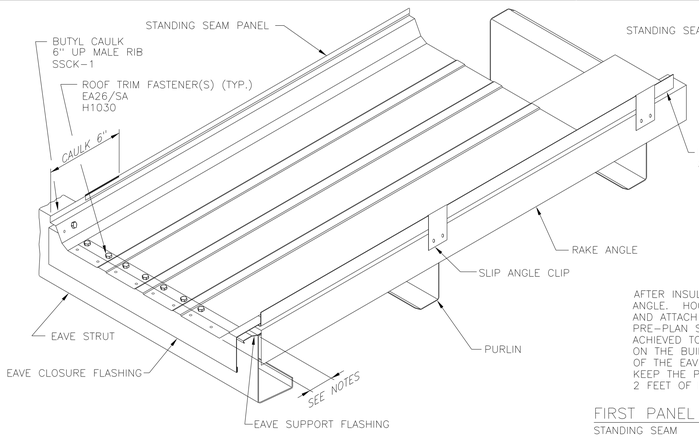

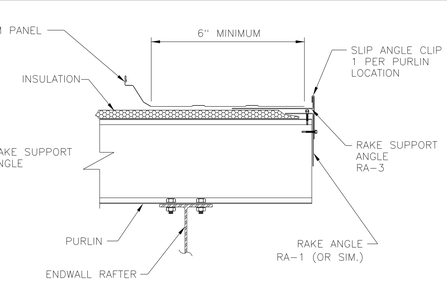

AFTER INSULATION IS IN PLACE ALIGN RAKE SUPPORT ANGLE (RA-3) WITH RAKE GABLE ANGLE. HOOK SLIP ANGLE CLIP (CL-21) OVER VERTICAL LEG OF RAKE SUPPORT ANGLE AND ATTACH SLIP ANGLE CLIP TO RAKE ANGLE AT EACH PURLIN LOCATION AS SHOWN. PRE-PLAN STARTING AND FINISHING PANEL CUTS SO THAT A 6" MINIMUM PANEL FLAT IS ACHIEVED TO ALLOW PROPER INSTALLATION OF RAKE TRIM. UNLESS NOTED DIFFERENTLY ON THE BUILDING ERECTION DRAWINGS, EXTEND THE LOWER END 4" PAST THE BACK SIDE OF THE EAVE STRUT (A STRING LINE EXTENDED OUT FROM THE EAVE STRUT WILL HELP KEEP THE PANEL OVERHANG STRAIGHT). REMOVE PAPER BACKING FROM APPROXIMATELY 2 FEET OF EAVE MASTIC AND INSTALL ACCORDINGLY.

FIRST PANEL INSTALLATION (UNIVERSAL RAKE) — RC11 SA

STANDING SEAM

CBC JOB No. C2210141A
DEALER: SHOOK BLDG. SYSTEMS, INC.
SHEET 18 OF 25
ENGR. APR. ED
DRAWN TDM
DATE 8/18/2022
SCALE

GENERAL DETAILS

CUSTOMER: MARTA MAINTENANCE BLDG
LOCATION: BIG BEAR LAKE, CA 92315

PLOT DATES:

STEEL BUILDINGS
A NUCOR Company
CBC
P.O. BOX 1009, LATHROP, CA 95330
OFFICE(S)/PLANT: 1700 E LOUISE AVE
(209) 983-0970 FAX (209) 858-2354
IAS ACCREDITED AC472
MBMA METAL BUILDINGS

REGISTERED PROFESSIONAL ENGINEER
KA DOU
No. 81257
EXP. 6/30/23
STATE OF CALIFORNIA
07/18/23

REV	BY	DATE
⚠	TDM	08/18/2022

PLANS FOR PERMITS

First Panel Installation – Refer to detail RC11SA at Universal Rake)

1) Install panel/panels from eave to ridge/high eave, straight and square with the building. Be sure to overhang the panel at eave the correct amount. Install all panel clips (RC67EA/RC18TA). If there are endlaps, complete the endlaps (RC06SA/RC07SA).

2) Determine where the center line of the panel rib will fall, based upon the width of the starter panel. Mark a line on the vertical part of the eave flashing at this point.

3) From the first vertical mark on the eave flashing, lay out the entire length of the building, putting a mark on the vertical leg of the flashing at 1'–0" O.C.. These marks will be used as the roof progresses to position the panel and to position the SSMC–I closure.

4) Mark the center line of all SSMC–I closures with a vertical mark. Install the first closure (EA36TA), with the mark on the eave flashing and the mark on the closure aligned.

5) Installed eave fasteners will pass through the panel, tape mastic, eave flashing and EA–1(T). Fastener locationis upslope from dimples at the end of the panel.

6) After the clips are installed on this first panel run, measure from the center of the fasteners which hold the panel clips to the purlins, at each panel endlap location and at the ridge/high eave purlin, and put a mark on the top of the purlin at 2'–0" O.C.. Then put in one 1/4–14x1 ½" clip fastener or drill a small hole at each 2'–0" mark. These holes or fasteners will be used as the roof progresses to position the panel clips in these locations at a perfect 2'–0" coverage, thus maintaining module and panel straightness/alignment.

PANEL MODULARITY AT CONNECTING PANEL

STANDING SEAM II/360 — RC71 SA

NO INSULATION

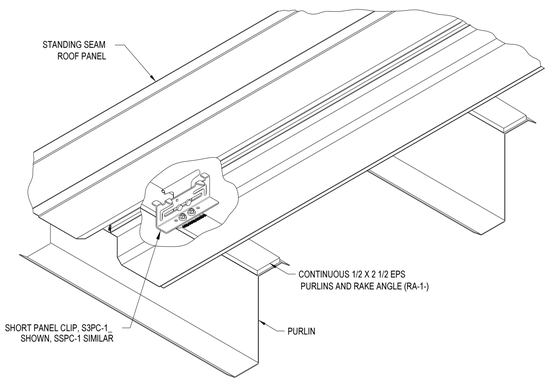

BLANKET INSULATION

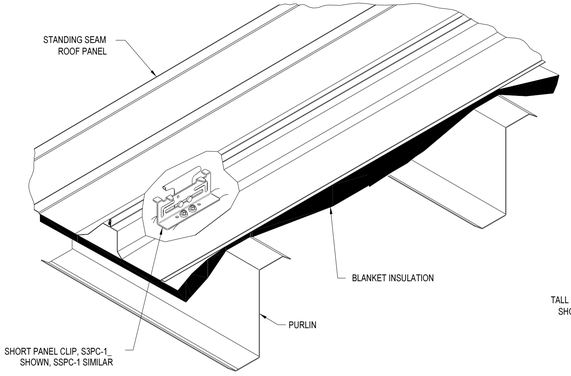

BLANKET INSULATION AND THERMAL BLOCKS

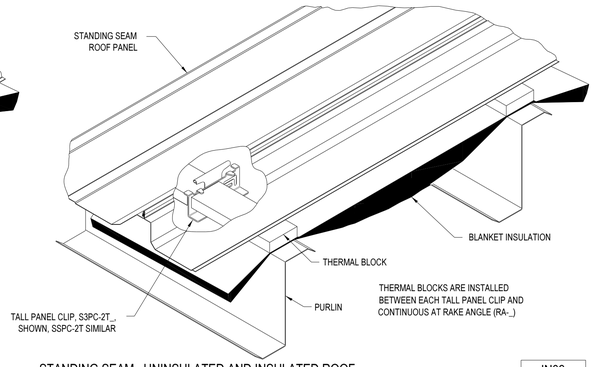

STANDING SEAM, UNINSULATED AND INSULATED ROOF — IN03 SA

STANDING SEAM

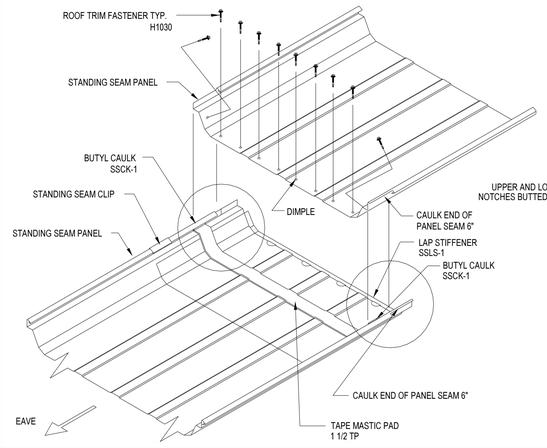

ALL AREAS ON ALUMINUM COATED PANELS THAT REQUIRE MASTIC SHOULD BE WIPED CLEAN WITH A MILD ALL PURPOSE DETERGENT CLEANER BEFORE MASTIC APPLICATION.

WHEN ENDLAPS ARE REQUIRED THE UPPER 3 INCHES OF THE LOWER PANEL SEAM AND LOWER 3" OF THE UPPER PANEL SEAM ARE NOTCHED TO ACCEPT PANEL LAP. THIS LAP WILL OCCUR APPROXIMATELY 12 INCHES ABOVE A PURLIN. PRIOR TO SETTING THE UPPER PANEL, INSTALL THE LAP STIFFENER, SSLS-1 AS SHOWN ABOVE. THEN PLACE PRECUT LENGTH OF SPECIAL 1 1/2" X 1/8" STANDING SEAM LAP MASTIC ACROSS THE WIDTH OF THE PANEL BEGINNING AND ENDING AT THE VERTICAL SEAMS. APPLY SSCK-1 (BUTYL LAP CAULK) TO INNER FACE OF BOTH MALE AND FEMALE SEAMS, MAKING SURE THAT BACK EDGE OF MALE NOTCH IS COVERED. INSTALL THE UPPER PANEL BY LAPPING THE LOWER PANEL 6" AND ROLLING/SETTING UPPER PANEL FEMALE SEAM OVER EXISTING INSTALLED PANEL. PULL MIDDLE OF UPPER PANEL UP AND SLIDE 3" NOTCH UNDER LOWER PANEL MALE SEAM. THE LOWER AND UPPER PANEL NOTCHES WILL BUT TOGETHER TO FORM A CONTINUOUS SEAM. RELAX THE MIDDLE OF THE UPPER PANEL ONTO PREVIOUSLY INSTALLED TAPE MASTIC AND CLAMP PANEL ENDLAP PER INSTRUCTIONS. NOW SECURE THE LAP WITH H1030 ROOF FASTENERS INSTALLED AT THE PRE-DIMPLED LOCATIONS WHILE CLAMPS ARE STILL IN PLACE. DO NOT REMOVE CLAMPS UNTIL ALL REQUIRED FASTENERS ARE INSTALLED.

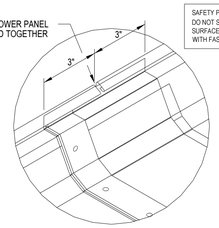

SAFETY PRECAUTION
DO NOT STEP ON RIB OF PANEL. ALWAYS STEP ON FLAT SURFACE. DO NOT STEP ON PANELS UNTIL FULLY SECURED WITH FASTENERS.

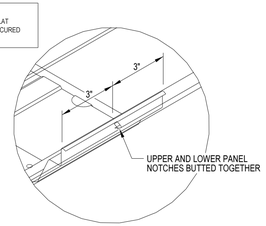

PANEL LAP DETAIL

STANDING SEAM — RC07 SA

NOTE : BEFORE ANY MASTIC IS APPLIED, CLEAN PANEL SURFACE OF ANY DIRT AND OIL.

★ USE PANEL NOTCH FOR LOCATING CLOSURE AT TYPICAL FLASHING. LOCATE CLOSURE 1" DOWNHILL OF FACTORY NOTCH.

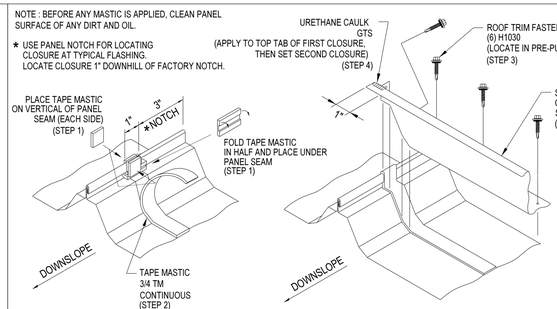

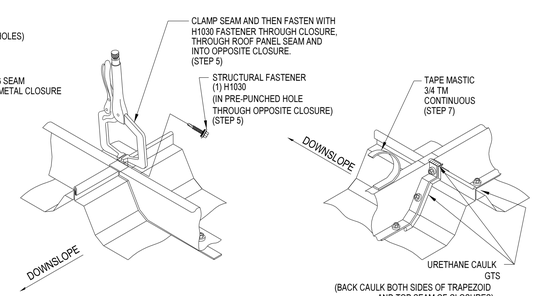

STEP 1. FOLD 1 1/2" LONG 3/4 X 3/16 TAPE MASTIC IN HALF AND PLACE ALONG RIB UNDER PANEL SEAM (AS SHOWN). PLACE TWO MORE PIECES OF MASTIC ALONG VERTICAL OF PANEL SEAM.

STEP 2. INSTALL 3/4 X 3/16 TAPE MASTIC ACROSS PANEL FLAT AND OVER PANEL RIB AND PREVIOUS MASTIC, LOCATED 1" DOWNHILL OF THE FACTORY NOTCH. KEEP RUN OF MASTIC INTACT FOR PLACEMENT ON NEXT PANEL.

STEP 3. INSTALL METAL CLOSURE FLUSH WITH EDGE OF MASTIC (LOCATED AT EDGE OF FACTORY NOTCH). SECURE IN PLACE WITH (6) H1030 ROOF FASTENERS IN PRE-PUNCHED HOLES.

STEP 4. APPLY 1" LONG URETHANE CAULK ALONG TOP TAB OF METAL CLOSURE. THIS IS TO ENSURE SEAL OF THE NEXT LAPPING METAL CLOSURE.

STEP 5. INSTALL NEXT METAL CLOSURE SAME AS THE FIRST. CLAMP THE TWO METAL CLOSURES TOGETHER AT SEAM AND INSTALL (1) H1030 FASTENER THROUGH HOLE AT TOP OF CLOSURE, THROUGH ROOF PANEL SEAM AND INTO OPPOSITE CLOSURE. DO NOT OVERTIGHTEN FASTENER TO EFFECT PANEL COVERAGE WIDTH.

STEP 6. APPLY URETHANE CAULK ALONG BACKSIDE OF METAL CLOSURES AT TRAPEZOIDAL LOCATION. NEXT, RUN A BEAD OF URETHANE CAULK ALONG TOP SEAM OF METAL CLOSURES AND AND PANEL SEAM.

STEP 7. AFTER CLOSURE FASTENING IS COMPLETE, ADD A CONTINUOUS RUN OF 3/4 X 3/16 TAPE MASTIC ALONG TOP EDGE OF CLOSURE FLANGE FOR SEAL OF RIDGE FLASHING.

SEAM CLOSURE AND OUTSIDE METAL CLOSURE INSTALLATION

STANDING SEAM — RC34 SA

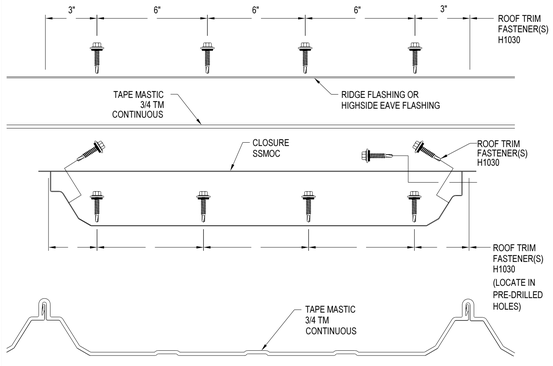

EXPANSION RIDGE FLASHING OR HIGH SIDE EAVE ATTACHMENT

STANDING SEAM — RC35 SA

All Subsequent Panel Runs

7) Caulk the first 6" of the top of male rib of the panel (RC11_A).
8) Lay panel in position next to previous panel.
9) Position a small framing square at the 1'-0" mark on the eave. Align the center of the (middle minor rib) of the panel with the edge of the square positioned at the 1'-0" mark, if this is a Standing Seam 360 panel, hook the female leg to the male leg of the preceding panel the entire length (RC01TA), then align center of panel with edge of square.
10) Holding the middle of the rib at the edge of the square, push the panel uphill or downhill to get the proper overhang amount (See Erection Drawings). This can be read right off the markings on the square. Note, the dimension shown is typically from face of eave strut. Subtract wall panel depth for correct overhang from eave flashing.
11) Once in position, install one fastener through the flat of the panel at the center of the flat.
12) If Standing Seam II panel, the panel can now be seamed at this time (RC36EA).
13) Install fasteners in panel flat from the center to completed seam and into the SSMC-I closure.
14) Using another SSMC-I, install closure by aligning the mark in the center of the closure, with the next 1'-0" mark on the eave trim (EA36TA).
15) Install remainder of fasteners in panel flat towards newly installed SSMC-I, then install fastener from trapezoid into closure.
16) Install panel clip at endlap or ridge/high eave location by either removing fastener or finding the pre-drilled hole at 2'-0" increments and then installing the fastener through the panel clip base into the pre-drilled hole. Then add the second fastener to the clip.
17) Panel should now be straight and on module, and the balance of the clips can be installed.
18) If there is a panel endlap, you would next lay the overlapping panel, make up the endlap utilizing the suggested clamps (RC66EA/ RC66TA), and put on the panel clip at the next uphill pre-drilled location. Then fill in the balance of the clips (RC67EA/ RC18TA).
19) Depending on insulation thickness and other job site variables, you may choose to lay out one or more additional purlins at panel midspans on these 2'-0" centers for proper clip/panel modularity.

PANEL MODULARITY-ALL SUBSEQUENT PANEL RUNS

STANDING SEAM II/360 — RC72 SA

ERECTION NOTES:

1. ALL AREAS WHERE MASTIC IS TO BE APPLIED SHOULD BE WIPED CLEAN WITH A MILD DETERGENT OR AN ALL PURPOSE CLEANER BEFORE MASTIC APPLICATION. THIS WILL ENSURE A GOOD SEALING SURFACE AND IMPROVE WEATHER TIGHTNESS.
2. THE BLANKET INSULATION MANUFACTURER RECOMMENDS THAT DOUBLE SIDED TAPE BE USED TO SECURE THE INSULATION TO THE EAVE. THE METAL BUILDING SUPPLIER IS NOT RESPONSIBLE FOR THE INSTALLATION OR ATTACHMENT OF THE INSULATION.
3. DO NOT USE THE DIMPLES IN THE END OF THE PANELS TO LOCATE FASTENERS AT THE EAVE. DIMPLES ARE FOR THE FASTENERS AT THE PANEL ENDLAPS ONLY.
4. ALL EXPOSED FASTENERS SHOULD PENETRATE THE SEALANT FOR THE MOST WEATHER TIGHT CONNECTION.
5. WHEN FIELD CUTTING PANELS OR TRIM DO NOT USE ABRASIVE SAWS OR OTHER CUTTING METHODS WHICH PRODUCE HOT METAL PARTICLES OR BURN THE CUT EDGES. THESE METHODS WILL DAMAGE THE PAINTED AND GALVALUME FINISH AND VOID ANY WARRANTIES. USE DOUBLE CUT SHEARS, NIBBLERS OR OTHER CUTTING DEVICES WHICH DO NOT PRODUCE HOT METAL PARTICLES OR BURNED EDGES.

ERECTION NOTES – STANDING SEAM

RC91 SA

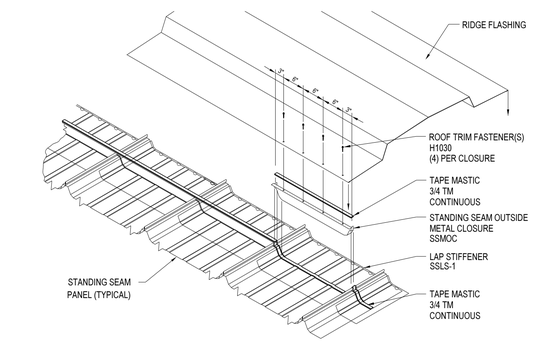

AFTER THE INSTALLATION OF THE ROOF PANELS HAS BEEN COMPLETED, PROCEED WITH THE RIDGE CLOSURE AS SHOWN ABOVE. BEFORE ANY MASTIC IS APPLIED, CLEAN PANELS OF ANY OIL AND DIRT. POSITION LAP STIFFENER, SSLS-1, AT THE ENDS OF THE PANELS. INSTALL 3/4" X 3/16" MASTIC, SEAM CLOSURE (SSMOC) AS PER DETAIL RC34SA. REPEAT UNTIL A SUFFICIENT NUMBER OF CLOSURES HAVE BEEN INSTALLED (BOTH SIDES OF RIDGE) TO EQUAL A LENGTH OF RIDGE FLASHING. RUN A CONTINUOUS STRIP OF 3/4" X 3/16" MASTIC OVER THE TOP OF THE CLOSURES AND APPLY THE RIDGE FLASHING.

EXPANSION RIDGE FLASHING ATTACHMENT

STANDING SEAM — RC37 SA

REF. DETAILS RC34SA & RC33SA

PLOT DATES:

GENERAL DETAILS

CUSTOMER: MARTA MAINTENANCE BLDG
LOCATION: BIG BEAR LAKE, CA 92315

CBC JOB No. C2210141A
DEALER: SHOOK BLDG. SYSTEMS, INC.
SHEET 19 OF 25
ENGR. APR. ED
DRAWN TDM
DATE 8/18/2022
SCALE

CBC STEEL BUILDINGS
A NUCOR Company
P.O. BOX 1009, LATHROP, CA 95330
OFFICES/PLANT: 1700 E. LOUISE AVE
(209) 983-0910 FAX (209) 858-2354

IAS ACCREDITED AC 472
MBMA METAL BUILDING MANUFACTURERS ASSOCIATION

REGISTERED PROFESSIONAL ENGINEER
WILLIAM VAN DOU
No. 81257
EXPIRES 12/31/23
CALIFORNIA
07/18/23

DATE	BY	REV
08/18/2022	TDM	1 PLANS FOR PERMITS

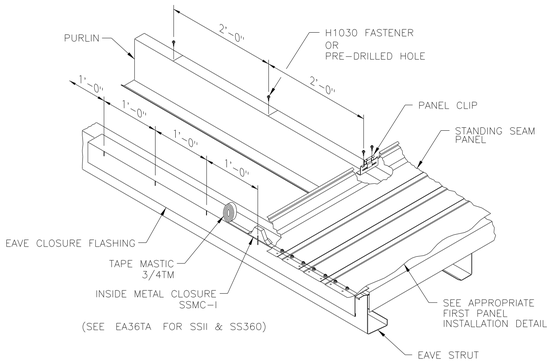

STEP 1

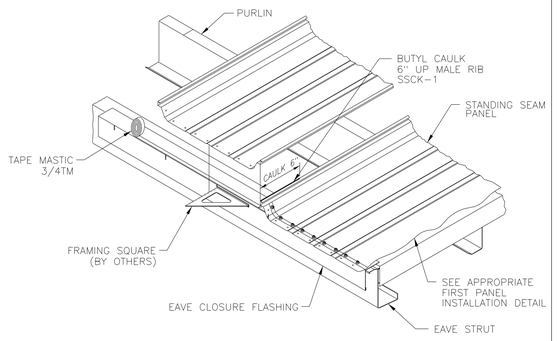

STEP 2

AS YOU ARE SETTING EACH PANEL, INSTALL THE EAVE CLOSURE AS PER THE FOLLOWING INSTRUCTIONS

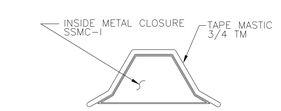

STEP 1. APPLY TAPE MASTIC TO TOP SIDE OF METAL CLOSURE. DO NOT REMOVE THE PAPER BACKING.

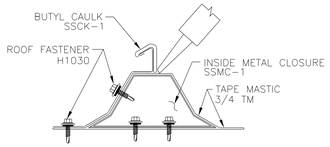

STEP 4. INSTALL EAVE FASTENERS IN THE FLAT OF THE PANEL IN THE CORRECT PATTERN. INSTALL A FASTENER THROUGH THE SIDE OF THE CLOSURE AS SHOWN ABOVE. APPLY CAULKING TO THE INSIDE FACE OF THE SEAM OVER THE CLOSURE.

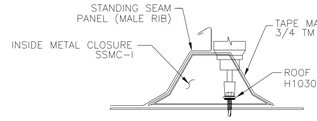

STEP 2. POSITION CLOSURE OUTSIDE MALE RIB AND INSTALL THE OUTSIDE FASTENER THROUGH THE PRE-PUNCHED HOLES.

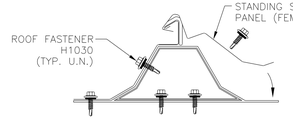

STEP 5. INSTALL THE NEXT PANEL RUN AND REPEAT STEPS 1 – 4. BE SURE TO INSTALL A ROOF FASTENER INTO THE SIDE OF THE NEXT PANEL AS SHOWN ABOVE.

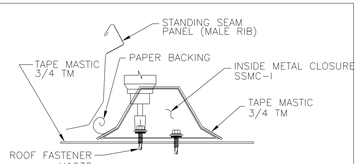

STEP 3. LIFT PANEL AND INSTALL THE INSIDE FASTENER. REMOVE THE PAPER FROM THE MASTIC AND PRESS THE PANEL FIRMLY IN PLACE.

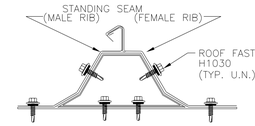

A PROPERLY COMPLETED RIB CLOSURE

INSIDE METAL CLOSURE INSTALLATION

STANDING SEAM ROOF PANEL

EA36
TA

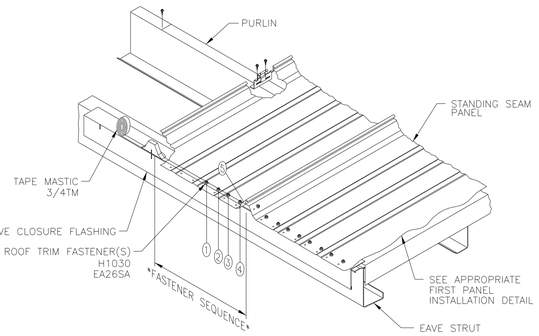

STEP 3

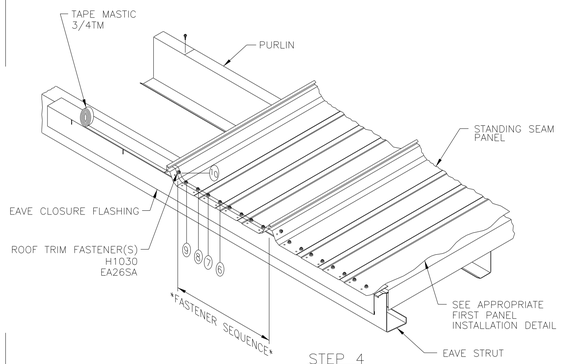

STEP 4

PANEL MODULARITY INSTALLATION

STANDING SEAM II/360

RC73
SA

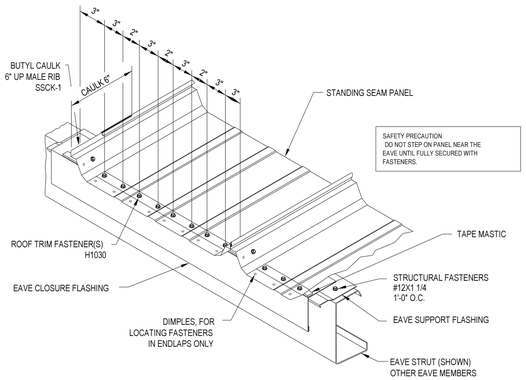

FASTENER INSTALLATION AT EAVE STRUT

STANDING SEAM ROOF

EA26
SA

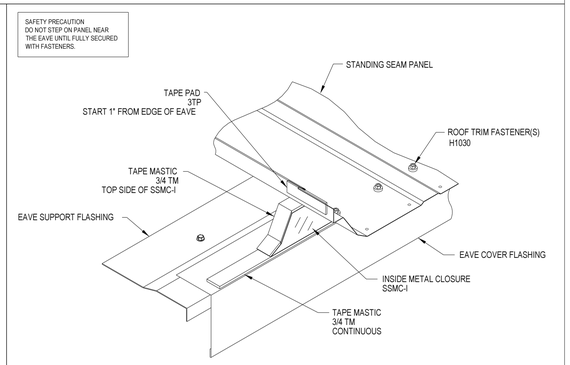

LOW EAVE CAULK DETAIL

STANDING SEAM ROOF

EA27
SA

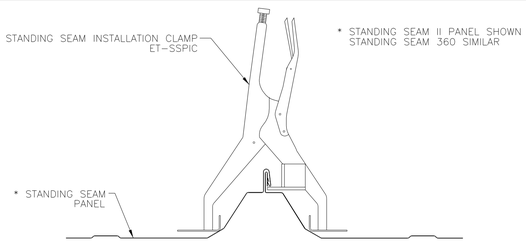

The standing seam installation clamp will help keep roof runs on module and clamp will remain out of the work area when in use. This will not need to be used on every panel run but only when required to help modify sheets to stay within tolerance. They are also adjustable to allow for broader ranges of corrections.

By slipping the flat tab (located below the hinge point of the clamp) under the seam of the roof panels and then squeezing the handles closed, the two base angles grip the lower trapezoid of the panels and shorten the distance between the vertical legs of the roof sheets. When used at end laps and ridge/high eave locations of the roof, you can manipulate the growth of the sheets caused by the increasing amount of insulation being laid under roof systems.

STANDING SEAM INSTALLATION CLAMP

STANDING SEAM II/360

RC70
SA

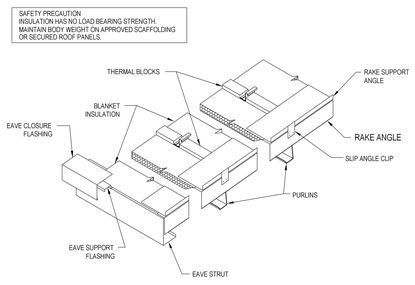

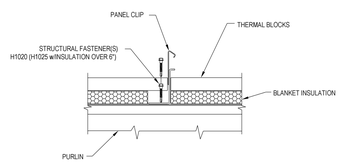

THERMAL BLOCK, AN OPTIONAL ACCESSORY FOR THE STANDING SEAM AND LOC-SEAM ROOF PANEL. THERMAL BLOCKS MAY BE USED FOR BETTER INSULATING VALUES. BY PLACING ONE THERMAL BLOCK OVER EACH PURLIN AND HIGH SIDE STRUT (NOT REQUIRED AT LOW EAVE).

THERMAL BLOCK INSTALLATION

RC26C
AA

CBC JOB No. C2210141A

GENERAL DETAILS

CUSTOMER: MARTA MAINTENANCE BLDG

LOCATION: BIG BEAR LAKE, CA 92315

DEALER: SHOOK BLDG. SYSTEMS, INC.

SHEET 20 OF 25

ENGR. APR. ED

DRAWN TDM

DATE 8/18/2022

SCALE

PLOT DATES:

CBC STEEL BUILDINGS
A NUCOR Company
P.O. BOX 1009, LATHROP, CA 95330
OFFICES/PLANT: 1700 E. LOUISE AVE
(209) 983-0970 FAX (209) 858-2354

REGISTERED PROFESSIONAL ENGINEER
VIA DOU
No. 81257
EXP. 12/31/23
STATE OF CALIFORNIA
07/18/23

REV	BY	DATE
△	TDM	08/18/2022
PLANS FOR PERMITS		

NOTE:
PANELS ARE DIMPLED AT BOTH ENDS. DIMPLES ARE USED FOR FASTENER LOCATIONS AT THE PANEL ENDLAPS ONLY.

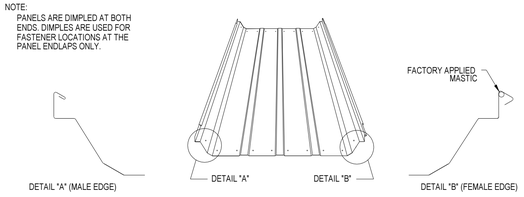

STANDING SEAM 360 ROOF PANEL

SAFETY PRECAUTION
DO NOT STEP ON RIB OF PANEL. ALWAYS STEP ON FLAT SURFACE.

STANDING SEAM 360 PANEL IDENTIFICATION MARK NUMBER

EXAMPLE S3P 24 -
- COUNTER (IDENTICAL LENGTH SHARE COUNTER)
- 24 GAGE
- STANDING SEAM 360

NOTE:
ALUMINUM-COATED PANELS ARE SUBJECT TO STAINING DUE TO RESIDUE FROM BARE HANDS. ALUMINUM-COATED LINER PANELS THAT INCLUDE AN ACRYLIC FINISH DO HAVE ADDITIONAL PROTECTION, BUT IT IS LIMITED AND DETERIORATES IN A RELATIVELY SHORT TIME MAKING THAT PANEL ALSO SUBJECT TO STAINING FROM BARE HANDS. IT IS RECOMMENDED THAT GLOVES BE USED FOR ALL HANDLING OF BOTH PRODUCTS AND THAT APPLICATION OF THESE PRODUCTS BE LIMITED TO AREAS NOT EXPOSED TO TOUCH.

PANEL MARKING AND NOTCHING — RC63 TA
STANDING SEAM 360

THE STANDING SEAM ROOF PANELS HAVE BEEN DESIGNED SO THAT BOTH SIDES OF A GABLED BUILDING CAN BE SHEETED SIMULTANEOUSLY.

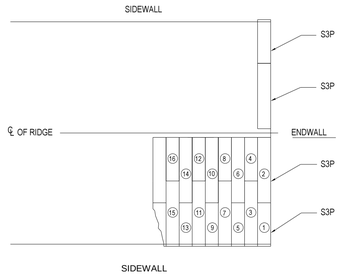

PANEL STAGGER LAYOUT -
TO ASSURE A WATER TIGHT CONNECTION, STANDING SEAM ENDLAPS ARE DESIGNED TO BE STAGGERED FROM ONE PANEL RUN TO THE NEXT. SEE ERECTION DRAWING FOR PROPER ENDLAP LOCATIONS.

DIRECTION OF ROOF PANEL ERECTION — RC64 TA
STANDING SEAM 360

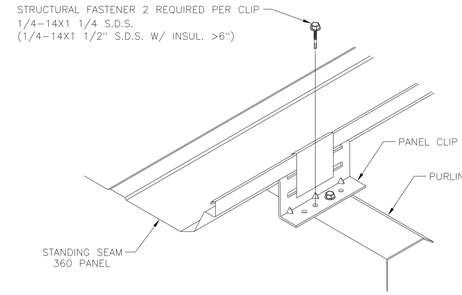

HOOK TAB OF CLIP OVER MALE LEG OF PANEL AND ROTATE DOWN INTO POSITION. SECURE THE CLIP TO THE PURLIN WITH TWO 1/4-14x1 1/4" S.D. FASTENERS. A GAUGE SHOULD BE USED TO MAINTAIN PANEL MODULE.

TYPICAL CLIP ATTACHMENT TO PURLIN — RC17 TA
STANDING SEAM 360

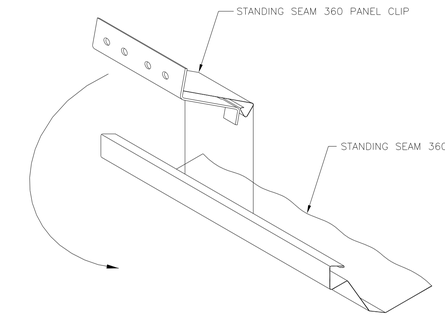

INSTALL CLIP MAKING CERTAIN THE SLIDING TAB IS CENTERED BEFORE ATTACHING CLIP TO THE PURLIN.

PANEL CLIP INSTALLATION — RC18 TA
STANDING SEAM 360 PANEL

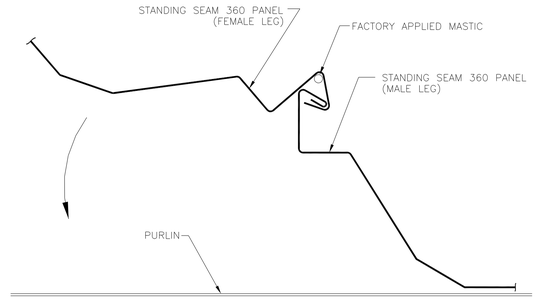

DETAIL AT SIDELAP — RC01 TA
STANDING SEAM 360

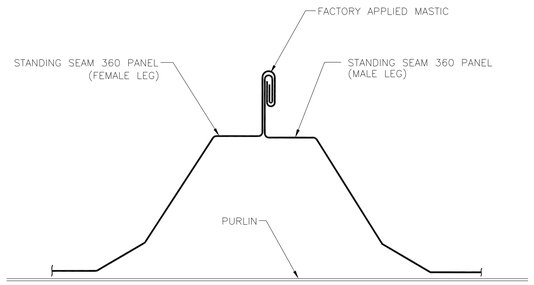

DETAIL AT FINISHED SEAM — RC05 TA
STANDING SEAM 360

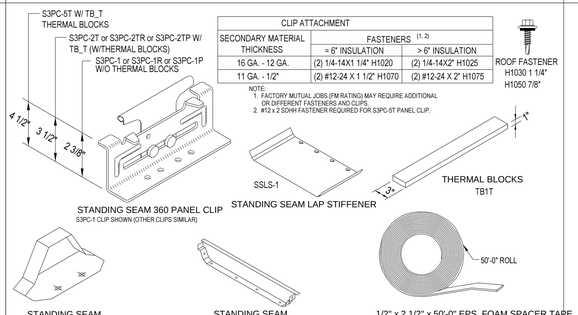

CLIP ATTACHMENT		
SECONDARY MATERIAL THICKNESS	FASTENERS (1, 2) = 6" INSULATION	FASTENERS (1, 2) > 6" INSULATION
16 GA. - 12 GA.	(2) 1/4-14X1 1/4" H1020	(2) 1/4-14X2" H1025
11 GA. - 1/2"	(2) #12-24 X 1 1/2" H1070	(2) #12-24 X 2" H1075

ROOF FASTENER H1030 1 1/4" H1050 7/8"

NOTE:
1. FACTORY MUTUAL JOBS (FM RATING) MAY REQUIRE ADDITIONAL OR DIFFERENT FASTENERS AND CLIPS.
2. #12 x 2 SDHH FASTENER REQUIRED FOR S3PC-5T PANEL CLIP.

STANDING SEAM PANELS IN GENERAL ARE KNOWN FOR THEIR TENDENCY TO RUMBLE IN HIGH WINDS IF INSULATION IS NOT USED. WHEN UNINSULATED STANDING SEAM ROOFS ARE USED SHORT CLIPS ARE REQUIRED AND CONTINUOUS RUN OF 1/2 X 2 1/2 EPS ON THE TOP OF ALL PURLINS, BAR JOISTS AND RAKE ANGLES.

SAFETY PRECAUTION:
ALWAYS WEAR GLOVES WHEN HANDLING MATERIALS.

BASIC PARTS AND PIECES — RC61 TA
STANDING SEAM 360

STANDING SEAM 360 PANEL ROOF SYSTEM HAS UNIQUE SIDELAP SEAMS WHICH ENGAGE THE ADJACENT PANEL TO FORM A TIGHT PENETRATION FREE CONNECTION. THE PANEL IS ATTACHED TO THE SUPPORT FRAMING BY A SPECIAL STANDING SEAM 360 PANEL CLIP WHICH IS INTERLOCKED WITHIN THE SEAM AND FASTENED TO THE PURLIN WITH SELF-DRILLING FASTENERS. THE PROPER INSTALLATION OF THE PANEL WILL REQUIRE TOOLS SPECIALLY DESIGNED FOR THIS PURPOSE.

ILLUSTRATED BELOW ARE THE TOOLS USED ON A STANDING SEAM 360 ROOF PANEL SYSTEM.

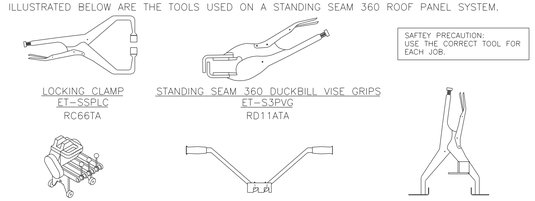

* AVAILABLE FOR PURCHASE OR RENTAL THROUGH;
D.I. ROOF SEAMERS
915 HIGHWAY 45
CORINTH, MS 38834
888.343.0456
WWW.EAGLESEAMERS.COM

STANDING SEAM 360 ERECTION TOOLS — RC62 TA

CBC JOB No. C2210141A
DEALER: SHOOK BLDG. SYSTEMS, INC.
SHEET 21 OF 25
ENGR. APR. ED
DRAWN TDM
DATE 8/18/2022
SCALE

GENERAL DETAILS

CUSTOMER: MARTA MAINTENANCE BLDG
LOCATION: BIG BEAR LAKE, CA 92315

PLOT DATES:

CBC STEEL BUILDINGS
A NUCOR Company
P.O. BOX 1009, LATHROP, CA 95330
OFFICES/PLANT 17700 E LOUISE AVE
(209) 983-0970 FAX (209) 858-2354

IAS ACCREDITED AC472
MBMA MEMBER

REGISTERED PROFESSIONAL ENGINEER
YA DOU
No. 81257
EXP 06/30/23
STATE OF CALIFORNIA
07/18/23

REV	BY	DATE
⚠ PLANS FOR PERMITS	TDM	08/18/2022

SAFETY PRECAUTION:
USE EXTREME CAUTION WHEN WORKING AT THE EAVE OF ROOF

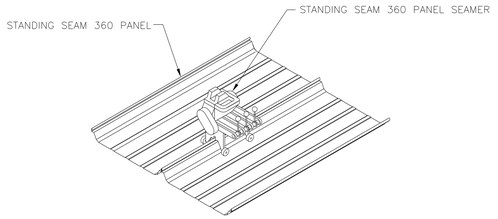

In preparation of the seaming operation, all construction debris should be removed from the roof to prevent machine damage and/or roof damage.

Refer to the owner's manual included with the Standing Seam 360 panel seamer for safe and practical seaming operations.

STANDING SEAM 360 PANEL SEAMING DETAIL — RC36 TA

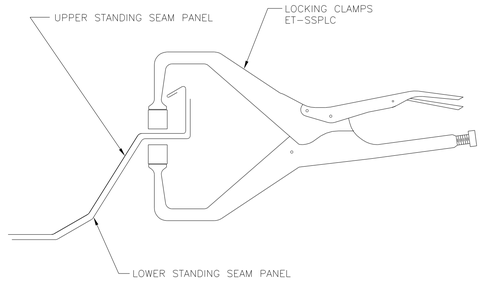

Clamp male ribs at endlap prior to installing fasteners

CLAMPING DETAIL AT ENDLAP — RC66 TA
STANDING SEAM 360

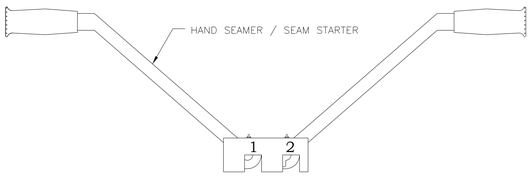

Shown above is the Hand Seamer tool. This tool is used at different locations prior to electrically seaming the roof.

PHASE 1 – 90? BEND
PHASE 2 – 360? BEND

REFER TO THE OWNER'S MANUAL INCLUDED WITH THE STANDING SEAM PANEL HAND SEAMER / SEAM STARTER FOR SAFE AND PRACTICAL SEAMING INSTRUCTIONS

STANDING SEAM 360 PANEL HAND SEAMER TOOL — RC68A TA

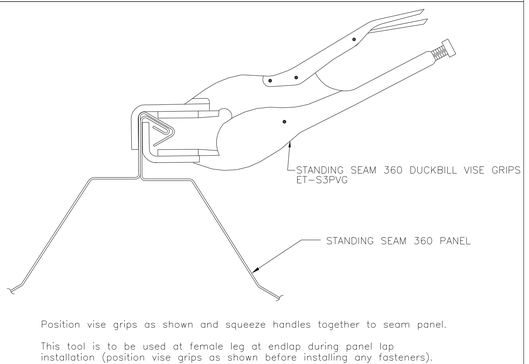

Position vise grips as shown and squeeze handles together to seam panel.

This tool is to be used at female leg at endlap during panel lap installation (position vise grips as shown before installing any fasteners).

STANDING SEAM 360 DUCKBILL VISE GRIPS — RD11A TA

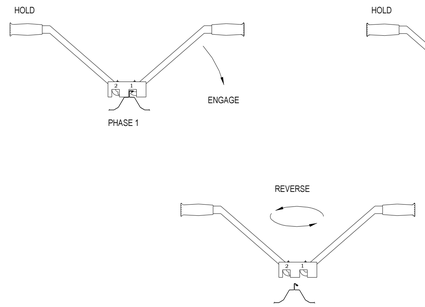

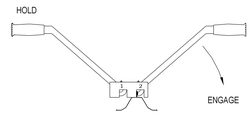

HAND/EAVE SEAMING PROCESS

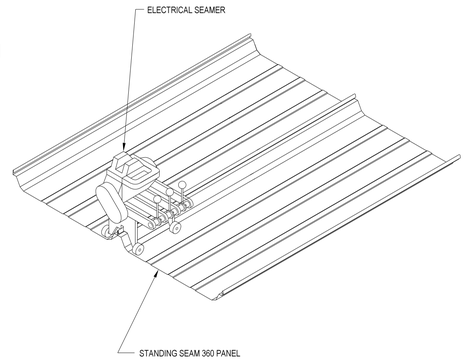

THE METAL BUILDING SUPPLIER FURNISHES THE STANDING SEAM 360 ROOF SYSTEM IN NON-HANDED PANELS. GABLE, SINGLE SLOPE OR UNSYMMETRICAL BUILDINGS CAN BE SHEETED SIMULTANEOUSLY FROM EITHER END OF THE BUILDING.

THE SEAMING PROCESS INVOLVES TWO DIFFERENT TOOLS, THE STANDING SEAM 360 ELECTRIC ROOF SEAMER AND THE HAND/EAVE SEAMER. THE STANDING SEAM 360 HAND/EAVE SEAMER IS A TWO STAGE TOOL USED AT THE STARTING END OF EACH PANEL (EAVE OR RIDGE) PRIOR TO SEAMING WITH THE ELECTRIC SEAMER.

- IN THE FIRST STAGE PLACE PHASE 1 SIDE OF THE SEAMER ONTO THE OPEN SIDE OF THE SEAM AT THE END OF THE PANEL AND ENGAGE THE TOOL TO A FULLY CLOSED POSITION. REMOVE THE SEAMER AND MOVE UP THE SLOPE THE WIDTH OF THE SEAMER JAWS (APPROXIMATELY FOUR INCHES) AND ENGAGE THE TOOL TO A FULLY CLOSED POSITION. THIS SHOULD COMPLETE THE FIRST STAGE OF HAND/EAVE SEAMING.
- REMOVE THE SEAMER AND REVERSE THE DIRECTION SO THAT PHASE 2 SIDE OF THE SEAMER IS PRESSED ONTO THE OPEN SIDE OF THE SEAM, STARTING AT THE PANEL END ENGAGE THE TOOL TO A FULLY CLOSED POSITION TO COMPLETE THE SEAM. **DO THIS STEP ONLY ONCE FOR THE SEAM IS NOW READY FOR THE ELECTRIC SEAMER.**

THE STANDING SEAM 360 ELECTRIC ROOF SEAMER IS A SINGLE DIRECTION MACHINE USED FOR SEAMING THE PANELS TOGETHER AT THE SIDELAPS. GABLE BUILDINGS WILL REQUIRE THE SEAMER TO START AT THE EAVE ON ONE SIDE OF THE BUILDING AND TRAVEL UP THE SLOPE TO THE RIDGE AND THEN TRAVEL DOWN THE SLOPE TO THE EAVE ON THE OPPOSITE SIDE OF THE BUILDING. SINGLE SLOPE BUILDINGS WILL REQUIRE THE SEAMER TO START AT EITHER THE HIGH OR LOW SIDE OF THE BUILDING DEPENDING UPON THE SHEETING DIRECTION.

- TO START THE SEAMING PROCESS, PLACE THE ELECTRIC SEAMER IN POSITION WITH THE THREE HANDLES IN THE UNLOCKED POSITIONS. THE SEAM ROLLERS SHOULD BE ON THE OPEN SIDE OF THE SEAM AND THE BACK OF THE SEAMER SHOULD BE ALIGNED WITH THE END OF PANEL (THE HAND/EAVE SEAMING OPERATION AT THE STARTING END OF THE PANEL SHOULD HAVE ALREADY BEEN COMPLETED). LOCK THE THREE HANDLES INTO POSITION AND START THE SEAMER. ALLOW THE SEAMER TO COMPLETE ITS RUN TO THE OPPOSITE END OF THE PANEL. SHOULD FURTHER SEAMING BE REQUIRED AFTER COMPLETING THE RUN WITH THE ELECTRICAL SEAMER, FINISH WITH THE TWO STAGE HAND/EAVE SEAMING PROCESS. **DO NOT RUN THE ELECTRIC SEAMER THROUGH ANY SECTION OF THE PANEL THAT HAS BEEN HAND/EAVE SEAMED.**

THE SEAMER SHOULD NEVER BE ALLOWED TO BECOME A FALLING HAZARD TO ANYONE BENEATH THE ROOF. ALL SAFETY PRECAUTIONS AND OSHA SAFETY REGULATIONS SHOULD ALWAYS BE FOLLOWED FOR MAXIMUM WORKER SAFETY.

PANEL SEAMING PROCESS — RC38 TA
STANDING SEAM 360

CBC JOB No. C2210141A

GENERAL DETAILS

CUSTOMER: MARTA MAINTENANCE BLDG
LOCATION: BIG BEAR LAKE, CA 92315

DEALER: SHOOK BLDG. SYSTEMS, INC.
SHEET 22 OF 25
ENGR. APR. ED
DRAWN TDM
DATE 8/18/2022
SCALE

PLOT DATES:

CBC STEEL BUILDINGS
A NUCOR Company
P.O. BOX 1009, LATHROP, CA 95330
OFFICES/PLANT: 1700 E LOUISE AVE
(209) 983-1910 FAX (209) 858-2354

REGISTERED PROFESSIONAL ENGINEER
YIA DOU
No. 81257
EXP. 6/30/23
STATE OF CALIFORNIA
07/18/23

REV	DESCRIPTION	BY	DATE
0	PLANS FOR PERMITS	TDM	08/18/2022

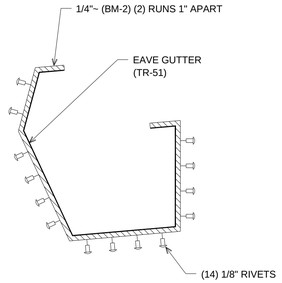

1. EAVE GUTTER TO HAVE A MINIMUM OF A 3" LAP.
2. PRE-DRILL HOLES FOR RIVETS.
3. APPLY (2) 1/4" BEADS OF CAULK (BM-2) 1" APART ON THE ENTIRE PROFILE AS SHOWN.
4. ADD BLIND RIVETS AT EQUAL SPACINGS ON LEGS SHOWN. BLIND RIVETS ARE TO BE PLACED IN THE MIDDLE OF THE (2) BUTYL CAULK (SSCK-1) RUNS.

1 GUTTER LAP DETAIL

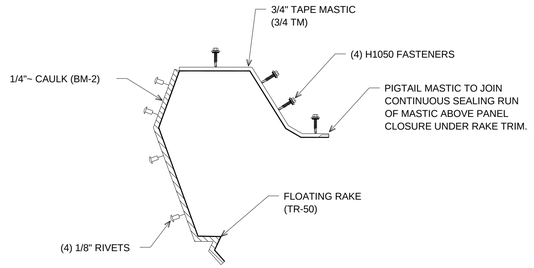

1. FLOATING RAKE TO HAVE A MINIMUM OF A 3" LAP.
2. PRE-DRILL HOLES FOR RIVETS.
3. APPLY TAPE MASTIC (3/4 TM) TO TOP LEGS OF RAKE TRIM AS SHOWN.
4. APPLY (1) 1/4" BEAD OF CAULK (BM-2) ON VERTICAL FACES OF RAKE TRIM.
5. ADD FASTENERS AT EQUAL SPACINGS ON LEGS SHOWN. FASTENERS MUST PASS THRU TAPE MASTIC.
6. ADD BLIND RIVETS AT EQUAL SPACINGS ON LEGS SHOWN. BLIND RIVETS ARE TO BE PLACED ON THE OUTSIDE OF THE BUTYL CAULK (SSCK-1), ON THE UPPER FLASHING. SEE DETAILS #7 AND #8 THIS PAGE.

2 RAKE LAP DETAIL

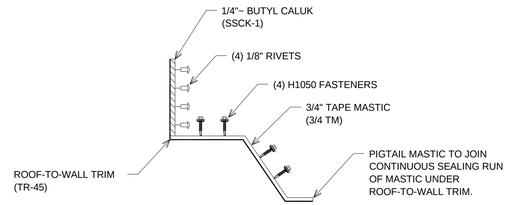

1. ROOF-TO-WALL TRIM TO HAVE A MINIMUM OF A 3" LAP.
2. PRE-DRILL HOLES FOR RIVETS.
3. APPLY TAPE MASTIC (3/4 TM) TO TOP LEGS OF WALL-TO-ROOF TRIM AS SHOWN.
4. APPLY (1) 1/4" BEAD OF BUTYL CAULK (SSCK-1) ON VERTICAL FACES OF WALL-TO-ROOF TRIM.
5. ADD FASTENERS AT EQUAL SPACINGS ON LEGS SHOWN. FASTENERS MUST PASS THRU TAPE MASTIC.
6. ADD BLIND RIVETS AT EQUAL SPACINGS ON LEGS SHOWN. BLIND RIVETS ARE TO BE PLACED ON THE OUTSIDE OF THE BUTYL CAULK (SSCK-1), ON THE UPPER FLASHING. SEE DETAILS #7 AND #8 THIS PAGE.

3 ROOF-TO-WALL (RAKE) LAP DETAIL

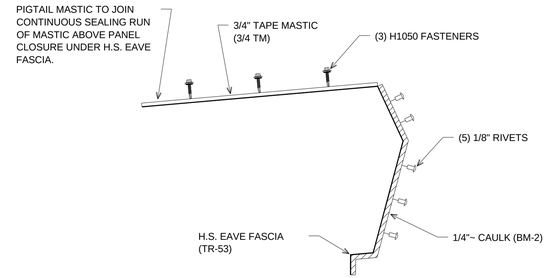

1. H.S. EAVE FASCIA TO HAVE A MINIMUM OF A 3" LAP.
2. PRE-DRILL HOLES FOR RIVETS.
3. APPLY TAPE MASTIC (3/4 TM) TO TOP LEG OF H.S. EAVE FASCIA TRIM AS SHOWN.
4. APPLY (1) 1/4" BEAD OF CAULK (BM-2) ON VERTICAL FACES OF H.S. EAVE TRIM.
5. ADD FASTENERS AT EQUAL SPACINGS ON LEGS SHOWN. FASTENERS MUST PASS THRU TAPE MASTIC.
6. ADD BLIND RIVETS AT EQUAL SPACINGS ON LEGS SHOWN. BLIND RIVETS ARE TO BE PLACED ON THE OUTSIDE OF THE BUTYL CAULK (SSCK-1), ON THE UPPER FLASHING. SEE DETAILS #7 AND #8 THIS PAGE.

4 H.S. EAVE FASCIA LAP DETAIL

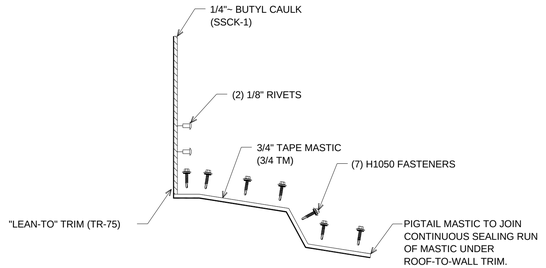

1. FLEXIBLE "LEAN-TO" TRIM TO HAVE A MINIMUM OF A 3" LAP.
2. PRE-DRILL HOLES FOR RIVETS.
3. APPLY TAPE MASTIC (3/4 TM) TO TOP LEGS OF "LEAN-TO" TRIM AS SHOWN.
4. APPLY (1) 1/4" BEAD OF BUTYL CAULK (SSCK-1) ON VERTICAL FACES OF WALL-TO-ROOF TRIM.
5. ADD FASTENERS AT EQUAL SPACINGS ON LEGS SHOWN. FASTENERS MUST PASS THRU TAPE MASTIC.
6. ADD BLIND RIVETS AT EQUAL SPACINGS ON LEGS SHOWN. BLIND RIVETS ARE TO BE PLACED ON THE OUTSIDE OF THE BUTYL CAULK (SSCK-1), ON THE UPPER FLASHING. SEE DETAILS #7 AND #8 THIS PAGE.

5 FLEXIBLE "LEAN-TO" LAP DETAIL

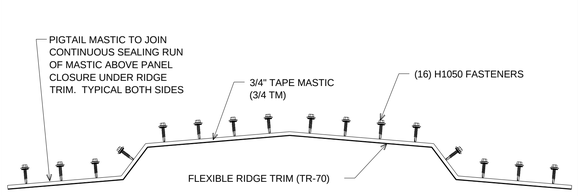

1. FLEXIBLE RIDGE TRIM TO HAVE A MINIMUM OF A 3" LAP.
2. APPLY TAPE MASTIC (3/4 TM) TO TOP LEGS OF FLEXIBLE RIDGE TRIM AS SHOWN.
3. ADD FASTENERS AT EQUAL SPACINGS ON LEGS SHOWN. FASTENERS MUST PASS THRU TAPE MASTIC.

6 FLEXIBLE RIDGE TRIM LAP DETAIL

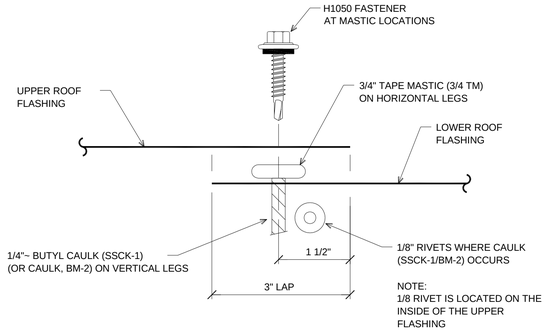

1. ADD FASTENERS/RIVETS AT EQUAL SPACINGS ON TRIM LEGS (SEE SPECIFIC DETAILS). FASTENERS MUST PASS THRU TAPE MASTIC.
2. PRE-DRILL HOLES FOR RIVETS.
3. TAPE MASTIC (3/4 TM) IS GENERALLY APPLIED TO HORIZONAL TRIM LEGS.
4. BUTYL / CAULK (SSCK-1/BM-2) IS GENERALLY APPLIED TO VERTICAL LEGS OF THE TRIM.
5. ADD BLIND RIVETS AT EQUAL SPACINGS ON LEGS SHOWN. BLIND RIVETS ARE TO BE PLACED ON THE OUTSIDE OF THE BUTYL / CAULK (SSCK-1/BM-2). SEE DETAIL #8 THIS PAGE.

7 SECTION THROUGH ROOF FLASHING LAP

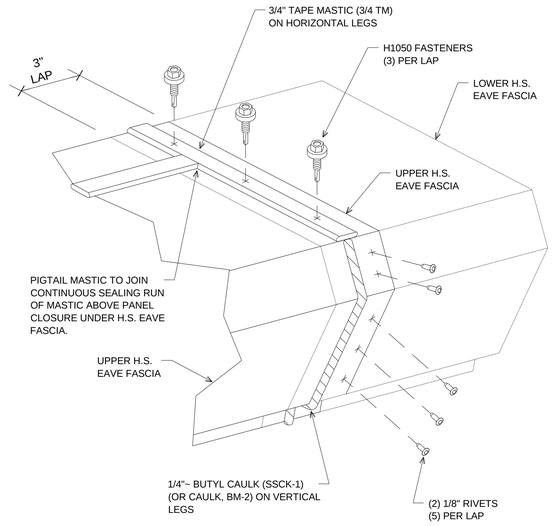

8 EXAMPLE DETAIL OF LAP

CBC JOB No. C22I0141A
DEALER: SHOOK BLDG. SYSTEMS, INC.
SHEET 23 OF 25
ENGR. APR. ED
DRAWN TDM
DATE 8/18/2022
SCALE

GENERAL DETAILS

CUSTOMER: MARTA MAINTENANCE BLDG
LOCATION: BIG BEAR LAKE, CA 92315

PLOT DATES:

STEEL BUILDINGS
A NUCOR Company
CBC
P.O. BOX 1009, LATHROP, CA 95330
OFFICES/PLANT: 1700 E. LOUISE AVE
(209) 983-0970 FAX (209) 838-2354
IAS ACCREDITED AC472
MBMA METAL BUILDINGS

REGISTERED PROFESSIONAL ENGINEER
VIA DOU
No. 81257
EXP. 06/30/23
STRUCTURAL
07/18/23

REV.	DESCRIPTION	BY	DATE
1	PLANS FOR PERMITS	TDM	08/18/2022

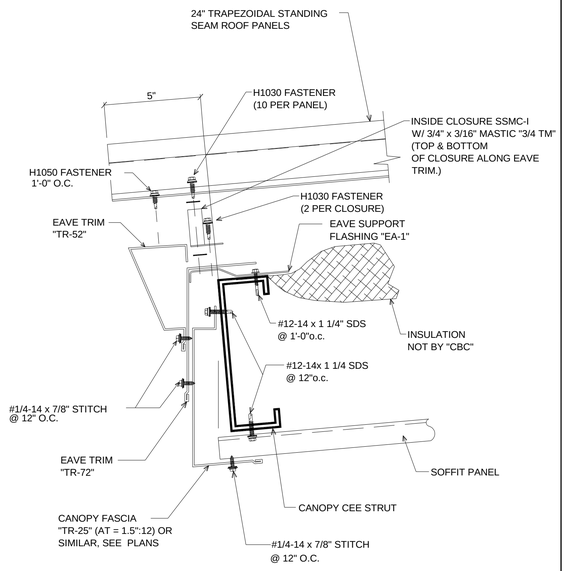

ERECTION NOTE:
DO NOT USE THE DIMPLES IN THE END OF THE PANELS TO LOCATE FASTENERS AT THE EAVE. DIMPLES ARE FOR THE FASTENERS AT THE PANEL ENDLAPS ONLY.

1 EAVE TRIM AT CANOPY W/ SOFFIT

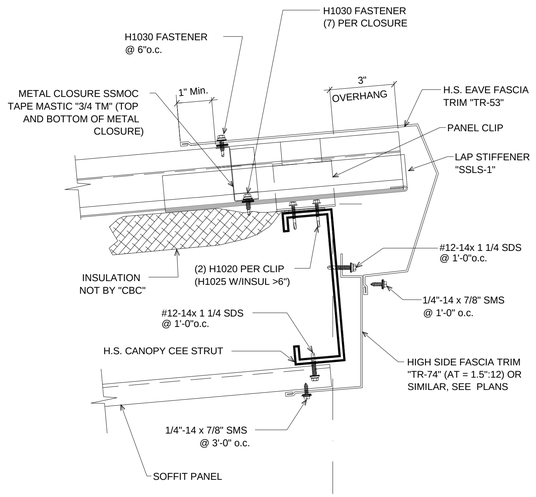

2 H.S. CANOPY W/ SOFFIT DETAIL

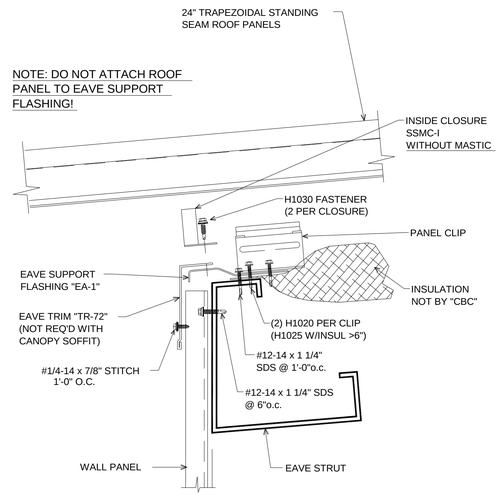

3 PARTITION EAVE DETAIL

NOTE:
STARTING &/OR ENDING PANEL MAY VARY AT B.L. TO CENTER OF RIB DIMENSION. SEE ROOF PLANS FOR "B.L. TO RIB" DIMENSION. FIELD CUTTING OF PANEL MAY BE REQUIRED. SEE "FIRST PANEL INSTALLATION DETAIL" DETAIL RC11/SA FOR MORE INFORMATION.

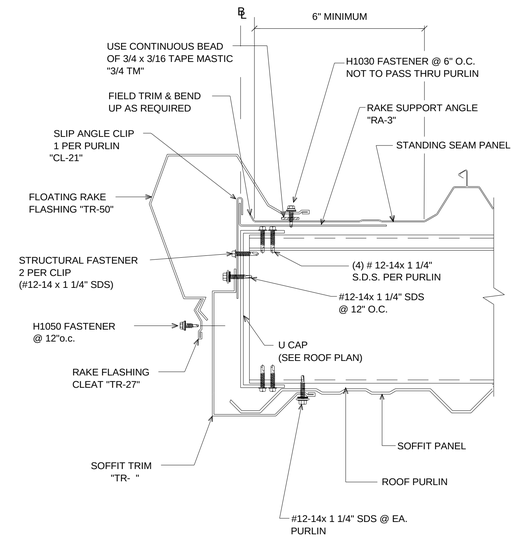

4 RAKE EXTENSION W/ SOFFIT DETAIL

CBC JOB No. C22I0141A
DEALER: SHOOK BLDG. SYSTEMS, INC.
SHEET 24 OF 25
ENGR. APR. ED
DRAWN TDM
DATE 8/18/2022
SCALE

GENERAL DETAILS

CUSTOMER: MARTA MAINTENANCE BLDG
LOCATION: BIG BEAR LAKE, CA 92315

PLOT DATES:

CBC STEEL BUILDINGS
A NUCOR Company
P.O. BOX 1009, LATHROP, CA 95330
OFFICES/PLANT 17700 E. LOUISE AVE
(209) 983-0970 FAX (209) 858-2354
IAS ACCREDITED AC 472
MBMA METAL BUILDINGS

REGISTERED PROFESSIONAL ENGINEER
KIA DOU
No. 81257
EXP. 6/30/23
STATE OF CALIFORNIA
07/18/23

REV	DATE	BY
1	08/18/2022	TDM
PLANS FOR PERMITS		

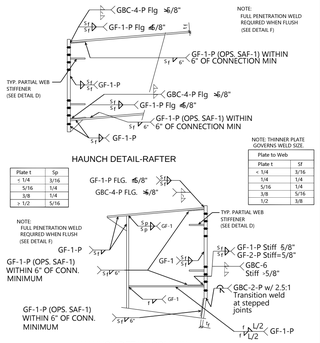

A WELDING ENGINEERING STANDARDS

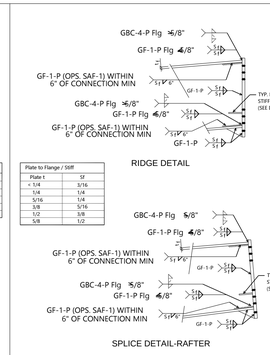

B WELDING ENGINEERING STANDARDS

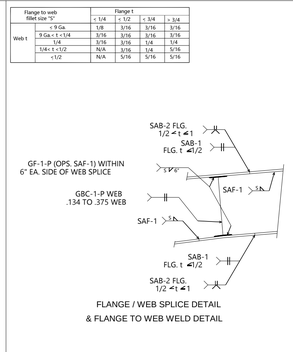

C WELDING ENGINEERING STANDARDS

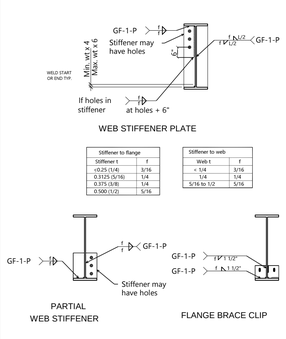

D WELDING ENGINEERING STANDARDS

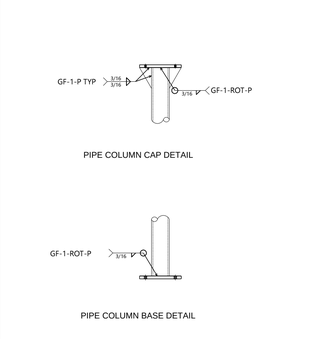

E WELDING ENGINEERING STANDARDS

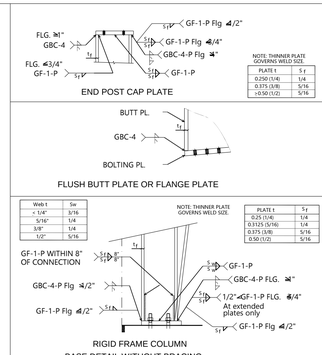

F WELDING ENGINEERING STANDARDS

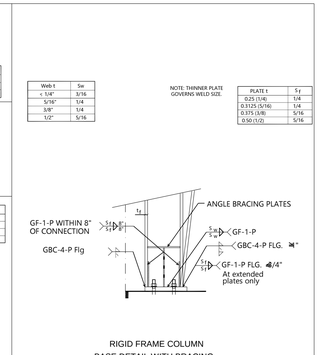

G WELDING ENGINEERING STANDARDS

H WELDING ENGINEERING STANDARDS

J WELDING ENGINEERING STANDARDS

K WELDING ENGINEERING STANDARDS

L WELDING ENGINEERING STANDARDS

M WELDING ENGINEERING STANDARDS

N WELDING ENGINEERING STANDARDS

P WELDING ENGINEERING STANDARDS

Q WELDING ENGINEERING STANDARDS

R WELDING ENGINEERING STANDARDS

S WELDING ENGINEERING STANDARDS

T WELDING ENGINEERING STANDARDS

CBC JOB No. C2210141A

GENERAL DETAILS

CUSTOMER: MARTA MAINTENANCE BLDG

LOCATION: BIG BEAR LAKE, CA 92315

DEALER: SHOOK BLDG. SYSTEMS, INC.

SHEET 25 OF 25

ENGR. APR. ED

DRAWN TDM

DATE 8/18/2022

SCALE

PLOT DATES:

CBC STEEL BUILDINGS
A NUCOR Company
P.O. BOX 1009 LATHROP, CA 95330
OFFICES/PLANT 1700 E LOUISE AVE
(209) 983-0970 FAX (209) 858-2354

IAS ACCREDITED AC 472

MBMA METAL BUILDING MANUFACTURERS ASSOCIATION

REGISTERED PROFESSIONAL ENGINEER YIN DOU No. 81257 EXP. 6/30/23 STATE OF CALIFORNIA

07/18/23

REV.	DESCRIPTION	BY	DATE
1	PLANS FOR PERMITS	TDM	08/18/2022

PRECISE GRADING PLAN – PHASE 3
MOUNTAIN REGIONAL TRANSIT AUTHORITY
NEW ADMINISTRATION BUILDING AND MAINTENANCE FACILITY
160–170 BUSINESS CENTER DRIVE

GRADING NOTES

1. ANY MODIFICATIONS OF OR CHANGES IN APPROVED GRADING PLANS MUST BE APPROVED BY THE CITY BUILDING OFFICIAL.
2. A COPY OF THE GRADING PERMIT AND APPROVED GRADING PLAN MUST BE IN THE POSSESSION OF A RESPONSIBLE PERSON AND AVAILABLE AT THE SITE WHILE WORK IS IN PROGRESS.
3. ENGINEER MUST SET GRADE STAKES FOR ALL DRAINAGE DEVICES AND OBTAIN INSPECTION APPROVAL BEFORE POURING.
4. PROVISIONS SHALL BE MADE FOR CONTRIBUTORY DRAINAGE AT ALL TIMES.
5. SECURE PERMISSION FROM CITY ENGINEER, EASEMENT GRANTEE, STATE HIGHWAY DEPARTMENT, AND/OR HOMEOWNERS ASSOCIATION FOR CONSTRUCTION, GRADING, AND/OR DISCHARGE OF DRAINAGE WITHIN STREET RIGHT-OF-WAY.
6. GRADING SHALL NOT BE STARTED WITHOUT FIRST NOTIFYING THE GRADING INSPECTOR.
7. CUT AND FILL SLOPES SHALL BE NO STEEPER THAN 2 UNITS HORIZONTAL TO 1 UNIT VERTICAL (2:1), EXCEPT WHERE SPECIFICALLY APPROVED OTHERWISE.
8. FILLS SHALL BE COMPACTED THROUGHOUT TO A MINIMUM OF 90% RELATIVE COMPACTION. AGGREGATE BASE FOR ASPHALTIC AREAS SHALL BE COMPACTED TO MINIMUM OF 95% RELATIVE COMPACTION. NO ROCKS GREATER THAN 6 INCHES IN DIAMETER MAY BE PLACED IN FILL.
9. AREAS TO RECEIVE FILL SHALL BE PROPERLY PREPARED AND APPROVED, IN WRITING, BY THE SOIL ENGINEER AND THE BUILDING OFFICIAL PRIOR TO PLACING FILL.
10. FILL SHALL BE BENCHED INTO COMPETENT MATERIAL.
11. ALL EXISTING FILLS SHALL BE APPROVED BY THE BUILDING OFFICIAL OR REMOVED PRIOR TO PLACING ADDITIONAL FILLS.
12. STOCK PILING OF EXCESS MATERIAL SHALL BE APPROVED BY THE BUILDING OFFICIAL PRIOR TO EXCAVATION.
13. CLEAR AND REMOVE FROM SITE ALL DEBRIS, EXCEPTING FOR EXISTING TREES IN DESIGNATED LANDSCAPE AREAS; STRIP SITE OF VEGETATION, LARGE ROOTS, SURFACE TRASH AND ROCKS. UNDER NO CIRCUMSTANCES SHALL THE CLEAN BEAR SITES BE USED FOR DISPOSAL. VIOLATORS ARE SUBJECT TO A $500.00 FINE.
14. ALL TRENCH BACKFILLS SHALL BE TESTED AND APPROVED BY THE SOIL ENGINEER.
15. THE ENGINEERING GEOLOGIST AND SOIL ENGINEER SHALL, AFTER CLEARING AND PRIOR TO THE PLACEMENT OF FILL IN CANYONS, INSPECT EACH CANYON FOR AREAS OF ADVERSE STABILITY AND TO DETERMINE THE PRESENCE OR ABSENCE OF SUBSURFACE WATER OR SPRING FLOW. IF NEEDED, SUBDRAINS WILL BE DESIGNED AND CONSTRUCTED PRIOR TO THE PLACEMENT OF FILL IN EACH RESPECTIVE CANYON.
16. SUBDRAIN OUTLETS SHALL BE COMPLETED AT THE BEGINNING OF THE SUBDRAIN CONSTRUCTION.
17. THE EXACT LOCATION OF THE SUBDRAINS SHALL BE SURVEYED IN THE FIELD FOR LINE/GRADE AND REFLECTED ON AS-GRADED PLANS.
18. ALL CUT SLOPES SHALL BE INVESTIGATED BOTH DURING AND AFTER GRADING BY THE ENGINEERING GEOLOGIST TO DETERMINE IF ANY SLOPE STABILITY PROBLEM EXISTS. SHOULD EXCAVATION DISCLOSE ANY GEOLOGICAL HAZARDS OR POTENTIAL GEOLOGICAL HAZARDS, THE ENGINEERING GEOLOGIST SHALL SUBMIT RECOMMENDED REMEDIATION TO THE BUILDING OFFICIAL FOR APPROVAL.
19. WHERE SUPPORT OR BUTTRESSING OF CUT AND NATURAL SLOPES IS DETERMINED TO BE NECESSARY BY THE ENGINEERING GEOLOGIST AND SOIL ENGINEER, THE SOIL ENGINEER SHALL SUBMIT DESIGN, LOCATIONS, AND CALCULATIONS TO THE BUILDING OFFICIAL PRIOR TO CONSTRUCTION. THE ENGINEERING GEOLOGIST AND SOIL ENGINEER SHALL INSPECT AND CONTROL THE CONSTRUCTION OF THE BUTTRESSING AND CERTIFY TO THE STABILITY OF THE SLOPE AND ADJACENT STRUCTURES UPON COMPLETION.
20. WHEN CUT PADS ARE BROUGHT TO NEAR GRADE, THE ENGINEERING GEOLOGIST SHALL DETERMINE IF THE BEDROCK IS EXTENSIVELY FRACTURED OR FAULTED AND WILL READILY TRANSMIT WATER. IF CONSIDERED NECESSARY BY THE ENGINEERING GEOLOGIST AND SOIL ENGINEER, A COMPACTED FILL BLANKET WILL BE PLACED.
21. THE ENGINEERING GEOLOGIST SHALL PERFORM PERIODIC INSPECTIONS AND SUBMIT A COMPLETE REPORT AND MAP UPON COMPLETION OF THE ROUGH GRADING.
22. THE COMPACTION REPORT AND APPROVAL FROM THE SOIL ENGINEER SHALL INDICATE THE TYPE OF FIELD TESTING PERFORMED, EACH TEST SHALL BE IDENTIFIED WITH THE METHOD OF OBTAINING THE IN-PLACE DENSITY, WHETHER SAND CONE OR NUCLEAR GAUGE, AND SHALL BE SO NOTED FOR EACH TEST.
23. THE GRADING CONTRACTOR SHALL SUBMIT A WRITTEN STATEMENT VERIFYING THAT THE WORK DONE UNDER HIS DIRECTION WAS PERFORMED IN ACCORDANCE WITH THE APPROVED PLANS AND REQUIREMENTS OF APPENDIX 33 OF THE CITY OF BIG BEAR LAKE BUILDING CODE OR DESCRIBING ALL VARIANCES FROM THE APPROVED PLANS AND REQUIREMENTS OF THE CODE.
24. THE UNDERSIGNED DESIGN ENGINEER VERIFIES THAT THIS GRADING PLAN WAS PREPARED UNDER MY SUPERVISION IN ACCORDANCE WITH THE CITY OF BIG BEAR LAKE BUILDING CODE. ALL SOILS ENGINEER AND ENGINEERING GEOLOGY RECOMMENDATIONS WERE INCORPORATED IN THE PLAN. (MUST BE SIGNED AND DATED BY THE DESIGN ENGINEER.)
25. GRADING OPERATIONS MUST BE CONDUCTED UNDER PERIODIC GEOLOGIC INSPECTION WITH INSPECTION REPORTS TO BE SUBMITTED TO THE BUILDING DEPARTMENT.
26. EXPORT SOIL MUST BE TRANSPORTED TO A LEGAL DUMP OR TO A PERMITTED SITE SHOWN CLEARLY ON APPROVED PLANS.
27. SLOPES SHALL BE PLANTED WITH AN APPROVED PLANT MATERIAL AND PROVIDED WITH AN APPROVED IRRIGATION SYSTEM, UNLESS AN ALTERNATIVE HAS BEEN APPROVED BY THE CITY.
28. THE ENGINEER SHALL SUBMIT A LETTER OF CERTIFICATION TO THE BUILDING OFFICIAL STATING THAT THE GRADING WAS DONE IN COMPLIANCE WITH THE APPROVED GRADING PLAN.
29. ANY CONTRACTOR PERFORMING WORK ON THIS PROJECT SHALL FAMILIARIZE HIMSELF WITH THE SITE AND SHALL BE SOLELY RESPONSIBLE FOR ANY DAMAGE TO EXISTING FACILITIES RESULTING DIRECTLY OR INDIRECTLY FORM HIS OPERATION, WHETHER OR NOT SUCH FACILITIES ARE SHOWN ON THESE PLANS. PUBLIC STREETS SHALL BE KEPT CLEAN FROM DIRT AND/OR DEBRIS. THE GRADING CONTRACTOR SHALL BE RESPONSIBLE FOR ALL COSTS INCURRED IN STREET CLEANING NECESSITATED BY HIS OPERATION.
30. ALL ROADS USED BY CONSTRUCTION TRAFFIC SHALL BE KEPT CLEAR OF CONSTRUCTION DEBRIS RELATED TO THE SITE CONSTRUCTION. IF DEBRIS FROM THE PROJECT IS LEFT ON THE ROAD OVERNIGHT, THE CITY MAY CLEAN THE ROAD AND CHARGE THE PERMIT HOLDER A MINIMUM FEE OF $100.00 PLUS $100 PER HOUR SPENT CLEANING THE ROAD.
31. PRELIMINARY SOIL AND GEOLOGY REPORTS AND ALL SUBSEQUENT REPORTS, AS APPROVED BY THE CITY OF BIG BEAR LAKE, ARE CONSIDERED A PART OF THE APPROVED GRADING PLAN. ALL RECOMMENDATIONS CONTAINED ARE TO BE COMPILED WITH OR REVISIONS SUBMITTED FOR REVIEW.
32. ALL EXISTING DRAINAGE COURSES THROUGH THIS SITE SHALL REMAIN OPEN UNTIL FACILITIES TO HANDLE STORM WATER ARE APPROVED AND FUNCTIONAL; HOWEVER, IN ANY CASE, THE PERMITTEE SHALL BE HELD LIABLE FOR ANY DAMAGE DUE TO OBSTRUCTING NATURAL DRAINAGE PATTERNS.
33. ROOF GUTTERS SHALL BE INSTALLED TO PREVENT ROOF DRAINAGE FROM FALLING ON MANUFACTURED SLOPES. GUTTERS SHALL BE CONNECTED TO NON-EROSIVE PIPING OR OTHER METHOD ACCEPTABLE TO THE BUILDING OFFICIAL.
34. ANY EXCAVATIONS ADJACENT TO OTHER PROPERTY OR STRUCTURES ARE SUBJECT TO THE PROVISIONS OF CALIFORNIA CIVIL CODE, SECTION 832, AND IS THE RESPONSIBILITY OF THE PERMITTEE AND/OR OWNER.

PLANTING AND IRRIGATION NOTES

35. ALL CUT AND FILL SLOPES WILL BE PLANTED WITH AN APPROVED GROUND COVER AND PROVIDED WITH AN IRRIGATION SYSTEM AS SOON AS PRACTICAL DURING GRADING. IN ADDITION TO THE GROUND COVER PLANTS SHALL BE INSTALLED ON ALL SLOPES. ALL PLANTING SHALL BE OF A TYPE APPROVED BY THE CITY.
36. THE PLANS FOR A DESIGNED IRRIGATION SYSTEM FOR FULL COVERAGE OF ALL PORTION OF THE SLOPES SHALL BE SUBMITTED AND APPROVED PRIOR TO ROUGH GRADING APPROVAL BY THE CITY.
37. PLANTING AND IRRIGATION PLANS FOR SLOPES MUST BE PREPARED AND SIGNED BY A CIVIL ENGINEER OR LANDSCAPE ARCHITECT.
38. FINISH GRADING WILL BE COMPLETED AND APPROVED AND SLOPE PLANTING AND IRRIGATION SYSTEMS INSTALLED BEFORE OCCUPANCY OF BUILDINGS.

EROSION CONTROL PROVISIONS CERTIFICATE

39. STORM WATER MANAGEMENT PLANS INCORPORATING ALL THE PROVISIONS OF THE CITY OF BIG BEAR LAKE MUNICIPAL CODE SHALL BE SUBMITTED AND APPROVED PRIOR TO PERMIT ISSUANCE. SUCH PLANS ARE TO INCLUDE CONSTRUCTION AND POST CONSTRUCTION PHASE PROVISIONS REFLECTING "BEST MANAGEMENT PRACTICES".
40. SPECIFY ON PLANS: IN CASE OF EMERGENCY CALL: SANDY BENSON (GENERAL MANAGER)
    WORK TELEPHONE NUMBER: (909) 878-5200
    HOME TELEPHONE NUMBER: (909) 586-5073
41. EQUIPMENT AND WORKERS FOR EMERGENCY WORK SHALL BE MADE AVAILABLE AT ALL TIME DURING THE RAINY SEASON. NECESSARY MATERIALS SHALL BE AVAILABLE ON-SITE AND STOCKPILED AT CONVENIENT LOCATIONS TO FACILITATE RAPID CONSTRUCTION OF TEMPORARY DEVICES WHEN RAIN IS IMMINENT.
42. EROSION CONTROL DEVICES SHALL NOT BE MOVED OR MODIFIED WITHOUT THE APPROVAL OF THE CITY BUILDING OFFICIAL.
43. STOCKPILED MATERIALS SHALL BE PLACED TO BE ACCESSIBLE BY VEHICLE DURING PERIODS OF PRECIPITATION AND PROTECTED FROM PRECIPITATION AND RUNOFF AT THE END OF EACH WORKING DAY.
44. ALL REMOVABLE EROSION PROTECTIVE DEVICES SHALL BE IN PLACE AT THE END OF EACH WORKING DAY.
45. AFTER A RAINSTORM ALL SILT AND DEBRIS SHALL BE REMOVED FROM STREETS, CHECK BERMS, AND BASINS. NO STANDING WATER SHALL BE LEFT IN OPEN TRENCHES.
46. GRADED AREAS ON THE PERMITTED AREA PERIMETER MUST DRAIN AWAY FROM THE FACE OF SLOPES AT THE CONCLUSION OF EACH WORKING DAY. DRAINAGE TO BE DIRECTED TOWARD DESILTING FACILITIES.
47. ISSUANCE OF A GRADING PERMIT DOES NOT ELIMINATE THE NEED FOR PERMITS FROM OTHER AGENCIES WITH REGULATORY RESPONSIBILITIES FOR CONSTRUCTION ACTIVITIES ASSOCIATED WITH THE WORK AUTHORIZED ON THIS PLAN.
48. EROSION CONTROL MEASURES AND PLANTING SHALL BE INSTALLED AND MAINTAINED AS SOON AS PRACTICAL, IN AREAS NOT SUBJECT TO FREQUENT TRAFFIC.
49. ALL EROSION CONTROL, DESILTING BASINS, SILT FENCES, AND OTHER STORM WATER AND/OR EROSION CONTROL FEATURES SHALL BE INSPECTED BY THE RESPONSIBLE PARTY, ON A WEEKLY BASIS, CLEANED, AND MAINTAINED TO ENSURE THESE FEATURES FUNCTION AS DESIGNED.
50. THE UNDERSIGNED CIVIL ENGINEER AND CONTRACTOR SHALL INSPECT THE EROSION CONTROL WORK AND ENSURE THAT THE WORK IS IN ACCORDANCE WITH THE APPROVED PLANS.

SIGNATURE: _____ ENGINEER _____ DATE

SIGNATURE: _____ CONTRACTOR _____ DATE

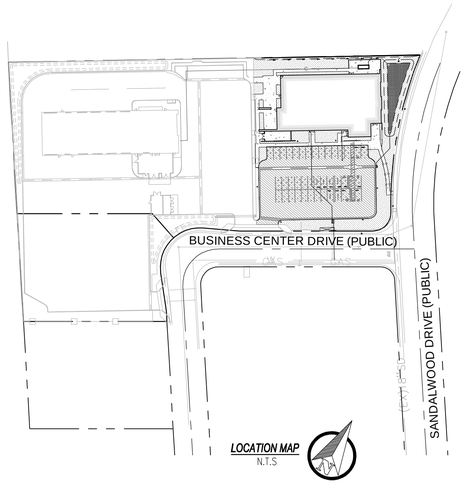

SURVEY MONUMENT NOTE

SURVEY MONUMENTS THAT EXIST AS SHOWN ON RECORDED MAPS, HIGHWAY MAPS OR POINTS THAT PROVIDE SURVEY CONTROL WITHIN THE CONSTRUCTION AREA, SHALL BE LOCATED AND REFERENCED OUT BY A LICENSED LAND SURVEYOR OR REGISTERED CIVIL ENGINEER (AUTHORIZED TO PRACTICE LAND SURVEYING), AND CORNER RECORDS SHALL BE FILED WITH THE COUNTY SURVEYOR PRIOR TO THE START OF CONSTRUCTION. THESE CORNER RECORDS SHALL DESCRIBE THE MONUMENTS FOUND WITH THE DISTANCES TO REFERENCE POINTS FOR RESETTING OF THE SURVEY MONUMENT. WHEN CONSTRUCTION IS COMPLETED, MONUMENTS SHALL BE SET AND CORNER RECORDS SHALL BE FILED WITH THE COUNTY SURVEYOR SHOWING THE NEW MONUMENTS.

ENGINEER'S NOTE TO CONTRACTOR

THE EXISTENCE AND APPROXIMATE LOCATION OF ANY UNDERGROUND UTILITIES OR STRUCTURES SHOWN ON THESE PLANS WERE OBTAINED BY A SEARCH OF AVAILABLE RECORDS. TO THE BEST OF OUR KNOWLEDGE, THERE ARE NO EXISTING UTILITIES OR STRUCTURES EXCEPT AS SHOWN ON THESE PLANS. THE ENGINEER ASSUMES NO LIABILITY AS TO THE EXACT LOCATION OF SAID LINES NOR FOR UTILITIES OR IRRIGATION LINES WHOSE LOCATIONS ARE NOT SHOWN. THE CONTRACTOR SHALL BE RESPONSIBLE FOR NOTIFYING ALL UTILITY AND IRRIGATION COMPANIES PRIOR TO WORK OR EXCAVATION TO DETERMINE EXACT LOCATION OF ALL LINES AFFECTING THIS WORK, WHETHER OR NOT SHOWN HEREON, AND FOR ANY DAMAGE OR PROTECTION OF THESE LINES.

CONTRACTOR'S RESPONSIBILITY FOR SAFETY

CONSTRUCTION CONTRACTOR AGREES THAT IN ACCORDANCE WITH GENERALLY ACCEPTED CONSTRUCTION PRACTICES, CONSTRUCTION CONTRACTOR WILL BE REQUIRED TO ASSUME SOLE AND COMPLETE RESPONSIBILITY FOR JOB SITE CONDITIONS DURING THE COURSE OF CONSTRUCTION OF THE PROJECT, INCLUDING SAFETY OF ALL PERSONS AND PROPERTY; THAT THIS REQUIREMENT SHALL BE MADE TO APPLY CONTINUOUSLY AND NOT BE LIMITED TO NORMAL WORKING HOURS, AND CONSTRUCTION CONTRACTOR FURTHER AGREES TO DEFEND, INDEMNIFY AND HOLD THE OWNER, ENGINEER, AND THE CITY OF BIG BEAR LAKE HARMLESS FROM ANY AND ALL LIABILITY, REAL OR ALLEGED, IN CONNECTION WITH THE PERFORMANCE OF WORK ON THIS PROJECT, EXCEPTING LIABILITY ARISING FROM THE SOLE NEGLIGENCE OF THE OWNER, ENGINEER, OR THE CITY OF BIG BEAR LAKE.

ALL CONTRACTORS AND SUBCONTRACTORS PERFORMING WORK SHOWN ON OR RELATED TO THESE PLANS SHALL CONDUCT THEIR OPERATIONS SO THAT EMPLOYEES ARE PROVIDED A SAFE PLACE TO WORK AND THE PUBLIC IS PROTECTED. ALL CONTRACTORS AND SUBCONTRACTORS SHALL COMPLY WITH THE "OCCUPATIONAL SAFETY AND HEALTH REGULATIONS" OF THE U.S. DEPARTMENT OF LABOR AND WITH THE STATE OF CALIFORNIA DEPARTMENT OF INDUSTRIAL RELATIONS "CONSTRUCTION SAFETY ORDERS". THE CIVIL ENGINEER SHALL NOT BE RESPONSIBLE IN ANY WAY FOR THE CONTRACTOR OR SUBCONTRACTORS COMPLIANCE WITH SAID REGULATIONS AND ORDERS.

DESIGN PROFESSIONAL'S SPECIAL INSPECTIONS STATEMENT

THIS GRADING PLAN WAS PREPARED UNDER MY DIRECTION AND SPECIAL INSPECTIONS ARE IN ACCORDANCE WITH SECTION 1705.6 OF THE CALIFORNIA BUILDING CODE. THE SITE MATERIALS, SYSTEMS, COMPONENTS AND WORK REQUIRED TO HAVE SPECIAL INSPECTION OR TESTS BY BUILDING OFFICIAL OR REGISTERED GEO/SOIL AND CIVIL ENGINEER, WHERE APPICABLE.

VALUED ENGINEERING, INC

SIGNATURE _____ 04/15/2024 DATE _____ CIVIL ENGINEER TITLE _____ 64696 RCE #

C.B.C. TABLE 1705.6
REQUIRED SPECIAL INSPECTIONS AND TEST OF SOILS

TYPE	CONTINUOUS SPECIAL INSPECTION	PERIODIC SPECIAL INSPECTION
1. VERIFY MATERIALS BELOW SHALLOW FOUNDATIONS ARE ADEQUATE TO ACHIEVE THE DESIGN BEARING CAPACITY.	---	X
2. VERIFY EXCAVATIONS ARE EXTENDED TO PROPER DEPTH AND HAVE REACHED PROPER MATERIAL.	---	X
3. PERFORM CLASSIFICATION AND TESTING OF COMPACTED FILL MATERIALS.	---	X
4. VERIFY USE OF PROPER MATERIALS, DENSITIES AND LIFT THICKNESSES DURING PLACEMENT AND COMPACTION OF COMPACTED FILL.	X	---
5. PRIOR TO PLACEMENT OF COMPACTED FILL, INSPECT SUBGRADE AND VERIFY THAT SITE HAS BEEN PREPARED PROPERLY.	---	X

LEGEND AND ABBREVIATIONS

AC PAVEMENT
PCC CONCRETE
GRASS/LANDSCAPING
CLEAR AND GRUB
PATH OF TRAVEL
FLOWLINE
A / 16 DETAIL ID / SHEET NUMBER
0.5% DIRECTION OF FLOW

AC	ASPHALTIC PAVEMENT
EXIST	EXISTING
FD	FOUND
FG	FINISHED GRADE
FL	FLOW LINE
FS	FINISHED SURFACE
GB	GRADE BREAK
HC	HANDICAP
HP	HIGH POINT
HDPE	HIGH-DENSITY POLYETHYLENE
HORIZ	HORIZONTAL
ICV	IRRIGATION CONTROL VALVE
INV	INVERT
L	LENGTH
L/A	LANDSCAPE AREA
LF	LINEAR FEET
LP	LOW POINT
LT	LIGHT
MAX	MAXIMUM
MH	MANHOLE
MIN	MINIMUM
MKD	MARKED
N	NORTHING
NG	NATURAL GROUND
OC	ON CENTER
PCC	PORTLAND CONCRETE CEMENT
PED	PEDESTAL
P/L	PROPERTY LINE
PROP	PROPOSED
R/W	RIGHT OF WAY
SCO	SEWER CLEAN OUT
SF	SQUARE FEET
SMH	SEWER MANHOLE
TC	TOP OF CURB
TF	TOP OF FOOTING
TG	TOP OF GRATE
TOP	TOP OF PIPE
TRW	TOP OF RETAINING WALL
TW	TO OF WALL
TYP	TYPICAL
SPPWC	STANDARD PLANS FOR PUBLIC WORKS CONSTRUCTION

SHEET INDEX

1. TITLE SHEET
2. DEMOLITION
3. GRADING
4. HORIZONTAL CONTROL
5. UTILITY
6. STORM DRAIN
7. STORM DRAIN DETAIL
8. EROSION CONTROL
9. SECTIONS
10. CONSTRUCTION DETAILS
11. CONDITIONS OF APPROVAL
12. CONDITIONS OF APPROVAL

CONTACT INFORMATION

OWNER:
MOUNTAIN AREA REGIONAL TRANSIT AUTHORITY
41939 FOX FARM ROAD
BIG BEAR LAKE, CA 92315
PHONE:909-878-5200

CIVIL ENGINEER:
VALUED ENGINEERING, INC.
1529 W. 13TH STREET, UNIT G
UPLAND, CA 91786
PHONE: 909-982-4601
MR. JEFFEREY D. MEITER

ARCHITECT:
RHUNAU CLARKE ARCHITECTS
3775 TENTH STREET
RIVERSIDE, CA 92501
PHONE: 951-684-4664

SOILS ENGINEER:
JOHN R. BYERLY, INC.
2257 SOUTH LILAC AVE
BLOOMINGTON, CA 2316
PHONE: 909-877-1324
MR. JOHN R. BYERLY

SEWER IMPROVEMENT ITEMS

		QUANTITIES
30	FURNISH AND INSTALL 4" PVC SDR 35 SEWER LINE PER MANUFACTURERS SPECIFICATIONS	413 LF
31	FURNISH AND INSTALL SEWER CLEANOUT PER BIG BEAR CITY COMMUNITY SERVICES DISTRICT STD. DWG. NO. S-9	2 EA
32	REMOVE PORTIONS OF EXISTING SEWER LINE	

WATER IMPROVEMENT ITEMS

		QUANTITIES
40	FURNSH AND INSTALL 2" METER (DOMESTIC), BACKFLOW AND COPPER SERVICE PER MANUFACTURER'S SPECIFICATION	1 EA
41	FURNSH AND INSTALL 1" METER (DOMESTIC), BACKFLOW AND COPPER SERVICE PER MANUFACTURER'S SPECIFICATION	1 EA
42	NOT USED	--
43	NOT USED	--
44	NOT USED	--
46	CONSTRUCT BACKFILL AND TRENCHING PER DEPARTMENT OF WATER AND POWER CITY OF BIG BEAR LAKE STD. PLAN NO. 2	2 EA

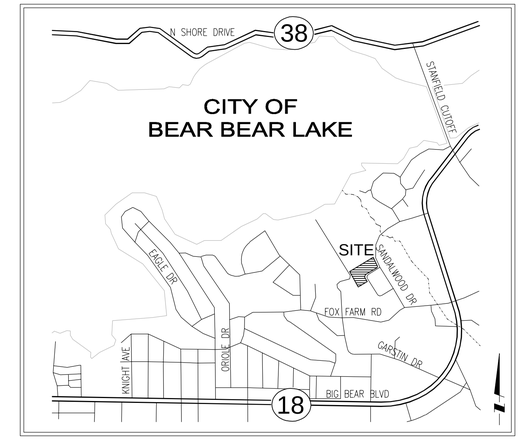

VICINITY MAP
N.T.S

DEMOLITION ITEMS

		QUANTITIES
1	CLEAR, GRUB AND DISPOSE	48,564 SF
99	PROTECT IN PLACE, ITEM PER PLAN	

CONSTRUCTION ITEMS

		QUANTITIES
1	CONSTRUCT (DRIVE AISLE) 3" AC OVER 8" CAB SECTION COMPACTED TO 90% PER APPROVED SOILS REPORT	8589 SF
2	CONSTRUCT (PARKING STALL) 2.5" AC OVER 4" CAB SECTION OVER COMPACTED TO 90% PER APPROVED SOILS REPORT	6772 SF
3	CONSTRUCT 6" CURB ONLY PER SPPWC STANDARD PLAN 120-2, TYPE A1-6 AND DETAIL A/10	211 LF
4	CONSTRUCT 6" CURB AND GUTTER (18" GUTTER) PER SPPWC STANDARD PLAN 120-2, TYPE A2-6 AND DETAIL A/10	287 LF
5	CONSTRUCT 4" PCC WALKWAY OVER COMPACTED NATIVE	5641 SF
6	CONSTRUCT CURB RAMP PER SPPWC STANDARD PLAN 111-4, CASE B, TYPE 1, PER DETAIL B/10	1 EA
7	CONSTRUCT (MODIFIED) CURB RAMP PER SPPWC STANDARD PLAN 111-4, CASE D, TYPE 1, PER DETAIL C/10	1 EA
8	CONSTRUCT 3' WIDE CONCRETE RIBBON GUTTER PER DETAIL D/10	163 LF
9	PAINT ACCESSIBLE PARKING STRIPING, SIGNAGE, AND LEGENDS PER DETAIL ON SHEET 10	LUMP SUM
10	PAINT 4" SOLID WHITE STRIPING FOR PARKING STALL	LUMP SUM
11	CONSTRUCT CURB OPENING PER DETAIL E/10	1 EA
12	FURNISH AND INSTALL PCC WHEEL STOP F/10	7 EA
13	CONSTRUCT GRADED SWALE	LUMPS SUM
14	CONSTRUCT FIRE PIT PER ARCHITECTURAL PLANS	--
15	CONSTRUCT RETAINING WALL PER ARCHITECTURAL PLANS	--
16	FURNISH AND INSTALL LIGHT STANDARD PER ARCHITECTURAL PLANS	--
17	FURNISH AND INSTALL FLAG POLE PER ARCHITECTURAL PLANS	--
97	SEE SHEET 5 FOR UTILITIES	
98	SEE SHEET 6 FOR STORM DRAIN	
99	PROTECT IN PLACE, ITEM PER PLAN	

GEOTECHNICAL SIGNATURE

THIS PLAN HAS BEEN REVIEWED AND CONFORMS TO THE TO THE RECOMMENDATIONS PROVIDED IN THE SOIL REPORT DATED APRIL 11, 2022

_____
SIGNATURE DATE

GRADING NOTE

ALL OF THE GRADING PROCEDURES, RECOMMENDATIONS, AND SPECIFICATIONS THAT ARE INDICATED ON THE GEOTECHNICAL REPORT NO. 7341, DATED APRIL 11, 2022, PREPARED BY JOHN R. BYERLY INCORPORATED MUST BE ADHERED TO.

BENCHMARK

NAVD 88
ELEVATION 6767.23'

CHISEL "X" IN BACK OF CONCRETE AT THE EASTERLY ECR OF THE KNUCKLE AT BUSINESS CENTER DRIVE

BUILDING CODES

-2022 CBC/2021 IBC
-2022 CRC/2021 IRC
-2022 CPC/2021 UPC
-2022 CALGREEN

PLAN CHECK NO: 23-XXXXX

Know what's below. Call 811 before you dig.

ENGINEER OF RECORD'S SEAL
REGISTERED PROFESSIONAL ENGINEER — JEFFREY D. MEITER — No. 64696 — CIVIL — STATE OF CALIFORNIA

VALUED
ENGINEERING, INC
CIVIL ENGINEERING • LAND SURVEYING • LAND PLANNING
1529 W. 13TH STREET, UNIT G, UPLAND, CA 91786
PHONE: (909) 982-4601
JEFFREY D. MEITER — 04/15/2024 — R.C.E. No. 64696

CITY OF BIG BEAR LAKE
ENGINEERING DIVISION
39707 BIG BEAR BLVD
BIG BEAR LAKE, CA 92315
PHONE (909) 866-5831
FAX (909) 866-7511

CITY OF BIG BEAR LAKE
BIG BEAR LAKE, CALIFORNIA
APPROVED BY: _____ DATE _____
R.C.E. _____ EXP. DATE _____

CITY OF BIG BEAR LAKE
MOUNTAIN AREA REGIONAL TRANSIT AUTHORITY
160-170 BUSINESS CENTER DRIVE
TITLE SHEET - PHASE 3

MARCH 2024
SHEET 1 OF 12
DRAWING NO. --

File: P:\JOBS\076210\CAD\SHEETS\GRADING – PHASE 3\76210 PG01 TITLE.dwg Apr 15, 2024 – 9:57am Kent

DEMOLITION ITEMS

[1] CLEAR, GRUB AND DISPOSE

[99] PROTECT IN PLACE, ITEM PER PLAN

QUANTITIES

48,564 SF

LEGEND

CLEAR AND GRUB

LIMIT OF WORK

P/L

233'

242'

160'

LIMIT OF WORK

ZONE X
ZONE AE

TRACT NO. 18678
M.B. 333/99-102
PARCEL 7

TRACT NO. 18678
M.B. 333/99-102
PARCEL 6

TRACT NO. 18678
M.B. 333/99-102
PARCEL 8

24" STORM DRAIN [99]

ROLLED CURB & GUTTER [99]

R/W

30'

22'

30'

SANDALWOOD DRIVE (PUBLIC)

SIDEWALK [99]

AC [99]

SIDEWALK [99]

R/W

SEWER [99]

BUSINESS CENTER DRIVE (PUBLIC)

25'

22'

ROLLED CURB & GUTTER [99]

SEWER [99]

[99] SS MH

AC [99]

25'

22'

ROLLED CURB & GUTTER [99]

GAS [99]

WATER [99]

R/W

STOP

NOTE CONSTRUCTION WITHIN THE PUBLIC RIGHT-OF-WAY, INCLUDING DRIVE APPROACH AND UTILITIES REQUIRES A SEPARATE PERMIT AND APPROVAL

SCALE 1"=20'

0 10' 20' 40'

GRAPHIC SCALE

LICENSED ARCHITECT
ROGER CLARK
No. C-44145
Exp.10-31-25
STATE OF CALIFORNIA

Know what's below. Call 811 before you dig.

ENGINEER OF RECORD'S SEAL
REGISTERED PROFESSIONAL ENGINEER
JEFFEREY D. MEITER
No. 64696
CIVIL
STATE OF CALIFORNIA

VALUED
ENGINEERING, INC
CIVIL ENGINEERING • LAND SURVEYING • LAND PLANNING
1529 W. 13TH STREET, UNIT G, UPLAND, CA 91786
PHONE (909) 982-4601

04/15/2024
JEFFREY D. MEITER R.C.E. No. 64696

CITY OF BIG BEAR LAKE
ENGINEERING DIVISION
39707 BIG BEAR BLVD
BIG BEAR LAKE, CA 92315
PHONE (909) 866-5831
FAX (909) 866-7511

CITY OF BIG BEAR LAKE
BIG BEAR LAKE, CALIFORNIA

APPROVED BY:

DATE

R.C.E. _____ EXP. DATE _____

CITY OF BIG BEAR LAKE

MOUNTAIN AREA REGIONAL TRANSIT AUTHORITY
160-170 BUSINESS CENTER DRIVE
DEMOLITION - PHASE 3

MARCH 2024

SHEET 2 OF 12

DRAWING NO.
--

File: P:\JOBS\076202\CAD\SHEETS\GRADING - PHASE 3\76202 PG02 DEMO.dwg Apr 15, 2024 - 9:55am Kent

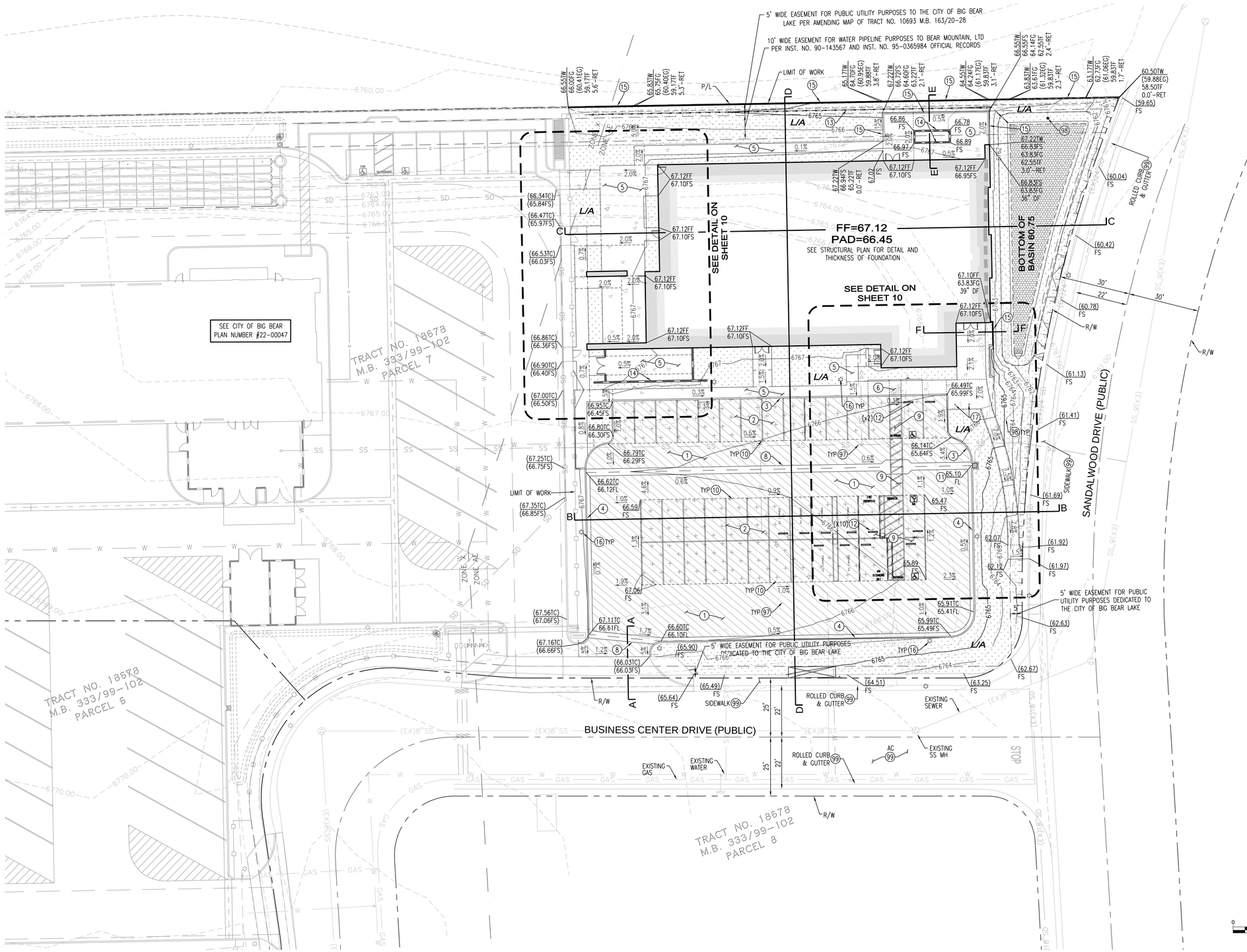

CONSTRUCTION ITEMS

1. CONSTRUCT (DRIVE AISLE) 3" AC OVER 8" CAB SECTION COMPACTED TO 90% PER APPROVED SOILS REPORT
2. CONSTRUCT (PARKING STALL) 2.5" AC OVER 4" CAB SECTION OVER COMPACTED TO 90% PER APPROVED SOILS REPORT
3. CONSTRUCT 6" CURB ONLY PER SPPWC STANDARD PLAN 120-2, TYPE A1-6 AND DETAIL A/10
4. CONSTRUCT 6" CURB AND GUTTER (18" GUTTER) PER SPPWC STANDARD PLAN 120-2, TYPE A2-6 AND DETAIL A/10
5. CONSTRUCT 4" PCC WALKWAY OVER COMPACTED NATIVE
6. CONSTRUCT CURB RAMP PER SPPWC STANDARD PLAN 111-4, CASE B, TYPE 1, PER DETAIL B/10
7. CONSTRUCT (MODIFIED) CURB RAMP PER SPPWC STANDARD PLAN 111-4, CASE D, TYPE 1, PER DETAIL C/10
8. CONSTRUCT 3' WIDE CONCRETE RIBBON GUTTER PER DETAIL D/10
9. PAINT ACCESSIBLE PARKING STRIPING, SIGNAGE, AND LEGENDS PER DETAIL ON SHEET 10
10. PAINT 4" SOLID WHITE STRIPING FOR PARKING STALL
11. CONSTRUCT CURB OPENING PER DETAIL E/10
12. FURNISH AND INSTALL PCC WHEEL STOP F/10
13. CONSTRUCT GRADED SWALE
14. CONSTRUCT FIRE PIT PER ARCHITECTURAL PLANS
15. CONSTRUCT RETAINING WALL PER ARCHITECTURAL PLANS
16. FURNISH AND INSTALL LIGHT STANDARD PER ARCHITECTURAL PLANS
17. FURNISH AND INSTALL FLAG POLE PER ARCHITECTURAL PLANS
97. SEE SHEET 5 FOR UTILITIES
98. SEE SHEET 6 FOR STORM DRAIN
99. PROTECT IN PLACE, ITEM PER PLAN

LEGEND

- PROPOSED BUILDING
- (1) AC PAVEMENT (DRIVE AISLES)
- (2) AC PAVEMENT (PARKING STALS)
- (5) PCC PAVEMENT
- L/A GRASS/LANDSCAPING
- PATH OF TRAVEL
- DEEPENED FOOTING
- FLOWLINE

NOTE SEE SHEET 9 FOR SECTIONS

NOTE ADD 6700' TO ALL ELEVATIONS

NOTE PROPOSED DETENTION BASINS USED AS SNOW STORAGE AREAS, 5,988 SQUARE-FEET

NOTE SEE SHEET 4, HORIZONTAL CONTROL PLAN, FOR DETAIL OF MONUMENTS AND BEARING AND DISTANCE

NOTE THE TOP OF ANY EXTERIOR FOUNDATION SHALL EXTEND ABOVE THE ELEVATION OF STREET GUTTER AT POINT OF DISCHARGE OR THE INLET OF AN APPROVED DRAINAGE DEVICE A MINIMUM OF 12" PLUS 2%

SCALE 1"=20'
0 10' 20' 40'
GRAPHIC SCALE

ROGER CLARK LICENSED ARCHITECT No. C-21745 Exp.10-31-25 STATE OF CALIFORNIA

811 Know what's below. Call 811 before you dig.

ENGINEER OF RECORD'S SEAL
REGISTERED PROFESSIONAL ENGINEER JEFFREY D. MEITER No. 64696 CIVIL STATE OF CALIFORNIA

VALUED ENGINEERING, INC
CIVIL ENGINEERING • LAND SURVEYING • LAND PLANNING
1529 W. 13TH STREET, UNIT G, UPLAND, CA 91786
PHONE (909) 982-4601
JEFFREY D. MEITER 04/15/2024
R.C.E. No. 64696

CITY OF BIG BEAR LAKE
ENGINEERING DIVISION
39707 BIG BEAR BLVD
BIG BEAR LAKE, CA 92315
PHONE (909) 866-5831
FAX (909) 866-7511

CITY OF BIG BEAR LAKE
BIG BEAR LAKE, CALIFORNIA
APPROVED BY:
DATE
R.C.E. _____ EXP. DATE _____

CITY OF BIG BEAR LAKE

MOUNTAIN AREA REGIONAL TRANSIT AUTHORITY
160-170 BUSINESS CENTER DRIVE
PRECISE GRADING - PHASE 3

MARCH 2024
SHEET 3 OF 12
DRAWING NO. --

File: P:\JOBS\076210\CAD\SHEETS\GRADING - PHASE 3\76210 PG03 PGP.dwg Apr 15, 2024 - 9:54am Kent

CURVE TABLE				
CURVE	LENGTH	RADIUS	Δ	TANGENT
C17	15.55'	10.50'	84°51'27"	9.60'
C19	39.79'	25.00'	91°12'11"	25.53'

N58°56'50"E 575.35'

TRACT NO. 18678
M.B. 333/99-102
PARCEL 7

TRACT NO. 18678
M.B. 333/99-102
PARCEL 8

BUSINESS CENTER DRIVE (PUBLIC)

SANDALWOOD DRIVE (PUBLIC)

Δ=23°32'24"
R=550.00'
L=225.97'

Δ=103°24'19"
R=55.00'
L=99.26'

Δ=5°02'51"
R=100.00'
L=8.81'

Δ=5°02'50"
R=100.00'
L=8.81'

Δ=91°12'11"
R=25.00'
L=39.79'

S65°01'42"W
42.68'

S36°22'13"E 49.36'

N33°19'47"W
10.31'

N59°58'51"E 185.92'

N59°58'51"E 200.33'

1" IRON PIPE W/O TAG, FLUSH, NO REF., ACCEPTED AS B.C. CENTERLINE SANDALWOOD DRIVE PER PARCEL MAP NO. 9452, PMB 106/32-33. SET TAG "LS 3069"

1+00 BUSINESS CENTER DRIVE C/L INT= 10+29.25 SANDALWOOD DRIVE

R/W

117' 13 SPACES @ 9' EA

81' 9 SPACES @ 9' EA

81' 9 SPACES @ 9' EA

122.6'

140.6'

101.1'

SCALE 1"=20'

0 10' 20' 40'

GRAPHIC SCALE

LICENSED ARCHITECT
REGISTERED CLIMATOLOGIST
Exp. 6-30-25
Exp. 10-31-25
STATE OF CALIFORNIA

Know what's **below.** **Call 811** before you dig.

ENGINEER OF RECORD'S SEAL
REGISTERED PROFESSIONAL ENGINEER
JEFFEREY D. MEITER
No. 64696
CIVIL
STATE OF CALIFORNIA

VALUED ENGINEERING, INC
CIVIL ENGINEERING • LAND SURVEYING • LAND PLANNING
1529 W. 13TH STREET, UNIT G, UPLAND, CA 91786
PHONE (909) 982-4601
JEFFERY D. MEITER 04/15/2024
R.C.E. No. 64696

CITY OF BIG BEAR LAKE
ENGINEERING DIVISION
39707 BIG BEAR BLVD
BIG BEAR LAKE, CA 92315
PHONE (909) 866-5831
FAX (909) 866-7511

CITY OF BIG BEAR LAKE
BIG BEAR LAKE, CALIFORNIA
APPROVED BY:
DATE
R.C.E. _____ EXP. DATE _____

CITY OF BIG BEAR LAKE

MOUNTAIN AREA REGIONAL TRANSIT AUTHORITY
160-170 BUSINESS CENTER DRIVE
HORIZONTAL CONTROL - PHASE 3

MARCH 2024

SHEET 4 OF 12

DRAWING NO.
--

File: P:\JOBS\076210\CAD\SHEETS\GRADING - PHASE 3\76210 PG04 HC.dwg Apr 15, 2024 - 9:54am Kent

SEWER IMPROVEMENT ITEMS

(30) FURNISH AND INSTALL 4" PVC SDR 35 SEWER LINE PER MANUFACTURER'S SPECIFICATIONS

(31) FURNISH AND INSTALL SEWER CLEANOUT PER BIG BEAR CITY COMMUNITY SERVICES DISTRICT STD. DWG. NO. S-9

(32) REMOVE PORTIONS OF EXISTING SEWER LINE

WATER IMPROVEMENT ITEMS

(40) FURNSH AND INSTALL 2" METER (DOMESTIC), BACKFLOW AND COPPER SERVICE PER MANUFACTURER'S SPECIFICATION

(41) FURNSH AND INSTALL 1" METER (DOMESTIC), BACKFLOW AND COPPER SERVICE PER MANUFACTURER'S SPECIFICATION

(42) NOT USED

(43) NOT USED

(44) NOT USED

(46) CONSTRUCT BACKFILL AND TRENCHING PER DEPARTMENT OF WATER AND POWER CITY OF BIG BEAR LAKE STD. PLAN NO. 2

NOTE CONSTRUCTION WITHIN THE PUBLIC RIGHT-OF-WAY, INCLUDING DRIVE APPROACH AND UTILITIES REQUIRES A SEPARATE PERMIT AND APPROVAL

NOTE STORM WATER SHALL NOT BE DRAINED INTO SEWERS INTENDED FOR SANITARY DRAINAGE ONLY.

ALL INLETS AND OUTLETS INTO AND OUT OF THE MANHOLES SHALL INCORPORATE THE USE OF A FLEXIBLE COMPRESSION JOINTS LOCATED BETWEEN 12" AND 36" FROM THE MANHOLE. NO FLEXIBLE COMPRESSION JOINT SHALL BE EMBEDDED IN THE MANHOLE BASE.

THE TWO-WAY CLEANOUT MUST BE MUST BE AN APPROVED TYPE AS DEFINED IN THE CPC SECTION 203.0 AND PER SECTION 707.4 EXCEPTION (4).

FF=67.12
PAD=66.45

FF=67.75
PAD=67.08

PROPOSED GAS LINE, BY OTHERS

EXIST 24" STORM DRAIN PER DWG. NO. 18678

SEE PLUMBING PLAN FOR CONTINUATION

SEE PLUMBING PLAN FOR CONTINUATION

63.32 INV

40 LF@ S=0.159

SEWER LINE PER CITY OF BIG BEAR PLAN NUMBER #22-00047

63.04TC (56.00INV)

(64.67) INV

(59.71) INV

(57.34) INV

(54.02) INV

30'

SEE CITY OF BIG BEAR WATER DISTRICT FOR CONSTINUATION

PROP SHADE STRUCTURE BY OTHERS

EXIST 8" PVC SEWER PER DWG. NO. 18678

EXIST 6" PVC WATER PER DWG. NO. 18678

BUSINESS CENTER DRIVE (PUBLIC)

SANDALWOOD DRIVE (PUBLIC)

BUSINESS CENTER DRIVE

TRACT NO. 18678
M.B. 333/99-102
PARCEL 5

TRACT NO. 18678
M.B. 333/99-102
PARCEL 7

TRACT NO. 18678
M.B. 333/99-102
PARCEL 8

ZONE X
ZONE AE

SCALE 1"=20'

GRAPHIC SCALE

ROGER CLARK — LICENSED ARCHITECT — No. C-41340 Exp.10-31-25 — STATE OF CALIFORNIA

811 Know what's **below.** **Call 811** before you dig.

ENGINEER OF RECORD'S SEAL — REGISTERED PROFESSIONAL ENGINEER — JEFFREY D. MEITER — No. 64696 — CIVIL — STATE OF CALIFORNIA

VALUED ENGINEERING, INC
CIVIL ENGINEERING • LAND SURVEYING • LAND PLANNING
1529 W. 13TH STREET, UNIT G, UPLAND, CA 91786
PHONE (909) 982-4601
04/15/2024
JEFFREY D. MEITER R.C.E. No. 64696

CITY OF BIG BEAR LAKE
ENGINEERING DIVISION
39707 BIG BEAR BLVD
BIG BEAR LAKE, CA 92315
PHONE (909) 866-5831
FAX (909) 866-7511

CITY OF BIG BEAR LAKE
BIG BEAR LAKE, CALIFORNIA
APPROVED BY:
DATE
R.C.E. _____ EXP. DATE _____

CITY OF BIG BEAR LAKE
MOUNTAIN AREA REGIONAL TRANSIT AUTHORITY
160-170 BUSINESS CENTER DRIVE
UTILITIES - PHASE 3

MARCH 2024
SHEET 5 OF 12
DRAWING NO. --

File: P:\JOBS\076210\CAD\SHEETS\GRADING - PHASE 3\76210 PG05 UT.dwg Apr 15, 2024 - 9:53am Kent

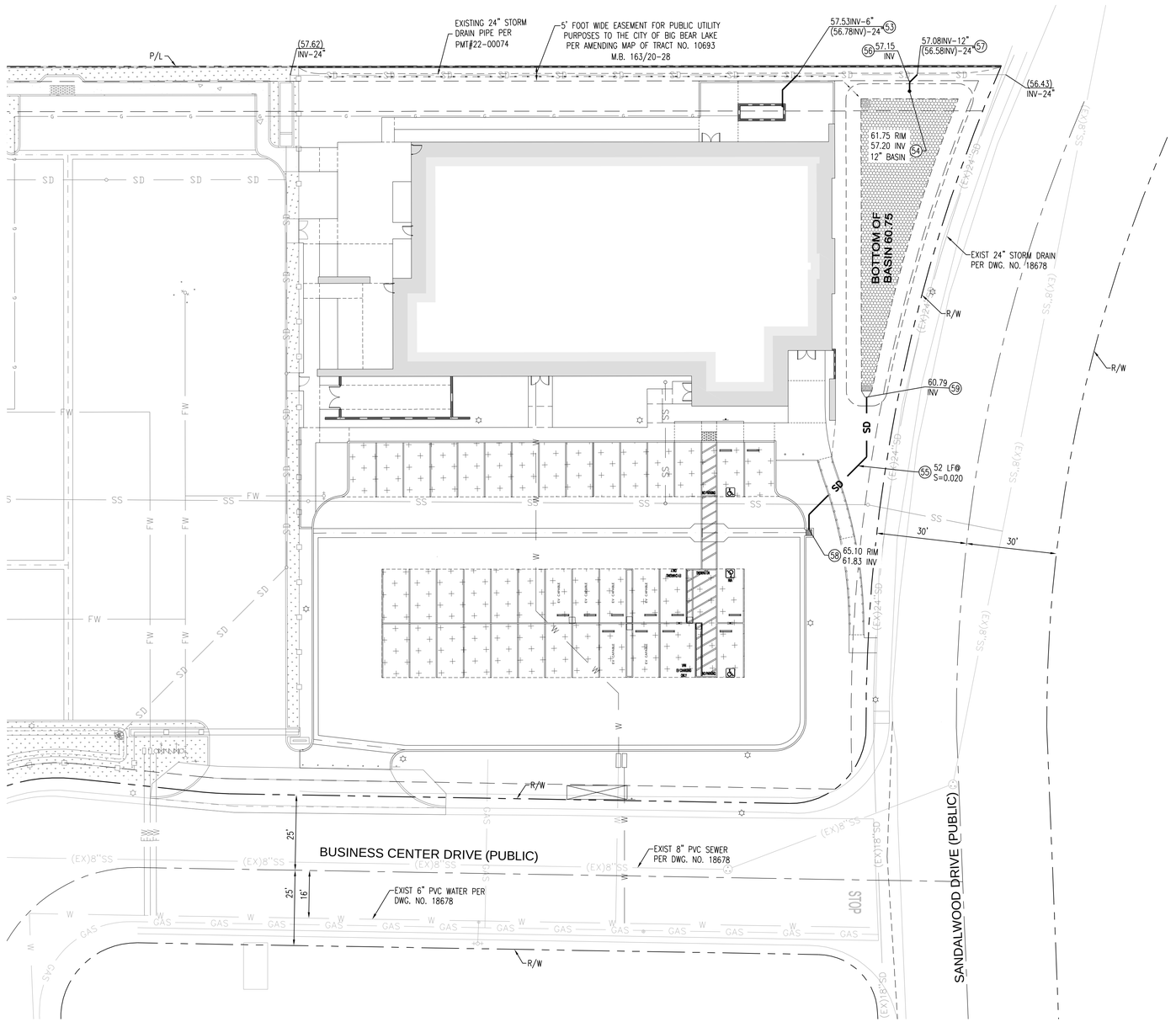

STORM DRAIN ITEMS

51. FURNISH AND INSTALL 6" PVC SCHEDULE 80 STORM DRAIN PIPE PER MANUFACTURERS'S SPECIFICATIONS
52. FURNISH AND INSTALL 6" PVC SCHEDULE 80 – 45° BEND
53. FURNISH AND INSTALL 6x24" WYE AND CONNECT TO 24" PIPE. REMOVE PORTIONS OF INTERFERING PIPE
54. FURNISH AND INSTALL INLINE NYLOPLAST DRAIN BY ADS WITH ATRIUM GRATE, SIZE PER PLAN A/7
55. FURNISH AND INSTALL 12" HDPE STORM DRAIN PER ADVANVED DRAINAGE SYSTEMS PER MANUFACTURER'S SPECIFICATIONS
56. FURNISH AND INSTALL 12" HDPE 45° – BEND
57. FURNISH AND INSTALL 12"x24" WYE AND CONNECT TO EXISTING 12" PIPE. REMOVE PORTIONS OF INTERFERING PIPE
58. FURNISH AND INSTALL 18x18" DROP INLET BY BROOKS PRODUCTS AND DETAIL B/7
59. FURNISH AND INSTALL FLARED END SECTION PER DETAIL C/7

NOTE CONSTRUCTION WITHIN THE PUBLIC RIGHT-OF-WAY, INCLUDING DRIVE APPROACH AND UTILITIES REQUIRES A SEPARATE PERMIT AND APPROVAL

NOTE STORM WATER SHALL NOT BE DRAINED INTO SEWERS INTENDED FOR SANITARY DRAINAGE ONLY.

ALL INLETS AND OUTLETS INTO AND OUT OF THE MANHOLES SHALL INCORPORATE THE USE OF A FLEXIBLE COMPRESSION JOINTS LOCATED BETWEEN 12" AND 36" FROM THE MANHOLE. NO FLEXIBLE COMPRESSION JOINT SHALL BE EMBEDDED IN THE MANHOLE BASE.

THE TWO-WAY CLEANOUT MUST BE AN APPROVED TYPE AS DEFINED IN THE CPC SECTION 203.0 AND PER SECTION 707.4 EXCEPTION (4).

LICENSED ARCHITECT ROGER GLASER No. C-31340 Exp.10-31-25 STATE OF CALIFORNIA

SCALE 1"=20'
0 10' 20' 40'
GRAPHIC SCALE

811 Know what's **below.** **Call 811** before you dig.

ENGINEER OF RECORD'S SEAL
REGISTERED PROFESSIONAL ENGINEER JEFFERY D. MEITER No. 64696 CIVIL STATE OF CALIFORNIA

VALUED ENGINEERING, INC
CIVIL ENGINEERING • LAND SURVEYING • LAND PLANNING
1529 W. 13TH STREET, UNIT G, UPLAND, CA 91786
PHONE (909) 982-4601
JEFFERY D. MEITER 04/15/2024
R.C.E. No. 64696

CITY OF BIG BEAR LAKE
ENGINEERING DIVISION
39707 BIG BEAR BLVD
BIG BEAR LAKE, CA 92315
PHONE (909) 866-5831
FAX (909) 866-7511

CITY OF BIG BEAR LAKE
BIG BEAR LAKE, CALIFORNIA
APPROVED BY:
DATE
R.C.E. EXP. DATE

CITY OF BIG BEAR LAKE
MOUNTAIN AREA REGIONAL TRANSIT AUTHORITY
160-170 BUSINESS CENTER DRIVE
STORM DRAIN - PHASE 3

MARCH 2024
SHEET 6 OF 12
DRAWING NO. --

File: P:\JOBS\0762102\CAD\SHEETS\GRADING - PHASE 3\762102 PG06 SD.dwg Apr 15, 2024 - 9:52am Kent

NYLOPLAST INLINE DRAIN WITH DOME GRATE

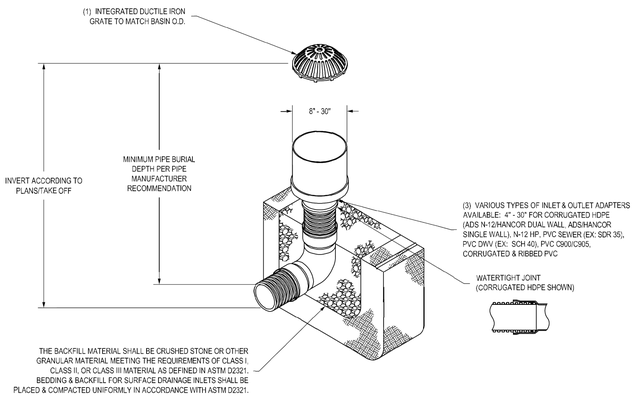

1 - 8" - 30" DOME GRATES SHALL BE DUCTILE IRON PER ASTM A536 GRADE 70-50-05.
2 - DRAINAGE CONNECTION STUB JOINT TIGHTNESS SHALL CONFORM TO ASTM D3212 FOR CORRUGATED HDPE (ADS N-12/HANCOR DUAL WALL), N-12 HP, & PVC SEWER (4" - 24").
3 - 8" - 30" DOME GRATES HAVE NO LOAD RATING

THIS PRINT DISCLOSES SUBJECT MATTER IN WHICH NYLOPLAST HAS PROPRIETARY RIGHTS. THE RECEIPT OR POSSESSION OF THIS PRINT DOES NOT CONFER, TRANSFER, OR LICENSE THE USE OF THE DESIGN OR TECHNICAL INFORMATION SHOWN HEREIN. REPRODUCTION OF THIS PRINT OR ANY INFORMATION CONTAINED HEREIN, OR MANUFACTURE OF ANY ARTICLE HEREFROM, FOR THE DISCLOSURE TO OTHERS IS FORBIDDEN, EXCEPT BY SPECIFIC WRITTEN PERMISSION FROM NYLOPLAST. ©2013 NYLOPLAST

DRAWN BY	EBC
DATE	03-25-10
REVISED BY	NWH
DATE	03-15-16
DWG SIZE	A
MATERIAL	
PROJECT NO./NAME	
SCALE	1:40 SHEET 1 OF 1

Nyloplast
3130 VERONA AVE
BUFORD, GA 30518
PHN (770) 932-2443
FAX (770) 932-2490
www.nyloplast-us.com

TITLE: INLINE DRAIN WITH DOME GRATE
QUICK SPEC INSTALLATION DETAIL

DWG NO. 7003-110-057 REV D

A/7 **INLINE DRAIN WITH ATRIUM GRATE**
NYLOPLAST

DROP INLET
18"x18" I.D.
(NOMINAL DIMENSIONS)
WITH FRAME AND GRATE

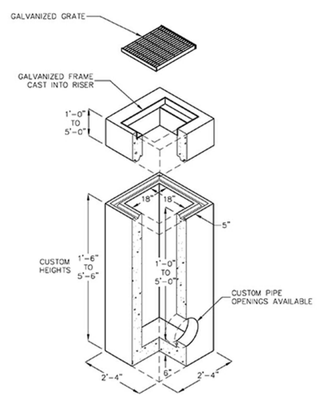

FOR COMPLETE DESIGN AND PRODUCT INFORMATION CONTACT JENSEN PRECAST.

2/1/08
SHEET6_181810_FF_A.dwg
© 2008 Jensen Precast

Jensen Precast reserves the right to make changes to product design and/or dimensions without notice. Please contact Jensen Precast whenever necessary for confirmation or advice on product design.

JENSEN PRECAST

B/7 **18x18 DROP INLET**
BROOKS PRODUCTS

Advanced Pipe Products

CORRUGATED HDPE FLARED END SECTION SPECIFICATIONS

Scope
This specification describes 12- through 36-inch (300 to 900mm) Flared End Sections for use in culvert and drainage outlet applications for Corrugated HDPE Pipe.

Requirements
The invert of the pipe and the end section shall be at the same elevation as the Flared End Section and shall be high density polyethylene meeting ASTM D3350-00 with a minimum cell classification of 213320C. Each end section shall have a carbon black additive for UV protection.

Installation
Installation shall be in accordance with those issued by state or local authorities. Visit www.4pipe.com for Advanced Pipe Products' most recent recommended installation instructions.

Dimensional Reference	Pipe Diameter in (mm)					
	12 (300)	15 (375)	18 (450)	24 (600)	30 (750)	36 (900)
A (in)	42	42	59	59	82	82
B (in)	14	17	21	27	34	41
C (in)	34	34	48	48	58	58
D (in)	6	6	6	6	6	6

All measurements are approximate and subject to change.

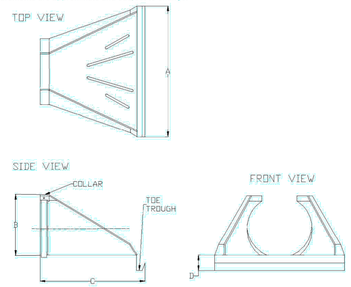

Advanced Pipe Products
1526 Gleneagles Dr. Bowling Green, OH 43402
Phone: 419-306-1129; Fax: 202-446-2918; www.4pipe.com

C/7 **FLARED END SECTION**
ADVANCED PIPE PRODUCTS

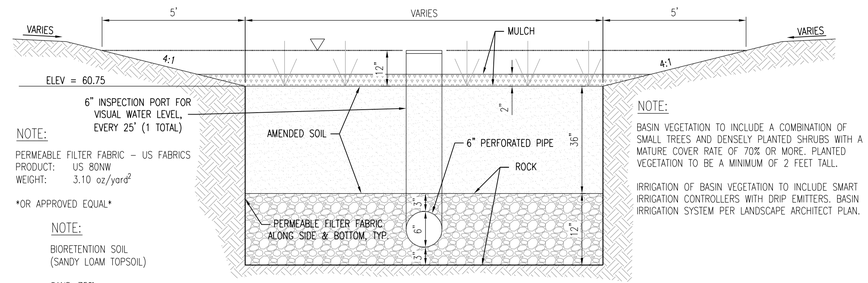

NOTE:
PERMEABLE FILTER FABRIC – US FABRICS
PRODUCT: US 80NW
WEIGHT: 3.10 oz/yard^2

OR APPROVED EQUAL

NOTE:
BIORETENTION SOIL
(SANDY LOAM TOPSOIL)

SAND–75%
SILT–20%
CLAY–5%

NOTE:
BASIN VEGETATION TO INCLUDE A COMBINATION OF SMALL TREES AND DENSELY PLANTED SHRUBS WITH A MATURE COVER RATE OF 70% OR MORE. PLANTED VEGETATION TO BE A MINIMUM OF 2 FEET TALL.

IRRIGATION OF BASIN VEGETATION TO INCLUDE SMART IRRIGATION CONTROLLERS WITH DRIP EMITTERS. BASIN IRRIGATION SYSTEM PER LANDSCAPE ARCHITECT PLAN.

X/7 **BIORETENTION BASIN**
NOT TO SCALE

LICENSED ARCHITECT
ROGER CLARK
No. C-41320
Exp.10-31-25
STATE OF CALIFORNIA

Know what's below. Call 811 before you dig.

ENGINEER OF RECORD'S SEAL
REGISTERED PROFESSIONAL ENGINEER
JEFFREY D. MEITER
No. 64696
CIVIL
STATE OF CALIFORNIA

VALUED ENGINEERING, INC
CIVIL ENGINEERING • LAND SURVEYING • LAND PLANNING
1529 W. 13TH STREET, UNIT G, UPLAND, CA 91786
PHONE (909) 982-4601

04/15/2024
JEFFERY D. MEITER R.C.E. No. 64696

CITY OF BIG BEAR LAKE
ENGINEERING DIVISION
39707 BIG BEAR BLVD
BIG BEAR LAKE, CA 92315
PHONE (909) 866-5831
FAX (909) 866-7511

CITY OF BIG BEAR LAKE
BIG BEAR LAKE, CALIFORNIA
APPROVED BY:
DATE
R.C.E. _____ EXP. DATE _____

CITY OF BIG BEAR LAKE
MOUNTAIN AREA REGIONAL TRANSIT AUTHORITY
160-170 BUSINESS CENTER DRIVE
STORM DRAIN DETAILS - PHASE 3

MARCH 2024
SHEET 7 OF 12
DRAWING NO.
--

File: P:\JOBS\076210Z\CAD\SHEETS\GRADING - PHASE 3\76210Z PG07 SD DETAILS.dwg Apr 15, 2024 - 9:51am Kent

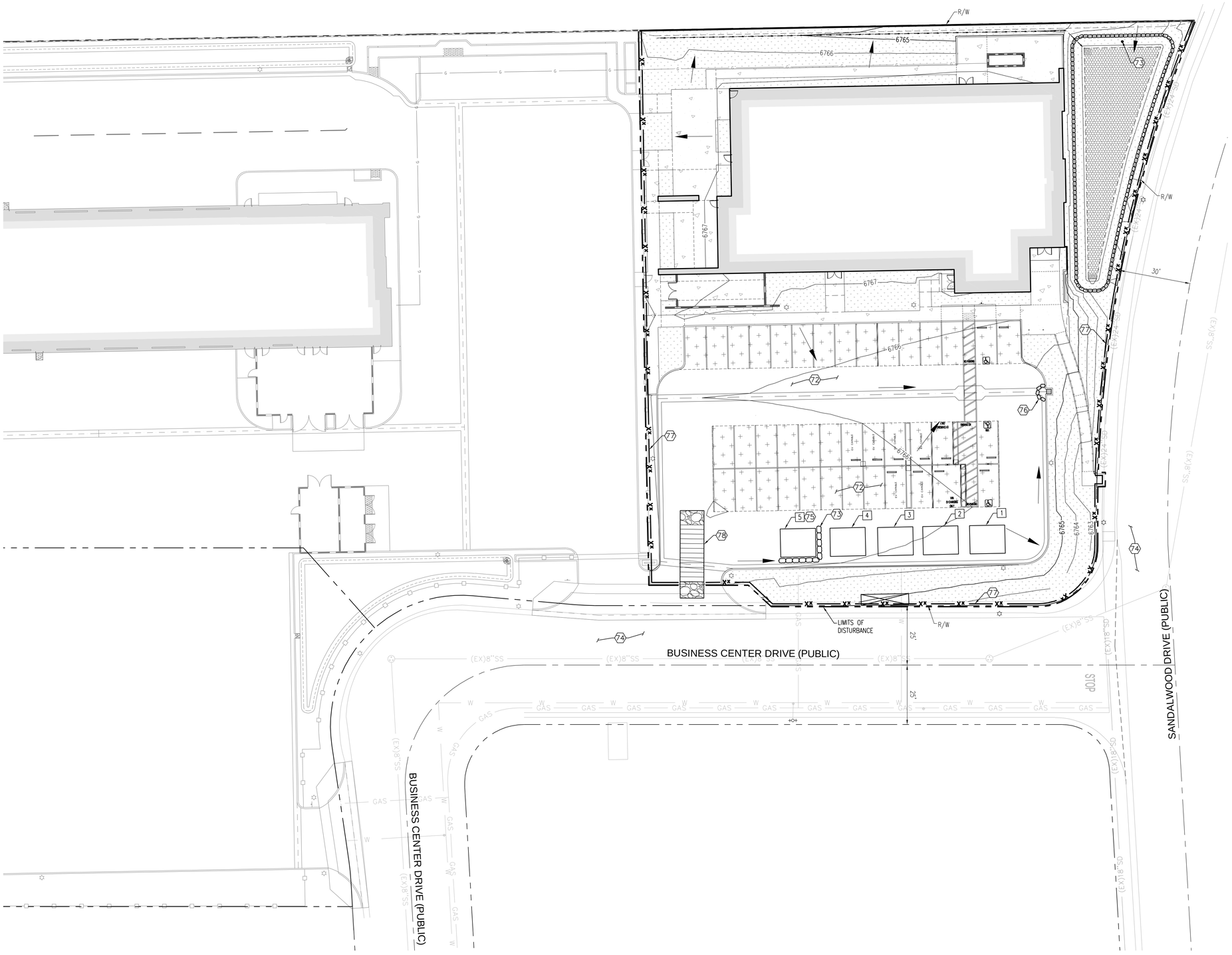

EROSION CONTROL AND BMP ITEMS

71 CONTRACTOR TO PREPARE AND IMPLEMENT A CONSTRUCTION SCHEDULE PER BMP (CASQA BMP HANDBOOK) EC-1

72 CONTRACTOR TO PROVIDE WATERING PER BMP (CASQA BMP HANDBOOK) WE-1

73 PLACE GRAVEL BAGS 2 COURSE HIGH PER BMP (CASQA BMP HANDBOOK) SE-6

74 STREET SWEEPING AND VACUUMING CONTROL PER BMP (CASQA BMP HANDBOOK) SE-7

75 CONSTRUCT CONCRETE WASTE MANAGEMENT PER BMP (CASQA BMP HANDBOOK) NS-8

76 CONTRACTOR TO PROVIDE STORM DRAIN INLET PROTECTION PER BMP (CASQA BMP HANDBOOK) SE-10

77 INSTALL SILT FENCE PER BMP (CASQA BMP HANDBOOK) SE-1

78 CONSTRUCT STABILIZED CONSTRUCTION ENTRANCE PER BMP (CASQA BMP HANDBOOK) TC-1

LEGEND:

CONSTRUCTION ENTRANCE PER BMP TC-1

SILT FENCE PER SE-1

GRAVEL BAGS PER SE-6

SD INLET PER BMP SE-10

FLOW DIRECTION

LIMITS OF DISTURBANCE

BMP AREAS

1 MATERIAL LOADING/UNLOADING AREA (WM-1)

2 SANITARY/WASTE AREA (WM-9)

3 VEHICLE STORAGE AREA (NS-8, NS-10)

4 EQUIPMENT STORAGE AREA (NS-8, NS-10)

5 CONCRETE WASTE MANAGEMENT (WM-8)

NON-STORMWATER MANAGEMENT BMP'S

WATER CONSERVATION PRACTICES (NS-1)
PAVING AND GRINDING OPERATIONS (NS-3)
ILLICIT CONNECTION/DISCHARGE (NS-6)
VEHICLE AND EQUIPMENT CLEANING (NS-8)
VEHICLE AND EQUIPMENT FUELING (NS-9)
VEHICLE AND EQUIPMENT MAINTENANCE (NS-10)
CONCRETE CURING (NS-12)
CONCRETE FINISHING (NS-13)

MATERIAL MANAGEMENT BMP'S

MATERIAL DELIVERY AND STORAGE (WM-1)
MATERIAL USE (WM-2)
STOCKPILE MANAGEMENT (WM-3)
SPILL PREVENTION AND CONTROL (WM-4)
SOLID WASTE MANAGEMENT (WM-5)
HAZARDOUS WASTE MANAGEMENT (WM-6)
CONCRETE WASTE MANAGEMENT (WM-8)
SANITARY/SEPTIC WASTE MANAGEMENT (WM-9)
LIQUID WASTE MANAGEMENT (WM-10)

LICENSED ARCHITECT ROGER CLARK No. C-31340 Exp.10-31-25 STATE OF CALIFORNIA

SCALE 1"=20'

0 10' 20' 40'

GRAPHIC SCALE

811 Know what's **below.** **Call 811** before you dig.

ENGINEER OF RECORD'S SEAL
REGISTERED PROFESSIONAL ENGINEER JEFFEREY D. MEITER No. 64696 CIVIL STATE OF CALIFORNIA

VALUED ENGINEERING, INC
CIVIL ENGINEERING • LAND SURVEYING • LAND PLANNING
1529 W. 13TH STREET, UNIT G, UPLAND, CA 91786
PHONE (909) 982-4601
JEFFREY D. MEITER 04/15/2024 R.C.E. No. 64696

CITY OF BIG BEAR LAKE
ENGINEERING DIVISION
39707 BIG BEAR BLVD
BIG BEAR LAKE, CA 92315
PHONE (909) 866-5831
FAX (909) 866-7511

CITY OF BIG BEAR LAKE
BIG BEAR LAKE, CALIFORNIA
APPROVED BY:
DATE
R.C.E. _____ EXP. DATE _____

CITY OF BIG BEAR LAKE

MOUNTAIN AREA REGIONAL TRANSIT AUTHORITY
160-170 BUSINESS CENTER DRIVE
EROSION CONTROL - PHASE 3

MARCH 2024
SHEET 8 OF 12
DRAWING NO.
--

File: P:\JOBS\0762102\CAD\SHEETS\GRADING - PHASE 3\762102 PG08 EC.dwg Apr 15, 2024 - 9:51am Kent

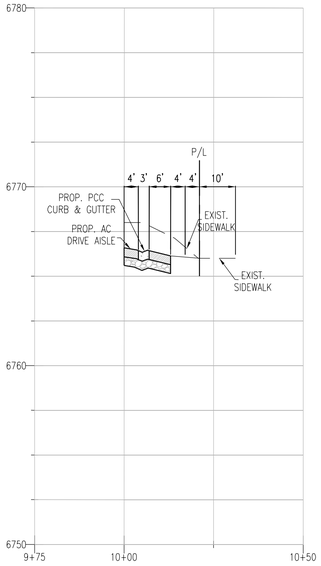

SECTION A-A

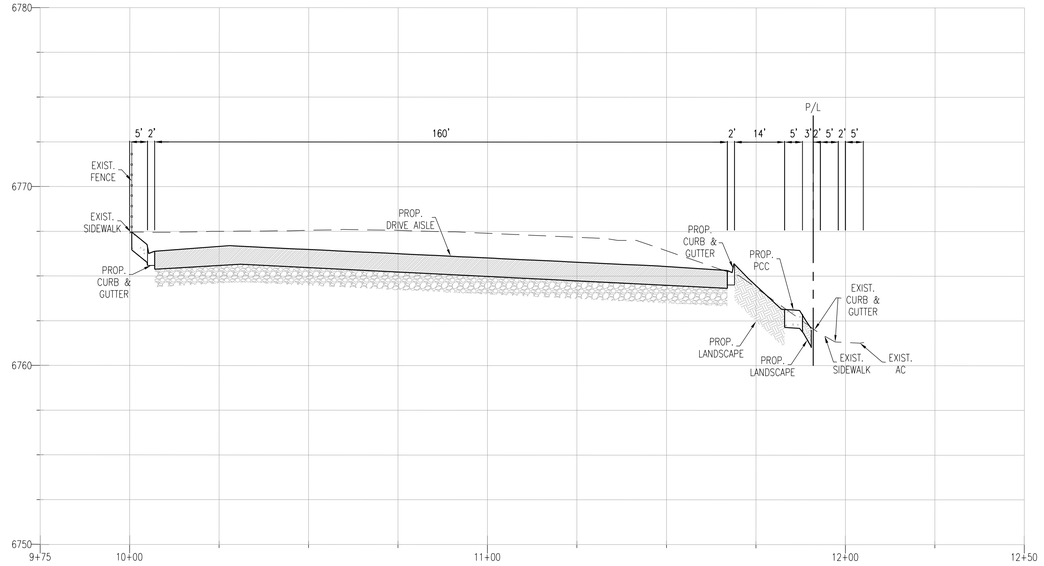

SECTION B-B

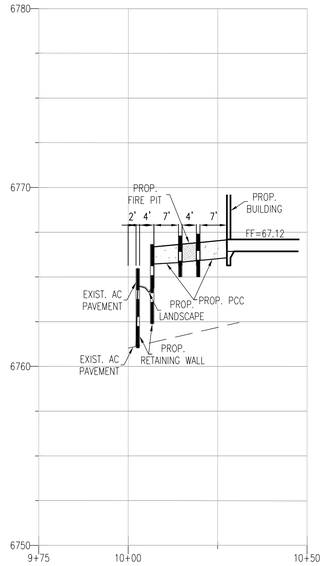

SECTION E-E

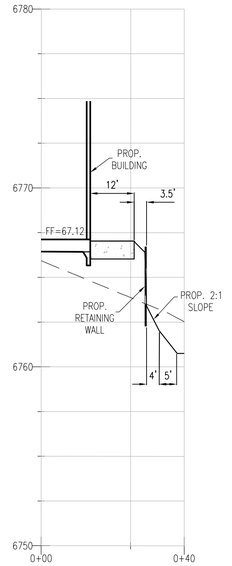

SECTION F-F

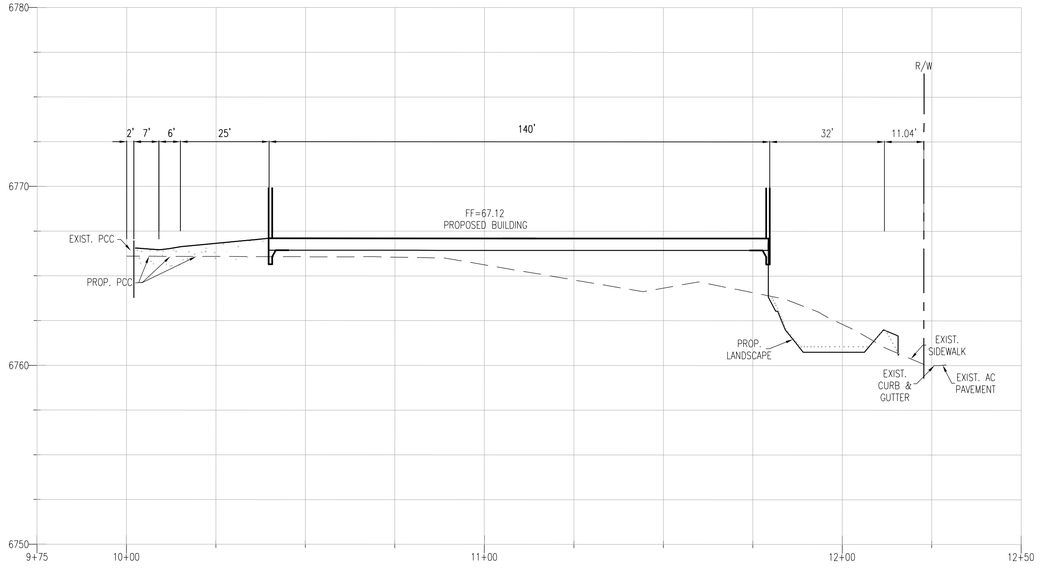

SECTION C-C

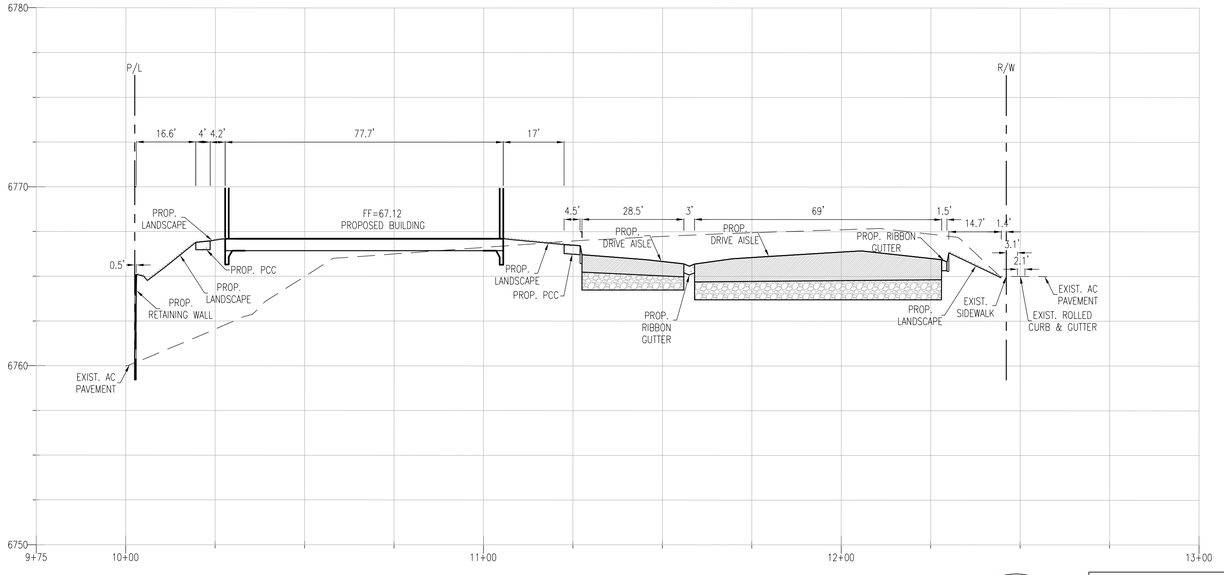

SECTION D-D

LICENSED ARCHITECT
ROGER CLARK
Exp.10-31-25
STATE OF CALIFORNIA

SCALE
HORIZ: 1"=20'
VERT: 1"=4'

811 Know what's **below.** **Call 811** before you dig.

ENGINEER OF RECORD'S SEAL
REGISTERED PROFESSIONAL ENGINEER
JEFFREY D. MEITER
No. 64696
CIVIL
STATE OF CALIFORNIA

VALUED ENGINEERING, INC
CIVIL ENGINEERING • LAND SURVEYING • LAND PLANNING
1529 W. 13TH STREET, UNIT G, UPLAND, CA 91786
PHONE (909) 982-4601
04/15/2024
JEFFERY D. MEITER R.C.E. No. 64696

CITY OF BIG BEAR LAKE
ENGINEERING DIVISION
39707 BIG BEAR BLVD
BIG BEAR LAKE, CA 92315
PHONE (909) 866-5831
FAX (909) 866-7511

CITY OF BIG BEAR LAKE
BIG BEAR LAKE, CALIFORNIA
APPROVED BY:
DATE
R.C.E. _____ EXP. DATE _____

CITY OF BIG BEAR LAKE

MOUNTAIN AREA REGIONAL TRANSIT AUTHORITY
160-170 BUSINESS CENTER DRIVE
SECTIONS - PHASE 3

MARCH 2024
SHEET 9 OF 12
DRAWING NO. --

File: P:\JOBS\076210Z\CAD\SHEETS\GRADING - PHASE 3\762102 PG09 SECTIONS.dwg Apr 15, 2024 - 9:50am Kent

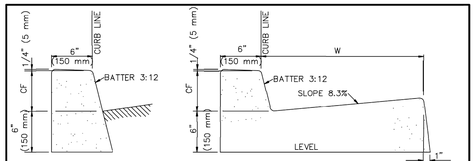

A1–6(150) AND A1–8(200)

A2–6(150) AND A2–8(200)

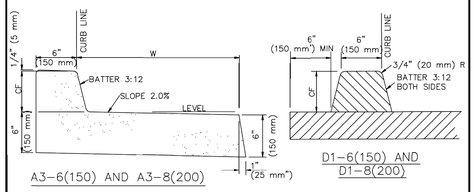

A3–6(150) AND A3–8(200)

D1–6(150) AND D1–8(200)

NOTES:

1. THE LAST NUMBER IN THE DESIGNATION IS THE CURB FACE (CF) HEIGHT, INCHES (mm).
2. GUTTER WIDTH, W, IS 24" (600 mm) UNLESS OTHERWISE SPECIFIED.
3. TYPES A1, A2, A3 AND C1 SHALL BE CONSTRUCTED FROM PCC.
4. TYPE D1 CURB SHALL BE CONSTRUCTED FROM ASPHALT CONCRETE.
5. TYPE C1 CURB SHALL BE ANCHORED WITH STEEL DOWELS AS SHOWN OR WITH AN EPOXY APPROVED BY THE ENGINEER.
6. ALL EXPOSED CORNERS ON PCC CURBS AND GUTTERS SHALL BE ROUNDED WITH A 1/2" (15 mm) RADIUS.

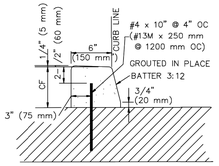

C1–6(150) AND C1–8(200)

STANDARD PLAN FOR PUBLIC WORKS CONSTRUCTION		
PROMULGATED BY THE PUBLIC WORKS STANDARDS INC. GREENBOOK COMMITTEE 1968 REV. 1998, 2009	CURB AND GUTTER – BARRIER USE WITH STANDARD SPECIFICATIONS FOR PUBLIC WORKS CONSTRUCTION	STANDARD PLAN 120-2 SHEET 1 OF 1

A/10 CURB/CURB AND GUTTER
SPPWC STD PLAN 120-2

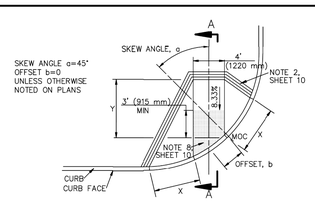

CASE C

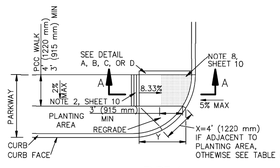

TYPE 1

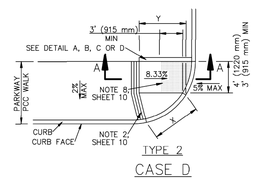

TYPE 2
CASE D

STANDARD PLANS FOR PUBLIC WORKS CONSTRUCTION	STANDARD PLAN
CURB RAMP	111-4 SHEET 5 OF 10

C/10 CURB RAMP
SPPWC STD PLAN 111-4

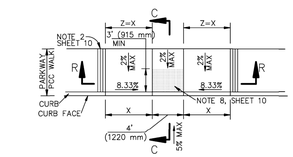

TYPE 1

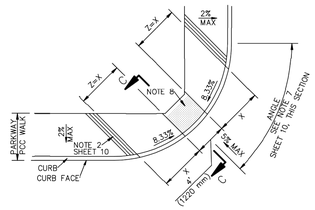

TYPE 2
CASE B

STANDARD PLANS FOR PUBLIC WORKS CONSTRUCTION	STANDARD PLAN
CURB RAMP	111-4 SHEET 4 OF 10

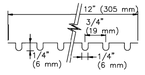

GROOVING DETAIL

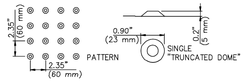

DETECTABLE WARNING DETAIL

DETAIL A

DETAIL B

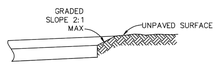

DETAIL C

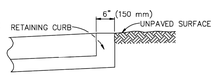

DETAIL D

GENERAL NOTES:

1. CONCRETE SHALL BE CLASS 520-C-2500 (310-C-17) CONFORMING TO SSPWC 201-1.1.2 AND SHALL BE 4" (100 mm) THICK.
2. THE RAMP SHALL HAVE A 12" (305 mm) WIDE BORDER WITH 1/4" (6 mm) GROOVES APPROXIMATELY 3/4" (19 mm) OC. SEE GROOVING DETAIL.
3. THE RAMP SURFACE SHALL HAVE A TRANSVERSE BROOMED SURFACE TEXTURE CONFORMING TO SSPWC 303-1.9.
4. USE DETAIL "A" OR "B" IF EXISTING SURFACE BEHIND LANDING IS PAVED.
5. USE DETAIL "C" OR "D" IF EXISTING SURFACE BEHIND LANDING IS UNPAVED.
6. R = 3' (900 mm) UNLESS OTHERWISE SHOWN ON PLAN.
7. ANGLE = Δ/2 UNLESS OTHERWISE SHOWN ON PLAN.
8. CONSTRUCT DETECTABLE WARNING SURFACE PER DETAIL THIS SHEET. MATERIALS SHALL BE PER CONTRACT DOCUMENTS.

STANDARD PLANS FOR PUBLIC WORKS CONSTRUCTION	STANDARD PLAN
CURB RAMP	111-4 SHEET 10 OF 10

B/10 CURB RAMP
SPPWC STD PLAN 111-4

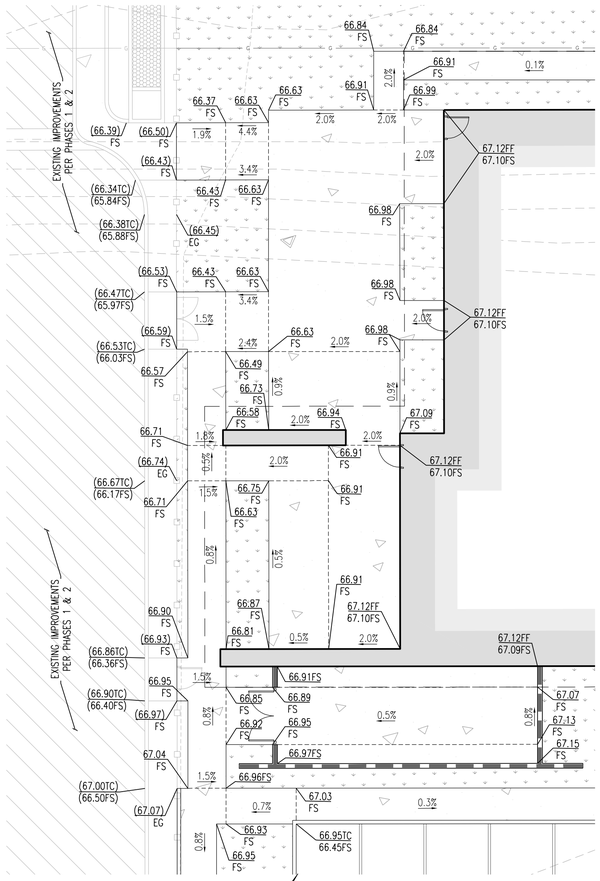

GRADING DETAIL
SCALE: 1"=10'

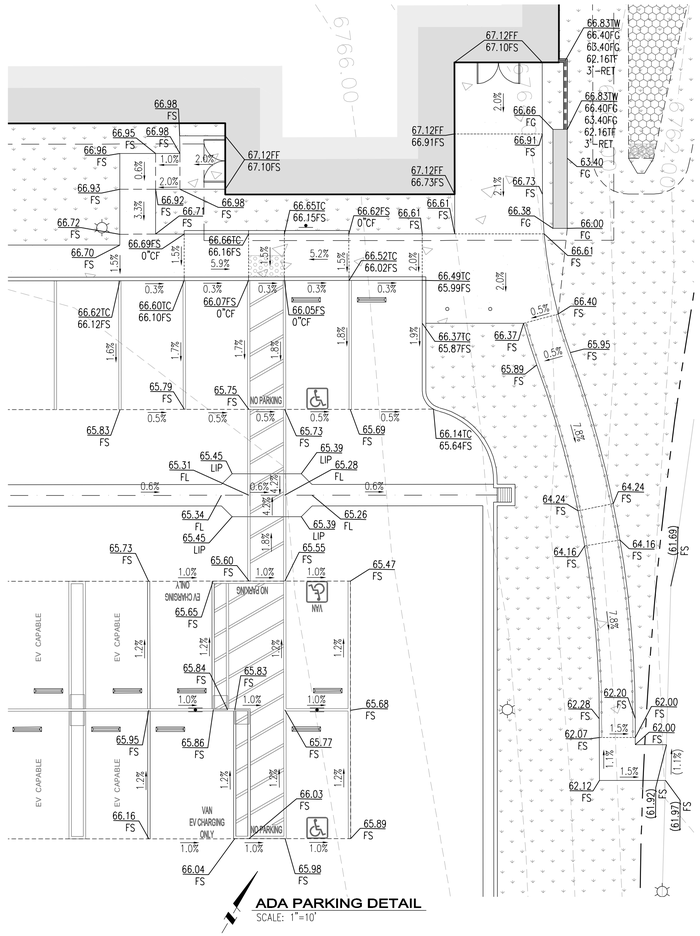

ADA PARKING DETAIL
SCALE: 1"=10'

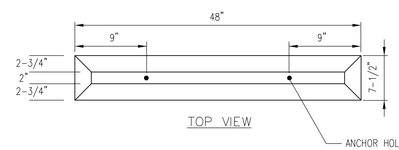

TOP VIEW

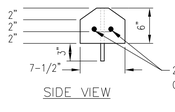

SIDE VIEW

ANCHOR HOLE WITH 1/4" COUNTER SINK FOR 5/8" ANCHOR PINS, 3" DEEP

F/10 WHEEL STOP
NOT TO SCALE

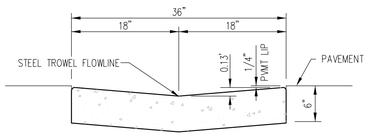

NOTES:
1. CONCRETE WILL BE CLASS 520-C-2500 PER SECTION 201 STANDARD SPECIFICATIONS FOR PUBLIC WORKS CONSTRUCTION
2. CURING COMPOUND SHALL BE TYPE 1-D.
3. ALL EXPOSED CORNERS SHALL BE 1/2" RADIUS.

D/10 36" RIBBON GUTTER
NOT TO SCALE

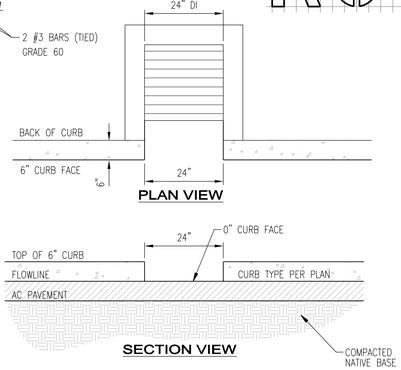

PLAN VIEW

SECTION VIEW

E/10 24" CURB OPENING
NOT TO SCALE

"NO PARKING" LEGEND
NOT TO SCALE

"VAN" LEGEND
NOT TO SCALE

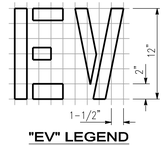

"EV" LEGEND
NOT TO SCALE

LICENSED ARCHITECT
JEFFREY D. METTER
No. C-47340
Exp.10-31-25
STATE OF CALIFORNIA

811 Know what's **below.** **Call 811** before you dig.

ENGINEER OF RECORD'S SEAL
REGISTERED PROFESSIONAL ENGINEER
JEFFREY D. METTER
No. 64696
CIVIL
STATE OF CALIFORNIA

VALUED ENGINEERING, INC
CIVIL ENGINEERING • LAND SURVEYING • LAND PLANNING
1529 W. 13TH STREET, UNIT G, UPLAND, CA 91786
PHONE (909) 982-4601
JEFFREY D. METTER — 04/15/2024 — R.C.E. No. 64696

CITY OF BIG BEAR LAKE
ENGINEERING DIVISION
39707 BIG BEAR BLVD
BIG BEAR LAKE, CA 92315
PHONE (909) 866-5831
FAX (909) 866-7511

CITY OF BIG BEAR LAKE
BIG BEAR LAKE, CALIFORNIA

APPROVED BY: _____ DATE _____

R.C.E. _____ EXP. DATE _____

CITY OF BIG BEAR LAKE

MOUNTAIN AREA REGIONAL TRANSIT AUTHORITY
160-170 BUSINESS CENTER DRIVE

CONSTRUCTION DETAILS

MARCH 2024

SHEET 10 OF 12

DRAWING NO. --

File: P:\OBS\076210Z\CAD\SHEETS\GRADING – PHASE 3\76210Z PG10 DTL.dwg Apr 15, 2024 - 9:50am Kent

RESOLUTION EXHIBIT C

CONDITIONS OF APPROVAL

CONDITIONAL USE PERMIT 2022-074
160-170 BUSINESS CENTER DRIVE
ASSESSOR'S PARCEL NUMBER'S 2328-021-12, 13

APPROVAL DATE: APRIL 19, 2023
EFFECTIVE DATE: MAY 1, 2023
EXPIRATION DATE: MAY 1, 2026 (Phase 1)

The following abbreviations identify the agency responsible for determining compliance with these conditions. The first group listed has responsibility for compliance at plan check, the second confirms compliance with the condition at final inspection, prior to final occupancy or issuance of a certificate of occupancy, or as specified in the condition. If only one group is identified, they have responsibilities from initial review through compliance verification. The reference number at the end of each condition (e.g. G-1 or MND-BIO2), should be retained for internal use.

RESPONSIBLE DEPARTMENTS/DIVISIONS			
ATTY	City Attorney	BLDG	Building & Safety
DWP	Department of Water	ENG	Engineering Division
PLNG	Planning Division	FIRE	Fire Protection District
PW	Public Works	MND	Mitigated Negative Declaration

GENERAL CONDITIONS

1. Approval of CUP 2022-074 (herein after "project") is granted for property located at 160-170 Business Center Drive, Assessor Parcel Number's 2328-021-12, 13 to to develop a vacant 3.55 acre site with a bus storage/maintenance facility and administrative offices. The project would include a 1-story, 11,470 SF maintenance building for service bays, a bus wash, and other support spaces for drivers and the bus fleet. The administration building, also 1-story, anticipates a 11,200 SF building area. This approval is based on the application and supplemental materials including approved plans stamped as "Received on June 17, 2022" (hereinafter "the plans") on file with the Planning Division. Build-out and use of the development shall conform with the plans, as approved and conditioned herein, and shall not be further altered unless subsequently reviewed and approved by the City. Any future adjustment or modification to the plans shall be considered by the Community Development Director or designee, may require a separate discretionary review application, and shall conform to all City, State, and Federal requirements, including subsequent City Code requirements or policies. (PLNG, G-1)

2. Developer means permit applicant, property owner, operator, permittee, lessee, and/or tenants using the space(s) for the intended use(s). Developer shall comply with project conditions for the life of the project. (ATTY, G-2)

3. Developer shall obtain necessary approvals prior to initiating any new construction or modifications authorized under this permit, including but not limited to temporary construction trailers, temporary staging areas, model home sales offices, placement or construction of advertising signs of any kind, structures, and exterior and/or interior building modifications. (PLNG/BLDG, G-3)

4. If Developer (including but not limited to owner or tenant) fails to comply with any of the permit conditions, then Developer shall be subject to permit revocation or enforcement actions, pursuant to the City Code. All costs associated with any such actions shall be the responsibility of Developer, owner or tenant. (ATTY, G-4)

5. If not appealed, this approval shall become effective on the eleventh (11th) day after the decision date. Should the effective date fall on a non-business day, the decision shall become effective on the next city business day following such 11th day. Failure to file a timely appeal prior to the effective date, or commencement of any activity related to the project, is understood as the Developer's acceptance of all conditions and obligations imposed by this permit and waiving any challenge to the validity of the conditions and obligations stated therein. (ATTY, G-5)

6. This permit shall automatically expire, with Phase 1 becoming null and void, thirty-six (36) months from the effective date unless Developer has inaugurated the project and complied with all conditions of approval, as demonstrated by the issuance of applicable building permits and installation of substantial construction improvements on such permits. Once Phase 1 has been inaugurated, Developer shall initiate Phase 2 no later than forty-eight (48) months from the effective date in the same matter, specifically with the issuance of applicable building permits and installation of substantial construction improvements relating to the Phase 2 development. (PLNG)

7. If a time extension is necessary or desired, Developer is responsible for submitting a completed application form with corresponding fees to the Planning Division at least ninety (90) days prior to the expiration date. Should the ninetieth (90th) day prior to the expiration date fall on a non-business day, the completed application form with corresponding fees must be submitted no later than the first business day prior to the ninetieth (90th) day. Should such time extension request be received in less time, the Planning Division may not be able to process the request in advance of the expiration date. In this situation, the Developer acknowledges that should the permit expire prior to project inauguration, new land use entitlement(s) would need to be requested before the project may commence. (ATTY, G-7)

8. Approval of this application does not relieve Developer from complying with all applicable Federal, State, County or City regulations or requirements. (ATTY, G-8)

9. In the event that exhibits and written conditions are inconsistent, the written conditions shall prevail. (ATTY, G-9)

10. Developer agrees, as part of and in connection with each and any of the application(s), to defend, indemnify, and hold City, any departments, agencies, divisions, boards, and/or commissions of the City, and its elected officials, officers, contractors serving as City officials, agents, employees, and attorneys of the City ("Indemnitees") harmless from liability for damages and/or claims, actions, or proceedings for damages for personal injuries, including death, and claims for property damage, and with respect to all other actions and liabilities for damages caused or alleged to have been caused by reason of the Developer's activities in connection with this project on the project site, and which may arise from the direct or indirect operations of the Developer or those of the Developer's contractors, agents, tenants, employees or any other persons acting on Developer's behalf, which relate to the development and/or construction of the project. This indemnity provision applies to all damages and claims, actions, or proceedings for damages, as described above, regardless of whether the City prepared, supplied, or approved the plans, specifications, or other documents for the project.

    In the event of any legal action challenging the validity, applicability, or interpretation of any provision of this approval, or any other supporting document relating to the project, the City will promptly notify Developer of the claim, action, or proceedings and will fully cooperate in the defense of the matter.

    a. Once notified, Developer must indemnify, defend and hold harmless the Indemnitees, and each of them, with respect to all liability, costs and expenses incurred by, and/or awarded against, the City or any of the Indemnitees in relation to such action.

    b. Within 15 days' notice from the City of any such action, Developer shall provide to City a cash deposit to cover legal fees, costs, and expenses incurred by City in connection with defense of any legal action in an initial amount to be reasonably determined by the City Attorney. City may draw funds from the deposit for such fees, costs, and expenses.

    c. Within 5 business days of each and every notice from City that the deposit has fallen below the initial amount, Applicant shall replenish the deposit each and every time in order for City's legal team to continue working on the matter.

    d. City shall only refund to Developer any unexpended funds from the deposit within 30 days of: (i) a final, non-appealable decision by a court of competent jurisdiction resolving the legal action; or (ii) full and complete settlement of legal action.

    The City shall have the right to select legal counsel of its choice that the Developer reasonably approves. The parties hereby agree to cooperate in defending such action. The City will not voluntarily assist in any such third-party challenge(s) or take any position adverse to the Developer in connection with such third-party challenge(s). In consideration for approval of the project, this condition shall remain in effect if the entitlement(s) related to this project is rescinded or revoked, whether or not at the request of Developer. (ATTY, G-10)

11. Developer is responsible for informing all subcontractors, consultants, englneers, or other business entities providing services related to the project of their responsibilities to comply with all permit conditions and the Big Bear Lake Municipal Code, including but not limited to the requirement that a business license be obtained by all entities doing business in the City. (ATTY, G-11)

12. Developer is responsible to ensure that all plans, specifications, studies, reports, calculations, maps, notes, legal documents, and designs, are be prepared, signed, and stamped (as required) by those individuals legally authorized to do so. (ATTY, G-12)

13. All uses and activities on the subject property must occur inside the buildings and/or structures or locations as approved by this permit, or otherwise allowed under the Big Bear Lake Municipal Code. On-site uses and activities shall be conducted in accordance with State, Federal, and local regulations and shall not create any public nuisances as a result of the operations. (PLNG, G-13)

14. Except as modified by this permit, Developer shall, for the life of the project, maintain off-street parking for all on-site uses in accordance with the Big Bear Lake Municipal Code requirements, including number and type of spaces, stall size, paving, striping, location and access. (PLNG, G-14)

CONDITIONS FOR COMPLIANCE PRIOR TO ISSUANCE OF PERMITS

15. Prior to initiating any construction or activity within the public right-of-way or city-owned property, Developer must obtain the proper approvals, such as but not limited to an encroachment permit, from the Public Works Department. (ENG/P-1)

16. Prior to issuance of grading plans or building permits, whichever comes first, Developer shall submit a stamped, signed, and dated soil investigation report prepared by a geotechnical engineer or civil engineer containing site-specific design recommendations. As appropriate, the Building Official may request additional studies or verification to evaluate soil strength, the effect of moisture variation on soil-bearing capacity, compressibility, liquefaction, seismically induced soil liquefaction, soil instability, and expansiveness. The submittal from the geotechnical engineer or civil engineer shall clarify that:
    a. The plans and specifications substantially conform to the recommendations in the soil investigation; and
    b. The geotechnical engineer or civil engineer who prepared the soil investigation has been retained by Developer to provide soil observations onsite, and provide periodic and final reports to the City of Big Bear Lake. (BLDG, P-4)

17. The proposed location of the project is partially situated in a flood zone AE, development permits for construction on Flood plains must comply with the requirements of the City of Big Bear Lake Municipal Code Chapter 15.64.
    a. Construction materials and methods must comply with FEMA Technical bulletin TB2-93. (ENG)
    b. Anchoring of the Structure must comply with TB-1,2,3 & 7. (ENG)
    c. Utilities such as electrical outlets, heating, ventilation and the similar must be designed and/or located so as to prevent water from entering or accumulating within the components during conditions of flooding. (ENG)
    d. Flood vents must be provided for the structures. (ENG)
    e. Lowest floor elevation must rise 1' from the Base Flood Elevation (ENG)
    f. A LOMR will be only required if the applicant of the project wishes be relieved of the requirement for flood insurance. If so, the property would have to be removed from the flood zone indicated on the FIRM panel. This would require a LOMR. the city submits the application requesting a map revision. The project's engineer would be required to do all hydrologic and hydraulic work, and prepare the reports but the formal application has to be executed by the city within 6 months of project completion. (ENG)
    g. A Final WQMP document must be submitted after planning commission approval and will require additional payment. (ENG) Percolation test showed that infiltration is slow/not feasible, that has to be reflected in the BMP device selection. (ENG)
    h. There is an existing storm drain located in the East side of the property along Sandalwood Dr., the outlet of the BMP devices can be considered to be connected to the existing storm drain system if the water is treated on site, and calculations are shown to demonstrate that the pipe size has enough capacity to carry the extra water runoff produced by the project. (ENG) Plans will need to show all existing and proposed utilities. (ENG)
    i. Grading plans must show contour lines NGVD 29 for benchmark, NAD 83 for bearing, limits of the flood zone elevation, water runoff direction that does not redirect water into the adjacent properties, calculation of cut and fill. (ENG)
    j. The use of flush curbs or curb openings is preferred for ease of plowing and drainage to be captured by the planted areas. (ENG)
    k. Show in the site plan the proposed locations for snow storage and indicate the area in square feet. (ENG)
    l. Need to provide a covered trash enclosure with an adequate concrete pad for loading/unloading the waste collection truck, asphalt usually cracks by fatigue. (ENG)
    m. Need to indicate the method that will be used for the containment of grease, fuels and oils in the maintenance area. (ENG)
    n. A 6" sewer lateral with cleanout will be required for the project. (ENG)
    o. RFP backflow assemblies will be required on all services to be installed at locations approved by the Department of Water and Power. (DWP)

18. Prior to issuance of grading plans, Developer shall submit a combined landscape and lighting plan to verify all project onsite lighting shall be of a type and in a location that does not constitute a hazard to vehicular traffic, either on private property or on public property, including but not limited to streets and roadways. Placement of such lighting shall not conflict with drainage plans, landscape plans, tree locations, parking spaces, or any other such land use and site plan concerns. (PLNG, P-5)

19. Prior to issuance of grading plans or building permits, Developer shall minimize potential construction-related noise impacts by including the following language on any grading, site work, and construction plans issued for the project site. (BLDG, P-6)

    "During earth-moving, grading, and construction activities, Developer shall implement the following measures at the project site:
    a. Limit earth-moving, grading, and construction activities to weekdays between 7:00 a.m. and 7:00 p.m., and on Saturdays between 9:00 a.m. and 7:00 p.m. Construction-related noise is prohibited on Sundays and City-observed holidays;
    b. Locate stationary noise-generating equipment as far as possible from sensitive receptors when sensitive receptors adjoin or are near a construction project area;
    c. Construct sound walls or other noise reduction measures prior to developing the project site;
    d. Equip all internal combustion engine driven equipment with intake and exhaust mufflers that are in good condition and appropriate for the equipment;
    e. Prohibit all unnecessary idling of internal combustion engines;
    f. Utilize 'quiet' models of air compressors and other stationary noise sources where technology exists; and
    g. Designate a 'disturbance coordinator' who would be responsible for responding to any complaints about construction noise or activities. The disturbance coordinator shall be responsible for determining the cause of the complaint and immediately implement reasonable measures to correct the problem."

20. Prior to issuance of grading plans or building permits, Developer shall minimize potential construction-related air quality impacts by including the following language on any grading, site work, and construction plans issued for the project site. (BLDG, P-7)

    "During earth-moving, grading, and construction activities, Developer shall implement the following measures at the project site:
    a. All exposed surfaces (e.g. parking areas, staging areas, soil piles, graded areas, and unpaved access roads) shall be watered at minimum two times per day;
    b. All haul trucks transporting soil, sand, or other loose material onsite or offsite shall be covered;
    c. All visible mud or dirt tracked out onto adjacent public roads shall be removed using wet power vacuum street sweepers at least once per day. The use of dry power sweeping is prohibited;
    d. All vehicle speeds on unpaved roads, pathways, or surfaces shall be limited to 15 miles per hour;
    e. All roadways, driveways, and sidewalks to be paved shall be completed as soon as possible. Building pads shall be laid as soon as possible after grading unless seeding or soil binders are used to stabilize the soil;
    f. Idling times shall be minimized either by shutting equipment off when not in use or reducing the maximum idling time to 5 minutes (as required by the California airborne toxics control measure Title 13, Section 2485 of California Code of Regulations). Clear signage shall be provided for construction workers at all access points;
    g. All construction equipment shall be maintained and properly tuned in accordance with manufacturer's specifications. All equipment shall be checked by a certified visible emissions evaluator; and
    h. Post a publicly visible sign identifying the City Building Division (909) 866-5831 during normal business hours, and the City Code Compliance Division (909) 866-CODE (909-866-2633) after hours for construction-related complaints. The South Coast Air Quality Management District 1-800-CUT-SMOG (1-800-288-7664) shall also be included to ensure compliance with applicable regulations."

21. Prior to issuance of building permits, Developer shall include on the first sheet after the cover sheet of the plan set, a complete reproduction of all conditions of approval, as adopted by the decision-maker. (PLNG, P-10)

22. Prior to issuance of building permits, the Property Owner shall sign and return to the Planning Division, a notarized deed restriction acknowledging the land use approvals for the property on a form provided by the City. Such deed restriction shall be confirmed as recorded by the County of San Bernardino prior to final inspection sign off. (PLNG, P-11)

23. Prior to issuance of building permits, Developer shall include all exterior building materials and colors, including product and finish, manufacturer name, color name and number, and surface finish type (e.g. stucco with sand finish, plaster with smooth finish) to be used in construction. (PLNG, P-13)

24. Prior to issuance of building permits, Developer shall submit a lighting plan with details of all exterior fixtures and locations. Such plan shall verify that all exterior light fixtures, including parking lot lighting, shall be full cutoff type, directs illumination downward only, is designed to minimize glare and light pollution, and shall not cast light on any adjacent property or roadway. Developer shall recess or conceal any under-canopy lighting elements so they are not directly visible from any public area. (PLNG, P-14)

25. Acceptance or approval of submitted plans does not release Developer from correction of mistakes, errors, or omissions contained therein. If, during the course of construction, the public interest requires a modification or departure from the approved plans, the City shall have the authority to require such modifications or departure and specify the manner in which the same is to be made. (BLDG, P-15)

26. Prior to issuance of a grading or building permit, Developer shall contact the Building Division to schedule a pre-site inspection. (BLDG, P-17)

27. Prior to commencement of any trenching, grading, staging, or construction activities onsite, Developer shall contact the Building Division to schedule a pre-construction meeting for the purpose of reviewing conditions of project approval and expectations throughout the project construction period. (BLDG/PLNG/ENG, P-18)

28. All applicable codes and ordinances shall apply, including but not limited to, the 2019 California Fire Code (CFC); California Code of Regulations, Title 19; and those portions of 2019 California Building Code, adopted by the State Fire Marshal. (FIRE, P-19)

29. A security fence with screening shall protect all construction sites. The fencing and screening shall be maintained at all times to protect pedestrians. All development projects shall submit a construction fencing plan with the construction design plans. Construction projects that have phased occupancy shall be completely separated by a construction fence that is screened and show the adjusted fence locations at each phase. (BLDG, P-23)

CONDITIONS FOR COMPLIANCE DURING ONSITE CONSTRUCTION ACTIVITIES

30. All related construction materials, debris, and equipment shall be stored on the project site. If that is not physically possible, then Developer shall obtain approvals for alternative locations in advance of such placement. For example, an encroachment permit would be required for placement within a public right-of-way, and a temporary use permit would be required for placement on another property. (BLDG, C-1)

31. At all times throughout the construction period, Developer shall maintain all portions of the job site in an organized and professional condition. At minimum, all trash, debris, construction scraps and broken/deteriorated machinery shall be removed from the site at the end of each week. If off-loaded construction materials are not used within 2 weeks, they shall be screened from view. All sidewalks, driveways and public/private roadways fronting the subject site shall be broom cleaned at the end of each construction work day. Construction site cleanup shall be in accordance with Big Bear Lake Municipal Code Chapter 15.50. (BLDG, C-2)

32. At all times during the construction period, Developer shall retain the stamped, approved job copy of the plans and permit card onsite. (BLDG, C-3)

CONDITIONS FOR COMPLIANCE PRIOR TO FINAL SIGNOFF OR OCCUPANCY

33. Prior to final signoff or certificate of occupancy, Developer shall submit to the Building Division a final grading and drainage plan prepared by a licensed civil engineer depicting all final grades (with accurate elevations above sea level indicated) and onsite drainage control measures to prevent storm water runoff onto adjoining properties. (BLDG/ENG, F-1)

34. Prior to final signoff or certificate of occupancy, Developer shall complete all required offsite and onsite improvements for the project, including structures, paving, and landscaping, unless the Community Development Director allows Developer to provide security or an executed agreement approved by the City Attorney to ensure timely completion of such improvements. (PLNG/BLDG, F-2)

35. The applicants shall prepare and submit Landscaping and irrigation plans, including all required WELO checklists and forms, in compliance with the State of California Model Water Efficient Landscape Ordinance (WELO). The landscaping plans must include all water features, pools and spas. The landscaping and irrigation plans must be reviewed by the DWP and Planning Department. (PLNG, F-3)

36. A Lot Merger application shall be submitted to the Engineering Department prior to building permit issuance and the merger shall be recorded prior to occupancy of any building. (PLNG, F-4)

LICENSED ARCHITECT — JEFFREY D. MEITER — No. 41390 — Exp.10-31-25 — STATE OF CALIFORNIA

811 Know what's below. Call 811 before you dig.

ENGINEER OF RECORD'S SEAL — REGISTERED PROFESSIONAL ENGINEER — JEFFREY D. MEITER — No. 64696 — CIVIL — STATE OF CALIFORNIA

VALUED ENGINEERING, INC
CIVIL ENGINEERING • LAND SURVEYING • LAND PLANNING
1529 W. 13TH STREET, UNIT G, UPLAND, CA 91786
PHONE: (909) 982-4601
JEFFREY D. MEITER — 04/15/2024 — R.C.E. No. 64696

CITY OF BIG BEAR LAKE
ENGINEERING DIVISION
39707 BIG BEAR BLVD
BIG BEAR LAKE, CA 92315
PHONE (909) 866-5831
FAX (909) 866-7511

CITY OF BIG BEAR LAKE
BIG BEAR LAKE, CALIFORNIA
APPROVED BY:
DATE
R.C.E. _____ EXP. DATE _____

CITY OF BIG BEAR LAKE
MOUNTAIN AREA REGIONAL TRANSIT AUTHORITY
160-170 BUSINESS CENTER DRIVE
CONDITIONS OF APPROVAL - PHASE 3

MARCH 2024
SHEET 11 OF 12
DRAWING NO. --

File: P:\JOBS\076210Z\CAD\SHEETS\GRADING - PHASE 3\76210Z PG11 COA.dwg Apr 15, 2024 - 9:49am Kent

CONDITIONS REGARDING THE MITIGATION MONITORING PROGRAM FOR THE MITIGATED NEGATIVE DECLARATION

Mitigation Measures No. / Implementing Action	Implementation Timing	Party Responsible for Implementation	Party Responsible for Monitoring	Date of Completion /Notes
Biological Resources				
BIO-1: Whenever possible, impacts to native nesting birds will be avoided by not conducting project activities that involve clearing of vegetation, generation of mechanical noise, or ground disturbance during the typical breeding season (February 1 to September 1), if species covered under the Migratory Bird Treaty Act and Fish and Game Code sections 3503, 3503.5, and 3513 are determined to be present. If project activities must be conducted during the nesting bird season, a qualified Avian Biologist will conduct pre-construction Nesting Bird Surveys (NBS) prior to project-related disturbance to nestable vegetation to identify any active nests within a 500-ft radius of the construction area. If no active nests are found, no further action will be required. If an active nest is found, the biologist will set appropriate no-work buffers around the nest which will be based upon the nesting species, its sensitivity to disturbance, nesting stage and expected types, intensity and duration of disturbance. Buffers around active nests will be a minimum of 250 feet, unless the biologist determines that smaller buffers would be sufficient to avoid impacts to nesting birds. The nests and buffer zones shall be field checked weekly by a qualified biological monitor. The approved no-work buffer zone shall be clearly marked in the field, within which no disturbance activity shall commence until the qualified biologist has determined the young birds have successfully fledged and the nest is inactive.	During ground-disturbing activities that involve project activities that involve clearing of vegetation, generation of mechanical noise, or ground disturbance during the typical breeding season (February 1 to September 1).	Project Proponent, Contractor, Biologist	City of Big Bear Lake	
Cultural Resources				
CR-1: In the event that any historic or prehistoric cultural resources are inadvertently discovered, all construction work in the immediate vicinity of the discovery shall stop and a quelified archaeologist shall be engaged to discuss the discovery and determine if further mitigation measures are warranted.	Upon discovery of cultural resources	Contractor, Archaeological Monitor	City of Big Bear Lake	
CR-2: If human remains are discovered, work shall halt in that area until a determination can be made regarding the provenance of the human remains; and the procedures set forth in CEQA Section 15064.5(e), the California PRC (Section 5097.98), and the State Health and Safety Code (Section 7050.5) shall be undertaken.	Upon discovery of human remains	Contractor, Archaeological Monitor	City of Big Bear Lake	
Geology and Soils				
GEO-1: All structures shall be designed to meet the California Building Code provisions in the most current CBC edition and the ASCE Standard 7-16, where applicable. It is the responsibility of both the property owner and project structural engineer to determine the risk factors with respect to using CBC minimum design values for the proposed facilities.	Prior to Building Permit Issuance	Project Proponent/ Contractor	City of Big Bear Lake	
GEO-2: The potential for liquefaction should be properly evaluated by the project Geotechnical Engineer.	Prior to Building Permit Issuance	Project Proponent/ Geotechnical Engineer	City of Big Bear Lake	
GEO-3: Site preparation recommendations as listed in a City-approved Final Geotechnical Investigation report shall be incorporated into project design.	During site preparation	Project Proponent/ Contractor	City of Big Bear Lake	
Tribal Cultural Resources				
N-1: The use of noisy equipment outside or within the repair building shall not be loud, excessive, raucous, disturbing, or exceeding 60db at the property line.	During operations	Project Proponent	City of Big Bear Lake	

Know what's below. Call 811 before you dig.

ENGINEER OF RECORD'S SEAL
REGISTERED PROFESSIONAL ENGINEER JEFFREY D. MEITER No. 64696 CIVIL STATE OF CALIFORNIA

VALUED ENGINEERING, INC
CIVIL ENGINEERING • LAND SURVEYING • LAND PLANNING
1529 W. 13TH STREET, UNIT G, UPLAND, CA 91786
PHONE (909) 982-4601
04/15/2024
JEFFREY D. MEITER R.C.E. No. 64696

CITY OF BIG BEAR LAKE
ENGINEERING DIVISION
39707 BIG BEAR BLVD
BIG BEAR LAKE, CA 92315
PHONE (909) 866-5831
FAX (909) 866-7511

CITY OF BIG BEAR LAKE
BIG BEAR LAKE, CALIFORNIA
APPROVED BY:
DATE
R.C.E. _____ EXP. DATE _____

CITY OF BIG BEAR LAKE
MOUNTAIN AREA REGIONAL TRANSIT AUTHORITY
160-170 BUSINESS CENTER DRIVE
CONDITIONS OF APPROVAL - PHASE 3

MARCH 2024
SHEET 12 OF 12
DRAWING NO.
--

LICENSED ARCHITECT ROGER CLARK Exp.10-31-25 STATE OF CALIFORNIA

File: P:\JOBS\076210\CAD\SHEETS\GRADING - PHASE 3\76210 PG12 COA.dwg Apr 15, 2024 - 9:48am Kent

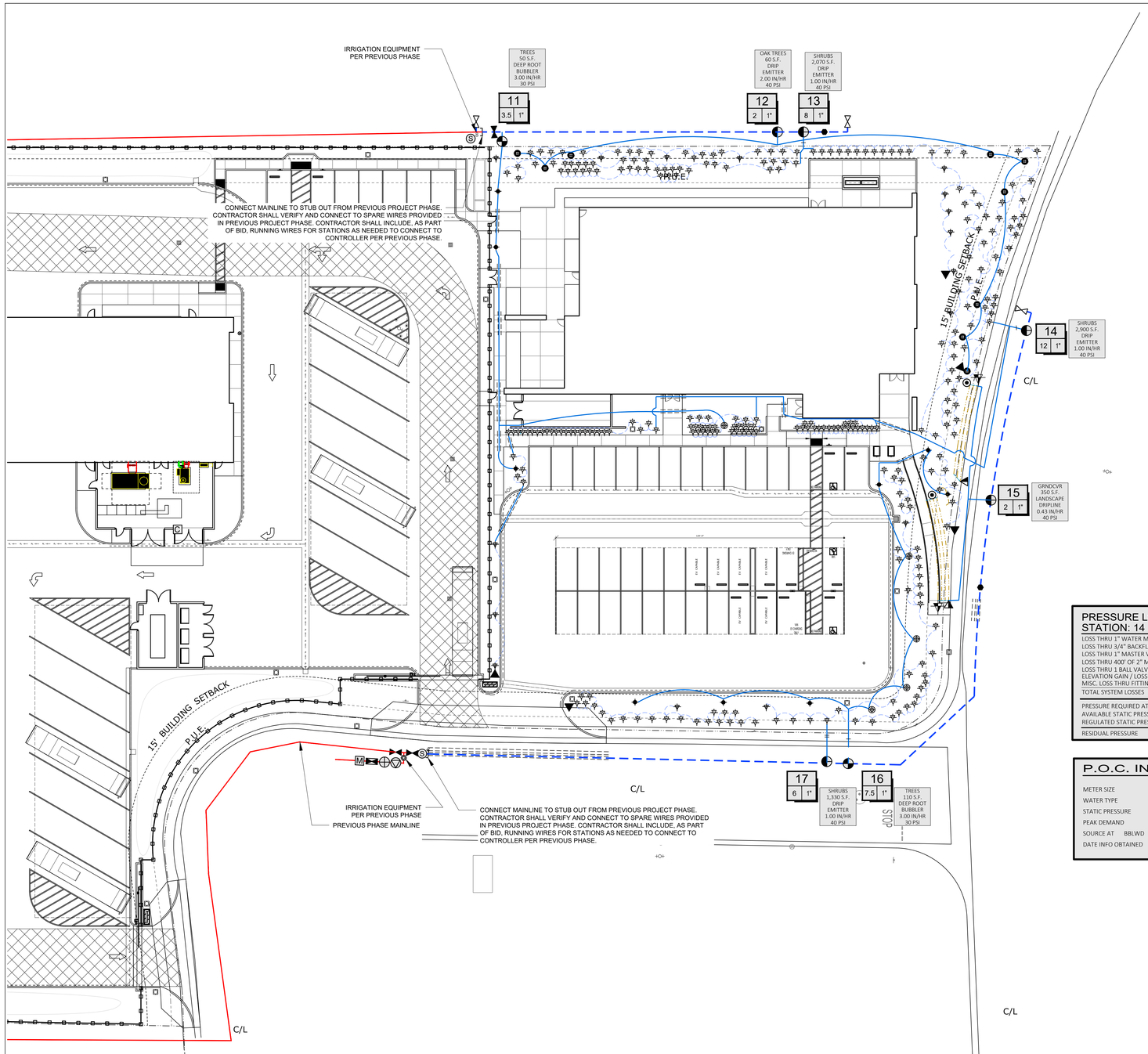

PRESSURE LOSS CALCULATIONS

STATION: 14 FLOW: 12 GPM

LOSS THRU 1" WATER METER	0.70	PSI
LOSS THRU 3/4" BACKFLOW	9.25	PSI
LOSS THRU 1" MASTER VALVE	1.80	PSI
LOSS THRU 400' OF 2" MAIN	.52	PSI
LOSS THRU 1 BALL VALVE	1.00	PSI
ELEVATION GAIN / LOSS	0.00	PSI
MISC. LOSS THRU FITTINGS (10%)	1.50	PSI
TOTAL SYSTEM LOSSES	14.77	PSI
PRESSURE REQUIRED AT VALVE	53.00	PSI
AVAILABLE STATIC PRESSURE	120.00	PSI
REGULATED STATIC PRESSURE	75.00	PSI
RESIDUAL PRESSURE	7.23	PSI

P.O.C. INFORMATION

METER SIZE	1"
WATER TYPE	POTABLE
STATIC PRESSURE	120 PSI
PEAK DEMAND	20 GPM
SOURCE AT BBLWD	-
DATE INFO OBTAINED	4/4/23

IRRIGATION PLANS ARE DIAGRAMMATIC IN NATURE. IRRIGATION MAINLINE AND ALL VALVES TO BE LOCATED ON PROJECT PROPERTY, IN PLANTER AREAS WHERE POSSIBLE. NO IRRIGATION EQUIPMENT IS TO BE INSTALLED IN STREETS, DRIVE AISLES OR BUILDINGS.

EQUIPMENT LEGEND

SYMBOL	MANUFACTURER/MODEL #	SIZE	DETAIL	NOTES
M	IRRIGATION WATER METER- EXISTING PER PREVIOUS PHASE	1"	N/A	-
C	RAINBIRD ESP12-LXMEF IRRIGATION CONTROLLER EQUIPPED WITH ESPLXMSM12 EXPANSION MODULE, LNK WIFI MODULE, AND WR2-RFC-48 RAIN/FREEZE SENSOR INSTALLED IN STRONG BOX SB-1855W WALL MOUNT ENCLOSURE- EXISTING PER PREVIOUS PHASE	24 STA.	'A', LI-2	(1,2)
	FEBCO 825YA REDUCED PRESSURE BACKFLOW PREVENTER LOCATED IN A STRONG BOX SBBC-22ALI VANDAL RESISTANT ENCLOSURE WITH INSULATED BLANKET- EXISTING PER PREVIOUS PHASE	1"	'B', LI-2	(4)
	WATTS LFUSB-Z3 WATER PRESSURE REDUCING VALVE. SET TO AN OUTPUT PRESSURE OF 75 PSI AND ADJUST IN THE FIELD AS NECESSARY- EXISTING PER PREVIOUS PHASE	1-1/2"	'H', LI-3	(3)
	RAINBIRD 100-EFB-CP NORMALLY CLOSED MASTER VALVE WITH PRS-D DIAL.- EXISTING PER PREVIOUS PHASE	1-1/2"	'C', LI-2	(3)
	FLOMEC QS200-15 FLOW METER- EXISTING PER PREVIOUS PHASE	1-1/2"	'D', LI-2	(3)
	WINTERIZATION AIR NOZZLE HOOK-UP- EXISTING PER PREVIOUS PHASE	LINE SIZE	-	(3)
	NIBCO T-585 BRONZE BALL VALVE	1-1/2"	'E', LI-2	(3)
	NIBCO T-585 BRONZE WINTERIZATION VALVE	1-1/2"	'F', LI-2	(3)
	RAINBIRD #33DLRC SERIES QUICK COUPLING VALVE	3/4"	'G', LI-2	(3)
	RAINBIRD PESB SERIES ELECTRIC CONTROL VALVE	1"	'H', LI-2	(3)
	RAINBIRD XCZ-100-PRB-COM DRIP CONTROL ZONE ASSEMBLY	1"	'I', LI-2	(3)
	SCH. 40 PVC IRRIGATION MAINLINE - 24" MIN. COVER	1-1/2"	'J', LI-2	(3)
	SCH. 40 PVC NON-PRESSURE LATERAL LINE - 12" MIN. COVER	PLAN SIZE	'J', LI-2	(3)
	SCH. 40 PVC DRIP DISTRIBUTION LINE - 9" MIN. COVER	PLAN SIZE	'J', LI-2	(3)
	SCH 40 PVC IRRIGATION PIPE / WIRE SLEEVE - 24" MIN. COVER	SEE CHART	'K', LI-2	(3)
NOT SHOWN	UF RATED CONTROL WIRE, 12 GA COMMON, 14 GA PILOT	12/14 GA	'L', LI-2	-
S	SPARE WIRES PULLED- EXISTING PER PREVIOUS PHASE	-	'M', LI-2	-
	HUNTER PLD-AVR AIR/VACUUM RELIEF VALVE	1/2"	'A', LI-3	-
	SALCO SLV-075-LF AUTOMATIC DRIP FLUSH VALVE	3/4"	'A', LI-3	(3)
	DRIPLINE MANUAL FLUSH VALVE	LINE SIZE	'D', LI-3	(3)
	HUNTER ECO-ID DRIP OPERATION INDICATOR	6"	'I', LI-3	-
	SCH. 40 PVC DRIPLINE HEADER	3/4"	'J', LI-2 'G', LI-3	(3)
	NETAFIM TLCV6-18 LANDSCAPE DRIPLINE	17 MM	'E'-'G', LI-3	(3)
	STUB-OUT MAINLINE IN VALVE BOX FOR FUTURE EXPANSION	1"	-	(3)

(1) LANDSCAPE CONTRACTOR TO COORDINATE ELECTRICAL POWER WITH ELECTRICAL CONTRACTOR.
(2) INSTALL RAIN/FREEZE SENSOR NEAR TOP OF MECHANICAL ENCLOSURE WALL, FREE FROM ANY OVERHEAD OBSTRUCTIONS.
(3) PIPING AND VALVES ARE SHOWN IN HARDSCAPE FOR CLARITY ONLY.
(4) CONTRACTOR TO LOCATE BACKFLOW PREVENTER IN SHRUB AREA AND SCREEN WHENEVER POSSIBLE.

* = UNLESS OTHERWISE NOTED

SPRINKLER LEGEND

SYMBOL	MANUFACTURER/MODEL #	NOZZLE	RAD.	PSI	FLOW (GPM) Q	T	H	TT	TQ	F	Van	PRECIP RATE	DETAIL	NOTES
TREE BUBBLERS														
	RAINBIRD RWS-1401-B-C	F		30						0.25		3.00	'N', LI-2	(1)
	RAINBIRD RWS-1402-B-C	F		30						0.50		3.00	'N', LI-2	(2)
	RAINBIRD PCT-07 DRIP EMITTER ON GPH IRRIGATION GIH12 RISER			30						7.00		1.00	'B', LI-3	(3,4)
SHRUB BUBBLERS														
	RAINBIRD PCT-05 DRIP EMITTER ON GPH IRRIGATION GIH12 RISER			30						5.00		1.00	'B'&'C', LI-3	(3,5)
	RAINBIRD PCT-07 DRIP EMITTER ON GPH IRRIGATION GIH12 RISER			30						7.00		1.00	'B'&'C', LI-3	(3,5)

(1) EACH TREE TO RECEIVE (2) BUBBLERS FOR A TOTAL OF 0.50 GPM PER SYMBOL. LOCATE BUBBLER ON OPPOSITE SIDES OF TREE, 18"-24" CLEAR OF TRUNK.
(2) EACH TREE TO RECEIVE (2) BUBBLERS FOR A TOTAL OF 1.00 GPM PER SYMBOL. LOCATE BUBBLER ON OPPOSITE SIDES OF TREE, 18"-24" CLEAR OF TRUNK.
(3) FLOW IS GALLONS PER HOUR
(4) EACH TREE IS TO RECEIVE (3) EMITTERS FOR A TOTAL OF 21 GPH PER SYMBOL. EMITTERS TO BE LOCATED EQUIDISTANT AROUND TRUCK, 18" MIN. CLEAR OF TRUNK
(5) EACH SHRUB TO RECEIVE (2) EMITTERS. EMITTERS TO BE LOCATED ON OPPOSITE SIDES OF SHRUB, 6"-12" CLEAR OF PLANT BASE. INSTALL EMITTERS PARALLEL TO SLOPE, 6" UPHILL FROM SHRUB WHERE INSTALLED ON SLOPES.

PIPE SIZING CHART

	3/4" PIPE
I	1" PIPE
II	1 1/4" PIPE
III	1 1/2" PIPE
I	2" PIPE
II	2 1/2" PIPE
III	3" PIPE
II	4" PIPE
III	6" PIPE
III	8" PIPE

SCH 40 PVC SLEEVING CHART

1 1/4" SLEEVE	1-4 WIRES	1/2" PIPE
1 1/2" SLEEVE	5-10 WIRES	3/4" PIPE
2" SLEEVE	11-20 WIRES	1" PIPE
2 1/2" SLEEVE	21-30 WIRES	1 1/4" PIPE
3" SLEEVE	31-40 WIRES	1 1/2" PIPE
4" SLEEVE	41-60 WIRES	2" PIPE
6" SLEEVE	61-99 WIRES	2 1/2"-3" PIPE
8" SLEEVE	100+ WIRES	4" PIPE
10" SLEEVE	N/A	6" PIPE

HYDROZONE AREA
IRRIGATION TYPE
PRECIP RATE
PRESSURE

STATION # / CONTROLLER

FLOW (GPM)	VALVE SIZE

REFERENCE INFORMATION MAY BE PRESENTED VIA LINE COLOR AND STYLE OR LINEWEIGHT SIZE AND STYLE. CWDG IS NOT RESPONSIBLE FOR PLANS REPRODUCED BY OTHERS OR PLANS PRINTED IN BLACK & WHITE OR MONOCHROME

NORTH 0 20' 40' 80'

Water Use Calculations

California Water Efficient Landscape Worksheet

Reference Evapotranspiration (ET_o): 51.27 Project Type: Non-Residential 0.45

Hydrozone # / Planting Description	Plant Factor (PF)	Irrigation Method	Irrigation Efficiency (IE)	ETAF (PF/IE)	Landscape Area (Sq. Ft.)	ETAF x Area	Estimated Total Water Use (ETWU)
Regular Landscape Areas							
Shrubs	0.3	Drip	0.81	0.37	6,650	2,463	78,291
Trees	0.3	Bubbler	0.81	0.37	220	81	2,590
				Totals	6,870	2,544	80,881
						ETWU Total	80,881
						Maximum Allowed Water Allowance (MAWA)	98,271

ETAF Calculations

Regular Landscape Areas

Total ETAF x Area	2,544
Total Area	6,870
Average ETAF	0.37

Maintenance Schedule

Irrigation Maintenance	January	February	March	April	May	June	July	August	September	October	November	December
Adjust Sprinkler Height		X										
Test Entire System (weekly)	X	X	X	X	X	X	X	X	X	X	X	X
Flush out drip systems	X	X	X	X	X	X	X	X	X	X	X	X
Test Backflow Preventer				X								
Adjust Controller Schedule	X	X	X	X	X	X	X	X	X	X	X	X
Flush Drip Valve Filter	2X	2X	2X	2X	2X	2X	2X	2X	2X	2X	2X	2X
Check for Clogged/Non-Functioning Nozzles	X	X	X	X	X	X	X	X	X	X	X	X
Clean Basket Strainer		X		X		X		X		X		
Clean Wye Strainers		X			X			X			X	
Check all Valves for Leaks		X		X		X		X		X		
Replace Rain Sensor Wafers		X										

STAMPS

CONSULTANT BRANDING

RUHNAU CLARKE ARCHITECTS

C:\Users\LUKEMO~1\AppData\Local\Temp\AcPublish_12572\irrigation.dwg

PROJECT No. : 5-08-01
4/18/2024 10:25 AM

DRAWN BY: CHECKED BY:

ISSUE No.____ DATE____ DESCRIPTION____ REVISION No.____ DATE____ DESCRIPTION____

RUHNAUCLARKE.COM

3775 TENTH STREET, RIVERSIDE CALIFORNIA 92501 (951) 684 4664 / 5751 PALMER WAY, SUITE C, CARLSBAD CALIFORNIA 92010 (760) 438 5899

MOUNT TRANSIT MAINTENANCE FACILITY
INCREMENT #3
170 BUSINESS CENTER. BIG BEAR LAKE, CALIFORNIA
BIG BEAR LAKES

INCREMENT #3
IRRIGATION PLAN

LI-1.0

5-08-01

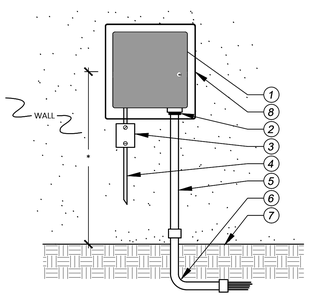

1. WALL MOUNT CONTROLLER - MOUNT PER MANUFACTURER
2. LOCKING NUT
3. ELECTRICAL JUNCTION BOX
4. 120V WIRES IN RIGID CONDUIT PER LOCAL CODES
5. RIGID CONDUIT FOR COMMON / CONTROL WIRES
6. SWEEP ELL - SIZE AS REQUIRED
7. FINISH GRADE (FLOOR SURFACE FOR INDOOR MOUNT)
8. CONTROLLER ENCLOSURE PER LEGEND AND/OR NOTES

* MOUNT CONTROLLER AT "EYE-LEVEL" (+/- 5'-0")

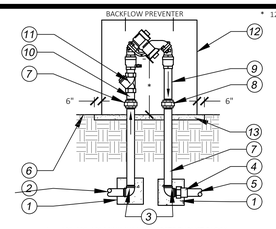

1. 12"x12"x12" MINIMUM CONCRETE THRUST BLOCK
2. TO POINT OF CONNECTION - ADAPT AS NECESSARY
3. BRASS 90 DEGREE ELL - TxT
4. PVC SCH 40 MALE ADAPTER - SIZE AS REQUIRED
5. PVC MAINLINE PER LEGEND - SIZE PER PLAN
6. FINISH GRADE
7. BRASS NIPPLE - TxT - LENGTH AS REQUIRED
8. BRASS UNION - SIZE AS REQUIRED
9. BRASS NIPPLE - TxT - 4" MINIMUM LENGTH
10. BRASS NIPPLE - TxT - 2" MINIMUM LENGTH
11. BRASS Y-STRAINER - 60 MESH SCREEN W/ HOSE BIB
12. VANDAL RESISTANT ENCLOSURE - MODEL PER LEGEND INSTALL PER MANUFACTURER'S REQUIREMENTS
13. INSTALL 4" CONCRETE PAD, EXTEND 6" PAST ENCLOSURE

NOTES:
INSTALL BACKFLOW PREVENTER PER LOCAL CODES, HEALTH DEPARTMENT STANDARDS, AND MANUFACTURER'S DIRECTIONS. VERIFY LOCAL REQUIREMENTS PRIOR TO INSTALLATION. WHERE BACKFLOW DEVICE SIZE IS SMALLER THAN MAINLINE, ENTIRE APPARATUS TO BE SIZE OF MAINLINE. BUSH DOWN ONLY AT THE BACKFLOW DEVICE. FINAL LOCATION OF DEVICE TO BE DETERMINED IN THE FIELD. BACKFLOW TO BE LOCATED IN PLANTER AREA AND SCREENED WITH SHRUBS AS POSSIBLE.

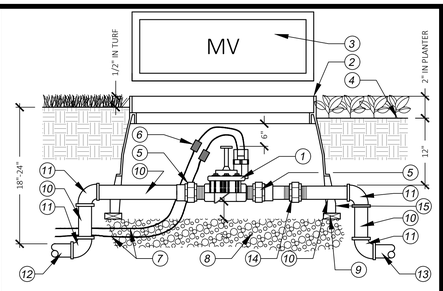

1. ELECTRIC CONTROL VALVE PER LEGEND
2. JUMBO RECTANGULAR VALVE BOX WITH BOLT-DOWN LID AND SS BOLT. LID AND BOX TO BE GREEN
3. HEAT BRAND "MV" ON LID IN 2" HIGH CHARACTERS
4. FINISH GRADE
5. PVC SCH 40 MALE ADAPTER
6. WATERPROOF WIRE CONNECTION W/36" EXPANSION LOOP
7. UF WIRES TO CONTROLLER MASTER VALVE OUTPUT, GAUGE PER LEGEND
8. 3/4" CRUSHED ROCK - 6" DEEP
9. COMMON BRICK - 4 REQUIRED
10. PVC MAINLINE PER LEGEND - LENGTH AS REQUIRED
11. PVC SCH 40 ELL - SxS
12. MAINLINE PIPING TO CONTROL VALVES
13. MAINLINE PIPING FROM POINT OF CONNECTION
14. PVC UNION - SIZE AS REQUIRED
15. VALVE BOX EXTENSION(S) AS REQUIRED

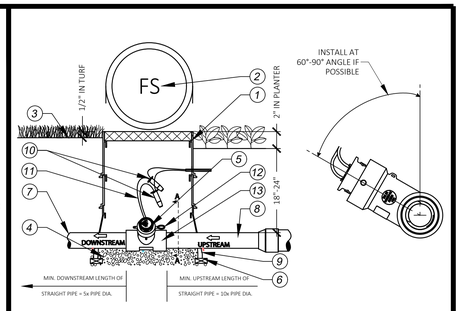

1. 10" ROUND PLASTIC VALVE BOX WITH LOCKING LID AND SS BOLT. BOX AND LID TO BE GREEN
2. HEAT BRAND "FS" ON LID IN 2" HIGH CHARACTERS
3. FINISH GRADE
4. 3/4" CRUSHED ROCK - 4" DEEP
5. FLOW SENSOR INSERT
6. COMMON BRICK - 4 REQUIRED
7. PVC MAINLINE FROM POC - PER LEGEND
8. PVC MAINLINE TO SYSTEM -PER LEGEND
9. VALVE BOX EXTENSIONS AS REQUIRED
10. WATERPROOF WIRE CONNECTORS WITH 36" EXPANSION LOOP
11. CABLE TO TRANSMITTER/CONTROLLER PER MANUFACTURER
12. QUICK RELEASE PIN
13. PVC TEE - SIZE PER PLAN

A Controller

NOTE: PER PREVIOUS PHASE

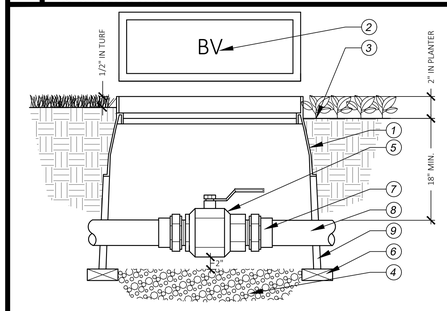

1. RECTANGULAR VALVE BOX WITH BOLT-DOWN LID AND SS BOLT. BOX AND LID TO BE GREEN
2. HEAT BRAND "BV" ON LID IN 2" HIGH CHARACTERS
3. FINISH GRADE
4. 3/4" CRUSHED ROCK - 4" DEPTH
5. BALL VALVE PER IRRIGATION PLAN
6. COMMON BRICK - 4 REQUIRED
7. SCH 40 PVC MALE ADAPTER - 2 REQUIRED
8. MAINLINE PIPING PER IRRIGATION PLAN
9. VALVE BOX EXTENSION(S) AS REQUIRED

NOTE:
USE TEFLON TAPE ON ALL MALE PIPE THREADS.

B Backflow Preventer

NOTE: PER PREVIOUS PHASE

1. 10" ROUND PLASTIC VALVE BOX W/ LOCKING LID
2. HEAT BRAND "BV" ON LID IN 2" HIGH LETTERS
3. FINISH GRADE
4. 3/4" CRUSHED ROCK - 6" DEPTH
5. BALL VALVE PER IRRIGATION PLAN
6. COMMON BRICK - 4 REQUIRED
7. SCH 40 PVC MALE ADAPTER
8. MAINLINE PIPING PER IRRIGATION PLAN
9. VALVE BOX EXTENSION(S) AS REQUIRED
10. SCH 40 PVC ELBOW

NOTE:
USE TEFLON TAPE ON ALL MALE PIPE THREADS.

MANUAL DRAIN VALVE WINTERIZING:

THE DRAIN VALVE SHOULD BE INSTALLED ON THE MAINLINE AT THE LOWEST POINT OF THE SYSTEM. ADDITIONAL DRAIN VALVES SHOULD BE INSTALLED IF THERE ARE MULTIPLE LOW POINTS ALONG THE RUN OF PIPE WHERE WATER COLLECTION MIGHT OCCUR. PIPING SHOULD BE SLOPED TO ALLOW WATER TO DRAIN OUT.

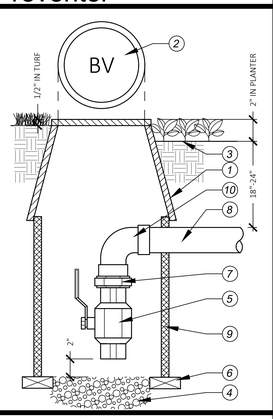

C Master Valve

NOTE: PER PREVIOUS PHASE

NOTE:
USE TEFLON TAPE ON ALL MALE PIPE THREADS.

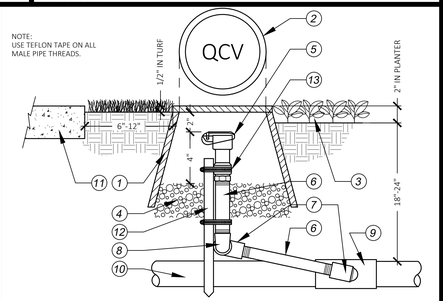

1. 10" ROUND PLASTIC VALVE BOX WITH LOCKING LID AND SS BOLT. BOX AND LID TO BE GREEN
2. HEAT BRAND "QCV" ON LID IN 2" HIGH CHARACTERS
3. FINISH GRADE
4. 3/4" CRUSHED ROCK 4" DEEP
5. QUICK COUPLER PER LEGEND
6. PVC SCH 80 NIPPLE LENGTH AS REQUIRED
7. PVC SCH 40 STREET ELL - TxT
8. PVC SCH 40 ELL - TxT
9. SCH 40 PVC MAINLINE FITTING
10. PVC SCH 40 MAINLINE PIPING PER EQUIPMENT LEGEND
11. WALK, CURB, OR WALL, ETC.
12. #4 REBAR, 18" MINIMUM LENGTH SUPPORT STAKE
13. STAINLESS STEEL CLAMP - 2 REQ.

D Flow Sensor

NOTE: PER PREVIOUS PHASE

NOTES:
TEE OFF MAINLINE TO BE SAME SIZE AS LATERAL LINE EXITING VALVE. ONLY REDUCE PIPE AT THE VALVE.

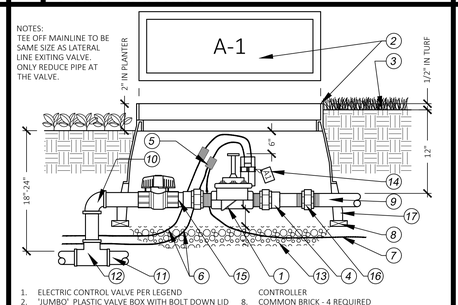

1. ELECTRIC CONTROL VALVE PER LEGEND
2. 'JUMBO' PLASTIC VALVE BOX WITH BOLT DOWN LID AND SS BOLT - HEAT BRAND STATION NUMBER ON LID IN 2" HIGH CHARACTERS. BOX AND LID TO BE GREEN
3. FINISH GRADE
4. PVC SCH 40 MALE ADAPTER - SIZE AS REQUIRED - TYP. OF 2
5. WATERPROOF WIRE CONNECTOR WITH 36" COILED EXPANSION LOOP
6. WIRES FROM CONTROLLER
7. COMMON WIRE TO OTHER VALVES ON SAME CONTROLLER
8. COMMON BRICK - 4 REQUIRED
9. PVC LATERAL LINE PER LEGEND
10. PVC SCH 40 ELL - SxS
11. PVC MAINLINE PER LEGEND
12. SCH 40 PVC MAINLINE FITTING
13. 3/4" GRAVEL - 6" DEEP
14. 'CHRISTY'S' I.D. TAG PER VALVE NUMBER
15. SCH. 80 PVC BALL VALVE - SAME SIZE AS CONTROL VALVE
16. PVC UNION - SIZE AS REQUIRED
17. VALVE BOX EXTENSION(S) AS REQUIRED

I Drip Control Valve Assembly

NOTES:
TEE OFF MAINLINE TO BE SAME SIZE AS LATERAL LINE EXITING VALVE. ONLY REDUCE PIPE SIZE AT VALVE.

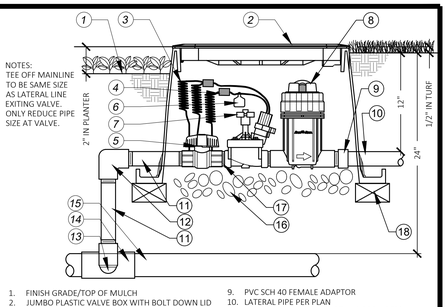

1. FINISH GRADE/TOP OF MULCH
2. JUMBO PLASTIC VALVE BOX WITH BOLT DOWN LID AND SS BOLT - HEAT BRAND STATION NUMBER ON LID IN 2" HIGH CHARACTERS. BOX COLOR TO BE GREEN
3. 36-INCH LINEAR LENGTH OF WIRE, COILED
4. WATERPROOF WIRE CONNECTION
5. BALL VALVE
6. 'CHRISTYS' I.D. TAG PER VALVE NUMBER
7. REMOTE CONTROL VALVE
8. PRESSURE REGULATING QUICK CHECK BASKET FILTER
9. PVC SCH 40 FEMALE ADAPTOR
10. LATERAL PIPE PER PLAN
11. PVC SCH 80 NIPPLE (LENGTH AS REQUIRED)
12. PVC SCH 40 ELL
13. PVC SCH 80 NIPPLE (2-INCH LENGTH, HIDDEN) AND PVC SCH 40 ELL
14. PVC SCH 40 TEE OR ELL
15. MAINLINE PIPE
16. 3-INCH MINIMUM DEPTH OF 3/4-INCH WASHED GRAVEL
17. PVC SCH 80 NIPPLE
18. COMMON BRICK - 4 REQUIRED

E Ball Valve

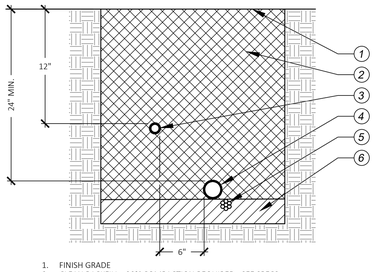

1. FINISH GRADE
2. CLEAN BACKFILL - 90% COMPACTION REQUIRED - SEE SPECS
3. NON-PRESSURE LATERAL LINE PER LEGEND
4. PRESSURE SUPPLY LINE PER LEGEND
5. CONTROL WIRES - INSTALL BELOW PRESSURE SUPPLY LINE
6. PROVIDE 2" OF CLEAN BACKFILL BELOW PRESSURE MAINLINE

NOTES:
BUNDLE AND TAPE WIRES AT 12'O.C. PIGTAIL AND LOOP CONTROL WIRES AT ALL 90° CHANGES IN DIRECTION. SPLICING OF WIRE RUNS IS NOT ALLOWED UNLESS APPROVED BY THE OWNER'S REPRESENTATIVE. 36" MIN. COVER IS REQUIRED FOR RECLAIMED WATER MAINLINE (WHERE APPLICABLE). INSTALL 1'x1'X1' THRUST BLOCK AT ALL TERMINAL POINTS ON MAINLINE.

F Manual Drain Valve

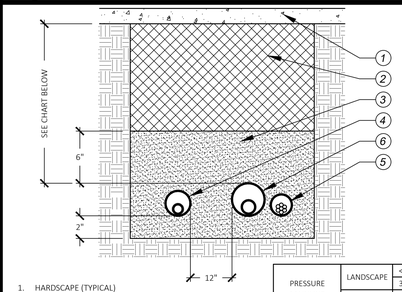

1. HARDSCAPE (TYPICAL)
2. CLEAN BACKFILL - 90% COMPACTION REQUIRED - SEE SPECS
3. SAND (TYPICAL)
4. NON-PRESSURE LATERAL LINE/ SLEEVE (SIZE PER CHART)
5. CONTROL WIRE SLEEVE ADJACENT TO MAINLINE SLEEVE (SIZE PER CHART) 6. PRESSURE SUPPLY LINE / SLEEVE (SIZE PER CHART)

PRESSURE MAINLINE	LANDSCAPE	<3"	24"
		3"+	36"
	VEHICULAR PAVING	<3"	30"
		3"+	36"
NON PRESSURE LATERAL	LANDSCAPE	<3"	12"
		3"+	18"
	VEHICULAR PAVING	<3"	24"
		3"+	30"

NOTES:
SIZE ALL SLEEVES PER SLEEVING CHART ON PLANS. EXTEND SLEEVES 12" BEYOND EDGE OF HARDSCAPE ON BOTH ENDS. RECLAIMED WATER SLEEVES TO BE A MINIMUM 42"-48" DEEP (OR PER WATER DISTRICT STANDARDS) WHERE APPLICABLE.

G Quick Coupler Valve

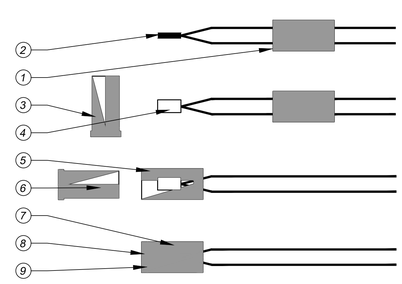

1. SLIP BASE SOCKET OVER END OF WIRES
2. STRIP WIRES APPROX. 5/8" FROM ENDS - TWIST TOGETHER
3. APPLY SEALER TO OUTSIDE OF SEALING PLUG AND FILL CAVITY WITH SEALER
4. PUT CRIMP END OVER WIRE ENDS - CRIMP SLEEVE AND CUT OFF EXCESS WIRE
5. PULL BASE SOCKET OVER END OF WIRES AS FAR AS POSSIBLE
6. PUSH SEALING PLUG INTO BASE SOCKET
7. PUSH WIRES TO END OF BASE SOCKET TO INSURE COMPLETE SEALING OF CONNECTION
8. COMPLETED WATERPROOF WIRE CONNECTION
9. SPEARS DS-100 WIRE CONNECTOR OR APPROVED EQUAL

H Remote Control Valve

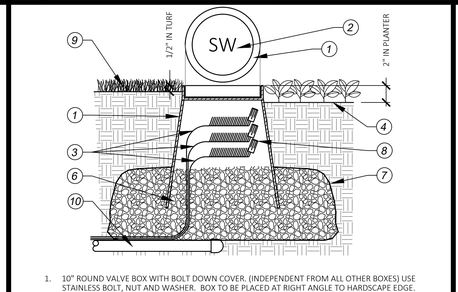

1. 10" ROUND VALVE BOX WITH BOLT DOWN COVER. (INDEPENDENT FROM ALL OTHER BOXES) USE STAINLESS BOLT, NUT AND WASHER. BOX TO BE PLACED AT RIGHT ANGLE TO HARDSCAPE EDGE.
2. HEAT BRAND "SW" ONTO LID IN 2" CHARACTERS
3. SPARE WIRES (PER PLAN) AND ONE COMMON WIRE CONTINUOUS FROM CONTROLLER. SEE EQUIPMENT LEGEND FOR SIZE AND COLOR.
4. FINISH GRADE IN SHRUB AREAS - 3" BELOW TOP OF BOX
5. PRESSURE SUPPLY LINE PER PLAN
6. 3/4" PEA GRAVEL. FILL TO TOP OF VALVE BOX HOLES
7. LANDSCAPE FABRIC
8. CAP WIRES WITH APPROVED WATERTIGHT WIRE CONNECTOR
9. FINISH GRADE IN TURF AREAS - 1" BELOW TOP OF BOX
10. CAP PRESSURE SUPPLY LINE DIRECTLY BELOW CENTER OF SPARE WIRE VALVE BOX (WHERE OCCURS)

J Trenching

K Sleeving

L Wire Connections

M Spare Wire Box

NOTE: PER PREVIOUS PHASE

N Tree Bubbler Heads

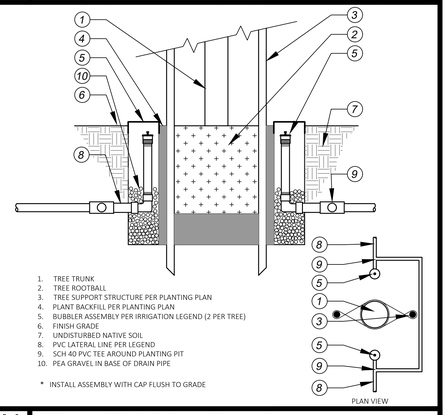

1. TREE TRUNK
2. TREE ROOTBALL
3. TREE SUPPORT STRUCTURE PER PLANTING PLAN
4. PLANT BACKFILL PER PLANTING PLAN
5. BUBBLER ASSEMBLY PER IRRIGATION LEGEND (2 PER TREE)
6. FINISH GRADE
7. UNDISTURBED NATIVE SOIL
8. PVC LATERAL LINE PER LEGEND
9. SCH 40 PVC TEE AROUND PLANTING PIT
10. PEA GRAVEL IN BASE OF DRAIN PIPE

* INSTALL ASSEMBLY WITH CAP FLUSH TO GRADE

STAMPS

CONSULTANT BRANDING

RUHNAU CLARKE ARCHITECTS

C:\Users\LUKEMO~1\AppData\Local\Temp\AcPublish_12572\irrigation.dwg

PROJECT No. : 5-08-01
4/18/2024 10:25 AM

DRAWN BY: CHECKED BY:

ISSUE No.____ DATE____ DESCRIPTION____
REVISION No.____ DATE____ DESCRIPTION____

RUHNAUCLARKE.COM

3775 TENTH STREET, RIVERSIDE CALIFORNIA 92501 (951) 684 4664 / 5751 PALMER WAY, SUITE C, CARLSBAD CALIFORNIA 92010 (760) 438 5899

MOUNT TRANSIT MAINTENANCE FACILITY
INCREMENT #3
170 BUSINESS CENTER. BIG BEAR LAKE, CALIFORNIA
BIG BEAR LAKES

INCREMENT #3
IRRIGATION DETAILS

LI-2.0

5-08-01

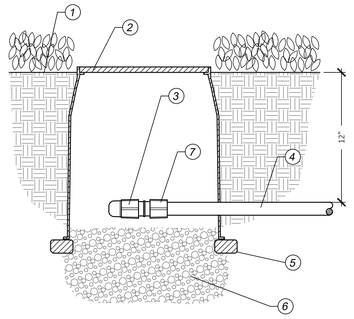

1. FINISH GRADE
2. 6" TAN ROUND VALVE BOX
3. AUTOMATIC FLUSH VALVE PER EQUIPMENT LEGEND
4. SCH. 40 PVC DRIP SUPPLY LINE
5. BRICK SUPPORTS (THREE REQUIRED)
6. 3/4" PEA GRAVEL SUMP
7. 3/4" HOSE THREAD ADAPTER

Automatic Flush Valve

SCALE:

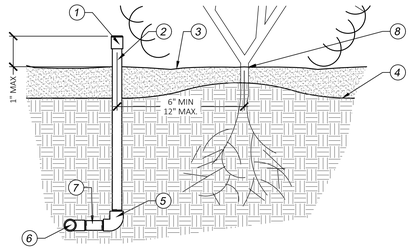

1. DRIP EMITTER PER IRRIGATION LEGEND
2. GIH RISER ASSEMBLY. LENGTH AS REQUIRED
3. MULCH PER PLAN
4. FINISH GRADE
5. SCHEDULE 40 PVC ELBOW, TXT
6. PVC TEE SCH. 40 OR ELBOW LINE SIZE
7. SCHEDULE 80 PVC NIPPLE, TXT, MAXIMUM 24" LENGTH.
8. PLANT BASE

B Drip Emitter

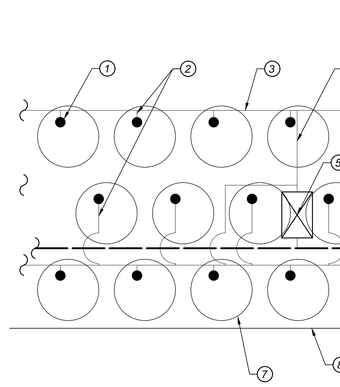

1. DRIP EMITTER PER IRRIGATION EQUIPMENT LEGEND AND EMITTER INSTALLATION DETAIL
2. SCH. 40 PVC NIPPLE - LENGTH AS REQUIRED
3. DRIP SUPPLY LINE PER IRRIGATION PLAN. CONTRACTOR TO ADJUST LATERAL LOCATION IN THE FIELD AS REQUIRED TO LIMIT NIPPLE LENGTHS
4. IRRIGATION LATERAL PER IRRIGATION PLAN
5. DRIP CONTROL VALVE ASSEMBLY PER PLAN
6. IRRIGATION MAINLINE PER PLAN
7. SHRUB PER PLANTING PLAN
8. EDGE OF HARDSCAPE/PLANTER AREA PER PLAN

C Shrub Drip Emitter Layout

SCALE: 1/2"=1'

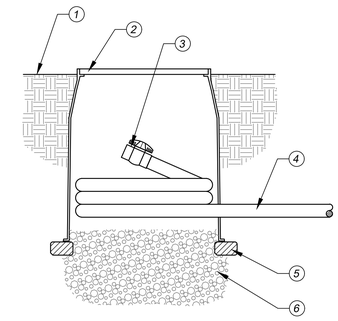

1. FINISH GRADE
2. 6" TAN ROUND VALVE BOX
3. PVC BALL VALVE - LINE SIZE
4. BLANK DRIPLINE
5. BRICK SUPPORTS (THREE REQUIRED)
6. 3/4" PEA GRAVEL SUMP

Dripline Flush Valve

SCALE:

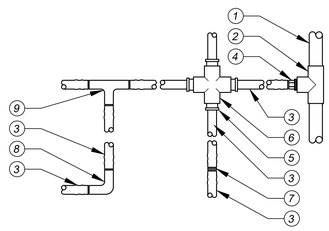

1. PVC PIPE (PER LEGEND)
2. SCH. 40 PVC TEE
3. LANDSCAPE DRIP TUBING (PER LEGEND)
4. SCH. 40 PVC MALE ADAPTER
5. COMPRESSION ADAPTER FITTING
6. SCH. 40 PVC CROSS
7. COMPRESSION COUPLING
8. COMPRESSION ELBOW FITTING
9. COMPRESSION TEE FITTING

NOTES:
ALL PERIMETER LATERALS ARE TO BE 2" TO 4" FROM THE EDGE OF PLANTER AREA. CONTRACTOR TO SIZE PVC SUPPLY MANIFOLD TO COMPENSATE FOR FLUSH VALVE FLOWS. THE TOTAL LENGTH OF ALL INTERCONNECTED DRIP LINE SHALL NOT EXCEED THE MAXIMUM RUN LENGTH.

E Dripline Fittings

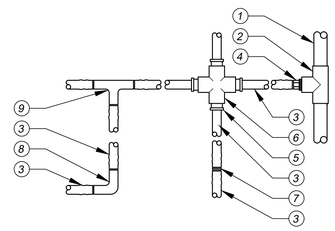

1. PVC PIPE (PER LEGEND)
2. SCH. 40 PVC TEE
3. LANDSCAPE DRIP TUBING (PER LEGEND)
4. SCH. 40 PVC MALE ADAPTER
5. COMPRESSION ADAPTER FITTING
6. SCH. 40 PVC CROSS
7. COMPRESSION COUPLING
8. COMPRESSION ELBOW FITTING
9. COMPRESSION TEE FITTING

NOTES:
ALL PERIMETER LATERALS ARE TO BE 2" TO 4" FROM THE EDGE OF PLANTER AREA. CONTRACTOR TO SIZE PVC SUPPLY MANIFOLD TO COMPENSATE FOR FLUSH VALVE FLOWS. THE TOTAL LENGTH OF ALL INTERCONNECTED DRIP LINE SHALL NOT EXCEED THE MAXIMUM RUN LENGTH.

F Dripline Fittings

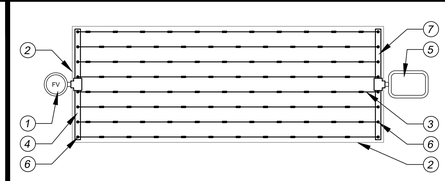

1. AUTOMATIC FLUSH VALVE (PER LEGEND) PLUMBED TO TUBING
2. AREA PERIMETER
3. LANDSCAPE DRIP TUBING (PER LEGEND)
4. PVC FLUSH MANIFOLD
5. REMOTE CONTROL VALVE WITH FILTER AND PRESSURE REGULATOR (SEE RCV DETAIL)
6. MANIFOLD-TO-ELBOW CONNECTION
7. PVC SUPPLY MANIFOLD

NOTES:
ALL PERIMETER LATERALS ARE TO BE 2" TO 4" FROM THE EDGE OF PLANTER AREA.

G Dripline End Connection

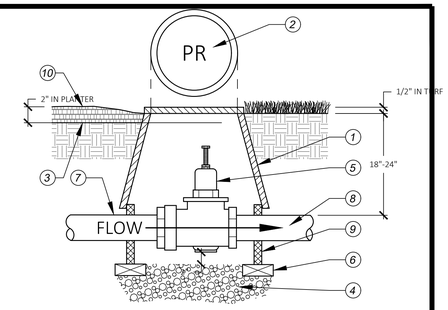

1. 10" ROUND PLASTIC VALVE BOX WITH LOCKING LID AND SS BOLT
2. HEAT BRAND BRAND "PR" ON LID IN 2" HIGH CHARACTERS
3. FINISH GRADE
4. 3/4" CRUSHED ROCK - 4" DEEP
5. PRESSURE REGULATOR PER LEGEND. SET PER PLAN
6. COMMON BRICK - 4 REQUIRED
7. PVC MAINLINE FROM POC - PER LEGEND
8. PVC MAINLINE TO SYSTEM - PER LEGEND
9. VALVE BOX EXTENSIONS AS REQUIRED
10. MULCH PER PLANTING PLAN

H Pressure Regulating Valve

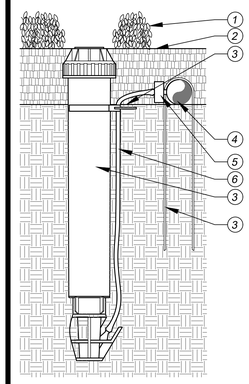

1. PLANT MATERIAL PER PLANTING PLAN
2. TOP OF MULCH
3. FINISH GRADE PER PLAN
4. DRIP TUBING PER PLAN
5. 1/4" SELF-PIERCING BARB CONNECTOR
6. DISTRIBUTION TUBING
7. DRIP SYSTEM OPERATION INDICATOR PER PLAN
8. DRIP STAKE PER SPECIFICATIONS

NOTES:
SET INDICATOR 2"-6" FROM EDGE OF CURBS AND WALKS, AND 6"-12" FROM FIXED VERTICLE OBJECTS SUCH AS FENCES, WALLS, AND BUILDINGS, ETC.

I Drip Operation Indicator

Yearly ET0

Jan	Feb	Mar	Apr	May	Jun	Jul	Aug	Sep	Oct	Nov	Dec	ET0
1.84	2.4	3.91	5.22	6.43	6.99	6.33	5.88	4.81	3.61	2.25	1.6	**51.27**
0.29	0.38	0.62	0.82	1.02	1.10	1.00	0.93	0.76	0.57	0.36	0.25	

IRRIGATION CONTROLLER SCHEDULE FOR FIRST SIX MONTHS AFTER PLANTING

CONTROLLER

Station	Flow (gpm)	Sprinkler Type	Plant Type	App.Rate Inches/Hr.	Water Days	Daily Run Time, Min.	Station	Flow (gpm)	Sprinkler Type	Plant Type	App.Rate Inches/Hr.	Water Days	Daily Run Time, Min.
11	3.5	Bubbler	Trees	3	4	4	**16**	7.5	Bubbler	Trees	3	4	4
12	2	Emitter	Oaks	1	4	18	**17**	6	Emitter	Shrubs	1	4	11
13	8	Emitter	Shrubs	1	4	11							
14	12	Emitter	Shrubs	1	4	11							
15	2	Dripline	Grndcvr	0.43	4	34							

IRRIGATION CONTROLLER SCHEDULE AFTER SIX MONTH PLANT ESTABLISHMENT PERIOD

CONTROLLER

Station	Flow (gpm)	Sprinkler Type	Plant Type	App.Rate Inches/Hr.	Water Days	Daily Run Time, Min.	Station	Flow (gpm)	Sprinkler Type	Plant Type	App.Rate Inches/Hr.	Water Days	Daily Run Time, Min.
11	3.5	Bubbler	Trees	3	3	4	**16**	10	Bubbler	Trees	3	3	4
12	2	Emitter	Oaks	1	3	18	**17**	13	Emitter	Shrubs	1	3	11
13	8	Emitter	Shrubs	1	3	11							
14	12	Emitter	Shrubs	1	3	11							
15	2	Dripline	Grndcvr	0.43	3	34							

Controller Schedules

STAMPS

CONSULTANT BRANDING

RUHNAU CLARKE ARCHITECTS

C:\Users\LUKCMO~1\AppData\Local\Temp\AcPublish_12572\Irrigation.dwg

PROJECT No. : 5-08-01
4/18/2024 10:25 AM

DRAWN BY: CHECKED BY:

ISSUE No.____ DATE____ DESCRIPTION____
REVISION No.____ DATE____ DESCRIPTION____

RUHNAUCLARKE.COM

3775 TENTH STREET, RIVERSIDE CALIFORNIA 92501 (951) 684 4664 / 5751 PALMER WAY, SUITE C, CARLSBAD CALIFORNIA 92010 (760) 438 5899

MOUNT TRANSIT MAINTENANCE FACILITY
INCREMENT #3
170 BUSINESS CENTER. BIG BEAR LAKE, CALIFORNIA
BIG BEAR LAKES

INCREMENT #3
IRRIGATION DETAILS

LI-2.1

5-08-01

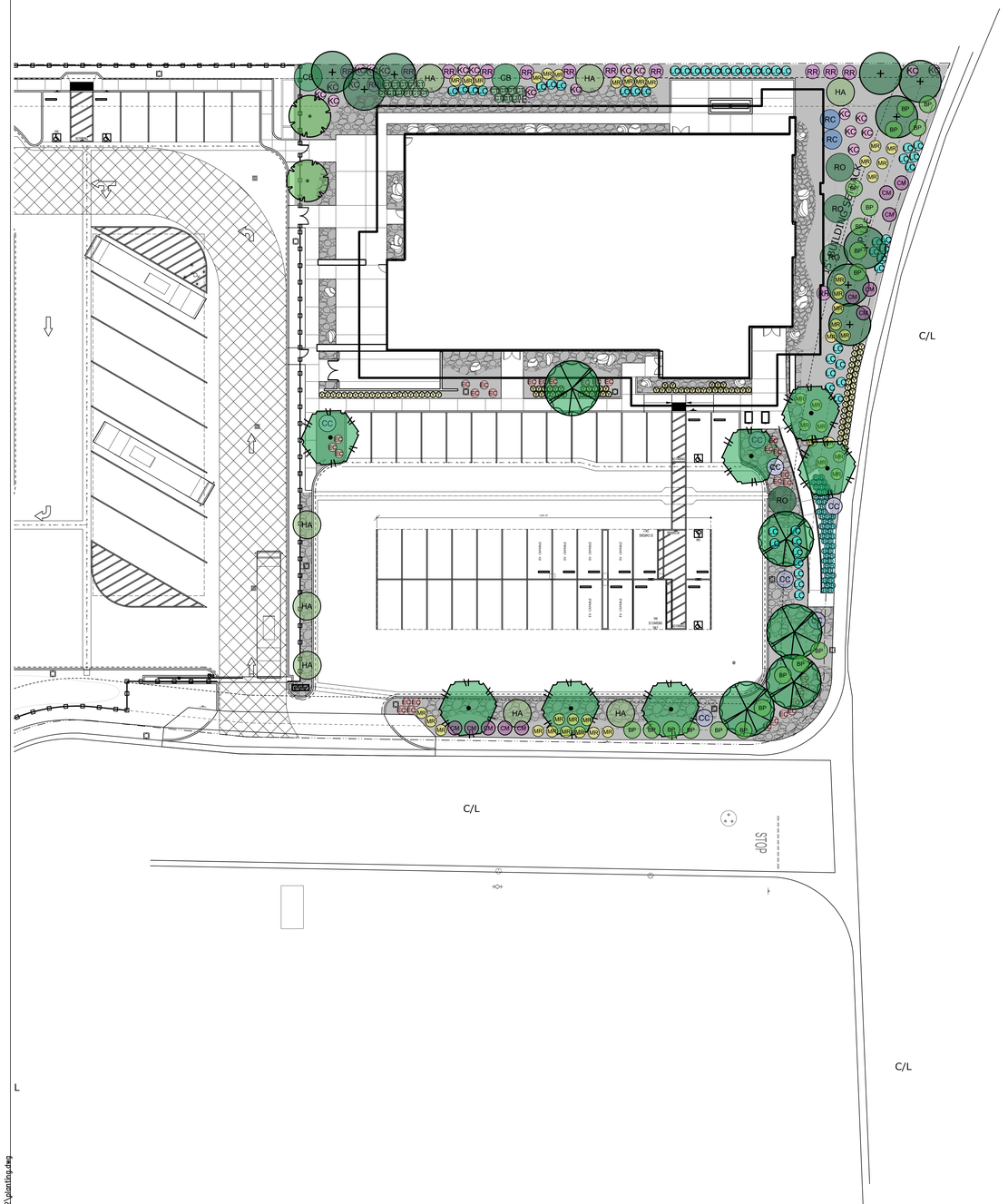

PLANTING LEGEND:

	BOTANIC NAME	COMMON NAME	SIZE / SPACING	WUCOLS	QNTY	DETAIL
TREES						
	Calocedrus decurrens	INCENSE CEDAR	36" BOX	MOD.	5	'A', LP-2
	Pinus ponderosa	PONDEROSA PINE	15 GAL	LOW	7	'A', LP-2
	Prunus ilicifolia	HOLLYLEAF CHERRY	15 GAL	LOW	2	'A', LP-2
	Quercus kelloggii	BLACK OAK	15 GAL	MOD.	9	'A', LP-2
SHRUBS / VINES						
CB	*Cercocarpus betuloides*	MOUNTAIN MAHOGANY	5 GAL	LOW	2	'C', LP-2
CC	*Ceanothus 'Concha'*	CONCHA WILD LILAC	1 GAL	LOW	8	'C', LP-2
LC	*Elymus condensatus 'Canyon Prince'*	CANYON PRINCE WILD RYE	1 GAL	LOW	50	'C', LP-2
EC	*Epilobium canum*	CALIFORNIA FUSHIA	1 GAL	LOW	31	'C', LP-2
HA	*Heteromeles arbutifolia*	TOYON	5 GAL	LOW	8	'C', LP-2
KC	*Keckiella cordifolia*	CLIMBING PENSTEMON	1 GAL	LOW	20	'C', LP-2
MR	*Muhlenbergia rigens*	DEER GRASS	1 GAL	LOW	42	'C', LP-2
RO	*Rhus ovata*	SUGAR BUSH	5 GAL	LOW	2	'C', LP-2
RR	*Ribes roezlii*	SIERRA GOOSEBERRY	1 GAL	LOW	13	'C', LP-2
RC	*Rosa californica*	CALIFORNIA WILD ROSE	5 GAL	LOW	2	'C', LP-2
GROUNDCOVERS						
Y	*Achillea millefolium*	YARROW	4" POTS @ 18" O.C.	LOW	103	'C', LP-2
BP	*Baccharis pilularis 'Pigeon Point'*	PIGEON POINT COYOTE BRUSH	1 GAL @ 72" O.C.	LOW	19	'C', LP-2
B	*Bouteloua gracilis*	BLUE GRAMA GRASS	1 GAL @ 24" O.C.	LOW	54	'C', LP-2
CT	*Carex tumulicola*	BERKELEY SEDGE	4" POTS @ 24" O.C.	LOW	18	'C', LP-2
CM	*Ceanothus maritimus 'Point Sierra'*	POINT SIERRA LILAC	1 GAL @ 60" O.C.	LOW	11	'C', LP-2
	3" MINIMUM DEPTH 3/4" CRUSHED ROCK. COLOR TO BE 'BARKWOOD'					'F', LP-2
	6" MINIMUM DEPTH 3"-5"Ø COBBLE ROCK. COLOR TO BE 'BAJA CRESTA'					'G', LP-2
	INSTALL 2'-5'Ø BOULDER - SIZE PER PLAN. COLOR TO BE 'BAJA CRESTA'					'H', LP-2

NOTES:
- ALL TREES WITHIN 6' OF HARDSCAPE TO RECEIVE ROOTBARRIER SEE DETAIL 'B', SHEET LP-2
- ALL PLANTER AREAS TO RECEIVE A 3" MINIMUM DEPTH LAYER OF 3/4" CRUSHED ROCK MULCH. COLOR TO BE 'BARKWOOD'
- PLANT WATER USE VALUES ARE PER WUCOLS IV PLANT LIST

NORTH 0 20' 40' 80'

STAMPS

CONSULTANT BRANDING

RUHNAU CLARKE ARCHITECTS

C:\Users\LUKEMO~1\AppData\Local\Temp\AcPublish_12572\planting.dwg

PROJECT No. : 5-08-01
4/18/2024 10:44 AM

DRAWN BY: CHECKED BY:

ISSUE No.____ DATE____ DESCRIPTION____
REVISION No.____ DATE____ DESCRIPTION____

RUHNAUCLARKE.COM
3775 TENTH STREET, RIVERSIDE CALIFORNIA 92501 (951) 684 4664 / 5751 PALMER WAY, SUITE C, CARLSBAD CALIFORNIA 92010 (760) 438 5899

MOUNT TRANSIT MAINTENANCE FACILITY
INCREMENT #3
170 BUSINESS CENTER. BIG BEAR LAKE, CALIFORNIA
BIG BEAR LAKES

INCREMENT #3
LANDSCAPE PLAN

LP-1.0

5-08-01

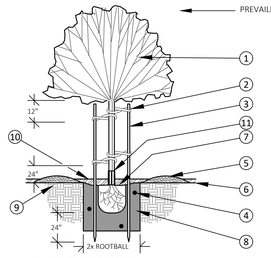

1. TREE PER PLANTING PLAN
2. CINCH TIE (4 PER TREE)
3. (MINIMUM 2) 3" DIA. x 10' LONG LODGE POLE STAKES. INSTALL ALIGNED WITH PREVAILING WIND DIRECTION
4. PLANT TABLETS PER PLANT TABLET DETAIL
5. EARTH WATERING BASIN IN GROUNDCOVER AREAS
6. FINISH GRADE
7. ROOTBALL: SET CROWN 1"-2" ABOVE FINISH GRADE
8. COMPACTED BACKFILL MIX PER PLANTING DETAIL
9. NATIVE SOIL
10. 3" MINIMUM DEEP MULCH PER PLANTING PLAN
11. PLASTIC TRUNK GUARD IN TURF AREAS ONLY

1. NOTE: ROOTBARRIER TO EXTEND 10' TOTAL, CENTERED ON TRUNK TYPICAL. 20' TOTAL LENGTH FOR TREES WITHIN RIGHT-OF-WAY OR WITHIN 10' OF CITY RIGHT-OF-WAY, CENTERED ON TRUNK.

A Tree Planting

SCALE: N.T.S.

THE RECOMMENDATIONS OF THIS PROJECT'S SOIL REPORTS SHALL TAKE PRECEDENCE OVER THE BELOW MINIMUMS ONLY WHEN THEY EXCEED BELOW BASED ON THE GIVEN NATIVE PLANTS PER PLANS

MINIMUM SOIL PREPARATION

NATIVE PLANTINGS TYPICALLY REQUIRE LITTLE TO NO SOIL AMENDMENTS UNLESS SOIL DAMAGE HAS OCCURRED AND SOIL REMEDIATION IS REQUIRED. MASS SOIL DISTURBANCE IS GENERALLY DESTRUCTIVE TO THE NATURAL CONDITION AND SHOULD BE AVOIDED UNLESS SPECIFICALLY CALLED FOR BY THE RESULTS OF SOIL TESTS.

BACK FILL CONDITIONERS/PREPERATION:

BACKFILL MIX FOR TREES, SHRUBS, AND VINES SHALL BE AS FOLLOWS:

PER CUBIC YARD OF BACK FILL MIX:
5 LBS. TRI-C PREMIUM HUMATE
5 LBS TRI-C ENDO 12

MANUFACTURES INSTRUCTIONS FOR HANDLING, STORAGE, AND APPLICATION MUST BE FOLLOWED

PLANTING TABS:

MYCO TABS PER PLANT CONTAINER SIZE

1 Gallon	5 Gallon	15 Gallon	24" Box	36" Box	48" Box	60" Box	72" Box	84" Box	96" Box
2 tabs	8 tabs	16 tabs	22 tabs	28 tabs	34 tabs	48 tabs	56 tabs	62 tabs	68 tabs

SOIL MAINTENANCE PROGRAM:

THREE (3) TRI-C MYCO REVIVAL PLUS APPLICATIONS ARE TO BE APPLIED EVENLY SPACED TO ALL PLANTINGS DURING THE ESTABLISHMENT PERIOD.

APPLICATION RATES:

1 Gallon	5 Gallon	15 Gallon	24" Box	36" Box	48" Box	60" Box	72" Box	84" Box	96" Box
2 tps	2 tbs	¼ cup	½ cups	1 cup	1-1/2 cup	2 cup	2-1/2 cup	3 cup	64 cup

APPLY TO SOIL SURFACE AND SCRATCH ½"-1" INTO SOIL- WATER THOROUGHLY AFTER APPLICATION

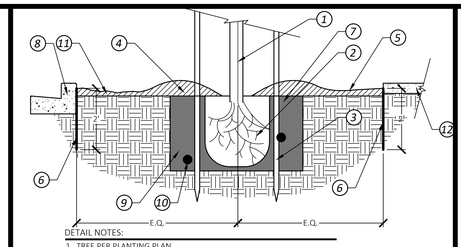

DETAIL NOTES:

1. TREE PER PLANTING PLAN
2. ROOTBALL
3. STAKE PER 'TREE PLANTING' DETAIL
4. EARTH WATERING BASIN PER 'TREE PLANTING' DETAIL
5. FINISH GRADE
6. DEEP ROOT BARRIER AT EDGE OF HARDSCAPE - 24" DEEP, 10' LONG CENTERED ON TRUNK. EACH DIRECTION FROM CENTER ON TRUNK
7. TREE PLANTING PIT
8. STREET CURB PER STREET IMPROVEMENT PLANS
9. COMPACTED BACKFILL MIX PER PLANTING SPECS / NOTES
10. PLANT TABLETS PER PLANTING SPECS / NOTES
11. MULCH TYPE AND DEPTH PER PLAN- KEEP 3" CLEAR FROM TRUNK
12. CONCRETE PAVING PER PLAN

NOTES:

1. ROOTBARRIER TO EXTEND 10' TOTAL, CENTERED ON TRUNK TYPICAL. 20' TOTAL LENGTH FOR TREES WITHIN RIGHT-OF-WAY OR WITHIN 10' OF CITY RIGHT-OF-WAY, CENTERED ON TRUNK.
2. ROOTBARRIER SHALL NOT ENCIRCLE THE TREE ROOTBALL

B Linear Root Barrier

SCALE: N.T.S.

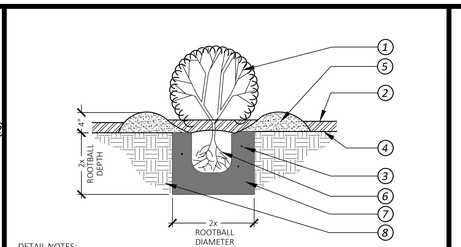

DETAIL NOTES:

1. SHRUB PER PLANTING PLAN
2. 3" DEPTH OF WOOD MULCH- KEEP 3" CLEAR FROM TRUNK
3. PLANT TABLETS PER PLANT TABLET DETAIL
4. FINISH GRADE
5. EARTH WATERING BASIN (RAKE SMOOTH PRIOR TO PLANTING GROUNDCOVER)
6. ROOTBALL: SET CROWN SLIGHTLY ABOVE FINISH GRADE
7. COMPACT BACKFILL MIX PER PLANTING DETAIL
8. NATIVE SOIL

GENERAL NOTE: A MINIMUM 3-INCH LAYER OF MULCH SHALL BE APPLIED ON ALL EXPOSED SOIL SURFACES OF PLANTING AREAS EXCEPT TURF AREAS, CREEPING OR ROOTING GROUNDCOVERS, OR DIRECT SEEDING APPLICATIONS WHERE MULCH IS CONTRAINDICATED

C Shrub Planting

SCALE: N.T.S.

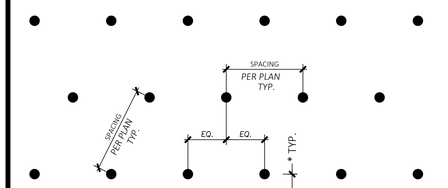

* DIST. FROM HARDSCAPE:
EQUAL TO 1/2 THE O.C. SPACING AS NOTED IN THE PLANTING LEGEND UNLESS OTHERWISE NOTED.

D Groundcover Spacing

SCALE: N.T.S.

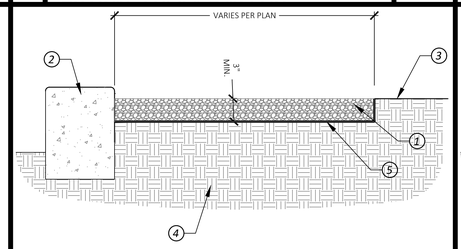

DETAIL NOTES:

1. 3" (MIN.) ¾" GRAVEL PER PLAN
2. CURB/ HARDSCAPE PER CIVIL PLAN
3. FINISH GRADE IN LANDSCAPE AREAS
4. COMPACTED SUBGRADE PER SOILS REPORT
5. GEOTECH FABRIC OR WEED BARRIER

F Landscape Gravel

SCALE: NTS

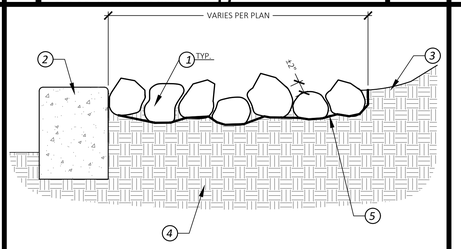

DETAIL NOTES:

1. RUBBLE SIZE AND COLOR PER CONSTRUCTION PLAN
2. CURB/ HARDSCAPE PER CIVIL PLAN
3. FINISH GRADE IN LANDSCAPE AREAS
4. COMPACTED SUBGRADE PER SOILS REPORT
5. GEOTECH FABRIC OR WEED BARRIER

DETAIL NOTES:

- CONTRACTOR SHALL LAYOUT PRELIMINARY BOUNDARIES OF RUBBLE WITH LANDSCAPE ARCHITECT FOR FINAL APPROVAL FROM TRIBAL REPRESENTATIVE.

G Cobble

SCALE: NTS

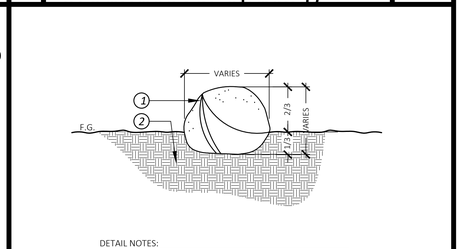

DETAIL NOTES:

1. STONE OR BOULDER. REFER TO PLANS FOR TYPE, SIZE AND SUPPLIERS
2. 90% COMPACTED SUBGRADE

GENERAL NOTES:

BOULDERS SHALL BE PLACED SO AS TO APPEAR "NATURAL." AT NO TIME SHALL ANY BOULDER BE PLACED ON TOP OF SOIL OR D.G. WITHOUT EMBEDDING IN AND COMPACTING THE SURROUNDING SOIL.

H Boulder Installation

SCALE: 1"=1'

E Soil Prep / Backfill / Plant Packs

SCALE: N/A

F Landscape Gravel

SCALE: NTS

G Cobble

SCALE: NTS

H Boulder Installation

SCALE: 1"=1'

-	
-	

STAMPS

CONSULTANT BRANDING

RUHNAU CLARKE ARCHITECTS

C:\Users\LUKEMC~1\AppData\Local\Temp\AcPublish_12572\planting.dwg

PROJECT No. : 5-08-01
4/18/2024 10:44 AM

DRAWN BY: CHECKED BY:

ISSUE No.____ DATE____ DESCRIPTION____
REVISION No.____ DATE____ DESCRIPTION____

RUHNAUCLARKE.COM

3775 TENTH STREET, RIVERSIDE CALIFORNIA 92501 (951) 684 4664 / 5751 PALMER WAY, SUITE C, CARLSBAD CALIFORNIA 92010 (760) 438 5899

MOUNT TRANSIT MAINTENANCE FACILITY
INCREMENT #3
170 BUSINESS CENTER. BIG BEAR LAKE, CALIFORNIA
BIG BEAR LAKES

INCREMENT #3
LANDSCAPE DETAILS

LP-2.0

5-08-01

MOUNTAIN TRANSIT ADMINISTRATION FACILITY

INCREMENT 3

170 BUSINESS CENTER DR. BIG BEAR LAKE, CA

BIG BEAR LAKE

RUHNAU CLARKE ARCHITECTS

3775 TENTH STREET, RIVERSIDE CALIFORNIA 92501 (951) 684 4664 / 5751 PALMER WAY, SUITE C, CARLSBAD CALIFORNIA 92010 (760) 438 5899

STAMPS

LICENSED ARCHITECT — CHRISTOPHER G. CLARKE — Exp.10-31-25 — STATE OF CALIFORNIA

AGENCY APPROVAL

File No.: XX-

CONSULTANT BRANDING

RUHNAU CLARKE ARCHITECTS

CONTACT LIST

Owner
Mountain Area Regional Transit Authority
41939 Fox Farm Road
Big Bear Lake, CA. 92315
Phone: 909-963-7200
Contact: Sandy Benson
sbenson@mountaintransit.org

Structural
RTM Engineering Consultants
9931 Muirlands Blvd.
Irvine, CA 92618
Phone: 949-462-3200
Contact: Larry Kaprielian, S.E., Principal
larry.kaprielian@rtmec.com

Mechanical & Plumbing
Design West Engineering
412 E. Vanderbilt Way
San Bernardion, CA, 92408
Phone: 909.890.3700
Contact: *Rudy Paramo*
rparamo@designwesteng.com

Architect
Ruhnau Clarke Architects
3775 Tenth St., Riverside, CA 92501
Phone:951.684.4664
Contact: *Bryan Dunaj*
bdunaj@ruhnauclarke.com
Contact: Roger Clarke
rclarke@ruhnauclarke.com

Landscape
Community Works
4649 Brockton Avenue
Riverside, CA 92506
Phone: 951-369-0700
Contact: Scott Rice
scott@cwdg.fun

Electrical
FBA Engineers
150 Paularino Avenue, Suite A120
Costa Mesa, CA 92626
Phone: 949-852-9995
Contact: Alan Bravo, Principal
abravo@fbaengr.com

Hardware Consultant
ASSA ABLOY Openings Solutions
Address:
Phone: (657) 258-7071
Contact: Valarie Harris FCSI CDT CCPR
valarie.harris@assaabloy.com

Cost Estimating
Dr. Stephen R. Dunn
601 N. Kirby Street, Unit 463. Hemet, CA
Phone: 760-224-9301
Contact: Dr.Stephen R. Dunn, PhD
drsdunnphd1993@gmail.com

Specifications
Spec Studio
9783 E. Maplewood Avenue
Englewood, CO 80111
Phone: 909-374-2011
Contact: Richard L. Gonser Jr., AIA, CSI, CCCA, SCIP
specstudio@icloud.com

Civil
Valued Engineering
600 N. Mountain Avenue, Suite C102. Upland, CA 91786
Phone: 909-982-4601
Contact: Jeff Meiser,
President/ CEO
jeff@valued-eng.com

GEOTEHCNIAL ENGINEER
JOHN R. BYERLY INC.
2257 SOUTH LILAC AVENUE
BLOOMINGTON, CA 92316
Phone: 909-783-1324
Contact: John R. Byerly
john@johnrbyerlyinc.com
Mike Lozano
mike@johnrbyerlyinc.com

TYPICAL ABBREVIATIONS

@	AT	GA	GAUGE	RSLB	RESILIENT BASE
&	AND	GALV	GALVANIZED	RT	RUBBER TREAD
<	ANGLE	GL	GLASS	RWL	RAIN WATER LEADER
		GLU LAM	GLUE LAMINATED		
ACPL	ACOUSTIC PLASTER	GB	GRAB BAR	O	ROUND
ACT	ACOUSTIC TILE	GPL	GYPSUM PLASTER		
AFF	ABOVE FINISHED FLOOR	GWB	GYPSUM WALLBOARD	SRF	SEAMLESS RESILIENT FLOORING
		GWW	WATER RESISTANT GWB		
BLKG	BLOCKING	GC	GENERAL CONTRACTOR	SS	SERVICE SINK/ STAINLESS STEEL
BD	BOARD				
BOS	BOTTOM OF STRUCTURE	H	HIGH	SHT	SHEET
BB	BULTTETIN BOARD	HDW	HARDWARE	SHTH	SHEATHING
		HORIZ	HORIZONTAL	SC	SOLID CORE
CAB	CABINET	HR	HOUR	SB	SPLASH BLOCK
CPT	CARPET	HT	HEIGHT	STN	STAIN
CSWK	CASEWORK			STD	STANDARD
CLG	CEILING	ID	INSIDE DIAMETER	STL	STEEL
CEM	CEMENT	INSUL	INSULATION	STR	STRUCTURAL/STRUCTUR
CPL	CEMENT PLASTER	INT	INTERIOR		
CL	CENTERLINE			E	
CT	CERAMIC TILE	JH	JOIST HANGER	SUSP	SUSPENDED
CLF	CHAIN LINK FNECE	JT	JOINT	SM	SHEET METAL
CLR	CLEAR	JST	JOIST	SIM	SIMILAR
COL	COLUMN				
CONC	CONCRETE	LAM	LAMINATE	TB	TACK BOARD
CMU	CONCRETE MASONRY UNIT	LT	LIGHT	TJ	TOOLED JOINT
CJ	COLD JOINT	LVR	LOUVER	TC	TOP OF CONCRETE CURB
CONT	CONTINUOUS			TS	TUBE STEEL
CF	CUBIC FEET	MACH	MACHINE	TW	TOP OF WALK
		MAX	MAXIMUM	TYP	TYPICAL
DP	DEMOUNTABLE PARTITION	MECH	MECHANICAL	TEL	TELEPHONE
DET	DETAIL	MIN	MINIMUM	TEMP	TEMPERATURE
DIM	DIMENSION	MH	MANHOLE	TOC	TOP OF CANOPY
DR	DOOR	MFR	MANUFACTURER	TOR	TOP OF ROOF
DRF	DOOR FRAME	MO	MASONRY OPENING	TOS	TOP OF STRUCTURE
DL	DOOR LOUVER	MTL	METAL	TOP	TOP OF PARAPET
DN	DOWN	ML	METAL LATHE	TOW	TOP OF WALL
DS	DOWN SPOUT	MS	METAL STUD		
DF	DRINKING FOUNTAIN	MTD	MOUNTED	UC	UNDER CUT/ UNDER COUNTER
DSA	DIVISION OF STATE ARCHITECT	NIC	NOT IN CONTRACT	UNO	UNLESS NOTED
DWGS	DRAWINGS	NTC	NOT IN CONTRACT		
		NTS	NOT TO SCALE		OTHERWISE
EA	EACH	NO	NUMBER		
ELEC	ELECTRIC			VERT	VERTICAL
EWC	ELECTRIC WATER COOLER	OC	ON CENTER	VC	VINYL COATED
ELEV	ELEVATION	OD	OUTSIDE DIAMETER	VCT	VINYL COMPOSITION
ENCL	ENCLOSURE	OFCI	OWNER FURNISHED/ CONTRACTOR INSTALLED	TILE	
EQ	EQUAL			VT	VINYL TILE
EQUIP	EQUIPMENT	OFOI	OWNER FURNUSHED/ OWNER INSTALLED	VSF	VINYL SHEET FLOORING
(E)	EXISTING			VWC	VINYL WALL COVERING
EXP	EXPANSION/EXPOSED	OH	OPPOSITE HAND/OVERHEAD	VIF	VERIFIED IN FIELD
EJ	EXPANSION JOINT	OPNG	OPENING	VTR	VENT THROUGH ROOF
EW	EACH WAY	OPP	OPPOSITE		
EXT	EXTERIOR			WWF	WELD WIRE FABRIC
		PA	PLANTING AREA	WI	WOODWORKING
FS	FLOOR SINK	PFIN	PRE FINISHED		
FOF	FACE OF FINISH	PL	PLATE/PROPERTY LINE		INSTITUTE
FOM	FACE OF MASONRY	PLAS	PLASTIC	WIN	WINDOW
FOS	FACE OF STUD	PLWD	PLYWOOD	W/	WITH
FIN	FINISH	PTD	PAINTED	WD	WOOD
FC	FINISH CEILING	PTN	PARTITION	W/O	WITHOUT
FG	FINISH GRADE				
FFE	FINISH FLOOR GRADE	R	RADIUS/RISER		
FEC	FIRE EXTINGUISER CABINET	RD	ROOF DRAIN		
FHC	FIRE HOSE CABINET	REF	REFERENCE		
FRPF	FIREPROOF/FIREPROOFING	REINF	REINFORCED		
FD	FLOOR DRAIN	REQD	REQUIRED		
FLR	FLOOR	RO	ROUGH OPENING		
FURN	FURNISH/FURNITURE	RQMT	REQUIREMENT		

ARCHITECTURAL SYMBOLS

BUILDING SECTION
DIRECTION OF VIEW CUT
DIRECTION OF VIEW
VIEW ON SHEET — SIM — 1 — A101
SHEET ON WHICH DETAIL OCCURS

EXTERIOR ELEVATION
DIRECTION OF VIEW
VIEW ON SHEET — SIM — 1 — A101
SHEET ON WHICH DETAIL OCCURS

DETAIL REFERENCE TO DRAWINGS
VIEW ON SHEET — SIM — 1 — A101
SHEET ON WHICH DETAIL OCCURS
DIRECTION OF VIEW

ROOM TAG
ROOM NAME — Room name
ROOM NUMBER — 1 — 102 — 2 — 8/A21.3
SHEET ON WHICH INTERIOR ELEVATION OCCURS — 3
INTERIOR ELEVATION VIEW

DOOR TAG
DOOR TAG — 101
DOOR RATING — 20 MIN.

WINDOW TAG
WINDOW TAG — 1t

KEYNOTE
CONSTRUCTION KEY NOTE — X.X / X
NUMBER — 1 — SIM — A101
ASSOCIATED DETAIL REFERENCE

CASEWORK IDENTIFICATION:
DEPTH
HEIGHT — 40 — 30 — 10
INDICATES SPECIAL CONDITION — HC — 34in — 30in
W.I.C. NUMBER
LENGTH
LOCK — M=REVERSE
EXPLANATION OF SPECIAL CONDITION IF NEEDED

GENERAL NOTES

1. THE CONTRACTOR IS SOLELY RESPONSIBLE FOR MEANS, METHODS, SEQUENCE, TECHNIQUES OR PROCEDURES NECESSARY FOR PERFORMING, SUPERINTENDING OR COORDINATING ALL PORTIONS OF THE WORK OF CONSTRUCTION IN ACCORDANCE WITH THE CONTRACT DOCUMENTS AND ANY HEALTH OR SAFETY PRECAUTIONS REQUIRED BY ANY REGULATORY AGENCIES.
2. THE CONTRACTOR SHALL COMPLY WITH CALIFORNIA FIRE CODE, CHAPTER 33 FOR FIRE SAFETY DURING CONSTRUCTION.
3. CONTRACTOR WILL BE REQUIRED TO PROVIDE AND INSTALL ALL EQUIPMENT AND RELATED ITEMS AS SHOWN IN THESE DOCUMENTS AND AS SPECIFIED. IT SHALL BE THE CONTRACTOR'S RESPONSIBILITY TO VERIFY ALL EXISTING CONDITIONS IN THE FIELD PRIOR TO BID AND TO DETERMINE THE WORK NECESSARY TO COMPLETE THE PROJECT.
4. ALL WORK SHALL CONFORM TO TITLE 24, CALIFORNIA CODE OF REGULATIONS (C.C.R.) AND SECTION 4-333.
5. STRUCTURAL MODIFICATIONS SHALL BE MADE BY ADDENDUM OR CONSTRUCTION CHANGE DOCUMENT (C.C.D.) APPROVED BY DSA PER SECTION 4-338, PART 1, TITLE 24.
6. A PROJECT INSPECTOR, EMPLOYED BY THE DISTRICT (OWNER) AND APPROVED BY THE DIVISION OF THE STATE ARCHITECT, SHALL PROVIDE CONTINUOUS INSPECTION OF THE WORK. THE DUTIES OF THE INSPECTOR IS DEFINED IN SECTION 4-342, PART 1, TITLE 24, C.C.R. THE INSPECTOR SHALL BE ESPECIALLY QUALIFIED IN MECHANICAL AND ELECTRICAL WORK AND HAVE SUCCESSFULLY COMPLETED THE REQUIRED DSA CERTIFICATION PROCESS FOR CLASS 2 INSPECTOR OF RECORD AND A R.B.I.P.
7. THE ARCHITECT OF RECORD SHALL HAVE THE RIGHT TO MAKE FINAL JUDGMENTS RELATIVE TO SUBMITTAL DRAWING REVISIONS IN ORDER TO ENSURE COMPLIANCE WITH ENGINEERING STANDARDS, APPLICABLE CODES, AND ARCHITECTURAL INTENT.
8. CONTRACTOR SHALL VERIFY ALL DIMENSIONS AND LOCATIONS OF EXISTING CONDITIONS ON THE JOB SITE PRIOR TO THE START OF ANY WORK. NOTIFY THE ARCHITECT IMMEDIATELY OF ANY DISCREPANCIES BETWEEN ACTUAL FIELD CONDITIONS AND CONSTRUCTION DOCUMENTS. EXISTING CONDITIONS ARE INDICATED AS A RESULT OF INFORMATION SHOWN ON AVAILABLE DOCUMENTS. ANY DAMAGE TO EXISTING CONDITIONS IS THE SOLE RESPONSIBILITY OF THE CONTRACTOR.
9. THE EXISTENCE OR LOCATION OF ANY UNDERGROUND UTILITIES, PIPES, OR STRUCTURE SHOWN ON THESE PLANS WERE OBTAINED BY A SEARCH OF AVAILABLE RECORDS. TO THE BEST OF OUR KNOWLEDGE, EXISTING UTILITIES ARE AS SHOWN ON THESE PLANS. THE CONTRACTOR SHALL ASCERTAIN THE TRUE VERTICAL AND HORIZONTAL LOCATION AND SIZE OF ALL UNDERGROUND UTILITIES AND SHALL BE RESPONSIBLE FOR DAMAGE TO ANY PUBLIC OR PRIVATE UTILITIES SHOWN OR NOT SHOWN HEREON.
10. THE CONTRACTOR SHALL BE SOLELY RESPONSIBLE FOR ADEQUACY AND SAFETY OF THE DESIGN/ERECTION OF BRACING, SHORING, TEMPORARY SUPPORTS AND SCAFFOLDING.
11. UNDER NO CIRCUMSTANCE SHALL WORKING DIMENSIONS BE SCALED FROM PLANS, SECTIONS, OR DETAILS ON THE DRAWINGS.
12. ALL STANDARDS, MATERIALS AND WORKMANSHIP SHALL COMPLY WITH THE STATE BUILDING CODES, ORDINANCES, REGULATIONS, AND LAWS.
13. WHERE ANY CONFLICT OCCURS BETWEEN THE REQUIREMENTS OF FEDERAL, STATE AND LOCAL LAWS, CODES, ORDINANCES, RULES AND REGULATIONS, THE MOST STRINGENT SHALL GOVERN.
14. ITEMS MARKED "TYP." OR "TYPICAL" SHALL APPLY IN ALL CASES UNLESS SPECIFICALLY INDICATED OTHERWISE.
15. THE CONTRACTOR SHALL BE RESPONSIBLE FOR COORDINATION OF REQUIREMENTS BETWEEN THE DISCIPLINES (ARCHITECTURAL, STRUCTURAL, PLUMBING, MECHANICAL, AND ELECTRICAL, ETC.) AND BETWEEN DRAWING AND SPECIFICATION IN ORDER TO ENSURE THAT ALL ITEMS SHOWN IN RELATIONSHIP TO ONE ANOTHER OR SHOWN IN MULTIPLE LOCATIONS ARE IN AGREEMENT. THE CONTRACTOR SHALL IMMEDIATELY NOTIFY THE ARCHITECT REGARDING ANY DISCREPANCIES, ERRORS, OMISSIONS OR INCONSISTENCIES AND SHALL NOT PROCEED WITH THE WORK UNTIL CLARIFICATION HAS BEEN ISSUED BY THE ARCHITECT.
16. ALL WORK SHALL BE DONE IN ACCORDANCE WITH TITLE 24 CALIFORNIA CODE OF REGULATIONS (CCR)
17. GRADING PLANS DRAINAGE IMPROVEMENTS, ROAD & ACCESS REQUIREMENTS AND ENVIRONMENTAL HEALTH CONSIDERATIONS SHALL COMPLY WITH ALL LOCAL ORDINANCES. INSPECTOR OF RECORD (IOR CLASSIFICATION 1).

APPLICABLE AGENCIES

STATE OF CALIFORNIA

BUILDING & SAFETY DEPARTMENT
BIG BEAR LAKE CITY HALL
39707 Big Bear Boulevard
Big Bear Lake, CA 92315
TEL: (909) 866-5831

REGIONAL MAP

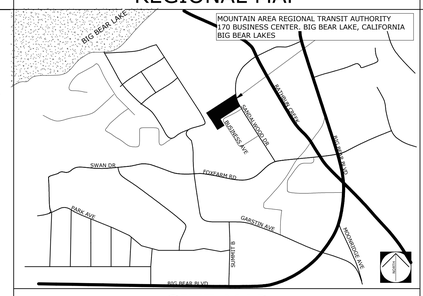

SITE MAP

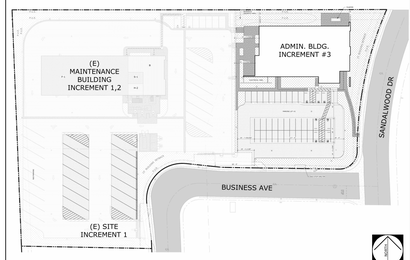

APPLICABLE CODES

PARTIAL LIST OF APPLICABLE CODES AS OF JANUARY 1, 2023
2022 CALIFORNIA ADMINISTRATIVE CODE, PART 1, TITLE 24 C.C.R.
2022 CALIFORNIA BUILDING CODE (CBC), PART 2, TITLE 24 C.C.R.
(2021 INTERNATIONAL BUILDING CODE VOLUMES 1-2 WTH 2022 CALIFORNIA AMENDMENTS)
2022 CALIFORNIA ELECTRICAL CODE (CEC), PART 3, TITLE 24 C.C.R.
(2023 IS THE CURRENT USE, USE THE CEC BASED ON THE NFPA 70-NEC 2020 EDITION AS MODIFIED)
2022 CALIFORNIA MECHANICAL CODE (CMC) PART 4, TITLE 24 C.C.R.
(2021 UNIFORM MECHANICAL CODE WITH 2022 CALIFORNIA AMENDMENTS)
2022 CALIFORNIA PLUMBING CODE (CPC), PART 5, TITLE 24 C.C.R.
(2021 UNIFORM PLUMBING CODE WITH 2022 CALIFORNIA AMENDMENTS)
2022 CALIFORNIA ENERGY CODE (CEnC), PART 6, TITLE 24 C.C.R.
2022 CALIFORNIA FIRE CODE(CFC), PART 9, TITLE 24 C.C.R.
(2021 INTERNATIONAL FIRE CODE WITH 2022 CALIFORNIA AMENDMENTS)
2022 CALIFORNIA GREEN BUILDING STANDARDS CODE, PART 11, TITLE 24 C.C.R.
2022 CALIFORNIA REFERENCED STANDARDS, PART 12, TITLE 24 C.C.R.
TITLE 19 C.C.R., PUBLIC SAFETY, STATE FIRE MARSHAL REGULATIONS.

PARTIAL LIST OF APPLICABLE STANDARDS

NFPA 13	AUTOMATIC FIRE SPRINKLER SYSTEMS	2022 EDITION
NFPA 14	STANDPIPE AND HOSE SYSTEMS	2019 EDITION
NFPA 20	STATIONARY PUMPS FOR FIRE PROTECTION	2022 EDITION
NFPA 22	WATER TANKS FOR PRIVATE FIRE PROTECTION	2023 EDITION
NFPA 24	PRIVATE FIRE MAINS & THEIR APPURTENANCES	2022 EDITION
NFPA 25	STANDARD FOR INSPECTION, TESTING AND MAINTENANCE OF WATER-BASED FIRE PROTECTION SYSTEMS	2023 EDITION
NFPA 72	NATIONAL FIRE ALARM CODE & SIGNALING CODE	2022 EDITION
NFPA 80	FIRE DOORS AND OTHER OPENING PROTECTIVES	2022 EDITION
NFPA 92	STANDARD FOR SMOKE CONTROL SYSTEMS	2021 EDITION
NFPA 241	STANDARD FOR SAFEGUARDING CONSTRUCTION, ALTERATION, AND DEMOLITION OPERATIONS	2022 EDITION
NFPA 253	CRITICAL RADIANT FLUX OF FLOOR COVERING SYSTEMS	2023 EDITION
NFPA 2001	CLEAN AGENT FIRE EXTINGUISHING SYSTEMS	2022 EDITION
UL 300	FIRE TESTING OF FIRE EXTINGUISHING SYSTEMS FOR PROTECTION OF RESTAURANT COOKING AREAS	2005 EDITION
UL 464	AUDIBLE SIGNAL APPLIANCES	2003 EDITION
UL 521	HEAT DETECTORS FOR FIRE PROTECTIVE SIGNALING SYSTEMS	1999 EDITION

REFERENCE CODE SECTION FOR NFPA STANDARDS - 2022 CBC (SFM) CHAPTER 35. SEE CHAPTER 35 FOR STATE OF CALIFORNIA AMENDMENTS TO NFPA STANDARDS.

MUNICIPAL CODE
CITY OF BIG BEAR LAKE MUNICIPAL CODE

SHEET INDEX

T-2 CONDITIONS OF APPROVAL

GENERAL
T-1 TITLE SHEET & SHEET INDEX

ARCHITECTURE - SITE
AS-1.1 OVERALL SITE PLAN
AS-1.2 FIRE AUTHORITY PLAN
AS-2.1 ENLARGED SITE PLAN
AS-2.2 ENLARGED SITE PLAN
ASD-1.1 SITE DETAILS
ASD-1.2 SITE DETAILS

ARCHITECTURE
A2-1.1 EGRESS & SIGNAGE PLAN
A2-1.2 FLOOR PLAN
A2-2.1 REFLECTED CEILING PLAN
A2-3.1 ROOF PLAN
A2-4.1 EXTERIOR ELEVATIONS
A2-5.1 BUILDING SECTIONS
A2-5.2 BUILDING SECTIONS
A2-6.1 WALL SECTIONS
A2-6.2 WALL SECTIONS
A2-6.3 WALL SECTIONS
A2-6.4 WALL SECTIONS
A2-6.5 WALL SECTIONS
A2-7.1 ENLARGED PLANS / INT. ELEVATIONS
A2-7.2 ENLARGED PLANS / INT. ELEVATIONS
A2-7.3 ENLARGED PLANS / INT. ELEVATIONS
A2-7.4 ENLARGED PLANS / INT. ELEVATIONS
A2-8.1 DOOR & WINDOW SCHEDULE
A2-8.2 WINDOW SCHEDULE
A2-8.3 WINDOW SCHEDULE

INTERIORS
ID-1.0 FINISHES PLAN/ SCHED & CMF

ARCHITECTURE DETAILS
AD-1.0 ACCESSIBILITY & SIGNAGE DETAILS
AD-1.1 ACCESSIBILITY, SIGNAGE, & MISC.
AD-2.0 WALL TYPES
AD-2.1 WALL DETAILS
AD-3.0 ROOF DETAILS
AD-4.0 CEILING DETAILS
AD-5.0 CASEWORK DETAILS
AD-6.0 DOOR & WINDOW DETAILS
AD-6.1 DOOR & WINDOW DETAILS

STRUCTURAL
S0-1.1 GENERAL NOTES
S0-1.2 GENERAL NOTES
S0-2.1 TYPICAL CONCRETE DETAILS
S0-2.2 TYPICAL REINFORCING & MASONRY DETAILS
S0-2.3 TYPICAL STEEL DETAILS
S0-2.4 TYPICAL STEEL DETAILS
S0-2.5 TYPICAL METAL DECK DETAILS
S0-2.6 TYPICAL METAL DECK DETAILS
S0-2.7 TYPICAL METAL STUD DETAILS
S0-2.8 TYPICAL METAL STUD DETAILS
S2-1.1 ADMIN. BUILDING FOUNDATION PLAN
S2-3.1 ADMIN. BUILDING ROOF FRAMING PLAN
S2-5.1 BRACED FRAME ELEVATIONS
S2-5.2 BRACED FRAME ELEVATIONS
S3-1.1 FOUNDATION DETAILS
S3-2.1 ROOF FRAMING DETAILS
S3-2.2 ROOF FRAMING DETAILS
S3-3.1 BRACED FRAME DETAILS
S3-3.2 BRACED FRAME DETAILS

MECHANICAL
M2-0.1 MECHANICAL LEGENDS NOTES & SCHEDULES
M2-0.2 MECHANICAL SCHEDULES
M2-0.3 MECHANICAL SCHEDULES CONT.
M2-0.4 ENERGY COMPLIANCE DOCUMENTS
M2-0.5 ENERGY COMPLIANCE DOCUMENTS CONT.
M2-0.6 ENERGY COMPLIANCE DOCUMENTS CONT.
M2-1.1 MECHANICAL FLOOR PLAN - HVAC
M2-1.2 MECHANICAL FLOOR PLAN - PIPING
M2-3.1 MECHANICAL ROOF PLAN
M2-4.1 MECHANICAL PIPING AND WIRING
M2-4.2 MECHANICAL PIPING AND WIRING CONT.
M2-4.3 MECHANICAL PIPING AND WIRING CONT.
M2-4.4 MECHANICAL PIPING AND WIRING CONT.
MD-1.1 MECHANICAL DETAILS
MD-1.2 MECHANICAL DETAILS CONT.

PLUMBING
P2-0.1 PLUMBING LEGEND NOTES & SCHEDULES
P2-1.1 PLUMBING SITE PLAN
P2-2.1 PLUMBING FOUNDATION PLAN
P2-2.2 PLUMBING PLAN
P2-3.1 PLUMBING ENLARGED PLANS
P2-4.1 PLUMBING ROOF PLAN
PD-1.1 PLUMBING DETAILS

ELECTRICAL
E1-0.1 SYMBOL LIST AND GENERAL NOTES
E1-0.2 ELECTRICAL DETAILS
E1-0.3 SINGLE LINE DIAGRAM AND LIGHTING FIXTURE SCHEDULE
E1-1.1 LIGHTING PLAN
E1-1.2 POWER PLAN
E1-1.3 ELECTRICAL PLAN AND ENLARGED ELECTRICAL ROOM
E1-1.4 ROOF ELECTRICAL PLAN
E1-2.1 PANEL SCHEDULES
E1-2.2 PANEL SCHEDULES
E1-3.1 TITLE 24 (INDOOR)
E1-3.2 TITLE 24 (OUTDOOR)
E1-3.3 TITEL 24 ENERGY DISTRIBUTION FORM
E1-3.4 TITLE 24 SOLAR AND BATTERY ENERGY FORM
ES1-1 SITE ELECTRICAL PLAN
ES1-2 PHOTOMETRIC CALCULATIONS
ES-1.3 PHOTOMETRIC CALCULATIONS - INTERIOR BUILDING

ALUM. CURTAIN WALL, STOREFRONT & DOOR SHOP DWGS.
CW0.01 COVER SHEET
CW0.02 GENERAL NOTES
CW0.03 SECTION PROPERTIES (OPG 1900 AFG451T)
CW0.04 SECTION PROPERTIES (AFG451T, AR600)
CW0.05 SECTION PROPERTIES (AFG451T, AR600)
CW1.01 FLOOR PLAN
CW1.02 EXTERIOR ELEVATIONS
CW1.03 EXTERIOR ELEVATIONS
CW2.01 CURTAIN WALL ELEVATIONS (OPG1900)
CW2.02 CURTAIN WALL ELEVATIONS (OPG1900)
CW2.03 CURTAIN WALL ELEVATIONS (OPG1900)
CW2.04 CURTAIN WALL ELEVATIONS (OPG1900)
CW2.05 CURTAIN WALL ELEVATIONS (OPG1900)
CW2.06 CURTAIN WALL ELEVATIONS (OPG1900)
CW2.07 CURTAIN WALL ELEVATIONS (OPG1900)
CW3.01 EXTERIOR STOREFRONT ELEVATIONS (AFG451T)
CW3.02 EXTERIOR STOREFRONT ELEVATIONS (AFG451T)
CW3.03 EXTERIOR STOREFRONT ELEVATIONS (AFG451T)
CW4.01 INTERIOR STOREFRONT ELEVATIONS (AR600)
CW4.02 INTERIOR STOREFRONT ELEVATIONS (AR600)
CW4.03 INTERIOR STOREFRONT ELEVATIONS (AR600)
CW4.04 INTERIOR STOREFRONT ELEVATIONS (AR600)
CW4.05 INTERIOR STOREFRONT ELEVATIONS (AR600)
CW4.06 INTERIOR STOREFRONT ELEVATIONS (AR600)
CW4.07 INTERIOR STOREFRONT ELEVATIONS (ATL175)
CW5.01 CURTAIN WALL DETAILS (OPG1900, HORZ. MEMBERS)
CW5.01A CURTAIN WALL DETAILS (OPG1900, HORZ. MEMBERS)
CW5.02 CURTAIN WALL DETAILS (OPG1900, HORZ. MEMBERS)
CW5.03 CURTAIN WALL DETAILS (OPG1900, HORZ. MEMBERS)
CW6.01 CURTAIN WALL DETAILS (OPG1900, HORZ. MEMBERS)
CW6.02 CURTAIN WALL DETAILS (OPG1900, HORZ. MEMBERS)
CW7.01 EXT. STOREFRONT DETAILS (AFG451T)
CW7.02 EXT. STOREFRONT DETAILS (AFG451T)
CW7.03 EXT. STOREFRONT DETAILS (AFG451T)
CW7.04 EXT. STOREFRONT DETAILS (AFG451T)
CW7.05 EXT. STOREFRONT DETAILS (AFG451T)
CW7.06 EXT. STOREFRONT DETAILS (AFG451T)
CW8.01 INT. STOREFRONT DETAILS (AR600)
CW8.02 INT. STOREFRONT DETAILS (AR600)
CW8.03 INT. STOREFRONT DETAILS (AR600)
CW9.01 INT. STOREFRONT DETAILS (ATL175)
CW9.02 INT. STOREFRONT DETAILS (ATL175)

TOTAL SHEET COUNT: 136

SCOPE OF WORK

INCREMENT #1 - MAINTENANCE BUILDING
STRUCTURAL FOOTINGS AND FOUNDATIONS, SITE GRADING, AND UTILITIES

INCREMENT #2 - MAINTENANCE BUILDING
LANDSCAPE, ARCHITECTURE, MECHANICAL, PLUMBING, ELECTRICAL, FIRE SPRINKLERS

INCREMENT #3 - ADMINISTRATION BUILDING
COMPLETE BUILDING AND SITE RELATED TO ADMIN. BUILDING

DEFERRED APPROVALS

1. SOLAR SHADE STRUCTURES
2. FIRE ALARM SYSTEM

STATEMENT OF GENERAL CONFORMANCE

FOR ARCHITECT/ENGINEERS WHO UTILIZE PLANS, INCLUDING BUT NOT LIMITED TO SHOP DRAWINGS, PREPARED BY OTHER LICENSED DESIGN PROFESSIONALS AND/OR CONSULTANTS

☒ THE DRAWINGS OR SHEETS LISTED ON THE INDEX SHEET

☐ THIS DRAWING, PAGE OF SPECIFICATIONS/CALCULATIONS

HAVE BEEN PREPARED BY OTHER DESIGN PROFESSIONALS OR CONSULTANTS WHO ARE LICENSED AND/OR AUTHORIZED TO PREPARE SUCH DRAWINGS IN THIS STATE. IT HAS BEEN EXAMINED BY ME FOR:

1) DESIGN INTENT AND APPEARS TO MEET THE APPROPRIATE REQUIREMENT OF TITLE 24, CALIFORNIA CODE
OF REGUATIONS AND THE PROJECT SPECIFICATIONS PREPARED BY ME, AND
2) COORDINATION WITH THE PLANS AND SPECIFICATIONS AND IS ACCEPTABLE FOR INCOPORATION INTO THE
CONSTRUCTION OF THIS PROJECT

THE STATEMENT OF GENERAL CONFORMANCE "SHALL NOT BE CONSTRUED AS RELIEVING ME OF MY RIGHTS, DUTIES, AND RESPONSIBILITIES UNDER SECTIONS 17802 AND 81138 OF THE EDUCATION CODE AND SECTIONS 4-336, 4-341, AND 4-344" OF TITLE 24, PART 1, (TITLE 24, PART 1, SECTION 4-317(b))

I FIND THAT: ☒ ALL DRAWINGS OR SHEETS LISTED ON THE COVER OR INDEX SHEET

☐ THIS DRAWINGS OR PAGE

☒ IS/ARE IN GENERAL CONFORMANCE WITH THE PROJECT DESIGN, AND

☒ HAS/HAVE BEEN COORDINATED WITH THE PROJECT PLANS AND SPECIFICATIONS

SIGNATURE _____ DATE _____

ARCHITECT OR ENGINEER DESIGNATED TO BE IN GENERAL RESPONSIBLE CHARGE

ROGER CLARKE
PRINT NAME

C-21340 LICENSE NUMBER — **10-31-25** EXPIRATION DATE

MOUNTAIN TRANSIT ADMINISTRATION FACILITY: INCREMENT 3: 100% CD

PROJECT No. :50801
4/18/2024 3:59:23 PM

DRAWN BY: CHECKED BY:

ISSUE No.____ DATE____ DESCRIPTION____
ISSUE No.____ DATE____ DESCRIPTION____
ISSUE No.____ DATE____ DESCRIPTION____

REVISION No.____ DATE____ DESCRIPTION____
REVISION No.____ DATE____ DESCRIPTION____
REVISION No.____ DATE____ DESCRIPTION____

RUHNAUCLARKE.COM
3775 TENTH STREET, RIVERSIDE CALIFORNIA 92501(951) 684 4664 / 5751 PALMER WAY, SUITE C, CARLSBAD CALIFORNIA 92010(760) 438 5899

MOUNTAIN TRANSIT ADMINISTRATION FACILITY
INCREMENT 3
170 BUSINESS CENTER DR. BIG BEAR LAKE, CA
BIG BEAR LAKE

TITLE SHEET & SHEET INDEX

T-1

50801

STAMPS

LICENSED ARCHITECT ROGER CLARKE Exp.10-31-25 STATE OF CALIFORNIA

AGENCY APPROVAL
File No.: Apn:

CONSULTANT BRANDING

RUHNAU CLARKE ARCHITECTS

RESOLUTION EXHIBIT C

CONDITIONS OF APPROVAL

CONDITIONAL USE PERMIT 2022-074
160-170 BUSINESS CENTER DRIVE
ASSESSOR'S PARCEL NUMBER'S 2328-021-12, 13

APPROVAL DATE: APRIL 19, 2023
EFFECTIVE DATE: MAY 1, 2023
EXPIRATION DATE: MAY 1, 2026 (Phase 1)

The following abbreviations identify the agency responsible for determining compliance with these conditions. The first group listed has responsibility for compliance at plan check, the second confirms compliance with the condition at final inspection, prior to final occupancy or issuance of a certificate of occupancy, or as specified in the condition. If only one group is identified, they have responsibilities from initial review through compliance verification. The reference number at the end of each condition (e.g. G-1 or MND-BIO2), should be retained for internal use.

RESPONSIBLE DEPARTMENTS/DIVISIONS			
ATTY	City Attorney	BLDG	Building & Safety
DWP	Department of Water	ENG	Engineering Division
PLNG	Planning Division	FIRE	Fire Protection District
PW	Public Works	MND	Mitigated Negative Declaration

GENERAL CONDITIONS

1. Approval of CUP 2022-074 (herein after "project") is granted for property located at 160-170 Business Center Drive, Assessor Parcel Number's 2328-021-12, 13 to to develop a vacant 3.55 acre site with a bus storage/maintenance facility and administrative offices. The project would include a 1-story, 11,470 SF maintenance building for service bays, a bus wash, and other support spaces for drivers and the bus fleet. The administration building, also 1-story, anticipates a 11,200 SF building area. This approval is based on the application and supplemental materials including approved plans stamped as "Received on June 17, 2022" (hereinafter "the plans") on file with the Planning Division. Build-out and use of the development shall conform with the plans, as approved and conditioned herein, and shall not be further altered unless subsequently reviewed and approved by the City. Any future adjustment or modification to the plans shall be considered by the Community Development Director or designee, may require a separate discretionary review application, and shall conform to all City, State, and Federal requirements, including subsequent City Code requirements or policies. (PLNG, G-1)

2. Developer means permit applicant, property owner, operator, permittee, lessee, and/or tenants using the space(s) for the intended use(s). Developer shall comply with project conditions for the life of the project. (ATTY, G-2)

3. Developer shall obtain necessary approvals prior to initiating any new construction or modifications authorized under this permit, including but not limited to temporary construction trailers, temporary staging areas, model home sales offices, placement or construction of advertising signs of any kind, structures, and exterior and/or interior building modifications. (PLNG/BLDG, G-3)

4. If Developer (including but not limited to owner or tenant) fails to comply with any of the permit conditions, then Developer shall be subject to permit revocation or enforcement actions, pursuant to the City Code. All costs associated with any such actions shall be the responsibility of Developer, owner or tenant. (ATTY, G-4)

5. If not appealed, this approval shall become effective on the eleventh (11th) day after the decision date. Should the effective date fall on a non-business day, the decision shall become effective on the next city business day following such 11th day. Failure to file a timely appeal prior to the effective date, or commencement of any activity related to the project, is understood as the Developer's acceptance of all conditions and obligations imposed by this permit and waiving any challenge to the validity of the conditions and obligations stated therein. (ATTY, G-5)

6. This permit shall automatically expire, with Phase 1 becoming null and void, thirty-six (36) months from the effective date unless Developer has inaugurated the project and complied with all conditions of approval, as demonstrated by the issuance of applicable building permits and installation of substantial construction improvements on such permits. Once Phase 1 has been inaugurated, Developer shall initiate Phase 2 no later than forty-eight (48) months from the effective date in the same matter, specifically with the issuance of applicable building permits and installation of substantial construction improvements relating to the Phase 2 development. (PLNG)

7. If a time extension is necessary or desired, Developer is responsible for submitting a completed application form with corresponding fees to the Planning Division at least ninety (90) days prior to the expiration date. Should the ninetieth (90th) day prior to the expiration date fall on a non-business day, the completed application form with corresponding fees must be submitted no later than the first business day prior to the ninetieth (90th) day. Should such time extension request be received in less time, the Planning Division may not be able to process the request in advance of the expiration date. In this situation, the Developer acknowledges that should the permit expire prior to project inauguration, new land use entitlement(s) would need to be requested before the project may commence. (ATTY, G-7)

8. Approval of this application does not relieve Developer from complying with all applicable Federal, State, County or City regulations or requirements. (ATTY, G-8)

9. In the event that exhibits and written conditions are inconsistent, the written conditions shall prevail. (ATTY, G-9)

10. Developer agrees, as part of and in connection with each and any of the application(s), to defend, indemnify, and hold City, any departments, agencies, divisions, boards, and/or commissions of the City, and its elected officials, officers, contractors serving as City officials, agents, employees, and attorneys of the City ("Indemnitees") harmless from liability for damages and/or claims, actions, or proceedings for damages for personal injuries, including death, and claims for property damage, and with respect to all other actions and liabilities for damages caused or alleged to have been caused by reason of the Developer's activities in connection with this project on the project site, and which may arise from the direct or indirect operations of the Developer or those of the Developer's contractors, agents, tenants, employees or any other persons acting on Developer's behalf, which relate to the development and/or construction of the project. This indemnity provision applies to all damages and claims, actions, or proceedings for damages, as described above, regardless of whether the City prepared, supplied, or approved the plans, specifications, or other documents for the project.

    In the event of any legal action challenging the validity, applicability, or interpretation of any provision of this approval, or any other supporting document relating to the project, the City will promptly notify Developer of the claim, action, or proceedings and will fully cooperate in the defense of the matter.

    a. Once notified, Developer must indemnify, defend and hold harmless the Indemnitees, and each of them, with respect to all liability, costs and expenses incurred by, and/or awarded against, the City or any of the Indemnitees in relation to such action.

    b. Within 15 days' notice from the City of any such action, Developer shall provide to City a cash deposit to cover legal fees, costs, and expenses incurred by City in connection with defense of any legal action in an initial amount to be reasonably determined by the City Attorney. City may draw funds from the deposit for such fees, costs, and expenses.

    c. Within 5 business days of each and every notice from City that the deposit has fallen below the initial amount, Applicant shall replenish the deposit each and every time in order for City's legal team to continue working on the matter.

    d. City shall only refund to Developer any unexpended funds from the deposit within 30 days of: (i) a final, non-appealable decision by a court of competent jurisdiction resolving the legal action; or (ii) full and complete settlement of legal action.

    The City shall have the right to select legal counsel of its choice that the Developer reasonably approves. The parties hereby agree to cooperate in defending such action. The City will not voluntarily assist in any such third-party challenge(s) or take any position adverse to the Developer in connection with such third-party challenge(s). In consideration for approval of the project, this condition shall remain in effect if the entitlement(s) related to this project is rescinded or revoked, whether or not at the request of Developer. (ATTY, G-10)

11. Developer is responsible for informing all subcontractors, consultants, engineers, or other business entities providing services related to the project of their responsibilities to comply with all permit conditions and the Big Bear Lake Municipal Code, including but not limited to the requirement that a business license be obtained by all entities doing business in the City. (ATTY, G-11)

12. Developer is responsible to ensure that all plans, specifications, studies, reports, calculations, maps, notes, legal documents, and designs, are be prepared, signed, and stamped (as required) by those individuals legally authorized to do so. (ATTY, G-12)

13. All uses and activities on the subject property must occur inside the buildings and/or structures or locations as approved by this permit, or otherwise allowed under the Big Bear Lake Municipal Code. On-site uses and activities shall be conducted in accordance with State, Federal, and local regulations and shall not create any public nuisances as a result of the operations. (PLNG, G-13)

14. Except as modified by this permit, Developer shall, for the life of the project, maintain off-street parking for all on-site uses in accordance with the Big Bear Lake Municipal Code requirements, including number and type of spaces, stall size, paving, striping, location and access. (PLNG, G-14)

CONDITIONS FOR COMPLIANCE PRIOR TO ISSUANCE OF PERMITS

15. Prior to initiating any construction or activity within the public right-of-way or city-owned property, Developer must obtain the proper approvals, such as but not limited to an encroachment permit, from the Public Works Department. (ENG/P-1)

16. Prior to issuance of grading plans or building permits, whichever comes first, Developer shall submit a stamped, signed, and dated soil investigation report prepared by a geotechnical engineer or civil engineer containing site-specific design recommendations. As appropriate, the Building Official may request additional studies or verification to evaluate soil strength, the effect of moisture variation on soil-bearing capacity, compressibility, liquefaction, seismically induced soil liquefaction, soil instability, and expansiveness. The submittal from the geotechnical engineer or civil engineer shall clarify that:
    a. The plans and specifications substantially conform to the recommendations in the soil investigation; and
    b. The geotechnical engineer or civil engineer who prepared the soil investigation has been retained by Developer to provide soil observations onsite, and provide periodic and final reports to the City of Big Bear Lake. (BLDG, P-4)

17. The proposed location of the project is partially situated in a flood zone AE, development permits for construction on Flood plains must comply with the requirements of the City of Big Bear Lake Municipal Code Chapter 15.64.
    a. Construction materials and methods must comply with FEMA Technical bulletin TB2-93. (ENG)
    b. Anchoring of the Structure must comply with TB-1,2,3 & 7. (ENG)
    c. Utilities such as electrical outlets, heating, ventilation and the similar must be designed and/or located so as to prevent water from entering or accumulating within the components during conditions of flooding. (ENG)
    d. Flood vents must be provided for the structures. (ENG)
    e. Lowest floor elevation must rise 1' from the Base Flood Elevation (ENG)
    f. A LOMR will be only required if the applicant of the project wishes be relieved of the requirement for flood insurance. If so, the property would have to be removed from the flood zone indicated on the FIRM panel. This would require a LOMR. the city submits the application requesting a map revision. The project's engineer would be required to do all hydrologic and hydraulic work, and prepare the reports but the formal application has to be executed by the city within 6 months of project completion. (ENG)
    g. A Final WQMP document must be submitted after planning commission approval and will require additional payment. (ENG) Percolation test showed that infiltration is slow/not feasible, that has to be reflected in the BMP device selection. (ENG)
    h. There is an existing storm drain located in the East side of the property along Sandalwood Dr., the outlet of the BMP devices can be considered to be connected to the existing storm drain system if the water is treated on site, and calculations are shown to demonstrate that the pipe size has enough capacity to carry the extra water runoff produced by the project. (ENG) Plans will need to show all existing and proposed utilities. (ENG)
    i. Grading plans must show contour lines NGVD 29 for benchmark, NAD 83 for bearing, limits of the flood zone elevation, water runoff direction that does not redirect water into the adjacent properties, calculation of cut and fill. (ENG)
    j. The use of flush curbs or curb openings is preferred for ease of plowing and drainage to be captured by the planted areas. (ENG)
    k. Show in the site plan the proposed locations for snow storage and indicate the area in square feet. (ENG)
    l. Need to provide a covered trash enclosure with an adequate concrete pad for loading/unloading the waste collection truck, asphalt usually cracks by fatigue. (ENG)
    m. Need to indicate the method that will be used for the containment of grease, fuels and oils in the maintenance area. (ENG)
    n. A 6" sewer lateral with cleanout will be required for the project. (ENG)
    o. RFP backflow assemblies will be required on all services to be installed at locations approved by the Department of Water and Power. (DWP)

18. Prior to issuance of grading plans, Developer shall submit a combined landscape and lighting plan to verify all project onsite lighting shall be of a type and in a location that does not constitute a hazard to vehicular traffic, either on private property or on public property, including but not limited to streets and roadways. Placement of such lighting shall not conflict with drainage plans, landscape plans, tree locations, parking spaces, or any other such land use and site plan concerns. (PLNG, P-5)

19. Prior to issuance of grading plans or building permits, Developer shall minimize potential construction-related noise impacts by including the following language on any grading, site work, and construction plans issued for the project site. (BLDG, P-6)

    "During earth-moving, grading, and construction activities, Developer shall implement the following measures at the project site:
    a. Limit earth-moving, grading, and construction activities to weekdays between 7:00 a.m. and 7:00 p.m., and on Saturdays between 9:00 a.m. and 7:00 p.m. Construction-related noise is prohibited on Sundays and City-observed holidays;
    b. Locate stationary noise-generating equipment as far as possible from sensitive receptors when sensitive receptors adjoin or are near a construction project area;
    c. Construct sound walls or other noise reduction measures prior to developing the project site;
    d. Equip all internal combustion engine driven equipment with intake and exhaust mufflers that are in good condition and appropriate for the equipment;
    e. Prohibit all unnecessary idling of internal combustion engines;
    f. Utilize 'quiet' models of air compressors and other stationary noise sources where technology exists; and
    g. Designate a 'disturbance coordinator' who would be responsible for responding to any complaints about construction noise or activities. The disturbance coordinator shall be responsible for determining the cause of the complaint and immediately implement reasonable measures to correct the problem."

20. Prior to issuance of grading plans or building permits, Developer shall minimize potential construction-related air quality impacts by including the following language on any grading, site work, and construction plans issued for the project site. (BLDG, P-7)

    "During earth-moving, grading, and construction activities, Developer shall implement the following measures at the project site:
    a. All exposed surfaces (e.g. parking areas, staging areas, soil piles, graded areas, and unpaved access roads) shall be watered at minimum two times per day;
    b. All haul trucks transporting soil, sand, or other loose material onsite or offsite shall be covered;
    c. All visible mud or dirt tracked out onto adjacent public roads shall be removed using wet power vacuum street sweepers at least once per day. The use of dry power sweeping is prohibited;
    d. All vehicle speeds on unpaved roads, pathways, or surfaces shall be limited to 15 miles per hour;
    e. All roadways, driveways, and sidewalks to be paved shall be completed as soon as possible. Building pads shall be laid as soon as possible after grading unless seeding or soil binders are used to stabilize the soil;
    f. Idling times shall be minimized either by shutting equipment off when not in use or reducing the maximum idling time to 5 minutes (as required by the California airborne toxics control measure Title 13, Section 2485 of California Code of Regulations). Clear signage shall be provided for construction workers at all access points;
    g. All construction equipment shall be maintained and properly tuned in accordance with manufacturer's specifications. All equipment shall be checked by a certified visible emissions evaluator; and
    h. Post a publicly visible sign identifying the City Building Division (909) 866-5831 during normal business hours, and the City Code Compliance Division (909) 866-CODE (909-866-2633) after hours for construction-related complaints. The South Coast Air Quality Management District 1-800-CUT-SMOG (1-800-288-7664) shall also be included to ensure compliance with applicable regulations."

21. Prior to issuance of building permits, Developer shall include on the first sheet after the cover sheet of the plan set, a complete reproduction of all conditions of approval, as adopted by the decision-maker. (PLNG, P-10)

22. Prior to issuance of building permits, the Property Owner shall sign and return to the Planning Division, a notarized deed restriction acknowledging the land use approvals for the property on a form provided by the City. Such deed restriction shall be confirmed as recorded by the County of San Bernardino prior to final inspection sign off. (PLNG, P-11)

23. Prior to issuance of building permits, Developer shall include all exterior building materials and colors, including product and finish, manufacturer name, color name and number, and surface finish type (e.g. stucco with sand finish, plaster with smooth finish) to be used in construction. (PLNG, P-13)

24. Prior to issuance of building permits, Developer shall submit a lighting plan with details of all exterior fixtures and locations. Such plan shall verify that all exterior light fixtures, including parking lot lighting, shall be full cutoff type, directs illumination downward only, is designed to minimize glare and light pollution, and shall not cast light on any adjacent property or roadway. Developer shall recess or conceal any under-canopy lighting elements so they are not directly visible from any public area. (PLNG, P-14)

25. Acceptance or approval of submitted plans does not release Developer from correction of mistakes, errors, or omissions contained therein. If, during the course of construction, the public interest requires a modification or departure from the approved plans, the City shall have the authority to require such modifications or departure and specify the manner in which the same is to be made. (BLDG, P-15)

26. Prior to issuance of a grading or building permit, Developer shall contact the Building Division to schedule a pre-site inspection. (BLDG, P-17)

27. Prior to commencement of any trenching, grading, staging, or construction activities onsite, Developer shall contact the Building Division to schedule a pre-construction meeting for the purpose of reviewing conditions of project approval and expectations throughout the project construction period. (BLDG/PLNG/ENG, P-18)

28. All applicable codes and ordinances shall apply, including but not limited to, the 2019 California Fire Code (CFC); California Code of Regulations, Title 19; and those portions of 2019 California Building Code, adopted by the State Fire Marshal. (FIRE, P-19)

29. A security fence with screening shall protect all construction sites. The fencing and screening shall be maintained at all times to protect pedestrians. All development projects shall submit a construction fencing plan with the construction design plans. Construction projects that have phased occupancy shall be completely separated by a construction fence that is screened and show the adjusted fence locations at each phase. (BLDG, P-23)

CONDITIONS FOR COMPLIANCE DURING ONSITE CONSTRUCTION ACTIVITIES

30. All related construction materials, debris, and equipment shall be stored on the project site. If that is not physically possible, then Developer shall obtain approvals for alternative locations in advance of such placement. For example, an encroachment permit would be required for placement within a public right-of-way, and a temporary use permit would be required for placement on another property. (BLDG, C-1)

31. At all times throughout the construction period, Developer shall maintain all portions of the job site in an organized and professional condition. At minimum, all trash, debris, construction scraps and broken/deteriorated machinery shall be removed from the site at the end of each week. If off-loaded construction materials are not used within 2 weeks, they shall be screened from view. All sidewalks, driveways and public/private roadways fronting the subject site shall be broom cleaned at the end of each construction work day. Construction site cleanup shall be in accordance with Big Bear Lake Municipal Code Chapter 15.50. (BLDG, C-2)

32. At all times during the construction period, Developer shall retain the stamped, approved job copy of the plans and permit card onsite. (BLDG, C-3)

CONDITIONS FOR COMPLIANCE PRIOR TO FINAL SIGNOFF OR OCCUPANCY

33. Prior to final signoff or certificate of occupancy, Developer shall submit to the Building Division a final grading and drainage plan prepared by a licensed civil engineer depicting all final grades (with accurate elevations above sea level indicated) and onsite drainage control measures to prevent storm water runoff onto adjoining properties. (BLDG/ENG, F-1)

34. Prior to final signoff or certificate of occupancy, Developer shall complete all required offsite and onsite improvements for the project, including structures, paving, and landscaping, unless the Community Development Director allows Developer to provide security or an executed agreement approved by the City Attorney to ensure timely completion of such improvements. (PLNG/BLDG, F-2)

35. The applicants shall prepare and submit Landscaping and irrigation plans, including all required WELO checklists and forms, in compliance with the State of California Model Water Efficient Landscape Ordinance (WELO). The landscaping plans must include all water features, pools and spas. The landscaping and irrigation plans must be reviewed by the DWP and Planning Department. (PLNG, F-3)

36. A Lot Merger application shall be submitted to the Engineering Department prior to building permit issuance and the merger shall be recorded prior to occupancy of any building. (PLNG, F-4)

CONDITIONS REGARDING THE MITIGATION MONITORING PROGRAM FOR THE MITIGATED NEGATIVE DECLARATION

Mitigation Measures No. / Implementing Action	Implementation Timing	Party Responsible for Implementation	Party Responsible for Monitoring	Date of Completion /Notes
Biological Resources				
BIO-1: Whenever possible, impacts to native nesting birds will be avoided by not conducting project activities that involve clearing of vegetation, generation of mechanical noise, or ground disturbance during the typical breeding season (February 1 to September 1), if species covered under the Migratory Bird Treaty Act and Fish and Game Code sections 3503, 3503.5, and 3513 are determined to be present. If project activities must be conducted during the nesting bird season, a qualified Avian Biologist will conduct pre-construction Nesting Bird Surveys (NBS) prior to project-related disturbance to nestable vegetation to identify any active nests within a 500-ft radius of the construction area. If no active nests are found, no further action will be required. If an active nest is found, the biologist will set appropriate no-work buffers around the nest which will be based upon the nesting species, its sensitivity to disturbance, nesting stage and expected types, intensity and duration of disturbance. Buffers around active nests will be a minimum of 250 feet, unless the biologist determines that smaller buffers would be sufficient to avoid impacts to nesting birds. The nests and buffer zones shall be field checked weekly by a qualified biological monitor. The approved no-work buffer zone shall be clearly marked in the field, within which no disturbance activity shall commence until the qualified biologist has determined the young birds have successfully fledged and the nest is inactive.	During ground-disturbing activities that involve project activities that involve clearing of vegetation, generation of mechanical noise, or ground disturbance during the typical breeding season (February 1 to September 1).	Project Proponent, Contractor, Biologist	City of Big Bear Lake	
Cultural Resources				
CR-1: In the event that any historic or prehistoric cultural resources are inadvertently discovered, all construction work in the immediate vicinity of the discovery shall stop and a qualified archaeologist shall be engaged to discuss the discovery and determine if further mitigation measures are warranted.	Upon discovery of cultural resources	Contractor, Archaeological Monitor	City of Big Bear Lake	

Mitigation Measures No. / Implementing Action	Implementation Timing	Party Responsible for Implementation	Party Responsible for Monitoring	Date of Completion /Notes
CR-2: If human remains are discovered, work shall halt in that area until a determination can be made regarding the provenance of the human remains; and the procedures set forth in CEQA Section 15064.5(e), the California PRC (Section 5097.98), and the State Health and Safety Code (Section 7050.5) shall be undertaken.	Upon discovery of human remains	Contractor, Archaeological Monitor	City of Big Bear Lake	
Geology and Soils				
GEO-1: All structures shall be designed to meet the California Building Code provisions in the most current CBC edition and the ASCE Standard 7-16, where applicable. It is the responsibility of both the property owner and project structural engineer to determine the risk factors with respect to using CBC minimum design values for the proposed facilities.	Prior to Building Permit Issuance	Project Proponent/ Contractor	City of Big Bear Lake	
GEO-2: The potential for liquefaction should be properly evaluated by the project Geotechnical Engineer.	Prior to Building Permit Issuance	Project Proponent/ Geotechnical Engineer	City of Big Bear Lake	
GEO-3: Site preparation recommendations as listed in a City-approved Final Geotechnical Investigation report shall be incorporated into project design.	During site preparation	Project Proponent/ Contractor	City of Big Bear Lake	
Tribal Cultural Resources				
N-1: The use of noisy equipment outside or within the repair building shall not be loud, excessive, raucous, disturbing, or exceeding 60db at the property line.	During operations	Project Proponent	City of Big Bear Lake	

BUILDING NAME	BUILDING ANALYSIS						BUILDING AREA (S.F.)		BUILDING AREA MODIFICATION PER SECTION 506		MIXED USE/OCCUPANCY AREA CALCULATION SECTION 508	EXTERIOR WALL PROTECTION PER TABLE 601		OPENING PROTECTION TABLE 705.8	FIRE SPRINKLER	SPECIAL CONSIDERATIONS:
	OCC. TYPE	CONST. TYPE	STORY (ALLOW.) TABLE 504.4	STORY (ACTUAL)	BLDG. HT. (ALLOW.) TABLE 504.3	BLDG. HT. (ACTUAL VIF)	ALLOWABLE BLDG. AREA (TABLE 506.2)	BLDG. AREA (ACTUAL)	FRONTAGE INCREASE CBC 506.3 AND TABLE 506.3.3			BEARING	NON-BEARING			
ADMIN. BUILDING	B	V-B	2	1	40'-0"	27'-8 1/2"	9,000 SF	8,505 SF	BUILDING PERIMETER 75% TO LESS THAN 100% OPEN SPACE. 30 FT. OR GREATER FRONTAGE INCREASE FACTOR = .75	FRONTAGE INCREASE $A_u=[A_t + (NS \times 1)]$ $A_u=[8,505 + (9,000 \times .75)]$ $A_u=[9,000 + 6,750]$ $A_u=15,255$	8,505 + 2,755 = 11,260 SF. B: 8,505 / 15,255 = .56 A-3: 2,755 / 7,255 = .38 .56 + 38 = .94	-	-	-	NO	
	A-3	V-B	2	1	40'-0"	27'-8 1/2"	6,000 SF	2,755 SF	BUILDING PERIMETER 75% TO LESS THAN 100% OPEN SPACE. 30 FT. OR GREATER FRONTAGE INCREASE FACTOR = .75	FRONTAGE INCREASE $A_u=[A_t + (NS \times 1)]$ $A_u=[2,755 + (6,000 \times .75)]$ $A_u=[2,755 + 4,500]$ $A_u=7,255$		-	-	-	NO	
SHADE STRUCTURE #1	U	V-B	1	1	40'-0"	20'- 0"	5,500 SF	4,960 SF	N/A	-	-	-	-	-	NO	
SHADE STRUCTURE #2	U	V-B	1	1	40'-0"	30'- 0"	5,500 SF	5,280 SF	N/A	-	-	-	-	-	NO	
SHADE STRUCTURE #3	U	V-B	1	1	40'-0"	30'- 0"	5,500 SF	5,280 SF	N/A	-	-	-	-	-	NO	
SHADE STRUCTURE #4	U	V-B	1	1	40'-0"	30'- 0"	5,500 SF	5,280 SF	N/A	-	-	-	-	-	NO	

STAMPS

AGENCY APPROVAL
File No.: ########/##-########

CONSULTANT BRANDING

RUHNAU CLARKE ARCHITECTS

CODE ANALYSIS

SCALE: 12" = 1'-0"

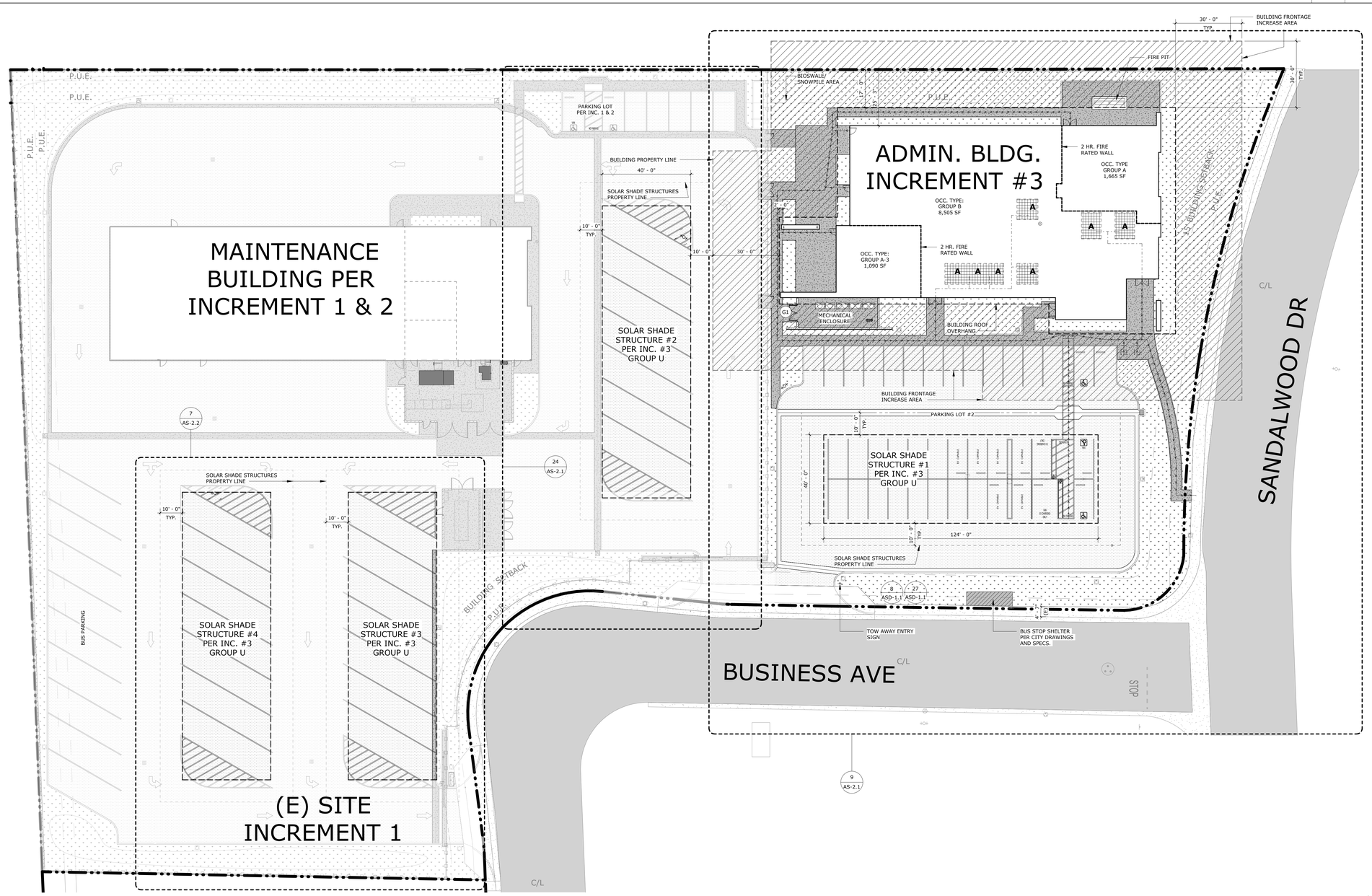

NORTH

OVERALL SITE PLAN

SCALE: 1" = 20'-0" | 1

- (E) CONCRETE PAVING TO REMAIN
- (E) ASPHALT ROAD TO REMAIN
- NEW BUILDING
- NEW LANDSCAPE AREA PER LANDSCAPE DWGS.
- NEW ASPHALT PER CIVIL'S DWGS.
- NEW CONCRETE PAVING PER CIVIL'S DWGS.
  CONTROL JOINTS PER DETAIL 1 / ASD-1.1
- BUILDING FRONTAGE INCREASE AREA
- PROPERTY LINE
- ACCESSIBLE PATH OF TRAVEL PER CBC 11B-303 & 11B-403

TOILET ROOMS

A — ALL GENDER RESTROOM

(E) PER INCREMENT 1 & 2

- (E) METAL FENCE
- (E) AC PAVING
- (E) CONCRETE

SITE LEGEND

STANDARD PARKING STALL PROVIDED.	28
MINIMUM NUMBER OF REQUIRED ACCESSIBLE PARKING SPACES (2022 CBC TABLE 11B-208.2)	2
TOTAL ACCESSIBLE PARKING STALLS PROVIDED.	3
VAN PARKING STALLS REQUIRED (2022 CBC SECTION 11B-208.2.4)	1
VAN PARKING STALLS PROVIDED	1
TOTAL EV CAPABLE SPACES REQUIRED (2022 CA GREEN CODE TABLE 5.106.5.3.1)	8
TOTAL EV CAPABLE SPACES PROVIDED	8
REQUIRED EV CAPABLE SPACES PROVIDED WITH EVSE (2022 CA GREEN CODE TABLE 5.106.5.3.1)	2
EV CAPABLE SPACES PROVIDED WITH EVSE	2
ACCESSIBLE STANDARD EVCS PARKING STALLS REQUIRED (2022 CBC SEC. 11B-228.3.2.1)	1
ACCESSIBLE STANDARD EVCS PARKING STALLS PROVIDED	1
ACCESSIBLE VAN EVCS PARKING STALLS REQUIRED (2022 CBC SEC. 11B-228.3.2.1)	1
ACCESSIBLE VAN EVCS PARKING STALLS PROVIDED	1
ACCESSIBLE AMBULATORY EVCS PARKING STALLS REQUIRED (2022 CBC SEC. 11B-228.3.2.1	0
TOTAL NUMBER OF PARKING SPACES PROVIDED IN PARKING FACILITY	39

PARKING COUNT

NO.	SIZE (WxH)	MATERIAL	FINISH	DETAIL	P.H.	HDWR	NOTES
G1	PR 8'-0" x 6'-0"	MTL	P	14 / ASD-1.1	-	-	2,3

NOTES:

1. PROVIDE KEYED KNOX PADLOCK PER CITY OF BIG BEAR LAKE FIRE DEPARTMENT REQUIREMENTS
2. GATE HEIGHTS TO MATCH HEIGHT OF ADJACENT FENCE OR CMU WALL U.N.O.
3. PROVIDE PADLOCKS AS PART OF HARDWARE SET
4. NO PADLOCKS ON EXIT GATES IN THE PATH OF EGRESS
5. NO MANUAL CANE BOLT, MANUALLY LOCKING HARDWARE OR CHAINS ON GATES WITH PANIC HARDWARE
6. CLOSING SPEED: 90 DEGREES TO 12 DEGREES IN 5 SECS.
7. GATES SHALL HAVE 5 LBS MAX. OPERATING PRESSURE.
8. PROVIDE KICK PLATES

GATE SCHEDULE ABBREVIATIONS:

P.H.	PANIC HARDWARE
P	POWDER COATED
PR	PAIR OF GATES
MTL	METAL FENCE

GATE SCHEDULE

MOUNT TRANSIT ADMINISTRATION FACILITY: INCREMENT 3 - 100% CD

PROJECT No. :50801
4/18/2024 4:19:28 PM

DRAWN BY: CHECKED BY:

ISSUE No._____ DATE_____ DESCRIPTION_____
ISSUE No._____ DATE_____ DESCRIPTION_____
ISSUE No._____ DATE_____ DESCRIPTION_____
ISSUE No._____ DATE_____ DESCRIPTION_____

REVISION No._____ DATE_____ DESCRIPTION_____
REVISION No._____ DATE_____ DESCRIPTION_____
REVISION No._____ DATE_____ DESCRIPTION_____
REVISION No._____ DATE_____ DESCRIPTION_____

RUHNAUCLARKE.COM
3775 TENTH STREET, RIVERSIDE CALIFORNIA 92501(951) 684 4664 / 5751 PALMER WAY, SUITE C, CARLSBAD CALIFORNIA 92010(760) 438 5899

MOUNT TRANSIT ADMINISTRATION FACILITY
INCREMENT 3
170 BUSINESS CENTER. BIG BEAR LAKE, CALIFORNIA
BIG BEAR LAKE

OVERALL SITE PLAN

AS-1.1

50801

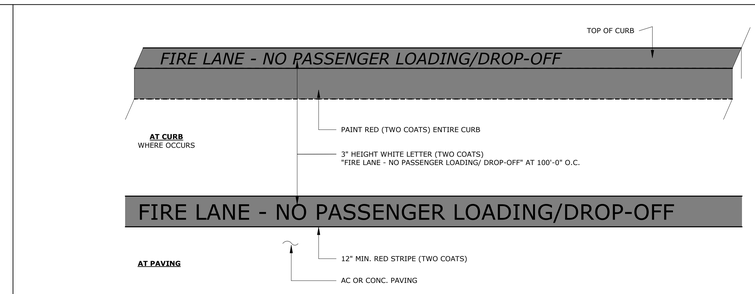

FIRE LANE STRIPING | SCALE: 1" = 1'-0" | 2

STAMPS

AGENCY APPROVAL
File No.: ########-##-########

CONSULTANT BRANDING

RUHNAU CLARKE ARCHITECTS

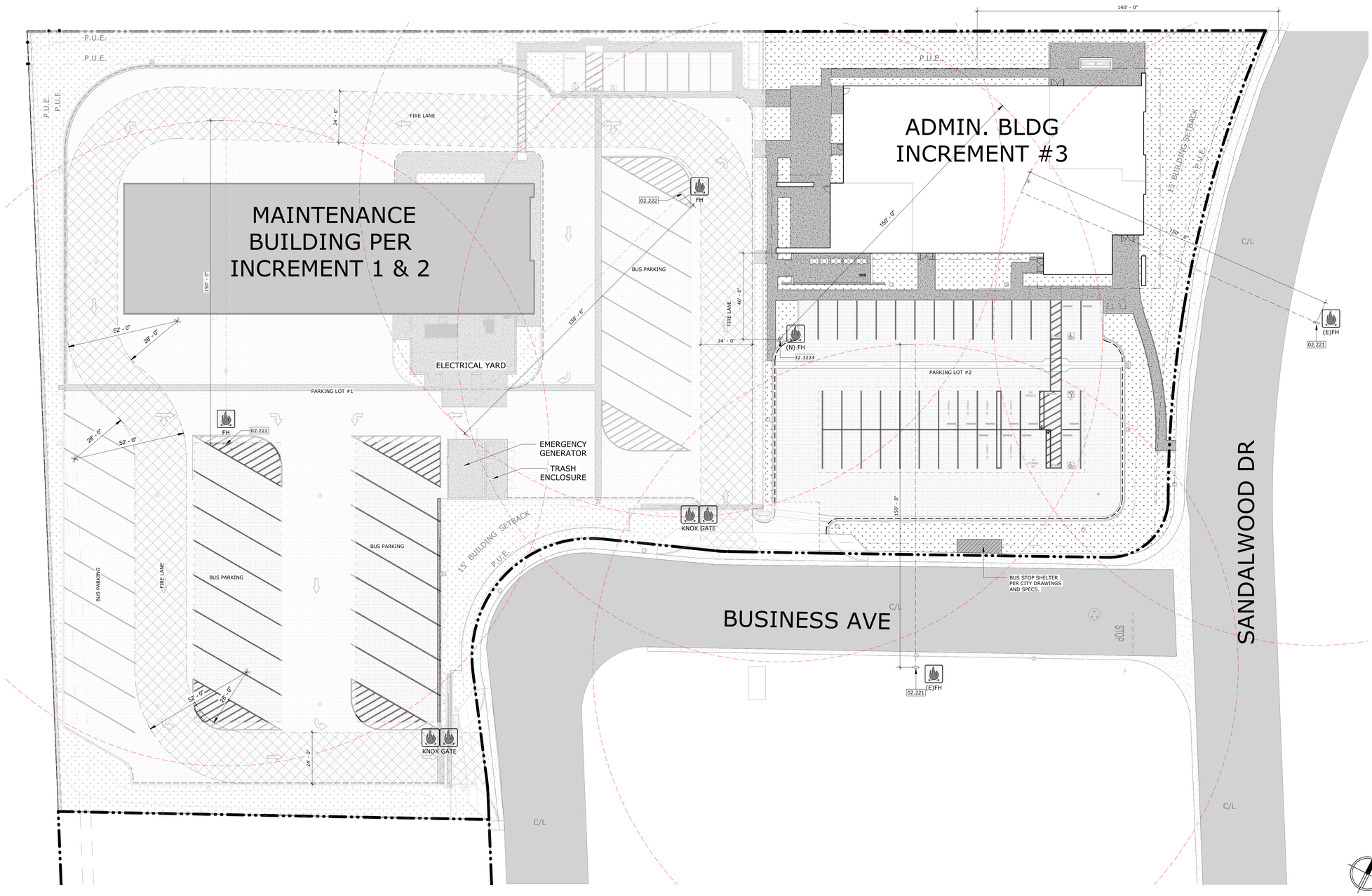

NORTH

(E) CONCRETE PAVING TO REMAIN

EXISTING ASPHALT ROAD TO REMAIN

NEW BUILDING

NEW LANDSCAPE AREA PER LANDSCAPE DWGS.

NEW ASPHALT PER CIVIL'S DWGS.

NEW CONCRETE PAVING PER CIVIL'S DWGS.
CONTROL JOINTS PER DETAIL 1 / ASD-1.1

PROPERTY LINE

SITE LEGEND

02.221	(E) FIRE HYDRANT TO REMAIN
02.222	(E) FIRE HYDRANT PER INCREMENT 1
32.3224	FIRE HYDRANT

KEYNOTE LEGEND

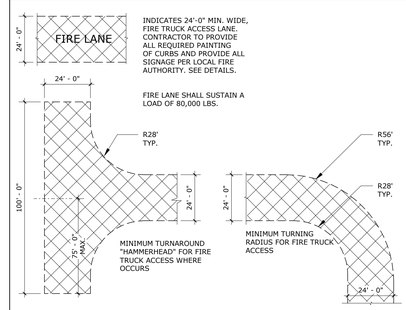

FH — FIRE HYDRANT

GATE — 20'-0" MIN. WIDE FIRE TRUCK ACCESS GATES.

KNOX — APPROVED LOCKBOX (MINIMUM KNOX BOX 3200 SERIES MODEL)

RED PAINTED CURB PER DETAIL 2 / AS-1.2

FIRE AUTHORITY PLAN | SCALE: 1" = 20'-0" | 1

FIRE ACCESS LEGEND

MOUNT TRANSIT ADMINISTRATION FACILITY: INCREMENT 3 - 100% CD

PROJECT No. :50801
4/18/2024 4:19:30 PM

DRAWN BY: _____ CHECKED BY: _____

ISSUE No.____ DATE_____ DESCRIPTION_____
ISSUE No.____ DATE_____ DESCRIPTION_____
ISSUE No.____ DATE_____ DESCRIPTION_____
ISSUE No.____ DATE_____ DESCRIPTION_____

REVISION No.____ DATE_____ DESCRIPTION_____
REVISION No.____ DATE_____ DESCRIPTION_____
REVISION No.____ DATE_____ DESCRIPTION_____
REVISION No.____ DATE_____ DESCRIPTION_____

RUHNAUCLARKE.COM
3775 TENTH STREET, RIVERSIDE CALIFORNIA 92501(951) 684 4664 / 5751 PALMER WAY, SUITE C, CARLSBAD CALIFORNIA 92010(760) 438 5899

MOUNT TRANSIT ADMINISTRATION FACILITY
INCREMENT 3
170 BUSINESS CENTER. BIG BEAR LAKE, CALIFORNIA
BIG BEAR LAKE

FIRE AUTHORITY PLAN | **AS-1.2**

50801

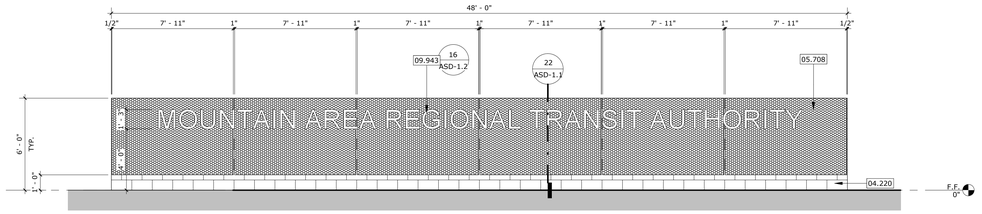

MECH YARD ELEVATION | SCALE: 1/4" = 1'-0" | 15

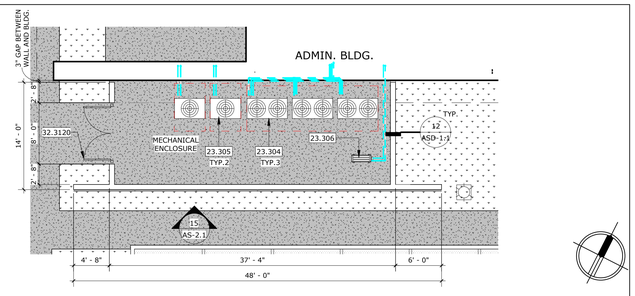

NORTH

MECHANICAL YARD | SCALE: 1/8" = 1'-0" | 5

STAMPS

AGENCY APPROVAL
File No. ########-##-########

CONSULTANT BRANDING

RUHNAU CLARKE ARCHITECTS

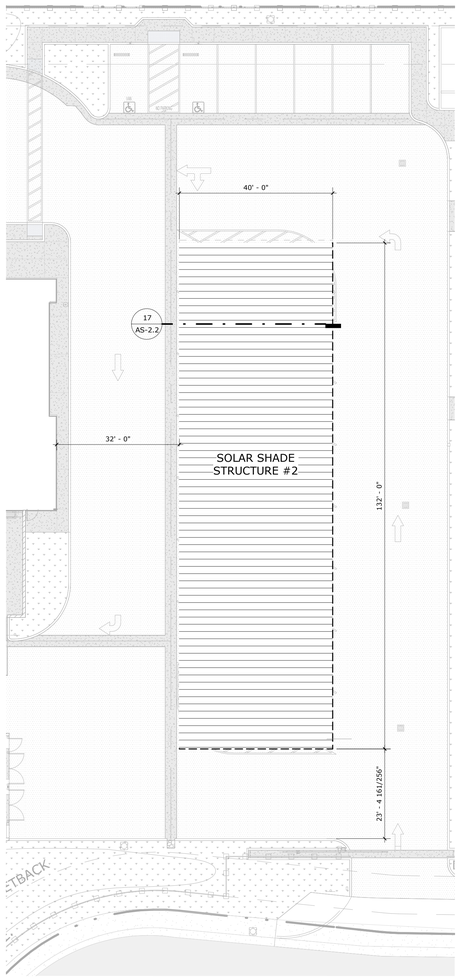

NORTH

SOLAR SHADE STRUCTURES #2 - ENLARGED PLAN | SCALE: 1/16" = 1'-0" | 24

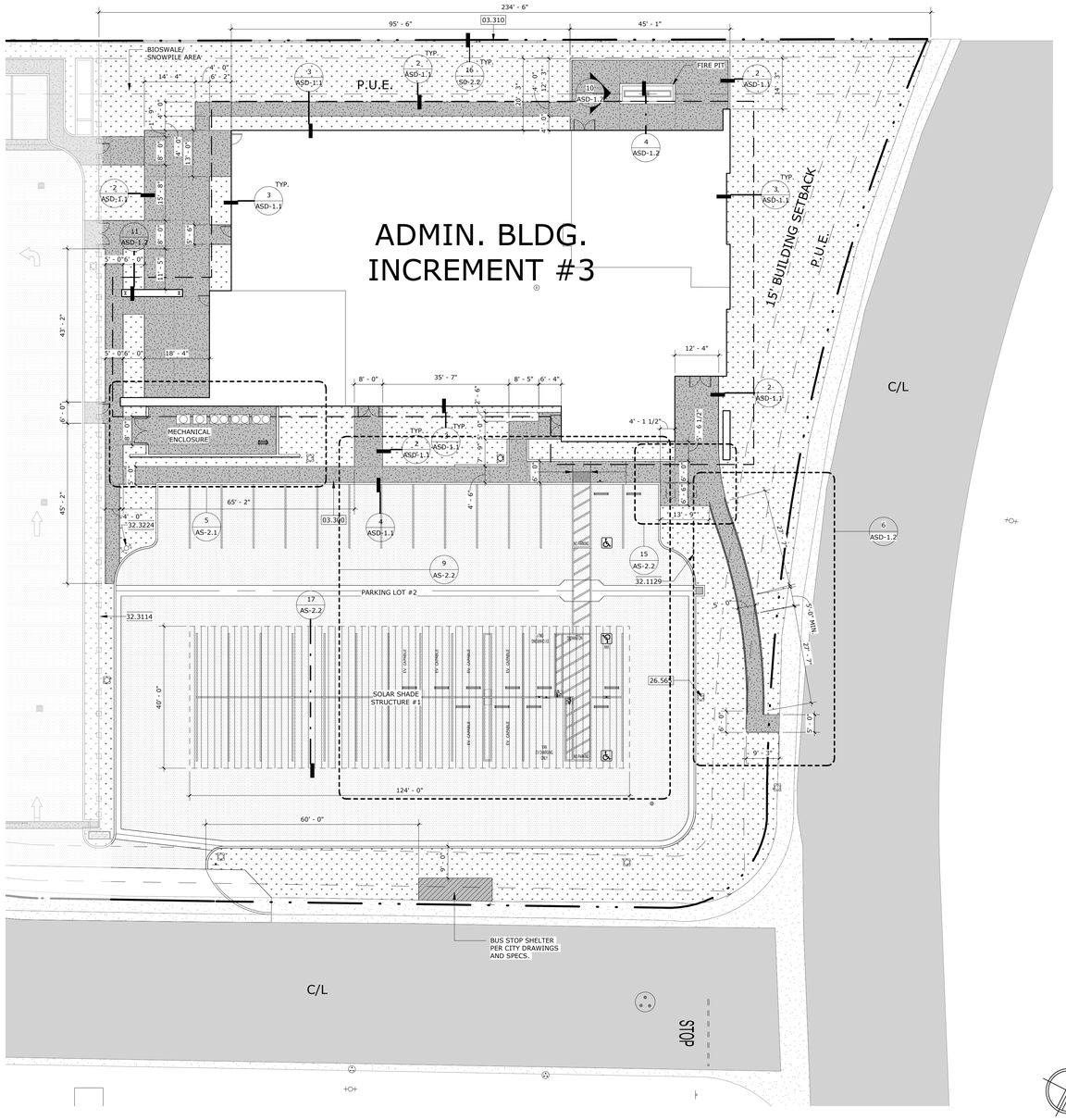

NORTH

ENLARGED SITE PLAN | SCALE: 1/16" = 1'-0" | 9

- NEW BUILDING
- NEW LANDSCAPE AREA PER LANDSCAPE DWGS.
- NEW ASPHALT PER CIVIL'S DWGS.
- NEW CONCRETE PAVING PER CIVIL'S DWGS.
- CONTROL JOINTS PER DETAIL 1 / ASD-1.1
- EXISTING ASPHALT ROAD TO REMAIN
- METAL FENCE, PER INCREMENT 1 & 2
- PROPERTY LINE
- TRAFFIC CONTROL PAVENMENT MARKING REF. DETAIL 24 / ASD-1.1
- SITE LIGHTING PER ELECTRICAL DWGS.

ENLARGED SITE PLAN LEGEND

03.300	CAST-IN-PLACE CONCRETE
03.310	CAST-IN-PLACE CONCRETE RETAINING WALL
04.220	CONCRETE MASONRY UNIT WALL
05.708	CORTEN STEEL METAL PANEL
09.943	WALL MOUNTED LETTER SIGN
23.304	CU UNIT PER MECH. DWGS.
23.305	HP UNIT PER MECH. DWGS.
23.306	OU UNIT PER MECH. DWGS.
26.565	SITE LIGHTING PER ELECTRICAL DWGS
32.1129	LANDSCAPE PER LANDSCAPE DWG.
32.3114	METAL FENCE PER INCREMENT 1 & 2
32.3120	ORNAMENTAL METAL GATE PER GATE SCHED. ON SHEET AS-1.1
32.3224	FIRE HYDRANT

KEYNOTE LEGEND

MOUNT TRANSIT ADMINISTRATION FACILITY: INCREMENT 3 - 100% CD

PROJECT No. :50801
4/18/2024 4:19:33 PM

DRAWN BY: CHECKED BY:

ISSUE No.____ DATE____ DESCRIPTION____
ISSUE No.____ DATE____ DESCRIPTION____
ISSUE No.____ DATE____ DESCRIPTION____
ISSUE No.____ DATE____ DESCRIPTION____

REVISION No.____ DATE____ DESCRIPTION____
REVISION No.____ DATE____ DESCRIPTION____
REVISION No.____ DATE____ DESCRIPTION____
REVISION No.____ DATE____ DESCRIPTION____

RUHNAUCLARKE.COM
3775 TENTH STREET, RIVERSIDE CALIFORNIA 92501 (951) 684 4664 / 5751 PALMER WAY, SUITE C, CARLSBAD CALIFORNIA 92010 (760) 438 5899

MOUNT TRANSIT ADMINISTRATION FACILITY
INCREMENT 3
170 BUSINESS CENTER. BIG BEAR LAKE, CALIFORNIA
BIG BEAR LAKE

ENLARGED SITE PLAN | **AS-2.1**

50801

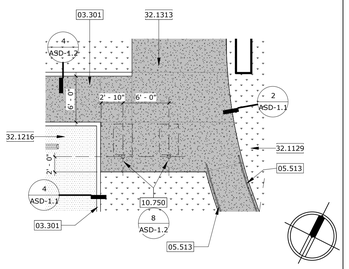

NORTH

FLAGPOLES ENLARGED PLAN

SCALE: 1/8" = 1'-0" | 15

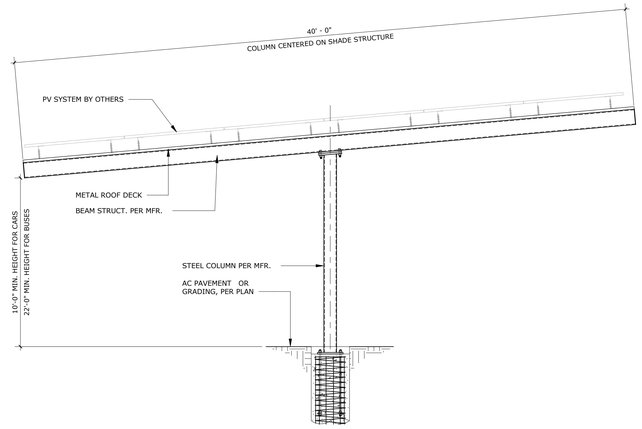

PV SHADE STRUCTURE SECTION

SCALE: 1/4" = 1'-0" | 17

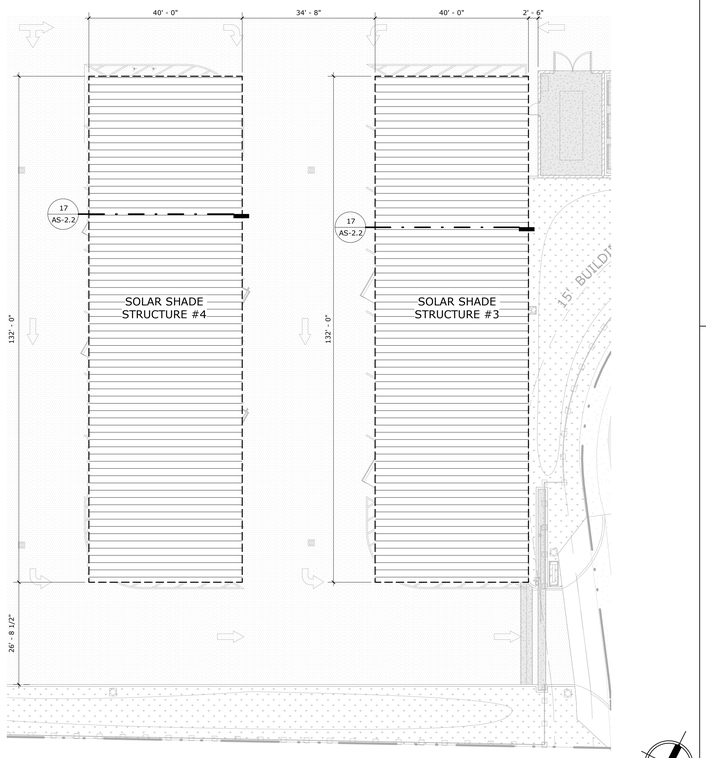

NORTH

SOLAR SHADE STRUCTURES #3 & #4 - ENLARGED PLAN

SCALE: 1/16" = 1'-0" | 7

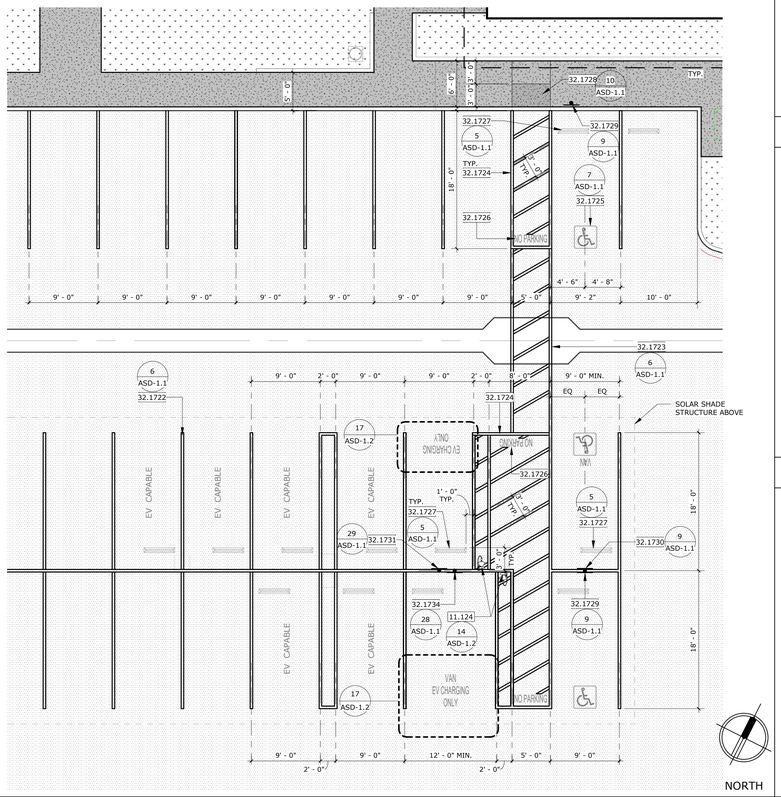

NORTH

PARKING LOT ENLARGED PLAN

SCALE: 1/8" = 1'-0" | 9

STAMPS

AGENCY APPROVAL
File No.: ########/##-########

RUHNAU CLARKE ARCHITECTS

CONSULTANT BRANDING

- NEW BUILDING
- NEW LANDSCAPE AREA PER LANDSCAPE DWGS.
- NEW ASPHALT PER CIVIL'S DWGS.
- NEW CONCRETE PAVING PER CIVIL'S DWGS.
- CONTROL JOINTS PER DETAIL 1 / ASD-1.1
- EXISTING ASPHALT ROAD TO REMAIN
- METAL FENCE, PER INCREMENT 1 & 2
- PROPERTY LINE
- TRAFFIC CONTROL PAVENMENT MARKING REF. DETAIL 24 / ASD-1.1
- SITE LIGHTING PER ELECTRICAL DWGS.

ENLARGED SITE PLAN LEGEND

03.301	CAST-IN-PLACE CONCRETE CURB
05.513	METAL HAND RAIL
10.750	FLAGPOLE
11.124	SINGLE PORT EV CHARGER
32.1129	LANDSCAPE PER LANDSCAPE DWG.
32.1216	ASPHALT PAVING
32.1313	CONCRETE PAVING
32.1722	4" WIDE WHITE STRIPING
32.1723	ACCESSIBILITY CROSSING LANE TO BE WHITE BORDER AND WHITE CROSS STRIPING
32.1724	BORDER TO BE BLUE AT ACCESS AISLE. INTERIOR STRIPING TO CONTRAST PER SURFACE: WHITE ON ASPHALT, BLUE ON CONC., TYP.
32.1725	INTERNATIONAL SYMBOL OF ACCESSIBILITY.
32.1726	12" HIGH WHITE LETTERING WITH NO STRIPING THROUGH TEXT, TYP.
32.1727	CONCRETE CURB WHEEL STOP
32.1728	TRUNCATED DOMES
32.1729	ACCESSIBILITY PARKING SIGN.
32.1730	VAN ACCESSIBLE PARKING SIGN.
32.1731	EV ACCESSIBLE PARKING SIGN
32.1734	EV VAN ACCESSIBLE PARKING SIGN

KEYNOTES

MOUNT TRANSIT ADMINISTRATION FACILITY: INCREMENT 3 - 100% CD

PROJECT No. :50801
4/18/2024 4:19:35 PM

DRAWN BY: CHECKED BY:

ISSUE No._____ DATE_____ DESCRIPTION_____
ISSUE No._____ DATE_____ DESCRIPTION_____
ISSUE No._____ DATE_____ DESCRIPTION_____
ISSUE No._____ DATE_____ DESCRIPTION_____

REVISION No._____ DATE_____ DESCRIPTION_____
REVISION No._____ DATE_____ DESCRIPTION_____
REVISION No._____ DATE_____ DESCRIPTION_____
REVISION No._____ DATE_____ DESCRIPTION_____

RUHNAUCLARKE.COM
3775 TENTH STREET, RIVERSIDE CALIFORNIA 92501(951) 684 4664 / 5751 PALMER WAY, SUITE C, CARLSBAD CALIFORNIA 92010(760) 438 5899

MOUNT TRANSIT ADMINISTRATION FACILITY
INCREMENT 3
170 BUSINESS CENTER. BIG BEAR LAKE, CALIFORNIA
BIG BEAR LAKE

ENLARGED SITE PLAN

AS-2.2

50801

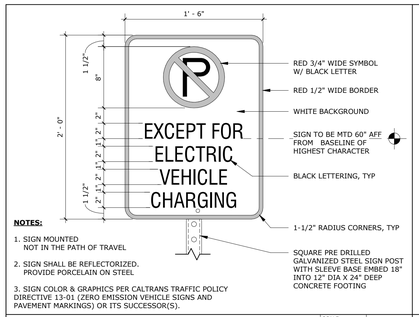

NOTES:

1. SIGN MOUNTED NOT IN THE PATH OF TRAVEL
2. SIGN SHALL BE REFLECTORIZED. PROVIDE PORCELAIN ON STEEL
3. SIGN COLOR & GRAPHICS PER CALTRANS TRAFFIC POLICY DIRECTIVE 13-01 (ZERO EMISSION VEHICLE SIGNS AND PAVEMENT MARKINGS) OR ITS SUCCESSOR(S).

SIGN - NO PARKING @ EV

SCALE: 1 1/2" = 1'-0" | 25

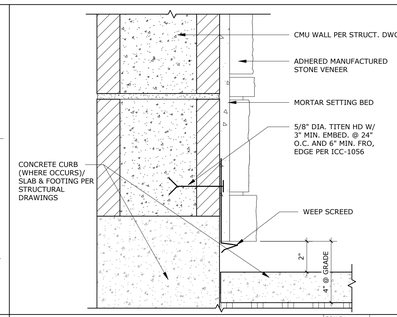

STONE VENEER @ CURB

SCALE: 3" = 1'-0" | REF.: 20/ASD-1.2 | 20

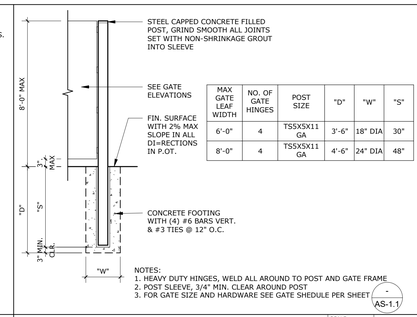

MAX GATE LEAF WIDTH	NO. OF GATE HINGES	POST SIZE	"D"	"W"	"S"
6'-0"	4	TSS5X5X11 GA	3'-6"	18" DIA	30"
8'-0"	4	TSS5X5X11 GA	4'-6"	24" DIA	48"

NOTES:
1. HEAVY DUTY HINGES, WELD ALL AROUND TO POST AND GATE FRAME
2. POST SLEEVE, 3/4" MIN. CLEAR AROUND POST
3. FOR GATE SIZE AND HARDWARE SEE GATE SHEDULE PER SHEET - AS-1.1

STEEL GATE POST SCHEDULE

SCALE: 3/8" = 1'-0" | REF.: / | 15

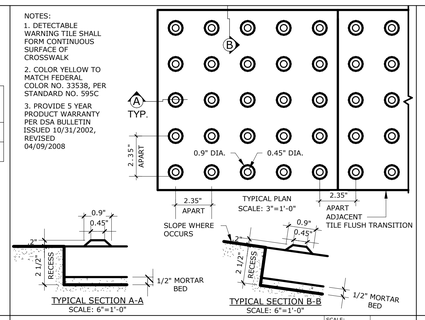

DETECTABLE WARNING TILE

SCALE: 3" = 1'-0" | 10

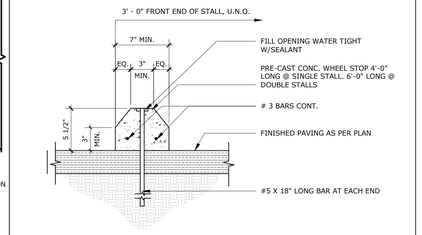

CONCRETE WHEELSTOP

SCALE: 1 1/2" = 1'-0" | REF.: / | 5

STAMPS

AGENCY APPROVAL
File No: ########/##-########

RUHNAU CLARKE ARCHITECTS

CONSULTANT BRANDING

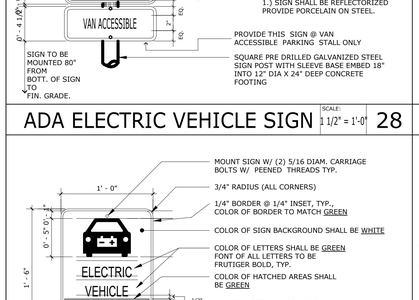

NOTES:

1. SIGN MOUNTED NOT IN THE PATH OF TRAVEL
2. SIGN SHALL BE REFLECTORIZED. PROVIDE PORCELAIN ON STEEL
3. SIGN COLOR & GRAPHICS PER CALTRANS TRAFFIC POLICY DIRECTIVE 13-01 (ZERO EMISSION VEHICLE SIGNS AND PAVEMENT MARKINGS) OR ITS SUCCESSOR(S).

SIGN - EV TOW-AWAY

SCALE: 1 1/2" = 1'-0" | 27

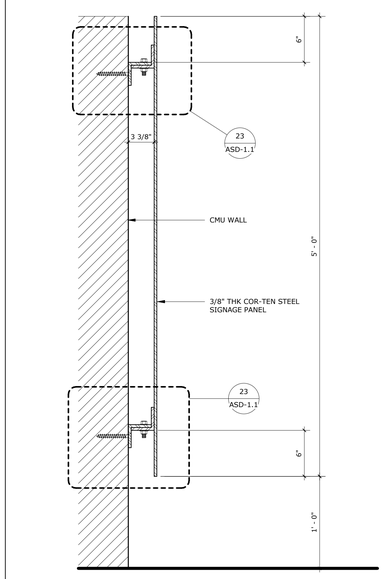

COR-TEN STEEL ANCHORAGE

SCALE: 1 1/2" = 1'-0" | REF.: 15/AS-2.1 | 22

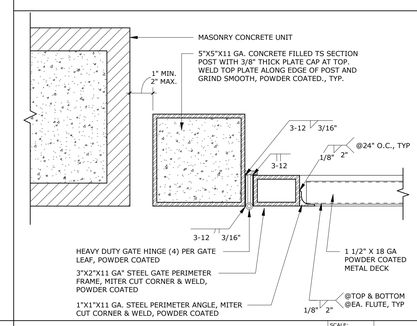

ENCLOSURE GATE JAMB

SCALE: 3" = 1'-0" | 17

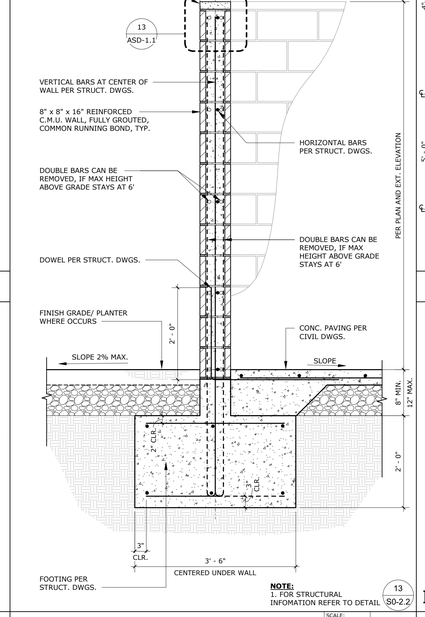

NOTE:
1. FOR STRUCTURAL INFOMATION REFER TO DETAIL 13 S0-2.2

C.M.U WALL - SECTION

SCALE: 3/4" = 1'-0" | REF.: 5/AS-2.1 | 12

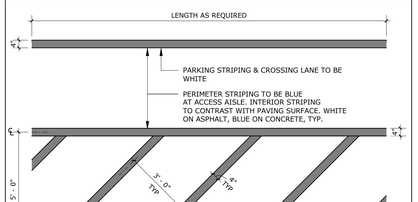

NOTE:
FIRE LANE MARKING ARE TO BE PAINTED WITH NO LESS THAN TWO COATS OF APPROVED RED PAINT, TYP.

TYP. PAVEMENT STRIPING

SCALE: 3/8" = 1'-0" | REF.: / | 6

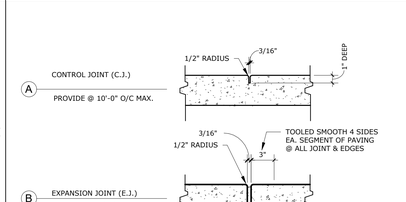

TYP. CONC. JOINT DETAILS

SCALE: 1 1/2" = 1'-0" | REF.: / | 1

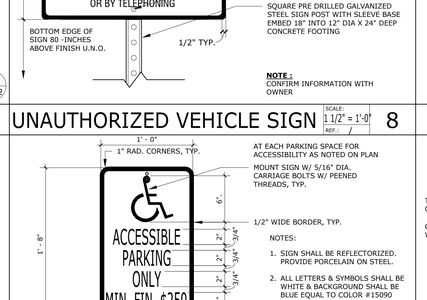

NOTES:
1. STENCIL: BACKGROUND, STENCIL AND BORDER STENCILED ON TO PARKING SURFACE IN EACH ACCESSIBLE STALL
2. LOCATE PER ACCESSIBLE PARKING STALL DETAIL(S)
3. MINIMUM 2" WIDTH FOR ALL LINES
4. VISUALLY CENTER SYMBOL WITHIN BORDER
5. SYMBOL PROPORTIONS TO MATCH CBC FIGURE 11B-703.7.2.1

INTERNATIONAL SYMBOL OF ACCESSIBILITY

ISA DETAIL

SCALE: 3/4" = 1'-0" | REF.: / | 7

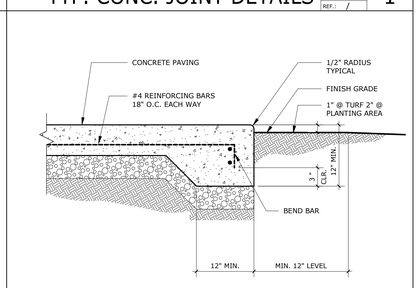

CONCRETE PAVING EDGE

SCALE: 1 1/2" = 1'-0" | REF.: 9/AS-2.1 | 2

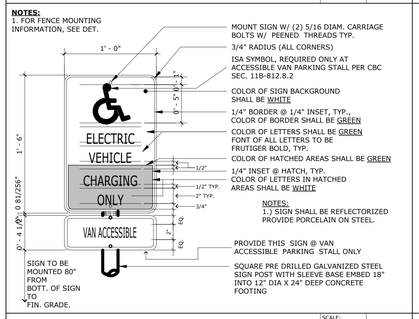

ADA ELECTRIC VEHICLE SIGN

SCALE: 1 1/2" = 1'-0" | 28

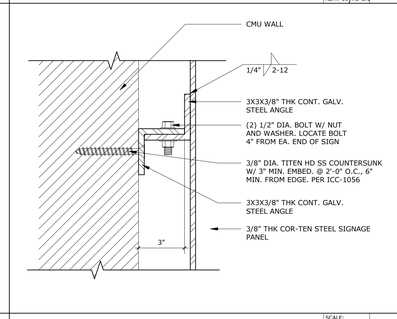

CONNECTION @ CMU WALL

SCALE: 3" = 1'-0" | REF.: 22/ASD-1.1 | 23

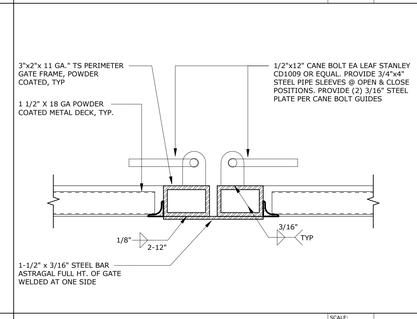

YARD GATE DROP LATCH

SCALE: 3" = 1'-0" | 18

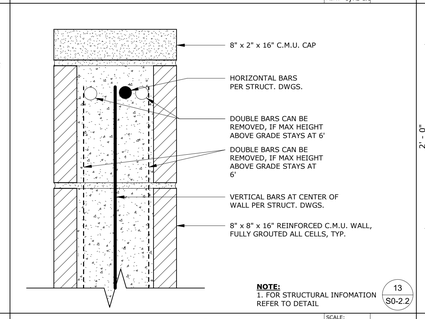

NOTE:
1. FOR STRUCTURAL INFOMATION REFER TO DETAIL 13 S0-2.2

C.M.U TOP OF WALL

SCALE: 3" = 1'-0" | REF.: 12/ASD-1.1 | 13

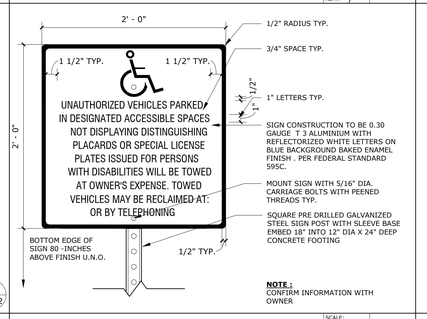

SIGN CONSTRUCTION TO BE 0.30 GAUGE T 3 ALUMINUM WITH REFLECTORIZED WHITE LETTERS ON BLUE BACKGROUND BAKED ENAMEL FINISH . PER FEDERAL STANDARD 595C.
MOUNT SIGN WITH 5/16" DIA. CARRIAGE BOLTS WITH PEENED THREADS TYP.
SQUARE PRE DRILLED GALVANIZED STEEL SIGN POST WITH SLEEVE BASE EMBED 18" INTO 12" DIA X 24" DEEP CONCRETE FOOTING

NOTE :
CONFIRM INFORMATION WITH OWNER

UNAUTHORIZED VEHICLE SIGN

SCALE: 1 1/2" = 1'-0" | REF.: / | 8

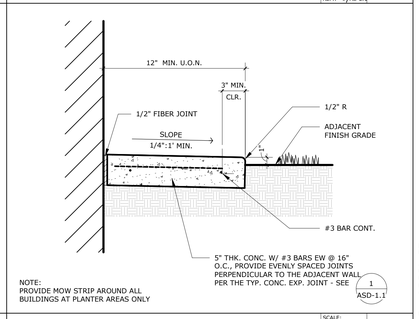

NOTE:
PROVIDE MOW STRIP AROUND ALL BUILDINGS AT PLANTER AREAS ONLY

TYP. BUILDING MOW STRIP

SCALE: 1 1/2" = 1'-0" | REF.: 9/AS-2.1 | 3

ELECTRIC VEHICLE SIGN

SCALE: 1 1/2" = 1'-0" | 29

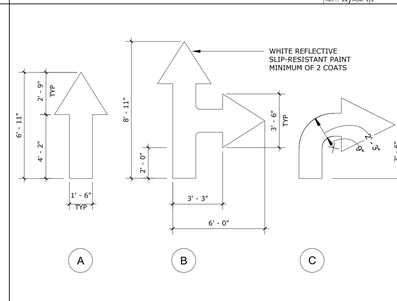

PAVEMENT DIRECTIONAL SIGN

SCALE: 1/4" = 1'-0" | REF.: / | 24

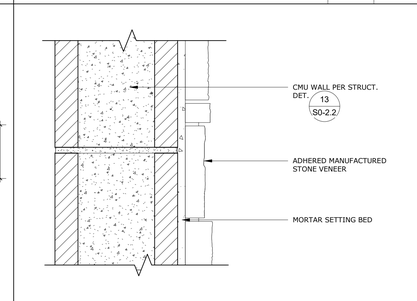

CMU W/ STONE VENEER

SCALE: 3" = 1'-0" | 19

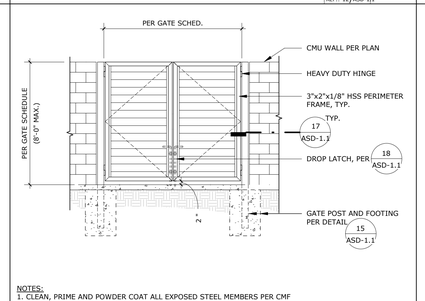

NOTES:
1. CLEAN, PRIME AND POWDER COAT ALL EXPOSED STEEL MEMBERS PER CMF

MTL SERVICE GATE-DBL-ELEV.

SCALE: 1/4" = 1'-0" | 14

NOTES:
1. SIGN SHALL BE REFLECTORIZED. PROVIDE PORCELAIN ON STEEL.
2. ALL LETTERS & SYMBOLS SHALL BE WHITE & BACKGROUND SHALL BE BLUE EQUAL TO COLOR #15090 FEDERAL STD. 595C INCLUDE THE STATEMENT "VAN ACCESSIBLE" AT VAN ACCESSIBLE PARKING STALL.
   ISA PROPORTIONS SHALL MATCH
3. CBC FIG. 11B-703.7.2.1, TYP..

PROVIDE THIS SIGN @ VAN ACCESSIBLE PARKING STALL ONLY
SQUARE PRE DRILLED GALV. STEEL SIGN POST WITH SLEEVE BASE EMBED 30" INTO 12" DIA. X 36" DEEP CONCRETE FOOTING.

ACCESSIBLE PARKING SIGN

SCALE: 1 1/2" = 1'-0" | REF.: / | 9

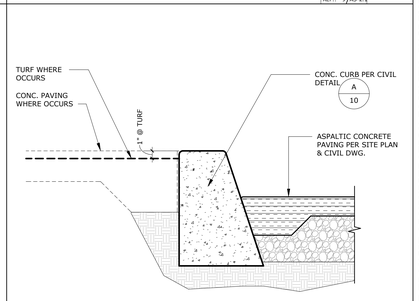

CONCRETE CURB AT AC

SCALE: 1 1/2" = 1'-0" | REF.: 9/AS-2.1 | 4

MOUNT TRANSIT ADMINISTRATION FACILITY: INCREMENT 3 - 100% CD

PROJECT No. :50801
4/18/2024 4:19:37 PM

DRAWN BY: CHECKED BY:

ISSUE No.	DATE	DESCRIPTION	REVISION No.	DATE	DESCRIPTION
ISSUE No.	DATE	DESCRIPTION	REVISION No.	DATE	DESCRIPTION
ISSUE No.	DATE	DESCRIPTION	REVISION No.	DATE	DESCRIPTION
ISSUE No.	DATE	DESCRIPTION	REVISION No.	DATE	DESCRIPTION

RUHNAUCLARKE.COM
3775 TENTH STREET, RIVERSIDE CALIFORNIA 92501(951) 684 4664 / 5751 PALMER WAY, SUITE C, CARLSBAD CALIFORNIA 92010(760) 438 5899

MOUNT TRANSIT ADMINISTRATION FACILITY
INCREMENT 3
170 BUSINESS CENTER. BIG BEAR LAKE, CALIFORNIA
BIG BEAR LAKE

DETAILS

ASD-1.1

50801

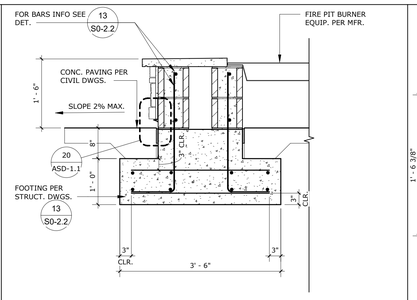

FIRE PIT FOOTING

SCALE: 3/4" = 1'-0" | 20

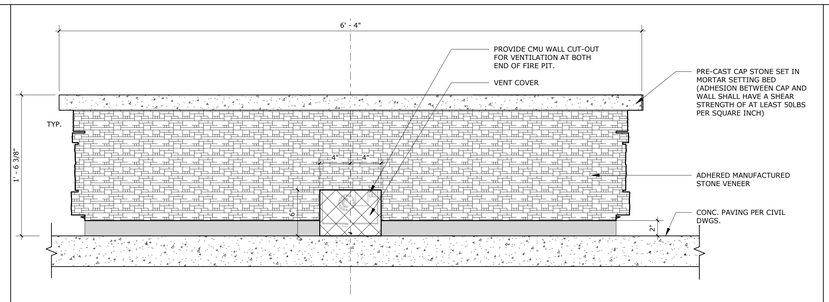

FIRE PIT ELEV.

SCALE: 1 1/2" = 1'-0" | 10

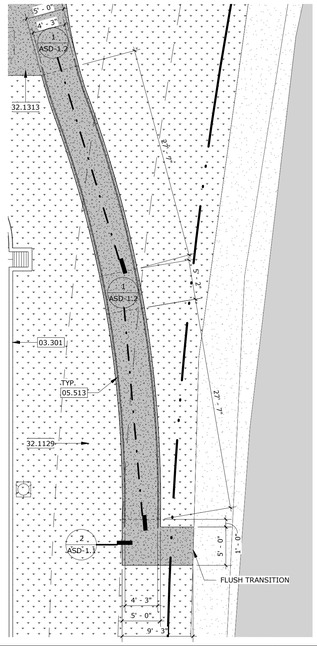

STAMPS

LICENSED ARCHITECT — ROGER CLARKE — No. C-#####, Exp.10-31-25 — STATE OF CALIFORNIA

AGENCY APPROVAL
File No: ########-##-########

CONSULTANT BRANDING

RUHNAU CLARKE ARCHITECTS

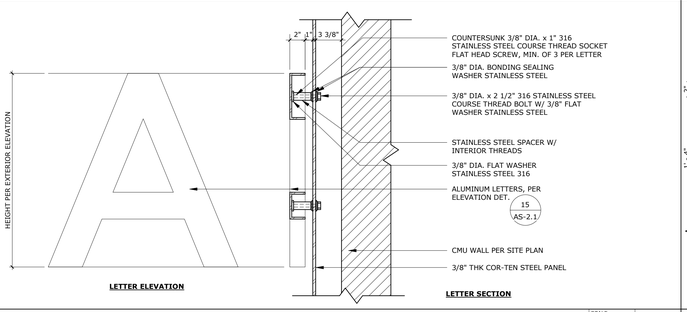

WALL-MOUNTED LETTER @ COR-TEN STEEL

SCALE: 1 1/2" = 1'-0" | 16

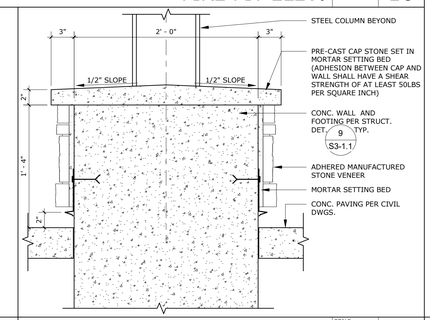

COLUMNS BASE WALL

SCALE: 1 1/2" = 1'-0" | 11

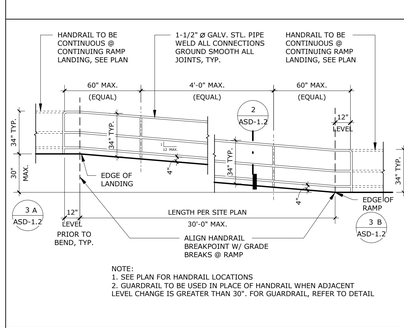

NOTE:
1. SEE PLAN FOR HANDRAIL LOCATIONS
2. GUARDRAIL TO BE USED IN PLACE OF HANDRAIL WHEN ADJACENT LEVEL CHANGE IS GREATER THAN 30". FOR GUARDRAIL, REFER TO DETAIL

RAMP ENLARGED PLAN

SCALE: 1/8" = 1'-0" | 6

TYP. RAMP SECTION

SCALE: 1/4" = 1'-0" | REF.: 6/ASD-1.2 | 1

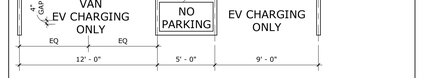

NOTES:
1. STENCIL PHRASE TO PARKING SURFACE IN EACH DESIGNATED PARKING ONLY STALLS
2. ALL LETTERING TO BE 12" HIGH, WHITE REFLECTORIZED PAINT
3. TEXT TO BE CENTERED

EV CHARGING ONLY STRIPING

SCALE: 3/16" = 1'-0" | 17

NOTES:
1. STENCIL ONE SYMBOL ON TO PARKING SURFACE IN EACH EV PARKING
2. PROPORTIONS TO MATCH IIB-703.7.2.1
3. LOCATE PER PARKING STALL DETAIL(S).
4. ALL LETTER TO BE 4" WIDE X 1/8" THK PAINTED WHITE

EV PAVEMENT SIGN

SCALE: 1" = 1'-0" | 12

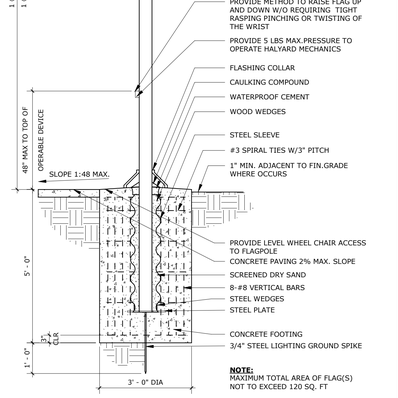

NOTE:
MAXIMUM TOTAL AREA OF FLAG(S) NOT TO EXCEED 120 SQ. FT

FLAGPOLE

SCALE: 1/2" = 1'-0" | 8

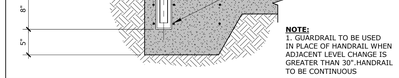

NOTE:
1. GUARDRAIL TO BE USED IN PLACE OF HANDRAIL WHEN ADJACENT LEVEL CHANGE IS GREATER THAN 30". HANDRAIL TO BE CONTINUOUS

TYP. HANDRAIL SECTION

SCALE: 1" = 1'-0" | REF.: 1/ASD-1.2 | 2

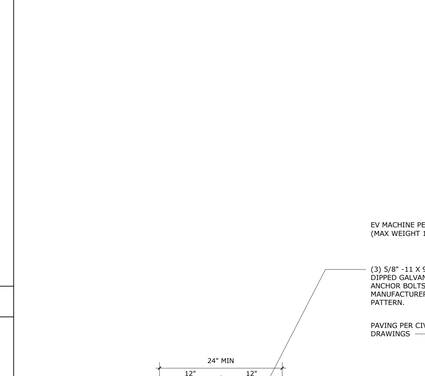

EV PEDESTAL BASE ATTACHMENT

SCALE: 1" = 1'-0" | 14

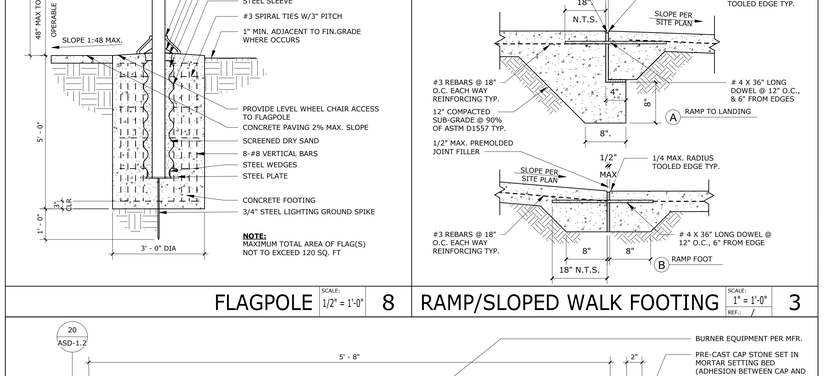

RAMP/SLOPED WALK FOOTING

SCALE: 1" = 1'-0" | REF.: / | 3

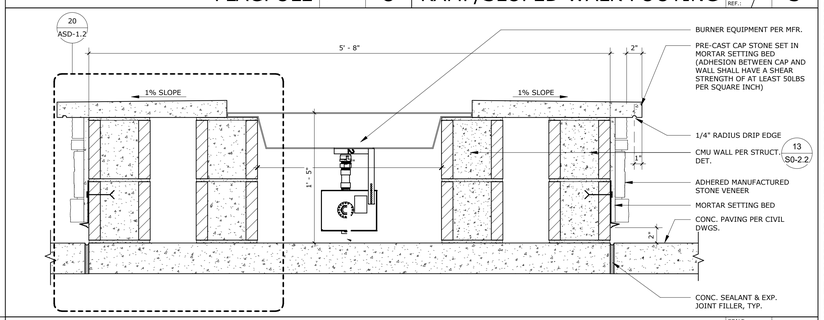

FIRE PIT

SCALE: 1 1/2" = 1'-0" | 4

PROJECT No. :50801
4/18/2024 4:19:39 PM

DRAWN BY: CHECKED BY:

ISSUE No.____ DATE____ DESCRIPTION____
ISSUE No.____ DATE____ DESCRIPTION____
ISSUE No.____ DATE____ DESCRIPTION____
ISSUE No.____ DATE____ DESCRIPTION____

REVISION No.____ DATE____ DESCRIPTION____
REVISION No.____ DATE____ DESCRIPTION____
REVISION No.____ DATE____ DESCRIPTION____
REVISION No.____ DATE____ DESCRIPTION____

RUHNAUCLARKE.COM
3775 TENTH STREET, RIVERSIDE CALIFORNIA 92501(951) 684 4664 / 5751 PALMER WAY, SUITE C, CARLSBAD CALIFORNIA 92010(760) 438 5899

MOUNT TRANSIT ADMINISTRATION FACILITY
INCREMENT 3
170 BUSINESS CENTER. BIG BEAR LAKE, CALIFORNIA
BIG BEAR LAKE

DETAILS

ASD-1.2

50801

MOUNT TRANSIT ADMINISTRATION FACILITY: INCREMENT 3 - 100% CD

MINIMUM PLUMBING FACILITIES									
TYPE OF OCCUPANCY	TOTAL SF	OCC. FACTOR	# OF OCCUPANTS	# OF DRINKING FOUNTAINS	MALE	FIXTURES PER PERSON	LAVATORIES PER PERSON	FEMALE	FIXTURES PER PERSON	LAVATORIES PER PERSON
A-3	3,163	30	106	1	53	1	1	53	1	1
B	4,844	150	33	0	17	1	1	16	2	1

REQUIRED		PROVIDED	
MINIMUM # WATER CLOSETS	7	TOTAL # WATER CLOSETS	7
MINIMUM # FIXTURES	4	TOTAL # FIXTURES	8
MINIMUM # DRINKING FOUNTAINS	1	TOTAL # DRINKING FOUNTAINS	1

ASSISTIVE LISTENING SYSTEMS				
ROOM NAME	ROOM #	# OF OCCUPANTS	# OF RECEIVERS	# OF HEARING-AID COMPATIBLE RECEIVERS PER CBC 11B-706.3 [11B-219.3]
BOARD ROOM	222	238	10	3
TOTAL # OF RECEIVERS			10	3

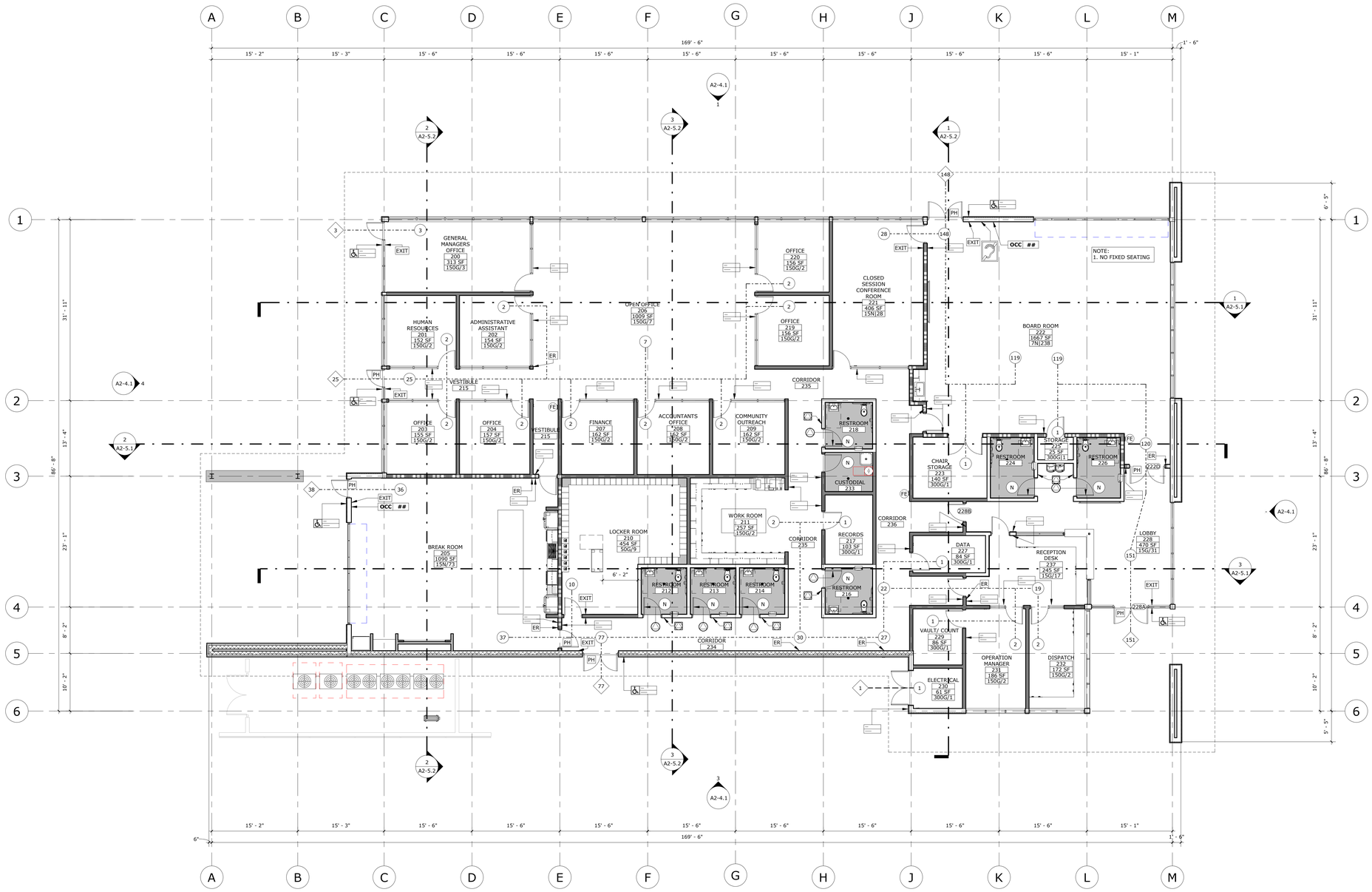

EGRESS & SIGNAGE PLAN | SCALE: 1/8" = 1'-0" | 1

1. SEE SHEET AS-1.1 "OVERALL SITE PLAN" FOR BUILDING CODE ANALYSIS INFORMATION
2. PER SECTION 1008.1.10 IN THE CBC 2022, DOOR SERVING ROOMS OR SPACES WITH AN OCCUPANT LOAD OF 50 OR MORE ARE REQUIRED TO HAVE PANIC HARDWARE OR FIRE EXIT HARDWARE.
3. ROOM OCCUPANT LOADS FACTORED PER CBC 2022 SECTION 1004, TABLE 1004.5
4. SEE SHEET AD-1.0 FOR SIGNAGE ATTACHMENTS AND LOCATIONS.
5. ALL DOORS TO HAVE A 90 DEGREE SWING LIMIT WHERE TACTILE SIGNAGE IS LOCATED ON HINGE SIDE OF DOOR.
6. TYPICAL AT PAIRS OF DOORS: WHEN POSSIBLE TACTILE SIGNAGE SHALL BE PLACED AT RIGHT SIDE OF DOORS.

GENERAL EGRESS NOTES

- FE — SEMI-RECESSED FIRE EXTINGUSHER, PER DETAIL 1/AD-1.1 MAXIMUM TRAVEL DISTANCE IDENTIFIED ON PLANS, PER CBC 2022 SECTION 906.
- # — ROOM OCCUPANCY DISCHARGE
- N — NON-OCCUPIED ROOM
- T — TOTAL OCCUPANCY DISCHARGE
- PATH OF TRAVEL / EGRESS. TRAVEL DISTANCE SHALL NOT BE MORE THAN 200 FT IN A BUILDING WITHOUT SPRINKLER SYSTEM PER CBC TABLE 1017.2

Room name 1001 Room Area ## | ### — ROOM TAG; SQ. FT.; OCCUPANT LOAD; OCCUPANT LOAD FACTOR

ISA — ROOM NUMBER / ROOM NAME; ROOM NUMBER / ROOM NAME (5/AD-1.0)

OCC ## — MAXIMUM OCCUPANT LOAD SIGN NUMBER OF OCCUPANTS (6/AD-1.0)

- UNISEX WALL SIGN — 12/AD-1.0
- UNISEX DOOR SIGN — 12/AD-1.0
- EXIT — EXIT SIGN — 8/AD-1.0
- ER — EXIT ROUTE — 7/AD-1.0
- INDICATES SIGN LOCATION
- ASSISTIVE LISTENING SIGNAGE — 29/AD-1.0
- PH — PANIC HARDWARE
- ROOF OVERHANG

EGRESS & SIGNAGE LEGEND

LICENSED ARCHITECT — ROGER CLARKE — C-17130 — Exp.10-31-25 — STATE OF CALIFORNIA

STAMPS

AGENCY APPROVAL
File No.: ####

CONSULTANT BRANDING

RUHNAU CLARKE ARCHITECTS

MOUNT TRANSIT ADMINISTRATION FACILITY: INCREMENT 3: 100% CD

PROJECT No. :50801
4/18/2024 4:01:20 PM

DRAWN BY: CHECKED BY:

ISSUE No.____ DATE_____ DESCRIPTION_____
REVISION No.____ DATE_____ DESCRIPTION_____

RUHNAUCLARKE.COM

3775 TENTH STREET, RIVERSIDE CALIFORNIA 92501(951) 684 4664 / 5751 PALMER WAY, SUITE C, CARLSBAD CALIFORNIA 92010(760) 438 5899

MOUNT TRANSIT ADMINISTRATION FACILITY
INCREMENT 3
170 BUSINESS CENTER DR. BIG BEAR LAKE, CA
BIG BEAR LAKE

EGRESS & SIGNAGE PLAN

A2-1.1

50801

GENERAL NOTES

1. VERIFY ALL DIMENSIONS PRIOR TO CONSTRUCTION.
2. ALL DIMENSIONS ARE TO FACE OF STUD, CENTERLINE OF COLUMN OR EDGE OF SLAB, U.N.O.
3. SEE SHEET AD-2.0 FOR WALL TYPE INFORMATION.
4. PROVIDE R-19 BATT INSULATION AT ALL EXTERIOR WALLS, U.N.O. GYPSUM BOARD AND INSULATION SHALL EXTEND FULL HEIGHT OF WALL TO UNDERSIDE OF ROOF STRUCTURE.
5. PROVIDE STUD BRACING AND SUPPORT FOR ALL WALL MOUNTED FIXTURES AND ACCESSORIES. PER DETAIL 5/S0-2.8
6. SEE SHEETS A2-8.1, A2-8.2, A2-8.3 FOR DOORS AND WINDOWS INFORMATION
7. SET DOORS ADJACENT TO WALLS A MIN. OF 4" AWAY FROM WALL U.N.O.
8. CONCRETE CURBS AT WALLS SHOWN ON STRUT. DWGS. TO BE 6" HIGH U.N.O.

05.104	BRACING PER STRUCTURAL DWGS., PAINT PER CMF
06.415	CHECK-IN COMPUTER STATION
10.514	LOCKER ROOM BENCH
11.413	VENDING MACHINE
23.303	MECH. UNIT PER MECH. DWGS.
27.410	TV MONITOR

KEYNOTES

DEPRESSED FLOOR SLAB. NOTE THAT FINISHED FLOOR TO BE 2% SLOPE MAX. IN ALL DIRECTIONS.

WALL TYPE
#-A#-#
WALL WIDTH
FIRE RATING (BY HOUR)

0-A1-8	TYP. EXTERIOR WALL	1/AD-2.0
0-B1-6	TYP. INTERIOR WALL	7/AD-2.0
2-D1-6	2 HR RATED WALL	9/AD-2.0

WALL TYPES:

A2 - SEE DETAIL	2/AD-2.0
A3 - SEE DETAIL	3/AD-2.0
B2 - SEE DETAIL	8/AD-2.0
C1 - SEE DETAIL	5/AD-2.0
C2 - SEE DETAIL	6/AD-2.0
D2 - SEE DETAIL	10/AD-2.0

A — WINDOW TAG
###A — DOOR TAG
ROOF OVERHANG

FLOOR PLAN LEGEND

OVERALL FLOOR PLAN — SCALE: 1/8" = 1'-0" — 1

STAMPS

AGENCY APPROVAL
File No.: Ltr.:

CONSULTANT BRANDING

RUHNAU CLARKE ARCHITECTS

PROJECT No. :50801
4/18/2024 4:01:24 PM

DRAWN BY: CHECKED BY:

ISSUE No.:_____ DATE:_____ DESCRIPTION:_____
REVISION No.:_____ DATE:_____ DESCRIPTION:_____

RUHNAUCLARKE.COM

3775 TENTH STREET, RIVERSIDE CALIFORNIA 92501(951) 684 4664 / 5751 PALMER WAY, SUITE C, CARLSBAD CALIFORNIA 92010(760) 438 5899

MOUNT TRANSIT ADMINISTRATION FACILITY
INCREMENT 3
170 BUSINESS CENTER DR. BIG BEAR LAKE, CA
BIG BEAR LAKE

FLOOR PLAN — **A2-1.2**

50801

MOUNT TRANSIT ADMINISTRATION FACILITY: INCREMENT 3: 100% CD

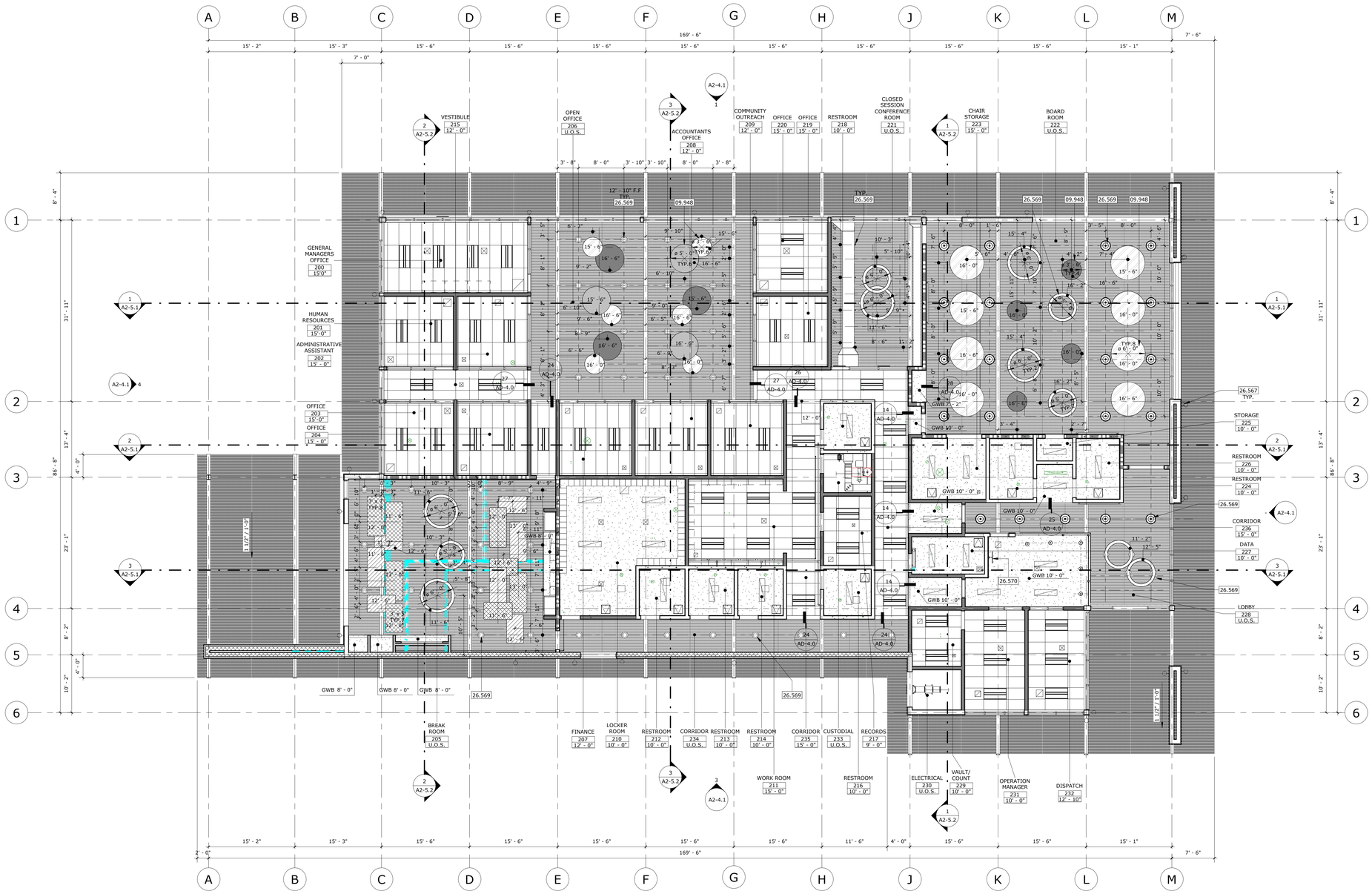
A
B
C
D
E
F
G
H
J
K
L
M
1
2
3
4
5
6
169' - 6"
15' - 2"
15' - 3"
7' - 0"
15' - 6"
15' - 1"
7' - 6"
VESTIBULE 215 12' - 0"
OPEN OFFICE 206 U.O.S.
ACCOUNTANTS OFFICE 208 12' - 0"
COMMUNITY OUTREACH 209 12' - 0"
OFFICE 220 15' - 0"
OFFICE 219 15' - 0"
RESTROOM 218 10' - 0"
CLOSED SESSION CONFERENCE ROOM 221 U.O.S.
CHAIR STORAGE 223 15' - 0"
BOARD ROOM 222 U.O.S.
GENERAL MANAGERS OFFICE 200 15'0"
HUMAN RESOURCES 201 15'-0"
ADMINISTRATIVE ASSISTANT 202 15' - 0"
OFFICE 203 15'-0"
OFFICE 204 15' - 0"
BREAK ROOM 205 U.O.S.
FINANCE 207 12' - 0"
LOCKER ROOM 210 10' - 0"
RESTROOM 212 10' - 0"
CORRIDOR U.O.S.
RESTROOM 213 10' - 0"
RESTROOM 214 10' - 0"
CORRIDOR 235 15' - 0"
CUSTODIAL 233 U.O.S.
RECORDS 217 9' - 0"
WORK ROOM 211 15' - 0"
RESTROOM 216 10' - 0"
ELECTRICAL 230 U.O.S.
VAULT/ COUNT 229 10' - 0"
OPERATION MANAGER 231 10' - 0"
DISPATCH 232 12' - 10"
STORAGE 225 10' - 0"
RESTROOM 226 10' - 0"
RESTROOM 224 10' - 0"
CORRIDOR 236 15' - 0"
DATA 227 10' - 0"
LOBBY 228 U.O.S.
12' - 10" F.F. TYP.
TYP. 26.569
09.948
26.569
26.570
GWB 8' - 0"
GWB 10' - 0"
GWB 10' - 0"
TYP.
TYP.
TYP.

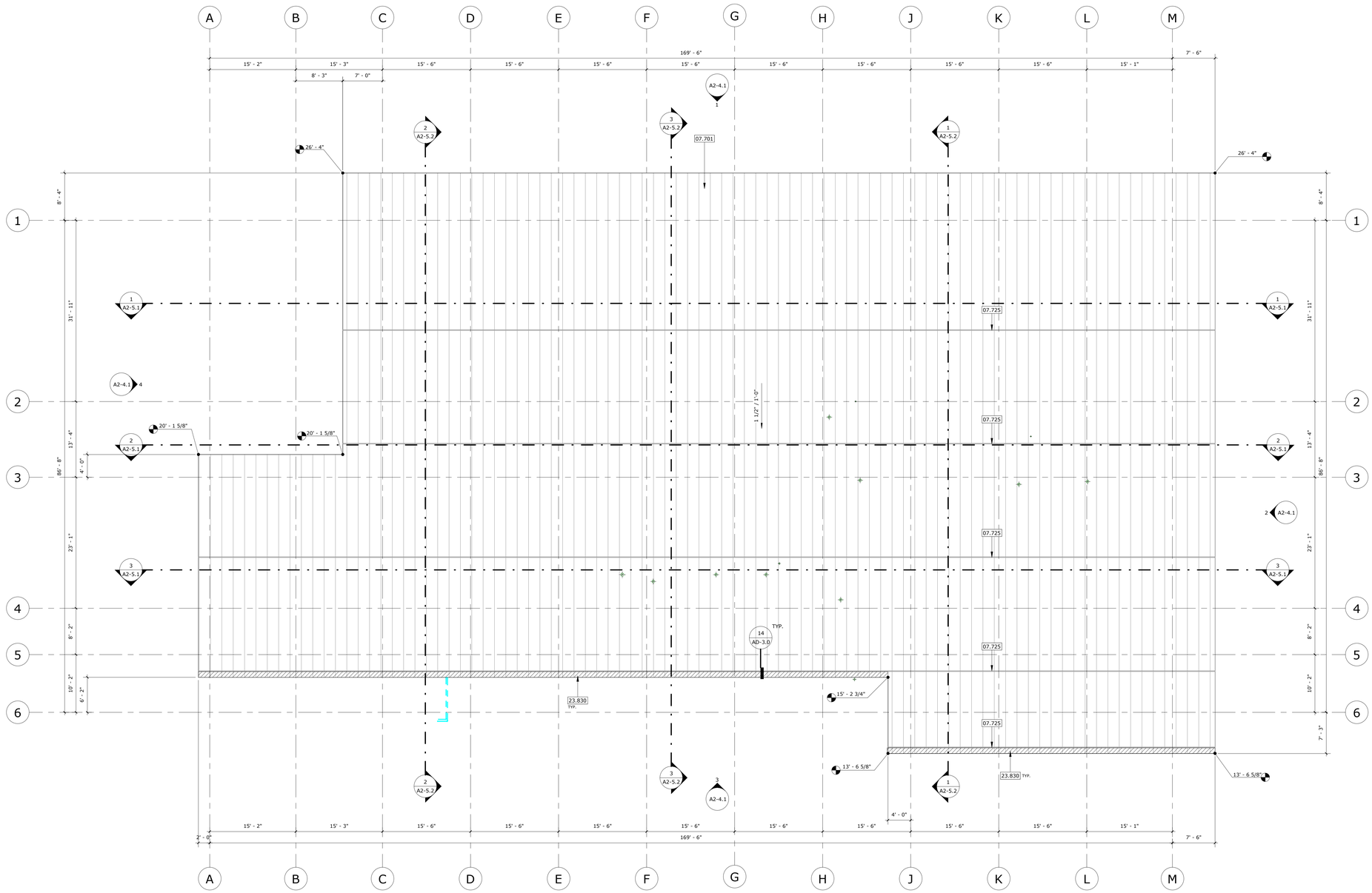

NORTH

ROOF PLAN | SCALE: 1/8" = 1'-0" | 1

STAMPS

LICENSED ARCHITECT — ROGER CLARKE — STATE OF CALIFORNIA — Exp.10-31-25

AGENCY APPROVAL
File No.: Sht:

CONSULTANT BRANDING

RUHNAU CLARKE ARCHITECTS

1. SEE DETAIL 1/AD-3.0 FOR TYPICAL ROOF ASSEMBLY.
2. FOR PIPE VENT PENETRATIONS THROUGH ROOF, REFER TO DETAIL 4/AD-3.0 & 6/AD-3.0 FOR TYP. INFO.

GENERAL NOTES

07.701	METAL ROOF PANEL SYSTEM
07.725	SNOW GUARD
23.830	HEAT TRACE ABOVE STANDING SEAM METAL ROOF

KEYNOTES

GRAPHIC PATTERN	MATERIAL NAME
	METAL ROOF PANEL **(MRP-1)** 1/AD-3.0
	HEAT TRACE
✦	PLUMBING AND EXHAUST VENTS PER PLUMBING DWGS.

NOTE:
REFER TO COLORS, MATERIALS AND FINISHES LEGEND FOR ADDITIONAL INFORMATION -/ID-1.0

ROOF LEGEND

MOUNT TRANSIT ADMINISTRATION FACILITY: INCREMENT 3: 100% CD

PROJECT No. :50801
4/18/2024 4:01:38 PM

DRAWN BY: CHECKED BY:

ISSUE No.____	DATE_____	DESCRIPTION_____	REVISION No.____	DATE_____	DESCRIPTION_____
ISSUE No.____	DATE_____	DESCRIPTION_____	REVISION No.____	DATE_____	DESCRIPTION_____
ISSUE No.____	DATE_____	DESCRIPTION_____	REVISION No.____	DATE_____	DESCRIPTION_____
ISSUE No.____	DATE_____	DESCRIPTION_____	REVISION No.____	DATE_____	DESCRIPTION_____

RUHNAUCLARKE.COM
3775 TENTH STREET, RIVERSIDE CALIFORNIA 92501(951) 684 4664 / 5751 PALMER WAY, SUITE C, CARLSBAD CALIFORNIA 92010(760) 438 5899

MOUNT TRANSIT ADMINISTRATION FACILITY
INCREMENT 3
170 BUSINESS CENTER DR. BIG BEAR LAKE, CA
BIG BEAR LAKE

ROOF PLAN

A2-3.1

50801

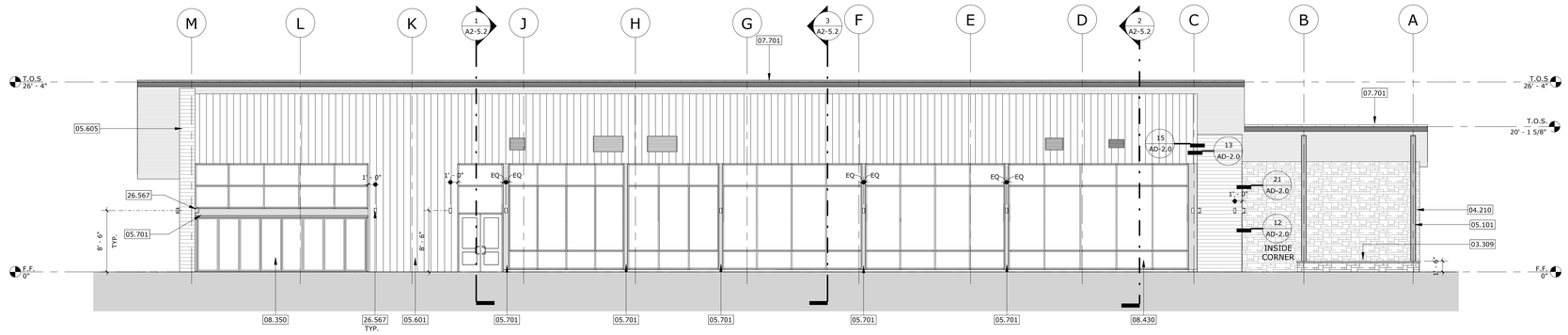

NORTH ELEVATION | SCALE: 1/8" = 1'-0" | 1

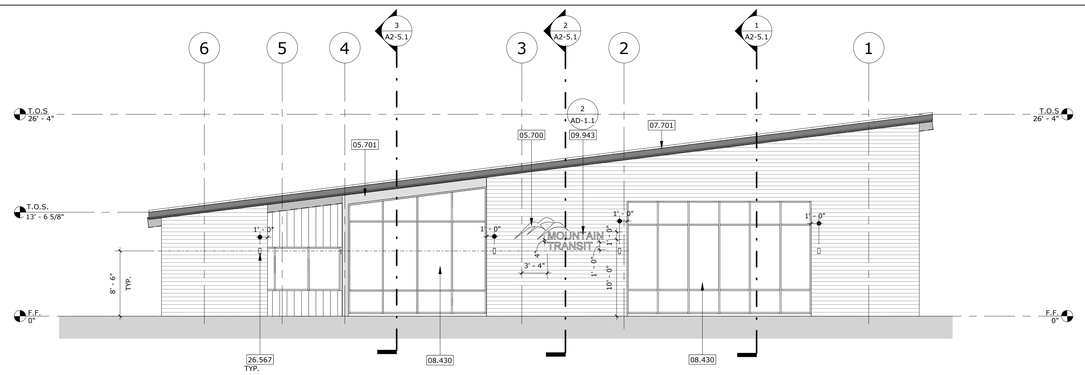

EAST ELEVATION | SCALE: 1/8" = 1'-0" | 2

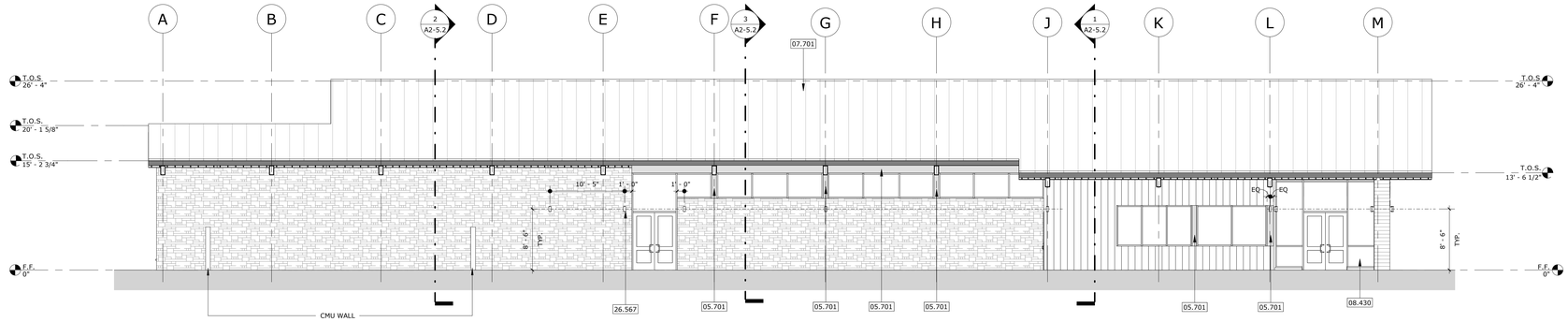

SOUTH ELEVATION | SCALE: 1/8" = 1'-0" | 3

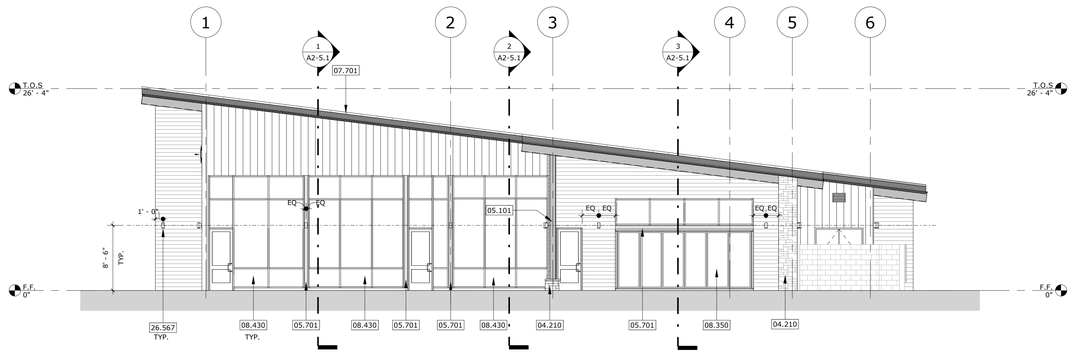

WEST ELEVATION | SCALE: 1/8" = 1'-0" | 4

RUHNAU CLARKE ARCHITECTS

CONSULTANT BRANDING

STAMPS

LICENSED ARCHITECT — ROGER CLARKE — Exp.10-31-25 — STATE OF CALIFORNIA

AGENCY APPROVAL
File No.: Ltr:

1. FOR COLORS, MATERIALS, AND FINISHES SEE SHEET - ID-1.0

GENERAL NOTES

03.309	CONCRETE COLUMN BASE
04.210	STONE CLADDING SYSTEM
05.100	STRUCTURAL STEEL FRAMING PER STRUCT. DWGS.
05.101	STRUCTURAL STEEL COLUMN
05.601	METAL WALL PANEL (VERTICAL)
05.605	FIBER CEMENT WALL PANEL (HORIZONTAL)
05.700	DECORATIVE METAL
05.701	BREAK METAL TO MATCH WINDOW FRAME FINISH & COLOR.
07.701	METAL ROOF PANEL SYSTEM
08.350	FOLDING POCKET DOOR PER DOOR SCHEDULE
08.430	STOREFRONT SYSTEM PER WINDOW SCHEDULE
09.943	WALL MOUNTED LETTER SIGN
23.303	MECH. UNIT PER MECH. DWGS.
26.567	EXTERIOR WALL MOUNTED LIGHT FIXTURE

KEYNOTES

GRAPHIC PATTERN	MATERIAL NAME
	METAL WALL PANEL **(MWP-1)**
	WOODLIKE LINEAR METAIL CEILING EXT. SYSTEM **(AWC-2)**
	METAL ROOF PANEL **(MRP-1)**
	METAL FASCIA PANEL **(SMF-1)**
	FIBER CEMENT WALL PANEL **(FCP-1)**
	STONE WALL CLADDING SYSTEM **(SV-1)**
	STEEL BEAMS **(P-9)**, PER STRUCT. DWGS.

NOTE: REFER TO COLORS, MATERIALS AND FINISHES LEGEND FOR ADDITIONAL INFORMATION — 1 ID-1.0

EXTERIOR ELEVATIONS LEGEND

MOUNT TRANSIT ADMINISTRATION FACILITY: INCREMENT 3: 100% CD

PROJECT No. :50801
4/18/2024 4:01:55 PM

DRAWN BY: CHECKED BY:

ISSUE No.____	DATE_____	DESCRIPTION_____	REVISION No.____	DATE_____	DESCRIPTION_____
ISSUE No.____	DATE_____	DESCRIPTION_____	REVISION No.____	DATE_____	DESCRIPTION_____
ISSUE No.____	DATE_____	DESCRIPTION_____	REVISION No.____	DATE_____	DESCRIPTION_____
ISSUE No.____	DATE_____	DESCRIPTION_____	REVISION No.____	DATE_____	DESCRIPTION_____

RUHNAUCLARKE.COM

3775 TENTH STREET, RIVERSIDE CALIFORNIA 92501 (951) 684 4664 / 5751 PALMER WAY, SUITE C, CARLSBAD CALIFORNIA 92010 (760) 438 5899

MOUNT TRANSIT ADMINISTRATION FACILITY
INCREMENT 3
170 BUSINESS CENTER DR. BIG BEAR LAKE, CA
BIG BEAR LAKE

EXTERIOR ELEVATIONS | **A2-4.1**

50801

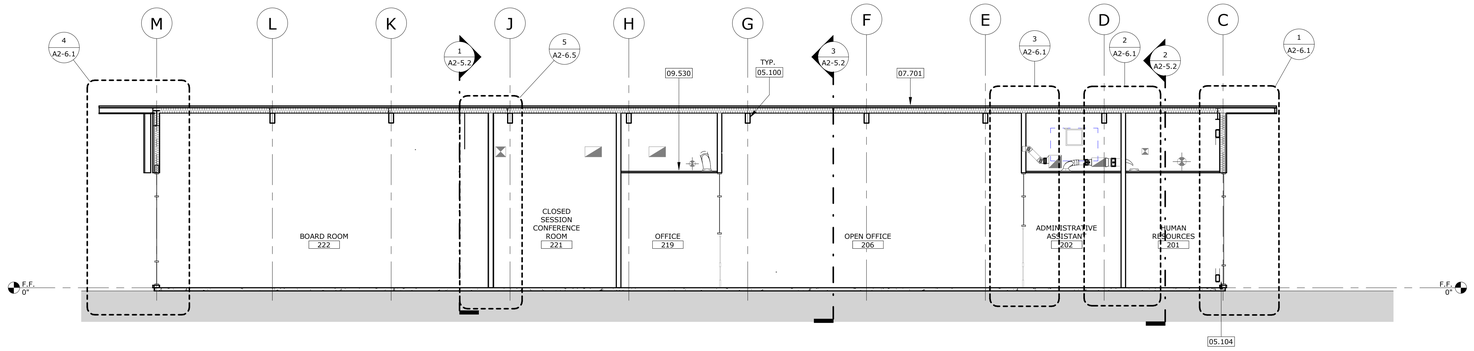

BUILDING SECTION | SCALE: 1/8" = 1'-0" | 1

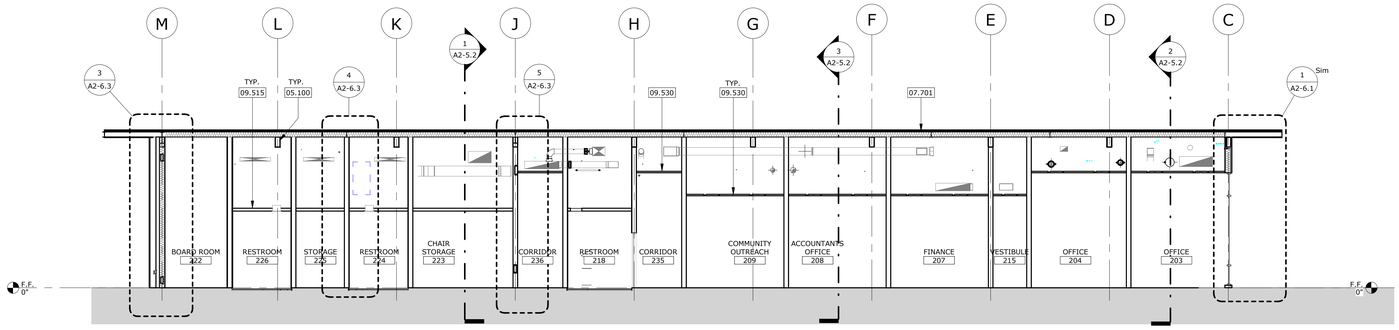

BUILDING SECTION | SCALE: 1/8" = 1'-0" | 2

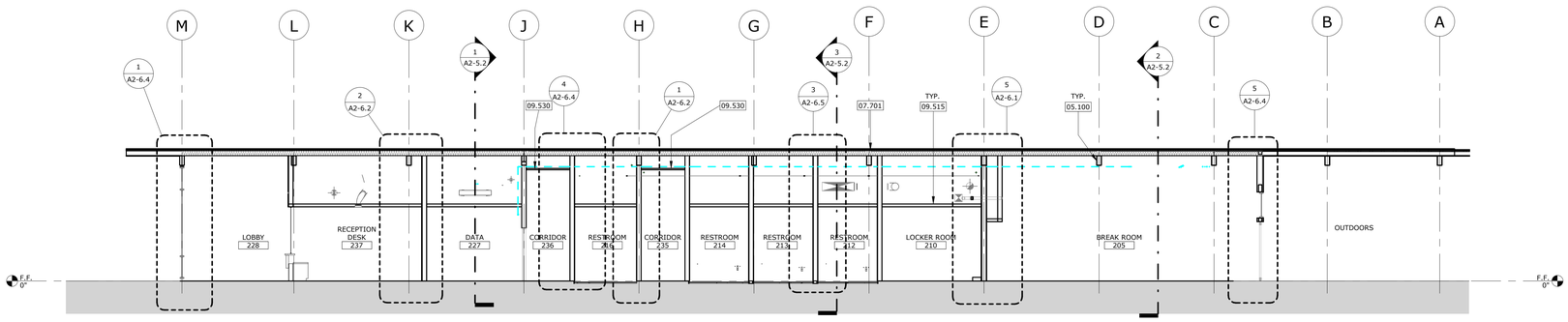

BUILDING SECTION | SCALE: 1/8" = 1'-0" | 3

STAMPS

LICENSED ARCHITECT — ROGER CLARKE — STATE OF CALIFORNIA — Exp.10-31-25

AGENCY APPROVAL
File No.: n.a.

CONSULTANT BRANDING

RUHNAU CLARKE ARCHITECTS

1. SLAB ON GRADE: 0'-0" = GLOBAL ELEVATION:FF=67.10
2. VERIFY ALL EXTERIOR ROOF OPENINGS & VENTS WITH MECHANICAL, ELECTRICAL, STRUCTURAL & PLUMBING DRAWINGS
3. SEE DETAIL 1/AD-2.1 FOR TYPICAL WALL PENETRATION DETAIL.
4. PROVIDE R-25 RIGID INSULATION UNDER ROOF DECKING, BETWEEN ROOF STRUCTURE. AND PROVIDE R-29 BATT INSULATION IN CAVITIES ON ALL THE AREAS WITH ACOUSTICAL CEILINGS. SEE DETAIL 1/AD-3.0 FOR TYPICAL ROOF CONSTRUCTION ASSEMBLY.
5. PROVIDE R-23 BATT INSULATION AT ALL EXTERIOR WALLS, U.N.O. GYPSUM BOARD AND INSULATION SHALL EXTEND FULL HEIGHT OF WALL TO UNDERSIDE OF ROOF STRUCTURE
6. ALL EXPOSED STRUCTURE, INCLUDING MECHANICAL & PLUMBING EQUIPMENT TO BE PAINTED

GENERAL NOTES

05.100	STRUCTURAL STEEL FRAMING PER STRUCT. DWGS.
05.104	BRACING PER STRUCTURAL DWGS., PAINT PER CMF
07.701	METAL ROOF PANEL SYSTEM
09.515	HARD LID CEILING WITH GYPSUM BOARD CEILING FINISH
09.530	ACOUSTICAL CEILING SUSPENSION ASSEMBLY

KEYNOTES

MOUNT TRANSIT ADMINISTRATION FACILITY: INCREMENT 3: 100% CD

PROJECT No. :50801
4/18/2024 4:01:57 PM

DRAWN BY: CHECKED BY:

ISSUE No.____ DATE____ DESCRIPTION____
ISSUE No.____ DATE____ DESCRIPTION____
ISSUE No.____ DATE____ DESCRIPTION____
ISSUE No.____ DATE____ DESCRIPTION____
REVISION No.____ DATE____ DESCRIPTION____
REVISION No.____ DATE____ DESCRIPTION____
REVISION No.____ DATE____ DESCRIPTION____

RUHNAUCLARKE.COM
3775 TENTH STREET, RIVERSIDE CALIFORNIA 92501 (951) 684 4664 / 5751 PALMER WAY, SUITE C, CARLSBAD CALIFORNIA 92010 (760) 438 5899

MOUNT TRANSIT ADMINISTRATION FACILITY
INCREMENT 3
170 BUSINESS CENTER DR. BIG BEAR LAKE, CA
BIG BEAR LAKE

BUILDING SECTIONS | **A2-5.1**

50801

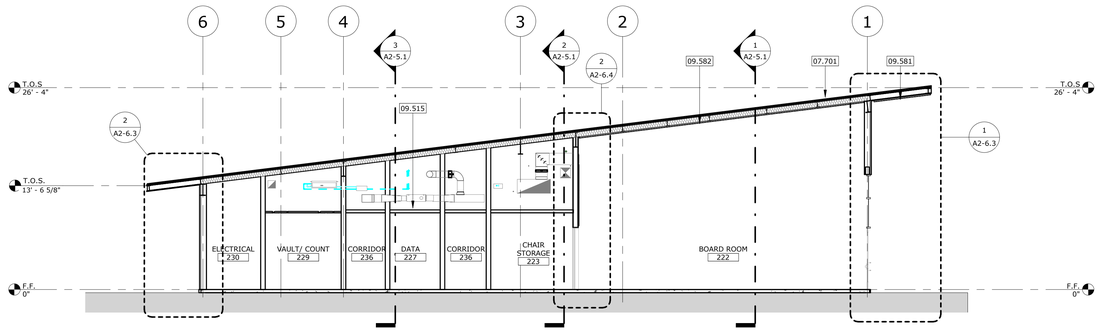

BUILDING SECTION | SCALE: 1/8" = 1'-0" | 1

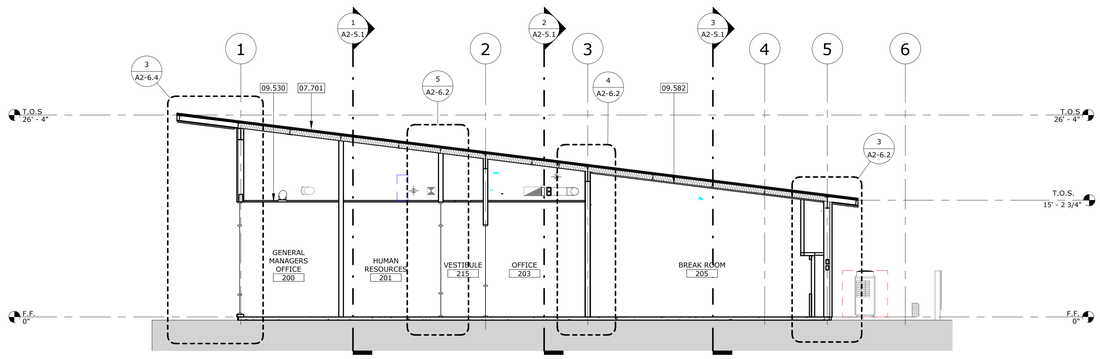

BUILDING SECTION | SCALE: 1/8" = 1'-0" | 2

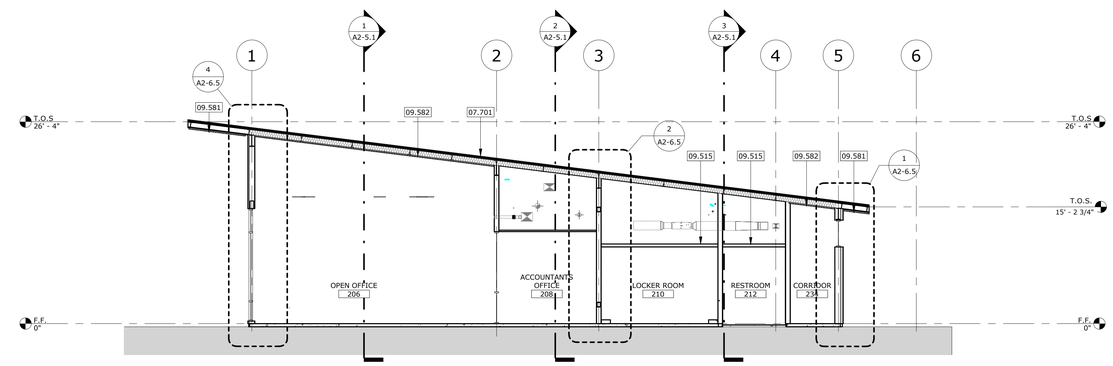

BUILDING SECTION | SCALE: 1/8" = 1'-0" | 3

STAMPS

LICENSED ARCHITECT — ROGER CLARKE — No. C-49130 — Exp.10-31-25 — STATE OF CALIFORNIA

AGENCY APPROVAL
File No.: Ext.:

CONSULTANT BRANDING

RUHNAU CLARKE ARCHITECTS

1. SLAB ON GRADE: 0'-0" = GLOBAL ELEVATION:FF=67.10
2. VERIFY ALL EXTERIOR ROOF OPENINGS & VENTS WITH MECHANICAL, ELECTRICAL, STRUCTURAL & PLUMBING DRAWINGS
3. SEE DETAIL 1/AD-2.1 FOR TYPICAL WALL PENETRATION DETAIL.
4. PROVIDE R-25 RIGID INSULATION UNDER ROOF DECKING, BETWEEN ROOF STRUCTURE. AND PROVIDE R-29 BATT INSULATION IN CAVITIES ON ALL THE AREAS WITH ACOUSTICAL CEILINGS. SEE DETAIL 1/AD-3.0 FOR TYPICAL ROOF CONSTRUCTION ASSEMBLY.
5. PROVIDE R-23 BATT INSULATION AT ALL EXTERIOR WALLS, U.N.O. GYPSUM BOARD AND INSULATION SHALL EXTEND FULL HEIGHT OF WALL TO UNDERSIDE OF ROOF STRUCTURE
6. ALL EXPOSED STRUCTURE, INCLUDING MECHANICAL & PLUMBING EQUIPMENT TO BE PAINTED

GENERAL NOTES

07.701	METAL ROOF PANEL SYSTEM
09.515	HARD LID CEILING WITH GYPSUM BOARD CEILING FINISH
09.530	ACOUSTICAL CEILING SUSPENSION ASSEMBLY
09.581	WOODLIKE LINEAR METAL CEILING EXT. SYSTEM
09.582	WOODLIKE LINEAR METAL CEILING INT. SYSTEM

KEYNOTES

MOUNT TRANSIT ADMINISTRATION FACILITY: INCREMENT 3: 100% CD

PROJECT No. :50801
4/18/2024 4:02:00 PM

DRAWN BY: CHECKED BY:

ISSUE No.____ DATE____ DESCRIPTION____
REVISION No.____ DATE____ DESCRIPTION____

RUHNAUCLARKE.COM
3775 TENTH STREET, RIVERSIDE CALIFORNIA 92501(951) 684 4664 / 5751 PALMER WAY, SUITE C, CARLSBAD CALIFORNIA 92010(760) 438 5899

MOUNT TRANSIT ADMINISTRATION FACILITY
INCREMENT 3
170 BUSINESS CENTER DR. BIG BEAR LAKE, CA
BIG BEAR LAKE

BUILDING SECTIONS | **A2-5.2**

50801

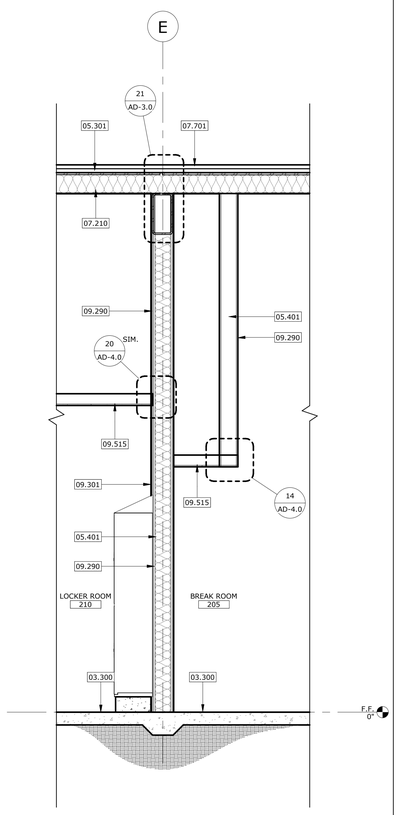

WALL SECTION | SCALE: 1/2" = 1'-0" | 5

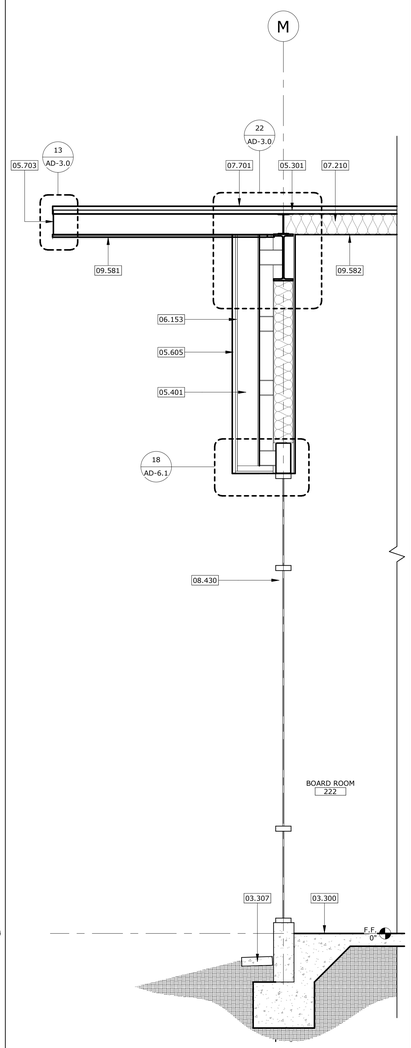

WALL SECTION | SCALE: 1/2" = 1'-0" | 4

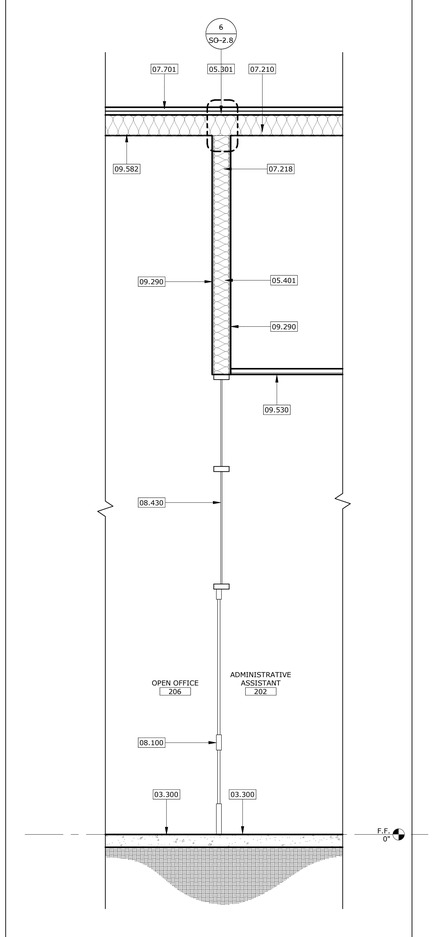

WALL SECTION | SCALE: 1/2" = 1'-0" | 3

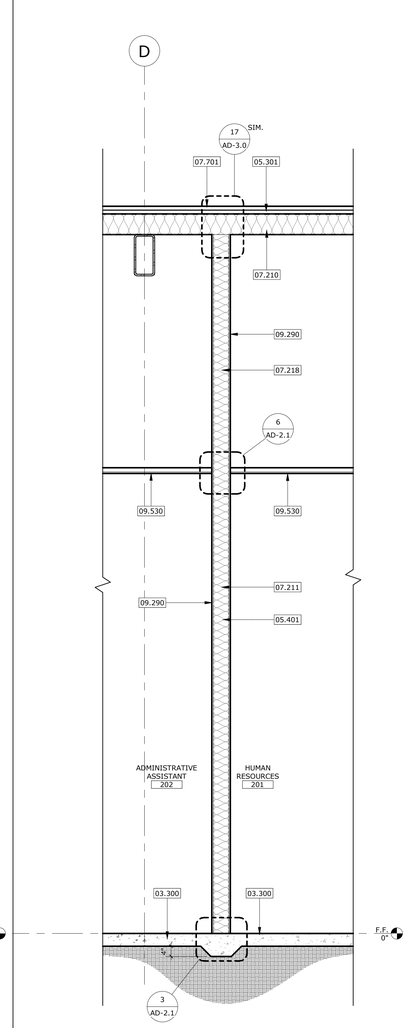

WALL SECTION | SCALE: 1/2" = 1'-0" | 2

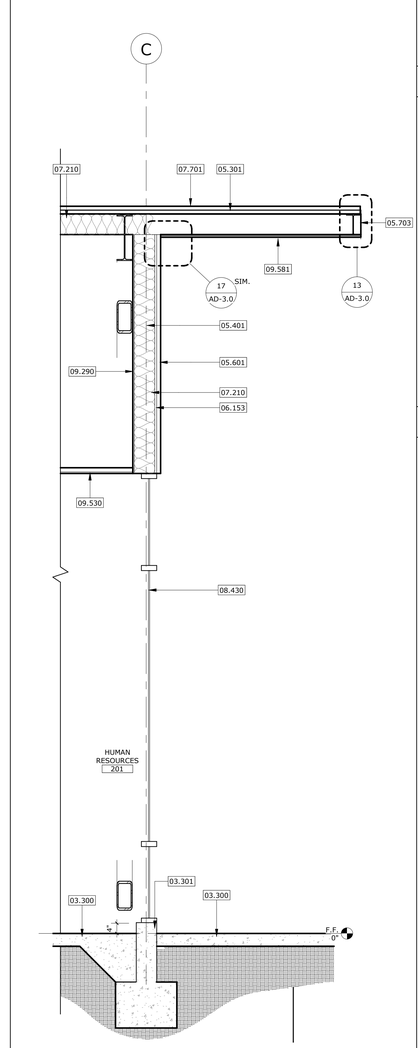

WALL SECTION | SCALE: 1/2" = 1'-0" | 1

STAMPS

LICENSED ARCHITECT
ROGER CLARKE
No. C-41130
Exp.10-31-25
STATE OF CALIFORNIA

AGENCY APPROVAL
File No.: Ltr.:

CONSULTANT BRANDING

RUHNAU
CLARKE
ARCHITECTS

1. SLAB ON GRADE: 0'-0" = GLOBAL ELEVATION:FF=67.10
2. VERIFY ALL EXTERIOR ROOF OPENINGS & VENTS WITH MECHANICAL, ELECTRICAL, STRUCTURAL & PLUMBING DRAWINGS
3. SEE DETAIL 1/AD-2.1 FOR TYPICAL WALL PENETRATION DETAIL.
4. PROVIDE R-25 RIGID INSULATION UNDER ROOF DECKING, BETWEEN ROOF STRUCTURE, AND PROVIDE R-29 BATT INSULATION IN CAVITIES ON ALL THE AREAS WITH ACOUSTICAL CEILINGS. SEE DETAIL 1/AD-3.0 FOR TYPICAL ROOF CONSTRUCTION ASSEMBLY.
5. PROVIDE R-23 BATT INSULATION AT ALL EXTERIOR WALLS, U.N.O. GYPSUM BOARD AND INSULATION SMALL EXTEND FULL HEIGHT OF WALL TO UNDERSIDE OF ROOF STRUCTURE
6. ALL EXPOSED STRUCTURE, INCLUDING MECHANICAL & PLUMBING EQUIPMENT TO BE PAINTED

GENERAL NOTES

03.300	CAST-IN-PLACE CONCRETE
03.301	CAST-IN-PLACE CONCRETE CURB
03.307	CONCRETE MOW STRIP
05.301	METAL ROOF DECK
05.401	METAL STUD WALL FRAMING
05.601	METAL WALL PANEL (VERTICAL)
05.605	FIBER CEMENT WALL PANEL (HORIZONTAL)
05.703	METAL FASCIA PANEL
06.153	WOOD SHEATHING
07.210	THERMAL INSULATION
07.211	BATT INSULATION
07.218	ACOUSTICAL INSULATION
07.701	METAL ROOF PANEL SYSTEM
08.100	DOOR AND FRAME PER DOOR SCHEDULE
08.430	STOREFRONT SYSTEM PER WINDOW SCHEDULE
09.290	GYPSUM WALL BOARD
09.301	CERAMIC TILE
09.515	HARD LID CEILING WITH GYPSUM BOARD CEILING FINISH
09.530	ACOUSTICAL CEILING SUSPENSION ASSEMBLY
09.581	WOODLIKE LINEAR METAL CEILING EXT. SYSTEM
09.582	WOODLIKE LINEAR METAL CEILING INT. SYSTEM

KEYNOTES

MOUNT TRANSIT ADMINISTRATION FACILITY: INCREMENT 3: 100% CD

PROJECT No. :50801
4/18/2024 4:02:02 PM

DRAWN BY: CHECKED BY:

ISSUE No._____ DATE_____ DESCRIPTION_____
ISSUE No._____ DATE_____ DESCRIPTION_____
ISSUE No._____ DATE_____ DESCRIPTION_____
ISSUE No._____ DATE_____ DESCRIPTION_____

REVISION No._____ DATE_____ DESCRIPTION_____
REVISION No._____ DATE_____ DESCRIPTION_____
REVISION No._____ DATE_____ DESCRIPTION_____
REVISION No._____ DATE_____ DESCRIPTION_____

RUHNAUCLARKE.COM
3775 TENTH STREET, RIVERSIDE CALIFORNIA 92501(951) 684 4664 / 5751 PALMER WAY, SUITE C, CARLSBAD CALIFORNIA 92010(760) 438 5899

MOUNT TRANSIT ADMINISTRATION FACILITY
INCREMENT 3
170 BUSINESS CENTER DR. BIG BEAR LAKE, CA
BIG BEAR LAKE

WALL SECTIONS

A2-6.1

50801

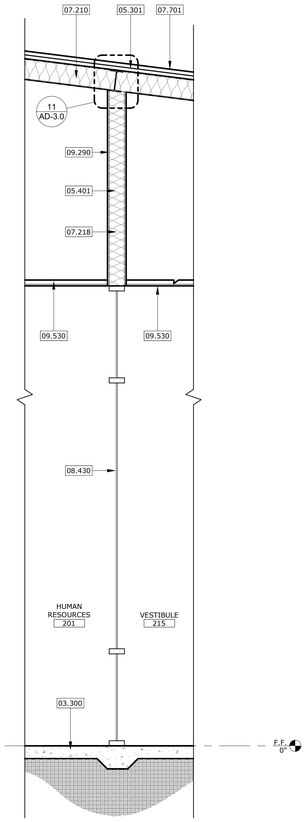

WALL SECTION | SCALE: 1/2" = 1'-0" | 5

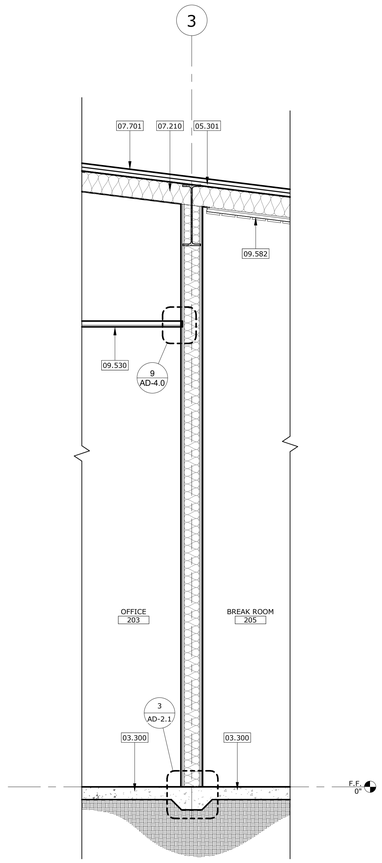

WALL SECTION | SCALE: 1/2" = 1'-0" | 4

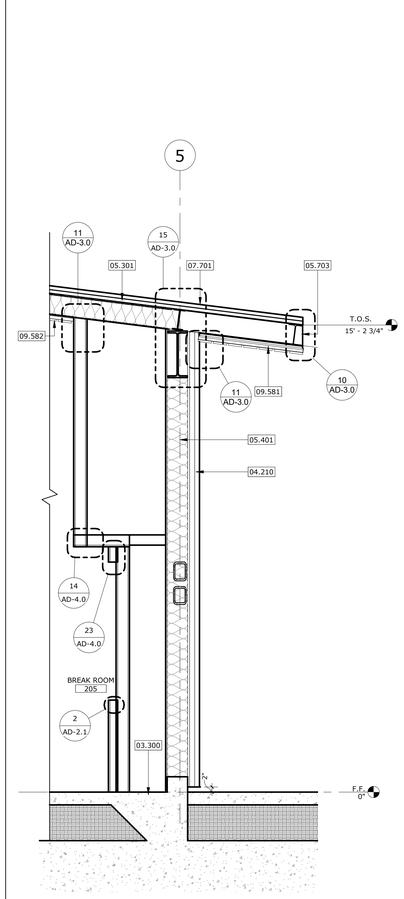

WALL SECTION | SCALE: 1/2" = 1'-0" | 3

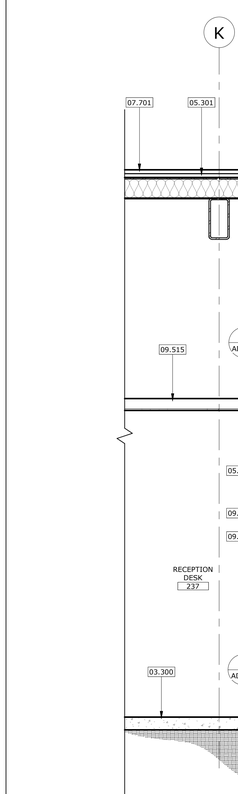

WALL SECTION | SCALE: 1/2" = 1'-0" | 2

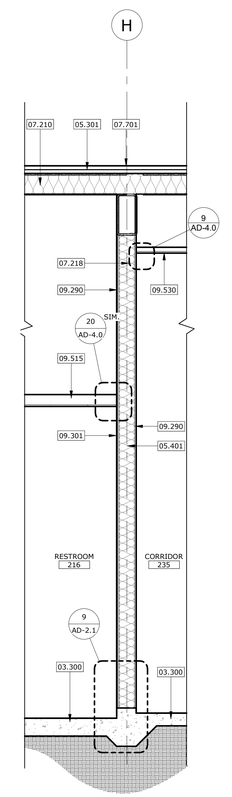

WALL SECTION | SCALE: 1/2" = 1'-0" | 1

STAMPS

AGENCY APPROVAL
File No.: Ext.:

CONSULTANT BRANDING

RUHNAU
CLARKE
ARCHITECTS

1. SLAB ON GRADE: 0'-0" = GLOBAL ELEVATION:FF=67.10
2. VERIFY ALL EXTERIOR ROOF OPENINGS & VENTS WITH MECHANICAL, ELECTRICAL, STRUCTURAL & PLUMBING DRAWINGS
3. SEE DETAIL 1/AD-2.1 FOR TYPICAL WALL PENETRATION DETAIL.
4. PROVIDE R-25 RIGID INSULATION UNDER ROOF DECKING, BETWEEN ROOF STRUCTURE. AND PROVIDE R-29 BATT INSULATION IN CAVITIES ON ALL THE AREAS WITH ACOUSTICAL CEILINGS. SEE DETAIL 1/AD-3.0 FOR TYPICAL ROOF CONSTRUCTION ASSEMBLY.
5. PROVIDE R-23 BATT INSULATION AT ALL EXTERIOR WALLS, U.N.O. GYPSUM BOARD AND INSULATION SHALL EXTEND FULL HEIGHT OF WALL TO UNDERSIDE OF ROOF STRUCTURE
6. ALL EXPOSED STRUCTURE, INCLUDING MECHANICAL & PLUMBING EQUIPMENT TO BE PAINTED

GENERAL NOTES

03.300	CAST-IN-PLACE CONCRETE
04.210	STONE CLADDING SYSTEM
05.301	METAL ROOF DECK
05.401	METAL STUD WALL FRAMING
05.703	METAL FASCIA PANEL
07.210	THERMAL INSULATION
07.218	ACOUSTICAL INSULATION
07.701	METAL ROOF PANEL SYSTEM
08.430	STOREFRONT SYSTEM PER WINDOW SCHEDULE
09.290	GYPSUM WALL BOARD
09.301	CERAMIC TILE
09.515	HARD LID CEILING WITH GYPSUM BOARD CEILING FINISH
09.530	ACOUSTICAL CEILING SUSPENSION ASSEMBLY
09.581	WOODLIKE LINEAR METAL CEILING EXT. SYSTEM
09.582	WOODLIKE LINEAR METAL CEILING INT. SYSTEM
09.703	FLUTED WOOD PANEL SYSTEM

KEYNOTES

MOUNT TRANSIT ADMINISTRATION FACILITY: INCREMENT 3: 100% CD

PROJECT No. :50801
4/18/2024 4:02:04 PM

DRAWN BY: CHECKED BY:

ISSUE No.____	DATE_____	DESCRIPTION_____
ISSUE No.____	DATE_____	DESCRIPTION_____
ISSUE No.____	DATE_____	DESCRIPTION_____
ISSUE No.____	DATE_____	DESCRIPTION_____
REVISION No.____	DATE_____	DESCRIPTION_____
REVISION No.____	DATE_____	DESCRIPTION_____
REVISION No.____	DATE_____	DESCRIPTION_____
REVISION No.____	DATE_____	DESCRIPTION_____

RUHNAUCLARKE.COM
3775 TENTH STREET, RIVERSIDE CALIFORNIA 92501(951) 684 4664 / 5751 PALMER WAY, SUITE C, CARLSBAD CALIFORNIA 92010(760) 438 5899

MOUNT TRANSIT ADMINISTRATION FACILITY
INCREMENT 3
170 BUSINESS CENTER DR. BIG BEAR LAKE, CA
BIG BEAR LAKE

WALL SECTIONS

A2-6.2

50801

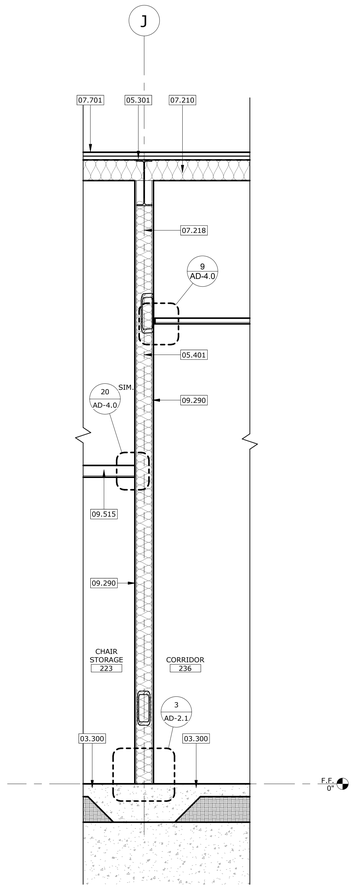

WALL SECTION | SCALE: 1/2" = 1'-0" | 5

WALL SECTION | SCALE: 1/2" = 1'-0" | 4

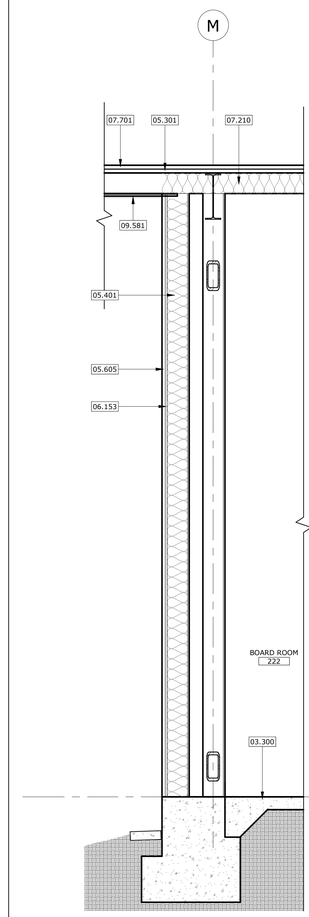

WALL SECTION | SCALE: 1/2" = 1'-0" | 3

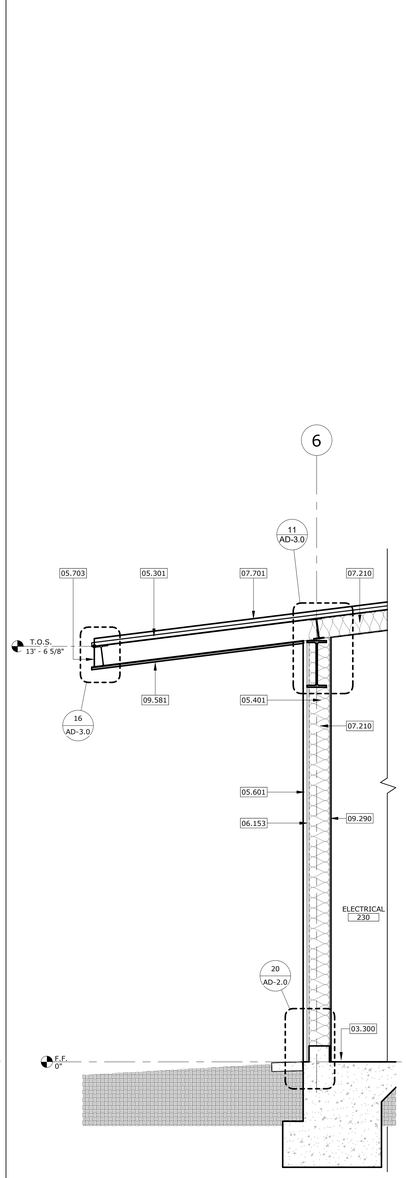

WALL SECTION | SCALE: 1/2" = 1'-0" | 2

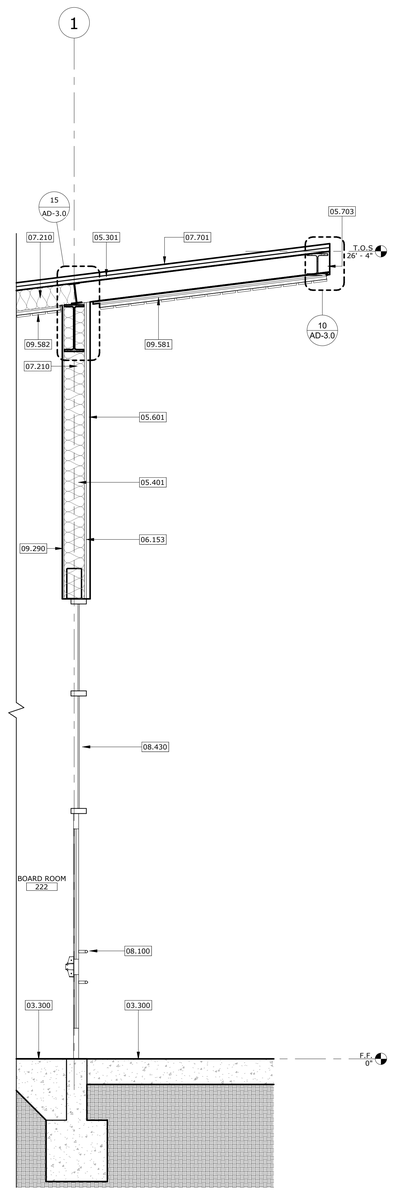

WALL SECTION | SCALE: 1/2" = 1'-0" | 1

STAMPS

LICENSED ARCHITECT — ROGER CLARKE — STATE OF CALIFORNIA — Exp.10-31-25

AGENCY APPROVAL
File No.: Sht:

CONSULTANT BRANDING

RUHNAU CLARKE ARCHITECTS

1. SLAB ON GRADE: 0'-0" = GLOBAL ELEVATION:FF=67.10
2. VERIFY ALL EXTERIOR ROOF OPENINGS & VENTS WITH MECHANICAL, ELECTRICAL, STRUCTURAL & PLUMBING DRAWINGS
3. SEE DETAIL 1/AD-2.1 FOR TYPICAL WALL PENETRATION DETAIL.
4. PROVIDE R-25 RIGID INSULATION UNDER ROOF DECKING, BETWEEN ROOF STRUCTURE. AND PROVIDE R-29 BATT INSULATION IN CAVITIES ON ALL THE AREAS WITH ACOUSTICAL CEILINGS. SEE DETAIL 1/AD-3.0 FOR TYPICAL ROOF CONSTRUCTION ASSEMBLY.
5. PROVIDE R-23 BATT INSULATION AT ALL EXTERIOR WALLS, U.N.O. GYPSUM BOARD AND INSULATION SHALL EXTEND FULL HEIGHT OF WALL TO UNDERSIDE OF ROOF STRUCTURE
6. ALL EXPOSED STRUCTURE, INCLUDING MECHANICAL & PLUMBING EQUIPMENT TO BE PAINTED

GENERAL NOTES

03.300	CAST-IN-PLACE CONCRETE
05.301	METAL ROOF DECK
05.401	METAL STUD WALL FRAMING
05.601	METAL WALL PANEL (VERTICAL)
05.605	FIBER CEMENT WALL PANEL (HORIZONTAL)
05.703	METAL FASCIA PANEL
06.153	WOOD SHEATHING
07.210	THERMAL INSULATION
07.218	ACOUSTICAL INSULATION
07.701	METAL ROOF PANEL SYSTEM
08.100	DOOR AND FRAME PER DOOR SCHEDULE
08.430	STOREFRONT SYSTEM PER WINDOW SCHEDULE
09.290	GYPSUM WALL BOARD
09.301	CERAMIC TILE
09.515	HARD LID CEILING WITH GYPSUM BOARD CEILING FINISH
09.581	WOODLIKE LINEAR METAL CEILING EXT. SYSTEM
09.582	WOODLIKE LINEAR METAL CEILING INT. SYSTEM

KEYNOTES

MOUNT TRANSIT ADMINISTRATION FACILITY: INCREMENT 3: 100% CD

PROJECT No. :50801
4/18/2024 4:02:06 PM

DRAWN BY: CHECKED BY:

ISSUE No._____ DATE_____ DESCRIPTION_____
ISSUE No._____ DATE_____ DESCRIPTION_____
ISSUE No._____ DATE_____ DESCRIPTION_____
ISSUE No._____ DATE_____ DESCRIPTION_____

REVISION No._____ DATE_____ DESCRIPTION_____
REVISION No._____ DATE_____ DESCRIPTION_____
REVISION No._____ DATE_____ DESCRIPTION_____
REVISION No._____ DATE_____ DESCRIPTION_____

RUHNAUCLARKE.COM
3775 TENTH STREET, RIVERSIDE CALIFORNIA 92501(951) 684 4664 / 5751 PALMER WAY, SUITE C, CARLSBAD CALIFORNIA 92010(760) 438 5899

MOUNT TRANSIT ADMINISTRATION FACILITY
INCREMENT 3
170 BUSINESS CENTER DR. BIG BEAR LAKE, CA
BIG BEAR LAKE

WALL SECTIONS

A2-6.3

50801

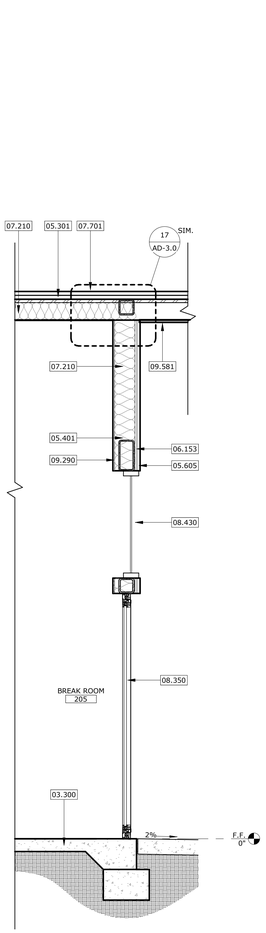

WALL SECTION | SCALE: 1/2" = 1'-0" | 5

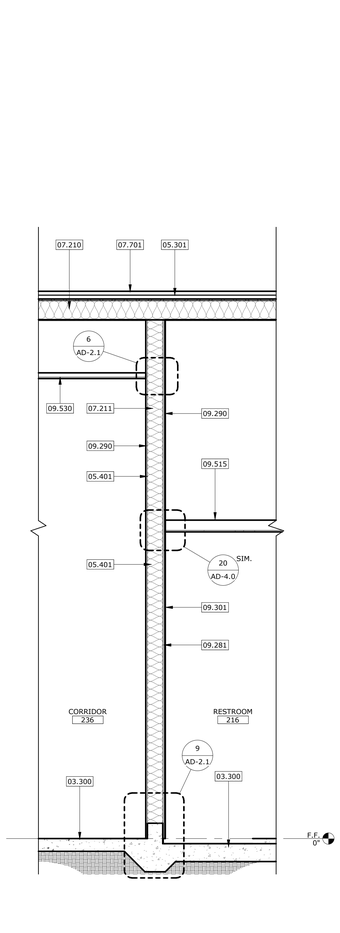

WALL SECTION | SCALE: 1/2" = 1'-0" | 4

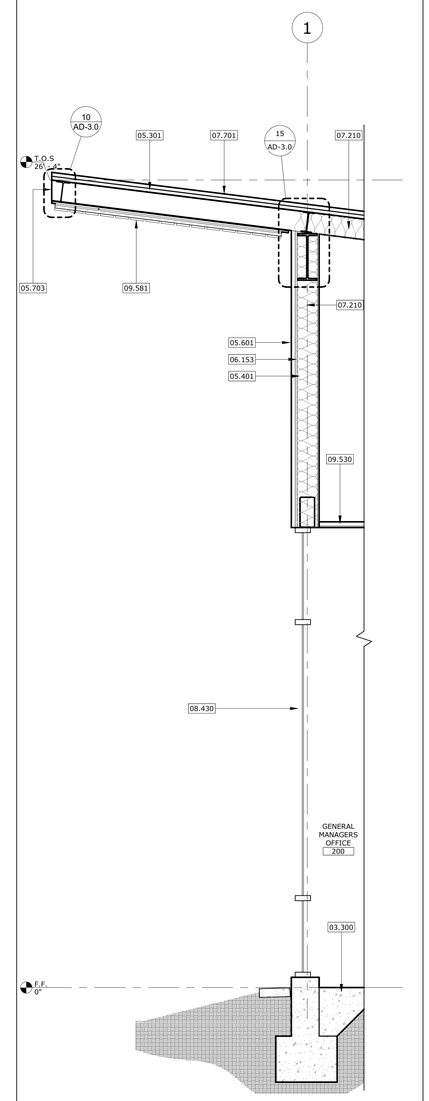

WALL SECTION | SCALE: 1/2" = 1'-0" | 3

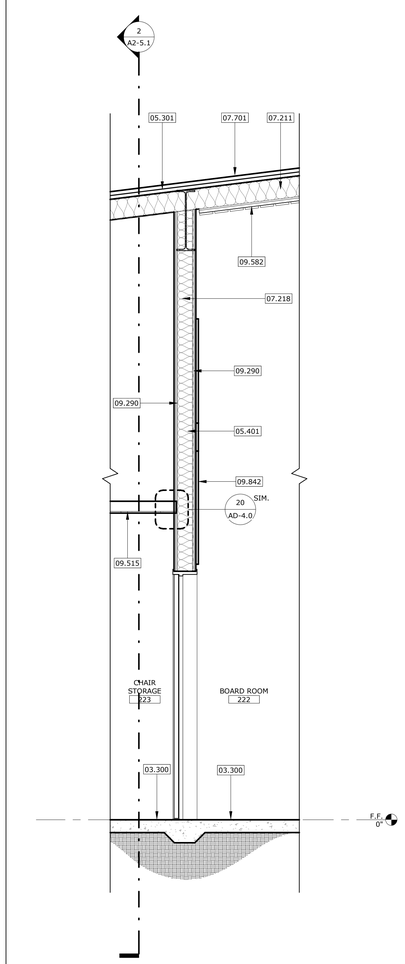

WALL SECTION | SCALE: 1/2" = 1'-0" | 2

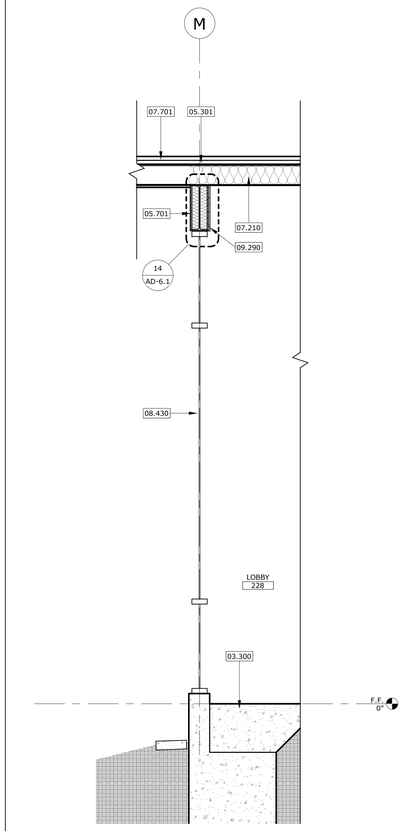

WALL SECTION | SCALE: 1/2" = 1'-0" | 1

STAMPS

AGENCY APPROVAL
File No.: Ltr:

CONSULTANT BRANDING

RUHNAU
CLARKE
ARCHITECTS

1. SLAB ON GRADE: 0'-0" = GLOBAL ELEVATION:FF=67.10
2. VERIFY ALL EXTERIOR ROOF OPENINGS & VENTS WITH MECHANICAL, ELECTRICAL, STRUCTURAL & PLUMBING DRAWINGS
3. SEE DETAIL 1/AD-2.1 FOR TYPICAL WALL PENETRATION DETAIL.
4. PROVIDE R-25 RIGID INSULATION UNDER ROOF DECKING, BETWEEN ROOF STRUCTURE, AND PROVIDE R-29 BATT INSULATION IN CAVITIES ON ALL THE AREAS WITH ACOUSTICAL CEILINGS. SEE DETAIL 1/AD-3.0 FOR TYPICAL ROOF CONSTRUCTION ASSEMBLY.
5. PROVIDE R-23 BATT INSULATION AT ALL EXTERIOR WALLS, U.N.O. GYPSUM BOARD AND INSULATION SHALL EXTEND FULL HEIGHT OF WALL TO UNDERSIDE OF ROOF STRUCTURE
6. ALL EXPOSED STRUCTURE, INCLUDING MECHANICAL & PLUMBING EQUIPMENT TO BE PAINTED

GENERAL NOTES

03.300	CAST-IN-PLACE CONCRETE
05.301	METAL ROOF DECK
05.401	METAL STUD WALL FRAMING
05.601	METAL WALL PANEL (VERTICAL)
05.605	FIBER CEMENT WALL PANEL (HORIZONTAL)
05.701	BREAK METAL TO MATCH WINDOW FRAME FINISH & COLOR.
05.703	METAL FASCIA PANEL
06.153	WOOD SHEATHING
07.210	THERMAL INSULATION
07.211	BATT INSULATION
07.218	ACOUSTICAL INSULATION
07.701	METAL ROOF PANEL SYSTEM
08.350	FOLDING POCKET DOOR PER DOOR SCHEDULE
08.430	STOREFRONT SYSTEM PER WINDOW SCHEDULE
09.281	CEMENTITIOUS BACKING BOARD
09.290	GYPSUM WALL BOARD
09.301	CERAMIC TILE
09.515	HARD LID CEILING WITH GYPSUM BOARD CEILING FINISH
09.530	ACOUSTICAL CEILING SUSPENSION ASSEMBLY
09.581	WOODLIKE LINEAR METAL CEILING EXT. SYSTEM
09.582	WOODLIKE LINEAR METAL CEILING INT. SYSTEM
09.842	FIXED SOUND-ABSORPTIVE PANEL

KEYNOTES

MOUNT TRANSIT ADMINISTRATION FACILITY: INCREMENT 3: 100% CD

PROJECT No. :50801
4/18/2024 4:02:08 PM

DRAWN BY: CHECKED BY:

ISSUE No._____ DATE_____ DESCRIPTION_____
ISSUE No._____ DATE_____ DESCRIPTION_____
ISSUE No._____ DATE_____ DESCRIPTION_____
ISSUE No._____ DATE_____ DESCRIPTION_____

REVISION No._____ DATE_____ DESCRIPTION_____
REVISION No._____ DATE_____ DESCRIPTION_____
REVISION No._____ DATE_____ DESCRIPTION_____
REVISION No._____ DATE_____ DESCRIPTION_____

RUHNAUCLARKE.COM
3775 TENTH STREET, RIVERSIDE CALIFORNIA 92501(951) 684 4664 / 5751 PALMER WAY, SUITE C, CARLSBAD CALIFORNIA 92010(760) 438 5899

MOUNT TRANSIT ADMINISTRATION FACILITY
INCREMENT 3
170 BUSINESS CENTER DR. BIG BEAR LAKE, CA
BIG BEAR LAKE

WALL SECTIONS

A2-6.4

50801

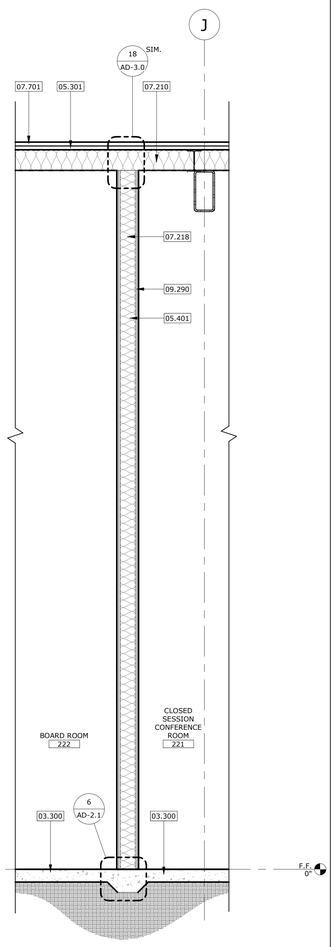

WALL SECTION | SCALE: 1/2" = 1'-0" | 5

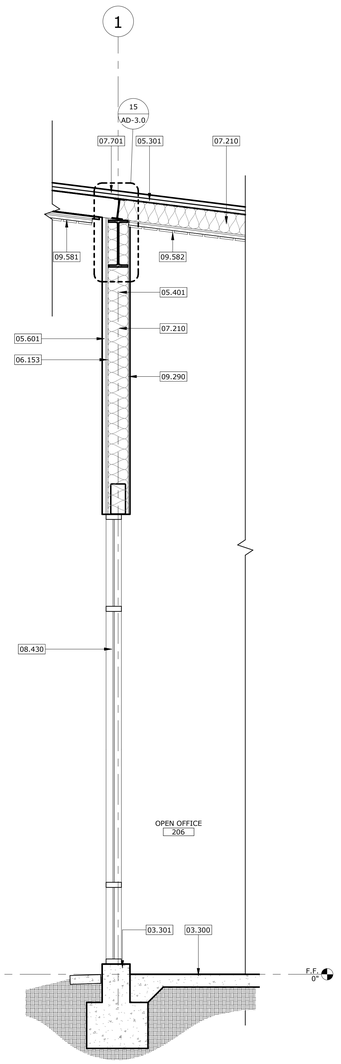

WALL SECTION | SCALE: 1/2" = 1'-0" | 4

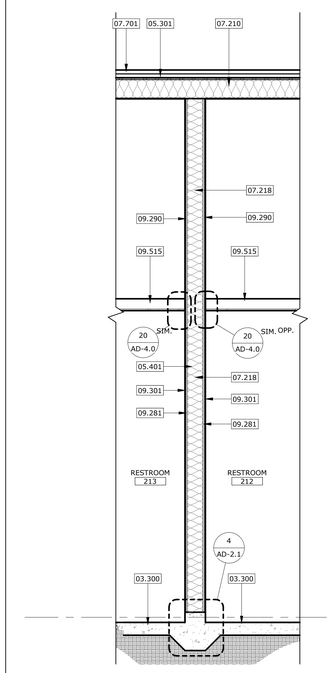

WALL SECTION | SCALE: 1/2" = 1'-0" | 3

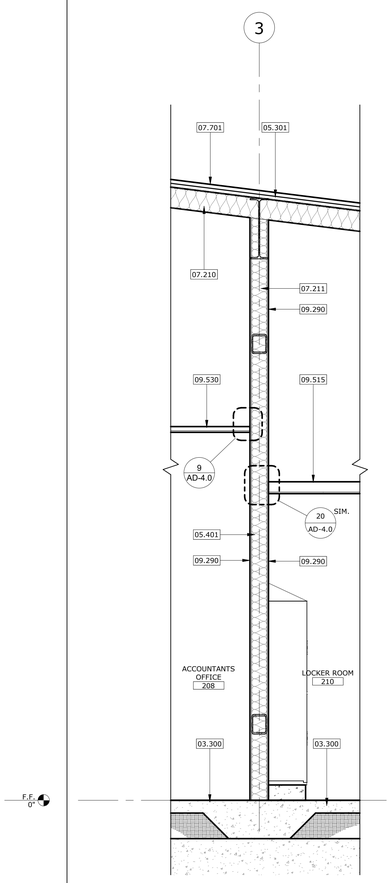

WALL SECTION | SCALE: 1/2" = 1'-0" | 2

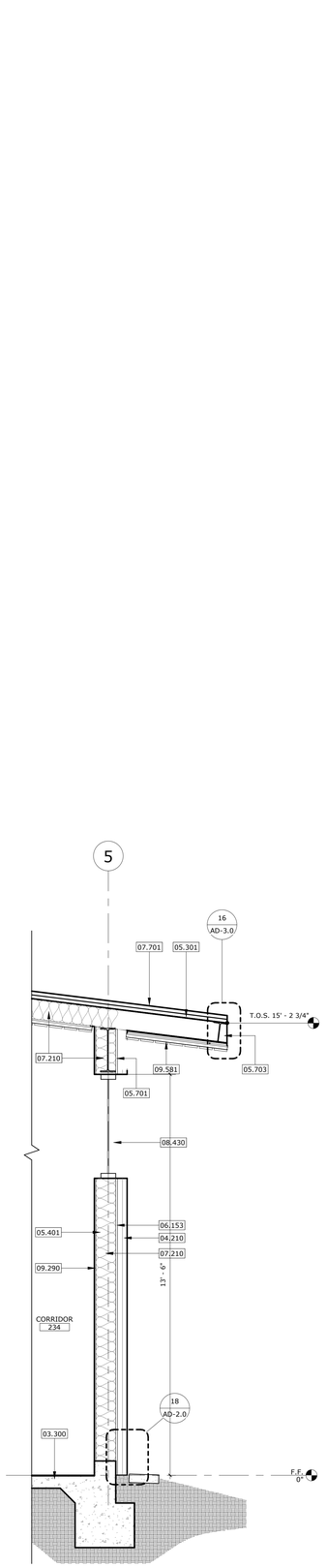

WALL SECTION | SCALE: 1/2" = 1'-0" | 1

STAMPS

LICENSED ARCHITECT — ROGER CLARKE — Exp.10-31-25 — STATE OF CALIFORNIA

AGENCY APPROVAL
File No.: Ltr.:

CONSULTANT BRANDING

RUHNAU CLARKE ARCHITECTS

1. SLAB ON GRADE: 0'-0" = GLOBAL ELEVATION:FF=67.10
2. VERIFY ALL EXTERIOR ROOF OPENINGS & VENTS WITH MECHANICAL, ELECTRICAL, STRUCTURAL & PLUMBING DRAWINGS
3. SEE DETAIL 1/AD-2.1 FOR TYPICAL WALL PENETRATION DETAIL.
4. PROVIDE R-25 RIGID INSULATION UNDER ROOF DECKING, BETWEEN ROOF STRUCTURE. AND PROVIDE R-29 BATT INSULATION IN CAVITIES ON ALL THE AREAS WITH ACOUSTICAL CEILINGS. SEE DETAIL 1/AD-3.0 FOR TYPICAL ROOF CONSTRUCTION ASSEMBLY.
5. PROVIDE R-23 BATT INSULATION AT ALL EXTERIOR WALLS, U.N.O. GYPSUM BOARD AND INSULATION SHALL EXTEND FULL HEIGHT OF WALL TO UNDERSIDE OF ROOF STRUCTURE
6. ALL EXPOSED STRUCTURE, INCLUDING MECHANICAL & PLUMBING EQUIPMENT TO BE PAINTED

GENERAL NOTES

03.300	CAST-IN-PLACE CONCRETE
03.301	CAST-IN-PLACE CONCRETE CURB
04.210	STONE CLADDING SYSTEM
05.301	METAL ROOF DECK
05.401	METAL STUD WALL FRAMING
05.601	METAL WALL PANEL (VERTICAL)
05.701	BREAK METAL TO MATCH WINDOW FRAME FINISH & COLOR.
05.703	METAL FASCIA PANEL
06.153	WOOD SHEATHING
07.210	THERMAL INSULATION
07.211	BATT INSULATION
07.218	ACOUSTICAL INSULATION
07.701	METAL ROOF PANEL SYSTEM
08.430	STOREFRONT SYSTEM PER WINDOW SCHEDULE
09.281	CEMENTITIOUS BACKING BOARD
09.290	GYPSUM WALL BOARD
09.301	CERAMIC TILE
09.515	HARD LID CEILING WITH GYPSUM BOARD CEILING FINISH
09.530	ACOUSTICAL CEILING SUSPENSION ASSEMBLY
09.581	WOODLIKE LINEAR METAL CEILING EXT. SYSTEM
09.582	WOODLIKE LINEAR METAL CEILING INT. SYSTEM

KEYNOTES

MOUNT TRANSIT ADMINISTRATION FACILITY: INCREMENT 3: 100% CD

PROJECT No. :50801
4/18/2024 4:02:10 PM

DRAWN BY: CHECKED BY:

ISSUE No.____ DATE_____ DESCRIPTION_____
ISSUE No.____ DATE_____ DESCRIPTION_____
ISSUE No.____ DATE_____ DESCRIPTION_____
ISSUE No.____ DATE_____ DESCRIPTION_____

REVISION No.____ DATE_____ DESCRIPTION_____
REVISION No.____ DATE_____ DESCRIPTION_____
REVISION No.____ DATE_____ DESCRIPTION_____
REVISION No.____ DATE_____ DESCRIPTION_____

RUHNAUCLARKE.COM
3775 TENTH STREET, RIVERSIDE CALIFORNIA 92501(951) 684-4664 / 5751 PALMER WAY, SUITE C, CARLSBAD CALIFORNIA 92010(760) 438 5899

MOUNT TRANSIT ADMINISTRATION FACILITY
INCREMENT 3
170 BUSINESS CENTER DR. BIG BEAR LAKE, CA
BIG BEAR LAKE

WALL SECTIONS

A2-6.5

50801

ACCESSIBLE LOCKER CALC.

TOTAL LOCKERS

2 TIER LOCKERS x 53 = 106 LOCKERS

REQUIRED ACCESSIBLE LOCKERS

2 TIER LOCKERS
= 106 x 0.05
= 5.3 = 6 LOCKERS (BOTTOM TIER)

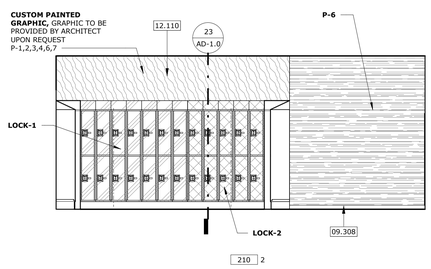

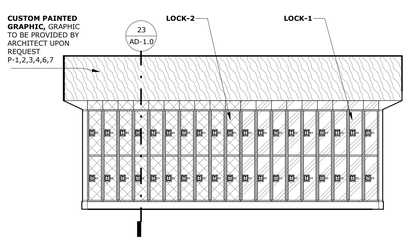

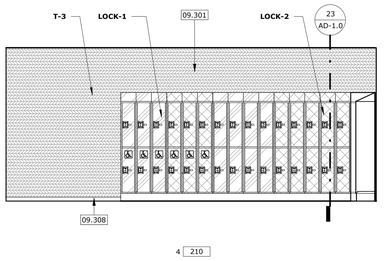

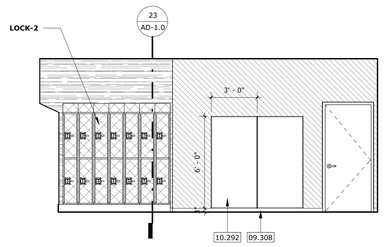

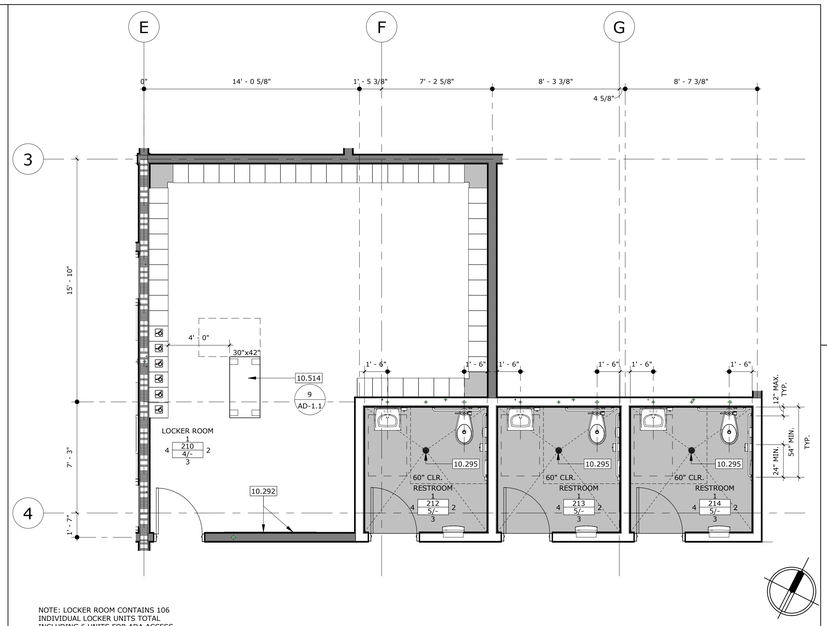

NOTE: LOCKER ROOM CONTAINS 106 INDIVIDUAL LOCKER UNITS TOTAL INCLUDING 6 UNITS FOR ADA ACCESS AND APPROACH

NORTH

INTERIOR ELEVATIONS - LOCKER RM #210

SCALE: 1/4" = 1'-0" | 4

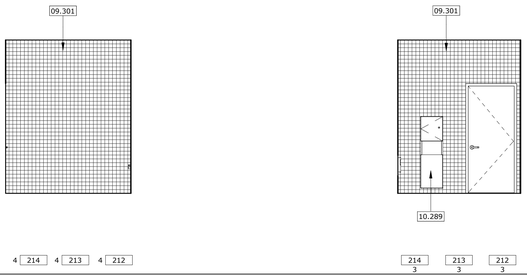

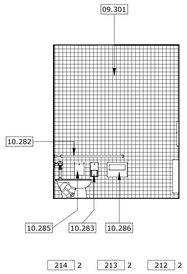

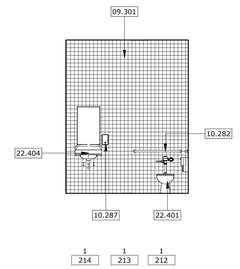

INTERIOR ELEVATIONS - RESTROOM #212

SCALE: 1/4" = 1'-0" | 5

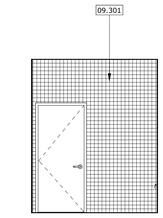

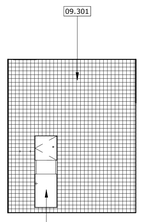

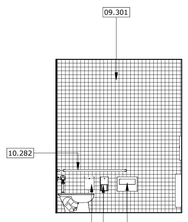

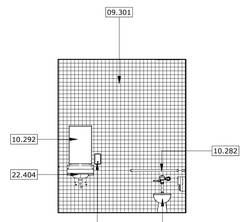

INTERIOR ELEVATIONS - RESTROOM #216 & #218

SCALE: 1/4" = 1'-0" | 6

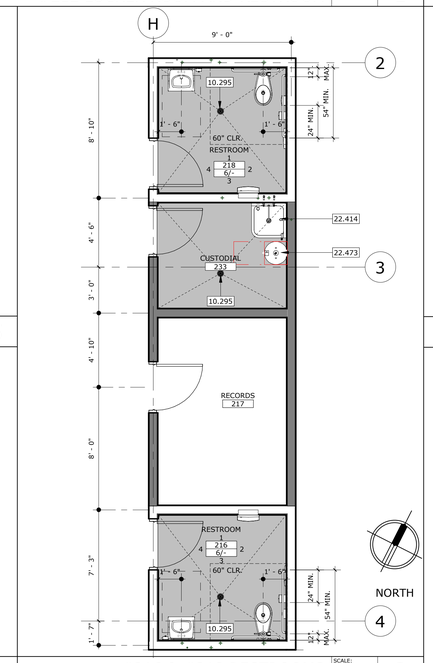

NORTH

#216 & #218 RESTROOMS

SCALE: 1/4" = 1'-0" | 2

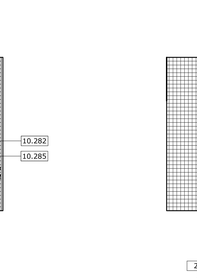

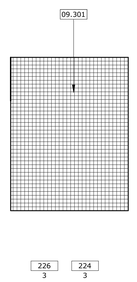

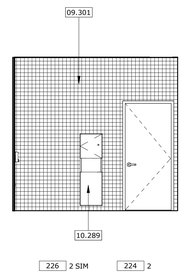

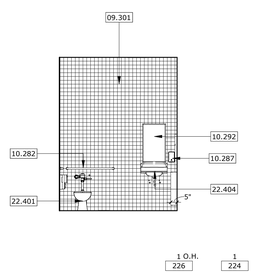

INTERIOR ELEVATIONS - RESTROOM #224 & #226

SCALE: 1/4" = 1'-0" | 7

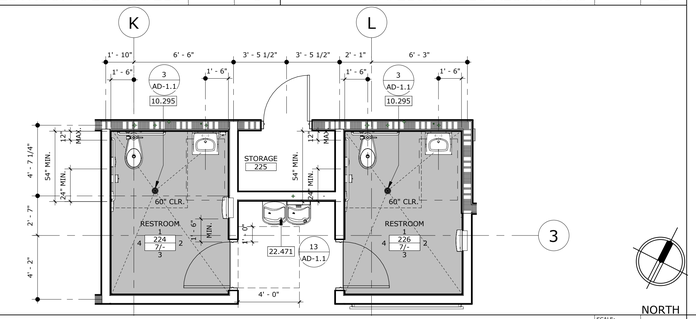

NORTH

RESTROOMS AND STORAGE

SCALE: 1/4" = 1'-0" | 3

RESTROOMS GENERAL NOTES

1. ALL DIMENSIONS SHOWN ON THIS SHEET INDICATE FIXTURES AND ACCESSORIES MINIMUM REQUIREMENTS FOR ACCESSIBILITY. REFER TO BOTH PLANS AND ELEVATIONS FOR LOCATIONS AND INFORMATION.
2. REFER TO DETAIL 21 / AD-1.0 FOR TYPICAL MOUNTING HEIGHTS FOR TOILET ACCESSORIES & PLUMBING FIXTURES
3. ALL WATER AND DRAIN PIPES UNDER LAVATORY SHALL BE INSULATED. THERE SHALL BE NO SHARP OR ABRASIVE OBJECTS OR SURFACES UNDER THE LAVATORY. PER CBC 2022 11B-606.5
4. SELF-CLOSING FAUCET CONTROL VALVES ARE ALLOWED IF THE FAUCET REMAINS OPEN FOR AT LEAST 10 SECONDS. PER CBC 2022 11B-606.4
5. A CLEAR FLOOR SPACE 30" BY 48" COMPLY WITH CBC 2022 11B-305.3 SHALL BE PROVIDED IN FRONT OF A LAVATORY TO ALLOW FORWARD APPROACH. SUCH CLEAR FLOOR SPACE SHALL ADJOIN OR OVERLAP AN ACCESSIBLE ROUTE. PER CBC 2022 11B-305
6. WATER CLOSET AND URINAL FLUSH VALVE CONTROLS, AND FAUCET AND OPERATING MECHANISM CONTROLS, SHALL BE OPERABLE WITH ONE HAND, SHALL NOT REQUIRE TIGHT GRASPING, PINCHING, OR TWISTING OF THE WRIST., AND SHALL BE MOUNTED NO MORE THAN 44" ABOVE THE FLOOR (PER CBC 2022 11B-308) AND REQUIRE A FORCE TO OPERATE TO BE NO GREATER THAN 5 LBF. MAX. (PER CBC 2022 11B-309.4). CONTRACTOR TO FIELD VERIFY EXISTING CONDITIONS AND CORRECT AS NECESSARY TO COMPLY WITH CODE.
7. SEE RCP. DRAWINGS FOR RESTROOM CEILING PLAN INFORMATION

09.301	CERAMIC TILE
09.308	TILE BASE
10.282	GRAB BAR
10.283	TOILET PAPER DISPENSER
10.285	SANITARY NAPKIN DISPOSAL
10.286	TOILET SEAT COVER DISPENSER
10.287	SOAP DISPENSER
10.289	PAPER TOWEL DISPENSER / WASTE RECEPTACLE
10.292	GLASS MIRROR
10.295	FLOOR DRAIN
10.514	LOCKER ROOM BENCH
12.110	MURAL
22.401	WATER CLOSET
22.404	LAVATORY
22.414	MOP SINK
22.471	DRINKING FOUNTAIN
22.473	WATER HEATER PER PLUMBING DWGS.

KEYNOTES

PAINT
- P-1
- P-2
- P-3
- P-4
- P-5
- P-6
- P-8 (NOT USED)

TILING
- T-2
- T-3
- T-4

VINYL WALL COVERING
- VWC-1
- VWC-2
- VWC-3

SOLID SURFACE
- SSM-2

FLEXIBLE WOOD VENEER
- FWV-1

PAINTED GRAPHIC

SOUND ABSORBING WALL UNITS
- AWP-1
- AWP-2
- AWP-3
- AWP-4

METAL LOCKERS
- LOCK-1
- LOCK-2

TACKABLE WALL PANEL
- TWP-1

MANUFACTURED STONE MASONRY
- SV-1

WOOD WALL PANELS
- WWP-1

NOTE:
REFER TO COLORS, MATERIALS AND FINISHES LEGEND FOR ADDITIONAL INFORMATION (ID-1.0)

INTERIOR ELEVATIONS LEGEND

STAMPS

AGENCY APPROVAL

CONSULTANT BRANDING

RUHNAU CLARKE ARCHITECTS

MOUNT TRANSIT ADMINISTRATION FACILITY: INCREMENT 3: 100% CD

PROJECT No. :50801
4/18/2024 4:02:25 PM

DRAWN BY: CHECKED BY:

ISSUE No.____ DATE____ DESCRIPTION____
ISSUE No.____ DATE____ DESCRIPTION____
ISSUE No.____ DATE____ DESCRIPTION____
ISSUE No.____ DATE____ DESCRIPTION____

REVISION No.____ DATE____ DESCRIPTION____
REVISION No.____ DATE____ DESCRIPTION____
REVISION No.____ DATE____ DESCRIPTION____
REVISION No.____ DATE____ DESCRIPTION____

RUHNAUCLARKE.COM
3775 TENTH STREET, RIVERSIDE CALIFORNIA 92501(951) 684 4664 / 5751 PALMER WAY, SUITE C, CARLSBAD CALIFORNIA 92010(760) 438 5899

MOUNT TRANSIT ADMINISTRATION FACILITY
INCREMENT 3
170 BUSINESS CENTER DR. BIG BEAR LAKE, CA
BIG BEAR LAKE

ENLARGED PLANS / INT. ELEVATIONS

A2-7.1

50801

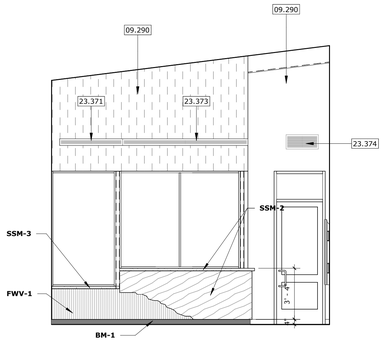

4 228

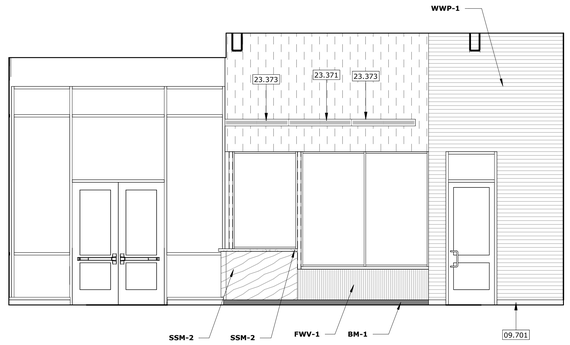

228
3

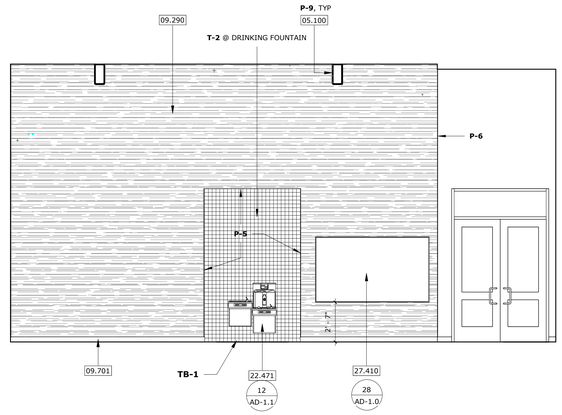

1
228

INTERIOR ELEVATION - LOBBY #228

SCALE: 1/4" = 1'-0" | 1

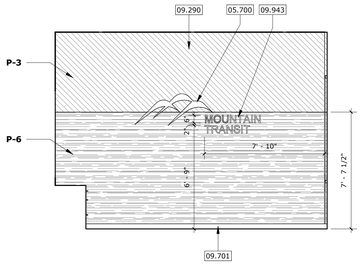

4 232

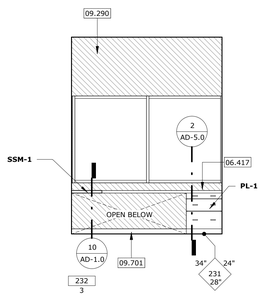

232
3

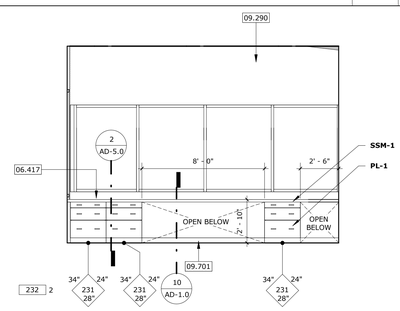

232 2

INTERIOR ELEVATION - DISPATCH #232

SCALE: 1/4" = 1'-0" | 2

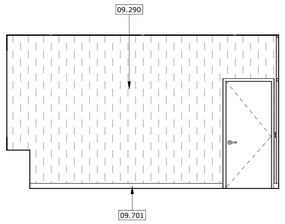

4 231

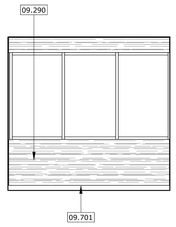

231
3

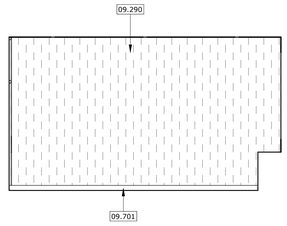

231 2

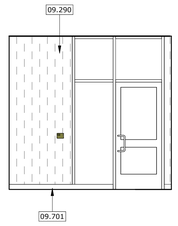

1
231

INTERIOR ELEVATION - OPERATION MANAGER #231

SCALE: 1/4" = 1'-0" | 3

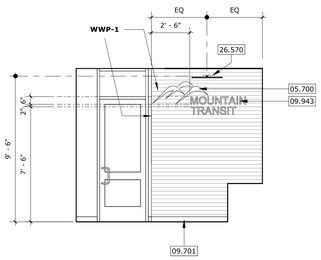

4 237

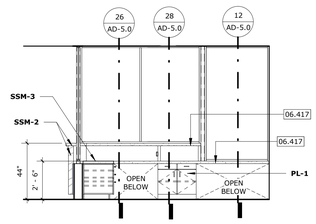

237 2

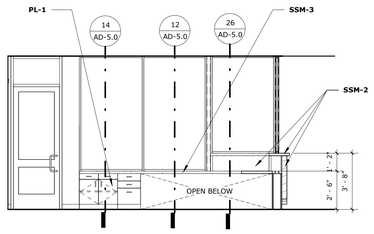

1
237

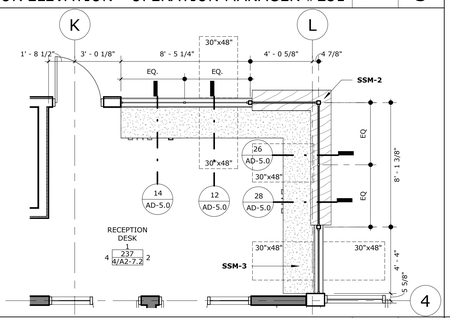

RECEPTION DESK ENLARGED PLAN AND ELEVS.

SCALE: 1/4" = 1'-0" | 4

D

GENERAL NOTES

1. VERIFY ALL DIMENSIONS PRIOR TO CONSTRUCTION.
2. ALL DIMENSIONS ARE TO FACE OF STUD, CENTERLINE OF COLUMN OR EDGE OF SLAB, U.N.O.
3. PROVIDE STUD BRACING AND SUPPORT FOR ALL WALL MOUNTED FIXTURES AND ACCESSORIES. PER DETAIL 5 / S0-2.8
4. PROVIDE GROMMETS AND RINGS IN COUNTER TOPS 60"O.C. FOR POWER AND DATA
5. FOR MOUNTING HEIGHTS AND ACCESSBILITY INFORMATION, SEE DET. 21 / AD-1.0
6. SEE SPECIFICATIONS SECTION ARCHITECTURAL WOOD CASEWORK-HARDWARE, FOR CASEWORK LOCKING REQUIREMENTS
7. FOR CERAMIC TILE COLORS & PATTERNS, SEE SHEET - / ID-1.0

KEYNOTES

05.100	STRUCTURAL STEEL FRAMING PER STRUCT. DWGS.
05.700	DECORATIVE METAL
06.417	SOLID SURFACE COUNTER
09.290	GYPSUM WALL BOARD
09.701	RUBBER BASE
09.943	WALL MOUNTED LETTER SIGN
22.471	DRINKING FOUNTAIN
23.371	DIFFUSER, PER MECH. DWGS.
23.373	BLANKOFF GRILLE, PER MECH. DWGS.
23.374	RETURN, PER MECH. DWGS.
26.570	WALL MOUNTED LIGHT FIXTURE, SEE ELEC. DWGS
27.410	TV MONITOR

INTERIOR ELEVATIONS LEGEND

PAINT
- P-1
- P-2
- P-3
- P-4
- P-5
- P-6
- P-8 (NOT USED)

MANUFACTURED STONE MASONRY
- SV-1

WOOD WALL PANELS
- WWP-1

TILING
- T-2
- T-3
- T-4

VINYL WALL COVERING
- VWC-1
- VWC-2
- VWC-3

SOLID SURFACE
- SSM-2

FLEXIBLE WOOD VENEER
- FWV-1

PAINTED GRAPHIC

SOUND ABSORBING WALL UNITS
- AWP-1
- AWP-2
- AWP-3
- AWP-4

METAL LOCKERS
- LOCK-1
- LOCK-2

TACKABLE WALL PANEL
- TWP-1

NOTE:
REFER TO COLORS, MATERIALS AND FINISHES LEGEND FOR ADDITIONAL INFORMATION - / ID-1.0

STAMPS

LICENSED ARCHITECT — ROGER CLARKE — No. C-41530 — Exp.10-31-25 — STATE OF CALIFORNIA

AGENCY APPROVAL
File No.: x.x.x

CONSULTANT BRANDING

RUHNAU CLARKE ARCHITECTS

PROJECT No. :50801
4/18/2024 4:02:31 PM

DRAWN BY: CHECKED BY:

ISSUE No.____ DATE____ DESCRIPTION____
ISSUE No.____ DATE____ DESCRIPTION____
ISSUE No.____ DATE____ DESCRIPTION____
ISSUE No.____ DATE____ DESCRIPTION____
REVISION No.____ DATE____ DESCRIPTION____
REVISION No.____ DATE____ DESCRIPTION____
REVISION No.____ DATE____ DESCRIPTION____
REVISION No.____ DATE____ DESCRIPTION____

RUHNAUCLARKE.COM
3775 TENTH STREET, RIVERSIDE CALIFORNIA 92501(951) 684 4664 / 5751 PALMER WAY, SUITE C, CARLSBAD CALIFORNIA 92010(760) 438 5899

MOUNT TRANSIT ADMINISTRATION FACILITY
INCREMENT 3
170 BUSINESS CENTER DR. BIG BEAR LAKE, CA
BIG BEAR LAKE

ENLARGED PLANS / INT. ELEVATIONS

A2-7.2

50801

MOUNT TRANSIT ADMINISTRATION FACILITY: INCREMENT 3: 100% CD

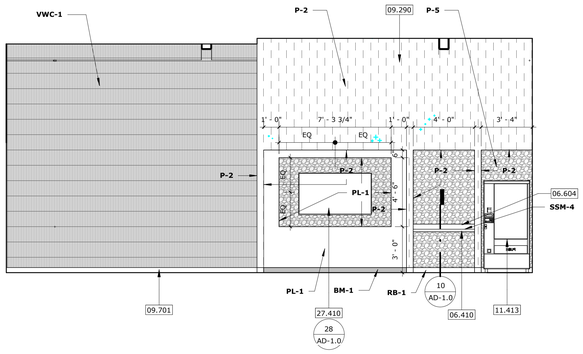

205
3

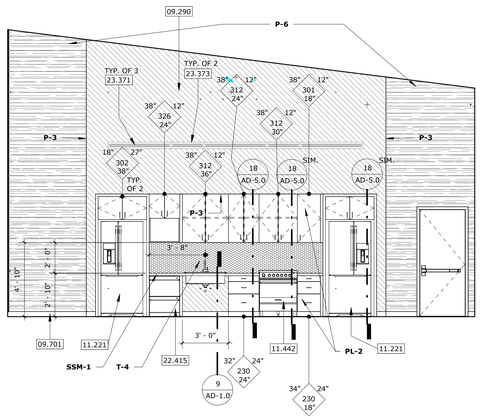

205 2

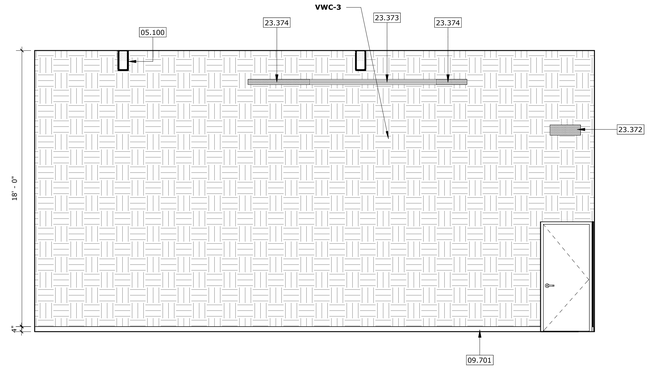

1
205

INTERIOR ELEVATIONS - BREAK ROOM

SCALE: 1/4" = 1'-0" | 2

INTERIOR ELEVATION - OFFICE

SCALE: 1/4" = 1'-0" | 1

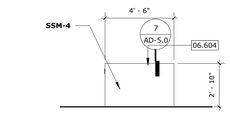

5

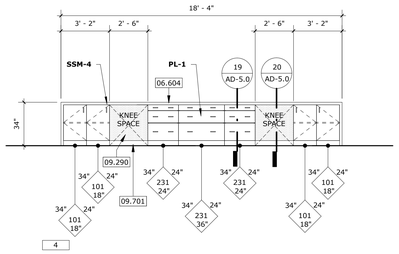

4

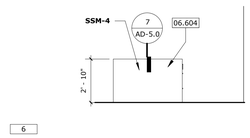

6

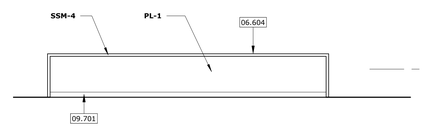

7

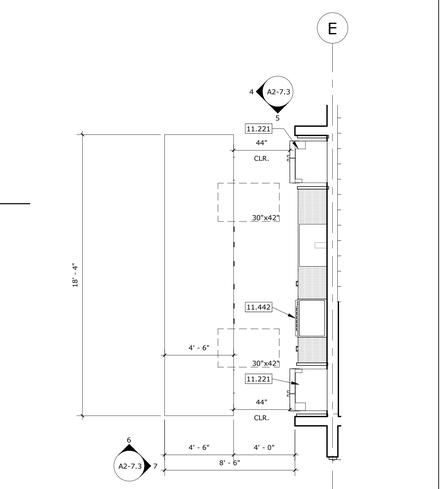

50% STORAGE CALCULATIONS - KITCHENETTE AND KITCHEN ISLAND

	REF. VIEW	ELEVATION	STORAGE AREA sq/ft.	
NON ACCESSIBLE - UPPER CABINETS	2/A2-7.3	205 2	25.7	
ACCESSIBLE - LOWER CABINETS	2/A2-7.3	205 2	15	81
	8/A2-7.3	4	66	
		7		
TOTAL STORAGE AREA:			106.7	
PERCENTAGE OF ACCESSIBLE STORAGE AREA: 81/106.7			76 %	

BREAKROOM ISLAND PLAN AND ELEVATIONS

SCALE: 1/4" = 1'-0" | 8

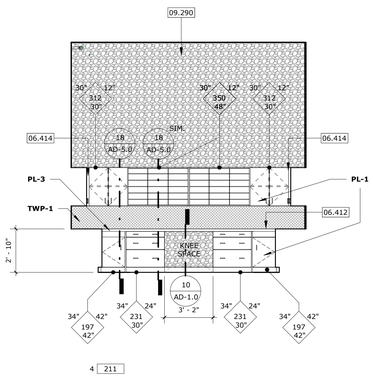

4 211

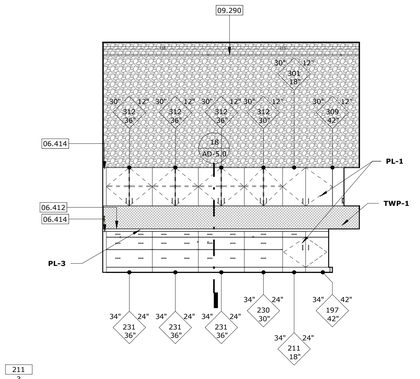

211
3

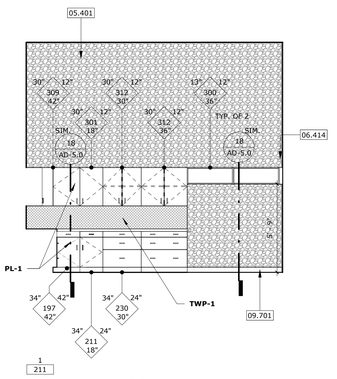

1
211

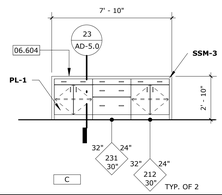

C

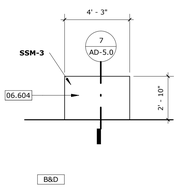

B&D

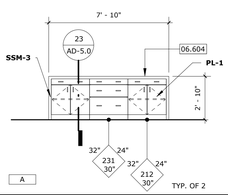

A

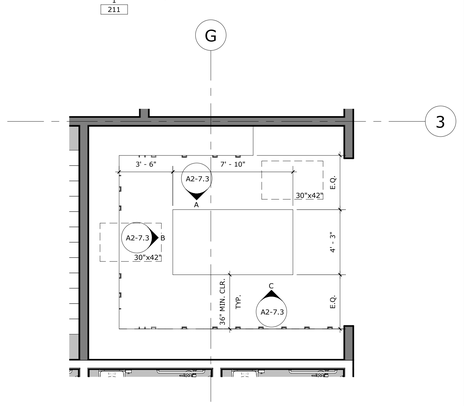

INTERIOR ELEVATION - WORK ROOM #211

SCALE: 1/4" = 1'-0" | 3

1. VERIFY ALL DIMENSIONS PRIOR TO CONSTRUCTION.
2. ALL DIMENSIONS ARE TO FACE OF STUD, CENTERLINE OF COLUMN OR EDGE OF SLAB, U.N.O.
3. PROVIDE STUD BRACING AND SUPPORT FOR ALL WALL MOUNTED FIXTURES AND ACCESSORIES. PER DETAIL 5/SO-2.8
4. PROVIDE GROMMETS AND RINGS IN COUNTER TOPS 60°O.C. FOR POWER AND DATA
5. FOR MOUNTING HEIGHTS AND ACCESSBILITY INFORMATION, SEE DET. 21/AD-1.0
6. SEE SPECIFICATIONS SECTION ARCHITECTURAL WOOD CASEWORK-HARDWARE, FOR CASEWORK LOCKING REQUIREMENTS
7. FOR CERAMIC TILE COLORS & PATTERNS, SEE SHEET -/ID-1.0

GENERAL NOTES

05.100	STRUCTURAL STEEL FRAMING PER STRUCT. DWGS.
05.401	METAL STUD WALL FRAMING
06.410	COMPUTER STATION(S)
06.412	PLASTIC LAMINIATE COUNTERTOP
06.414	PLASTIC LAMINIATE FILLER PANEL
06.604	SOLID SURFACE MATERIAL
09.290	GYPSUM WALL BOARD
09.701	RUBBER BASE
11.221	RESIDENTIAL GRADE REFRIGERATOR N.I.C.
11.413	VENDING MACHINE
11.442	RESIDENTIAL GRADE RANGE W/ AN ELECTRIC DOWNDRAFT SLIDE-IN W/ DUCTLESS VENT KIT. N.I.C.
22.415	DRAWER DISH WASHER N.I.C.
23.330	AIR DUCT ACCESSORY
23.371	DIFFUSER, PER MECH. DWGS.
23.372	REGISTER, PER MECH. DWGS.
23.373	BLANKOFF GRILLE, PER MECH. DWGS.
23.374	RETURN, PER MECH. DWGS.
27.410	TV MONITOR

KEYNOTES

PAINT
- P-1
- P-2
- P-3
- P-4
- P-5
- P-6
- P-8 (NOT USED)

TILING
- T-2
- T-3
- T-4

VINYL WALL COVERING
- VWC-1
- VWC-2
- VWC-3

SOLID SURFACE
- SSM-2

FLEXIBLE WOOD VENEER
- FWV-1

PAINTED GRAPHIC

SOUND ABSORBING WALL UNITS
- AWP-1
- AWP-2
- AWP-3
- AWP-4

METAL LOCKERS
- LOCK-1
- LOCK-2

TACKABLE WALL PANEL
- TWP-1

MANUFACTURED STONE MASONRY
- SV-1

WOOD WALL PANELS
- WWP-1

NOTE:
REFER TO COLORS, MATERIALS AND FINISHES LEGEND FOR ADDITIONAL INFORMATION -/ID-1.0

INTERIOR ELEVATIONS LEGEND

STAMPS

AGENCY APPROVAL
File No.: 4.0+

CONSULTANT BRANDING

RUHNAU CLARKE ARCHITECTS

MOUNT TRANSIT ADMINISTRATION FACILITY: INCREMENT 3: 100% CD

PROJECT No. :50801
4/18/2024 4:02:42 PM

DRAWN BY: CHECKED BY:

ISSUE No._____ DATE_____ DESCRIPTION_____
ISSUE No._____ DATE_____ DESCRIPTION_____
ISSUE No._____ DATE_____ DESCRIPTION_____
ISSUE No._____ DATE_____ DESCRIPTION_____

REVISION No._____ DATE_____ DESCRIPTION_____
REVISION No._____ DATE_____ DESCRIPTION_____
REVISION No._____ DATE_____ DESCRIPTION_____
REVISION No._____ DATE_____ DESCRIPTION_____

RUHNAUCLARKE.COM
3775 TENTH STREET, RIVERSIDE CALIFORNIA 92501(951) 684 4664 / 5751 PALMER WAY, SUITE C, CARLSBAD CALIFORNIA 92010(760) 438 5899

MOUNT TRANSIT ADMINISTRATION FACILITY
INCREMENT 3
170 BUSINESS CENTER DR. BIG BEAR LAKE, CA
BIG BEAR LAKE

ENLARGED PLANS / INT. ELEVATIONS

A2-7.3

50801

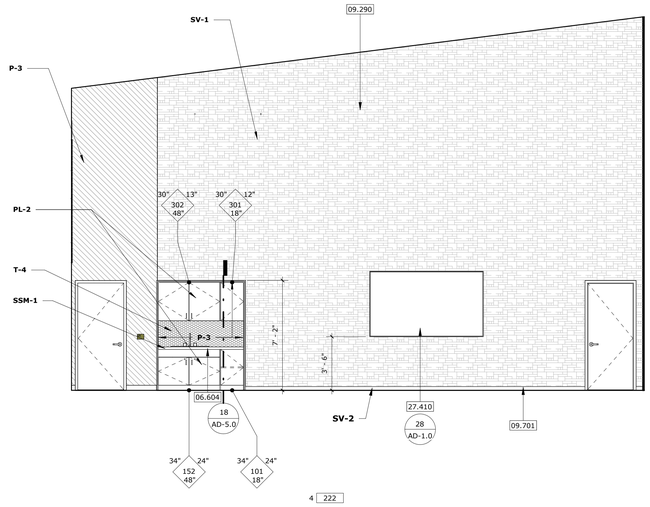

4 222

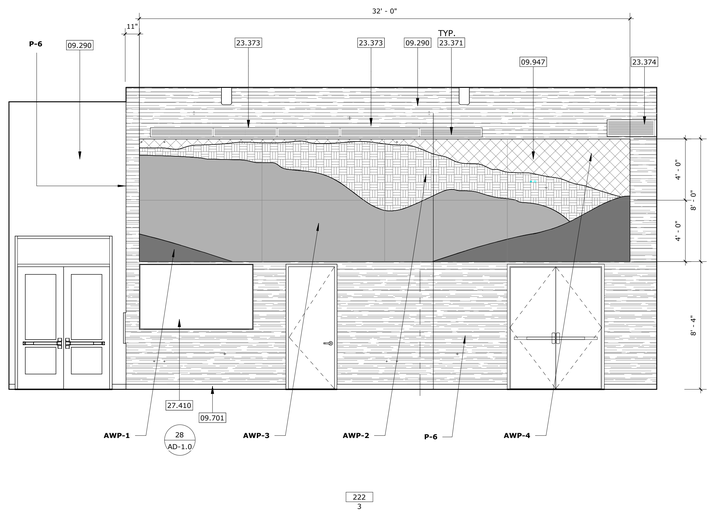

222
3

INTERIOR ELEVATION - BOARD ROOM #222

SCALE: 1/4" = 1'-0" | 1

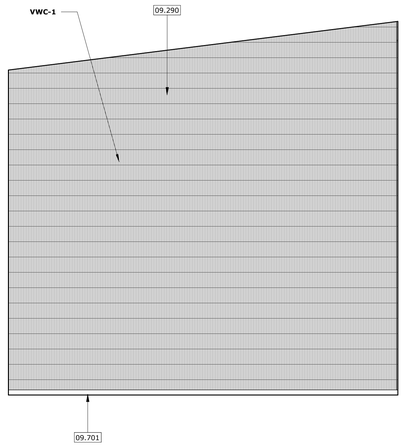

4 221

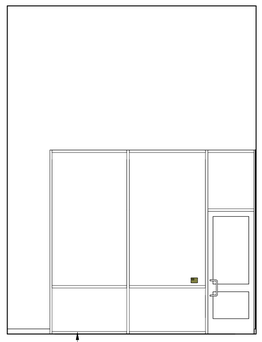

221
3

CLOSED SESSION CONFERENCE ROOM - #221

SCALE: 1/4" = 1'-0" | 3

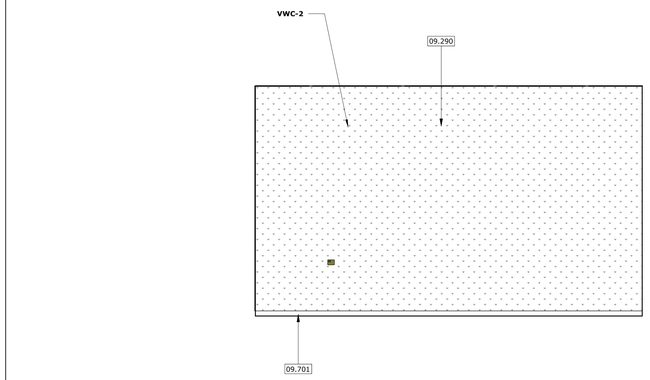

200
3

INTERIOR ELEVATION - GENERAL MANAGERS' OFFICE #200

SCALE: 1/4" = 1'-0" | 2

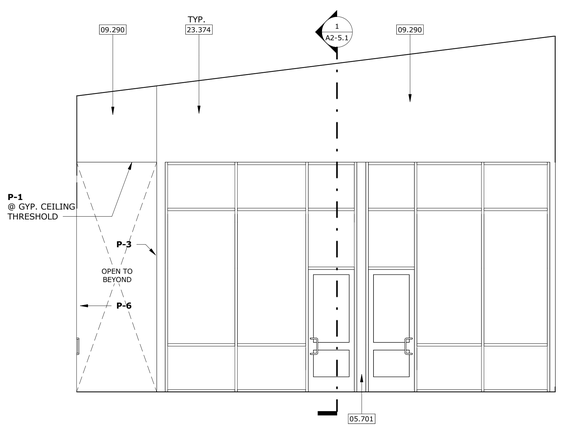

4 206

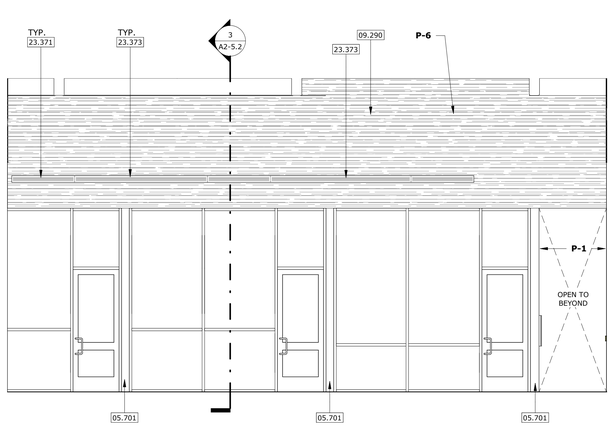

206
3

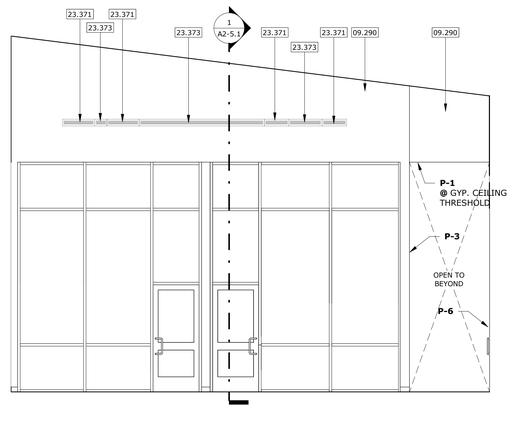

206 2

INTERIOR ELEVATION - OPEN OFFICE #206

SCALE: 1/4" = 1'-0" | 5

PROJECT No. :50801
4/18/2024 4:02:51 PM

DRAWN BY: CHECKED BY:

ISSUE No.____ DATE____ DESCRIPTION____
ISSUE No.____ DATE____ DESCRIPTION____
ISSUE No.____ DATE____ DESCRIPTION____
ISSUE No.____ DATE____ DESCRIPTION____

REVISION No.____ DATE____ DESCRIPTION____
REVISION No.____ DATE____ DESCRIPTION____
REVISION No.____ DATE____ DESCRIPTION____
REVISION No.____ DATE____ DESCRIPTION____

RUHNAUCLARKE.COM
3775 TENTH STREET, RIVERSIDE CALIFORNIA 92501(951) 684 4664 / 5751 PALMER WAY, SUITE C, CARLSBAD CALIFORNIA 92010(760) 438 5899

MOUNT TRANSIT ADMINISTRATION FACILITY
INCREMENT 3
170 BUSINESS CENTER DR. BIG BEAR LAKE, CA
BIG BEAR LAKE

ENLARGED PLANS / INT. ELEVATIONS

A2-7.4

50801

STAMPS

LICENSED ARCHITECT — ROGER CLARKE — Exp.10-31-25 — STATE OF CALIFORNIA

AGENCY APPROVAL
File No.: Sht:

CONSULTANT BRANDING

RUHNAU CLARKE ARCHITECTS

1. VERIFY ALL DIMENSIONS PRIOR TO CONSTRUCTION.
2. ALL DIMENSIONS ARE TO FACE OF STUD, CENTERLINE OF COLUMN OR EDGE OF SLAB, U.N.O.
3. PROVIDE STUD BRACING AND SUPPORT FOR ALL WALL MOUNTED FIXTURES AND ACCESSORIES. PER DETAIL 5 / SO-2.8
4. PROVIDE GROMMETS AND RINGS IN COUNTER TOPS 60°O.C. FOR POWER AND DATA
5. FOR MOUNTING HEIGHTS AND ACCESSBILITY INFORMATION, SEE DET. 21 / AD-1.0
6. SEE SPECIFICATIONS SECTION ARCHITECTURAL WOOD CASEWORK-HARDWARE, FOR CASEWORK LOCKING REQUIREMENTS
7. FOR CERAMIC TILE COLORS & PATTERNS, SEE SHEET - / ID-1.0

GENERAL NOTES

05.701	BREAK METAL TO MATCH WINDOW FRAME FINISH & COLOR.
06.604	SOLID SURFACE MATERIAL
09.290	GYPSUM WALL BOARD
09.701	RUBBER BASE
09.947	SOUND-ABSORBING WALL UNIT
23.371	DIFFUSER, PER MECH. DWGS.
23.373	BLANKOFF GRILLE, PER MECH. DWGS.
23.374	RETURN, PER MECH. DWGS.
27.410	TV MONITOR

KEYNOTES

PAINT
P-1
P-2
P-3
P-4
P-5
P-6
P-8 (NOT USED)

TILING
T-2
T-3
T-4

VINYL WALL COVERING
VWC-1
VWC-2
VWC-3

SOLID SURFACE
SSM-2

FLEXIBLE WOOD VENEER
FWV-1

PAINTED GRAPHIC

SOUND ABSORBING WALL UNITS
AWP-1
AWP-2
AWP-3
AWP-4

METAL LOCKERS
LOCK-1
LOCK-2

TACKABLE WALL PANEL
TWP-1

MANUFACTURED STONE MASONRY
SV-1

WOOD WALL PANELS
WWP-1

NOTE:
REFER TO COLORS, MATERIALS AND FINISHES LEGEND FOR ADDITIONAL INFORMATION - / ID-1.0

INTERIOR ELEVATIONS LEGEND

MOUNT TRANSIT ADMINISTRATION FACILITY: INCREMENT 3: 100% CD

DOOR SCHEDULE

DOOR NO.	DOOR							FRAME									DOOR NO.
	DOOR TYPE	WIDTH	HEIGHT	THICKNESS	MATERIAL	FINISH	COLOR	MATERIAL	FINISH	COLOR	HEAD	JAMB	SILL/THRESHOLD	PANIC HARDWARE	HARDWARE GROUP	FIRE RATING.	REMARKS	
200A	B	3' - 0"	8' - 0"	1 3/4"	ALUM	FF	ALUM-1	ALUM	FF	ALUM-1	18/AD-6.0	19/AD-6.0	9/AD-6.0		13.0			200A
200B	B	3' - 0"	8' - 0"	1 3/4"	ALUM	FF	ALUM-1	ALUM	FF	ALUM-1	20/AD-6.1		1/AD-6.1		4.0			200B
201A	B	3' - 0"	8' - 0"	1 3/4"	ALUM	FF	ALUM-1	ALUM	FF	ALUM-1	18/AD-6.0	19/AD-6.0	9/AD-6.0		13.0			201A
202A	B	3' - 0"	8' - 0"	1 3/4"	ALUM	FF	ALUM-1	ALUM	FF	ALUM-1	18/AD-6.0	19/AD-6.0	9/AD-6.0		13.0			202A
203A	B	3' - 0"	8' - 0"	1 3/4"	ALUM	FF	ALUM-1	ALUM	FF	ALUM-1	18/AD-6.0	19/AD-6.0	9/AD-6.0		13.0			203A
204A	B	3' - 0"	7' - 0"	1 3/4"	ALUM	FF	ALUM-1	ALUM	FF	ALUM-1	18/AD-6.0	19/AD-6.0	9/AD-6.0		13.0			204A
205A	B	3' - 0"	8' - 0"	1 3/4"	ALUM	FF	ALUM-1	ALUM	FF	ALUM-1	4/AD-6.0	5/AD-6.0	17/AD-6.0	*	3.0			205A
205B	C	18' - 0"	8' - 0"	3 19/128"	ALUM	FF	ALUM-2	ALUM	FF	ALUM-2	1/CW7.03	1/CW7.06	2/CW7.03		19.0			205B
205C	A	3' - 0"	7' - 0"	1 3/4"	ALUM	FF	ALUM-1	ALUM	FF	ALUM-1	16/AD-2.1	17 & 22/AD-2.1	9/AD-6.0		16.0	2 HR.		205C
205D	A	3' - 0"	7' - 0"	1 3/4"	ALUM	FF	ALUM-1	ALUM	FF	ALUM-1	16/AD-2.1	22/AD-2.1	9/AD-6.0	*	7.0	2 HR.	6" x 27" LITE	205D
207A	B	3' - 0"	8' - 0"	1 3/4"	ALUM	FF	ALUM-1	ALUM	FF	ALUM-1	18/AD-6.0	19/AD-6.0	9/AD-6.0		13.0			207A
208A	B	3' - 0"	8' - 0"	1 3/4"	ALUM	FF	ALUM-1	ALUM	FF	ALUM-1	18/AD-6.0	19/AD-6.0	9/AD-6.0		13.0			208A
209A	B	3' - 0"	8' - 0"	1 3/4"	ALUM	FF	ALUM-1	ALUM	FF	ALUM-1	18/AD-6.0	19/AD-6.0	9/AD-6.0		13.0			209A
210A	A	3' - 0"	7' - 0"	1 3/4"	HM	PSG	P-10	HM	PSG	P-10	4/AD-6.0	5/AD-6.0	9/AD-6.0		18.0			210A
212A	A	3' - 0"	7' - 0"	1 3/4"	HM	PSG	P-10	HM	PSG	P-10	6/AD-6.0	7/AD-6.0	9/AD-6.0		15.0		DOOR UNDERCUT PER MECHANICAL DWGS.	212A
213A	A	3' - 0"	7' - 0"	1 3/4"	HM	PSG	P-10	HM	PSG	P-10	6/AD-6.0	7/AD-6.0	9/AD-6.0		15.0		DOOR UNDERCUT PER MECHANICAL DWGS.	213A
214A	A	3' - 0"	7' - 0"	1 3/4"	HM	PSG	P-10	HM	PSG	P-10	6/AD-6.0	7/AD-6.0	9/AD-6.0		15.0		DOOR UNDERCUT PER MECHANICAL DWGS.	214A
215A	B	3' - 0"	8' - 0"	1 3/4"	ALUM	FF	ALUM-1	ALUM	FF	ALUM-1	20/AD-6.1		1/AD-6.1	*	3.0			215A
216A	A	3' - 0"	7' - 0"	1 3/4"	HM	PSG	P-10	HM	PSG	P-10	6/AD-6.0	7/AD-6.0	9/AD-6.0		15.0		DOOR UNDERCUT PER MECHANICAL DWGS.	216A
217A	A	3' - 0"	7' - 0"	1 3/4"	HM	PSG	P-10	HM	PSG	P-10	4/AD-6.0	5/AD-6.0	9/AD-6.0		12.0			217A
218A	A	3' - 0"	7' - 0"	1 3/4"	HM	PSG	P-10	HM	PSG	P-10	6/AD-6.0	7/AD-6.0	9/AD-6.0		15.0		DOOR UNDERCUT PER MECHANICAL DWGS.	218A
219A	B	3' - 0"	7' - 0"	1 3/4"	ALUM	FF	ALUM-1	ALUM	FF	ALUM-1	18/AD-6.0	19/AD-6.0	9/AD-6.0		13.0			219A
220A	B	3' - 0"	7' - 0"	1 3/4"	ALUM	FF	ALUM-1	ALUM	FF	ALUM-1	18/AD-6.0	19/AD-6.0	9/AD-6.0		13.0			220A
221A	A	3' - 0"	7' - 0"	1 3/4"	ALUM	FF	ALUM-1	ALUM	FF	ALUM-1	16/AD-2.1	22/AD-2.1	9/AD-6.0		14.0	2 HR.		221A
221B	B	3' - 0"	8' - 0"	1 3/4"	ALUM	FF	ALUM-1	ALUM	FF	ALUM-1	18/AD-6.0	19/AD-6.0	9/AD-6.0		14.0			221B
222A	PR-B	6' - 0"	8' - 0"	2"	ALUM	FF	ALUM-1	ALUM	FF	ALUM-1	20/AD-6.1		1/AD-6.1	*	2.0			222A
222B	D	24' - 0"	8' - 0"	3 19/128"	ALUM	FF	ALUM-2	ALUM	FF	ALUM-2	1/CW7.03	1/CW7.06	2/CW7.03		19.0			222B
222C	A	3' - 0"	7' - 0"	1 3/4"	ALUM	FF	ALUM-1	ALUM	FF	ALUM-1	16/AD-2.1	22/AD-2.1	9/AD-6.0		14.0	2 HR.		222C
222D	PR-B	6' - 0"	8' - 0"	2"	ALUM	FF	ALUM-1	ALUM	FF	ALUM-1	18/AD-2.1	22/AD-2.1	9/AD-6.0	*	6.0	2 HR.		222D
223A	PR-A	6' - 0"	8' - 0"	1 3/4"	HM	PSG	P-10	HM	PSG	P-10	11/AD-2.1	12/AD-2.1	9/AD-6.0		9.0	2 HR.		223A
224A	A	3' - 0"	7' - 0"	1 3/4"	HM	PSG	P-10	HM	PSG	P-10	6/AD-6.0	7/AD-6.0	9/AD-6.0		15.0		DOOR UNDERCUT PER MECHANICAL DWGS.	224A
225A	A	3' - 0"	8' - 0"	1 3/4"	HM	PSG	P-10	HM	PSG	P-10	11/AD-2.1	12/AD-2.1	9/AD-6.0		11.0	2 HR.		225A
226A	A	3' - 0"	7' - 0"	1 3/4"	HM	PSG	P-10	HM	PSG	P-10	6/AD-6.0	7/AD-6.0	9/AD-6.0		15.0		DOOR UNDERCUT PER MECHANICAL DWGS.	226A
227A	A	3' - 0"	7' - 0"	1 3/4"	HM	PSG	P-10	HM	PSG	P-10	4/AD-6.0	5/AD-6.0	9/AD-6.0		12.0			227A
228A	PR-B	6' - 0"	8' - 0"	2"	ALUM	FF	ALUM-1	ALUM	FF	ALUM-1	20/AD-6.1		1/AD-6.1	*	1.0			228A
228B	B	3' - 0"	8' - 0"	1 3/4"	ALUM	FF	ALUM-1	ALUM	FF	ALUM-1	18/AD-6.0	19/AD-6.0	9/AD-6.0		8.0			228B
228C	B	3' - 0"	8' - 0"	1 3/4"	ALUM	FF	ALUM-1	ALUM	FF	ALUM-1	10/AD-6.0	5/AD-6.0	9/AD-6.0		17.0			228C
228D	B	3' - 0"	8' - 0"	1 3/4"	ALUM	FF	ALUM-1	ALUM	FF	ALUM-1	18/AD-6.0	19/AD-6.0	9/AD-6.0		13.0		180 DEGREE DOOR SWING	228D
229A	A	3' - 0"	7' - 0"	1 3/4"	HM	PSG	P-10	HM	PSG	P-10	4/AD-6.0	5/AD-6.0	9/AD-6.0		12.0			229A
230A	PR-A	6' - 0"	8' - 0"	1 3/4"	HM	PSG	P-10	HM	PSG	P-10	15/AD-6.0	16/AD-6.0	17/AD-6.0		5.0		DOOR UNDERCUT PER MECHANICAL DWGS.	230A
231A	B	3' - 0"	7' - 0"	1 3/4"	ALUM	FF	ALUM-1	ALUM	FF	ALUM-1	18/AD-6.0	19/AD-6.0	9/AD-6.0		13.0			231A
232A	B	3' - 0"	7' - 0"	1 3/4"	ALUM	FF	ALUM-1	ALUM	FF	ALUM-1	18/AD-6.0	19/AD-6.0	9/AD-6.0		13.0			232A
233A	A	3' - 0"	7' - 0"	1 3/4"	HM	FF	P-10	HM	PSG	P-10	4/AD-6.0	5/AD-6.0	9/AD-6.0		10.0		DOOR UNDERCUT PER MECHANICAL DWGS.	233A
234A	PR-B	6' - 0"	8' - 0"	2"	ALUM	FF	ALUM-1	ALUM	FF	ALUM-1	20/AD-6.1		1/AD-6.1	*	2.0			234A

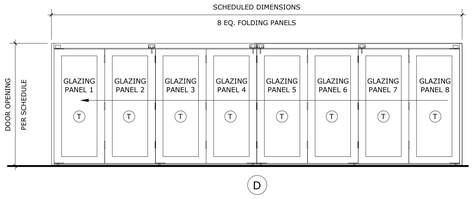

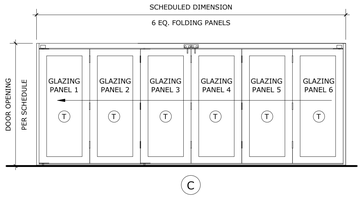

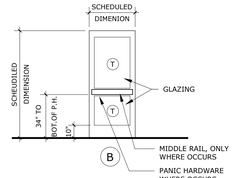

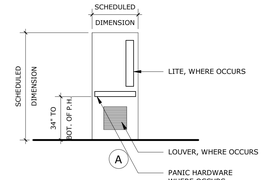

DOOR TYPES

SCALE: 1/4" = 1'-0" | 6

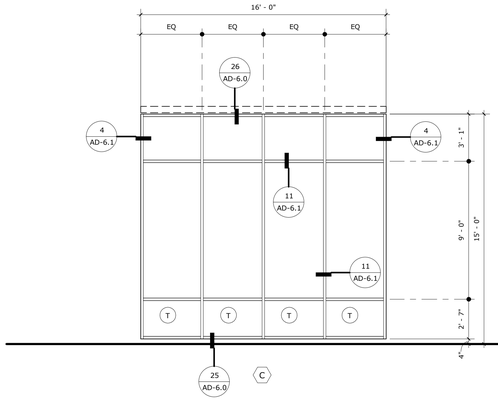

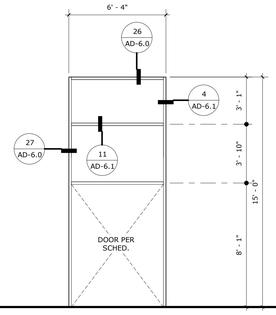

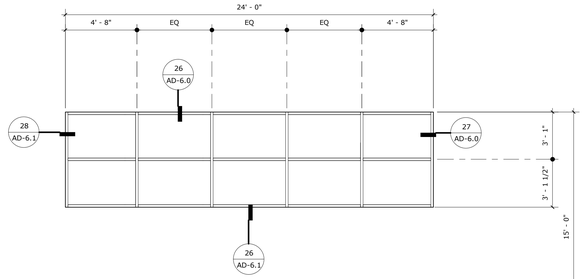

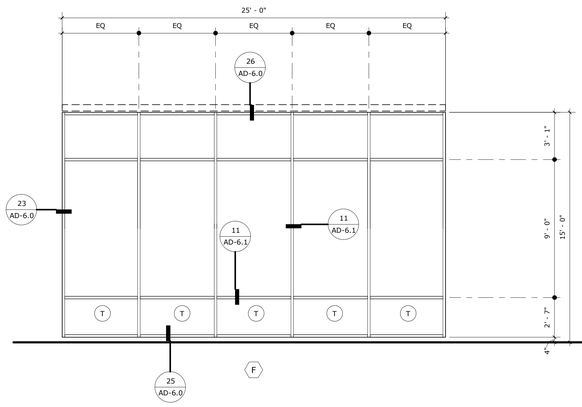

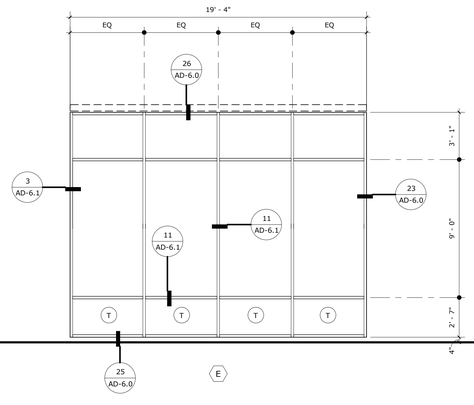

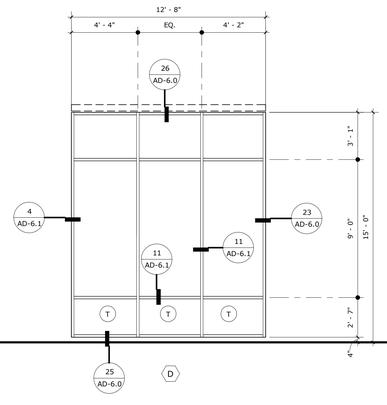

WINDOW SCHEDULE

SCALE: 1/4" = 1'-0" | 4

PROJECT No. :50801
4/18/2024 4:02:53 PM

DRAWN BY: CHECKED BY:

ISSUE No._____ DATE_____ DESCRIPTION_____
ISSUE No._____ DATE_____ DESCRIPTION_____
ISSUE No._____ DATE_____ DESCRIPTION_____
ISSUE No._____ DATE_____ DESCRIPTION_____

REVISION No._____ DATE_____ DESCRIPTION_____
REVISION No._____ DATE_____ DESCRIPTION_____
REVISION No._____ DATE_____ DESCRIPTION_____
REVISION No._____ DATE_____ DESCRIPTION_____

RUHNAUCLARKE.COM
3775 TENTH STREET, RIVERSIDE CALIFORNIA 92501(951) 684 4664 / 5751 PALMER WAY, SUITE C, CARLSBAD CALIFORNIA 92010(760) 438 5899

MOUNT TRANSIT ADMINISTRATION FACILITY
INCREMENT 3
170 BUSINESS CENTER DR. BIG BEAR LAKE, CA
BIG BEAR LAKE

DOOR & WINDOW SCHEDULE

A2-8.1

50801

STAMPS

LICENSED ARCHITECT ROBERT CLARKE Exp.10-31-25 STATE OF CALIFORNIA

AGENCY APPROVAL
File No.= x.x.

CONSULTANT BRANDING

RUHNAU CLARKE ARCHITECTS

GENERAL NOTES

1. SEE SHEET AD-6.0 FOR HOLLOW METAL FRAME DETAILS
2. SET DOORS ADJACENT TO WALLS A MIN. OF 4" AWAY FROM WALL U.N.O.
3. ALL GLAZING IN DOORS, AND WINDOWS BELOW 8'-0" A.F.F., ARE TEMPERED OR AS REQUIRED BY SECTION 2406 OF THE 2022 CBC
4. PROVIDE DOOR STOPS AT ALL INTERIOR DOORS. PROVIDE BACKING PLATE PER DETAIL 5/S0-2.8
5. ALL EXTERIOR DOORS ARE TO SWING OUT AND OPEN TO A MIN. OF 110 DEGREES FROM ITS CLOSED POSITION WHERE POSSIBLE, U.N.O.
   - EXCEPTION: WHERE TACTILE SIGNAGE IS LOCATED ON HINGE SIDE OF DOOR, DOORS TO HAVE A 90 DEGREE SWING LIMIT
6. ALL EXTERIOR DOORS SHALL HAVE A POLYSTYRENE CORE (THERMAL RESISTANCE)
7. PROVIDE AIR SEALS/WEATHER STRIPPING AT ALL EXTERIOR DOORS TO CONDITIONED SPACES.
8. ALL FLOOR MATERIAL CHANGE SHALL BE LOCATED UNDER THE CENTERLINE OF DOOR WHERE OCCURS, TYP.
9. ALL EXTERIOR DOORS SHALL BE OPERABLE FROM THE INTERIOR WITHOUT THE USE OF A KEY OR ANY SPECIAL KNOWLEDGE OR EFFORT. DEAD BOLTS ARE ONLY PERMITTED WHEN OPERABLE WITH A SINGLE EFFORT LEVER TYPE HARDWARE.
10. HAND ACTIVATED DOOR OPENING HARDWARE SHALL BE MOUNTED 34"-44" A.F.F.
11. ALL DOORS SHALL BE LOCKABLE FROM THE INTERIOR SIDE
12. PER SECTION 1008.1.10 IN THE CBC 2022, DOOR SERVING ROOMS OR SPACES WITH AN OCCUPANT LOAD OF 50 OR MORE ARE REQUIRED TO HAVE PANIC HARDWARE OR FIRE EXIT HARDWARE.
13. PER CBC 2022 11B-404.2.5, THRESHOLDS SHALL BE 1/2" HIGH MAX., SEE DETAIL 1/AD-6.1 17/AD-6.0
14. THE BOTTOM 10" OF ALL DOORS EXTENDING THE FULL WIDTH SHALL HAVE A SMOOTH UNINTERRUPTED SURFACE TO ALLOW THE DOOR TO BE OPENED BY A WHEELCHAIR FOOTREST WITHOUT CREATING A TRAP OR HAZARDOUS CONDITION. CBC 2022 11B-404.2.10
15. MAXIMUM EFFORT TO OPERATE ALL DOORS SHALL NOT EXCEED 5 LBS FOR BOTH EXTERIOR AND INTERIOR DOORS. FIRE DOORS SHALL NOT EXCEED 15 LBS. CBC 2022 11B-404.2.9
16. REFER TO SPECIFICATION SECTION 08 71 00(VERIFY) FOR DOOR HARDWARE INFORMATION

ABBREVIATIONS

ALUM	ALUMINUM
AN	ANODOZIED
HM	HOLLOW METAL
HC	HOLLOW CORE
GALV.	GALVANIZED
STL	STEEL
PSG	PAINT: SEMI-GLOSS

GLAZING NOTES

GLAZING TYPES

1. TYPE GL-1: SINGLE VISION GLAZING
2. TYPE GL-2: SEALED INSULATED GLASS UNIT
T. TEMPERED GLAZING

GENERAL GLAZING NOTES

1. VERIFY ALL DIMENSIONS AND ROUGH OPENINGS IN FIELD PRIOR TO FABRICATION.
2. ALL EXTERIOR GLAZING TO RECEIVE TYPE 2 GLAZING, U.N.O.
3. GLAZING TO BE TEMEPERED, T, SHALL INCLUDE:
   - ALL GLAZING IN DOORS
   - ALL DOOR SIDELIGHTS WITHIN 24" OF DOOR FRAME
   - ALL DOOR TRANSOMS
   - ALL WINDOW GLAZING WITHIN A DISTANCE OF 36" HORIZONTALLY FROM A WALKING PATH AND UP TO 60" FROM GRADE
   - ALL GLAZING WITHIN THE SWING OF A DOOR
4. ALL INTERIOR GLAZING TO RECEIVE TYPE 1 GLAZING, U.N.O.

REFER TO SPECIFICATION SECTION **08 80 00** FOR ADDITIONAL INFORMATION.

MECHANIZED ROLLER SHADES

MOUNT TRANSIT ADMINISTRATION FACILITY: INCREMENT 3: 100% CD

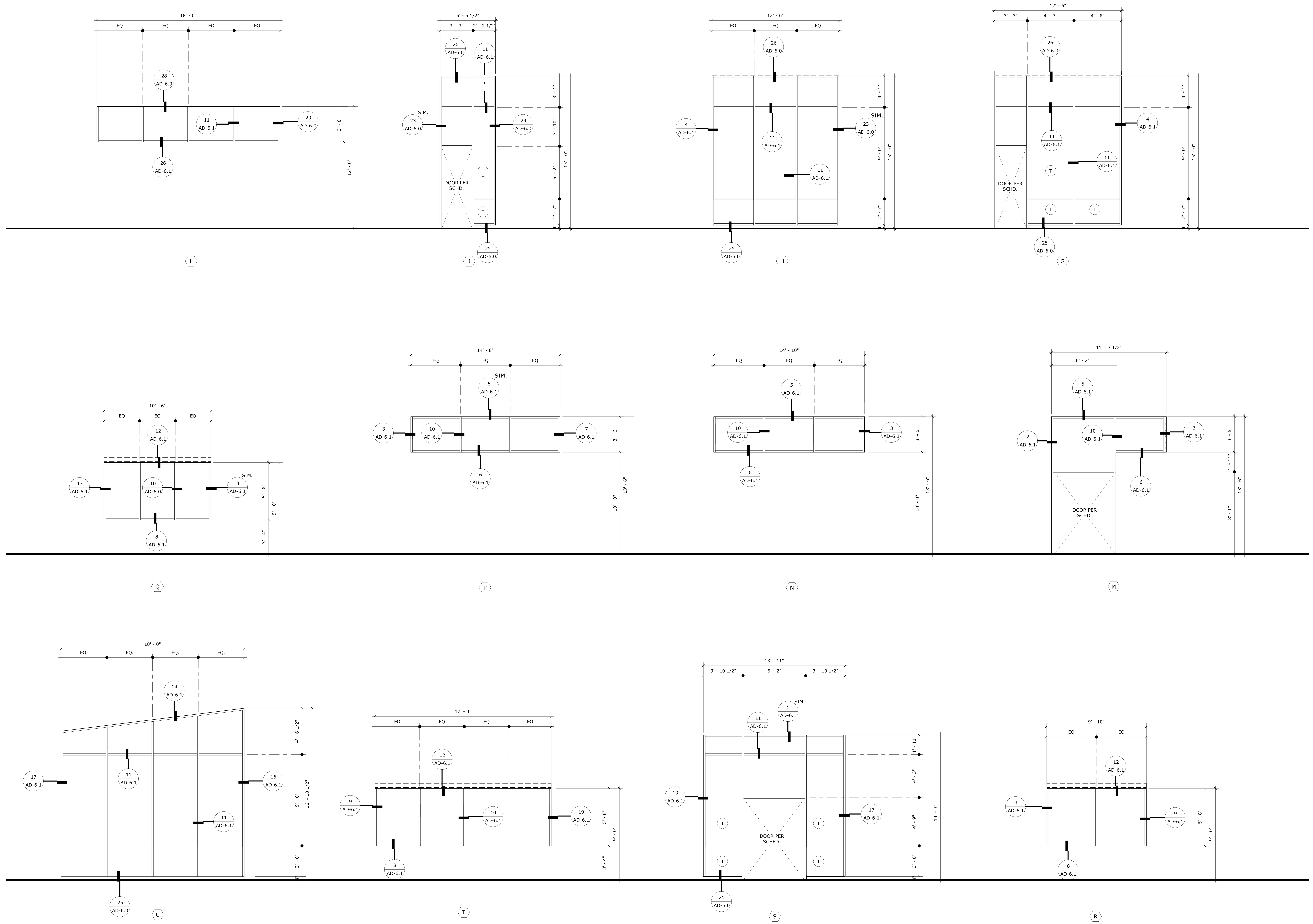

WINDOW SCHEDULE
SCALE: 1/4" = 1'-0"
3

STAMPS

AGENCY APPROVAL

RUHNAU CLARKE ARCHITECTS

CONSULTANT BRANDING

GENERAL NOTES

1. SEE SHEET AD-6.0 FOR HOLLOW METAL FRAME DETAILS
2. SET DOORS ADJACENT TO WALLS A MIN. OF 4" AWAY FROM WALL U.N.O.
3. ALL GLAZING IN DOORS, AND WINDOWS BELOW 8'-0" A.F.F., ARE TEMPERED OR AS REQUIRED BY SECTION 2406 OF THE 2022 CBC
4. PROVIDE DOOR STOPS AT ALL INTERIOR DOORS. PROVIDE BACKING PLATE PER DETAIL 5/S0-2.8
5. ALL EXTERIOR DOORS ARE TO SWING OUT AND OPEN TO A MIN. OF 110 DEGREES FROM ITS CLOSED POSITION WHERE POSSIBLE, U.N.O.
   - EXCEPTION: WHERE TACTILE SIGNAGE IS LOCATED ON HINGE SIDE OF DOOR, DOORS TO HAVE A 90 DEGREE SWING LIMIT
6. ALL EXTERIOR DOORS SHALL HAVE A POLYSTYRENE CORE (THERMAL RESISTANCE)
7. PROVIDE AIR SEALS/WEATHER STRIPPING AT ALL EXTERIOR DOORS TO CONDITIONED SPACES.
8. ALL FLOOR MATERIAL CHANGE SHALL BE LOCATED UNDER THE CENTERLINE OF DOOR WHERE OCCURS, TYP.
9. ALL EXTERIOR DOORS SHALL BE OPERABLE FROM THE INTERIOR WITHOUT THE USE OF A KEY OR ANY SPECIAL KNOWLEDGE OR EFFORT. DEAD BOLTS ARE ONLY PERMITTED WHEN OPERABLE WITH A SINGLE EFFORT LEVER TYPE HARDWARE.
10. HAND ACTIVATED DOOR OPENING HARDWARE SHALL BE MOUNTED 34"-44" A.F.F.
11. ALL DOORS SHALL BE LOCKABLE FROM THE INTERIOR SIDE
12. PER SECTION 1008.1.10 IN THE CBC 2022, DOOR SERVING ROOMS OR SPACES WITH AN OCCUPANT LOAD OF 50 OR MORE ARE REQUIRED TO HAVE PANIC HARDWARE OR FIRE EXIT HARDWARE.
13. PER CBC 2022 11B-404.2.5, THRESHOLDS SHALL BE 1/2" HIGH MAX., SEE DETAIL 1/AD-6.1 17/AD-6.0
14. THE BOTTOM 10" OF ALL DOORS EXTENDING THE FULL WIDTH SHALL HAVE A SMOOTH UNINTERRUPTED SURFACE TO ALLOW THE DOOR TO BE OPENED BY A WHEELCHAIR FOOTREST WITHOUT CREATING A TRAP OR HAZARDOUS CONDITION. CBC 2022 11B-404.2.10
15. MAXIMUM EFFORT TO OPERATE ALL DOORS SHALL NOT EXCEED 5 LBS FOR BOTH EXTERIOR AND INTERIOR DOORS. FIRE DOORS SHALL NOT EXCEED 15 LBS. CBC 2022 11B-404.2.9
16. REFER TO SPECIFICATION SECTION 08 71 00(VERIFY) FOR DOOR HARDWARE INFORMATION

ABBREVIATIONS

ALUM	ALUMINUM
AN	ANODOZIED
HM	HOLLOW METAL
HC	HOLLOW CORE
GALV.	GALVANIZED
STL	STEEL
PSG	PAINT: SEMI-GLOSS

GLAZING NOTES

GLAZING TYPES

- (1) TYPE GL-1: SINGLE VISION GLAZING
- (2) TYPE GL-2: SEALED INSULATED GLASS UNIT
- (T) TEMPERED GLAZING

GENERAL GLAZING NOTES

1. VERIFY ALL DIMENSIONS AND ROUGH OPENINGS IN FIELD PRIOR TO FABRICATION.
2. ALL EXTERIOR GLAZING TO RECEIVE TYPE (2) GLAZING, U.N.O.
3. GLAZING TO BE TEMEPERED, (T), SHALL INCLUDE:
   - ALL GLAZING IN DOORS
   - ALL DOOR SIDELIGHTS WITHIN 24" OF DOOR FRAME
   - ALL DOOR TRANSOMS
   - ALL WINDOW GLAZING WITHIN A DISTANCE OF 36" HORIZONTALLY FROM A WALKING PATH AND UP TO 60" FROM GRADE
   - ALL GLAZING WITHIN THE SWING OF A DOOR
4. ALL INTERIOR GLAZING TO RECEIVE TYPE (1) GLAZING, U.N.O.

REFER TO SPECIFICATION SECTION **08 80 00** FOR ADDITIONAL INFORMATION.

MECHANIZED ROLLER SHADES

MOUNT TRANSIT ADMINISTRATION FACILITY: INCREMENT 3: 100% CD

PROJECT No. :50801
4/18/2024 4:02:56 PM

DRAWN BY: CHECKED BY:
ISSUE No.______ DATE________ DESCRIPTION____________
ISSUE No.______ DATE________ DESCRIPTION____________
ISSUE No.______ DATE________ DESCRIPTION____________
ISSUE No.______ DATE________ DESCRIPTION____________
REVISION No.______ DATE________ DESCRIPTION____________
REVISION No.______ DATE________ DESCRIPTION____________
REVISION No.______ DATE________ DESCRIPTION____________
REVISION No.______ DATE________ DESCRIPTION____________

RUHNAUCLARKE.COM
3775 TENTH STREET, RIVERSIDE CALIFORNIA 92501 (951) 684 4664 / 5751 PALMER WAY, SUITE C, CARLSBAD CALIFORNIA 92010 (760) 438 5899

MOUNT TRANSIT ADMINISTRATION FACILITY
INCREMENT 3
170 BUSINESS CENTER DR. BIG BEAR LAKE, CA
BIG BEAR LAKE

WINDOW SCHEDULE **A2-8.2**

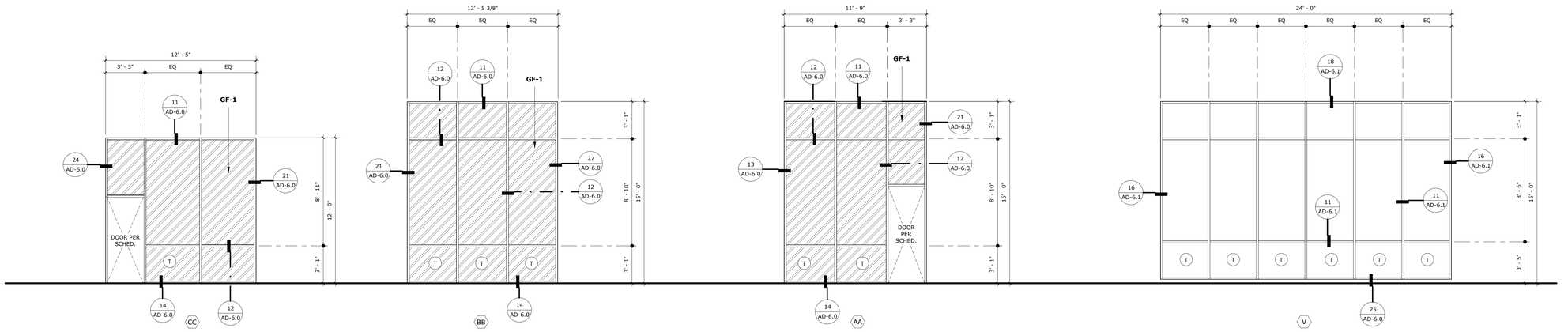

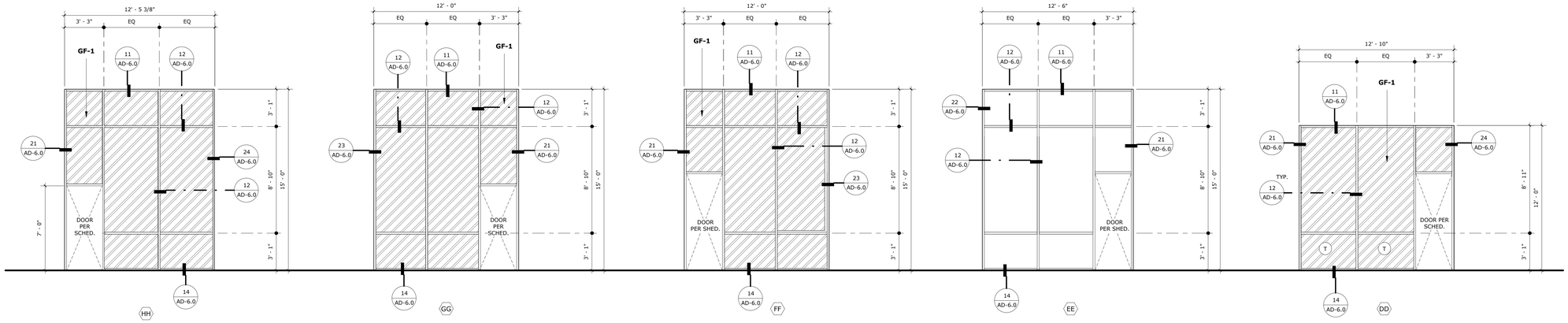

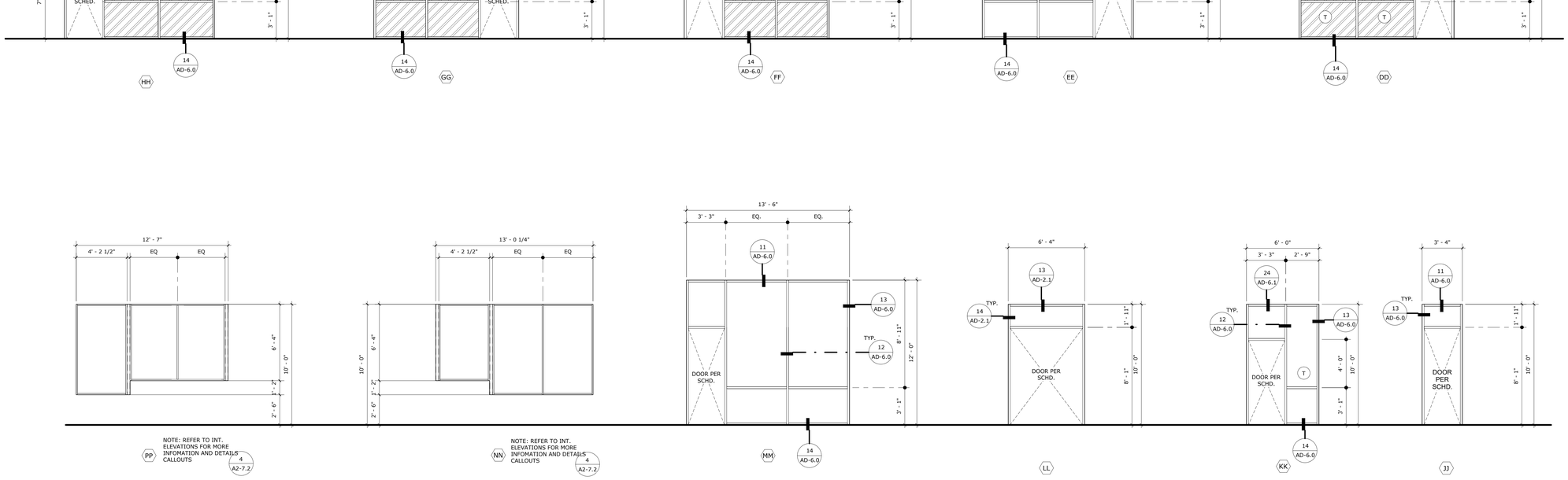

GENERAL NOTES

1. SEE SHEET AD-6.0 FOR HOLLOW METAL FRAME DETAILS
2. SET DOORS ADJACENT TO WALLS A MIN. OF 4" AWAY FROM WALL U.N.O.
3. ALL GLAZING IN DOORS, AND WINDOWS BELOW 8'-0" A.F.F., ARE TEMPERED OR AS REQUIRED BY SECTION 2406 OF THE 2022 CBC
4. PROVIDE DOOR STOPS AT ALL INTERIOR DOORS. PROVIDE BACKING PLATE PER DETAIL 5 S0-2.8
5. ALL EXTERIOR DOORS ARE TO SWING OUT AND OPEN TO A MIN. OF 110 DEGREES FROM ITS CLOSED POSITION WHERE POSSIBLE, U.N.O.
   - EXCEPTION: WHERE TACTILE SIGNAGE IS LOCATED ON HINGE SIDE OF DOOR, DOORS TO HAVE A 90 DEGREE SWING LIMIT
6. ALL EXTERIOR DOORS SHALL HAVE A POLYSTYRENE CORE (THERMAL RESISTANCE)
7. PROVIDE AIR SEALS/WEATHER STRIPPING AT ALL EXTERIOR DOORS TO CONDITIONED SPACES.
8. ALL FLOOR MATERIAL CHANGE SHALL BE LOCATED UNDER THE CENTERLINE OF DOOR WHERE OCCURS, TYP.
9. ALL EXTERIOR DOORS SHALL BE OPERABLE FROM THE INTERIOR WITHOUT THE USE OF A KEY OR ANY SPECIAL KNOWLEDGE OR EFFORT. DEAD BOLTS ARE ONLY PERMITTED WHEN OPERABLE WITH A SINGLE EFFORT LEVER TYPE HARDWARE.
10. HAND ACTIVATED DOOR OPENING HARDWARE SHALL BE MOUNTED 34"-44" A.F.F.
11. ALL DOORS SHALL BE LOCKABLE FROM THE INTERIOR SIDE
12. PER SECTION 1008.1.10 IN THE CBC 2022, DOOR SERVING ROOMS OR SPACES WITH AN OCCUPANT LOAD OF 50 OR MORE ARE REQUIRED TO HAVE PANIC HARDWARE OR FIRE EXIT HARDWARE.
13. PER CBC 2022 11B-404.2.5, THRESHOLDS SHALL BE 1/2" HIGH MAX., SEE DETAIL 1 AD-6.1/ 17 AD-6.0
14. THE BOTTOM 10" OF ALL DOORS EXTENDING THE FULL WIDTH SHALL HAVE A SMOOTH UNINTERRUPTED SURFACE TO ALLOW THE DOOR TO BE OPENED BY A WHEELCHAIR FOOTREST WITHOUT CREATING A TRAP OR HAZARDOUS CONDITION. CBC 2022 11B-404.2.10
15. MAXIMUM EFFORT TO OPERATE ALL DOORS SHALL NOT EXCEED 5 LBS FOR BOTH EXTERIOR AND INTERIOR DOORS. FIRE DOORS SHALL NOT EXCEED 15 LBS. CBC 2022 11B-404.2.9
16. REFER TO SPECIFICATION SECTION 08 71 00(VERIFY) FOR DOOR HARDWARE INFORMATION

ABBREVIATIONS

ALUM	ALUMINUM
AN	ANODOZIED
HM	HOLLOW METAL
HC	HOLLOW CORE
GALV.	GALVANIZED
STL	STEEL
PSG	PAINT: SEMI-GLOSS

GLAZING NOTES

GLAZING TYPES

1 TYPE GL-1: SINGLE VISION GLAZING
2 TYPE GL-2: SEALED INSULATED GLASS UNIT
T TEMPERED GLAZING

GENERAL GLAZING NOTES

1. VERIFY ALL DIMENSIONS AND ROUGH OPENINGS IN FIELD PRIOR TO FABRICATION.
2. ALL EXTERIOR GLAZING TO RECEIVE TYPE 2 GLAZING, U.N.O.
3. GLAZING TO BE TEMEPERED, T, SHALL INCLUDE:
   - ALL GLAZING IN DOORS
   - ALL DOOR SIDELIGHTS WITHIN 24" OF DOOR FRAME
   - ALL DOOR TRANSOMS
   - ALL WINDOW GLAZING WITHIN A DISTANCE OF 36" HORIZONTALLY FROM A WALKING PATH AND UP TO 60" FROM GRADE
   - ALL GLAZING WITHIN THE SWING OF A DOOR
4. ALL INTERIOR GLAZING TO RECEIVE TYPE 1 GLAZING, U.N.O.

REFER TO SPECIFICATION SECTION **08 80 00** FOR ADDITIONAL INFORMATION.

MECHANIZED ROLLER SHADES

GRAPHIC FILM

GF-1

NOTE:
REFER TO COLORS, MATERIALS AND FINISHES LEGEND FOR ADDITIONAL INFORMATION ID-1.0

INTERIOR ELEVATIONS LEGEND

LEGEND - WINDOW SCHEDULE FINISHES

WINDOW SCHEDULE

STAMPS

AGENCY APPROVAL

CONSULTANT BRANDING

RUHNAU CLARKE ARCHITECTS

MOUNT TRANSIT ADMINISTRATION FACILITY: INCREMENT 3: 100% CD

PROJECT No. :50801
4/18/2024 4:02:58 PM

DRAWN BY: CHECKED BY:

ISSUE No.____ DATE_____ DESCRIPTION_____
ISSUE No.____ DATE_____ DESCRIPTION_____
ISSUE No.____ DATE_____ DESCRIPTION_____
ISSUE No.____ DATE_____ DESCRIPTION_____

REVISION No.____ DATE_____ DESCRIPTION_____
REVISION No.____ DATE_____ DESCRIPTION_____
REVISION No.____ DATE_____ DESCRIPTION_____
REVISION No.____ DATE_____ DESCRIPTION_____

RUHNAUCLARKE.COM

3775 TENTH STREET, RIVERSIDE CALIFORNIA 92501(951) 684 4664 / 5751 PALMER WAY, SUITE C, CARLSBAD CALIFORNIA 92010(760) 438 5899

SCALE:
1/16" = 1'-0"
1/4" = 1'-0"

10

MOUNT TRANSIT ADMINISTRATION FACILITY
INCREMENT 3
170 BUSINESS CENTER DR. BIG BEAR LAKE, CA
BIG BEAR LAKE

WINDOW SCHEDULE

A2-8.3

50801

ROOM FINISH SCHEDULE

ROOM NO.	ROOM NAME	FLOOR		BASE		ELEVATION 1			ELEVATION 2			ELEVATION 3			ELEVATION 4			CEILING			REMARKS	ROOM NO.
		MATERIAL	COLOR	MATERIAL	COLOR	MATERIAL	FINISH	COLOR	MATERIAL	FINISH	COLOR	MATERIAL	FINISH	COLOR	MATERIAL	FINISH	COLOR	MATERIAL	FINISH	COLOR		
200	GENERAL MANAGERS OFFICE	CPT	CPT-1,4	RB	RB-1	-	-	-	GF	FF	GF-1	VWC	FF	VWC-2	-	-	-	ACT	FF	ACT-1		200
201	HUMAN RESOURCES	CPT	CPT-1	RB	RB-1	VWC	FF	VWC-2	GWB	PES	P- 1	GF	FF	GF-1	-	-	-	ACT	FF	ACT-1		201
202	ADMINISTRATIVE ASSISTANT	CPT	CPT-1	RB	RB-1	GWB	PES	P-1	GF	FF	GF-1	GF	FF	GF-1	VWC	FF	VWC-2	ACT	FF	ACT-1		202
203	OFFICE	CPT	CPT-1	RB	RB-1	GF	FF	GF-1	GWB	PES	P-1	VWC	FF	VWC-2	-	-	-	ACT	FF	ACT-1		203
204	OFFICE	CPT	CPT-1	RB	RB-1	GF	FF	GF-1	GWB	PES	P-1	VWC	FF	VWC-2	GWB	PES	P-1	ACT	FF	ACT-1		204
205	BREAK ROOM	LVT	LVT-4	RB/BM	RB-1/BM-1	VWC	FF	VWC-3	GWB/T	PSG/FF	P-3,6/T-4	GWB/VWC/PL	PSG/FF/FF	P-2,5/VWC-1/PL-1	GWB	PSG	P-1	AWC/ACP/GWB	FF/FF/PES	AWC-1/ACP-5,6,7,8/P-2,3	EXPOSED STRUCTURE TO BE PAINTED IN P-9 (FLAT FINISH)	205
206	OPEN OFFICE	CPT	CPT-2,3	RB	RB-1	GWB	PES	P-1	GWB	PES	P-1	GWB	PES	P-1	GWB	PES	P-1	AWC/ACP	FF/FF	AWC-1/ACP-1,2,3	EXPOSED STRUCTURE TO BE PAINTED IN P-9 (FLAT FINISH)	206
207	FINANCE	CPT	CPT-1	RB	RB-1	GF	FF	GF-1	GWB	PES	P-1	VWC	FF	VWC-2	GWB	PES	P-1	ACT	FF	ACT-1		207
208	ACCOUNTANTS OFFICE	CPT	CPT-1	RB	RB-1	GF	FF	GF-1	GWB	PES	P-1	VWC	FF	VWC-2	GWB	PES	P-1	ACT	FF	ACT-1		208
209	COMMUNITY OUTREACH	CPT	CPT-1	RB	RB-1	GF	FF	GF-1	GWB	PES	P-1	VWC	FF	VWC-2	GWB	PES	P-1	ACT	FF	ACT-1		209
210	LOCKER ROOM	T	T-1	T	T-5	GWB	PSG	P-1,2,3,4,6,7	GWB	PSG	P-1,2,3,4,6,7	GWB	PSG	P-3,6	T	FF	T-3	GWB	PSG	P-1	CUSTOM PAINTED MURAL ON ELEVATIONS 1 & 2: CUSTOM GRAPHIC TO BE PROVIDED BY ARCHITECT UPON REQUEST	210
211	WORK ROOM	LVT	LVT-4	RB	RB-1	GWB/TWP	PSG/FF	P-5/TWP-1	GWB	PSG	P-6	GWB/TWP	PSG/FF	P-5/TWP-1	GWB/TWP	PSG/FF	P-5/TWP-1	ACT	FF	ACT-1		211
212	RESTROOM	T	T-1	TB	TB-1	T	FF	T-2	T	FF	T-1	T	FF	T-1	T	FF	T-1	GWWB	PSG	P-1		212
213	RESTROOM	T	T-1	TB	TB-1	T	FF	T-2	T	FF	T-1	T	FF	T-1	T	FF	T-1	GWWB	PSG	P-1		213
214	RESTROOM	T	T-1	TB	TB-1	T	FF	T-2	T	FF	T-1	T	FF	T-1	T	FF	T-1	GWWB	PSG	P-1		214
215	VESTIBULE	LVT	LVT-1,3	RB	RB-1	GWB	PES	P-1	-	-	-	GWB	PES	P-1,6	GWB	PES	P-1	ACT/AWC/GWB	FF/FF/PES	ACT-1/AWC-1/P-1	SEE FINISHES PLAN ON ID-1.0 FOR ACCENT PAINT LOCATIONS	215
216	RESTROOM	T	T-1	TB	TB-1	T	FF	T-1	T	FF	T-1	T	FF	T-2	T	FF	T-1	GWWB	PSG	P-1		216
217	RECORDS	LVT	LVT-1	RB	RB-1	GWB	PSG	P-2	GWB	PSG	P-5	GWB	PSG	P-2	GWB	PSG	P-2	ACT	FF	ACT-1		217
218	RESTROOM	T	T-1	TB	TB-1	T	FF	T-2	T	FF	T-1	T	FF	T-1	T	FF	T-1	GWWB	PSG	P-1		218
219	OFFICE	CPT	CPT-1	RB	RB-1	GWB	PES	P-1	VWC	FF	VWC-2	GWB	PES	P-1	GF	FF	GF-1	ACT	FF	ACT-1		219
220	OFFICE	CPT	CPT-1	RB	RB-1	-	-	-	VWC	FF	VWC-2	GWB	PES	P-1	GF	FF	GF-1	ACT	FF	ACT-1		220
221	CLOSED SESSION CONFERENCE ROOM	CPT	CPT-1	RB	RB-1	-	-	-	GWB	PES	P-2	GWB	PES	P-2	VWC	FF	VWC-1	AWC/ACP	FF/FF	AWC-1/ACP-7,8	EXPOSED STRUCTURE & MECH TO BE PAINTED IN P-9 (FLAT FINISH)	221
222	BOARD ROOM	LVT	LVT-1,2	RB/SV	RB-1/SV-2	GWB	PES	P-1	GWB	PES	P-1	GWB/AWP	PES/FF	P-1,6/AWP-1,2,3,4	GWB/SV/T	PES/FF/FF	P-3/SV-1/T-4	AWC/ACP/GWB	FF/FF/PES	AWC-1/ACP-1,3,7,8/P-3	EXPOSED STRUCTURE TO BE PAINTED IN P-9 (FLAT FINISH)	222
223	CHAIR STORAGE	LVT	LVT-1	RB	RB-1	GWB	PSG	P-1	GWB	PSG	P-1	GWB	PSG	P-1	GWB	PSG	P-1	GWB	PSG	P-1		223
224	RESTROOM	T	T-1	TB	TB-1	T	FF	T-2	T	FF	T-1	T	FF	T-1	T	FF	T-1	GWWB	PSG	P-1		224
225	STORAGE	LVT	LVT-1	RB	RB-1	GWB	PSG	P-1	GWB	PSG	P-1	GWB	PSG	P-1	GWB	PSG	P-1	GWB	PSG	P-1		225
226	RESTROOM	T	T-1	TB	TB-1	T	FF	T-2	T	FF	T-1	T	FF	T-1	T	FF	T-1	GWWB	PSG	P-1		226
227	DATA	LVT	LVT-3	RB	RB-1	GWB	PSG	P-1	GWB	PSG	P-1	GWB	PSG	P-1	GWB	PSG	P-1	GWB	PSG	P-1		227
228	LOBBY	LVT	LVT-3	RB/TB	RB-1/TB-1	GWB/T	PSG/FF	P-1,6/T-2	GWB	PSG	P-1,5	GWB/WWP	PSG/FF	P-1,2/WWP-1	GWB	PSG/FF	P-1,2,5	GWB/AWC/ACP	PES/FF/FF	P-5/AWC-1/ACP-8,9	EXPOSED STRUCTURE TO BE PAINTED IN P-9 (FLAT FINISH)	228
229	VAULT/ COUNT	LVT	LVT-1	RB	RB-1	GWB	PSG	P-1	GWB	PSG	P-1	GWB	PSG	P-1	GWB	PSG	P-1	ACT	FF	ACT-1		229
230	ELECTRICAL	CONC	CONC-1	RB	RB-1	GWB	PSG	P-1	GWB	PSG	P-1	GWB	PSG	P-1	GWB	PSG	P-1	-	-	-		230
231	OPERATION MANAGER	LVT	LVT-1	RB	RB-1	GWB	PSG	P-2	GWB	PSG	P-2	GWB	PSG	P-6	GWB	PSG	P-2	ACT	FF	ACT-1		231
232	DISPATCH	LVT	LVT-1	RB	RB-1	GWB	PSG	P-3	GWB	PSG	P-6	GWB	PSG	P-3	GWB	PSG	P-3,6	ACT	FF	ACT-1		232
233	CUSTODIAL	T	T-1	T	T-5	GWB/FRP	PSG/FF	P-1/FRP-1	GWB/FRP	PSG/FF	P-1/FRP-1	GWB	PSG	P-1	GWB	PSG	P-1	-	-	-		233
234	CORRIDOR	LVT	LVT-1,3	RB	RB-1	GWB	PSG	P-6	GWB	PSG	P-1,3	GWB	PSG	P-1	GWB	PSG	P-1	AWC	FF	AWC-1	EXPOSED STRUCTURE TO BE PAINTED IN P-9 (FLAT FINISH); SEE FINISHES PLAN ON ID-1.0 FOR ACCENT PAINT LOCATIONS	234
235	CORRIDOR	LVT	LVT-1,3	RB	RB-1	GWB	PSG	P-1	GWB	PSG	P-1	GWB	PSG	P-1	GWB	PSG	P-6	ACT/GWB	FF/PES	ACT-1/P-1	SEE FINISHES PLAN ON ID-1.0 FOR ACCENT PAINT LOCATIONS	235
236	CORRIDOR	LVT	LVT-1,3	RB	RB-1	GWB	PSG	P-1	GWB	PSG	P-1,3	GWB	PSG	P-1	GWB	PSG	P-1	ACT/GWB	FF/PES	ACT-1/P-1	SEE FINISHES PLAN ON ID-1.0 FOR ACCENT PAINT LOCATIONS	236
237	RECEPTION DESK	LVT	LVT-3	RB	RB-1	GWB/WWP	PES/FF	P-1/WWP-1	GWB	PES	P-1	GWB/WWP	PES/FF	P-1/WWP-1	WWP	FF	WWP-1	GWB	PES	P-1		237

ITEM	MATERIAL	LOCATION
03 35 11-	CONCRETE FLOOR FINISHES	
CONC-1	SEALED NATURAL CONCRETE	TYPICAL FLOOR @ FACILITIES/DATA/STORAGE
04 20 00-	UNIT MASONRY	
CMU-1	ANGELES BLOCK, PRECISION BLOCK, 'NATURAL GRAY' W/ #446 SPEC MIX MORTAR W/ CORRESPONDING CAP	TYPICAL/ BREAK ROOM ISLAND
04 73 00-	MANUFACTURED STONE MASONRY	
SV-1	EL DORADO,HILLSTONE, 'LUCERA', HEIGHT: 1"-11.5", LENGTH: 3"-16", VARYING AVERAGE THICKNESS 1"-3.25" W/ CORRESPONDING CORNER PIECES AND PRE-CAST CAP STONE (WHERE OCCURS)	ACCENT @ EXTERIOR/ ACCENT @ BOARD ROOM INTERIOR
04 73 00-	MANUFACTURED STONE MASONRY (ACCESSORY BASE CLADDING)	
SV-2	VALORI PRECAST, PART# VP-BC14ST, L 30'x W 2.5"x H 3", COLOR/FINISH: GRIS OLD WORLD	BASE CLADDING @ SV-1 WALL AT INTERIOR BOARD ROOM
06 41 00-	ARCHITECTURAL WOOD CASEWORK	
FWV-1	SURFACING SOLUTION, TAMBOUR, PROFILE #676 WOOD SPECIES 'RED OAK' W/ CLEAR SEALER, 0.590551" DEPTH, VERTICAL ORIENTATION	ACCENT @ RECEPTION DESK FACADE
PL-1	FORMICA, 'PLANKED URBAN OAK #9312-58 (MATTE FINISH)	TYPICAL CASEWORK/ TV MOTION CUT-OUT & ISLAND @ BREAK ROOM
PL-2	WILSONART, STANDARD HPL FINISH, 'NIGHTFALL' #5023-19 (LENO WEAVE FINISH AEON)	CASEWORK @ BREAK ROOM/ BOARD ROOM
06 41 00-	ARCHITECTURAL WOOD CASEWORK (ACCESSORY)	
BM-1	FRY REGLET, 4" REVEAL BASE #MWRB75400, OVERALL DIM: 4 7/8"H W/ 3/4" STRAIGHT UNIFORM BASE, 'CLEAR ANODIZED'	BASE @ RECEPTION DESK CASEWORK
06 42 00-	WOOD PANELING	
WWP-1	LBI BOYD DESIGN RESOURCE, STACKED WOOD WALLS, ACOUSTICAL FLUTED #2036, SPECIES: 'WHITE OAK', 11.75"Wx96"L, THICKNESS: 0.48", COVERED AREA PER UNIT: 7.85Q/FT., FINISH: U.V. VARNISH W/ ANTIMIKROBIAL ADDITIVE W/ COORDINATING CORNER TRIM	ACCENT WALL @ RECEPTION DESK & LOBBY
06 83 16-	FIBERGLASS REINFORCED PANELING	
FRP-1	PANOLAM, CLASS A, SMOOTH, CLASSIC COLOR 'GRAY'	TYPE AS NOTED IN DRAWINGS
07 41 13-	METAL ROOF PANELS	
MRP-1	METAL SALES, MAGNA-LOC, 24 GAUGE, 16" COVERAGE FLAT PANEL, FINISH: SLATE GREY W38	TYPICAL ROOF PANEL
07 42 13-	METAL WALL PANELS	
MWP-1	BESTBUYMETALS, 7/8" CORRUGATED PANEL, 34.67" WALL COVERAGE, 24 GAUGE, REFELCTIVITY 25-70%, 'SLATE GREY' #W38 (INSTALLED VERTICALLY)	TYPICAL EXTERIOR WALL
MWP-2	WESTERN STATES METAL ROOFING, FLAT SHEETS A0606/A588, 60"X96, 3/8" THICK, COR-TEN PANELS	ACCENT SIGNAGE PANEL @ EXTERIOR
07 46 46-	FIBER-CEMENT SIDING	
FCP-1	NICHIHA, VINTAGEWOOD, WOOD SERIES AWP 1818,' CEDAR', BUILT-IN RAINSCREEN,34.8 LBS/PANEL, 5/8" THICKNESS, PANEL ORIENTATION: HORIZONTAL	ACCENT EXTERIOR WALL PANELS
07 62 00-	SHEET METAL FLASHING AND TRIM	
SMF-1	BESTBUYMETALS, TRIM PANEL FINISH TO MATCH FCP-1	METAL FASCIA
SMF-2	BESTBUYMETALS, TRIM PANEL FINISH TO MATCH ALUM-1	BREAK METAL @ STOREFRONTS
08 32 23-	SLIDING AND FOLDING GLAZED WALLS AND DOORS	
ALUM-2	ARCADIA, OASIS 10000 BIFOLDING GLASS DOOR, ANODIZED ALUMINUM 'BLACK AB-8' #85	WHERE NOTED IN PLANS
08 43 13-	ALUMINUM-FRAMED STOREFRONTS	
ALUM-1	ARCADIA, 'BLACK' #AB-8	TYPICAL
08 80 00-	GLAZING (FILM)	
GF-1	3M FASARA, GRADATION, CLOUD NARROW WHITE (SH2FGCN) 50" WIDE ROLL	INTERIOR OFFICE GLAZING; WHERE NOTED ON PLANS
09 30 00-	TILING	
T-1	AMERICAN OLEAN, MERIT, RECTANGLE 12"x24", 'COOL BEIGE' #ME07 FINISH: MATTE (STAGGERED INSTALL/ VERTICAL LAYOUT ON WALL); STACKED INSTALL AT FLOORS)	TYPICAL FLOOR & WALL @ RESTROOMS/ FLOOR @ CUSTODIAL & LOCKER R.
T-2	TILEBAR, NATURE MICRO 'RAJA BLEND' PEBBLE MOSIAC TILE, 12"X12" COLOR: MULTICOLOR	ACCENT WALL @ RESTROOMS & DRINKING FOUNTAIN
T-3	DALTILE, COLORBODY PORCELAIN, EMERSON WOOD, 'BUTTER PECAN' #E001 SHAPE: 3D CUBE (HEX) 12"X12" (MATTE FINISH), QUARTER TURN INSTALL	ACCENT WALL TILE @ LOCKER ROOM
T-4	TILEBAR, EDEN 2.0, BLUE RIMMED PENNY ROUND POLISHED PORCELAIN MOSAIC 'ROYAL'	BACKSPLASH @ BREAK & BOARD ROOM CASEWORK
T-5	AMERICAN OLEAN, MERIT, 'COOL BEIGE' #ME07 FINISH: MATTE, TILE BASE, BULLNOSE #P43C9, 3"X12"	TILE BASE @ LOCKER ROOM/ CUSTODIAL
09 30 00-	TILING (ACCESSORY)	
TB-1	SCHLUTER, DILEX-AHX PROFILE IN 'ANODIZED ALUMINUM'	BASE @ RESTROOMS & DRINKING FOUNTAIN

ITEM	MATERIAL	LOCATION
09 30 00-	TILING (GROUT)	
G-1	CUSTOM BUILDING PRODUCTS, 'URBAN PUTTY' #172	GROUT @ RESTROOM TILE
G-2	ARDEX GROUT COLORS, 'AZURE BLUE' #27	GROUT @ BREAK ROOM/ BOARD ROOM BACKSPLASH
09 51 00-	ACOUSTICAL CEILINGS	
ACT-1	ARMSTRONG, ULTIMA HIGH NRC, SQUARE LAY-IN 15/16" #1945-WH, WHITE, 24"x48"x7/8" WITH 15/16" PRELUDE SUSPENSION SYSTEM 'WHITE', NRC: 0.80	TYPICAL
09 54 23-	LINEAR METAL CEILINGS	
AWC-1	RULON INTERNATIONAL, ENDURE #800 SERIES: PLANKS WILL BE 3-1/4" W/O THE 3/4" SPACER. FINISH: #227 ENGLISH WALNUT. CONTRACTOR TO PROVIDE A 1-1/2" BLACK ACOUSTICAL INSULATION TO ACHIEVE NRC 0.70	ACCENT INTERIOR CEILING @ RECEPTION,OPEN OFFICE, BOARD ROOM, BREAK ROOM,HALLWAYS
AWC-2	RULON INTERNATIONAL, ENDURE #900 SERIES: PLANKS WILL BE 3-1/4" W/ A 3/4" BLACK INTEGRATED SPACER (REVEAL), PLANK FINISH: #227 ENGLISH WALNUT	CEILINGS @ EXTERIOR SOFFIT
09 65 00-	RESILIENT FLOORING	
LVT-1	SHAW CONTRACT, RESPITE #4090V, 'PATH' #90250 7.2"x48.03" (5MM THICKNESS)	TYPICAL FLOOR/ ACCENT @ BOARD ROOM
LVT-2	SHAW CONTRACT, RESPITE #4090V, 'REDWOOD' #90840 7.2"x48.03" (5MM THICKNESS)	TYPICAL FLOOR @ BOARD ROOM
LVT-3	SHAW CONTRACT, RESPITE #4090V, 'LODGE' #90270 7.2"x48.03" (5MM THICKNESS)	TYPICAL FLOOR @ RECEPTION/LOBBY/FRONT OF HOUSE, ACCENT @ HALLWAYS
LVT-4	SHAW CONTRACT, CAST 5.0, #4099V, 'UNBOUND' #98114 24"X24" (5MM THICKNESS)	TYPICAL FLOOR @BREAK ROOM/WORK ROOM
09 65 00-	RESILIENT FLOORING (RUBBER BASE)	
RB-1	TARKETT, JOHNSONITE, 'EITHER ORE' #55	TYPICAL RUBBER BASE
09 68 13-	TILE CARPETING	
CPT-1	SHAW CONTRACT, RESPOND TILE #5T307, 'MOUNTAIN' #05761, 9"x36" (0.272" THICKENESS), STAGGER INSTALLATION	TYPICAL FLOOR @ OFFICES
CPT-2	SHAW CONTRACT, COLOR FORM TILE #5T112, 'IMPLY' #81485, 9"x36" (0.220" THICKNESS), ASHLAR INSTALLATION	TYPICAL FLOOR @ OPEN OFFICE AREA
CPT-3	SHAW CONTRACT, COLOR FORM TILE #5T112, 'SAND' #81155, 9"x36" (0.220" THICKNESS), ASHLAR INSTALLATION	TYPICAL FLOOR @ OPEN OFFICE AREA
CPT-4	SHAW CONTRACT, STEPPIN OUT, WELCOME II TILE #5T031, PORTABELLA #31761, 24"x24" (0.362" THICKNESS), QUARTER TURN INSTALLATION	TYPICAL WALK OFF
09 72 00-	WALL COVERINGS	
VWC-1	WOLF GORDON, COLLECTION: CONTRACT, SKU: SRR 5215, SERRA, 'COPPER' GOH #13727388, 52" 32OZ. PER LINEAR YARD	ACCENT WALL @ BREAK ROOM/ CONFERENCE ROOM
VWC-2	WOLF GORDON, COLLECTION: PENINSULA 'DENIM' GOH #33438211, 54" 20OZ. PER LINEAR YARD GORDON, COLLECTION: PENINSULA 'DENIM' GOH #33438211, 54" 20OZ. PER LINEAR YARD	ACCENT WALL @ PRIVATE OFFICES
VWC-3	WOLF GORDON, DIGITAL VINYL WALLCOVERING, GOH #33520016, TABBY EMBOSS #CDP 510', 54"/ 25 OZ. PER LINEAR YARD. 'WHITE' WITH CUSTOM GRAPHIC TO BE PROVIDED BY ARCHITECT UPON REQUEST	ACCENT WALL @ BREAK ROOM
09 84 30-	SOUND-ABSORBING WALL AND CEILING UNITS	
ACP-1	AUTEX ACOUSTICS, HORIZON CIRCLE,'PINNACLE' (1" THICKNESS) NRC:0.80, VARIED SIZES	ACCENT CEILING @ BOARD ROOM, OPEN OFFICE
ACP-2	AUTEX ACOUSTICS, HORIZON CIRCLE,'MURALLA' (1" THICKNESS) NRC:0.80, 60" DIA	ACCENT CEILING @ OPEN OFFICE
ACP-3	AUTEX ACOUSTICS, HORIZON CIRCLE,'PARTHENON' (1" THICKNESS) NRC:0.80, VARIED SIZES	ACCENT CEILING @ BOARD ROOM, OPEN OFFICE
ACP-4	NOT USED	NOT USED
ACP-5	AUTEX ACOUSTICS, HORIZON RECTANGLE,'PARTHENON' (1" THICKNESS) NRC:0.80, VARIED SIZES	ACCENT CEILING @ BREAK ROOM
ACP-6	AUTEX ACOUSTICS, HORIZON RECTANGLE,'OPERA' (1" THICKNESS) NRC:0.80, VARIED SIZES	ACCENT CEILING @ BREAK ROOM
AWP-1	AUTEX GLOBAL ACOUSTICS, CUBE PANEL,'PINNACLE' (1/2" THICKNESS) NRC:0.45, PRECISION CUT PANEL, VECTOR FILE W/ CUSTOM GRAPHIC TO BE PROVIDED BY ARCHITECT	ACCENT WALL @ BOARD ROOM
AWP-2	AUTEX GLOBAL ACOUSTICS, CUBE PANEL,'PARTHENON' (1/2" THICKNESS) NRC:0.45, PRECISION CUT PANEL, VECTOR FILE W/ CUSTOM GRAPHIC TO BE PROVIDED BY ARCHITECT	ACCENT WALL @ BOARD ROOM
AWP-3	AUTEX GLOBAL ACOUSTICS, CUBE PANEL,'MURALLA' (1/2" THICKNESS) NRC:0.45, PRECISION CUT PANEL, VECTOR FILE W/ CUSTOM GRAPHIC TO BE PROVIDED BY ARCHITECT	ACCENT WALL @ BOARD ROOM
AWP-4	AUTEX GLOBAL ACOUSTICS, CUBE PANEL,'OPERA' (1/2" THICKNESS) NRC:0.45, PRECISION CUT PANEL, VECTOR FILE W/ CUSTOM GRAPHIC TO BE PROVIDED BY ARCHITECT	ACCENT WALL @ BOARD ROOM

ITEM	MATERIAL	LOCATION
09 91 23-	INTERIOR PAINTING	
P-1	SHERWIN WILLIAMS, 'IVORY LACE' #SW7013	TYPICAL WALL COLOR/ GYP. CEILINGS/ LOCKER ROOM: CUSTOM MURAL
P-2	SHERWIN WILLIAMS, 'SILVER STRAND' #SW7057	TYPICAL @ CORRIDORS/ACCENT @ BREAK ROOM/ LOCKER ROOM: CUSTOM MURAL
P-3	SHERWIN WILLIAMS, 'URBAN JUNGLE' #SW9117	ACCENT @ OFFICES/DISPATCH/BREAK ROOM/ LOCKER ROOM: CUSTOM MURAL
P-4	SHERWIN WILLIAMS, 'URBAN PUTTY' #SW7532	ACCENT @ BOARD ROOM/ LOCKER ROOM: CUSTOM MURAL
P-5	SHERWIN WILLIAMS, 'LABRADORITE' #SW7619	ACCENT @ OPEN OFFICE, LOBBY, WORK ROOM
P-6	SHERWIN WILLIAMS, 'IN THE NAVY' #SW9178	ACCENT @ BOARD ROOM/ BREAK ROOM/ OPEN OFFICE/DISPATCH/LOCKER ROOM: CUSTOM MURAL
P-7	SHERWIN WILLIAMS, 'ENTICING RED' #SW6600)	LOCKER ROOM: CUSTOM MURAL
09 96 00-	HIGH-PERFORMANCE COATINGS	
P-8	TNEMEC, 'INEMEC WHITE' #00WH	WALL MOUNTED LETTER SIGNAGE
P-9	TNEMEC, CUSTOM COLORS TO MATCH SHERWIN WILLIAMS 'CAVIAR' #SW6990	EXPOSED STRUCTURAL BEAMS/ MECHANICAL DUCTS/PLUMBING/ UOS/ EXTERIOR COLUMNS
P-10	TNEMEC, CUSTOM COLORS TO MATCH SHERWIN WILLIAMS 'ANONYMOUS' #SW7046	HM DOORS/ FRAMES
10 11 00-	VISUAL DISPLAY UNITS	
TWP-1	WOLF GORDON, BULLETIN BOARD CORK, 'BLUEBERRY' #2214	TACK WALL @ WORK ROOM
10 14 23-	PANEL SIGNAGE	
SIGN-1	BACKGROUND PL-1, WITH DIE CUT ACRYLIC TEXT IN BLACK ON BLACK ACRYLIC SUBSTRATE	OFFICE/ROOM SIGNAGE
10 26 00-	WALL AND DOOR PROTECTION	
WP-1	INPRO, ALUMINUM CORNER GUARD, 12' x 3/4", 90° , FINISH: BRONZE (DW-AL03412-BRZ), ADHESIVE MOUNTED (NO TAPE OR SCREWS), 1" LEG	WHERE NOTED IN PLANS
10 51 13-	METAL LOCKERS	
LOCK-1	PENCO 2 TIER-METAL LOCKERS W/ ZEE BASE/SLOPE TOP KITS, 'LIGHT PUTTY' #723	LOCKERS @ LOCKER ROOM
LOCK-2	PENCO 2 TIER-METAL LOCKERS W/ ZEE BASE/SLOPE TOP KITS, 'REGAL BLUE' #822	LOCKERS @ LOCKER ROOM
10 75 00-	FLAGPOLES	
FP-1	COMMERCIAL EXTERNAL HALYARD FLAGPOLE 20FT.	FLAGPOLE @ EXTERIOR
12 24 00-	WINDOW SHADES	
RS-1	MECHOSHADE, SOHO ELEVATE 1680 SERIES, 'SLATE' #1686, 5% OPENNESS	TYPICAL
12 36 00-	COUNTERTOPS	
PL-3	WILSONART, STANDARD HPL FINISH, 'ORTENSIA' #5038K-15 (FIELDSTONE FINISH) W/ AEON SCRATCH RESISTANCE	COUNTER @ WORK ROOM CASEWORK
SSM-1	STARON SOLID SURFACES, 'SANDED WHITE PAPER' #WP410, 1/2" THICKNESS	COUNTER @ BREAK ROOM/BOARD ROOM/DISPATCH
SSM-2	DALTILE, ONE QUARTZ SURFACES, 'CABRINI GREY' #NQ51 FINISH: VELVET, 3/4" THICKNESS, SLAB	FACADE @ RECEPTION DESK
SSM-3	FORMICA, SOLID SURFACING, 'LUNA CONCRETE' #781, 1/2" THICKNESS	COUNTER @ RECEPTION DESK/ WORKROOM ISLAND
SSM-4	FORMICA, SOLID SURFACING, 'INDIGO SPECK' #626	COUNTER @ BREAK ROOM ISLAND/ COMPUTER WORKSTATION
26 50 05-	LIGHTING FIXTURES	
ACP-7	OCL ARCHITECTURAL LIGHTING, REV ACOUSTIC PENDANT, 6' DIA., COLOR: 'MIDNIGHT BLUE'	ACCENT @ BOARD ROOM, CONFERENCE ROOM, BREAK ROOM
ACP-8	OCL ARCHITECTURAL LIGHTING, REV ACOUSTIC PENDANT, 5' DIA., COLOR: 'CLASSIC WHITE'	ACCENT @ BOARD ROOM, CONFERENCE ROOM, BREAK ROOM
ACP-9	OCL ARCHITECTURAL LIGHTING, REV ACOUSTIC PENDANT, 6' DIA., COLOR: 'CLASSIC WHITE'	ACCENT @ LOBBY
32 13 13-	SITE CONCRETE	
CONC-2	NATURAL CONCRETE 'GRAY' MEDIUM BROOM BRUSHED	TYPICAL @ SITE/ RETAINING WALL
32 31 19-	DECORATIVE METAL FENCES AND GATES	
OF-1	AMERISTAR, ECHELON II ALUMINUM W/ INTERNAL REINFORCING WEB 'BLACK'	SITE FENCING/GATES

FINISH NOTES

1. ALL FINISHES SHALL COMPLY WITH CBC CHAPTERS 3, 8, & 10, CFC AND CCR TITLE 19 AND STATE OF CALIFORNIA TECHNICAL BULLETIN 117-2013.
2. WALL AND CEILING MATERIALS SHALL NOT EXCEED THE FLAME SPREAD CLASSIFICATIONS IN CBC TABLE 803.13.
3. ALL ADJACENT DISSIMILAR FINISH MATERIALS TO RECEIVE BEAD OF CAULK, U.N.O.
4. SEE INTERIOR ELEVATION SHEETS FOR ACCENT PAINT LOCATIONS.
5. ALL EXPOSED STEEL, HOLLOW METAL DOORS AND FRAMES, AND LOUVERS TO BE PAINTED.
6. TOILET ROOM, TOILET ROOM VESTIBULES, AND FOOD SERVICE AREA WALLS AND CEILINGS NOT COVERED BY EITHER TILE OR F.R.P. TO HAVE MOISTURE RESISTANT GYPSUM BOARD, U.N.O.
7. COORDINATE FINISHES WITH MECHANICAL FOR PLUMBING FIXTURES.
8. FOR EXTENT AND PATTERN OF CEILING FINISH, SEE REFLECTED CEILING PLAN
9. AT COVE BASE, PROVIDE CONTINUOUS 3/8" RADIUS
10. FOR TYPICAL CERAMIC TILE DETAILS, REFER TO DETAIL 10 / AD-2.1
11. SEE SHEET **AD-6.0** FOR ALL TRANSITION DETAILS IF IT IS NOT A FLUSH TRANSITION BETWEEN ANY TWO FLOOR FINISHES.
12. FOR MORE INFORMATION ON COLORS, FINISHES, & MATERIALS, REFER TO SHEET - / ID-1.0
13. ALL FLOOR FINISHES SHALL BE STABLE, FIRM, & SLIP RESISTANT PER CBC SECTION 11B-302.1.
14. CARPET / CARPET TILE FLOORING SHALL BE SECURELY ATTACHED WITH FIRM BACKING AND PILE HEIGHT OF 1/2" MAX. PER CBC SECTION 11B-302.2. CARPET EDGES SHALL COMPLY WITH CBC SECTION 11B-303.
15. ALL FLOOR FINISHES SHALL EXTEND BELOW ACCESSIBLE WORKSTATIONS, SINKS, ETC. FOR THE REQUIRED TOE/KNEE CLEARANCE.
16. REFER TO CORRESPONDING SPECIFICATIONS FOR BURNING CHARACTERISTICS AND TESTING REQ.

FINISH ABBREVIATIONS

ACP	ACOUSTICAL CEILING PANEL (SUSPENDED)
ACT	ACOUSTICAL CEILING TILE
AWP	ACOUSTIC WALL PANEL
CGD	CORNER GUARD
CMU	CONCRETE MASONRY UNIT
CONC	CONCRETE
CPL	CEMENT PLASTER
CPT	CARPET
CT	CERAMIC TILE
DIS	DISPLAY CASE
ECO	ECORESIN PANEL
EPOXY	EPOXY FLOOR
EPT	EPOXY TERRAZZO
EXP	EXPOSED
FF	FACTORY FINISH
FRP	FIBERGLASS REINFORCED PANEL
G	GROUT
GPL	GYPSUM PLASTER
GWB	GYPSUM WALLBOARD
GWW	WATER RESISTANT GWB
ICB	INTEGRAL COVED BASE
LINO	LINOLEUM
LVT	LUXURY VINYL TILE
MESH	METAL MESH SYSTEM
MPS	METAL PANEL SYSTEM
OP	OPERABLE PARTITION
PCPL	PORTLAND CEMENT PLASTER OVER METAL LATH, SAND FINISH
PES	PAINT - EGGSHELL
PL	PLASTIC LAMINATE
PLAS	PLASTER
PF	PAINT, FLAT
PG	PAINT, GLOSS
PSG	PAINT, SEMI-GLOSS
QT	QUARRY TILE
RES	RESINOUS/EPOXY FLOORING
RF	RUBBER FLOORING
RS	ROLLER SHADE SYSTEM
S	SEAL
SAF	SYNTHETIC ATHLETIC FLOORING
SCW	SOLID CORE WOOD
SEAL	SEALED CONCRETE
SSM	SOLID SURFACE MATERIAL
ST	STAIN WOOD COLOR
STV	STONE TILE VENEER
SV	SHEET VINYL
TSRB	TOP SET RUBBER BASE
TWP	TACKABLE WALL PANEL
U.O.S.	UNDERSIDE OF STRUCTURE
VCB	VENTED COVED BASE
VCT	VINYL COMPOSITION TILE
VF	VINYL FABRIC
VWC	VINYL WALL COVERING
WD	WOOD
WP	WALL PADDING
WS	WALL SYSTEM

FLOOR FINISH LEGEND

CONCRETE
- CONC-1

RESILIENT FLOORING
- LVT-1
- LVT-2
- LVT-3
- LVT-4

CARPETING
- CPT-1
- CPT-2
- CPT-3
- CPT-4

**T

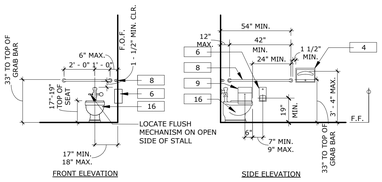

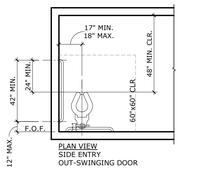

ACCESSIBLE TOILET ROOM STALL

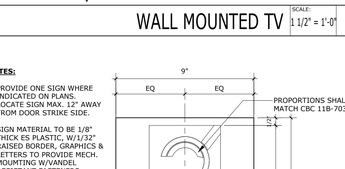

ACCESSIBLE TOILET ROOM FIXTURES & ACCESSORIES

MOUNTING HEIGHTS & LOCATIONS

DIMENSIONS:	ADULTS
TOILET CENTERLINE FROM WALL FINISH	17 1/2"
TOILET SEAT HEIGHT	17" - 19"
GRAB BAR HEIGHT TO TOP OF GRAB	33"
GRAB BAR (DISTANCE FROM REAR WALL) (SIDE)	12" MAX
TOILET PAPER HEIGHT (TO DELIVERY)	19"
TOILET PAPER IN FRONT OF TOILET (TO CL)	7"-9"
NAPKIN DISPOSAL IN FRONT OF TOILET	12" MAX.*
DISPENSER SEAT COVERS, PAPER TOWELS	40" MAX.
REFLECTING SURFACE / SOAP DISPENSER	40" MAX.
LAVATORY/SINK TOP HEIGHT	34" MAX.
LAVATORY KNEE CLEARANCE	29" MAX.
SINK KNEE CLEARANCE	27" MAX.
URINAL LIP HEIGHT	17" MAX.
URINAL FLUSH HANDLE HEIGHT	44" MAX.

NOTE:
CONTRACTOR TO PROVIDE MOUNTING HEIGHTS INDICATED. VERIFY INTENDED USE OF EACH RESTROOM PRIOR TO ROUGH IN. PROVIDE BACKING PER STRUCT. AS REQUIRED, SEE DETAIL (5 SO-2.8)

* DISPOSAL UNITS ARE TO BE LOCATED ON THE SIDEWALL BETWEEN THE REAR WALL OF THE TOILET AND THE TOILET PAPER DISPENSER, ADJACENT TO THE TOILET PAPER DISPENSER. CBC 11B-604.7.2

ACCESSORY AND EQUIPMENT KEYNOTES

ACCESSORIES

1 NEW 18" X 30" TEMPERED GLASS MIRROR WITH STAINLESS STEEL ANGLE FRAME AND SHELF.
2 NOT USED
3 NOT USED
4 NEW SURFACE MOUNTED TOILET SEAT COVER DISPENSER - STAINLESS STEEL WITH SATIN FINISH.
5 NOT USED
6 NEW RECESSED MULTI-ROLL TOILET TISSUE DISPENSER - STAINLESS STEEL WITH SATIN FINISH (3" MAX. PROJECTION FROM FINISH FACE OF WALL)
7 NEW SURFACE MOUNTED SOAP DISPENSER FOR LIQUID SOAP - STAINLESS STEEL WITH SATIN FINISH. INSTALLED AT =40" A.F.F. (OVER OBSTRUCTION)
8 NEW GRAB BARS (SIDE = 48" L. X 1-1/2" DIA., REAR = 36" L. X 1-1/2" DIA.) STAINLESS STEEL. FOR ANCHORAGE SEE DETAILS (15 AD-1.0)
9 NEW SURFACE MOUNTED FEMININE NAPKIN DISPOSAL (WOMENS ONLY) - STAINLESS STEEL WITH SATIN FINISH - 3" MAX. PROJECTION
10 NEW RECESSED CONVERTIBLE PAPER TOWEL DISPENSER AND WASTE RECEPTACLE- STAINLESS STEEL WITH SATIN FINISH. 4" MAX. PROJECTION

EQUIPMENT

11 NEW ACCESSIBLE LAVATORY.
12 NEW ACCESSIBLE WATER CLOSET.
13 NEW ACCESSIBLE URINAL.

MECHANICAL / PLUMBING

14 INSULATE DRAIN AND ALL WATER PIPING TO PREVENT CONTACT. THERE SHALL BE NO SHARP OR ABRASIVE SURFACES UNDER THE LAVATORY, PER CBS 11B-606.5

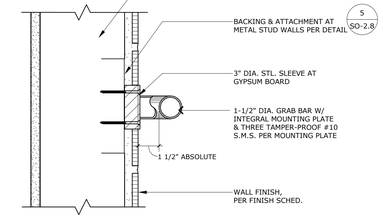

NOTE:
REFERENCE TO TOILET STALL ELEVATIONS FOR MOUNTING HEIGHT OR PER TITLE 24, 2-511

GRAB BAR @ METAL BACKING
SCALE: 3" = 1'-0" | 15

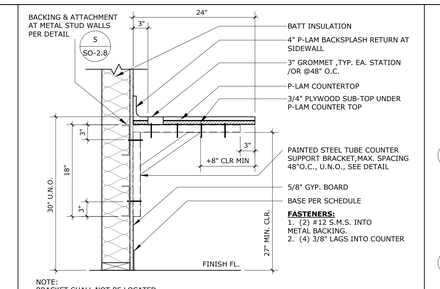

NOTE:
BRACKET SHALL NOT BE LOCATED WITH 30"X48" CLR SPACE, TYP.

COUNTERTOP SECTION
SCALE: 1" = 1'-0" | 10

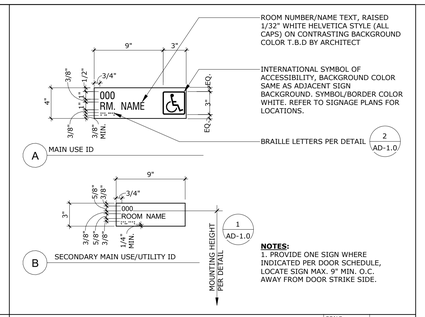

ROOM SIGNS
SCALE: 1 1/2" = 1'-0" | 5

STAMPS

AGENCY APPROVAL
File No.= n.a.

RUHNAU CLARKE ARCHITECTS

CONSULTANT BRANDING

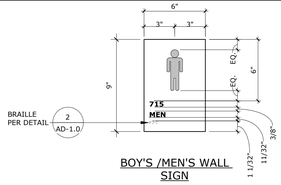

BOY'S /MEN'S WALL SIGN

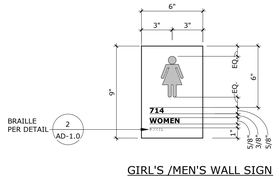

GIRL'S /MEN'S WALL SIGN

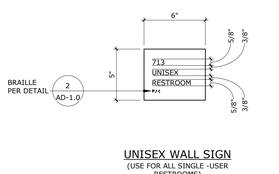

UNISEX WALL SIGN
(USE FOR ALL SINGLE -USER RESTROOMS)

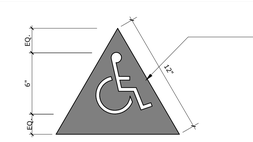

TITLE 24 BOY'S /MEN'S DOOR SIGN

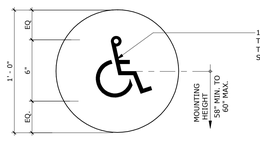

TITLE 24 GIRL'S /WOMEN'S DOOR SIGN

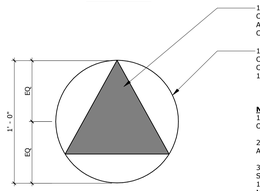

NOTES:
1. ALL TEXT/GRAPHICS TO BE WHITE ON CONTRASTING BACKGROUND, TYP.
2. BACKGROUND COLOR T.B.D. BY ARCHITECT, TYP.
3. EDGES ON GEOMETRIC SYMBOLS SHALL BE EASED OR ROUNDED AT 1/16" MIN. OR CHAMFERED AT 1/8" MAX. VERTICES SHALL BE RADIUSED BETWEEN 1/8" MIN - 1/4" MAX.
4. FOR MORE INFO. ON SIGN PLACEMENT, REFER TO DETAIL (13 AD-1.0)

TITLE 24 UNISEX DOOR SIGN
(USE FOR ALL SINGLE -USER RESTROOMS)

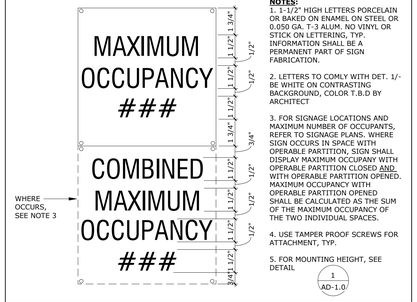

MAX. OCCUPANCY SIGN
SCALE: 3" = 1'-0" | 6

CHARACTER TYPE: CHARACTERS ON SIGNS SHALL BE RAISED 1/32" MINIMUM AND SHALL BE SANS SERIF UPPERCASE CHARACTERS ACCOMPANIED BY CONTRACTED GRADE 2 BRAILLE.

CHARACTER SIZE: RAISED CHARACTERS SHALL BE A MINIMUM OF 5/8" AND A MAXIMUM OF 2" HIGH.

FINISH AND CONTRAST: CONTRAST BETWEEN CHARACTERS, SYMBOLS, AND THEIR BACKGROUNDS MUST BE 70% MINIMUM AND HAVE A NON-GLARE FINISH.

PROPORTIONS: VISUAL CHARACTERS ON SIGNS SHALL BE SELECTED FROM FONTS WHERE THE WIDTH OF THE UPPERCASE LETTER "O" IS 60 PERCENT MINIMUM AND 110 PERCENT MAXIMUM OF THE HEIGHT OF THE UPPERCASE LETTER "I". STROKE THICKNESS OF THE UPPERCASE LETTER "I" SHALL BE 10 PERCENT MINIMUM AND 15 PERCENT MAXIMUM OF THE HEIGHT OF THE CHARACTER. (CBC 11B-703.2.6)

BRAILLE: CONTRACTED CALIFORNIA GRADE 2 BRAILLE SHALL BE USED WHENEVER CONTRACTED BRAILLE IS REQUIRED. FOR MORE INFO SEE DET. (2 AD-1.0)

MOUNTING HEIGHT : SIGNS WITH RAISED CHARACTERS AND BRAILLE SHALL BE LOCATED 48" MINIMUM ABOVE THE FINISH FLOOR OR GROUND SURFACE MEASURED FROM THE BASELINE OF THE LOWEST LINE OF BRAILLE, AND 60" MAXIMUM ABOVE THE FINISH FLOOR OR GROUND SURFACE MEASURED FROM THE BASELINE OF THE HIGHEST LINE OF RAISED CHARACTERS.

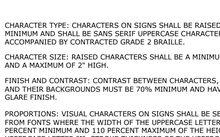

SIGNAGE REQUIREMENTS
SCALE: 1" = 1'-0" | 1

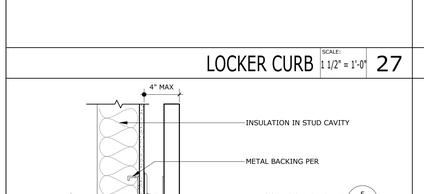

LOCKER CURB
SCALE: 1 1/2" = 1'-0" | 27

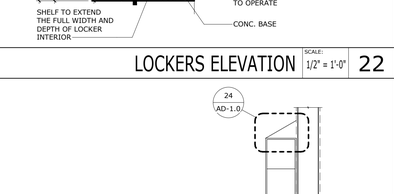

LOCKERS ELEVATION
SCALE: 1/2" = 1'-0" | 22

DOOR SIGN SIZE:
FOR MORE INFO. ON SIZES OF EXTERIOR, INTERIOR & TOILET ROOM DOOR SIGNS, REFER TO SPECIFICATIONS

NOTES:
1. SIGNS TO BE LOCATED ADJACENT TO LATCH SIDE OF DOOR.
2. WHERE NO SPACE ON LATCH SIDE IS AVAILABLE, SIGNS TO BE LOCATED @ NEAREST ADJACENT WALL.
3. SIGNS TO BE LOCATED ON APPROACH SIDE OF DOOR AS ONE ENTERS ROOM OR SPACE.
4.SIGNS THAT IDENTIFY EXITS ARE TO BE LOCATED ON APPROACH SIDE OF DOOR AS ONE EXITS ROOM OR SPACE.
5. MOUNTING HEIGHTS SHALL BE PER DET. (1 AD-1.0)
6. MOUNTING LOCATION SHALL BE DETERMINED SO THAT A PERSON MAY APPROACH WITHIN 3" OF SIGNAGE WITHOUT OBSTRUCTION, OR STANDING WITHIN THE SWING OF THE DOOR.

DOOR SIGN ATTACHMENT
SCALE: 3/8" = 1'-0" | 19

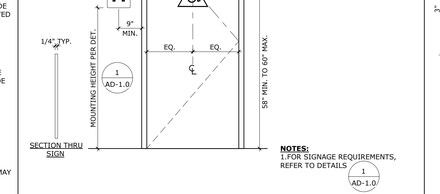

NOTES:
1.FOR SIGNAGE REQUIREMENTS, REFER TO DETAILS (1 AD-1.0)

TOILET SIGNS
SCALE: 1/2" = 1'-0" | 13

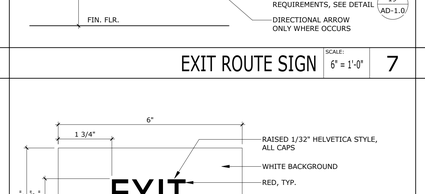

EXIT ROUTE SIGN
SCALE: 6" = 1'-0" | 7

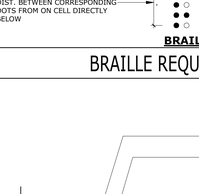

EXIT SIGN
SCALE: 6" = 1'-0" | 8

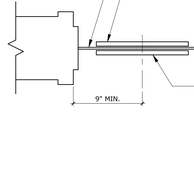

SIGN ATTACHMENT AT GLASS
SCALE: 1 1/2" = 1'-0" | 3

WALL MOUNTED TV
SCALE: 1 1/2" = 1'-0" | 28

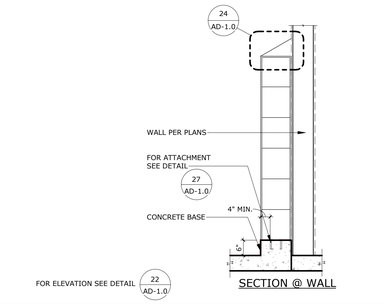

LOCKER SECTION
SCALE: 1/2" = 1'-0" | 23

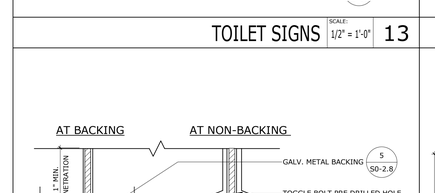

SIGN ATTACH. FRAMED WALL
SCALE: 3" = 1'-0" | 14

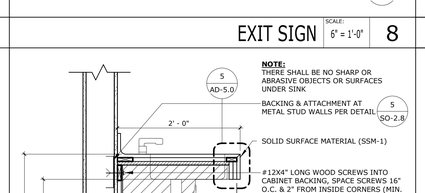

NOTE:
THERE SHALL BE NO SHARP OR ABRASIVE OBJECTS OR SURFACES UNDER SINK

SINK CLEARANCE
SCALE: 1" = 1'-0" | 9

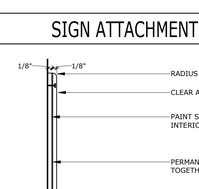

NOTES:
1. ATTACH SIGNS USING (3) THREE FLATHEAD COUNTERSUNK SCREWS TO SOLID BACKING AND ADHESIVE TO BACK.
2. MOUNTING HEIGHT PER (1 AD-1.0)
3. SIGNS ARE TO BE DISTINCTLY DIFFERENT FROM THE WALL IN COLOR AND CONTRAST.

TOILET SIGN
SCALE: 6" = 1'-0" | 4

ASSISTIVE LISTENING SIGN
SCALE: 3" = 1'-0" | 29

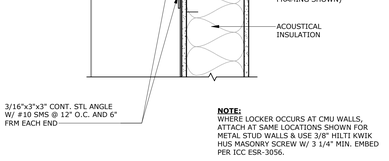

NOTE:
WHERE LOCKER OCCURS AT CMU WALLS, ATTACH AT SAME LOCATIONS SHOWN FOR METAL STUD WALLS & USE 3/8" HILTI KWIK HUS MASONRY SCREW W/ 3 1/4" MIN. EMBED PER ICC ESR-3056.

LOCKER ATTACHMENT
SCALE: 1 1/2" = 1'-0" | 24

PROJECT No. :50801
4/18/2024 4:03:01 PM

DRAWN BY: CHECKED BY:

ISSUE No.____ DATE____ DESCRIPTION____
ISSUE No.____ DATE____ DESCRIPTION____
ISSUE No.____ DATE____ DESCRIPTION____
ISSUE No.____ DATE____ DESCRIPTION____

REVISION No.____ DATE____ DESCRIPTION____
REVISION No.____ DATE____ DESCRIPTION____
REVISION No.____ DATE____ DESCRIPTION____
REVISION No.____ DATE____ DESCRIPTION____

RUHNAUCLARKE.COM
3775 TENTH STREET, RIVERSIDE CALIFORNIA 92501(951) 684 4664 / 5751 PALMER WAY, SUITE C, CARLSBAD CALIFORNIA 92010(760) 438 5899

MOUNT TRANSIT ADMINISTRATION FACILITY
INCREMENT 3
170 BUSINESS CENTER DR. BIG BEAR LAKE, CA
BIG BEAR LAKE

DETAILS ACCESSIBILITY & SIGNAGE DETAILS

AD-1.0

50801

MOUNT TRANSIT ADMINISTRATION FACILITY: INCREMENT 3: 100% CD

GENERAL NOTES:
1. THE SPOUT SHALL PROVIDE A FLOW OF WATER 4 INCHES HIGH MIN. AND SHALL BE LOCATED 5 INCHES MAX. FROM THE FRONT OF THE UNIT. THE ANGLE OF THE WATER STREAM SHALL BE MEASURED HORIZONTALLY RELATIVE TO THE FRONT FACE OF THE UNIT.

2. WHERE SPOUTS ARE LOCATED LESS THAN 3" OF THE FRONT OF THE UNIT, THE ANGLE OF THE WATER STREAM SHALL BE 30 DEGREES MAX.

3. WHERE SPOUTS ARE LOCATED BETWEEN 3" AND 5" MAX. FROM THE FRONT OF THE UNIT, THE ANGLE OF THE WATER STREAM SHALL BE 15 DEGREES MAX.

4. FORCE REQUIRED TO ACTIVATE CONTROLS CAN NOT EXCEED 5lbs.

NOTE :
BOTTLE FILLING STATION & VERSATILE BI-LEVEL ADA COOLER DRINKING FOUNTAIN DETAILS BASED ON MANUFACTURE ATTACHMENT DETAILS AND SPECIFICATIONS.
REFER TO MANUFACTURER'S INSTALLATION TO BE COMPLETED IN ACCORDANCE SPECIFIC HARDWARE AND ATTACHMENT.

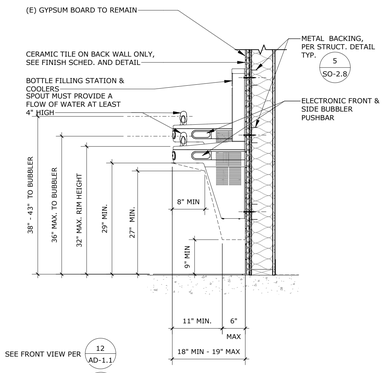

INT. DRINKING FOUNTAIN-SECTION | SCALE: 3/4" = 1'-0" | 11

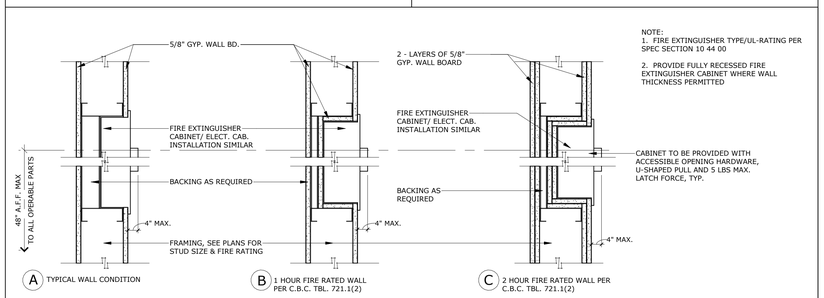

RECESSED FIRE CABINET FRAMING | SCALE: 1 1/2" = 1'-0" | 1

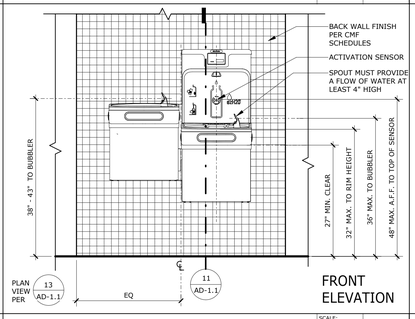

HI-LOW DRINKING FOUNTAIN | SCALE: 3/4" = 1'-0" | 12

WALL-MOUNTED LETTERS/LOGO | SCALE: 1 1/2" = 1'-0" | 2

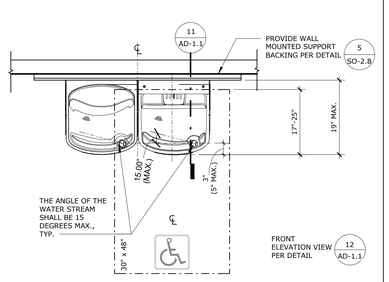

HI-LOW DRINKING FOUNTAIN | SCALE: 3/4" = 1'-0" | 13

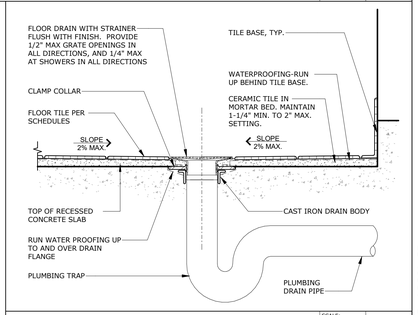

FLOOR DRAIN | SCALE: 1 1/2" = 1'-0" | 3

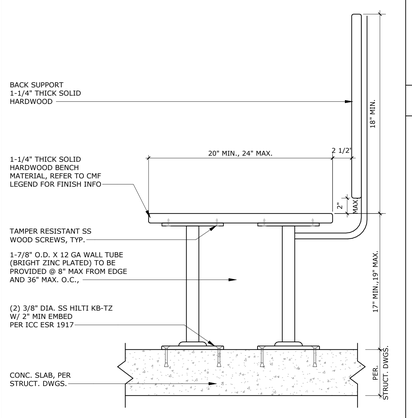

LOCKER BENCH WITH BACK SUPPORT | SCALE: 1 1/2" = 1'-0" | 9

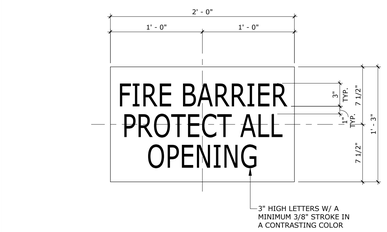

FIRE BARRIER MARKING SIGN | SCALE: 1 1/2" = 1'-0" | 4

STAMPS

LICENSED ARCHITECT — ROGER CLARKE — No. C-49130 — Exp.10-31-25 — STATE OF CALIFORNIA

AGENCY APPROVAL
File No.: Ltr:

CONSULTANT BRANDING

RUHNAU CLARKE ARCHITECTS

MOUNT TRANSIT ADMINISTRATION FACILITY: INCREMENT 3: 100% CD

PROJECT No. :50801
4/18/2024 4:03:02 PM

DRAWN BY: CHECKED BY:

ISSUE No._____ DATE_____ DESCRIPTION_____
ISSUE No._____ DATE_____ DESCRIPTION_____
ISSUE No._____ DATE_____ DESCRIPTION_____
ISSUE No._____ DATE_____ DESCRIPTION_____

REVISION No._____ DATE_____ DESCRIPTION_____
REVISION No._____ DATE_____ DESCRIPTION_____
REVISION No._____ DATE_____ DESCRIPTION_____
REVISION No._____ DATE_____ DESCRIPTION_____

RUHNAUCLARKE.COM
3775 TENTH STREET, RIVERSIDE CALIFORNIA 92501(951) 684 4664 / 5751 PALMER WAY, SUITE C, CARLSBAD CALIFORNIA 92010(760) 438 5899

MOUNT TRANSIT ADMINISTRATION FACILITY
INCREMENT 3
170 BUSINESS CENTER DR. BIG BEAR LAKE, CA
BIG BEAR LAKE

ACCESSIBILITY, SIGNAGE, & MISC.

AD-1.1

50801

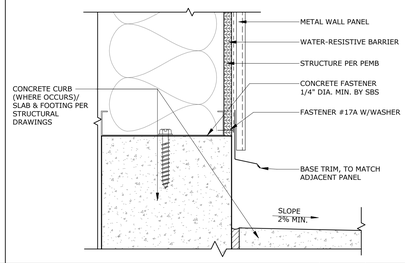

METAL WALL @ CURB-VERT. — SCALE: 3" = 1'-0" — 20

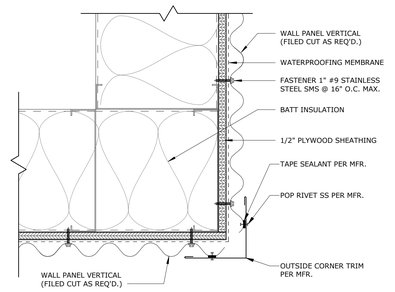

OUTSIDE CORNER @ V. MWP — SCALE: 3" = 1'-0" — 15

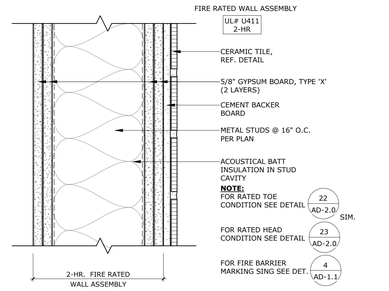

WALL TYPE D2 — SCALE: 3" = 1'-0" — 10

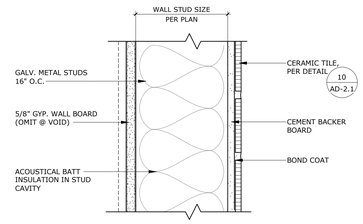

WALL TYPE C1 — SCALE: 3" = 1'-0" — 5

LICENSED ARCHITECT
ROBERT CLARKE
No. C-41130
Exp.10-31-25
STATE OF CALIFORNIA

STAMPS

AGENCY APPROVAL
File No.= n.a.=

CONSULTANT BRANDING

RUHNAU CLARKE ARCHITECTS

NOTE:
FOR MORE INFO. REFER TO WALL TYPE "A3"

F.C. PANEL OUTSIDE CORNER — SCALE: 3" = 1'-0" — 21

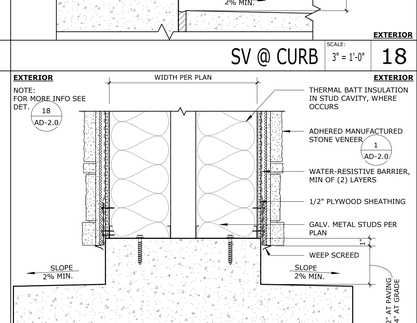

INSIDE CORNER @ SV & MWP — SCALE: 3" = 1'-0" — 16

EXTERIOR PLAN VIEW

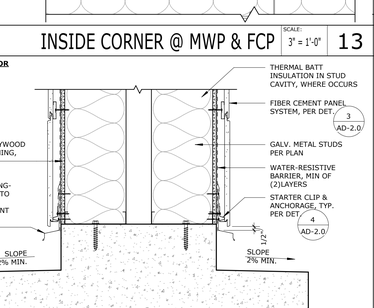

DOUBLE WALL PLAN @ FCP — SCALE: 1 1/2" = 1'-0" — 11

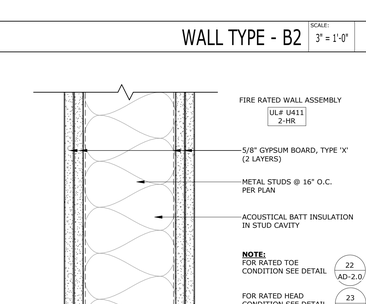

WALL TYPE C2 — SCALE: 3" = 1'-0" — 6

INTERIOR **EXTERIOR**

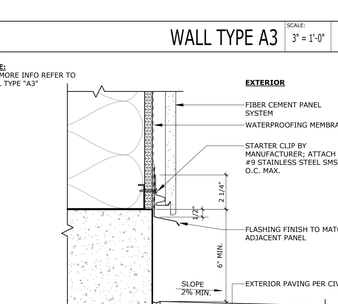

WALL TYPE A1 — SCALE: 3" = 1'-0" — 1

UL SYSTEM NO. BW-S-007
1 & 2 HR FIRE-RATING

FIRE RATED BASE ASSEMBLY — SCALE: 3" = 1'-0" — 22

EXTERIOR PLAN VIEW

DOUBLE WALL PLAN @ SV — SCALE: 1 1/2" = 1'-0" — 17

INSIDE CORNER @ FCP & SV — SCALE: 3" = 1'-0" — 12

WALL TYPE - B1 — SCALE: 3" = 1'-0" — 7

INTERIOR **EXTERIOR**

WALL TYPE A2 — SCALE: 3" = 1'-0" — 2

INTERIOR FIRE RATED WALL DETAIL — SCALE: 1" = 1'-0" — 23

SV @ CURB — SCALE: 3" = 1'-0" — 18

INSIDE CORNER @ MWP & FCP — SCALE: 3" = 1'-0" — 13

WALL TYPE - B2 — SCALE: 3" = 1'-0" — 8

INTERIOR **EXTERIOR**

WALL TYPE A3 — SCALE: 3" = 1'-0" — 3

EXTERIOR **EXTERIOR**

DOUBLE WALL TOE @ SV — SCALE: 1 1/2" = 1'-0" — 19

EXTERIOR

DOUBLE WALL TOE @ FCP — SCALE: 1 1/2" = 1'-0" — 14

WALL TYPE D1 — SCALE: 3" = 1'-0" — 9

NOTE:
FOR MORE INFO REFER TO WALL TYPE "A3"

EXTERIOR

F.C. PANEL @ CURB — SCALE: 3" = 1'-0" — 4

PROJECT No. :50801
4/18/2024 4:03:04 PM

DRAWN BY: CHECKED BY:

ISSUE No.____ DATE____ DESCRIPTION____
ISSUE No.____ DATE____ DESCRIPTION____
ISSUE No.____ DATE____ DESCRIPTION____
ISSUE No.____ DATE____ DESCRIPTION____
REVISION No.____ DATE____ DESCRIPTION____
REVISION No.____ DATE____ DESCRIPTION____
REVISION No.____ DATE____ DESCRIPTION____
REVISION No.____ DATE____ DESCRIPTION____

RUHNAUCLARKE.COM

3775 TENTH STREET, RIVERSIDE CALIFORNIA 92501(951) 684 4664 / 5751 PALMER WAY, SUITE C, CARLSBAD CALIFORNIA 92010(760) 438 5899

MOUNT TRANSIT ADMINISTRATION FACILITY
INCREMENT 3
170 BUSINESS CENTER DR. BIG BEAR LAKE, CA
BIG BEAR LAKE

DETAILS
WALL TYPES

AD-2.0

50801

MOUNT TRANSIT ADMINISTRATION FACILITY: INCREMENT 3: 100% CD

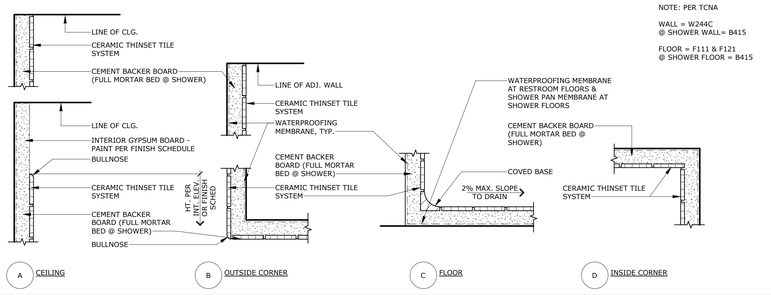

NOTE: PER TCNA

WALL = W244C
@ SHOWER WALL= B415

FLOOR = F111 & F121
@ SHOWER FLOOR = B415

CERAMIC TILE DETAILS — SCALE: 3" = 1'-0" — 10

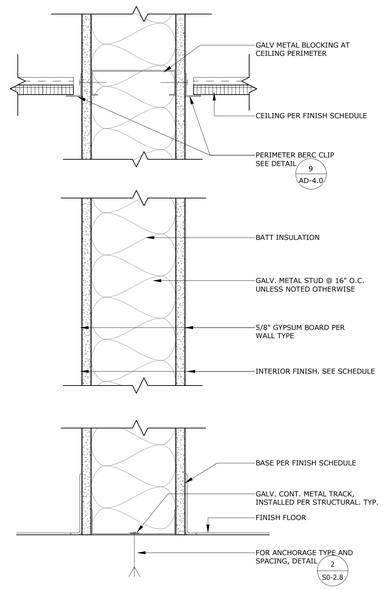

TYPICAL INTERIOR WALL — SCALE: 3" = 1'-0" — 6

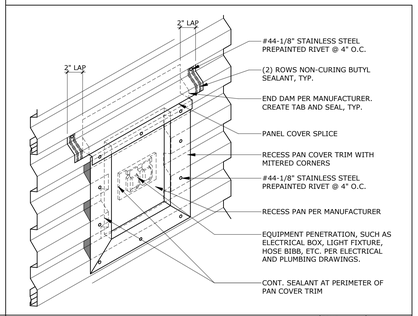

MWP PENETRATION DETAIL — SCALE: 1 1/2" = 1'-0" — 1

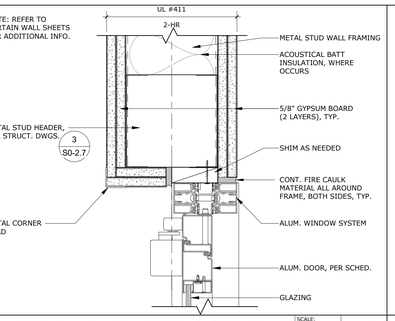

INT. ALUM. DR. HEAD @ 2HR WALL — SCALE: 3" = 1'-0" — 16

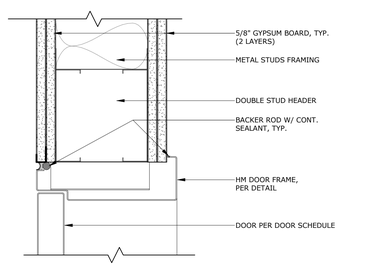

INT. DOOR HEAD @ 2-HR — SCALE: 3" = 1'-0" — 11

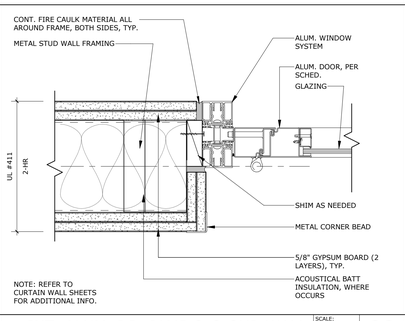

INT. ALUM. DR. JAMB 2 @ 2HR WALL — SCALE: 3" = 1'-0" — 22

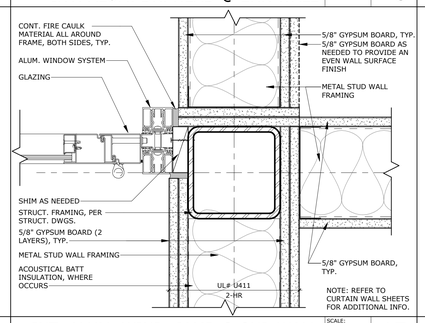

INT. ALUM. WIND. JAMB @ 2HR WALL — SCALE: 3" = 1'-0" — 17

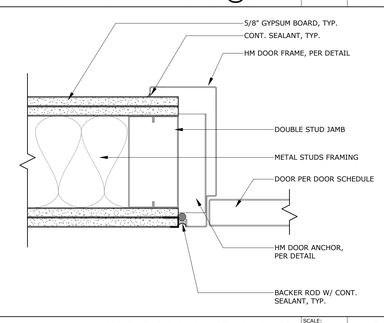

INT. DOOR JAMB @ 2-HR — SCALE: 3" = 1'-0" — 12

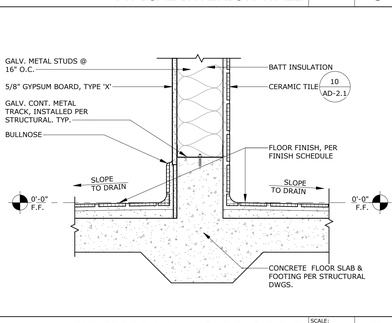

INTERIOR WALL CURB @ TILE — SCALE: 1 1/2" = 1'-0" — 7

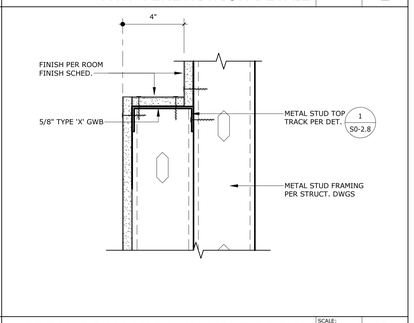

BREAK ROOM MNTR CUT-OUT DETAIL — SCALE: 3" = 1'-0" — 2

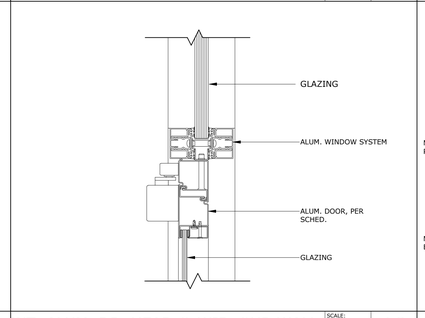

INT. ALUM. DR. HEAR @ WID. 2HR WALL — SCALE: 3" = 1'-0" — 18

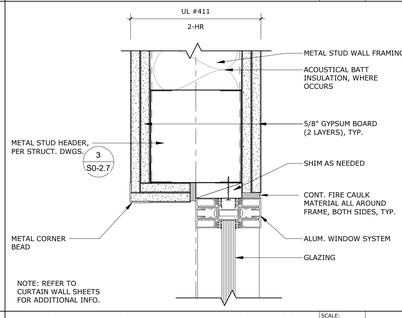

INT. ALUM. WIND. HEAD @ 2HR WALL — SCALE: 3" = 1'-0" — 13

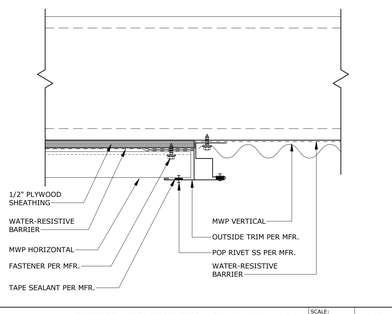

PANEL TRANSITION @ H. & V. — SCALE: 3" = 1'-0" — 8

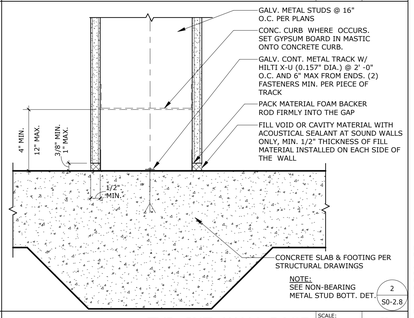

TYP. INT. WALL BASE — SCALE: 3" = 1'-0" — 3

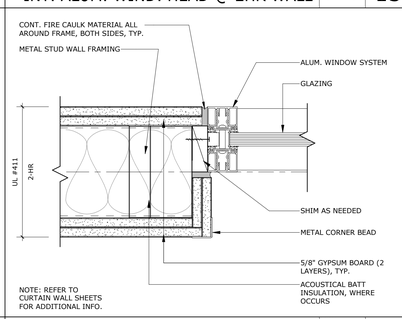

INT. ALUM. WIND. JAMB 2@ 2HR WALL — SCALE: 3" = 1'-0" — 14

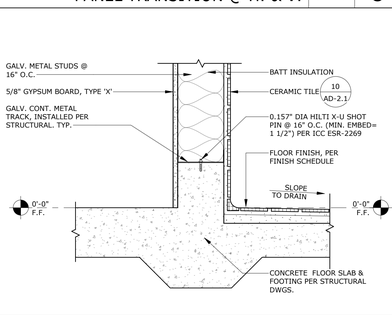

INT. WALL CURB @ TILE & GYP — SCALE: 1 1/2" = 1'-0" — 9

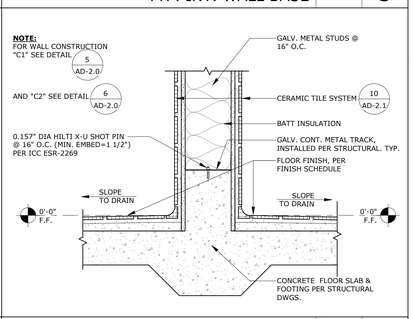

INTERIOR WALL CURB @ TILE — SCALE: 1 1/2" = 1'-0" — 4

PROJECT No. :50801
4/18/2024 4:03:05 PM

DRAWN BY: CHECKED BY:

ISSUE No.____ DATE____ DESCRIPTION____
ISSUE No.____ DATE____ DESCRIPTION____
ISSUE No.____ DATE____ DESCRIPTION____
ISSUE No.____ DATE____ DESCRIPTION____

REVISION No.____ DATE____ DESCRIPTION____
REVISION No.____ DATE____ DESCRIPTION____
REVISION No.____ DATE____ DESCRIPTION____
REVISION No.____ DATE____ DESCRIPTION____

RUHNAUCLARKE.COM
3775 TENTH STREET, RIVERSIDE CALIFORNIA 92501 (951) 684 4664 / 5751 PALMER WAY, SUITE C, CARLSBAD CALIFORNIA 92010 (760) 438 5899

MOUNT TRANSIT ADMINISTRATION FACILITY
INCREMENT 3
170 BUSINESS CENTER DR. BIG BEAR LAKE, CA
BIG BEAR LAKE

WALL DETAILS

AD-2.1

50801

LICENSED ARCHITECT — ROGER CLARKE — No. C-41130 — Exp.10-31-25 — STATE OF CALIFORNIA

STAMPS

AGENCY APPROVAL
File No.: XX

CONSULTANT BRANDING

RUHNAU CLARKE ARCHITECTS

MOUNT TRANSIT ADMINISTRATION FACILITY: INCREMENT 3: 100% CD

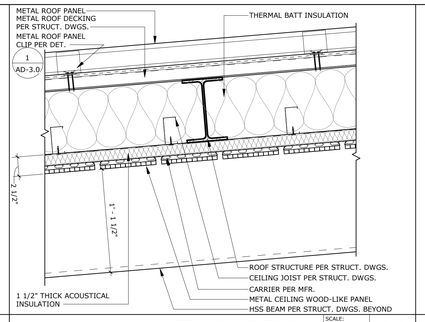

METAL ROOF FINISH | SCALE: 1 1/2" = 1'-0" | 20

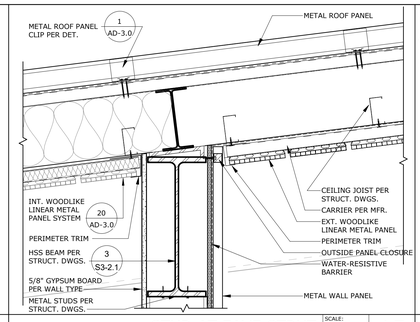

STUD AT EAVE STRUT | SCALE: 1 1/2" = 1'-0" | 15

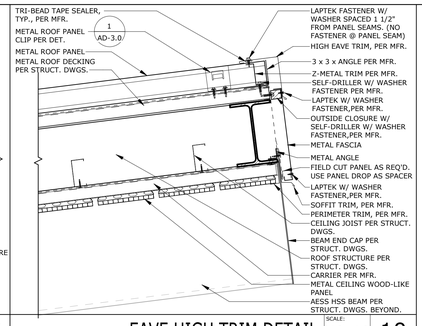

EAVE HIGH TRIM DETAIL | SCALE: 1 1/2" = 1'-0" | 10

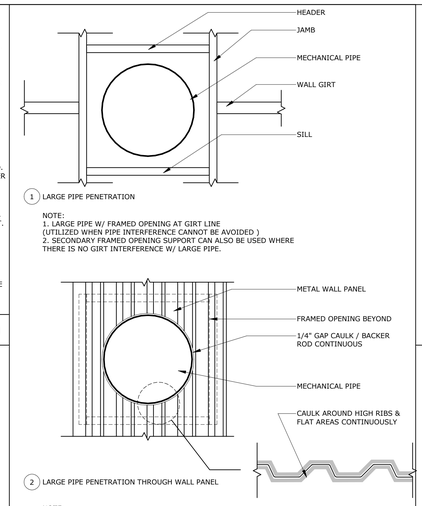

PEMB W. PANEL PENETRATIONS | SCALE: 1 1/2" = 1'-0" | 6

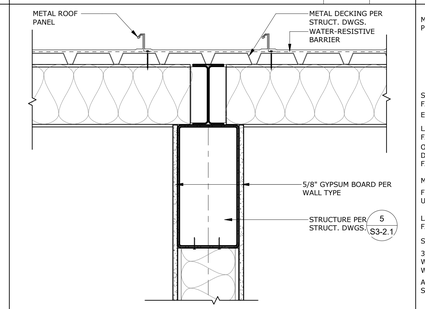

INT. TOP WALL TERMINATION | SCALE: 1 1/2" = 1'-0" | 21

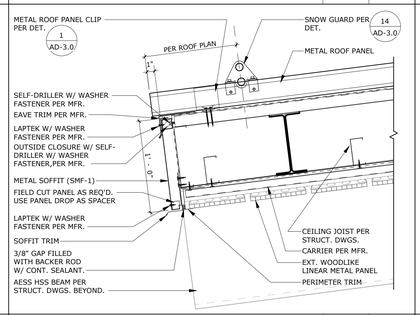

EAVE TRIM DETAIL | SCALE: 1 1/2" = 1'-0" | 16

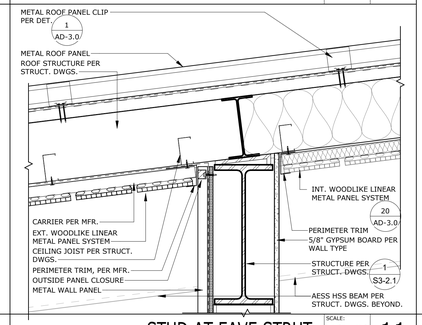

STUD AT EAVE STRUT. | SCALE: 1 1/2" = 1'-0" | 11

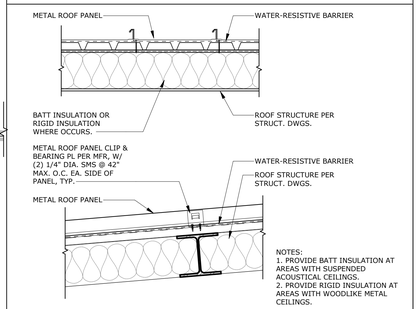

TYPICAL ROOF ASSEMBLY | SCALE: 1" = 1'-0" | 1

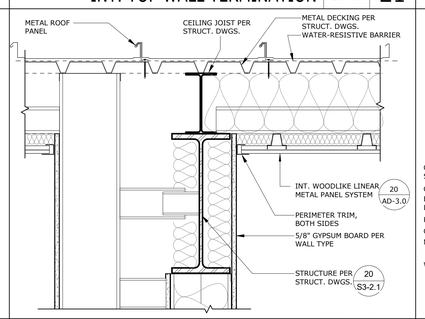

BEAM @ GRID LINE M | SCALE: 1 1/2" = 1'-0" | 22

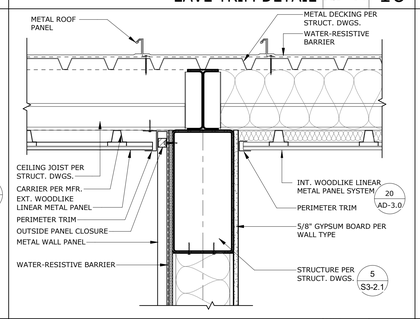

STUD AT EAVE STRUT | SCALE: 1 1/2" = 1'-0" | 17

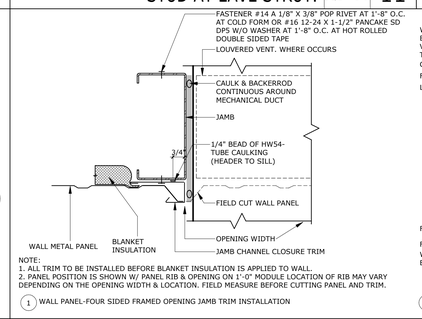

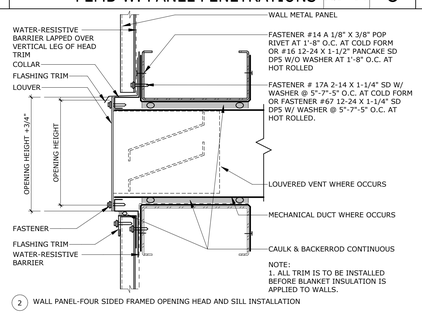

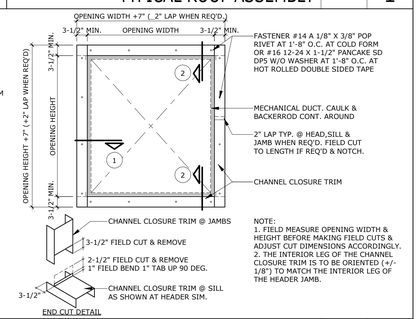

WALL PANEL 4 SIDED OPENING | SCALE: 3" = 1'-0" | 2

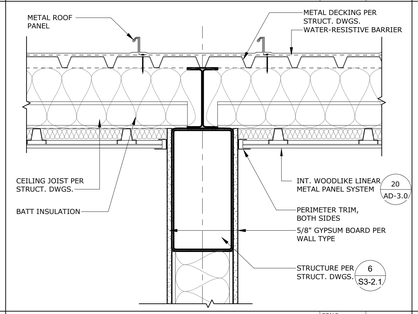

STUD AT EAVE STRUT | SCALE: 1 1/2" = 1'-0" | 18

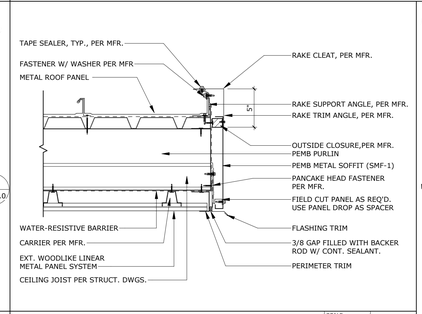

TYP. INT. & END WALL CONN. | SCALE: 1 1/2" = 1'-0" | 13

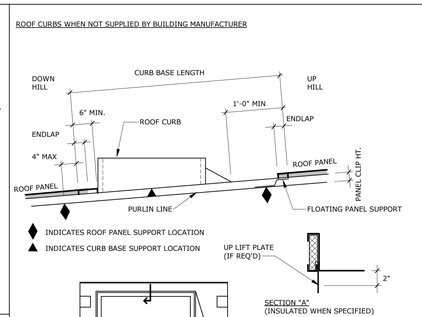

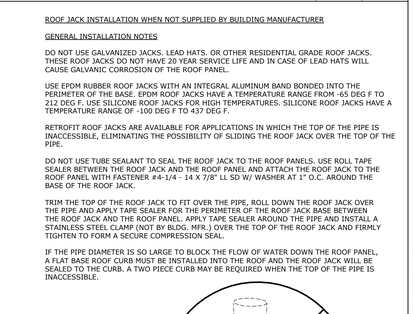

ROOF DETAIL | SCALE: 12" = 1'-0" | 4

MOUNT TRANSIT ADMINISTRATION FACILITY: INCREMENT 3: 100% CD

PROJECT No. :50801
4/18/2024 4:03:08 PM

DRAWN BY: CHECKED BY:

ISSUE No._____ DATE_____ DESCRIPTION_____
ISSUE No._____ DATE_____ DESCRIPTION_____
ISSUE No._____ DATE_____ DESCRIPTION_____
ISSUE No._____ DATE_____ DESCRIPTION_____

REVISION No._____ DATE_____ DESCRIPTION_____
REVISION No._____ DATE_____ DESCRIPTION_____
REVISION No._____ DATE_____ DESCRIPTION_____
REVISION No._____ DATE_____ DESCRIPTION_____

RUHNAUCLARKE.COM
3775 TENTH STREET, RIVERSIDE CALIFORNIA 92501(951) 684 4664 / 5751 PALMER WAY, SUITE C, CARLSBAD CALIFORNIA 92010(760) 438 5899

MOUNT TRANSIT ADMINISTRATION FACILITY
INCREMENT 3
170 BUSINESS CENTER DR. BIG BEAR LAKE, CA
BIG BEAR LAKE

DETAILS
ROOF DETAILS

AD-3.0

50801

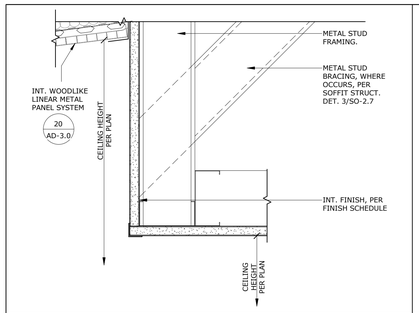

MTL PANEL SYSTEM TO GWB CEILING — SCALE: 3" = 1'-0" — 25

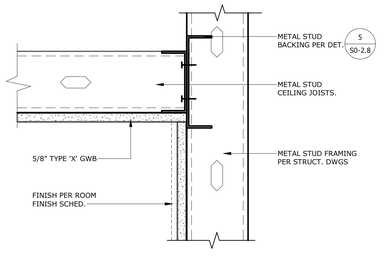

FRAMED GYP BOARD CEILING — SCALE: 3" = 1'-0" — 20

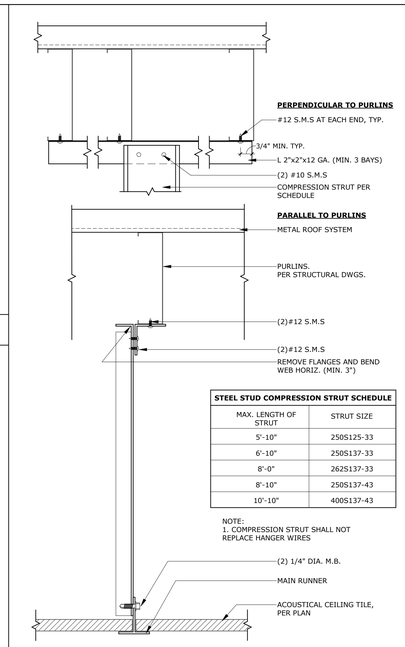

STEEL STUD COMPRESSION STRUT SCHEDULE	
MAX. LENGTH OF STRUT	STRUT SIZE
5'-10"	250S125-33
6'-10"	250S137-33
8'-0"	262S137-33
8'-10"	250S137-43
10'-10"	400S137-43

NOTE:
1. COMPRESSION STRUT SHALL NOT REPLACE HANGER WIRES

(2) 1/4" DIA. M.B.
MAIN RUNNER
ACOUSTICAL CEILING TILE, PER PLAN

COMPRESSION STRUT — SCALE: 3" = 1'-0" — 16

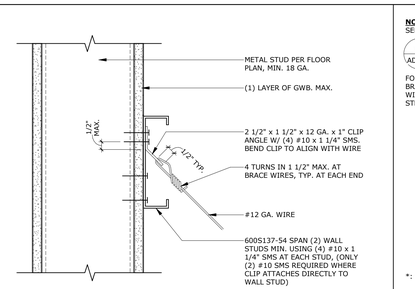

BRACING WIRE TO WALL — SCALE: 3" = 1'-0" — 10

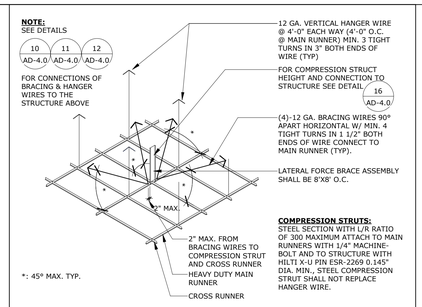

SUSPEN. CEILING BRACING — SCALE: 3" = 1'-0" — 5

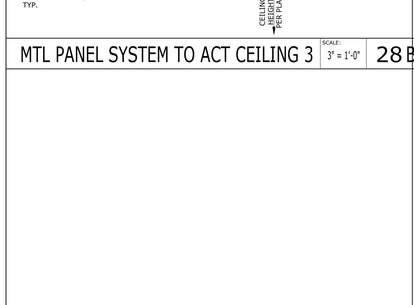

ACT TO ACT CEILING SYSTEM — SCALE: 3" = 1'-0" — 26

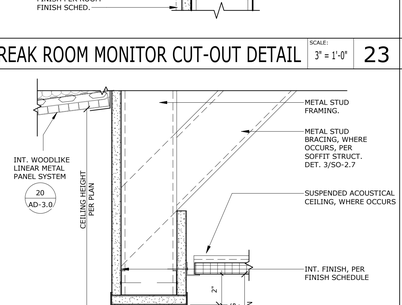

RECESSED LIGHT @ SOFFIT — SCALE: 3" = 1'-0" — 21

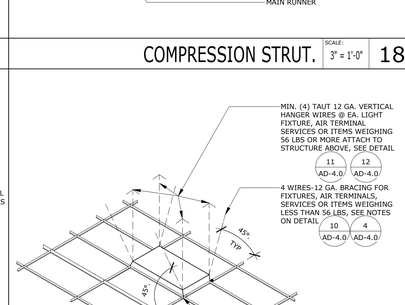

NOTES :
1. BEAM FLANGE THICKNESS SHALL NOT BE LESS THAN 3/16".
2. RDP IN RESPONSIBLE CHARGE, IOR, AND CONTRACTOR SHALL VERIFY THAT NO PAF IS INSTALLED IN THE PROTECTED ZONE OF ANY STEEL MEMBER. SEE ANSI/AISC 341-10

TYP. WIRE CONNECTION @ STL — SCALE: 3" = 1'-0" — 11

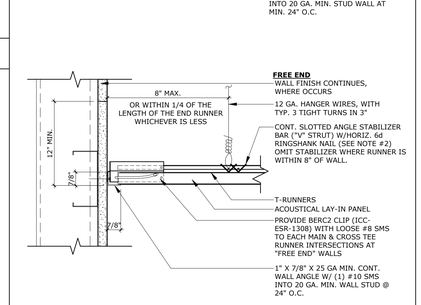

CEILING WIRE SPLICES — SCALE: 6" = 1'-0" — 6

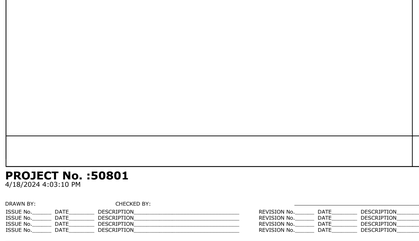

MTL PANEL SYSTEM TO ACT CEILING 2 — SCALE: 3" = 1'-0" — 27

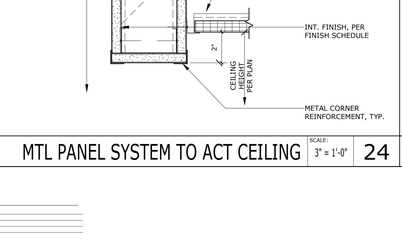

RECESSED LIGHT @ HARD LID — SCALE: 3" = 1'-0" — 22

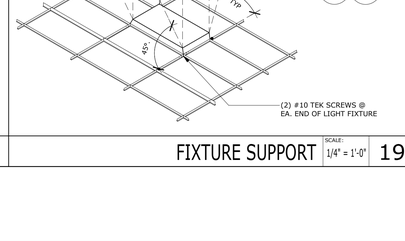

STEEL STUD COMPRESSION STRUT SCHEDULE	
MAX. LENGTH OF STRUT	STRUT SIZE
5'-10"	250S125-33
6'-10"	250S137-33
8'-0"	362S137-33
8'-10"	250S137-43
10'-10"	400S137-43

NOTE:
1. COMPRESSION STRUT SHALL NOT REPLACE HANGER WIRES

(2) 1/4" DIA. M.B.
ACOUSTICAL CEILING TILE, PER PLAN
MAIN RUNNER

COMPRESSION STRUT. — SCALE: 3" = 1'-0" — 18

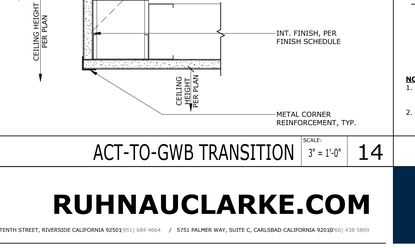

WIRE CONN. @ METAL JOIST — SCALE: 3" = 1'-0" — 12

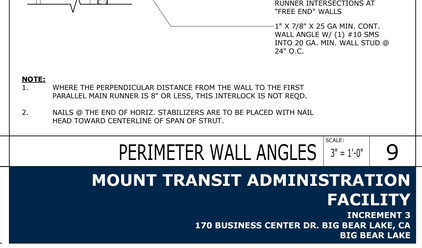

NOTE:
BRACING WIRES & COMPRESSION STRUTS SHALL OCCUR AT EVERY 144 S.F. IN ROOMS OVER 144 S.F.

LAY-IN CEIL. REQUIREMENTS — SCALE: 1/8" = 1'-0" — 7

MTL PANEL SYSTEM TO ACT CEILING 3 — SCALE: 3" = 1'-0" — 28

BREAK ROOM MONITOR CUT-OUT DETAIL — SCALE: 3" = 1'-0" — 23

ACCESS DOOR @ GWB — SCALE: 3" = 1'-0" — 13

MTL PANEL SYSTEM TO ACT CEILING — SCALE: 3" = 1'-0" — 24

MTL PANEL SYSTEM TO ACT CEILING — SCALE: 3" = 1'-0" — 24

FIXTURE SUPPORT — SCALE: 1/4" = 1'-0" — 19

ACT-TO-GWB TRANSITION — SCALE: 3" = 1'-0" — 14

NOTE:
1. WHERE THE PERPENDICULAR DISTANCE FROM THE WALL TO THE FIRST PARALLEL MAIN RUNNER IS 8" OR LESS, THIS INTERLOCK IS NOT REQD.
2. NAILS @ THE END OF HORIZ. STABILIZERS ARE TO BE PLACED WITH NAIL HEAD TOWARD CENTERLINE OF SPAN OF STRUT.

PERIMETER WALL ANGLES — SCALE: 3" = 1'-0" — 9

METAL SUSPENSION SYSTEMS FOR LAY-IN PANEL CEILINGS : 2022 CBC

1. CEILING SYSTEM GENERAL NOTES:

1.01 CEILING SYSTEM COMPONENTS SHALL COMPLY WITH ASTM C635-07 AND SECTION 5.1 OF ASTM E580-10A
1.02 THE CEILING GRID SYSTEM MUST BE RATED HEAVY DUTY AS DEFINED BY ASTM C635-08.
1.03 CEILING SYSTEMS. THE FOLLOWING CEILING SYSTEM(S) IS/ARE PART OF THE SCOPE OF THIS PROJECT:
ACT ONLY:
MANUFACTURER'S NAME: ARMSTRONG WORLD INDUSTRIES
PRODUCT EVALUATION REPORT TYPE AND NUMBER: ICC ESR-1308
MANUFACTURER'S MODEL NUMBER - MAIN RUNNER: 7301
MANUFACTURER'S CATALOG NUMBER - CROSS RUNNER: XL7342, XL7328
FOR OTHER SYSTEMS, SEE SPEC SECTION 09 51 00
1.04 SEISMIC WALL CLIP:
MANUFACTURER'S MODEL: BERC2
1.05 CEILING PANELS SHALL NOT SUPPORT ANY LIGHT FIXTURES, AIR TERMINALS OR DEVICES.
1.06 FOR CEILING INSTALLATIONS UTILIZING ACOUSTICAL TILE PANELS OF MINERAL OR GLASS FIBER, IT IS NOT MANDATORY TO PROVIDE 3/4" CLEARANCE BETWEEN THE ACOUSTICAL TILE PANELS AND THE WALL ON THE SIDES OF THE CEILING WHICH ARE FREE TO SLIP. FOR ALL OTHER CEILING PANEL TYPES, PROVIDE 3/4" CLEARANCE BETWEEN THE CEILING PANEL AND THE WALL ON THE SIDES OF THE CEILING FREE TO SLIP.

2. MATERIALS:

2.01 CEILING WIRE SHALL BE CLASS 1 ZINC COATED (GALVANIZED) CARBON STEEL CONFORMING TO ASTM A641-09A. WIRE SHALL BE #12 GAGE (0.106" DIAMETER) WITH SOFT TEMPER AND MINIMUM TENSILE STRENGTH = 70 KSI.
2.02 GALVANIZED SHEET STEEL (INCLUDING THAT USED FOR METAL STUD AND TRACK COMPRESSION STRUTS/POST) SHALL CONFORM TO ASTM A653-11, OR OTHER EQUIVALENT SHEET STEEL LISTED IN SECTION A2.1 OF THE NORTH AMERICAN SPECIFICATION FOR THE DESIGN OF COLD-FORMED STEEL STRUCTURAL MEMBERS 2007, INCLUDING SUPPLEMENT 2 DATED 2010 (AISI S100-07/S2-10). MATERIAL 43 MIL (18 GAGE) AND LIGHTER SHALL HAVE MINIMUM YIELD STRENGTH OF 33 KSI. MATERIAL 54 MIL (16 GAGE) AND HEAVIER SHALL HAVE A MINIMUM YIELD STRENGTH OF 50 KSI.
2.03 ELECTRICAL METALLIC TUBE (EMT) SHALL BE ANSI C80.3/UL 797 CARBON STEEL WITH G90 GALVANIZING. EMT SHALL HAVE MINIMUM YIELD STRENGTH (Fy) OF 30 KSI AND MINIMUM ULTIMATE STRENGTH (Fu) OF 48 KSI.

3. ATTACHMENT OF HANGER AND BRACING WIRES:

3.01 SEPARATE ALL CEILING HANGER AND BRACING WIRES AT LEAST SIX (6) INCHES FROM ALL UNBRACED DUCTS, PUPES, CONDUIT, ETC.
3.02 HANGER AND BRACING WIRES SHALL NOT ATTACH TO OR BEND AROUND OBSTRUCTIONS INCLUDING BUT NOT LIMITED TO: PIPING, DUCTWORK, CONDUIT AND EQUIPMENT.
3.03 HANGER WIRES THAT ARE MORE THAN ONE (HORIZONTAL) IN SIX (VERTICAL) OUT OF PLUMB SHALL HAVE COUNTER-SLOPING WIRES.
3.04 SLACK SAFETY WIRES SHALL BE CONSIDERED HANGER WIRES FOR INSTALLATION AND TESTING REQUIREMENTS.
3.05 HANGER AND BRACING WIRE ANCHORAGE TO THE STRUCTURE SHALL BE INSTALLED IN SUCH A MANNER THAT THE DIRECTION OF THE ANCHORAGE ALIGNS CLOSELY WITH THE DIRECTION OF THE WIRE. (E.G. BRACING WIRE CEILING CLIPS MUST BE BENT AS SHOWN IN THE DETAILS AND ROTATED AS REQUIRED TO ALIGN CLOSELY WITH THE DIRECTION OF THE WIRE, SCREW EYES IN WOOD MUST BE INSTALLED SO THEY ALIGN CLOSELY WITH THE DIRECTION OF THE WIRE, ETC.)

4. FASTENERS AND WELDING:

4.01 SHEET METAL SCREWS SHALL COMPLY WITH ASTM C1513-10, ASME B18.6.4-89 (R2005). PENETRATION OF SCREWS THROUGH JOINED MATERIAL SHALL NOT BE LESS THAN THREE EXPOSED THREADS.
4.02 EXPANSION ANCHORS SHALL BE: N/A
4.03 POWER-ACTUATED FASTENERS SHALL BE: N/A
4.04 IF NOT OTHERWISE SPECIFIED IN THE EVALUATION REPORT, POWER-ACTUATED FASTENERS INSTALLED IN STEEL SHALL BE INSTALLED SO THE ENTIRE POINTED END OF THE FASTENER IS DRIVEN THROUGH THE STEEL MEMBER.
4.05 POWER-ACTUATED FASTENERS IN CONCRETE ARE NOT PERMITTED FOR BRACING WIRES.
4.06 CONCRETE REINFORCEMENT AND PRESTRESSING TENDONS SHALL BE LOCATED BY NON-DESTRUCTIVE MEANS PRIOR TO INSTALLING POST - INSTALLED ANCHOR.
4.07 WELDING SHALL BE IN ACCORDANCE WITH AWS D1.3 USING E60XX SERIES ELECTRODES.

5. TESTING: ALL FIELD TESTING MUST BE PERFORMED IN THE PRESENCE OF THE PROJECT INSPECTOR.

5.01 POST-INSTALLED ANCHORS IN CONCRETE USED TO SUPPORT HANGER WIRES SHALL BE TESTED AT A FREQUENCY OF 10 PERCENT. POWER ACTUATED FASTENERS IN CONCRETE SHALL BE FIELD TESTED FOR 200 LBS. IN TENSION. ALL OTHER POST-INSTALLED ANCHORS IN CONCRETE SHALL BE TESTED IN ACCORDANCE WITH CBC SECTION 1910A.5.
5.02 POST-INSTALLED ANCHORS IN CONCRETE USED TO ATTACH BRACING WIRES SHALL BE TESTED AT A FREQUENCY OF 50 PERCENT IN ACCORDANCE WITH CBC SECTION 1910A.5.

6. LIGHT FIXTURES:

6.01 ALL LIGHT FIXTURES SHALL BE POSITIVELY ATTACHED TO THE CEILING SUSPENSION SYSTEMS BY MECHANICAL MEANS TO RESIST A HORIZONTAL FORCE EQUAL TO THE WEIGHT OF THE FIXTURE. A MINIMUM OF TWO SCREWS OR APPROVED FASTENERS ARE QREUIRED AT EACH LIGHT FIXTURE, PER ASTM E580, SECTION 5.3.1.
6.02 SURFACE-MOUNTED LIGHT FIXTURES SHALL BE ATTACHED TO THE MAIN RUNNER WITH AT LEAST TWO POSITIVE CLAMPING DEVICES. THE CLAMPING DEVICE SHALL COMPLETELY SORROUND THE SUPPORTING CEILING RUNNER AND BE MADE OF STEEL WITH A MINIMUM THICKNESS OF #14 GAGE. ROTATIONAL SPRING CATCHES DO NOT COMPLY.
6.03 LIGHT FIXTURES WEIGHING LESS THAT OR EQUAL TO 10 L.B. SHALL HAVE A MINIMUM OF ONE (1) #12 GAGE SLACK SAFETY WIRE CONNECTED FROM THE FIXTURE HOUSING TO THE STRUCTURE ABOVE.
6.04 LIGHT FIXTURES WEIGHING GREATER THAN 10 LB. BUT LESS THAN OR EQUAL TO 56 LBS. MAY BE SUPPORTED DIRECTLY ON THE CEILING RUNNERS, BUT THEY SHALL HAVE A MINIMUM OF TWO (2) #12 GAGE SLACK SAFETY WIRES CONNECTED FROM THE FIXTURE HOUSING AT DIAGONAL CORNERS TO THE STRUCTURE ABOVE.
6.05 ALL LIGHT FIXTURES WEIGHING GREATER THAN 56 LB. SHALL BE INDEPENDENTLY SUPPORTED BY NOT LESS THAN FOUR (4) TAUT #12 GAGE HANGER WIRES (ONE AT EACH CORNER) ATTACHED FROM THE FIXTURE HOUSING TO THE STRUCTURE ABOVE OR OTHER APPROVED HANGERS. THE FOUR (4) TAUT #12 GAGE WIRES OR OTHER APPROVED HANGERS, INCLUDING THEIR ATTACHMENT TO THE STRUCTURE ABOVE, SHALL BE CAPABLE OF SUPPORTING FOUR (4) TIMES THE WEIGHT OF THE FIXTURE.

7. SERVICES WITHIN THE CEILING:

7.01 ALL FLEXIBLE SPRINKELER HOSE FITTING MOUNTING BRACKETS, CEILING MOUNTED AIR TERMINALS OR OTHER SERVICES SHALL BE POSITIVELY ATTACHED TO THE CEILING SUSPENSION SYSTEMS BY MECHANICAL MEANS. SCREWS OR APPROVED FASTENERS ARE REQUIRED. A MINIMUM OF TWO ATTACHMENTS ARE REQUIRED AT EACH COMPONENT.
7.02 CEILING-MOUNTED AIR TERMINALS OR OTHER SERVICES WEIGHING LESS THAN OR EQUAL TO 20 LB. SHALL HAVE ONE (1) #12 GAGE SLACK SAFETY WIRE ATTACHED FROM THE TERMINAL OR SERVICE TO THE STRUCTURE ABOVE.
7.03 FLEXIBLE SPRINKELER HOSE FITTINGS, CEILING-MOUNTED AIR TERMINALS OR OTHER SERVICES WEIGHING MORE THAN 20 LB. BUT LESS THAN OR EQUAL TO 56 LB. SHALL HAVE TWO (2) #12 GAGE SLACK SAFETY WIRES (AT DIAGONAL CORNERS) CONNECTED FROM THE TERMINAL OR SERVICE TO THE STRUCTURE ABOVE.
7.04 FLEXIBLE SPRINKELER HOSE FITTINGS, CEILING-MOUNTED AIR TERMINALS OR OTHER SERVICES WEIGHING MORE THAN 56 LB. SHALL BE SUPPORTED DIRECTLY FROM THE STRUCTURE ABOVE BY NOT LESS THAN FOUR (4) TAUT #12 GAGE HANGER WIRES ATTACHED FROM THE TERMINAL OR SERVICE TO THE STRUCTURE ABOVE OR OTHER APPROVED HANGERS.

8. OTHER DEVICES WITHIN THE CEILING:

8.01 ALL LIGHTWEIGHT MISCELLANEOUS DEVICES, SUCH AS STROBE LIGHTS, OCCUPANCY SENSORS, SPEAKERS, EXIT SIGNS, ETC., SHALL BE ATTACHED TO THE CEILING GRID, IN ADDITION, DEVICES WEIGHING MORE THAN 10 LBS. SHALL HAVE A #12 GAGE SLACK SAFETY WIRE ANCHORED TO THE STRUCTURE ABOVE. DEVICES WEIGHING MORE THAN 20 LB. SHALL BE SUPPORTED INDEPENDENTLY FROM THE STRUCTURE ABOVE.

CEILING REQUIREMENTS — SCALE: 1 1/2" = 1'-0" — 4

MOUNT TRANSIT ADMINISTRATION FACILITY: INCREMENT 3: 100% CD

PROJECT No. :50801
4/18/2024 4:03:10 PM

DRAWN BY: CHECKED BY:

ISSUE No.:_____ DATE:_____ DESCRIPTION:_____
ISSUE No.:_____ DATE:_____ DESCRIPTION:_____
ISSUE No.:_____ DATE:_____ DESCRIPTION:_____

REVISION No.:_____ DATE:_____ DESCRIPTION:_____
REVISION No.:_____ DATE:_____ DESCRIPTION:_____
REVISION No.:_____ DATE:_____ DESCRIPTION:_____

RUHNAUCLARKE.COM
3775 TENTH STREET, RIVERSIDE CALIFORNIA 92501(951) 684 4664 / 5751 PALMER WAY, SUITE C, CARLSBAD CALIFORNIA 92010(760) 438 5899

MOUNT TRANSIT ADMINISTRATION FACILITY
INCREMENT 3
170 BUSINESS CENTER DR. BIG BEAR LAKE, CA
BIG BEAR LAKE

DETAILS
CEILING DETAILS

AD-4.0

50801

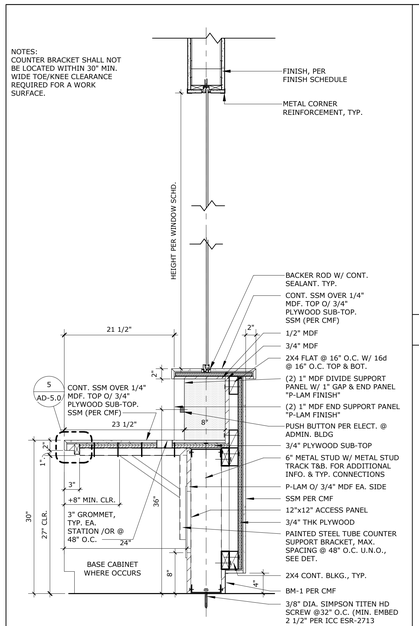

RECEPTION DESK WINDOW DETAIL — SCALE: 1" = 1'-0" — 26

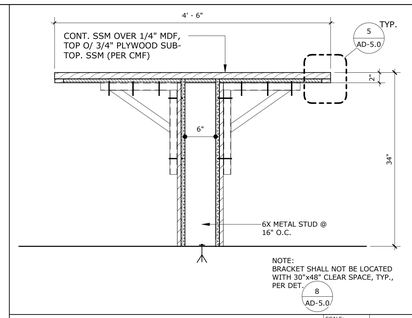

ISLAND COUNTER ADA — SCALE: 1" = 1'-0" — 20

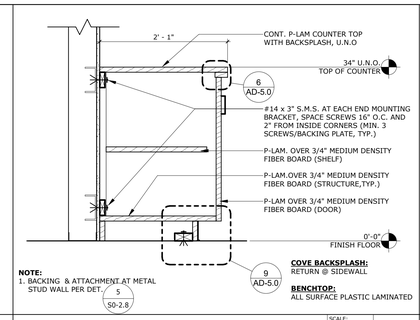

P-LAM BASE CABINET — SCALE: 1" = 1'-0" — 10

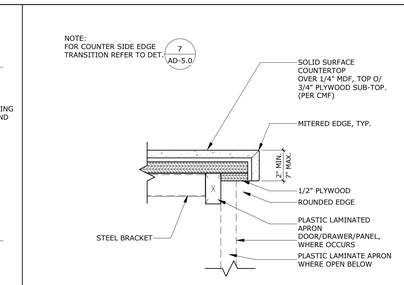

SSM COUNTERTOP EDGE — SCALE: 3" = 1'-0" — 5

STAMPS

AGENCY APPROVAL
File No.= n.a.

RUHNAU CLARKE ARCHITECTS

CONSULTANT BRANDING

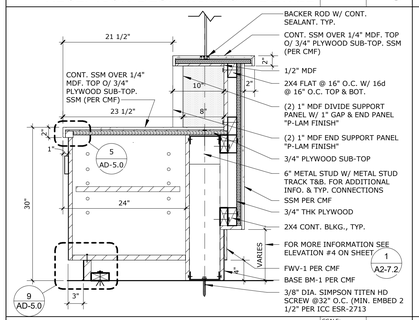

RECEPTION DESK WINDOW DETAIL — SCALE: 1" = 1'-0" — 28

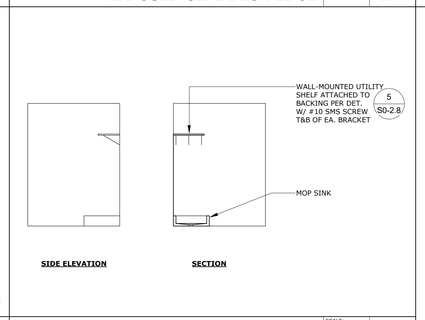

TYP. CUSTODIAL ELEVATIONS1 — SCALE: 1/4" = 1'-0" — 22

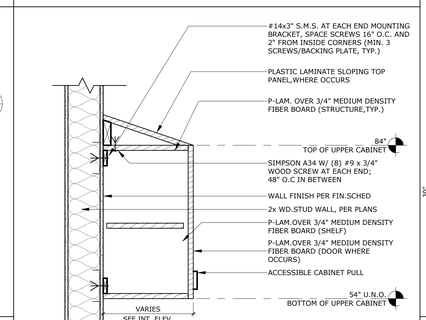

UPPER & BASE CABINET — SCALE: 1" = 1'-0" — 18

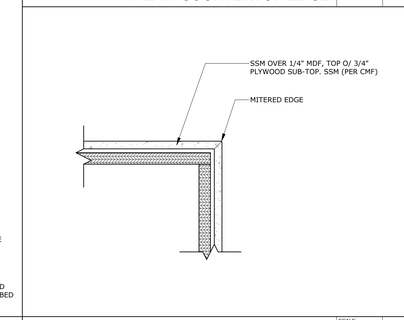

RECEPTION DESK DETAIL — SCALE: 1" = 1'-0" — 12

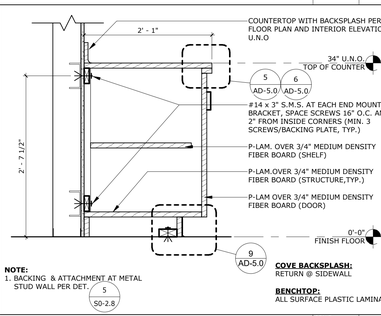

P-LAM COUNTERTOP EDGE — SCALE: 3" = 1'-0" — 6

TYP. CABINET PULLS — SCALE: 1" = 1'-0" — 1

TACK SURFACE PANEL — SCALE: 1/4" = 1'-0" — 4

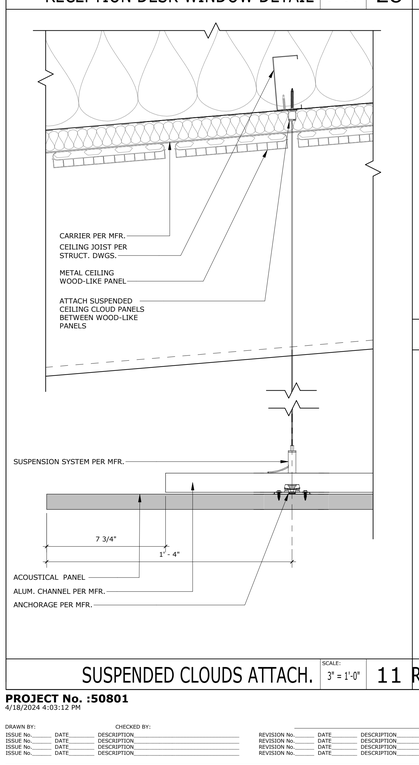

SUSPENDED CLOUDS ATTACH. — SCALE: 3" = 1'-0" — 11

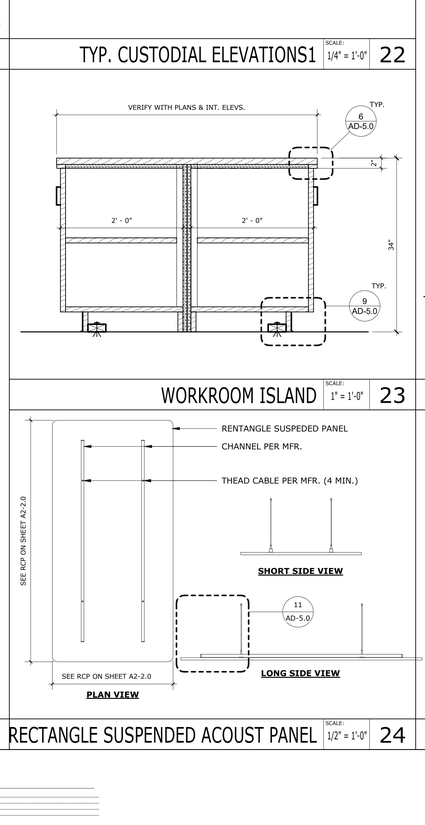

WORKROOM ISLAND — SCALE: 1" = 1'-0" — 23

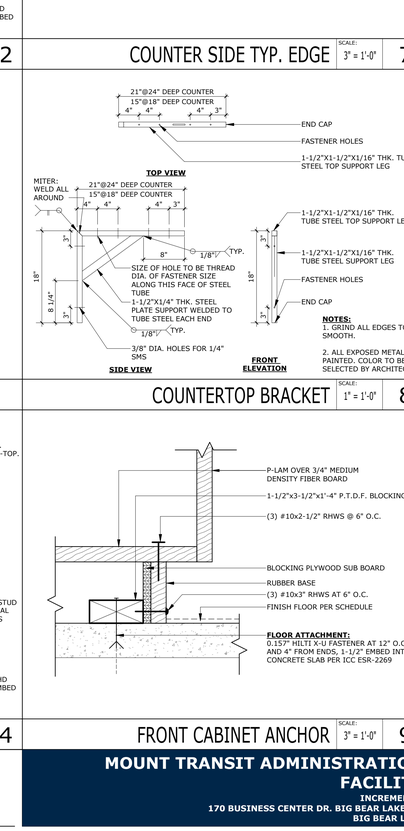

COUNTERTOP BRACKET — SCALE: 1" = 1'-0" — 8

RECTANGLE SUSPENDED ACOUST PANEL — SCALE: 1/2" = 1'-0" — 24

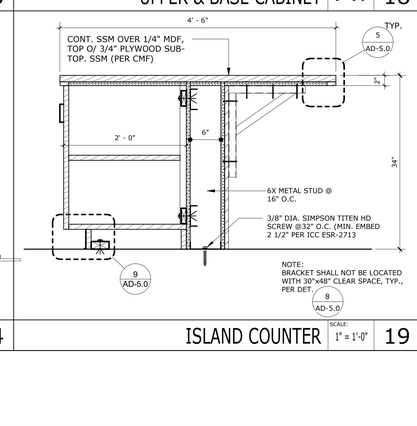

ISLAND COUNTER — SCALE: 1" = 1'-0" — 19

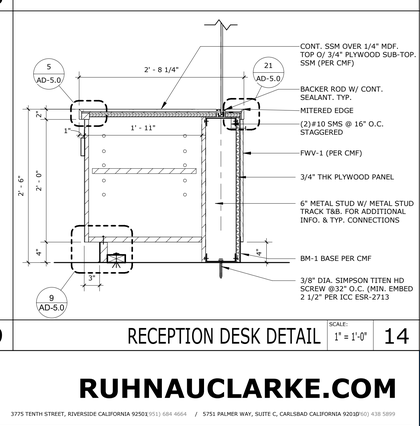

RECEPTION DESK DETAIL — SCALE: 1" = 1'-0" — 14

FRONT CABINET ANCHOR — SCALE: 3" = 1'-0" — 9

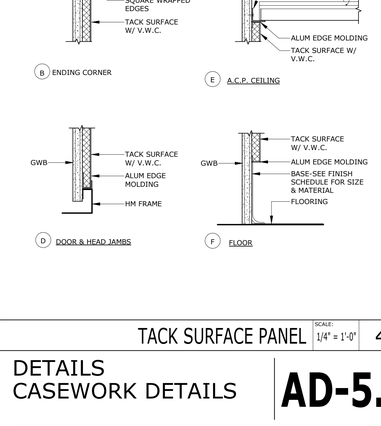

BASE CABINET — SCALE: 1" = 1'-0" — 2

PROJECT No. :50801
4/18/2024 4:03:12 PM

DRAWN BY: CHECKED BY:

ISSUE No.____ DATE____ DESCRIPTION____
ISSUE No.____ DATE____ DESCRIPTION____
ISSUE No.____ DATE____ DESCRIPTION____
ISSUE No.____ DATE____ DESCRIPTION____

REVISION No.____ DATE____ DESCRIPTION____
REVISION No.____ DATE____ DESCRIPTION____
REVISION No.____ DATE____ DESCRIPTION____
REVISION No.____ DATE____ DESCRIPTION____

RUHNAUCLARKE.COM
3775 TENTH STREET, RIVERSIDE CALIFORNIA 92501(951) 684 4664 / 5751 PALMER WAY, SUITE C, CARLSBAD CALIFORNIA 92010(760) 438 5899

MOUNT TRANSIT ADMINISTRATION FACILITY
INCREMENT 3
170 BUSINESS CENTER DR. BIG BEAR LAKE, CA
BIG BEAR LAKE

DETAILS
CASEWORK DETAILS

AD-5.0

50801

MOUNT TRANSIT ADMINISTRATION FACILITY: INCREMENT 3: 100% CD

NOTE:
1. FURNISH AND INSTALL WINDOW SEALS OR WEATHER STRIPPING AS SPECIFIED. NOT SHOWN HERE FOR SAKE OF CLARITY

2. REFER TO CURTAIN WALL SHEETS FOR ADDITIONAL INFO.

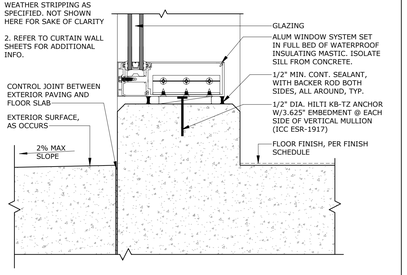

EXT. ALUM. WINDOW SILL | SCALE: 3" = 1'-0" | 25

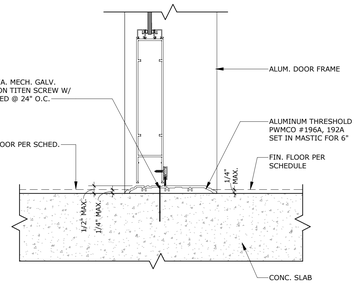

INT. ALUM. DOOR SILL | SCALE: 3" = 1'-0" | 20

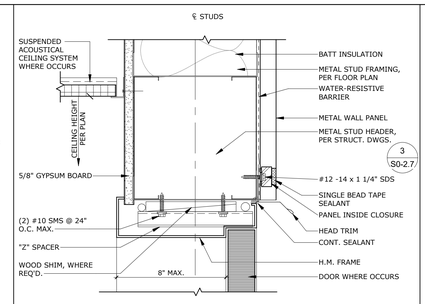

EXT. HM. DOOR HEAD | SCALE: 3" = 1'-0" | 15

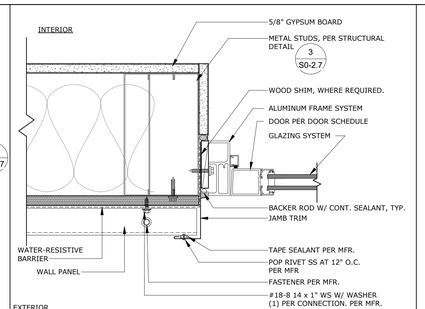

ALUMN. DOOR JAMB | SCALE: 3" = 1'-0" | 10

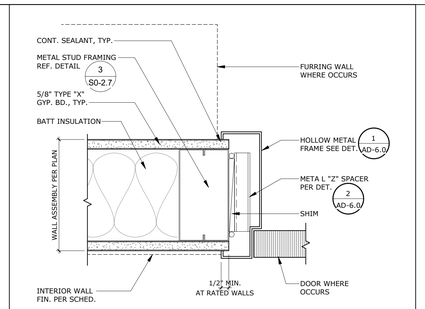

INT. HM. DOOR JAMB | SCALE: 3" = 1'-0" | 5

LICENSED ARCHITECT
ROGER CLARKE
No. C-41130
Exp.10-31-25
STATE OF CALIFORNIA

STAMPS

AGENCY APPROVAL
File No.= XX-

CONSULTANT BRANDING

RUHNAU CLARKE ARCHITECTS

NOTE: REFER TO CURTAIN WALL SHEETS FOR ADDITIONAL INFO.

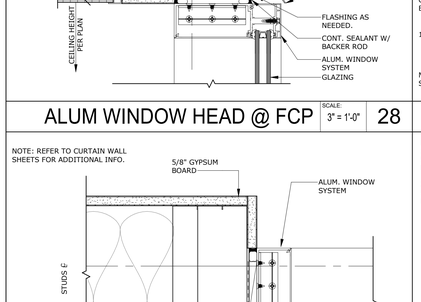

ALUM W. HEAD @ MTL V. PANEL | SCALE: 3" = 1'-0" | 26

NOTE: REFER TO CURTAIN WALL SHEETS FOR ADDITIONAL INFO.

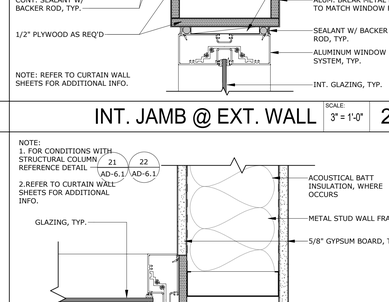

INT. ALUM. WIN. DB. JAMB | SCALE: 3" = 1'-0" | 21

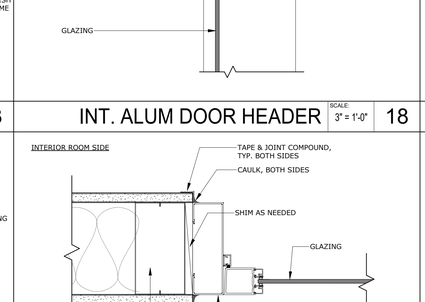

EXT. HM. DOOR JAMB 2 | SCALE: 3" = 1'-0" | 16

NOTE: REFER TO CURTAIN WALL SHEETS FOR ADDITIONAL INFO.

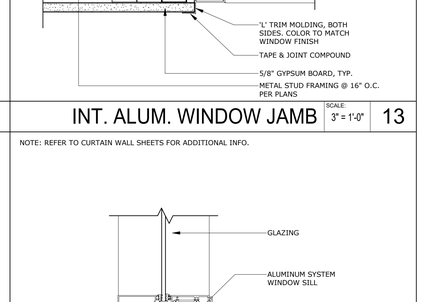

INT. ALUM. WINDOW HEAD | SCALE: 3" = 1'-0" | 11

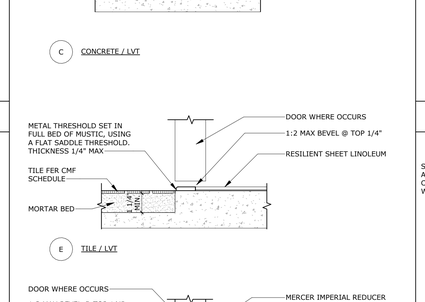

INT. HM. DOOR HEAD W/ TILE | SCALE: 3" = 1'-0" | 6

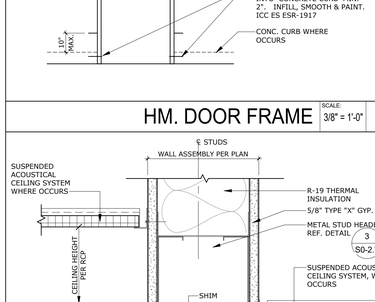

H.M. DOOR & WINDOW FRAME. | SCALE: 6" = 1'-0" | 1

NOTE: REFER TO CURTAIN WALL SHEETS FOR ADDITIONAL INFO.

ALUM W. JAMB @ MTL V. PANEL | SCALE: 3" = 1'-0" | 27

NOTE: REFER TO CURTAIN WALL SHEETS FOR ADDITIONAL INFO.

INT. JAMB @ CORNER MTL | SCALE: 3" = 1'-0" | 22

TYP. HM THRESHOLD | SCALE: 3" = 1'-0" | 17

NOTE: REFER TO CURTAIN WALL SHEETS FOR ADDITIONAL INFO.

INT. ALUM. WINDOW MULLION | SCALE: 3" = 1'-0" | 12

INT. HM. DOOR JAMB W/ TILE | SCALE: 3" = 1'-0" | 7

H.M. FRAME ANCHOR | SCALE: 12" = 1'-0" | 2

NOTE: REFER TO CURTAIN WALL SHEETS FOR ADDITIONAL INFO.

ALUM WINDOW HEAD @ FCP | SCALE: 3" = 1'-0" | 28

INT. JAMB @ EXT. WALL | SCALE: 3" = 1'-0" | 23

INT. ALUM DOOR HEADER | SCALE: 3" = 1'-0" | 18

NOTE: REFER TO CURTAIN WALL SHEETS FOR ADDITIONAL INFO.

INT. ALUM. WINDOW JAMB | SCALE: 3" = 1'-0" | 13

FLOOR TRANSITIONS | SCALE: 3" = 1'-0" | 9

HM. DOOR FRAME | SCALE: 3/8" = 1'-0" | 3

NOTE: REFER TO CURTAIN WALL SHEETS FOR ADDITIONAL INFO.

ALUM. WINDOW JAMB @ FCP | SCALE: 3" = 1'-0" | 29

INT. ALUM W. JAMB @ CORNER | SCALE: 3" = 1'-0" | 24

INT. ALUM DOOR JAMB | SCALE: 3" = 1'-0" | 19

NOTE: REFER TO CURTAIN WALL SHEETS FOR ADDITIONAL INFO.

INT. ALUM. WINDOW SILL | SCALE: 3" = 1'-0" | 14

INT. HM. DOOR HEAD | SCALE: 3" = 1'-0" | 4

PROJECT No. :50801
4/18/2024 4:03:14 PM

DRAWN BY: CHECKED BY:

ISSUE No.:_____ DATE:_____ DESCRIPTION:_____
ISSUE No.:_____ DATE:_____ DESCRIPTION:_____
ISSUE No.:_____ DATE:_____ DESCRIPTION:_____

REVISION No.:_____ DATE:_____ DESCRIPTION:_____
REVISION No.:_____ DATE:_____ DESCRIPTION:_____
REVISION No.:_____ DATE:_____ DESCRIPTION:_____

RUHNAUCLARKE.COM

3775 TENTH STREET, RIVERSIDE CALIFORNIA 92501(951) 684 4664 / 5751 PALMER WAY, SUITE C, CARLSBAD CALIFORNIA 92010(760) 438 5899

MOUNT TRANSIT ADMINISTRATION FACILITY
INCREMENT 3
170 BUSINESS CENTER DR. BIG BEAR LAKE, CA
BIG BEAR LAKE

DETAILS
DOOR & WINDOW DETAILS

AD-6.0

50801

MOUNT TRANSIT ADMINISTRATION FACILITY: INCREMENT 3: 100% CD

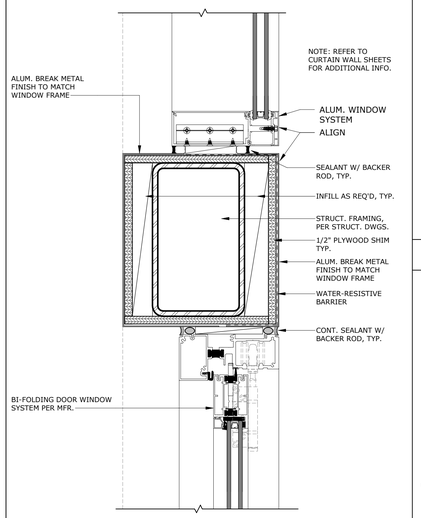

BI-FOLDING DOOR - HEADER | SCALE: 3" = 1'-0" | 26

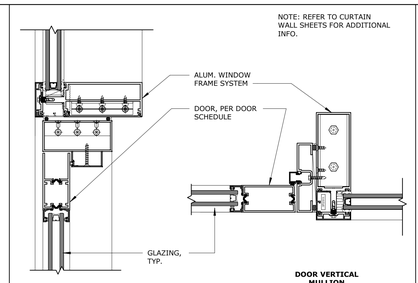

STOREFRONT DR HEAD & JAMB | SCALE: 3" = 1'-0" | 20

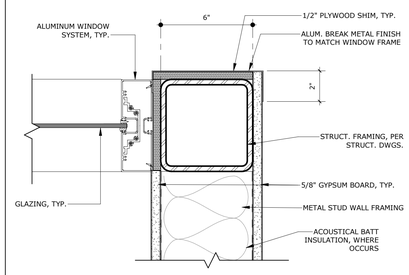

NOTE: REFER TO CURTAIN WALL SHEETS FOR ADDITIONAL INFO.

INT. ALUM W. JAMB @ COLUMN CORNER | SCALE: 3" = 1'-0" | 21

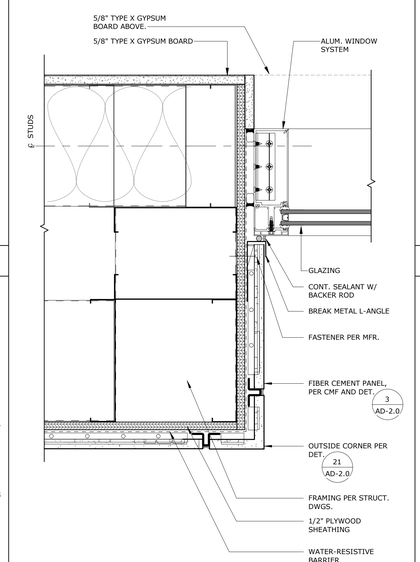

EXT. ALUM JAMB @ FCP | SCALE: 3" = 1'-0" | 16

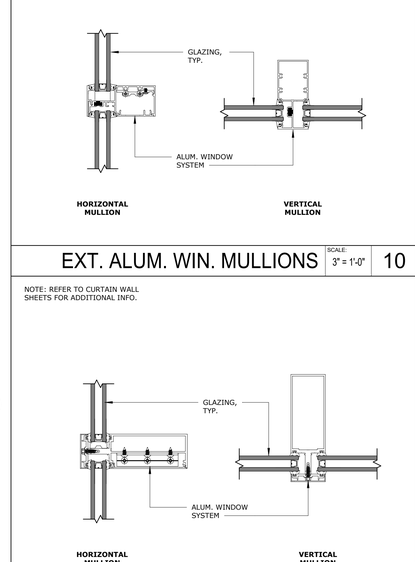

EXT. STOREFRONT MULLIONS | SCALE: 3" = 1'-0" | 11

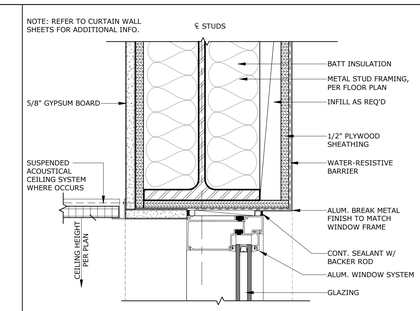

EXT. ALUM HEAD @ BREAK MTL | SCALE: 3" = 1'-0" | 5

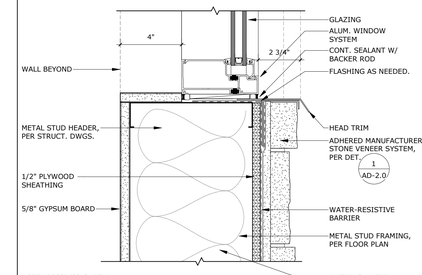

ALUM WINDOW SILL @ S. V. | SCALE: 3" = 1'-0" | 6

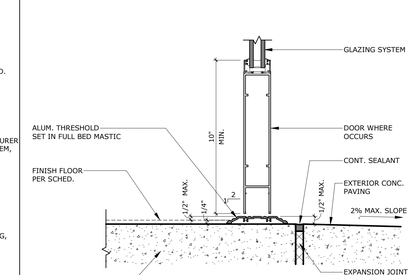

ALUM. DOOR THRESHOLD | SCALE: 3" = 1'-0" | 1

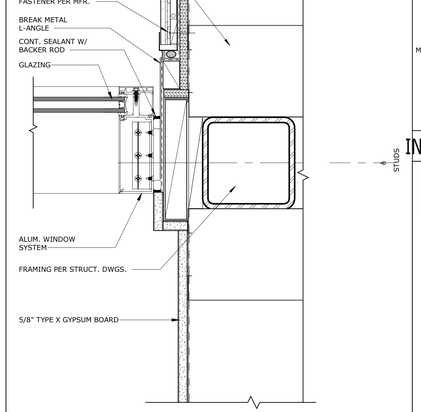

EXT. ALUM JAMB @ FCP AND COLUMN | SCALE: 3" = 1'-0" | 28

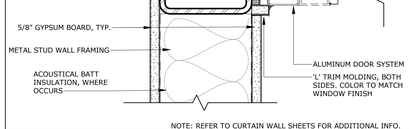

INT. ALUM DR. JAMB @ COLUMN CORNER | SCALE: 3" = 1'-0" | 22

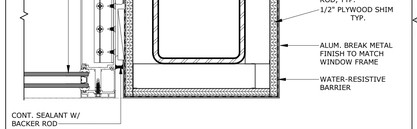

ALUM STOREFRONT @ CORNER | SCALE: 3" = 1'-0" | 17

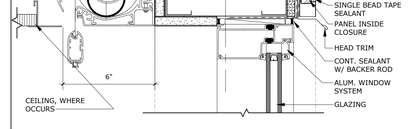

EXT. WIN. HEAD @ MWP | SCALE: 3" = 1'-0" | 12

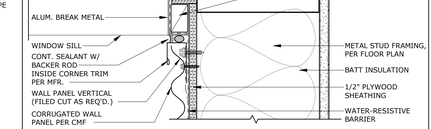

ALUM. WIN. @ MWP CORNER | SCALE: 3" = 1'-0" | 7

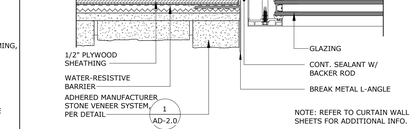

ALUM WINDOW JAMB @ SV | SCALE: 3" = 1'-0" | 2

DOUBLE WALL HEADER @ FCP | SCALE: 3" = 1'-0" | 18

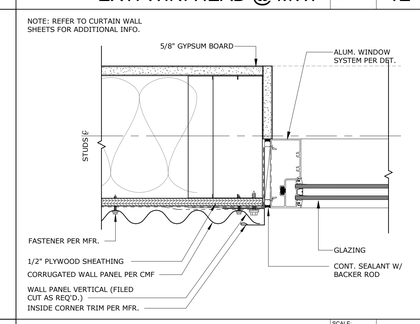

EXT. WIN. JAMB @MWP | SCALE: 3" = 1'-0" | 13

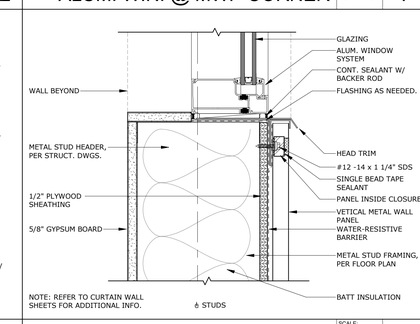

ALUM WIN. SILL @ MWP | SCALE: 3" = 1'-0" | 8

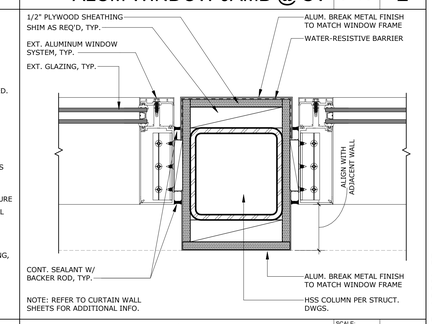

EXT. JAMB @ METAL BREAK | SCALE: 3" = 1'-0" | 3

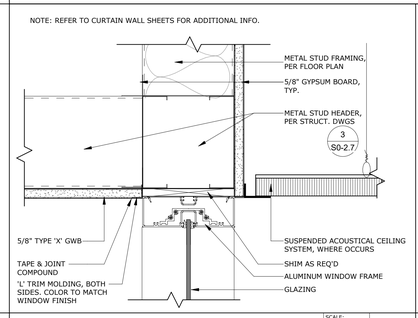

INT. WIND HEADER @ GWB | SCALE: 3" = 1'-0" | 24

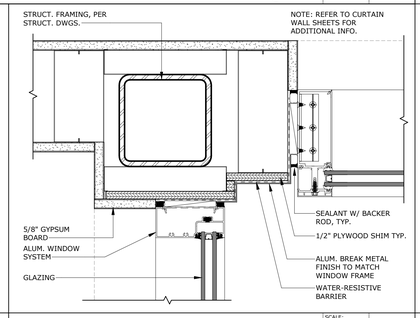

STOREFRONT INSIDE JAMB | SCALE: 3" = 1'-0" | 19

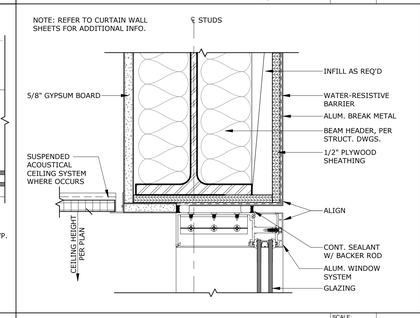

EXT. ALUM HEAD @ HSS | SCALE: 3" = 1'-0" | 14

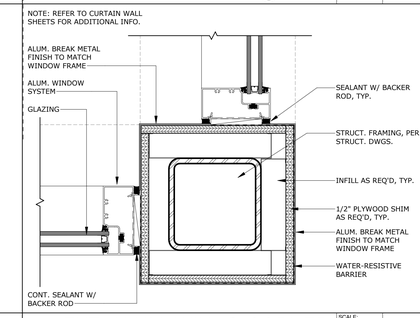

EXT. ALUM. WIN. @ CORNER | SCALE: 3" = 1'-0" | 9

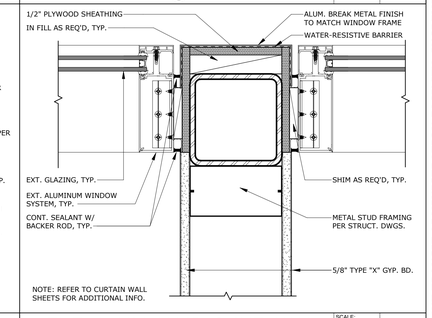

EXT. ALUM JAMB @ INT. WALL | SCALE: 3" = 1'-0" | 4

PROJECT No. :50801
4/18/2024 4:03:17 PM

DRAWN BY: _____ CHECKED BY: _____

ISSUE No._____ DATE_____ DESCRIPTION_____
ISSUE No._____ DATE_____ DESCRIPTION_____
ISSUE No._____ DATE_____ DESCRIPTION_____
ISSUE No._____ DATE_____ DESCRIPTION_____

REVISION No._____ DATE_____ DESCRIPTION_____
REVISION No._____ DATE_____ DESCRIPTION_____
REVISION No._____ DATE_____ DESCRIPTION_____
REVISION No._____ DATE_____ DESCRIPTION_____

RUHNAUCLARKE.COM
3775 TENTH STREET, RIVERSIDE CALIFORNIA 92501(951) 684 4664 / 5751 PALMER WAY, SUITE C, CARLSBAD CALIFORNIA 92010(760) 438 5899

MOUNT TRANSIT ADMINISTRATION FACILITY
INCREMENT 3
170 BUSINESS CENTER DR. BIG BEAR LAKE, CA
BIG BEAR LAKE

DOOR & WINDOW DETAILS

AD-6.1

50801

MOUNT TRANSIT ADMINISTRATION FACILITY: INCREMENT 3: 100% CD

LIST OF ABBREVIATIONS

ADD'L.	ADDITIONAL
ALT.	ALTERNATE
ACI	AMERICAN CONCRETE INSTITUTE
APA	AMERICAN PLYWOOD ASSOCIATION
ASTM	AMERICAN SOCIETY FOR TESTING AND MATERIALS
AWS	AMERICAN WELDING SOCIETY
A.B.	ANCHOR BOLT(S)
APPROX.	APPROXIMATELY
ARCH.	ARCHITECT / ARCHITECTURAL
@	AT
B. PL.	BASE PLATE
BM.	BEAM
BRG.	BEARING
BTWN.	BETWEEN
BLK.	BLOCK
BLKG.	BLOCKING
B.E.	BOTH ENDS
BOT. OR BOTT.	BOTTOM
B.N.	BOUNDARY NAILS
BLDG.	BUILDING
C	CAMBER
CANT.	CANTILEVER
CBC	CALIFORNIA BUILDING CODE
CIP	CAST IN PLACE
CLG.	CEILING
CJ	CEILING JOIST OR CONSTRUCTION JOINT OR CONTROL JOINT
CJP	COMPLETE JOINT PENETRATION WELD
℄	CENTER LINE
CLR.	CLEAR
COL.	COLUMN
CONC.	CONCRETE
CMU	CONCRETE MASONRY UNIT
COND.	CONDITION
CONN.	CONNECTION
CONSTR.	CONSTRUCTION
CONT'D	CONTINUED
CONT.	CONTINUOUS
CONTR.	CONTRACTOR
CSK.	COUNTERSINK
DL	DEAD LOAD
DP.	DEEP
DEMO.	DEMOLISH
DTL. OR DET.	DETAIL
DIAG.	DIAGONAL
DIA. OR ⌀	DIAMETER
DIM.	DIMENSION
DO	DITTO
DBL.	DOUBLE
D.F.	DOUGLAS FIR
DWL.	DOWEL
DN.	DOWN
DWG.	DRAWING
EA.	EACH
E.F.	EACH FACE
E.S.	EACH SIDE
E.W.	EACH WAY
E.N.	EDGE NAIL(S)
ELEC.	ELECTRICAL
ELEV.	ELEVATION
EMBED.	EMBEDMENT
ENG.	ENGINEER
EQ.	EQUAL
EQUIP.	EQUIPMENT
EXCAV.	EXCAVATION
(E)	EXISTING
EXP.	EXPANSION
EJ	EXPANSION JOINT
EXT.	EXTERIOR
F.O.C.	FACE OF CONCRETE
F.O.M.	FACE OF MASONRY
F.O.S.	FACE OF STUD OR FACE OF SLAB
F.S.	FAR SIDE
FIN.	FINISH
F.F.	FINISHED FLOOR
FHWS	FLAT HEAD WOOD SCREW
FLR.	FLOOR
FD	FLOOR DRAIN
FTG.	FOOTING
FNDN.	FOUNDATION
FRMG.	FRAMING
GALV.	GALVANIZE
GA.	GAUGE
GLU-LAM	GLUED LAMINATED
GLB	GLUED LAMINATED BEAM
GR.	GRADE
HGR.	HANGER
HR	HARDROCK
HDR.	HEADER
HT.	HEIGHT
HD	HOLD DOWN
HSS	HOLLOW STRUCTURAL SECTION
HORIZ.	HORIZONTAL
INFO.	INFORMATION
I.D.	INSIDE DIAMETER
INT.	INTERIOR
IBC	INTERNATIONAL BUILDING CODE
ICC	INTERNATIONAL CODE COUNCIL
INV.	INVERT
JST.	JOIST
KP	KING POST
KSI	KIPS PER SQUARE INCH
LAM.	LAMINATED
LDGR.	LEDGER
LT. WT. OR LW	LIGHT WEIGHT
LL	LIVE LOAD
LG.	LONG OR LENGTH
LLH	LONG LEG HORIZONTAL
LLV	LONG LEG VERTICAL
LO-HY	LOW HYDROGEN
M.B.	MACHINE BOLT(S)
MFR.	MANUFACTURER
MAS.	MASONRY
M.O.	MASONRY OPENING
MATL.	MATERIAL
MAX.	MAXIMUM
MECH.	MECHANICAL
MTL.	METAL
MIN.	MINIMUM
MISC.	MISCELLANEOUS
MU	MECHANICAL UNIT
N.A.	NEUTRAL AXIS
N.F.	NEAR FACE
N.S.	NEAR SIDE
NSA	NELSON STUD ANCHOR
(N)	NEW
NIC.	NOT IN CONTRACT
NTS.	NOT TO SCALE
NO. OR #	NUMBER
O.C.	ON CENTER
OPNG.	OPENING
OPP.	OPPOSITE
O.H.	OPPOSITE HAND
O.D.	OUTSIDE DIAMETER
PHWS	PAN HEAD WOOD SCREW
P.J.	PANEL JOINT
d	PENNY
PIL.	PILASTER
PL. OR ℙ	PLATE (STEEL OR WOOD)
PLY.	PLYWOOD
PWJ	PLYWOOD WEB JOIST
PCF	POUNDS PER CUBIC FOOT
PSF	POUNDS PER SQUARE FOOT
PSI	POUNDS PER SQUARE INCH
PT	PRESSURE TREATED

LIST OF ABBREVIATIONS (CONT'D)

PTDF	PRESSURE TREATED DOUGLAS FIR
PL	PROPERTY LINE
RAD.	RADIUS
RFTR.	RAFTER
REF.	REFERENCE
REINF.	REINFORCING
REQ'D	REQUIRED
REQMT.	REQUIREMENT
RF.	ROOF
R.D.	ROOF DRAIN
RO.	ROUGH
R.O.	ROUGH OPENING
SCHED.	SCHEDULE
SEC.	SECTION
SEL.	SELECT
SEP.	SEPARATION
SHTG.	SHEATHING
SHT.	SHEET
S.M.	SHEET METAL
SMS	SHEET METAL SCREWS
SIM.	SIMILAR
SIMP.	SIMPSON
SPCG.	SPACING
SPECS.	SPECIFICATION
SQ.	SQUARE
STGR.	STAGGER
S.S.	STAINLESS STEEL
SPC	STANDARD PIPE COLUMN
STD.	STANDARD
STL.	STEEL
STIFF.	STIFFENER
STIRR.	STIRRUP
STRUCT.	STRUCTURAL
SYM.	SYMMETRICAL
TSG	TAPERED STEEL GIRDER
THK.	THICK
K OR KIP	1,000 POUNDS
THRU	THROUGH
TN	TOE NAIL
T&G	TONGUE AND GROOVE
T&B	TOP AND BOTTOM
T.O.F.	TOP OF FOOTING
T.O.L.	TOP OF LEDGER
T.O.S.	TOP OF STEEL OR TOP OF SHEATHING
T.O.W.	TOP OF WALL
TL	TOTAL LOAD
TS	TUBE STEEL
TYP.	TYPICAL
U.N.O.	UNLESS NOTED OTHERWISE
VIF	VERIFY IN FIELD
VERT.	VERTICAL
WT.	WEIGHT
WWF	WELDED WIRE FABRIC
W/	WITH
W/O	WITHOUT
WD.	WOOD
WIJ	WOOD-I-JOIST
WP	WORK POINT
W.S.	WOOD SCREW

GENERAL

1. THESE STRUCTURAL DRAWINGS AND SPECIFICATIONS, INCLUDING ANY ADDENDA (COLLECTIVELY "THE PLANS") INCORPORATE ALL LEGAL AND INDUSTRY REQUIREMENTS AND STANDARDS INCLUDING WITHOUT LIMITATION THE FOLLOWING:
   - THE CALIFORNIA BUILDING CODE, 2022 EDITION.
   - OTHER REGULATING AGENCIES WHICH MAY HAVE AUTHORITY OVER ANY PORTION OF THE WORK, INCLUDING THE STATE OF CALIFORNIA DIVISION OF INDUSTRIAL SAFETY, AND THOSE CODES AND STANDARDS LISTED IN THESE NOTES AND SPECIFICATIONS.
   - THE FUNCTIONALITY STANDARDS SET FORTH IN TITLE 7 OF THE CALIFORNIA CIVIL CODE (THE "RIGHT TO REPAIR ACT").
   - THE MANUFACTURER'S REQUIREMENTS OR RECOMMENDATIONS FOR ANY INCORPORATED PRODUCTS.
   - THE MOST CURRENT APPROVED ISSUES OF ANY NOTED SPECIFICATIONS, CODES AND STANDARDS, INCLUDING SUPPLEMENTS, UNLESS NOTED OTHERWISE.
2. THE PLANS REPRESENT ONLY THE FINISHED STRUCTURE, AND THEY ARE NOT INTENDED TO INDICATE OR REQUIRE ANY CONSTRUCTION MEANS, METHODS, TECHNIQUES, SEQUENCES OR PROCEDURES. IN PARTICULAR AND WITHOUT LIMITATION, THE CONTRACTOR SHALL BE FULLY AND SOLELY RESPONSIBLE FOR ANY AND ALL EXCAVATION, DEMOLITION, SHORING AND ERECTION PROCEDURES AND FOR ANY AND ALL SAFETY PROGRAMS AND PRECAUTIONS.
3. IN USING THE PLANS FOR BIDDING OR CONSTRUCTION PURPOSES, THE CONTRACTOR IS REQUIRED TO REVIEW ALL OF THE PROJECT'S CONSTRUCTION DOCUMENTS AS A WHOLE IN ORDER TO IDENTIFY ALL REQUIREMENTS THAT DIRECTLY OR INDIRECTLY AFFECT ITS PORTION OF THE STRUCTURAL WORK, EVEN REQUIREMENTS LOCATED IN SECTIONS DESIGNATED AS APPLICABLE TO OTHER TRADES. IN CASE OF CONFLICTS, THE CONTRACTOR SHALL EITHER OBTAIN DIRECTION FROM AN APPROPRIATE OWNER REPRESENTATIVE OR OTHERWISE APPLY THE MORE STRINGENT REQUIREMENT.
4. IN INTERPRETING THE PLANS, THE FOLLOWING GENERAL RULES APPLY:
   - WRITTEN DIMENSIONS SHALL TAKE PRECEDENCE OVER SCALED DRAWINGS.
   - SPECIFIC NOTES AND DETAILS SHALL TAKE PRECEDENCE OVER GENERAL NOTES AND TYPICAL DETAILS.
   - WORK NOT PARTICULARLY SHOWN OR SPECIFIED SHALL BE THE SAME AS SIMILAR PARTS THAT ARE SHOWN OR SPECIFIED.
   - SCALED DIMENSIONS AND GRAPHICALLY SHOWN LOCATIONS ARE TO BE CONSIDERED ONLY APPROXIMATE.
5. IN IMPLEMENTING THE PLANS, THE FOLLOWING GENERAL RULES APPLY:
   - BECAUSE THE PLANS ARE INTENDED TO SET FORTH THE REQUIREMENTS FOR CONSTRUCTION IN ONLY AN INDUSTRY-STANDARD LEVEL OF QUALITY AND DETAIL, AND THEREFORE ARE INTENDED TO BE SUPPLEMENTED BY APPROPRIATE REQUESTS FOR CLARIFICATION AND INFORMATION, ERRORS AND OMISSIONS ARE TO BE EXPECTED AND ANTICIPATED; AND THE CONTRACTOR IS REQUIRED TO CAREFULLY REVIEW THE PLANS FOR ERRORS AND OMISSIONS AND TO BRING THESE ERRORS AND OMISSIONS TO THE ATTENTION OF AN APPROPRIATE OWNER REPRESENTATIVE IN A TIMELY MANNER AND ASSUMES THE RISK OF THE CONSEQUENCES OF FAILING TO DO SO BEFORE BIDDING OR OTHERWISE PROCEEDING.
   - THE CONTRACTOR SHALL REVIEW AND VERIFY ALL DIMENSIONS PRIOR TO STARTING CONSTRUCTION, AND NOTIFY THE ARCHITECT IMMEDIATELY OF ANY DISCREPANCIES OR INCONSISTENCIES.
6. SUBMITTALS WILL BE REVIEWED BY THE STRUCTURAL ENGINEER, IF AT ALL, ONLY PURSUANT TO THE INDUSTRY-STANDARD PROTOCOL SET FORTH IN AIA DOCUMENT A201, AND IN NO EVENT WILL THE SUBMITTAL REVIEW PROCESS RELIEVE OR LESSEN THE SUBMITTING CONTRACTOR'S RESPONSIBILITY FOR AN INAPPROPRIATE SUBMITTAL.
7. IN NO EVENT WILL ANY SITE VISITS BY THE STRUCTURAL ENGINEER CONCERN CONSTRUCTION MEANS AND METHODS OR CONSTRUCTION SAFETY, AND ALL SUCH MATTERS SHALL REMAIN THE SOLE RESPONSIBILITY OF THE CONTRACTOR.
8. COPIES OF THE PLANS PROVIDED IN ANY ELECTRONIC FORM ARE SUBJECT TO THE SAME PROVISIONS AS THE OTHER INSTRUMENTS OF SERVICE PREPARED BY OR ON BEHALF OF STRUCTURAL ENGINEER FOR THE PROJECT, INCLUDING WITHOUT LIMITATION THE ENGINEER'S COMMON LAW, STATUTORY OR OTHER RESERVED RIGHTS, INCLUDING COPYRIGHTS. A RECIPIENT IS GRANTED AT MOST A TRANSFERABLE NONEXCLUSIVE LICENSE TO REUSE THE PLANS SOLELY FOR PROJECT PURPOSES; AND NO RECIPIENT IS AUTHORIZED TO USE OR TO ALLOW THE USE OF ALL OR ANY PORTION OF THESE PLANS FOR ANY OTHER PURPOSE, AND ANY USE FOR ANY OTHER PURPOSE WOULD CONSTITUTE ACTIONABLE PLAGIARISM. STRUCTURAL ENGINEER PROVIDES DOCUMENTS IN AN ELECTRONIC FORM ONLY IN ITS STANDARD FORMATS AND CONVENTIONS AND WITH NO GUARANTEE OF COMPATIBILITY WITH ANY RECIPIENT'S SOFTWARE OR HARDWARE, AND ANY USE WITH OR CONVERSION TO OTHER FORMATS OR CONVENTIONS, OR THE USE WITH ANY PARTICULAR SOFTWARE OR HARDWARE, IS AT THE RECIPIENT'S SOLE RISK.

EXISTING CONDITIONS

1. ALL INFORMATION SHOWN ON THE PLANS RELATIVE TO EXISTING CONDITIONS IS GIVEN AS THE BEST PRESENT KNOWLEDGE FROM PLANS SUPPLIED BY THE OWNER, BUT WITHOUT GUARANTEE OF ACCURACY.
2. WHERE ACTUAL CONDITIONS ARE NOT IN ACCORDANCE WITH THE INFORMATION PRESENTED, THE ARCHITECT SHALL BE NOTIFIED IMMEDIATELY. NO MODIFICATIONS OF THE PLANS FOR NEW CONSTRUCTION SHALL BE MADE WITHOUT THE WRITTEN APPROVAL OF THE ARCHITECT.
3. CONTRACTOR TO PROVIDE TEMPORARY ADEQUATE SHORING AS REQ'D.

EXISTING UNDERGROUND UTILITIES

1. THE ARCHITECT AND ENGINEERS ARE NOT RESPONSIBLE FOR THE LOCATIONS OF EXISTING UNDERGROUND UTILITIES WHETHER OR NOT SHOWN ON THE DRAWINGS. THE LOCATION OF ANY EXISTING UNDERGROUND UTILITIES SHOWN ON THE DRAWINGS, IF ANY, IS APPROXIMATE. THE CONTRACTOR SHALL EXERCISE EXTREME CAUTION IN EXCAVATING AND TRENCHING ON THE SITE. THE CONTRACTOR SHALL IMMEDIATELY NOTIFY THE ARCHITECT SHOULD ANY SUCH UNIDENTIFIED CONDITIONS BE DISCOVERED.
2. THE CONTRACTOR SHALL BE RESPONSIBLE FOR ANY DAMAGES WHICH MAY RESULT FROM HIS FAILURE TO EXACTLY LOCATE AND PRESERVE ALL EXISTING UNDERGROUND UTILITIES.

DEMOLITION

1. ALL DEMOLITION SHALL BE CARRIED ON IN SUCH A WAY AS NOT TO DAMAGE EXISTING ELEMENTS, WHICH ARE TO REMAIN IN THE FINISHED STRUCTURE.
2. ALL ELEMENTS OF THE STRUCTURE, WHICH ARE TO REMAIN, AND WHICH ARE DAMAGED DURING DEMOLITION WORK SHALL BE REPLACED AT NO ADDITIONAL COST. EXISTING ELEMENTS SHALL BE PROTECTED TO THE FULLEST EXTENT POSSIBLE, IN ORDER TO MITIGATE DAMAGE.
3. CONTRACTOR IS RESPONSIBLE FOR REMOVAL AND REPLACEMENT OF ALL EXISTING ELEMENTS THAT ARE NECESSARY FOR THE INSTALLATION OF ALL NEW WORK.
4. DO NOT CORE OR CUT NEW OPENINGS IN EXISTING CONCRETE OR MASONRY WITHOUT SPECIFIC APPROVAL OF THE STRUCUTRAL ENGINEER. SUBMIT DIMENSIONED LAYOUT OF ALL PROPOSED NEW OPENINGS TO ARCHITECT FOR REVIEW AND APPROVAL PRIOR TO CORING OR CUTTING OPENINGS. CONTRACTOR, AT HIS OWN EXPENSE, SHALL USE NON-DESTRUCTIVE METHODS TO LOCATE EXISTING REINFORCING. EXISTING REINFORCING SHALL NOT BE CUT WITHOUT SPECIFIC APPROVAL OF THE STRUCTURAL ENGINEER.

PROJECT DESIGN CRITERIA

1. BASIC DESIGN LIVE LOADS:

ROOF: 100 PSF (SNOW)

2. WIND LOADS

RISK CATEGORY: II
EXPOSURE CATEGORY: C
ULTIMATE DESIGN WIND SPEED (3-SECOND GUST), V_{ULT} = 102 MPH
NOMINAL DESIGN WIND SPEED, V_{ASD} = 79 MPH
VELOCITY PRESSURE EXPOSURE COEFFICIENT, K_Z = 0.92
TOPOGRAPHIC FACTOR, K_{ZT} = 1.0
WIND DIRECTIONALITY FACTOR, K_D = 0.85

A. MWFRS - DIRECTIONAL PROCEDURE (ASCE 7-16, CH. 27)

$q_z = 0.00256\ K_z\ K_{zt}\ K_d\ V_{ULT}^2 = 20.8$ PSF

$P = qGC_p - q_i(GC_{pi})$

GUST EFFECT FACTOR, G = 0.85
EXTERNAL PRESSURE COEFFICIENT, C_p = 0.8 FOR WINDWARD WALLS, -0.3 FOR LEEWARD WALLS
INTERNAL PRESSURE COEFFICIENT, (GC_{pi}) = ±0.18

P = 20.4 PSF FOR WINDWARD WALLS
P = 16.0 PSF FOR LEEWARD WALLS
P = 51.0 PSF FOR PARAPET

* WIND PRESSURES ARE STRENGTH LEVEL FORCES

B. COMPONENTS & CLADDING (ASCE 7-16, CH. 30)

$q_h = 0.00256\ K_z\ K_{zt}\ K_d\ V_{ULT}^2 = 20.8$ PSF

$P = q_h\ [(GC_p) - (GC_{pi})]$

GUST EFFECT FACTOR, G = 0.85
EXTERNAL PRESSURE COEFFICIENT, (GC_p) = 0.90 & -1.26 FOR WALLS, 1.00 & -2.30 FOR ROOF, -3.20 FOR ROOF OVERHANG
INTERNAL PRESSURE COEFFICIENT, (GC_{pi}) = ±0.18

P = 22.5 PSF, -30.0 PSF FOR WALLS
P = 24.6 PSF, -51.7 PSF FOR ROOF
P = -70.4 PSF FOR ROOF OVERHANG
P = 74.2 PSF FOR PARAPET

* WIND PRESSURES ARE STRENGTH LEVEL FORCES

4. EARTHQUAKE LOADS **

SEISMIC DESIGN CRITERIA

S_S = 1.642g
S_1 = 0.568
SITE CLASS: D
F_A = 1.0
F_V = 1.732
S_{DS} = 1.313g
S_{D1} = 0.760g
RISK CATEGORY: II
SEISMIC DESIGN CATEGORY: D

SEISMIC DESIGN REQUIREMENTS

DESIGN BASE SHEAR	$V = C_SW$
WHERE	$C_S = S_{DS}/(R/I_e)$
BUT SHALL NOT BE LESS THAN	$C_S = 0.044S_{DS}I_e > 0.01$
BUT NEED NOT EXCEED	$C_S = S_{D1}/[T(R/I_e)]$

BUILDING	R	Ω_0	T	I_e	C_S	V* (K)	PRIMARY LATERAL FORCE RESISTING SYSTEM	ANALYSIS PROCEDURE	STRUCT. IRREG.	LOC. OF BASE
ADMIN. (N/S)	6.0	2.0	0.328	1.0	0.219	184.0	(1)	(A)	NONE	T.O.F.
ADMIN. (E/W)	6.0	2.0	0.354	1.0	0.219	184.0	(1)	(A)	NONE	T.O.F.

(1) STEEL SPECIAL CONCENTRICALLY BRACED FRAME (ASCE 7-16, TABLE 12.2-1, ITEM B.2)

(A) EQUIVALENT LATERAL FORCE PROCEDURE

* DESIGN BASE SHEARS ARE STRENGTH LEVEL FORCES.
** 20% OF FLAT ROOF SNOW LOAD CONSIDERED IN EFFECTIVE SEISMIC WEIGHT & BASE SHEAR

FOUNDATION

1. ALL PORTIONS OF WORK PERTAINING TO EXCAVATIONS, FOUNDATIONS AND RETAINING WALLS SHALL CONFORM TO THE CALIFORNIA BUILDING CODE, CHAPTER 18.
2. THE FOUNDATION DESIGN IS BASED ON A GEOTECHNICAL REPORT INCLUDING ALL ADDENDUM BY:

   JOHN R. BYERLY, INC.
   BIG BEAR LAKE, CA
   DATE: MARCH 11, 2024
   RPT NO.: 8225
   FILE NO.: S-14447

3. AN ALLOWABLE SOIL BEARING PRESSURE OF 2500 PSF WAS USED FOR DESIGN. BOTTOM OF FOOTINGS SHALL BE 18" MINIMUM BELOW LOWEST ADJACENT FINAL GRADE AND BEAR ON APPROVED NATURAL GRADE OR COMPACTED FILL.
4. SEE SPECIFICATIONS FOR EARTHWORK OPERATIONS.
5. THE CONTRACTOR SHALL PROVIDE FOR DE-WATERING OF EXCAVATIONS FROM EITHER SURFACE WATER, GROUND WATER OR SEEPAGE.
6. THE CONTRACTOR SHALL PROVIDE FOR THE DESIGN, APPROVALS, PERMITS, INSTALLATION AND MONITORING OF ALL CRIBBING, SHEATHING AND SHORING REQUIRED TO SAFELY RETAIN TEMPORARY EXCAVATIONS.
7. EXCAVATIONS FOR FOOTINGS SHALL BE APPROVED BY THE GEOTECHNICAL ENGINEER PRIOR TO PLACING CONCRETE AND REINFORCING. THE CONTRACTOR SHALL NOTIFY THE GEOTECHNICAL ENGINEER WHEN EXCAVATIONS ARE READY FOR INSPECTION. THE GEOTECHNICAL ENGINEER SHALL SUBMIT A LETTER OF COMPLIANCE TO THE OWNER.
8. ALL EXCAVATIONS SHALL BE PROPERLY BACKFILLED. DO NOT PLACE BACKFILL BEHIND RETAINING WALLS BEFORE CONCRETE HAS ATTAINED FULL DESIGN STRENGTH. THE CONTRACTOR SHALL BRACE OR PROTECT ALL BUILDING AND PIT WALLS BELOW GRADE FROM LATERAL LOADS UNTIL ATTACHING FLOORS ARE COMPLETELY IN PLACE AND HAVE ATTAINED FULL DESIGN STRENGTH. THE CONTRACTOR SHALL PROVIDE FOR DESIGN, PERMITS AND INSTALLATION AND REMOVAL OF SUCH BRACING.
9. FOOTING BACKFILL AND UTILITY TRENCH BACKFILL WITHIN BUILDING AREA SHALL BE MECHANICALLY COMPACTED IN LAYERS, TO THE APPROVAL OF THE GEOTECHNICAL ENGINEER. FLOODING WILL NOT BE PERMITTED.
10. ALL ABANDONED FOOTINGS, UTILITIES, ETC., THAT INTERFERE WITH NEW CONSTRUCTION, SHALL BE REMOVED.
11. THE CONTRACTOR SHALL IMMEDIATELY NOTIFY THE ARCHITECT SHOULD ANY BURIED STRUCTURES, SUCH AS CESSPOOLS, CISTERNS, FOUNDATIONS, ETC., BE FOUND.

CONCRETE

1. ALL PORTIONS OF WORK PERTAINING TO CONCRETE CONSTRUCTION SHALL CONFORM TO THE CALIFORNIA BUILDING CODE, CHAPTER 19.
2. CONCRETE MIXES SHALL BE DESIGNED BY A QUALIFIED TESTING LABORATORY. MIX DESIGNS SHALL CONFORM TO ACI 318, SEC. 26.4, CBC SEC.1903 AND 1904. MIX DESIGNS SHALL INCORPORATE THE FOLLOWING CRITERIA:
   - MINIMUM OF 5 SACKS OF CEMENT PER CUBIC YARD OF CONCRETE. MAXIMUM OF 7 SACKS OF CEMENT PER YARD OF CONCRETE.
   - MAXIMUM WATER/CEMENT RATIO (BY WEIGHT) OF CONCRETE IN CONTACT WITH SOIL SHALL BE 0.45.
   - MAXIMUM SLUMP SHALL NOT EXCEED 3" ± 1" FOR FOOTINGS, SLABS ON GRADE, AND MASS CONCRETE; AND 4" ± 1" FOR OTHER CONCRETE. SLUMP LIMITATIONS NOTED SHALL APPLY TO CONCRETE MIX PRIOR TO THE ADDITION OF ANY WATER-REDUCING ADMIXTURES OR SUPER-PLASTICIZERS. MAXIMUM SLUMP MAY BE INCREASED TO 5 +/- 1" FOR MIX INCLUDING WATER-REDUCING ADMIXTURES OR SUPER-PLASTICIZERS.
   - CALCIUM CHLORIDE OR ADMIXTURES CONTAINING CHLORIDE(S) SHALL NOT BE USED.
3. SCHEDULE OF STRUCTURAL CONCRETE 28 DAY MINIMUM STRENGTHS AND TYPES:
   - FOOTINGS, CAISSONS, GRADE BEAMS — 145 PCF, f'c = 4500 PSI
   - SLABS ON GRADE (NOTE: 2,500 PSI USED FOR DESIGN) — 145 PCF, f'c = 4500 PSI
   - ELSEWHERE UNLESS NOTED — 145 PCF, f'c = 4500 PSI
4. PORTLAND CEMENT SHALL CONFORM TO ASTM C-150, TYPE II. CEMENT USED FOR CONCRETE IN CONTACT WITH SOIL SHALL CONFORM TO ASTM C-150, TYPE V.
5. AGGREGATE FOR NORMALWEIGHT CONCRETE SHALL CONFORM TO ASTM C-33. COMBINED AGGREGATE GRADATION OF ⅜" MAXIMUM (PEA GRAVEL) SHALL NOT BE USED.
6. READY MIXED CONCRETE SHALL CONFORM TO ASTM C-94.
7. PLACEMENT OF CONCRETE SHALL CONFORM TO ACI 304. CLEAN AND ROUGHEN TO ¼" AMPLITUDE ALL CONCRETE SURFACES AGAINST WHICH CONCRETE IS TO BE PLACED.
8. ALL REINFORCING BARS, ANCHOR BOLTS AND OTHER CONCRETE INSERTS SHALL BE SECURED IN POSITION PRIOR TO PLACING CONCRETE.
9. PROVIDE SLEEVES FOR PLUMBING AND ELECTRICAL OPENINGS IN CONCRETE BEFORE PLACING. DO NOT CUT ANY REINFORCING WHICH MAY CONFLICT. CORING IN CONCRETE IS NOT PERMITTED EXCEPT AS SHOWN. NOTIFY THE STRUCTURAL ENGINEER, IN ADVANCE, OF CONDITIONS NOT SHOWN ON THE STRUCTURAL DRAWINGS.
10. THE FOLLOWING MINIMUM CONCRETE COVER SHALL BE PROVIDED FOR REINFORCEMENT:

    CONCRETE CAST AGAINST AND PERMANENTLY EXPOSED TO EARTH ..... 3"

    CONCRETE EXPOSED TO EARTH OR WEATHER:
    #6 THROUGH #18 BARS ..... 2"
    #5 BARS, W31 OR D31 WIRE, AND SMALLER ..... 1½"

    CONCRETE NOT EXPOSED TO WEATHER OR IN CONTACT WITH GROUND:
    SLABS, WALLS, JOISTS:
    #14 AND #18 BARS ..... 1½"
    #11 BAR AND SMALLER ..... ¾"
    BEAMS, COLUMNS:
    PRIMARY REINFORCEMENT STIRRUPS, TIES, SPIRALS ..... 1½"
11. CONDUITS OR PIPES SHALL NOT BE EMBEDDED WITHIN A SLAB, WALL, BEAM, OR COLUMN, UNLESS SPECIFICALLY DETAILED.
12. SEE ARCHITECTURAL AND STRUCTURAL DRAWINGS FOR ALL MOLDS, GROOVES, REVEALS, ORNAMENTS AND GROUNDS TO BE CAST IN CONCRETE.
13. NON-SHRINK GROUT WHERE NOTED ON DRAWINGS SHALL BE A PRE-MIXED COMPOUND CONSISTING OF NON-METALLIC AGGREGATE, CEMENT, WATER REDUCING AND PLASTICIZING ADDITIVES, CAPABLE OF DEVELOPING A MINIMUM COMPRESSIVE STRENGTH OF 8,000 PSI AT 28 DAYS. WHERE APPLICATION THICKNESS EXCEEDS MANUFACTURER'S LIMITATIONS, EXTEND WITH ⅜" (GRAVEL) AGGREGATE IN ACCORDANCE WITH MANUFACTURER'S RECOMMENDATIONS.
14. CONCRETE FOR SLAB ON GRADE DOES NOT REQUIRE BATCH PLANT INSPECTION. A MINIMUM OF ONE SET OF CYLINDERS SHALL BE TAKEN AND TESTED FOR EACH DAY, 50 CUBIC YARDS OF CONCRETE, OR 2,000 SQ. FT OF CONCRETE.

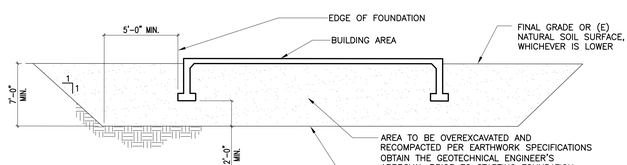

SCHEMATIC DIAGRAM OF FOUNDATION PREPARATION

NOTE:
1. SEE SPECIFICATIONS FOR EARTHWORK OPERATIONS.

STAMPS

REGISTERED PROFESSIONAL ENGINEER — No. 2705 Exp. 9-30-25 — STRUCTURAL — STATE OF CALIFORNIA

REGISTERED ARCHITECT — ROBERT CLARKE — Exp.10-31-25 — STATE OF CALIFORNIA

AGENCY APPROVAL
File No.: # A/#

KNA STRUCTURAL ENGINEERS
9931 Muirlands Boulevard, Irvine, CA 92618
Tel (949) 462-3200, Fax (949) 462-3201
KNA JOB NO: 203.653 CONSULTANT

RUHNAU CLARKE ARCHITECTS

REINFORCING STEEL

1. ALL PORTIONS OF WORK PERTAINING TO FABRICATION AND PLACEMENT OF REINFORCING STEEL SHALL CONFORM TO THE CALIFORNIA BUILDING CODE, CHAPTER 19 AND ACI 318-19.
2. REINFORCING BARS SHALL CONFORM TO ASTM A-615 GRADE 60, EXCEPT #3 BARS MAY BE GRADE 40. REINFORCING BARS THAT ARE TO BE WELDED SHALL CONFORM TO ASTM A-706, GRADE 60.
3. WELDING OF REINFORCEMENT SHALL BE WITH LOW HYDROGEN ELECTRODES AND SHALL CONFORM TO STRUCTURAL WELDING CODE - REINFORCING STEEL, AWS D1.4, BY THE AMERICAN WELDING SOCIETY AND SEC. 1903A.8. WELDING RODS USED FOR THE WELDING OF REINFORCING SHALL BE E80XX. ALL WELDING SHALL BE PERFORMED BY CERTIFIED WELDERS.
4. ALL REINFORCING BAR BENDS SHALL BE MADE COLD. ALL #5 OR LARGER REINFORCING BARS SHALL NOT BE RE-BENT.
5. FUSION WELDED REINFORCING STEEL ASSEMBLIES SHALL CONFORM TO SEC. 1903A.8. TIES/STIRRUP BARS IN FUSION WELDED ASSEMBLIES SHALL CONFORM TO ASTM A-706, AND LONGITUDINAL HOLDING WIRES SHALL CONFORM TO ASTM A-1064.
6. WELDED WIRE FABRIC SHALL CONFORM TO ASTM A-185, AND SHALL BE LAPPED 1½ SPACES AND 12" MINIMUM.
7. DOWELS BETWEEN FOOTINGS AND WALLS OR COLUMNS SHALL BE THE SAME GRADE, SIZE, SPACING AND NUMBER AS THE VERTICAL REINFORCEMENT, RESPECTIVELY.
8. REINFORCING SPLICES SHALL BE MADE AS INDICATED ON THE DRAWINGS.
9. ALL VERTICAL REINFORCING SHALL BE CONTINUOUS BETWEEN TWO DIAPHRAGM LEVELS, UNLESS NOTED OTHERWISE.

STRUCTURAL STEEL AND MISCELLANEOUS METAL

1. ALL PORTIONS OF WORK PERTAINING TO STRUCTURAL STEEL CONSTRUCTION SHALL CONFORM TO THE CALIFORNIA BUILDING CODE, CHAPTER 22.
2. ALL STRUCTURAL STEEL SHALL CONFORM TO ASTM A-992, UNLESS NOTED OTHERWISE.
3. ROUND HOLLOW STRUCTURAL SECTION (HSS) SHALL CONFORM TO ASTM A-500, GRADE B.
4. SQUARE AND RECTANGULAR HOLLOW STRUCTURAL SECTIONS (HSS) SHALL CONFORM TO ASTM A-500, GRADE B.
5. CHANNELS, ANGLES AND PLATES SHALL CONFORM TO ASTM A-36, UNLESS NOTED OTHERWISE.
6. ALL BOLTS SHALL CONFORM TO THE FOLLOWING, UNLESS NOTED OTHERWISE:
   - ANCHOR BOLTS: ASTM F1554, GRADE 36
   - TYPICAL STEEL CONNECTIONS: ASTM F3125, GRADE A325N OR F1852 (NON-SLIP-CRITICAL)
   - MOMENT AND DRAG CONNECTIONS: ASTM F3125, GRADE A325SC OR F1852 (SLIP-CRITICAL)
   - MISCELLANEOUS CONNECTIONS NOT NOTED OTHERWISE: ASTM A-307
7. HIGH STRENGTH BOLTS SHALL CONFORM TO THE FOLLOWING, UNLESS NOTED OTHERWISE:
   - JOINT ASSEMBLIES USING HIGH-STRENGTH BOLTS SHALL BE IN ACCORDANCE WITH SPECIFICATION FOR STRUCTURAL HIGH STRENGTH TWIST OFF TYPE BOLTS, BY THE RESEARCH COUNCIL ON STRUCTURAL CONNECTION.
   - ALL HIGH STRENGTH BOLTS SHALL CONFORM TO ASTM F3125, GRADE A325 OR F1852 TWIST OFF TYPE, NUTS SHALL CONFORM TO ASTM A-563, AND WASHERS SHALL CONFORM TO ASTM F-436.
   - PAINT SHALL NOT BE PERMITTED ON CONTACT SURFACES UNLESS NOTED OTHERWISE. CONTACT SURFACES OF BOLTED PARTS SHALL BE DESCALED AND FREE OF DIRT, OIL, BURRS, PITS

STRUCTURAL TESTS AND INSPECTIONS

1. IN ADDITION TO THE REQUIRED INSPECTIONS, THE OWNER SHALL EMPLOY ONE OR MORE SPECIAL INSPECTORS WHO SHALL PROVIDE INSPECTIONS DURING CONSTRUCTION ON THE TYPES OF WORK LISTED BELOW.

2. THE SPECIAL INSPECTOR SHALL BE A QUALIFIED PERSON WHO SHALL DEMONSTRATE COMPETENCE, TO THE SATISFACTION OF THE BUILDING OFFICIAL, FOR INSPECTION OF THE PARTICULAR TYPE OF CONSTRUCTION OR OPERATION REQUIRING SPECIAL INSPECTION.

3. THE SPECIAL INSPECTOR SHALL OBSERVE THE WORK ASSIGNED FOR CONFORMANCE WITH THE APPROVED DESIGN DRAWINGS AND SPECIFICATIONS.

4. THE SPECIAL INSPECTOR SHALL FURNISH INSPECTION REPORTS TO THE BUILDING OFFICIAL, THE STRUCTURAL ENGINEER, AND OTHER DESIGNATED PERSONS. ALL DISCREPANCIES SHALL BE BROUGHT TO THE IMMEDIATE ATTENTION OF THE CONTRACTOR FOR CORRECTION, THEN, IF UNCORRECTED, TO THE STRUCTURAL ENGINEER AND TO THE ENFORCEMENT AGENCY.

5. THE SPECIAL INSPECTOR SHALL SUBMIT A FINAL SIGNED REPORT STATING WHETHER THE WORK REQUIRING SPECIAL INSPECTION, WAS, TO THE BEST OF THE INSPECTOR'S KNOWLEDGE, IN CONFORMANCE WITH THE APPROVED PLANS AND SPECIFICATIONS AND THE APPLICABLE WORKMANSHIP PROVISIONS OF THE CODE.

6. SPECIAL INSPECTIONS SHALL NOT BE REQUIRED WHEN THE WORK IS DONE ON THE PREMISES OF A FABRICATOR REGISTERED AND APPROVED BY THE ENFORCEMENT AGENCY TO PERFORM SUCH WORK WITHOUT SPECIAL INSPECTION.

7. THE FOLLOWING TYPES OF WORK SHALL BE INSPECTED BY A SPECIAL INSPECTOR:

   STEEL CONSTRUCTION
   (SEE SECTION 1705.2 FOR ADDITIONAL INFORMATION)

   MATERIAL VERIFICATION OF HIGH-STRENGTH BOLTS, NUTS, AND WASHERS: IDENTIFICATION MARKINGS TO CONFORM TO ASTM STANDARDS SPECIFIED IN APPROVED CONSTRUCTION DOCUMENTS
   MANUFACTURER'S CERTIFICATE OF COMPLIANCE REQUIRED

   INSPECTION OF HIGH-STRENGTH BOLTING

   INSPECTION OF WELDING
   STRUCTURAL STEEL
   REINFORCING STEEL

      VERIFICATION OF WELDABILITY OF REINFORCING STEEL OTHER THAN ASTM A-706
      BOUNDARY ELEMENTS OF SPECIAL REINFORCED CONCRETE SHEAR WALLS
      SHEAR REINFORCEMENT
      OTHER REINFORCING STEEL

   INSPECTION OF STEEL FRAME JOINTS FOR COMPLIANCE WITH APPROVED CONSTRUCTION DOCUMENTS

   CONCRETE CONSTRUCTION
   (SEE SECTION 1705.3 AND TABLE 1705.3 FOR ADDITIONAL INFORMATION)

   INSPECTION OF REINFORCING STEEL PLACEMENT

   INSPECT BOLTS TO BE INSTALLED IN CONCRETE PRIOR TO AND DURING PLACEMENT OF CONCRETE WHERE ALLOWABLE LOADS HAVE BEEN INCREASED

   VERIFYING USE OF REQUIRED MIX DESIGN

   AT THE TIME FRESH CONCRETE IS SAMPLED TO FABRICATE SPECIMENS FOR STRENGTH TESTS, PERFORM SLUMP AND AIR CONTENT TESTS, AND DETERMINE THE TEMPERATURE OF CONCRETE

   INSPECT CONCRETE PLACEMENT FOR PROPER TECHNIQUES

   INSPECTION FOR MAINTENANCE OF SPECIFIED CURING TEMPERATURE AND TECHNIQUES

   INSPECT FORMWORK FOR SHAPE, LOCATION AND DIMENSIONS OF THE CONCRETE MEMBER BEING FORMED

   MASONRY CONSTRUCTION – LEVEL A (OCCUPANCY CATEGORIES I, II & III)
   (SEE SECTION 1705.4 FOR ADDITIONAL INFORMATION)

   AS MASONRY CONSTRUCTION BEGINS, THE FOLLOWING SHALL BE VERIFIED TO ENSURE COMPLIANCE:
   PROPORTIONS OF SITE-PREPARED MORTAR
   CONSTRUCTION OF MORTAR JOINTS
   LOCATION OF REINFORCEMENT AND CONNECTORS

   THE INSPECTION PROGRAM SHALL VERIFY:
   SIZE AND LOCATION OF STRUCTURAL ELEMENTS
   TYPE, SIZE AND LOCATION OF ANCHORS, INCLUDING OTHER DETAILS OF ANCHORAGE OF MASONRY TO STRUCTURAL MEMBERS, FRAMES OR OTHER CONSTRUCTION
   SPECIFIED SIZE, GRAND AND TYPE OF REINFORCING
   WELDING OF REINFORCING BARS
   PROTECTION OF MASONRY DURING COLD WEATHER OR HOT WEATHER

   PRIOR TO GROUTING, THE FOLLOWING SHALL BE VERIFIED TO ENSURE COMPLIANCE:
   GROUT SPACE IS CLEAN
   PLACEMENT OF REINFORCEMENT AND CONNECTORS
   CONSTRUCTION OF MORTAR JOINTS

   GROUT PLACEMENT SHALL BE VERIFIED TO ENSURE COMPLIANCE WITH CODE AND CONSTRUCTION DOCUMENT PROVISIONS

   PREPARATION OF ANY REQUIRED GROUT SPECIMENS, MORTAR SPECIMENS AND/OR PRISMS SHALL BE OBSERVED

   COMPLIANCE WITH REQUIRED INSPECTION PROVISIONS OF THE CONSTRUCTION DOCUMENTS AND THE APPROVED SUBMITTALS SHALL BE VERIFIED

   SOILS
   (SEE SECTION 1705.6 AND TABLE 1705.6 FOR ADDITIONAL INFORMATION)

   VERIFY MATERIALS BELOW FOOTINGS ARE ADEQUATE TO ACHIEVE THE DESIGN BEARING CAPACITY

   VERIFY EXCAVATIONS ARE EXTENDED TO PROPER DEPTH AND HAVE REACHED PROPER MATERIAL

   PERFORM CLASSIFICATION AND TESTING OF CONTROLLED FILL MATERIALS

   VERIFY USE OF PROPER MATERIALS, DENSITIES AND LIFT THICKNESSES DURING PLACEMENT AND COMPACTION OF CONTROLLED FILL

   PRIOR TO PLACEMENT OF CONTROLLED FILL, OBSERVE SUBGRADE AND VERIFY THAT SITE HAS BEEN PREPARED PROPERLY

STRUCTURAL OBSERVATION

1. THE OWNER SHALL EMPLOY RTM ENGINEERING CONSULTANTS (RTM), OR OTHER ENGINEER DESIGNATED BU RTM, TO PERFORM STRUCTURAL OBSERVATION AS DEFINED IN CALIFORNIA BUILDING CODE, SECTION 1704.6. OBSERVED DEFICIENCIES SHALL BE REPORTED IN WRITING TO THE OWNER'S REPRESENTATIVE, SPECIAL INSPECTOR, CONTRACTOR AND THE BUILDING OFFICIAL. THE STRUCTURAL OBSERVER SHALL SUBMIT TO THE BUILDING OFFICIAL A WRITTEN STATEMENT THAT THE SITE VISITS HAVE BEEN MADE AND IDENTIFYING ANY REPORTED DEFICIENCIES THAT, TO THE BEST OF THE STRUCTURAL OBSERVER'S KNOWLEDGE, HAVE NOT BEEN RESOLVED.

2. AS DEFINED IN CALIFORNIA BUILDING CODE CHAPTER 2, STRUCTURAL OBSERVATION MEANS "THE VISUAL OBSERVATION OF THE STRUCTURAL SYSTEM BY A REGISTERED DESIGN PROFESSIONAL FOR GENERAL CONFORMANCE TO THE APPROVED CONSTRUCTION DOCUMENTS".

SITE OBSERVATION SCHEDULE

SCHEDULED VISIT NO.	OBSERVATION	ELEMENTS
1	REINFORCING STEEL PLACEMENT IN FOOTING TRENCHES	FOOTING REINFORCING
2	STEEL & STUD FRAMING (SUBSTANTIALLY COMPLETE)	STRUCTURAL STEEL FRAMING, METAL STUD FRAMING, AND GENERAL FRAMING

CONCRETE BLOCK MASONRY (f'm = 2,000 PSI)

1. ALL PORTIONS OF WORK PERTAINING TO CONCRETE BLOCK MASONRY CONSTRUCTION SHALL CONFORM TO THE CALIFORNIA BUILDING CODE, CHAPTER 21.

2. THE STRENGTH OF CONCRETE BLOCK MASONRY CONSTRUCTION SHALL BE DETERMINED BY THE UNIT STRENGTH METHOD IN ACCORDANCE WITH TMS 602 ARTICLE 1.4B.2b.

3. CONCRETE BLOCKS SHALL BE HOLLOW LOAD-BEARING CONCRETE MASONRY UNITS CONFORMING TO ASTM C-90, MEDIUM WEIGHT UNITS, NET COMPRESSIVE STRENGTH OF 2,000 PSI. USE OPEN END UNITS AT VERTICAL REINFORCING.

4. CEMENT SHALL BE AS SPECIFIED FOR CONCRETE.

5. MORTAR SHALL CONFORM TO ASTM C-270, FOR TYPE S MORTAR. MORTAR SHALL ATTAIN A MINIMUM COMPRESSIVE STRENGTH OF 1800 PSI AT 28 DAYS.

6. GROUT SHALL CONFORM TO ARTICLE 2.2 OF TMS 602. GROUT PROPORTIONS SHALL CONFORM TO ASTM C-476, TABLE 1, FOR COARSE GROUT. USE SUFFICIENT WATER FOR GROUT TO FLOW INTO ALL CELLS WITHOUT SEGREGATION. SIKA GROUT AID ADMIXTURE, OR APPROVED EQUAL, SHALL BE USED. GROUT SHALL ATTAIN A MINIMUM COMPRESSIVE STRENGTH OF 2000 PSI AT 28 DAYS.

7. PROVIDE A MINIMUM ONE BAR DIAMETER OF GROUT BETWEEN MAIN REINFORCING AND MASONRY UNITS. PROVIDE A MINIMUM OF ½" OF GROUT AROUND ALL BOLTS EMBEDDED IN MASONRY.

8. CELLS SHALL BE IN VERTICAL ALIGNMENT. DOWELS IN FOOTINGS SHALL BE SET TO ALIGN WITH CORES CONTAINING VERTICAL REINFORCING.

9. ALL REINFORCING BARS, ANCHOR BOLTS, STEEL PLATES, AND OTHER CMU INSERTS SHALL BE SECURED IN POSITION PRIOR TO PLACING GROUT, TO PREVENT MOVEMENT DURING GROUT PLACEMENT AND CONSOLIDATION WITH MECHANICAL VIBRATOR DIRECTLY ADJACENT.

10. ALL CELLS IN CONCRETE BLOCKS SHALL BE SOLIDLY FILLED WITH GROUT.

11. LOW-LIFT GROUTED CONSTRUCTION SHALL CONFORM TO TMS 602 ARTICLE 3.5D. MAXIMUM GROUT POUR HEIGHT FOR LOW-LIFT CONSTRUCTION SHALL BE 4 FEET.

12. HIGH-LIFT GROUTED CONSTRUCTION SHALL CONFORM TO TMS 605 ARTICLE 3.5D. MAXIMUM GROUT POUR HEIGHT SHALL NOT EXCEED 12 FEET. PROVIDE CLEANOUT OPENINGS AND ADEQUATE PROVISIONS TO PREVENT FACE SHELL DAMAGE (BLOW-OUT) AT THE BOTTOM OF EACH POUR OF GROUT.

13. GROUT POURS SHALL BE CONSOLIDATED BY MECHANICAL VIBRATION AND RECONSOLIDATED AFTER EXCESS MOISTURE HAS BEEN ABSORBED, BUT BEFORE WORKABILITY IS LOST.

14. HORIZONTAL REINFORCING SHALL BE PLACED IN BOND BEAM UNITS.

15. REFER TO ARCHITECTURAL DRAWINGS FOR SURFACE TEXTURE, HEIGHT OF MASONRY UNITS, LAYING PATTERN AND JOINT TYPE. USE RUNNING BOND PATTERN, UNLESS NOTED OTHERWISE.

16. NO PIPES OR DUCTS SHALL BE PLACED IN MASONRY CONSTRUCTION UNLESS SPECIFICALLY NOTED OR DETAILED. WHERE PIPES ARE DETAILED TO PASS THROUGH MASONRY WALLS, PROVIDE SLEEVE OR CORED HOLE 2" LARGER THAN OUTSIDE DIAMETER OF PIPE.

17. ELECTRICAL CONDUIT MAY BE ROUTED IN MASONRY WALLS AS FOLLOWS:

   A. MAXIMUM SIZE AND QUANTITY OF CONDUIT PER CELL (EXCEPT AT JUNCTION BOXES) SHALL BE AS FOLLOWS: FOR 8" BLOCK, ONE-1" DIAMETER OR TWO - ¾" DIAMETER; FOR 12" BLOCK, TWO - 1" DIAMETER OR FOUR - ¾" DIAMETER. MULTIPLE CONDUITS SHALL BE BUNDLED TOGETHER.

   B. CONDUIT SHALL NOT BE PLACED IN A MASONRY CELL CONTAINING REINFORCING.

   C. CONDUIT SHALL NOT BE PLACED IN A PILASTER.

   D. CONDUIT SHALL BE PLACED AT THE CENTERLINE OF THE WALL.

18. ALL STRUCTURAL MASONRY WORK SHALL BE CONTINUOUSLY INSPECTED DURING LAYING AND GROUTING BY A SPECIAL INSPECTOR SPECIFICALLY APPROVED BY THE ENFORCEMENT AGENCY FOR THAT PURPOSE.

COLD-FORMED STEEL FRAMING

1. ALL PORTIONS OF WORK PERTAINING TO COLD-FORMED STEEL CONSTRUCTION SHALL CONFORM TO THE CALIFORNIA BUILDING CODE, CHAPTER 22.

2. ALL LIGHT GAUGE METAL FRAMING SHALL BE GALVANIZED AND SHALL CONFORM TO ASTM A-653 SS, GRADE 50, CLASS 1, WITH A MINIMUM YIELD STRENGTH OF 50 KSI FOR 16 GAUGE AND HEAVIER FRAMING, AND ASTM A-653 SS, GRADE 33, WITH A MINIMUM YIELD STRENGTH OF 33 KSI FOR 18 GAUGE AND LIGHTER FRAMING.

3. DIMENSIONS, PROPERTIES AND TYPES NOTED ARE BASED ON METAL STUDS AND TRACKS BY STEEL STUD MANUFACTURERS ASSOCIATION, ICC NO. ESR-3064P, UNLESS NOTED OTHERWISE.

4. ALL STUDS AT JAMBS OF DOOR AND WINDOW OPENINGS SHALL BE 16 GAUGE, UNLESS NOTED OTHERWISE.

5. WELDING SHALL BE IN ACCORDANCE WITH THE STRUCTURAL WELDING CODE - SHEET STEEL, AWS D1.3, BY THE AMERICAN WELDING SOCIETY.

6. ALL SHEET METAL SCREWS SHALL PROTRUDE 3 EXPOSED THREADS MINIMUM THROUGH BASE METAL FRAMING.

7. ALL METAL STUDS SHALL HAVE STIFFENED FLANGES.

8. SEE ARCHITECTURAL AND STRUCTURAL DRAWINGS FOR SIZE AND GAUGE OF STUDS.

9. STUD TO SILL TRACK CONNECTION SHALL HAVE A GAP NO GREATER THAN 1/8".

WOOD

1. ALL PORTIONS OF WORK PERTAINING TO WOOD CONSTRUCTION SHALL CONFORM TO THE CALIFORNIA BUILDING CODE, CHAPTER 23.

2. LUMBER SHALL BE GRADED IN ACCORDANCE WITH THE STANDARD GRADING RULES NO. 17 OF THE WEST COAST LUMBER INSPECTION BUREAU, OR THE STANDARD GRADING RULES OF THE WESTERN WOOD PRODUCTS ASSOCIATION.

3. DIMENSION LUMBER SHALL BE DOUGLAS FIR-LARCH, NO. 1 AND BETTER GRADE, UNLESS NOTED OTHERWISE. TIMBERS SHALL BE DOUGLAS FIR LARCH, NO. 1 GRADE, UNLESS NOTED OTHERWISE. MOISTURE CONTENT AT TIME OF INSTALLATION SHALL BE 19% OR LESS.

4. ALL PLYWOOD SHALL BE STRUCTURAL 1 AND COMPLY WITH PRODUCT STANDARD PS-1. USE PLYWOOD NAILS SAME GAUGE AS COMMON WIRE NAILS WITH LENGTHS AT LEAST EQUAL TO PLYWOOD THICKNESS PLUS REQUIRED PENETRATION IN ACCORDANCE WITH SECTIONS 2306.2 (AWC SDPWS TABLE 4.2A) OR 2306.3 (AWC SDPWS TABLE 4.3A), AS APPLICABLE.

5. EXPOSED MEMBERS SHALL BE SELECT STRUCTURAL GRADE, FREE OF HEART CENTER (WHERE SIZE PERMITS), AND SELECTED FOR APPEARANCE AND STRAIGHTNESS.

6. BOLT HOLES SHALL BE A MINIMUM OF 1/32" TO A MAXIMUM OF 1/16" LARGER DIAMETER THAN NOMINAL SIZE OF BOLT USED. RETIGHTEN ALL NUTS PRIOR TO CLOSING IN.

7. STANDARD CUT WASHERS SHALL BE USED UNDER BOLT HEADS AND NUTS AGAINST WOOD. USE HEAVY PLATE OR MALLEABLE IRON WASHERS WHERE NOTED.

8. DO NOT BORE OR NOTCH MEMBERS, EXCEPT WHERE SHOWN IN DETAILS. OBTAIN ENFORCEMENT AGENCY AND STRUCTURAL ENGINEER'S APPROVAL FOR ANY HOLES OR NOTCHES NOT DETAILED.

9. METAL CONNECTORS FOR WOOD CONSTRUCTION SHALL BE SIMPSON "STRONG-TIE", KC METALS, OR APPROVED EQUAL, UNLESS NOTED OTHERWISE. PRODUCT CALLOUT ON PLANS REFERS TO SIMPSON "STRONG TIE" MODEL NUMBER AND KC METALS PRODUCT REFERENCE NUMBER. FILL ALL ROUND AND TRIANGLE HOLES WITH THE SPECIFIED NAILS. APPROVED EQUALS MAY ONLY BE USED WITH PRIOR APPROVAL FROM ENFORCEMENT AGENCY AND THE STRUCTURAL ENGINEER.

10. ALL SILL PLATES WHICH REST ON FOUNDATION OR SLAB ON GRADE SHALL BE PRESERVATIVE-TREATED IN ACCORDANCE WITH SEC. 2303.1.9, AND SHALL BEAR THE QUALITY MARK OF AN APPROVED INSPECTION AGENCY THAT MAINTAINS CONTINUING SUPERVISION, TESTING AND INSPECTION OVER THE QUALITY OF PRESERVATIVE-TREATED WOOD. CUTS AND HOLES SHALL BE RETREATED.

11. JOISTS MORE THAN 8-INCH DEPTH SHALL BE CONTINUOUSLY BRIDGED BY SOLID BLOCKING, 2 INCHES THICK AND THE FULL DEPTH OF THE JOIST, SPACED AT 8 FEET ON CENTER.

12. ALL NAILING SHALL CONFORM TO TABLE 2304.10.1 - FASTENING SCHEDULE, USING COMMON WIRE NAILS. PREDRILL ALL NAILS 20D AND LARGER AND WHERE REQUIRED TO PREVENT SPLITTING. FASTENERS IN CONTACT WITH PRESERVATIVE-TREATED WOOD SHALL BE OF HOT-DIPPED ZINC-COATED GALVANIZED STEEL.

13. LAG BOLTS SHALL HAVE LEAD HOLES BORED BEFORE INSTALLING. HOLE DIAMETERS SHALL BE AS FOLLOWS:

   A. SHANK PORTION SAME DIAMETER AND LENGTH OF SHANK

   B. THREAD PORTION 0.40 TO 0.70 DIAMETER OF THREAD AND SAME LENGTH

14. CONTRACTOR TO REMOVE AND REPLACE EXISTING PLYWOOD SHEATHING AS REQUIRED FOR INSTALLATION OF BLOCKING AND/OR STRAPS.

POST-INSTALLED ANCHORS

1. ACCEPTABLE EQUIVALENT MANUFACTURERS OF POST-INSTALLED EXPANSION ANCHORS AND SCREW ANCHORS SHALL BE HILTI INC., SIMPSON STRONG-TIE COMPANY INC., OR DEWALT, UNO.

2. TESTS FOR POST-INSTALLED ANCHORS IN HARDENED CONCRETE SHALL CONFORM THE CALIFORNIA BUILDING CODE, CHAPTER 19, SECTION 1910.5.

3. POST-INSTALLED ANCHOR INSTALLATION SHALL BE INSPECTED BY A SPECIAL INSPECTOR SPECIFICALLY APPROVED BY THE ENFORCEMENT AGENCY FOR THAT PURPOSE.

4. POST-INSTALLED ANCHOR TESTING SHALL BE DONE IN THE PRESENCE OF THE PROJECT INSPECTOR.

5. TEST QUANTITY OF POST-INSTALLED ANCHORS AS NOTED BELOW:

APPLICATION	QUANTITY
SILL PLATES	10% OF BOLTS
STRUCTURAL	100% OF BOLTS
NON-STRUCTURAL (EQUIP. ANCHORAGE, ETC.)	50% OF BOLTS

6. IF ANY ANCHOR FAILS TESTING, TEST ALL ANCHORS OF THE SAME CATEGORY NOT PREVIOUSLY TESTED UNTIL TWENTY (20) CONSECUTIVE ANCHORS PASS, THEN RESUME INITIAL TESTING FREQUENCY.

7. TORQUE TESTING SHALL BE APPLIED BY CALIBRATED WRENCH. TENSION TESTING (WHERE INDICATED) SHALL BE APPLIED BY HYDRAULIC JACK OR CALIBRATED SPRING LOADING DEVICE.

8. THE FOLLOWING CRITERIA SHALL APPLY FOR THE ACCEPTANCE OF INSTALLED POST-INSTALLED ANCHORS:

   A. TORQUE WRENCH METHOD: THE APPLICABLE TEST TORQUE MUST BE ATTAINED WITHIN ONE-HALF (½) TURN OF THE NUT. SLEEVE ANCHORS ⅜ INCH DIAMETER OR LESS MUST ATTAIN THE SPECIFIED TEST TORQUE WITHIN ONE-QUARTER (¼) TURN OF THE NUT, AND THREADED ANCHORS MUST ATTAIN THE SPECIFIED TEST TORQUE WITHIN ONE-QUARTER (¼) TURN OF THE SCREW AFTER INITIAL SEATING OF THE SCREW HEAD.

   B. HYDRAULIC RAM METHOD: (FOR TENSION TESTING WHERE INDICATED) ANCHORS SHALL MAINTAIN THE TENSION TEST LOAD FOR A MINIMUM OF 15 SECONDS AND SHALL EXHIBIT NO DISCERNABLE MOVEMENT DURING THE TENSION TEST. (AN EXAMPLE OF DISCERNABLE MOVEMENT WOULD BE LOOSENING OF THE WASHER UNDER THE NUT).

9. TEST LOADS (1)(2)(3)

TORQUE TEST VALUES - EXPANSION ANCHORS
NORMAL WEIGHT CONCRETE

ANCHOR DIAMETER (INCH)	ANCHOR DEPTH (INCHES)	REQ'D. ANCHOR DEPTH (INCHES NOMINAL)	TORQUE (FT-LBF)
⅜	2	2½	30
½	2	2½	50
	3¼	3¼	50
⅝	3¼	3¼	40
	4	4½	40
¾	3¼	4½	110
	4¾	5½	110

(1) TEST VALUES ARE BASED ON KWIK BOLT TZ2 (KB-TZ2) EXPANSION ANCHORS BY HILTI, INC. (ICC EVALUATION REPORT NUMBER ESR-4266).

(2) TEST VALUES ARE BASED ON CARBON STEEL ANCHORS.

(3) VERIFY TORQUE VALUES WITH MANUFACTURER FOR SIMPSON STRONG-BOLT 2 (ICC ESR-3037) OR DEWALT POWER-STUD+SD2 (ICC ESR-2502)

TORQUE TEST VALUES - EXPANSION ANCHORS
GROUT-FILLED CMU

ANCHOR DIAMETER (INCH)	ANCHOR DEPTH (INCHES)	TORQUE (FT-LBF)
⅜	2	15
½	2	25
	3¼	25
⅝	3⅜	35
	4	35
¾	3¾	70
	4¾	70

(1) TEST VALUES ARE BASED ON KWIK BOLT TZ (KB-TZ) EXPANSION ANCHORS BY HILTI, INC. (ICC EVALUATION REPORT NUMBER ESR-3785).

(2) TEST VALUES ARE BASED ON CARBON STEEL ANCHORS.

(3) VERIFY TORQUE VALUES WITH MANUFACTURER FOR SIMPSON WEDGE-ALL (ICC ESR-1396) OR DEWALT POWER-STUD+SD1 (ICC ESR-2966)

TORQUE TEST VALUES - EXPANSION ANCHORS
STRUCTURAL LIGHT WEIGHT CONCRETE OVER METAL DECK

ANCHOR DIAMETER (INCH)	ANCHOR DEPTH (INCHES)	TORQUE (FT-LBF)
⅜	2	25
½	2	40
	3¼	40
⅝	3⅜	60
	4	60

(1) TEST VALUES ARE BASED ON KWIK BOLT TZ (KB-TZ) EXPANSION ANCHORS BY HILTI, INC. (ICC EVALUATION REPORT NUMBER ESR-1917).

(2) TEST VALUES ARE BASED ON CARBON STEEL ANCHORS.

(3) VERIFY TORQUE VALUES WITH MANUFACTURER FOR SIMPSON STRONG-BOLT 2 (ICC ESR-3037) OR DEWALT POWER-STUD+SD2 (ICC ESR-2502)

TORQUE TEST VALUES - SCREW ANCHORS
NORMAL WEIGHT CONCRETE

ANCHOR DIAMETER (INCH)	ANCHOR DEPTH (INCHES)	TORQUE (FT-LBF)
¼	1 ⅝"	24
	2 ½"	24
⅜	2¾	50
	3½	50
½	3¾	65
	4½	65
⅝	4½	100
	6	100
¾	6	150
	6¾	150

(1) TEST VALUES ARE BASED ON TITEN HD SCREW ANCHORS BY SIMPSON STRONG-TIE, (ICC EVALUATION REPORT NUMBER ESR-2713).

(3) VERIFY TORQUE VALUES WITH MANUFACTURER FOR HILTI KWIK HUS-EZ SCREW ANCHORS (ICC ESR-3027) OR DEWALT SCREW-BOLT+SCREW ANCHOR (ICC ESR-3889)

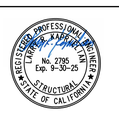

STAMPS

AGENCY APPROVAL
File No.: # JUrisdiction

KNA STRUCTURAL ENGINEERS
9931 Muirlands Boulevard, Irvine, CA 92618
Tel (949) 462-3200, Fax (949) 462-3201
KNA JOB NO: 203.653 CONSULTANT

RUHNAU CLARKE ARCHITECTS

POWDER DRIVEN CONCRETE FASTENERS

1. THE USE OF POWDER DRIVEN FASTENERS FOR TENSION LOADS IS LIMITED TO SUPPORT OF MINOR LOADS, SUCH AS ACOUSTICAL CEILINGS, DUCTWORK, CONDUIT, ETC. POWDER DRIVEN CONCRETE FASTENERS MAY NOT BE USED IN CURBS.

2. ALLOWABLE TENSION LOADS SHALL BE LIMITED TO 90 POUNDS, OR 80% OF ICC APPROVED VALUES, WHICHEVER IS LESS. QUALIFICATION FOR USE OF ALL POWER ACTUATED TOOLS MUST MEET ANSI A10.3 STANDARD AS REQUIRED BY THE MANUFACTURER AND ALL OSHA REQUIREMENTS.

3. THE OPERATOR, TOOL, AND FASTENERS SHALL BE PREQUALIFIED BY THE PROJECT INSPECTOR. HE SHALL OBSERVE THE TESTING OF THE FIRST TEN FASTENER INSTALLATIONS. A "PULL-OUT" TEST LOAD OF 200 LBS. SHALL BE APPLIED TO THE PIN IN SUCH A MANNER AS NOT TO RESIST THE SPALLING TENDENCY OF THE CONCRETE SURROUNDING THE PIN. THEREAFTER, RANDOM TESTS, UNDER THE PROJECT INSPECTOR'S SUPERVISION, SHALL BE MADE OF APPROXIMATELY ONE IN TEN PINS. IF ANY PIN FAILS TESTING, TEST ALL PINS OF THE SAME CATEGORY NOT PREVIOUSLY TESTED UNTIL TWENTY CONSECUTIVE PASS, THEN RESUME THE INITIAL TESTING FREQUENCY.

4. FASTENERS SHALL HAVE ICC APPROVAL FOR THE TYPE OF CONCRETE INTO WHICH THE FASTENERS ARE INSTALLED.

5. POWDER DRIVEN CONCRETE FASTENERS ARE NOT PERMITTED IN PRESTRESSED CONCRETE MEMBERS.

6. WHEN INSTALLING DRILLED-IN ANCHORS AND/OR POWDER DRIVEN PINS IN NON-PRESTRESSED REINFORCED CONCRETE, USE CARE AND CAUTION TO AVOID CUTTING OR DAMAGE TO THE REINFORCING BARS. MAINTAIN A MINIMUM CLEARANCE OF ONE INCH BETWEEN THE REINFORCEMENT AND DRILLED-IN ANCHOR AND/OR PIN.

ANCHORS AND/OR DOWELS INSTALLED WITH ADHESIVE

1. ANCHORS AND/OR DOWELS SHALL BE INSTALLED WITH ADHESIVE ONLY WHERE INDICATED ON DRAWINGS.

2. ANCHORS AND/OR DOWELS SHALL BE INSTALLED IN CONCRETE USING ONE OF THE FOLLOWING PRODUCTS IN ACCORDANCE WITH THE APPLICABLE ICC/IAPMO REPORT:

   - HILTI HIT-HY 200 ADHESIVE ICC NO. ESR-3187
   - SIMPSON SET-XP ADHESIVE ICC NO. ESR-2508
   - DEWALT PURE110+ ADHESIVE ICC NO. ESR-3298

3. ANCHORS AND/OR DOWELS SHALL BE INSTALLED IN GROUTED MASONRY USING ONE OF THE FOLLOWING PRODUCTS IN ACCORDANCE WITH THE APPLICABLE ICC REPORT:

   - HILTI HIT-HY 270 ADHESIVE ICC NO. ESR-4143
   - SIMPSON SET-XP ADHESIVE IAPMO NO. ER-265

4. ADHESIVE SYSTEMS OTHER THAN THOSE SPECIFIED SHALL BE SUBMITTED AS A SUBSTITUTION, AND ARE SUBJECT TO THE REVIEW AND APPROVAL OF THE ENFORCEMENT AGENCY, THE ARCHITECT, AND THE STRUCTURAL ENGINEER.

5. HOLES SHALL BE DRILLED WITH NON-REBAR-CUTTING DRILL BITS.

6. HOLES SHALL BE CLEAN OF CONCRETE DUST AND DEBRIS USING A NYLON BRUSH AND OIL-FREE COMPRESSED AIR. HOLES SHALL ALSO BE FREE OF STANDING WATER.

7. PROJECT INSPECTOR SHALL VERIFY INSTALLATION OF ANCHORS OR DOWELS IN ACCORDANCE WITH MANUFACTURER'S RECOMMENDATIONS, INCLUDING CLEANLINESS OF DRILL HOLES AND PROPER EMBEDMENT.

8. ANCHORS SET IN CONCRETE AND GROUTED MASONRY SHALL BE TESTED TO 2 TIMES THE ASD ALLOWABLE TENSION LOAD, 1.25 TIMES THE LRFD STRENGTH CAPACITY, OR 80% OF THE YIELD STRENGTH OF THE BOLT FOR THE SPECIFIC LOCATION OF THE ANCHOR TO BE TESTED, WHICHEVER IS LESS. TORQUE TESTING IS NOT PERMITTED. SEE DETAILS FOR TEST LOADS.

9. ADHESIVE ANCHORS INSTALLED IN HORIZONTAL TO VERTICALLY OVERHEAD ORIENTATION TO SUPPORT SUSTAINED TENSION LOADS SHALL BE DONE BY A CERTIFIED ADHESIVE ANCHOR INSTALLER (AAI) AS CERTIFIED THROUGH ACI/CRSI (ACI 318-14 17.8.2.2). PROOF OF CURENT CERTIFICATION SHALL BE SUBMITTED TO THE ENGINEER FOR APPROVAL PRIOR TO COMMENCEMENT OF INSTALLATION.

10. ADHESIVE ANCHORS MUST BE INSTALLED IN CONCRETE AGED A MINIMUM OF 21 DAYS.

INCREMENT #3: REBID SET 04/19/2024

PAD FOOTING SCHEDULE				
	A	B	REINF.	REMARKS
PF-3	3'-0"	2'-0"	(5)#5 EA. WAY	
PF-4	4'-0"	2'-0"	(7)#5 EA. WAY	
PF-5	5'-0"	2'-0"	(9)#5 EA. WAY	
PF-6	6'-0"	2'-0"	(10)#5 EA. WAY	
PF-7	7'-0"	2'-0"	(12)#5 EA. WAY	

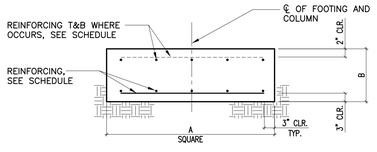

C107-0 SCALE: NO SCALE

PAD FOOTING SCHEDULE 17

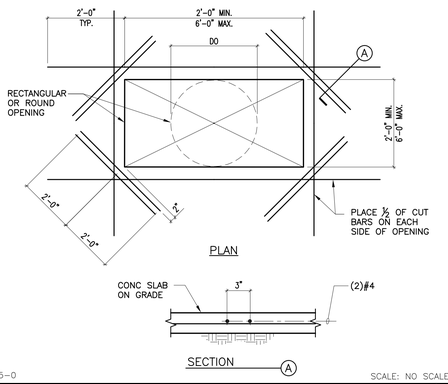

C205-0 SCALE: NO SCALE

OPENING IN SLAB ON GRADE 13

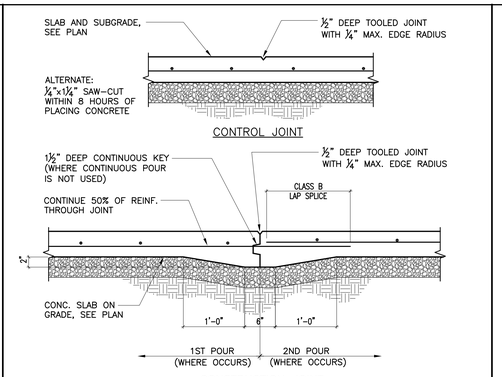

C202-0 SCALE: NO SCALE

JOINT IN SLAB ON GRADE 9

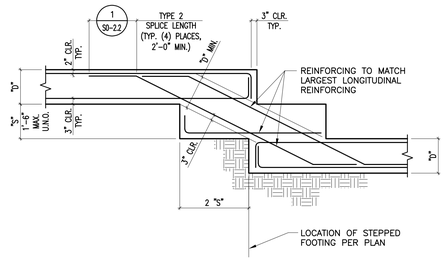

NOTES:
1. FOR FOOTING REINFORCING SEE FOOTING ELEVATIONS AND/OR SECTIONS.
2. VERTICAL WALL DOWELS SHALL EXTEND TO BOTTOM OF FOOTING.

C104-0 SCALE: NO SCALE

STEPPED FTG. TWO LAYERS OF REINF. 5

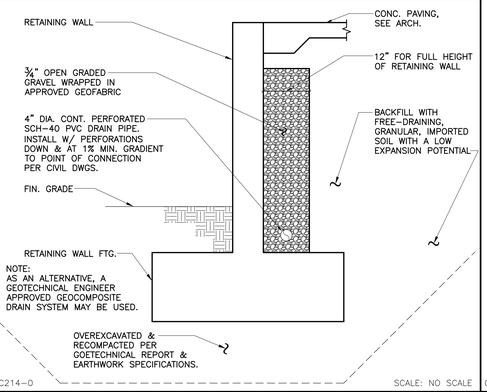

C214-0 SCALE: NO SCALE

RETAINING WALL DRAINAGE DETAIL 18

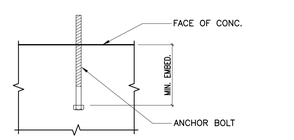

BOLT SIZE	EMBEDMENT FOR CONCRETE U.N.O.
½"	7"
⅝"	7"
¾"	7"
⅞"	7"
1"	8"
1⅛"	9"
1¼"	10"

NOTES:
1. MINIMUM BOLT SPACING SHALL BE 12 BOLT DIAMETERS WITH A MINIMUM EDGE DISTANCE OF 12 DIAMETERS, UNLESS NOTED OTHERWISE.
2. PROVIDE AN ADDITIONAL 2" OF EMBEDMENT FOR ANCHOR BOLTS LOCATED IN THE TOP OF COLUMNS.
3. ANCHOR BOLTS SHALL BE HEX HEADED WITH THE DIMENSIONS OF THE HEX CONFORMING TO ANSI/ASME B18.2.1 BENT BAR ANCHORS SHALL NOT BE USED.

C501-0 SCALE: NO SCALE

CONCRETE ANCHOR BOLT SCHEDULE 14

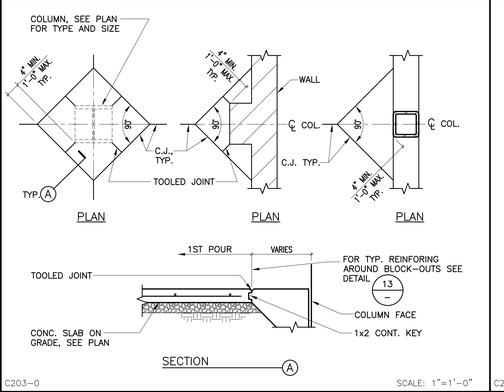

C203-0 SCALE: 1"=1'-0"

S.O.G. CONST. JOINTS AT COL. 10

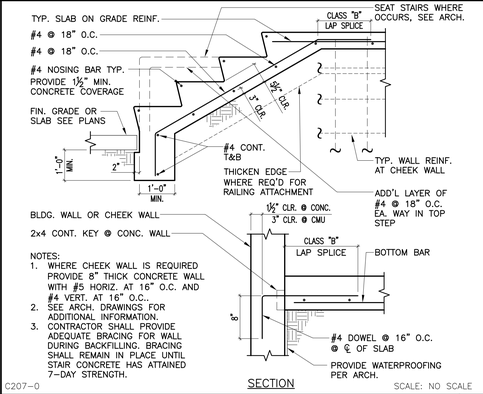

NOTES:
1. WHERE CHEEK WALL IS REQUIRED PROVIDE 8" THICK CONCRETE WALL WITH #5 HORIZ. AT 16" O.C. AND #4 VERT. AT 16" O.C..
2. SEE ARCH. DRAWINGS FOR ADDITIONAL INFORMATION.
3. CONTRACTOR SHALL PROVIDE ADEQUATE BRACING FOR WALL DURING BACKFILLING. BRACING SHALL REMAIN IN PLACE UNTIL STAIR CONCRETE HAS ATTAINED 7-DAY STRENGTH.

C207-0 SCALE: NO SCALE

CONCRETE STAIR ON GRADE 6

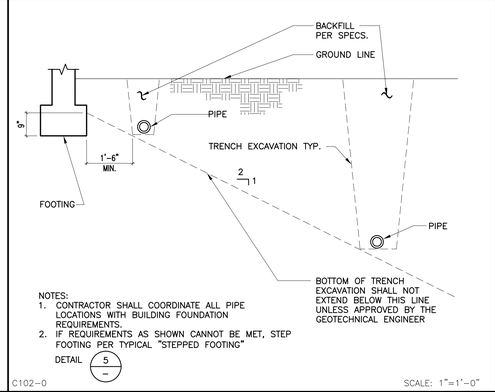

NOTES:
1. CONTRACTOR SHALL COORDINATE ALL PIPE LOCATIONS WITH BUILDING FOUNDATION REQUIREMENTS.
2. IF REQUIREMENTS AS SHOWN CANNOT BE MET, STEP FOOTING PER TYPICAL "STEPPED FOOTING"

DETAIL 5

C102-0 SCALE: 1"=1'-0"

PIPES PARALLEL TO FOOTINGS 1

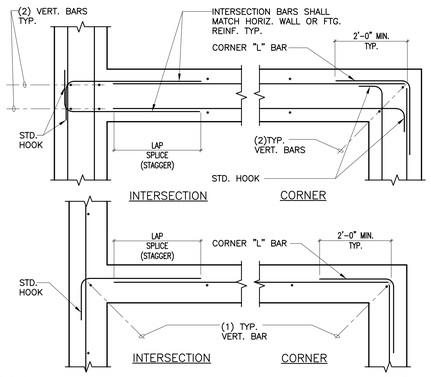

C303-0 SCALE: NO SCALE

REINF. AT FTG. OR WALL INTERSECTION 19

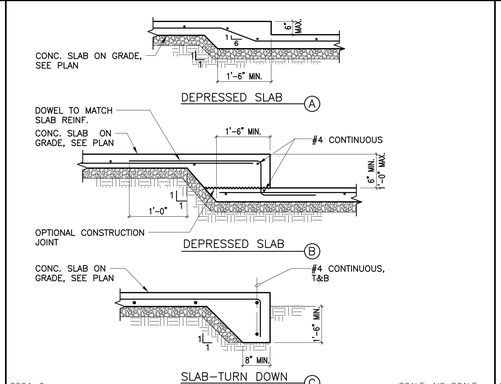

C204-0 SCALE: NO SCALE

DEPRESSED S.O.G. AND SLAB EDGE 15

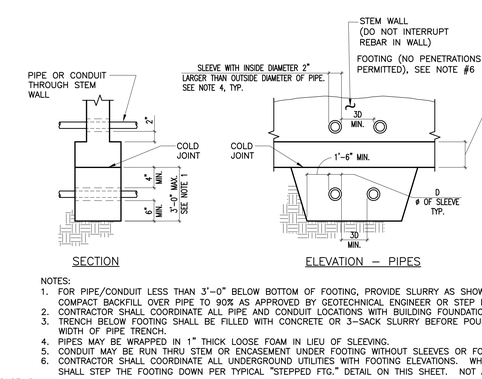

NOTES:
1. FOR PIPE/CONDUIT LESS THAN 3'-0" BELOW BOTTOM OF FOOTING, PROVIDE SLURRY AS SHOWN. FOR PIPE/CONDUIT MORE THAN 3'-0" BELOW BOTTOM OF FOOTING, COMPACT BACKFILL OVER PIPE TO 90% AS APPROVED BY GEOTECHNICAL ENGINEER OR STEP FTG SO THAT DIMENSION DOES NOT EXCEED 3'-0".
2. CONTRACTOR SHALL COORDINATE ALL PIPE AND CONDUIT LOCATIONS WITH BUILDING FOUNDATION REQUIREMENTS.
3. TRENCH BELOW FOOTING SHALL BE FILLED WITH CONCRETE OR 3-SACK SLURRY BEFORE POURING FOOTING. CONCRETE FILL SHALL BE SAME WIDTH AS FOOTING AND FULL WIDTH OF PIPE TRENCH.
4. PIPES MAY BE WRAPPED IN 1" THICK LOOSE FOAM IN LIEU OF SLEEVING.
5. CONDUIT MAY BE RUN THRU STEM OR ENCASEMENT UNDER FOOTING WITHOUT SLEEVES OR FOAM WRAP.
6. CONTRACTOR SHALL COORDINATE ALL UNDERGROUND UTILITIES WITH FOOTING ELEVATIONS. WHERE PIPES OR CONDUIT ARE IN CONFLICT WITH THE FOOTING, CONTRACTOR SHALL STEP THE FOOTING DOWN PER TYPICAL "STEPPED FTG." DETAIL ON THIS SHEET. NOT ALL REQUIRED STEPS IN THE FOOTING ARE SHOWN ON PLAN.

C103-0 SCALE: NO SCALE

PIPES AND CONDUIT PERPENDICULAR TO FOOTINGS 2

C105-0 SCALE: NO SCALE

CONTINUOUS FOOTING CONST. JOINT 20

NOTES:
1. SEE ARCH. FOR SIZE, HEIGHT AND LOCATION OF CURBS AND PADS.
2. PROVIDE INSERTS AS REQ'D BY ARCH & MECH. DRAWINGS.

C208-0 SCALE: NO SCALE

CONCRETE CURB AND PADS 16

NOTES:
1. PANELS SHALL BE DIVIDED BY CONTROL JOINTS AND CONSTRUCTION JOINTS.
2. PROVIDE CONTROL JOINTS PERPENDICULAR TO CONSTRUCTION JOINTS.
3. IN AREAS WHERE COLUMNS DO NOT OCCUR PROVIDE CONSTRUCTION OR CONTROL JOINTS AT 12'-0" MAX.
4. BETWEEN 1:1 TO 2:1 PANEL SHALL NOT EXCEED 150 SQUARE FEET IN AREA.
5. SEE PLANS FOR LOCATIONS WHERE ADDITIONAL JOINTS MAY BE REQUIRED.
6. THE CONTRACTOR SHALL SUBMIT A PROPOSED LAYOUT OF JOINTS FOR APPROVAL PRIOR TO POURING SLABS.
7. PROVIDE JOINTS @ ALL RE-ENTRANT CORNERS IN SLAB CONSTRUCTION.

C201-0 SCALE: NO SCALE

METHOD OF POURING S.O.G. 8

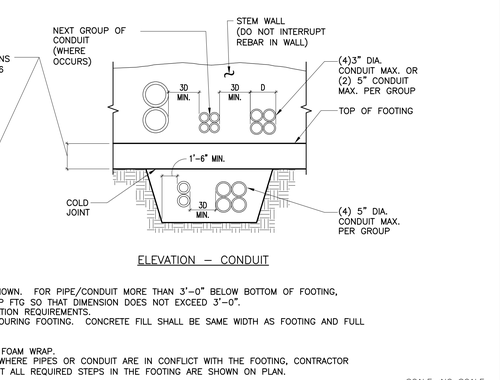

NOTES:
1. FOR FOOTING REINFORCING SEE FOOTING ELEVATIONS AND/OR SECTIONS.
2. VERTICAL WALL DOWELS SHALL EXTEND TO BOTTOM OF FOOTING.

C108-0 SCALE: NO SCALE

STEPPED FTG: ONE LAYER OF REINF. 3

INCREMENT #3: REBID SET 04/18/2024

PROJECT No. :50801

DRAWN BY:RCA CHECKED BY:

DELTA #	DATE	ADD	AFO	CCD	REV
DELTA #	DATE	ADD	AFO	CCD	REV
DELTA #	DATE	ADD	AFO	CCD	REV
DELTA #	DATE	ADD	AFO	CCD	REV

RUHNAUCLARKE.COM

3775 TENTH STREET, RIVERSIDE CALIFORNIA 92501 (951) 684 4664 / 5751 PALMER WAY, SUITE C, CARLSBAD CALIFORNIA 92010 (760) 438 5899

MOUNT TRANSIT ADMINISTRATION FACILITY
INCREMENT 3
170 BUSINESS CENTER DR. BIG BEAR LAKES, CA
BIG BEAR LAKES

TYPICAL CONCRETE DETAILS

S0-2.1

FREESTANDING CMU WALL SCHEDULE

H**	W	D	(A)	(B) *	(C)	WALL THICKNESS (NOMINAL)
1'–0" TO 2'–0"	1'–6"	12"	#5 @ 24" O.C.	#5 @ 24" O.C.	–	8"
2'–1" TO 3'–0"	2'–0"	12"	#5 @ 24" O.C.	#5 @ 24" O.C.	–	8"
3'–1" TO 4'–0"	2'–6"	12"	#5 @ 24" O.C.	#5 @ 24" O.C.	#5 @ 24" O.C.	8"
4'–1" TO 5'–0"	2'–6"	12"	#5 @ 24" O.C.	#5 @ 24" O.C.	#5 @ 24" O.C.	8"
5'–1" TO 6'–0"	3'–0"	12"	#5 @ 24" O.C.	#5 @ 24" O.C.	#5 @ 24" O.C.	8"
6'–1" TO 7'–0"	3'–6"	12"	#5 @ 24" O.C.	#5 @ 24" O.C.	#5 @ 24" O.C.	8"

* SPACE VERTICAL REINFORCING @ 16" O.C. WHERE STACK BOND PATTERN OCCURS.
** SEE ARCHITECTURAL OR CIVIL DRAWINGS FOR HEIGHT.

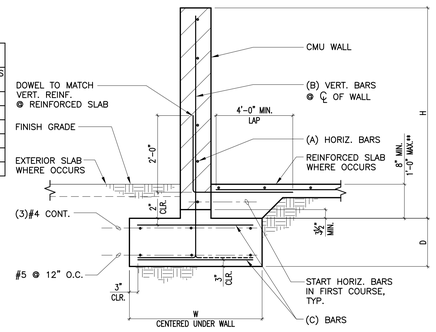

M108–0 SCALE: NO SCALE

13

TYP. VERT. PIPES OR COND. THRU FTG.

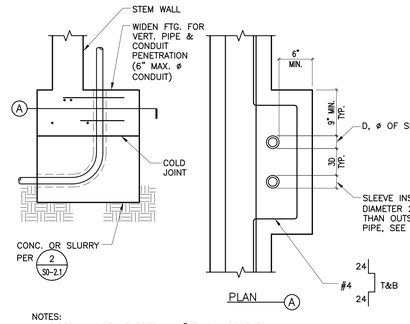

NOTES:
1. PIPES MAY BE WRAPPED IN 1" THICK LOOSE FOAM IN LIEU OF SLEEVING.
2. CONDUIT MAY BE ROUTED UP THROUGH FOOTING WITHOUT SLEEVES OR FOAM WRAP.

C109–0 SCALE: NO SCALE

9

BAR BENDS

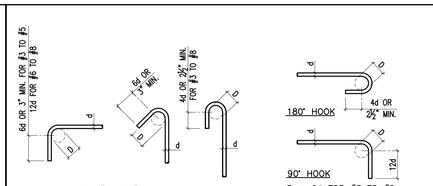

NOTES:
1. ALL BAR BENDS SHALL BE MADE COLD.
2. ALL REINFORCING BARS #5 & LARGER SHALL NOT BE RE–BENT.

C409–0 SCALE: NO SCALE

5

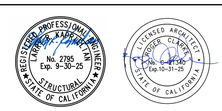

STAMPS

AGENCY APPROVAL
File No.: # A/#

KNA STRUCTURAL ENGINEERS
9931 Muirlands Boulevard, Irvine, CA 92618
Tel (949) 462-3200, Fax (949) 462-3201
KNA JOB NO: 203.653
CONSULTANT

RUHNAU CLARKE ARCHITECTS

CONC. MAS. WALL INTERSECTIONS

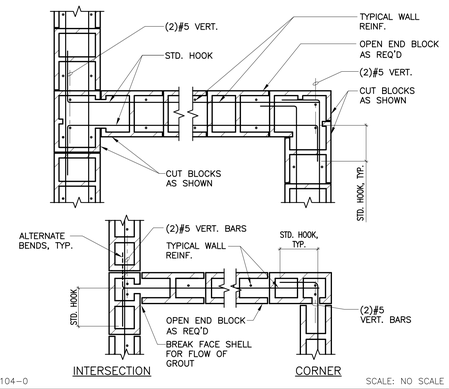

M104–0 SCALE: NO SCALE

18

PIPE PENETRATION W/IN GRADE BM.

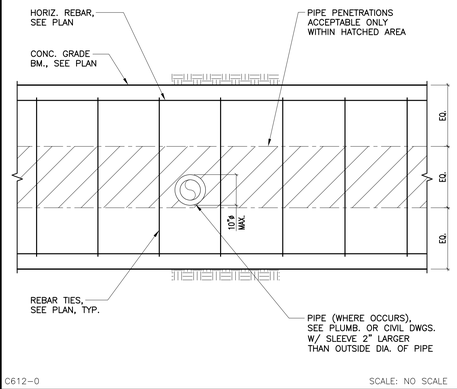

C612–0 SCALE: NO SCALE

10

DETAIL

REINFORCING DEVELOPMENT & SPLICE LENGTHS (GRADE 60)

TYPE	BAR LOCATION	CONCRETE		BAR SIZE																										
		TYPE	STRENGTH	#3			#4			#5			#6			#7			#8			#9			#10			#11		
				ℓ_d	ℓ_s	ℓ_{dh}	ℓ_d	ℓ_s	ℓ_{dh}	ℓ_d	ℓ_s	ℓ_{dh}	ℓ_d	ℓ_s	ℓ_{dh}	ℓ_d	ℓ_s	ℓ_{dh}	ℓ_d	ℓ_s	ℓ_{dh}	ℓ_d	ℓ_s	ℓ_{dh}	ℓ_d	ℓ_s	ℓ_{dh}	ℓ_d	ℓ_s	ℓ_{dh}
1	VERT. REINF. IN CONC WALL	NWC	fc'>4ksi	14	18	6	19	25	7	24	31	9	28	37	10	42	54	12	47	62	14	54	70	15	61	79	17	67	87	19
2	HORIZ. REINF. IN CONC. WALL, FTGS., BEAMS, MISC. (SEE NOTE 5)	NWC	fc'>4ksi	18	24	6	25	32	7	31	40	9	37	48	10	54	70	12	62	80	14	70	91	15	79	102	17	87	113	19
3	SLAB ON GRADE (SEE NOTE 6)	NWC	fc'>4ksi	14	18	6	19	25	7	24	31	9	28	37	10	42	54	12	47	62	14	54	70	15	61	79	17	67	87	19
4	CONC. ROOF OR FLOOR DIAPHRAGMS	LWC	fc'≥3ksi	23	30	8	30	39	12	37	48	12	44	57	13	65	84	16	74	96	19	83	108	20	93	121	23	104	135	25

NOTES:
1. ℓ_d = DEVELOPMENT
ℓ_s = LAP SPLICE LENGTH
ℓ_{dh} = HOOK DEVELOPMENT LENGTH
2. THE ABOVE DEVELOPMENT & SPLICE LENGTHS ARE CLASS B & APPLY TO ALL REINF. U.N.O. ON DWGS.
3. FOR NONCONTACT LAP SPLICES AND ALL SPLICES IN SHOTCRETE WALLS, ADD 6" TO THE LENGTHS IN THE TABLE ABOVE.
4. WHEN SPLICING BARS OF DIFFERENT SIZE, USE THE LAP SPLICE LENGTH OF LARGER BAR.
5. TYPE 2 VALUES NOTED HAVE ALREADY BEEN INCREASED BY 1.3, ASSUMING A "TOP BAR" CONDITION.
6. FOR SLABS OR CURBS THICKER THAN 12", THE REBAR LAPS SHALL BE INCREASED TO COMPLY WITH TYPE 2 VALUES.

C415–0 SCALE: NO SCALE

1

19

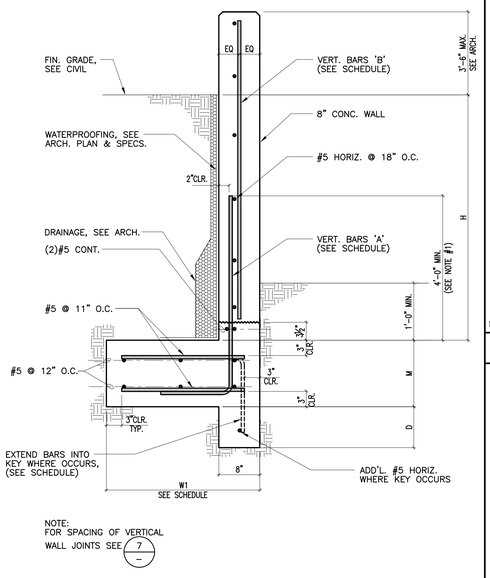

NOTE:
FOR SPACING OF VERTICAL WALL JOINTS SEE 7 —

SCHEDULE					
H (FT.)	W1 (FT.)	M (IN.)	D (FT.)	VERT. BARS 'A'	VERT. BARS 'B'
0'–0" TO 2'–0"	2'–0"	1'–0"	–	#5 @ 18" O.C.	(SEE NOTE #1)
2'–1" TO 4'–0"	3'–6"	1'–0"	–	#5 @ 18" O.C.	(SEE NOTE #1)
4'–1" TO 6'–0"	5'–0"	1'–0"	0'–9"	#5 @ 14" O.C.	#5 @ 18" O.C.
6'–1" TO 8'–0"	7'–3"	1'–2"	1'–0"	#6 @ 9" O.C.	#5 @ 18" O.C.

NOTE :
1. AT WALLS WITH H = 4–0" OR LESS, PLACE VERT. BARS 'A' AT CENTER LINE OF WALL AND OMIT VERT. BARS 'B'.

MMT–095 SCALE: 1"=1'–0"

20

SITE RETAINING WALL SCHEDULE - PROPERTY LINE FTG.

HORIZ. REINF. LAP SPLICE - MASONRY

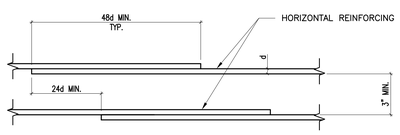

NOTES:
1. CONTRACTOR MAY AT HIS OPTION USE A BUTT WELDED SPLICE IN LIEU OF LAP.
2. WHERE HORIZ. BARS OF DIFFERENT SIZE ARE BEING LAPPED, LAP LENGTH SHALL BE BASED UPON SMALLER BAR DIAMETER.

M103–0 SCALE: NO SCALE

11

VERT. REINF. LAP SPLICE-MASONRY

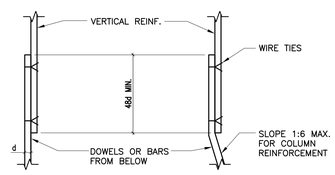

NOTES:
1. ALL VERTICAL REINFORCING FOR COLUMN, PIERS AND WALLS SHALL BE DOWELED AS SHOWN, UNLESS NOTED OTHERWISE.
2. DOWELS SHALL BE THE SAME GRADE, SIZE, QUANTITY AND/OR SPACING AS VERTICAL REINFORCING.
3. WHERE HORIZ. BARS OF DIFFERENT SIZE ARE BEING LAPPED, LAP LENGTH SHALL BE BASED UPON LARGER BAR DIAMETER.

M102–0 SCALE: NO SCALE

7

CONCRETE BASE FOR EQUIPMENT

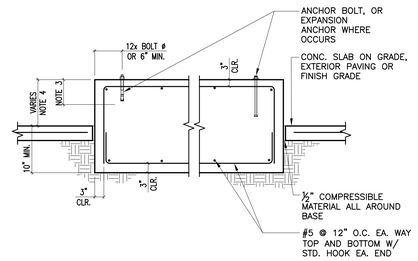

NOTES:
SEE MECHANICAL AND ELECTRICAL DRAWINGS FOR THE FOLLOWING:
1. LOCATION AND DIMENSIONS OF BASES.
2. LOCATION, NUMBER, SIZE AND TYPE OF BOLTS.
3. EMBEDMENT OF EXPANSION ANCHORS WHERE OCCURS.
4. CURB HEIGHT, 4" MIN.

C209–0 SCALE: NO SCALE

2

TYP. CONTROL JOINT IN CMU WALL

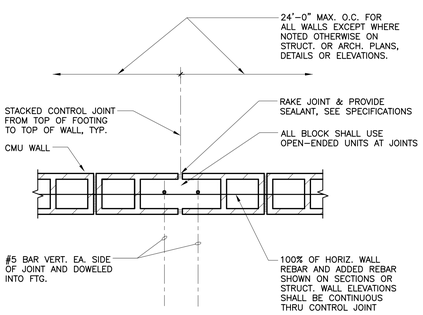

M110–0 SCALE: NO SCALE

12

CJP WELDED REINFORCING BARS

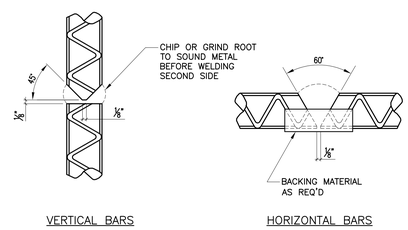

NOTES:
1. A PRE–QUALIFICATION TEST SHALL BE MADE BY AN APPROVED TESTING LABORATORY ON SAMPLES OF EACH SIZE BAR BEING WELDED.
2. WELDING SHALL BE WITH E80XX LOW HYDROGEN ELECTRODES AND SHALL CONFORM TO A.W.S. – D1.4.

C412–0 SCALE: NO SCALE

8

HORIZONTAL WALL CONST. JOINT

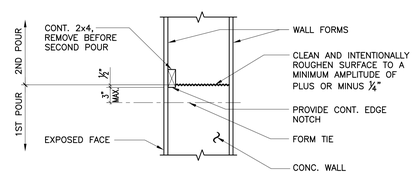

NOTE:
PROVIDE CONTINUOUS 2x4 ON BOTH FACES WHEN BOTH FACES ARE EXPOSED.

C304–0 SCALE: NO SCALE

3

INCREMENT #3: REBID SET 04/18/2024

PROJECT No. :50801

DRAWN BY:RCA CHECKED BY:
DELTA # _____ DATE _____ ☐ ADD ☐ AFO ☐ CCD ☐ REV
DELTA # _____ DATE _____ ☐ ADD ☐ AFO ☐ CCD ☐ REV
DELTA # _____ DATE _____ ☐ ADD ☐ AFO ☐ CCD ☐ REV
DELTA # _____ DATE _____ ☐ ADD ☐ AFO ☐ CCD ☐ REV

RUHNAUCLARKE.COM
3775 TENTH STREET, RIVERSIDE CALIFORNIA 92501 (951) 684 4664 / 5751 PALMER WAY, SUITE C, CARLSBAD CALIFORNIA 92010 (760) 438 5899

MOUNT TRANSIT ADMINISTRATION FACILITY
INCREMENT 3
170 BUSINESS CENTER DR. BIG BEAR LAKES, CA
BIG BEAR LAKES

TYPICAL REINFORCING & MASONRY DETAILS

S0-2.2

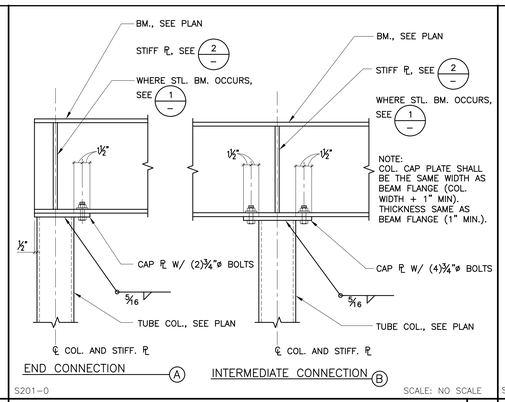

S201-0 SCALE: NO SCALE

17 BEAM TO HSS COL. CONN. (2 SIDES)

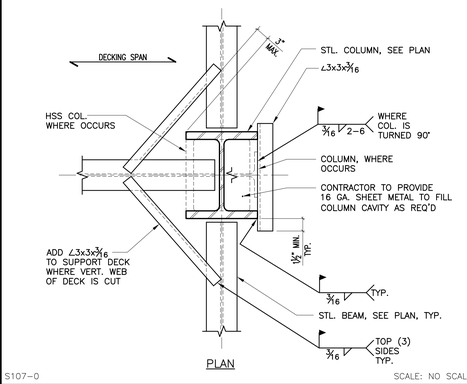

S107-0 SCALE: NO SCALE

13 DECK SUPPORT AT COLUMN

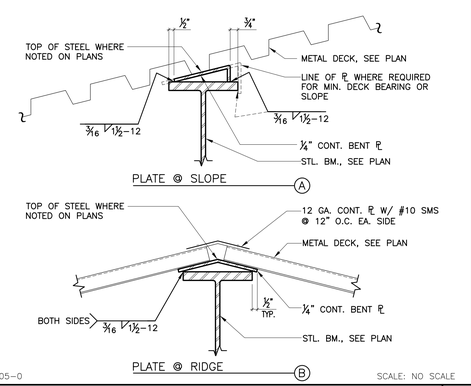

S505-0 SCALE: NO SCALE

9 BEAM SLOPE TRANSITION PLATES

5

STAMPS

AGENCY APPROVAL

KNA STRUCTURAL ENGINEERS
9931 Muirlands Boulevard, Irvine, CA 92618
Tel (949) 462-3200, Fax (949) 462-3201
KNA JOB NO: 203.653 CONSULTANT

RUHNAU CLARKE ARCHITECTS

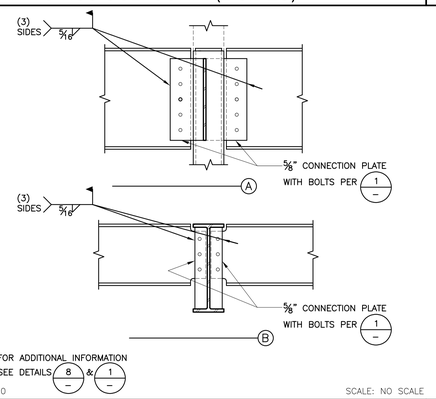

S316-0 SCALE: NO SCALE

18 TYPICAL WELDED DRAG BEAM

BASE PLATE SCHEDULE			
COLUMN SIZE	"T"	ANCHOR DIA. U.N.O.	EMBEDMENT
4" TO 6"	1"	¾"	9"
> 6" TO 10"	1½"	¾"	9"
> 10" TO 14"	2"	1"	12"
GREATER THAN 14"	2½"	1¼"	12"

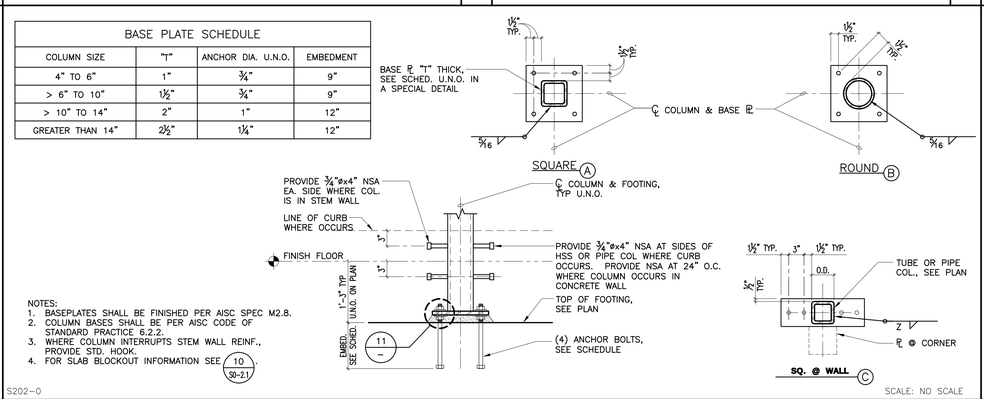

NOTES:
1. BASEPLATES SHALL BE FINISHED PER AISC SPEC M2.8.
2. COLUMN BASES SHALL BE PER AISC CODE OF STANDARD PRACTICE 6.2.2.
3. WHERE COLUMN INTERRUPTS STEM WALL REINF., PROVIDE STD. HOOK.
4. FOR SLAB BLOCKOUT INFORMATION SEE 10 S0-2.1

S202-0 SCALE: NO SCALE

14 TYPICAL BASE PLATE

6

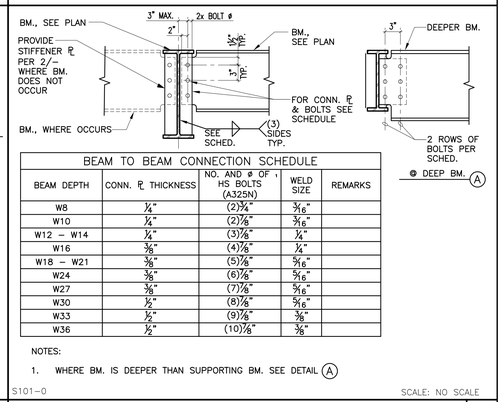

BEAM TO BEAM CONNECTION SCHEDULE				
BEAM DEPTH	CONN. PL THICKNESS	NO. AND ø OF ¾" HS BOLTS (A325N)	WELD SIZE	REMARKS
W8	¼"	(2)¾"	5/16"	
W10	¼"	(2)⅞"	5/16"	
W12 – W14	¼"	(3)⅞"	¼"	
W16	3/8"	(4)⅞"	¼"	
W18 – W21	3/8"	(5)⅞"	5/16"	
W24	3/8"	(6)⅞"	5/16"	
W27	3/8"	(7)⅞"	5/16"	
W30	½"	(8)⅞"	5/16"	
W33	½"	(9)⅞"	3/8"	
W36	½"	(10)⅞"	3/8"	

NOTES:
1. WHERE BM. IS DEEPER THAN SUPPORTING BM. SEE DETAIL A

S101-0 SCALE: NO SCALE

1 BEAM TO BEAM CONNECTION

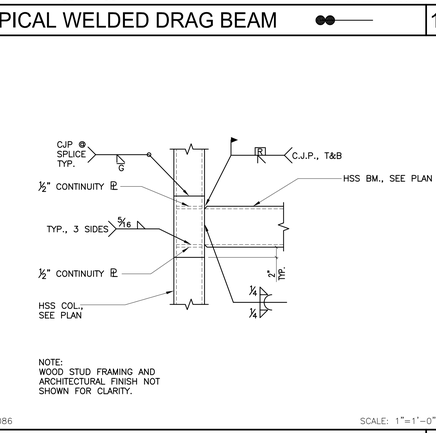

NOTE:
WOOD STUD FRAMING AND ARCHITECTURAL FINISH NOT SHOWN FOR CLARITY.

MMT-086 SCALE: 1"=1'-0"

19 HSS BM. TO COL. MOMENT CONN.

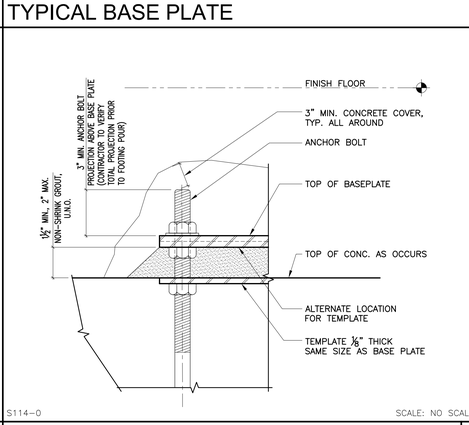

S114-0 SCALE: NO SCALE

15 ANCHOR BOLT PROJECTION

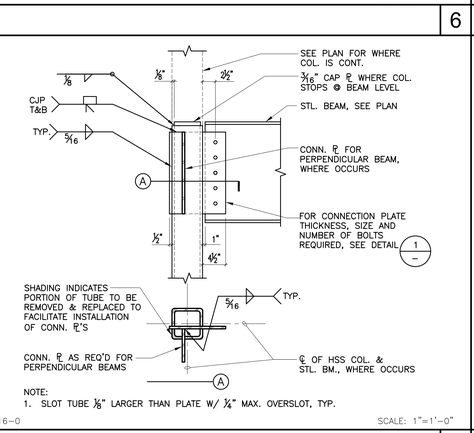

NOTE:
1. SLOT TUBE ⅛" LARGER THAN PLATE W/ ¼" MAX. OVERSLOT, TYP.

S116-0 SCALE: 1"=1'-0"

11 BEAM TO SIDE OF HSS COL. CONN. (ONE SIDE)

7

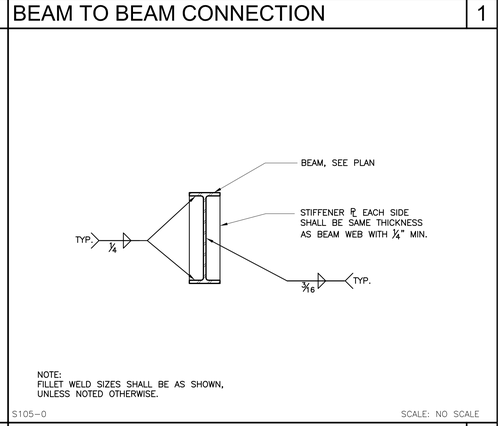

NOTE:
FILLET WELD SIZES SHALL BE AS SHOWN, UNLESS NOTED OTHERWISE.

S105-0 SCALE: NO SCALE

2 BEAM STIFFENER PLATES

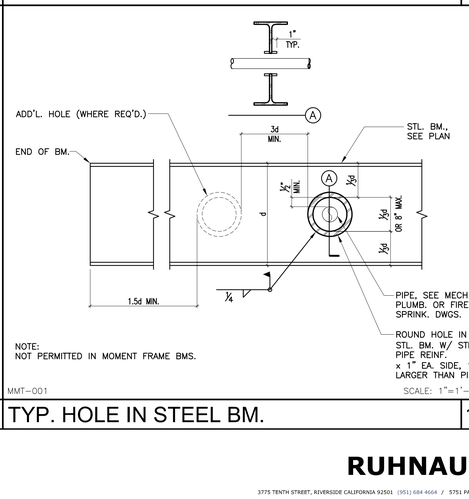

NOTE:
NOT PERMITTED IN MOMENT FRAME BMS.

MMT-001 SCALE: 1"=1'-0"

16 TYP. HOLE IN STEEL BM.

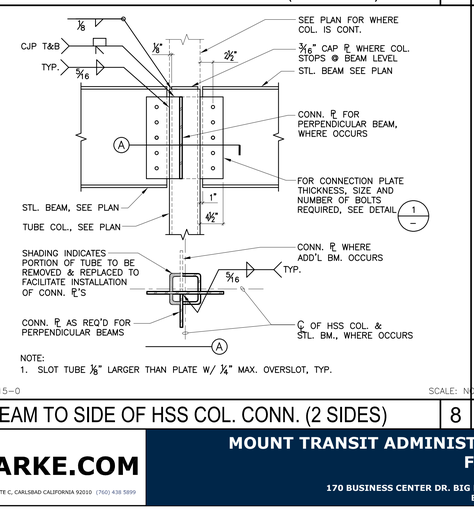

NOTE:
1. SLOT TUBE ⅛" LARGER THAN PLATE W/ ¼" MAX. OVERSLOT, TYP.

S115-0 SCALE: NO SCALE

12 BEAM TO SIDE OF HSS COL. CONN. (2 SIDES)

8

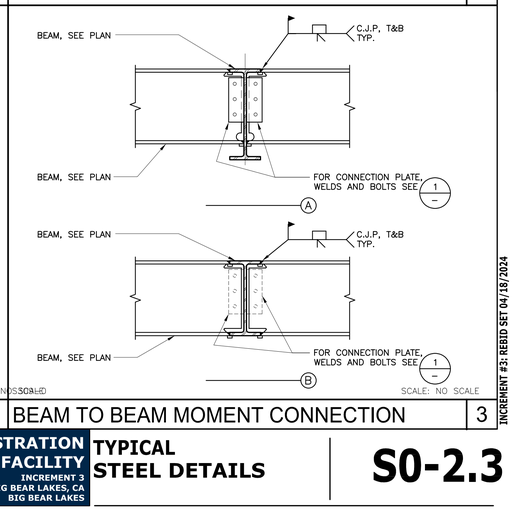

S104-0 SCALE: NO SCALE

3 BEAM TO BEAM MOMENT CONNECTION

20 — 16 — 12 — 8 — 4

PROJECT No. :50801

DRAWN BY:RCA CHECKED BY:
DELTA # _____ DATE _____ ☐ ADD ☐ AFO ☐ CCD ☐ REV
DELTA # _____ DATE _____ ☐ ADD ☐ AFO ☐ CCD ☐ REV
DELTA # _____ DATE _____ ☐ ADD ☐ AFO ☐ CCD ☐ REV
DELTA # _____ DATE _____ ☐ ADD ☐ AFO ☐ CCD ☐ REV

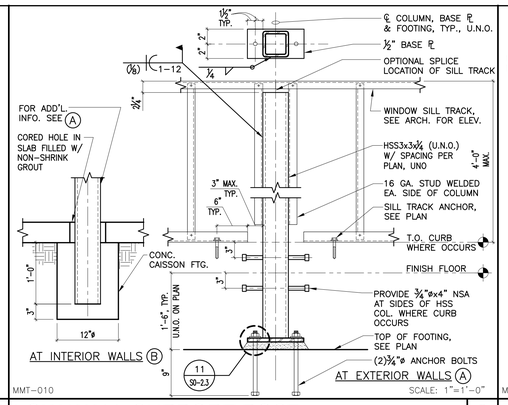

MMT-010 SCALE: 1"=1'-0"

17 | 13 | LOW WALL SUPPORT POST | 9

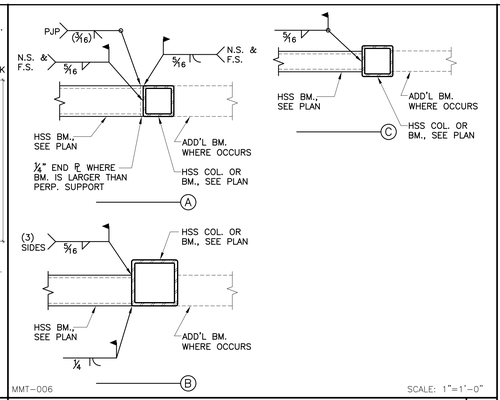

MMT-006 SCALE: 1"=1'-0"

5 | TYP. HSS CONNECTIONS

REGISTERED PROFESSIONAL ENGINEER
LAURENCE E. KNA
No. 27955
Exp. 9-30-25
STRUCTURAL
STATE OF CALIFORNIA
LICENSED ARCHITECT
ROBERT D. CLARKE
No. 18736
Exp.10-31-25
STATE OF CALIFORNIA
STAMPS
AGENCY APPROVAL
Jurisdiction: # Approval #

KNA STRUCTURAL ENGINEERS
9931 Muirlands Boulevard, Irvine, CA 92618
Tel (949) 462-3200, Fax (949) 462-3201
KNA JOB NO: 203.653
CONSULTANT

RUHNAU CLARKE ARCHITECTS

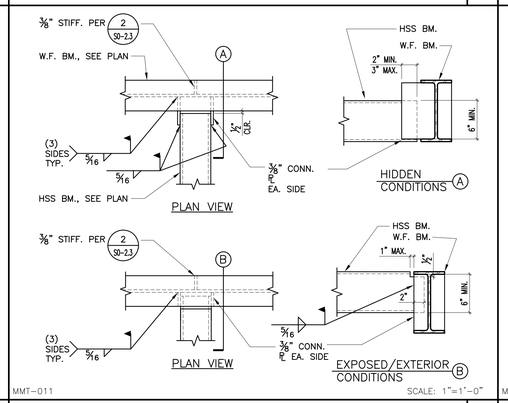

MMT-011 SCALE: 1"=1'-0"

18 | 14 | TYP. HSS TO W.F. BEAM | 10

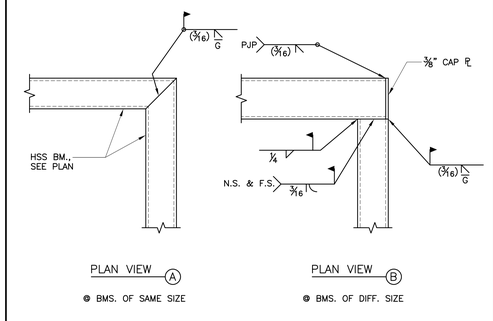

MMT-007 SCALE: 1"=1'-0"

6 | HSS @ CORNER

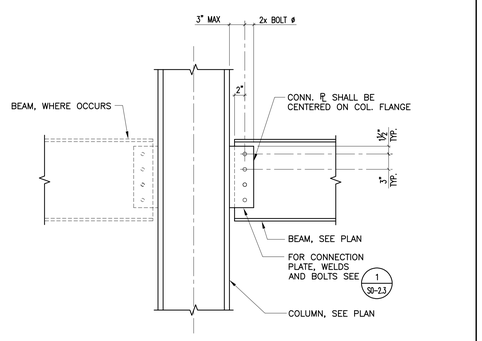

S102-0 SCALE: NO SCALE

1 | BEAM TO WF COL. FLANGE CONN.

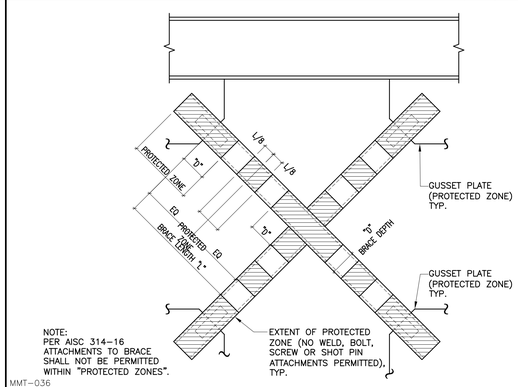

MMT-036

19 | 15 | BRACE MEMBER PROTECTED ZONES

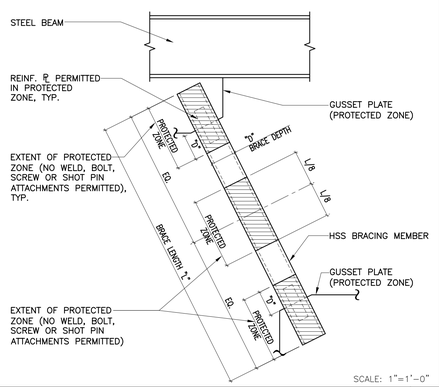

SCALE: 1"=1'-0"

7 | STEEL BEAM SPLICE / BENT BEAM | 2

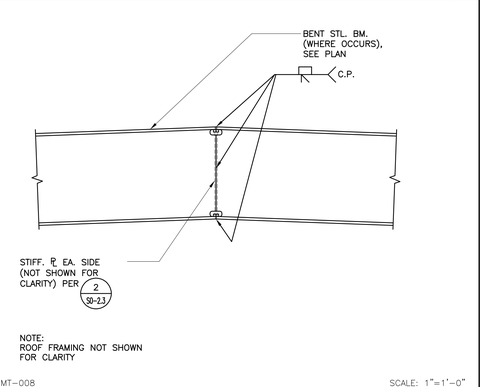

MMT-008 SCALE: 1"=1'-0"

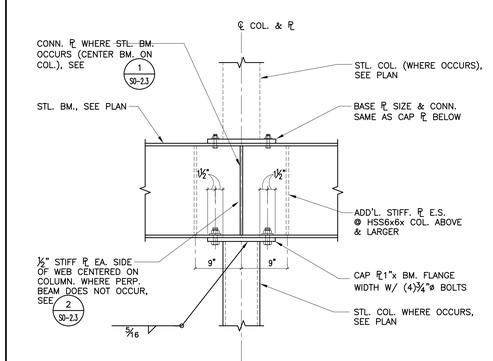

MMT-009 SCALE: 1"=1'-0"

20 | 16 | 12 | BEAM TO HSS OR PIPE COL. CONN. | 8

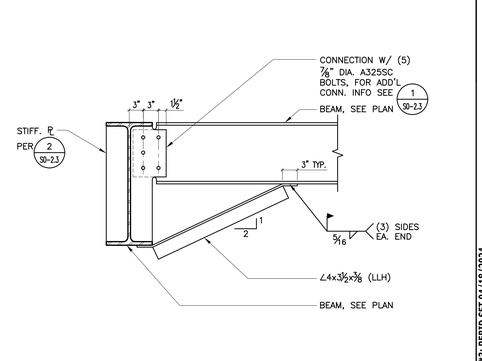

MMT-005 SCALE: 1"=1'-0"

8 | BEAM BRACE | 3

INCREMENT #3: REBID SET 04/18/2024

PROJECT No. :50801

DRAWN BY:RCA CHECKED BY:

DELTA # ____ DATE ____ ADD AFO CCD REV
DELTA # ____ DATE ____ ADD AFO CCD REV
DELTA # ____ DATE ____ ADD AFO CCD REV
DELTA # ____ DATE ____ ADD AFO CCD REV

17 | 13 | 9

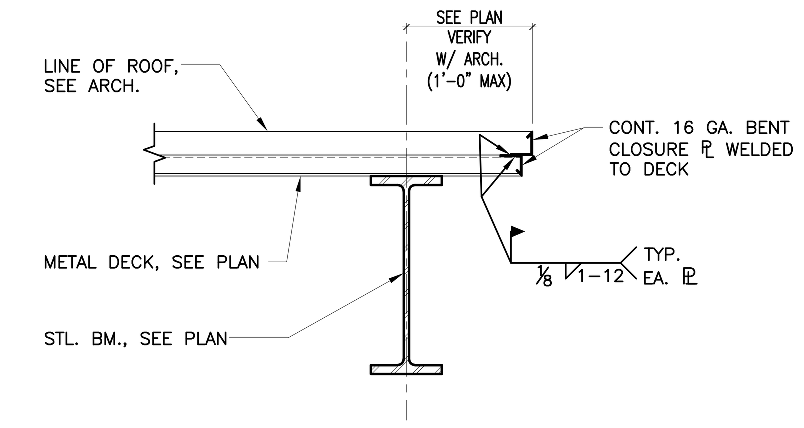

S506-0 SCALE: NO SCALE

TYPICAL ROOF DECK EDGE 5

STAMPS
AGENCY APPROVAL
KNA STRUCTURAL ENGINEERS
9931 Muirlands Boulevard, Irvine, CA 92618
Tel (949) 462-3200, Fax (949) 462-3201
KNA JOB NO: 203.653
CONSULTANT
RUHNAU CLARKE ARCHITECTS

18 | 14 | 10 | 6

FLOOR AND ROOF CONSTRUCTION SCHEDULE		
MARK	DECK CONSTRUCTION	DETAIL
D1	1½"x18 GA. PLB-36 ROOF DECK	2 / –

S415-0 SCALE: NO SCALE

FLOOR AND ROOF CONST. SCHEDULE 1

19 | 15 | 11

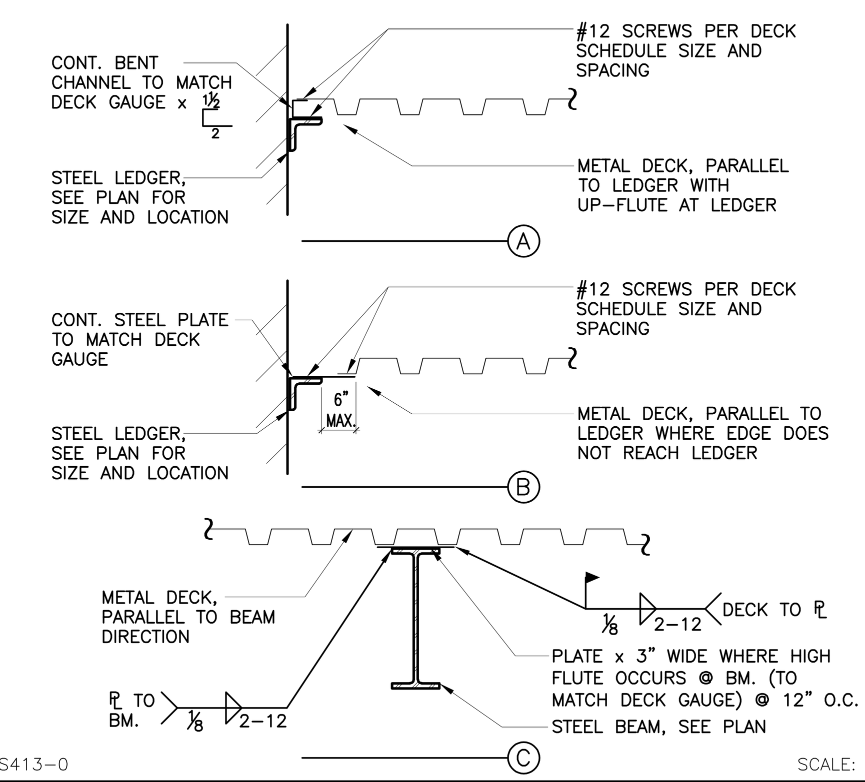

S413-0 SCALE: NO SCALE

NON-COMPOSITE DECK PARALLEL TO SUPPORT 7

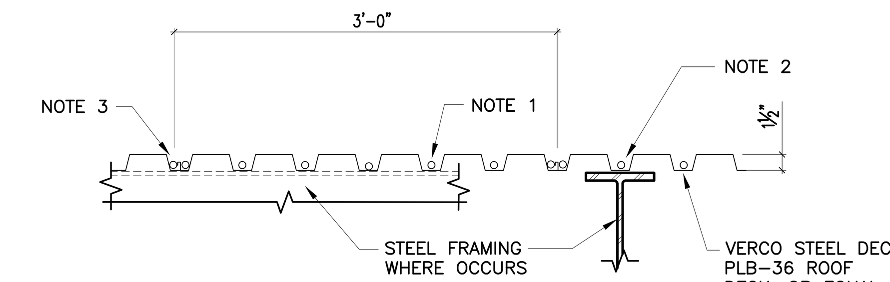

NOTES:

1. ○ INDICATES #12 SCREWS, ICC ESR-3693.
2. WHERE DECK RIBS ARE PARALLEL TO SUPPORTS USE #12 SCREW @ 4" O.C.
3. SEAM ATTACHMENT TO BE VSC2 @ 12" O.C.
4. DECK ENDS PERMITTED TO BE EITHER BUTTED OR LAPPED.
5. MINIMUM DECK PROPERTIES:

	D1
GAGE	18 GA.
I- (IN^4)	0.306
S+ (IN^3)	0.314
S- (IN^3)	0.331

S502-0 SCALE: NO SCALE

ROOF DECK ATTACHMENT & SECT. PROP. 2

20 | 16 | 12 | 8

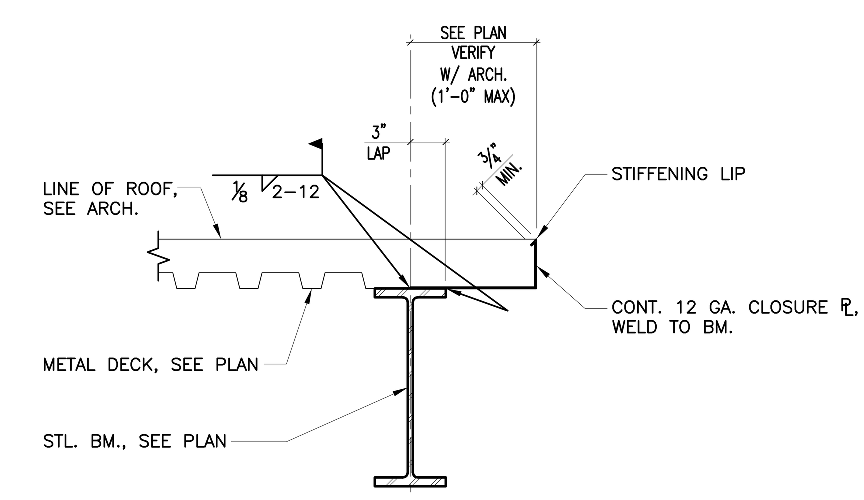

S507-0 SCALE: NO SCALE

TYPICAL ROOF DECK EDGE 3

INCREMENT #3: REBID SET 04/18/2024

PROJECT No. :50801

DRAWN BY:RCA CHECKED BY:

RUHNAUCLARKE.COM

MOUNT TRANSIT ADMINISTRATION FACILITY
INCREMENT 3
170 BUSINESS CENTER DR. BIG BEAR LAKES, CA
BIG BEAR LAKES

TYPICAL METAL DECK DETAILS

S0-2.5

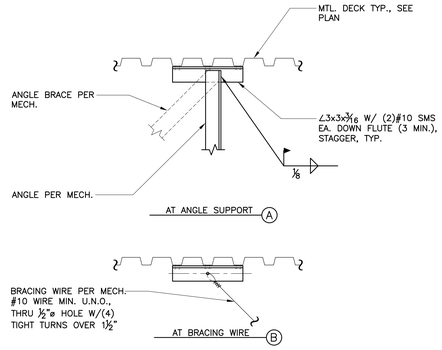

MMT–057 SCALE: NO SCALE

17 MECH. SUPPORT

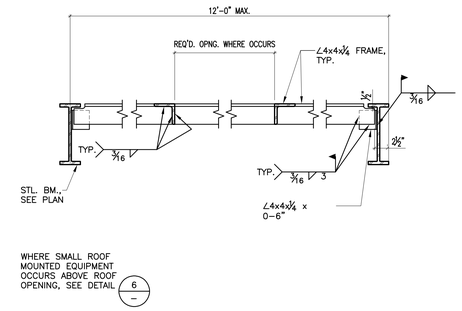

MMT–018 SCALE: 1"=1'–0"

13 TYPICAL DROP IN ANGLE FRAME

9

5

REGISTERED PROFESSIONAL ENGINEER LAWRENCE E. KNA No. 2795 Exp. 9-30-25 STRUCTURAL STATE OF CALIFORNIA
LICENSED ARCHITECT ROBERT C. RUHNAU Exp.10-31-25 STATE OF CALIFORNIA
STAMPS
AGENCY APPROVAL File No.: # App
KNA STRUCTURAL ENGINEERS
9931 Muirlands Boulevard, Irvine, CA 92618
Tel (949) 462-3200, Fax (949) 462-3201
KNA JOB NO: 203.653 CONSULTANT
RUHNAU CLARKE ARCHITECTS

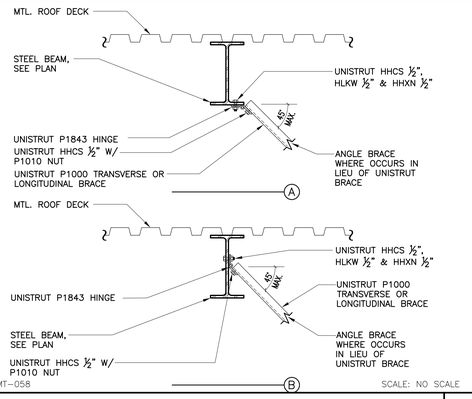

MMT–058 SCALE: NO SCALE

18 BRACE DETAIL

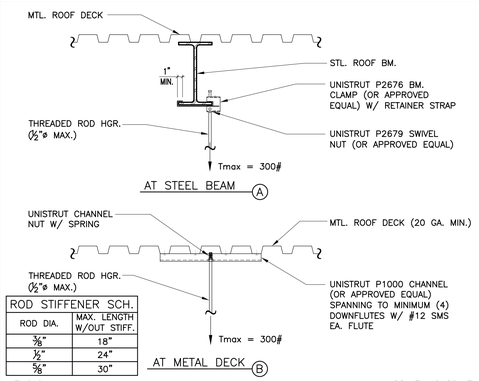

ROD STIFFENER SCH.	
ROD DIA.	MAX. LENGTH W/OUT STIFF.
3/8"	18"
1/2"	24"
5/8"	30"

MMT–019 SCALE: NO SCALE

14 THREADED ROD HANGER AT METAL ROOF DECK

10

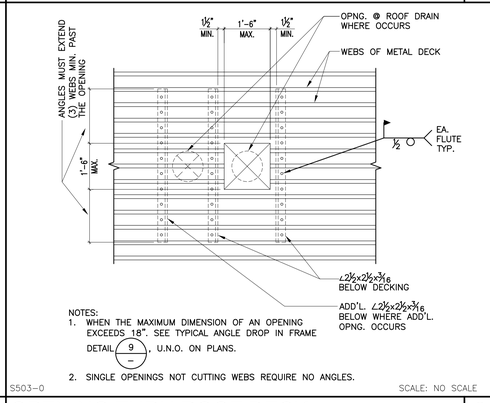

NOTES:
1. WHEN THE MAXIMUM DIMENSION OF AN OPENING EXCEEDS 18". SEE TYPICAL ANGLE DROP IN FRAME DETAIL 9, U.N.O. ON PLANS.
2. SINGLE OPENINGS NOT CUTTING WEBS REQUIRE NO ANGLES.

S503–0 SCALE: NO SCALE

6 OPENING THRU ROOF DECK

2

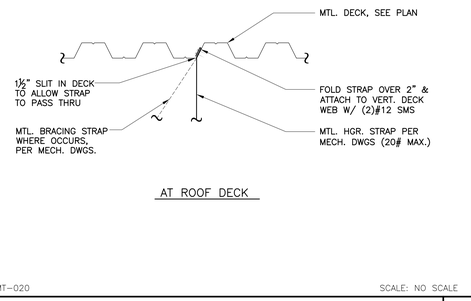

MMT–020 SCALE: NO SCALE

15 TYP. DUCT SUPPORT STRAP ATTACHMENT

11

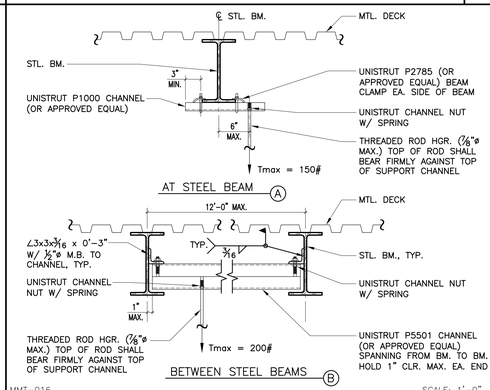

MMT–016 SCALE: 1'–0"

7 THREADED ROD HANGER AT BRACE ASSEMBLY

3

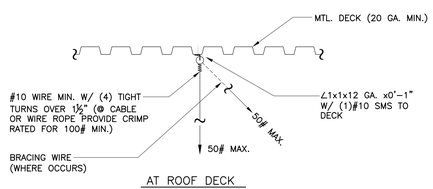

MMT–021 NO SCALE

16 HANGER WIRE TO DECK

12

8

INCREMENT #3: REBID SET 04/18/2024

STUD SCHEDULE

DEPTH	GAUGE	B	AREA (IN^2)	I (IN^4)	S (IN^3)	MAX. INTERIOR STUD WALL HT.*	SSMA DESIGNATION
2½"	20	1⅝"	.223	.235	.188	9'–1"	250S162–33
	18	1⅝"	.289	.302	.242	9'–10"	250S162–43
	16	1⅝"	.358	.370	.296	10'–7"	250S162–54
4"	20	1⅝"	.275	.692	.346	13'–0"	400S162–33
	18	1⅝"	.357	.892	.446	14'–2"	400S162–43
	16	1⅝"	.443	1.098	.549	15'–2"	400S162–54
6"	20	1⅝"	.344	1.793	.598	17'–11"	600S162–33
	18	1⅝"	.447	2.316	.772	19'–6"	600S162–43
	16	1⅝"	.556	2.860	.953	20'–11"	600S162–54
8"	20	1⅝"	.413	3.582	.896	22'–6"	800S162–33
	16	1⅝"	.670	5.736	1.434	26'–4"	800S162–54
	14	2"	.907	8.140	2.035	26'–4"	800S200–68
10"	16	2"	.839	11.278	2.256	26'–4"	1000S200–54
12"	14	2"	1.192	21.947	3.658	26'–4"	1200S200–68

DEPTH O.D. B

* MAX. HEIGHT PER SCHEDULE BASED ON SSMA CATALOG FOR INTERIOR, NON–BEARING WALLS WITH 15.1 PSF LATERAL LOAD @ L/240 @ 16" O.C.

TRACK SCHEDULE

DEPTH	GAUGE	B	AREA (IN^2)	I (IN^4)	S (IN^3)	SSMA DESIGNATION
2½"	20	1½"	.190	.221	.167	250T150–33
	18	1½"	.248	.289	.217	250T150–43
	16	1½"	.311	.368	.273	250T150–54
4"	20	1½"	.242	.622	.300	400T150–33
	18	1½"	.315	.811	.390	400T150–43
	16	1½"	.396	1.025	.489	400T150–54
6"	20	1½"	.311	1.590	.517	600T150–33
	18	1½"	.405	2.072	.673	600T150–43
	16	1½"	.509	2.611	.843	600T150–54
8"	20	1½"	.380	3.180	.781	800T150–33
	16	1½"	.622	5.214	1.272	800T150–54
	14	1½"	.783	6.594	1.599	800T150–68
10"	16	1½"	.735	9.061	1.777	1000T150–54
12"	14	1½"	1.068	18.148	2.963	1200T150–68

DEPTH I.D. B

NOTES:
1. SEE ARCHITECTURAL AND STRUCTURAL DRAWINGS FOR SIZE AND GAUGE OF STUDS. PROVIDE MIN. 20 GA. STUDS FOR INTERIOR CONDITIONS, AND 16 GA. FOR EXTERIOR, U.N.O.
2. DIMENSIONS, PROPERTIES AND TYPES NOTED ARE BASED ON METAL STUDS AND TRACKS BY STEEL STUD MANUFACTURERS ASSOCIATION (SSMA), ICC ESR–3064P, U.N.O.

S615–0 SCALE: NO SCALE

METAL STUD AND TRACK SCHEDULES 19

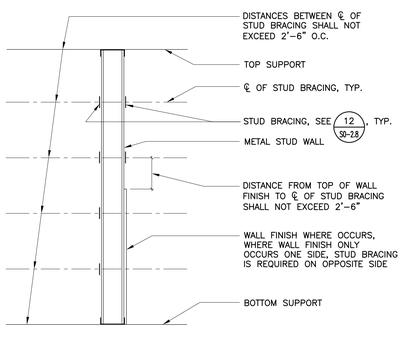

NOTE:
WHERE WALL FINISH OCCURS BOTH SIDES OF WALL, FOR FULL HEIGHT OF STUD, BRACING IS NOT REQUIRED, U.N.O.

S616–0 SCALE: NO SCALE

WALL STUD BRACING LOCATION 20

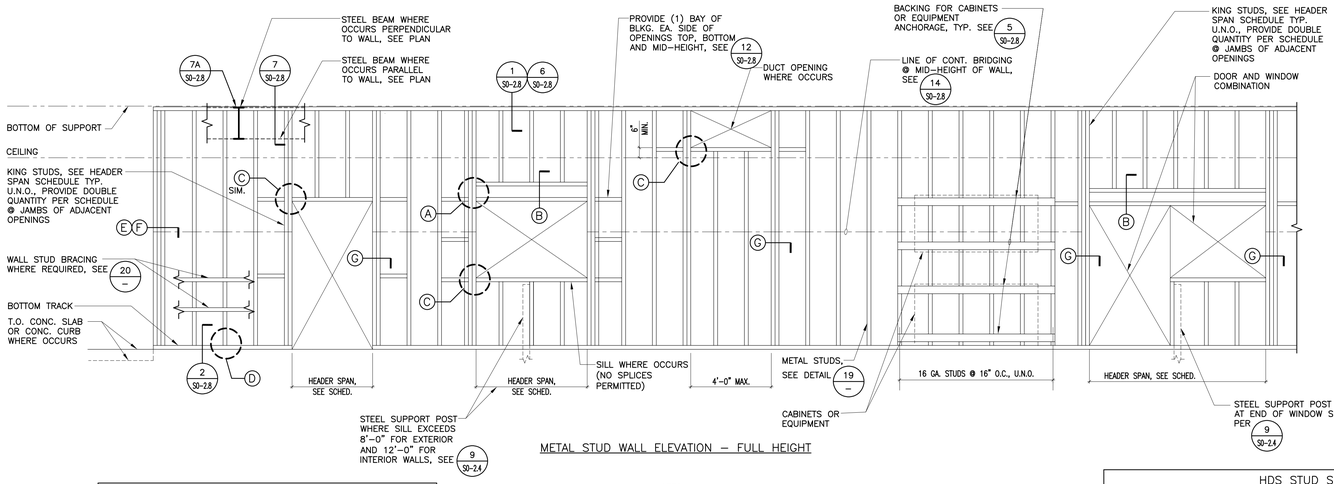

METAL STUD WALL ELEVATION – FULL HEIGHT

HEADER SPAN SCHEDULE

SPAN	CONDITION	HEADER	KING STUDS*
4'–0"	ALL	SINGLE 16GA. TRACK	(2) x 16GA.
4'–1" TO 13'–0"	EXTERIOR	BOX HDR. PER 'B'	(3) x 16GA.
4'–1" TO 13'–0"	INTERIOR	BOX HDR. PER 'B'	(3) x 16GA.
> SPANS NOTED	ALL	SEE SIZE ON PLAN	SEE SIZE ON PLAN

*NOTE: (1) 16GA. DIETRICH HDS MAY REPLACE (2) 16GA. KING STUDS

NOTES:
1. SEE "METAL STUD AND TRACK SCHEDULES" ON THIS SHEET FOR ADDITIONAL INFORMATION.
2. SEE ARCHITECTURAL AND STRUCTURAL DRAWINGS FOR SIZE OF STUDS.
3. ALL TOP AND BOTTOM TRACKS SHALL BE SAME GAUGE AS STUDS, U.N.O.
4. ALL STUDS AT JAMBS OF DOOR AND WINDOW OPENINGS SHALL BE 16 GAUGE, U.N.O.
5. WELDING SHALL BE IN ACCORDANCE WITH STRUCTURAL WELDING CODE – SHEET STEEL, AWS D1.3, BY THE AMERICAN WELDING SOCIETY.
6. OMIT SHEET METAL SCREWS @ WELDED STUD CONDITIONS.

HDS STUD SCHEDULE

DEPTH O.D.	DEPTH	GAUGE	B	A	AREA (IN^2)	I (IN^4)	S (IN^3)	MAX SPACING OF STUD BRACING
	3⅝"	16	3	1.0625"	0.715	1.483	0.818	4'–0"
	4"	16	3	1.0625"	0.736	1.869	0.934	4'–0"
	6"	16	3	2.25"	0.984	4.856	1.619	4'–0"
	8"	16	3	2.25"	1.097	9.843	2.461	4'–0"

B A TYP.

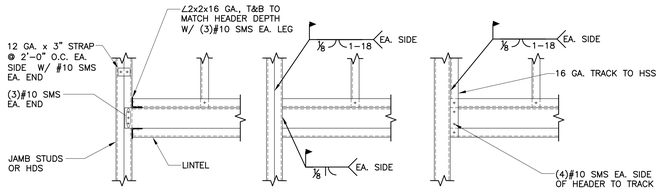

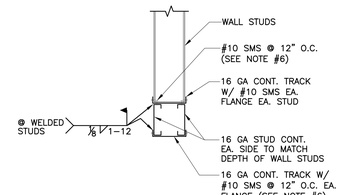

LINTEL TO JAMB (A)

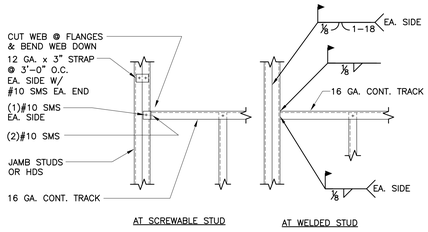

LINTEL SECTION (B)

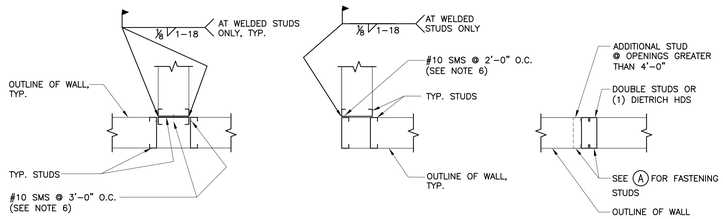

TRACK TO JAMB (C)

STUD TO TRACK (D)

TYP. INTERSECTION (E)

TYPICAL CORNER (F)

MULTIPLE STUDS (G)

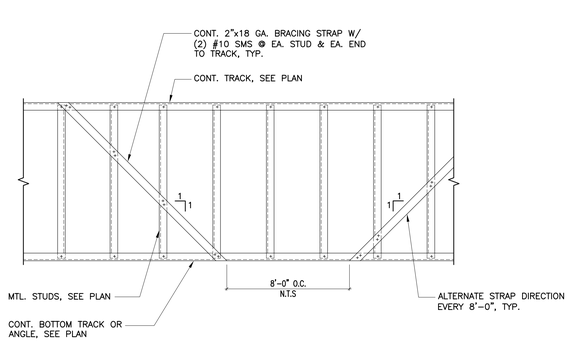

TYP. IN–PLANE SOFFIT BRACING (H)

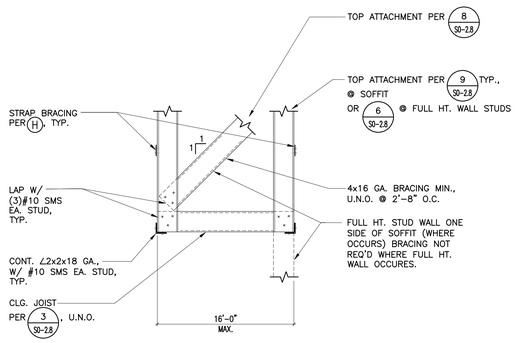

TYP. SOFFIT (J)

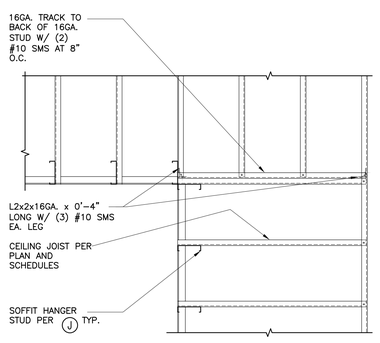

TYP. SOFFIT TRANSITION (K)

SCALE: NO SCALE

S604–0

METAL STUD WALL FRAMING (INTERIOR AND EXTERIOR) 3

KNA STRUCTURAL ENGINEERS
9931 Muirlands Boulevard, Irvine, CA 92618
Tel (949) 462-3200, Fax (949) 462-3201
KNA JOB NO: 203.653
CONSULTANT

RUHNAU CLARKE ARCHITECTS

STAMPS

AGENCY APPROVAL
Fire Marshal # AHJ#

INCREMENT #3: REBID SET 04/18/2024

PROJECT No. :50801

DRAWN BY:RCA CHECKED BY:
DELTA # ____ DATE ____ ADD AFO CCD REV
DELTA # ____ DATE ____ ADD AFO CCD REV
DELTA # ____ DATE ____ ADD AFO CCD REV
DELTA # ____ DATE ____ ADD AFO CCD REV

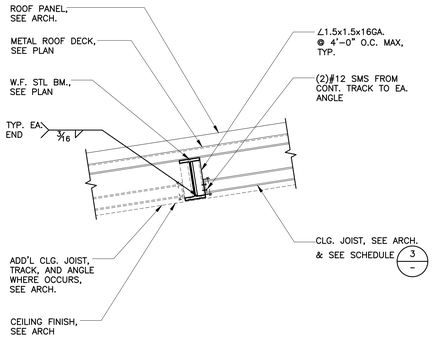

MMT-081 SCALE: 1"=1'-0"

FLUSH CEILING JOIST TO ROOF BEAM | 17

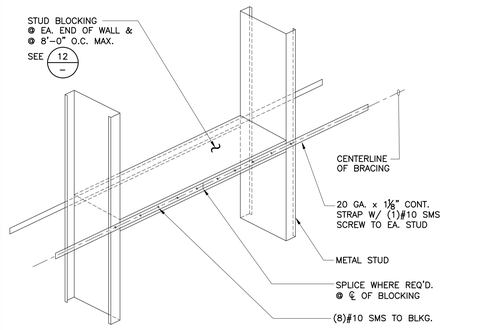

S618-0 SCALE: NO SCALE

METAL STUD BRACING | 13

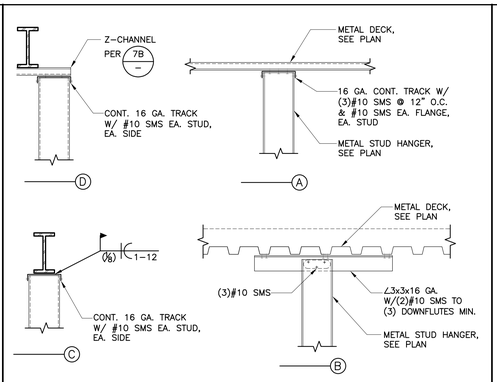

S811-0 SCALE: NO SCALE

TYP. STUD SOFFIT TOP ATTACHMENT | 9

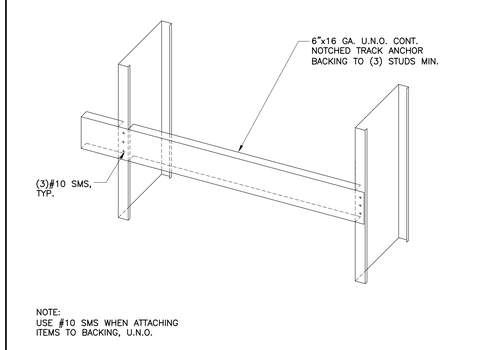

S620-0 SCALE: NO SCALE

BACKING AT METAL STUDS | 5

STAMPS

AGENCY APPROVAL

KNA STRUCTURAL ENGINEERS
9931 Muirlands Boulevard, Irvine, CA 92618
Tel (949) 462-3200, Fax (949) 462-3201
KNA JOB NO: 203.653 CONSULTANT

RUHNAU CLARKE ARCHITECTS

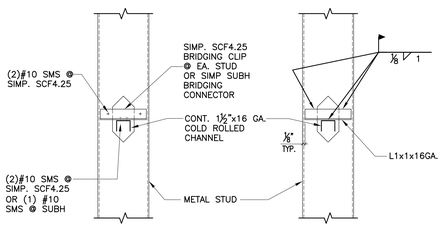

S619-0 SCALE: NO SCALE

METAL STUD BRIDGING | 14

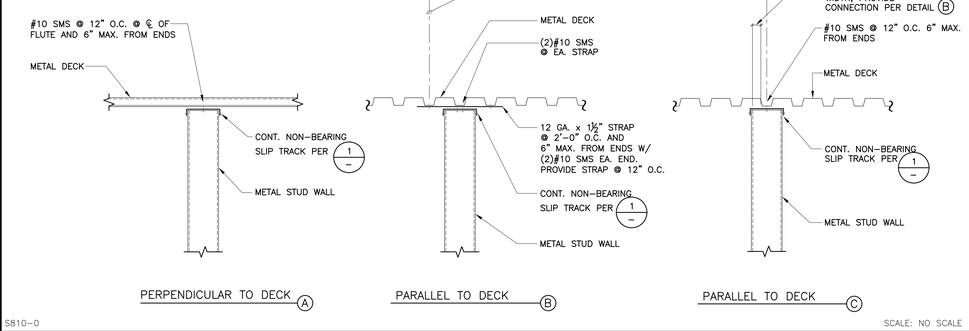

S810-0 SCALE: NO SCALE

NON-BEARING METAL STUD PARTITION TOP (FULL HEIGHT WALL) | 6

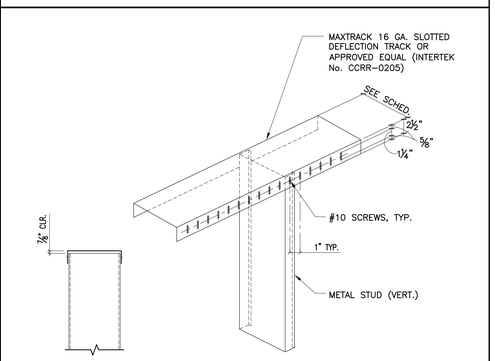

S711-0 SCALE: NO SCALE

METAL STUD TOP TRACK | 1

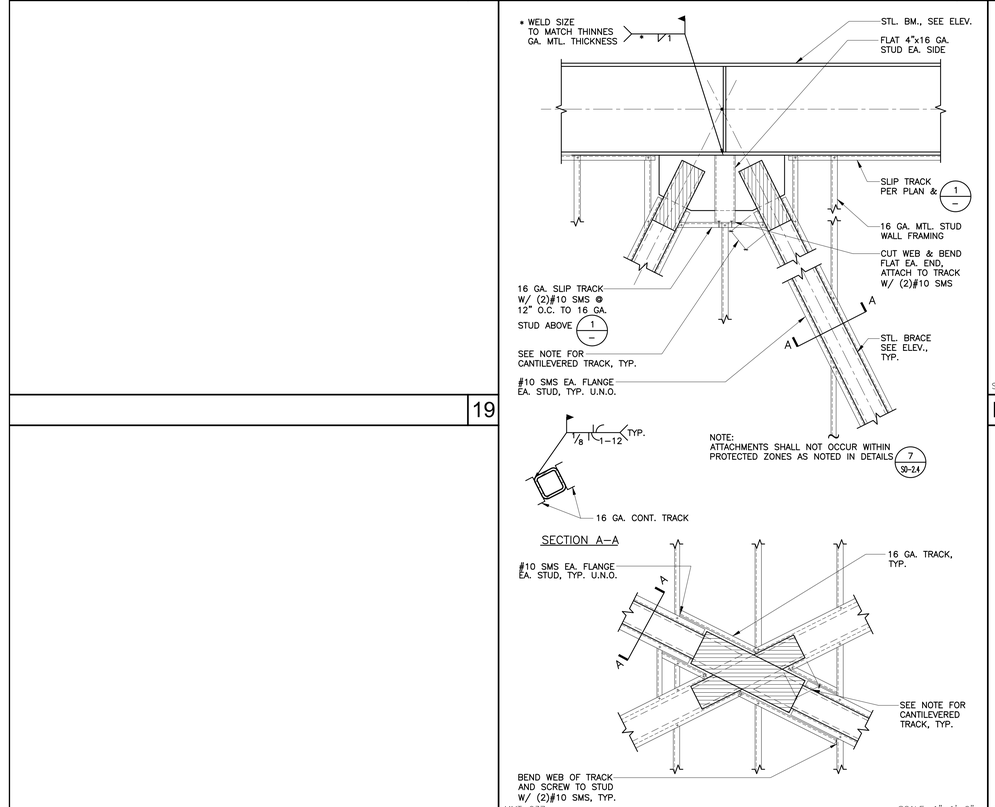

MMT-037 SCALE: 1"=1'-0"

METAL STUDS AT BRACE FRAME | 16

S803-0 SCALE: NO SCALE

NON-BEARING METAL STUD TOP AT STEEL BEAM (FULL HEIGHT WALL) | 12

S704-0 SCALE: NO SCALE

NON-BEARING METAL STUD BOTT. | 2

S617-0 SCALE: NO SCALE

NON-BEARING METAL STUD BLOCKING | 8

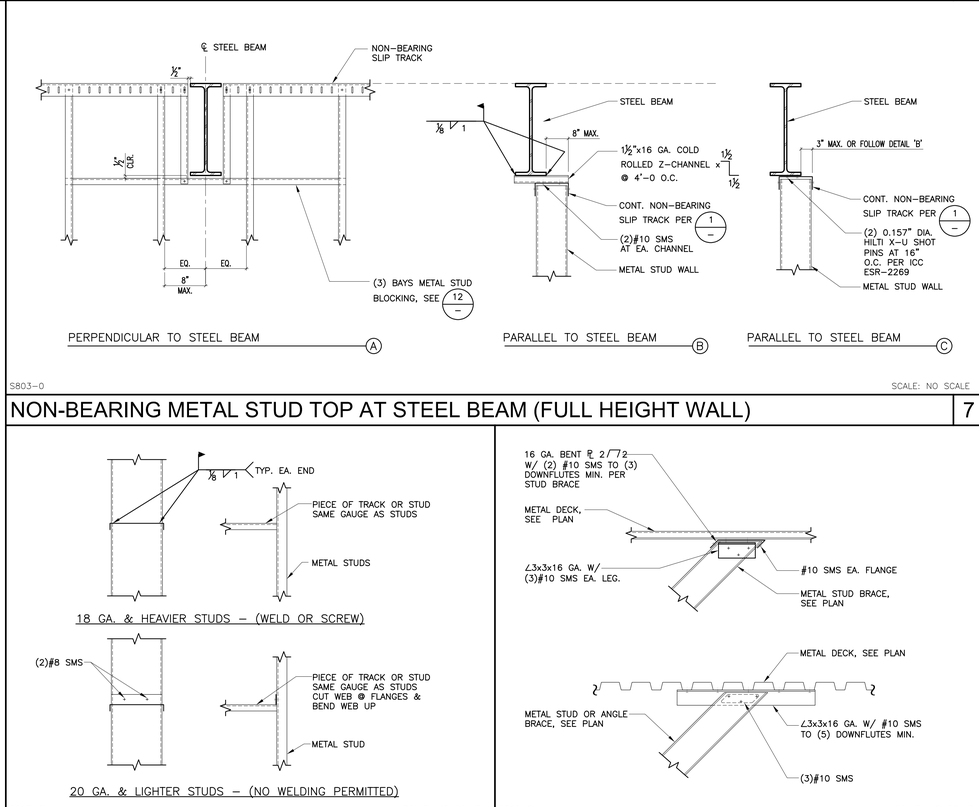

S812-0 SCALE: NO SCALE

TYP. STUD BRACE TO METAL DECK | 12

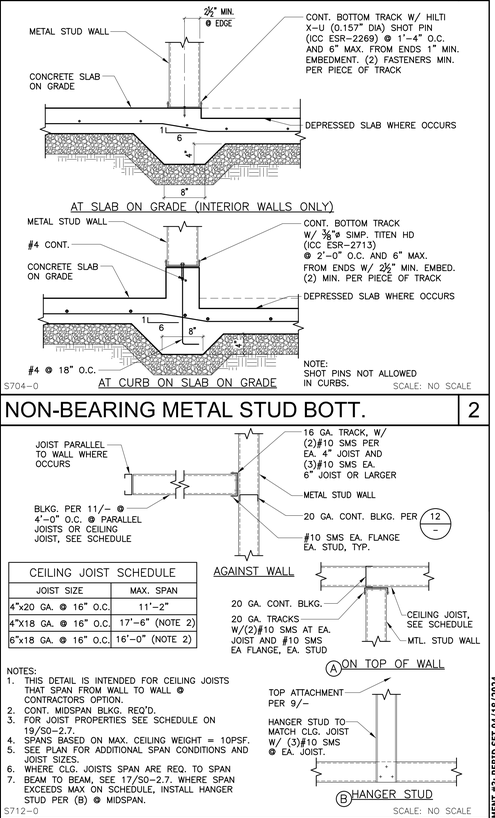

S712-0 SCALE: NO SCALE

CEILING JOIST SCHEDULE & DETAILS | 3

INCREMENT #3: REBID SET 04/18/2024

PROJECT No. :50801

DRAWN BY:RCA CHECKED BY:

DELTA # _____ DATE _____ ADD AFO CCD REV
DELTA # _____ DATE _____ ADD AFO CCD REV
DELTA # _____ DATE _____ ADD AFO CCD REV
DELTA # _____ DATE _____ ADD AFO CCD REV

RUHNAUCLARKE.COM
3775 TENTH STREET, RIVERSIDE CALIFORNIA 92501 (951) 684 4664 / 5751 PALMER WAY, SUITE C, CARLSBAD CALIFORNIA 92010 (760) 438 5899

MOUNT TRANSIT ADMINISTRATION FACILITY
INCREMENT 3
170 BUSINESS CENTER DR. BIG BEAR LAKES, CA
BIG BEAR LAKES

TYPICAL METAL STUD DETAILS

S0-2.8

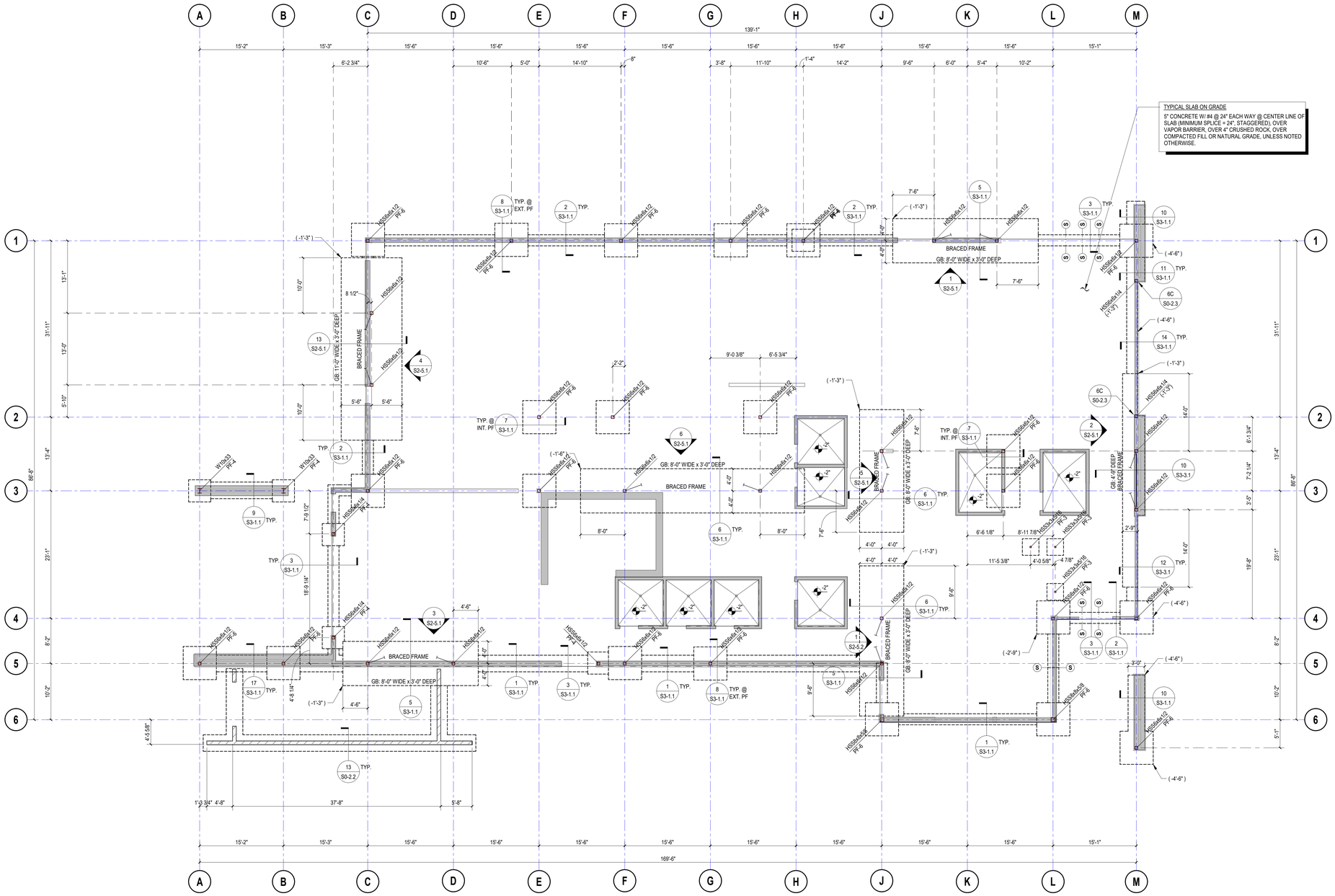

FOUNDATION PLAN

SCALE: 1/8" = 1'-0"

FOUNDATION PLAN NOTES

1. SEE SHEETS S0-1.1 THROUGH S0-2.8 FOR GENERAL NOTES AND TYPICAL DETAILS.
2. SEE SPECIFICATIONS FOR ALL SITE AND SUBGRADE PREPARATIONS.
3. SEE ARCHITECTURAL AND/OR CIVIL DRAWINGS FOR FINISH FLOOR ELEVATIONS.
4. SEE ARCHITECTURAL AND CIVIL DRAWINGS FOR ALL EXTERIOR CONCRETE PAVING, SLABS, BASES, CURBS, SITE WALLS, ETC.
5. FOR ANY DIMENSIONAL INFORMATION NOT SHOWN, SEE ARCHITECTURAL DRAWINGS.
6. SEE PLANS AND ARCHITECTURAL DRAWINGS FOR DEPRESSIONS AND/OR SLOPES IN CONCRETE SLABS.
7. ALL DIMENSIONS SHOWN ARE FROM FACE OF STUD, CENTER LINE OF COLUMN, OR CENTER LINE OF WALL, UNLESS NOTED OTHERWISE. ALL COLUMNS ARE CENTERED IN STUD WALL, UNLESS NOTED OTHERWISE.
8. SEE ARCHITECTURAL DRAWINGS FOR SIZE AND LOCATION OF ALL DOOR AND WINDOW OPENINGS IN BEARING AND NON-BEARING WALLS.
9. SEE ARCHITECTURAL DRAWINGS FOR LOCATION OF INTERIOR NON-BEARING PARTITIONS. INTERIOR NON-BEARING PARTITION WALLS THAT DO NOT REQUIRE CONCRETE CURBS ARE NOT SHOWN ON STRUCTURAL DRAWINGS.
10. SEE ARCHITECTURAL, PLUMBING, MECHANICAL, ELECTRICAL, AND KITCHEN DRAWINGS FOR ADDITIONAL EMBEDDED ITEMS AND SLAB PENETRATIONS.
12. FOR TYPICAL PIPE CHASE IN CONCRETE STEM WALL, SEE DETAIL 9/S0-2.2.
13. FOR TYPICAL SLAB JOINTS, SEE DETAIL 8/S0-2.1.

LEGEND

- HSS3x3x3/16 PF-2 (-1'-0"): INDICATES STEEL OR WOOD COLUMN SIZE. SEE DETAIL 6/S0-2.3 FOR STEEL COLUMN BASE PLATE, U.N.O.
- : INDICATES CONCRETE FOOTING. SEE DETAIL 17/S0-2.1 FOR ADDITIONAL INFORMATION.
- : INDICATES DEPTH OF TOP OF FOOTING BELOW FINISH FLOOR.
- : INDICATES CONCRETE CURB. SEE PLANS AND DETAIL 12/S0-2.1 FOR ADDITIONAL INFORMATION.
- (S)·····(S): INDICATES STEP IN CONTINUOUS FOOTING. SEE DETAILS 3/S0-2.1 AND 5/S0-2.1 FOR ADDITIONAL INFORMATION. STEP CONTINUOUS FOOTING TO MATCH BOTTOM OF LOWEST ADJACENT FOOTING ELEVATION.
- : INDICATES TOP OF SLAB ELEVATION (WHERE INDICATED).

STAMPS

AGENCY APPROVAL
File No.: n.a.

KNA STRUCTURAL ENGINEERS
9931 Muirlands Boulevard, Irvine, CA 92618
Tel (949) 462-3200 Fax (949) 462-3201
www.KNAstructural.com
KNA Job No.: 203.653
CONSULTANT BRANDING

RUHNAU CLARKE ARCHITECTS

INCREMENT #3: REBID SET 04/18/2024

PROJECT No. :1-XX-XXX

DRAWN BY:
CHECKED BY:
DELTA # _____ DATE _____ ADD AFO CCD REV
DELTA # _____ DATE _____ ADD AFO CCD REV
DELTA # _____ DATE _____ ADD AFO CCD REV
DELTA # _____ DATE _____ ADD AFO CCD REV

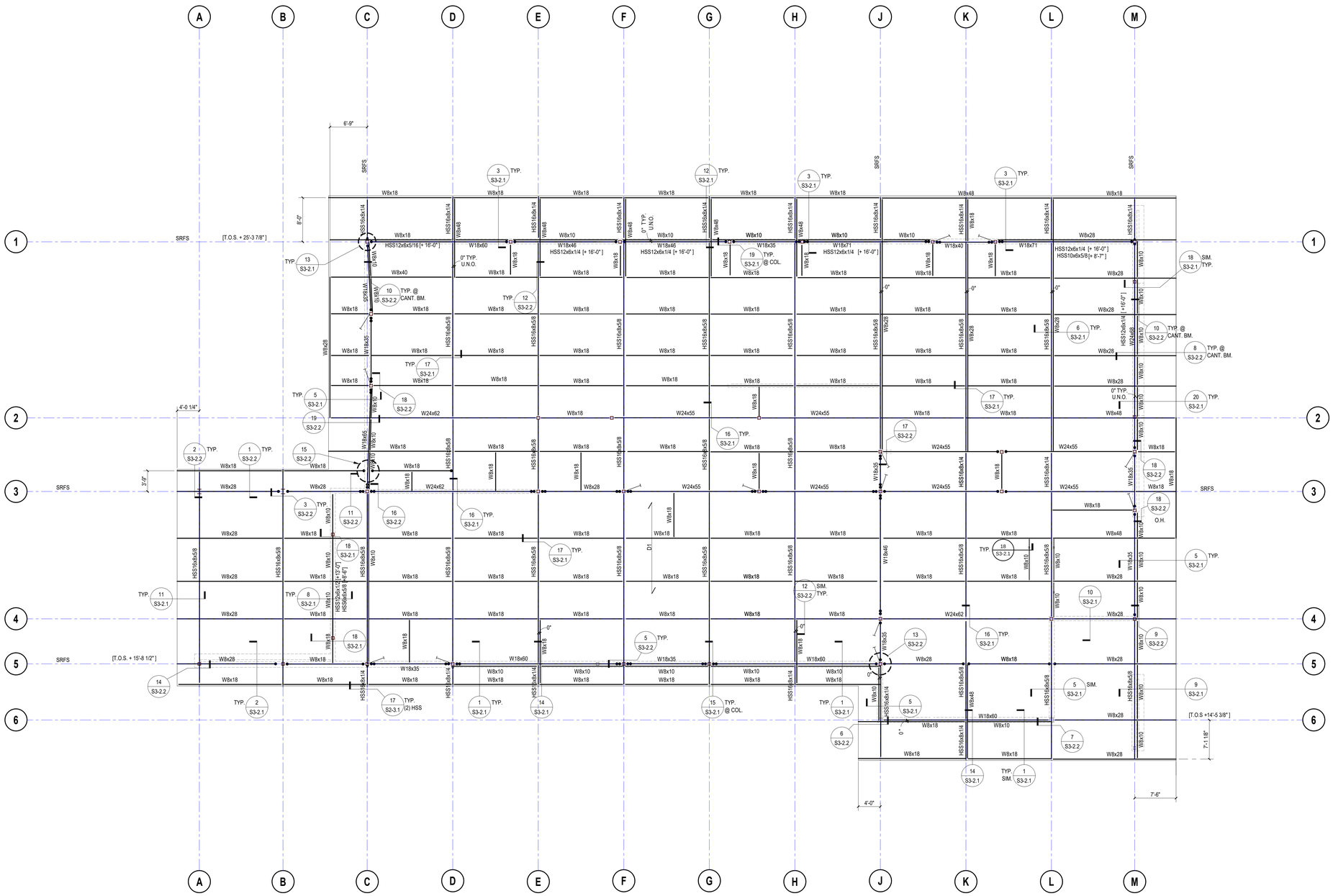

ROOF FRAMING PLAN NOTES

1. SEE SHEETS S0-1.1 THROUGH S0-2.8 FOR GENERAL NOTES AND TYPICAL DETAILS.

2. FOR ANY DIMENSIONAL INFORMATION NOT SHOWN, SEE ARCHITECTURAL DRAWINGS.

3. SEE ARCHITECTURAL, PLUMBING, MECHANICAL AND ELECTRICAL DRAWINGS FOR SIZE AND LOCATION OF ROOF OPENINGS NOT SHOWN ON ROOF FRAMING PLANS. SEE DETAILS 6/S0.7 FOR TYPICAL OPENINGS, UNLESS NOTED OTHERWISE.

4. ALL BEAMS SHALL BE EQUALLY SPACED BETWEEN COLUMNS, UNLESS NOTED OTHERWISE.

5. "MU" DENOTES MECHANICAL UNIT. MAXIMUM ALLOWABLE WEIGHT IS SHOWN. SEE MECHANICAL AND ARCHITECTURAL DRAWINGS FOR EXACT SIZE AND WEIGHT OF MECHANICAL UNITS. FOR TYPICAL FRAMING AT MECHANICAL UNITS, SEE DETAIL 16/S0.7.

6. THE CONTRACTOR SHALL COORDINATE LOCATION OF ALL FRAMING BEAMS AT MECHANICAL UNITS WITH MECHANICAL DRAWINGS. THE LOCATION OF FRAMING SHALL MATCH CURB LAYOUT AND ROOF PENETRATIONS FOR THE SUPPLIED UNITS.

LEGEND

[+ 15'-0"] : INDICATES TOP OF STEEL ELEVATION.

D1 : INDICATES SPAN OF METAL DECK. DECK SPAN INDICATED SHALL BE TYPICAL, UNLESS NOTED OTHERWISE. DECK SHALL SPAN OVER 2 SPANS MINIMUM (3 SUPPORTS) AND 3 SPANS (4 SUPPORTS) WHEREVER POSSIBLE. SEE FLOOR AND ROOF CONSTRUCTION SCHEDULE ON DETAIL 1/S0-2.5 FOR STRUCTURAL DECK AND FILL REQUIREMENTS.

c=1 1/2" : INDICATES AMOUNT OF CAMBER IN STEEL BEAM. NO CAMBER REQUIRED WHERE NONE SHOWN.

: INDICATES TYPICAL CONNECTION WITH ASTM A325SC BOLTS.

: INDICATED WELDED HSS BM. TO COL. MOMENT CONNECTION PER 15/S0-2.3.

: INDICATES TYPICAL CONNECTION WITH ASTM A325SC BOLTS AND WELDED CONNECTION PER 14/S0-2.3.

ROOF FRAMING PLAN

SCALE: 1/8" = 1'-0"

STAMPS

AGENCY APPROVAL

KNA STRUCTURAL ENGINEERS
9931 Muirlands Boulevard, Irvine, CA 92618
Tel (949) 462-3200 Fax (949) 462-3201
www.KNAstructural.com
KNA Job No.: 203.653
CONSULTANT BRANDING

RUHNAU CLARKE ARCHITECTS

INCREMENT #3: REBID SET 04/18/2024

PROJECT No. :1-XX-XXX

DRAWN BY:
DELTA # _____ DATE _____
DELTA # _____ DATE _____
DELTA # _____ DATE _____
DELTA # _____ DATE _____

CHECKED BY:
☐ ADD ☐ AFO ☐ CCD ☐ REV
☐ ADD ☐ AFO ☐ CCD ☐ REV
☐ ADD ☐ AFO ☐ CCD ☐ REV
☐ ADD ☐ AFO ☐ CCD ☐ REV

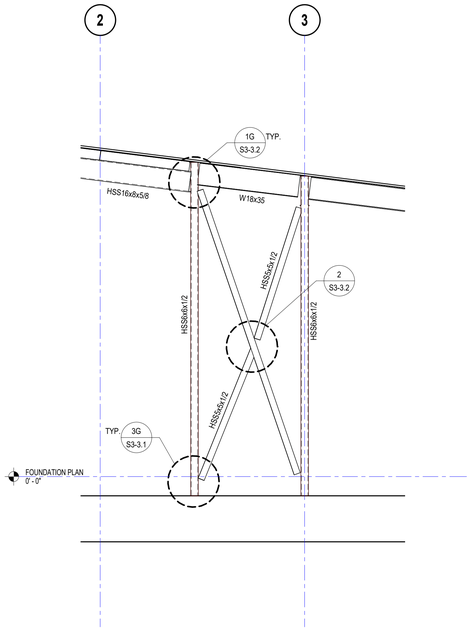

BRACED FRAME ELEVATION - LINE J

SCALE: 1/4" = 1'-0"

5

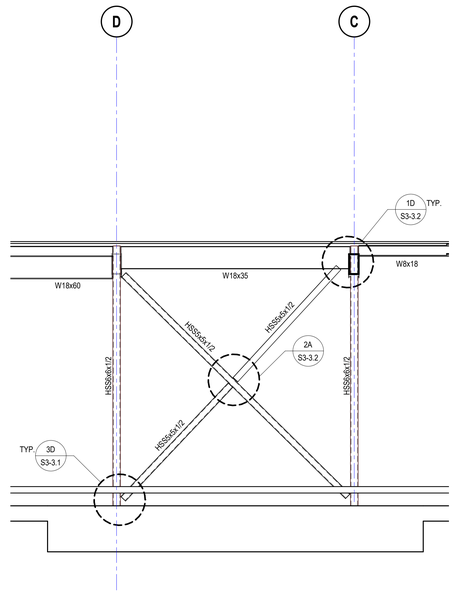

BRACED FRAME ELEVATION - LINE 5

SCALE: 1/4" = 1'-0"

3

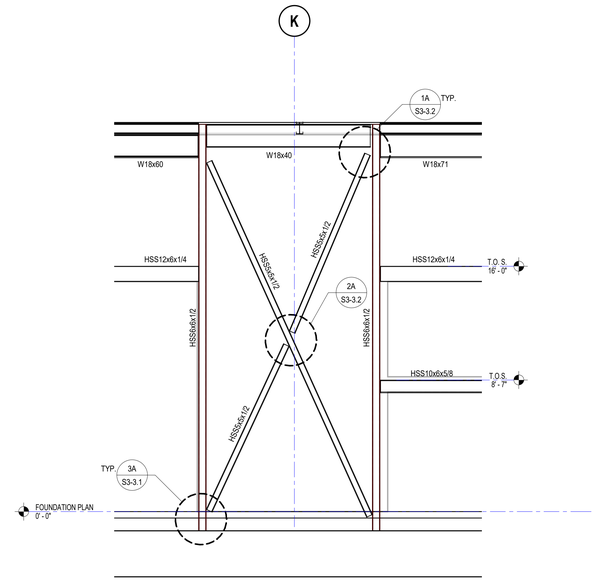

BRACED FRAME ELEVATION - LINE 1

SCALE: 1/4" = 1'-0"

1

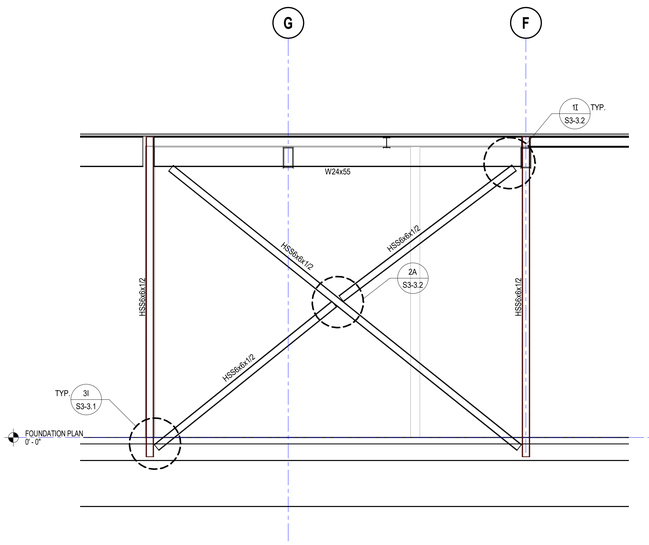

BRACED FRAME ELEVATION - LINE 3

SCALE: 1/4" = 1'-0"

6

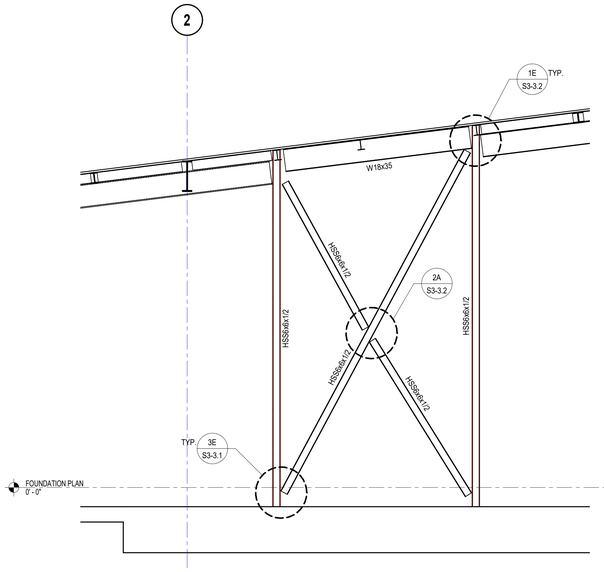

BRACED FRAME ELEVATION - LINE C

SCALE: 1/4" = 1'-0"

4

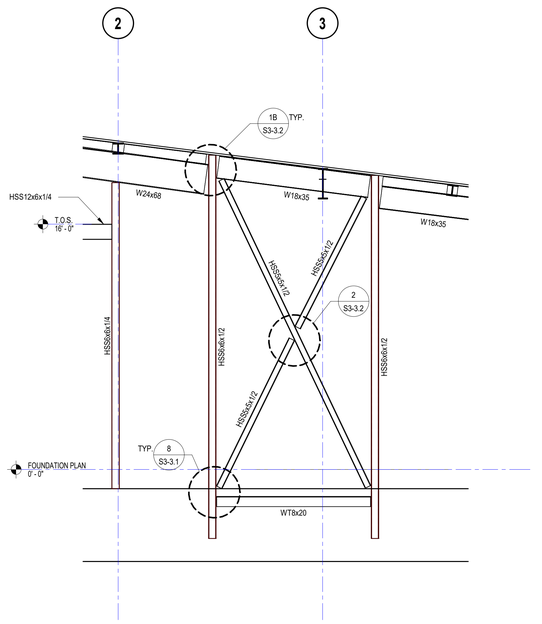

BRACED FRAME ELEVATION - LINE M

SCALE: 1/4" = 1'-0"

2

STAMPS

AGENCY APPROVAL

KNA STRUCTURAL ENGINEERS
9931 Muirlands Boulevard, Irvine, CA 92618
Tel (949) 462-3200 Fax (949) 462-3201
www.KNAstructural.com

KNA Job No.: 203.653

CONSULTANT BRANDING

RUHNAU CLARKE ARCHITECTS

INCREMENT #3: REBID SET 04/18/2024

PROJECT No. :1-XX-XXX

DRAWN BY:
DELTA # _____ DATE _____
DELTA # _____ DATE _____
DELTA # _____ DATE _____
DELTA # _____ DATE _____

CHECKED BY:
☐ ADD ☐ AFO ☐ CCD ☐ REV
☐ ADD ☐ AFO ☐ CCD ☐ REV
☐ ADD ☐ AFO ☐ CCD ☐ REV
☐ ADD ☐ AFO ☐ CCD ☐ REV

MOUNT TRANSIT ADMINISTRATION FACILITY
INCREMENT 3
170 BUSINESS CENTER DR. BIG BEAR LAKES, CA
BIG BEAR LAKES

BRACED FRAME ELEVATIONS

S2-5.1

1-XX-XXX

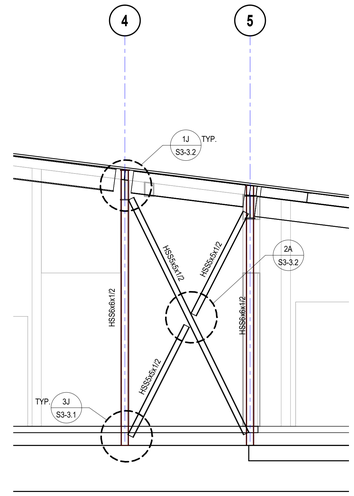

BRACED FRAME ELEVATION - LINE J @ LINE 6 — 1

SCALE: 1/4" = 1'-0"

STAMPS

AGENCY APPROVAL
File No.: n.a.

KNA STRUCTURAL ENGINEERS
9931 Muirlands Boulevard, Irvine, CA 92618
Tel (949) 462-3200 Fax (949) 462-3201
www.KNAstructural.com

KNA Job No.: 203.653
CONSULTANT BRANDING

RUHNAU CLARKE ARCHITECTS

INCREMENT #3: REBID SET 04/18/2024

PROJECT No. :1-XX-XXX

DRAWN BY:
DELTA # _____ DATE _____
DELTA # _____ DATE _____
DELTA # _____ DATE _____
DELTA # _____ DATE _____

CHECKED BY:
☐ ADD ☐ AFO ☐ CCD ☐ REV
☐ ADD ☐ AFO ☐ CCD ☐ REV
☐ ADD ☐ AFO ☐ CCD ☐ REV
☐ ADD ☐ AFO ☐ CCD ☐ REV

MOUNT TRANSIT ADMINISTRATION FACILITY
INCREMENT 3
170 BUSINESS CENTER DR. BIG BEAR LAKES, CA
BIG BEAR LAKES

BRACED FRAME ELEVATIONS

S2-5.2

1-XX-XXX

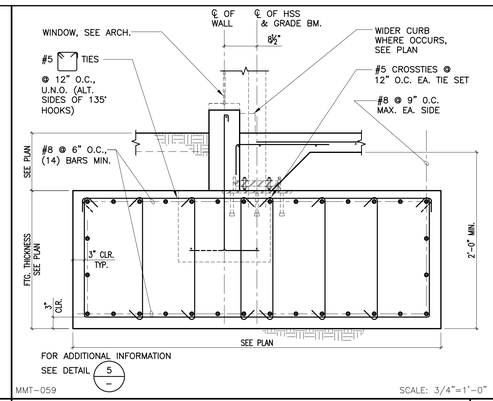

MMT–059 SCALE: 3/4"=1'–0"

17 DETAIL

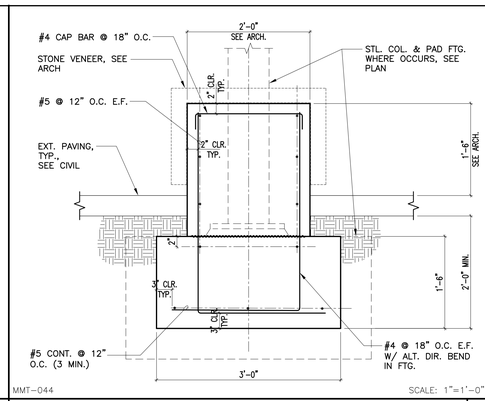

MMT–044 SCALE: 1"=1'–0"

13 DETAIL

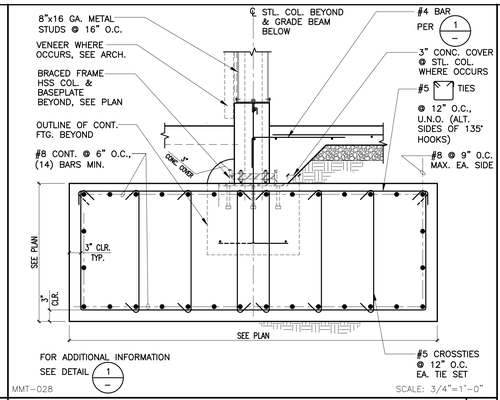

MMT–028 SCALE: 3/4"=1'–0"

5 DETAIL

REGISTERED PROFESSIONAL ENGINEER LAWRENCE J. KNA No. 2795 Exp. 9-30-25 STRUCTURAL STATE OF CALIFORNIA
LICENSED ARCHITECT ROGER CLARKE Exp.10-31-25 STATE OF CALIFORNIA
STAMPS
AGENCY APPROVAL
Arc No.: # Ltr#
KNA STRUCTURAL ENGINEERS
9931 Muirlands Boulevard, Irvine, CA 92618
Tel (949) 462-3200, Fax (949) 462-3201
KNA JOB NO: 203.653
CONSULTANT
RUHNAU CLARKE ARCHITECTS

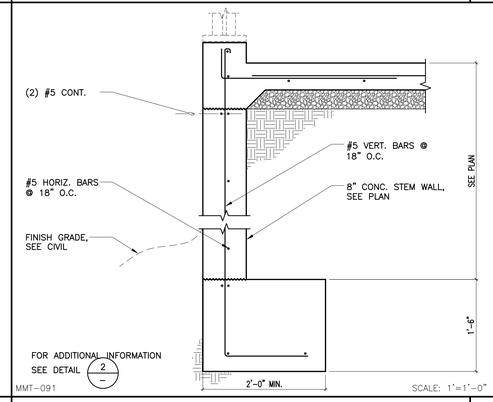

MMT–091 SCALE: 1"=1'–0"

18 DETAIL

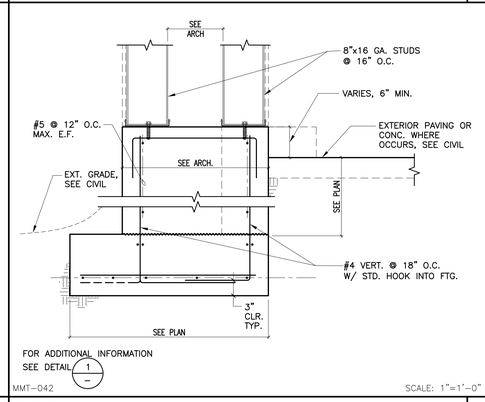

MMT–042 SCALE: 1"=1'–0"

14 DETAIL

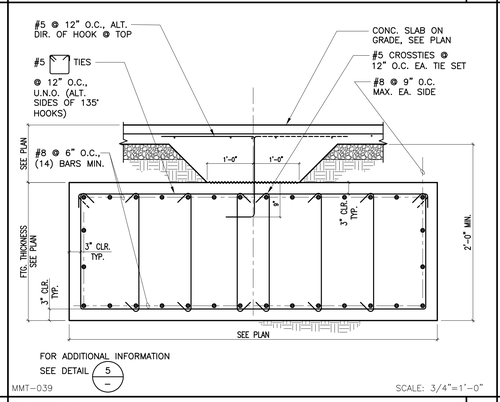

MMT–039 SCALE: 3/4"=1'–0"

10 DETAIL

6 DETAIL

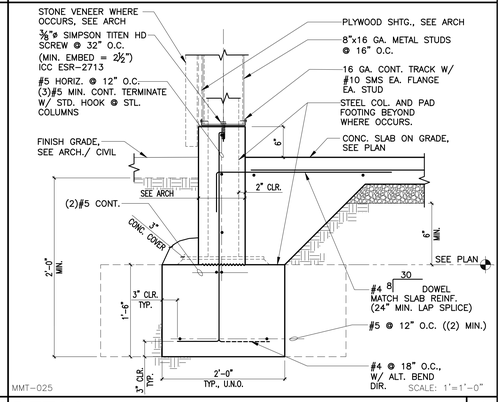

MMT–025 SCALE: 1"=1'–0"

1 DETAIL

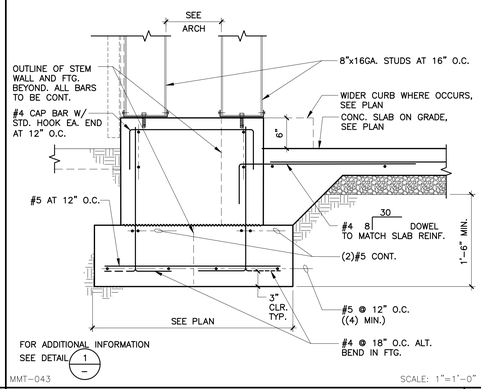

MMT–043 SCALE: 1"=1'–0"

15 DETAIL

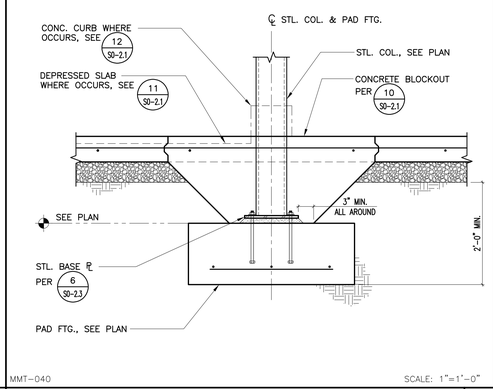

MMT–040 SCALE: 1"=1'–0"

11 DETAIL

7 DETAIL

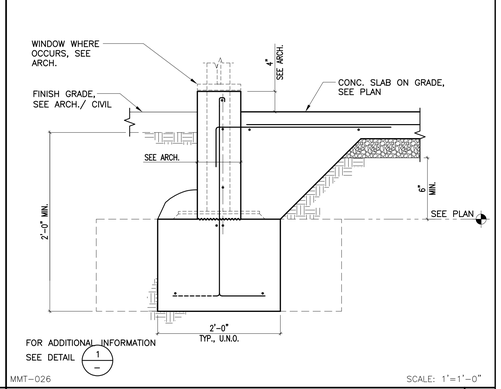

MMT–026 SCALE: 1'=1'–0"

2 DETAIL

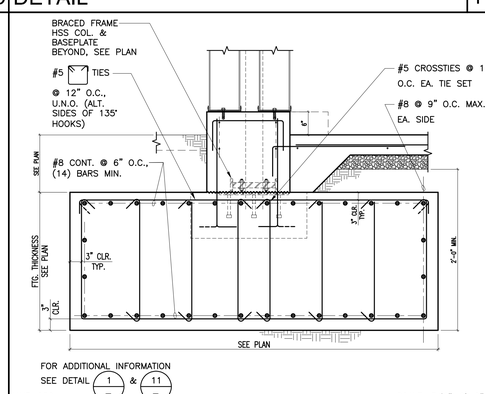

MMT–050 SCALE: 3/4"=1'–0"

16 DETAIL

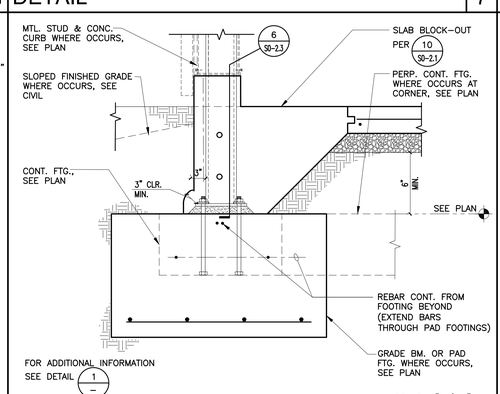

MMT–041 SCALE: 1"=1'–0"

12 DETAIL

8 DETAIL

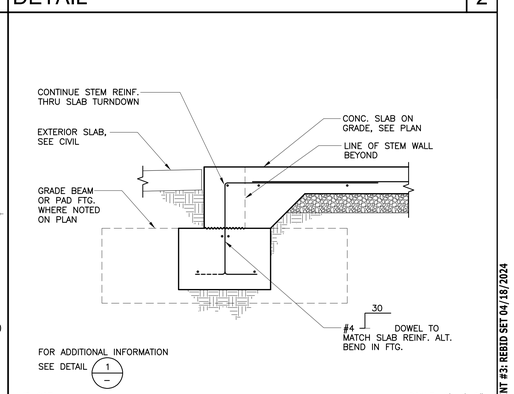

MMT–027 SCALE: 1'=1'–0"

3 DETAIL

INCREMENT #3: REBID SET 04/18/2024

PROJECT No. :50801

DRAWN BY:RCA CHECKED BY:
DELTA # _____ DATE _____ ADD AFO CCD REV
DELTA # _____ DATE _____ ADD AFO CCD REV
DELTA # _____ DATE _____ ADD AFO CCD REV
DELTA # _____ DATE _____ ADD AFO CCD REV

RUHNAUCLARKE.COM
3775 TENTH STREET, RIVERSIDE CALIFORNIA 92501 (951) 684 4664 / 5751 PALMER WAY, SUITE C, CARLSBAD CALIFORNIA 92010 (760) 438 5899

MOUNT TRANSIT ADMINISTRATION FACILITY
INCREMENT 3
170 BUSINESS CENTER DR. BIG BEAR LAKES, CA
BIG BEAR LAKES

FOUNDATION DETAILS

S3-1.1

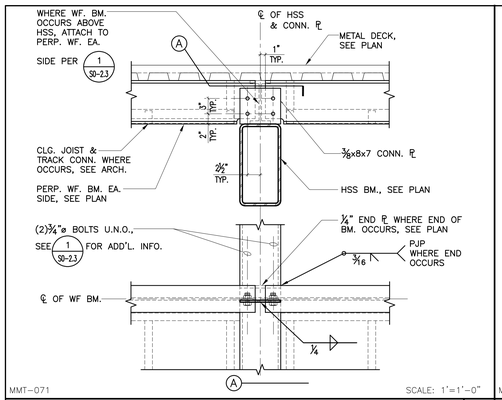

MMT-071 SCALE: 1"=1'-0"

DETAIL 17

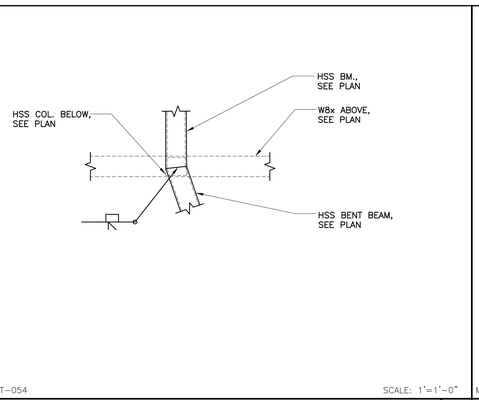

MMT-054 SCALE: 1"=1'-0"

DETAIL 13

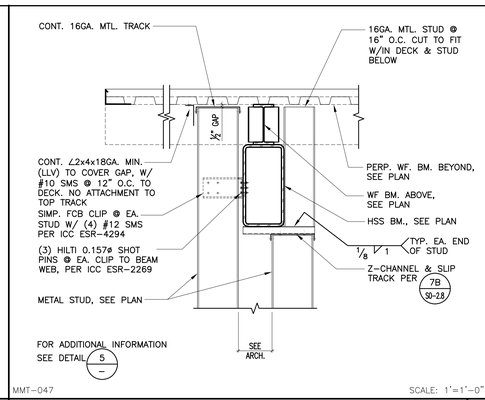

MMT-047 SCALE: 1"=1'-0"

DETAIL 9

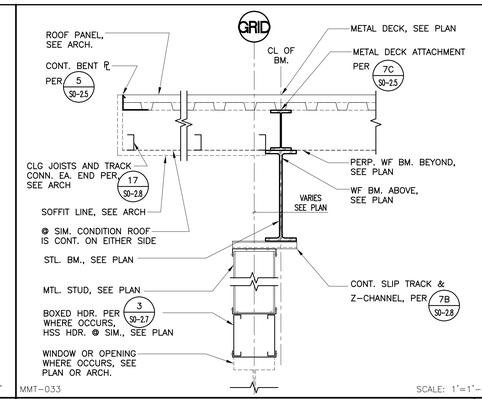

MMT-033 SCALE: 1"=1'-0"

DETAIL 5

STAMPS

AGENCY APPROVAL
Arc No.: # Date

KNA STRUCTURAL ENGINEERS
9931 Muirlands Boulevard, Irvine, CA 92618
Tel (949) 462-3200, Fax (949) 462-3201
KNA JOB NO: 203.653 CONSULTANT

RUHNAU CLARKE ARCHITECTS

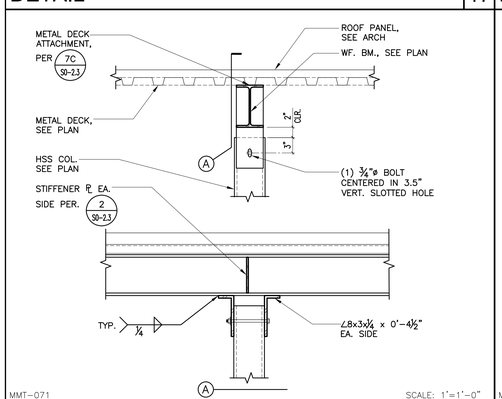

MMT-071 SCALE: 1"=1'-0"

DETAIL 18

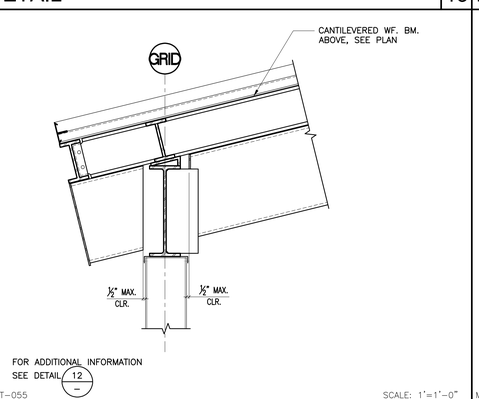

MMT-055 SCALE: 1"=1'-0"

DETAIL 14

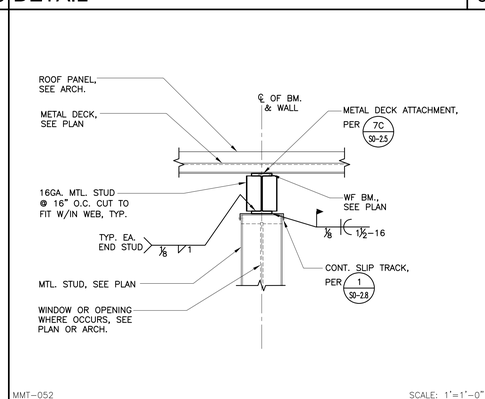

MMT-052 SCALE: 1"=1'-0"

DETAIL 10

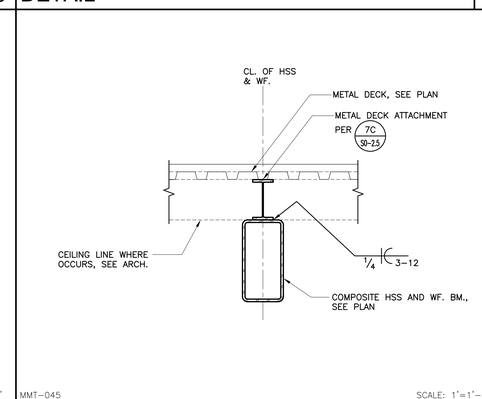

MMT-045 SCALE: 1"=1'-0"

DETAIL 6

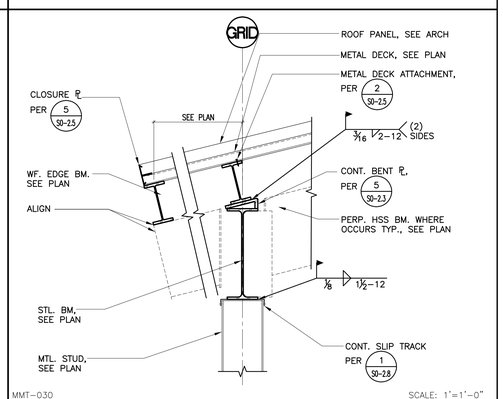

MMT-030 SCALE: 1"=1'-0"

DETAIL 1

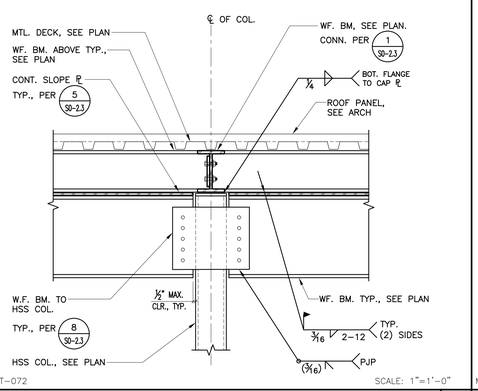

MMT-072 SCALE: 1"=1'-0"

DETAIL 19

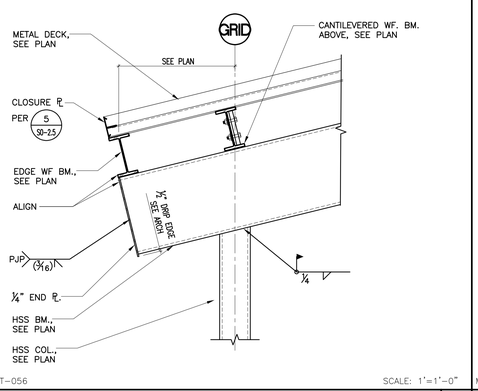

MMT-056 SCALE: 1"=1'-0"

DETAIL 15

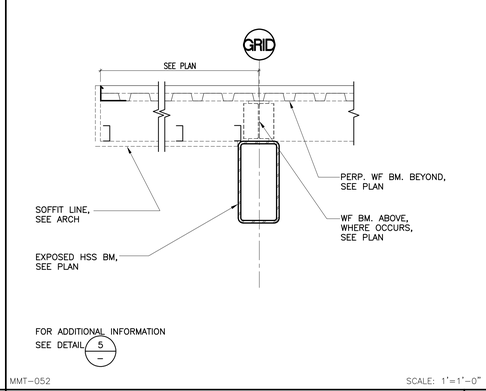

MMT-052 SCALE: 1"=1'-0"

DETAIL 11

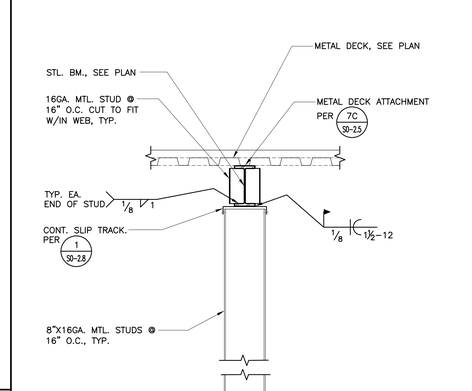

MMT-046 SCALE: 1"=1'-0"

DETAIL 8

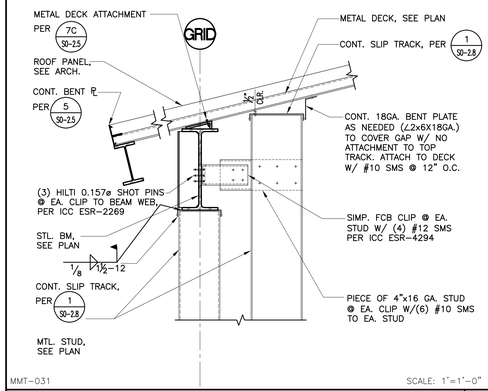

MMT-031 SCALE: 1"=1'-0"

DETAIL 2

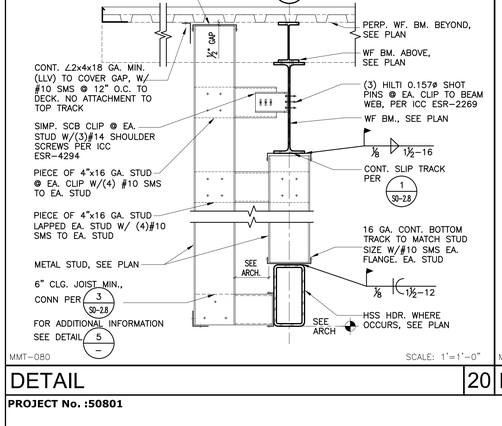

MMT-080 SCALE: 1"=1'-0"

DETAIL 20

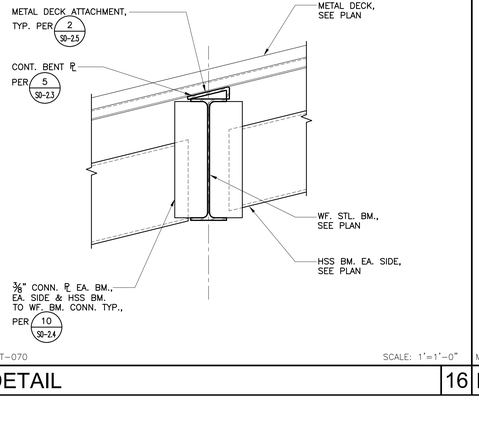

MMT-070 SCALE: 1"=1'-0"

DETAIL 16

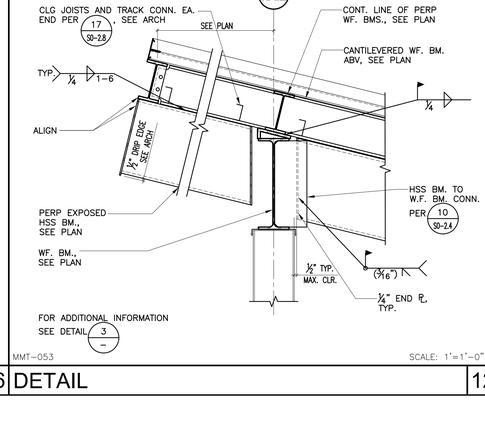

MMT-053 SCALE: 1"=1'-0"

DETAIL 12

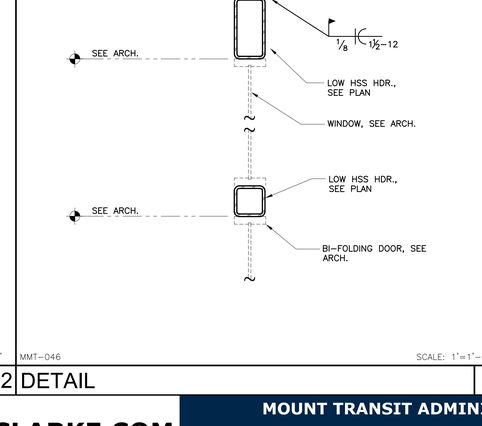

MMT-046 SCALE: 1"=1'-0"

DETAIL 8

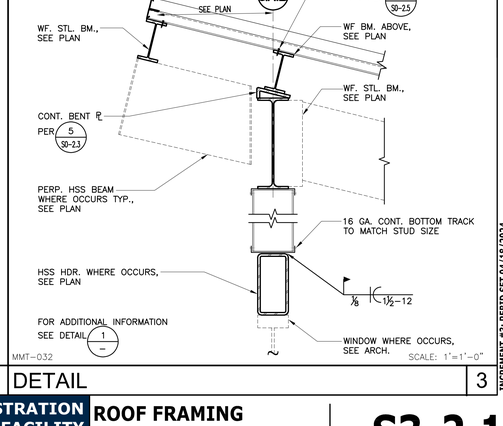

MMT-032 SCALE: 1"=1'-0"

DETAIL 3

INCREMENT #3: REBID SET 04/18/2024

PROJECT No. :50801

DRAWN BY:RCA CHECKED BY:

DELTA # _____ DATE _____ ADD AFO CCD REV
DELTA # _____ DATE _____ ADD AFO CCD REV
DELTA # _____ DATE _____ ADD AFO CCD REV
DELTA # _____ DATE _____ ADD AFO CCD REV

RUHNAUCLARKE.COM

3775 TENTH STREET, RIVERSIDE CALIFORNIA 92501 (951) 684 4664 / 5751 PALMER WAY, SUITE C, CARLSBAD CALIFORNIA 92010 (760) 438 5899

MOUNT TRANSIT ADMINISTRATION FACILITY
INCREMENT 3
170 BUSINESS CENTER DR. BIG BEAR LAKES, CA
BIG BEAR LAKES

ROOF FRAMING DETAILS

S3-2.1

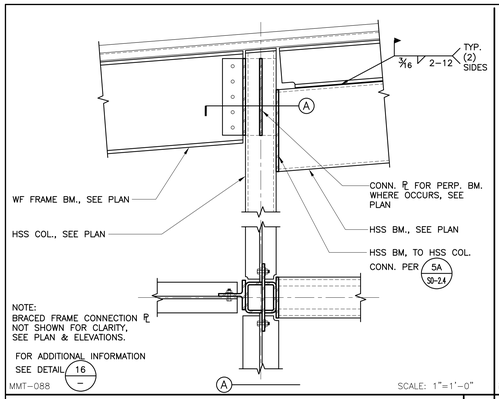

MMT–088 SCALE: 1"=1'–0"

DETAIL 17

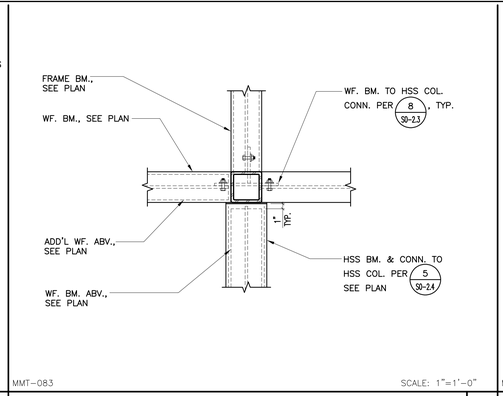

MMT–083 SCALE: 1"=1'–0"

DETAIL 13

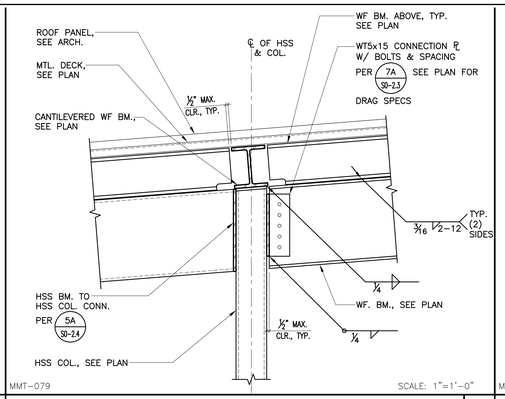

MMT–079 SCALE: 1"=1'–0"

DETAIL 9

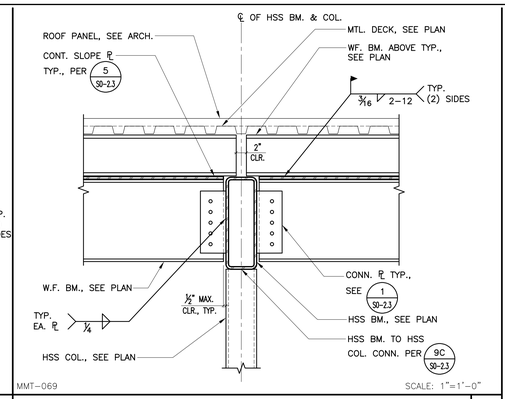

MMT–069 SCALE: 1"=1'–0"

DETAIL 5

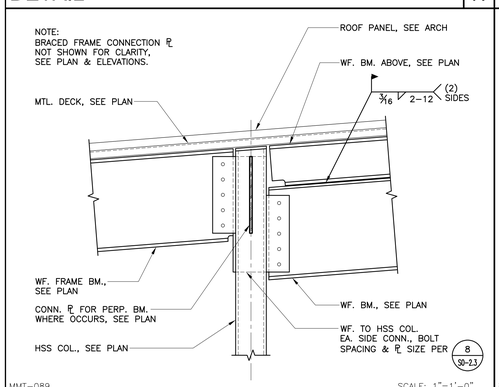

MMT–089 SCALE: 1"=1'–0"

DETAIL 18

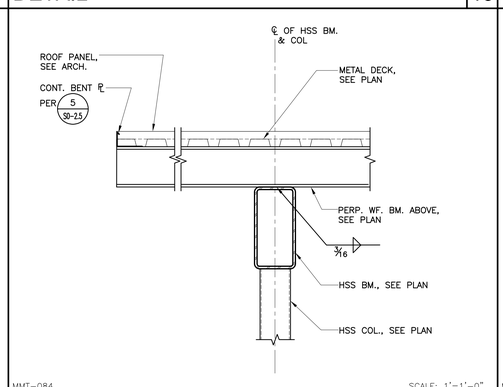

MMT–084 SCALE: 1'=1'–0"

DETAIL 14

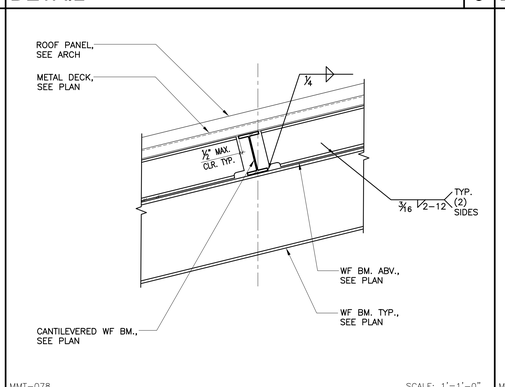

MMT–078 SCALE: 1'=1'–0"

DETAIL 10

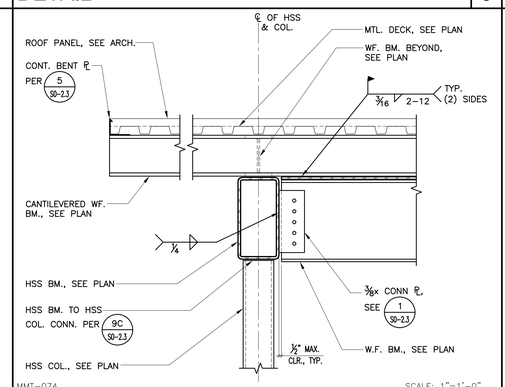

MMT–074 SCALE: 1"=1'–0"

DETAIL 6

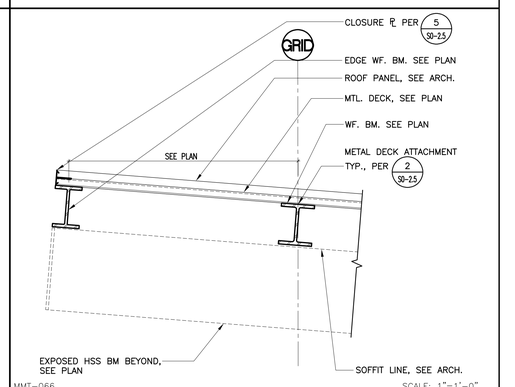

MMT–066 SCALE: 1"=1'–0"

DETAIL 1

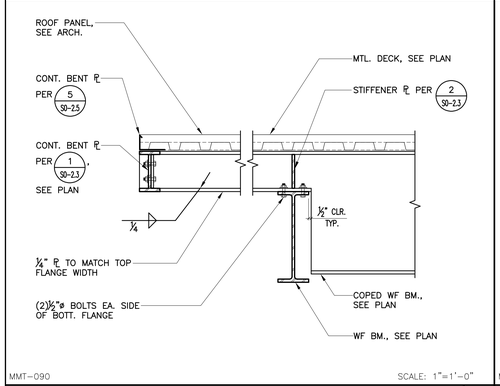

MMT–090 SCALE: 1"=1'–0"

DETAIL 19

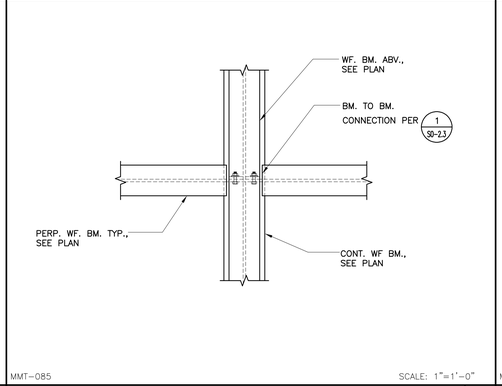

MMT–085 SCALE: 1"=1'–0"

DETAIL 15

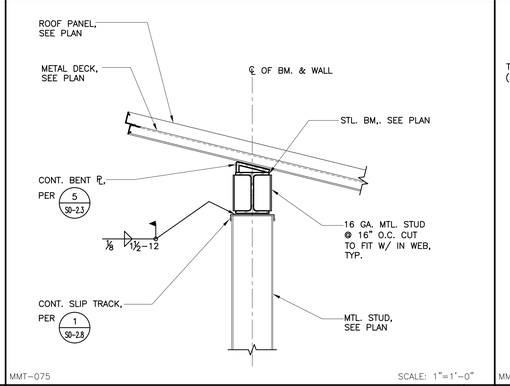

MMT–075 SCALE: 1"=1'–0"

DETAIL 11

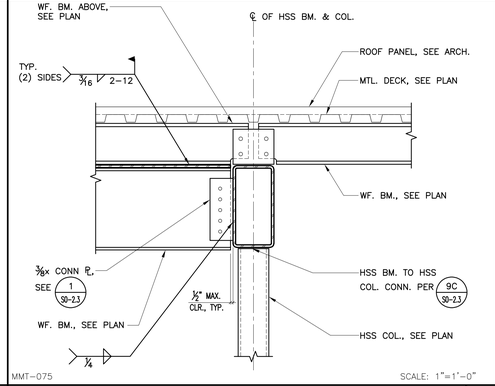

MMT–075 SCALE: 1"=1'–0"

DETAIL 7

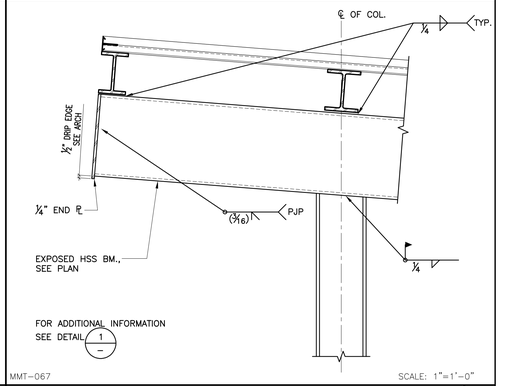

MMT–067 SCALE: 1"=1'–0"

DETAIL 2

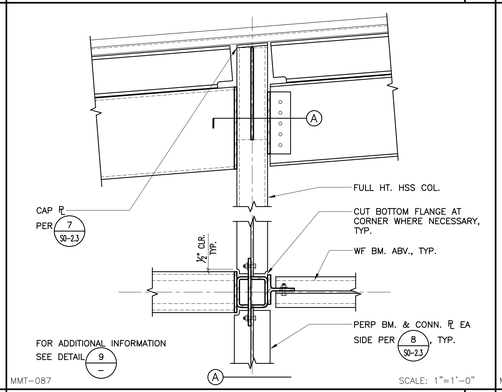

MMT–087 SCALE: 1"=1'–0"

DETAIL 16

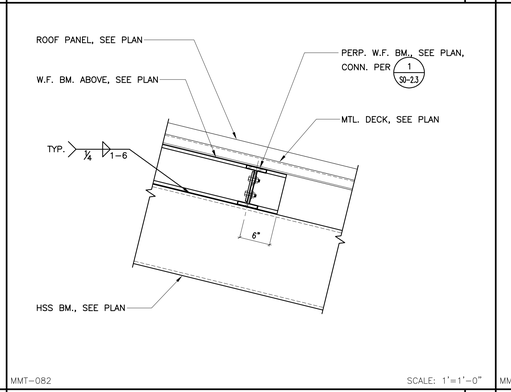

MMT–082 SCALE: 1'=1'–0"

DETAIL 12

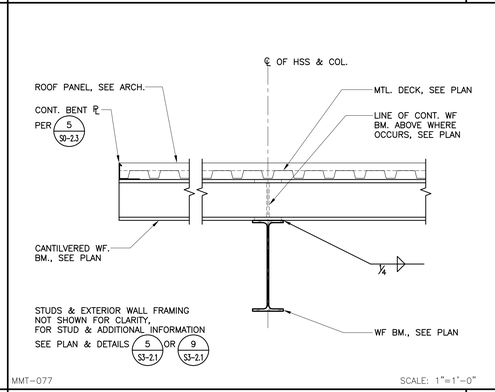

MMT–077 SCALE: 1"=1'–0"

DETAIL 8

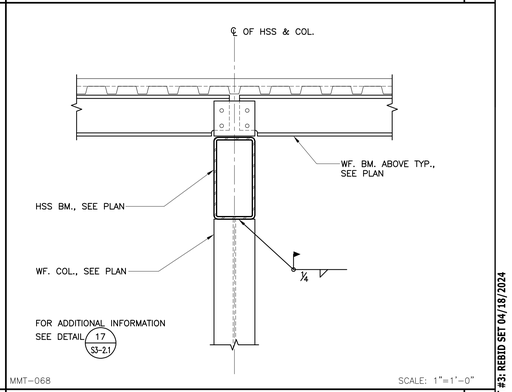

MMT–068 SCALE: 1"=1'–0"

DETAIL 3

INCREMENT #3: REBID SET 04/18/2024

PROJECT No. :50801

DRAWN BY:RCA CHECKED BY:
DELTA # _____ DATE _____ ADD AFO CCD REV
DELTA # _____ DATE _____ ADD AFO CCD REV
DELTA # _____ DATE _____ ADD AFO CCD REV
DELTA # _____ DATE _____ ADD AFO CCD REV

RUHNAUCLARKE.COM
3775 TENTH STREET, RIVERSIDE CALIFORNIA 92501 (951) 684 4664 / 5751 PALMER WAY, SUITE C, CARLSBAD CALIFORNIA 92010 (760) 438 5899

MOUNT TRANSIT ADMINISTRATION FACILITY
INCREMENT 3
170 BUSINESS CENTER DR. BIG BEAR LAKES, CA
BIG BEAR LAKES

ROOF FRAMING DETAILS

S3-2.2

17

18

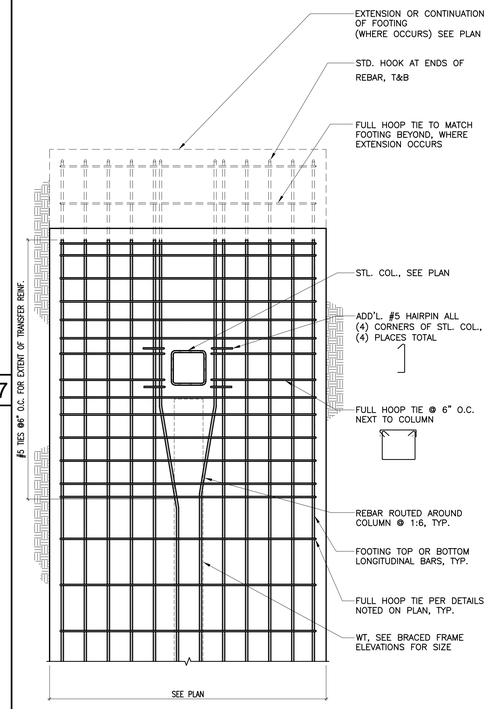

MMT-096 SCALE: 3/4"=1'-0"

GRADE BM. REBAR @ BRACE FRAME COLUMN - PLAN VIEW

14

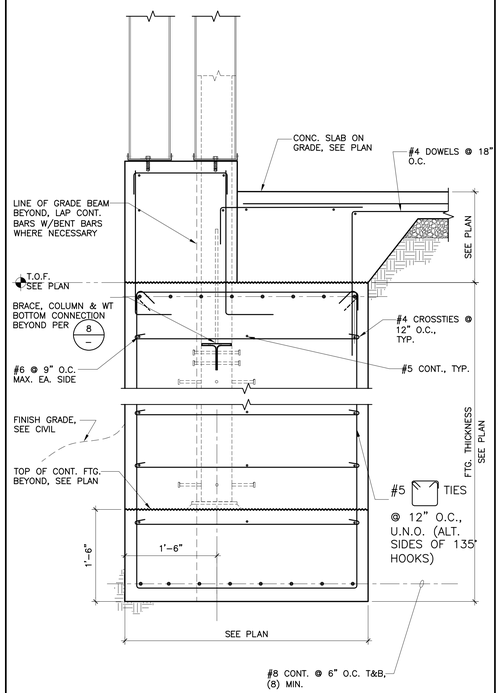

FOR ADDITIONAL INFORMATION SEE DETAIL 1.1 / S3-1.1

MMT-093 SCALE: 1"=1'-0"

DETAIL

10

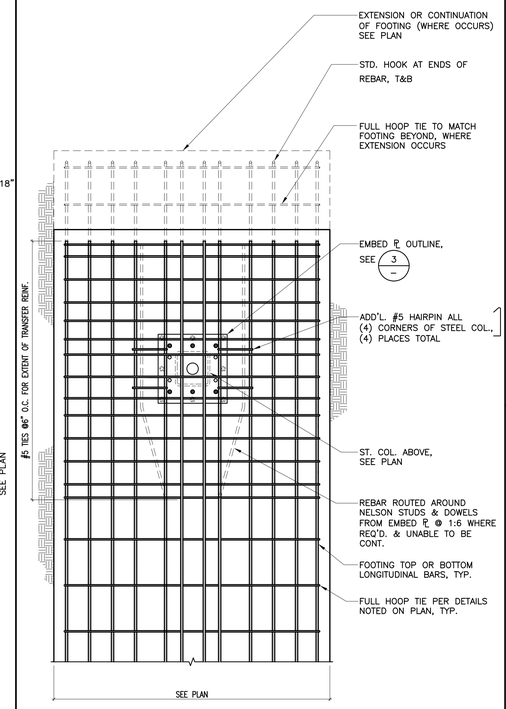

NOTE:
REBAR SPACING ABLE TO BE SLIGHTLY SHIFTED TO AVOID HITTING NELSON STUD ANCHORS & DOWELS FROM EMBED PL SUCH THAT SPACING SATISIFES 6" MAX. REQUIREMENT PER DETAILS.

MMT-038 SCALE: 3/4"=1'-0"

GRADE BM. REBAR @ BRACE FRAME COLUMN - PLAN VIEW

6

STAMPS

REGISTERED PROFESSIONAL ENGINEER — LAWRENCE A. KNA — No. 2795 Exp. 9-30-25 — STRUCTURAL — STATE OF CALIFORNIA

LICENSED ARCHITECT — LAWRENCE ALAN CLARKE — No. C-21126 Exp.10-31-25 — STATE OF CALIFORNIA

AGENCY APPROVAL
File No.: # App

KNA STRUCTURAL ENGINEERS
9931 Muirlands Boulevard, Irvine, CA 92618
Tel (949) 462-3200, Fax (949) 462-3201
KNA JOB NO: 203.653
CONSULTANT

RUHNAU CLARKE ARCHITECTS

19

20

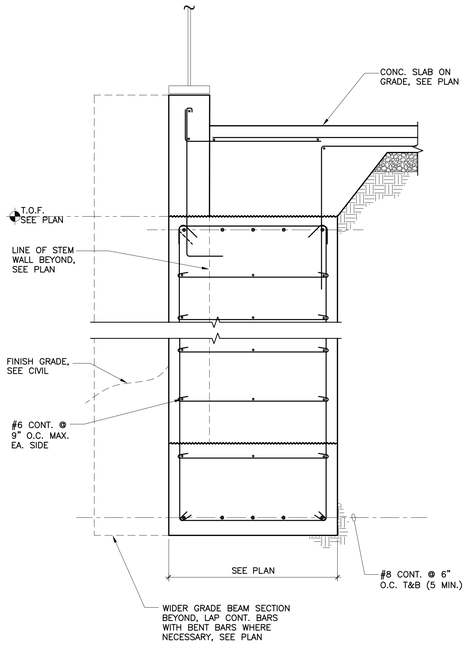

FOR ADDITIONAL INFORMATION SEE DETAIL 10 / — & 2 / S3-1.1

MMT-094 SCALE: 1"=1'-0"

DETAIL

16

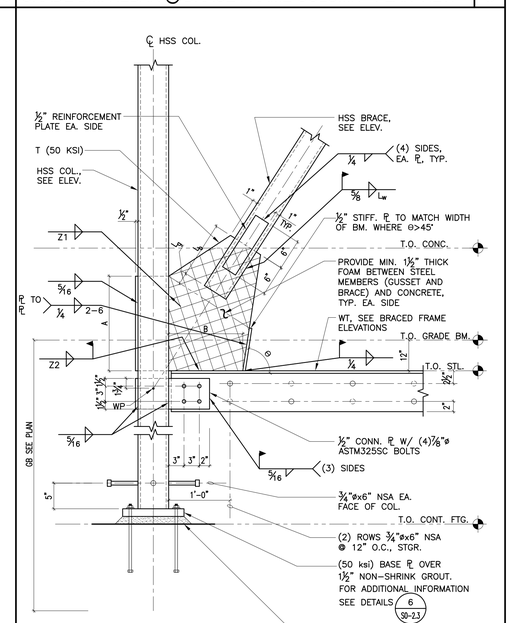

NOTES:
1. METAL STUD FRAMING NOT SHOWN FOR CLARITY.

BOTTOM CONNECTION SCHEDULE

CONN. I.D.	CONN. ℄ THICKNESS T	CONN. ℄ DIMENSIONS A	CONN. ℄ DIMENSIONS B	LENGTH OF BRACE L_b	LENGTH OF WELD @ BRACE L_w	OFFSET DIMENSION L_g	WELD SIZE @ COL. Z1	WELD SIZE @ BM. Z2
A	¾"	2'-4"	1'-2"	0'-11"	0'-10"	2¼"	9/16	9/16

FOR ADDITIONAL INFORMATION SEE DETAILS 6 / S0-2.3

SCALE: 1"=1'-0"

MMT-092

DETAIL

8

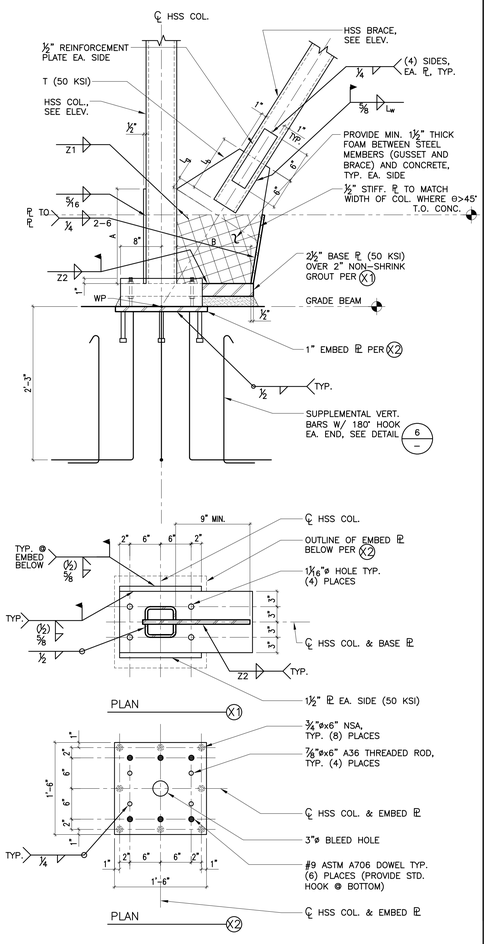

BOTTOM CONNECTION SCHEDULE

CONN. I.D.	CONN. ℄ THICKNESS T	CONN. ℄ DIMENSIONS A	CONN. ℄ DIMENSIONS B	LENGTH OF BRACE L_b	LENGTH OF WELD @ BRACE L_w	OFFSET DIMENSION L_g	WELD SIZE @ COL. Z1	WELD SIZE @ BM. Z2
A	¾"	2'-2"	1'-5"	0'-11"	0'-10"	2¼"	9/16	9/16
B	¾"	1'-9½"	1'-4"	0'-11"	0'-10"	2¼"	9/16	9/16
D	¾"	1'-0½"	1'-2½"	0'-11"	0'-10"	2¼"	9/16	9/16
E	¾"	1'-9"	1'-3½"	1'-1"	1'-0"	2¼"	9/16	9/16
G	⅞"	2'-7"	1'-7½"	0'-11"	0'-10"	2½"	9/16	9/16
I	¾"	1'-1"	1'-5"	0'-11"	0'-10"	2¼"	9/16	9/16
J	⅞"	1'-2 1/2"	1'-5"	0'-11"	0'-10"	2½"	9/16	9/16

MMT-034 SCALE: 1"=1'-0"

DETAIL

3

INCREMENT #3: REBID SET 04/18/2024

PROJECT No. :50801

DRAWN BY:RCA CHECKED BY:
DELTA # _____ DATE _____ ADD AFO CCD REV
DELTA # _____ DATE _____ ADD AFO CCD REV
DELTA # _____ DATE _____ ADD AFO CCD REV
DELTA # _____ DATE _____ ADD AFO CCD REV

RUHNAUCLARKE.COM

3775 TENTH STREET, RIVERSIDE CALIFORNIA 92501 (951) 684 4664 / 5751 PALMER WAY, SUITE C, CARLSBAD CALIFORNIA 92010 (760) 438 5899

MOUNT TRANSIT ADMINISTRATION FACILITY
INCREMENT 3
170 BUSINESS CENTER DR. BIG BEAR LAKES, CA
BIG BEAR LAKES

BRACED FRAME DETAILS

S3-3.1

REGISTERED PROFESSIONAL ENGINEER
LAWRENCE E. KNA
No. 2795
Exp. 9-30-25
STRUCTURAL
STATE OF CALIFORNIA

LICENSED ARCHITECT
ROGER CLARKE
No. 18185
Exp. 10-31-25
STATE OF CALIFORNIA

STAMPS

AGENCY APPROVAL
Fac No:: # A/#

KNA STRUCTURAL ENGINEERS
9931 Muirlands Boulevard, Irvine, CA 92618
Tel (949) 462-3200, Fax (949) 462-3201
KNA JOB NO: 203.653
CONSULTANT

RUHNAU CLARKE ARCHITECTS

17 13 9 5

18 14 10 **DETAIL** 1

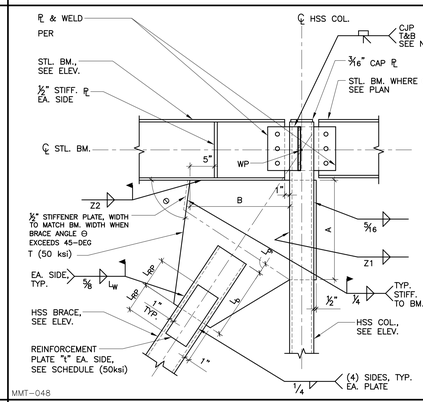

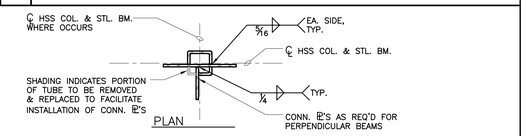

FLAT BEAM TO COLUMN CONNECTION SCHEDULE

CONN. I.D.	CONN. ℙ THICKNESS T	CONN. ℙ DIMENSIONS A	CONN. ℙ DIMENSIONS B	LENGTH OF BRACE L_b	LENGTH OF WELD @ BRACE l_w	OFFSET DIMENSION L_g	WELD SIZE @ COL. Z1	WELD SIZE @ BM. Z2	REINFORCEMENT ℙ THICKNESS, t	REINFORCEMENT ℙ MIN. L_{RP}
A	¾"	1'-10½"	1'-5"	0'-11"	0'-10"	2¼"	9/16"	9/16"	½"	6"
B	¾"	1'-7"	1'-2½"	0'-11"	0'-10"	2¼"	9/16"	9/16"	½"	6"
D (NOTE 3)	¾"	0'-11"	1'-6½"	0'-11"	0'-10"	2¼"	9/16"	9/16"	½"	6"
E	¾"	1'-8½"	1'-7"	1'-1"	1'-0"	2¼"	9/16"	9/16"	½"	6"
G	⅞"	2'-5"	1'-7½"	0'-11"	0'-10"	2½"	9/16"	9/16"	½"	6"
I	¾"	1'-1"	2'-4½"	1'-1"	1'-0"	2¼"	9/16"	9/16"	½"	6"
J	⅞"	1'-8"	1'-4½"	0'-11"	0'-10"	2½"	9/16"	9/16"	½"	6"

NOTES:
1. METAL DECK AND METAL STUD FRAMING NOT SHOWN FOR CLARITY.
2. U.T. INSPECTION OF COMPLETE PENETRATION WELD NOT REQ'D. @ THIS CONDITION.
3. FRAME BEAM REQUIRE ¾" WEB-DOUBLER.

MMT-048 SCALE: 1"=1'-0"

18 14 10 **DETAIL** 1

19 15 11 7 DETAIL 2

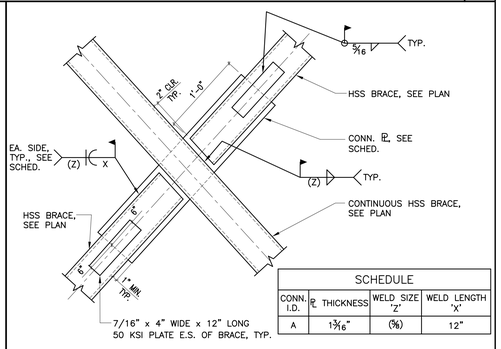

SCHEDULE

CONN. I.D.	ℙ THICKNESS	WELD SIZE 'Z'	WELD LENGTH 'X'
A	1 3/16"	(⅜)	12"

NOTE:
PROTECTED ZONE PER 16/90-28

MMT-049 SCALE: 1"=1'-0"

20 16 12 8 3

INCREMENT #3: RESID SET 04/18/2024

PROJECT No. :50801

DRAWN BY:RCA CHECKED BY:
DELTA # _____ DATE _____ ☐ ADD ☐ AFO ☐ CCD ☐ REV
DELTA # _____ DATE _____ ☐ ADD ☐ AFO ☐ CCD ☐ REV
DELTA # _____ DATE _____ ☐ ADD ☐ AFO ☐ CCD ☐ REV
DELTA # _____ DATE _____ ☐ ADD ☐ AFO ☐ CCD ☐ REV

MOUNT TRANSIT ADMINISTRATION FACILITY
INCREMENT 3
170 BUSINESS CENTER DR. BIG BEAR LAKES, CA
BIG BEAR LAKES

BRACED FRAME DETAILS

S3-3.2

CAL GREEN GENERAL NOTES

1. AT THE TIME OF ROUGH INSTALLATION AND DURING STORAGE ON THE CONSTRUCTION SITE UNTIL FINAL STARTUP OF THE HEATING, COOLING AND VENTILATING EQUIPMENT, ALL DUCT AND OTHER RELATED AIR DISTRIBUTION COMPONENT OPENINGS SHALL BE COVERED WITH TAPE, PLASTIC, SHEET METAL OR OTHER METHODS ACCEPTABLE TO THE ENFORCING AGENCY TO REDUCE THE AMOUNT OF DUST, WATER AND DEBRIS WHICH MAY ENTER THE SYSTEM.

2. ADHESIVES, SEALANTS, AND CAULKS USED ON THE PROJECT SHALL MEET THE REQUIREMENTS OF THE FOLLOWING STANDARDS:

   A. ADHESIVES, ADHESIVE BONDING PRIMERS, ADHESIVE PRIMERS, SEALANTS, SEALANTS PRIMERS AND CAULKS SHALL COMPLY WITH LOCAL OR REGIONAL AIR POLLUTION CONTROL OR AIR QUALITY MANAGEMENT DISTRICT RULES WHERE APPLICABLE, OR SCAQMD RULE 1168 VOC LIMITS, AS SHOWN IN TABLES 5.504.4.1 AND 5.504.4.2. SUCH PRODUCTS ALSO SHALL COMPLY WITH THE RULE 1168 PROHIBITION ON THE USE OF CERTAIN TOXIC COMPOUNDS (CHLOROFORM, ETHYLENE DICHLORIDE, METHYLENE CHLORIDE, PERCHLOROETHYLENE, AND TRICHLOROETHYLENE), EXCEPT FOR AEROSOL PRODUCTS AS SPECIFIED IN SUBSECTION 2 BELOW.

   B. AEROSOL ADHESIVE, AND SMALLER UNIT SIZES OF ADHESIVES, AND SEALANT OR CAULKING COMPOUNDS (IN UNITS OF PRODUCT, LESS PACKAGING, WHICH DO NOT WEIGH MORE THAN ONE POUND AND DO NOT CONSIST OF MORE THAN 16 FLUID OUNCES) SHALL COMPLY WITH STATEWIDE VOC STANDARDS AND OTHER REQUIREMENTS, INCLUDING PROHIBITIONS ON USE OF CERTAIN TOXIC COMPOUNDS, OF CALIFORNIA CODE OF REGULATIONS, TITLE 17 COMMENCING WITH SECTION 94507.

3. IN MECHANICALLY VENTILATED BUILDINGS, PROVIDE REGULARLY OCCUPIED AREAS OF THE BUILDING WITH AIR FILTRATION MEDIA FOR OUTSIDE AND RETURN AIR THAT PROVIDES AT LEAST A MINIMUM EFFICIENCY REPORTING VALUE (MERV) OF 13. MERV 13 FILTERS SHALL BE INSTALLED PRIOR TO OCCUPANCY, AND RECOMMENDATIONS FOR MAINTENANCE WITH FILTERS OF THE SAME VALUE SHALL BE INCLUDED IN THE OPERATIONS AND MAINTENANCE MANUAL.

   EXCEPTIONS:

   A. AN ASHRAE 10-PERCENT TO 15-PERCENT EFFICIENCY FILTER SHALL BE PERMITTED FOR AN HVAC UNIT MEETING THE 2022 CALIFORNIA ENERGY CODE HAVING 60,000 BTU/H OR LESS CAPACITY PER FAN COIL, IF THE ENERGY USE OF THE AIR DELIVERY SYSTEM IS 0.4 W/CFM OR LESS AT DESIGN AIR FLOW.

   B. EXISTING MECHANICAL EQUIPMENT.

   5.504.5.3.1 LABELING, INSTALLED FILTERS SHALL BE CLEARLY LABELED BY THE MANUFACTURER INDICATING MERV RATING.

4. BUILDINGS SHALL MEET OR EXCEED THE PROVISIONS OF CALIFORNIA BUILDING CODE, CCR, TITLE 24, PART 2, SECTIONS 1202 (VENTILATION) AND CHAPTER 14 (EXTERIOR WALLS), FOR ADDITIONAL MEASURES NOT APPLICABLE TO LOW RISE RESIDENTIAL OCCUPANCIES, SEE SECTION 5.407.2 OF THIS CODE.

5. FOR MECHANICALLY OR NATURALLY VENTILATED SPACES IN BUILDINGS, MEET THE MINIMUM REQUIREMENTS OF SECTION 120.1 (REQUIREMENTS FOR VENTILATION) OF THE 2022 CALIFORNIA ENERGY CODE, OR THE APPLICABLE LOCAL CODE, WHICHEVER IS MORE STRINGENT, AND THE DIVISION 1, CHAPTER 4 OF CCR, TITLE 8.

6. INSTALLATIONS OF HVAC, REFRIGERATION EQUIPMENT SHALL COMPLY WITH 5.508.1.1 AND 5.508.1.2, ADDRESSING THAT ALL REFRIGERATION IN HVAC EQUIPMENT SHALL BE R-410A AND NOT CONTAIN CFCS & HALONS.

MECHANICAL BASIS OF DESIGN

A. OUTDOOR DESIGN CONDITIONS:

1. SUMMER: 85°F DB/62°F WB
2. WINTER: -1°F
3. ELEVATION: 6,745 FEET

B. DESIGN CONDITIONS:

OCCUPANT SPACE	OCG DENSITY	LIGHTING DENSITY	COOLING TEMPERATURE	HEATING TEMPERATURE	RELATIVE HUMIDITY	VENTILATION PER OCCUPANT
OFFICE	100 SF/OCC	0.7 W/SF	74°F+/-2°F	70°F+/-2°F	50%	15 CFM/OCC
LOBBY	15 SF/OCC	0.85 W/SF	74°F+/-2°F	70°F+/-2°F	50%	15 CFM/OCC
ELECTRICAL ROOM	N/A	N/A	80°F MAX	N/A	N/A	N/A
DATA/ TELECOM	N/A	N/A	80°F MAX	N/A	N/A	N/A

C. HVAC CONTROL METHOD:

1. CARRIER VRF SYSTEM PROGRAMMABLE T-STAT

D. CALIFORNIA VENTILATION CRITERIA:

1. COMPLY WITH CALIFORNIA BUILDING ENERGY EFFICIENCY STANDARD.
   A. GREATER OF 15 CFM/PERSON OR 0.15 CFM/SF

E. EXHAUST TO OUTDOORS (MINIMUM RATES)

1. RESTROOMS: 50 OR 75 CFM/(WC or U)

F. BUILDING ENVELOPE:

1. REFER TO THE ARCHITECTURAL DRAWINGS AND SPECIFICATIONS FOR ENVELOPE REQUIREMENTS
2. ALL ENVELOPE COMPONENTS SHALL MEET CALIFORNIA ENERGY CODE MINIMUM PRESCRIPTIVE CRITERIA.

G. DUCTWORK DESIGN CRITERIA (MAXIMUM ALLOWABLE AIR PRESSURE DROPS AND AIR VELOCITIES) TO MEET HIGH EFFICIENCY OPERATION WITH MINIMAL ACOUSTICAL NOISE. DUCT STATIC PRESSURE FRICTION LOSS SHALL NOT EXCEED 0.2" PER 100 FEET IN MECHANICAL ROOMS AND SHAFTS. LOW PRESSURE SUPPLY AND EXHAUST DUCT STATIC PRESSURE FRICTION LOSS BASED ON A MAXIMUM OF 0.08" PER 100 FEET. LOW PRESSURE RETURN DUCT STATIC PRESSURE FRICTION LOSS BASED ON A MAXIMUM OF 0.05" PER 100 FEET. MEDIUM PRESSURE DUCTWORK SHALL NOT EXCEED MAXIMUM VELOCITY AS LISTED BELOW.

1. IN ADDITION, MAXIMUM SUPPLY, RETURN AND EXHAUST DUCT AIR FLOW VELOCITIES, REGARDLESS OF PRESSURE DROP, SHALL NOT EXCEED THE FOLLOWING CRITERIA:
   A. MAINS ABOVE CEILING: 1750 FPM
   B. MAINS ABOVE OPEN OCCUPIED SPACES: 1450 FPM
   C. BRANCHES ABOVE CEILING: 1400 FPM
   D. BRANCHES ABOVE OPEN OCCUPIED SPACES: 1150 FPM
   E. RUN-OUTS TO DIFFUSERS: 725 FPM
   F. IN SHAFTS: 2500 FPM
   G. IN MECHANICAL ROOMS: 3000 FPM

H. ACOUSTICAL

1. THE FOLLOWING NOISE NC/RC CRITERIA LEVELS WILL BE DESIGNED AS DEFINED IN THE ASHRAE HVAC APPLICATIONS HANDBOOK. THESE LEVELS ADDRESS THE MECHANICAL SYSTEMS ONLY. ACTUAL SOUND PERFORMANCE REQUIREMENTS FOR EACH SPACE MUST BE VERIFIED WITH ACOUSTICAL CONSULTANT.
   A. CORRIDORS AND LOBBIES: 40
   B. OFFICES: 30

TITLE 24 PERFORMANCE TESTING NOTES

1. THE CALIFORNIA ENERGY CODE SECTION 10-103 REQUIRES ACCEPTANCE TESTING ON ALL NEWLY INSTALLED LIGHTING CONTROLS, MECHANICAL SYSTEMS, ENVELOPES, AND PROCESS EQUIPMENT AFTER INSTALLATION AND BEFORE PROJECT COMPLETION. AN ACCEPTANCE TEST IS A FUNCTIONAL PERFORMANCE TEST TO HELP ENSURE THAT THE NEWLY INSTALLED EQUIPMENT IS OPERATING AND IN COMPLIANCE WITH THE ENERGY CODE.

2. LIGHTING CONTROLS ACCEPTANCE TESTS MUST BE PERFORMED BY A CERTIFIED LIGHTING CONTROLS ACCEPTANCE TEST TECHNICIAN (ATT).

3. MECHANICAL SYSTEM ACCEPTANCE TESTS MUST BE PERFORMED BY A CERTIFIED MECHANICAL ATT FOR PROJECTS SUBMITTED ON OR AFTER OCTOBER 1, 2021.

4. ENVELOPE AND PROCESS EQUIPMENT ACCEPTANCE TESTS SHALL BE PERFORMED BY THE INSTALLING CONTRACTOR, ENGINEER/ARCHITECT OR RECORD OF THE OWNER'S AGENT.

5. A LISTING OF CERTIFIED ATT CAN BE FOUND AT: HTTPS://WWW.ENERGY.CA.GOV/PROGRAMS-AND-TOPICS/PROGRAMS/ACCEPTANCE-TEST-TECHNICIAN-CERTIFICATION-PROVIDER-PROGRAM/ACCEPTANCE

6. THE ACCEPTANCE TESTING PROCEDURES MUST BE REPLACED, AND DEFICIENCIES MUST BE CORRECTED BY THE BUILDER OR INSTALLING CONTRACTOR UNTIL THE CONSTRUCTION/INSTALLATION OF THE SPECIFIC SYSTEM CONFORM AND PASS THE REQUIRED ACCEPTANCE CRITERIA. PROJECT INSPECTORS WILL COLLECT THE FORMS TO CONFIRM THAT THE REQUIRED ACCEPTANCE TESTS HAVE BEEN COMPLETED.

REFRIGERANT PIPE INSULATION SCHEDULE

REFRIGERANT CONDITION OR PHASE	FLUID TEMPERATURE RANGE (°F)	CONDUCTIVITY RANGE (IN Btu-in/hr per sqft/°F)	INSULATION MEAN RATING TEMPERATURE (°F)	PIPE SIZE (IN. DIA>)		
				1/4 TO 7/8	1-1/8 TO 1-3/4	1-5/8
				REQUIRED INSULATION THICKNESS (IN.)		
SPACE HEATING & COOLING SYSTEMS (REFRIGERATION)						
HIGH PRESSURE VAPOR (HP GAS)	201 - 250°	0.25 - 0.29	150°	2.5	2.5	2.5
	141° - 200°		125°	1.5	1.5	2.0
LIQUID	105° - 140°	0.22 - 0.28	100°	1.0	1.5	1.5
LOW PRESSURE VAPOR (GAS)	40° - 60°	0.20 - 0.26	75°	0.5	1.0	1.0
	BELOW 40°		50°	1.0	1.5	1.5

NOTE:
1. WHERE INSULATED PIPING IS EXPOSED OUTDOORS, IT SHALL BE COVERED. COVER OUTDOOR EXPOSED INSULATED PIPING WITH 0.016 INCH THICK CORRUGATED ALUMINUM JACKET.
2. VERIFY REFRIGERANT FLUID OPERATING TEMPERATURE RANGES WITH EQUIPMENT MANUFACTURER.
3. THE ABOVE TABLE APPLIES TO ALL REFRIGERATION PIPING SYSTEMS, INCLUDING COOLING ONLY WITH/WITHOUT HOT GAS BYPASS. HEAT PUMP SYSTEMS INCLUDING MINI-SPLITS, AND VRF/VRV HEAT PUMP AND HEAT RECOVERY SYSTEMS.
4. VRF/VRV 3-PIPE HEAT RECOVERY SYSTEMS TYPICALLY HAVE HIGH PRESSURE VAPOR PIPING (FOR HEATING) THAT EXCEEDS 200°F.
5. VRF 2-PIPE HEAT RECOVERY SYSTEMS TYPICALLY HAVE HIGH PRESSURE VAPOR/LIQUID 2 PHASE (FOR HEATING) THAT IS LESS THAN 201°F.
6. FOR VRF/VRV HEAT RECOVERY SYSTEMS, THE ABOVE TABLE APPLIES TO PIPING BETWEEN THE OUTDOOR UNIT (HP) AND MODE SELECTION BOX (HRB) AND INDOOR UNITS (FAN COIL UNITS).
7. ALL INSULATION WALL THICKNESS GREATER THAN 1-1/2" REQUIRES DOUBLE LAYER (1" PLUS 1-1/2" OR 1-1/2" PLUS 1") TO MEET ASTM E84 (UL 723). EACH INDIVIDUAL LAYER MUST BE FULLY VAPOR PROOF, SEALED AND MEET ASTM E84 25/50 FLAME SPREAD/SMOKE GENERATED RATINGS.

MECHANICAL GENERAL NOTES

1. THE TOTAL INSTALLATION SHALL COMPLY WITH ANY AND REQUIREMENTS OF THE LEGALLY CONSTITUTED AUTHORITIES HAVING JURISDICTION INCLUDING 2022 CBC (CALIFORNIA BUILDING CODE), 2022 CMC/IPC (CALIFORNIA MECHANICAL AND PLUMBING CODE), 2022 CAL GREEN REQUIREMENTS AND THE 2022 TITLE 24 ENERGY CODE.
2. VISIT THE SITE PRIOR TO BID AND SHALL THOROUGHLY FAMILIARIZE THEMSELVES WITH THE EXISTING CONDITIONS UNDER WHICH HE WILL BE REQUIRED TO WORK.
3. ALL INDICATED DIMENSIONS ARE APPROXIMATE AND ARE GIVEN FOR ESTIMATE PURPOSES ONLY. BEFORE PROCEEDING WITH THE WORK CAREFULLY CHECK AND VERIFY DIMENSIONS, SIZES, REQUIRED CLEARANCES AND SHALL ASSUME FULL RESPONSIBILITY FOR THE FITTING OF EQUIPMENT AND MATERIALS HEREIN REQUIRED TO OTHER PARTS OF THE WORK OF OTHER TRADES. DUCT DIMENSIONS SHOWN ON PLANS ARE NET INSIDE CLEAR.
4. THE DRAWINGS ARE ESSENTIALLY DIAGRAMMATIC TO THE EXTENT THAT OFFSETS, BENDS, SPECIAL FITTINGS AND LOCATIONS ARE NOT EXACTLY LOCATED. DUCTWORK DIMENSIONS SHOWN ON THE DRAWINGS ARE NET INSIDE DIMENSIONS. DO NOT FABRICATE DUCTWORK FROM THESE DRAWINGS. THE MECHANICAL CONTRACTOR IS RESPONSIBLE FOR SUPPLYING SHOP DRAWINGS WHICH REFLECT THE PROPOSED INSTALLATION. THE SHOP DRAWINGS MUST BE APPROVED BY THE ENGINEER PRIOR TO ANY SHEET METAL FABRICATION. THE MECHANICAL CONTRACTOR IS RESPONSIBLE FOR PROVIDING ACCURATE AS-BUILT DRAWINGS AT THE COMPLETION OF THE PROJECT AND SUBMITTING THEM TO THE ENGINEER AND OWNER.
5. IN THE PREPARATION OF THESE DOCUMENTS, CERTAIN ASSUMPTIONS ARE MADE REGARDING EXISTING CONDITIONS. SOME OF THESE ASSUMPTIONS MAY NOT BE VERIFIABLE WITHOUT EXPENDING ADDITIONAL SUMS OF MONEY OR DESTROYING OTHERWISE ADEQUATE OR SERVICEABLE PORTIONS OF EXISTING BUILDINGS AND/OR EQUIPMENT. THEREFORE, THE ENGINEER SHALL NOT BE HELD RESPONSIBLE FOR ANY CHANGES OR ADDITIONAL COSTS INCURRED DUE TO EXISTING CONDITIONS.
6. COMPLY WITH CONTRACT DOCUMENTS IN LAYING OUT THEIR WORK AND EQUIPMENT. THEY SHALL COORDINATE THE WORK OF THIS SECTION WITH THE WORK OF OTHER TRADES AND JOB CONDITIONS.
7. THE INSTALLATION OF ACCESS PANELS OR OTHER INDICATING EQUIPMENT OR SPECIALTIES REQUIRING READING, ADJUSTMENT, INSPECTION, REPAIRS, REMOVAL OR REPLACEMENT SHALL BE CONVENIENTLY LOCATED WITH REFERENCE TO THE FINISHED BUILDING.
8. WHERE MATERIAL IS SHOWN ON THE DRAWINGS BUT NOT SPECIFIED, IT SHALL BE OF THE SAME TYPE AND QUALITY AS EXISTING MATERIAL.
9. PROVIDE MANUAL VOLUME DAMPERS AT UPSTREAM PORTION OF TERMINAL AIR BRANCHES. THESE SHALL BE OF THE LOCKING QUADRANT TYPE. WHERE LOCATED OVER SLOPED OR HARD CEILINGS, CONTRACTOR SHALL PROVIDE POTTORFF REMOTE POWERED BALANCING DAMPER, MODEL RD-10 (RECTANGULAR) OR RD-10R (ROUND). RJ-11 CABLE SHALL BE ROUTED BEHIND GRILLE OPENING AND INSTALLED PER MANUFACTURER'S REQUIREMENTS.
10. PROVIDE MINIMUM 1" ACOUSTICAL LINING IN DUCTWORK WITHIN 10 FEET OF AIR MOVING EQUIPMENT. PROVIDE DURO-DYNE FLEXIBLE CONNECTION AT DUCT AT EQUIPMENT LOCATIONS.
11. DUCTS IN AN UNCONDITIONED SPACE OR EXTERIOR DUCT WORK SHALL HAVE A MIN. OF R-8 INSULATION. DUCTS WITHIN THE CONDITIONED ENVELOPE ABOVE A CEILING SHALL HAVE A MIN. OF R-4.2 INSULATION. EXTERIOR DUCTWORK SHALL NOT HAVE INSULATION EXPOSED TO THE ENVIRONMENT.
12. WHERE NOT SPECIFICALLY INDICATED OTHERWISE, DUCTWORK AND EQUIPMENT SHALL BE SUPPORTED PER THE SMACNA GUIDELINES FOR SEISMIC RESTRAINT AND CURRENT APPLICABLE UNIFORM MECHANICAL CODE.
13. WHEN A FIRE ALARM SYSTEM WITH FULL COVERAGE SMOKE DETECTORS ARE PROVIDED, DUCT SMOKE DETECTORS MAY BE ELIMINATED. FIRE ALARM CONTRACTOR SHALL WIRE SMOKE/FIRE DAMPER ACTIVATORS TO AREA SMOKE DETECTORS.
14. TESTING, ADJUSTING, AND BALANCING (TAB) OF THE AIR CONDITIONING SYSTEMS AND RELATED ANCILLARY EQUIPMENT WILL BE PERFORMED BY A CERTIFIED, INDEPENDENT THIRD PARTY, AABC AGENCY PROCURED BY THE MECHANICAL CONTRACTOR. A COMPLETE AIR BALANCE REPORT TO BE SUBMITTED TO THE ADMINISTRATIVE AUTHORITY AND TO THE MECHANICAL ENGINEER AND APPROVED PRIOR TO FINAL PAYMENT. IT SHALL BE PERFORMED IN ACCORDANCE WITH AN APPROVED METHOD PER CMC 314.1.
15. AIR HANDLING DUCT SYSTEMS SHALL BE CONSTRUCTED, INSTALLED AND INSULATED AS PROVIDED IN CHAPTER 6 OF 2022 CMC.
16. MATERIALS EXPOSED WITHIN DUCTS OR PLENUMS SHALL BE NONCOMBUSTIBLE OR SHALL HAVE FLAME SPREAD INDEX NOT GREATER THAN 25 AND A SMOKE DEVELOPED INDEX NOT GREATER THAN 50 (2022 CMC SECTION 602.2).
17. ALL DUCTWORK SHALL BE HARD DUCT. FLEXIBLE AIR DUCTS AND CONNECTORS SHALL BE NOT MORE THAN 5' IN LENGTH AND SHALL NOT BE USED IN LIEU OF RIDGED ELBOWS OR FITTINGS. FLEXIBLE AIR DUCTS SHALL BE PERMITTED TO BE USED AS AN ELBOW AT A TERMINAL DEVICE (SEC 603.4.1 CMC).
18. ANY SUBSTITUTION MADE THAT IS DIFFERENT FROM WHAT IS SPECIFIED ON THE DRAWINGS SHALL BE CLEARLY INDICATED ON THE SUBMITTAL AS TO THAT IS BEING SUBSTITUTED.
19. THERMOSTATS SHALL COMPLY WITH THE 2022 ENERGY COMMISSION AND SHALL BE WIFI ENABLED.
20. AT THE TIME OF ROUGH INSTALLATION, OR DURING STORAGE ON THE CONSTRUCTION SITE AND UNTIL FINAL STARTUP OF THE HEATING AND COOLING EQUIPMENT, DUCT AND OTHER RELATED AIR DISTRIBUTION COMPONENT OPENINGS SHALL BE COVERED WITH TAPE, PLASTIC, SHEET METAL OR OTHER METHODS ACCEPTABLE TO THE ENFORCING AGENCY TO REDUCE THE AMOUNT OF DUCT OR DEBRIS WHICH MAY COLLECT IN THE SYSTEM.
21. WHERE MORE THAN ONE HEATING, COOLING, VENTILATING, OR REFRIGERATING SYSTEM IS INSTALLED ON THE ROOF OF A BUILDING OR WITHIN A BUILDING, IT SHALL BE PERMANENTLY IDENTIFIED AS TO THE AREA OR SPACE SERVED BY THE EQUIPMENT. (CMC 303.6) PROVIDE PERMANENT LABELING AND IDENTIFICATION FOR HVAC UNIT (SINGLE SYSTEM OR MULTIPLE) AND THERMOSTATS. IDENTIFICATION FOR THE THERMOSTATS SHALL CORRELATE TO THE HVAC UNIT THAT IT SERVES.
22. AIR CONDITIONING REFRIGERATION SERVICE PORTS LOCATED OUTDOORS SHALL BE FITTED WITH LOCKING TYPE TAMPER RESISTANT CAP OR SHALL BE PROTECTED FROM UNAUTHORIZED ACCESS BY A MEANS ACCEPTABLE TO THE BUILDING DEPARTMENT PER CMC SECTION 1105.11.

AIR DISTRIBUTION SCHEDULE

SYMBOL	DESCRIPTION	MANUFACTURER & MODEL NO.	FINISH	ACCESSORIES
CD	CEILING DIFFUSER	"KRUEGER" MODEL 1240	BRITISH WHITE	-
CE / CR / TR	CEILING REGISTER / TRANSFER	"KRUEGER" MODEL S80	BRITISH WHITE	-
SG	SUPPLY SIDEWALL GRILLE	"KRUEGER" MODEL 880	BRITISH WHITE	-
RG/RLG	RETURN/RELIEF SIDEWALL GRILLE	"KRUEGER" MODEL S85	BRITISH WHITE	-
TG	TRANSFER GRILLE	"KRUEGER" MODEL S80	BRITISH WHITE	-
EG	EXHAUST SIDEWALL GRILLE	"KRUEGER" MODEL S85	BRITISH WHITE	-
LBD (3)	LINEAR BAR GRILLE SUPPLY	"KRUEGER" MODEL 1600	BRITISH WHITE	1/8" BARS, 0° DEFLECTION 1/2" BAR SPACING
LBR/LBT (3)	LINEAR BAR GRILLE RETURN/RELIEF/TRANSFER	"KRUEGER" MODEL 1600	BRITISH WHITE	1/8" BARS, 0° DEFLECTION 1/2" BAR SPACING

(1) AT HARD LID CEILINGS, CONTRACTOR SHALL PROVIDE POTTORFF REMOTE POWERED BALANCING DAMPER. MODEL RD-10 (RECTANGULAR) OR RD-10R (ROUND). RJ-11 CABLE SHALL BE ROUTED BEHIND GRILLE OPENING AND INSTALLED PER MANUFACTURER'S REQUIREMENTS.

(2) NO OPPOSED BLADE DAMPERS SHALL BE USED.

(3) ALL LINEAR BAR GRILLES AND BLANKOFFS SHALL BE CONFIGURED PER THE MANUFACTURERS RECOMMENDATIONS TO ACHIEVE THE LOOK OF A CONTINUOUS GRILLE.

HVAC LEGEND

SYMBOLS	ABBREVIATIONS	DESCRIPTIONS
		SQ., RECT., OR ROUND DUCT SIZE AS NOTED
		DUCT WITH ACOUSTICAL LINER
		FLEXIBLE DUCT
	CD	CEILING DIFFUSER, SUPPLY
	CR / CE	CEILING REGISTER, RETURN / EXHAUST
		SECTION THROUGH DUCT
		DUCT DOWN
		RECTANGULAR TO ROUND TRANSITION
		DUCT ACCESS DOOR
		MITERED DUCT ELBOW WITH TURNING VANES
	MVD	MANUAL VOLUME DAMPER, LOCKING QUADRANT TYPE FOR ROUND DUCT OR OPPOSED BLADE TYPE FOR RECT DUCT.
	SFD	SMOKE FIRE DAMPER WITH ACCESS DOOR
		SECTION REFERENCE
DETAIL No. / SHEET No.		DETAIL REFERENCE
EQUIPMENT ID. No.		EQUIPMENT DESIGNATION AND NUMBER
	OBD	OPPOSED BLADE DAMPER
		PARALLEL DAMPER
T	T'STAT	THERMOSTAT
CO	CO2 SENSOR	CO2 SENSOR
DD		DUCT DETECTOR
	A.F.F.	ABOVE FINISHED FLOOR
	CFM	CUBIC FEET OF AIR PER MINUTE
	CFMS	CFM SUPPLY
	CFMR	CFM RETURN
	CFME	CFM EXHAUST
	O.S.A.	OUTSIDE AIR
	S.A.	SUPPLY AIR
	R.A.	RETURN AIR
	E.A.	EXHAUST AIR
	30"x10"	INDICATES RECTANGULAR DUCT SIZE: WIDTH x HEIGHT
	12"Ø	INDICATES ROUND DUCT SIZE: DIAMETER
M		MOTORIZED DAMPER
	REFR.	REFRIGERANT LINES

ANCHORAGE AND BRACING NOTES

1. PIPES, DUCTS AND CONDUITS SHALL BE SUPPORTED AND BRACED PER THE 2006 SMACNA "GUIDELINES FOR SEISMIC RESTRAINTS OF MECHANICAL SYSTEMS AND PLUMBING SYSTEMS", THE "SUPERSTRUT SEISMIC RESTRAINT SYSTEM" FOR PIPES AND CONDUITS ONLY.

APPLICABLE NOTES

1. 2022 BUILDING STANDARDS ADMINISTRATIVE CODE, PART 1, TITLE 24 C.C.R.
2. 2022 CALIFORNIA BUILDING CODE (CBC),PART 2, TITLE 24 C.C.R. (IBC WITH AMENDMENTS)
3. 2022 CALIFORNIA ELECTRICAL CODE (CEC), PART 3, TITLE 24 C.C.R. (NEC WITH AMENDMENTS)
4. 2022 CALIFORNIA MECHANICAL CODE (CMC), PART 4, TITLE 24 C.C.R. (UMC WITH AMENDMENTS)
5. 2022 CALIFORNIA PLUMBING CODE (CPC), PART 5, TITLE 24 C.C.R. (UPC WITH AMENDMENTS)
6. 2022 CALIFORNIA FIRE CODE, PART 9, TITLE 24 C.C.R. (IFC WITH AMENDMENTS)
7. 2022 CALIFORNIA REFERENCED STANDARDS, PART 12, TITLE 24 C.C.R.
8. 2022 TITLE 19 C.C.R., PUBLIC SAFETY, STATE FIRE MARSHAL REGULATIONS.
9. 2022 CALIFORNIA ENERGY CODE (PART 6, TITLE 24 C.C.R.)
10. 2022 CALIFORNIA GREEN BUILDING STANDARDS CODE (CGBSG), PART 11, TITLE 24 C.C.R.
11. 2021 INTERNATIONAL BUILDING CODE (IBC)
12. 2021 INTERNATIONAL MECHANICAL CODE (IMC)
13. 2021 INTERNATIONAL PLUMBING CODE (IPC)

MECHANICAL SHEET INDEX

SHEET #	SHEET NAME
M2-0.1	MECHANICAL LEGENDS NOTES & SCHEDULES
M2-0.2	MECHANICAL SCHEDULES
M2-0.3	MECHANICAL SCHEDULES CONT.
M2-0.4	ENERGY COMPLIANCE DOCUMENTS
M2-0.5	ENERGY COMPLIANCE DOCUMENTS CONT.
M2-0.6	ENERGY COMPLIANCE DOCUMENTS CONT.
M2-1.1	MECHANICAL FLOOR PLAN - HVAC
M2-1.2	MECHANICAL FLOOR PLAN - PIPING
M2-3.1	MECHANICAL ROOF PLAN
M2-4.1	MECHANICAL PIPING & WIRING
M2-4.2	MECHANICAL PIPING & WIRING CONT.
M2-4.3	MECHANICAL PIPING & WIRING CONT.
M2-4.4	MECHANICAL PIPING & WIRING CONT.
MD-1.1	MECHANICAL DETAILS
MD-1.2	MECHANICAL DETAILS CONT.

STAMPS

AGENCY APPROVAL
File No.: ########-########

MECHANICAL ELECTRICAL AND ENERGY CONSULTANTS
DESIGN WEST ENGINEERING
412 E. Vanderbilt Way
San Bernardino, CA 92408
Tel: 909-890-3700
Fax: 909-890-3700
Email: cadd@designwesteng.com
CONSULTANT BRANDING

RUHNAU CLARKE ARCHITECTS

MOUNT TRANSIT ADMINISTRATION FACILITY: INCREMENT 3: 100% CONSTRUCTION DOCUMENTS

PRINTED: 4/18/2024 11:42:31 AM
PATH: BIM 360://50801_MATF3_HTP\22-066 Mountain Transit Maintenance and Operations Facility_Central_22-1.rvt

PROJECT No. :50801
4/18/2024 11:42:31 AM

DRAWN BY: CHECKED BY:

ISSUE No.:_____ DATE:_____ DESCRIPTION:_____
REVISION No.:_____ DATE:_____ DESCRIPTION:_____

RUHNAUCLARKE.COM
3775 TENTH STREET, RIVERSIDE CALIFORNIA 92501 (951) 684 4664 / 5751 PALMER WAY, SUITE C, CARLSBAD CALIFORNIA 92010 (760) 438 5899

MOUNT TRANSIT ADMINISTRATION FACILITY
INCREMENT 3
170 BUSINESS CENTER DR. BIG BEAR LAKES, CA
BIG BEAR LAKES

MECHANICAL LEGENDS NOTES & SCHEDULES

M2-0.1

50801

DOAS SPLIT SYSTEM SCHEDULE

INDOOR UNIT

TAG	MANUFACTURER & MODEL NO.	AREA SERVED	AIR QUANTITY CFM	EXT. S.P.	REFRIG. PIPE SIZES LIQUID/GAS	COOLING CAP (MBH)	HEATING CAP (MBH)	SECONDARY HEAT	ELECTRICAL V-PH-HZ	ELECTRICAL AMPS	AREA SMOKE DETECTOR SHUTDOWN	OPER. WT. (LBS)	ANCHORAGE DETAIL REFERENCE	REMARKS (SEE EQUIPMENT NOTES BELOW)
DOAS 1	CARRIER MMD-AP0961HF2UL	FC-1 THRU FC-4 & FC-8	1,360	1.0	1/2" / 7/8"	96.0	59.0	15 KW	208-1-60	4.76 MCA 15.0 MOCP	YES	365	7 MD-1.1	1 2 3 4 5 6 7
DOAS 2	CARRIER MMD-AP0961HF2UL	FC-5 THRU FC-7 & FC-9	1,360	1.0	1/2" / 7/8"	96.0	59.0	15 KW	208-1-60	4.76 MCA 15.0 MOCP	YES	365	7 MD-1.1	1 2 3 4 5 6 7

OUTDOOR UNIT

TAG	MANUFACTURER & MODEL NO.	UNIT SERVED	DESIGN COOLING CONDITION AMBIENT DB/WB (°F)	DESIGN COOLING CONDITION NOMINAL CAP(MBH)	DESIGN COOLING CONDITION EFFICIENCY	HEATING CAPACITY (MBH) AMB. TEMP.°F	HEATING CAPACITY (MBH) NOMINAL CAP (MBH)	HEATING CAPACITY (MBH) EFFICIENCY	UNIT ELECT. V-PH-HZ	UNIT ELECT. AMPS	UNIT WEIGHT (LBS)	ANCHORAGE DETAIL REFERENCE	REMARKS (SEE EQUIPMENT NOTES BELOW)
HP 1	CARRIER MMY-MAP0966HT9P-UL	DOAS 1	85.0 / 62.0	96.0	12.95 EER 25.15 IEER	-1.0	108.0	4.25 COP	208-3-60	36.0 MCA 40.0 MOCP	685	6 MD-1.1	3 8
HP 2	CARRIER MMY-MAP0966HT9P-UL	DOAS 2	85.0 / 62.0	96.0	12.95 EER 25.15 IEER	-1.0	108.0	4.25 COP	208-3-60	36.0 MCA 40.0 MOCP	685	6 MD-1.1	3 8

1. PROVIDE CONDENSATE PUMP, DIVERSITECH CP-22, 120V-1PH.
2. PROVIDE MICROMETL FILTER BOX FOR MERV-13 FILTER
3. PIPE SIZES ARE FOR REFERENCE ONLY. CONTRACTOR TO VERIFY SIZE AND TOTAL LENGTH IN FIELD.
4. PROVIDE REFOCO 3000542 FLOW SWITCH FOR AUTOMATIC SHUTOFF (24V REQUIRED), POWERED BY FC, AND SECONDARY DRAIN PAN.
5. MINIMUM PIPE LENGTH OF 164 FT.
6. MW SUASSE VIBRATION ISOLATOR.
7. 15 KW DUCT HEATER (TUTCO E-SERIES DH), 208V-3PH, 41.6 MCA, 60 MOCP, SLIP-IN DESIGN W/ 24 VAC CONTROL. COMPLETE W/ GASKET COVER, FAN INTERLOCK W/ 24 VAC RELAY, PILOT LIGHT (POWER ON), DISCONNECT SWITCH, DISCONNECT CONTACTOR, SCR CONTROLLER, AIRFLOW SWITCH AND MANUAL BACKUP LIMITS. PROVIDE MANUFACTURER'S TRANSFORMER FOR 24 VAC. INSTALL DUCT HEATER AT LEAST 4 FT AWAY FROM THE AIR HANDLER.(SEE MANUFACTURER'S INSTALL MANUAL)
8. AUTOMATIC DEFROST CYCLE.

DUCTLESS MINI-SPLIT SCHEDULE

INDOOR UNIT

TAG	MANUFACTURER & MODEL NO.	AREA SERVED	AIR QUANTITY CFM	EXT. S.P.	REFRIG. PIPE SIZES LIQUID/GAS	ELECTRICAL (2) V-PH-HZ	ELECTRICAL (2) AMPS	AREA SMOKE DETECTOR SHUTDOWN	OPER. WT. (LBS)	ANCHORAGE DETAIL REFERENCE	REMARKS (SEE EQUIPMENT NOTES BELOW)
IU 1	CARRIER RAV-SM182KRTP-UL	DATA 227	530	N/A	1/4" / 1/2"	208-1-60 (2)	2	NO	35	9 MD-1.1	4 5

OUTDOOR UNIT

TAG	MANUFACTURER & MODEL NO.	UNIT SERVED	DESIGN COOLING CONDITION AMBIENT DB/WB	DESIGN COOLING CONDITION TOTAL (MBH)	DESIGN COOLING CONDITION EFFICIENCY	HEATING CAPACITY (MBH) AMB. TEMP.°F	HEATING CAPACITY (MBH) CAPACITY	HEATING CAPACITY (MBH) EFFICIENCY	UNIT ELECT. V-PH-HZ	UNIT ELECT. AMPS	UNIT WEIGHT (LBS)	ANCHORAGE DETAIL REFERENCE	REMARKS (SEE EQUIPMENT NOTES BELOW)
OU 1	CARRIER RAV-SP182AT2P-UL	IU 1	85.0 / 62.0	18.0	23.8 SEER2 12.0 EER2	3	3	3	208-1-60	14.0 MCA 25.0 MOCP	100	10 MD-1.1	1

1. COMPLETE WITH LOW AMBIENT ACCESSORIES.
2. INDOOR UNIT POWERED THRU OUTDOOR UNIT.
3. DISABLE HEATING FUNCTIONALITY.
4. COMPLETE WITH CONDENSATE PUMP (MINI AQUA UNIVOLT FP1035/RS)
5. COMPLETE W/ HARDWIRED THERMOSTAT

VRF HEAT RECOVERY CONDENSING UNIT SCHEDULE

TAG	MANUFACTURER & MODEL NO.	UNIT SERVED	COOLING CAPACITY AMBIENT DB/WB (°F)	COOLING CAPACITY NOMINAL CAPACITY (MBH)	COOLING CAPACITY EFFICIENCY	HEATING CAPACITY AMBIENT DB (°F)	HEATING CAPACITY NOMINAL CAPACITY (MBH)	HEATING CAPACITY EFFICIENCY	REFRIG. TYPE	UNIT ELECTRICAL (1) V-PH-HZ	UNIT ELECTRICAL (1) AMPS MODULE 1	UNIT ELECTRICAL (1) AMPS MODULE 2	UNIT ELECTRICAL (1) AMPS MODULE 3	OPR. WEIGHT (LBS.)	ANCHORAGE DETAIL REFERENCE	REMARKS (SEE EQUIPMENT NOTES BELOW)
CU 1	CARRIER MMY-AP4326FT9P-UL	FC 1 THRU FC 9	85.0 / 62.0	432.0	9.55 EER 20.2 IEER 21.0 SCHE	-1.0	486.0	3.21 COP	R-410a	208V-3ø-60Hz	52.1 MCA 60 MOCP	52.1 MCA 60 MOCP	52.1 MCA 60 MOCP	2,515	6 MD-1.1	1 2

NOTES:

1. EACH CONDENSING MODULE IS TO RECEIVE SEPARATE POWER.
2. PIPE SIZES ARE FOR REFERENCE ONLY. CONTRACTOR TO VERIFY SIZE AND TOTAL LENGTH IN FIELD.

VRF FAN COIL SCHEDULE

TAG	MANUFACTURER & MODEL NO.	AREA SERVED	FAN SYSTEM CFM	FAN SYSTEM ESP	FAN SYSTEM SPEED / DRIVE	FAN SYSTEM FLA	OSA CFM	COOLING ENTERING DB/WB (°F)	COOLING NOMINAL CAPACITY (MBH)	HEATING ENTERING DB (°F)	HEATING NOMINAL CAPACITY (MBH)	ELECTRICAL V-PH-HZ	ELECTRICAL AMPS	AREA SMOKE DETECTOR FOR SHUTDOWN	FILTER	REFRIG. PIPE SIZES LIQUID/GAS	OPR. WEIGHT W/ ACCESSORIES (LBS.)	ANCHORAGE DETAIL REFERENCE	REMARKS (SEE EQUIPMENT NOTES BELOW)
FC 1	CARRIER MMD-UP0361BHP-UL	BREAK ROOM 205	1,125	0.8	HIGH / DIRECT	2.71	565	72.3 / 60.0	36.0	68.1	40.0	208V-1ø-60Hz	3.39 MCA 15.0 MOCP	NO	MERV-13	3/8" / 5/8"	125	7 MD-1.1	1 2 3 4 5 6
FC 2	CARRIER MMD-UP0721HP-UL	OFFICES 200 THRU 204, VESTIBULE 215	2,235	1.0	HIGH / DIRECT	4.6	175	75.5 / 59.0	72.0	65.4	81.0	208V-1ø-60Hz	5.7 MCA 15.0 MOCP	YES	MERV-13	1/2" / 7/8"	250	7 MD-1.1	2 3 4 5 6 7 8
FC 3	CARRIER MMD-UP0721HP-UL	OPEN OFFICE 206, OFFICE 219 & 220	2,235	1.0	HIGH / DIRECT	4.6	230	75.3 / 60.0	72.0	65.6	81.0	208V-1ø-60Hz	5.7 MCA 15.0 MOCP	YES	MERV-13	1/2" / 7/8"	250	7 MD-1.1	2 3 4 5 6 7 8
FC 4	CARRIER MMD-UP0241BHP-UL	OFFICE 207,208,209, WORKRM 211, CORR 235 & 236, RR 216 & 218, RECORD 217, CUST 233	705	0.8	HIGH / DIRECT	1.78	240	74.2 / 59.0	24.0	66.5	27.0	208V-1ø-60Hz	2.23 MCA 15.0 MOCP	YES	MERV-13	3/8" / 5/8"	125	7 MD-1.1	2 3 4 5 6
FC 5	CARRIER MMD-UP0421BHP-UL	LOCKER 210, RR 212 THRU 214, CORR 234	1,125	0.8	HIGH / DIRECT	2.71	280	73.9 / 60.0	42.0	66.7	47.5	208V-1ø-60Hz	3.39 MCA 15.0 MOCP	YES	MERV-13	3/8" / 5/8"	125	7 MD-1.1	1 2 3 4 5 6
FC 6	CARRIER MMD-UP0241BHP-UL	CLOSED SESSION CONFERENCE RM 221	705	0.8	HIGH / DIRECT	1.78	160	74.7 / 59.0	24.0	66.1	27.0	208V-1ø-60Hz	2.23 MCA 15.0 MOCP	NO	MERV-13	3/8" / 5/8"	125	7 MD-1.1	1 2 3 4 5 6
FC 7	CARRIER MMD-UP0961HP-UL	BOARD ROOM 222, STORAGE 225, CHAIR STORAGE 223	2,825	1.0	HIGH / DIRECT	5.9	850	74.2 / 59.0	96.0	66.5	108.0	208V-1ø-60Hz	7.4 MCA 15.0 MOCP	NO	MERV-13	1/2" / 7/8"	255	7 MD-1.1	2 3 4 5 6 7 8
FC 8	CARRIER MMD-UP0361BHP-UL	LOBBY 228, RR 224 & 226	1,020	0.8	HIGH / DIRECT	2.71	150	75.0 / 65.0	36.0	65.8	40.0	208V-1ø-60Hz	3.39 MCA 15.0 MOCP	NO	MERV-13	3/8" / 5/8"	125	7 MD-1.1	1 2 3 4 5 6
FC 9	CARRIER MMD-UP0181BHP-UL	MANAGER 231, DISPATCH 232, VAULT 229	600	0.6	HIGH / DIRECT	1.53	70	75.2 / 60.0	18.0	65.6	20.0	208V-1ø-60Hz	1.91 MCA 15.0 MOCP	NO	MERV-13	3/8" / 5/8"	100	7 MD-1.1	2 3 4 5 6

NOTE:

1. COMPLETE W/ CONDENSATE PUMP & FLOAT SWITCH
2. T-24 COMPLIANT THERMOSTAT
3. PIPE SIZES ARE FOR REFERENCE ONLY. CONTRACTOR TO VERIFY SIZE AND TOTAL LENGTH IN FIELD.
4. PROVIDE MICROMETL FILTER BOX FOR MERV-13 FILTER
5. INSTALL PER MANUFACTURER'S SPECIFICATIONS
6. CONTRACTOR TO FOLLOW MANUFACTURER'S RECOMMENDED LONG LINE GUIDELINES AND INCLUDE ALL NECESSARY REFRIGERANT ACCESSORIES AS RECOMMENDED BY THE MANUFACTURER.
7. CONDENSATE PUMP & MOISTURE SENSOR, PER PLUMBING PLANS
8. PROVIDE REFOCO 3000542 FLOW SWITCH FOR AUTOMATIC SHUTOFF (24V REQUIRED), POWERED BY FC, AND SECONDARY DRAIN PAN.

REGISTERED PROFESSIONAL ENGINEER — STEVEN M. JOHNSON — No. 33209 — MECHANICAL — SIGNED 04/18/2024 — STATE OF CALIFORNIA

LICENSED ARCHITECT — ROBERT D. CLARKE — No. C-41530 — Exp.10-31-25 — STATE OF CALIFORNIA

STAMPS

AGENCY APPROVAL
File No.: ########-########

MECHANICAL ELECTRICAL AND ENERGY CONSULTANTS

DESIGN WEST ENGINEERING

412 E. Vanderbilt Way
San Bernardino, CA 92408
Tel: 909-890-3700
Fax: 909-890-3770
Email: cadd@designwesteng.com

CONSULTANT BRANDING

RUHNAU CLARKE ARCHITECTS

MOUNT TRANSIT ADMINISTRATION FACILITY: INCREMENT 3: 100% CONSTRUCTION DOCUMENTS

PRINTED: 4/18/2024 11:42:33 AM
PATH: J:\01_Projects\50801_MMTA_MTP\122-066 Mountain Transit Maintenance Fac_3\Revit_Central_2024

PROJECT No. :50801
4/18/2024 11:42:33 AM

DRAWN BY: CHECKED BY:

ISSUE No.____ DATE____ DESCRIPTION____
REVISION No.____ DATE____ DESCRIPTION____

BUILDING EAVE HEAT TRACE SYSTEM SCHEDULE

TAG	MANUFACTURER & MODEL NO.	LOCATION	POWER OUTPUT	DESIGN LENGTHS	ELECTRICAL V-PH-HZ	ELECTRICAL AMPS	ANCHORAGE DETAIL REFERENCE	REMARKS (SEE EQUIPMENT NOTES BELOW)
HT 1	WARMZONE PLSRR-6-2	BUILDING EAVES	6 WATT/FT	160 FT + 325 FT	208V-1PH	960 W + 1,950 W MCA 20A + 30A MOCP	1 / MD-1.2	1, 2, 3, 4

NOTES:

1. PROVIDE TF115 THERMOSTAT WITH REMOTE SENSOR. 120V-1PH. SET AT 40°F
2. PROVIDE ECOTRACE RL60 RELAY PANEL. 60A (2x 30A)
3. PROVIDE SR ROOF CLIPS
4. PROVIDE SR POWER CONNECTION KIT W/ END SEAL & COMPRESSION FITTING

EXHAUST FAN SCHEDULE

TAG	MANUFACTURER & MODEL NO.	AREA/UNIT SERVED	TYPE	FAN SYSTEM CFM	ESP	RPM	PWR	WATTS	TIP SPEED	V-PH-HZ	AMPS	SONES	OPER. WT. W/ ACCESSORIES (LBS)	ANCHORAGE DETAIL REFERENCE	REMARKS (SEE EQUIPMENT NOTES BELOW)
EF 1 THRU EF 5	GREENHECK SP-A50-90-VG	RR 212, 213, 214, 216, 218	CEILING	50	0.125"	808	N/A	6	N/A	120-1-60	0.29 FLA	0.6	20	14 / MD-1.1	1, 2, 3, 4, 5, 6, 11
EF 6 THRU EF 7	GREENHECK SP-A50-90-VG	RR 224, 226	CEILING	75	0.18"	887	N/A	6	N/A	120-1-60	0.29 FLA	0.6	20	14 / MD-1.1	1, 2, 3, 4, 5, 6, 11
EF 8	GREENHECK SP-A50-90-VG	CUST 233	CEILING	60	0.17"	838	N/A	6	N/A	120-1-60	0.29 FLA	0.6	20	14 / MD-1.1	1, 2, 3, 4, 5, 6, 11
EF 9	GREENHECK SP-A390-VG	LOCKER 210	CEILING	130	0.141	757	N/A	12	N/A	120-1-60	1.5 FLA	1.3	35	14 / MD-1.1	2, 3, 4, 5, 6, 9, 11
EF 10	GREENHECK SQ-95-VG	BREAKROOM 205	INLINE	340	0.25	1,113	1/6 HP 0.04 BHP	N/A	3,169	120-1-60	3.0 MCA 15.0 MOCP	4.9	70	14 / MD-1.1	3, 5, 6, 7, 9, 10
EF 11	GREENHECK SQ-90-VG	ELECTRICAL 230	INLINE	290	0.15	985	1/10 HP 0.02 BHP	N/A	2,804	120-1-60	2.0 MCA 15.0 MOCP	3.3	70	14 / MD-1.1	3, 5, 6, 9, 13
RF 1	GREENHECK SQ-160-VG	CORRIDORS	INLINE	940	0.3	621	3/4 HP 0.08 BHP	N/A	2,724	120-1-60	11.0 MCA 20.0 MOCP	3.1	155	14 / MD-1.1	3, 5, 6, 7, 8, 9, 12
RF 2	GREENHECK SQ-160-VG	BOARD ROOM 222	INLINE	850	0.3	611	3/4 HP 0.07 BHP	N/A	2,681	120-1-60	11.0 MCA 20.0 MOCP	2.9	155	14 / MD-1.1	3, 5, 6, 7, 8, 9, 12

EQUIPMENT NOTES:

1. ROUND DUCT CONNECTION
2. WHITE ALUM GRILLE
3. BACKDRAFT DAMPER
4. INTERCONNECT TO LIGHT SWITCH
5. MOUNTING BRACKET
6. ISOLATOR KIT
7. VARI-GREEN DIAL ON EXTERIOR OF FAN HOUSING
8. VARI-GREEN CONSTANT PRESSURE, INTEGRAL TRANSDUCER, ROOM TAP
9. VARI-GREEN EC MOTOR
10. INTERLOCK WITH FC-1.
11. DISCHARGE TO ROOF CAP.
12. VARI-GREEN TRANSFORMER 85-277VAC TO 24 VDC, MOUNTED & WIRED
13. CONTROLLED BY LINE VOLTAGE T-STAT. SET TO 80°F.

VRF FLOW SELECTOR BOX SCHEDULE

TAG	MANUFACTURER & MODEL NO.	UNIT SERVED	CONNECTING PORT PIPE SIZES INDOOR SIDE LIQUID/GAS	OUTDOOR SIDE LIQUID/DISCHARGE/SUCTION			ELECTRICAL V-PH-HZ	AMPS	OPER. WT WITH ACCESSORIES (LBS.)	ANCHORAGE DETAIL REFERENCE	REMARKS (SEE EQUIPMENT NOTES BELOW)
FSB 1	CARRIER RBM-Y0384FUL	FC 1	3/8" / 5/8"	3/8"	1/2"	5/8"	208V-1ø-60Hz	1	30	14 / MD-1.1	2
FSB 2	CARRIER RBM-Y0964FUL	FC 2	1/2" / 7/8"	1/2"	3/4"	7/8"	208V-1ø-60Hz	1	40	14 / MD-1.1	2
FSB 3	CARRIER RBM-Y0964FUL	FC 3	1/2" / 7/8"	1/2"	3/4"	7/8"	208V-1ø-60Hz	1	40	14 / MD-1.1	2
FSB 4	CARRIER RBM-Y0384FUL	FC 4	3/8" / 5/8"	3/8"	1/2"	5/8"	208V-1ø-60Hz	1	30	14 / MD-1.1	2
FSB 5	CARRIER RBM-Y0614FUL	FC 5	3/8" / 5/8"	3/8"	1/2"	5/8"	208V-1ø-60Hz	1	30	14 / MD-1.1	2
FSB 6	CARRIER RBM-Y0384FUL	FC 6	3/8" / 5/8"	3/8"	1/2"	5/8"	208V-1ø-60Hz	1	30	14 / MD-1.1	2
FSB 7	CARRIER RBM-Y0964FUL	FC 7	1/2" / 7/8"	1/2"	3/4"	7/8"	208V-1ø-60Hz	1	40	14 / MD-1.1	2
FSB 8	CARRIER RBM-Y0614FUL	FC 8	3/8" / 5/8"	3/8"	1/2"	5/8"	208V-1ø-60Hz	1	30	14 / MD-1.1	2
FSB 9	CARRIER RBM-Y0384FUL	FC 9	3/8" / 5/8"	3/8"	1/2"	5/8"	208V-1ø-60Hz	1	30	14 / MD-1.1	2

EQUIPMENT NOTES:

1. FLOW SELECTOR BOX IS POWERED THRU FAN COIL UNIT
2. MAX 49 FT PIPE LENGTH BETWEEN BOX & FAN COIL

REGISTERED PROFESSIONAL ENGINEER STEVEN M. JOHNSON No. 33209 SIGNED:04/18/2024 MECHANICAL STATE OF CALIFORNIA

LICENSED ARCHITECT ROGER CLARKE No. C-21340 Exp.10-31-25 STATE OF CALIFORNIA

STAMPS

AGENCY APPROVAL
File No: ######A###-#######

MECHANICAL ELECTRICAL AND ENERGY CONSULTANTS

DESIGN WEST ENGINEERING

412 E. Vanderbilt Way
San Bernardino, CA 92408
Tel: 909-890-3700
Fax: 909-890-3770
Email: cadd@designwesteng.com

CONSULTANT BRANDING

RUHNAU CLARKE ARCHITECTS

MOUNT TRANSIT ADMINISTRATION FACILITY: INCREMENT 3: 100% CONSTRUCTION DOCUMENTS

PRINTED :4/18/2024 11:42:34 AM
PATH: BIM 360://50801_MARTA_MTMF/22-066 Mountain Transit Maintenance Inc_3_MEP_Central_R21.rvt

PROJECT No. :50801
4/18/2024 11:42:34 AM

DRAWN BY: CHECKED BY:

ISSUE No.______ DATE________ DESCRIPTION______________________
ISSUE No.______ DATE________ DESCRIPTION______________________
ISSUE No.______ DATE________ DESCRIPTION______________________
ISSUE No.______ DATE________ DESCRIPTION______________________

REVISION No.______ DATE________ DESCRIPTION______________________
REVISION No.______ DATE________ DESCRIPTION______________________
REVISION No.______ DATE________ DESCRIPTION______________________
REVISION No.______ DATE________ DESCRIPTION______________________

RUHNAUCLARKE.COM

3775 TENTH STREET, RIVERSIDE CALIFORNIA 92501 (951) 684 4664 / 5751 PALMER WAY, SUITE C, CARLSBAD CALIFORNIA 92010 (760) 438 5899

MOUNT TRANSIT ADMINISTRATION FACILITY
INCREMENT 3
170 BUSINESS CENTER DR. BIG BEAR LAKES, CA
BIG BEAR LAKES

MECHANICAL SCHEDULES CONT.

M2-0.3

CERTIFICATE OF COMPLIANCE - NONRESIDENTIAL PERFORMANCE COMPLIANCE METHOD NRCC-PRF-E

Nonresidential Performance Compliance Method (Page 1 of 16)

Project Name:	Mountain Transit Admin	**Date Prepared:**	2023-12-12

A. General Information

1	Project Name	Mountain Transit Admin			
2	Run Title	Title 24 Analysis			
3	Project Location	160-170 Business Center Drive			
4	City	Big Bear Lake	5	Standards Version	Compliance 2022
6	Zip code	92315	7	Compliance Software (version)	EnergyPro 9.2
8	Climate Zone	16	9	Building Orientation (deg)	45
10	Building Type(s)	• Nonresidential	11	Weather File	SANDBERG_STYP20.epw
12	Project Scope	• New envelope	13	Number of Dwelling Units	0
15	Total Conditioned Floor Area in Scope (ft²)	10135	15	Total # of hotel/motel rooms	0
16	Total Unconditioned Floor Area (ft²)	60	17	Fuel Type	Natural gas
18	Nonresidential Conditioned Floor Area	10135	19	Total # of Stories (Habitable Above Grade)	1
20	Residential Conditioned Floor Area	0			

CERTIFICATE OF COMPLIANCE - NONRESIDENTIAL PERFORMANCE COMPLIANCE METHOD NRCC-PRF-E

Nonresidential Performance Compliance Method (Page 2 of 16)

B. PROJECT SUMMARY

Table B shows which building components are included in the performance calculation. If indicated as not included, the project must show compliance prescriptively if within the permit application.

Building Components Complying via Performance					Building Components Complying Prescriptively	
Envelope (See Table G)	Nonres	Performance	Solar Thermal Water Heating (See Table I3)	☐ Performance	The following building components are ONLY eligible for prescriptive compliance and should be documented on the NRCC form listed if within the scope of the permit application (i.e. compliance will not be shown on the NRCC-PRF-E).	
	MultiFam	Not Included		☒ Not Included		
Mechanical (See Table H)	Nonres	Not Included	Covered Process: Commercial Kitchens (see Table J)	☐ Performance	Indoor Lighting (Unconditioned) 140.6 & 170.2(e)	NRCC-LTI-E is required
	MultiFam	Not Included		☒ Not Included	Outdoor Lighting 140.7 & 170.2(e)	NRCC-LTO-E is required
Domestic Hot Water (See Table I)	Nonres	Not Included	Covered Process: Laboratory Exhaust (see Table J)	☐ Performance	Sign Lighting 140.8 & 170.2(e)	NRCC-LTS-E is required
	MultiFam	Not Included		☒ Not Included	**Building Components Complying with Mandatory Measures**	
Lighting (Indoor Conditioned, see Table K)	Nonres	Not Included	Photovoltaics (see Table F)	☐ Performance	Electrical power systems, commissioning, solar ready, elevator and escalator requirements are mandatory and should be documented on the NRCC form listed if applicable (i.e. compliance will not be shown on the NRCC-PRF-E.)	
	MultiFam	Not Included		☒ Not Included	Electrical Power Distribution 110.11	NRCC-ELC-E is required
			Battery (see Table F)	☐ Performance	Commissioning 120.8	NRCC-CXR-E is required
				☒ Not Included	Solar and Battery 110.10	NRCC-SAB-E is required

CERTIFICATE OF COMPLIANCE - NONRESIDENTIAL PERFORMANCE COMPLIANCE METHOD NRCC-PRF-E

Nonresidential Performance Compliance Method (Page 3 of 16)

C1. COMPLIANCE SUMMARY

	COMPLIES[1]		
	Time Dependent Valuation (TDV)		**Source Energy Use**
	Efficiency[2] (kBtu/ft² - yr)	**Total[2] (kBtu/ft² - yr)**	**Total[2] (kBtu/ft² - yr)**
Standard Design	311.78	311.78	39.76
Proposed Design	293.53	293.53	38.95
Compliance Margins	**18.25**	**18.25**	**0.81**
	Pass	**Pass**	**Pass**

[1] *Efficiency measures include improvements like a better building envelope and more efficient equipment*
[2] *Compliance Totals include efficiency, photovoltaics and batteries*
[3] *New Construction, Complete Addition Scope: Building complies when all efficiency and total compliance margins are greater than or equal to zero and unmet load hour limits are not exceeded*
Existing, Addition and Alteration Scope: Building complies when efficiency compliance margin is greater than or equal to zero and unmet load hour limits are not exceeded

CERTIFICATE OF COMPLIANCE - NONRESIDENTIAL PERFORMANCE COMPLIANCE METHOD NRCC-PRF-E

Nonresidential Performance Compliance Method (Page 4 of 16)

C2. TDV ENERGY COMPLIANCE RESULTS FOR PERFORMANCE COMPONENTS (Annual TDV Energy Use, kBtu/ft² - yr)

	COMPLIES[1]		
Energy Component	**Standard Design (TDV)**	**Proposed Design (TDV)**	**Compliance Margin (TDV)[2]**
Space Heating	60.47	64.45	-3.98
Space Cooling	45.73	47.76	-2.03
Indoor Fans	171.39	147.13	24.26
Heat Rejection	0	0	0
Pumps & Misc.	0	0	0
Domestic Hot Water	0	0	0
Indoor Lighting	34.19	34.19	0
Flexibility	---	---	---
EFFICIENCY COMPLIANCE TOTAL	**311.78**	**293.53**	**18.25 (5.9%)**
Photovoltaics	---	---	---
Batteries	---	---	---
TOTAL COMPLIANCE	**311.78**	**293.53**	**18.25 (5.9%)**

[1] *Notes: This number in parenthesis following the Compliance Margin in column 4, represents the Percent Better than Standard.*

CERTIFICATE OF COMPLIANCE - NONRESIDENTIAL PERFORMANCE COMPLIANCE METHOD NRCC-PRF-E

Nonresidential Performance Compliance Method (Page 5 of 16)

C3. TDV ENERGY RESULTS FOR NON-REGULATED COMPONENTS[1]

Non-Regulated Energy Component	**Standard Design (TDV)**	**Proposed Design (TDV)**	**Compliance Margin (TDV)[2]**
Receptacle	81.73	81.73	---
Process	21.41	21.41	---
Other Ltg	0.13	0.13	---
Process Motors	---	---	---
TOTAL (TOTAL COMPLIANCE + NON-REGULATED COMPONENTS)	**415.05**	**396.8**	**18.25 (4.4%)**

[1] *Notes: This table is not used for Energy Code Compliance.*

CERTIFICATE OF COMPLIANCE - NONRESIDENTIAL PERFORMANCE COMPLIANCE METHOD NRCC-PRF-E

Nonresidential Performance Compliance Method (Page 6 of 16)

C4. SOURCE ENERGY COMPLIANCE RESULTS FOR PERFORMANCE COMPONENTS (Annual SOURCE Energy Use, kBtu/ft² /yr)

	COMPLIES[2]		
Energy Component	**Standard Design (SOURCE)**	**Proposed Design (SOURCE)**	**Compliance Margin (SOURCE)[1]**
Space Heating	17	18.27	-1.27
Space Cooling	3.23	3.47	-0.24
Indoor Fans	16.79	14.47	2.32
Heat Rejection	0	0	0
Pumps & Misc.	0	0	0
Domestic Hot Water	0	0	0
Indoor Lighting	2.74	2.74	0
Flexibility	---	---	---
EFFICIENCY COMPLIANCE TOTAL	**39.76**	**38.95**	**0.81 (2%)**
Photovoltaics	---	---	---
Batteries	---	---	---
TOTAL COMPLIANCE	**39.76**	**38.95**	**0.81 (2%)**

[1] *Notes: This number in parenthesis following the Compliance Margin in column 4, represents the Percent Better than Standard.*

CERTIFICATE OF COMPLIANCE - NONRESIDENTIAL PERFORMANCE COMPLIANCE METHOD NRCC-PRF-E

Nonresidential Performance Compliance Method (Page 7 of 16)

C5. SOURCE ENERGY RESULTS FOR NON-REGULATED COMPONENTS[1]

Non-Regulated Energy Component	**Standard Design (SOURCE)**	**Proposed Design (SOURCE)**	**Compliance Margin (SOURCE)[2]**
Receptacle	6.2	6.2	---
Process	1.47	1.47	---
Other Ltg	0.01	0.01	---
Process Motors	---	---	---
TOTAL (TOTAL COMPLIANCE + NON-REGULATED COMPONENTS)	**47.44**	**46.63**	**0.81 (1.7%)**

[1] *Notes: This table is not used for Energy Code Compliance.*

C6. 'ABOVE CODE' QUALIFICATIONS

☐ This project is pursuing CalGreen Tier 1 ☐ This project is pursuing CalGreen Tier 2

CERTIFICATE OF COMPLIANCE - NONRESIDENTIAL PERFORMANCE COMPLIANCE METHOD NRCC-PRF-E

Nonresidential Performance Compliance Method (Page 8 of 16)

C7. ENERGY USE SUMMARY

Energy Component	**Standard Design Site (MWh)**	**Proposed Design Site (MWh)**	**Margin (MWh)**	**Standard Design Site (MBtu)**	**Proposed Design Site (MBtu)**	**Margin (MBtu)**
Space Heating	4.6	4.6	0	167.5	181.4	-13.9
Space Cooling	20.1	20.8	-0.7	---	---	---
Indoor Fans	61.2	52.5	8.7	---	---	---
Heat Rejection	---	---	---	---	---	---
Pumps & Misc.	---	---	---	---	---	---
Domestic Hot Water	---	---	---	---	---	---
Indoor Lighting	14.4	14.4	0	---	---	---
Flexibility	---	---	---	---	---	---
EFFICIENCY TOTAL	**100.3**	**92.3**	**8**	**167.5**	**181.4**	**-13.9**
Photovoltaics	---	---	---	---	---	---
Batteries	---	---	---	---	---	---
ENERGY USE SUBTOTAL	**100.3**	**92.3**	**8**	**167.5**	**181.4**	**-13.9**
Receptacle	35.7	35.7	0	---	---	---
Process	10.1	10.1	0	---	---	---
Other Ltg	0.1	0.1	0	---	---	---
Process Motors	---	---	---	---	---	---
ENERGY USE TOTAL	**146.2**	**138.2**	**8**	**167.5**	**181.4**	**-13.9**

CERTIFICATE OF COMPLIANCE - NONRESIDENTIAL PERFORMANCE COMPLIANCE METHOD NRCC-PRF-E

Nonresidential Performance Compliance Method (Page 9 of 16)

C8. ENERGY USE INTENSITY (EUI)

	Standard Design (kBtu/ft² / yr)	**Proposed Design (kBtu/ft² / yr)**	**Margin (kBtu/ft² / yr)**	**Margin Percentage**
GROSS EUI[1]	65.36	64.04	1.32	2.02
NET EUI[1]	65.36	64.04	1.32	2.02

[1] *Notes: Gross EUI is Energy Use Total (not including PV)/Total Building Area. Net EUI is Energy Use Total (including PV)/Total Building Area.*

D1. EXCEPTIONAL CONDITIONS

• The aged solar reflectance and aged thermal emittance must be listed in the Cool Roof Rating Council database of certified products. For projects where initial reflectance is used, the initial reflectance must be listed, and the aged reflectance is calculated by the software program and used in the compliance model.
• This project includes partial performance compliance scope options. The building must show compliance with all other applicable compliance scope options (performance or prescriptive) before occupying.
• The project uses the Simplified Geometry Performance Modeling Approach which is not capable of modeling daylighting controls and assumes the prescriptive Secondary Daylit Control requirements are met. PRESCRIPTIVE COMPLIANCE documentation (form NRCC-CTI-02-E) for the requirements of section 140.6(d) Automatic Daylighting Controls in Secondary Daylit Zones is required.
• The project includes windows which have been classified as clerestory windows. Please verify that clerestories are present, and that daylighting controls are present for these areas. Clerestory windows do not trigger mandatory daylighting control requirements, and may allow users to claim PAF credit for daylighting controls in areas illuminated by clerestories.
• The building does not include service water heating. Verify that service water heating is not required and is not included in the design.
• The proposed building includes space(s) that are modeled with unknown HVAC system(s). Verify that the spaces modeled with unknown HVAC system(s) are either part of core and shell analysis which will be permitted for mechanical compliance in the future, or the spaces have an existing HVAC system not modeled for compliance, or the compliance scope does not include mechanical.
• PV/Battery Building Type has been modified from software defaults for one or more spaces. Review project's PV/Battery Building Type(s) with documentation author. Refer to Energy Code section 140.10 for Nonresidential or 170.2(g) for more information.

CERTIFICATE OF COMPLIANCE - NONRESIDENTIAL PERFORMANCE COMPLIANCE METHOD NRCC-PRF-E

Nonresidential Performance Compliance Method (Page 10 of 16)

G1. ENVELOPE GENERAL INFORMATION (conditioned spaces only)

01	**02**	**03**	**04**
Opaque Surfaces & Orientation	**Total Gross Surface Area (ft²)**	**Total Fenestration Area (ft²)**	**Window to Wall Ratio (%)**
North-Facing[1]	1564.1	726.25	46.43
East-Facing[2]	2007	583.28	29.06
South-Facing[3]	1543.93	714.88	46.3
West-Facing[4]	3617.25	1615.5	44.66
Total	**8732.28**	**3639.91**	**41.68**
Roof	10135	0	0

Notes
[1] *North-Facing is oriented to within 45 degrees of true north, including 45 00'00" east of north (NE), but excluding 45 00'00" west of north (NW),*
[2] *East-Facing is oriented to within 45 degrees of true east, including 45 00'00" south of east (SE), but excluding 45 00'00" north of east (NE),*
[3] *South-Facing is oriented to within 45 degrees of true south, including 45 00'00" west of south (SW), but excluding 45 00'00" east of south (SE),*
[4] *West-Facing is oriented to within 45 degrees of true west, including 45 00'00" north of west (NW), but excluding 45 00'00" south of west (SW),*

G2A. ROOFING PRODUCT SUMMARY (NONRESIDENTIAL)

01	**02**	**03**	**04**	**05**	**06**
Assembly Name	**Roof Pitch**	**Roof Rise (x in 12)**	**Aged Solar Reflectance**	**Thermal Emittance**	**SRI**
Metal Building Roof R-3817	LowSlope	N/A	0.63	0.75	N/A
Metal Building Roof R-3829	LowSlope	N/A	0.63	0.75	N/A

G4. NONRESIDENTIAL AIR BARRIER

01	**02**
Building Story Name	**Air Barrier**
Com-Office	No air barrier

CERTIFICATE OF COMPLIANCE - NONRESIDENTIAL PERFORMANCE COMPLIANCE METHOD NRCC-PRF-E

Nonresidential Performance Compliance Method (Page 11 of 16)

G5. OPAQUE SURFACE ASSEMBLY SUMMARY

01	02	03	04	05	06		07	08	09	10
Surface Name	**Construction Type**	**Area (ft²)**	**Framing Type**	**Cavity R-Value**	**Continuous R-Value**		**Units**	**Value**	**Description of Assembly Layers**	**Status[1]**
					Interior	**Exterior**				
Slab On Grade6	Underground Floor	10,195	N/A	0	N/A	N/A	F-factor	0.73	Slab Type =Unheated slab on grade Insulation Orientation =None Insulation R-Value =none	N
A-38	Exterior Wall	1,035	N/A	23	N/A	N/A	U-factor	0.0553	Fiber cement board - 63 lb/ft3 - 1/3 in. Vapor seal - 2 layers of mopped 15 lb felt - 1/4 in. Plywood - 5/8 in. Composite-3 Gypsum Board - 5/8 in.	N
A-110	Exterior Wall	1,485	N/A	23	N/A	N/A	U-factor	0.0531	Hard Board - 3/4 in. Mortar - Cement - 1 in. Mortar - Cement - 1 in. Vapor seal - 2 layers of mopped 15 lb felt - 1/4 in. Plywood - 1/4 in. Composite-2 Gypsum Board - 5/8 in.	N
Metal Building Roof R-3817	Roof	5,405	N/A	0	N/A	25	U-factor	0.0382	Metal Standing Seam - 1/16 in. Vapor permeable felt - 1/8 in. Compliance Insulation R25.00 Plywood - 1/4 in.	N
A-224	Exterior Wall	6,459.41	N/A	23	N/A	N/A	U-factor	0.056	Metal Siding - 1/16 in. Vapor seal - 2 layers of mopped 15 lb felt - 1/4 in. Plywood - 5/8 in. Composite-3 Gypsum Board - 5/8 in.	N

[1] *Status: N - New, A - Altered, E - Existing*

CERTIFICATE OF COMPLIANCE - NONRESIDENTIAL PERFORMANCE COMPLIANCE METHOD NRCC-PRF-E

Nonresidential Performance Compliance Method (Page 12 of 16)

G5. OPAQUE SURFACE ASSEMBLY SUMMARY

01	02	03	04	05	06		07	08	09	10
Surface Name	**Construction Type**	**Area (ft²)**	**Framing Type**	**Cavity R-Value**	**Continuous R-Value**		**Units**	**Value**	**Description of Assembly Layers**	**Status[1]**
					Interior	**Exterior**				
Metal Building Roof R-3829	Roof	4,790	N/A	29	N/A	N/A	U-factor	0.0409	Metal Standing Seam - 1/16 in. Vapor permeable felt - 1/8 in. Composite-4	N
R-11 Wall37	Interior Wall	2,295	Wood	11	N/A	N/A	U-factor	0.1028	Stucco - 7/8 in. Vapor permeable felt - 1/8 in. Composite-5 Gypsum Board - 1/2 in.	N

[1] *Status: N - New, A - Altered, E - Existing*

G6A. OPAQUE DOOR SUMMARY (NONRESIDENTIAL)

01	**02**	**03**	**04**
Assembly Name	**Area (ft²)**	**Overall U-factor**	**Status[1]**
Insulated Door15	372	0.2	N

[1] *Status: N - New, A - Altered, E - Existing*

CERTIFICATE OF COMPLIANCE - NONRESIDENTIAL PERFORMANCE COMPLIANCE METHOD NRCC-PRF-E

Nonresidential Performance Compliance Method (Page 13 of 16)

G7A. FENESTRATION ASSEMBLY SUMMARY (NONRESIDENTIAL)

01	02	03	04	05	06	07	08	09
Fenestration Assembly Name	**Fenestration Type/ Product Type / Frame Type**	**Certification Method[1]**	**Assembly Method**	**Area (ft²)**	**Overall U-factor**	**Overall SHGC**	**Overall VT**	**Status[2]**
copy of Storefront	Vertical fenestration Curtain wall N/A	NFRC	Manufactured	3,639.91	0.24	0.39	0.7	N

[1] *Notes: Newly installed fenestration shall have a certified NFRC Label Certificate or use the CEC default tables found in Table 110.6-A and Table 110.6-B. Center of Glass (COG) values are for the glass-only, determined by the manufacturer, and are shown for ease of verification. Site-built fenestration values are calculated per Nonresidential Appendix NA6 and are used in the analysis.*
[2] *Status: N - New, A - Altered, E - Existing*

CERTIFICATE OF COMPLIANCE - NONRESIDENTIAL PERFORMANCE COMPLIANCE METHOD NRCC-PRF-E

Nonresidential Performance Compliance Method (Page 14 of 16)

G8. OVERHANG DETAILS

01	02	03	04	05	06	07
Fenestration Tag/ ID	**Azimuth**	**Depth (ft)**	**Height from Top of Sill to Overhang (ft)**	**Right Extent (ft)**	**Left Extent (ft)**	**Flap Height**
Door Glass12	180	27	18.5	27	2	N/A
Window 18.25 x 3.513	180	27	15.5	27	2	N/A
Window 25.3 x1525	270	7.5	23	7.5	7.5	N/A
Window 12 x1527	180	7.5	21	7.5	7.5	N/A
Window 12.5 x1532	180	7.5	21	7.5	7.5	N/A
Window 12 x1540	180	7.5	21	7.5	7.5	N/A
Window 5.3 x1548	180	7.5	21	7.5	7.5	N/A
Window 38 x1551	270	7.5	23	7.5	7.5	N/A
Window 12 x1558	270	7.5	23	7.5	7.5	N/A
Window 57.5 x 3.7594	90	3	14.75	3	3	N/A
Window 6 x 1095	90	3	15.6	3	3	N/A
Window 16 x 15108	270	7.5	23	7.5	7.5	N/A
Window 24 x 6.5112	270	7.5	22.8	7.5	7.5	N/A
Window 6 x 15114	270	7.5	31.3	7.5	7.5	N/A
Window 24 x 15116	0	4.5	22	4.5	4.5	N/A
Window 14 x 14127	90	25	16	6	25	N/A
Window 18 x 15129	0	7	15.5	7	7	N/A
Window 10.5 x 5.5138	90	7	14	7	7	N/A
Window 9.8 x 5.5143	90	7	14	7	7	N/A
Window 17.5 x 5.5145	0	21	13.3	21	7	N/A

CERTIFICATE OF COMPLIANCE - NONRESIDENTIAL PERFORMANCE COMPLIANCE METHOD NRCC-PRF-E

Nonresidential Performance Compliance Method (Page 15 of 16)

I. DECLARATION OF REQUIRED CERTIFICATES OF INSTALLATION

Selections made by Documentation Author indicate which Certificates of Installation must be submitted for the features to be recognized for compliance. These documents must be retained and provided to the building inspector during construction and can be found online

Building Component	**Form/Title**
Envelope	NRCI-ENV-01-E - Must be submitted for all buildings
Envelope	NRCI-ENV-E - Envelope (for all buildings)

M. DECLARATION OF REQUIRED CERTIFICATES OF ACCEPTANCE

Selections made by Documentation Author indicate which Certificates of Acceptance must be submitted for the features to be recognized for compliance. These documents must be provided to the building inspector during construction and must be completed through an Acceptance Test Technician Certification Provider (ATTCP).

Building Component	**Form/Title**
Envelope	NRCA-ENV-02-F - NRFC label verification for fenestration

N. DECLARATION OF REQUIRED CERTIFICATES OF VERIFICATION

Selections made by Documentation Author indicate which Certificates of Verification must be submitted for the features to be recognized for compliance. These documents must be retained and provided to the building inspector during construction and can be found online

There are no Certificates of Verification applicable to this project

CERTIFICATE OF COMPLIANCE - NONRESIDENTIAL PERFORMANCE COMPLIANCE METHOD NRCC-PRF-E

Nonresidential Performance Compliance Method (Page 16 of 16)

Documentation Author's Declaration Statement

I. I certify that this Certificate of Compliance documentation is accurate and complete.

Documentation Author Name: Steven Johnson	Documentation Author Signature: Steven Johnson
Company: Design West Engineering	Signature Date:2023-12-12
Address: 412 E. Vanderbilt Way	CEA/HERS Certification Identification (if applicable): 33209
City/State/Zip: San Bernardino, CA 92408	Phone: 909.890.3700

Responsible Person's Declaration statement

I certify the following under penalty of perjury, under the laws of the State of California:

1. The information provided on this Certificate of Compliance is true and correct.
2. I am eligible under Division 3 of the Business and Professions Code to accept responsibility for the building design or system design identified on this Certificate of Compliance (responsible designer)
3. The energy features and performance specifications, materials, components, and manufactured devices for the building design or system design identified on this Certificate of Compliance conform to the requirements of Title 24, Part 1 and Part 6 of the California Code of Regulations.
4. The building design features or system design features identified on this Certificate of Compliance are consistent with the information provided on other applicable compliance documents, worksheets, calculations, plans and specifications submitted to the enforcement agency for approval with this building permit application.
5. I understand that a registered copy of this Certificate of Compliance shall be made available with the building permit(s) issued for the building, and made available to the enforcement agency for all applicable inspections, and I will take the necessary steps to accomplish this requirement.
6. I understand that a registered copy of this Certificate of Compliance is required to be included with the documentation the builder provides to the building owner at occupancy, and I will take the necessary steps to accomplish these requirements.

Responsible Designer Name: Roger Clarke	Responsible Designer Signature:	
Company: Ruhnau Clarke Architects		
Address: 3775 Tenth Street	Date Signed:	
City/State/Zip: Riverside, CA 92501	License #: C-21340	
Phone: 951-684-4664	Title:	Scope:
Responsible Designer Name: Steven Johnson	Responsible Designer Signature: Steven Johnson	
Company: Design West Engineering		
Address: 412 E. Vanderbilt Way	Date Signed: 2023-12-12	
City/State/Zip: San Bernardino, CA 92408	License #: M-33209	
Phone: 909-890-3700	Title:	Scope:

STAMPS

REGISTERED PROFESSIONAL ENGINEER — ROGER M. CLARKE — No. 33209 — SIGNED 04/18/2024 — MECHANICAL — STATE OF CALIFORNIA

LICENSED ARCHITECT — ROGER CLARKE — No. C-21340 — Exp. 10-31-25 — STATE OF CALIFORNIA

AGENCY APPROVAL
File No.: ########-########

CONSULTANT BRANDING

MECHANICAL ELECTRICAL AND ENERGY CONSULTANTS

DESIGN WEST ENGINEERING
412 E. Vanderbilt Way
San Bernardino, CA 92408
Tel: 909-890-3700
Fax: 909-890-3700
Email: cadd@designwesteng.com

RUHNAU CLARKE ARCHITECTS

MOUNT TRANSIT ADMINISTRATION FACILITY: INCREMENT 3: 100% CONSTRUCTION DOCUMENTS

PRINTED: 4/18/2024 11:42:36 AM
PATH: R:\Projects\50801_Mt Transit Admin\Revit\50801_MTNP22-066 Mountain Transit Maintenance Facility_Increment 3_Central_R24.rvt

PROJECT No. :50801
4/18/2024 11:42:36 AM

DRAWN BY: CHECKED BY:

ISSUE No._____ DATE_____ DESCRIPTION_____
ISSUE No._____ DATE_____ DESCRIPTION_____
ISSUE No._____ DATE_____ DESCRIPTION_____
ISSUE No._____ DATE_____ DESCRIPTION_____

REVISION No._____ DATE_____ DESCRIPTION_____
REVISION No._____ DATE_____ DESCRIPTION_____
REVISION No._____ DATE_____ DESCRIPTION_____
REVISION No._____ DATE_____ DESCRIPTION_____

RUHNAUCLARKE.COM
3775 TENTH STREET, RIVERSIDE CALIFORNIA 92501 (951) 684 4664 / 5751 PALMER WAY, SUITE C, CARLSBAD CALIFORNIA 92010 (760) 438 5899

MOUNT TRANSIT ADMINISTRATION FACILITY
INCREMENT 3
170 BUSINESS CENTER DR. BIG BEAR LAKES, CA
BIG BEAR LAKES

ENERGY COMPLIANCE DOCUMENTS

M2-0.4

50801

STATE OF CALIFORNIA
Mechanical Systems
CALIFORNIA ENERGY COMMISSION

CERTIFICATE OF COMPLIANCE	NRCC-MCH-E
This document is used to demonstrate compliance for mechanical systems that are within the scope of the permit application and are demonstrating compliance using the prescriptive path outlined in 140.4, or 141.0(b)2 for alterations.	
Project Name: Mountain Transit Admin & Maintenance Facility	**Report Page:** (Page 1 of 19)
Project Address: 160-170 Business Center Drive	**Date Prepared:** 11/29/2023

A. GENERAL INFORMATION

01	Project Location (city)	Big Bear Lake	04	Total Conditioned Floor Area	10135
02	Climate Zone	16	05	Total Unconditioned Floor Area	60
03	Occupancy Types Within Project:		06	# of Stories (Habitable Above Grade)	1

● Office ● All Other Occupancies

B. PROJECT SCOPE

This table includes mechanical systems or components that are within the scope of the permit application and are demonstrating compliance using the prescriptive path outlined in 140.4, 170.2(b) or 141.0(b)2 and 180.2(b)2 for alterations.

01	02	03
Air System(s)	Wet System Components	Dry System Components
☒ Heating Air System	☐ Water Economizer	☐ Air Economizer
☒ Cooling Air System	☐ Pumps	☐ Electric Resistance Heat
Mechanical Controls	☐ System Piping	☒ Fan Systems
☒ Mechanical Controls (existing to remain, altered or new)	☐ Cooling Towers	☒ Ductwork (existing to remain, altered or new)
	☐ Chillers	☒ Ventilation
	☐ Boilers	☐ Zonal Systems/ Terminal Boxes

Generated Date/Time:
CA Building Energy Efficiency Standards - 2022 Nonresidential Compliance
Report Version: 2022.0.000
Schema Version: rev 20220101
Documentation Software: EnergyPro
Compliance ID: EnergyPro-4473-1123-1639
Report Generated: 2023-11-29 14:35:02

STATE OF CALIFORNIA
Mechanical Systems
CALIFORNIA ENERGY COMMISSION

CERTIFICATE OF COMPLIANCE	NRCC-MCH-E
Project Name: Mountain Transit Admin & Maintenance Facility	**Report Page:** (Page 2 of 19)
	Date Prepared: 11/29/2023

C. COMPLIANCE RESULTS

Table C will indicate if the project data input into the compliance document is compliant with mechanical requirements. This table is not editable by the user. If this table says "DOES NOT COMPLY" or "COMPLIES with Exceptional Conditions" refer to Table D., or the table indicated as not compliant for guidance.

01		02		03		04		05		06		07		08		09
System Summary 110.1, 110.2, 140.4, 170.2(c)	AND	Pumps 140.4(k), 170.2(c)4	AND	Fans/ Economizers 140.4(c), 140.4(e), 170.2(c)	AND	System Controls 110.2, 120.2, 140.4(f), 170.2(c)	AND	Ventilation 120.1, 160.2	AND	Terminal Box Controls 140.4(d), 170.2(c)4B	AND	Distribution 120.3, 140.4(l), 160.2, 160.3	AND	Cooling Towers 110.2(e)2		Compliance Results
[See Table F]		[See Table G]		[See Table H]		[See Table I]		[See Table J]		[See Table K]		[See Table L]		[See Table M]		
Yes	AND		AND	Yes	AND	Yes	AND	Yes	AND		AND	Yes	AND			COMPLIES
Mandatory Measures Compliance (See Table Q for Details)																COMPLIES

D. EXCEPTIONAL CONDITIONS

This table is auto-filled with uneditable comments because of selections made or data entered in tables throughout the form.

E. ADDITIONAL REMARKS

This table includes remarks made by the permit applicant to the Authority Having Jurisdiction.

F. HVAC SYSTEM SUMMARY (DRY & WET SYSTEMS)

Space Conditioning System Information

01	02	03	04	05	06
System Name	Quantity	System Serving	System Status	Space Type	Utilizing Recovered Heat
CU-1	1	Multi-zone	New/ Addition		☐
IU/OU-1	1	Single zone	New/ Addition		☐
DOAS Split 1	2	Single zone	New/ Addition		☐

Generated Date/Time:
CA Building Energy Efficiency Standards - 2022 Nonresidential Compliance
Report Version: 2022.0.000
Schema Version: rev 20220101
Documentation Software: EnergyPro
Compliance ID: EnergyPro-4473-1123-1639
Report Generated: 2023-11-29 14:35:02

STATE OF CALIFORNIA
Mechanical Systems
CALIFORNIA ENERGY COMMISSION

CERTIFICATE OF COMPLIANCE	NRCC-MCH-E
Project Name: Mountain Transit Admin & Maintenance Facility	**Report Page:** (Page 3 of 19)
	Date Prepared: 11/29/2023

F. HVAC SYSTEM SUMMARY (DRY & WET SYSTEMS)

Dry System Equipment Sizing (includes air conditioners, condensers, heat pumps, VRF, furnaces and unit heaters and DOAS systems)

01	02	03	04	05	06	07	08	09	10	11
Name or Item Tag	Equipment Category per Tables 110.2, 140.4(a)2 and 170.2(c)3aii	Equipment Type per Tables 110.2 and Title 20	Smallest Size Available[1] 140.4(a) and 170.2(c)1	Equipment Sizing per Mechanical Schedule (kBtu/h) 140.4(a&b), 170.2(c)1 & 170.2(c)2						
				Heating Output[1,2]		Cooling Output[1,2]		Load Calculations[3,4]		
				Per Design (kBtu/h)	Rated (kBtu/h)	Sensible Per Design (kBtu/h)	Rated (kBtu/h)	Total Heating Load (kBtu/h)	Total Sensible Cooling Load (kBtu/h)	
CU-1	Variable Refrigerant Flow	VRF heat pump, air cooled	Yes	512.24	486	0	474.14	432	184.21	250.94
IU/OU-1	Unitary AC/ Condensers	AC, air cooled, split (3 phase)	Yes	0	0	0	11.21	12	-0.35	15.08
DOAS Split 1	Unitary Heat Pumps	Air-cooled, split (3 phase)	Yes	154.94	108	102.36	185.64	96	229.57	44.24

[1] FOOTNOTES: Equipment shall be the smallest size, within the available options of the desired equipment line, necessary to meet the design heating and cooling loads of the building per 140.4(b) and 170.2(c)1. Healthcare facilities are excepted.
[2] It is common practice to show rated output capacity on the equipment schedule. Sensible cooling output comes from specification sheet tables.
[3] If equipment is heating only, leave cooling output and load blank. If equipment is cooling only, leave heating output and load blank.
[4] Authority Having Jurisdiction may ask for load calculations used for compliance per 140.4(b) and 170.2(c).

Dry System Equipment Efficiency (other than Package Terminal Air Conditioners (PTAC) and Package Terminal Heat Pumps (PTHP), DX-DOAS and Dual Fuel Heat Pumps)

01	02	03	04	05		06	07	08	09
Name or Item Tag	Size Category (Btu/h)	Heating Mode					Cooling Mode		
		Rating Condition (°F)	Efficiency Unit	Minimum Efficiency Required per Tables 110.2 / Title 20	Design Efficiency	Efficiency Unit	Minimum Efficiency Required per Tables 110.2 / Title 20	Design Efficiency
CU-1	>=240,000	47 °Fdb/ 43 °Fwb OSA	COP	3.2	3.2	EER IEER	9.5 12.7	9.5 20.2
IU/OU-1	<65,000					SEER2	14.3	21.5

Generated Date/Time:
CA Building Energy Efficiency Standards - 2022 Nonresidential Compliance
Report Version: 2022.0.000
Schema Version: rev 20220101
Documentation Software: EnergyPro
Compliance ID: EnergyPro-4473-1123-1639
Report Generated: 2023-11-29 14:35:02

STATE OF CALIFORNIA
Mechanical Systems
CALIFORNIA ENERGY COMMISSION

CERTIFICATE OF COMPLIANCE	NRCC-MCH-E
Project Name: Mountain Transit Admin & Maintenance Facility	**Report Page:** (Page 4 of 19)
	Date Prepared: 11/29/2023

F. HVAC SYSTEM SUMMARY (DRY & WET SYSTEMS)

Dry System Equipment Efficiency (other than Package Terminal Air Conditioners (PTAC) and Package Terminal Heat Pumps (PTHP), DX-DOAS and Dual Fuel Heat Pumps)

01	02	03	04	05		06	07	08	09
Name or Item Tag	Size Category (Btu/h)	Heating Mode					Cooling Mode		
		Rating Condition (°F)	Efficiency Unit	Minimum Efficiency Required per Tables 110.2 / Title 20	Design Efficiency	Efficiency Unit	Minimum Efficiency Required per Tables 110.2 / Title 20	Design Efficiency
DOAS Split 1	>=65,000 and <135,000		COP	3.4	4.2	EER IEER	11 14.1	13 25.2

G. PUMPS

This section does not apply to this project.

Generated Date/Time:
CA Building Energy Efficiency Standards - 2022 Nonresidential Compliance
Report Version: 2022.0.000
Schema Version: rev 20220101
Documentation Software: EnergyPro
Compliance ID: EnergyPro-4473-1123-1639
Report Generated: 2023-11-29 14:35:02

STATE OF CALIFORNIA
Mechanical Systems
CALIFORNIA ENERGY COMMISSION

CERTIFICATE OF COMPLIANCE	NRCC-MCH-E
Project Name: Mountain Transit Admin & Maintenance Facility	**Report Page:** (Page 5 of 19)
	Date Prepared: 11/29/2023

H. FAN SYSTEMS & AIR ECONOMIZERS

This table is used to demonstrate compliance with prescriptive requirements found in 140.4(c), 140.4(e), 140.4(m), 170.2(c)3, and 170.2(c)4A for fan systems. Fan systems serving only process loads are exempt from these requirements and do not need to be included in Table H.

System Name	FC-1	Quantity	1	Fan System Status	New	System Zoning	all other systems	Serving Dwelling Units	Not Serving Dwelling Units	Fan System Airflow (cfm)	1,110	Site Elevation	6,745	Economizer	NA: Efficiency per Table 140.4-F
01	02	03	04			05		06	07	08	09			10	11
Fan Name or Item Tag	Fan Type	Qty	Component			Airflow through Component (%)		Water Gauge (w.g)	Allowance		Design				
									Component Allowance	Fan Allowance (watt/cfm)[3]	Design Electrical Input Power Method			Motor Nameplate Horsepower	Design Electrical Input Power (kW)
VRF	Supply	1												Manufacturer provided	0.25
Supply Fan Base Allowance (kW)		Exhaust/Return/Relief/Transfer Fan Base Allowance(kW)							Fan System Allowance (kW)[3]					Fan System Electrical Output (kW)	0.25
System Name	FC-2	Quantity	1	Fan System Status	New	System Zoning	all other systems	Serving Dwelling Units	Not Serving Dwelling Units	Fan System Airflow (cfm)	2,200	Site Elevation	6,745	Economizer	NA: Efficiency per Table 140.4-F
01	02	03	04			05		06	07	08	09			10	11
Fan Name or Item Tag	Fan Type	Qty	Component			Airflow through Component (%)		Water Gauge (w.g)	Allowance		Design				
									Component Allowance	Fan Allowance (watt/cfm)[3]	Design Electrical Input Power Method			Motor Nameplate Horsepower	Design Electrical Input Power (kW)
VRF	Supply	1												Manufacturer provided	0.25
Supply Fan Base Allowance (kW)		Exhaust/Return/Relief/Transfer Fan Base Allowance(kW)							Fan System Allowance (kW)[3]					Fan System Electrical Output (kW)	1

Generated Date/Time:
CA Building Energy Efficiency Standards - 2022 Nonresidential Compliance
Report Version: 2022.0.000
Schema Version: rev 20220101
Documentation Software: EnergyPro
Compliance ID: EnergyPro-4473-1123-1639
Report Generated: 2023-11-29 14:35:02

STATE OF CALIFORNIA
Mechanical Systems
CALIFORNIA ENERGY COMMISSION

CERTIFICATE OF COMPLIANCE	NRCC-MCH-E
Project Name: Mountain Transit Admin & Maintenance Facility	**Report Page:** (Page 6 of 19)
	Date Prepared: 11/29/2023

H. FAN SYSTEMS & AIR ECONOMIZERS

System Name	FC-3	Quantity	1	Fan System Status	New	System Zoning	all other systems	Serving Dwelling Units	Not Serving Dwelling Units	Fan System Airflow (cfm)	2,000	Site Elevation	6,745	Economizer	NA: Efficiency per Table 140.4-F
01	02	03	04			05		06	07	08	09			10	11
Fan Name or Item Tag	Fan Type	Qty	Component			Airflow through Component (%)		Water Gauge (w.g)	Allowance		Design				
									Component Allowance	Fan Allowance (watt/cfm)[3]	Design Electrical Input Power Method			Motor Nameplate Horsepower	Design Electrical Input Power (kW)
VRF	Supply	1												Manufacturer provided	0.25
Supply Fan Base Allowance (kW)		Exhaust/Return/Relief/Transfer Fan Base Allowance(kW)							Fan System Allowance (kW)[3]					Fan System Electrical Output (kW)	0.15
System Name	FC-4	Quantity	1	Fan System Status	New	System Zoning	all other systems	Serving Dwelling Units	Not Serving Dwelling Units	Fan System Airflow (cfm)	705	Site Elevation	6,745	Economizer	NA: <=33 kBtu/h cooling
01	02	03	04			05		06	07	08	09			10	11
Fan Name or Item Tag	Fan Type	Qty	Component			Airflow through Component (%)		Water Gauge (w.g)	Allowance		Design				
									Component Allowance	Fan Allowance (watt/cfm)[3]	Design Electrical Input Power Method			Motor Nameplate Horsepower	Design Electrical Input Power (kW)
VRF	Supply	1												Manufacturer provided	0.15
Supply Fan Base Allowance (kW)		Exhaust/Return/Relief/Transfer Fan Base Allowance(kW)							Fan System Allowance (kW)[3]					Fan System Electrical Output (kW)	0.15

Generated Date/Time:
CA Building Energy Efficiency Standards - 2022 Nonresidential Compliance
Report Version: 2022.0.000
Schema Version: rev 20220101
Documentation Software: EnergyPro
Compliance ID: EnergyPro-4473-1123-1639
Report Generated: 2023-11-29 14:35:02

STATE OF CALIFORNIA
Mechanical Systems
CALIFORNIA ENERGY COMMISSION

CERTIFICATE OF COMPLIANCE	NRCC-MCH-E
Project Name: Mountain Transit Admin & Maintenance Facility	**Report Page:** (Page 7 of 19)
	Date Prepared: 11/29/2023

H. FAN SYSTEMS & AIR ECONOMIZERS

System Name	FC-5	Quantity	1	Fan System Status	New	System Zoning	all other systems	Serving Dwelling Units	Not Serving Dwelling Units	Fan System Airflow (cfm)	1,110	Site Elevation	6,745	Economizer	NA: Efficiency per Table 140.4-F
01	02	03	04			05		06	07	08	09			10	11
Fan Name or Item Tag	Fan Type	Qty	Component			Airflow through Component (%)		Water Gauge (w.g)	Allowance		Design				
									Component Allowance	Fan Allowance (watt/cfm)[3]	Design Electrical Input Power Method			Motor Nameplate Horsepower	Design Electrical Input Power (kW)
VRF	Supply	1												Manufacturer provided	0.25
Supply Fan Base Allowance (kW)		Exhaust/Return/Relief/Transfer Fan Base Allowance(kW)							Fan System Allowance (kW)[3]					Fan System Electrical Output (kW)	0.25
System Name	FC-6	Quantity	1	Fan System Status	New	System Zoning	all other systems	Serving Dwelling Units	Not Serving Dwelling Units	Fan System Airflow (cfm)	705	Site Elevation	6,745	Economizer	NA: <=33 kBtu/h cooling
01	02	03	04			05		06	07	08	09			10	11
Fan Name or Item Tag	Fan Type	Qty	Component			Airflow through Component (%)		Water Gauge (w.g)	Allowance		Design				
									Component Allowance	Fan Allowance (watt/cfm)[3]	Design Electrical Input Power Method			Motor Nameplate Horsepower	Design Electrical Input Power (kW)
VRF	Supply	1												Manufacturer provided	0.15
Supply Fan Base Allowance (kW)		Exhaust/Return/Relief/Transfer Fan Base Allowance(kW)							Fan System Allowance (kW)[3]					Fan System Electrical Output (kW)	0.15

Generated Date/Time:
CA Building Energy Efficiency Standards - 2022 Nonresidential Compliance
Report Version: 2022.0.000
Schema Version: rev 20220101
Documentation Software: EnergyPro
Compliance ID: EnergyPro-4473-1123-1639
Report Generated: 2023-11-29 14:35:02

STATE OF CALIFORNIA
Mechanical Systems
CALIFORNIA ENERGY COMMISSION

CERTIFICATE OF COMPLIANCE	NRCC-MCH-E
Project Name: Mountain Transit Admin & Maintenance Facility	**Report Page:** (Page 8 of 19)
	Date Prepared: 11/29/2023

H. FAN SYSTEMS & AIR ECONOMIZERS

System Name	FC-7	Quantity	1	Fan System Status	New	System Zoning	all other systems	Serving Dwelling Units	Not Serving Dwelling Units	Fan System Airflow (cfm)	2,825	Site Elevation	6,745	Economizer	NA: Efficiency per Table 140.4-F
01	02	03	04			05		06	07	08	09			10	11
Fan Name or Item Tag	Fan Type	Qty	Component			Airflow through Component (%)		Water Gauge (w.g)	Allowance		Design				
									Component Allowance	Fan Allowance (watt/cfm)[3]	Design Electrical Input Power Method			Motor Nameplate Horsepower	Design Electrical Input Power (kW)
VRF	Supply	1												Manufacturer provided	0.25
Supply Fan Base Allowance (kW)		Exhaust/Return/Relief/Transfer Fan Base Allowance(kW)							Fan System Allowance (kW)[3]					Fan System Electrical Output (kW)	1
System Name	FC-8	Quantity	1	Fan System Status	New	System Zoning	all other systems	Serving Dwelling Units	Not Serving Dwelling Units	Fan System Airflow (cfm)	1,000	Site Elevation	6,745	Economizer	NA: Efficiency per Table 140.4-F
01	02	03	04			05		06	07	08	09			10	11
Fan Name or Item Tag	Fan Type	Qty	Component			Airflow through Component (%)		Water Gauge (w.g)	Allowance		Design				
									Component Allowance	Fan Allowance (watt/cfm)[3]	Design Electrical Input Power Method			Motor Nameplate Horsepower	Design Electrical Input Power (kW)
VRF	Supply	1												Manufacturer provided	0.25
Supply Fan Base Allowance (kW)		Exhaust/Return/Relief/Transfer Fan Base Allowance(kW)							Fan System Allowance (kW)[3]					Fan System Electrical Output (kW)	0.25

Generated Date/Time:
CA Building Energy Efficiency Standards - 2022 Nonresidential Compliance
Report Version: 2022.0.000
Schema Version: rev 20220101
Documentation Software: EnergyPro
Compliance ID: EnergyPro-4473-1123-1639
Report Generated: 2023-11-29 14:35:02

STATE OF CALIFORNIA
Mechanical Systems
CALIFORNIA ENERGY COMMISSION

CERTIFICATE OF COMPLIANCE	NRCC-MCH-E
Project Name: Mountain Transit Admin & Maintenance Facility	**Report Page:** (Page 9 of 19)
	Date Prepared: 11/29/2023

H. FAN SYSTEMS & AIR ECONOMIZERS

System Name	FC-9	Quantity	1	Fan System Status	New	System Zoning	all other systems	Serving Dwelling Units	Not Serving Dwelling Units	Fan System Airflow (cfm)	600	Site Elevation	6,745	Economizer	NA: <=33 kBtu/h cooling
01	02	03	04			05		06	07	08	09			10	11
Fan Name or Item Tag	Fan Type	Qty	Component			Airflow through Component (%)		Water Gauge (w.g)	Allowance		Design				
									Component Allowance	Fan Allowance (watt/cfm)[3]	Design Electrical Input Power Method			Motor Nameplate Horsepower	Design Electrical Input Power (kW)
VRF	Supply	1												Manufacturer provided	0.15
Supply Fan Base Allowance (kW)		Exhaust/Return/Relief/Transfer Fan Base Allowance(kW)							Fan System Allowance (kW)[3]					Fan System Electrical Output (kW)	0.15

Generated Date/Time:
CA Building Energy Efficiency Standards - 2022 Nonresidential Compliance
Report Version: 2022.0.000
Schema Version: rev 20220101
Documentation Software: EnergyPro
Compliance ID: EnergyPro-4473-1123-1639
Report Generated: 2023-11-29 14:35:02

STATE OF CALIFORNIA
Mechanical Systems
CALIFORNIA ENERGY COMMISSION

CERTIFICATE OF COMPLIANCE	NRCC-MCH-E
Project Name: Mountain Transit Admin & Maintenance Facility	**Report Page:** (Page 10 of 19)
	Date Prepared: 11/29/2023

H. FAN SYSTEMS & AIR ECONOMIZERS

System Name	IU/OU-1	Quantity	1	Fan System Status	New	System Zoning	all other systems	Serving Dwelling Units	Not Serving Dwelling Units	Fan System Airflow (cfm)	450	Site Elevation	6,745	Economizer	NA: <=33 kBtu/h cooling
01	02	03	04			05		06	07	08	09			10	11
Fan Name or Item Tag	Fan Type	Qty	Component			Airflow through Component (%)		Water Gauge (w.g)	Allowance		Design				
									Component Allowance	Fan Allowance (watt/cfm)[3]	Design Electrical Input Power Method			Motor Nameplate Horsepower	Design Electrical Input Power (kW)
SF	Supply	1	Base Allowance for system serving spaces <=6 floors away			450			104		Manufacturer provided				0.15
			MERV 13-16 Filter upstream of thermal conditioning equipment			450			63						
			Hydronic/DX cooling coil or heat pump coil			450			63						
Supply Fan Base Allowance (kW)		Exhaust/Return/Relief/Transfer Fan Base Allowance(kW)							Fan System Allowance (kW)[3]		1			Fan System Electrical Output (kW)	0.15

Generated Date/Time:
CA Building Energy Efficiency Standards - 2022 Nonresidential Compliance
Report Version: 2022.0.000
Schema Version: rev 20220101
Documentation Software: EnergyPro
Compliance ID: EnergyPro-4473-1123-1639
Report Generated: 2023-11-29 14:35:02

STATE OF CALIFORNIA
Mechanical Systems
CALIFORNIA ENERGY COMMISSION

CERTIFICATE OF COMPLIANCE	NRCC-MCH-E
Project Name: Mountain Transit Admin & Maintenance Facility	**Report Page:** (Page 11 of 19)
	Date Prepared: 11/29/2023

H. FAN SYSTEMS & AIR ECONOMIZERS

System Name	DOAS Split 1	Quantity	2	Fan System Status	New	System Zoning	all other systems	Serving Dwelling Units	Not Serving Dwelling Units	Fan System Airflow (cfm)	2,720	Site Elevation	6,745	Economizer	Differential Temperature
01	02	03	04			05		06	07	08	09			10	11
Fan Name or Item Tag	Fan Type	Qty	Component			Airflow through Component (%)		Water Gauge (w.g)	Allowance		Design				
									Component Allowance	Fan Allowance (watt/cfm)[3]	Design Electrical Input Power Method			Motor Nameplate Horsepower	Design Electrical Input Power (kW)
SF	Supply	2	Base Allowance for system serving spaces <=6 floors away			1,360			316		Manufacturer provided				0.32
			MERV 13-16 Filter upstream of thermal conditioning equipment			1,360			189						
			Hydronic/DX cooling coil or heat pump coil			1,360			189						
			100% outdoor air system			1,360			95						
Supply Fan Base Allowance (kW)			Exhaust/Return/Relief/Transfer Fan Base Allowance(kW)						Fan System Allowance (kW)[3]		1.26			Fan System Electrical Output (kW)	0.64

[1] FOOTNOTES: Fans serving spaces with design background noise goals below NC35
[2] Low-turndown single-zone VAV fan system must be capable of and configured to reduce airflow to 50 percent of design airflow and use no more than 30 percent of the design wattage at that airflow. No more than 10 percent of the design load served by the equipment shall have fixed loads.
[3] Fan system allowance includes fan system base allowance.
[4] Filter pressure loss can only be counted once per fan system.
[5] Complex Fan System means a fan system that combines a single cabinet fan system with other supply fans, exhaust fans, or both.
[6] Computer room economizers must meet requirements of 140.9(a) and will be documented on the NRCC-PRC-E document..

Generated Date/Time:
CA Building Energy Efficiency Standards - 2022 Nonresidential Compliance
Report Version: 2022.0.000
Schema Version: rev 20220101
Documentation Software: EnergyPro
Compliance ID: EnergyPro-4473-1123-1639
Report Generated: 2023-11-29 14:35:02

STATE OF CALIFORNIA
Mechanical Systems
CALIFORNIA ENERGY COMMISSION

CERTIFICATE OF COMPLIANCE	NRCC-MCH-E
Project Name: Mountain Transit Admin & Maintenance Facility	**Report Page:** (Page 12 of 19)
	Date Prepared: 11/29/2023

H. EXHAUST AIR HEAT RECOVERY 140.4(q), 170.2(c)4O

01	02	03	04	05	06	07	08	09	10	11
Fan System Name	Qty	Hours of Operation per Year	Design Supply Airflow Rate	Outdoor Airflow	% Outdoor Air at Full Design Airflow	Exemptions to Exhaust Air Heat Recovery Requirement per 140.4(q) & 170.2(c)4O	Exhaust Air Heat Recovery 140.4(q) & 170.2(c)4O	Type Of Heat Recovery Rating	Required Recovery Ratio	Energy Recovery Bypass

Fan Energy Index (FEI)

01	02	03
Name or Item Tag	FEI Exception	FEI

I. SYSTEM CONTROLS

This table is used to demonstrate compliance with mandatory controls in 110.2 and 120.2 and prescriptive controls in 140.4(f) and (n), 170.2(c)4O 170.2(c)4L or requirements in 141.0(b)2E 180.2(b)2 for altered space conditioning systems.

01	02	03	04	05	06	07	08	09
System Name	System Zoning	Conditioned Floor Area Being Served (ft²)	Thermostats 110.2(b) & (c)[1], 120.2(a) 160.3(a)2A or 141.0(b)2E & 180.2(b)2	Shut-Off Controls 120.2(e) & 160.3(a)2D	Isolation Zone Controls 120.2(g) & 160.3(a)2F	Demand Response 110.12 120.2(b) & 160.3(a)2B	Supply Air Temp. Reset 140.4(f) & 170.2(c)4O	Window Interlocks per 140.4(n) & 170.2(c)4O
CU-1	Multi-zone w/ DDC to zone	<= 25,000 ft²	EMCS	EMCS	EMCS	EMCS	Included	NA: No operable windows
IU/OU-1	Single zone	<= 25,000 ft²	Setback	NA: 7 day per 120.2(e)1	NA: Continuous Heat/Cool	DR Tstat per 110.12	Included	NA: No operable windows

[1] FOOTNOTES: Gravity gas wall heaters, gravity floor heaters, gravity room heaters, non-central electric heaters, fireplaces or decorative gas appliances, wood stoves are not required to have setback thermostats.

Generated Date/Time:
CA Building Energy Efficiency Standards - 2022 Nonresidential Compliance
Report Version: 2022.0.000
Schema Version: rev 20220101
Documentation Software: EnergyPro
Compliance ID: EnergyPro-4473-1123-1639
Report Generated: 2023-11-29 14:35:02

REGISTERED PROFESSIONAL ENGINEER — STEVEN M. RUHNAU — No. 33209 — MECHANICAL — STATE OF CALIFORNIA
SIGNED 04/18/2024
LICENSED ARCHITECT — STEVEN M. RUHNAU — No. C-31520 — Exp.10-31-25 — STATE OF CALIFORNIA

STAMPS

AGENCY APPROVAL
File No.: ########-#######

MECHANICAL ELECTRICAL AND ENERGY CONSULTANTS
DESIGN WEST ENGINEERING
412 E. Vanderbilt Way
San Bernardino, CA 92408
Tel: 909-890-3700
Fax: 909-890-3770
Email: cadd@designwesteng.com

CONSULTANT BRANDING

RUHNAU CLARKE ARCHITECTS

MOUNT TRANSIT ADMINISTRATION FACILITY: INCREMENT 3: 100% CONSTRUCTION DOCUMENTS

PRINTED: 4/18/2024 11:42:37 AM
PATH: J:\01_Projects\50801_MATH_MTMF22-066 Mountain Transit Maintenance Facility - Increment 3\21_Revit\50801_Central_R24.rvt

PROJECT No. :50801
4/18/2024 11:42:37 AM

DRAWN BY: CHECKED BY:

ISSUE No._____ DATE_____ DESCRIPTION_____
ISSUE No._____ DATE_____ DESCRIPTION_____
ISSUE No._____ DATE_____ DESCRIPTION_____
ISSUE No._____ DATE_____ DESCRIPTION_____
REVISION No._____ DATE_____ DESCRIPTION_____
REVISION No._____ DATE_____ DESCRIPTION_____
REVISION No._____ DATE_____ DESCRIPTION_____
REVISION No._____ DATE_____ DESCRIPTION_____

MOUNT TRANSIT ADMINISTRATION FACILITY
INCREMENT 3
170 BUSINESS CENTER DR. BIG BEAR LAKES, CA
BIG BEAR LAKES

ENERGY COMPLIANCE DOCUMENTS CONT.

M2-0.5

50801

STATE OF CALIFORNIA
Mechanical Systems
CALIFORNIA ENERGY COMMISSION

CERTIFICATE OF COMPLIANCE		NRCC-MCH-E
Project Name: Mountain Transit Admin & Maintenance Facility	**Report Page:**	**(Page 13 of 19)**
	Date Prepared:	11/29/2023

J. VENTILATION AND INDOOR AIR QUALITY

This table is used to demonstrate compliance with mandatory ventilation requirements in 120.1 120.2(e)3B 140.4(a) and 140.4(q) for all nonresidential and hotel/motel and it 124nkfnolnlv/2160.2, 160.3(a)3D, 170.2(c)4N, 170.2(c)4O for high-rise residential occupancies. For alterations, only ventilation systems being altered within the scope of the permit application need to be documented in this table. In lieu of this table, the required outdoor ventilation rates and airflows may be shown on the plans or the calculations can be presented in a spreadsheet.

01	☐	Check the box if the project is showing ventilation calculations on the plans, or attaching the calculations instead of completing this table.
02	☒	Check this box if the project included Nonresidential, Hotel/Motel Spaces or Multifamily Common Use Spaces
	☐	
03	☐	Check the box if the project is using natural ventilation in any nonresidential or hotel/motel spaces to meet required ventilation rates per 120.1(c)2.

Nonresidential and Hotel/ Motel Multifamily Common Use Ventilation Systems

04		05			06			07
System Name	CU-1	System Design OA CFM Airflow[2]		2768	System Design Transfer Air CFM		0	Air Filtration per 120.1(c) 141.0(b)2 and 160.2(c)21[2]
								Provided
08	09	10	11	12	13	14	15	16
Space Name or Item Tag	Mechanical Ventilation Required per 120.1(c)3[3] & 160.2(c)3					Exh. Vent per 120.1(c)4 & 160.2(c)4		DCV or Sensor Controls per 120.1(d)3, 120.1(d)5, and 120.1(e)3[6] 160.2(c)5D 160.2(c)5E 160.2(c)5D
	Occupancy Type[4]	Conditioned Floor Area (ft^2)	# of Shower heads/ toilets	# of people[5]	Required Min OA CFM	Required Min CFM	Provided per Design CFM	
FC-1	Break room	1095			547.5	0	0	DCV: Provided per §120.1(d)4
								Occ Sensor: NA: Not required space type
FC-2	Office space	1155			173.2	0	0	DCV: NA: Not required per §120.1(d)3
								Occ Sensor: NA: Not required space type

STATE OF CALIFORNIA
Mechanical Systems
CALIFORNIA ENERGY COMMISSION

CERTIFICATE OF COMPLIANCE		NRCC-MCH-E
Project Name: Mountain Transit Admin & Maintenance Facility	**Report Page:**	**(Page 14 of 19)**
	Date Prepared:	11/29/2023

J. VENTILATION AND INDOOR AIR QUALITY

FC-3	Office space	1515			227.2	0	0	DCV	NA: Not required per §120.1(d)3
								Occ Sensor	NA: Not required space type
FC-4	Office space	1755			263.2	0	0	DCV	NA: Not required per §120.1(d)3
								Occ Sensor	NA: Not required space type
FC-5	All others	1005			150.8	0	0	DCV	NA: Not required per §120.1(d)3
								Occ Sensor	NA: Not required space type
FC-6	Conference/ meeting	415			207.5	0	0	DCV	NA: Not required per §120.1(d)3
								Occ Sensor	NA: Not required space type
FC-7	Conference/ meeting	1810			905	0	0	DCV	NA: Not required per §120.1(d)3
								Occ Sensor	NA: Not required space type
FC-8	Main Entry Lobby	855			427.5	0	0	DCV	NA: Not required per §120.1(d)3
								Occ Sensor	NA: Not required space type
FC-9	Office space	445			66.8	0	0	DCV	NA: Not required per §120.1(d)3
								Occ Sensor	NA: Not required space type
17	Total System Required Min OA CFM				2969	18	Ventilation for this System Complies?		Yes

STATE OF CALIFORNIA
Mechanical Systems
CALIFORNIA ENERGY COMMISSION

CERTIFICATE OF COMPLIANCE		NRCC-MCH-E
Project Name: Mountain Transit Admin & Maintenance Facility	**Report Page:**	**(Page 15 of 19)**
	Date Prepared:	11/29/2023

J. VENTILATION AND INDOOR AIR QUALITY

04		05			06			07
System Name	IU/OU-1	System Design OA CFM Airflow[1]		0	System Design Transfer Air CFM		0	Air Filtration per 120.1(c) 141.0(b)2 and 160.2(c)21[2]
								Provided
08	09	10	11	12	13	14	15	16
Space Name or Item Tag	Mechanical Ventilation Required per 120.1(c)[3] & 160.2(c)3					Exh. Vent per 120.1(c)4 & 160.2(c)4		DCV or Sensor Controls per 120.1(d)3, 120.1(d)5, and 120.1(e)3[6] 160.2(c)5D 160.2(c)5E 160.2(c)5D
	Occupancy Type[4]	Conditioned Floor Area (ft^2)	# of Shower heads/ toilets	# of people[5]	Required Min OA CFM	Required Min CFM	Provided per Design CFM	
Data	All others	85			0	0	0	DCV: NA: Not required per §120.1(d)3
								Occ Sensor: NA: Not required space type
17	Total System Required Min OA CFM				0	18	Ventilation for this System Complies?		Yes

[1] FOOTNOTES: System CFM should include both mechanical and natural ventilation for the zone/system

[2] Air filtration requirements apply to the following three system types per 120.1(c)1A: space conditioning systems utilizing ducts to supply air to occupiable space; supply-only ventilation systems providing outside air to occupiable space; supply side of balanced ventilation systems including heat recovery and energy recovery ventilation systems providing outside air to occupiable space.

[3] Uniform Mechanical Code may have more stringent ventilation requirements; the most stringent code requirement takes precedence.

[4] See Standards Tables 120.1-A and 120.1-B.

[5] For lecture halls with fixed seating, the expected number of occupants shall be determined in accordance with the California Building Code.

[6] 120.2(e)3 requires systems serving rooms that are required by 130.1(c) to have lighting occupancy sensing controls to also have occupancy sensing zone controls for ventilation. Examples of spaces which require lighting occupancy sensors include offices 250ft^2 or smaller, multipurpose rooms less than 1,000 ft^2, classrooms, conference rooms, restrooms, aisles and open areas in warehouses, library book stack aisles, corridors, stairwells, parking garages, and loading and unloading zones, unless excepted by 130.1(c).

K. TERMINAL BOX CONTROLS

This section does not apply to this project.

STATE OF CALIFORNIA
Mechanical Systems
CALIFORNIA ENERGY COMMISSION

CERTIFICATE OF COMPLIANCE		NRCC-MCH-E
Project Name: Mountain Transit Admin & Maintenance Facility	**Report Page:**	**(Page 16 of 19)**
	Date Prepared:	11/29/2023

L. DISTRIBUTION (DUCTWORK and PIPING)

This table is used to show compliance with mandatory pipe insulation requirements found in 120.3 and mandatory requirements found in 120.4(g) for duct sealing.

01	☐	Insulation shall be protected from damage, including that due to sunlight, moisture, equipment maintenance, and wind. Insulation exposed to weather shall be installed with a cover suitable for outdoor service. Insulation covering chilled water piping and refrigerant suction piping located outside the conditioned space shall have a Class I or Class II vapor retarder. All penetrations and joints of which shall be sealed.

Duct Leakage Testing

The answers to the questions below apply to the following duct systems:		CU-1	**NR/ Common Use:** Duct leakage testing shall not exceed 6% per NA7.5.3 required for these systems?	No
			Dwelling Units: Total duct leakage of duct system shall not exceed 12% or duct system to outside shall not exceed 6% per RA3.1.4 required for systems?	No
			Duct leakage testing per CMC Section 603.10.1 required for these systems?	Yes

11	No	The scope of the project includes only duct systems serving healthcare facilities
12	No	Duct system provides conditioned air to an occupiable space for a constant volume, single zone, space-conditioning system.
13	No	The space conditioning system serves less than 5,000 ft^2 of conditioned floor area.
14	No	The combined surface area of the ducts is more than 25% of the total surface area of the entire duct system:
15		The scope of the project includes extending an existing duct system, which is constructed, insulated or sealed with asbestos.
16	No	The scope of the project includes an existing duct system that is documented to have been previously sealed as confirmed through field verification and diagnostic testing in accordance with procedures in the Reference Nonresidential Appendix NA2.
17		All Ductwork and plenums with pressure class ratings shall be constructed to Seal Class A
18		All ductwork is an extension of an existing duct system
19		Ductwork serving individual dwelling unit
20		< 25 ft of new or replacement space conditioning ducts installed
21	R-8	Duct Insulation R-value
22		
23		

STATE OF CALIFORNIA
Mechanical Systems
CALIFORNIA ENERGY COMMISSION

CERTIFICATE OF COMPLIANCE		NRCC-MCH-E
Project Name: Mountain Transit Admin & Maintenance Facility	**Report Page:**	**(Page 17 of 19)**
	Date Prepared:	11/29/2023

M. COOLING TOWERS

This section does not apply to this project.

N. DECLARATION OF REQUIRED CERTIFICATES OF INSTALLATION

Selections have been made based on information provided in previous tables of this document. If any selection needs to be changed, please explain why in Table E Additional Remarks. These documents must be provided to the building inspector during construction and can be found online at https://www.energy.ca.gov/title24/2019standards/2019_compliance_documents/Nonresidential_Documents/NRCI/

Form/Title
NRCI-MCH-01-E - Must be submitted for all buildings

O. DECLARATION OF REQUIRED CERTIFICATES OF ACCEPTANCE

Selections have been made based on information provided in previous tables of this document. If any selection needs to be changed, please explain why in Table E Additional Remarks. These documents must be provided to the building inspector during construction and can be found online at https://www.energy.ca.gov/title24/2019standards/2019_compliance_documents/Nonresidential_Documents/NRCA/

Form/Title	Systems/Spaces To Be Field Verified
NRCA-MCH-02-A - Outdoor Air must be submitted for all newly installed HVAC units. Note: MCH-02-A can be performed in conjunction with MCH-07-A Supply Fan VFD Acceptance (if applicable) since testing activities overlap.	MMY-AP4326FT; 1 ton;
NRCA-MCH-03-A - Constant Volume Single Zone HVAC NOTE: This form does not automatically move to "Yes'. If Constant Volume Single Zone HVAC Systems are included in the scope, permit applicant should move this form to "Yes".	1 ton;
NRCA-MCH-06-A Demand Control Ventilation Systems must be submitted for all systems required to employ demand controlled ventilation (refer to 120.1(c)3) can vary outside ventilation flow rates based on maintaining interior carbon dioxide (CO_2) concentration setpoints.	MMY-AP4326FT;
NRCA-MCH-11-A Automatic Demand Shed Controls	MMY-AP4326FT; 1 ton;
NRCA-MCH-18-A Energy Management Control Systems	MMY-AP4326FT;

P. DECLARATION OF REQUIRED CERTIFICATES OF VERIFICATION

There are no NRCV forms required for this project.

STATE OF CALIFORNIA
Mechanical Systems
CALIFORNIA ENERGY COMMISSION

CERTIFICATE OF COMPLIANCE		NRCC-MCH-E
Project Name: Mountain Transit Admin & Maintenance Facility	**Report Page:**	**(Page 18 of 19)**
	Date Prepared:	11/29/2023

Q. MANDATORY MEASURES DOCUMENTATION LOCATION

This table is used to indicate where mandatory measures are documented in the plan set or construction documentation.

01		02
Compliance with Mandatory Measures documented through MCH Mandatory Measures Note Block	Yes	Plan sheet or construction document location: M-Sheets

STATE OF CALIFORNIA
Mechanical Systems
CALIFORNIA ENERGY COMMISSION

CERTIFICATE OF COMPLIANCE		NRCC-MCH-E
Project Name: Mountain Transit Admin & Maintenance Facility	**Report Page:**	**(Page 19 of 19)**
Project Address: 160-170 Business Center Drive	**Date Prepared:**	11/29/2023

DOCUMENTATION AUTHOR'S DECLARATION STATEMENT

I certify that this Certificate of Compliance documentation is accurate and complete.

Documentation Author Name: Steven Johnson	Documentation Author Signature: Steven Johnson
Company: Design West Engineering	Signature Date: 2023-11-29
Address: 412 E. Vanderbilt Way	CEA / HERS Certification Identification (if applicable): 33209
City/State/Zip: San Bernardino CA 92408	Phone: 909.890.3700

RESPONSIBLE PERSON'S DECLARATION STATEMENT

I certify the following under penalty of perjury, under the laws of The State of California:

1. The information provided on this Certificate of Compliance is true and correct.
2. I am eligible under Division 3 of the Business and Professions Code to accept responsibility for the building design or system design identified on this Certificate of Compliance (responsible designer)
3. The energy features and performance specifications, materials, components, and manufactured devices for the building design or system design identified on this Certificate of Compliance conform to the requirements of Title 24, Part 1 and Part 6 of the California Code of Regulations.
4. The building design features or system design features identified on this Certificate of Compliance are consistent with the information provided on other applicable compliance documents, worksheets, calculations, plans and specifications submitted to the enforcement agency for approval with this building permit application.
5. I will ensure that a completed signed copy of this Certificate of Compliance shall be made available with the building permit(s) issued for the building, and made available to the enforcement agency for all applicable inspections. I understand that a completed signed copy of this Certificate of Compliance is required to be included with the documentation the builder provides to the building owner at occupancy.

Responsible Designer Name: Steven Johnson	Responsible Designer Signature: Steven Johnson
Company: Design West Engineering	Date Signed: 2023-11-29
Address: 412 E. Vanderbilt Way	License: M-33209
City/State/Zip: San Bernardino CA 92408	Phone: 909-890-3700

REGISTERED PROFESSIONAL ENGINEER — STEVEN M. JOHNSON — No. 33209 — MECHANICAL — SIGNED 04/18/2024 — STATE OF CALIFORNIA

LICENSED ARCHITECT — ROGER CLARKE — No. C-17536 — Exp. 10-31-25 — STATE OF CALIFORNIA

STAMPS

AGENCY APPROVAL
File No.: ########-#######

MECHANICAL ELECTRICAL AND ENERGY CONSULTANTS
DESIGN WEST ENGINEERING
412 E. Vanderbilt Way
San Bernardino, CA 92408
Tel: 909-890-3700
Fax: 909-890-3770
Email: cadd@designwesteng.com
CONSULTANT BRANDING

RUHNAU CLARKE ARCHITECTS

MOUNT TRANSIT ADMINISTRATION FACILITY: INCREMENT 3: 100% CONSTRUCTION DOCUMENTS

PRINTED: 4/18/2024 11:42:39 AM
PATH: R:\50\50801_MMTA_MTMF\22-066 Mountain Transit Maintenance Fac\2 Design\Revit\50801_M2-0.6.rvt

PROJECT No. :50801
4/18/2024 11:42:38 AM

DRAWN BY: CHECKED BY:

ISSUE No.:_____ DATE:_____ DESCRIPTION:_____
ISSUE No.:_____ DATE:_____ DESCRIPTION:_____
ISSUE No.:_____ DATE:_____ DESCRIPTION:_____
ISSUE No.:_____ DATE:_____ DESCRIPTION:_____
REVISION No.:_____ DATE:_____ DESCRIPTION:_____
REVISION No.:_____ DATE:_____ DESCRIPTION:_____
REVISION No.:_____ DATE:_____ DESCRIPTION:_____
REVISION No.:_____ DATE:_____ DESCRIPTION:_____

RUHNAUCLARKE.COM
3775 TENTH STREET, RIVERSIDE CALIFORNIA 92501 (951) 684 4664 / 5751 PALMER WAY, SUITE C, CARLSBAD CALIFORNIA 92010 (760) 438 5899

MOUNT TRANSIT ADMINISTRATION FACILITY
INCREMENT 3
170 BUSINESS CENTER DR. BIG BEAR LAKES, CA
BIG BEAR LAKES

ENERGY COMPLIANCE DOCUMENTS CONT.

M2-0.6

50801

EXHAUST AIR SCHEDULE

ROOM NUMBER	ROOM NAME	USAGE	ZONE AREA, A_z(SF)	CMC TABLE 403.7 R_p (CFM/SF)	EXHAUST REQUIRED (CFM)	EXHAUST PROVIDED (CFM)
210	LOCKER ROOM	OTHER LOCKER ROOM	455	0.25	115	130

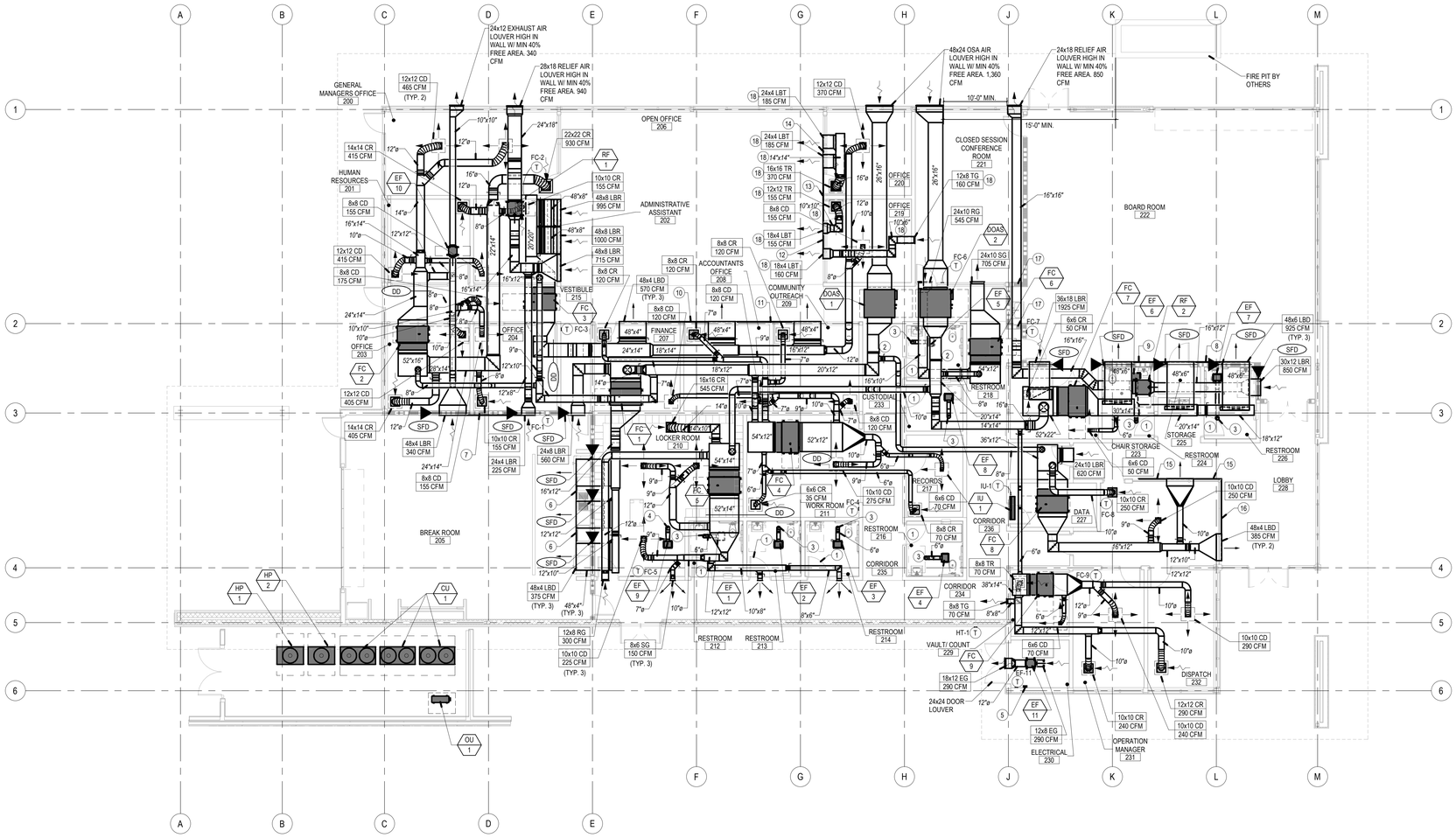

MECANICAL FLOOR PLAN - HVAC | SCALE: 1/8" = 1'-0" | 1

GENERAL NOTES

1. FOR LINE TYPES, SYMBOLS & ABBREVIATIONS SEE LEGEND ON SHEET M2-0.1.
2. FOR EQUIPMENT DETAIL REFERENCES, SEE EQUIPMENT SCHEDULE ON SHEET M2-0.2 & M2-0.3.
3. ONCE INSTALLATION IS COMPLETE, CONTRACTOR TO PROVIDE AS-BUILTS TO MEOR.
4. SPIN-IN OR TAP TYPE DUCT CONNECTIONS SHALL BE PROVIDED WITH AN EXTRACTOR.
5. T-STATS SHALL NOT BE MOUNTED IN DIRECT LINE OF ANY SUPPLY DIFFUSER OR NEAR ANY HEAT REJECTION EQUIPMENT.
6. DUCT DIMENSIONS ARE NET INSIDE CLEAR, ADD AN ADDITIONAL 3" MINIMUM FOR R-8 DUCT INSULATION AND AN ADDITIONAL 1.5" MINIMUM FOR R-4.2 DUCT INSULATION. SIZES MAY CHANGE PER MANUFACTURER.
7. DUCTWORK SHALL BE HARD DUCT. FLEX DUCT MAY BE USED ONLY AT SUPPLY & RETURN OUTLETS AT A MAX. LENGTH OF 5'-0".
8. ENVIRONMENTAL AIR DUCT EXHAUST SHALL TERMINATE NOT LESS THAN 3 FEET FROM A PROPERTY LINE. 10 FEET FROM A FORCED AIR INLET, 10 FEET ABOVE A PUBLIC WALKWAY, AND 3 FEET FROM OPENINGS INTO THE BUILDING. THE DISCHARGE OF ENVIRONMENTAL EXHAUST DUCTS SHALL NOT BE DIRECTED ONTO A PUBLIC WALKWAY. PER CMC SEC. 502.2.1.
9. DUCTWORK SHALL BE MOUNTED HIGH AND TIGHT TO ROOF STRUCTURE AS POSSIBLE.
10. PROVIDE 1" ACOUSTICAL LINING IN DUCTWORK WITHIN 10 FEET OF ALL AIR MOVING EQUIPMENT. PROVIDE DURO-DYNE FLEXIBLE CONNECTION AT DUCT TO EQUIPMENT LOCATIONS. WHERE DUCT LINER IS INDICATED ON PLAN, DUCT SIZES ARE NET INSIDE OF LINER DIMENSIONS.
11. ALL THERMOSTATS SHALL BE PROGRAMMED TO RUN IN FAN MODE DURING OCCUPIED HOURS AND SHALL COORDINATE HOURS WITH OWNER. COOLING/ HEATING MODE SHALL RUN AS NEED, PER TEMPERATURE SET POINT AND OCCUPANT LOAD.
12. COORDINATE DUCT RUNS WITH FIRE SPRINKLER CONTRACTOR.
13. RESTROOM DOORS SHALL HAVE A 1" UNDERCUT.
14. COORDINATE WITH GENERAL CONTRACTOR FOR BUILDING TO BE PURGED UPON COMPLETION AND PRIOR TO OCCUPANCY. FILTERS SHALL BE REPLACED BEFORE PURGE AND UPON COMPLETION OF PURGE CYCLE.
15. AT HARD LID CEILINGS, PROVIDE FOR "MAT" CABLE DRIVEN DAMPERS. MODEL RT-150. CABLE SHALL BE ROUTED BEHIND GRILLE OPENING AND INSTALLED PER MANUFACTURER'S REQUIREMENTS.
16. FOR DUCT SUPPORT, SEE DETAIL 2 & 3 / MD-1.1
17. FOR AIR DISTRIBUTION, SEE DETAIL 1 & 5 / MD-1.1
18. FOR THERMOSTAT MOUNTING, SEE DETAIL 4 / MD-1.1
19. FOR DUCT CONNECTION TO WALL LOUVER, SEE DETAIL 16 / MD-1.1
20. FOR DUCT DETECTOR MOUNTING, SEE DETAIL 13 / MD-1.1
21. FOR EXHAUST FAN MOUNTING, SEE DETAIL 14 / MD-1.1
22. FOR OUTDOOR UNIT MOUNTING, SEE DETAIL 10 / MD-1.1
23. FOR CU OR HP UNIT MOUNTING, SEE DETAIL 6 / MD-1.1
24. FOR INDOOR UNIT MOUNTING, SEE DETAIL 9 / MD-1.1
25. FOR FAN COIL MOUNTING, SEE DETAIL 7 / MD-1.1
26. FOR SMOKE FIRE DAMPER MOUNTING, SEE DETAIL 3 / MD-1.2 & 4 / MD-1.2

CONSTRUCTION NOTES

1. DOOR UNDERCUT
2. DUCT MOUNTED HEATER. SEE DOAS SCHEDULE
3. 6"ø EA DUCT UP THRU ROOF
4. 7"ø EA DUCT UP THRU ROOF
5. HEAT TRACE SYSTEM RELAY PANEL
6. 24" LONG x 4" TALL BLANKOFF SUPPLY BAR GRILLE
7. (1) 72" LONG & (1) 24" LONG x 4" TALL BLANKOFF RELIEF BAR GRILLE
8. 48" LONG x 6" TALL BLANKOFF SUPPLY BAR GRILLE
9. 60" LONG x 6" TALL BLANKOFF SUPPLY BAR GRILLE
10. (1) 72" LONG & (1) 36" LONG x 4" TALL BLANKOFF SUPPLY BAR GRILLE
11. (1) 72" LONG & (1) 30" LONG x 4" TALL BLANKOFF SUPPLY BAR GRILLE
12. 24" LONG x 4" TALL BLANKOFF TRANSFER BAR GRILLE
13. (1) 72" LONG & (1) 24" LONG x 4" TALL BLANKOFF TRANSFER BAR GRILLE
14. 6" LONG x 4" TALL BLANKOFF TRANSFER BAR GRILLE
15. 48" LONG x 4" TALL BLANKOFF SUPPLY BAR GRILLE
16. (1) 72" LONG & (1) 24" LONG x 4" TALL BLANKOFF SUPPLY BAR GRILLE
17. PROVIDE 26 GA. DUCT FOR DUCTWORK THAT IS PASSING THRU AND LOCATED WITHIN A RATED AREA AND THAT DOES NOT HAVE AIR DISTRIBUTION INTO THE RATED AREA. FIRE SEAL AROUND DUCT AT EACH PENETRATION THROUGH RATED WALLS. PER CBC SEC. 713 & 717.5.4
18. PROVIDE ACOUSTICAL LINING ON DUCTWORK.

STAMPS

REGISTERED PROFESSIONAL ENGINEER — No. 33209 — SIGNED 04/18/2024 — MECHANICAL — STATE OF CALIFORNIA

LICENSED ARCHITECT — ROGER CLARKE — Exp.10-31-25 — STATE OF CALIFORNIA

AGENCY APPROVAL
File No.: ########-########

MECHANICAL ELECTRICAL AND ENERGY CONSULTANTS
DESIGN WEST ENGINEERING
412 E. Vanderbilt Way
San Bernardino, CA 92408
Tel: 909-890-3700
Fax: 909-890-3770
Email: cadd@designwesteng.com
CONSULTANT BRANDING

RUHNAU CLARKE ARCHITECTS

MOUNT TRANSIT ADMINISTRATION FACILITY: INCREMENT 3: 100% CONSTRUCTION DOCUMENTS

PRINTED: 4/18/2024 11:42:42 AM
PATH: BIM 360://50801_MATA_HTM/22-066 Mountain Transit Maintenance Yard_C Central_22_M

PROJECT No. :50801
4/18/2024 11:42:42 AM

DRAWN BY: CHECKED BY:

ISSUE No.____ DATE____ DESCRIPTION____
REVISION No.____ DATE____ DESCRIPTION____

RUHNAUCLARKE.COM
3775 TENTH STREET, RIVERSIDE CALIFORNIA 92501 (951) 684 4664 / 5751 PALMER WAY, SUITE C, CARLSBAD CALIFORNIA 92010 (760) 438 5899

MOUNT TRANSIT ADMINISTRATION FACILITY
INCREMENT 3
170 BUSINESS CENTER DR. BIG BEAR LAKES, CA
BIG BEAR LAKES

MECHANICAL FLOOR PLAN - HVAC

M2-1.1

50801

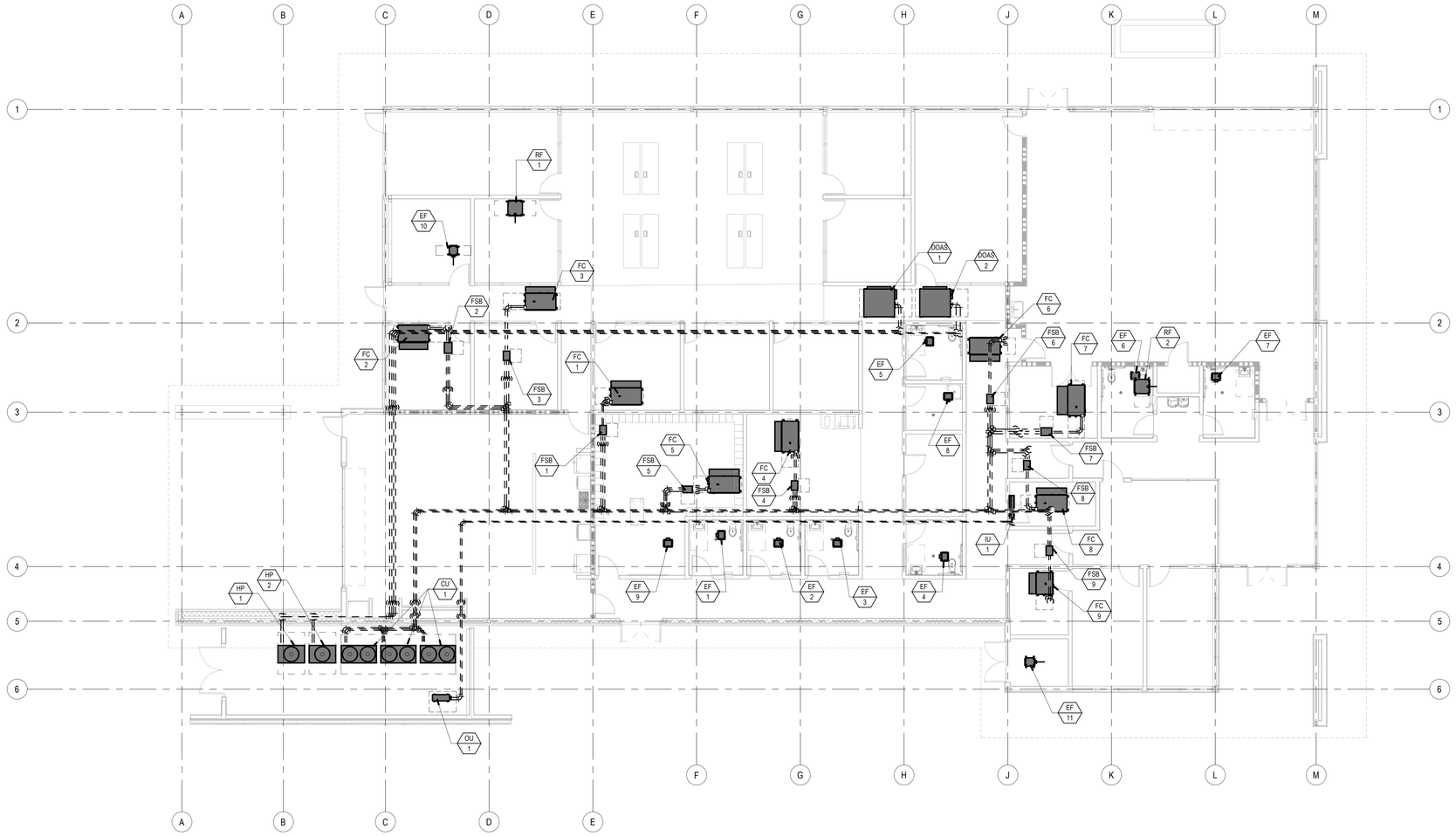

GENERAL NOTES

1. FOR LINE TYPES, SYMBOLS & ABBREVIATIONS SEE LEGEND ON SHEET M2-0.1.
2. FOR EQUIPMENT DETAIL REFERENCES, SEE EQUIPMENT SCHEDULE ON SHEET M2-0.2 & M2-0.3.
3. ONCE INSTALLATION IS COMPLETE, CONTRACTOR TO PROVIDE AS-BUILTS TO MEOR.
4. REFRIGERANT PIPE ROUTING AND FLOW SELECTOR BOX LOCATIONS ARE DIAGRAMMATIC AND SHOWN FOR REFERENCE ONLY. FAN COIL AND FLOW SELECTOR BOX CLEARANCES (SHOWN DASHED) ARE TO BE FULLY ACCESSIBLE THROUGH T-BAR CEILING (OR CEILING ACCESS PANEL) FREE OF OBSTRUCTIONS. THE TOTAL DEVELOPED LENGTH OF REFRIGERANT PIPING IS NOT TO EXCEED MANUFACTURER'S RECOMMENDATIONS. CONTRACTOR TO PROVIDE MEASURED TOTAL DEVELOPED LENGTH OF REFRIGERANT PIPING ON SHOP DRAWINGS. FINAL ROUTING AND LOCATION OF EQUIPMENT TO BE DETERMINED IN FIELD WITH THE APPROVAL OF THE MECHANICAL ENGINEER OF RECORD.
5. CONTRACTOR TO FOLLOW MANUFACTURER'S RECOMMENDED LONG LINE GUIDELINES AND INCLUDE ALL NECESSARY REFRIGERANT ACCESSORIES AS RECOMMENDED BY THE MANUFACTURE.
6. FOR REFRIGERANT PIPE SUPPORT, SEE DETAIL 11/MD-1.1
7. FOR REFRIGERANT PIPE SUPPORT ON GRADE, SEE DETAIL 15/MD-1.1
8. FOR REFRIGERANT PIPE SUPPORT ON WALL, SEE DETAIL 2/MD-1.2
9. FOR REFRIGERANT PIPE SIZES REFER TO PIPING DIAGRAM 1/M2-4.1, 1/M2-4.3, 1/M2-4.4
10. FOR INSULATED PIPE THRU RATED WALL, SEE DETAIL 5/MD-1.2

MECANICAL FLOOR PLAN - PIPING | SCALE: 1/8" = 1'-0" | 1

STAMPS

REGISTERED PROFESSIONAL ENGINEER — STEVEN M. JOHNSON — No. 33209 — SIGNED 04/18/2024 — MECHANICAL — STATE OF CALIFORNIA

LICENSED ARCHITECT — ROGER CLARKE — No. C-49136 — Exp.10-31-25 — STATE OF CALIFORNIA

AGENCY APPROVAL
File No.: ########-########

CONSULTANT BRANDING

MECHANICAL ELECTRICAL AND ENERGY CONSULTANTS

DESIGN WEST ENGINEERING

412 E. Vanderbilt Way
San Bernardino, CA 92408
Tel: 909-890-3700
Fax: 909-890-3770
Email: cadd@designwesteng.com

RUHNAU CLARKE ARCHITECTS

MOUNT TRANSIT ADMINISTRATION FACILITY: INCREMENT 3: 100% CONSTRUCTION DOCUMENTS

PRINTED: 4/18/2024 11:42:48 AM
PATH: BIM 360://50801_MATTA_HTMF\22-066 Mountain Transit Maintenance Fac_C-Central_R21.rvt

PROJECT No. :50801
4/18/2024 11:42:48 AM

DRAWN BY: CHECKED BY:

ISSUE No._____ DATE_____ DESCRIPTION_____
ISSUE No._____ DATE_____ DESCRIPTION_____
ISSUE No._____ DATE_____ DESCRIPTION_____
ISSUE No._____ DATE_____ DESCRIPTION_____

REVISION No._____ DATE_____ DESCRIPTION_____
REVISION No._____ DATE_____ DESCRIPTION_____
REVISION No._____ DATE_____ DESCRIPTION_____
REVISION No._____ DATE_____ DESCRIPTION_____

RUHNAUCLARKE.COM

3775 TENTH STREET, RIVERSIDE CALIFORNIA 92501 (951) 684 4664 / 5751 PALMER WAY, SUITE C, CARLSBAD CALIFORNIA 92010 (760) 438 5899

MOUNT TRANSIT ADMINISTRATION FACILITY
INCREMENT 3
170 BUSINESS CENTER DR. BIG BEAR LAKES, CA
BIG BEAR LAKES

MECHANICAL FLOOR PLAN - PIPING

M2-1.2

50801

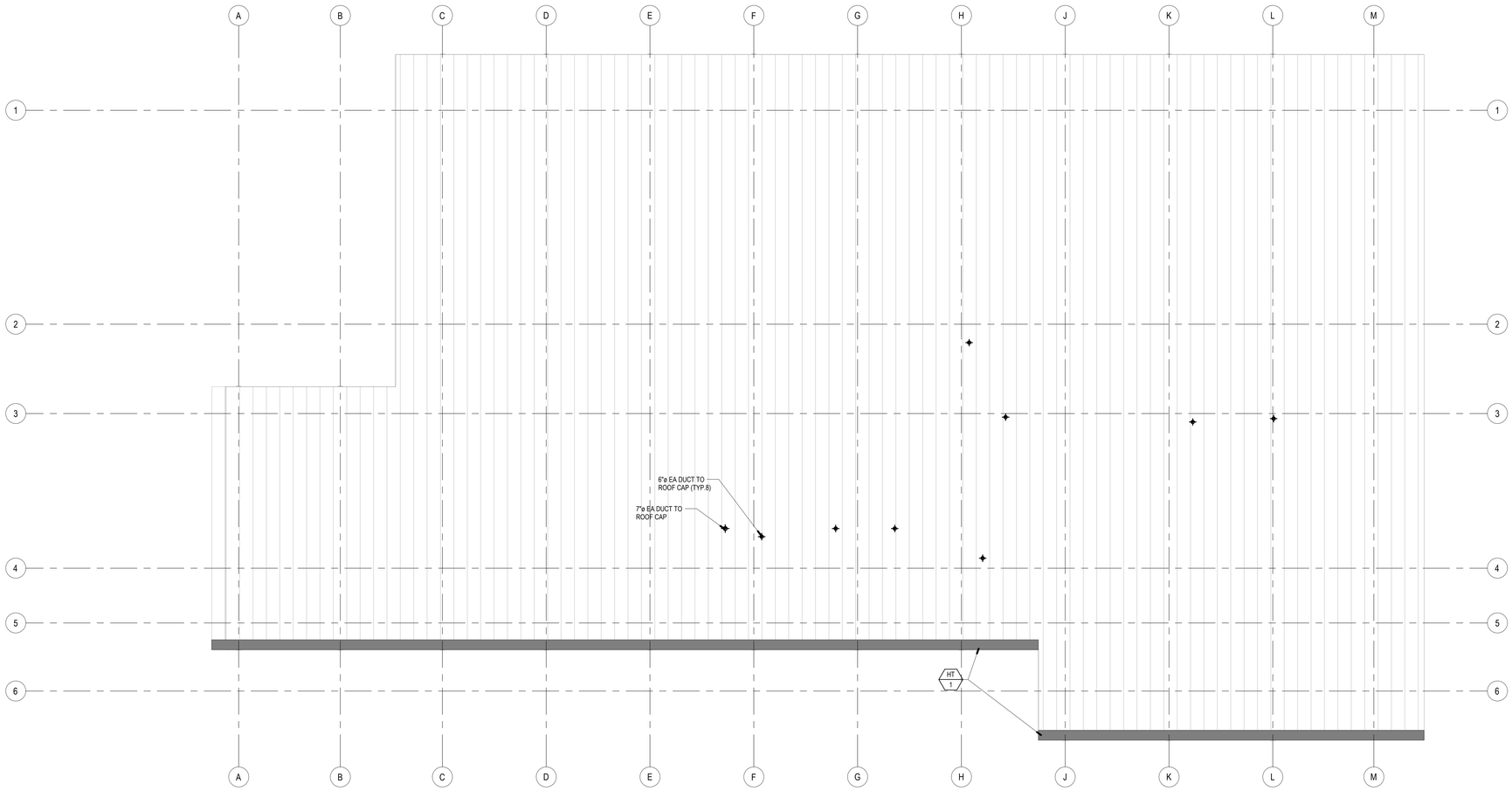

NORTH

MECHANICAL ROOF PLAN | SCALE: 1/8" = 1'-0" | 1

STAMPS

REGISTERED PROFESSIONAL ENGINEER — STEVEN M. JOHNSON — No. 33209 — MECHANICAL — STATE OF CALIFORNIA — SIGNED 04/18/2024

LICENSED ARCHITECT — ROGER CLARKE — No. C-49136 — Exp.10-31-25 — STATE OF CALIFORNIA

AGENCY APPROVAL
File No.: ########-########

MECHANICAL ELECTRICAL AND ENERGY CONSULTANTS

DESIGN WEST ENGINEERING

412 E. Vanderbilt Way
San Bernardino, CA 92408
Tel: 909-890-3700
Fax: 909-890-3770
Email: cadd@designwesteng.com

CONSULTANT BRANDING

RUHNAU CLARKE ARCHITECTS

GENERAL NOTES

1. FOR LINE TYPES, SYMBOLS & ABBREVIATIONS SEE LEGEND ON SHEET M2-0.1.
2. FOR EQUIPMENT DETAIL REFERENCES, SEE EQUIPMENT SCHEDULE ON SHEET M2-0.2 & M2-0.3.
3. ONCE INSTALLATION IS COMPLETE, CONTRACTOR TO PROVIDE AS-BUILTS TO MEOR.
4. VENTING SHALL HAVE MINIMUM 10' CLEARANCE FROM ANY FORCED AIR INLET WITH A MINIMUM 3' CLEARANCE ABOVE AND A MINIMUM OF 4' CLEARANCE FROM ANY PROPERTY LINE EXCEPT A PUBLIC WAY, PER SEC. 502.2.1
5. FOR EXHAUST DUCT THRU ROOF, SEE DETAIL 8/MD-1.1
6. FOR HEAT TRACE MOUNTING, SEE DETAIL 1/MD-1.2

MOUNT TRANSIT ADMINISTRATION FACILITY: INCREMENT 3: 100% CONSTRUCTION DOCUMENTS

PROJECT No. :50801
4/18/2024 11:42:50 AM

DRAWN BY: CHECKED BY:

ISSUE No._____ DATE_____ DESCRIPTION_____
REVISION No._____ DATE_____ DESCRIPTION_____

MOUNT TRANSIT ADMINISTRATION FACILITY
INCREMENT 3
170 BUSINESS CENTER DR. BIG BEAR LAKES, CA
BIG BEAR LAKES

MECHANICAL ROOF PLAN

M2-3.1

50801

PRINTED: 4/18/2024 11:42:50 AM
PATH: BIM 360://50801_MMTA_HTMP22-066 Mountain Transit Maintenance and Operations Facility_Z24/Central_Z24.rvt

Indoor Units:	9 / 1 to 64	
Capacity:	420 / 216 to 583.2 (97.2%)	
Total Pipe Length:	322.0 / 3281.0	feet
Furthest Actual:	158.0 / 591.0	feet
Furthest Equiv.:	164.9 / 656.0	feet
After 1st Branch Actual:	106.5 / 164.0	feet
After 1st Branch Equiv.:	109.9 / 164.0	feet
Max Height Between IDU/IDU:	11.0 / 49.0	feet
Max Height Between IDU/ODU (Above):	0.0 / 164.0	feet
Max Height Between IDU/ODU (Below):	11.0 / 98.0	feet

Correction Factors

System Capacity:	0.85	0.69
Temperature:	0.86	0.73
Piping Length:	0.99	1.00
Altitude:	1.00	1.00
Defrosting:	-	0.95
Diversity:	1.00	1.00
Additional Derates:	1.00	1.00

Additional Refrigerant:	82.42	lb
Total Refrigerant Amount:	155.32	lb
Min Allowable Room Volume(cuft):	5973.80	

Design Temperatures (°F)

Cooling:
Indoor DB 80.0 Humidity 51.8% Indoor WB 67.0
Outdoor DB 96.0

Heating:
Indoor DB 70.0
Outdoor DB 18.0 Humidity 75.0% Outdoor WB 16.5

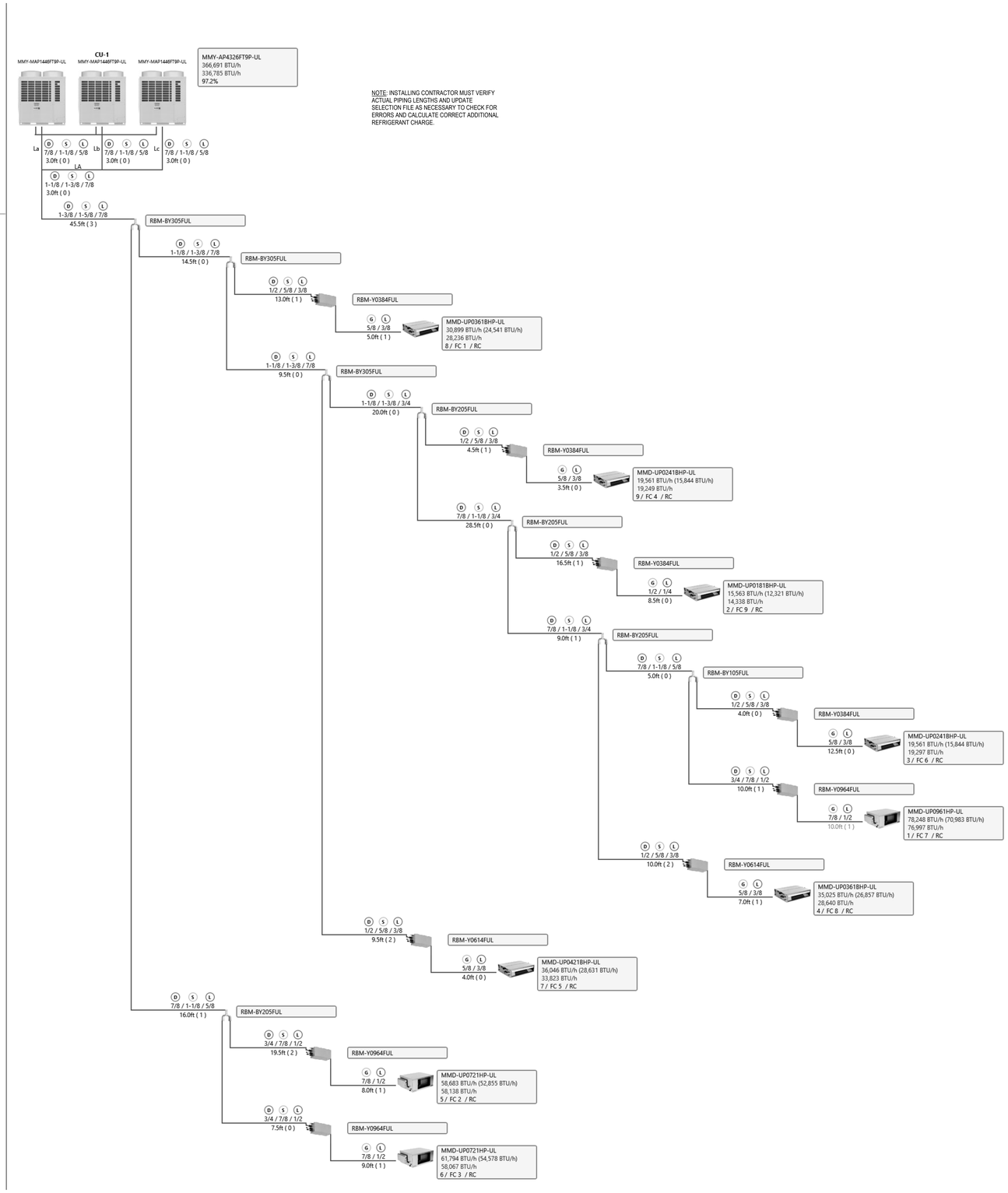

NOTE: INSTALLING CONTRACTOR MUST VERIFY ACTUAL PIPING LENGTHS AND UPDATE SELECTION FILE AS NECESSARY TO CHECK FOR ERRORS AND CALCULATE CORRECT ADDITIONAL REFRIGERANT CHARGE.

CU-1 PIPING DIAGRAM | NO SCALE | 1

REGISTERED PROFESSIONAL ENGINEER
No. 33209
SIGNED 04/18/2024
MECHANICAL
STATE OF CALIFORNIA

LICENSED ARCHITECT
ROGER CLARKE
No. C-49130
Exp.10-31-25
STATE OF CALIFORNIA

STAMPS

AGENCY APPROVAL
File No.: ########-########

MECHANICAL ELECTRICAL AND ENERGY CONSULTANTS
DESIGN WEST ENGINEERING
412 E. Vanderbilt Way
San Bernardino, CA 92408
Tel: 909-890-3700
Fax: 909-890-3770
Email: cadd@designwesteng.com
CONSULTANT BRANDING

RUHNAU CLARKE ARCHITECTS

MOUNT TRANSIT ADMINISTRATION FACILITY: INCREMENT 3: 100% CONSTRUCTION DOCUMENTS

PROJECT No. :50801
4/18/2024 11:42:51 AM

DRAWN BY: CHECKED BY:

ISSUE No.:_____	DATE:_____	DESCRIPTION:_____	REVISION No.:_____	DATE:_____	DESCRIPTION:_____
ISSUE No.:_____	DATE:_____	DESCRIPTION:_____	REVISION No.:_____	DATE:_____	DESCRIPTION:_____
ISSUE No.:_____	DATE:_____	DESCRIPTION:_____	REVISION No.:_____	DATE:_____	DESCRIPTION:_____
ISSUE No.:_____	DATE:_____	DESCRIPTION:_____	REVISION No.:_____	DATE:_____	DESCRIPTION:_____

MOUNT TRANSIT ADMINISTRATION FACILITY
INCREMENT 3
170 BUSINESS CENTER DR. BIG BEAR LAKES, CA
BIG BEAR LAKES

MECHANICAL PIPING & WIRING

M2-4.1

50801

PRINTED: 4/18/2024 11:42:51 AM
PATH: 2024 Jobs\50801_MATH_MTMP22-066 Mountain Transit Maintenance Facility - Expand_R24.rvt

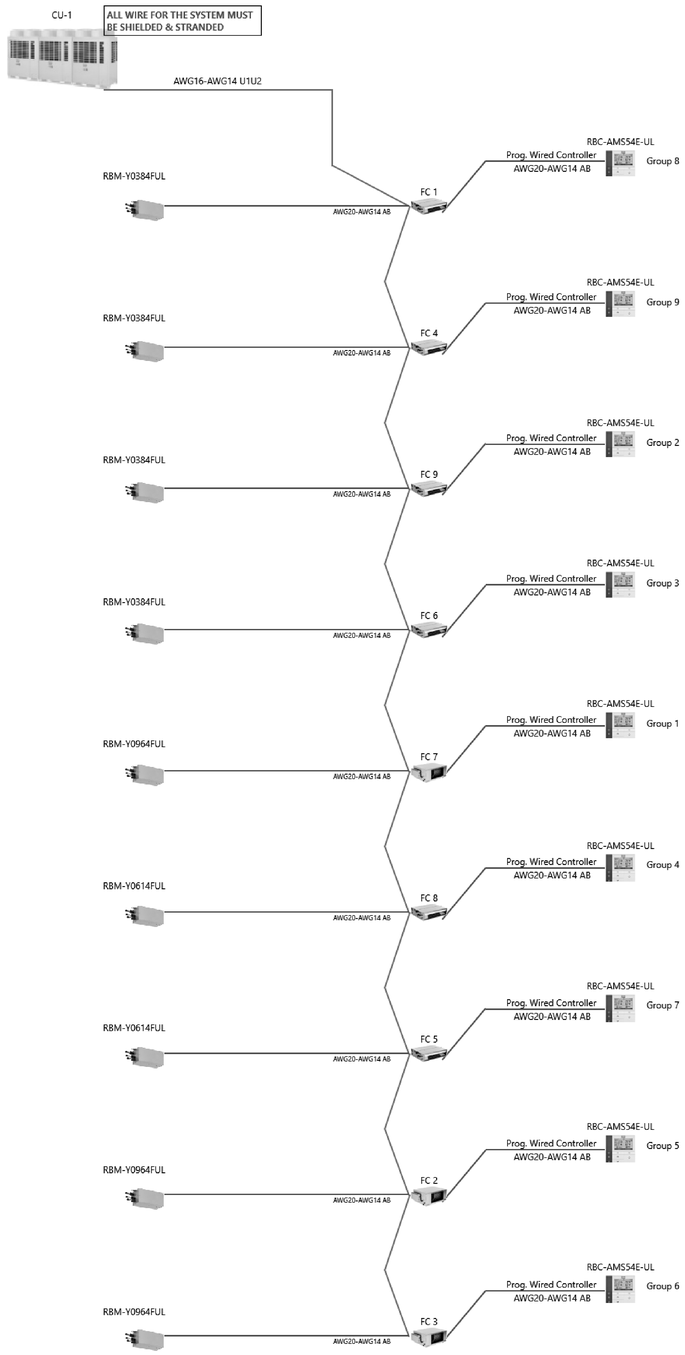

CU-1 WIRING DIAGRAM | NO SCALE | 1

STAMPS

REGISTERED PROFESSIONAL ENGINEER — STEVEN M. JOHNSON — No. 53209 — SIGNED 04/18/2024 — MECHANICAL — STATE OF CALIFORNIA

LICENSED ARCHITECT — ROGER CLARKE — No. C-41530 — Exp.10-31-25 — STATE OF CALIFORNIA

AGENCY APPROVAL
File No.: ########-########

MECHANICAL ELECTRICAL AND ENERGY CONSULTANTS

DESIGN WEST ENGINEERING
412 E. Vanderbilt Way
San Bernardino, CA 92408
Tel: 909-890-3700
Fax: 909-890-3770
Email: cadd@designwesteng.com

CONSULTANT BRANDING

RUHNAU CLARKE ARCHITECTS

MOUNT TRANSIT ADMINISTRATION FACILITY: INCREMENT 3: 100% CONSTRUCTION DOCUMENTS

PROJECT No. :50801
4/18/2024 11:42:51 AM

DRAWN BY: CHECKED BY:

ISSUE No.____ DATE_____ DESCRIPTION_____
ISSUE No.____ DATE_____ DESCRIPTION_____
ISSUE No.____ DATE_____ DESCRIPTION_____
ISSUE No.____ DATE_____ DESCRIPTION_____

REVISION No.____ DATE_____ DESCRIPTION_____
REVISION No.____ DATE_____ DESCRIPTION_____
REVISION No.____ DATE_____ DESCRIPTION_____
REVISION No.____ DATE_____ DESCRIPTION_____

RUHNAUCLARKE.COM
3775 TENTH STREET, RIVERSIDE CALIFORNIA 92501 (951) 684 4664 / 5751 PALMER WAY, SUITE C, CARLSBAD CALIFORNIA 92010 (760) 438 5899

MOUNT TRANSIT ADMINISTRATION FACILITY
INCREMENT 3
170 BUSINESS CENTER DR. BIG BEAR LAKES, CA
BIG BEAR LAKES

MECHANICAL PIPING & WIRING CONT.

M2-4.2

50801

PRINTED: 4/18/2024 11:42:51 AM
PATH: BIM 360://50801_MMTF3_HTMP22-066 Mountain Transit Maintenance and Operations Facility/Central Plant/50801_MMTF3_CENTRAL PLANT_R24.rvt

Indoor Units:		1 / 1 to 16	
Capacity:		96 / 48 to 96 (100.0%)	
Total Pipe Length:		165.0 / 984.0	feet
Furthest Actual:		165.0 / 328.0	feet
Furthest Equiv.:		173.0 / 394.0	feet
After 1st Branch Actual:		0.0 / 98.0	feet
After 1st Branch Equiv.:		0.0 / 98.0	feet
Max Height Between IDU/IDU:		0.0 / 2.0	feet
Max Height Between IDU/ODU (Above):		0.0 / 131.0	feet
Max Height Between IDU/ODU (Below):		10.0 / 10.0	feet

Correction Factors

System Capacity:	0.82	0.92
Temperature:	0.90	1.00
Piping Length:	0.91	0.98
Altitude:	1.00	1.00
Defrosting:	-	0.95
Diversity:	1.00	1.00
Additional Derates:	1.00	1.00

Additional Refrigerant:	16.27	lb
Total Refrigerant Amount:	41.67	lb
Min Allowable Room Volume(cuft):	1602.85	

Design Temperatures (°F)

Cooling:
Indoor DB 80.0 Humidity 51.8% Indoor WB 67.0
Outdoor DB 96.0

Heating:
Indoor DB 70.0
Outdoor DB 18.0 Humidity 75.0% Outdoor WB 16.5

Indoor Unit Cooling Range Error: This unit is only rated to %n, but derates are based upon minimum and maximum values.Indoor Unit Heating Range Error: [-] Pre-heater is required to be field-installed when outside air unit heating entering DB/WB air temp. is below 32.0°F.

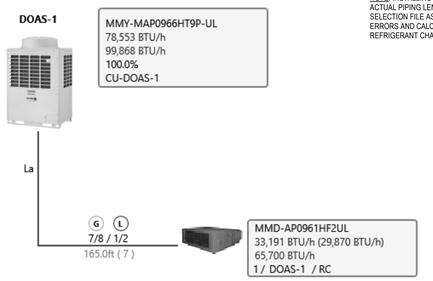

NOTE: INSTALLING CONTRACTOR MUST VERIFY ACTUAL PIPING LENGTHS AND UPDATE SELECTION FILE AS NECESSARY TO CHECK FOR ERRORS AND CALCULATE CORRECT ADDITIONAL REFRIGERANT CHARGE.

DOAS-1 PIPING DIAGRAM | NO SCALE | 1

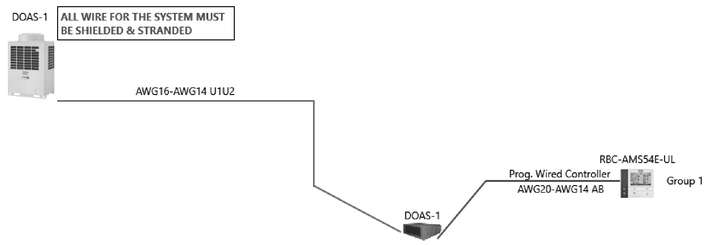

DOAS-1 WIRING DIAGRAM | NO SCALE | 2

STAMPS

AGENCY APPROVAL
File No.: ########-########

MECHANICAL ELECTRICAL AND ENERGY CONSULTANTS
DESIGN WEST ENGINEERING
412 E. Vanderbilt Way
San Bernardino, CA 92408
Tel: 909-890-3700
Fax: 909-890-3770
Email: cadd@designwesteng.com
CONSULTANT BRANDING

RUHNAU CLARKE ARCHITECTS

MOUNT TRANSIT ADMINISTRATION FACILITY: INCREMENT 3: 100% CONSTRUCTION DOCUMENTS

PRINTED: 4/18/2024 11:42:52 AM
PATH: BIM 360://50801_MATA_HTMF\22-066 Mountain Transit Maintenance Fac_central_22.rvt

PROJECT No. :50801
4/18/2024 11:42:52 AM

DRAWN BY: CHECKED BY:

ISSUE No._____ DATE_____ DESCRIPTION_____
ISSUE No._____ DATE_____ DESCRIPTION_____
ISSUE No._____ DATE_____ DESCRIPTION_____
ISSUE No._____ DATE_____ DESCRIPTION_____
REVISION No._____ DATE_____ DESCRIPTION_____
REVISION No._____ DATE_____ DESCRIPTION_____
REVISION No._____ DATE_____ DESCRIPTION_____
REVISION No._____ DATE_____ DESCRIPTION_____

RUHNAUCLARKE.COM
3775 TENTH STREET, RIVERSIDE CALIFORNIA 92501 (951) 684 4664 / 5751 PALMER WAY, SUITE C, CARLSBAD CALIFORNIA 92010 (760) 438 5899

MOUNT TRANSIT ADMINISTRATION FACILITY
INCREMENT 3
170 BUSINESS CENTER DR. BIG BEAR LAKES, CA
BIG BEAR LAKES

MECHANICAL PIPING & WIRING CONT.

M2-4.3

50801

Indoor Units:	1 / 1 to 16	
Capacity:	96 / 48 to 96 (100.0%)	
Total Pipe Length:	165.5 / 984.0	feet
Furthest Actual:	165.5 / 328.0	feet
Furthest Equiv.:	173.5 / 394.0	feet
After 1st Branch Actual:	0.0 / 98.0	feet
After 1st Branch Equiv.:	0.0 / 98.0	feet
Max Height Between IDU/IDU:	0.0 / 2.0	feet
Max Height Between IDU/ODU (Above):	0.0 / 131.0	feet
Max Height Between IDU/ODU (Below):	10.0 / 10.0	feet

Correction Factors

System Capacity:	0.82	0.92
Temperature:	0.90	1.00
Piping Length:	0.91	0.98
Altitude:	1.00	1.00
Defrosting:	-	0.95
Diversity:	1.00	1.00
Additional Derates:	1.00	1.00

Additional Refrigerant:	16.32	lb
Total Refrigerant Amount:	41.72	lb
Min Allowable Room Volume(cuft):	1604.49	

Design Temperatures (°F)

Cooling:
Indoor DB 80.0 Humidity 51.8% Indoor WB 67.0
Outdoor DB 96.0

Heating:
Indoor DB 70.0
Outdoor DB 18.0 Humidity 75.0% Outdoor WB 16.5

⚠ Indoor Unit Cooling Range Error: This unit is only rated to %n, but derates are based upon minimum and maximum values.Indoor Unit Heating Range Error: [-] Pre-heater is required to be field-installed when outside air unit heating entering DB/WB air temp. is below 32.0°F.

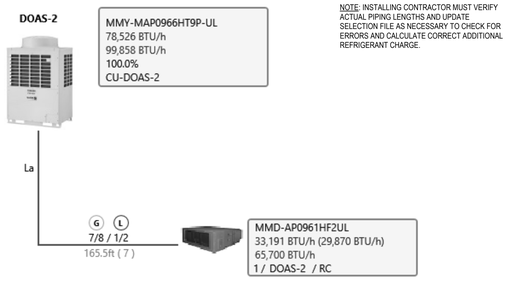

NOTE: INSTALLING CONTRACTOR MUST VERIFY ACTUAL PIPING LENGTHS AND UPDATE SELECTION FILE AS NECESSARY TO CHECK FOR ERRORS AND CALCULATE CORRECT ADDITIONAL REFRIGERANT CHARGE.

DOAS-2 PIPING DIAGRAM | NO SCALE | 1

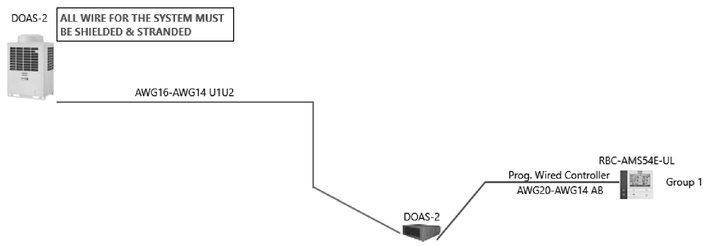

DOAS-2 WIRING DIAGRAM | NO SCALE | 2

STAMPS

AGENCY APPROVAL
File No.: ########-#######

MECHANICAL ELECTRICAL AND ENERGY CONSULTANTS
DESIGN WEST ENGINEERING
412 E. Vanderbilt Way
San Bernardino, CA 92408
Tel: 909-890-3700
Fax: 909-890-3770
Email: cadd@designwesteng.com
CONSULTANT BRANDING

RUHNAU CLARKE ARCHITECTS

MOUNT TRANSIT ADMINISTRATION FACILITY: INCREMENT 3: 100% CONSTRUCTION DOCUMENTS

PRINTED: 4/18/2024 11:42:52 AM
PATH: BIM 360://50801_MATA_MTMF\22-066 Mountain Transit Maintenance Fac_central_22.rvt

PROJECT No. :50801
4/18/2024 11:42:52 AM

DRAWN BY: CHECKED BY:

ISSUE No._____ DATE_____ DESCRIPTION_____
ISSUE No._____ DATE_____ DESCRIPTION_____
ISSUE No._____ DATE_____ DESCRIPTION_____
ISSUE No._____ DATE_____ DESCRIPTION_____

REVISION No._____ DATE_____ DESCRIPTION_____
REVISION No._____ DATE_____ DESCRIPTION_____
REVISION No._____ DATE_____ DESCRIPTION_____
REVISION No._____ DATE_____ DESCRIPTION_____

MOUNT TRANSIT ADMINISTRATION FACILITY
INCREMENT 3
170 BUSINESS CENTER DR. BIG BEAR LAKES, CA
BIG BEAR LAKES

MECHANICAL PIPING & WIRING CONT.

M2-4.4

50801

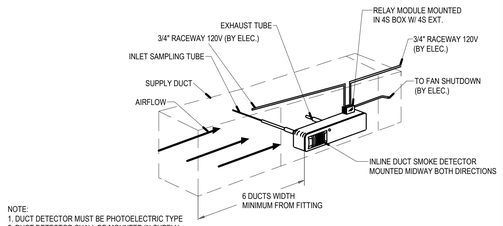

NOTE:
1. DUCT DETECTOR MUST BE PHOTOELECTRIC TYPE
2. DUCT DETECTOR SHALL BE MOUNTED IN SUPPLY DUCT PRIOR TO ANY TRANSITION OR TURNS
3. DUCT DETECTOR IS SYSTEM SENSOR INNOVAIR D4120 AIR VELOCITY 100 TO 4000 FPS CSFM LISTING # 3242-1653:207
4. WHERE DUCT SMOKE DETECTORS ARE NOT RE-SETTABLE FROM THE PROTECTED FIRE ALARM SYSTEM, A LISTED ALARM/SUPERVISORY INDICATOR WITH IN INTEGRAL RESET SWITCH SHALL BE PROVIDED IN AN ACCESSIBLE LOCATION

DUCT DETECTOR MOUNTING 13

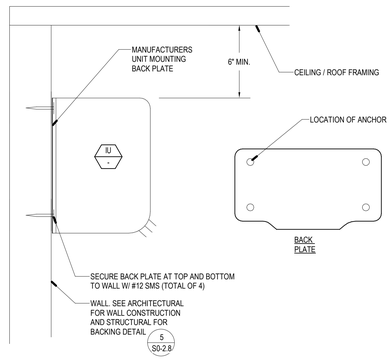

INDOOR UNIT MOUNTING 9

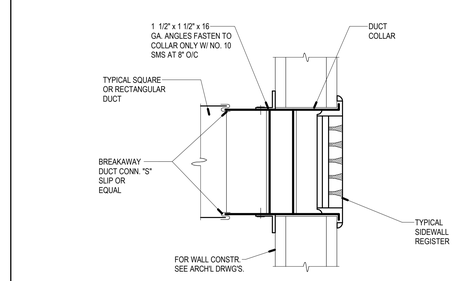

AIR DISTRIBUTION - SIDEWALL 5

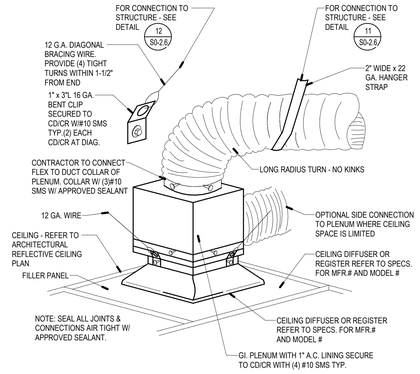

AIR DISTRIBUTION 1

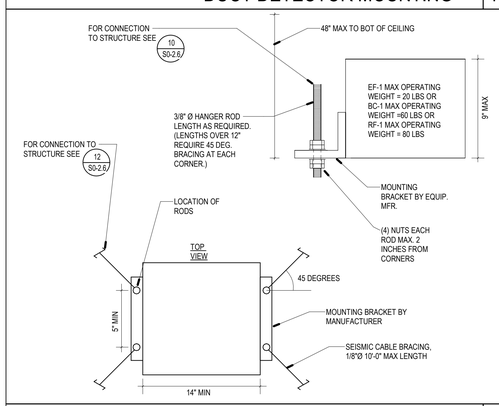

CEILING/INLINE EXH. FAN & FSB MOUNTING 14

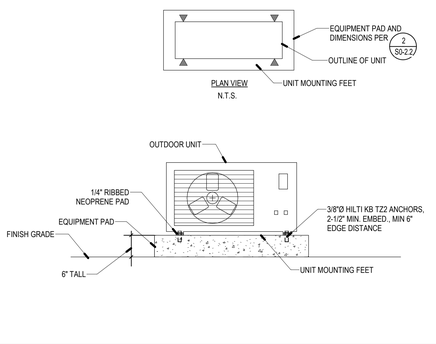

OUTDOOR UNIT MOUNTING 10

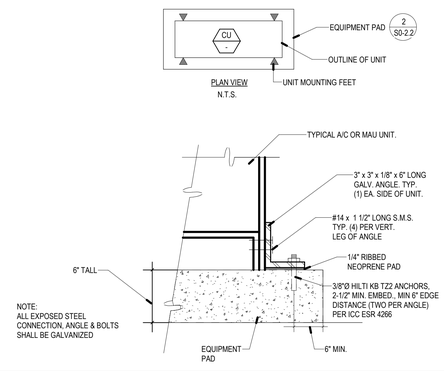

CU/HP UNIT MOUNTING 6

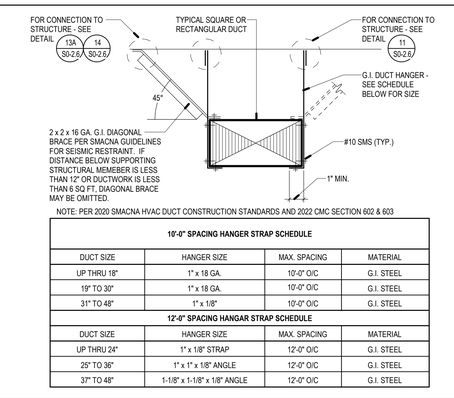

NOTE: PER 2020 SMACNA HVAC DUCT CONSTRUCTION STANDARDS AND 2022 CMC SECTION 602 & 603

10"-0" SPACING HANGER STRAP SCHEDULE			
DUCT SIZE	HANGER SIZE	MAX. SPACING	MATERIAL
UP THRU 18"	1" x 18 GA.	10'-0" O/C	G.I. STEEL
19" TO 30"	1" x 18 GA.	10'-0" O/C	G.I. STEEL
31" TO 48"	1" x 1/8"	10'-0" O/C	G.I. STEEL
12'-0" SPACING HANGAR STRAP SCHEDULE			
DUCT SIZE	HANGER SIZE	MAX. SPACING	MATERIAL
UP THRU 24"	1" x 1/8" STRAP	12'-0" O/C	G.I. STEEL
25" TO 36"	1" x 1" x 1/8" ANGLE	12'-0" O/C	G.I. STEEL
37" TO 48"	1-1/8" x 1-1/8" x 1/8" ANGLE	12'-0" O/C	G.I. STEEL

DUCT SUPPORT 2

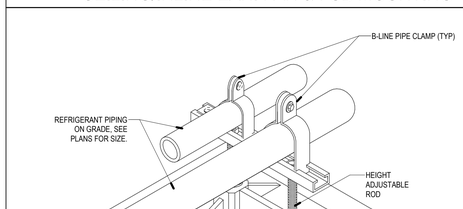

NOTE:
MAX SPACING - 6'-0" AS REQUIRED

PIPE SUPPORT ON GRADE 15

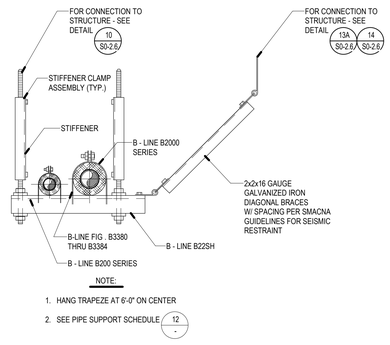

NOTE:
1. HANG TRAPEZE AT 6'-0" ON CENTER
2. SEE PIPE SUPPORT SCHEDULE 12 -

REFRIGERANT PIPE SUPPORT 11

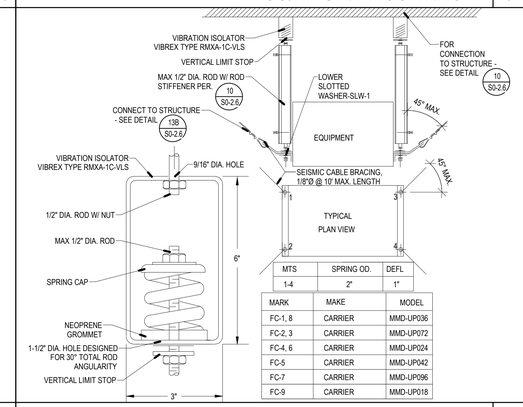

MTS	SPRING OD.	DEFL
1-4	2"	1"

MARK	MAKE	MODEL
FC-1, 8	CARRIER	MMD-UP036
FC-2, 3	CARRIER	MMD-UP072
FC-4, 6	CARRIER	MMD-UP024
FC-5	CARRIER	MMD-UP042
FC-7	CARRIER	MMD-UP096
FC-9	CARRIER	MMD-UP018

FAN COIL MOUNTING 7

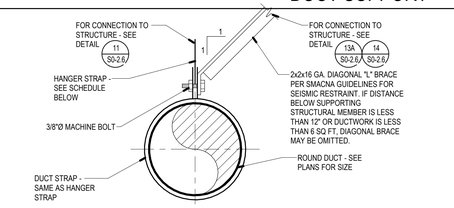

NOTE: PER 2020 SMACNA HVAC DUCT CONSTRUCTION STANDARDS AND 2022 CMC SECTION 602 & 603

10"-0" SPACING HANGER STRAP SCHEDULE			
DUCT SIZE	HANGER SIZE	MAX. SPACING	MATERIAL
UP THRU 10"	1" x 22 GA.	10'-0" O/C	G.I. STEEL
11" TO 20"	1" x 22 GA.	10'-0" O/C	G.I. STEEL
21" TO 40"	1" x 20 GA.	10'-0" O/C	G.I. STEEL
12'-0" SPACING HANGER STRAP SCHEDULE			
DUCT SIZE	HANGER SIZE	MAX. SPACING	MATERIAL
UP THRU 10"	2" x 18 GA.	12'-0" O/C	G.I. STEEL
11" TO 20"	2" x 16 GA.	12'-0" O/C	G.I. STEEL
21" TO 40"	1/8" STEEL x 1-1/2"	12'-0" O/C	G.I. STEEL

DUCT SUPPORT 3

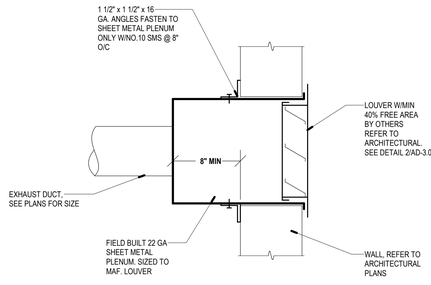

DUCT CONNECTION TO WALL LOUVER 16

PIPE SIZE IN INCHES	MAXIMUM SPAN BETWEEN SUPPORT HANGERS O.C. STEEL	MAXIMUM SPAN BETWEEN SUPPORT HANGERS O.C. COPPER	HANGER ROD DIAMETER SIZE	MAX. ROD LENGTH, NO STIFFNER	MAX. ROD LENGTH, WITH STIFFNER	LONGITUDINAL ANGLE BRACE (2)	VERTICAL HANGER ANGLE (STIFFENER) (1)	TRANSVERSE ANGLE BRACE (2)	BOLT SIZE
REFRIGERANT PIPE									
1/2 & 3/4	6'-0"	5'-0"	3/8"	16"	68"	1-1/2 x 1-1/2 x 18 GA @ 80'-0" O.C.	1 x 1 x 18GA	1-1/2 x 1-1/2 x 18 GA @ 40'-0" O.C.	1/4"
1 THRU 1-1/2	6'-0"	10'-0"	3/8"	16"	68"	1-1/2 x 1-1/2 x 18 GA @ 80'-0" O.C.	1 x 1x 18GA	1-1/2 x 1-1/2 x 18 GA @ 40'-0" O.C.	1/4"
2	10'-0"	10'-0"	3/8"	16"	68"	1-1/2 x 1-1/2 x 18 GA @ 80'-0" O.C.	1 x 1 x 18GA	1-1/2 x 1-1/2 x 18 GA @ 40'-0" O.C.	1/4"

NOTES
1. VERTICAL ANGLE ONLY REQUIRED WHEN ROD MAXIMUM LENGTH IS EXCEEDED.
2. BRACING MAY BE OMITTED WHERE TOP OF PIPE IS 12" OR LESS FROM BOTTOM OF HANGER SUPPORT CONNECTED TO STRUCTURE

DX PIPE SUPPORT SCHEDULE 12

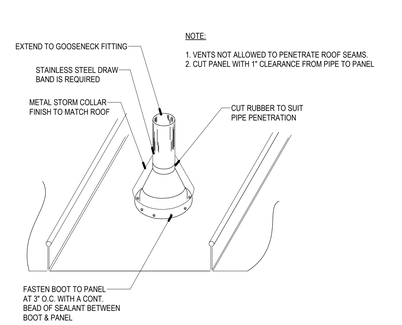

NOTE:
1. VENTS NOT ALLOWED TO PENETRATE ROOF SEAMS.
2. CUT PANEL WITH 1" CLEARANCE FROM PIPE TO PANEL

EXHAUST DUCT THRU ROOF 8

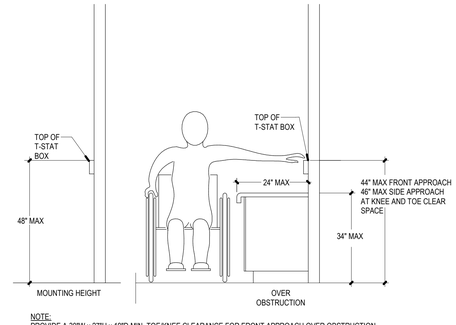

NOTE:
PROVIDE A 30"W x 27"H x 19"D MIN. TOE/KNEE CLEARANCE FOR FRONT APPROACH OVER OBSTRUCTION

THERMOSTAT MOUNTING 4

REGISTERED PROFESSIONAL ENGINEER — STEVEN M. JOHNSON — No. 33209 — SIGNED 04/18/2024 — MECHANICAL — STATE OF CALIFORNIA

LICENSED ARCHITECT — STEVEN M. JOHNSON — No. C-31120 — Exp.10-31-25 — STATE OF CALIFORNIA

STAMPS

AGENCY APPROVAL
File No.: ########-########

MECHANICAL ELECTRICAL AND ENERGY CONSULTANTS
DESIGN WEST ENGINEERING
412 E. Vanderbilt Way
San Bernardino, CA 92408
Tel: 909-890-3700
Fax: 909-890-3770
Email: cadd@designwesteng.com
CONSULTANT BRANDING

RUHNAU CLARKE ARCHITECTS

MOUNT TRANSIT ADMINISTRATION FACILITY: INCREMENT 3: 100% CONSTRUCTION DOCUMENTS

PRINTED: 4/18/2024 11:42:54 AM
PATH: BIM 360://50801_MATA_HTNFC22-066 Mountain Transit Maintenance Facility_Increment 3_CENTRAL.rvt

PROJECT No. :50801
4/18/2024 11:42:54 AM

DRAWN BY: CHECKED BY:

ISSUE No.	DATE	DESCRIPTION
ISSUE No.	DATE	DESCRIPTION
ISSUE No.	DATE	DESCRIPTION
ISSUE No.	DATE	DESCRIPTION

REVISION No.	DATE	DESCRIPTION
REVISION No.	DATE	DESCRIPTION
REVISION No.	DATE	DESCRIPTION
REVISION No.	DATE	DESCRIPTION

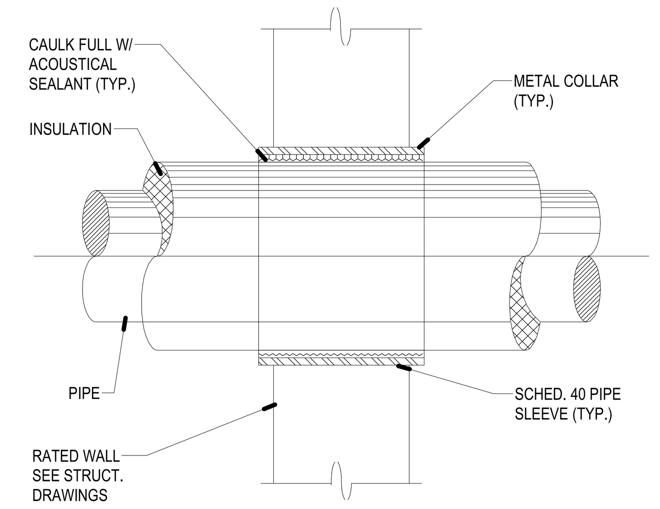

NOTE:

ALL PENETRATIONS THROUGH FIRE RATED WALL, CEILINGS, & FLOORS SHALL BE SLEEVED WITH A NON-COMBUSTABLE METAL SLEEVE. ALL SUCH PENETRATIONS SHALL BE FIRE STOPED. 3M FIRE BARRIER CAULK C 25N/S WITH A MINIMUM 1/2" DEPTH FOR A RATING OF 3 HOURS. THE FIRE STOP MATERIAL SHALL MEET ASTM, UL, & FACTORY MUTUAL SYSTEM APPROVAL, ALONG WITH CALIFORNIA STATE FIRE MARSHALL (APPROVAL #4485941:100), THE CITY OF LOS ANGELES (APPROVAL #PR24463 & I.C.B.O., N.E.R., #243).

INSULATED PIPE THRU RATED WALL | 5

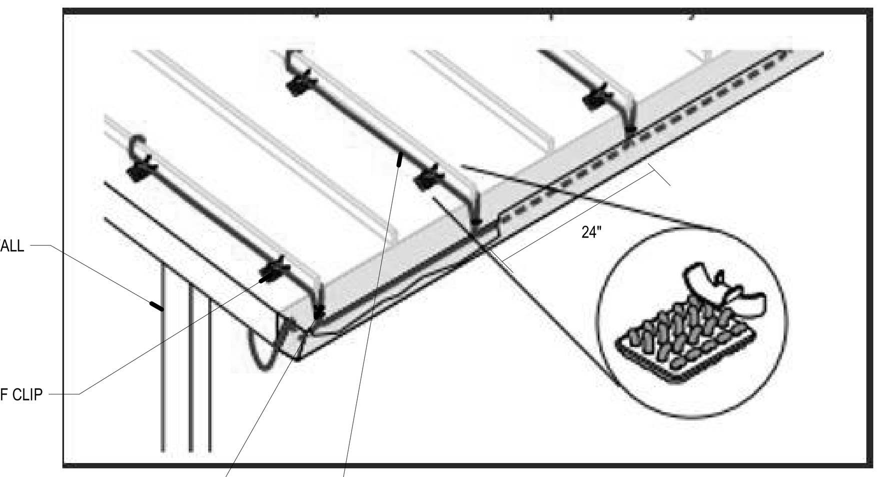

HEAT TRACE MOUNTING | 1

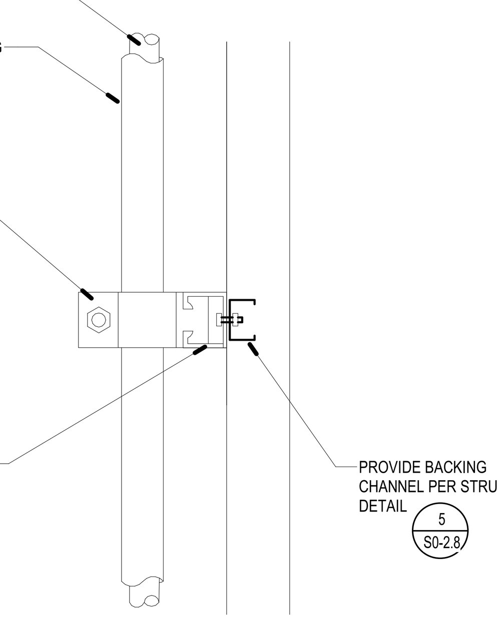

PIPE SUPPORT ON WALL | 2

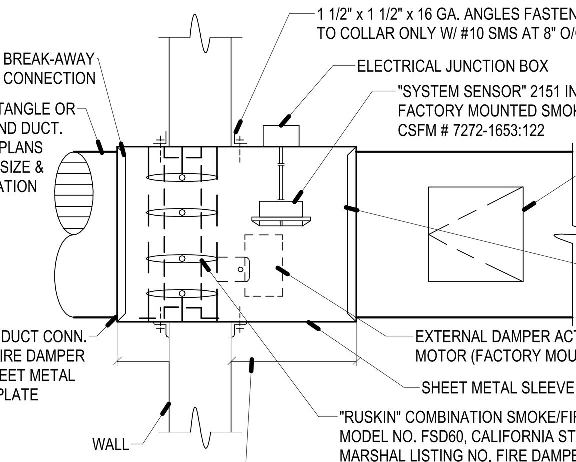

SFM NOTES:

1. FIRE DAMPER DETAIL FOR REFERENCE ONLY.
2. FIRE DAMPER SHALL BE STATE FIRE MARSHAL APPROVED AND INSTALLED STRICTLY PER MANUFACTURER'S PRINTED INSTRUCTIONS.
3. MANUFACTURER'S INSTALLATION INSTRUCTIONS SHALL BE MADE AVAILABLE TO THE INSPECTION AUTHORITIES.
4. SUBMIT SHOP DRAWINGS FOR APPROVAL PRIOR TO INSTALLATION.
5. FIRE DAMPER SHALL CONFORM TO CBC CHAPTER 7
6. FIRE DAMPER SHALL CONFORM TO NFPA 90A
7. DUCT DETECTOR SHALL BE INSTALLED WITHIN 5 FEET OF THE DAMPER WITH NO AIR OUTLETS OR INLETS BETWEEN THE DETECTOR AND THE DAMPER.
8. SMOKE/FIRE DAMPER SHALL BE INSTALLED PER THE REQUIREMENTS OF SMACNA'S FIRE SMOKE AND RADIATION DAMPER INSTALLATION GUIDE FOR HVAC SYSTEMS.

SMOKE FIRE DAMPER MOUNTING AT RATED WALL | 3

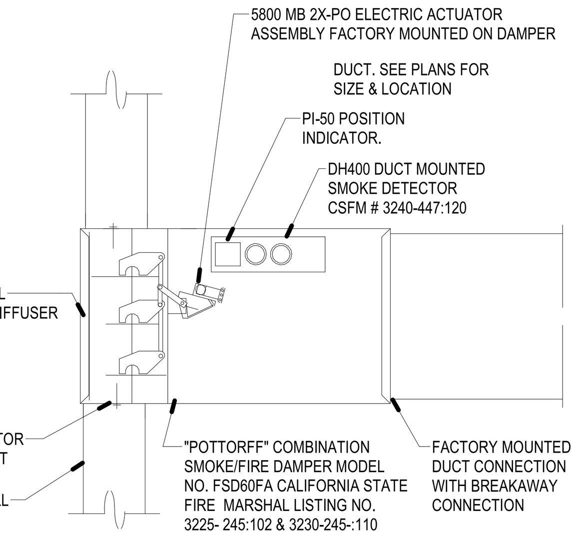

SFM NOTES:

1. FIRE DAMPER DETAIL FOR REFERENCE ONLY.
2. FIRE DAMPER SHALL BE STATE FIRE MARSHAL APPROVED AND INSTALLED STRICTLY PER MANUFACTURER'S PRINTED INSTRUCTIONS.
3. MANUFACTURER'S INSTALLATION INSTRUCTIONS SHALL BE MADE AVAILABLE TO THE INSPECTION AUTHORITIES.
4. SUBMIT SHOP DRAWINGS FOR APPROVAL PRIOR TO INSTALLATION. 5. FIRE DAMPER SHALL CONFORM TO UBC 43-7 6. FIRE DAMPER SHALL CONFORM TO NFPA 90A

SMOKE FIRE DAMPER MOUNTING - SIDE GRILLE | 4

STAMPS

AGENCY APPROVAL

MECHANICAL ELECTRICAL AND ENERGY CONSULTANTS

DESIGN WEST ENGINEERING
412 E. Vanderbilt Way
San Bernardino, CA 92408
Tel: 909-890-3700
Fax: 909-890-3770
Email: cadd@designwesteng.com

CONSULTANT BRANDING

RUHNAU CLARKE ARCHITECTS

MOUNT TRANSIT ADMINISTRATION FACILITY: INCREMENT 3: 100% CONSTRUCTION DOCUMENTS

PRINTED :4/18/2024 11:42:54 AM
PATH: BIM 360://50801_MARTA_MTMF/22-066 Mountain Transit Maintenance Inc_3_MEP_Central_R21.rvt

PROJECT No. :50801
4/18/2024 11:42:54 AM

DRAWN BY: CHECKED BY:
ISSUE No.__ DATE__ DESCRIPTION__ REVISION No.__ DATE__ DESCRIPTION__

RUHNAUCLARKE.COM
3775 TENTH STREET, RIVERSIDE CALIFORNIA 92501 (951) 684 4664 / 5751 PALMER WAY, SUITE C, CARLSBAD CALIFORNIA 92010 (760) 438 5899

MOUNT TRANSIT ADMINISTRATION FACILITY
INCREMENT 3
170 BUSINESS CENTER DR. BIG BEAR LAKES, CA
BIG BEAR LAKES

MECHANICAL DETAILS CONT.

MD-1.2

50801

PLUMBING FIXTURE SCHEDULE

TAG	SPECIFICATION	CONNECTION SIZE: WASTE	TRAP	VENT	CW	HW	ELEC.
FD 1	FLOOR DRAIN: JOSAM 30002-5A FLOOR DRAIN W/LOC CAST IRON BODY W/CLAMP RING, FLANGE, ADJUSTABLE NIKALOY STRAINER, POLISHED BRONZE GRATE. PROVIDED WITH TRAP PRIMER CONNECTION FOR TP-1	2"	2"	1-1/2"	-	-	-
HB 1	HOSE BIBB: WOODFORD 65-4 RECESSED ANTI-SIPHON FREEZELESS WALL HYDRANT, CHROME FINISH WITH VACUUM BREAKER, METAL WHEEL HANDLE AND LOOSE TEE KEY OPERATED CONTROL VALVE.	-	-	-	3/4"	-	-
JS 1	SERVICE/JAN. SINK: KOHLER "WHITBY" K6710 WHITE ENAMEL CAST IRON FLOOR-MOUNTED CORNER BASIN MOP SINK W/ K-8940 SINK RIM GUARD. CHICAGO 897-CP WALL MOUNTED 8" BODY, SERVICE SINK FAUCET W/ VACUUM BREAKER, HOSE THREADED OUTLET, PAIL HOOK, INTEGRAL STOPS & WALL BRACE.	3"	3"	1-1/2"	1/2"	1/2"	-
L 1	LAVATORY: KOHLER "KINGSTON" K-2005, WHITE VITREOUS CHINA, WALL HUNG LAVATORY W/ FAUCET HOLE ON CENTER. SLOAN 3362133 DECK MOUNTED SINGLE HOLE E-TRONIC TRADITIONAL SINK FAUCET HARD WIRED DUAL BEAM INFRARED SENSOR, W/ 0.5 GPM AERATOR, THERMOSTATIC MIXING VALVE. PROVIDE ASSE 1070 OR CSA B125.3 (CPC 407.3) APPROVED TMV SET TO 110°. GRID STRAINER DRAIN W/ 1-1/2" CAST BRASS P-TRAP WITH CHROME FINISH, ANGLE STOPS W/ RIGID RISER. PROVIDE JOSAM 17000 SERIES WALL CARRIER. ON ADA COMPLIANT PROVIDE TRUEBRO LAV GUARD PER ADA CODE 4.19.4	2"	1-1/2"	1-1/2"	1/2"	1/2"	120V
S 1	BREAKROOM SINK: ELKAY ECTRUAD301755, 31-1/2" X 18-1/2" X 5-1/2", STAINLESS STEEL SINGLE BOWL SINK, 18 GAUGE, UNDERMOUNTED SINK. ELKAY EBG2815 STAINLESS STEEL UTILITY RACK. CHICAGO 434-ABCP GOOSENECK PULL DOWN FAUCET, DECK MOUNTED SINGLE HOLE, SINGLE LEVER W/ 1.5 GPM AERATOR, PROVIDE ASSE 1070 APPROVED TMV SET TO 110°. CHROME BASKET STRAINERS W/ 1-1/2" CAST BRASS L.A. PATTERN P-TRAP WITH CHROME FINISH, W/ QUARTER TURN ANGLE STOPS.	2"	1-1/2"	1-1/2"	1/2"	1/2"	-
S 2	BOARD ROOM SINK: ELKAY LRADQ312265, 31" X 22" X 6-1/2", STAINLESS STEEL SINGLE BOWL SINK, 18 GAUGE, SELF RIM, SINGLE HOLE ON CENTER. CHICAGO 434-ABCP GOOSENECK PULL DOWN FAUCET, DECK MOUNTED SINGLE HOLE, SINGLE LEVER W/ 1.5 GPM AERATOR, PROVIDE ASSE 1070 APPROVED TMV SET TO 110°. CHROME BASKET STRAINERS W/ 1-1/2" CAST BRASS L.A. PATTERN P-TRAP WITH CHROME FINISH, W/ QUARTER TURN ANGLE STOPS.	2"	1-1/2"	1-1/2"	1/2"	1/2"	-
TP 1	TRAP PRIMER: MIFAB. MODEL "M-500" 1/2" INLET AND 1/2" OUTLET WITH OPTIONAL DISTRIBUTION UNIT, MAY BE LOCATED AS INDICATED ON DRAWINGS OR AS REQUIRED BY CODE. UPC LISTED. PROVIDED WITH A 12"X 12" ACCESS PANEL OR LARGER DEPENDING ON THE REQUIRED ACCESS TO THE EQUIPMENT AND SHUT-OFF VALVE. (CONTRACTOR TO VERIFY).	-	-	-	1/2"	-	-
WC 1	WATERCLOSET: KOHLER "HIGHCLIFF ULTRA" K-96057, ADA COMPLIANT, 16-5/8" HIGH RIM, (1.28 GPF), FLOOR MOUNTED, ELONGATED BOWL, SIPHON JET, 1-1/2" TOP SPUD, WHITE VITREOUS CHINA. SLOAN 111-SFSM-1.28-HW EXPOSED SENSOR FLUSH VALVE (1.28 GPF)., BEMIS PLASTIC SEAT MODEL 2L215ST, ELONGATED, OPEN FRONT, STAIN & CHEMICAL RESISTANT.	3"	INT.	2"	1"	-	120V
WHA 1	WATER HAMMER ARRESTOR: MIFAB, INC. MODEL "MWH" (SEE PLANS FOR SIZE), INSTALLED ON ALL QUICK CLOSING VALVES AND ALL VALVES WHICH CLOSE WITH THE FLOW OF FLUID, OR ON HEADERS SERVING MORE THAN ONE FIXTURE. PROVIDED WITH A 12"X 12" ACCESS PANEL.	-	-	-	-	-	-
DF 1	DRINKING FOUNTAIN (INDOOR): ELKAY "EZH20" LZSTL8WSLP, ADA, BI-LEVEL ELECTRIC WATER COOLER WITH BOTTLE FILLING STATION, STAINLESS STEEL BASIN WITH INTEGRAL DRAIN. DELIVERS 8 GPH OF 50° F OF DRINKING WATER, BOTTLE FILLER SHALL PROVIDE 1.1 GPM FLOW RATE W/ LAMINAR FLOW. WATERSENTRY PLUS 3000-GALLON CAPACITY FILTER. SEE ARCHITECTURAL DETAIL FOR CLEARANCE AND MOUNTING REQUIREMENTS.	2"	-	1-1/2"	1/2"	-	115V-1Ø-60H Z4.2 FLA 370W

GARBAGE DISPOSAL SCHEDULE

TAG	MANUFACTURER & MODEL NO.	CONSTRUCTION	ELECTRICAL	WEIGHT	REMARKS
GD 1	IN-SINK ERATOR BADGER 5	GALVANIZED STEEL	120V-1ø-60Hz 6.9 AMPS 1/2 HP	15 LBS	QUIET DURA-DRIVE INDUCTION MOTOR

EXPANSION TANK SCHEDULE

TAG	MANUFACTURER & MODEL NO.	CAPACITY	AIR PRE-CHARGE	WATER SIDE VOLUME	WEIGHT
ET 1	WATTS PLT-12	4.5 GALLONS	20 PSI	3.42 GALLONS	10 LBS DRY 39 LBS WET

CIRCULATING PUMP SCHEDULE

TAG	SYSTEM	MANUFACTURER & MODEL NO.	LOCATION	CAPACITY	CONSTRUCTION	MOTOR HP	MOTOR RPM	ELECTRICAL V-PH-HZ	ELECTRICAL AMPS	WEIGHT (LBS.)	ANCHORAGE DETAIL REFERENCE
CP 1	WH-1	TACO 007-F5-5	CUSTODIAL 233	3 GPM @ 9' TDH	STAINLESS STEEL	1/25	3250	120V-1ø-60Hz	0.76	8	

WATER HEATER SCHEDULE

TAG	MANUFACTURER & MODEL NO.	LOCATION	CAPACITY	RECOVERY	EFFICIENCY	ELECTRICAL V-PH-HZ	ELECTRICAL WATTS	WEIGHT	ACCESSORIES	ANCHORAGE DETAIL REFERENCE
WH 1	BRADFORD WHITE LE25ST3-3	CUSTODIAL 233	55 GALLONS	29 GAL./HR. @ 80 DEG. TEMP. RISE	98%	208V-1ø-60Hz	5,500	142 LBS. (DRY) 601 LBS. (WET)	(1)	

NOTES:
(1) 415-46409-67 VOLTAGE AND WATTAGE CONVERSION KIT

CONDENSATE PUMP SCHEDULE

TAG	MANUFACTURER & MODEL NO.	LOCATION	TANK CAPACITY	ELECTRICAL V-PH-HZ	ELECTRICAL WATTS	WEIGHT (LBS.)
COP 1	BECKETT PUMPS BK171UL	FINANCE 207	2.5 QT.	120V-1ø-60Hz	60	4.5
COP 2	BECKETT PUMPS BK171UL	LOCKER ROOM 210	2.5 QT.	120V-1ø-60Hz	60	4.5
COP 3	BECKETT PUMPS BK171UL	COMMUNITY OUTREACH 209	2.5 QT.	120V-1ø-60Hz	60	4.5
COP 4	BECKETT PUMPS BK171UL	CORRIDOR 234	2.5 QT.	120V-1ø-60Hz	60	4.5
COP 5	BECKETT PUMPS BK171UL	CHAIR STORAGE 223	2.5 QT.	120V-1ø-60Hz	60	4.5
COP 6	BECKETT PUMPS BK171UL	DATA 227	2.5 QT.	120V-1ø-60Hz	60	4.5

PIPE MATERIAL SCHEDULE

SERVICE	PIPE MATERIAL & WEIGHT	TYPE OF JOINTS	PRESSURE FITTINGS MATERIAL	SHUT-OFF RATINGS PSI-SwP	VALVE
COLD WATER ABV GROUND	COPPER L TUBE	SOLDERED	CAST BRONZE/ WROUGHT COPPER	125	BALL GATE CHECK
COLD WATER BELOW GROUND TO 5' OUTSIDE BUILDING	COPPER K TUBE	BRAZED	CAST BRONZE/ WROUGHT COPPER	125	BALL GATE
HOT WATER ABV GROUND	COPPER L TUBE	SOLDERED	CAST BRONZE/ WROUGHT COPPER	125	BALL CHECK
VENT	NO-HUB CAST IRON	NO-HUB	N/A	N/A	N/A
WASTE, SOIL & ROOF DRAINS BELOW GRADE	SCHEDULE 40 ABS	SOLVENT-WELD	ABS	N/A	N/A
WASTE, SOIL & ROOF DRAINS ABOVE GRADE	NO-HUB CAST IRON	NO-HUB	N/A	N/A	N/A
CONDENSATE	COPPER L TUBE	SOLDERED	BRONZE	125	N/A
FUEL GAS ABOVE GRADE	STEEL 40, BLACK STEEL 40, BLACK	SCREWED WELDED	MALL. IRON STEEL WELD	150 150	SQR HEAD COCK
FUEL GAS BELOW GRADE	POLYETHYLENE PIPING STAINLESS STEEL TUBING	PER MANF.	STAINLESS STEEL TUBING	PER MANF.	PER MANF.

NOTE: ALL EXPOSED FUEL GAS PIPING SHALL BE PRIME AND PAINTED, COORDINATE COLOR WITH ARCHITECT.

COLD WATER SCHEDULE

PLUMBING SYSTEM FRICTION LOSS

F.U.'S : 53 GPM: 53

MIN. FRICTION LOSS (PSI)	A=	35	(35 PSI FOR FLUSHVALVE & PRESSURE ASSISTED TANK)
ELEV. ABOVE ST. MAIN (FT.)	B=	23.5	(FOR CIVIL PLANS)
DAILY ST. HIGH PRESSURE (PSI)	C=	120	(FROM LOCAL WATER DISTRICT)
DIST. FROM ST. TO HIGHEST FIXTURE	D=	325	(FROM PLANS, IN FEET)
1-1/2" METER PRESSURE LOSS (PSI)	E=	3.2	(UPC APPENDIX A.1)
BACKFLOW DEVICE LOSS (PSI)	F=	13	
PRV DEVICE LOSS (PSI)	G=	6	
SYSTEM STATIC PRESSURE LOSS (FT. HD.)	H=	10.105	H= (B) (0.43)
FRICTION LOSS AVAILABLE TO SYSTEM	I=	52.695	I = C - A - E - F - G - H
TOTAL DEVELOPED LENGTH = DIST. FROM ST. TO HIGHEST FIXTURE PLUS FITTING LOSS	J=	455	J=(D) (1.4)
FRICTION LOSS/100 FT.	K=	11.581	K= (I/J) (100)

MAXIMUM VELOCITY NOT TO EXCEED 8 FPS. (MAX. FRICTION LOSS ALLOWABLE)

PLUMBING SIZING FORM

PIPE SIZE IS BASED ON CHART A 105.1(1) @ 3.0 P.S.I. / 100 FT.

FIXTURE UNITS ARE BASED ON TABLE A 103.1(2) FROM APPENDIX A

PIPE SIZE SCHEDULE

SIZE	FIXTURE UNITS F. TANK	F. VALVE	GPM	VELOCITY
1/2"	1	0	1.8	2.5
3/4"	5	0	4.8	3.0
1"	13	0	10	4.0
1-1/4"	24	0	17	4.5
1-1/2"	47	10	27	5.0
2"	158	64	56	6.0
2-1/2"	380	250	100	7.5
3"	850	800	160	8.0
4"	1750	1750	230	8.0

FIXTURE UNITS

NUMBER	FIXTURE	UNIT	TOTAL
7	WC	5	35
7	L	1	7
1	S-1	1.5	1.5
1	S-2	1	1
1	JS	3	3
1	1st HB	2.5	2.5
3	2nd HB	1	3
1	DF	0.5	0.5
TOTAL FIXTURE UNITS			53.5
TOTAL G.P.M.			53

VELOCITY FOR COLD WATER PIPING LESS THAN 8 FT. PER SECOND

VELOCITY FOR HOTWATER PIPING LESS THAN 5 FT. PER SECOND

GENERAL NOTES

1. THE TOTAL INSTALLATION SHALL COMPLY WITH ANY AND REQUIREMENTS OF THE LEGALLY CONSTITUTED AUTHORITIES HAVING JURISDICTION INCLUDING 2022 CBC (CALIFORNIA BUILDING CODE), 2022 CAL GREEN REQUIREMENTS AND 2022 CMC/CPC (CALIFORNIA MECHANICAL AND PLUMBING CODE).
2. VISIT THE SITE PRIOR TO BID AND SHALL THOROUGHLY FAMILIARIZE THEMSELVES WITH THE EXISTING CONDITIONS UNDER WHICH HE WILL BE REQUIRED TO WORK. INDICATED DIMENSIONS ARE APPROXIMATE AND ARE GIVEN FOR ESTIMATE PURPOSES ONLY.
3. BEFORE PROCEEDING WITH THE WORK CAREFULLY CHECK AND VERIFY DIMENSIONS, SIZES, REQUIRED CLEARANCES AND SHALL ASSUME FULL RESPONSIBILITY FOR THE FITTING OF EQUIPMENT AND MATERIALS HEREIN REQUIRED TO OTHER PARTS OF THE WORK OF OTHER TRADES.
4. THE DRAWINGS ARE ESSENTIALLY DIAGRAMMATIC TO THE EXTENT THAT OFFSETS, BENDS, SPECIAL FITTINGS AND LOCATIONS ARE NOT EXACTLY LOCATED. IN THE PREPARATION OF THESE DOCUMENTS, CERTAIN ASSUMPTIONS ARE MADE REGARDING EXISTING CONDITIONS. SOME OF THESE ASSUMPTIONS MAY NOT BE VERIFIABLE WITHOUT EXPENDING ADDITIONAL SUMS OF MONEY OR DESTROYING OTHERWISE ADEQUATE OR SERVICEABLE PORTIONS OF EXISTING BUILDINGS AND/OR EQUIPMENT. THEREFORE, THE ENGINEER SHALL NOT BE HELD RESPONSIBLE FOR ANY CHANGES OR ADDITIONAL COSTS INCURRED DUE TO EXISTING CONDITIONS.
5. ITEMS RELATED TO PLUMBING UTILITIES AND/OR OTHER SERVICE(S); MATERIALS, LABOR, PERMITS, FEES, ETC., SHALL BE VERIFIED WITH THE RESPECTIVE SERVING UTILITY COMPANY PRIOR TO SUBMISSION OF A BID. THE ACT OF SUBMITTING A BID SHALL CONSTITUTE FULL RESPONSIBILITY TO INSTALL SERVICE(S) IN COMPLIANCE WITH THE REQUIREMENTS OF THE SERVING UTILITY COMPANY AND THE MECHANICAL ENGINEER. BE RESPONSIBLE FOR CHARGES LEVIED BY THE SERVING UTILITY COMPANY EXCEPTING THE FIRST BILLING DEPOSIT.
6. COMPLY WITH CONTRACT DOCUMENTS IN LAYING OUT THEIR WORK AND EQUIPMENT. THEY SHALL COORDINATE THE WORK OF THIS SECTION WITH THE WORK OF OTHER TRADES AND JOB CONDITIONS.
7. THE INSTALLATION OF ACCESS PANELS OR OTHER INDICATING EQUIPMENT OR SPECIALTIES REQUIRING READING, ADJUSTMENT, INSPECTION, REPAIRS, REMOVAL OR REPLACEMENT SHALL BE CONVENIENTLY LOCATED WITH REFERENCE TO THE FINISHED BUILDING.
8. EQUIPMENT AND FIXTURES INSTALLED UNDER THIS CONTRACT SHALL BE HUNG OR ANCHORED IN ACCORDANCE WITH 2022 CPC/CBC.
9. THE INTENT OF THE DRAWINGS AND SPECIFICATIONS IS TO CONSTRUCT THE PROJECT IN ACCORDANCE WITH TITLE 24, CALIFORNIA CODE OF REGULATIONS.
10. WHERE MATERIAL IS SHOWN ON THE DRAWINGS BUT NOT SPECIFIED, IT SHALL BE OF THE SAME TYPE AND QUALITY AS EXISTING MATERIAL.
11. TEST SYSTEM(S) IN ACCORDANCE WITH REQUIREMENTS OF THE GOVERNING AUTHORITIES.
12. CLEANOUTS SHALL BE INSTALLED WHERE READILY ACCESSIBLE AND LOCATED AS PER CODE REQUIREMENTS SHALL COORDINATE CLEANOUT LOCATIONS WITH EQUIPMENT CABINETS, ETC. AND THE ARCHITECT PRIOR TO ANY INSTALLATION.
13. PAVED AREAS WHICH ARE EXCAVATED AND/OR DAMAGED BY OPERATIONS SHALL BE PATCHED AND REPAIRED. IN ADDITION, RESTORE TO ORIGINAL CONDITION PLANTED AREAS DAMAGED BY OPERATIONS.
14. INSPECT & TEST EXISTING REGULATOR AT GAS METER SHOULD THE INLET PRESSURE AT THE REGULATOR BE LESS THAN **8.0 IN. W.C.** THE EXISTING REGULATOR SHALL BE REPLACED WITH A NEW AGA APPROVED REGULATOR AND SET TO AN INLET SUPPLY PRESSURE OF **8.0 IN. W.C.** OR GREATER.
15. CONNECTIONS TO EXISTING SERVICES SHALL BE MADE SUCH THAT INTERRUPTION TIME WILL BE AS SHORT AS POSSIBLE. THE CONTRACTOR SHALL GIVE THE OWNERS REPRESENTATIVE SUFFICIENT NOTICE OF SUCH INTERRUPTIONS AND THE ACTUAL SHUT-DOWN TIME SHALL BE AT A TIME DESIGNATED BY THE OWNERS REPRESENTATIVE.
16. EXTERIOR WATER SHUT-OFF VALVES BELOW GROUND SHALL BE INSTALLED IN YARD BOXES WITH COVERS CONSPICUOUSLY MARKED "WATER SHUT-OFF" RESPECTIVELY.
17. WHEN REQUIRED BY THE AUTHORITY HAVING JURISDICTION, POTABLE WATER SYSTEMS SHALL BE DISINFECTED AND FLUSHED PRIOR TO USE BY WATER-CHLORINATION SOLUTION AND HAVE BACTERIOLOGICAL EXAMINATION MADE BY AN APPROVED AGENCY PER 2022 CPC SEC. 609.10 AND AS PRESCRIBED IN AWWA C651. METHODS OF CLEANING/ DISINFECTING FOR NEW OR REPAIR PIPING AS DESCRIBED IN C651 OR NFPA 24.
18. PLUMBING PIPE, FITTINGS AND FIXTURES USED TO CONVEY OR DISPENSE WATER FOR HUMAN CONSUMPTION SHALL COMPLY WITH AB 1953.
19. ANY SUBSTITUTION MADE THAT IS DIFFERENT FROM WHAT IS SPECIFIED ON THE DRAWINGS SHALL BE CLEARLY INDICATED ON THE SUBMITTAL AS TO THAT IS BEING SUBSTITUTED.
20. SHUT-OFF VALVES SHALL BE PROVIDED IN MAIN BRANCHES, RUNS TO RISERS AND WHERE INDICATED ON DRAWINGS.
21. NEW NON-RESIDENTIAL WATER CLOSETS SHALL COMPLY WITH 2022 CAL-GREEN 5.303.3.1 AND SHALL NOT EXCEED 1.28 GALLONS PER FLUSH. TANK-TYPE WATER CLOSETS SHALL BE CERTIFIED TO THE PERFORMANCE CRITERIA OF THE U.S. EPA WATERSENSE SPECIFICATION FOR TANK-TYPE TOILETS.
22. NEW NON-RESIDENTIAL WALL MOUNTED URINALS SHALL COMPLY WITH 2022 CAL-GREEN 5.303.3.2 AND SHALL NOT EXCEED 0.125 GALLONS PER FLUSH.
23. NEW NON-RESIDENTIAL LAVATORY FAUCETS SHALL COMPLY WITH 2022 CAL-GREEN 5.303.3.4 AND SHALL NOT EXCEED 0.5 GALLONS PER MINUTE AT 60 PSI.
24. NEW NON-RESIDENTIAL KITCHEN FAUCETS SHALL COMPLY WITH 2022 CAL-GREEN 5.303.3.4 AND SHALL NOT EXCEED 1.8 GALLONS PER MIN AT 60 PSI.

APPLICABLE CODES

1. 2022 CALIFORNIA ADMINISTRATIVE CODE (CAC), PART 1, TITLE 24 CCR
2. 2022 CALIFORNIA BUILDING CODE (CBC), PART 2, TITLE 24 CCR (2021 INTERNATIONAL BUILDING CODE, VOL. 1 & 2, AND 2022 CALIFORNIA AMENDMENTS)
3. 2022 CALIFORNIA ELECTRICAL CODE (CEC), PART 3, TITLE 24 CCR (2020 NATIONAL ELECTRICAL CODE AND 2022 CALIFORNIA AMENDMENTS)
4. 2022 CALIFORNIA MECHANICAL CODE (CMC), PART 4, TITLE 24 CCR (2021 IAPMO UNIFORM MECHANICAL CODE AND 2022 CALIFORNIA AMENDMENTS)
5. 2022 CALIFORNIA PLUMBING CODE (CPC), PART 5, TITLE 24 CCR (2021 IAPMO UNIFORM PLUMBING CODE AND 2022 CALIFORNIA AMENDMENTS)
6. 2022 CALIFORNIA ENERGY CODE (CEC), PART 6, TITLE 24 CCR
7. 2022 CALIFORNIA FIRE CODE (CFC), PART 9, TITLE 24 CCR (2021 INTERNATIONAL FIRE CODE AND 2022 CALIFORNIA AMENDMENTS)
8. 2022 CALIFORNIA EXISTING BUILDING CODE (CEBC), PART 10, TITLE 24 CCR (2021 INTERNATIONAL EXISTING BUILDING CODE AND 2022 CALIFORNIA AMENDMENTS)
9. 2022 CALIFORNIA GREEN BUILDING STANDARDS CODE (CALGREEN), PART 11, TITLE 24 CCR
10. 2022 CALIFORNIA REFERENCED STANDARDS CODE, PART 12, TITLE 24 CCR
11. TITLE 19 CCR, PUBLIC SAFETY, STATE FIRE MARSHALL REGULATIONS

PIPE INSULATION SCHEDULE

FLUID TEMPERATURE RANGE (°F)	CONDUCTIVITY RANGE (IN BTU-IN/HR PER SQFT/°F)	INSULATION MEAN RATING TEMPERATURE (°F)		PIPE SIZE (IN. DIA>) < 1	1 to < 1.5	1.5 to < 4	4 to < 8	8 AND LARGER
				REQUIRED INSULATION THICKNESS (IN.)				
DOMESTIC HOT WATER HEATING								
105° - 140°	0.22 - 0.28	100°	INCHES	1.0	1.5	1.5	1.5	1.5
			R-VALUE	R-7.7	R-12.5	R-11	R-9	R-8

NOTE: WHERE INSULATED PIPING IS EXPOSED OUTDOORS, IT SHALL BE COVERED. COVER OUTDOOR EXPOSED INSULATED PIPING WITH 0.016 INCH THICK CORRUGATED ALUMINUM JACKET. PROVIDE VALVE STEM EXTENSIONS SUCH THAT INSULATION IS NOT DAMAGED WHEN VALVE IS CYCLED

GAS LOAD SCHEDULE

SYMBOL	ITEM	LOCATION	DEMAND (IN CFH)
-	GAS USAGE	MAINTENANCE BUILDING	988.2
-	PATIO HEATER	SITE	350
-	PATIO HEATER	SITE	350

TOTAL GAS LOAD	1,688.2 CFH
BUILDING LONGEST DEVELOPED PIPE LENGTH (LOW PRESSURE GAS)	<150 FT.
SITE LONGEST DEVELOPED PIPE LENGTH (LOW PRESSURE GAS)	<500 FT.

PLUMBING LEGEND SYMBOLS

SYMBOL	ABBREVIATIONS	DESCRIPTION
DETAIL No. / SHEET No.		DETAIL REFERENCE
EQUIPMENT ID. No.		EQUIPMENT REFERENCE
	CW	COLD WATER
	HW	HOT WATER
	HWR	HOT WATER RETURN
	-	POP-OFF DRAIN LINE OR HIDDEN WATER LINE
	S or W	SOIL or WASTE BELOW GRADE (or FLOOR)
RD/OD	RD/OD	ROOF & OVERFLOW DRAIN ABOVE & BELOW GRADE (or FLOOR)
	S or W	SOIL or WASTE ABOVE GRADE (or FLOOR)
	V	PLUMBING VENT
COND	COND	CONDENSATE DRAIN
SEC COND	SEC COND	SECONDARY CONDENSATE DRAIN
G	G	GAS LOW PRESSURE
MPG	MPG	GAS MEDIUM PRESSURE
	BV	BALL VALVE
	SOV	SHUT OFF VALVE
	SOV or GC	SHUT OFF VALVE OR GAS COCK ON RISER
	CV	SWING CHECK VALVE
	PRV	PRESSURE REDUCING VALVE
	PTR	PRESSURE-TEMPERATURE RELIEF VALVE
	RPBFP	REDUCED PRESSURE BACKFLOW PREVENTER
	DN	PIPE DOWN
	UP	PIPE UP
	DN	TEE DOWN
	UP	TEE UP
C		PIPE RISER & PIPE DROP (UP AND DOWN)
	FCO	FLOOR CLEANOUT
	WCO	WALL CLEANOUT
	CO	CLEANOUT PLUG
	COTG	YARD CLEANOUT or CLEANOUT TO GRADE
		CAP ON END OF PIPE
	HB	HOSE BIBB WITH VACUUM BREAKER
	WHA & TP	WATER HAMMER ARRESTOR & TRAP PRIMER
	CS	CIRCUIT SETTER
	GR	GAS REGULATOR
	GC	GAS COCK (or GAS STOP)
	GS	GAS SOLENOID
		EXISTING PIPING TO BE DEMOLISHED
	P.O.C.	POINT OF CONNECTION
	P.O.D.	POINT OF DEMOLITION
	AP	ACCESS PANEL
	ABV	ABOVE
	BEL	BELOW
	AGA	AMERICAN GAS ASSOCIATION
	CONN	CONNECTION
	CONT	CONTINUATION
	(E)	EXISTING
	(N)	NEW
	DN	DOWN
	ADA	AMERICAN DISABILITY ACT
	IE	INVERT ELEVATION
	(TYP)	TYPICAL
	U.O.N.	UNLESS OTHER NOTED
	VTR	VENT THROUGH ROOF
	W/	WITH
	FU	PLUMBING FIXTURE UNIT
	B.F.F.	BELOW FINISH FLOOR
	R.I.C.	ROUGH IN CONNECT
CCO	CCO	CONDENSATE CLEAN OUT

ANCHORAGE AND BRACING NOTES

1. PIPES, DUCTS AND CONDUITS SHALL BE SUPPORTED AND BRACED PER THE SMACNA "GUIDELINES FOR SEISMIC RESTRAINTS OF MECHANICAL SYSTEMS AND PLUMBING SYSTEMS", THE "SUPERSTRUT SEISMIC RESTRAINT SYSTEM" FOR PIPES AND CONDUITS ONLY.

PLUMBING SHEET INDEX

SHEET #	SHEET NAME
P2-0.1	PLUMBING LEGENDS NOTES & SCHEDULES
P2-1.1	PLUMBING SITE PLAN
P2-2.1	PLUMBING FOUNDATION PLAN
P2-2.2	PLUMBING PLAN
P2-3.1	PLUMBING ENLARGED PLANS
P2-4.1	PLUMBING ROOF PLAN
PD-1.1	PLUMBING DETAILS

REGISTERED PROFESSIONAL ENGINEER — No. 33209 — SIGNED 04/18/2024 — MECHANICAL — STATE OF CALIFORNIA

LICENSED ARCHITECT — REGISTERED PROFESSIONAL ENGINEER — Exp.10-31-25 — STATE OF CALIFORNIA

STAMPS

AGENCY APPROVAL
File No. ########/##-########

MECHANICAL ELECTRICAL AND ENERGY CONSULTANTS

DESIGN WEST ENGINEERING
412 E. Vanderbilt Way
San Bernardino, CA 92408
Tel: 909-890-3700
Fax: 909-890-3710
Email: cadd@designwesteng.com

CONSULTANT BRANDING

RUHNAU CLARKE ARCHITECTS

MOUNT TRANSIT ADMINISTRATION FACILITY: INCREMENT 3: 100% CONSTRUCTION DOCUMENTS

PRINTED: 4/18/2024 12:06:33 PM
PATH: J:\M_Projects\50801_MATTA_MTMF22-066 Mountain Transit Maintenance Fac - Increment 3\Cad\Plumbing\P2-0.1.dwg

PROJECT No. :50801
4/18/2024 12:06:33 PM

DRAWN BY: CHECKED BY:

ISSUE No.____ DATE____ DESCRIPTION____
REVISION No.1 DATE 03/19/24 DESCRIPTION ADDENDUM 1

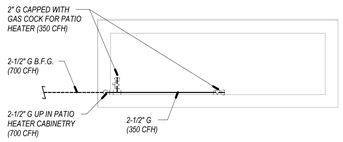

ENLARGED HEATERS | SCALE: 1/4" = 1'-0" | 2

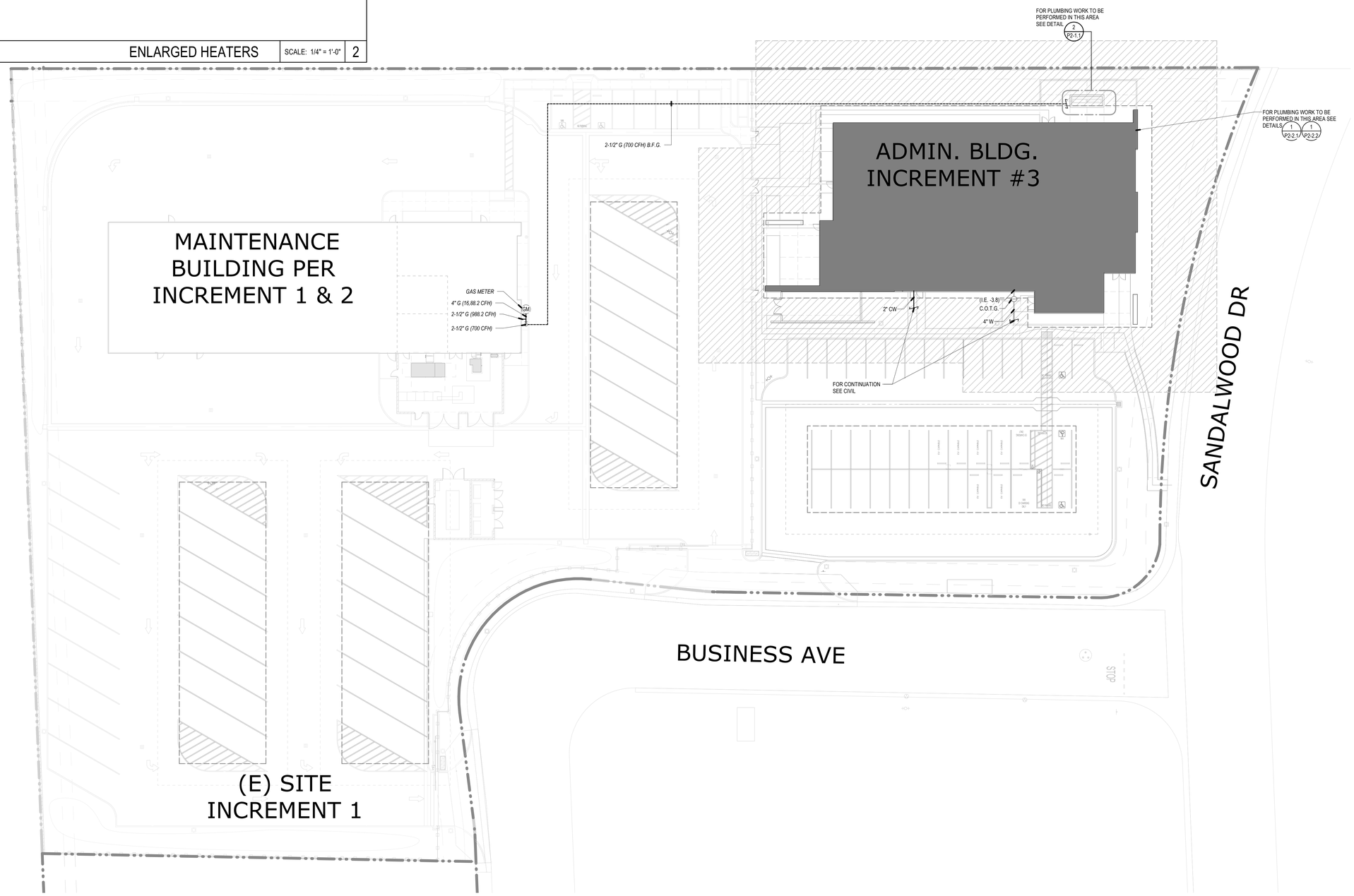

NORTH

PLUMBING SITE PLAN | SCALE: 1" = 20'-0" | 1

GENERAL NOTES

1. FOR LINE TYPES, SYMBOLS & ABBREVIATIONS SEE LEGEND ON P2-0.1.
2. PRIOR TO CONSTRUCTION CONTRACTOR SHALL FIELD VERIFY FOR EXACT SIZE, LOCATION & INVERT ELEVATION OF EXISTING WASTE LINE & COORDINATE WITH PLUMBING ENGINEER FOR ANY CHANGES NEEDED.
3. ALL WASTE LINES INSIDE THE BUILDING SHALL BE SLOPED AT 2% SLOPE.

STAMPS

REGISTERED PROFESSIONAL ENGINEER — STEVEN M. JOHNSON — No. 33209 — SIGNED 04/18/2024 — MECHANICAL — STATE OF CALIFORNIA

LICENSED ARCHITECT — ROGER CLARKE — No. C-41130 — Exp.10-31-25 — STATE OF CALIFORNIA

AGENCY APPROVAL
File No.: ########-##-########

MECHANICAL ELECTRICAL AND ENERGY CONSULTANTS
DESIGN WEST ENGINEERING
412 E. Vanderbilt Way
San Bernardino, CA 92408
Tel: 909-890-3700
Fax: 909-890-3770
Email: cadd@designwesteng.com
CONSULTANT BRANDING

RUHNAU CLARKE ARCHITECTS

MOUNT TRANSIT ADMINISTRATION FACILITY: INCREMENT 3: 100% CONSTRUCTION DOCUMENTS

PRINTED: 4/18/2024 12:06:34 PM
PATH: 2024 Jobs\50801_MATH_MTMP22-066 Mountain Transit Maintenance Fac 3\50801_ALL.rvt

PROJECT No. :50801
4/18/2024 12:06:34 PM

DRAWN BY: CHECKED BY:

ISSUE No.____ DATE____ DESCRIPTION____
ISSUE No.____ DATE____ DESCRIPTION____
ISSUE No.____ DATE____ DESCRIPTION____
ISSUE No.____ DATE____ DESCRIPTION____

REVISION No. 1 DATE 03/19/24 DESCRIPTION ADDENDUM 1
REVISION No.____ DATE____ DESCRIPTION____
REVISION No.____ DATE____ DESCRIPTION____
REVISION No.____ DATE____ DESCRIPTION____

MOUNT TRANSIT ADMINISTRATION FACILITY
INCREMENT 3
170 BUSINESS CENTER DR. BIG BEAR LAKES, CA
BIG BEAR LAKES

PLUMBING SITE PLAN

P2-1.1

50801

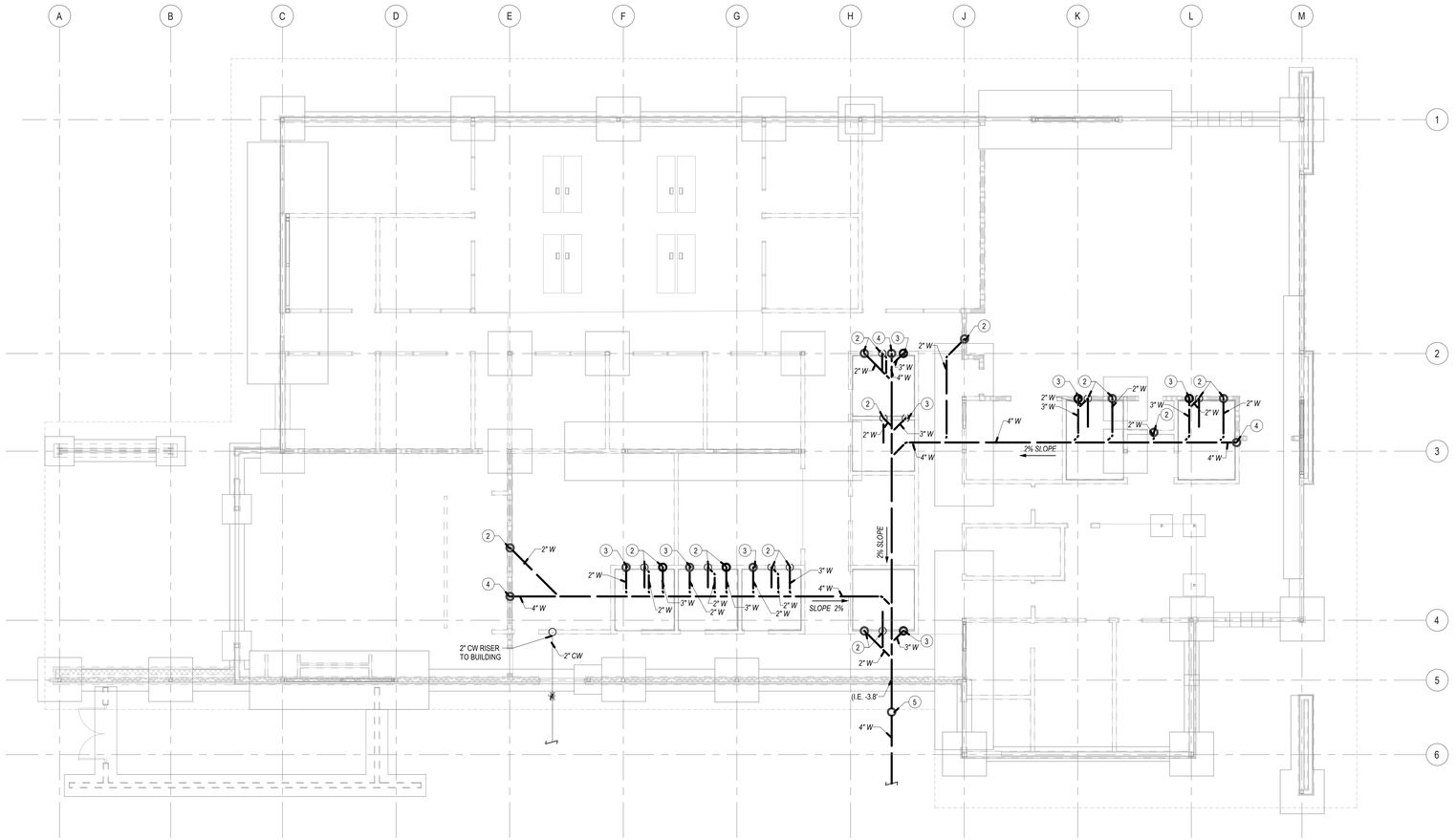

NORTH

GENERAL NOTES

1. FOR LINE TYPES, SYMBOLS & ABBREVIATIONS SEE LEGEND ON P2-0.1.
2. PRIOR TO CONSTRUCTION CONTRACTOR SHALL FIELD VERIFY FOR EXACT SIZE, LOCATION & INVERT ELEVATION OF EXISTING WASTE LINE & COORDINATE WITH PLUMBING ENGINEER FOR ANY CHANGES NEEDED.
3. ALL WASTE LINES INSIDE THE BUILDING SHALL BE SLOPED AT 2% SLOPE.
4. ALL PIPING THROUGH FOOTINGS SHALL BE SLEEVED.

CONSTRUCTION NOTES

1. 2" CW UP TO ABOVE.
2. 2" W DN FROM ABOVE.
3. 3" W DN FROM ABOVE.
4. 4" W DN FROM ABOVE.
5. 4" C.O.T.G.

PLUMBING FOUNDATION PLAN | SCALE: 1/8" = 1'-0" | 1

STAMPS

REGISTERED PROFESSIONAL ENGINEER — STEVEN M. JOHNSON — No. 33209 — SIGNED 04/18/2024 — MECHANICAL — STATE OF CALIFORNIA

LICENSED ARCHITECT — ROGER CLARKE — No. C-49130 — Exp.10-31-25 — STATE OF CALIFORNIA

AGENCY APPROVAL
File No.: ########-##-########

MECHANICAL ELECTRICAL AND ENERGY CONSULTANTS

DESIGN WEST ENGINEERING

412 E. Vanderbilt Way
San Bernardino, CA 92408
Tel: 909-890-3700
Fax: 909-890-3770
Email: cadd@designwesteng.com

CONSULTANT BRANDING

RUHNAU CLARKE ARCHITECTS

MOUNT TRANSIT ADMINISTRATION FACILITY: INCREMENT 3: 100% CONSTRUCTION DOCUMENTS

PRINTED: 4/18/2024 12:06:35 PM
PATH: BIM 360:[50801_MATF_HTMP]22-066 Mountain Transit Maintenance and Operations Facility_Z24.rvt
Model: Central_Z24.rvt

PROJECT No. :50801
4/18/2024 12:06:35 PM

DRAWN BY: CHECKED BY:

ISSUE No.____ DATE____ DESCRIPTION____
ISSUE No.____ DATE____ DESCRIPTION____
ISSUE No.____ DATE____ DESCRIPTION____
ISSUE No.____ DATE____ DESCRIPTION____

REVISION No.1 DATE 03/19/24 DESCRIPTION ADDENDUM 1
REVISION No.____ DATE____ DESCRIPTION____
REVISION No.____ DATE____ DESCRIPTION____
REVISION No.____ DATE____ DESCRIPTION____

MOUNT TRANSIT ADMINISTRATION FACILITY
INCREMENT 3
170 BUSINESS CENTER DR. BIG BEAR LAKES, CA
BIG BEAR LAKES

PLUMBING FOUNDATION PLAN

P2-2.1

50801

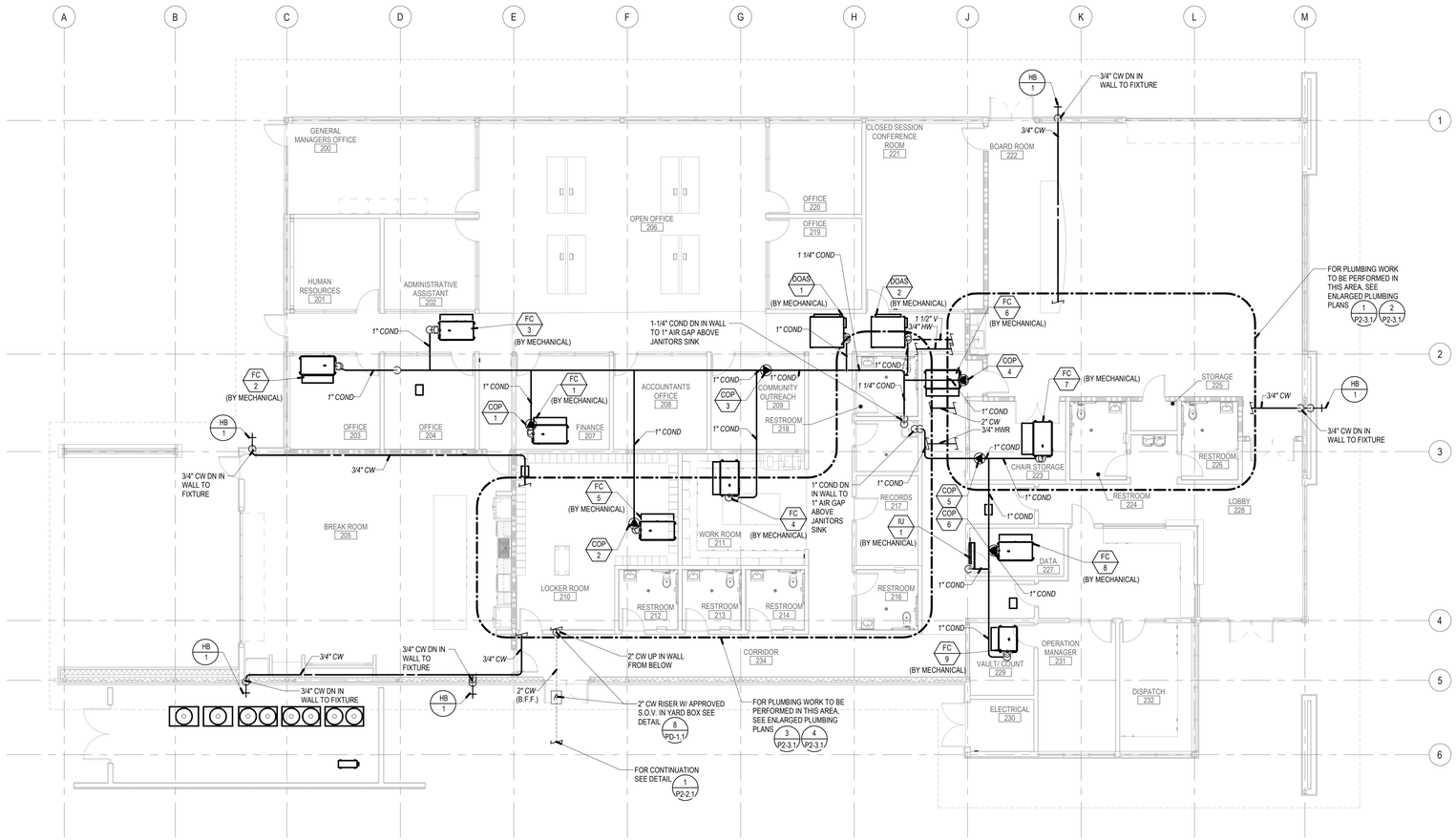

NORTH

PLUMBING PLAN | SCALE: 1/8" = 1'-0" | 1

GENERAL NOTES

1. FOR LINE TYPES, SYMBOLS & ABBREVIATIONS SEE LEGEND ON P2-0.1.
2. ROUTE HOT WATER LOOP AS CLOSE AS POSSIBLE TO ALL FIXTURES.
3. ALL VENTING SHALL HAVE A MIN. OF 10' CLEARANCE FROM ANY FORCED AIR INLET W/ A MIN. OF 3' CLEARANCE ABOVE & A MIN OF 4' CLEARANCE FROM ANY PROPERTY LINE EXCEPT A PUBLIC WAY PER CPC SEC. 906.
4. NEW OR REPAIRED POTABLE WATER SYSTEMS SHALL BE DISINFECTED PRIOR TO USE, ACCORDING TO THE METHOD SET IN SECTION 609.9 OF THE CPC.
5. COORDINATE EXACT LOCATION OF S.O.V., BACKFLOW DEVICE, WATER METER WITH ARCHITECT.
6. PRIOR TO CONSTRUCTION CONTRACTOR SHALL FIELD VERIFY FOR EXACT SIZE, LOCATION & INVERT ELEVATION OF EXISTING WASTE LINE & COORDINATE WITH PLUMBING ENGINEER FOR ANY CHANGES NEEDED.
7. SHUT-OFF VALVES SHALL BE PROVIDED ON ALL MAIN BRANCHES, RUNS TOO RISERS AND WHERE SHOWN ON DRAWING. LOCATE SHUT-OFF VALVES OVER T-BAR CEILING WHEN POSSIBLE. PROVIDE ACCESS PANELS WHEN SHUT-OFF VALVES ARE LOCATED OVER HARD LID CEILINGS.
8. ALL WASTE LINES INSIDE THE BUILDING SHALL BE SLOPED AT 2% SLOPE.
9. ALL CONDENSATE LINES INSIDE THE BUILDING SHALL BE SLOPED AT 1% SLOPE.
10. FOR PIPE SUPPORT AND PIPE SUPPORT SCHEDULE SEE DETAILS 1 PD-1.1 2 PD-1.1
11. FOR CLEANOUT SEE DETAIL 11 PD-1.1
12. FOR HOSE BIBB SEE DETAIL 9 PD-1.1
13. FOR CONDNESATE CONNECTION SEE DETAILS 13 PD-1.1 14 PD-1.1
14. FOR PIPE THROUGH FIRE RATED WALL SEE DETAIL 15 PD-1.1
15. FOR WATER SUPPLY TO BUILDING SEE DETAIL 8 PD-1.1

REGISTERED PROFESSIONAL ENGINEER — STEVEN M. JOHNSON — No. 33209 — SIGNED 04/18/2024 — MECHANICAL — STATE OF CALIFORNIA
LICENSED ARCHITECT — ROGER CLARKE — No. C-41130 — Exp.10-31-25 — STATE OF CALIFORNIA
STAMPS

AGENCY APPROVAL
File No.: ########/##-########

MECHANICAL ELECTRICAL AND ENERGY CONSULTANTS
DESIGN WEST ENGINEERING
412 E. Vanderbilt Way
San Bernardino, CA 92408
Tel: 909-890-3700
Fax: 909-890-3770
Email: cadd@designwesteng.com
CONSULTANT BRANDING

RUHNAU CLARKE ARCHITECTS

MOUNT TRANSIT ADMINISTRATION FACILITY: INCREMENT 3: 100% CONSTRUCTION DOCUMENTS

PRINTED: 4/18/2024 12:06:38 PM
PATH: BIM 360://50801_MATF_HTMP22-066 Mountain Transit Maintenance Fac_Big Bear Lake/Central_22.rvt

PROJECT No. :50801
4/18/2024 12:06:38 PM

DRAWN BY: _____ CHECKED BY: _____

ISSUE No.____	DATE_____	DESCRIPTION_____	REVISION No.____	DATE_____	DESCRIPTION_____
ISSUE No.____	DATE_____	DESCRIPTION_____	REVISION No.____	DATE_____	DESCRIPTION_____
ISSUE No.____	DATE_____	DESCRIPTION_____	REVISION No.____	DATE_____	DESCRIPTION_____
ISSUE No.____	DATE_____	DESCRIPTION_____	REVISION No.____	DATE_____	DESCRIPTION_____

RUHNAUCLARKE.COM
3775 TENTH STREET, RIVERSIDE CALIFORNIA 92501 (951) 684 4664 / 5751 PALMER WAY, SUITE C, CARLSBAD CALIFORNIA 92010 (760) 438 5899

MOUNT TRANSIT ADMINISTRATION FACILITY
INCREMENT 3
170 BUSINESS CENTER DR. BIG BEAR LAKES, CA
BIG BEAR LAKES

PLUMBING PLAN

P2-2.2

50801

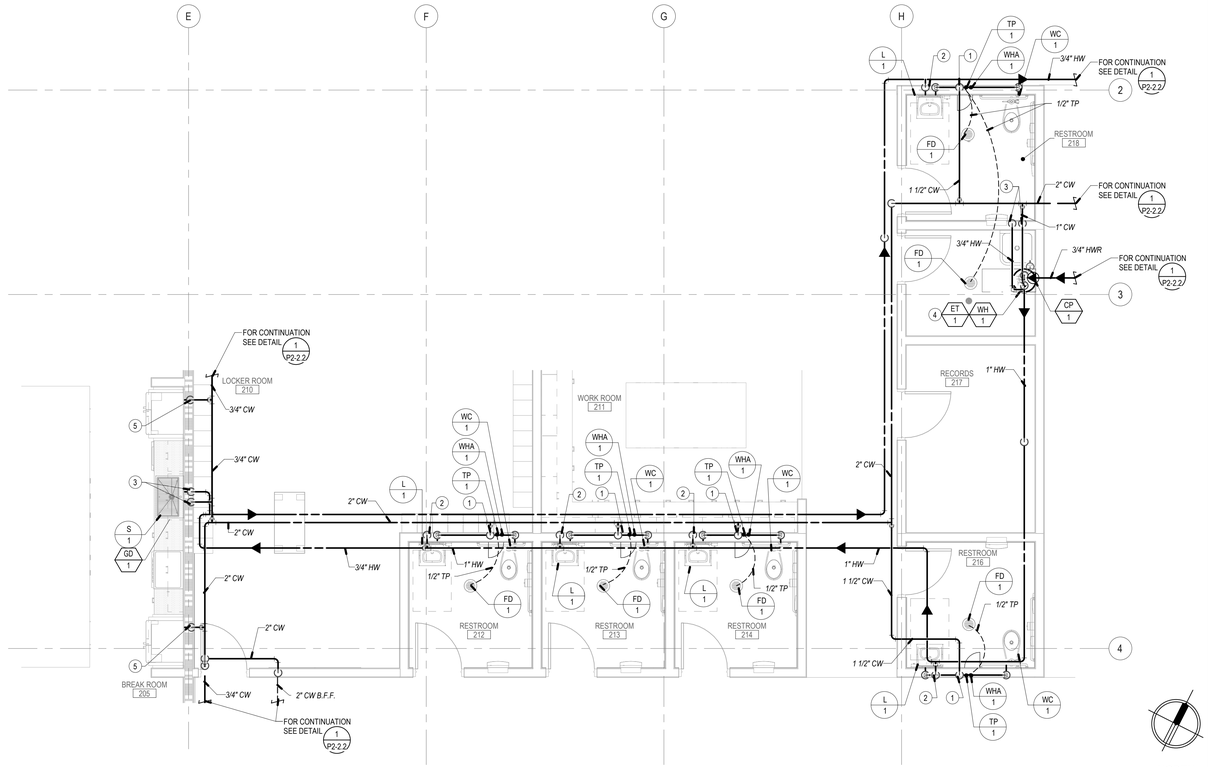

ENLARGED BREAKROOM AND RESTROOOM DOMESTIC WATER PLAN

SCALE: 1/4" = 1'-0" | 3

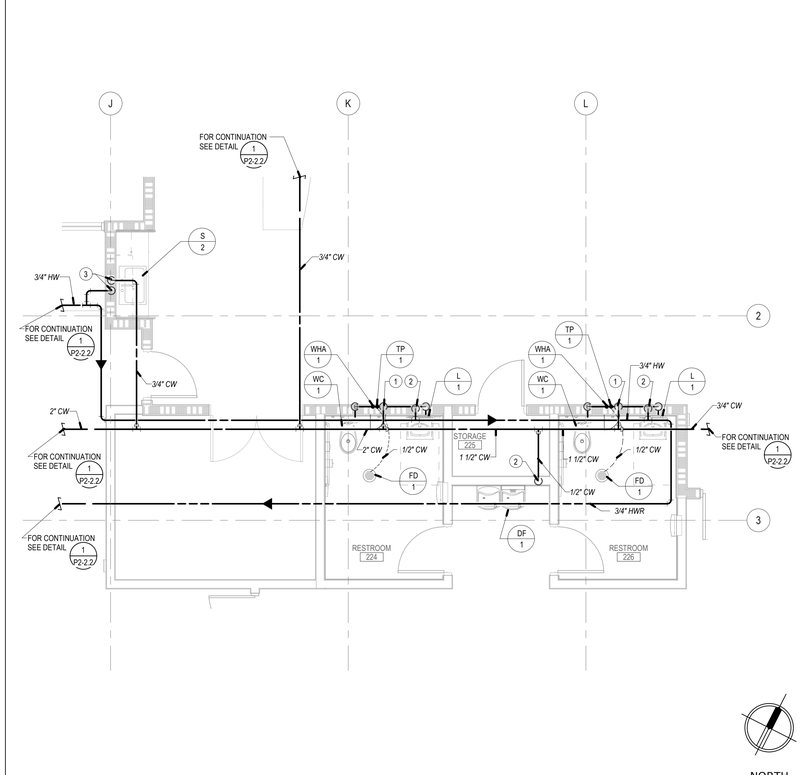

ENLARGED LOBBY RESTROOMS DOMESTIC WATER PLAN

SCALE: 1/4" = 1'-0" | 1

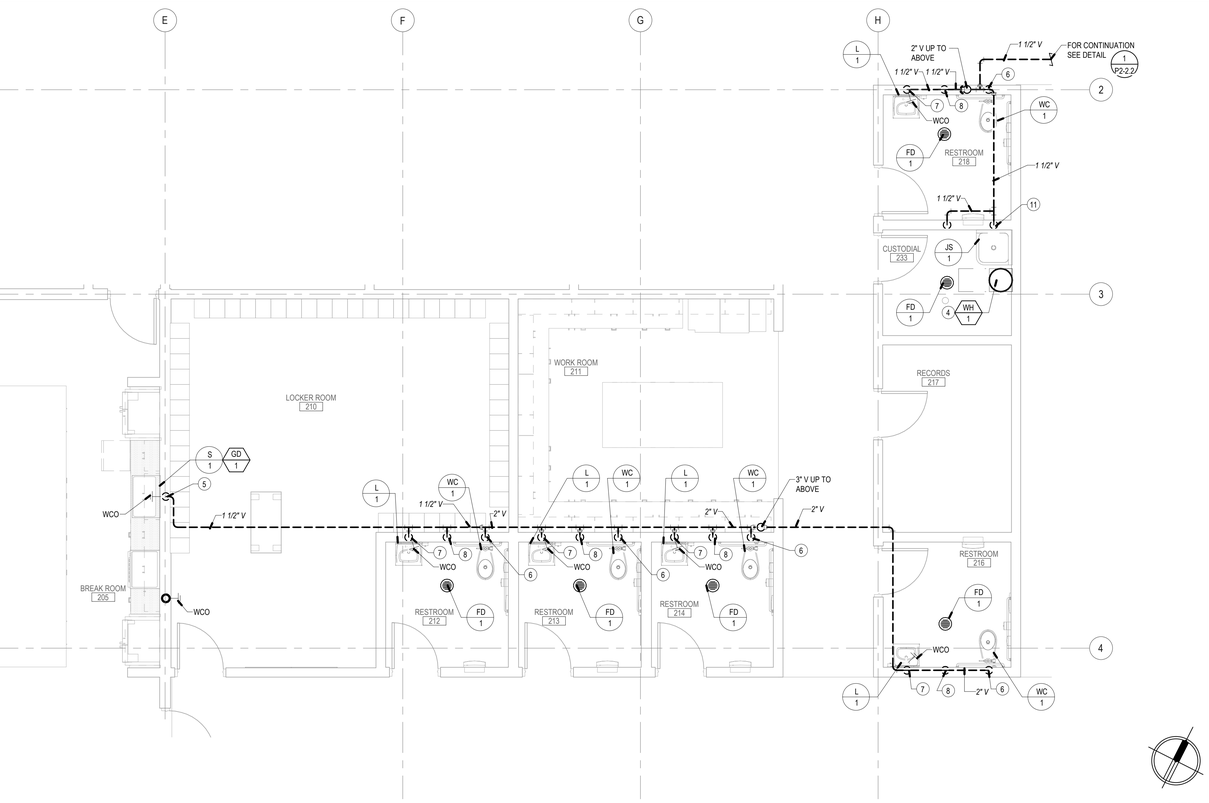

ENLARGED BREAKROOM AND RESTROOM WASTE & VENT PLAN

SCALE: 1/4" = 1'-0" | 4

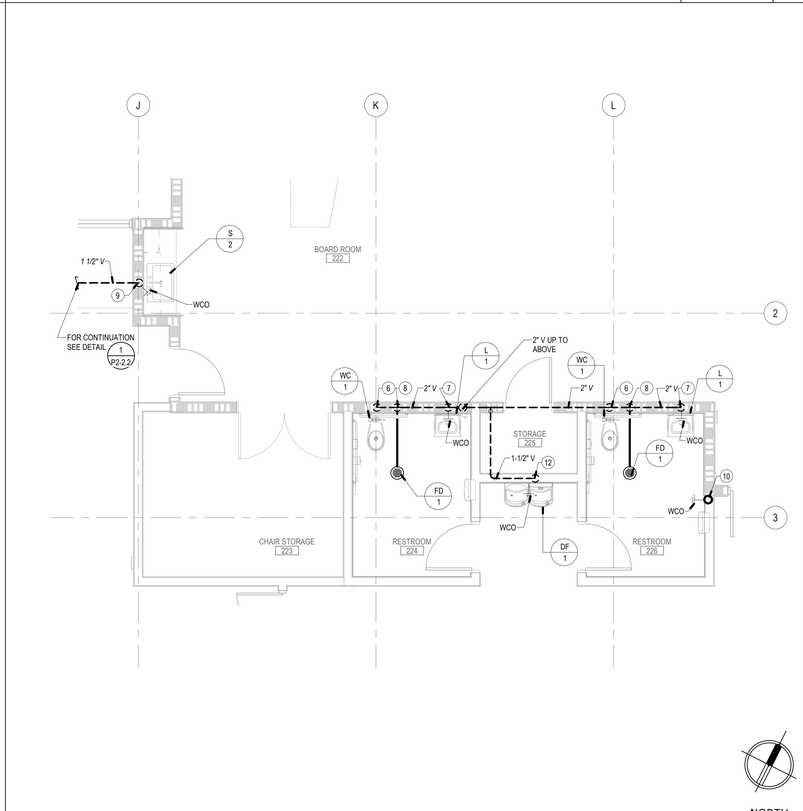

ENLARGED LOBBY RESTROOMS WASTE & VENT PLAN

SCALE: 1/4" = 1'-0" | 2

GENERAL NOTES

1. FOR LINE TYPES, SYMBOLS & ABBREVIATIONS SEE LEGEND ON P2-0.1.
2. ROUTE HOT WATER LOOP AS CLOSE AS POSSIBLE TO ALL FIXTURES.
3. ALL VENTING SHALL HAVE A MIN. OF 10' CLEARANCE FROM ANY FORCED AIR INLET W/ A MIN. OF 3' CLEARANCE ABOVE & A MIN OF 4' CLEARANCE FROM ANY PROPERTY LINE EXCEPT A PUBLIC WAY PER CPC SEC. 906.
4. NEW OR REPAIRED POTABLE WATER SYSTEMS SHALL BE DISINFECTED PRIOR TO USE, ACCORDING TO THE METHOD SET IN SECTION 609.9 OF THE CPC.
5. COORDINATE EXACT LOCATION OF S.O.V., BACKFLOW DEVICE, WATER METER WITH ARCHITECT.
6. SHUT-OFF VALVES SHALL BE PROVIDED ON ALL MAIN BRANCHES, RUNS TOO RISERS AND WHERE SHOWN ON DRAWING. LOCATE SHUT-OFF VALVES OVER T-BAR CEILING WHEN POSSIBLE. PROVIDE ACCESS PANELS WHEN SHUT-OFF VALVES ARE LOCATED OVER HARD LID CEILINGS.
7. ALL WASTE LINES INSIDE THE BUILDING SHALL BE SLOPED AT 2% SLOPE.
8. FOR PIPE SUPPORT AND PIPE SUPPORT SCHEDULE SEE DETAILS 1 PD-1.1 / 2 PD-1.1
9. FOR TRAP PRIMER CONNECTION SEE DETAILS 4 PD-1.1 / 5 PD-1.1
10. FOR WATER HAMMER ARRESTOR SEE DETAIL 6 PD-1.1
11. FOR CLEANOUT SEE DETAIL 11 PD-1.1
12. FOR WATER HEATER CONNECTION SEE DETAIL 12 PD-1.1
13. FOR SINK CONNECTION SEE DETAIL 7 PD-1.1
14. FOR WATER TO APPLIANCE SEE DETAIL 10 PD-1.1
15. FOR PIPE THROUGH FIRE RATED WALL SEE DETAIL 15 PD-1.1

CONSTRUCTION NOTES

1. 1-1/2" CW DN IN WALL TO FULL SIZE HEADER WITH SOV ON RISER BEHIND ACCESS PANEL.
2. 1/2" CW DN IN WALL TO FIXTURE.
3. 3/4" CW & HW DN IN WALL TO FIXTURE.
4. 1" HW & CW TO WATER HEATER. POP-OFF DRAIN LINE FULL SIZE OF UNIT CONNECTION DN TO JANITORS SINK. SEE DETAIL 12 PD-1.1
5. 1/2" CW DN IN WALL TO RECESSED BOX W/ ANGLE STOP FITTINGS.
6. 3" W & 2" V RISER FOR WATER CLOSET.
7. 2" W & 1-1/2" V RISER FOR LAVATORY.
8. 2" W & 1-1/2" V RISER FOR FLOOR DRAIN.
9. 2" W & 1-1/2" V RISER FOR SINK.
10. 4" W RISER FOR WCO.
11. 3" W & 1-1/2" V RISER FOR JANITORS SINK.
12. 2" W & 1-1/2" V RISER FOR DRINKING FOUNTAIN.

REGISTERED PROFESSIONAL ENGINEER — STEVEN M. JOHNSON — No. 33209 — SIGNED 04/18/2024 — MECHANICAL — STATE OF CALIFORNIA

LICENSED ARCHITECT — ROGER CLARKE — No. C-41136 — Exp.10-31-25 — STATE OF CALIFORNIA

STAMPS

AGENCY APPROVAL
File No.: ########/##-########

MECHANICAL ELECTRICAL AND ENERGY CONSULTANTS

DESIGN WEST ENGINEERING

412 E. Vanderbilt Way
San Bernardino, CA 92408
Tel: 909-890-3700
Fax: 909-890-3770
Email: cadd@designwesteng.com

CONSULTANT BRANDING

RUHNAU CLARKE ARCHITECTS

MOUNT TRANSIT ADMINISTRATION FACILITY: INCREMENT 3: 100% CONSTRUCTION DOCUMENTS

PROJECT No. :50801
4/18/2024 12:06:43 PM

DRAWN BY: CHECKED BY:

ISSUE No.____ DATE____ DESCRIPTION____
ISSUE No.____ DATE____ DESCRIPTION____
ISSUE No.____ DATE____ DESCRIPTION____
ISSUE No.____ DATE____ DESCRIPTION____

REVISION No.1 DATE 03/19/24 DESCRIPTION ADDENDUM 1
REVISION No.____ DATE____ DESCRIPTION____
REVISION No.____ DATE____ DESCRIPTION____
REVISION No.____ DATE____ DESCRIPTION____

PRINTED: 4/18/2024 12:06:43 PM
PATH: BIM 360://50801_MMTA_HYMY\22-066 Mountain Transit Maintenance Facility_Central_24.rvt

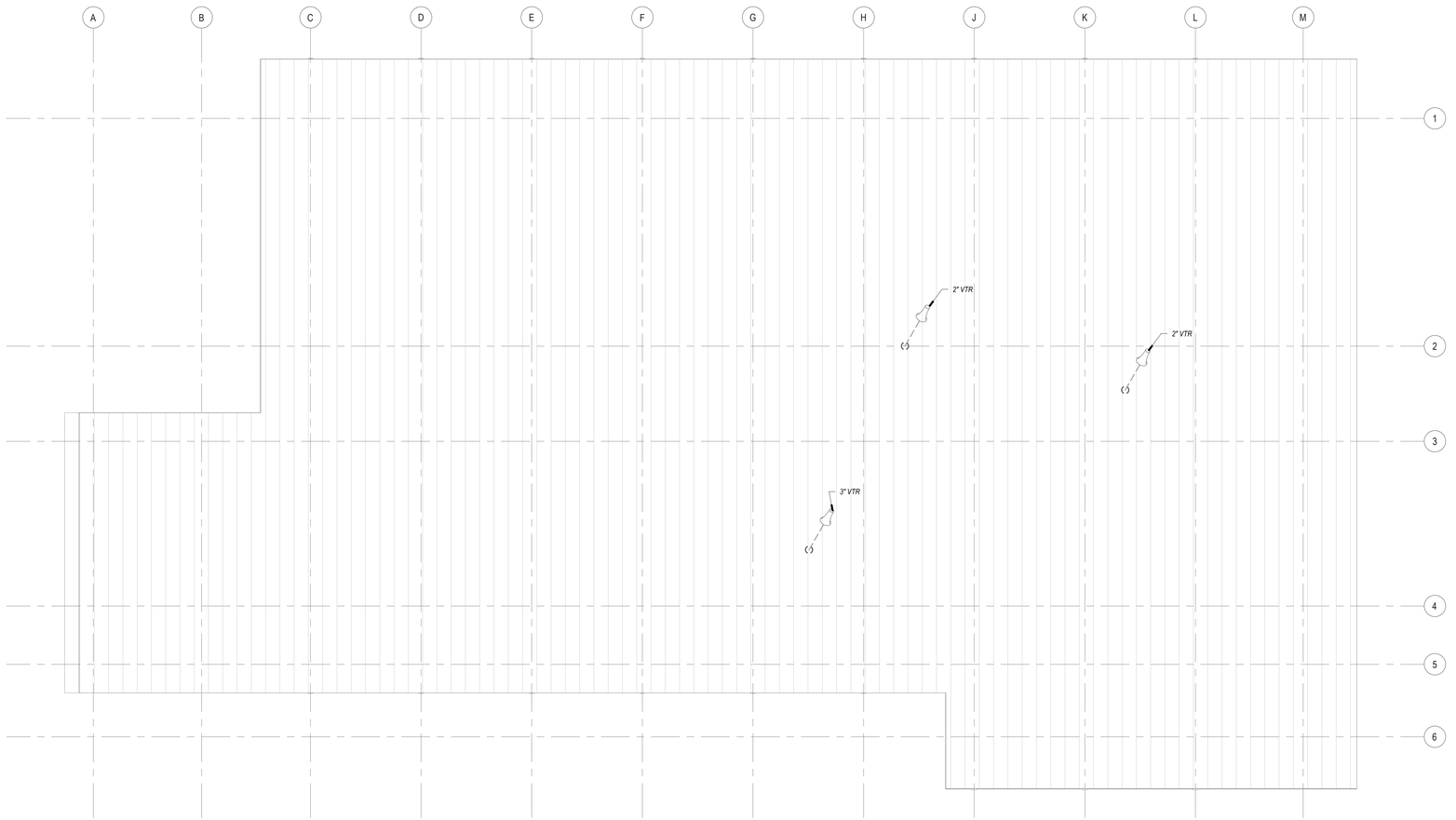

NORTH

PLUMBING ROOF PLAN | SCALE: 1/8" = 1'-0" | 1

GENERAL NOTES

1. FOR LINE TYPES, SYMBOLS & ABBREVIATIONS SEE LEGEND ON P2-0.1.
2. ALL VENTING SHALL HAVE A MIN. OF 10' CLEARANCE FROM ANY FORCED AIR INLET W/ A MIN. OF 3' CLEARANCE ABOVE & A MIN OF 4' CLEARANCE FROM ANY PROPERTY LINE EXCEPT A PUBLIC WAY PER CPC SEC. 906.
3. FOR VENT THRU ROOF SEE DETAIL 3/PD-1.1

REGISTERED PROFESSIONAL ENGINEER — BRIAN M. JOHNSON — No. 33209 — SIGNED 04/18/2024 — MECHANICAL — STATE OF CALIFORNIA

LICENSED ARCHITECT — ROGER CLARKE — No. C-41130 — Exp.10-31-25 — STATE OF CALIFORNIA

STAMPS

AGENCY APPROVAL
File No.: ########/##-#######

MECHANICAL ELECTRICAL AND ENERGY CONSULTANTS

DESIGN WEST ENGINEERING

412 E. Vanderbilt Way
San Bernardino, CA 92408
Tel: 909-890-3700
Fax: 909-890-3770
Email: cadd@designwesteng.com

CONSULTANT BRANDING

RUHNAU CLARKE ARCHITECTS

MOUNT TRANSIT ADMINISTRATION FACILITY: INCREMENT 3: 100% CONSTRUCTION DOCUMENTS

PLUMBING ROOF PLAN — P2-4.1

50801

PROJECT No. :50801
4/18/2024 12:06:44 PM

DRAWN BY: CHECKED BY:

ISSUE No._____ DATE_____ DESCRIPTION_____
ISSUE No._____ DATE_____ DESCRIPTION_____
ISSUE No._____ DATE_____ DESCRIPTION_____
ISSUE No._____ DATE_____ DESCRIPTION_____

REVISION No._____ DATE_____ DESCRIPTION_____
REVISION No._____ DATE_____ DESCRIPTION_____
REVISION No._____ DATE_____ DESCRIPTION_____
REVISION No._____ DATE_____ DESCRIPTION_____

MOUNT TRANSIT ADMINISTRATION FACILITY
INCREMENT 3
170 BUSINESS CENTER DR. BIG BEAR LAKES, CA
BIG BEAR LAKES

PRINTED: 4/18/2024 12:06:44 PM
PATH: BIM 360://50801_MATF_HTMP22-066 Mountain Transit Maintenance Facility_Increment 3_Z24.rvt

WATER HEATER CONNECTION 12

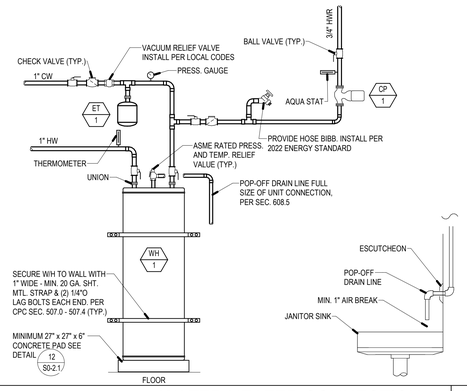

COLD WATER RISER 8

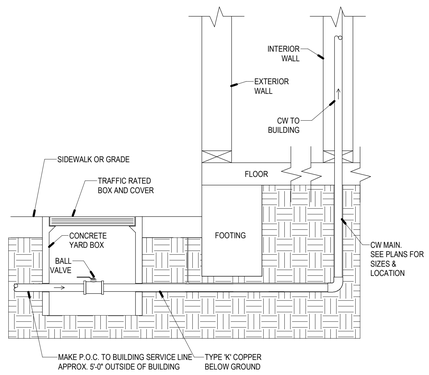

TRAP PRIMER CONNECTION 4

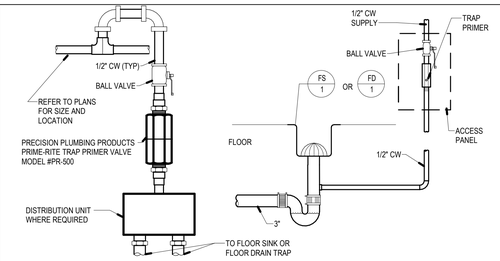

FLOOR DRAIN TRAP PRIMER DISTRIBUTION CHART				
NO. OF DRAINS	DISTRIBUTION UNIT MODEL	MAX. WATER DEL. ON 15 SEC. PRESS. DROP.	USE STAND PIPE STYLE	DISTRIBUTION UNIT IS
1	N/A	2 OZ.	STRAIGHT	NOT REQUIRED
2	DU-2	2 OZ.	STRAIGHT	2 OPENING
3	DU-3	5 OZ.	STRAIGHT	3 OPENING
4	DU-4	5 OZ.	STRAIGHT	4 OPENING

NOTE ACCESS PANEL SHALL NOT BE INSTALLED BEHIND GRAB BARS.

PIPE SUPPORT 1

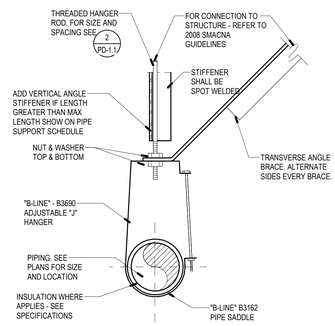

NOTE:

1. DETAIL APPLIES TO PIPES 2" I.D. AND SMALLER
2. REFER TO PIPE SUPPORT SCHEDULE FOR ADDITIONAL INFORMATION

CONDENSATE CONNECTION 13

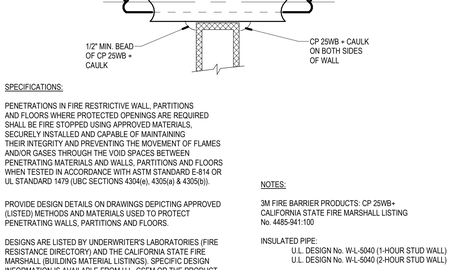

HOSE BIBB 9

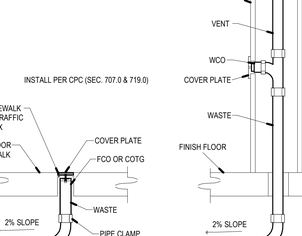

ELECTRONIC TRAP PRIMER 5

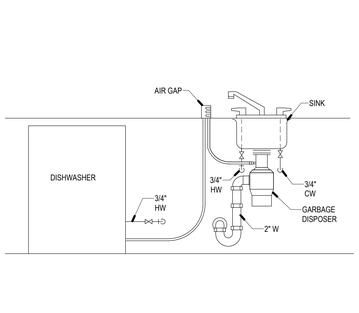

PIPE SUPPORT SCHEDULE 2

PIPE SIZE IN INCHES	MAXIMUM SPAN BETWEEN SUPPORT HANGERS O.C. HORIZ.	VERT	HANGER ROD DIAMETER SIZE	MAX. LENGTH FOR RODS	LONGITUDINAL ANGLE BRACE (2)	VERTICAL HANGER ANGLE (STIFFENER) (1)	TRANSVERSE ANGLE BRACE (2)	BOLT SIZE
COPPER TUBE & PIPE								
1/2 & 3/4	6'-0"	10'-0"	3/8"	37"	1-1/2 x 1-1/2 x 18 GA @ 80'-0" O.C.	1 x 1 x 18GA	1-1/2 x 1-1/2 x 18 GA @ 40'-0" O.C.	3/8"
1 THRU 1-1/2	6'-0"	10'-0"	3/8"	37"	1-1/2 x 1-1/2 x 18 GA @ 80'-0" O.C.	1 x 1 x 18GA	1-1/2 x 1-1/2 x 18 GA @ 40'-0" O.C.	3/8"
2	10'-0"	10'-0"	3/8"	37"	1-1/2 x 1-1/2 x 18 GA @ 80'-0" O.C.	1 x 1 x 18GA	2-1/2 x 2-1/2 x 16 GA @ 40'-0" O.C.	3/8"
STEEL PIPE FOR GAS								
1/2 & 3/4	10'-0"	10'-0"	3/8"	37"	1-1/2 x 1-1/2 x 18 GA @ 80'-0" O.C.	1 x 1 x 18GA	1-1/2 x 1-1/2 x 18 GA @ 40'-0" O.C.	3/8"
1	8'-0"	8'-0"	3/8"	37"	1-1/2 x 1-1/2 x 18 GA @ 80'-0" O.C.	1 x 1 x 18GA	1-1/2" x 1-1/2 x 18 GA @ 40'-0" O.C.	3/8"
1-1/4 THRU 2	10'-0"	10'-0"	3/8"	37"	2-1/2 x 2-1/2 x 16 GA @ 80'-0" O.C.	1 x 1 x 18GA	2-1/2 x 2-1/2 x 16 GA @ 40'-0" O.C.	3/8"
SCHEDULE 40 PVC & ABS DWV (3)								
1/2 & 3/4	4'-0"	10'-0"	3/8"	37"	1-1/2 x 1-1/2 x 18 GA @ 80'-0" O.C.	1 x 1 x 18GA	1-1/2 x 1-1/2 x 18 GA @ 40'-0" O.C.	3/8"
1 THRU 2	4'-0"	10'-0"	3/8"	37"	1-1/2 x 1-1/2 x 18 GA @ 80'-0" O.C.	1 x 1 x 18GA	1-1/2 x 1-1/2 x 18 GA @ 40'-0" O.C.	3/8"
CAST IRON HUBLESS (NO HUB)								
1-1/2 & 2	(A) 15'-0"		3/8"	37"	1-1/2 x 1-1/2 x 18 GA @ 80'-0" O.C.	1 x 1 x 18GA	1-1/2 x 1-1/2 x 18 GA @ 40'-0"	3/8"
3 THRU 6	(A) REFER TO SMACNA GUIDELINES IN SCHEDULE BELOW							
(A) SUPPORT EVERY JOINT. SUPPORT SHALL BE WITHIN 18 INCHES OF JOINT ON BOTH SIDES. (SUPPORT ALSO REQUIRED AT EACH HORIZONTAL JOINT CONNECTION)								
ALL PIPING 2-1/2" AND LARGER PER THE FOLLOWING SMACNA GUIDELINES								
2-1/2	10'-0"	10'-0"	1/2"	25"	2-1/2 x 2-1/2 x 16 GA @ 80'-0" O.C.	2 x 2 x 16GA	2-1/2 x 2-1/2 x 16 GA @ 40'-0" O.C.	3/8"
3	10'-0"	10'-0"	1/2"	25"	2-1/2 x 2-1/2 x 16 GA @ 80'-0"	2 x 2 x 16GA	2-1/2 x 2-1/2 x 16 GA @ 40'-0" O.C.	3/8"
4	10'-0"	10'-0"	5/8"	31"	2-1/2 x 2-1/2 x 16 GA @ 80'-0" O.C.	2 x 2 x 16GA	2-1/2 x 2-1/2 x 16 GA @ 40'-0" O.C.	1/2"
5	10'-0"	10'-0"	5/8"	31"	2-1/2 x 2-1/2 x 16 GA @ 80'-0" O.C.	2 x 2 x 16GA	2-1/2 x 2-1/2 x 16 GA @ 40'-0" O.C.	1/2"
6	10'-0"	10'-0"	5/8"	37"	2-1/2 x 2-1/2 x 16 GA @ 40'-0" O.C.	2 x 2 x 16GA	2-1/2 x 2-1/2 x 16 GA @ 40'-0" O.C.	1/2"

NOTES

(1) VERTICAL ANGLE ONLY REQUIRED WHEN ROD MAXIMUM LENGTH IS EXCEEDED.
(2) BRACING MAY BE OMITTED WHERE TOP OF PIPE IS 12" OR LESS FROM BOTTOM OF HANGER SUPPORT CONNECTED TO STRUCTURE
(3) ALLOW FOR EXPANSION EVERY 30'-0"

CONDENSATE CONNECTION 14

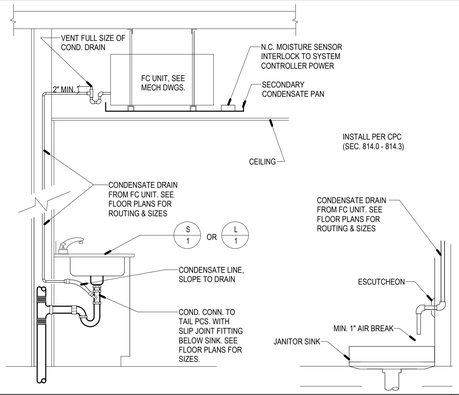

COLD WATER TO APPLIANCE 10

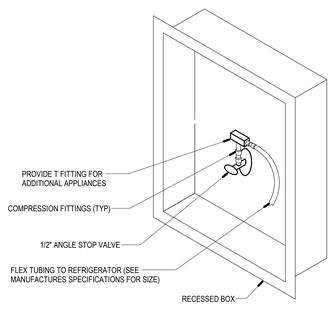

WATER HAMMER ARRESTOR 6

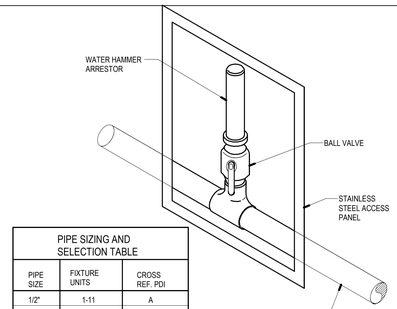

PIPE SIZING AND SELECTION TABLE		
PIPE SIZE	FIXTURE UNITS	CROSS REF. PDI
1/2"	1-11	A
3/4"	12-32	B
1"	33-60	C
1 1/4"	61-113	D
1 1/2"	114-154	E
2"	155-330	F

NOTE:
ACCESS PANEL SHALL NOT BE INSTALLED BEHIND GRAB BARS.

VENT THRU ROOF 3

NOTE:

1. PIPES & VENTS NOT ALLOWED TO PENETRATE ROOF SEAMS.
2. INSTALL VENT IN THE CENTER TO ALLOW BASE OF ROOF JACK TO LAY FLAT ON PANEL. CANNOT ENCOMPASS MORE THAN 75% OF PANEL.
3. ALL VENTING SHALL HAVE A MIN. OF 10' CLEARANCE FROM ANY FORCED AIR INLET W/ A MIN. OF 3' CLEARANCE ABOVE & A MIN. OF 4' CLEARANCE FROM ANY PROPERTY LINE EXCEPT A PUBLIC WAY. PER CPC (SEC. 906)

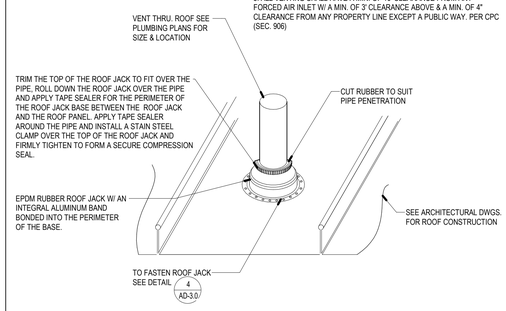

PIPE PENETRATION - FIRE RATED WALL 15

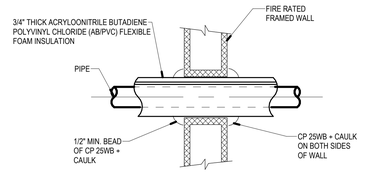

SPECIFICATIONS:

PENETRATIONS IN FIRE RESTRICTIVE WALL, PARTITIONS AND FLOORS WHERE PROTECTED OPENINGS ARE REQUIRED SHALL BE FIRE STOPPED USING APPROVED MATERIALS, SECURELY INSTALLED AND CAPABLE OF MAINTAINING THEIR INTEGRITY AND PREVENTING THE MOVEMENT OF FLAMES AND/OR GASES THROUGH THE VOID SPACES BETWEEN PENETRATING MATERIALS AND WALLS, PARTITIONS AND FLOORS WHEN TESTED IN ACCORDANCE WITH ASTM STANDARD E-814 OR UL STANDARD 1479 (UBC SECTIONS 4304(a), 4305(a) & 4309(b)).

PROVIDE DESIGN DETAILS ON DRAWINGS DEPICTING APPROVED (LISTED) METHODS AND MATERIALS USED TO PROTECT PENETRATING WALLS, PARTITIONS AND FLOORS.

DESIGNS ARE LISTED BY UNDERWRITER'S LABORATORIES (FIRE RESISTANCE DIRECTORY) AND THE CALIFORNIA STATE FIRE MARSHALL (BUILDING MATERIAL LISTINGS). SPECIFIC DESIGN INFORMATION IS AVAILABLE FROM U.L. CSFM OR THE PRODUCT MANUFACTURER.

NOTES:

3M FIRE BARRIER PRODUCTS: CP 25WB+
CALIFORNIA STATE FIRE MARSHALL LISTING No. 4485-941:100

INSULATED PIPE:
U.L. DESIGN No. W-L-5040 (1-HOUR STUD WALL)
U.L. DESIGN No. W-L-5040 (2-HOUR STUD WALL)

CLEAN OUT 11

SINK CONNECTION 7

DESIGN WEST ENGINEERING
412 E. Vanderbilt Way
San Bernardino, CA 92408
Tel: 909-890-3700
Fax: 909-890-3770
Email: cadd@designwesteng.com
CONSULTANT BRANDING

STAMPS

AGENCY APPROVAL
File No.: ########-##-########

RUHNAU CLARKE ARCHITECTS

MOUNT TRANSIT ADMINISTRATION FACILITY: INCREMENT 3: 100% CONSTRUCTION DOCUMENTS

PRINTED: 4/18/2024 12:06:44 PM
PATH: R:_50801\50801_MMATA_MTMP\22-065 Mountain Transit Maintenance Facility\2 Drawings\PD1.1.vwx

PROJECT No. :50801
4/18/2024 12:06:44 PM

DRAWN BY: CHECKED BY:

ISSUE No._____ DATE_____ DESCRIPTION_____
ISSUE No._____ DATE_____ DESCRIPTION_____
ISSUE No._____ DATE_____ DESCRIPTION_____
ISSUE No._____ DATE_____ DESCRIPTION_____

REVISION No. 1 DATE 03/19/24 DESCRIPTION ADDENDUM 1
REVISION No._____ DATE_____ DESCRIPTION_____
REVISION No._____ DATE_____ DESCRIPTION_____
REVISION No._____ DATE_____ DESCRIPTION_____

RUHNAUCLARKE.COM
3775 TENTH STREET, RIVERSIDE CALIFORNIA 92501 (951) 684 4664 / 5751 PALMER WAY, SUITE C, CARLSBAD CALIFORNIA 92010 (760) 438 5899

MOUNT TRANSIT ADMINISTRATION FACILITY
INCREMENT 3
170 BUSINESS CENTER DR. BIG BEAR LAKES, CA
BIG BEAR LAKES

PLUMBING DETAILS

PD-1.1

50801

GENERAL NOTES

1. THESE DRAWINGS AND SPECIFICATIONS ARE INTENDED TO COVER A COMPLETE INSTALLATION OF SYSTEMS. THE OMISSION OR EXPRESSED REFERENCE TO ANY ITEM OF LABOR OR MATERIALS REQUIRED FOR THE PROPER EXECUTION OF THE WORK IN ACCORDANCE WITH PRESENT PRACTICE OF THE TRADE SHALL NOT RELIEVE THE CONTRACTOR FROM PROVIDING SUCH ADDITIONAL LABOR AND MATERIALS.

2. THIS PROJECT IS A COMPLETE A NEW BUILDING CONSTRUCTION. REFER TO THE ARCHITECTURAL DRAWINGS FOR NOTES AND OTHER ELECTRICAL REQUIREMENT NOT SHOWN ON THE ELECTRICAL DRAWINGS. IF THERE ARE OMISSIONS OR CONFLICTS BETWEEN THE ELECTRICAL DOCUMENTS AND THE DOCUMENTS OF OTHER TRADES, CLARIFY THESE POINTS WITH THE ARCHITECT BEFORE SUBMITTING A BID. NO EXTRA PAYMENT WILL BE ALLOWED FOR FAILURE TO OBTAIN THIS INFORMATION.

3. THESE PLANS, SPECIFICATIONS, AND ALL MATERIALS SHALL BE IN FULL ACCORDANCE WITH ALL LEGAL AND INDUSTRY REQUIREMENTS, AND STANDARDS INCLUDING WITHOUT LIMITATION TO THE FOLLOWING:
   - A. CALIFORNIA CODE OF REGULATIONS TITLE 24, PARTS 1 AND 2 (CALIFORNIA BUILDING CODE), 2022 EDITION.
   - B. CALIFORNIA CODE OF REGULATIONS TITLE 24, PART 3 (CALIFORNIA ELECTRICAL CODE), 2022 EDITION.
   - C. CALIFORNIA CODE OF REGULATIONS TITLE 24, PART 6 (CALIFORNIA ENERGY CODE), 2022 EDITION.
   - D. CALIFORNIA CODE OF REGULATIONS TITLE 24, PART 9 (CALIFORNIA FIRE CODE), 2022 EDITION.
   - E. OTHER REGULATING AGENCIES WHICH MAY HAVE AUTHORITY OVER ANY PORTION OF THE WORK, INCLUDING THE STATE OF CALIFORNIA DIVISION OF INDUSTRIAL SAFETY, AND THOSE CODES AND STANDARDS LISTED IN THESE NOTES AND SPECIFICATIONS.
   - F. THE ELECTRICAL SYSTEMS FUNCTIONALITY STANDARDS SET FORTH IN TITLE 7 OF THE CALIFORNIA CIVIL CODE (THE "RIGHT TO REPAIR.
   - G. THE MANUFACTURER'S REQUIREMENTS OR RECOMMENDATIONS FOR ANY INCORPORATED PRODUCTS.
   - H. THE MOST CURRENT APPROVED ISSUES OF ANY NOTED SPECIFICATIONS, CODES AND STANDARDS, INCLUDING SUPPLEMENTS, UNLESS NOTED OTHERWISE.

4. IN USING THE PLANS FOR BIDDING OR CONSTRUCTION PURPOSES, THE CONTRACTOR IS REQUIRED TO REVIEW ALL OF THE PROJECT'S CONSTRUCTION DOCUMENTS AS A WHOLE IN ORDER TO IDENTIFY ALL REQUIREMENTS THAT DIRECTLY OR INDIRECTLY AFFECT ITS PORTION OF THE ELECTRICAL WORK, EVEN REQUIREMENTS LOCATED IN SECTIONS DESIGNATED AS APPLICABLE TO OTHER TRADES. IN CASE OF CONFLICTS, THE CONTRACTOR SHALL EITHER OBTAIN DIRECTION FROM AN APPROPRIATE OWNER REPRESENTATIVE OR OTHERWISE APPLY THE MORE STRINGENT REQUIREMENT.

5. THE PLANS REPRESENT ONLY THE FINISHED ELECTRICAL, FIRE ALARM, AND LOW VOLTAGE SYSTEMS, AND THEY ARE NOT INTENDED TO INDICATE OR REQUIRE ANY CONSTRUCTION MEANS, METHODS, TECHNIQUES, SEQUENCES OR PROCURES.

6. WHEN INTERPRETING THE PLANS, THE FOLLOWING GENERAL RULES APPLY:
   - A. WRITTEN DIMENSIONS SHALL TAKE PRECEDENCE OVER SCALED DRAWINGS.
   - B. SCALED DIMENSIONS AND GRAPHICALLY SHOWN LOCATIONS ARE TO BE CONSIDERED ONLY APPROXIMATE. FIELD VERIFY DIMENSIONS PRIOR TO BID.

7. IN IMPLEMENTING THE PLANS, THE FOLLOWING GENERAL RULES APPLY:
   - A. BECAUSE THE PLANS ARE INTENDED TO SET FORTH THE REQUIREMENTS FOR CONSTRUCTION IN ONLY AN INDUSTRY-STANDARD LEVEL OF QUALITY AND DETAIL, AND THEREFORE ARE INTENDED TO BE SUPPLEMENTED BY APPROPRIATE REQUESTS FOR CLARIFICATION AND INFORMATION, ERRORS AND OMISSIONS ARE TO BE EXPECTED AND ANTICIPATED; AND THE CONTRACTOR IS REQUIRED TO CAREFULLY REVIEW THE PLANS FOR ERRORS AND OMISSIONS AND TO BRING THESE ERRORS AND OMISSIONS TO THE ATTENTION OF AN APPROPRIATE OWNER REPRESENTATIVE IN A TIMELY MANNER AN ASSUMES THE RISK OF THE CONSEQUENCES OF FAILING TO DO SO BEFORE BIDDING OR OTHERWISE PROCEEDING.
   - B. THE CONTRACTOR SHALL REVIEW AND VERIFY ALL DIMENSIONS PRIOR TO STARTING CONSTRUCTION, AND NOTIFY THE ARCHITECT IMMEDIATELY OF ANY DISCREPANCIES OR INCONSISTENCIES.

8. SUBMITTALS WILL BE REVIEWED BY THE ELECTRICAL ENGINEER, IF AT ALL, ONLY PURSUANT TO THE INDUSTRY STANDARD PROTOCOL SET FORTH IN AJA DOCUMENT A201, AND IN NO EVENT WILL THE SUBMITTAL REVIEW PROCESS RELIEVE OR LESSEN THE SUBMITTING CONTRACTOR'S RESPONSIBILITY FOR AN INAPPROPRIATE SUBMITTAL.

9. IN NO EVENT WILL ANY SITE VISITS BY THE ELECTRICAL ENGINEER CONCERN CONSTRUCTION MEANS AND METHODS OR CONSTRUCTION SAFETY, AND ALL SUCH MATTERS SHALL REMAIN THE SOLE RESPONSIBILITY OF THE CONTRACTOR.

10. COPIES OF THE PLANS PROVIDED IN ANY ELECTRONIC FORM ARE SUBJECT TO THE SAME PROVISIONS AS THE OTHER INSTRUMENTS OF SERVICE PREPARED BY OR ON BEHALF OF ELECTRICAL ENGINEER FOR THE PROJECT, INCLUDING WITHOUT LIMITATION THE ENGINEER'S COMMON LAW, STATUTORY OR OTHER RESERVED RIGHTS, INCLUDING COPYRIGHTS. A RECIPIENT IS GRANTED AT MOST A TRANSFERABLE NONEXCLUSIVE LICENSE TO RE-USE THE PLANS SOLELY FOR PROJECT PURPOSES; AND NO RECIPIENT IS AUTHORIZED TO USE OR TO ALLOW THE USE OF ALL OR ANY PORTION OF THESE PLANS FOR NAY OTHER PURPOSE, AND ANY USE FOR ANY OTHER PURPOSE WOULD CONSTITUTE ACTIONABLE PLAGIARISM. ELECTRICAL ENGINEER PROVIDES DOCUMENTS IN AN ELECTRONIC FORM ONLY IN ITS STANDARD FORMATS AND CONVENTIONS AND WITH NO GUARANTEE OF COMPATIBILITY WITH ANY RECIPIENT'S SOFTWARE OR HARDWARE, AND ANY USE WITH OR CONVERSION TO OTHER FORMATS OR CONVENTIONS, OR THE USE WITH ANY PARTICULAR SOFTWARE OR HARDWARE, IS AT THE RECIPIENT'S SOLE RISK.

11. REFER TO THE DRAWINGS AND SHOP DRAWINGS OF OTHER TRADES FOR ADDITIONAL DETAILS WHICH AFFECT THE PROPER INSTALLATION OF THIS

12. BEFORE SUBMITTING A BID, THE CONTRACTOR SHALL FAMILIARIZE HIMSELF WITH ALL FEATURES OF THE EXISTING BUILDINGS AND SITE, AND ALL DRAWINGS WHICH MAY AFFECT THE EXECUTION OF THE WORK. NO EXTRA PAYMENT WILL BE ALLOWED FOR FAILURE TO OBTAIN THIS INFORMATION.

13. PROTECT ALL WORK, MATERIALS AND EQUIPMENT FROM DAMAGE FROM ANY CAUSE WHATEVER AND PROVIDE ADEQUATE AND PROPER STORAGE FACILITIES DURING THE PROGRESS OF THE WORK. PROVIDE FOR THE SAFETY AND GOOD CONDITION OF ALL THE WORK UNTIL FINAL ACCEPTANCE OF THE WORK BY THE OWNER AND REPLACE ALL DAMAGED OR DEFECTIVE WORK, MATERIALS AND EQUIPMENT BEFORE REQUESTING FINAL ACCEPTANCE.

14. THE DRAWINGS INDICATE IN A DIAGRAMMATIC MANNER, THE DESIRED LOCATIONS OF ARRANGEMENT OF THE COMPONENTS OF ELECTRICAL WORK. DETERMINE EXACT CONDUIT ROUTING, CONDUIT BENDS, AUXILIARY JUNCTION BOXES, SUPPORTS, AND UNDEFINED CONSTRUCTION DETAILS AS A JOB CONDITION TO BE INSTALLED IN ACCORDANCE WITH THE APPLICABLE CODE REQUIREMENTS. PROPER JUDGEMENT MUST BE EXERCISED IN EXECUTING THE WORK SO AS TO SECURE THE BEST POSSIBLE INSTALLATION IN THE AVAILABLE SPACE, AND TO OVERCOME LOCAL DIFFICULTIES DUE TO SPACE LIMITATIONS OR INTERFERENCE OF CONDITIONS ENCOUNTERED.

15. IN THE EVENT CHANGES IN THE INDICATED LOCATIONS OR ARRANGEMENTS ARE NECESSARY, DUE TO DEVELOPED CONDITIONS IN THE BUILDING CONSTRUCTION OR REARRANGEMENT OF EQUIPMENT, SUCH CHANGES SHALL BE MADE WITHOUT COST PROVIDING THE CHANGE IS ORDERED BEFORE THE CONDUIT RUNS, ETC., AND WORK DIRECTLY CONNECTED TO SAME IS INSTALLED AND NO EXTRA MATERIALS ARE REQUIRED.

16. THE DRAWINGS INDICATE APPROXIMATE LOCATIONS OF EXISTING CONDUITS. THE EXACT ROUTING SHALL BE VERIFIED IN FIELD AND LENGTH OF CONDUCTORS SHALL BE ADJUSTED TO THE LENGTH REQUIRED.

17. PERFORM CUTTING AND PATCHING ON THE CONSTRUCTION WORK WHICH MAY BE REQUIRED FOR THE PROPER INSTALLATION OF THE ELECTRICAL WORK. PATCHING SHALL BE OF THE SAME MATERIAL, WORKMANSHIP AND FINISH AS SPECIFIED AND ACCURATELY MATCH SURROUNDING WORK TO SATISFACTION OF THE ARCHITECT.

18. PROVIDE ALL EQUIPMENT WITH ENCLOSURES LISTED OR LABELED FOR USE AND LOCATION WHERE SUCH EQUIPMENT IS INSTALLED.

19. PROVIDE UL LISTED FIRE STOP FOR ALL PENETRATIONS THROUGH FIRE RATED WALLS AND CEILINGS TO MAINTAIN ALL FIRE RATINGS. THE FIRE STOP MATERIALS SHALL BE RE-ENTERABLE AND REUSABLE.

20. PROVIDE COORDINATED SHOP DRAWINGS. INDICATING DIMENSIONED LOCATIONS AND SIZES OF ALL CORE DRILLS FOR REVIEW AND APPROVAL. ALL CORE DRILL LOCATIONS SHALL BE VERIFIED AND APPROVED WITH OWNERS REPRESENTATIVE, STRUCTURAL AND ARCHITECT PRIOR TO CORE DRILL. UTILIZE X-RAY EQUIPMENT TO LOCATE AND VERIFY EXISTING STRUCTURAL ELEMENTS WITHIN SLAB.

21. WHERE EXISTING CIRCUITS ARE SHOWN ON PLANS, THE INFORMATION WAS OBTAINED FROM RECORD DRAWINGS. WHERE NEW CIRCUITS ARE SHOWN IN EXISTING PANELBOARD(S), THE CONTRACTOR SHALL VERIFY THAT THE INDICATED CIRCUITS ARE AVAILABLE IN THE EXISTING PANELBOARD(S). THE CONTRACTOR SHALL RELOCATE SUCH CIRCUITS TO AN AVAILABLE SPACE IN THE EXISTING PANELBOARD(S), AND "AS BUILT" PLANS. IF NO CIRCUIT SPACE IS AVAILABLE IN THE EXISTING PANELBOARD(S), THE CONTRACTOR SHALL REPORT THE DISCREPANCY TO THE ARCHITECT.

22. GROUNDING SHALL BE EXECUTED IN ACCORDANCE WITH ALL APPLICABLE CODES AND REGULATIONS, BOTH OF THE STATE OF CALIFORNIA AND LOCAL AUTHORITIES HAVING JURISDICTION.

23. PROVIDE GROUND WIRE IN EACH CONDUIT CONTAINING CIRCUITS FEEDING RECEPTACLES. THE CONDUIT SHALL NOT BE PERMITTED TO SERVE AS THE ONLY ELECTRICAL GROUND RETURN PATH.

24. WHERE CIRCUIT CHANGES OR ADDITIONS OCCUR IN EXISTING PANELBOARDS, UPDATE PANEL DIRECTORY CARDS WITH NEW TYPEWRITTEN CARDS INDICATING DESCRIPTION OF ALL CIRCUITS.

25. PROVIDE HANDLE TIES AT CIRCUIT BREAKERS TO SIMULTANEOUSLY DISCONNECT AL UNGROUNDED CONDUCTORS OF MULTI-WIRE BRANCH CIRCUITS WITH A SHARED NEUTRAL.

26. UNLESS NOTED OTHERWISE ALL 120 VOLT HOMERUNS OVER 100 FEET SHALL BE #10 AWG MINIMUM. ADJUST CONDUIT SIZE ACCORDINGLY.

27. UNLESS NOTED OTHERWISE ALL 277 VOLT HOMERUNS OVER 200 FEET SHALL BE #10 AWG MINIMUM, OVER 300 FEET SHALL BE #8 AWG MINIMUM. ADJUST CONDUIT SIZE ACCORDINGLY.

28. CONDUIT FOR DATA/ VOICE CABLING SHALL COMPLY WITH THE FOLLOWING ADDITIONAL REQUIREMENTS:
   - A. INSIDE BEND RADIUS SHALL BE AT LEAST 10 TIMES ITS INTERNAL DIAMETER.
   - B. PROVIDE PULL BOXES WHENEVER CONDUIT LENGTH EXCEEDS 150 FEET AND WHEN COMBINED BENDS ARE GREATER THAN 180 DEGREES.
   - C. ALL CONDUIT SHALL BE PROVIDED WITH INSULATED BUSHINGS.
   - D. MAINTAIN A MINIMUM CLEARANCE OF 4 FEET FROM MOTORS AND TRANSFORMERS.
   - E. MAINTAIN A MINIMUM CLEARANCE OF 12 INCHES FROM POWER CIRCUITS.
   - F. MAINTAIN A MINIMUM CLEARANCE OF 12 INCHES FROM LIGHT FIXTURES.

29. COORDINATE MOUNTING HEIGHTS OF RECEPTACLES, SWITCHES, A/V DEVICES, SECURITY DEVICES, ETC. MOUNTED ON COMMON WALLS SO THAT ALL OUTLETS ARE MOUNTED TO ALIGN HORIZONTALLY.

30. NOTIFY THE ARCHITECT IN WRITING WHEN INSTALLATION IS COMPLETE AND THAT A FINAL INSPECTION OF THIS WORK CAN BE PERFORMED. IN THE EVENT DEFECTS OR DEFICIENCIES ARE FOUND DURING THIS FINAL INSPECTION, THEY SHALL BE CORRECTED TO THE SATISFACTION OF THE ARCHITECT BEFORE FINAL ACCEPTANCE CAN BE ISSUED.

31. SHOULD, AT ANY GIVEN TIME DURING CONSTRUCTION, THE FIRE ALARM SYSTEM IS INOPERABLE, THE CONTRACTOR SHALL PROVIDE A FIRE WATCH DURING THE ENTIRE DOWNTIME. INCLUDE ALL COSTS IN BID TO COMPLY WITH THIS PROVISION.

FIRE ALARM SYSTEM SYMBOLS

- FIRE ALARM SMOKE DETECTOR ON FLUSH CEILING OUTLET BOX.
- HEAT DETECTOR ON SURFACE OUTLET BOX LOCATED IN ATTIC SPACE.
- FIRE ALARM VISUAL ON FLUSH WALL OUTLET BOX AT +80".
- FIRE ALARM VISUAL STROBE ON FLUSH CEILING MOUNTED OUTLET BOX.
- FIRE ALARM HORN/STROBE- ON FLUSH CEILING MOUNTED OUTLET BOX.
- FIRE ALARM CONTROL PANEL AND/OR EXPANDER PANEL SURFACE MOUNTED ON WALL + 72" A.F.F. TO TOP OF CABINET.
- FIRE ALARM PULL STATION ON FLUSH WALL MOUNTED OUTLET BOX, AT +48"
- WP — FIRE ALARM EXTERIOR WEATHERPROOF HORN ON FLUSH WALL MOUNTED OUTLET BOX, AT +90".

FIRE ALARM SYSTEM GENERAL NOTE

1. THE FIRE ALARM SYSTEM IS NOT BEING PERMITTED VIA THIS BUILDING PERMIT AND IS A DEFERRED SUBMITTAL. ANY NOTES REFERENCING A FIRE ALARM AND DEVICES ARE NOT BEING REVIEWED OR PERMITTED AND ARE SOLELY AS REFERENCE.

ELECTRICAL MOUNTING REACH RANGES

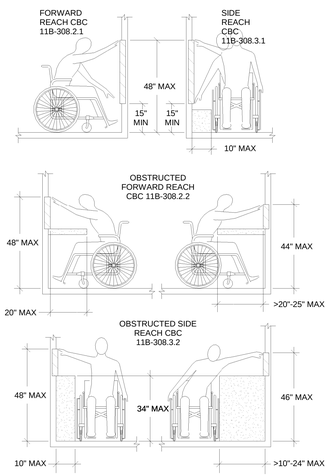

SYMBOL LIST

(ALL SYMBOLS NOT NECESSARILY USED ON THESE DRAWINGS) ALL SYMBOL DESCRIPTIONS ARE SUBJECT TO MODIFICATION AS NOTED ON THE DRAWINGS. VERIFY EXACT LOCATIONS AND HEIGHTS OF OUTLETS WITH ARCHITECTURAL INTERIOR ELEVATIONS PRIOR TO ROUGH-IN.

K	INTRUSION DETECTION SYSTEM KEY PAD, ON FLUSH WALL MOUNTED OUTLET BOX, +45". WITH 1" CONDUIT TO ACCESSIBLE CEILING SPACE, U.N.O.
ID	INTRUSION DETECTION SYSTEM - 1"C., WITH CONDUCTORS AS SPECIFIED.
T1	TELEPHONE SYSTEM 3/4"C. WITH ONE (1)SET OF SPECIFIED CONDUCTORS. T2 - 1"C. WITH TWO (2)SET OF SPECIFIED CONDUCTORS. T3 - 1 1/4"C. WITH THREE (3)SET OF SPECIFIED CONDUCTORS. T4 - 1 1/2"C. WITH FOUR (4)SET OF SPECIFIED CONDUCTORS.
P1	PUBLIC ADDRESS SYSTEM - 3/4"C.WITH ONE (1)SET OF SPECIFIED CONDUCTORS. P2 - 3/4"C. WITH TWO (2)SET OF SPECIFIED CONDUCTORS. P3 - 1"C. WITH THREE (3)SET OF SPECIFIED CONDUCTORS. P4 - 1"C. WITH FOUR (4)SET OF SPECIFIED CONDUCTORS. P5 - 1 1/4"C. WITH FIVE (5)SET OF SPECIFIED CONDUCTORS. P6 - 1 1/4"C. WITH FIVE (5)SET OF SPECIFIED CONDUCTORS.
D1	COMPUTER/DATA PROCESSING SYSTEM - 3/4"C. WITH (1) SET OF SPECIFIED CABLING. D2 - 1"C. WITH (2) SETS OF SPECIFIED CABLING. D3 - 1"C. WITH (3) SETS OF SPECIFIED CABLING. D4 - 1 1/4"C. WITH (4) SETS OF SPECIFIED CABLING. D5 - 1 1/4"C. WITH (5) SETS OF SPECIFIED CABLING. D6 - 1 1/2"C. WITH (6) SETS OF SPECIFIED CABLING.
AV	AUDIO/ VISUAL SYSTEM - 1"C. WITH SPECIFIED CONDUCTORS.
M1	MICROPHONE SYSTEM - 3/4"C. WITH CONDUCTORS AS SPECIFIED. M2 - 1"C. WITH CONDUCTORS AS SPECIFIED. M3 - 1 1/4"C. WITH CONDUCTORS AS SPECIFIED.
P1	AUTONOMOUS PUBLIC ADDRESS SYSTEM CONDUCTORS-3/4"C. WITH(1) SET OF SPECIFIED CABLING. P2 - 3/4"C. WITH (2) SETS OF SPECIFIES CABLING. P3 - 1"C. WITH (3) SETS OF SPECIFIES CABLING. P4 - 1 1/4"C. WITH (4) SETS OF SPECIFIES CABLING.
LC	LIGHTING SYSTEM - 1"C. WITH SPECIFIED CONDUCTORS.
PS	PRIORITY PAGE SENSOR KIT IN A SINGLE GANG OUTLET BOX LOCATED ABOVE ACCESSIBLE CEILING.
PJ UST	WALL MOUNT ULTRA SHORT THROW PROJECTOR. VERIFY EXACT MOUNTING LOCATION PRIOR TO INSTALLATION.
PJ LT	CEILING MOUNT LONG THROW PROJECTOR. VERIFY EXACT MOUNTING LOCATION PRIOR TO INSTALLATION.
S	CEILING MOUNTED SPEAKER AND GRILLE ON FLUSH IN CEILING BACK BOX. PROVIDE ONE SET OF CAT6A CABLE ON J-HOOKS AND CONDUIT SLEEVES TO BUILDING DATA CABINET/RACK AND CONNECT AS REQUIRED.
S	FLUSH WALL MOUNTED SPEAKER AND GRILLE WITH BACK BOX FOR PUBLIC ADDRESS SYSTEM. CABLE ROUTED VIA CONDUIT SLEEVES TO BUILDING DATA CABINET/RACK AND CONNECT AS REQUIRED.
WP S	EXTERIOR SPEAKER AND VANDELPROOF GRILLE ON FLUSH IN WALL BACKBOX, +90" WITH 1" CONDUIT TO ACCESSIBLE CEILING SPACE. PROVIDE SPECIFIED CABLE FROM SPEAKER THROUGH CONDUIT, J-HOOKS AND CONDUIT SLEEVES TO BUILDING'S PA BACKBOARD IN DATA ROOM.
XR	LIGHTING CONTROL SYSTEM OCCUPANCY MOTION SENSOR ON FLUSH CEILING MOUNTED OUTLET BOX.
CS	STANDARD SIZE COMBINATION IP/SPEAKER UNIT ON FLUSH IN WALL BACKBOX,+90" AFF WITH 1" CONDUIT TO ACCESSIBLE CEILING SPACE U.N.O. PROVIDE TWO (2) SETS OF CAT 6A CABLES THROUGH CONDUIT, J-HOOKS AND CONDUIT SLEEVES TO BUILDING MDF/IDF CABINET FOR INFORMATION.
C	IP CLOCK ON FLUSH IN WALL BACKBOX, 90" AFF WITH 1" CONDUIT ACCESSIBLE CEILING SPACE U.N.O. PROVIDE ONE (1) CAT 6A CABLE THROUGH CONDUIT,J-HOOKS AND CONDUIT SLEEVES TO BUILDING MDF/IDF CABINET FOR TERMINATION.
	INTRUSION DETECTION SYSTEM MOTION SENSOR, ON FLUSH WALL MOUNTED OUTLET BOX, +90". WITH 1" CONDUIT TO ACCESSIBLE CEILING SPACE, U.N.O.
	INTRUSION DETECTION SYSTEM MOTION SENSOR, ON FLUSH WALL MOUNTED OUTLET BOX, +90". WITH 1" CONDUIT TO CABLE TRAY, U.N.O.
RC	RECEPTACLE CONTROLLER. SEE LIGHTING CONTROL DRAWINGS FOR ADDITIONAL INFORMATION.
RC	ROOM LIGHTING CONTROLLER ON FLUSH WALL MOUNTED OUTLET BOX AT +90"A.F.F.WITH COVER PLATE. U.N.O. VERIFY TYPE OF THE BOX.
RC	ROOM LIGHTING CONTROLLER IN ACCESSIBLE CEILING SPACE.
DDV	DOUBLE DATA DROP LOCATION ON FLUSH MOUNTED OUTLET BOX WITH CONNECTOR AND 1" CONDUIT STUB-OUT TO ACCESSIBLE CEILING SPACE. PROVIDE CONNECTOR AND 20 FEET OF SLACK CABLES.
WI	WIRELESS MIC IR RECEIVER (EXTRON VOICELIFT) MOUNTED ON A SINGLE GANG FLUSH IN CEILING OUTLET BOX.
WP C	STANDARD SIZE COMBINATION IP/SPEAKER UNIT ON FLUSH IN WALL BACKBOX,+90" AFF WITH 1" CONDUIT TO FLUSH WALL MOUNTED WEATHERPROOF OUTLET BOX WITH DATA CONNECTOR AND 3 FEET OF SLACK CABLE INSIDE OUTLET BOX FOR FUTURE CONNECTION TO IP BASED SURVEILLANCE CAMERA EQUIPMENT BY DISTRICT.
C	DOUBLE DATA DROP LOCATION WITH CONNECTOR AND 20 FEET OF SLACK CABLE LOCATED IN ACCESSIBLE CEILING SPACE ADJACENT TO EXTERIOR WALL OF BUILDING FOR EXTERIOR CCTV CAMERA EQUIPMENT. CABLE SHALL BE COILED-UP AND BUNDLED AT THE LOCATION INDICATED FOR FUTURE CONNECTION TO EXTERIOR CCTV CAMERA EQUIPMENT BY THE DISTRICT.
C	COMPUTER/DATA OUTLET, WITH A SINGLE COMPUTER CONNECTOR, ON FLUSH WALL MOUNTED OUTLET BOX . PROVIDE 1" CONDUIT TO ACCESSIBLE CEILING SPACE UNLESS NOTED OTHERWISE, "C" INDICATES HORIZONTAL IN FLUSH WALL MOUNTED OUTLET BOX +6" ABOVE COUNTER SPLASH.
M	COMPUTER OUTLET WITH A SINGLE COMPUTER CONNECTOR, AND ONE HDMI CONNECTOR ON FLUSH MOUNTED OUTLET BOX, INSTALLED BEHIND FLAT SCREEN TV AT +44" UNLESS NOTED OTHERWISE. VERIFY EXACT LOCATION OF OUTLET PRIOR TO ROUGH-IN. PROVIDE 1" CONDUIT FROM OUTLET INTO ACCESSIBLE CEILING SPACE FOR EXTENSION OF DATA AND HDMI CABLES.
C	COMPUTER/DATA OUTLET, WITH TWO (2) COMPUTER CONNECTORS, ON FLUSH WALL MOUNTED OUTLET BOX . PROVIDE 1" CONDUIT TO CABLE TRAY, UNLESS NOTED OTHERWISE, "C" INDICATES HORIZONTAL IN FLUSH WALL MOUNTED OUTLET BOX +6" ABOVE COUNTER SPLASH.
C	COMPUTER/DATA OUTLET, WITH FOUR (4) COMPUTER CONNECTORS, ON FLUSH WALL MOUNTED OUTLET BOX PROVIDE 1 1/4" CONDUIT TO ACCESSIBLE CEILING SPACE, UNLESS NOTED OTHERWISE, "C" INDICATES HORIZONTAL IN FLUSH WALL MOUNTED OUTLET BOX +6" ABOVE COUNTER SPLASH.
C	COMPUTER OUTLET WITH THREE (3) COMPUTER CONNECTORS, ON FLUSH WALL MOUNTED OUTLET BOX AT + 18", UNLESS NOTED OTHERWISE. PROVIDE 1" CONDUIT TO ACCESSIBLE CEILING SPACE. "C" INDICATES HORIZONTAL FLUSH WALL MOUNTED OUTLET BOX AT +6" ABOVE COUNTER SLASH.
P	COMPUTER OUTLET WITH ONE (1) COMPUTER CONNECTOR, ON SURFACE MOUNTED OUTLET BOX LOCATED IN ACCESSIBLE CEILING SPACE FOR PROJECTOR EQUIPMENT.
R	COMPUTER OUTLET, "R" INDICATES RECESSED FLOOR BOX WITH MULTI-SERVICE FITTINGS. PROVIDE ONE (1) COMPUTER CONNECTOR WITH REQUIRED MOUNTING HARDWARE AND COVERPLATES.
R	COMPUTER OUTLET, "R" INDICATES RECESSED FLOOR BOX WITH MULTI-SERVICE FITTINGS. PROVIDE TWO (2) COMPUTER CONNECTORS WITH REQUIRED MOUNTING HARDWARE AND COVERPLATES.
R	COMPUTER/VOICE OUTLET, "R" INDICATES RECESSED FLOOR BOX WITH MULTI-SERVICE FITTINGS. PROVIDE ONE (1) COMPUTER CONNECTOR AND ONE (1) VOICE CONNECTOR WITH REQUIRED MOUNTING HARDWARE AND COVERPLATES.
	COMPUTER/VOICE OUTLET WITH ONE (1) COMPUTER CONNECTOR AND ONE (1) VOICE CONNECTOR, ON FLUSH WALL MOUNTED OUTLET BOX AT + 18", UNLESS NOTED OTHERWISE. PROVIDE 1" CONDUIT TO ACCESSIBLE CEILING SPACE. "C" INDICATES HORIZONTAL FLUSH WALL MOUNT MOUNTED OUTLET BOX +6" ABOVE COUNTER SPLASH.
	COMPUTER/VOICE OUTLET WITH TWO (2) COMPUTER CONNECTORS AND ONE (1) VOICE CONNECTOR, ON FLUSH WALL MOUNTED OUTLET BOX AT + 18", UNLESS NOTED OTHERWISE. PROVIDE 1" CONDUIT TO ACCESSIBLE CEILING SPACE. "C" INDICATES HORIZINTAL FLUSH WALL MOUNT MOUNTED OUTLET BOX +6" ABOVE COUNTER SPLASH.
VC	VIDEO CONTROL OUTLET WITH TOUCH SCREEN CONTROLLER ON 3-GANG WALL PLASTER RING AT +45", UNLESS NOTED OTHERWISE. PROVIDE 1 1/4" CONDUIT FROM THE BOX TO ACCESSIBLE CEILING.
AV	AUDIO VIDEO OUTLET WITH AUDIO VIDEO INPUTS IN FLUSH WALL MOUNTED OUTLET BOX AT +18", UNLESS NOTED OTHERWISE. PROVIDE 1 1/4" CONDUIT FROM THE BOX TO ACCESSIBLE CEILING.
AV	AUDIO/VIDEO SYSTEM FLUSH IN CEILING SPEAKER (EXTRON # FF120). VERIFY EXACT LOCATION OF SPEAKER IN ROOM WITH MANUFACTURER PRIOR TO INSTALLATION.
ALS	ASSISTIVE LISTENING OUTLET BOX AT 45" FOR AUDIO/VIDEO SYSTEM SOUND OUTPUT TO ALS TRANSMITTER., PROVIDE 1" CONDUIT FROM THE BOX TO ACCESSIBLE CEILING.
VS	AUDIO/VISUAL SYSTEM MOUNTING ASSEMBLY AND EQUIPMENT ENCLOSURE. MOUNTED FLUSH IN CEILING. VERIFY EXACT LOCATION PRIOR TO INSTALLATION.
WAP	CFCI DOUBLE DATA OUTLET WITH TWO SETS OF CAT6A CABLING TO NEAREST IDF CABINET VIA CABLE TRAY FOR WIRELESS ACCESS POINT. PROVIDE WIRELESS DEVICES MODEL MERAKI MR52. VERIFY THE TYPE WITH THE DISTRICT.
WAP	DATA DROP LOCATION WITH CONNECTORS AND 15 FEET OF SLACK CABLES LOCATED IN ACCESSIBLE CEILING SPACE ADJACENT TO EXTERIOR WALL OF BUILDING FOR EXTERIOR WIRELESS ACCESS POINT EQUIPMENT. PROVIDE TWO SETS OF DATA CABLES TO BUILDING'S IDF RACK/CABINET. PROVIDE WIRELESS DEVICES MERAKI MR84. VERIFY THE TYPE WITH THE DISTRICT.

	LIGHTING FIXTURE, RECESS MOUNTED, WITH OUTLET BOX.
	LIGHTING FIXTURE, SURFACE OR PENDANT MOUNTED ON FLUSH MOUNTED OUTLET BOX.
	LIGHTING FIXTURE, SURFACE, CHAIN OR PENDANT MOUNTED ON FLUSH MOUNTED OUTLET BOX.
	LIGHTING FIXTURE, SURFACE OR PENDANT MOUNTED, ON FLUSH CEILING MOUNTED OUTLET BOX.
	LIGHTING FIXTURE, RECESS MOUNTED, WITH OUTLET BOX.
	LIGHTING FIXTURE, SURFACE OR FLUSH MOUNTED AS INDICATED ON FIXTURE SCHEDULE, ON WALL MOUNTED OUTLET BOX, +90". STEM INDICATES WALL MOUNTED OUTLET BOX, TYPICAL.
	OUTLET ON EMERGENCY OR NIGHT LIGHT LIGHTING CIRCUIT.
	POST TOP LIGHTING STANDARD, POLE MOUNTED LUMINAIRE AND POLE SUPPORT BASE.
	LIGHTING FIXTURE WITH LAMPS ON NORMAL AND EMERGENCY LIGHTING CIRCUITS, PROVIDE SEPARATE LAMP BALLASTS AS REQUIRED.
E	LIGHTING FIXTURE RECESSED MOUNTED WITH OUTLET BOX AND REMOTE MOUNTED JUNCTION BOX CONCEALED ABOVE ACCESSIBLE CEILING. PROVIDE FLEXIBLE CONDUIT CONNECTION 6 FT. MAXIMUM LENGTH, 1/2" DIAMETER MINIMUM, FROM JUNCTION BOX TO FIXTURE OUTLET. PROVIDE CONDUCTORS IN CONDUIT, QUANTITY AS REQUIRED FOR INDICATED CIRCUITS AND SWITCHING CONTROLS, #12 (AWG) MINIMUM.
	EXIT SIGN SINGLE FACE, ON FLUSH CEILING MOUNTED OUTLET BOX. ARROW INDICATES DIRECTIONAL ARROW ON EXIT SIGN FACE.
	EXIT SIGN DOUBLE FACE, ON FLUSH CEILING MOUNTED OUTLET BOX.
	EXIT SIGN, ON FLUSH WALL MOUNTED OUTLET BOX, +90".
OS	LIGHTING CONTROL OCCUPANCY MOTION SENSOR ON FLUSH CEILING MOUNTED OUTLET BOX. MOUNT CENTERED IN CEILING TILE.
LC	LIGHTING LEVEL CONTROLLER (PHOTO SENSOR) ON FLUSH CEILING MOUNTED OUTLET BOX. MOUNT CENTERED IN CEILING TILE.
S 2,P T A,B	SINGLE POLE TOGGLE SWITCH, ON FLUSH WALL MOUNTED OUTLET BOX, +45". INSTALL MULTIPLE SWITCHES UNDER COMMON COVER PLATE. SUBSCRIPT OR SUPERSCRIPT AT SWITCH SYMBOL INDICATES THE FOLLOWING: 2 - DOUBLE POLE 3 - THREE WAY 4 - FOUR WAY P - PILOT LIGHT M - MANUAL MOTOR STARTERS K - KEY OPERATED R - SPDT MOMENTARY CONTACT RELAY SWITCH V - VAPOR PROOF a,b,c,d, ETC. - MULTIPLE SWITCHES WITH IDENTIFICATION OF OUTLET CONTROLLED
2 100	FIXTURE SCHEDULE DESIGNATION: "2" INDICATES FIXTURE TYPE, "100" INDICATES FIXTURE TOTAL WATTAGE.
	LIGHTING CONTROL OCCUPANCY SENSOR ON FLUSH WALL MOUNTED OUTLET BOX, +45".
	SWITCH FOR CONTROL OF LOW VOLTAGE LIGHTING RELAY(S), ON FLUSH WALL MOUNTED OUTLET BOX, +45". INSTALL MULTIPLE SWITCHES UNDER COMMON COVER PLATE.
	SINGLE GANG WALL TOGGLE SWITCH ON WALL MOUNTED OUTLET BOX, +45"

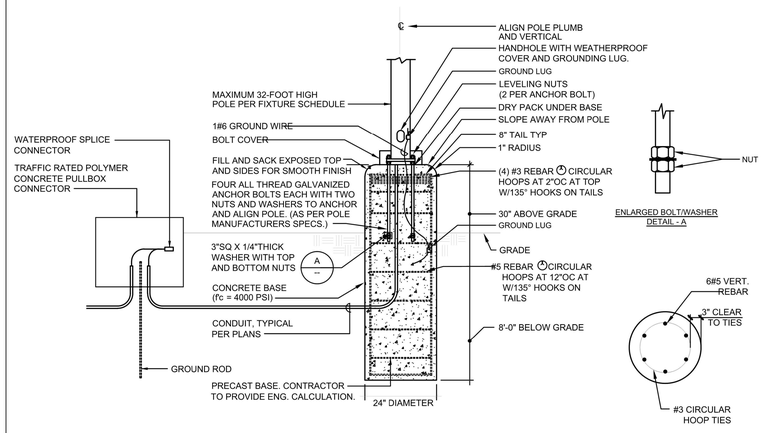

RAISED POLE BASE DETAIL (MAX 32' POLE) N.T.S. 6

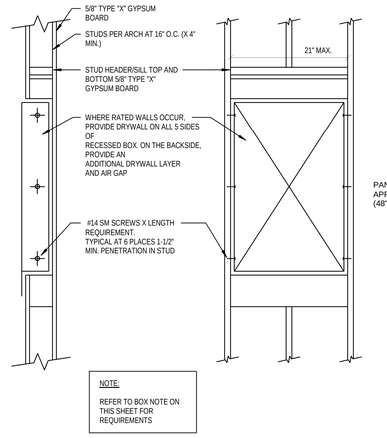

PANELBOARD/ TERMINAL CABINET ANCHORAGE-FLUSH N.T.S. 3

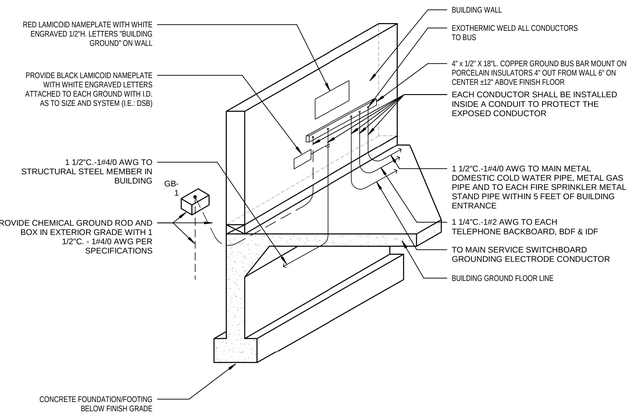

BUILDING ELECTRICAL SERVICE GROUND BUS N.T.S. 5

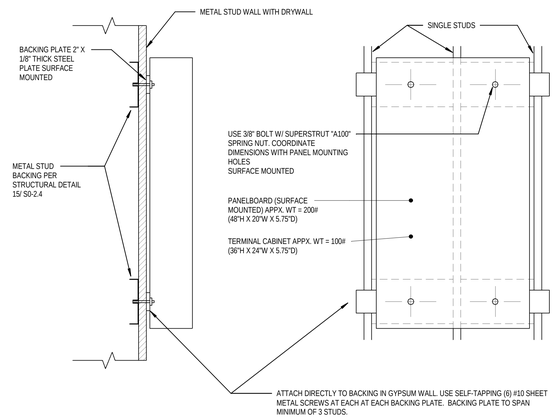

SURFACE MOUNTED PANELBOARD/TERMINAL CABINET ANCHORAGE N.T.S. 4

1. FLOOR OR WALL ASSEMBLY MIN 4-1/2 IN. THICK REINFORCED LIGHTWEIGHT OR NORMAL WEIGHT (100-150 PCF) CONCRETE. WALL MAY ALSO BE CONSTRUCTED OF ANY UL CLASSIFIED CONCRETE BLOCKS*. MAX DIAM OF OPENING IS 32 IN.

2. METALLIC SLEEVE (OPTIONAL) NOM 32 IN. DIAM (OR SMALLER) SCHEDULE 40 (OR HEAVIER) STEEL SLEEVE CAST OR GROUTED INTO FLOOR OR WALL ASSEMBLY, FLUSH WITH FLOOR OR WALL SURFACES.

3. THROUGH-PENETRANT ONE METALLIC PIPE OR CONDUIT TO BE INSTALLED EITHER CONCENTRICALLY OR ECCENTRICALLY WITHIN THE FIRESTOP SYSTEM. THE ANNULAR SPACE BETWEEN PIPE OR CONDUIT AND PERIPHERY OF OPENING SHALL BE MIN 0 IN. (POINT CONTACT) TO MAX 1-7/8 IN. PIPE MAY BE INSTALLED WITH CONTINUOUS POINT CONTACT. PIPE OR CONDUIT TO BE RIGIDLY SUPPORTED ON BOTH SIDES OF FLOOR OR WALL ASSEMBLY. THE FOLLOWING TYPES AND SIZES OF METALLIC PIPES OR CONDUITS MAY BE USED:

   A. STEEL PIPE: NOM 30 IN. DIAM (OR SMALLER) SCHEDULE 10 (OR HEAVIER) STEEL PIPE.

   B. IRON PIPE: NOM 30 IN. DIAM (OR SMALLER) CAST OR DUCTILE IRON PIPE.

   C. COPPER PIPE: NOM 6 IN. DIAM (OR SMALLER) REGULAR (OR HEAVIER) COPPER PIPE.

   D. COPPER TUBING: NOM 6 IN. DIAM (OR SMALLER) TYPE L (OR HEAVIER) COPPER TUBING.

   E. CONDUIT: NOM 6 IN. DIAM (OR SMALLER) STEEL CONDUIT.

   F. CONDUIT: NOM 4 IN. DIAM (OR SMALLER) STEEL ELECTRICAL METALLIC TUBING (EMT).

4. FIRE STOP SYSTEM THE FIRESTOP SYSTEM SHALL CONSIST OF THE FOLLOWING:

   A. PACKING MATERIAL MIN 4 IN. THICKNESS OF MIN 4 PCF MINERAL WOOL BATT INSULATION FIRMLY PACKED INTO OPENING AS A PERMANENT FORM. PACKING MATERIAL TO BE RECESSED FROM TOP SURFACE OF FLOOR OR FROM BOTH SURFACES OF WALL AS REQUIRED TO ACCOMMODATE THE REQUIRED THICKNESS OF FILL MATERIAL.

   B. FILL, VOID OR CAVITY MATERIAL* -- SEALANT MIN 1/4 IN. THICKNESS OF FILL MATERIAL APPLIED WITHIN THE ANNULUS, FLUSH WITH TOP SURFACE OF FLOOR OR WITH BOTH SURFACES OF WALL. AT THE POINT OR CONTINUOUS CONTACT LOCATIONS BETWEEN PIPE AND CONCRETE, A MIN 1/4 IN. DIAM BEAD OF FILL MATERIAL SHALL BE APPLIED AT THE CONCRETE/PIPE INTERFACE ON THE TOP SURFACE OF FLOOR AND ON BOTH SURFACES OF WALL.

   HILTI CONSTRUCTION CHEMICALS, DIV OF
   HILTI INC - FS-One Sealant
   *Bearing the UL Classification Marking

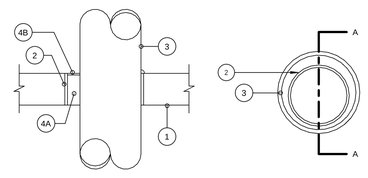

SECTION A-A

System No. C-AJ-1226
F RATING = 3-HR.
T RATING = 0-HR.

L Rating At Ambient - Less than 1 CFM/Sq Ft
L Rating At 400 F - 4 CFM/Sq Ft

FIRESTOP ALL THROUGH WALL POWER, TELECOM AND FIRE ALARM CONDUIT PENETRATIONS

RATED CONCRETE FLOOR/WALL SINGLE CONDUIT FIRE STOP N.T.S. 2

1. WALL ASSEMBLY -- THE 1 OR 2 HR FIRE-RATED GYPSUM WALLBOARD/STUD WALL ASSEMBLY SHALL BE CONSTRUCTED THE MATERIALS AND IN THE MANNER SPECIFIED IN OF THE INDIVIDUAL U300 OR U400 SERIES WALL AND PARTITION DESIGNS IN THE UL FIRE RESISTANCE DIRECTORY AND SHALL INCLUDE THE FOLLOWING CONSTRUCTION FEATURES:

1A. STUDS -- WALL FRAMING MAY CONSIST OF EITHER WOOD STUDS OR STEEL CHANNEL STUDS. WOOD STUDS TO CONSIST OF NOM 2 BY 4 IN. LUMBER SPACED 16 IN. OC. STEEL STUDS TO BE MIN 2-1/2 IN. WIDE AND SPACED MAX 24 IN. OC. WHEN STEEL STUDS ARE USED AND THE DIAM OF OPENING EXCEEDS THE WIDTH OF STUD CAVITY, THE OPENING SHALL BE FRAMED ON ALL SIDES USING LENGTHS OF STEEL STUD INSTALLED BETWEEN THE VERTICAL STUDS AND SCREW-ATTACHED TO THE STEEL STUDS AT EACH END. THE FRAMED OPENING IN THE WALL SHALL BE 4 TO 6 IN. WIDER AND 4 TO 6 IN. HIGHER THAN THE DIAM. OF THE PENETRATING ITEM SUCH THAT WHEN THE PENETRATING ITEM IS INSTALLED IN THE OPENING, A 2 TO 3 IN. CLEARANCE IS PRESENT BETWEEN THE PENETRATING ITEM AND THE FRAMING ON ALL FOUR SIDES.

1B. GYPSUM BOARD* -- 5/8 IN. THICK, 4 FT WIDE WITH SQUARE OR TAPERED EDGES. THE GYPSUM BOARD TYPE, THICKNESS, NUMBER OF LAYERS, FASTENER TYPE AND SHEET ORIENTATION SHALL BE AS SPECIFIED IN THE INDIVIDUAL U300 OR U400 SERIES DESIGN IN THE UL FIRE RESISTANCE DIRECTORY. MAX DIAM OF OPENING IS 32-1/4 IN. FOR STEEL STUD WALLS. MAX DIAM OF OPENING IS 14-1/2 IN. FOR WOOD STUD WALLS. THE F RATING OF THE FIRESTOP SYSTEM IS EQUAL TO THE FIRE RATING OF THE WALL ASSEMBLY.

2. THROUGH-PENETRANTS -- ONE METALLIC PIPE, CONDUIT OR TUBING TO BE INSTALLED EITHER CONCENTRICALLY OR ECCENTRICALLY WITHIN THE FIRESTOP SYSTEM. THE ANNULAR SPACE SHALL BE MIN 0 IN. TO MAX 2-1/4 IN. PIPE MAY BE INSTALLED WITH CONTINUOUS POINT CONTACT. PIPE, CONDUIT OR TUBING MAY BE INSTALLED AT AN ANGLE NOT GREATER THAN 45 DEGREES FROM PERPENDICULAR. PIPE, CONDUIT OR TUBING TO BE RIGIDLY SUPPORTED ON BOTH SIDES OF WALL ASSEMBLY. THE FOLLOWING TYPES AND SIZES OF METALLIC PIPES, CONDUITS OR TUBING MAY BE USED:

   A. STEEL PIPE -- NOM 30 IN DIAM (OR SMALLER) SCHEDULE 10 (OR HEAVIER) STEEL PIPE.

   B. IRON PIPE -- NOM 30 IN. DIAM (OR SMALLER) CAST OR DUCTILE IRON PIPE.

   C. CONDUIT -- NOM 4 IN DIAM (OR SMALLER) STEEL ELECTRICAL METALLIC TUBING OR 6 IN. DIAM STEEL CONDUIT.

   D. COPPER TUBING -- NOM 6 IN. DIAM (OR SMALLER) TYPE L (OR HEAVIER) COPPER TUBING.

   E. COPPER PIPE -- NOM 6 IN. DIAM (OR SMALLER) REGULAR (OR HEAVIER) COPPER PIPE.

3. FILL, VOID OR CAVITY MATERIAL* -- SEALANT -- MIN 5/8 IN. THICKNESS OF FILL MATERIAL APPLIED WITHIN THE ANNULUS, FLUSH WITH BOTH SURFACES OF WALL. AT THE POINT OR CONTINUOUS CONTACT LOCATIONS BETWEEN PIPE AND WALL, A MIN 1/2 IN. DIAM BEAD OF FILL MATERIAL SHALL BE APPLIED AT THE PIPE WALL INTERFACE ON BOTH SURFACES OF WALL .

   HILTI CONSTRUCTION CHEMICALS, DIV OF
   HILTI INC -- FS-ONE SEALANT
   *BEARING THE UL CLASSIFICATION MARK

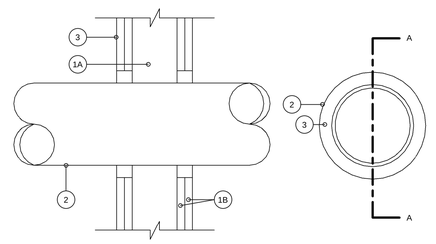

SECTION A-A

System No. W-L-1054
F Ratings - 1 and 2 Hr (See Items 1 and 3)
T Rating - 0 Hr

L Rating At Ambient - Less Than 1 CFM/Sq Ft
L Rating At 400 F - 4 CFM/Sq Ft

FIRESTOP ALL THROUGH WALL POWER, TELECOM AND FIRE ALARM CONDUIT PENETRATIONS

RATED STUD WALL FIRE STOP N.T.S. 1

FBAEngineering
Consulting Electrical Engineers
150 Paularino Avenue Suite A120
Costa Mesa, CA 92626
949.852.9995 • 949.852.1657 (fax)
fbaengr.com
FBA Job Number: 874.1055

STAMPS

AGENCY APPROVAL
File No.: 4.2

CONSULTANT BRANDING

RUHNAU CLARKE ARCHITECTS

MOUNT TRANSIT ADMINISTRATION FACILITY: 100% CD

PROJECT No. :50801
4/18/2024 11:26:22 AM

DRAWN BY: FBA CHECKED BY: FBA

ISSUE No._____ DATE_____ DESCRIPTION_____
ISSUE No._____ DATE_____ DESCRIPTION_____
ISSUE No._____ DATE_____ DESCRIPTION_____
ISSUE No._____ DATE_____ DESCRIPTION_____

REVISION No._____ DATE_____ DESCRIPTION_____
REVISION No._____ DATE_____ DESCRIPTION_____
REVISION No._____ DATE_____ DESCRIPTION_____
REVISION No._____ DATE_____ DESCRIPTION_____

RUHNAUCLARKE.COM
3775 TENTH STREET, RIVERSIDE CALIFORNIA 92501(951) 684 4664 / 5751 PALMER WAY, SUITE C, CARLSBAD CALIFORNIA 92010(760) 438 5899

MOUNT TRANSIT ADMINISTRATION FACILITY
170 BUSINESS CENTER DR. BIG BEAR LAKES, CA
BIG BEAR LAKES

ELECTRICAL DETAILS

E1-0.2

50801

ADDITIONAL SUBMITTAL REQUIREMENT FOR LED LIGHT FIXTURES

PART 1: THE MANUFACTURERS AND MODEL NUMBER OF THE LED LUMINAIRE INDICATED IN THE LUMINAIRE SCHEDULE HAS BEEN SPECIFIED BECAUSE THE PERFORMANCE OF THE LUMINAIRE HAS BEEN ANALYZED IN DETAIL AND DETERMINED TO ADEQUATELY MEET THE REQUIREMENTS OF THE PROJECT. LUMINAIRES OTHER THE SPECIFIED ITEM MAY BE PROPOSED AS EQUAL, PROVIDED THE CONTRACTOR COMPLIES WITH THE FOLLOWING ADDITIONAL REQUIREMENTS:

A. AS PART OF THE SHOP DRAWINGS SUBMITTAL PROCESS, CONTRACTOR SHALL PROVIDE DOCUMENTATION FOR APPROVAL IN ACCORDANCE WITH PART 2 BELOW. ALL SUBMITTALS SHALL BE MADE IN A TIMELY MANNER TO ALLOW AT LEAST TWO WEEKS OF ENGINEERING REVIEW WITHOUT JEOPARDIZING THE PROJECT SCHEDULE.

B. CONTRACTOR SHALL NOT ACQUIRE THE PROPOSED EQUAL LUMINAIRE BEFORE OBTAINING WRITTEN APPROVAL OF SUBMITTALS.

C. CONTRACTOR SHALL REMOVE AND REPLACE WITHOUT CHANGE TO CONTRACT PRICE, ANY INSTALLED LUMINAIRE WHICH DO NOT PERFORM AS INDICATED IN THE CONTRACTOR'S APPROVED SUBMITTALS.

PART 2: SHOULD THE CONTRACTOR CHOOSE TO PROPOSE AN LED LUMINAIRE OTHER THAN THE SPECIFIED ITEM, CONTRACTOR SHALL PREPARE AND SUBMIT FOR APPROVAL OF THE FOLLOWING ITEMS IN ADDITION TO MANUFACTURERS SPECIFICATION SHEETS:

A. FOR INTERIOR LUMINAIRES, SCALED DRAWINGS OF EACH ROOM WHERE THE LUMINAIRE(S) ARE TO BE INSTALLED SHOWING COMPUTER GENERATED POINT-BY POINT CALCULATIONS OF THE MAINTAINED HORIZONTAL FOOTCANDLE LEVELS AT 30-INCHES ABOVE THE FLOOR. FOR CLASSROOMS, SUBMITTALS SHALL ALSO INDICATE VERTICAL FOOTCANDLE LEVELS ON THE PRIMARY TEACHING WALL / WHITE BOARD IN EACH ROOM. THE CALCULATIONS SHALL BE BASED ON THE IES LIGHT DISTRIBUTION FOR THE LUMINAIRE(S) PROPOSED USING 80% CEILING REFLECTANCE, 20% WALL REFLECTANCE, AND 10% FLOOR REFLECTANCE.

FIXTURE NOTES:

(NOTE: REFER TO SPECIFICATIONS FOR ADDITIONAL REQUIREMENTS)

1. FIXTURES LOCATED OUTDOORS SHALL BE RATED FOR STARTING AND OPERATING TEMPERATURES BELOW 0-DEGREES FAHRENHEIT.
2. FIXTURES WITH THE SAME TYPE # SHALL BE THE PRODUCTS OF THE SAME MANUFACTURER, I.E., TYPE #1, 1A, 1B, ETC., SHALL BE THE SAME MANUFACTURER).
3. THE CONTRACTOR SHALL VERIFY ACTUAL CEILING AND WALL CONSTRUCTION TYPE AS DEFINED ON THE ARCHITECTURAL DRAWINGS AND FURNISH LIGHTING FIXTURES WITH THE CORRECT AND COMPLETE MOUNTING HARDWARE AND MOUNTING DEVICES TO ACCOMMODATE BUILDING CONSTRUCTION AT EACH INSTALL LOCATION, WHETHER OR NOT SUCH VARIATIONS ARE INDICATED BY THE FIXTURE CATALOG NUMBER.
4. THE CONTRACTOR SHALL VERIFY DEPTH OF ALL RECESSED LIGHTING FIXTURES WITH ARCHITECTURAL DRAWINGS PRIOR TO ORDERING FIXTURES. ANY DISCREPANCIES THAT WILL CAUSE RECESSED FIXTURES NOT TO FIT INTO CEILING/ WALL SPACES SHALL BE REPORTED TO THE OWNER'S REPRESENTATIVE PRIOR TO SUBMITTING SHOP DRAWINGS AND PRIOR TO ORDERING FIXTURES.
5. LIGHT FIXTURES RECESSED IN CEILING OR WALL WITH A ONE HOUR OR MORE FIRE RATING BUILDING CONSTRUCTION, EACH FIXTURE SHALL BE ENCLOSED IN A BOX WHICH HAS A FIRE RATING EQUAL TO THAT OF THE BUILDING CONSTRUCTION. PROVIDE MINIMUM OF 3" CLEAR FROM ALL SIDES AND TOP OF RECESSED LIGHT FIXTURES.
6. WALL AND CEILING INSULATION SHALL BE INSTALLED TO ALLOW 3" MINIMUM CLEARANCE FROM BOTTOM, SIDES AND TOP OF RECESSED LIGHT FIXTURES.
7. VERIFY MOUNTING HEIGHT OF ALL WALL MOUNTED FIXTURES WITH ARCHITECT PRIOR TO ROUGH-IN.
8. REFER TO ARCHITECTURAL REFLECTED CEILING PLANS AND WALL ELEVATIONS FOR EXACT INSTALL LOCATION OF ALL FIXTURES.
9. VERIFY VOLTAGE BEING SUPPLIED TO FIXTURES PRIOR TO SUBMITTING SHOP DRAWINGS AND PRIOR TO ORDERING FIXTURE VOLTAGE SHALL MATCH BRANCH CIRCUITS CONNECTING TO RESPECTIVE FIXTURE.
10. SUSPENDED MOUNT LIGHT FIXTURES THAT MAY STRIKE STRUCTURAL ELEMENTS, WALL OR MECHANICAL DUCT WORK IF SWIVELED AT +45-DEGREES SHALL BE SWAY BRACED WITH AIR CRAFT CABLE TO PREVENT STRIKING SAID APPURTENANCES DURING SEISMIC EVENTS, AS REQUIRED.
11. OCCUPANCY MOTION SENSOR SYSTEM SHALL BE PROVIDED IN EVERY ROOM/ SPACE LOCATION THROUGHOUT THE FACILITY AND AS DESCRIBED IN THE SPECIFICATIONS, WHETHER SYMBOLS ARE SHOWN OR NOT SHOWN ON THE PLANS.
12. PROVIDE TESTING CERTIFICATION AND COMMISSIONING OF LIGHTING FIXTURES, INSTALLATION, LIGHTING CONTROL SYSTEM AND LIGHTING SYSTEM OPERATION.
13. CONTRACTOR SHALL COORDINATE INSTALLATION OF RECESSED LIGHTING FIXTURES IN HARD LID OR STUCCO CEILING AREAS WITH FRAMING CONTRACTOR.
14. ALL "EDGE-LIT" EXIT SIGN SHALL BE EQUIPPED WITH MIRRORED BACKGROUND.
15. ALL LED DRIVERS SHALL BE COMPATIBLE WITH THE SPECIFIED LIGHTING CONTROLS.
16. PROVIDE 3/4"C. BETWEEN ALL LUMINAIRES AND CONTROL DEVICES LOCATED IN NON-ACCESSIBLE CEILING SPACES.

LIGHTING FIXTURE SCHEDULE

IMAGE	TYPE	DESCRIPTION	MANUFACTURER NAME	MANUFACTURER CATALOG NO.	LAMP TYPE	LAMP LUMENS	LAMP CCT	LAMP CRI (MIN)	POWER VOLTAGE	POWER INPUT WATTAGE	MOUNTING TYPE	NOTES
	A	2' X 4' LED RECESSED T-BAR MOUNT; LOW-GLARE BACK-LIT PANEL;METAL FRAME WITH PATTERN 12 ACRYLIC LENS, STANDARD DIMMING 0-10V.	LITHONIA LIGHTING	CPX SERIES OR EQUAL	LED	5892	4000	80	120	41.8	RECESSED, T-BAR	CONFIRM HOUSING FINISH WITH ARCHITECT
	B	1' X 4' LED RECESSED T-BAR MOUNT; LOW-GLARE BACK-LIT PANEL;METAL FRAME WITH PATTERN 12 ACRYLIC LENS, STANDARD DIMMING 0-10V.	LITHONIA LIGHTING	CPX SERIES OR EQUAL	LED	5161	4000	80	120	42.2	RECESSED	CONFIRM HOUSING FINISH WITH ARCHITECT
	C	4' LED MARINE GRADE ALUMINUM WITH DIE-CAST END CAPS, MATTE WHITE POLYESTER POWDER COAT FINISHED, PEARLESCENT POLYCARBONATE LENS, NOMINAL THICKNESS .156", DIMMING CONSTANT CURRENT (LED).	KENALL	MLHA 12 SERIES OR EQUAL	LED	5345	4000	80	120	49	SURFACE	CONFIRM HOUSING FINISH WITH ARCHITECT
	D	LED STRIPLIGHT 48" LENGTH, CODE-GAUGE COLD-ROLLED STEEL WIREWAY HOUSING, SNAP ON FROSTED DIFFUSED ACRYLIC LENS, STANDARD 0-10V DIMMING.	LITHONIA LIGHTING	ZL1N SERIES OR EQUAL	LED	3273	4000	80	120	25	SURFACE/ CHAIN HUNG	CONFIRM HOUSING FINISH WITH ARCHITECT
	E	LED PENDANT LIGHT FIXTURE WITH THICK GAUGE ALUMINUM SHELL, HOLLOW SEE-THROUGH CORE, INTEGRATED 0-10V DIMMING DRIVER, HIGHLY REFLECTIVE WHITE MATTE INTERNAL REFLECTOR. FINISH AS SELECTED BY ARCHITECT	EUREKA LIGHTING	APERTURE 4256-24 SERIES	LED	2302	4000	80	120	57.4	PENDANT	CONFIRM HOUSING FINISH WITH ARCHITECT
	F	13" LED PENDANT LIGHT FIXTURE WITH CNC SPUN ALUMINUM HOUSING, .125" FROSTED ACRYLIC FLAT LENS, INTEGRAL DRIVER 0-10V DIMMING. FINISH AS SELECTED BY ARCHITECT	EUREKA LIGHTING	TIKI P5113 SERIES	LED	4126	4000	80	120	42	PENDANT	CONFIRM HOUSING FINISH WITH ARCHITECT
	G	LED SURFACE CANOPY LUMINAIRE, IP66 RATED, T5 WIDE OPTICS, STANDARD INTEGRAL DIMMING 0-10V.	LITHONIA LIGHTING	D SERIES SURFACE CANOPY OR EQUAL	LED	5443	4000	80	120	46	SURFACE	CONFIRM HOUSING FINISH WITH ARCHITECT
	H1	MODIFIED 6' DIAMETER, 1.75" HEIGHT ACOUSTIC RING WITH LIGHTWEIGHT, MODULAR ACRYLIC FRAMES CLAD IN 4.5MM SOLA FELT, FROSTED WHITE OPAL DIFFUSER AND 4.5 MM PET FELT. STANDARD 0-10V DIMMING.	OCL LIGHTING	ACOUSTIC RING SERIES	LED	-	4000	80	120	132	PENDANT	CONFIRM HOUSING FINISH WITH ARCHITECT
	H2	THE SAME AS H1 EXCEPT MODIFIED 9' DIAMETER .	OCL LIGHTING	ACOUSTIC RING SERIES	LED	-	4000	80	120	99	PENDANT	CONFIRM HOUSING FINISH WITH ARCHITECT
	I	4" PENDANT CYLINDRICAL SHAPE LED LIGHT FIXTURE ALUMINUM BODY, DIE CAST BOTTOM BEZEL AND WIDE FLOOD .	OCL LIGHTING	ASTRA PENDANT SERIES OR EQUAL	LED	2358	4000	80	120	25	PENDANT	CONFIRM HOUSING FINISH WITH ARCHITECT
	J	4" DIAMETER ROUND RECESSED DOWNLIGHT WITH ALUMINUM TRIM AND BEZEL, DIFFUSED LENS, STANDARD INTEGRAL 0-10V DIMMING.	ALPHABET LIGHTING	NU ESSENTIALS OR EQUAL	LED	1921	4000	80	120	26	RECESSED TO CEILING	CONFIRM HOUSING FINISH WITH ARCHITECT
	K	DECORATIVE EXTERIOR 2" DIAMETER CYLINDRICAL WALL SCONCE WITH DOWNLIGHT WIDE OPTIC. INTEGRAL LED DRIVER, EXTRUDED ALUMINUM HOUSING, RECESSED GEAR HOUSING, SUITABLE FOR WET LOCATION. STANDARD 0-10V DIMMING.	GOTHAM LIGHTING	EVO20WC 40/20 AR LSS WD OR EQUAL	LED	2000	4000	80	120	31.7	WALL MOUNTED	CONFIRM HOUSING FINISH WITH ARCHITECT
	L	24 LONG LED WALL LAMP PICTURE ADJUSTABLE WITH MATERIAL:ACRYLIC SHADE AND MIN. 8.9" EXTENSION FROM THE WALL, UNIVERSAL 120-277 0-10V, ELV, TRIAC DIMMING DRIVER.	TECH LIGHTING	PLURAL FACETED SERIES OR EQUAL	LED	1131	4000	80	120	17.4	WALL MOUNTED	CONFIRM HOUSING FINISH WITH ARCHITECT
	M	9" DIAMETER DIRECT PENDANT LED LIGHT FIXTURE WITH SPUN ALUMINUM SHADE , THICK ALUMINUM TUBE AND ROUND DIFFUSER, STANDARD INTEGRAL DRIVER 0-10V DIMMING.	EUREKA LIGHTING	STELLA 4272-9 SERIES	LED	2050	4000	80	120	28.6	PENDANT	CONFIRM HOUSING FINISH WITH ARCHITECT
	N	48" LINEAR LOW PROFILE LED LIGHT FIXTURE WITH EXTRUDED ALUMINUM HOUSING, CURVED POLYCARBONATE DIFFUSED LENS AND WET LOCATION IP67 RATING. INTEGRATED POWER SUPPLY, 0-10V DIMMING.	INSIGHT LIGHTING	PILOT EXTERIOR DIRECT VIEW SERIES	LED	1512	4000	80	120	28	SURFACE/ CEILING	CONFIRM HOUSING FINISH WITH ARCHITECT
	X1	LED EDGE-LIT EXIT SIGN FIXTURE WITH EXTRUDED BRUSHED ALUMINUM FINISH, CLEAR ACRYLIC PANELS, GREEN LETTERS, OR DOUBLE FACES AS INDICATED ON PLANS	LITHONIA LIGHTING	EDG SERIES OR EQUAL	LED	-	N/A	N/A	120	3	SURFACE/ WALL	CONFIRM HOUSING FINISH WITH ARCHITECT
	SP1	LED AREA LIGHT WITH DIE-CAST ALUMINUM HOUSING, ACRYLIC LENSES, TYPE 3M LIGHT DISTRIBUTION, MOUNTED TO 30-FEET HIGH X 5-INCH DIAMETER NON-TAPERED STEEL POLE, ALL FINISHED WITH COLOR AS SELECTED BY ARCHITECT. ENTIRE ASSEMBLY RATED FOR STEADY 90MPH WIND WITH 1.3 GUST FACTOR.	LITHONIA LIGHTING	DSX1-SERIES OR EQUAL	LED	20539	4000	80	120	165	POST	CONFIRM HOUSING FINISH WITH ARCHITECT
	SP2	SAME AS TYPE SP1 EXCEPT TWO LUMINARES WITH TSW OPTICS MOUNTED 180-DEGREES APART.	LITHONIA LIGHTING	DSX1-SERIES OR EQUAL	LED	21795	4000	80	120	330	POST	CONFIRM HOUSING FINISH WITH ARCHITECT
	SP3	SAME AS TYPE SP1 EXCEPT TWO LUMINARES MOUNTED 90-DEGREES APART.	LITHONIA LIGHTING	DSX1-SERIES OR EQUAL	LED	20539	4000	80	120	330	POST	CONFIRM HOUSING FINISH WITH ARCHITECT

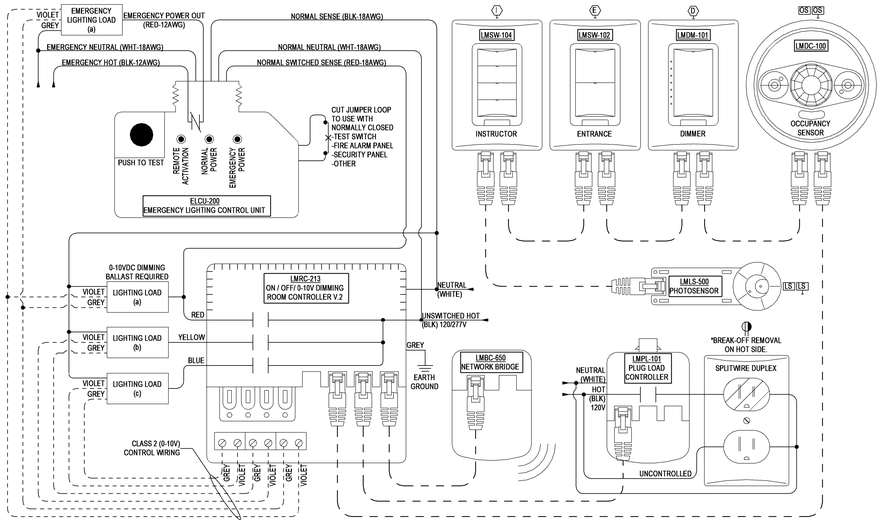

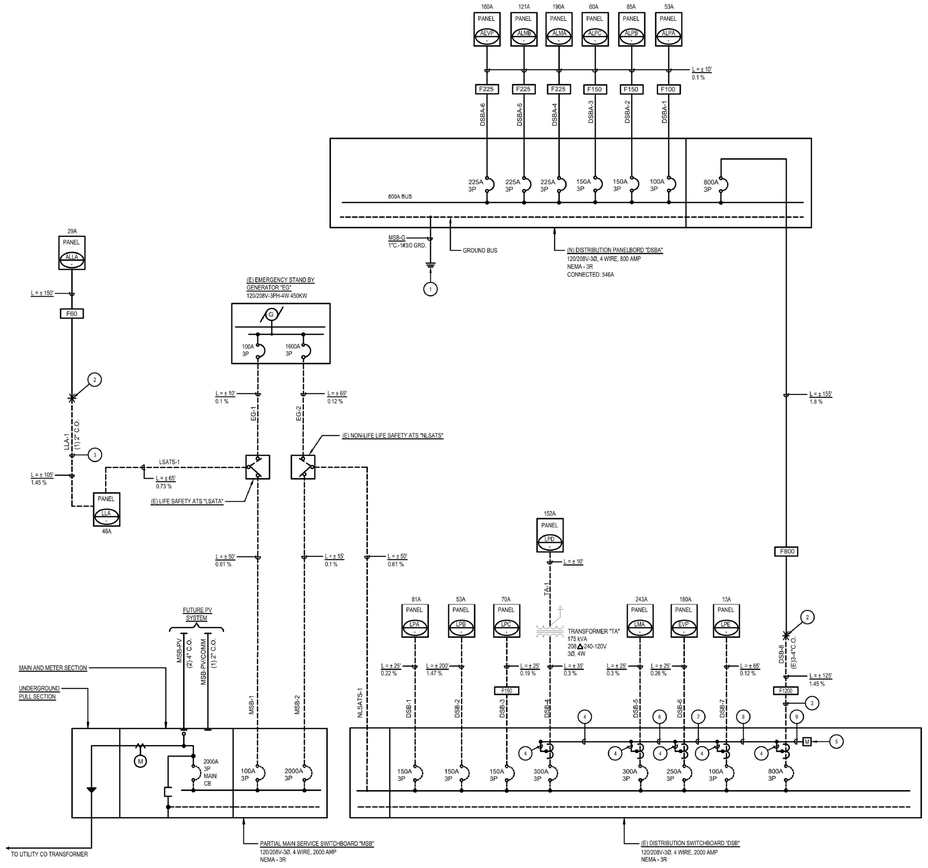

MOUNT TRANSIT ADMIN BLDG. SERVICE LOAD CALCULATION

LOAD DESCRIPTION	CONNECTED LOAD (AA)	CONNECTED CURRENT (A)
MAINTENANCE PANEL LLA	46	16560
MAINTENANCE PANEL LPA	81	29160
MAINTENANCE PANEL LPB	53	19080
MAINTENANCE PANEL LPC	70	25200
MAINTENANCE BLDG PANEL LPD	175	63000
MAINTENANCE BLDG PANEL LMA	243	87480
MAINTENANCE PANEL EVP	180	64800
ADMIN BUILDING DSBA	499	190000
TOTAL CONNECTED LOADS	1347	495280
PROPOSED SERVICE SIZE: 208/120V-3PHASE-4W-1600A		

PROJECT: MOUNT TRANSIT-MARTA
PROJECT NO: 8741055.000
SUBJECT: VOLTAGE DROP CALCULATION
208/120 V

DISTRIBUTION BOARD	DESTINATION PANEL	FEEDER TAG	FEEDER DESIG.	WIRE SIZE		R (1000')	X (1000')	L(feet)	RL	XL	PHASE	V	I	COS(pf)	SIN	VD%	VD% TOTAL
MSB	LLA	MSB-1/LSATS-1	F-100	1	1	0.1600	0.0570	115	0.0184	0.0066	3	120	46	0.85	0.53	0.73	0.73
MSB	DSB	MSB-2/NLSATS-1	F-2000	500MCM	6	0.0048	0.0080	65	0.0003	0.0005	3	120	1347	0.85	0.53	0.61	0.61
DSB	LPA	DSB1	F-150	1/O	1	0.1200	0.0550	25	0.0030	0.0014	3	120	81	0.85	0.53	0.22	0.83
DSB	LPB	DSB2	F-100	1	1	0.1600	0.0570	200	0.0320	0.0114	3	120	53	0.85	0.53	1.47	2.07
DSB	LPC	DSB3	F-150	1/O	1	0.1200	0.0550	25	0.0030	0.0014	3	120	70	0.85	0.53	0.19	0.80
DSB	LPD/TA	DSB4	F-350	350MCM	1	0.0390	0.0500	45	0.0018	0.0023	3	120	152	0.85	0.53	0.34	0.95
DSB	LMA	DSB5	F-350	350MCM	1	0.0390	0.0500	25	0.0010	0.0013	3	120	243	0.85	0.53	0.30	0.91
DSB	EVP	DSB6	F-250	250MCM	1	0.0540	0.0520	25	0.0014	0.0013	3	120	170	0.85	0.53	0.26	0.26
DSB	LPE	DSB7	F-100	1	1	0.1600	0.0570	65	0.0104	0.0037	3	120	13	0.85	0.53	0.12	0.12
DSB	DSBA	DSB8	F-1200	350MCM	4	0.0098	0.0125	280	0.0027	0.0035	3	120	546	0.85	0.53	1.89	1.89
DSBA	ALPA	DSBA-1	F-100	1	1	0.1600	0.0570	10	0.0016	0.0006	3	120	53	0.85	0.53	0.07	1.97
DSBA	ALPB	DSBA-2	F-150	1/O	1	0.1200	0.0550	10	0.0012	0.0006	3	120	65	0.85	0.53	0.09	1.99
DSBA	ALPC	DSBA-3	F-150	1/O	1	0.1200	0.0550	10	0.0012	0.0006	3	120	60	0.85	0.53	0.07	1.96
DSBA	ALMA	DSBA-4	F-225	4/O	1	0.0630	0.0510	10	0.0006	0.0005	3	120	90	0.85	0.53	0.06	1.96
DSBA	ALMB	DSBA-5	F-225	4/O	1	0.0630	0.0510	10	0.0006	0.0005	3	120	121	0.85	0.53	0.08	1.98
DSBA	ALPV	DSBA-6	F150	1/O	4	0.0300	0.0138	10	0.0003	0.0001	3	120	90	0.85	0.53	0.02	1.92
LLA	ALLA	LLA-1	F-100	1	1	0.1600	0.0570	179	0.0286	0.0102	3	120	29	0.85	0.53	0.72	1.45

FEEDER SCHEDULE					
	COPPER CONDUCTORS THW 600V (AWG)				
FEEDER TYPE	CONDUIT SIZE AND QUANTITY		CONDUCTORS IN EACH CONDUIT		
			PHASE/NEUTRAL		EQUIPMENT GROUND WIRE SIZE
	QUAN.	SIZE	QUAN.	SIZE	
F20	1	3/4"	4	12	12
F30	1	3/4"	4	10	10
F40	1	1"	4	8	10
F50	1	1 1/4"	4	6	10
F60	1	1 1/2"	4	4	10
F70	1	1 1/4"	4	4	8
F80	1	2"	4	2	8
F90	1	2"	4	2	8
F100	1	2"	4	1	8
F110	1	2"	4	1	6
F125	1	2"	4	1/0	6
F150	1	2"	4	1/0	6
F175	1	2"	4	2/0	6
F200	1	2 1/2"	4	3/0	6
F225	1	3"	4	4/0	4
F250	1	3"	4	250MCM	4
F275	1	4"	4	350MCM	4
F300	1	4"	4	350MCM	4
F350	1	4"	4	500MCM	2
F400	2	2 1/2"	4	3/0	2
F500	2	3"	4	250MCM	2
F600	2	4"	4	350MCM	1
F700	2	4"	4	500MCM	1/0
F800	3	4"	4	350MCM	1/0
F900	3	4"	4	350MCM	2/0
F1000	3	4"	4	500MCM	2/0
F1200	4	4"	4	350MCM	3/0
F1600	5	4"	4	500MCM	4/0
F2000	6	4"	4	500MCM	350MCM
F2500	7	4"	4	500MCM	350MCM
F3000	8	4"	4	500MCM	500MCM
F4000	11	4"	4	500MCM	500MCM
F20/N	1	3/4"	3	12	12
F30/N	1	3/4"	3	10	10
F40/N	1	1"	3	8	10
F50/N	1	1"	3	6	10
F60/N	1	1 1/4"	3	4	10
F70/N	1	1 1/4"	3	4	8
F80/N	1	1 1/4"	3	2	8
F90/N	1	1 1/4"	3	2	8
F100/N	1	1 1/2"	3	1	8
F110/N	1	1 1/2"	3	1	6
F125/N	1	2"	3	1/0	6
F150/N	1	2"	3	1/0	6
F175/N	1	2"	3	2/0	6
F200/N	1	2"	3	3/0	6
F225/N	1	2 1/2"	3	4/0	4
F250/N	1	2 1/2"	3	250MCM	4
F275/N	1	3"	3	350MCM	4
F300/N	1	3"	3	350MCM	4
F350/N	1	4"	3	500MCM	2
F400/N	2	2"	3	3/0	2
F500/N	2	2 1/2"	3	250MCM	2
F600/N	2	3"	3	350MCM	1
F700/N	2	4"	3	500MCM	1/0
F800/N	3	3"	3	350MCM	1/0
F350/U	-	-	4	4/0	-
F400/U	2	3"	4	350MCM	2
F500/U	2	4"	4	500MCM	1/0
F600/U	2	4"	4	500MCM	2/0
F700/U	2	4"	4	500MCM	2/0
F800/U	3	4"	4	500MCM	2/0
F900/U	3	4"	4	500MCM	4/0
F1000/U	3	4"	4	500MCM	4/0
F1200/U	4	4"	4	500MCM	250MCM
F1600/U	6	4"	4	500MCM	350MCM
F2000/U	8	4"	4	500MCM	350MCM
F2500/U	9	4"	4	500MCM	500MCM
F3000/U	11	4"	4	500MCM	500MCM
F4000/U	15	4"	4	500MCM	500MCM

STAMPS

AGENCY APPROVAL
File No.: 4.0

FBAEngineering
Consulting Electrical Engineers
150 Paularino Avenue Suite A120
Costa Mesa, CA 92626
949.852.9995 • 949.852.1657 (fax)
fbaengr.com
FBA Job Number: 874.1055

RUHNAU CLARKE ARCHITECTS
CONSULTANT BRANDING

PLAN NOTES

1. GROUNDING ELECTRODE CONDUCTOR, CONNECT FROM EQUIPMENT GROUND BUS TO UFER GROUND BUS. SEE DETAIL "6" ON SHEET E1-0.2 FOR ADDITIONAL INFORMATION.
2. INTERCEPT AT EXISTING STUB-OUT CONDUIT(S) AND EXTEND TO NEW PANEL. REFER TO SITE PLAN SHEET ES1-1 FOR ADDITIONAL INFORMATION.
3. PROVIDE NEW CONDUCTORS IN EXISTING CONDUITS, SIZE AS INDICATED.
4. PROVIDE 3/4"C.- WITH ONE (1) SET OF CAT6 CABLE TO BUILDING EMS PANEL.
5. PROVIDE SHARK MP-200 METER, MAXIMUM 8 CIRCUITS. PROVIDE 1-1/4"C.- WITH ONE (1) SET OF CAT6 CABLE TO BUILDING IDF. INSTALL ALL ADDED DEVICES INSIDE THE PANELBOARD.
6. PROVIDE 1"C.- WITH TWO (2) SETS OF CAT6 CABLE.
7. PROVIDE 1"C.- WITH THREE (3) SETS OF CAT6 CABLE.
8. PROVIDE 1 1/4"C.- WITH FOUR (4) SETS OF CAT6 CABLE.
9. PROVIDE 1 1/4"C.- WITH FIVE (5) SETS OF CAT6 CABLE.

MOUNT TRANSIT ADMINISTRATION FACILITY: 100% CD

LIGHTING CONTROL WIRING DIAGRAM | N.T.S. | 2

SINGLE LINE DIAGRAM | N.T.S. | 1

PROJECT No. :50801
4/18/2024 11:26:24 AM

DRAWN BY: CHECKED BY:

ISSUE No.____ DATE____ DESCRIPTION____
ISSUE No.____ DATE____ DESCRIPTION____
ISSUE No.____ DATE____ DESCRIPTION____
ISSUE No.____ DATE____ DESCRIPTION____

REVISION No.____ DATE____ DESCRIPTION____
REVISION No.____ DATE____ DESCRIPTION____
REVISION No.____ DATE____ DESCRIPTION____
REVISION No.____ DATE____ DESCRIPTION____

RUHNAUCLARKE.COM
3775 TENTH STREET, RIVERSIDE CALIFORNIA 92501(951) 684 4664 / 5751 PALMER WAY, SUITE C, CARLSBAD CALIFORNIA 92010(760) 438 5899

MOUNT TRANSIT ADMINISTRATION FACILITY
170 BUSINESS CENTER DR. BIG BEAR LAKES, CA
BIG BEAR LAKES

SINGLE LINE DIAGRAM AND LIGHTING FIXTURE SCHEDULE

E1-0.3

50801

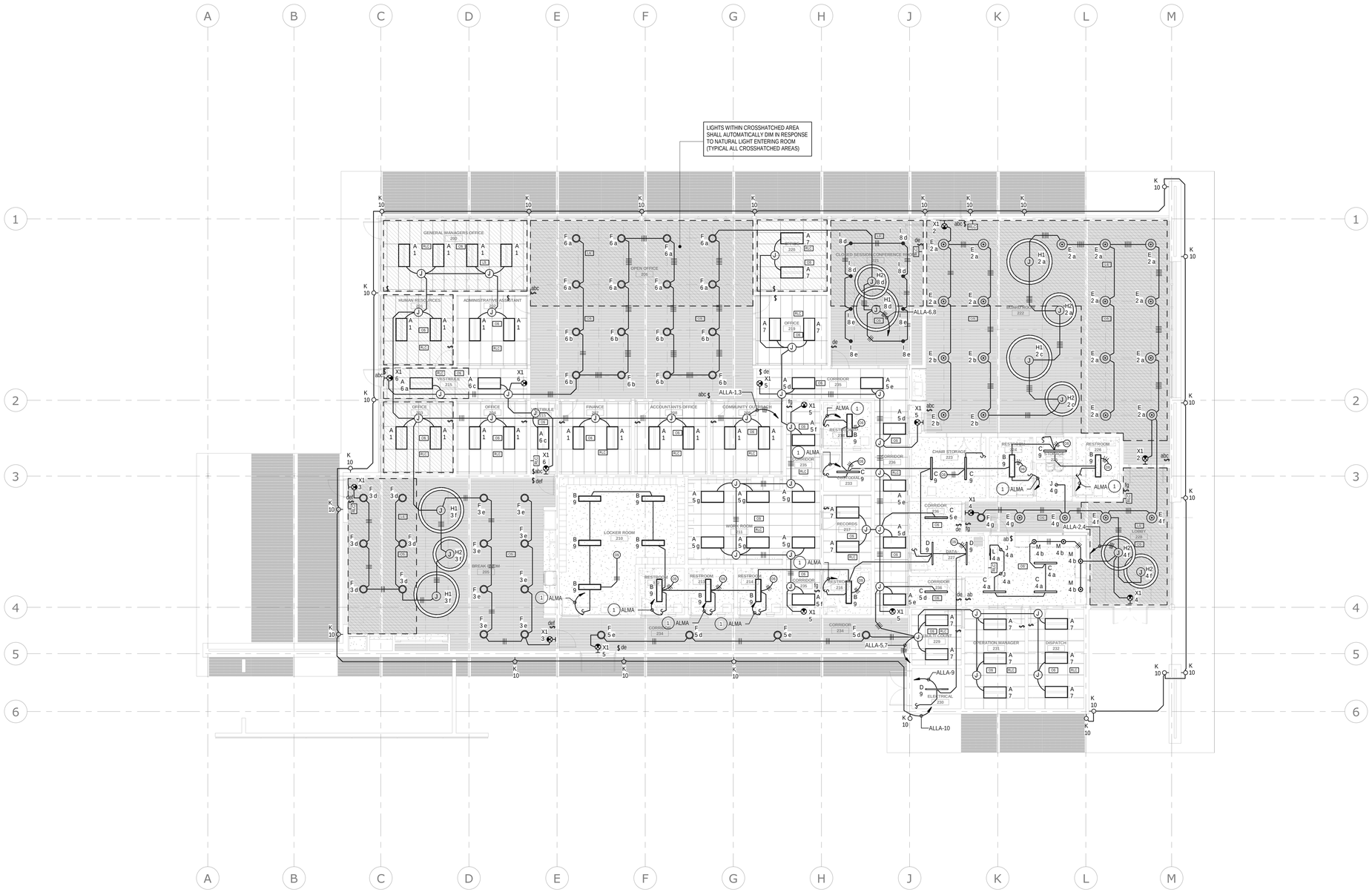

LIGHTING PLAN | 1/8" = 1'-0" | 1

PROJECT No. :50801
4/18/2024 11:26:27 AM

DRAWN BY: CHECKED BY:

ISSUE No.	DATE	DESCRIPTION
ISSUE No.	DATE	DESCRIPTION
ISSUE No.	DATE	DESCRIPTION
ISSUE No.	DATE	DESCRIPTION

REVISION No.	DATE	DESCRIPTION
REVISION No.	DATE	DESCRIPTION
REVISION No.	DATE	DESCRIPTION
REVISION No.	DATE	DESCRIPTION

RUHNAUCLARKE.COM
3775 TENTH STREET, RIVERSIDE CALIFORNIA 92501(951) 684 4664 / 5751 PALMER WAY, SUITE C, CARLSBAD CALIFORNIA 92010(760) 438 5899

MOUNT TRANSIT ADMINISTRATION FACILITY
170 BUSINESS CENTER DR. BIG BEAR LAKES, CA
BIG BEAR LAKES

STAMPS

REGISTERED PROFESSIONAL ENGINEER — No. 16072 — Ex.09-30-24 — ELECTRICAL — STATE OF CALIFORNIA

LICENSED ARCHITECT — ROGER CLARKE — Exp.10-31-25 — STATE OF CALIFORNIA

AGENCY APPROVAL
File No: n.a.

FBAEngineering
Consulting Electrical Engineers
150 Paularino Avenue Suite A120
Costa Mesa, CA 92626
949.852.9995 • 949.852.1657 (fax)
fbaengr.com
FBA Job Number: 874.1055

CONSULTANT BRANDING

RUHNAU CLARKE ARCHITECTS

PLAN NOTES

1. PROVIDE 3/4"C.- 2#12, 1#12 GRD. TO RELAY IN THE PANEL INDICATED. SEE PANEL SCHEDULE FOR ADDITIONAL INFORMATION.

MOUNT TRANSIT ADMINISTRATION FACILITY: 100% CD

LIGHTING PLAN

E1-1.1

50801

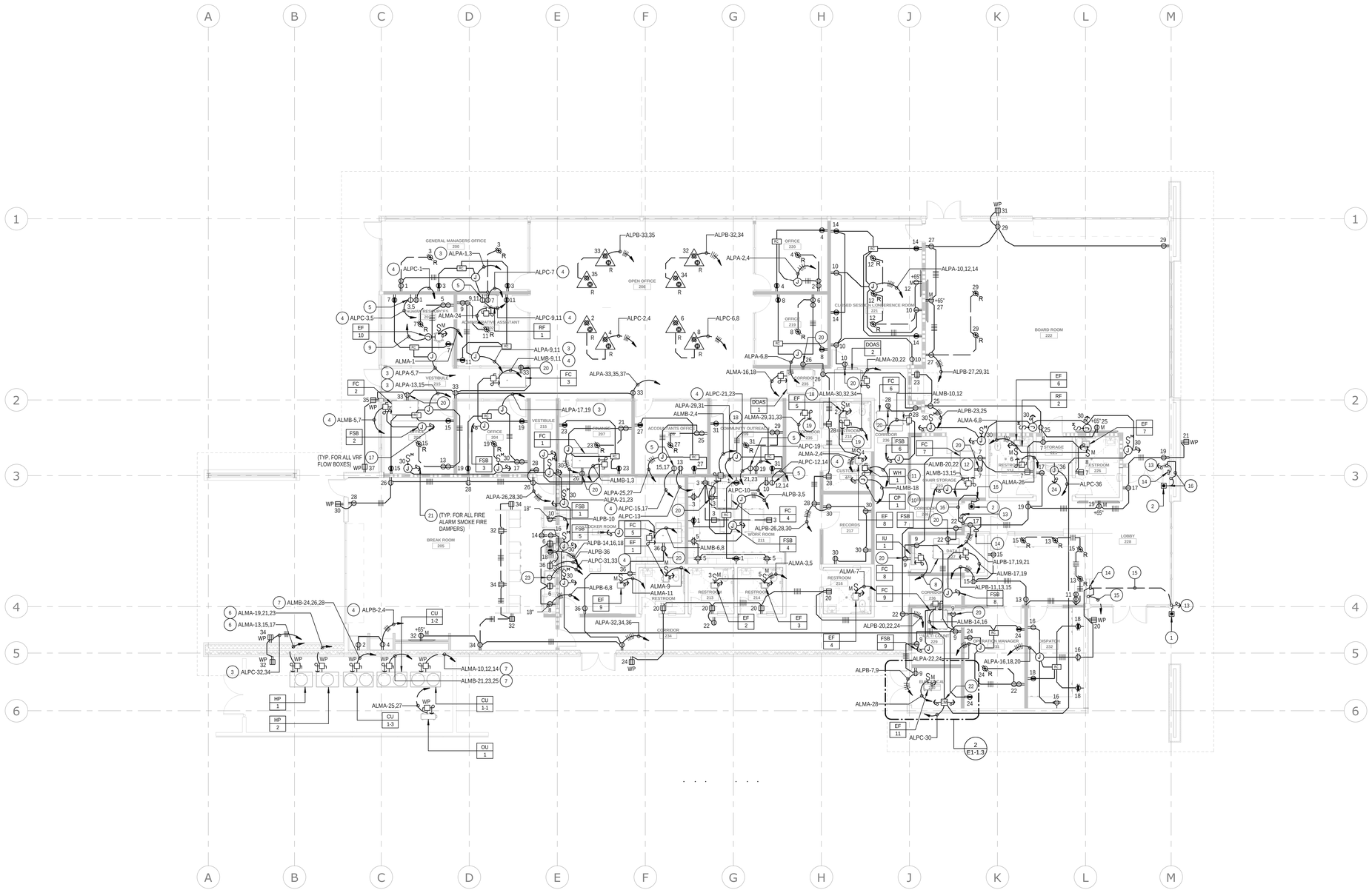

PLAN NOTES

1. PROVIDE AND INSTALL WEATHERPROOF TYPE BUZZER'S PUSH BUTTON AT 48" ON THE BUILDING FRONT DOOR 'S VERTICAL MEMBER.
2. PROVIDE AND INSTALL DOOR'S RELEASE PUSH BUTTON PER MANUFACTURER'S REQUIREMENTS.
3. PROVIDE 3/4"C. - 4#10, 1#10 GRD.
4. PROVIDE 3/4"C. - 2#10, 1#10 GRD.
5. PROVIDE SPECIAL TYPE 240V-2P-30A RECEPTACLE FOR PRINTER/COPY MACHINE. VERIFY THE TYPE OF PLUG TO MATCH WITH THE OUTLET.
6. PROVIDE 1"C.- 3#6, 1#10 GRD.
7. PROVIDE 1 1/4"C.- 3#2, 1#6 GRD.
8. INDOOR UNIT POWERED THROUGH OUTDOOR UNIT OU-1. REFER TO MECHANICAL PLANS FOR MORE INFORMATION.
9. PROVIDE 3/4" CONDUIT FROM THE EXHAUST FAN AND INTERCONNECT WITH FAN COIL FC-1. REFER TO MECHANICAL PLANS FOR MORE INFORMATION.
10. CONNECT POWER TO WATER HEATER CIRCULATION PUMP. ROUTED THROUGH MECHANICAL OVERRIDE TIMER AS REQUIRED. VERIFY EXACT LOCATION WITH PUMBING PLANS PRIOR TO ANY ROUGH-IN.
11. CONNECT POWER TO WATER HEATER AS REQUIRED. VERIFY EXACT LOCATION AND REQUIREMENTS WITH PLUMBING PLANS PRIOR TO ANY ROUGH-IN.
12. PROVIDE 1"C.- 2#4, 1#8 GRD.
13. EXTEND 3/4"C. - 2#12, 1#12 GRD. FROM POWER SUPPLY TO DOOR'S LOCK SYSTEM THROUGH DOOR'S FRAME. VERIFY ALL REQUIREMENTS WITH SYSTEM MANUFACTURER.
14. PROVIDE DOOR'S POWER SUPPLY MODEL NO. PS902/914 BY VON DUPRIN AT 8'-0" A.F.F. AND CONNECT TO POWER AS REQUIRED.
15. EXTEND CONDUIT FROM BUZZER'S PUSH BUTTON ON VERTICAL AND TOP MEMBER OF THE GATE AND TO GATE'S BUZZER IN ADMIN LOBBY ROOM 228.
16. EXTEND 3/4"C. - 2#12, 1#12 GRD. THROUGH THE WALL AND CEILING TO DOOR'S RELEASE SYSEM.
17. INSTALL 3-BOX FOR VRF FLOW SELECTOR BOX. THE FLOW SELECTOR BOX IS POWERED THROUGH FAN COIL UNIT INDICATED. REFER TO MECHANICAL PLANS FOR MORE INFORMATION.
18. PROVIDE 1"C.- 3#4, 1#8 GRD.
19. PROVIDE DISCONNECT SWITCH FOR INDOOR UNIT DUCT HEATER. THE DISCONNECT/DUCT HEATER SHOULD BE MINIMUM 4 FEET AWAY FROM THE AIR HANDLER. REFER TO MECHANICAL PLANS FOR MANUFACTURER'S REQUIREMENTS AND OTHER INFORMATION.
20. CONNECT RECEPTACLE ON THE SIDE OF THE UNIT FOR CONDENSING PUMP.
21. CONNECT POWER TO SMOKE FIRE DAMPER AS REQUIRED.
22. PROVIDE FIRE ALARM CONTROL MODULE FOR ROUTING POWER OF SMOKE FIRE DAMPERS.
23. PROVIDE SPECIAL TYPE 240V-2P-30A RECEPTACLE FOR RANGE/OVEN. VERIFY THE TYPE OF PLUG TO MATCH WITH THE OUTLET.
24. CONNECT POWER TO ELECTRIC DRINKING FOUNTAIN AS REQUIRED.

0' 4' 8' 16' NORTH

POWER PLAN 1/8" = 1'-0" 1

STAMPS

REGISTERED PROFESSIONAL ENGINEER — No. 16072 — Exp.09-30-24 — ELECTRICAL — STATE OF CALIFORNIA

LICENSED ARCHITECT — ROGER CLARKE — Exp.10-31-25 — STATE OF CALIFORNIA

AGENCY APPROVAL
File No.: n.a.

CONSULTANT BRANDING

FBAEngineering
Consulting Electrical Engineers
150 Paularino Avenue Suite A120
Costa Mesa, CA 92626
949.852.9995 • 949.852.1657 (fax)
fbaengr.com
FBA Job Number: 874.1055

RUHNAU CLARKE ARCHITECTS

MOUNT TRANSIT ADMINISTRATION FACILITY: 100% CD

PROJECT No. :50801
4/18/2024 11:26:31 AM

DRAWN BY: FBA CHECKED BY: FBA

ISSUE No._____ DATE_____ DESCRIPTION_____
ISSUE No._____ DATE_____ DESCRIPTION_____
ISSUE No._____ DATE_____ DESCRIPTION_____
ISSUE No._____ DATE_____ DESCRIPTION_____

REVISION No._____ DATE_____ DESCRIPTION_____
REVISION No._____ DATE_____ DESCRIPTION_____
REVISION No._____ DATE_____ DESCRIPTION_____
REVISION No._____ DATE_____ DESCRIPTION_____

RUHNAUCLARKE.COM
3775 TENTH STREET, RIVERSIDE CALIFORNIA 92501(951) 684 4664 / 5751 PALMER WAY, SUITE C, CARLSBAD CALIFORNIA 92010(760) 438 5899

MOUNT TRANSIT ADMINISTRATION FACILITY
170 BUSINESS CENTER DR. BIG BEAR LAKES, CA
BIG BEAR LAKES

POWER PLAN

E1-1.2

50801

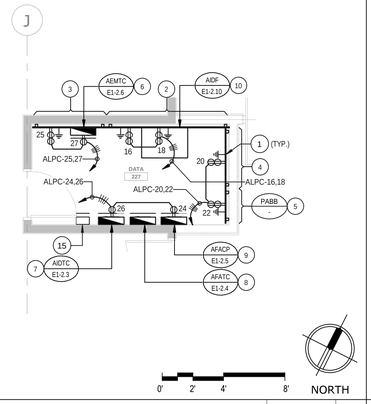

ENLARGED DATA ROOM 227 | 1/4" = 1'-0" | 3

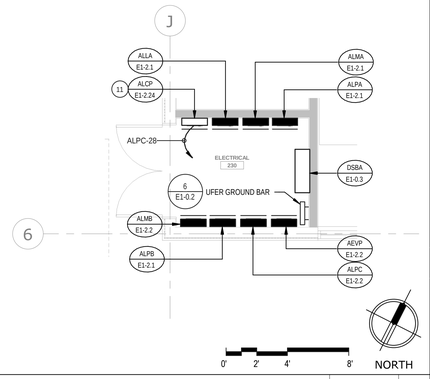

ENLARGED ELECTRICAL ROOM 230 | 1/4" = 1'-0" | 2

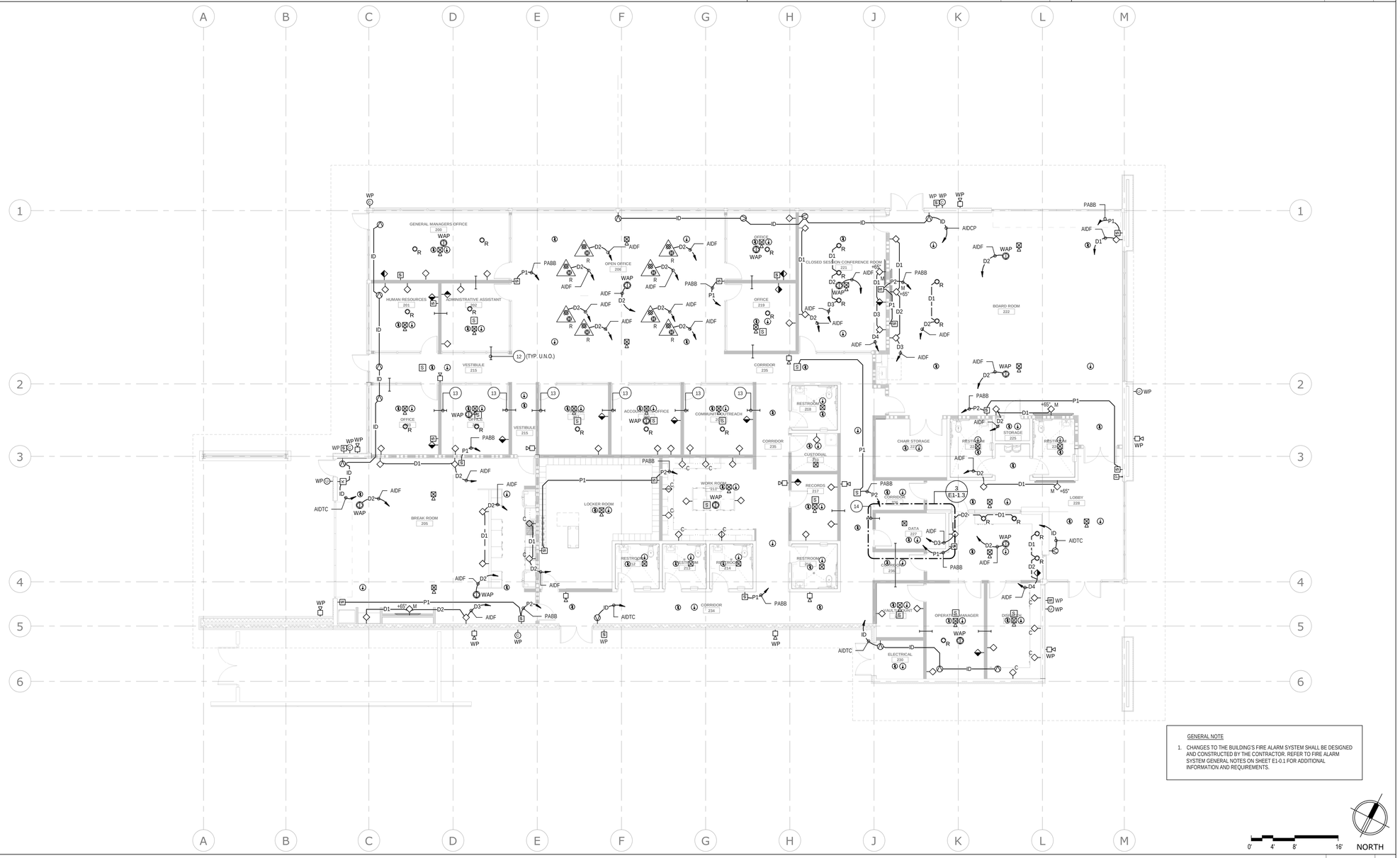

GENERAL NOTE

1. CHANGES TO THE BUILDING'S FIRE ALARM SYSTEM SHALL BE DESIGNED AND CONSTRUCTED BY THE CONTRACTOR. REFER TO FIRE ALARM SYSTEM GENERAL NOTES ON SHEET E1-0.1 FOR ADDITIONAL INFORMATION AND REQUIREMENTS.

0' 4' 8' 16' NORTH

SIGNAL PLAN AND FIRE ALARM PLANS | 1/8" = 1'-0" | 1

STAMPS

PROFESSIONAL ENGINEER — ELECTRICAL — STATE OF CALIFORNIA — No. 10372 — Exp.09-30-24

LICENSED ARCHITECT — STATE OF CALIFORNIA — Exp.10-31-25

AGENCY APPROVAL
File No.: n.a.

CONSULTANT BRANDING

FBAEngineering
Consulting Electrical Engineers
150 Paularino Avenue Suite A120
Costa Mesa, CA 92626
949.852.9995 • 949.852.1657 (fax)
fbaengr.com
FBA Job Number: 874.1055

RUHNAU CLARKE ARCHITECTS

PLAN NOTES

1. PROVIDE 1"C. - 1#6 GRD. TO BUILDING'S MAIN GROUNDING SYSTEM.
2. PROVIDE 8'W. X 8'H. X 3/4" THICK PLYWOOD BACKBOARD FOR DATA NETWORK CONDUIT TERMINATION.
3. PROVIDE 5'W. X 8'H. X 3/4" THICK PLYWOOD BACKBOARD FOR INTERNET SERVICE CONDUIT TERMINATION.
4. PROVIDE 4'W. X 8'H. X 3/4" THICK PLYWOOD BACKBOARD FOR DATA/VOICE NETWORK CONDUIT TERMINATION.
5. PROVIDE 2'W. X 8'H. X 3/4" THICK PLYWOOD BACKBOARD FOR PUBLIC ADDRESS/PAGING SYSTEM CONDUIT TERMINATION.
6. PROVIDE 24" X 24" X 6"D. TERMINAL CABINET FOR ENERGY MANAGEMENT SYSTEM CONDUIT TERMINATION.
7. PROVIDE 24" X 24" X 6"D. TERMINAL CABINET FOR INTRUSION DETECTION SYSTEM CONDUIT TERMINATION.
8. PROVIDE 24" X 24" X 6"D. TERMINAL CABINET FOR FIRE ALARM SYSTEM CONDUIT TERMINATION.
9. FIRE ALARM CONTROL PANEL.
10. PROVIDE 2'W. X 3'D. 4 POST, FLOOR STANDING IDF CABINET.
11. LIGHTING CONTROL SYSTEM CABINET.
12. PROVIDE TWO (2) 3" CONDUIT SLEEVE FOR ROUTING SIGNAL SYSTEM CONDUCTORS.
13. PROVIDE THREE (3) 3" CONDUIT SLEEVES FOR ROUTING SIGNAL SYSTEM CONDUCTORS.
14. PROVIDE FOUR (4) 3" CONDUIT SLEEVES FOR ROUTING SIGNAL SYSTEM CONDUCTORS.
15. HEAT TRACE SHROMA-RG-OD CONTROL PANEL FOR ROOF AND GUTTER DE-ICING APPLICAITON. WHEN THE SNOW SENSOR SENSES A TEMPERATURE BELOW THE SET-POINT, IT ACTIVATES THE CONTACTOR ENERGIZING THE HEATING ELEMENTS.

MOUNT TRANSIT ADMINISTRATION FACILITY: 100% CD

PROJECT No. :50801
4/18/2024 11:26:34 AM

DRAWN BY: CHECKED BY:

ISSUE No.____ DATE____ DESCRIPTION____
ISSUE No.____ DATE____ DESCRIPTION____
ISSUE No.____ DATE____ DESCRIPTION____
ISSUE No.____ DATE____ DESCRIPTION____

REVISION No.____ DATE____ DESCRIPTION____
REVISION No.____ DATE____ DESCRIPTION____
REVISION No.____ DATE____ DESCRIPTION____

RUHNAUCLARKE.COM
3775 TENTH STREET, RIVERSIDE CALIFORNIA 92501 (951) 684 4664 / 5751 PALMER WAY, SUITE C, CARLSBAD CALIFORNIA 92010 (760) 438 5899

MOUNT TRANSIT ADMINISTRATION FACILITY
170 BUSINESS CENTER DR. BIG BEAR LAKES, CA
BIG BEAR LAKES

ELECTRICAL PLAN AND ENLARGED ELECTRICAL ROOMS

E1-1.3

50801

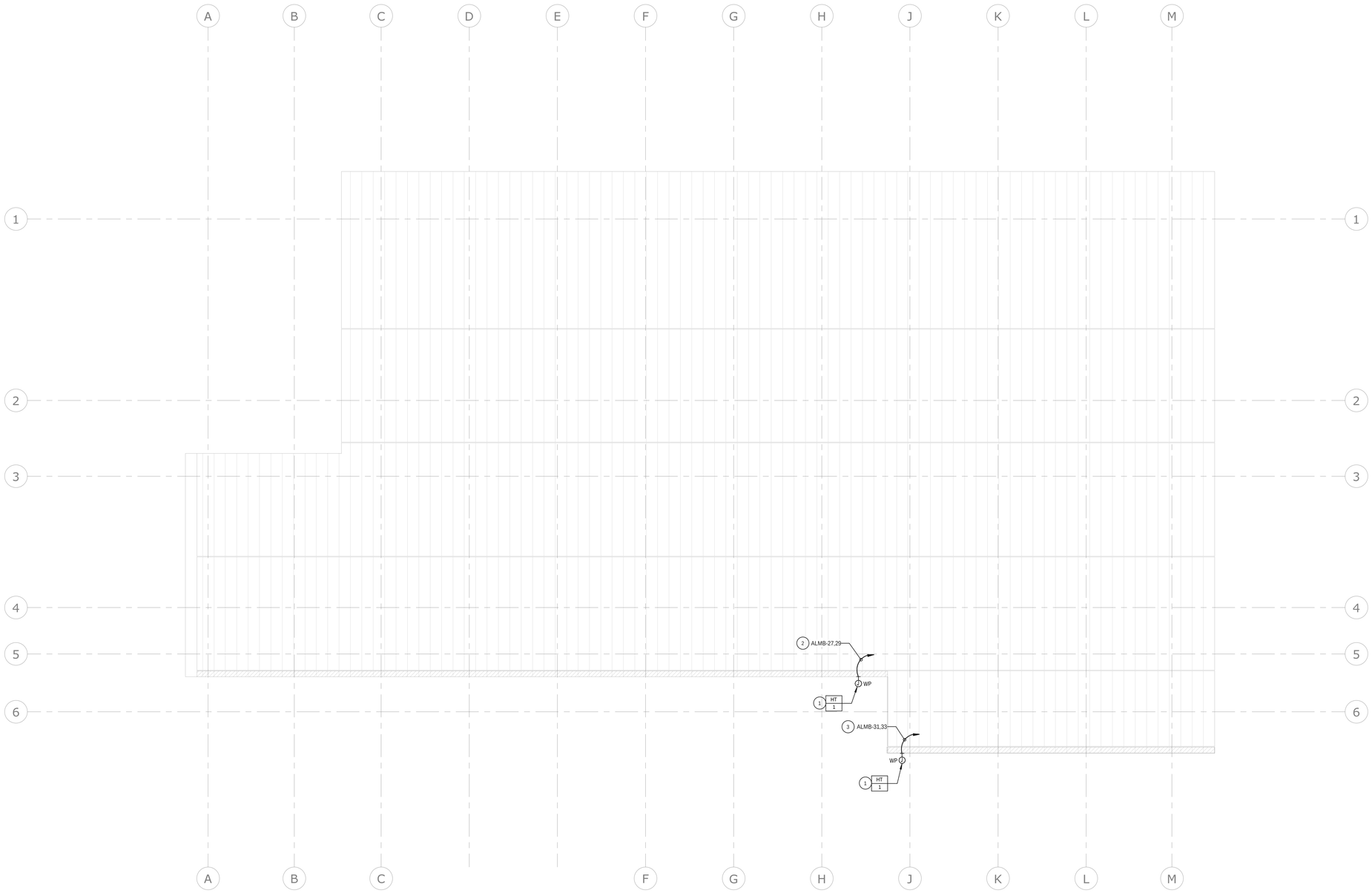

STAMPS

REGISTERED PROFESSIONAL ENGINEER
C 10372
ELECTRICAL
STATE OF CALIFORNIA
Exp.08-30-24

LICENSED ARCHITECT
ROGER CLARKE
No. C-49130
Exp.10-31-25
STATE OF CALIFORNIA

AGENCY APPROVAL
File No: n.a.

CONSULTANT BRANDING

FBAEngineering
Consulting Electrical Engineers
150 Paularino Avenue Suite A120
Costa Mesa, CA 92626
949.852.9595 • 949.852.1657 (fax)
fbaengr.com
FBA Job Number: 874.1055

RUHNAU CLARKE ARCHITECTS

PLAN NOTES

1. PROVIDE WEATHERPROOF J-BOX FOR HEAT TRACE SYSTEM AND CONNECT POWER AS REQUIRED. PROVIDE THERMOSTAT WITH REMOTE SENSOR SET AT 40 F. WHEN THE TEMPERATURE OUTSIDE GOES DOWN BELOW 40 F, THE HEAT TRACE WILL TURN ON THEN TURN OFF IF IT RAISES ABOVE 40 F. REFER TO MECHANICAL PLANS AND SCHEDULE FOR MORE INFORMATION.
2. PROVIDE 1"C.- 2#4, 1#8 GRD.
3. PROVIDE 3/4"C. - 2#8, 1#10 GRD.

ROOF ELECTRICAL PLAN | 1/8" = 1'-0" | 1

PROJECT No. :50801
4/18/2024 11:26:36 AM

DRAWN BY: CHECKED BY:

ISSUE No.____ DATE_____ DESCRIPTION_____
ISSUE No.____ DATE_____ DESCRIPTION_____
ISSUE No.____ DATE_____ DESCRIPTION_____
ISSUE No.____ DATE_____ DESCRIPTION_____

REVISION No.____ DATE_____ DESCRIPTION_____
REVISION No.____ DATE_____ DESCRIPTION_____
REVISION No.____ DATE_____ DESCRIPTION_____
REVISION No.____ DATE_____ DESCRIPTION_____

RUHNAUCLARKE.COM
3775 TENTH STREET, RIVERSIDE CALIFORNIA 92501(951) 684 4664 / 5751 PALMER WAY, SUITE C, CARLSBAD CALIFORNIA 92010(760) 438 5899

MOUNT TRANSIT ADMINISTRATION FACILITY
170 BUSINESS CENTER DR. BIG BEAR LAKES, CA
BIG BEAR LAKES

ROOF ELECTRICAL PLAN

E1-1.4

50801

MOUNT TRANSIT ADMINISTRATION FACILITY: 100% CD

Branch Panel: ALPA

MOUNT TRANSIT ADMINISTRATION FACILITY

Location: ELECTRICAL ROOM 230 | **Volts:** 120/208 Wye | **A.I.C. Rating:** 14,000
Supply From: | **Phases:** 3 | **Mains Type:** 100A
Mounting: Surface | **Wires:** 4 | **Bus:** 150A

CKT	Circuit Description	Trip	Pole	A	B	C	A	B	C	Pole	Trip	Circuit Description	CKT
1	MANAGER OFFICE RECEPT.	20 A	1	600 VA			600 VA			1	20 A	OFFICE RECEPT.	2
3	MANAGER OFFICE RECEPT.	20 A	1		720 VA			540 VA		1	20 A	OFFICE RECEPT.	4
5	OFFICE RECEPT.	20 A	1			600 VA			600 VA	1	20 A	OFFICE RECEPT.	6
7	OFFICE RECEPT.	20 A	1	540 VA			540 VA			1	20 A	OFFICE RECEPT.	8
9	OFFICE RECEPT.	20 A	1		600 VA			900 VA		1	20 A	CONFERENCE RM. RECEPT.	10
11	OFFICE RECEPT.	20 A	1			540 VA			720 VA	1	20 A	CONFERENCE RM. RECEPT.	12
13	OFFICE RECEPT.	20 A	1	600 VA			720 VA			1	20 A	CONFERENCE RM. RECEPT.	14
15	OFFICE RECEPT.	20 A	1		540 VA			680 VA		1	20 A	DISPATCH OFFICE RECEPT.	16
17	OFFICE RECEPT.	20 A	1			600 VA			680 VA	1	20 A	DISPATCH OFFICE RECEPT.	18
19	OFFICE RECEPT.	20 A	1	540 VA			200 VA			1	20 A	EXTERIOR RECEPT.	20
21	OFFICE RECEPT.	20 A	1		600 VA			600 VA		1	20 A	MANAGER OFFICE RECEPT.	22
23	OFFICE RECEPT.	20 A	1			540 VA			720 VA	1	20 A	MANAGER OFFICE RECEPT.	24
25	OFFICE RECEPT.	20 A	1	600 VA			540 VA			1	20 A	BREAKROOM RECEPT.	26
27	OFFICE RECEPT.	20 A	1		540 VA			540 VA		1	20 A	BREAKROOM RECEPT.	28
29	OFFICE RECEPT.	20 A	1			600 VA			200 VA	1	20 A	EXERIOR RECEPT.	30
31	OFFICE RECEPT.	20 A	1	540 VA			720 VA			1	20 A	BREAKROOM RECEPT.	32
33	VESTIBULE RECEPT.	20 A	1		720 VA			540 VA		1	20 A	BREAKROOM RECEPT.	34
35	EXTERIOR RECEPT.	20 A	1			200 VA			540 VA	1	20 A	LOCKER RM. RECEPT.	36
37	EXTERIOR RECEPT.	20 A	1	200 VA			0 VA			1	20 A	Spare	38
39	Spare	20 A	1		0 VA			0 VA		1	20 A	Spare	40
41	Spare	20 A	1			0 VA			0 VA	1	20 A	Spare	42
				Total Load:	6940 VA		7520 VA		6540 VA				
				Total Amps:	58 A		63 A		55 A				

Legend:

Load Classification	Connected Load	Demand Factor	Estimated Demand	Panel Totals	
Receptacle	2700 VA	100.00%	2700 VA		
R-Receptacle	18300 VA	77.32%	14150 VA	**Total Conn. Load:**	21000 VA
				Total Est. Demand:	16850 VA
				Total Conn.:	58 A
				Total Est. Demand:	47 A

Notes:

Branch Panel: ALPB

MOUNT TRANSIT ADMINISTRATION FACILITY

Location: ELECTRICAL ROOM 230 | **Volts:** 120/208 Wye | **A.I.C. Rating:** 14,000
Supply From: | **Phases:** 3 | **Mains Type:** 150A
Mounting: Surface | **Wires:** 4 | **Bus:** 225A

CKT	Circuit Description	Trip	Pole	A	B	C	A	B	C	Pole	Trip	Circuit Description	CKT
1	WORKROOM RECEPT.	20 A	1	750 VA			2000...			1	20 A	VENDING MACHINE	2
3	WORKROOM RECEPT.	20 A	1		1040...			300 VA		1	20 A	BREAKRM. COMPUTER STATION	4
5	WORKROOM RECEPT.	20 A	1			750 VA			500 VA	1	20 A	BREAKRM. COUNTER RECEPT.	6
7	RESTRM/STORAGE RECEPT.	20 A	1	900 VA			1000...			1	20 A	REFRIGERATOR	8
9	UTILITY RECEPT.	20 A	1		1080...			1000...		1	20 A	REFRIGERATOR	10
11	LOBBY RECEPT.	20 A	1			600 VA			0 VA	1	20 A	Spare	12
13	LOBBY RECEPT.	20 A	1	540 VA			1200...			1	20 A	MICROWAVE	14
15	LOBBY RECEPT.	20 A	1		720 VA			800 VA		1	20 A	DISH WASHER	16
17	LOBBY RECEPT.	20 A	1			540 VA			1000...	1	20 A	GARBAGE DISPOSAL	18
19	LOBBY RECEPT.	20 A	1	540 VA			720 VA			1	20 A	RESTROOM RECEPT.	20
21	EXTERIOR RECEPT.	20 A	1		200 VA			720 VA		1	20 A	CORRIDOR RECEPT.	22
23	COFFEE MAKER	20 A	1			1000...			200 VA	1	20 A	EXTERIOR RECEPT.	24
25	BOARD ROOM RECEPT.	20 A	1	540 VA			360 VA			1	20 A	CORRIDOR RECEPT.	26
27	BOARD ROOM RECEPT.	20 A	1		540 VA			900 VA		1	20 A	RESTROOM/CUSTODIAN RECEPT.	28
29	BOARD ROOM RECEPT.	20 A	1			720 VA			720 VA	1	20 A	RECORD ROOM RECEPT.	30
31	EXTERIOR RECEPT.	20 A	1	200 VA			1800...			1	20 A	OPEN OFFICE FLOOR BOX RECEPT.	32
33	OPEN OFFICE FLOOR BOX RECEPT.	20 A	1		1800...			1800...		1	20 A	OPEN OFFICE FLOOR BOX RECEPT.	34
35	OPEN OFFICE FLOOR BOX RECEPT.	20 A	1			1800...			250 VA	1	20 A	EXHAUST HOOD	36
37	Space	--	1	--			--			1	--	Space	38
39	Space	--	1		--			--		1	--	Space	40
41	Space	--	1			--			--	1	--	Space	42
				Total Load:	10550 VA		10900 VA		8080 VA				
				Total Amps:	91 A		94 A		67 A				

Legend:

Load Classification	Connected Load	Demand Factor	Estimated Demand	Panel Totals	
Receptacle	10480 VA	97.71%	10240 VA		
R-Receptacle	19050 VA	76.25%	14525 VA	**Total Conn. Load:**	29530 VA
				Total Est. Demand:	24765 VA
				Total Conn.:	82 A
				Total Est. Demand:	69 A

Notes:

Branch Panel: ALLA

MOUNT TRANSIT ADMINISTRATION FACILITY

Location: ELECTRICAL ROOM 230 | **Volts:** 120/208 Wye | **A.I.C. Rating:** 10,000
Supply From: | **Phases:** 3 | **Mains Type:** 60A
Mounting: Surface | **Wires:** 4 | **Bus:** 100A

CKT	Circuit Description	Trip	Pole	A	B	C	A	B	C	Pole	Trip	Circuit Description	CKT
1	OFFICE LTS.	20 A	1	810 VA			1273...			1	20 A	BOARDROOM 222 LTS.	2
3	BREAK ROOM 205 LTS.	20 A	1		1252...			813 VA		1	20 A	LOBBY LTS.	4
5	WORKRM./CORRIDOR LTS.	20 A	1			970 VA			1040...	1	20 A	OPEN OFFICE LTS.	6
7	OFFICE LTS.	20 A	1	630 VA			489 VA			1	20 A	CONFERENCE ROOM LTS.	8
9	LOCKER/RESTRM/UTILITY LTS.	20 A	1		817 VA			761 VA		1	20 A	(R) EXTERIOR LTS.	10
11	(R) PARKING LOT LTS.	20 A	1			1630...			152 VA	1	20 A	BUS STOP LTS.	12
13	(R) CANOPY LTS.	20 A	1	230 VA			0 VA			1	20 A	Spare	14
15	Spare	20 A	1		0 VA			0 VA		1	20 A	Spare	16
17	Spare	20 A	1			0 VA			0 VA	1	20 A	Spare	18
19	Spare	20 A	1	0 VA			0 VA			1	20 A	Spare	20
21	Spare	20 A	1		0 VA			0 VA		1	20 A	Spare	22
23	Spare	20 A	1			0 VA			0 VA	1	20 A	Spare	24
25	Space	--	1	--			--			1	--	Space	26
27	Space	--	1		--			--		1	--	Space	28
29	Space	--	1			--			--	1	--	Space	30
				Total Load:	3432 VA		3643 VA		3792 VA				
				Total Amps:	29 A		31 A		32 A				

Legend:

Load Classification	Connected Load	Demand Factor	Estimated Demand	Panel Totals	
Lighting	1144 VA	100.00%	1144 VA		
Lighting - Dwelling Unit	1059 VA	100.00%	1059 VA	**Total Conn. Load:**	10866 VA
Other	4499 VA	100.00%	4499 VA	**Total Est. Demand:**	11850 VA
Power	230 VA	100.00%	230 VA	**Total Conn.:**	30 A
L-LIGHTING (LCL)	1630 VA	125.00%	2038 VA	**Total Est. Demand:**	33 A
Lighting (LCL)	15 VA	125.00%	19 VA		
L-Lighting(LCL)	2289 VA	125.00%	2861 VA		

Notes:
R - INDICATES THE CIRCUIT IS CONTROLLED BY 120V-1P-20A RELAY OPERATED BY ENERGY MANAGEMENT SYSTEM. MOUNT RELAY IN A SEPARATED COMPARTMENT ABOVE PANEL. PROVIDE 3/4"C.- 2#12, 1#12 GRD. FROM RELAY COIL TO BUILDING EMS PANEL.

Branch Panel: ALMA

MOUNT TRANSIT ADMINISTRATION FACILITY

Location: ELECTRICAL ROOM 230 | **Volts:** 120/208 Wye | **A.I.C. Rating:** 14,000
Supply From: | **Phases:** 3 | **Mains Type:** 250A
Mounting: Surface | **Wires:** 4 | **Bus:** 400A

CKT	Circuit Description	Trip	Pole	A	B	C	A	B	C	Pole	Trip	Circuit Description	CKT
1	EF-10	20 A	1	506 VA			35 VA			1	20 A	(R) EF-5	2
3	(R) EF-2	20 A	1		35 VA			35 VA		1	20 A	(R) EF-8	4
5	(R) EF-3	20 A	1			35 VA			35 VA	1	20 A	(R) EF-6	6
7	(R) EF-4	20 A	1	35 VA			35 VA			1	20 A	(R) EF-7	8
9	(R) EF-1	20 A	1		35 VA			5002...		3	90 A	CU-1-1 (41.68 FLA)	10
11	(R) EF-9	20 A	1			180 VA			5002...	--	--	--	12
13	HP-1 (28.8 FLA) OUTDOOR UNIT	50 A	3	3456...			5002...			--	--	--	14
15	--	--	--		3456...			396 VA		2	20 A	DOAS-1 (INDOOR UNIT)	16
17	--	--	--			3456...			396 VA	--	--	--	18
19	HP-2 (28.8 FLA) OUTDOOR UNIT	50 A	3	3456...			396 VA			2	20 A	DOAS-2 (INDOOR UNIT)	20
21	--	--	--		3456...			396 VA		--	--	--	22
23	--	--	--			3456...			1587...	1	20 A	RF-1 (8.8 FLA)	24
25	OU-1 (OUTDOOR UNIT)	20 A	2	1344...			1587...			1	20 A	RF-2 (8.8 FLA)	26
27	--	--	--		1344...			288 VA		1	20 A	EF-11	28
29	DOAS-1 DUCT HEATER	60 A	3			3994...			3994...	3	60 A	DOAS-2 DUCT HEATER	30
31	--	--	--	3994...			3994...			--	--	--	32
33	--	--	--		3994...			3994...		--	--	--	34
35	Spare	20 A	1			0 VA			0 VA	1	20 A	Spare	36
37	Space	--	1	--			--			1	--	Space	38
39	Space	--	1		--			--		1	--	Space	40
41	Space	--	1			--			--	1	--	Space	42
				Total Load:	23840 VA		22431 VA		22135 VA				
				Total Amps:	199 A		187 A		184 A				

Legend:

Load Classification	Connected Load	Demand Factor	Estimated Demand	Panel Totals	
HVAC	67152 VA	100.00%	67152 VA		
Power	1254 VA	100.00%	1254 VA	**Total Conn. Load:**	68406 VA
				Total Est. Demand:	68406 VA
				Total Conn.:	190 A
				Total Est. Demand:	190 A

Notes:
R - INIDICATES THE CIRCUIT IS CONTROLLED BY 120V-20A RELAY OPERATED BY ON/OFF SWITCH. MOUNT RELAY IN SEPARATE COMPARTMENT ABOVE PANEL. PROVIDE 3/4"C.- 2#12, 1#12 GRD. FROM RELAY COIL TO EXHAUST FAN.

STAMPS

AGENCY APPROVAL
File No.: n.a.

FBAEngineering
Consulting Electrical Engineers
150 Paularino Avenue Suite A120
Costa Mesa, CA 92626
949.852.9995 • 949.852.1657 (fax)
fbaengr.com
FBA Job Number: 874.1055

CONSULTANT BRANDING

RUHNAU CLARKE ARCHITECTS

MOUNT TRANSIT ADMINISTRATION FACILITY: 100% CD

Branch Panel: ALMB

MOUNT TRANSIT ADMINISTRATION FACILITY

Location: ELECTRICAL ROOM 230 | **Volts:** 120/208 Wye | **A.I.C. Rating:** 10,000
Supply From: | **Phases:** 3 | **Mains Type:** 225A
Mounting: Surface | **Wires:** 4 | **Bus:** 300A

CKT	Circuit Description	Trip	Pole	A	B	C	A	B	C	Pole	Trip	Circuit Description	CKT
1	FC-1	20 A	2	441 VA			186 VA			2	20 A	FC-4	2
3	--	--	--		441 VA			186 VA		--	--	--	4
5	FC-2	20 A	2			741 VA			441 VA	2	20 A	FC-5	6
7	--	--	--	741 VA			441 VA			--	--	--	8
9	FC-3	20 A	2		741 VA			186 VA		2	20 A	FC-6	10
11	--	--	--			741 VA			186 VA	--	--	--	12
13	FC-7	20 A	2	616 VA			159 VA			2	20 A	FC-9	14
15	--	--	--		616 VA			159 VA		--	--	--	16
17	FC-8	20 A	2			441 VA			96 VA	1	20 A	CP-1	18
19	--	--	--	441 VA			2750...			2	70 A	WATER HEATER WH-1	20
21	CU-1-2 (41.8 FLA)	90 A	3		5002...			2750...		--	--	--	22
23	--	--	--			5002...			5002...	3	90 A	CU-1-3 (41.68 FLA)	24
25	--	--	--	5002...			5002...			--	--	--	26
27	HT-1 (HEAT TRACE SYSTEM)	70 A	2		3120...			5002...		--	--	--	28
29	--	--	--			3120...			0 VA	1	20 A	Spare	30
31	HT-1 (HEAT TRACE SYSTEM)	40 A	2	2080...			0 VA			1	20 A	Spare	32
33	--	--	--		2080...			0 VA		1	20 A	Spare	34
35	Spare	20 A	1			0 VA			0 VA	1	20 A	Spare	36
37	Space	--	1	--			--			1	--	Space	38
39	Space	--	1		--			--		1	--	Space	40
41	Space	--	1			--			--	1	--	Space	42
			Total Load:		17859 VA		20283 VA		15770 VA				
			Total Amps:		152 A		172 A		131 A				

Legend:

Load Classification	Connected Load	Demand Factor	Estimated Demand	Panel Totals	
HVAC	43416 VA	100.00%	43416 VA		
Power	10496 VA	100.00%	10496 VA	**Total Conn. Load:**	53912 VA
				Total Est. Demand:	53912 VA
				Total Conn.:	150 A
				Total Est. Demand:	150 A

Notes:

Branch Panel: ALPC

MOUNT TRANSIT ADMINISTRATION FACILITY

Location: ELECTRICAL ROOM 230 | **Volts:** 120/208 Wye | **A.I.C. Rating:** 14,000
Supply From: | **Phases:** 3 | **Mains Type:** 150A
Mounting: Surface | **Wires:** 4 | **Bus:** 225A

CKT	Circuit Description	Trip	Pole	A	B	C	A	B	C	Pole	Trip	Circuit Description	CKT
1	OFFICE PRINTER	20 A	1	1000...			1800...			1	20 A	OPEN OFFICE FLOOR BOX RECEPT.	2
3	OFFICE PRINTER	30 A	2		500 VA			1800...		1	20 A	OPEN OFFICE FLOOR BOX RECEPT.	4
5	--	--	--			500 VA			1800...	1	20 A	OPEN OFFICE FLOOR BOX RECEPT.	6
7	OFFICE PRINTER	20 A	1	1000...			1800...			1	20 A	OPEN OFFICE FLOOR BOX RECEPT.	8
9	OFFICE PRINTER	30 A	2		500 VA			1000...		1	20 A	WORK ROOM PRINTER	10
11	--	--	--			500 VA			500 VA	2	30 A	WORK ROOM PRINTER	12
13	OFFICE PRINTER	20 A	1	1000...			500 VA			--	--	--	14
15	OFFICE PRINTER	30 A	2		500 VA			500 VA		1	20 A	DATA NETWORK BACKBOARD	16
17	--	--	--			500 VA			1500...	1	20 A	AIDF (INT. DATA FRAME)	18
19	OFFICE PRINTER	20 A	1	1000...			500 VA			1	20 A	DATA/VOICE NETWORK BACKBOARD	20
21	OFFICE PRINTER	30 A	2		500 VA			500 VA		1	20 A	PUBLIC ADDRESS/PA SYSTEM BACKBOARD	22
23	--	--	--			500 VA			200 VA	1	20 A	AFACP (FIRE ALARM CONTROL PANEL)	24
25	INTERNET SERVICE BACKBOARD	20 A	1	500 VA			200 VA			1	20 A	AIDTC (INTRUSION DETECTION TERM....	26
27	AEMTC (EMS TERMINAL CABINET)	20 A	1		200 VA			200 VA		1	20 A	ALCP (LIGHTING CONTROL PANEL)	28
29	FIRE PIT POWER	20 A	1			200 VA			550 VA	1	20 A	SMOKE FIRE DAMPERS *	30
31	RANGE/OVEN	30 A	2	3600...			200 VA			1	20 A	EXTERIOR RECEPT.	32
33	--	--	--		3600...			200 VA		1	20 A	EXTERIOR RECEPT.	34
35	Spare	20 A	1			0 VA			500 VA	1	20 A	DRINKING FOUNTAIN	36
37	Space	--	1	--			--			1	--	Space	38
39	Space	--	1		--			--		1	--	Space	40
41	Space	--	1			--			--	1	--	Space	42
			Total Load:		13100 VA		10000 VA		7250 VA				
			Total Amps:		113 A		87 A		60 A				

Legend:

Load Classification	Connected Load	Demand Factor	Estimated Demand	Panel Totals	
Motor	550 VA	100.00%	550 VA		
Other	200 VA	100.00%	200 VA	**Total Conn. Load:**	30350 VA
Power	700 VA	100.00%	700 VA	**Total Est. Demand:**	25650 VA
Receptacle	19400 VA	75.77%	14700 VA	**Total Conn.:**	84 A
R-Receptacle	9500 VA	100.00%	9500 VA	**Total Est. Demand:**	71 A

Notes:
* - PROVIDE APPROVED-CIRCUIT BREAKER LOCK-ON DEVICE, RED IN COLOR. LABEL: "FIRE ALARM CONTROL CIRCUIT".

Branch Panel: AEVP

MOUNT TRANSIT ADMINISTRATION FACILITY

Location: ELECTRICAL ROOM 230 | **Volts:** 120/208 Wye | **A.I.C. Rating:** 14,000
Supply From: | **Phases:** 3 | **Mains Type:** 225A
Mounting: Surface | **Wires:** 4 | **Bus:** 250A

CKT	Circuit Description	Trip	Pole	A	B	C	A	B	C	Pole	Trip	Circuit Description	CKT
1	FUTURE EV SYSTEM	40 A	2	3600...			3600...			2	40 A	FUTURE EV SYSTEM	2
3	--	--	--		3600...			3600...		--	--	--	4
5	FUTURE EV SYSTEM	40 A	2			3600...			3600...	2	40 A	FUTURE EV SYSTEM	6
7	--	--	--	3600...			3600...			--	--	--	8
9	FUTURE EV SYSTEM	40 A	2		3600...			3600...		2	40 A	FUTURE EV SYSTEM	10
11	--	--	--			3600...			3600...	--	--	--	12
13	FUTURE EV SYSTEM	40 A	2	3600...			0 VA			1	20 A	Spare	14
15	--	--	--		3600...			0 VA		1	20 A	Spare	16
17	FUTURE EV SYSTEM	40 A	2			3600...			0 VA	1	20 A	Spare	18
19	--	--	--	3600...			0 VA			1	20 A	Spare	20
21	Spare	20 A	1		0 VA			0 VA		1	20 A	Spare	22
23	Spare	20 A	1			0 VA			0 VA	1	20 A	Spare	24
25	Spare	20 A	1	0 VA			0 VA			1	20 A	Spare	26
27	Spare	20 A	1		0 VA			0 VA		1	20 A	Spare	28
29	Spare	20 A	1			0 VA			0 VA	1	20 A	Spare	30
31	Spare	20 A	1	0 VA			0 VA			1	20 A	Spare	32
33	Spare	20 A	1		0 VA			0 VA		1	20 A	Spare	34
35	Spare	20 A	1			0 VA			0 VA	1	20 A	Spare	36
37	Space	--	1	--			--			1	--	Space	38
39	Space	--	1		--			--		1	--	Space	40
41	Space	--	1			--			--	1	--	Space	42
			Total Load:		21600 VA		18000 VA		18000 VA				
			Total Amps:		180 A		150 A		150 A				

Legend:

Load Classification	Connected Load	Demand Factor	Estimated Demand	Panel Totals	
Other	57600 VA	100.00%	57600 VA		
				Total Conn. Load:	57600 VA
				Total Est. Demand:	57600 VA
				Total Conn.:	160 A
				Total Est. Demand:	160 A

Notes:

STAMPS

AGENCY APPROVAL
File No.: 4.2

FBAEngineering
Consulting Electrical Engineers
150 Paularino Avenue Suite A120
Costa Mesa, CA 92626
949.852.9995 • 949.852.1657 (fax)
fbaengr.com
FBA Job Number: 874.1055

CONSULTANT BRANDING

RUHNAU CLARKE ARCHITECTS

MOUNT TRANSIT ADMINISTRATION FACILITY: 100% CD

STATE OF CALIFORNIA
Indoor Lighting
CALIFORNIA ENERGY COMMISSION

CERTIFICATE OF COMPLIANCE		NRCC-LTI-E
Project Name: MOUNT TRANSIT ADMINSTRATION FACILITY	Report Page:	(Page 1 of 8)
Project Address: 170 BUSINESS CENTER DR.	Date Prepared:	2/22/2024

This document is used to demonstrate compliance with requirements in 110.9, 110.12(c), 130.0, 130.1, 140.6 and 141.0(b)2 for indoor lighting scopes using the prescriptive path for nonresidential and hotel/motel occupancies. It is also used to document compliance with requirements in 160.5, 170.2(e) and 180.2(b)4 for indoor lighting scopes using the prescriptive path for multifamily occupancies. Multifamily includes dormitory and senior living facilities.

A. GENERAL INFORMATION

01	Project Location (city)	BIG BEAR LAKES	04	Total Conditioned Floor Area (ft²)	9,057
02	Climate Zone	16	05	Total Unconditioned Floor Area (ft²)	0
03	Occupancy Types Within Project (select all that apply):		06	# of Stories (Habitable Above Grade)	1

● Office ● Support Areas ● All Other Occupancies

B. PROJECT SCOPE

This table includes any lighting systems that are within the scope of the permit application and are demonstrating compliance using the prescriptive path outlined in 140.6 / 170.2(e) or 141.0(b)2 / 180.2(b)4 for alterations.

Scope of Work	Conditioned Spaces		Unconditioned Spaces	
01	02	03	04	05
My Project Consists of (check all that apply):	Calculation Method	Area (ft²)	Calculation Method	Area (ft²)
☒ New Lighting System	Area Category Method	9057	Area Category Method	0
☐ New Lighting System - Parking Garage				
Total Area of Work (ft²)	9057		0	

STATE OF CALIFORNIA
Indoor Lighting
CALIFORNIA ENERGY COMMISSION

CERTIFICATE OF COMPLIANCE		NRCC-LTI-E
Project Name: MOUNT TRANSIT ADMINSTRATION FACILITY	Report Page:	(Page 2 of 8)
	Date Prepared:	2/22/2024

C. COMPLIANCE RESULTS

If any cell on this table says "DOES NOT COMPLY" or "COMPLIES with Exceptional Conditions" refer to Table D. for guidance.

Lighting in conditioned and unconditioned spaces must not be combined for compliance per 140.6(b)1 / 170.2(e)	Allowed Lighting Power per 140.6(b) / 170.2(e) (Watts)						Adjusted Lighting Power per 140.6(a) / 170.2(e) (Watts)				Compliance Results
	01	02	03	04		05	06	07		08	09
	Complete Building 140.6(c)1	Area Category 140.6(c)2 / 170.2(e)4	Area Category Additional 140.6(c)2G / 170.2(e)4Av (+)	Tailored 140.6(c)3 / 170.2(e)4B (+)		**Total Allowed** (Watts)	Total Designed (Watts)	Adjustments PAF Lighting Control Credits 140.6(a)2 / 170.2(e)1B (-)		**Total Adjusted** (Watts) *Includes Adjustments	**05 must be >= 08 140.6 / 170.2(e)**
	(See Table I)	(See Table I)	(See Table J)	(See Table K)			(See Table F)	(See Table P)			
Conditioned		6,019.7	0		=	6,020	6,002	0	=	6002	COMPLIES
Unconditioned					=				=		
Controls Compliance (See Table H for Details)											COMPLIES
Rated Power Reduction Compliance (See Table Q for Details)											

D. EXCEPTIONAL CONDITIONS

This table is auto-filled with uneditable comments because of selections made or data entered in tables throughout the form.

E. ADDITIONAL REMARKS

This table includes remarks made by the permit applicant to the Authority Having Jurisdiction.

STATE OF CALIFORNIA
Indoor Lighting
CALIFORNIA ENERGY COMMISSION

CERTIFICATE OF COMPLIANCE		NRCC-LTI-E
Project Name: MOUNT TRANSIT ADMINSTRATION FACILITY	Report Page:	(Page 3 of 8)
	Date Prepared:	2/22/2024

F. INDOOR LIGHTING FIXTURE SCHEDULE

This table includes all planned permanent and portable lighting other than dwelling unit/ hotel/ motel room lighting. Multifamily dwelling unit and hotel/motel room lighting is documented in Table T. If using Table T to document lighting in multifamily common use areas providing shared provisions for living, eating, cooking or sanitation, those luminaires are not included here.

Designed Wattage: Conditioned Spaces

01	02	03	04	05	06	07	08	09	10	
Name or Item Tag	Complete Luminaire Description	Modular (Track) Fixture	Small Aperture & Color Change[1]	Watts per luminaire[2]	How is Wattage determined	Total Number of Luminaires	Excluded per 140.6(a)3 / 170.2(e)2C	Design Watts	Field Inspector	
									Pass	Fail
A	A - 2'x4' LED RECESSED	No	NA	45	Mfr. Spec	45	No	2,025	☐	☐
B	B - 1'x4' LED RECESSED	No	NA	45	Mfr. Spec	12	No	540	☐	☐
C	C - 4' LED MARINE GRADE	No	NA	49	Mfr. Spec	6	No	294	☐	☐
D	D - LED STRIPLIGHT	No	NA	26.7	Mfr. Spec	10	No	267	☐	☐
E	E - LED PENDANT WITH THICK GAUGE ALUMINUM SHELL	No	NA	40.5	Mfr. Spec	17	No	688.5	☐	☐
F	F - LED PENDANT WITH SPUN MATE	No	NA	56	Mfr. Spec	20	No	1,120	☐	☐
H1	H1 - 8' DIA, 1.75" HEIGHT	No	NA	173	Mfr. Spec	3	No	519	☐	☐
H2	H2 - 6' DIA, 1.75" HEIGHT	No	NA	116	Mfr. Spec	3	No	348	☐	☐
I	I - PENDANT CYLINDRICAL SHAPE	No	NA	25	Mfr. Spec	8	No	200	☐	☐
Total Designed Watts: CONDITIONED SPACES								6,002		

[1]*FOOTNOTE: Design Watts for small aperture and color changing luminaires which qualify per 140.6(a)4B / 170.2(e)2D is adjusted to be 75% /80% of their rated wattage. Table F automatically makes this adjustment, the permit applicant should enter full rated wattage in column 05.*

[2]*Authority Having Jurisdiction may ask for Luminaire cut sheets to confirm wattage used for compliance per 130.0(c) / 160.5(b). Wattage used must be the maximum rated for the luminaire, not the lamp.*

G. MODULAR LIGHTING SYSTEMS

This section does not apply to this project.

STATE OF CALIFORNIA
Indoor Lighting
CALIFORNIA ENERGY COMMISSION

CERTIFICATE OF COMPLIANCE		NRCC-LTI-E
Project Name: MOUNT TRANSIT ADMINSTRATION FACILITY	Report Page:	(Page 4 of 8)
	Date Prepared:	2/22/2024

H. INDOOR LIGHTING CONTROLS (Not including PAFs)

This table includes lighting controls for conditioned and unconditioned spaces.

Building Level Controls

01	02	03	
		Field Inspector	
		Pass	Fail
Mandatory Demand Response 110.12(c)	Shut-off controls 130.1(c) / 160.5(b)4C		
Required >= 4,000W subject to multilevel	Whole Building Auto Time Switch	☐	☐

Area Level Controls

04	05	06	07	08	09	10	11	12	
Area Description	Complete Building or Area Category Primary Function Area	Manual Area Controls 130.1(a) / 160.5(b)4A	Multi-Level Controls 130.1(b) / 160.5(b)4B	Shut-Off Controls 130.1(c) // 160.5(b)4C	Primary/Sky lit Daylighting 130.1(d) / 160.5(b)4D	Secondary Daylighting 130.1(d) / 160.5(b)4D	Interlocked Systems 140.6(a)1/ 170.2(e)2A	Field Inspector	
								Pass	Fail
Whole Building	All Other Space Types	Readily Accessible	Dimmer	See Building Level	Included	Included	No	☐	☐
					13				
					Plan Sheet Showing Daylit Zones:				

I. LIGHTING POWER ALLOWANCE: COMPLETE BUILDING OR AREA CATEGORY METHODS

Each area complying using the Complete Building or Area Category Methods per 140.6(b) are included in this table. Column 06 indicates if additional lighting power allowances per 140.6(c) or adjustments per 140.6(a) are being used .

Conditioned Spaces

01	02	03	04	05	06	
Area Description	Complete Building or Area Category Primary Function Area	Allowed Density (W/ft²)	Area (ft²)	Allowed Wattage (Watts)	Additional Allowance / Adjustment	
					Area Category	PAF
OFFICE	Office (<=250 square feet)	0.65	3,250	2,112.5	No	No

STATE OF CALIFORNIA
Indoor Lighting
CALIFORNIA ENERGY COMMISSION

CERTIFICATE OF COMPLIANCE		NRCC-LTI-E
Project Name: MOUNT TRANSIT ADMINSTRATION FACILITY	Report Page:	(Page 5 of 8)
	Date Prepared:	2/22/2024

I. LIGHTING POWER ALLOWANCE: COMPLETE BUILDING OR AREA CATEGORY METHODS

CONFRENCE ROOM	Convention, Conference, Multipurpose and Meeting Center	0.75	2,051	1,538.2	No	No
ELECTRICAL ROOM	Electrical Mechancial Telephone Room	0.4	146	58.4	No	No
STORAGE	All Other Space Types	0.4	259	103.6	No	No
RESTROOM	Restroom	0.65	495	321.8	No	No
LOCKER ROOM	Locker/Dressing Room	0.45	456	205.2	No	No
LOBBY	Main Entry Lobby	0.7	2,400	1,680	No	No
		TOTALS:	9,057	6,019.7	See Tables J, or P for detail	

J. ADDITIONAL ALLOWANCE: AREA CATEGORY METHOD QUALIFYING LIGHTING SYSTEM

This section does not apply to this project.

K. TAILORED METHOD GENERAL LIGHTING POWER ALLOWANCE

This section does not apply to this project.

L. ADDITIONAL LIGHTING ALLOWANCE: TAILORED WALL DISPLAY

This section does not apply to this project.

M. ADDITIONAL LIGHTING ALLOWANCE: TAILORED FLOOR AND TASK LIGHTING

This section does not apply to this project.

N. ADDITIONAL LIGHTING ALLOWANCE: TAILORED DECORATIVE /SPECIAL EFFECTS

This section does not apply to this project.

STATE OF CALIFORNIA
Indoor Lighting
CALIFORNIA ENERGY COMMISSION

CERTIFICATE OF COMPLIANCE		NRCC-LTI-E
Project Name: MOUNT TRANSIT ADMINSTRATION FACILITY	Report Page:	(Page 6 of 8)
	Date Prepared:	2/22/2024

O. ADDITIONAL LIGHTING ALLOWANCE: TAILORED VERY VALUABLE MERCHANDISE

This section does not apply to this project.

P. POWER ADJUSTMENT: LIGHTING CONTROL CREDIT (POWER ADJUSTMENT FACTOR (PAF))

This section does not apply to this project.

Q. RATED POWER REDUCTION COMPLIANCE FOR ONE-FOR-ONE ALTERATIONS

This section does not apply to this project.

R. 80% LIGHTING POWER FOR ALL ALTERATIONS - CONTROLS EXCEPTIONS

This section does not apply to this project.

S. DAYLIGHT DESIGN POWER ADJUSTMENT FACTOR (PAF)

This section does not apply to this project.

T. DWELLING UNIT LIGHTING

This section does not apply to this project.

U. DECLARATION OF REQUIRED CERTIFICATES OF INSTALLATION

Selections have been made based on information provided in this document. If any selections have been changed by permit applicant, an explanation should be included in Table E. Additional Remarks. These documents must be provided to the building inspector during construction and can be found online

Form/Title
NRCI-LTI-E - Must be submitted for all buildings

STAMPS

AGENCY APPROVAL
File No.: n.a.

FBA Engineering
Consulting Electrical Engineers
150 Paularino Avenue Suite A120
Costa Mesa, CA 92626
949.852.9995 • 949.852.1657 (fax)
fbaengr.com
FBA Job Number: 874.1055

CONSULTANT BRANDING

RUHNAU CLARKE ARCHITECTS

STATE OF CALIFORNIA
Indoor Lighting
CALIFORNIA ENERGY COMMISSION

CERTIFICATE OF COMPLIANCE		NRCC-LTI-E
Project Name: MOUNT TRANSIT ADMINSTRATION FACILITY	Report Page:	(Page 7 of 8)
	Date Prepared:	2/22/2024

V. DECLARATION OF REQUIRED CERTIFICATES OF ACCEPTANCE

Selections have been made based on information provided in this document. If any selections have been changed by the permit applicant, an explanation should be included in Table E. Additional Remarks. These documents must be provided to the building inspector during construction and any with "-A" in the form name must be completed through an Acceptance Test Technician Certification Provider (ATTCP). For more information visit: http://www.energy.ca.gov/title24/attcp/providers.html

Form/Title	Systems/Spaces To Be Field Verified
NRCA-LTI-02-A - Must be submitted for occupancy sensors and automatic time switch controls.	Whole Building Time Switch;
NRCA-LTI-03-A - Must be submitted for automatic daylight controls.	Whole Building;
NRCA-LTI-04-A - Must be submitted for demand responsive lighting controls.	Whole Building Demand Response;

STATE OF CALIFORNIA
Indoor Lighting
CALIFORNIA ENERGY COMMISSION

CERTIFICATE OF COMPLIANCE		NRCC-LTI-E
Project Name: MOUNT TRANSIT ADMINSTRATION FACILITY	Report Page:	(Page 8 of 8)
Project Address: 170 BUSINESS CENTER DR.	Date Prepared:	2/22/2024

DOCUMENTATION AUTHOR'S DECLARATION STATEMENT

I certify that this Certificate of Compliance documentation is accurate and complete.

Documentation Author Name: Stephen R. Zajicek P.E.	Documentation Author Signature:
Company:	Signature Date:
Address: 150 Paularino Avenue Suite A120	CEA/ HERS Certification Identification (if applicable): E10372
City/State/Zip: Costa Mesa CA 92626	Phone: 949-852-9995

RESPONSIBLE PERSON'S DECLARATION STATEMENT

I certify the following under penalty of perjury, under the laws of the State of California:

1. The information provided on this Certificate of Compliance is true and correct.
2. I am eligible under Division 3 of the Business and Professions Code to accept responsibility for the building design or system design identified on this Certificate of Compliance (responsible designer)
3. The energy features and performance specifications, materials, components, and manufactured devices for the building design or system design identified on this Certificate of Compliance conform to the requirements of Title 24, Part 1 and Part 6 of the California Code of Regulations.
4. The building design features or system design features identified on this Certificate of Compliance are consistent with the information provided on other applicable compliance documents, worksheets, calculations, plans and specifications submitted to the enforcement agency for approval with this building permit application.
5. I will ensure that a completed signed copy of this Certificate of Compliance shall be made available with the building permit(s) issued for the building, and made available to the enforcement agency for all applicable inspections. I understand that a completed signed copy of this Certificate of Compliance is required to be included with the documentation the builder provides to the building owner at occupancy.

Responsible Designer Name: Stephen R Zajicek	Responsible Designer Signature:
Company: FBA Engineering	Date Signed: 2024-02-22
Address: 150 Paularino Avenue Suite A120	License: E10372
City/State/Zip: Costa Mesa Ca 92626	Phone: 949-852-9995

MOUNT TRANSIT ADMINISTRATION FACILITY: 100% CD

PROJECT No. :50801
4/18/2024 11:26:37 AM

DRAWN BY: CHECKED BY:

ISSUE No._____ DATE_____ DESCRIPTION_____
ISSUE No._____ DATE_____ DESCRIPTION_____
ISSUE No._____ DATE_____ DESCRIPTION_____
ISSUE No._____ DATE_____ DESCRIPTION_____

REVISION No._____ DATE_____ DESCRIPTION_____
REVISION No._____ DATE_____ DESCRIPTION_____
REVISION No._____ DATE_____ DESCRIPTION_____
REVISION No._____ DATE_____ DESCRIPTION_____

RUHNAUCLARKE.COM
3775 TENTH STREET, RIVERSIDE CALIFORNIA 92501(951) 684 4664 / 5751 PALMER WAY, SUITE C, CARLSBAD CALIFORNIA 92010(760) 438 5899

MOUNT TRANSIT ADMINISTRATION FACILITY
170 BUSINESS CENTER DR. BIG BEAR LAKES, CA
BIG BEAR LAKES

TITLE 24 (INDOOR)

E1-3.1

50801

STATE OF CALIFORNIA
Outdoor Lighting
CALIFORNIA ENERGY COMMISSION

CERTIFICATE OF COMPLIANCE		NRCC-LTO-E
Project Name: MOUNT TRANSIT ADMINSTRATION FACILITY	Report Page:	(Page 1 of 7)
Project Address: 170 BUSINESS CENTER DR.	Date Prepared:	2/22/2024

This document is used to demonstrate compliance with requirements in 110.9, 130.0, 130.2, 140.7, and 141.0(b)2L for outdoor lighting scopes using the prescriptive path for nonresidential and hotel/motel occupancies. It is also used to document compliance with requirements in 160.5, 170.2(e)6, 180.1(a) and 180.2(b)4Bv for outdoor lighting scopes using the prescriptive path for multifamily and mixed-use occupancies. Multifamily includes dormitory and senior living facilities.

A. GENERAL INFORMATION

01	Project Location (city)	BIG BEAR LAKES	04	Total Illuminated Hardscape Area (ft²)	77689
02	Climate Zone	16			

03 Outdoor Lighting Zone per Title 24 Part 1 10.114 or as designated by Authority Having Jurisdiction (AHJ):

☐ LZ-0: Very Low - Undeveloped Parkland ☒ LZ-2: Moderate - Urban Clusters ☐ LZ-4: High - Must be reviewed by CA Energy Commission for Approval

☐ LZ-1: Low - Rural Areas ☐ LZ-3: Moderately High - Urban Areas

05 Occupancy Types within Project

● Office ● Support Areas ● All Other Occupancies

B. PROJECT SCOPE

This table includes outdoor lighting systems that are within the scope of the permit application and are demonstrating compliance using the prescriptive path outlined in 140.7 / 170.2(e)6 or 141.0(b)2L / 180.2(b)4Bv for alterations.

My Project Consists of:

01	02	
☒ New Lighting System	Must Comply with Allowances from 140.7 / 170.2(e)6	
☐ Altered Lighting System	Is your alteration increasing the connected lighting load (Watts)?	◯ Yes ◯ No
03	04	05
% of Existing Luminaires Being Altered[1]	Sum Total of Luminaires Being Added or Altered	Calculation Method
☐ < 10% ☐ >= 10% and < 50% ☐ >= 50%		

Please proceed to Table F. Outdoor Lighting Fixture Schedule to define the project's luminaires.

[1] FOOTNOTES: % of Existing Luminaires Being Altered = (Sum Total of Luminaires Being Added or Altered / Existing Luminaires within the Scope of the Permit Application) x 100.

STATE OF CALIFORNIA
Outdoor Lighting
CALIFORNIA ENERGY COMMISSION

CERTIFICATE OF COMPLIANCE		NRCC-LTO-E
Project Name: MOUNT TRANSIT ADMINSTRATION FACILITY	Report Page:	(Page 2 of 7)
	Date Prepared:	2/22/2024

C. COMPLIANCE RESULTS

Results in this table are automatically calculated from data input and calculations in Tables F through N. Note: If any cell on this table says "COMPLIES with Exceptional Conditions" refer to Table D. Exceptional Conditions for guidance or see applicable Table referenced below.

Calculations of Total Allowed Lighting Power (Watts) 140.7 / 170.2(e)6 or 141.0(b)2L / 180.2(b)4Bv												Compliance Results		
01		02		03		04		05	OR	06	=	07		08	09
General Hardscape Allowance 140.7(d)1 / 170.2(e)6 (See Table I)	+	Per Application 140.7(d)2 / 170.2(e)6 (See Table J)	+	Sales Frontage 140.7(d)2 (See Table K)	+	Ornamental 140.7(d)2 / 170.2(e)6 (See Table L)	+	Per Specific Area 140.7(d)2 / 170.2(e)6 (See Table M)	OR	Existing Power Allowance 141.0(b)2L / 180.2(b)4Bv (See Table N)	=	**Total Allowed** (Watts)	≥	**Total Actual** (Watts)	**07 must be >= 08**
2,306	+	---	+	---	+	---	+	---	OR	---	=	2,306	≥	2,148	COMPLIES
										Shielding Compliance (See Table G for Details)					N/A
										Controls Compliance (See Table H for Details)					Not applicable

D. EXCEPTIONAL CONDITIONS

This table is auto-filled with uneditable comments because of selections made or data entered in tables throughout the form.

E. ADDITIONAL REMARKS

This table includes remarks made by the permit applicant to the Authority Having Jurisdiction.

Generated Date/Time: Documentation Software: EnergyPro
CA Building Energy Efficiency Standards - 2022 Nonresidential Compliance Report Version: 2022.0.000 Schema Version: rev 20220101 Compliance ID: EnergyPro-7526-0224-0823 Report Generated: 2024-02-22 09:51:51

STATE OF CALIFORNIA
Outdoor Lighting
CALIFORNIA ENERGY COMMISSION

CERTIFICATE OF COMPLIANCE		NRCC-LTO-E
Project Name: MOUNT TRANSIT ADMINSTRATION FACILITY	Report Page:	(Page 3 of 7)
	Date Prepared:	2/22/2024

F. OUTDOOR LIGHTING FIXTURE SCHEDULE

For new or altered lighting systems demonstrating compliance with 140.7 / 170.2(e)6 all new luminaires being installed and any existing luminaires remaining or being moved within the spaces covered by the permit application are included in the Table below. For altered lighting systems using the Existing Power method per 141.0(b)2L only new luminaires being installed and replacement luminaires being installed as part of the project scope are included (ie, existing luminaires remaining or existing luminaires being moved are not included). Outdoor lighting attached to multifamily buildings and controlled from the inside of a dwelling unit are included in Table H. and are not included here. All other multifamily outdoor lighting is included here.

Designed Wattage:

01	02		03	04	05	06	07	08	09	10	
Name or Item Tag	Complete Luminaire Description		Watts per luminaire[1, 2]	How is Wattage determined	Total Number Luminaires[2]	Luminaire Status[3]	Excluded per 140.7(a) / 170.2(e)6A	Design Watts	Cutoff Req. > 6,200 initial lumen output 130.2(b) / 160.5(c)1[4]	Field Inspector	
										Pass	Fail
G	G - LED SURFACE CANOPY LUMINAIRE	☐ Linear	46	Mfr. Spec	5	New	☐	230	NA: < 6200 lumens	☐	☐
K	K - LED EXTERIOR 2" DIA WALL SCONE	☐ Linear	12	Mfr. Spec	24	New	☐	288	NA: < 6200 lumens	☐	☐
SP1	SP1 - LED AREA LIGHT	☐ Linear	163	Mfr. Spec	4	New	☐	652	NA: < 6200 lumens	☐	☐
SP2	SP2 - LED AREA LIGHT WITH TWO LUMINAIRES MOUNTED 90 DEGREES	☐ Linear	326	Mfr. Spec	2	New	☐	652	NA: < 6200 lumens	☐	☐
SP3	SP3 - LED AREA LIGHT WITH TWO LUMINAIRES MOUNTED 180 DEGREES	☐ Linear	326	Mfr. Spec	1	New	☐	326	NA: < 6200 lumens	☐	☐
							Total Design Watts:	2148			

* NOTES: Selections with a * require a note in the space below explaining how compliance is achieved.
EX: Luminaire is lighting a statue; EXCEPTION 2 to 130.2(b)

[1] FOOTNOTES: Authority Having Jurisdiction may ask for Luminaire cut sheets to confirm wattage used for compliance per 130.0(c) / 160.5(b)
[2] For linear luminaires, wattage should be indicated as W/lf instead of Watts/luminaire. Total linear feet should be indicated in column 05 instead of number of luminaires.
[3] Select "New" for new luminaires in a new outdoor lighting project, or for added luminaires in an alteration. Select "Altered" for replacement luminaires in an alteration. Select "Existing to Remain" for existing luminaires within the project scope that are not being altered and are remaining. Select "Existing Reinstalled" for existing luminaires which are being removed and reinstalled as part of the project scope.

Generated Date/Time: Documentation Software: EnergyPro
CA Building Energy Efficiency Standards - 2022 Nonresidential Compliance Report Version: 2022.0.000 Schema Version: rev 20220101 Compliance ID: EnergyPro-7526-0224-0823 Report Generated: 2024-02-22 09:51:51

STATE OF CALIFORNIA
Outdoor Lighting
CALIFORNIA ENERGY COMMISSION

CERTIFICATE OF COMPLIANCE		NRCC-LTO-E
Project Name: MOUNT TRANSIT ADMINSTRATION FACILITY	Report Page:	(Page 4 of 7)
	Date Prepared:	2/22/2024

F. OUTDOOR LIGHTING FIXTURE SCHEDULE

For new or altered lighting systems demonstrating compliance with 140.7 / 170.2(e)6 all new luminaires being installed and any existing luminaires remaining or being moved within the spaces covered by the permit application are included in the Table below. For altered lighting systems using the Existing Power method per 141.0(b)2L only new luminaires being installed and replacement luminaires being installed as part of the project scope are included (ie, existing luminaires remaining or existing luminaires being moved are not included). Outdoor lighting attached to multifamily buildings and controlled from the inside of a dwelling unit are included in Table H. and are not included here. All other multifamily outdoor lighting is included here.

Designed Wattage:

01	02	03	04	05	06	07	08	09	10

[4] Compliance with mandatory shielding requirements is required for luminaires with initial lumen output >= 6,200 unless exempted by 130.2(b)/ 160.5(c)

G. SHIELDING REQUIREMENTS (BUG)

This section does not apply to this project.

H. OUTDOOR LIGHTING CONTROLS

This table demonstrates compliance with controls requirements for all new or altered luminaires installed as part of the permit application. For alteration projects, luminaires which are existing to remain (ie untouched) and luminaires which are removed and reinstalled (wiring only) do not need to be included in this table even if they are within the spaces covered by the permit application.
Outdoor lighting for nonresidential buildings, parking garages and common service areas in multifamily buildings must be documented separately from outdoor lighting attached to multifamily buildings and controlled from the inside of a dwelling unit

Mandatory Controls for Nonresidential Occupancies, Parking Garages & Common Areas in Multifamily Buildings

01	02	03	04	05	
Area Description	Shut-Off 130.2(c)1 / 160.5(c)	Auto-Schedule 130.2(c)2 / 160.5(c)	Motion Sensor 130.2(c)3 / 160.5(c)	Field Inspector	
				Pass	Fail

[1] FOOTNOTE: Text has been abbreviated, please refer to Table 160.5-A to confirm compliance with the specific light source technologies listed.
[2] Authority having jurisdiction may ask for cutsheets or other documentation to confirm compliance of light source.
[3] Recessed luminaires marked for use in fire-rated installations, and recessed luminaires installed in non-insulated ceilings are excepted from ii and iii.

Generated Date/Time: Documentation Software: EnergyPro
CA Building Energy Efficiency Standards - 2022 Nonresidential Compliance Report Version: 2022.0.000 Schema Version: rev 20220101 Compliance ID: EnergyPro-7526-0224-0823 Report Generated: 2024-02-22 09:51:51

STATE OF CALIFORNIA
Outdoor Lighting
CALIFORNIA ENERGY COMMISSION

CERTIFICATE OF COMPLIANCE		NRCC-LTO-E
Project Name: MOUNT TRANSIT ADMINSTRATION FACILITY	Report Page:	(Page 5 of 7)
	Date Prepared:	2/22/2024

I. LIGHTING POWER ALLOWANCE (per 140.7 / 170.2(e))

This table includes areas using allowance calculations per 140.7 / 170.2(e). General Hardscape Allowance is per Table 140.7-A/Table 170.2-R while "Use it or lose it" Allowances are per Table 140.7-B /Table 170.2-S. Indicate which allowances are being used to expand sections for user input. Luminaires that qualify for one of the "Use it or lose it" allowances shall not qualify for another "Use it or lose it" allowance.
Outdoor lighting attached to multifamily buildings and controlled from the inside of a dwelling unit are included in Table H. and are not included here. All other multifamily outdoor lighting is included here.

	01				
	"Use it or lose it" Allowance (select all that apply) (select all that apply)				
☒ General Hardscape Allowance Table I (below)	☐ Per Application Table J	☐ Sales Frontage Table K	☐ Ornamental Table L	☐ Per Specific Area Table M	

Calculated General Hardscape Lighting Power Allowance per Table 140.7-A for Nonresidential & Hotel/Motel

02	03	04	05	06	07	08	09
Area Description	Area Wattage Allowance (AWA)			Linear Wattage Allowance (LWA)			Total General AWA + LWA (Watts)
	Illuminated Area (ft²)	Allowed Density (W/ft²)	Area Allowance (Watts)	Perimeter Length (lf)	Allowed Density (W/lf)	Linear Allowance (Watts)	
EXTERIOR LIGHTING	20089	0.019	381.7	2000	0.2	300	682
EXTERIOR LIGHTING	57600	0.019	1094.4	2200	0.2	330	1424
					Initial Wattage Allowance for Entire Site (Watts):		200
					Instances of Initial Wattage Allowance (LZ 0 only)[1]		
					Total General Hardscape Allowance (Watts):		2306

J. LIGHTING ALLOWANCE: PER APPLICATION

This section does not apply to this project.

K. LIGHTING ALLOWANCE: SALES FRONTAGE

This section does not apply to this project.

L. LIGHTING ALLOWANCE: ORNAMENTAL

This section does not apply to this project.

Generated Date/Time: Documentation Software: EnergyPro
CA Building Energy Efficiency Standards - 2022 Nonresidential Compliance Report Version: 2022.0.000 Schema Version: rev 20220101 Compliance ID: EnergyPro-7526-0224-0823 Report Generated: 2024-02-22 09:51:51

STATE OF CALIFORNIA
Outdoor Lighting
CALIFORNIA ENERGY COMMISSION

CERTIFICATE OF COMPLIANCE		NRCC-LTO-E
Project Name: MOUNT TRANSIT ADMINSTRATION FACILITY	Report Page:	(Page 6 of 7)
	Date Prepared:	2/22/2024

M. LIGHTING ALLOWANCE: PER SPECIFIC AREA

This section does not apply to this project.

N. EXISTING CONDITIONS POWER ALLOWANCE (alterations only)

This section does not apply to this project.

O. DECLARATION OF REQUIRED CERTIFICATES OF INSTALLATION

Selections have been made based on information provided in this document. If any selection has been changed by permit applicant, an explanation should be included in Table E. Additional Remarks. These documents must be provided to the building inspector during construction and can be found online

Form/Title
NRCI-LTO-E - Must be submitted for all buildings

P. DECLARATION OF REQUIRED CERTIFICATES OF ACCEPTANCE

There are no NRCA forms required for this project.

Generated Date/Time: Documentation Software: EnergyPro
CA Building Energy Efficiency Standards - 2022 Nonresidential Compliance Report Version: 2022.0.000 Schema Version: rev 20220101 Compliance ID: EnergyPro-7526-0224-0823 Report Generated: 2024-02-22 09:51:51

STAMPS

AGENCY APPROVAL
File No.: n.a.

FBAEngineering
Consulting Electrical Engineers
150 Paularino Avenue Suite A120
Costa Mesa, CA 92626
949.852.9995 • 949.852.1657 (fax)
fbaengr.com
FBA Job Number: 874.1055

CONSULTANT BRANDING

RUHNAU CLARKE ARCHITECTS

STATE OF CALIFORNIA
Outdoor Lighting
CALIFORNIA ENERGY COMMISSION

CERTIFICATE OF COMPLIANCE		NRCC-LTO-E
Project Name: MOUNT TRANSIT ADMINSTRATION FACILITY	Report Page:	(Page 7 of 7)
Project Address: 170 BUSINESS CENTER DR.	Date Prepared:	2/22/2024

DOCUMENTATION AUTHOR'S DECLARATION STATEMENT

I certify that this Certificate of Compliance documentation is accurate and complete.

Documentation Author Name: Stephen R. Zajicek P.E.	Documentation Author Signature:
Company:	Signature Date:
Address: 150 Paularino Avenue Suite A120	CEA/ HERS Certification Identification (if applicable): E10372
City/State/Zip: Costa Mesa CA 92626	Phone: 949-852-9995

RESPONSIBLE PERSON'S DECLARATION STATEMENT

I certify the following under penalty of perjury, under the laws of the State of California:

1. The information provided on this Certificate of Compliance is true and correct.
2. I am eligible under Division 3 of the Business and Professions Code to accept responsibility for the building design or system design identified on this Certificate of Compliance (responsible designer)
3. The energy features and performance specifications, materials, components, and manufactured devices for the building design or system design identified on this Certificate of Compliance conform to the requirements of Title 24, Part 1 and Part 6 of the California Code of Regulations.
4. The building design features or system design features identified on this Certificate of Compliance are consistent with the information provided on other applicable compliance documents, worksheets, calculations, plans and specifications submitted to the enforcement agency for approval with this building permit application.
5. I will ensure that a completed signed copy of this Certificate of Compliance shall be made available with the building permit(s) issued for the building, and made available to the enforcement agency for all applicable inspections. I understand that a completed signed copy of this Certificate of Compliance is required to be included with the documentation the builder provides to the building owner at occupancy.

Responsible Designer Name: Stephen R Zajicek	Responsible Designer Signature:
Company: FBA Engineering	Date Signed: 2024-02-22
Address: 150 Paularino Avenue Suite A120	License: E10372
City/State/Zip: Costa Mesa Ca 92626	Phone: 949-852-9995

Generated Date/Time: Documentation Software: EnergyPro
CA Building Energy Efficiency Standards - 2022 Nonresidential Compliance Report Version: 2022.0.000 Schema Version: rev 20220101 Compliance ID: EnergyPro-7526-0224-0823 Report Generated: 2024-02-22 09:51:51

MOUNT TRANSIT ADMINISTRATION FACILITY: 100% CD

STATE OF CALIFORNIA
Electrical Power Distribution
CALIFORNIA ENERGY COMMISSION

CERTIFICATE OF COMPLIANCE	NRCC-ELC-E
This document is used to demonstrate compliance with mandatory requirements in 130.5, for electrical systems in newly constructed nonresidential and hotel/motel occupancies and 160.6 and 160.9 for electrical systems in newly constructed multifamily occupancies. Additions and alterations to electrical service systems in nonresidential and hotel/motel occupancies will also use this document to demonstrate compliance per 141.0(a) or 141.0(b)2P for alterations. For multifamily addition or alterations compliance will be documented per 180.1(a) or 180.2 (h)4bvii	
Project Name: MOUNT TRANSIT ADMINSTRATION FACILITY	**Report Page:** (Page 1 of 4)
Project Address: 170 BUSINESS CENTER DR.	**Date Prepared:** 2/22/2024

A. GENERAL INFORMATION

01	Project Location (city)	BIG BEAR LAKES	02	Climate Zone	16
			03	Occupancy Types Within Project:	All Other OccupanciesOfficeSupport Areas

B. PROJECT SCOPE

This table includes electrical systems that are within the scope of the permit application.

01	02	03	04	05	06	07
Electrical Service Designation/ Description	Scope of Work[1]	Rating[2] (kVA)	Utility Provided Metering System Exception to 130.5(a)/ 160.6(a)[3]	System subject to CA Elec Code Article 517 Exception to 130.5(a)and (b)	Demand Response Controls	Provides power to dwelling units/common living areas only in multifamily occupancy
Main	New electrical service equipment and meter	50	☐	☐	Where required, demand response controls must be specified which are capable of receiving and automatically responding to at least one standards based messaging protocol which enables demand response after receiving a demand response signal. Sections 120.2/ 160.3, 130.1/ 160.5, and 130.3/ 160.5, and mechanical, indoor lighting, and sign lighting Certificate of Compliance documents will indicate when demand response controls are required.	☐

[1] FOOTNOTES: Adding only new feeders and branch circuits triggers Voltage Drop 130.5(c)/160.6(c), no other requirements from 130.5/160.6 are required.
[2] If common use areas in a multifamily are submetered, rating is for submeter size serving common use areas.
[3] Applicable if the utility company is providing a metering system that indicates instantaneous kW demand and kWh for a utility-defined period.

STATE OF CALIFORNIA
Electrical Power Distribution
CALIFORNIA ENERGY COMMISSION

CERTIFICATE OF COMPLIANCE	NRCC-ELC-E
Project Name: MOUNT TRANSIT ADMINSTRATION FACILITY	**Report Page:** (Page 2 of 4)
	Date Prepared: 2/22/2024

C. COMPLIANCE RESULTS

Results in this table are automatically calculated from data input and calculations in Tables F through J. Note: If any cell on this table says "COMPLIES with Exceptional Conditions" refer to Table D. Exceptional Conditions for guidance or see applicable Table referenced below.

01		02		03		04	05	06
Service Electrical Metering 130.5(a)/ 160.6(a) (See Table F)	AND	Separation for Monitoring 130.5(b)/ 160.6(b) (See Table G)	AND	Voltage Drop 130.5(c)/ 160.6(c) (See Table H)	AND	Controlled Receptacles 130.5(d)/ 160.6(d) (See Table I)	Electric Ready 160.9 (See Table J)	**Compliance Results**
Yes	AND		AND	Yes	AND			COMPLIES

D. EXCEPTIONAL CONDITIONS

This table is auto-filled with uneditable comments because of selections made or data entered in tables throughout the form.

E. ADDITIONAL REMARKS

This table includes remarks made by the permit applicant to the Authority Having Jurisdiction.

F. SERVICE ELECTRICAL METERING

This table includes new or replacement electrical service systems OR equipment to demonstrate compliance with 130.5(a) / 160.6(a). For multifamily occupancies, submetered systems that provide power to common use areas must meet the following metering requirements. Submetered systems providing power to dwelling units do not.

01	02	03				04	05	
Electrical Service Designation/ Description	Rating[1] (kVA)	Required Metering Capabilities per Table 130.5-A				Location of Requirements in Construction Documents	Field Inspector	
		Instantaneous Demand (kW)	Historical Peak Demand (kW)	Tracking kWh for user-defined period	kWh per rate period		Pass	Fail
Main	50	☒	☐	☒	☐		☐	☐

[1] FOOTNOTES: If common use areas in a multifamily are submetered, rating is for submeter size serving common use areas.

H. VOLTAGE DROP

This table includes entirely new or complete replacement electrical power distribution systems, or alterations that add, modify or replace both feeders and branch circuits to demonstrate compliance with 130.5(c)/ 160.6(c). For alterations, only the altered circuits must demonstrate compliance per 141.0(b)2Piii/ 180.2(b)4Bviic.

STATE OF CALIFORNIA
Electrical Power Distribution
CALIFORNIA ENERGY COMMISSION

CERTIFICATE OF COMPLIANCE	NRCC-ELC-E
Project Name: MOUNT TRANSIT ADMINSTRATION FACILITY	**Report Page:** (Page 3 of 4)
	Date Prepared: 2/22/2024

H. VOLTAGE DROP

01	02				03	04	05	
Electrical Service Designation/Description	Combined Voltage Drop on Installed Feeder/Branch Circuit Conductors Compliance Method				Location of Voltage Drop Calculations[1]	Sheet Number for Voltage Drop Calculations in Construction Documents	Field Inspector	
							Pass	Fail
Main	☒	Voltage drop less than 5%	☐	Permitted by CA Elec Code (Exception to 130.5(c))*	Attached	E-Sheets	☐	☐

** NOTES: If "Permitted by CA Elec Code *" is selected under Compliance Method above, please indicate where the exception applies in the space provided below.*

[1] FOOTNOTES: Voltage drop calculations may be attached to the permit application outside the construction documents if allowed by the Authority Having Jurisdiction. Select "attached" if applicable. If calculations will be the responsibility of the installing contractor, select "Contractor Responsible".

J. ELECTRIC READY BUILDINGS

This section does not apply to this project.

K. DECLARATION OF REQUIRED CERTIFICATES OF INSTALLATION

Selections have been made based on information provided in this document. If any selection have been changed by permit applicant, an explanation should be included in Table E. Additional Remarks. These documents must be provided to the building inspector during construction and can be found online

Form/Title
NRCI-ELC-E - Must be submitted for all buildings

STATE OF CALIFORNIA
Electrical Power Distribution
CALIFORNIA ENERGY COMMISSION

CERTIFICATE OF COMPLIANCE	NRCC-ELC-E
Project Name: MOUNT TRANSIT ADMINSTRATION FACILITY	**Report Page:** (Page 4 of 4)
Project Address: 170 BUSINESS CENTER DR.	**Date Prepared:** 2/22/2024

DOCUMENTATION AUTHOR'S DECLARATION STATEMENT

I certify that this Certificate of Compliance documentation is accurate and complete.

Documentation Author Name: Stephen R. Zajicek P.E.	Documentation Author Signature:
Company:	Signature Date:
Address: 150 Paularino Avenue Suite A120	CEA/ HERS Certification Identification (if applicable): E10372
City/State/Zip: Costa Mesa CA 92626	Phone: 949-852-9995

RESPONSIBLE PERSON'S DECLARATION STATEMENT

I certify the following under penalty of perjury, under the laws of the State of California:

1. The information provided on this Certificate of Compliance is true and correct.
2. I am eligible under Division 3 of the Business and Professions Code to accept responsibility for the building design or system design identified on this Certificate of Compliance (responsible designer)
3. The energy features and performance specifications, materials, components, and manufactured devices for the building design or system design identified on this Certificate of Compliance conform to the requirements of Title 24, Part 1 and Part 6 of the California Code of Regulations.
4. The building design features or system design features identified on this Certificate of Compliance are consistent with the information provided on other applicable compliance documents, worksheets, calculations, plans and specifications submitted to the enforcement agency for approval with this building permit application.
5. I will ensure that a completed signed copy of this Certificate of Compliance shall be made available with the building permit(s) issued for the building, and made available to the enforcement agency for all applicable inspections. I understand that a completed signed copy of this Certificate of Compliance is required to be included with the documentation the builder provides to the building owner at occupancy.

Responsible Designer Name: Stephen R Zajicek	Responsible Designer Signature:
Company: FBA Engineering	Date Signed: 2024-02-22
Address: 150 Paularino Avenue Suite A120	License: E10372
City/State/Zip: Costa Mesa CA 92626	Phone: 949-852-9995

STAMPS

AGENCY APPROVAL
File No.: 4.0

FBAEngineering
Consulting Electrical Engineers
150 Paularino Avenue Suite A120
Costa Mesa, CA 92626
949.852.9995 • 949.852.1657 (fax)
fbaengr.com
FBA Job Number: 874.1055

CONSULTANT BRANDING

RUHNAU CLARKE ARCHITECTS

MOUNT TRANSIT ADMINISTRATION FACILITY: 100% CD

PROJECT No. :50801
4/18/2024 11:26:37 AM

DRAWN BY: CHECKED BY:

ISSUE No._____ DATE_____ DESCRIPTION_____
ISSUE No._____ DATE_____ DESCRIPTION_____
ISSUE No._____ DATE_____ DESCRIPTION_____
ISSUE No._____ DATE_____ DESCRIPTION_____

REVISION No._____ DATE_____ DESCRIPTION_____
REVISION No._____ DATE_____ DESCRIPTION_____
REVISION No._____ DATE_____ DESCRIPTION_____
REVISION No._____ DATE_____ DESCRIPTION_____

RUHNAUCLARKE.COM
3775 TENTH STREET, RIVERSIDE CALIFORNIA 92501(951) 684 4664 / 5751 PALMER WAY, SUITE C, CARLSBAD CALIFORNIA 92010(760) 438 5899

MOUNT TRANSIT ADMINISTRATION FACILITY
170 BUSINESS CENTER DR. BIG BEAR LAKES, CA
BIG BEAR LAKES

TITLE 24 ENERGY DISTRIBUTION FORM

E1-3.3

50801

STATE OF CALIFORNIA
Solar And Battery
CALIFORNIA ENERGY COMMISSION

CERTIFICATE OF COMPLIANCE — **NRCC-SAB-E**

This document is used to demonstrate compliance with prescriptive PV and battery requirements in 140.10/ 170.2 for nonresidential, multifamily and mixed-use buildings and prescriptive solar thermal requirements in 170.2(d)3C for multifamily and hotel/ motel occupancies. When PV/battery/solar thermal requirements don't apply or are traded using the performance approach, this document demonstrates compliance with mandatory solar readiness requirements in 110.10/ 160.8 for newly constructed buildings which are either multifamily ten stories or fewer, hotel/motel ten stories or fewer or all other nonresidential buildings three stories or fewer. It is also used to demonstrate compliance with solar readiness in 110.10/ 160.8 for additions to nonresidential, multifamily or hotel/motel building types which add more than 2,000 ft² of roof area. Alterations, or additions of less than 2,000 ft² of roof area, are not required to comply with solar readiness, solar PV and battery requirements and do not need to complete this document.

Project Name:	MOUNT TRANSIT ADMINSTRATION FACILITY	**Report Page:**	**(Page 1 of 5)**
Project Address:	170 BUSINESS CENTER DR.	**Date Prepared:**	2/22/2024

A. GENERAL INFORMATION

01	Project Location (city)	BIG BEAR LAKES	04	Building Occupancies	All Other OccupanciesOfficeSupport Areas
02	Climate Zone	16	05	Construction Type	New construction w/ roof <=533 ft²
03	Conditioned Floor Area (ft²)	10406	06	Number of Stories	Bldg <= 3 stories

B. PROJECT SCOPE

The compliance path the project is using to comply per 110.10(b)1B/ 140.10/ 170.2(g and h) is indicated below.

Compliance with Solar Photovoltaic (PV) and Battery Requirements in 140.10/ 170.2(g and h)

	01	
☒	Provided PV system and battery storage sized per 140.10/ 170.2 (g and h)	The project has included an installed PV system and battery storage system per requirements in 140.10/ 170.2(g and h) as documented in Table J.
☐	Exception to PV and Battery: Not enough Solar Access Roof Area	The total of all available Solar Access Roof Area(s) of the project site is less than three percent of the conditioned floor area as documented in Table J.
☐	Exception to PV and Battery: Required PV < 4kW	The required PV system size is less than 4 kW dc as documented in Table J..
☐	Exception to PV and Battery: No contiguous Solar Access Roof Area	The Solar Access Roof Area(s) of the project site contains less than 80 contiguous square feet as documented in Table J.
☐	Exception to PV and Battery: Can't meet snow load	The project has a roof design where the enforcement authority has verified it is not possible for the PV system, including panels, modules, components, supports, and attachments to the roof structure, to meet ASCE 7-16 Chapter 7, Snow Loads.
☐	Exception to PV and Battery: Multi-tenant without VNEM or Community Solar	The project is a multi-tenant building in an area where a load serving entity does not provide either a Virtual Net Metering (VNEM) or community solar program.
☐	The prescriptive PV/battery requirement has been traded off using the performance compliance approach as documented on the PRF Certificate of Compliance form.	

STATE OF CALIFORNIA
Solar And Battery
CALIFORNIA ENERGY COMMISSION

CERTIFICATE OF COMPLIANCE		**NRCC-SAB-E**
Project Name: MOUNT TRANSIT ADMINSTRATION FACILITY	**Report Page:**	**(Page 2 of 5)**
	Date Prepared:	2/22/2024

Compliance with Solar Thermal Water Heating Requirements in 170.2(d)3C (Multifamily and hotel/ motel occupancies only)

	01	
☐	The project includes a hotel/motel or multifamily occupancy with a gas or propane central water-heating system (serves 2+ dwelling units) and includes a permanently installed domestic solar water-heating system to comply with 170.2(d)3C and Reference Residential Appendix RA4, as documented in Table H. Compliance meets Exception 2 to solar ready requirements in 110.10(b).	

C. COMPLIANCE RESULTS

Results in this table are automatically calculated from data input and calculations in Tables F through I. Note: If any cell on this table says "DOES NOT COMPLY" or "COMPLIES with Exceptional Conditions" refer to Table D, for guidance or see the applicable Table referenced below.

Allocated Solar Zone				Installed PV System				Installed SWH System				Smart Tstat and Alternative EE Measure		Compliance Results
01		02		03		04		05		06		07	08	
Required Minimum Area (ft²)	<=	Designated Area (ft²)	OR	Required Minimum DC Power Rating (Watts)	<=	Designed DC Power Rating (Watts)	OR	Required Minimum Solar Savings Fraction	<=	Designed/Rated Solar Savings Fraction	OR	JA5 Compliant Thermostat Specified?	Alternative Energy Efficiency Measure	
(See Table F)				(See Tables G or J)				(See Table H)				(See Table I)		
	<=		OR	0	<=	0	OR		<=		OR			
Location in construction documents showing the location for inverters and metering equipment and a pathway for the routing of conduit/ plumbing to the electrical service/ water heating system per §110.10(c).														
Battery storage system design meets the minimum requirements in Joint Appendix JA12 and the minimum energy (kWh)/ power (kW) capacity per Table J.														COMPLIES

D. EXCEPTIONAL CONDITIONS

This table is auto-filled with uneditable comments because of selections made or data entered in tables throughout the form.

E. ADDITIONAL REMARKS

This table is includes remarks made by the permit applicant to the Authority Having Jurisdiction.

CA Building Energy Efficiency Standards - 2022 Nonresidential Compliance
Generated Date/Time:
Report Version: 2022.0.000
Schema Version: rev 20220101
Documentation Software: EnergyPro
Compliance ID: EnergyPro-7526-0224-0821
Report Generated: 2024-02-22 09:51:51

STATE OF CALIFORNIA
Solar And Battery
CALIFORNIA ENERGY COMMISSION

CERTIFICATE OF COMPLIANCE		**NRCC-SAB-E**
Project Name: MOUNT TRANSIT ADMINSTRATION FACILITY	**Report Page:**	**(Page 3 of 5)**
	Date Prepared:	2/22/2024

F. ALLOCATED SOLAR ZONE

This section does not apply to this project.

G. PERMANENTLY INSTALLED SOLAR PV FOR SOLAR READY EXCEPTION

This section does not apply to this project.

H. PERMANENTLY INSTALLED SOLAR HOT WATER SYSTEMS

This section does not apply to this project.

I. SMART THERMOSTATS AND ALTERNATIVE EFFICIENCY MEASURE FOR SOLAR READY EXCEPTION

This section does not apply to this project.

CA Building Energy Efficiency Standards - 2022 Nonresidential Compliance
Generated Date/Time:
Report Version: 2022.0.000
Schema Version: rev 20220101
Documentation Software: EnergyPro
Compliance ID: EnergyPro-7526-0224-0821
Report Generated: 2024-02-22 09:51:51

STATE OF CALIFORNIA
Solar And Battery
CALIFORNIA ENERGY COMMISSION

CERTIFICATE OF COMPLIANCE		**NRCC-SAB-E**
Project Name: MOUNT TRANSIT ADMINSTRATION FACILITY	**Report Page:**	**(Page 4 of 5)**
	Date Prepared:	2/22/2024

J. PHOTOVOLTAIC (PV) AND BATTERY SYSTEMS

This table documents compliance with prescriptive photovoltaic and battery system requirements in 140.10/ 170.2(g and h). Unless the project meets one of the listed exceptions, or trades-off PV in an energy model using performance path, 140.10/ 170.2(g and h) requires installed photovoltaic and battery systems for newly constructed buildings. The installed PV systems must meet the minimum requirements in Joint Appendix 11.

Photovoltaic (PV) System

01	02	03	04	05	06	07	08
Occupancy	Conditioned Floor Area (ft²)	Area of New Roof[1] (ft²)	Roof Area < 70% Solar Access[2] (ft²)	Plansheet or Document showing Solar Access Calculations	Occupied Roof Area[3] (ft²)	Solar Access Roof Area (SARA) (ft²)	Min Size of PV System Required (kWdc)
					Total Min Size PV System Required for all Spaces (kWdc):		
					Total Size PV System in Design (kWdc):		

[1]FOOTNOTES: Includes the area of the building's roof space capable of structurally supporting a PV system and the area of all roof space on covered parking areas, carports, and all other newly constructed structures on the site that are compatible with supporting a PV system per Title 24, Part 2 Section 1511.2.
[2]Solar access must be determined using CEC-approved solar access calculation tools found at https://www.energy.ca.gov/programs-and-topics/programs/building-energy-efficiency-standards/solar-assessment-tools.
[3]As specified by CBC Section 503.1.4.

K. DECLARATION OF REQUIRED CERTIFICATES OF INSTALLATION

Selections have been made based on information provided in this document. If any selections have been changed by the permit applicant, an explanation should be included Table E. Additional Remarks and ExceptionalConditionMessageCCSABE += UserChangedSelectionInCI. These documents must be provided to the building inspector during construction and can be found online

Form/Title
NRCI-SAB-01-E - Must be submitted for all buildings that must comply with solar readiness or PV/Battery requirements.

L. DECLARATION OF REQUIRED CERTIFICATES OF ACCEPTANCE

There are no forms required for this project.

CA Building Energy Efficiency Standards - 2022 Nonresidential Compliance
Generated Date/Time:
Report Version: 2022.0.000
Schema Version: rev 20220101
Documentation Software: EnergyPro
Compliance ID: EnergyPro-7526-0224-0821
Report Generated: 2024-02-22 09:51:51

STATE OF CALIFORNIA
Solar And Battery
CALIFORNIA ENERGY COMMISSION

CERTIFICATE OF COMPLIANCE		**NRCC-SAB-E**
Project Name: MOUNT TRANSIT ADMINSTRATION FACILITY	**Report Page:**	**(Page 5 of 5)**
Project Address: 170 BUSINESS CENTER DR.	**Date Prepared:**	2/22/2024

DOCUMENTATION AUTHOR'S DECLARATION STATEMENT

I certify that this Certificate of Compliance documentation is accurate and complete.

Documentation Author Name: Stephen R. Zajicek P.E.	Documentation Author Signature:
Company:	Signature Date:
Address: 150 Paularino Avenue Suite A120	CEA/ HERS Certification Identification (if applicable): E10372
City/State/Zip: Costa Mesa CA 92626	Phone: 949-852-9995

RESPONSIBLE PERSON'S DECLARATION STATEMENT

I certify the following under penalty of perjury, under the laws of the State of California:

1. The information provided on this Certificate of Compliance is true and correct.
2. I am eligible under Division 3 of the Business and Professions Code to accept responsibility for the building design or system design identified on this Certificate of Compliance (responsible designer)
3. The energy features and performance specifications, materials, components, and manufactured devices for the building design or system design identified on this Certificate of Compliance conform to the requirements of Title 24, Part 1 and Part 6 of the California Code of Regulations.
4. The building design features or system design features identified on this Certificate of Compliance are consistent with the information provided on other applicable compliance documents, worksheets, calculations, plans and specifications submitted to the enforcement agency for approval with this building permit application.
5. I will ensure that a completed signed copy of this Certificate of Compliance shall be made available with the building permit(s) issued for the building, and made available to the enforcement agency for all applicable inspections. I understand that a completed signed copy of this Certificate of Compliance is required to be included with the documentation the builder provides to the building owner at occupancy.

Responsible Designer Name: Stephen R Zajicek	Responsible Designer Signature:
Company: FBA Engineering	Date Signed: 2024-02-22
Address: 150 Paularino Avenue Suite A120	License: E10372
City/State/Zip: Costa Mesa Ca 92626	Phone: 949.852.9995

CA Building Energy Efficiency Standards - 2022 Nonresidential Compliance
Generated Date/Time:
Report Version: 2022.0.000
Schema Version: rev 20220101
Documentation Software: EnergyPro
Compliance ID: EnergyPro-7526-0224-0821
Report Generated: 2024-02-22 09:51:51

STAMPS

AGENCY APPROVAL
File No.: 3.0

FBA Engineering
Consulting Electrical Engineers
150 Paularino Avenue Suite A120
Costa Mesa, CA 92626
949.852.9995 • 949.852.1657 (fax)
fbaengr.com
FBA Job Number: 874.1055

CONSULTANT BRANDING

RUHNAU CLARKE ARCHITECTS

MOUNT TRANSIT ADMINISTRATION FACILITY: 100% CD

PROJECT No. :50801
4/18/2024 11:26:38 AM

DRAWN BY: CHECKED BY:

ISSUE No._____ DATE_____ DESCRIPTION_____
ISSUE No._____ DATE_____ DESCRIPTION_____
ISSUE No._____ DATE_____ DESCRIPTION_____
ISSUE No._____ DATE_____ DESCRIPTION_____

REVISION No._____ DATE_____ DESCRIPTION_____
REVISION No._____ DATE_____ DESCRIPTION_____
REVISION No._____ DATE_____ DESCRIPTION_____
REVISION No._____ DATE_____ DESCRIPTION_____

RUHNAUCLARKE.COM
3775 TENTH STREET, RIVERSIDE CALIFORNIA 92501 (951) 684 4664 / 5751 PALMER WAY, SUITE C, CARLSBAD CALIFORNIA 92010 (760) 438 5899

MOUNT TRANSIT ADMINISTRATION FACILITY
170 BUSINESS CENTER DR. BIG BEAR LAKES, CA
BIG BEAR LAKES

TITLE 24 SOLAR AND BATTERY ENERGY FORM

E1-3.4

50801

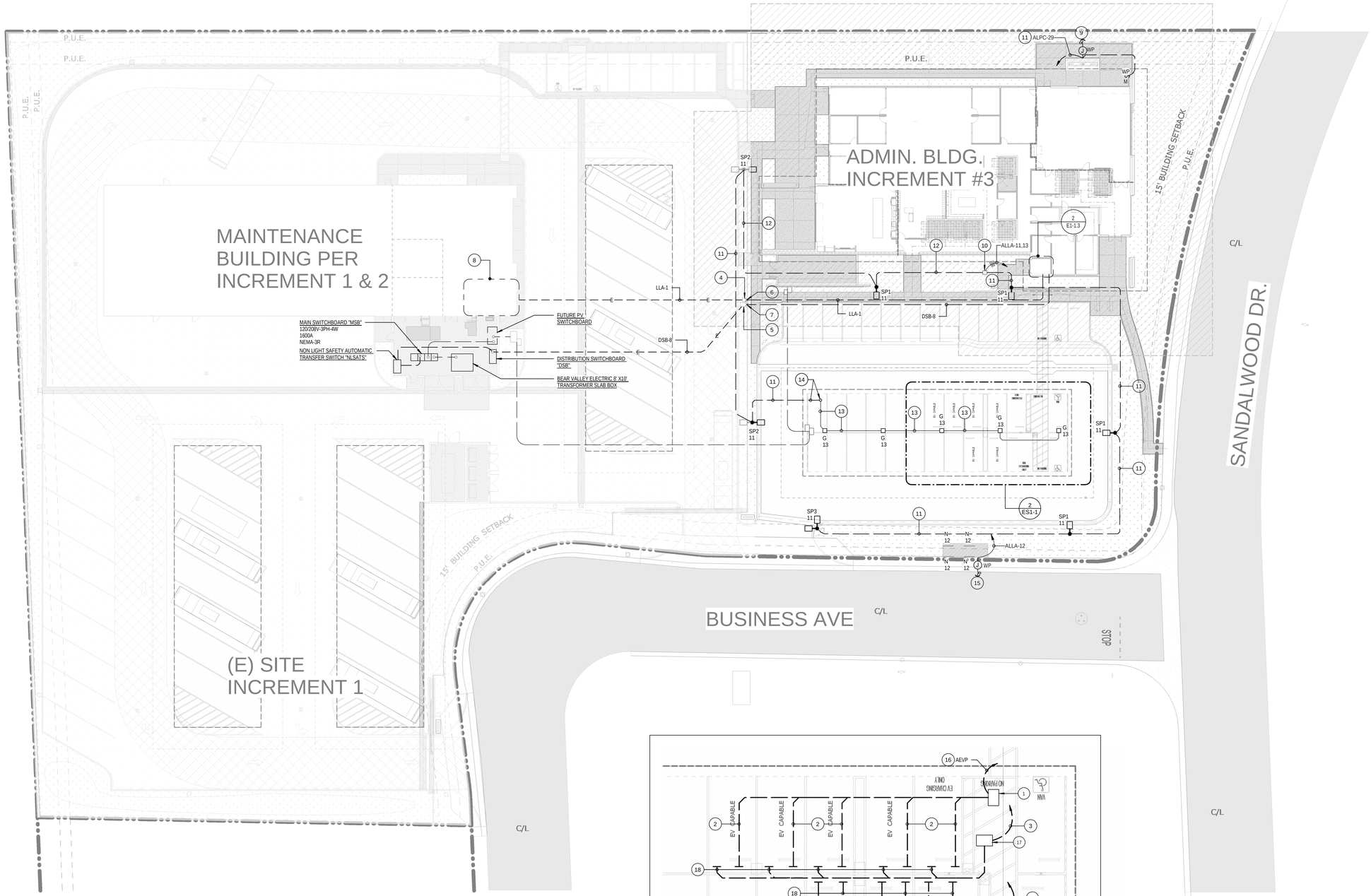

EV POWER ENLARGED SITE ELECTRICAL PLAN — 1/8" = 1'-0" — 2

SITE ELECTRICAL PLAN — 1" = 20'-0" — 1

0' 10' 20' 40' NORTH

STAMPS

AGENCY APPROVAL
File No.: 4.0

FBAEngineering
Consulting Electrical Engineers
150 Paularino Avenue Suite A120
Costa Mesa, CA 92626
949.852.9595 • 949.852.1657 (fax)
fbaengr.com
FBA Job Number: 874.1055

CONSULTANT BRANDING

RUHNAU CLARKE ARCHITECTS

PLAN NOTES

1. PROVIDE 2' X 3' X 3' D. UNDERGROUND CONCRETE PULL BOX WITH BOLT-DOWN TRAFFIC COVER. ENGRAVE: "EV CHARGING POWER".
2. PROVIDE 2" C.O. WITH PULL-ROPE FOR FUTURE DUAL-PORT 30KW, 208V EV CHARGING STATION POWER CONDUCTORS. CONDUIT SHALL BE STUBBED AND CAPPED BELOW GRADE AND EXTEND BACK TO PANELBOARD LOCATION FOR TERMINATION VIA INDICATED PULL BOX. CONTRACTOR SHALL VERIFY WITH DISTRICT/ARCHITECT THE EXACT LOCATION OF THE FUTURE CHARGING STATION PRIOR TO ROUGH-IN.
3. PROVIDE FOUR (4) 1"C.O. WITH PULL ROPE FOR FUTURE EV CHARGING STATION CONTROL. EXTEND CONDUITS TO THE ADMIN. BUILDING ELECTRICAL ROOM 230 INDICATED.
4. EXISTING LIGHTING PULL BOX TO REMAIN AND TO BE UTILIZED FOR EXTENDING NEW UNDERGROUND CONDUIT AND WIRING TO ADMIN. BUILDING'S ELECTRICAL ROOM 230.
5. EXISTING POWER PULL BOX TO REMAIN AND TO BE UTILIZED FOR EXTENDING NEW UNDERGROUND CONDUIT AND WIRING TO ADMIN. BUILDING'S ELECTRICAL ROOM 230.
6. INTERCEPT EXISTING LIGHTING PULL BOX CONDUIT AND EXTEND AS INDICATED.
7. INTERCEPT EXISTING POWER PULL BOX CONDUIT AND EXTEND AS INDICATED.
8. MAINTENANCE BUILDING'S ELECTRICAL ROOM. REFER TO DETAIL "2" ON SHEET E1-1.2 (INCREMENT 2) FOR MORE INFORMATION.
9. CONNECT POWER TO OUTSIDE FIRE PIT PER MANUFACTURER'S REQUIREMENTS. VERIFY LOCATION.
10. PROVIDE 18" X 12" X 24" DEEP CONCRETE PULL BOX WITH BOLT-DOWN TRAFFIC RATED COVER. ENGRAGE: "LIGHTING".
11. PROVIDE 3/4"C. - 4#10, 1#10 GRD.
12. PROVIDE 3/4"C. - 4#10, 1#10 GRD.
13. PROVIDE 3/4"C. - 2#10, 1#10 GRD. LIGHTING CONDUIT ON THE CANOPY. REFER TO CANOPY STRUCTURE FOR CANOPY STRUCTURE'S MANUFACTURER REQUIREMENTS.
14. ROUTE CONDUIT DOWN INSIDE THE CANOPY COLUMN AND EXTEND UNDERGROUND CONDUIT TO THE PARKING LIGHTING FIXTURE INDICATED. REFER TO CANOPY STRUCTURE FOR CANOPY STRUCTURER'S MANUFACTURER REQUIREMENTS.
15. CONNECT POWER TO BUS STOP LIGHTING FIXTURES (PROVIDED BY OTHERS) PER MANUFACTURER'S REQUIREMENTS.
16. PROVIDE FOUR (4) 2"C.O. WITH PULL ROPE TO PANEL INDICATED FOR FUTURE EV CHARGING EQUIPMENT.
17. PROVIDE 2' X 2' X 3'D. UNDERGROUND CONCRETE PULL BOX WITH BOLT-DOWN TRAFFIC COVER. ENGRAVE: "EV CHARGING CONTROLLER".
18. PROVIDE ONE (1) 1"C.O. WITH PULL ROPE FOR FUTURE EV CHARGING STATION CONTROL. CONDUIT SHALL BE STUBBED AND CAPPED BELOW GRADE AND EXTEND BACK TO THE THE ADMIN BUILDING ELECTRICAL ROOM 230. CONTRACTOR SHALL VERIFY WITH DISTRICT/ARCHITECT THE EXACT LOCATION OF THE FUTURE CHARGING STATION PRIOR TO ROUGH-IN.

MOUNT TRANSIT ADMINISTRATION FACILITY: 100% CD

PROJECT No. :50801
4/18/2024 11:26:44 AM

DRAWN BY: CHECKED BY:

ISSUE No._____ DATE_____ DESCRIPTION_____
ISSUE No._____ DATE_____ DESCRIPTION_____
ISSUE No._____ DATE_____ DESCRIPTION_____
ISSUE No._____ DATE_____ DESCRIPTION_____

REVISION No._____ DATE_____ DESCRIPTION_____
REVISION No._____ DATE_____ DESCRIPTION_____
REVISION No._____ DATE_____ DESCRIPTION_____
REVISION No._____ DATE_____ DESCRIPTION_____

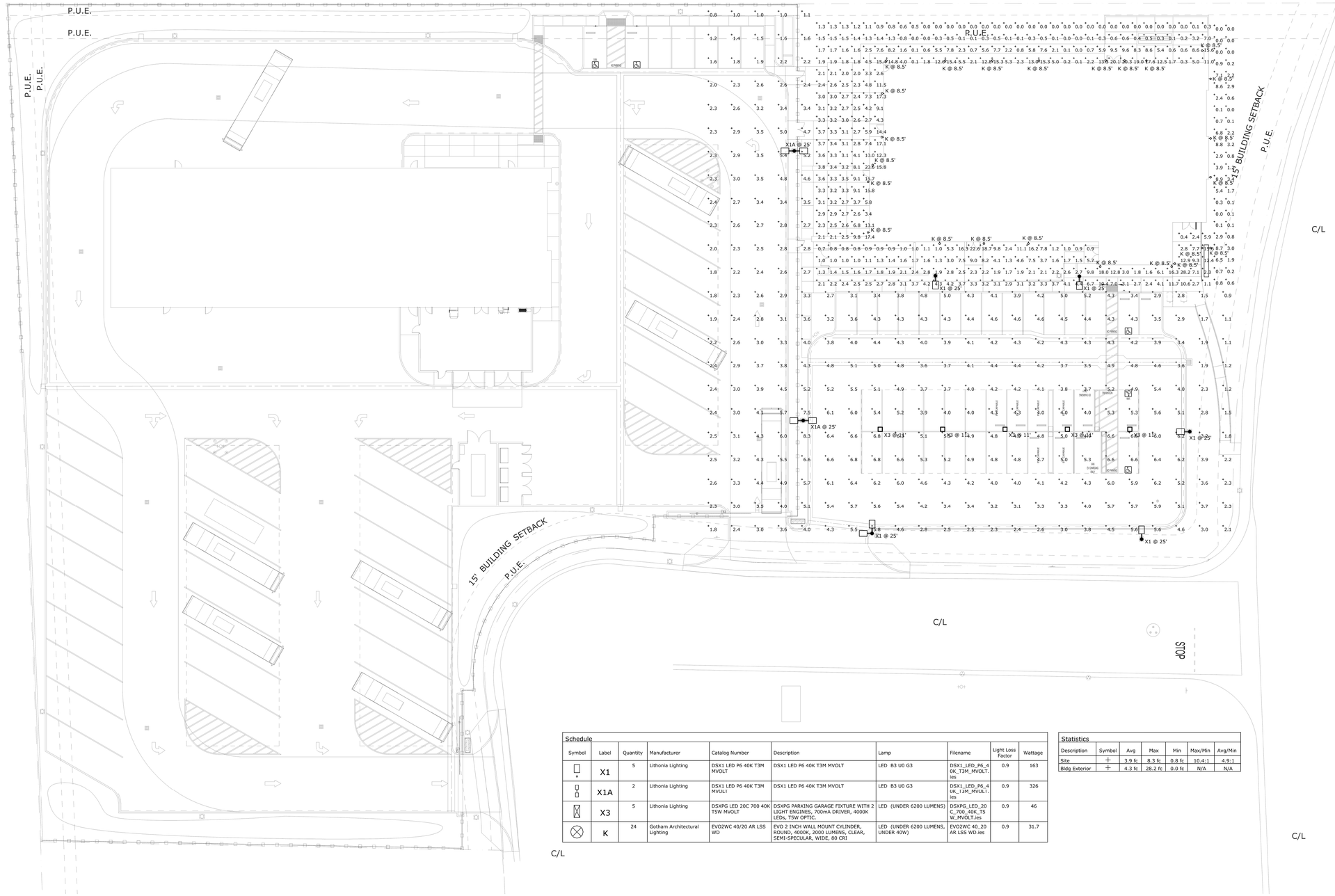

Schedule

Symbol	Label	Quantity	Manufacturer	Catalog Number	Description	Lamp	Filename	Light Loss Factor	Wattage
	X1	5	Lithonia Lighting	DSX1 LED P6 40K T3M MVOLT	DSX1 LED P6 40K T3M MVOLT	LED B3 U0 G3	DSX1_LED_P6_40K_T3M_MVOLT.ies	0.9	163
	X1A	2	Lithonia Lighting	DSX1 LED P6 40K T3M MVOLI	DSX1 LED P6 40K T3M MVOLT	LED B3 U0 G3	DSX1_LED_P6_40K_I3M_MVOLT.ies	0.9	326
	X3	5	Lithonia Lighting	DSXPG LED 20C 700 40K T5W MVOLT	DSXPG PARKING GARAGE FIXTURE WITH 2 LIGHT ENGINES, 700mA DRIVER, 4000K LEDs, T5W OPTIC.	LED (UNDER 6200 LUMENS)	DSXPG_LED_20C_700_40K_T5W_MVOLT.ies	0.9	46
	K	24	Gotham Architectural Lighting	EVO2WC 40/20 AR LSS WD	EVO 2 INCH WALL MOUNT CYLINDER, ROUND, 4000K, 2000 LUMENS, CLEAR, SEMI-SPECULAR, WIDE, 80 CRI	LED (UNDER 6200 LUMENS, UNDER 40W)	EVO2WC 40_20 AR LSS WD.ies	0.9	31.7

Statistics

Description	Symbol	Avg	Max	Min	Max/Min	Avg/Min
Site	+	3.9 fc	8.3 fc	0.8 fc	10.4:1	4.9:1
Bldg Exterior	+	4.3 fc	28.2 fc	0.0 fc	N/A	N/A

STAMPS

AGENCY APPROVAL
File No: 5.0

CONSULTANT BRANDING

FBAEngineering
Consulting Electrical Engineers
150 Paularino Avenue Suite A120
Costa Mesa, CA 92626
949.852.9995 • 949.852.1657 (fax)
fbaengr.com
FBA Job Number: 874.1055

RUHNAU CLARKE ARCHITECTS

MOUNT TRANSIT ADMINISTRATION FACILITY: 100% CD

PROJECT No. :50801
4/18/2024 11:26:46 AM

DRAWN BY: CHECKED BY:

ISSUE No._____	DATE_____	DESCRIPTION_____	REVISION No._____	DATE_____	DESCRIPTION_____
ISSUE No._____	DATE_____	DESCRIPTION_____	REVISION No._____	DATE_____	DESCRIPTION_____
ISSUE No._____	DATE_____	DESCRIPTION_____	REVISION No._____	DATE_____	DESCRIPTION_____
ISSUE No._____	DATE_____	DESCRIPTION_____	REVISION No._____	DATE_____	DESCRIPTION_____

MOUNT TRANSIT ADMINISTRATION FACILITY
170 BUSINESS CENTER DR. BIG BEAR LAKES, CA
BIG BEAR LAKES

PHOTOMETRIC CALCULATIONS - SITE EXTERIOR PLAN

PHOTOMETRIC CALCULATIONS - SITE EXTERIOR PLAN

ES1-2

50801

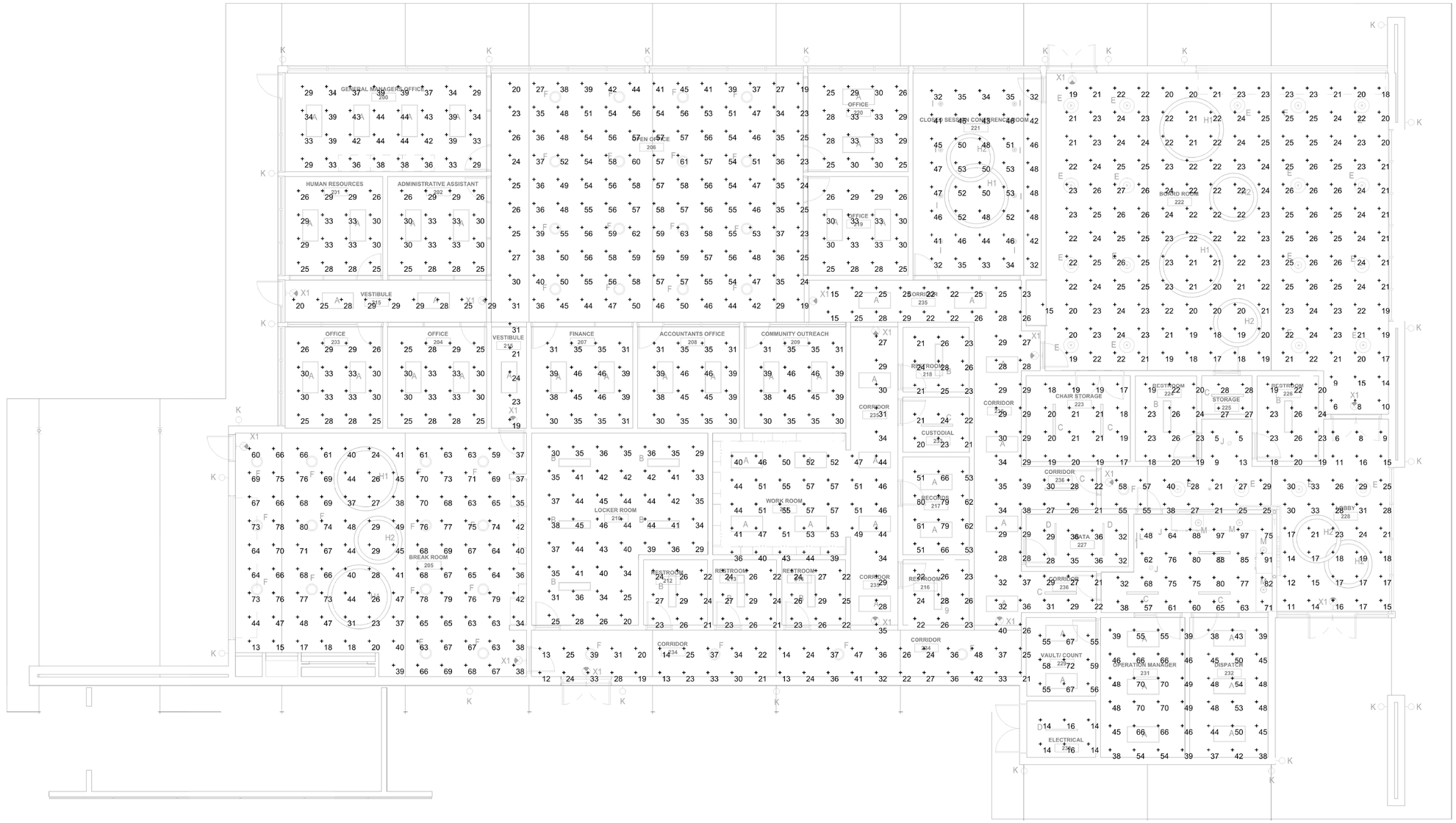

Schedule

Symbol	Label	QTY	Manufacturer	Catalog	Description	Lamp	Filename	LLF	Input Power
	A	49	Lithonia Lighting	CPX 2X4 6000LM 80 40K A12 MIN10 MVOLT	CPX 2X4, 6000 Lumens, 80 CRI, 4000K, Prismatic A12 Pattern Lens, 120-277	LED 4000K	CPX_2X4_6000LM_80_40K_A12_MVOLT.ies	0.9	41.8
	B	12	Lithonia Lighting	CPX 1X4 5000LM 80CRI 40K A12 MIN10 MVOLT	CPX 1X4, 5000 Lumens, 80 CRI, 4000K, Pristmatic A12 Pattern Lens, 120-277	LED 4000K	CPX_1X4_5000LM_80CRI_40K_A12_MVOLT.ies	0.9	42.2
	C	9	Kenall Manufacturing	MLHA12 48 F MW PP 1 45L40K DCC 1 DV	Impact Resistant Polycarbonate Lens Surface Mounted 1x4	LED 4000K	MLHA12-48-F-MW-PP-1-45L40K-DCC-1-DV.ies	0.9	49
	D	3	Lithonia Lighting	ZL1N L48 3000LM FST MVOLT 40K 80CRI	ZL1N 48" 3,000 Lumens Frosted Diffuser MVOLT 4,000 K 80CRI	LED 4000K	ZL1N_L48_3000LM_FST_MVOLT_40K_80_CRI.ies	0.9	25
	E	21	Eureka Lighting	4256-24 LED.HO 40 80 DV ACKX RC1 RCA XXX XXX XXX	24in Aporture Pendant with Hollow Center	LED 4000K	4256-24-HO.ies	0.9	57.4
	F	35	Impact Architectural Lighting	P5113 40 HX NUL XX	13in Tiki Pendant, Direct Only	LED 4000K	#20588 - P5117-40HX-NUL & P4917-40HX - Tiki & TOP.LS.TIKI.IES	0.9	42
	G	0	Lithonia Lighting	DSXSC LED 20C 700 40K T5M MVOLT	DSX SURFACE CANOPY FIXTURE WITH 2 LIGHT ENGINES, 700mA DRIVER, 4000K LEDs, T5M OPTIC.	LED 4000K	DSXSC_LED_20C_700_40K_T5M_MVOLT.ies	0.9	46
	H1	5	OCL Lighting	RV1 P1XX 96 MW XXX LED2 40K UNV 100 DM1 MOD8FT	8FT Acoustic Ring Pendant	LED 4000K	RV1-P1XX-48-LED2-GYA.ies	1.52	132
	H2	6	OCL Lighting	RV1 P1XX 72 MW XXX LED2 40K UNV 100 DM1 MOD6FT	6FT Acoustic Ring Pendant	LED 4000K	RV1-P1XX-48-LED2-GYA.ies	1.28	99
	I	8	OCL Lighting	AS1 P1XX 04 WF XXX LED3 40K UNV 100 DM1	AS1-P1XX-04-WF-LED3	LED 4000K	AS1-P1XX-04-WF-LED3.ies	0.9	25
	J	2	Alphabet Lighting	NUE4 RD SW 20LM 40K 80 60D DL WH WH NC UNV DIM10	NUE 4 inch Downlight 60 degrees,Diffused Lens	LED 4000K	NUE4-RD-SW-20LM-30K-90-60D-DL-WH-WH.ies	0.9	21
	K	0	Gotham Architectural Lighting	EVO2WC 40/10 AR LSS WD MVOLT UGZ XXX	EVO 2 INCH WALL MOUNT CYLINDER, ROUND, 4000K, 1000 LUMENS, CLEAR, SEMI-SPECULAR, WIDE, 80 CRI	LED 4000K	EVO2WC_40_10_AR_LSS_WD.ies	0.9	12.7
	L	1	Tech Lighting	700PLUF 24 X LED930	24in Plural Faceted Picture Light	LED 3000K	Plural 24 Picture Light.IES	0.9	17.4
	M	4	Eureka Lighting	4272D-9 LED 40 80 DV AC60 XXX XXX XXX WH	9in Stella Pendant, Direct Only	LED 4000K	4272D-9 LED REG.ies	0.9	28.71

Statistics

Description	Symbol	Avg	Max	Min	Max/Min	Avg/Min
201_Human Resources @ 2.5ft	+	29 fc	33 fc	25 fc	1.3:1	1.2:1
202_Admin Assistant @ 2.5ft	+	29 fc	33 fc	25 fc	1.3:1	1.2:1
203_Office @ 2.5ft	+	29 fc	33 fc	25 fc	1.3:1	1.2:1
204_Office @ 2.5ft	+	29 fc	33 fc	25 fc	1.3:1	1.2:1
205_Breakroom @ 2.5ft	+	55 fc	80 fc	13 fc	6.2:1	4.2:1
206_Open Office @ 2.5ft	+	45 fc	63 fc	19 fc	3.3:1	2.4:1
207_Finance @ 2.5ft	+	38 fc	46 fc	30 fc	1.5:1	1.3:1
208_Accountants @ 2.5ft	+	37 fc	46 fc	30 fc	1.5:1	1.2:1
209_Community Outreach @ 2.5ft	+	37 fc	46 fc	30 fc	1.5:1	1.2:1
210_Locker Room	+	37 fc	46 fc	20 fc	2.3:1	1.9:1
211_Work Rm @ 2.5ft	+	49 fc	57 fc	36 fc	1.6:1	1.4:1
212_Restroom	+	25 fc	29 fc	21 fc	1.4:1	1.2:1
213_Restroom	+	25 fc	29 fc	21 fc	1.4:1	1.2:1
214_Restroom	+	25 fc	29 fc	22 fc	1.3:1	1.1:1
215_Vestibule	+	26 fc	31 fc	19 fc	1.6:1	1.4:1
216_Restroom	+	24 fc	28 fc	22 fc	1.3:1	1.1:1
217_Reconds @ 2.5ft	+	62 fc	79 fc	51 fc	1.5:1	1.2:1
218_Restroom	+	24 fc	28 fc	21 fc	1.3:1	1.1:1
219_Office @ 2.5ft	+	29 fc	33 fc	25 fc	1.3:1	1.2:1
220_Office @ 2.5ft	+	29 fc	33 fc	25 fc	1.3:1	1.2:1
221_Closed Session Conference @ 2.5ft	+	44 fc	53 fc	32 fc	1.7:1	1.4:1
222_Boardroom @ 2.5ft	+	22 fc	27 fc	6 fc	4.5:1	3.7:1
223_Chair Storage	+	19 fc	21 fc	17 fc	1.2:1	1.1:1
224_Restroom	+	22 fc	26 fc	18 fc	1.4:1	1.2:1
225_Storage	+	28 fc	28 fc	27 fc	1.0:1	1.0:1
226_Restroom	+	22 fc	26 fc	18 fc	1.4:1	1.2:1
227_Data @ 2.5ft	+	33 fc	36 fc	28 fc	1.3:1	1.2:1
228_Lobby @ 2.5ft	+	23 fc	58 fc	5 fc	11.6:1	4.6:1
228_Reception Desk @ 2.5ft	+	71 fc	97 fc	32 fc	3.0:1	2.2:1
229_Vault/Count @ 2.5ft	+	60 fc	72 fc	55 fc	1.3:1	1.1:1
230_Electrical	+	15 fc	16 fc	14 fc	1.1:1	1.1:1
231_Operation Manager @ 2.5ft	+	54 fc	70 fc	38 fc	1.8:1	1.4:1
232_Dispatch @ 2.5ft	+	45 fc	54 fc	37 fc	1.5:1	1.2:1
233_Custodial	+	22 fc	24 fc	20 fc	1.2:1	1.1:1
234-235-236_Corridor	+	29 fc	51 fc	12 fc	4.3:1	2.4:1
200_General Managers Office @ 2.5ft	+	37 fc	44 fc	29 fc	1.5:1	1.3:1

NORTH

PHOTOMETRIC CALCULATIONS - INTERIOR BUILDING | N.T.S. | 1

PROJECT No. :50801
4/18/2024 11:26:49 AM

DRAWN BY: _____ CHECKED BY: _____

ISSUE No._____ DATE_____ DESCRIPTION_____
ISSUE No._____ DATE_____ DESCRIPTION_____
ISSUE No._____ DATE_____ DESCRIPTION_____
ISSUE No._____ DATE_____ DESCRIPTION_____

REVISION No._____ DATE_____ DESCRIPTION_____
REVISION No._____ DATE_____ DESCRIPTION_____
REVISION No._____ DATE_____ DESCRIPTION_____
REVISION No._____ DATE_____ DESCRIPTION_____

RUHNAUCLARKE.COM
3775 TENTH STREET, RIVERSIDE CALIFORNIA 92501(951) 684 4664 / 5751 PALMER WAY, SUITE C, CARLSBAD CALIFORNIA 92010(760) 438 5899

MOUNT TRANSIT ADMINISTRATION FACILITY
170 BUSINESS CENTER DR. BIG BEAR LAKES, CA
BIG BEAR LAKES

PHOTOMETRIC CALCULATIONS - INTERIOR BUILDING

ES-1.3

50801

STAMPS

AGENCY APPROVAL
File No: 4.0

FBAEngineering
Consulting Electrical Engineers
150 Paularino Avenue Suite A120
Costa Mesa, CA 92626
949.852.9995 • 949.852.1657 (fax)
fbaengr.com
FBA Job Number: 874.1055

CONSULTANT BRANDING

RUHNAU CLARKE ARCHITECTS

MOUNT TRANSIT ADMINISTRATION FACILITY: 100% CD

PROJECT INFORMATION :

PROJECT: **MOUNT TRANSIT ADMINISTRATION FACILITY**
Increment 3
170 BUSINESS CENTER DR.
BIG BEAR LAKES, CA

ARCHITECT:
RUHNAU CLARKE ARCHITECTS
3775 TENTH STREET
RIVERSIDE, CALIFORNIA 92501
Phone: 951.684.4664
Fax:

GENERAL CONTRACTOR :
-
-
-
Phone: -
Fax: -

GLAZING CONTRACTOR:
-
-
-
Phone: -
Fax: -

FRAMING:

Curtain Wall : OPG1900 Series 2-1/4" x 7" Pressure Plate Curtain Wall System

Exterior Storefront : AFG451T Series 2" x 4-1/2" Thermally-Broken Offset Glazing System , Compensating Stick, Outside Set

Interior Storefront : AR600 Series 2" x 6" Non-Thermal Center Glazing System.

Interior Storefront : ATL175R600 Series 2" x 1-3/4" Non-Thermal Offset Glazing System @NN & PP

Aluminum Swing Doors : MS362T Series Thermal Medium Stile Door @Exterior
MS362 Series Non-Thermal Medium Stile Door @Interior

FRAME FINISH:

- Exterior Storefront : T.B.D.
- Interior Storefront : T.B.D.

DESIGN CRITERIA:

STRUCTURAL REF. : ~

GLAZING CONTRACTOR, GENERAL CONTRACTOR, & ARCHITECT NOTES:

1. THE FOLLOWING SHOP DRAWING ARE FOR THE SPECIFIC ALUMINUM WINDOWS, STOREFRONTS, CURTAIN WALLS, DOORS MATERIAL ONLY. UNLESS SPECIFICALLY NOTED:
   A. SURROUNDING STRUCTURES / SUBSTRATE DETAILS ARE FOR REFERENCE ONLY AND MUST BE VERIFIED BY ARCHITECT, CONTRACTORS AND SUB-TRADES AS REQUIRED
   B. ALL DIMENSIONS, QUANTITIES AND CONDITIONS SHOWN MUST BE VERIFIED IN FIELD BEFORE FABRICATION AND INSTALLATION
   C. THESE SHOP DRAWINGS WHEN APPROVED WILL SUPERSEDE ALL OTHER DOCUMENTS WITH WHICH THE JOB WILL BE MANUFACTURED. ANY SUBSEQUENT CHANGES ARE SUBJECT TO THE APPROVAL OF ARCADIA INC.
   D. TOLERANCE OF ROUGH OPENING SHALL BE A MINIMUM +/- 3/16"

2. ARCADIA INC IS NOT RESPONSIBLE FOR WORK AND/OR ERRORS INCURRED BY OTHER TRADES THROUGH THE USE OF THIS SHOP DRAWING

3. ALL APPROVALS OF THESE SHOP DRAWING BY CONSULTANT, PUBLIC AGENCY ARCHITECT ETC. MUST BE OBTAINED BEFORE DIES ARE CUT, MATERIAL FABRICATED OR SHIPPED. ARCADIA INC. IS NOT RESPONSIBLE FOR MATERIAL FABRICATED, SHIPPED OR ERECTED PRIOR TO ALL APPROVALS.

4. THE CAPACITY OF THE BUILDING STRUCTURE TO SUPPORT THE DEAD AND WIND LOADING HAS NOT BEEN EVALUATED. A COPY OF THESE SHOP DRAWING AND CALCULATIONS SHOULD BE SUBMITTED TO THE PROJECT STRUCTURAL ENGINEER SO THAT THE ADEQUACY OF THE BUILDING STRUCTURE CAN BE EVALUATED.

5. ALL GASKET JOINTS, BUTT JOINTS, HORIZONTAL AND VERTICAL JOINT, LAP JOINTS AND WEEP HOLES SHOULD BE SEALED AND INSTALLED WATERTIGHT PER THE INSTALLATION INSTRUCTION AND/OR TEST REPORT AND FOLLOWING SEALANT MANUFACTURER RECOMMENDATIONS AS TO SIZE, METHOD OF APPLICATION AND COMPATIBILITY WITH ADJOINING MATERIAL.

6. IF CONNECTION CONFIGURATION OR MATERIALS DIFFER FROM THOSE USED IN THIS SET OF SHOP DRAWING IT SHALL BE BROUGHT TO THE ATTENTION OF ARCADIA INC. PRIOR TO FABRICATION OR INSTALLATION.

7. ALL SHEAR BLOCKS SHALL BE ALUMINUM WITH A DRILLED HOLE OF MAX. DIAMETER EQUAL TO BOLT DIAMETER PLUS 1/32".

8. ALL BOLTS, LAG SCREWS, AND CONCRETE ANCHORS SHALL BE INSTALLED WITH AMERICAN STANDARD PLAIN WASHERS UNLESS NOTED OTHERWISE. ALL BOLTS SHALL BE ASTM A307 UNLESS NOTED OTHERWISE.

9. ALL POST-INSTALLED CONCRETE ANCHORS ARE SUBJECT TO SPECIAL INSPECTION PER THE ESR AND LOCAL ADOPTED BUILDING CODES.

10. INTERNAL STEEL STIFFENERS WHERE SPECIFIED SHALL BE FABRICATED USING ASTM A-36 STEEL FOR STRUCTURAL SHAPES AND ASTM A-569 FOR COLD FORMED SECTIONS.
    DIMENSIONS SHOWN IN THESE SHOP DRAWING AND CALCULATIONS ARE APPROXIMATE; ACTUAL FABRICATED SIZE SHALL PROVIDE FOR A TIGHT FIT WITH A MAXIMUM OF 1/8"
    CLEARANCE.

11. ALL WELDING OF ALUMINUM SHALL BE IN ACCORDANCE WITH 2019 CALIFORNIA BUILDING CODE. WELDING OF ALUMINUM TO OCCUR ONLY AT LOCATIONS SPECIFICALLY SHOWN ON SHOP
    DRAWING.

12. ALL ALUMINUM IN CONTACT WITH MASONRY, STUCCO, STEEL OR OTHER DISSIMILAR MATERIALS SHALL BE SEPARATED WITH VINYL TAPE OR POLYSTYRENE SHIMS. INTERNAL
    STEEL REINFORCING SHALL BE SHOP COATED WITH ALKYD TYPE ZINC CHROMATE PRIMER COMPLYING WITH FS TT-P-645.

13. ALL GLASS AND GLAZING SHALL MEET THE REQUIREMENTS FOR THE 2019 CALIFORNIA BUILDING CODE. SAFETY GLAZING SHALL BE USED IN ALL AREAS WHERE REQUIRED.

14. GLASS SETTING BLOCKS SHALL BE INSTALLED AT GLASS LITE 1/4 POINTS EXCEPT AS SPECIFICALLY NOTED OTHERWISE ON THE WINDOW WALL ELEVATIONS.

15. ARCADIA INC. IS NOT RESPONSIBLE FOR THE TYPE, SIZE, OR LOCATION OF ANY LOAD BEARING STRUCTURAL MEMBERS OF THE BUILDING. THE DESIGN OF THE WINDOW WALL
    IS BASED ON THE ASSUMPTION THAT THE BUILDING MEMBERS ARE CAPABLE OF ADEQUATELY SUPPORTING ALL WIND AND DEAD LOADS IMPOSED ON THEM BY THE SYSTEM.
    THIS SYSTEM, AS DETAILED, SHALL BE DESIGNED TO ACCOMMODATE A BUILDING DEFLECTION OF + OR - 1/4" VERTICALLY. THE STRUCTURAL ENGINEER OF RECORD FOR THE
    BUILDING SHALL VERIFY THAT ALL SURROUNDING STRUCTURES TO WHICH WINDOW WALL FRAMING IS TO BE ANCHORED ARE STRUCTURALLY SOUND AND CAPABLE OF SUPPORTING THE WEIGHTS AND REACTIONS OF THESE SYSTEMS UNDER MAXIMUM DESIGN LOADS.

16. STRUCTURAL ATTACHMENT BETWEEN ALUMINUM FRAMING AND STEEL STUD FRAMING SHALL BE ADEQUATE TO ACCEPT ALL LOADS IMPOSED BY THE WINDOW OR CURTAIN
    WALL FRAMING.(STEEL STUD FRAMING DESIGN AND SUPPLY BY OTHER)

17. THE WINDLOAD REACTIONS ACT PERPENDICULAR TO THE ELEVATION AT EACH MULLION LOCATION
    THE DEAD LOAD REACTIONS ACT IN THE DOWNWARD DIRECTION AT EACH MULLION LOCATION.
    THE WINDLOAD AND DEAD LOAD REACTIONS SHOWN ARE THE CRITICAL CASE REACTIONS PER ELEVATION.

18. USE 100% ELONGATION SILICONE SEALANT AT ALL LOCATIONS.

19. ALL SCREWS TO BE 18-8 STAINLESS STEEL OR SAE J429 GRADE 2 MINIMUM. 1/4" SCREWS TO BE SAE J429 GRADE 5.

SHEET INDEX

NO.	SHEET NO.	SHEET TITLE	REVISION
1	CW0.01	COVER SHEET	
2	CW0.02	GENERAL NOTES	
3	CW0.03	SECTION PROPERTIES (OPG1900)	
4	CW0.04	SECTION PROPERTIES (AFG451T, AR600)	
5	CW0.05	SECTION PROPERTIES (AR600, ATL175)	
6	CW1.01	FLOOR PLAN	
7	CW1.02	EXTERIOR ELEVATIONS	
8	CW1.03	EXTERIOR ELEVATIONS	
9	CW2.01	CURTAIN WALL ELEVATIONS (OPG1900)	
10	CW2.02	CURTAIN WALL ELEVATIONS (OPG1900)	
11	CW2.03	CURTAIN WALL ELEVATIONS (OPG1900)	
12	CW2.04	CURTAIN WALL ELEVATIONS (OPG1900)	
13	CW2.05	CURTAIN WALL ELEVATIONS (OPG1900)	
14	CW2.06	CURTAIN WALL ELEVATIONS (OPG1900)	
15	CW2.07	CURTAIN WALL ELEVATIONS (OPG1900)	
16	CW3.01	EXTERIOR STOREFRONT ELEVATIONS (AFG451T)	
17	CW3.02	EXTERIOR STOREFRONT ELEVATIONS (AFG451T)	
18	CW3.03	EXTERIOR STOREFRONT ELEVATIONS (AFG451T)	
19	CW4.01	INTERIOR STOREFRONT ELEVATIONS (AR600)	
20	CW4.02	INTERIOR STOREFRONT ELEVATIONS (AR600)	
21	CW4.03	INTERIOR STOREFRONT ELEVATIONS (AR600)	
22	CW4.04	INTERIOR STOREFRONT ELEVATIONS (AR600)	
23	CW4.05	INTERIOR STOREFRONT ELEVATIONS (AR600)	
24	CW4.06	INTERIOR STOREFRONT ELEVATIONS (AR600)	
25	CW4.07	INTERIOR STOREFRONT ELEVATIONS (ATL175)	
26	CW5.01	CURTAIN WALL DETAILS (OPG1900, HORZ. MEMBERS)	
27	CW5.01A	CURTAIN WALL DETAILS (OPG1900, HORZ. MEMBERS)	
28	CW5.02	CURTAIN WALL DETAILS (OPG1900, HORZ. MEMBERS)	
29	CW5.03	CURTAIN WALL DETAILS (OPG1900, HORZ. MEMBERS)	
30	CW6.01	CURTAIN WALL DETAILS (OPG1900, HORZ. MEMBERS)	
31	CW6.02	CURTAIN WALL DETAILS (OPG1900, HORZ. MEMBERS)	
32	CW7.01	EXT. STOREFRONT DETAILS (AFG451T)	
33	CW7.02	EXT. STOREFRONT DETAILS (AFG451T)	
34	CW7.03	EXT. STOREFRONT DETAILS (AFG451T)	
35	CW7.04	EXT. STOREFRONT DETAILS (AFG451T)	
36	CW7.05	EXT. STOREFRONT DETAILS (AFG451T)	
37	CW7.06	EXT. STOREFRONT DETAILS (AFG451T)	
38	CW8.01	INT. STOREFRONT DETAILS (AR600)	
39	CW8.02	INT. STOREFRONT DETAILS (AR600)	
40	CW8.03	INT. STOREFRONT DETAILS (AR600)	
41	CW9.01	INT. STOREFRONT DETAILS (ATL175)	
42	CW9.02	INT. STOREFRONT DETAILS (ATL175)	
43			
44			
45			
46			
47			
48			
49			
50			
51			
52			
53			
54			
55			
56			
57			
58			
59			
60			
61			
62			
63			
64			
65			
66			
67			
68			
69			
70			
71			
72			
73			
74			
75			
76			
77			
78			
79			
80			
81			
82			
83			
84			
85			
86			
87			
88			
89			
90			

ALUMINUM CURTAIN WALL, STOREFRONT & DOOR SHOP DRAWINGS

Submittal No. 1 DATE: 12/11/2023

THESE DRAWINGS WERE PRODUCED USING THE FOLLOWING RESOURCES:
ARCHITECTURE DRAWINGS DATED 10/23/23
AAE-730

MOUNT TRANSIT ADMINISTRATION FACILITY

170 BUSINESS CENTER DR.
BIG BEAR LAKES, CA

REVIEW NOTES

ARCADIA, INC.® PRODUCT USE & WARRANTY

Product Use
Arcadia, Inc., hereby disclaims all liability for the installation of project or design, any parts, gaskets, glazing aerials, components or sealant of other manufacturers used with Arcadia, Inc.,products , or lack of performance of Arcadia, Inc., products attributable to such items. Buyer agrees that under no circumstances shall Arcadia, Inc. be liable for installation defects as Arcadia, Inc. has not and will not be involved in the product selection or installation process. Buyer acknowledges that windows and doors are designed and manufactured to specific performance levels and are rated and classified for particular uses. Different product applications require different levels of product performance. Windows and doors are rated by independent certification agencies to insure they meet their specifications. Selecting the appropriate Arcadia, Inc. products and the installation and application of these products is not the responsibility of Arcadia, Inc. but of Buyer. Buyer represents and agrees that Buyer is solely responsible for the selection and application of proper systems and sizes and to ensure that when installed Arcadia, Inc.'s products will not allow water to pass beyond, around or through Arcadia, Inc.'s products. Unless Buyer has requested in writing and paid a separate and additional fee to Arcadia, Inc. for assembly and installation instructions and unless the same is reflected in this documents. Buyer agrees that any details shown are for purposes of illustrations purposes only and are not intended to show how the product should actually be installed and applied. This warranty also does not cover, and Arcadia, Inc., hereby disclaims all liability for any product which has accident, fire, war, flood, earthquakes, acts of God, or to which parts not supplied by Arcadia, Inc., have been added, or to defects caused by depreciation or normal wear. All decisions regarding the existence of defects in material and workmanship and the occurrence of any of the matters described in the preceding paragraphs or affecting this Warranty shall be made by Arcadia, Inc., and shall be final and binding upon the parties.

Warranties
Arcadia, Inc. warrants that goods sold here under are merchantable unless manufactured in conformance with Buyer's specifications, and that Arcadia, Inc. conveys good title thereto. ARCADIA, INC. MAKES NO WARRANTIES OR REPRESENTATIONS , EXPRESS OR IMPLIED, BEYOND THE DESCRIPTION ON THE FACE OF THIS CONTRACT AND PURCHASER UNDERSTANDS THAT ARCADIA, INC. HEREBY DISCLAIMS ALL IMPLIED WARRANTIES OF MERCHANTABILITY AND FITNESS. FOR EXAMPLE, ARCADIA, INC. DOES NOT WARRANT THAT THE GOODS ARE FIT FOR BUYER'S PARTICULAR USE OR PURPOSE, AND EXPRESSLY DISCLAIMS ALL PRIOR, CONTEMPORANEOUS OR SUBSEQUENT ORAL REPRESENTATIONS OR WARRANTIES OF ANY KIND. IN THE EVENT GOODS ARE NOT CONFORMING, BUYER'S EXCLUSIVE REMEDY SHALL BE RETURN OF THE GOODS AND REFUND OF THE PURCHASE PRICE, OR AT ARCADIA, INC.'S OPTION, REPLACEMENT OF THE GOODS BY ARCADIA, INC., BUT IN NO EVENT SHALL ARCADIA, INC. BE LIABLE TO BUYER FOR ANY MERCHANDISE OR PART BEYOND ITS INVOICE VALUE (LESS SCRAP VALUE), NOR FOR ANY DIRECT , CONSEQUENTIAL, SPECIAL OR INDIRECT DAMAGES. Arcadia, Inc. shall not have any liability to the customer for lost profits or other consequential, special, indirect or incidental damages, based upon a claim of any type or nature (including, but not limited to, contract, tort (including negligence, warranty or strict liability)), even if advised of possibility of such damages. Arcadia, Inc. specifically does not warrant the accuracy of any advice or recommendations given to Buyer in connection with the sale of goods hereunder.

REVIEW NOTES

STAMPS

REGISTERED PROFESSIONAL ENGINEER — GARY M. HOHMANN — No. 84674 — CIVIL — STATE OF CALIFORNIA
LICENSED ARCHITECT — ROBERT CLARKE — Exp.10-31-25 — STATE OF CALIFORNIA
12/11/23

AGENCY APPROVAL
File No: ########-########

CONSULTANT BRANDING

RUHNAU CLARKE ARCHITECTS

arcadia
ARCADIA, INC.®
2301 East Vernon Avenue
Vernon, California 90058
Ph: (323) 269-7300
Fx: (323) 261-9927

MOUNT TRANSIT ADMINISTRATION FACILITY: INCREMENT 3: 100% DESIGN DEVELOPMENT

GLASS SCHEDULE / MATERIAL LEGEND

GLASS	DESCRIPTION
GL-1	1" I.G.U. PER SEPC. 08 80 00
GL-3	1/4" CLEAR TEMPERED GLASS @INTERIOR STOREFRONT
(T)	TEMPERED GLASS

ABBREVIATIONS

REFERENCE	DESCRIPTION
B.O.M.	BOTTOM OF MULLION
D. L. O.	DAYLGHT OPENING DIMENSION
D. O.	DOOR OPENING DIMENSION
D. P.	DIMENSION POINT REFERENCE
F. D.	FRAME DIMENSION
OPP.	OPPOSITE HAND
N.B.A.	NOT BY ARCADIA
R. O.	ROUGH OPENING DIMENSION
T .O .M.	TOP OF MULLION
TYP.	TYPICAL
V.I.F.	VERIFY IN FIELD
W.O.	WINDOW OPENING
℄	CENTER LINE
GL	GLASS
SIM.	SIMILAR

GASKET TABLE:

GASKET SHAPE	GASKET No.	DESCRIPTION
	OPG 1985	Glazing gasket for OPG3000 & OPG1900
	OPG 1986IP Isolator	Pressure Bar Isolator gasket
	VTL-TG	Glazing gasket for AFG601T
		Bulb Gasket @Door
		Mohair
	AWB-C4375	Anti Walk Block
	E260	Front Gasket
	E150	Back Gasket

FASTENERS:

DESCRIPTION	SHAPE	REMARK
#8 x 1/4" PAN HEAD MACHINE SCREW		
#10 x 1-1/2" PAN HEAD SHEET METAL SCREW		
#12 x 3/4" FLAT HEAD SHEET METAL SCREW		
#12 x 1" FLAT HEAD SHEET METAL SCREW		
#12 x 1-1/2" FLAT HEAD SHEET METAL SCREW		
#10-14 ELCO DRIL-FLEX		ESR-3332 LARR#25095
1/4-14 x 2-1/2" ELCO DRIL-FLEX (FLAT HEAD)		ESR-3332
1/4-14 x 2-1/2" ELCO DRIL-FLEX		ESR-3332
1/4-20 x 2-1/2" ELCO DRIL-FLEX		ESR-3332
1/4" DIA. CONCRETE SCREW, SIMPSON STRONG-TIE TITEN SS		
1/4" DIA. HILTI KWIK HUS-EZ CONCRETE SCREW		ESR-3027
3/8" DIA. HILTI KWIK HUS-EZ CONCRETE SCREW		ESR-3027
1/2" DIA. HILTI KWIK HUS-EZ SCREW (CMU)		ESR-3056

SETTING BLOCKS

BLOCK	SYMBOL	DESCRIPTION
	SB01	Setting Block [1" x 5/8" x 4] SB-1.0X0.6250X4
	SB02	Setting Block [1" x 1/4" x 4] SB-1.0X0.250X4
	SB03	Setting Block [1" x 3/4" x 4] SB-1.0X0.75X4

MISC.

DOOR SCHEDULE

EXTERIOR

NO.	TYPE	WIDTH	HEIGHT	MATERIAL	LOCATION	REMARKS

INTERIOR

DOOR TYPE

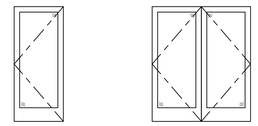

TYPE 'SGL'
SINGLE DOOR
(MEDIUM STILE)

TYPE 'PR'
PAIR DOOR
(MEDIUM STILE)

GENERAL NOTES ON DOORS

Typical for all doors -
Doors shall comply with 11B-404.2.7 and 11B-309.4.
Demonstrate or provide 5 lbs. opening force max. unlatching and 5 lbs. force max operating pressure per CBC 11B-404.2.9 and closing speed shall comply with Section 11B-404.2.8.
The force for pushing or pulling open a door or gate shall be as follows:

1. Interior hinged doors and gates: 5 pounds maximum.
2. Sliding or folding doors: 5 pounds maximum.
3. Required fire doors: the minimum opening force allowable by the appropriate administrative authority, not to exceed 15 pounds.
4. Exterior hinged doors: 5 pounds maximum.

These forces do not apply to the force required to retract latch bolts or disengage other devices that hold the door or gate in a closed position.

STAMPS

REGISTERED PROFESSIONAL ENGINEER — DAVID M. HERNANDEZ — No. 84674 — CIVIL — STATE OF CALIFORNIA
LICENSED ARCHITECT — ROGER CLARKE — Exp.10-31-25 — STATE OF CALIFORNIA
12/11/23

AGENCY APPROVAL
File No: ########-########

CONSULTANT BRANDING

RUHNAU CLARKE ARCHITECTS

arcadia
ARCADIA, INC.
2301 East Vernon Avenue
Vernon, California 90058
Ph: (323) 269-7300
Fx: (323) 261-9927

MOUNT TRANSIT ADMINISTRATION FACILITY: INCREMENT 3: 100% DESIGN DEVELOPMENT

PROJECT No. : 50801
11/17/2023 11:41:15 AM

DRAWN BY: CHECKED BY:

ISSUE No.	DATE	DESCRIPTION	REVISION No.	DATE	DESCRIPTION
ISSUE No.	DATE	DESCRIPTION	REVISION No.	DATE	DESCRIPTION
ISSUE No.	DATE	DESCRIPTION	REVISION No.	DATE	DESCRIPTION
ISSUE No.	DATE	DESCRIPTION	REVISION No.	DATE	DESCRIPTION

OPG1910

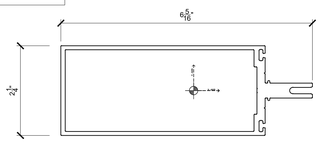

Area: 2.0288
Perimeter: 33.1967
Bounding box: X: -2.9797 -- 3.3313
Y: -1.1251 -- 1.1249
Centroid: X: 0.0000
Y: 0.0000
Moments of inertia: X: 1.4067
Y: 8.3837
Product of inertia: XY: -0.0004
Radii of gyration: X: 0.8327
Y: 2.0328
Principal moments and X-Y directions about centroid:
I: 1.4067 along [1.0000 -0.0001]
J: 8.3837 along [0.0001 1.0000]

OPG1978

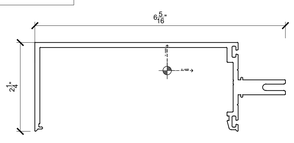

Area: 1.5637
Perimeter: 24.0507
Bounding box: X: -2.9662 -- 3.3198
Y: -0.7046 -- 1.5244
Centroid: X: 0.0000
Y: 0.0000
Moments of inertia: X: 0.6634
Y: 7.3019
Product of inertia: XY: -0.5054
Radii of gyration: X: 0.6513
Y: 2.1609
Principal moments and X-Y directions about centroid:
I: 0.6252 along [0.9971 -0.0755]
J: 7.3402 along [0.0755 0.9971]

OPG1900

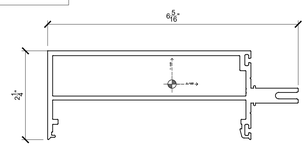

Area: 2.0426
Perimeter: 33.7381
Bounding box: X: -3.1648 -- 3.1212
Y: -0.8344 -- 1.3946
Centroid: X: 0.0000
Y: 0.0000
Moments of inertia: X: 0.7531
Y: 8.5672
Product of inertia: XY: -0.3104
Radii of gyration: X: 0.6072
Y: 2.0480
Principal moments and X-Y directions about centroid:
I: 0.7408 along [0.9992 -0.0396]
J: 8.5795 along [0.0396 0.9992]

OPG1901

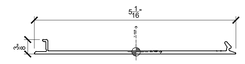

Area: 0.4303
Perimeter: 11.4205
Bounding box: X: -2.5541 -- 2.5039
Y: -0.3075 -- 0.0545
Centroid: X: 0.0000
Y: 0.0000
Moments of inertia: X: 0.0015
Y: 0.9890
Product of inertia: XY: 0.0011
Radii of gyration: X: 0.0592
Y: 1.5160
Principal moments and X-Y directions about centroid:
I: 0.0015 along [1.0000 0.0012]
J: 0.9890 along [-0.0012 1.0000]

OPG1550

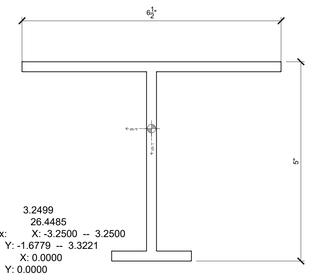

Area: 3.2499
Perimeter: 28.4485
Bounding box: X: -3.2500 -- 3.2500
Y: -1.6779 -- 3.3221
Centroid: X: 0.0000
Y: 0.0000
Moments of inertia: X: 11.6986
Y: 5.8929
Product of inertia: XY: 0.0000
Radii of gyration: X: 1.8973
Y: 1.3466
Principal moments and X-Y directions about centroid:
I: 5.8929 along [0.0000 -1.0000]
J: 11.6986 along [1.0000 0.0000]

OPG1552

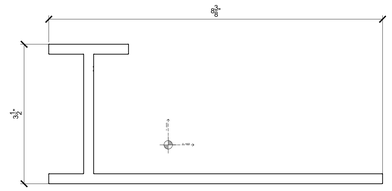

Area: 3.3433
Perimeter: 27.2213
Bounding box: X: -2.9961 -- 5.3789
Y: -0.9752 -- 2.5248
Centroid: X: 0.0000
Y: 0.0000
Moments of inertia: X: 5.4178
Y: 20.3583
Product of inertia: XY: 5.6744
Radii of gyration: X: 1.2730
Y: 2.4676
Principal moments and X-Y directions about centroid:
I: 3.5070 along [0.9477 -0.3191]
J: 22.2690 along [0.3191 0.9477]

OPG1912

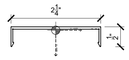

Area: 0.1735
Perimeter: 6.4400
Bounding box: X: -0.0858 -- 0.4142
Y: -1.1233 -- 1.1267
Centroid: X: 0.0000
Y: 0.0000
Moments of inertia: X: 0.1039
Y: 0.0025
Product of inertia: XY: 0.0000
Radii of gyration: X: 0.7737
Y: 0.1196
Principal moments and X-Y directions about centroid:
I: 0.0025 along [0.0001 1.0000]
J: 0.1039 along [-1.0000 0.0001]

OPG1979

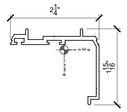

Area: 0.4261
Perimeter: 10.1895
Bounding box: X: -0.5300 -- 1.3780
Y: -1.3489 -- 0.8752
Centroid: X: 0.0000
Y: 0.0000
Moments of inertia: X: 0.2321
Y: 0.1049
Product of inertia: XY: 0.0883
Radii of gyration: X: 0.7381
Y: 0.4963
Principal moments and X-Y directions about centroid:
I: 0.0597 along [0.4559 0.8900]
J: 0.2773 along [-0.8900 0.4559]

OPG1999

Area: 0.2486
Perimeter: 4.2738
Bounding box: X: -0.8363 -- 0.4137
Y: -0.6486 -- 0.2264
Centroid: X: 0.0000
Y: 0.0000
Moments of inertia: X: 0.0157
Y: 0.0388
Product of inertia: XY: -0.0143
Radii of gyration: X: 0.2514
Y: 0.3950
Principal moments and X-Y directions about centroid:
I: 0.0089 along [0.9019 -0.4319]
J: 0.0457 along [0.4319 0.9019]

OPG1902

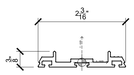

Area: 0.3363
Perimeter: 7.2055
Bounding box: X: -1.0999 -- 1.0981
Y: -0.1209 -- 0.2741
Centroid: X: 0.0000
Y: 0.0000
Moments of inertia: X: 0.0023
Y: 0.1390
Product of inertia: XY: 0.0000
Radii of gyration: X: 0.0829
Y: 0.6430
Principal moments and X-Y directions about centroid:
I: 0.0023 along [1.0000 0.0003]
J: 0.1390 along [-0.0003 1.0000]

OPG1913

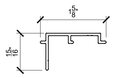

Area: 0.1828
Perimeter: 5.9239
Bounding box: X: -0.2042 -- 0.7258
Y: -0.6697 -- 0.9813
Centroid: X: 0.0000
Y: 0.0000
Moments of inertia: X: 0.0466
Y: 0.0104
Product of inertia: XY: -0.0104
Radii of gyration: X: 0.5049
Y: 0.2390
Principal moments and X-Y directions about centroid:
I: 0.0077 along [0.2575 -0.9663]
J: 0.0494 along [0.9663 0.2575]

TB251

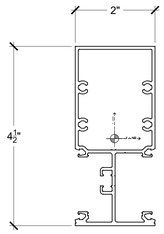

Area: 1.30626 sq in
Perimeter: 34.02641 in
Bounding box: X: -0.98529 -- 1.01471 in
Y: -2.18611 -- 2.31389 in
Centroid: X: 0.00000 in
Y: 0.00000 in
Moments of inertia: X: 2.95143 sq in sq in
Y: 0.68129 sq in sq in
Product of inertia: XY: -0.02135 sq in sq in
Radii of gyration: X: 1.50314 in
Y: 0.72219 in
Principal moments (sq in sq in) and X-Y directions about centroid:
I: 2.95163 along [0.99996 -0.00940]
J: 0.68108 along [0.00940 0.99996]

TB266

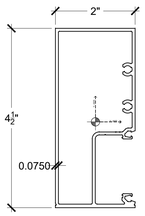

Area: 1.1775
Perimeter: 30.5811
Bounding box: X: -1.0047 -- 0.9953
Y: -2.1494 -- 2.3507
Centroid: X: 0.0000
Y: 0.0000
Moments of inertia: X: 2.8568
Y: 0.6938
Product of inertia: XY: 0.1277
Radii of gyration: X: 1.5576
Y: 0.7676
Principal moments and X-Y directions about centroid:
I: 0.6863 along [0.0587 0.9983]
J: 2.8644 along [-0.9983 0.0587]

TB265

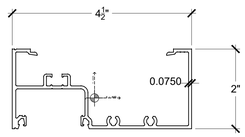

Area: 0.9934
Perimeter: 26.2281
Bounding box: X: -2.0660 -- 2.4340
Y: -0.7722 -- 1.2278
Centroid: X: 0.0000
Y: 0.0000
Moments of inertia: X: 0.4186
Y: 2.7063
Product of inertia: XY: -0.1837
Radii of gyration: X: 0.6491
Y: 1.6505
Principal moments and X-Y directions about centroid:
I: 0.4039 along [0.9968 -0.0795]
J: 2.7209 along [0.0795 0.9968]

STAMPS

REGISTERED PROFESSIONAL ENGINEER — DAVID M. HORNBECK — No. 84674 — CIVIL — STATE OF CALIFORNIA

LICENSED ARCHITECT — ROGER CLARKE — Exp.10-31-25 — STATE OF CALIFORNIA

12/11/23

AGENCY APPROVAL
File No: ########-########

CONSULTANT BRANDING

RUHNAU CLARKE ARCHITECTS

arcadia
ARCADIA, INC.
2301 East Vernon Avenue
Vernon, California 90058
Ph: (323) 269-7300
Fx: (323) 261-9927

MOUNT TRANSIT ADMINISTRATION FACILITY: INCREMENT 3: 100% DESIGN DEVELOPMENT

PROJECT No. : 50801
11/17/2023 11:41:15 AM

DRAWN BY: CHECKED BY:

ISSUE No.	DATE	DESCRIPTION	REVISION No.	DATE	DESCRIPTION
ISSUE No.	DATE	DESCRIPTION	REVISION No.	DATE	DESCRIPTION
ISSUE No.	DATE	DESCRIPTION	REVISION No.	DATE	DESCRIPTION
ISSUE No.	DATE	DESCRIPTION	REVISION No.	DATE	DESCRIPTION

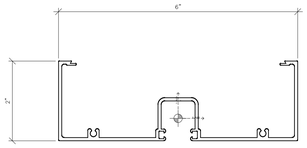

26239

Area: 1.09765 sq in
Perimeter: 27.81847 in
Bounding box: X: -3.00001 -- 2.99999 in
Y: -0.56206 -- 1.43794 in
Centroid: X: 0.00000 in
Y: 0.00000 in
Moments of inertia: X: 0.42676 sq in sq in
Y: 4.93912 sq in sq in
Product of inertia: XY: -0.00003 sq in sq in
Radii of gyration: X: 0.62354 in
Y: 2.12125 in
Principal moments (sq in sq in) and X-Y directions about centroid:
I: 0.42676 along [1.00000 0.00001]
J: 4.93912 along [-0.00001 1.00000]

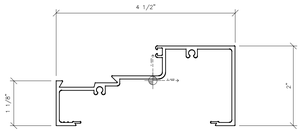

HM253

Area: 0.85383 sq in
Perimeter: 21.47340 in
Bounding box: X: -2.42594 -- 2.06156 in
Y: -1.13201 -- 0.86799 in
Centroid: X: 0.00000 in
Y: 0.00000 in
Moments of inertia: X: 0.33249 sq in sq in
Y: 2.18476 sq in sq in
Product of inertia: XY: -0.30247 sq in sq in
Radii of gyration: X: 0.62403 in
Y: 1.59962 in
Principal moments (sq in sq in) and X-Y directions about centroid:
I: 0.28435 along [0.98757 0.15718]
J: 2.23290 along [-0.15718 0.98757]

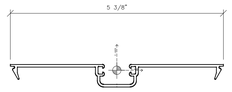

26270

Area: 0.47627 sq in
Perimeter: 15.00887 in
Bounding box: X: -2.67300 -- 2.67300 in
Y: -0.42053 -- 0.14447 in
Centroid: X: 0.00000 in
Y: 0.00000 in
Moments of inertia: X: 0.01490 sq in sq in
Y: 1.10504 sq in sq in
Product of inertia: XY: 0.00000 sq in sq in
Radii of gyration: X: 0.17687 in
Y: 1.52322 in
Principal moments (sq in sq in) and X-Y directions about centroid:
I: 0.01490 along [1.00000 0.00000]
J: 1.10504 along [0.00000 1.00000]

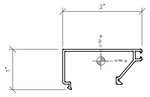

HM153ST

Area: 0.22976 sq in
Perimeter: 8.83180 in
Bounding box: X: -0.95999 -- 1.03201 in
Y: -0.71752 -- 0.29547 in
Centroid: X: 0.00000 in
Y: 0.00000 in
Moments of inertia: X: 0.02259 sq in sq in
Y: 0.11531 sq in sq in
Product of inertia: XY: -0.00897 sq in sq in
Radii of gyration: X: 0.31354 in
Y: 0.70842 in
Principal moments (sq in sq in) and X-Y directions about centroid:
I: 0.02173 along [0.99543 0.09544]
J: 0.11617 along [-0.09544 0.99543]

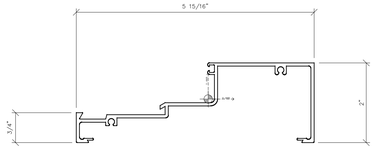

26263

Area: 0.94430 sq in
Perimeter: 23.73015 in
Bounding box: X: -3.30997 -- 2.65803 in
Y: -1.09278 -- 0.90722 in
Centroid: X: 0.00000 in
Y: 0.00000 in
Moments of inertia: X: 0.39282 sq in sq in
Y: 3.93716 sq in sq in
Product of inertia: XY: -0.65277 sq in sq in
Radii of gyration: X: 0.64497 in
Y: 2.04191 in
Principal moments (sq in sq in) and X-Y directions about centroid:
I: 0.27642 along [0.98447 0.17555]
J: 4.05356 along [-0.17555 0.98447]

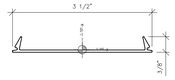

FF200

Area: 0.2516
Perimeter: 8.4583
Bounding box: X: -1.7500 -- 1.7500
Y: -0.0642 -- 0.3267
Centroid: X: 0.0000
Y: 0.0000
Moments of inertia: X: 0.0017
Y: 0.3304
Product of inertia: XY: 0.0000
Radii of gyration: X: 0.0812
Y: 1.1459
Principal moments and X-Y directions about centroid:
I: 0.0017 along [1.0000 0.0000]
J: 0.3304 along [0.0000 1.0000]

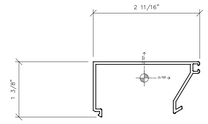

26263ST

Area: 0.37549 sq in
Perimeter: 11.81532 in
Bounding box: X: -1.28107 -- 1.39094 in
Y: -0.98002 -- 0.40749 in
Centroid: X: 0.00000 in
Y: 0.00000 in
Moments of inertia: X: 0.07458 sq in sq in
Y: 0.35241 sq in sq in
Product of inertia: XY: -0.01996 sq in sq in
Radii of gyration: X: 0.44568 in
Y: 0.96878 in
Principal moments (sq in sq in) and X-Y directions about centroid:
I: 0.07316 along [0.99746 0.07129]
J: 0.35383 along [-0.07129 0.99746]

DS001

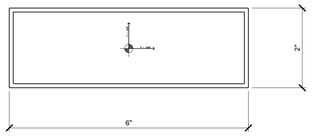

T600

Area: 1.5600
Perimeter: 31.1485
Bounding box: X: -3.0000 -- 3.0000
Y: -1.0000 -- 1.0000
Centroid: X: 0.0000
Y: 0.0000
Moments of inertia: X: 1.1812
Y: 6.7331
Product of inertia: XY: 0.0000
Radii of gyration: X: 0.8701
Y: 2.0775
Principal moments and X-Y directions about centroid:
I: 1.1812 along [1.0000 0.0000]
J: 6.7331 along [0.0000 1.0000]

Area: 0.0923
Perimeter: 3.2699
Bounding box: X: -0.3766 -- 0.1284
Y: -0.3842 -- 0.4639
Centroid: X: 0.0000
Y: 0.0000
Moments of inertia: X: 0.0074
Y: 0.0015
Product of inertia: XY: 0.0017
Radii of gyration: X: 0.2838
Y: 0.1285
Principal moments and X-Y directions about centroid:
I: 0.0011 along [0.2525 0.9676]
J: 0.0079 along [-0.9676 0.2525]

STAMPS

REGISTERED PROFESSIONAL ENGINEER — DAVID M. HARRIGER — No. 84674 — CIVIL — STATE OF CALIFORNIA

LICENSED ARCHITECT — ROGER CLARKE — Exp.10-31-25 — STATE OF CALIFORNIA

12/11/23

AGENCY APPROVAL
File No: ########-########

CONSULTANT BRANDING

RUHNAU CLARKE ARCHITECTS

arcadia
ARCADIA, INC.
2301 East Vernon Avenue
Vernon, California 90058
Ph: (323) 269-7300
Fx: (323) 261-9927

MOUNT TRANSIT ADMINISTRATION FACILITY: INCREMENT 3: 100% DESIGN DEVELOPMENT

PROJECT No. :50801
11/17/2023 11:41:15 AM

DRAWN BY: CHECKED BY:

ISSUE No.	DATE	DESCRIPTION	REVISION No.	DATE	DESCRIPTION

RUHNAUCLARKE.COM
3775 TENTH STREET, RIVERSIDE CALIFORNIA 92501 (951) 684 4664 / 5751 PALMER WAY, SUITE C, CARLSBAD CALIFORNIA 92010 (760) 438 5899

MOUNT TRANSIT ADMINISTRATION FACILITY
INCREMENT 3
170 BUSINESS CENTER. BIG BEAR LAKE, CALIFORNIA
BIG BEAR LAKE

SECTION PROPERTIES (AFG451T, AR600)

CW0.04

50801

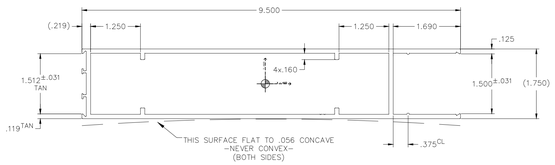

DRB950

Area: 2.4868
Perimeter: 46.3359
Bounding box: X: -4.6014 -- 4.8986
Y: -0.8751 -- 0.8749
Centroid: X: 0.0000
Y: 0.0000
Moments of inertia: X: 1.4932
Y: 21.2535
Product of inertia: XY: 0.0004
Radii of gyration: X: 0.7749
Y: 2.9234
Principal moments and X-Y directions about centroid:
I: 1.4932 along [1.0000 0.0000]
J: 21.2535 along [0.0000 1.0000]

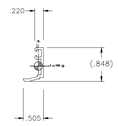

DS001

Area: 0.0923
Perimeter: 3.2699
Bounding box: X: -0.3766 -- 0.1284
Y: -0.3842 -- 0.4639
Centroid: X: 0.0000
Y: 0.0000
Moments of inertia: X: 0.0074
Y: 0.0015
Product of inertia: XY: 0.0017
Radii of gyration: X: 0.2838
Y: 0.1285
Principal moments and X-Y directions about centroid:
I: 0.0011 along [0.2525 0.9676]
J: 0.0079 along [-0.9676 0.2525]

S21F

Area: 0.1136
Perimeter: 4.4813
Bounding box: X: -0.3063 -- 0.3197
Y: -0.4386 -- 0.2614
Centroid: X: 0.0000
Y: 0.0000
Moments of inertia: X: 0.0050
Y: 0.0064
Product of inertia: XY: 0.0003
Radii of gyration: X: 0.2089
Y: 0.2370
Principal moments and X-Y directions about centroid:
I: 0.0049 along [0.9815 0.1913]
J: 0.0064 along [-0.1913 0.9815]

S21B

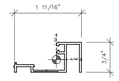

Area: 0.1931
Perimeter: 8.1025
Bounding box: X: -1.0703 -- 0.6287
Y: -0.3165 -- 0.4335
Centroid: X: 0.0000
Y: 0.0000
Moments of inertia: X: 0.0133
Y: 0.0518
Product of inertia: XY: 0.0134
Radii of gyration: X: 0.2625
Y: 0.5180
Principal moments and X-Y directions about centroid:
I: 0.0091 along [0.9540 0.2997]
J: 0.0560 along [-0.2997 0.9540]

31330

Area: 1.3253
Perimeter: 21.7669
Bounding box: X: -0.8700 -- 0.8700
Y: -1.9703 -- 1.6547
Centroid: X: 0.0000
Y: 0.0000
Moments of inertia: X: 1.5560
Y: 0.6771
Product of inertia: XY: 0.0000
Radii of gyration: X: 1.0835
Y: 0.7148
Principal moments and X-Y directions about centroid:
I: 0.6771 along [0.0000 1.0000]
J: 1.5560 along [-1.0000 0.0000]

T245

Area: 1.1376
Perimeter: 25.2800
Bounding box: X: -2.2500 -- 2.2500
Y: -1.0000 -- 1.0000
Centroid: X: 0.0000
Y: 0.0000
Moments of inertia: X: 0.8297
Y: 2.9599
Product of inertia: XY: 0.0000
Radii of gyration: X: 0.8540
Y: 1.6130
Principal moments and X-Y directions about centroid:
I: 0.8297 along [1.0000 0.0000]
J: 2.9599 along [0.0000 1.0000]

UCH201

Area: 0.2612
Perimeter: 8.2170
Bounding box: X: -1.0285 -- 0.9715
Y: -0.7258 -- 0.2742
Centroid: X: 0.0000
Y: 0.0000
Moments of inertia: X: 0.0247
Y: 0.1623
Product of inertia: XY: -0.0002
Radii of gyration: X: 0.3076
Y: 0.7881
Principal moments and X-Y directions about centroid:
I: 0.0247 along [1.0000 -0.0012]
J: 0.1623 along [0.0012 1.0000]

DSO901

Area: 1.1485
Perimeter: 20.7173
Bounding box: X: -0.8864 -- 0.8636
Y: -1.7169 -- 1.7831
Centroid: X: 0.0000
Y: 0.0000
Moments of inertia: X: 1.7063
Y: 0.5928
Product of inertia: XY: 0.0254
Radii of gyration: X: 1.2189
Y: 0.7185
Principal moments and X-Y directions about centroid:
I: 0.5923 along [0.0228 0.9997]
J: 1.7068 along [-0.9997 0.0228]

STAMPS

REGISTERED PROFESSIONAL ENGINEER
DAVID M. HORNER
No. 84674
CIVIL
STATE OF CALIFORNIA

LICENSED ARCHITECT
ROGER CLARKE
Exp.10-31-25
STATE OF CALIFORNIA

12/11/23

AGENCY APPROVAL
File No: ########-########

CONSULTANT BRANDING

RUHNAU CLARKE ARCHITECTS

arcadia
ARCADIA, INC.
2301 East Vernon Avenue
Vernon, California 90058
Ph: (323) 269-7300
Fx: (323) 261-9927

MOUNT TRANSIT ADMINISTRATION FACILITY: INCREMENT 3: 100% DESIGN DEVELOPMENT

PROJECT No. : 50801
11/17/2023 11:41:15 AM

DRAWN BY: CHECKED BY:

ISSUE No.	DATE	DESCRIPTION	REVISION No.	DATE	DESCRIPTION
ISSUE No.	DATE	DESCRIPTION	REVISION No.	DATE	DESCRIPTION
ISSUE No.	DATE	DESCRIPTION	REVISION No.	DATE	DESCRIPTION
ISSUE No.	DATE	DESCRIPTION	REVISION No.	DATE	DESCRIPTION

RUHNAUCLARKE.COM
3775 TENTH STREET, RIVERSIDE CALIFORNIA 92501 (951) 684 4664 / 5751 PALMER WAY, SUITE C, CARLSBAD CALIFORNIA 92010 (760) 438 5899

MOUNT TRANSIT ADMINISTRATION FACILITY
INCREMENT 3
170 BUSINESS CENTER. BIG BEAR LAKE, CALIFORNIA
BIG BEAR LAKE

SECTION PROPERTIES (AFG451T, AR600)

CW0.05

50801

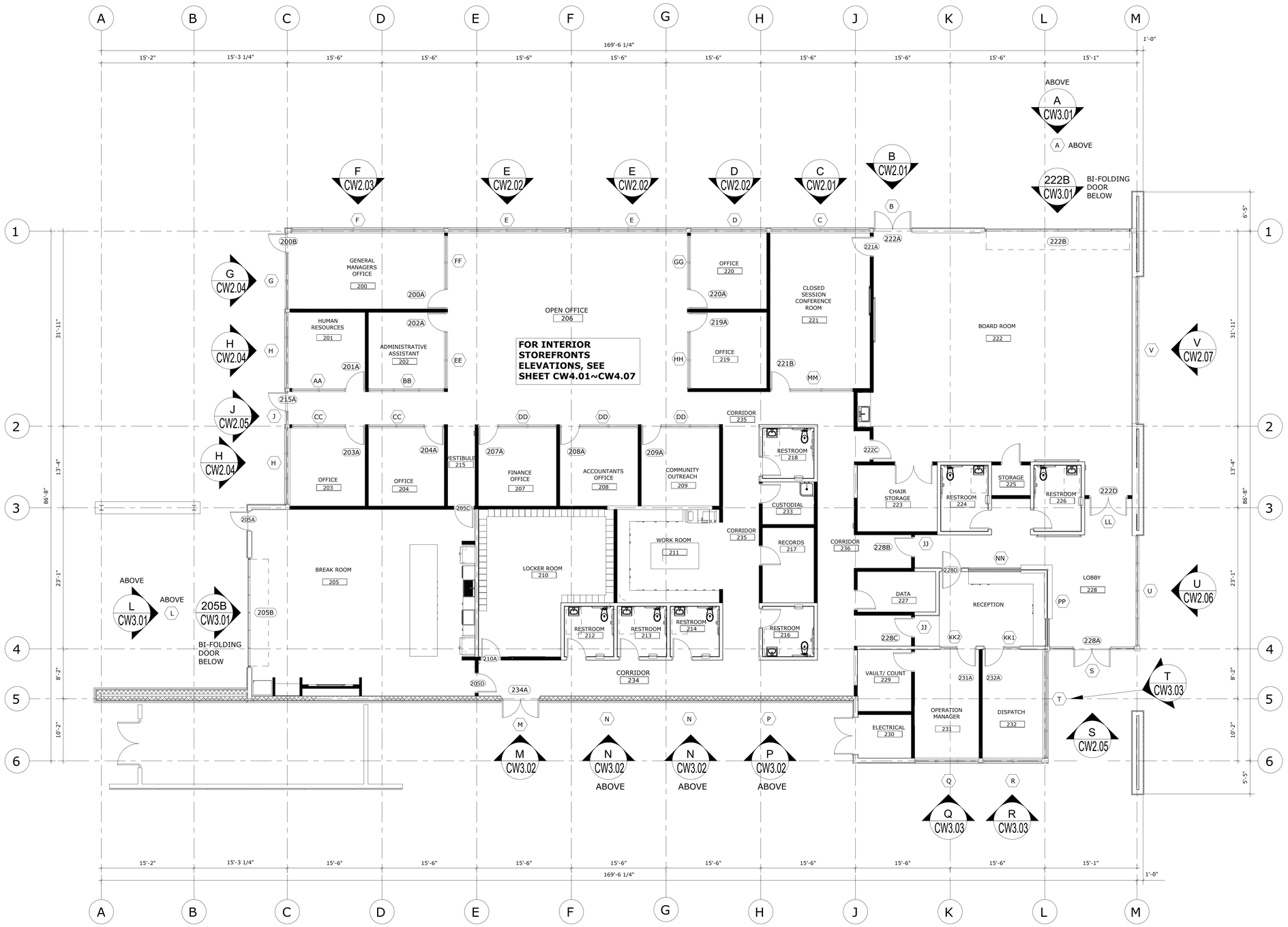

1 OVERALL FLOOR PLAN

REF. ARCH. DWG. : A2-1.2 (SCALE : N.T.S.)

(FOR THE PURPOSE OF STOREFRONT & DOOR LOCATION ONLY, DO NOT TAKE ANY DIMENSIONS FROM THIS FLOOR PLAN)

STAMPS

DAVID M. HUMPHREYS No. 84674 CIVIL STATE OF CALIFORNIA

LICENSED ARCHITECT ROGER CLARKE Exp.10-31-25 STATE OF CALIFORNIA

12/11/23

AGENCY APPROVAL
File No: ########-########

CONSULTANT BRANDING

RUHNAU CLARKE ARCHITECTS

arcadia
ARCADIA, INC.
2301 East Vernon Avenue
Vernon, California 90058
Ph: (323) 269-7300
Fx: (323) 261-9927

MOUNT TRANSIT ADMINISTRATION FACILITY: INCREMENT 3: 100% DESIGN DEVELOPMENT

PROJECT No. :50801
11/17/2023 11:41:15 AM

DRAWN BY: CHECKED BY:

ISSUE No.____ DATE____ DESCRIPTION____
ISSUE No.____ DATE____ DESCRIPTION____
ISSUE No.____ DATE____ DESCRIPTION____
ISSUE No.____ DATE____ DESCRIPTION____

REVISION No.____ DATE____ DESCRIPTION____
REVISION No.____ DATE____ DESCRIPTION____
REVISION No.____ DATE____ DESCRIPTION____
REVISION No.____ DATE____ DESCRIPTION____

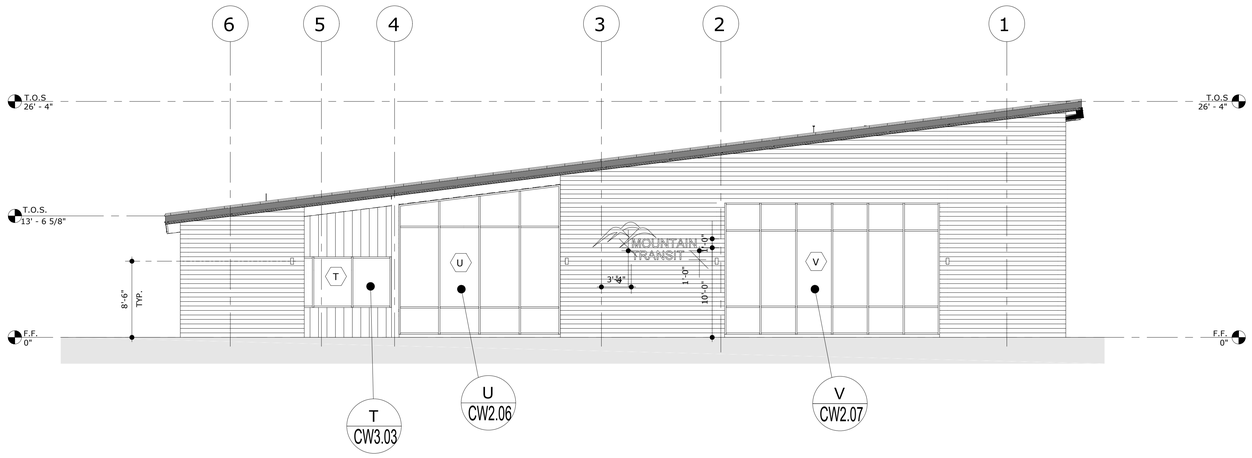

1 EAST ELEVATION

REF. ARCH. DWG. : 2/A2-4.1 (SCALE : N.T.S.)

(FOR THE PURPOSE OF STOREFRONT & DOOR LOCATION ONLY,
DO NOT TAKE ANY DIMENSIONS FROM THIS FLOOR PLAN)

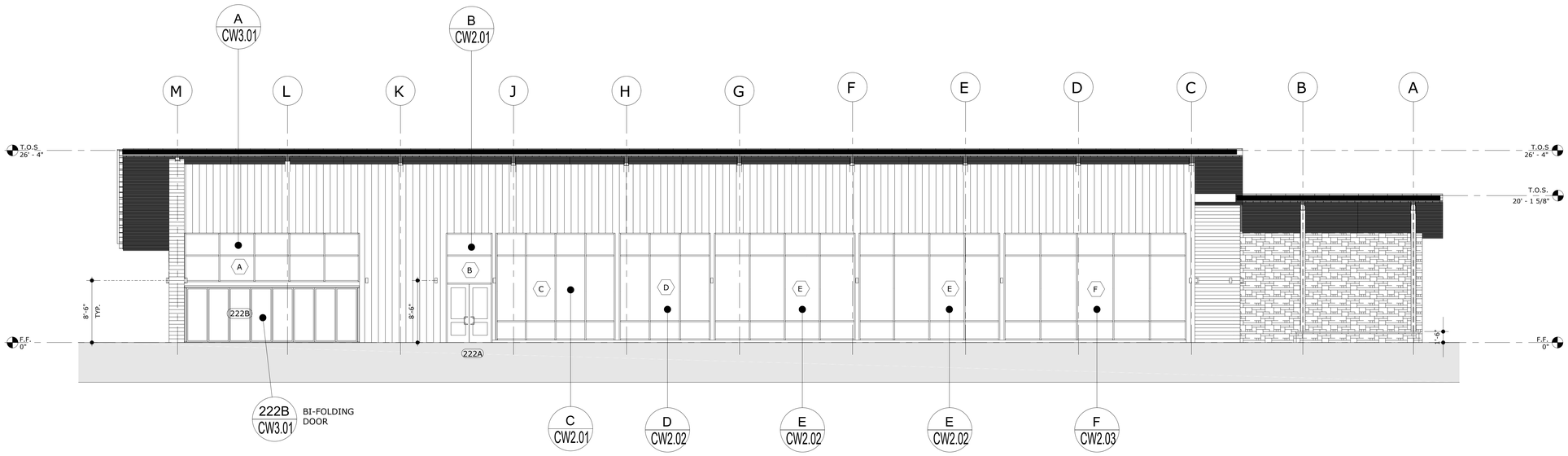

2 NORTH ELEVATION

REF. ARCH. DWG. : 1/A2-4.1 (SCALE : N.T.S.)

(FOR THE PURPOSE OF STOREFRONT & DOOR LOCATION ONLY,
DO NOT TAKE ANY DIMENSIONS FROM THIS FLOOR PLAN)

STAMPS

REGISTERED PROFESSIONAL ENGINEER — GARY D. HAMMER — No. 84674 — CIVIL — STATE OF CALIFORNIA

LICENSED ARCHITECT — ROGER CLARKE — Exp.10-31-25 — STATE OF CALIFORNIA

12/11/23

AGENCY APPROVAL
File No: ########-########

CONSULTANT BRANDING

RUHNAU CLARKE ARCHITECTS

arcadia
ARCADIA, INC.
2301 East Vernon Avenue
Vernon, California 90058
Ph: (323) 269-7300
Fx: (323) 261-9927

MOUNT TRANSIT ADMINISTRATION FACILITY: INCREMENT 3: 100% DESIGN DEVELOPMENT

PROJECT No. :50801
11/17/2023 11:41:15 AM

DRAWN BY: CHECKED BY:

ISSUE No.	DATE	DESCRIPTION	REVISION No.	DATE	DESCRIPTION
ISSUE No.	DATE	DESCRIPTION	REVISION No.	DATE	DESCRIPTION
ISSUE No.	DATE	DESCRIPTION	REVISION No.	DATE	DESCRIPTION
ISSUE No.	DATE	DESCRIPTION	REVISION No.	DATE	DESCRIPTION

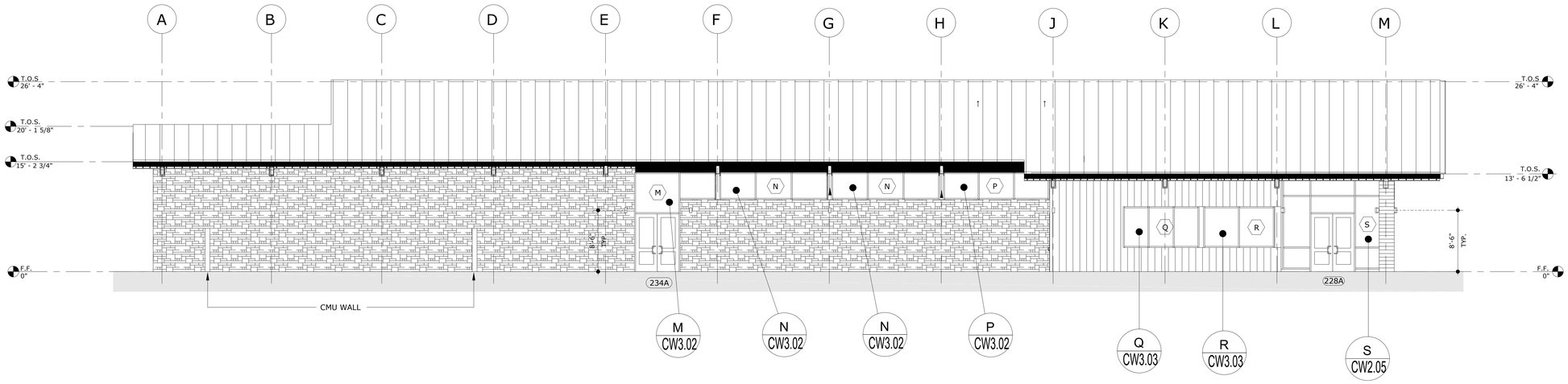

1 SOUTH ELEVATION

REF. ARCH. DWG. : 3/A2-4.1 (SCALE : N.T.S.)

(FOR THE PURPOSE OF STOREFRONT & DOOR LOCATION ONLY,
DO NOT TAKE ANY DIMENSIONS FROM THIS FLOOR PLAN)

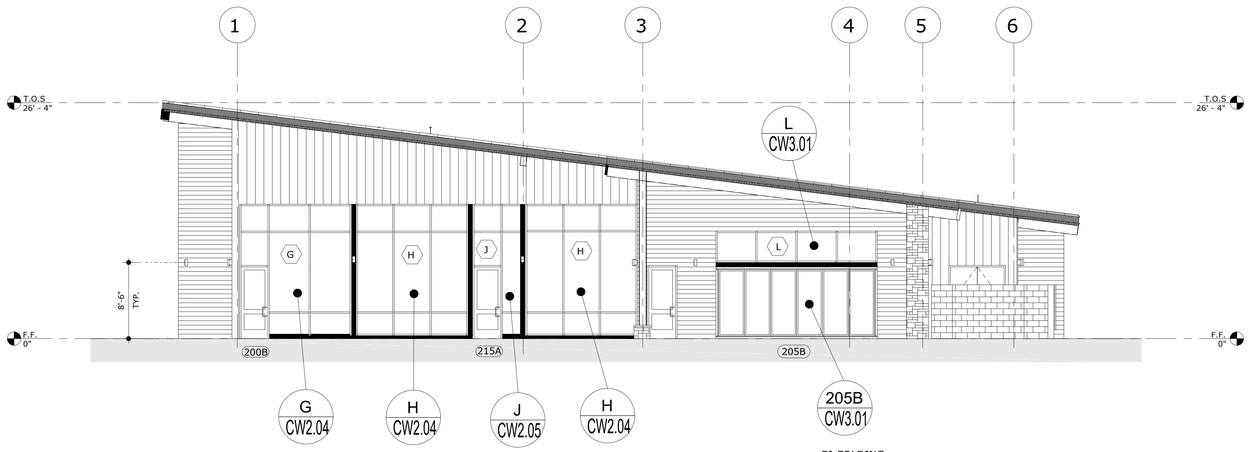

2 WEST ELEVATION

REF. ARCH. DWG. : 4/A2-4.1 (SCALE : N.T.S.)

(FOR THE PURPOSE OF STOREFRONT & DOOR LOCATION ONLY,
DO NOT TAKE ANY DIMENSIONS FROM THIS FLOOR PLAN)

STAMPS

12/11/23

AGENCY APPROVAL

CONSULTANT BRANDING

RUHNAU CLARKE ARCHITECTS

arcadia
ARCADIA, INC.
2301 East Vernon Avenue
Vernon, California 90058
Ph: (323) 269-7300
Fx: (323) 261-9927

MOUNT TRANSIT ADMINISTRATION FACILITY: INCREMENT 3: 100% DESIGN DEVELOPMENT

PROJECT No. :50801
11/17/2023 11:41:15 AM

DRAWN BY: CHECKED BY:

ISSUE No.____ DATE____ DESCRIPTION____
ISSUE No.____ DATE____ DESCRIPTION____
ISSUE No.____ DATE____ DESCRIPTION____
ISSUE No.____ DATE____ DESCRIPTION____

REVISION No.____ DATE____ DESCRIPTION____
REVISION No.____ DATE____ DESCRIPTION____
REVISION No.____ DATE____ DESCRIPTION____
REVISION No.____ DATE____ DESCRIPTION____

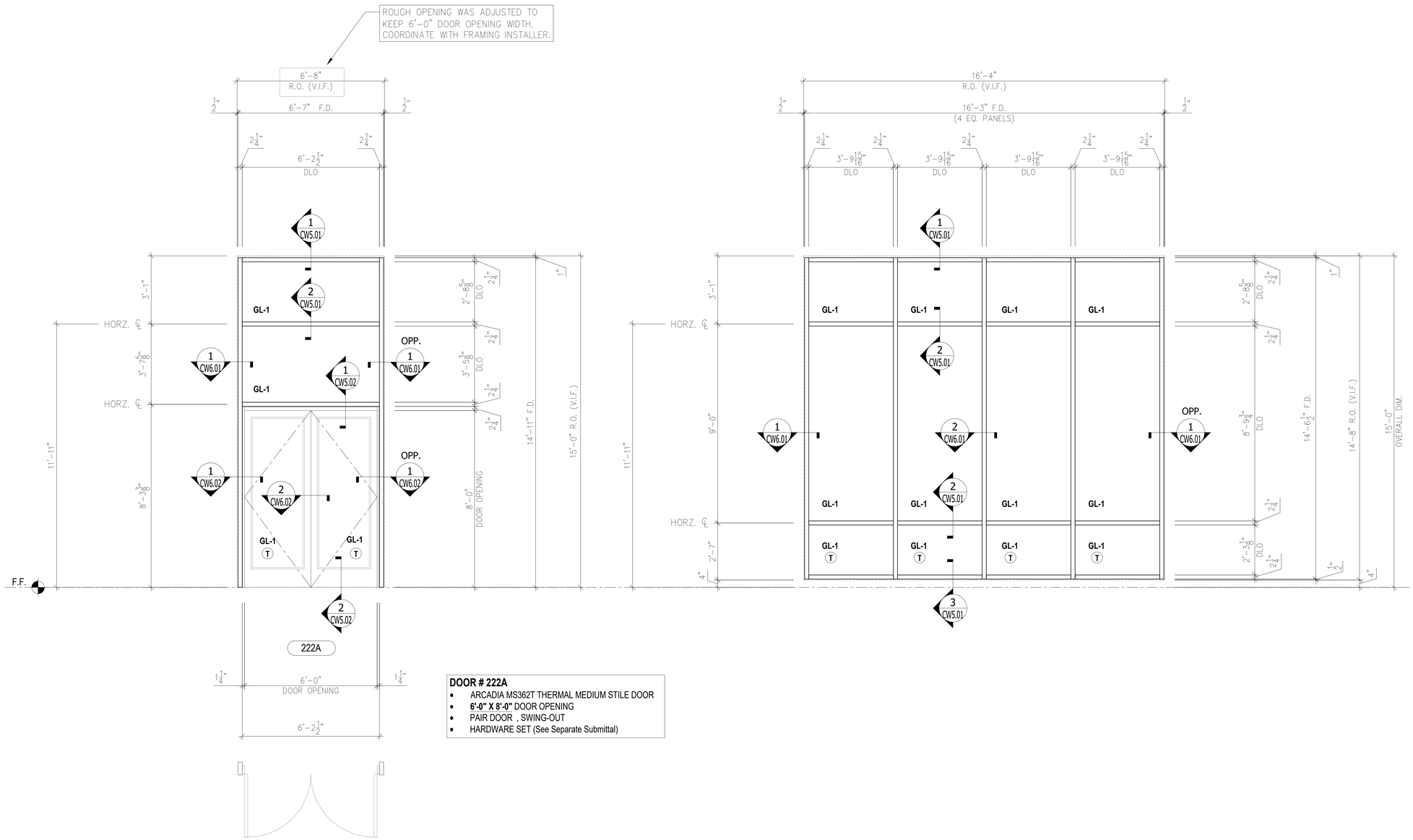

DOOR # 222A

- ARCADIA MS362T THERMAL MEDIUM STILE DOOR
- **6'-0" X 8'-0"** DOOR OPENING
- PAIR DOOR , SWING-OUT
- HARDWARE SET (See Separate Submittal)

B **EXTERIOR CURTAIN WALL** ELEVATION
OPG1900 (2-1/4" x 7") (Scale: 1/2"=1'-0")
Arch Ref: A2-8.1 (TYPE "B")
- QT'Y : 1 THUS @BOARD ROOM 222

C **EXTERIOR CURTAIN WALL** ELEVATION
OPG1900 (2-1/4" x 7") (Scale: 1/2"=1'-0")
Arch Ref: A2-8.1 (TYPE "C")
- QT'Y : 1 THUS @CLOSED SESSION CONFERENCE ROOM 221

GLASS LEGEND	
MARK	DESCRIPTION
GL-1	1" I.G.U. PER SPEC. 08 80 00
GL-3	1/4 CLEAR TEMPERED GLASS @INTERIOR STOREFRONT
(T)	TEMPERED GLASS

STAMPS
REGISTERED PROFESSIONAL ENGINEER DAVID M. HERNANDEZ No. 84674 CIVIL STATE OF CALIFORNIA
LICENSED ARCHITECT ROGER CLARKE Exp.10-31-25 STATE OF CALIFORNIA
12/11/23

AGENCY APPROVAL
File No: ########-########

CONSULTANT BRANDING
RUHNAU CLARKE ARCHITECTS

arcadia
ARCADIA, INC.
2301 East Vernon Avenue
Vernon, California 90058
Ph: (323) 269-7300
Fx: (323) 261-9927

MOUNT TRANSIT ADMINISTRATION FACILITY: INCREMENT 3: 100% DESIGN DEVELOPMENT

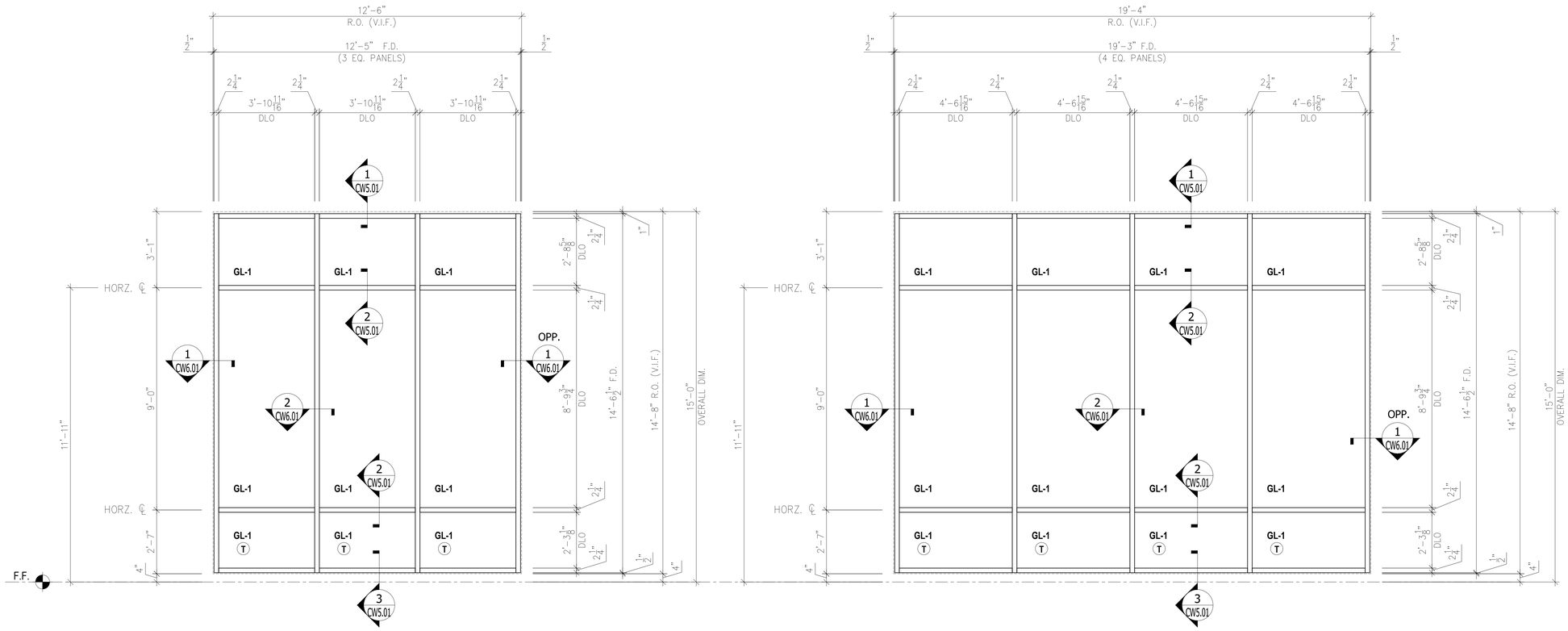

D **EXTERIOR CURTAIN WALL** ELEVATION
OPG1900 (2-1/4" x 7") (Scale: 1/2"=1'-0")
Arch Ref: A2-8.1 (TYPE "D")
- QT'Y : 1 THUS @OFFICE 220

E **EXTERIOR CURTAIN WALL** ELEVATION
OPG1900 (2-1/4" x 7") (Scale: 1/2"=1'-0")
Arch Ref: A2-8.1 (TYPE "E")
- QT'Y : 2 THUS @OPEN OFFICE 206

GLASS LEGEND	
MARK	DESCRIPTION
GL-1	1" I.G.U. PER SPEC. 08 80 00
GL-3	1/4 CLEAR TEMPERED GLASS @INTERIOR STOREFRONT
(T)	TEMPERED GLASS

STAMPS
12/11/23

AGENCY APPROVAL
File No: ########-########

CONSULTANT BRANDING

RUHNAU CLARKE ARCHITECTS

ARCADIA, INC.
2301 East Vernon Avenue
Vernon, California 90058
Ph: (323) 269-7300
Fx: (323) 261-9927

MOUNT TRANSIT ADMINISTRATION FACILITY: INCREMENT 3: 100% DESIGN DEVELOPMENT

PROJECT No. :50801
11/17/2023 11:41:15 AM

DRAWN BY: CHECKED BY:

ISSUE No.	DATE	DESCRIPTION	REVISION No.	DATE	DESCRIPTION
ISSUE No.	DATE	DESCRIPTION	REVISION No.	DATE	DESCRIPTION
ISSUE No.	DATE	DESCRIPTION	REVISION No.	DATE	DESCRIPTION
ISSUE No.	DATE	DESCRIPTION	REVISION No.	DATE	DESCRIPTION

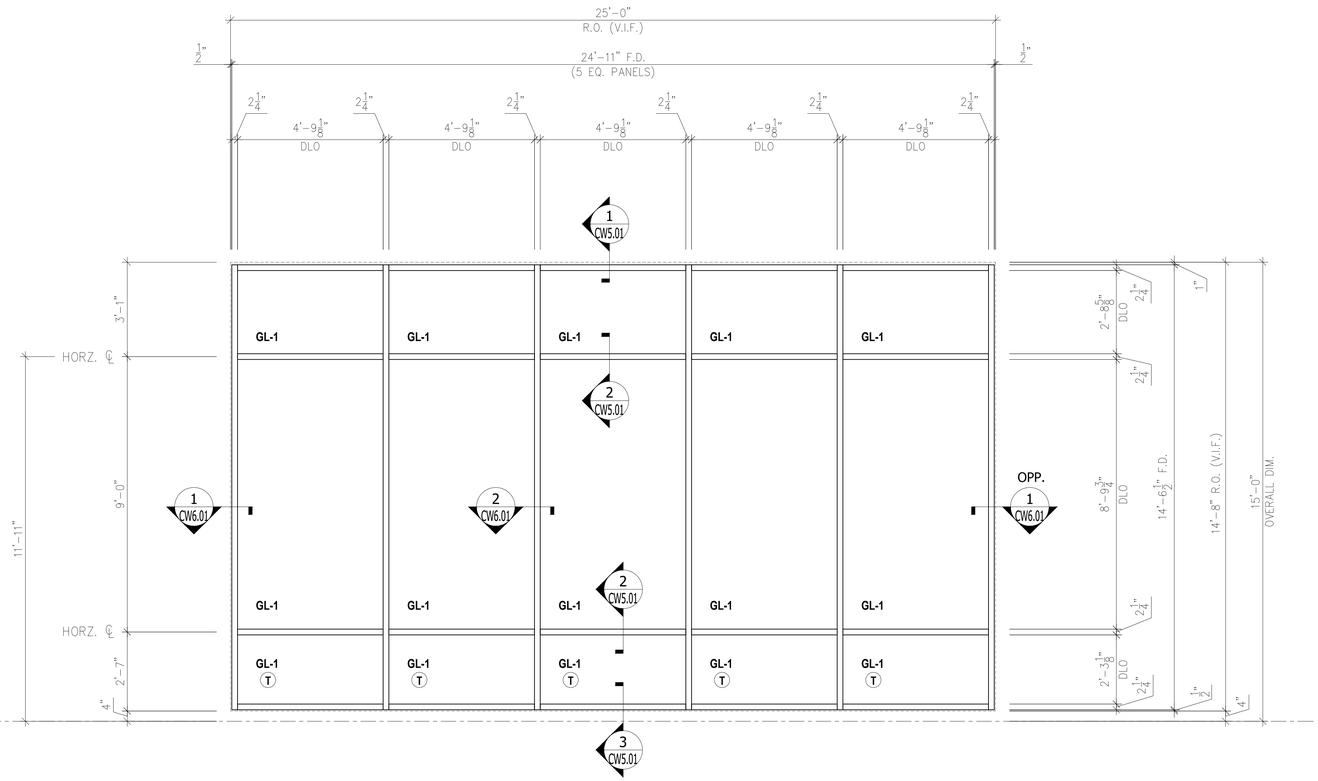

EXTERIOR CURTAIN WALL ELEVATION
OPG1900 (2-1/4" x 7") (Scale: 1/2"=1'-0")

F

Arch Ref: A2-8.1 (TYPE "F")

- QT'Y : 2 THUS @GENERAL MANAGER'S OFFICE 200

GLASS LEGEND	
MARK	DESCRIPTION
GL-1	1" I.G.U. PER SPEC. 08 80 00
GL-3	1/4 CLEAR TEMPERED GLASS @INTERIOR STOREFRONT
(T)	TEMPERED GLASS

STAMPS

REGISTERED PROFESSIONAL ENGINEER — GARY D. HAMMER — No. 84674 — CIVIL — STATE OF CALIFORNIA

LICENSED ARCHITECT — ROGER CLARKE — Exp.10-31-25 — STATE OF CALIFORNIA

12/11/23

AGENCY APPROVAL
File No: ########-########

CONSULTANT BRANDING

RUHNAU CLARKE ARCHITECTS

arcadia
ARCADIA, INC.
2301 East Vernon Avenue
Vernon, California 90058
Ph: (323) 269-7300
Fx: (323) 261-9927

MOUNT TRANSIT ADMINISTRATION FACILITY: INCREMENT 3: 100% DESIGN DEVELOPMENT

PROJECT No. :50801
11/17/2023 11:41:15 AM

DRAWN BY: CHECKED BY:

ISSUE No.	DATE	DESCRIPTION	REVISION No.	DATE	DESCRIPTION
ISSUE No.	DATE	DESCRIPTION	REVISION No.	DATE	DESCRIPTION
ISSUE No.	DATE	DESCRIPTION	REVISION No.	DATE	DESCRIPTION
ISSUE No.	DATE	DESCRIPTION	REVISION No.	DATE	DESCRIPTION

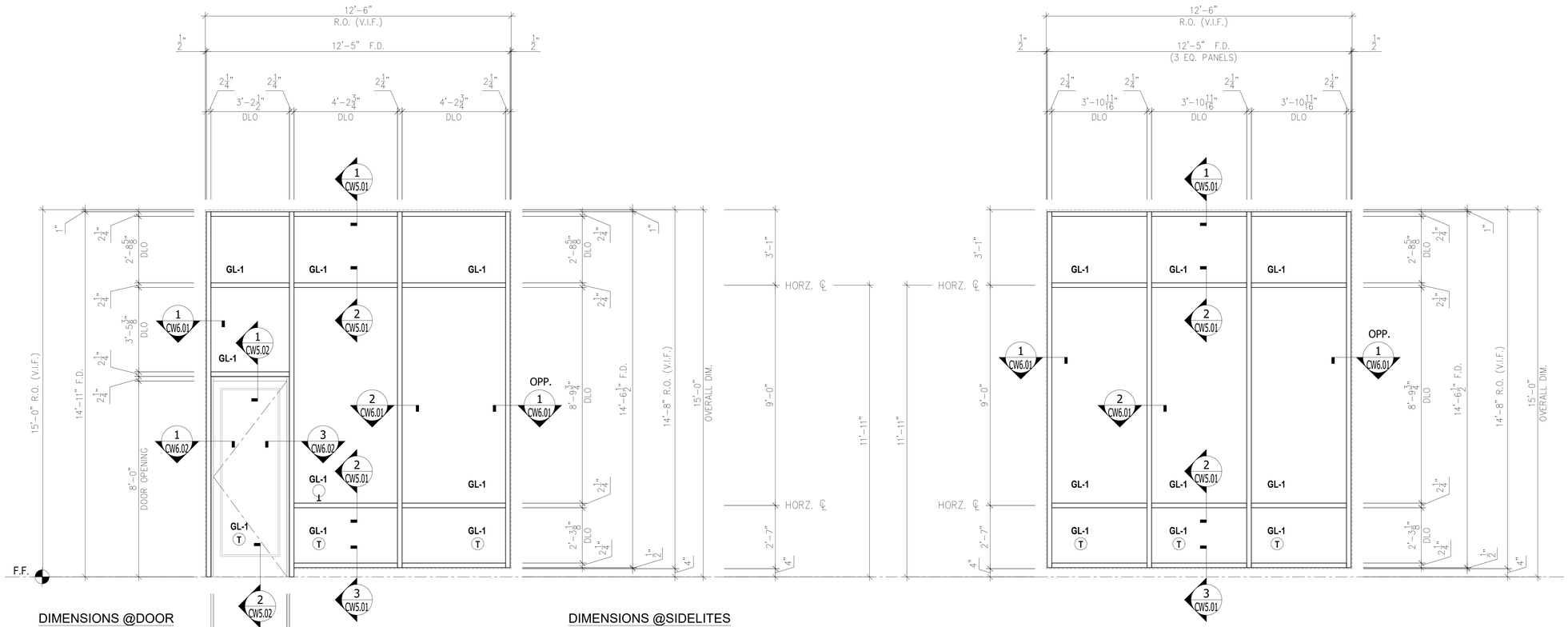

DIMENSIONS @DOOR

DIMENSIONS @SIDELITES

DOOR # 200B

- ARCADIA MS362T THERMAL MEDIUM STILE DOOR
- **3'-0" X 8'-0"** DOOR OPENING
- HINGE LEFT , SWING-OUT
- HARDWARE SET (See Separate Submittal)

G **EXTERIOR CURTAIN WALL** ELEVATION
OPG1900 (2-1/4" x 7") (Scale: 1/2"=1'-0")
Arch Ref: A2-8.2 (TYPE "G")
- QT'Y : 1 THUS @GENERAL MANAGER'S OFFICE 200

H **EXTERIOR CURTAIN WALL** ELEVATION
OPG1900 (2-1/4" x 7") (Scale: 1/2"=1'-0")
Arch Ref: A2-8.2 (TYPE "H")
- QT'Y : 2 THUS @HUMAN RESOURCES 201 & OFFICE 203

GLASS LEGEND	
MARK	DESCRIPTION
GL-1	1" I.G.U. PER SPEC. 08 80 00
GL-3	1/4 CLEAR TEMPERED GLASS @INTERIOR STOREFRONT
(T)	TEMPERED GLASS

STAMPS

REGISTERED PROFESSIONAL ENGINEER — DAVID M. YEDINAK — No. 84674 — CIVIL — STATE OF CALIFORNIA
LICENSED ARCHITECT — ROGER CLARKE — Exp.10-31-25 — STATE OF CALIFORNIA
12/11/23

AGENCY APPROVAL
File No: ########-########

CONSULTANT BRANDING

RUHNAU CLARKE ARCHITECTS

arcadia
ARCADIA, INC.
2301 East Vernon Avenue
Vernon, California 90058
Ph: (323) 269-7300
Fx: (323) 261-9927

MOUNT TRANSIT ADMINISTRATION FACILITY: INCREMENT 3: 100% DESIGN DEVELOPMENT

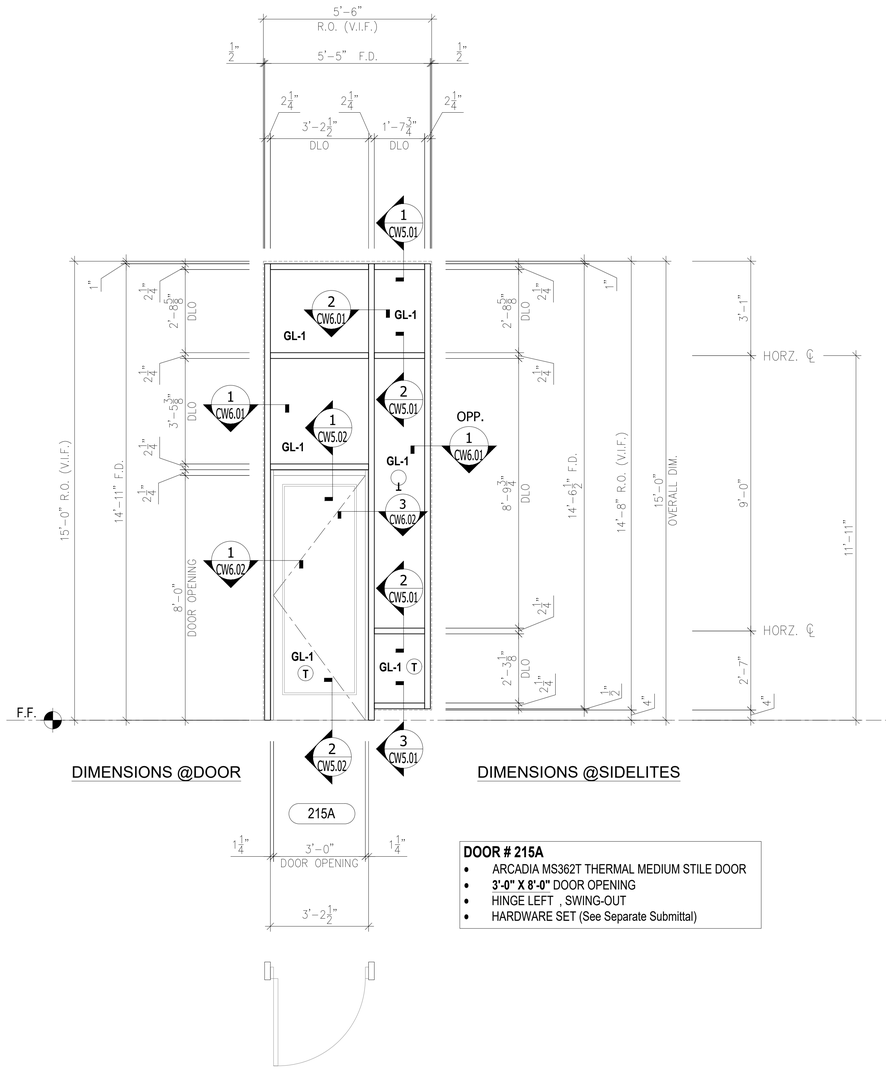

DIMENSIONS @DOOR

DIMENSIONS @SIDELITES

215A

3'-0" DOOR OPENING

3'-2 1/2"

DOOR # 215A

- ARCADIA MS362T THERMAL MEDIUM STILE DOOR
- **3'-0" X 8'-0"** DOOR OPENING
- HINGE LEFT , SWING-OUT
- HARDWARE SET (See Separate Submittal)

J **EXTERIOR CURTAIN WALL** ELEVATION
OPG1900 (2-1/4" x 7") (Scale: 1/2"=1'-0")
Arch Ref: A2-8.2 (TYPE "J")
- QT'Y : 1 THUS @HUMAN RESOURCES 201 & OFFICE 203

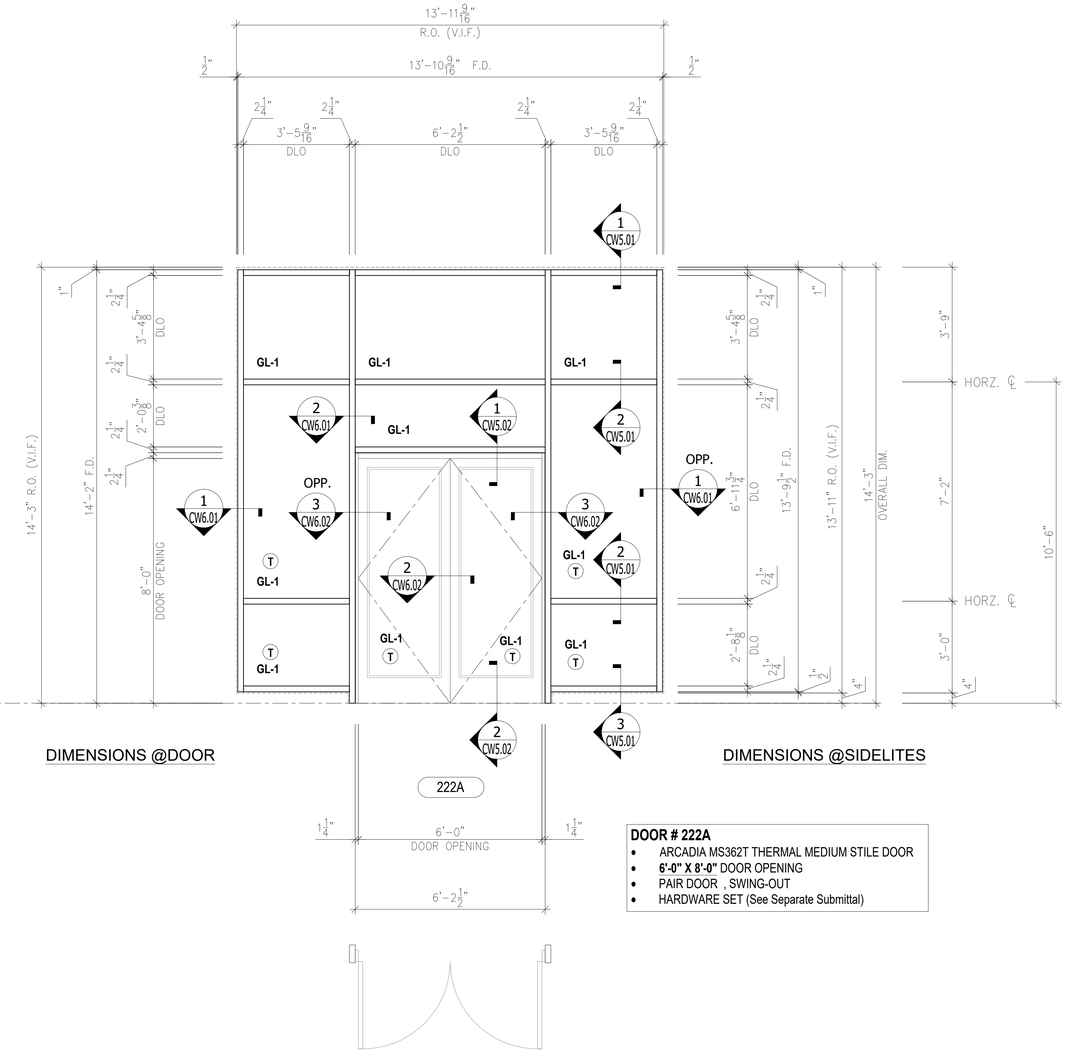

DIMENSIONS @DOOR

DIMENSIONS @SIDELITES

222A

6'-0" DOOR OPENING

6'-2 1/2"

DOOR # 222A

- ARCADIA MS362T THERMAL MEDIUM STILE DOOR
- **6'-0" X 8'-0"** DOOR OPENING
- PAIR DOOR , SWING-OUT
- HARDWARE SET (See Separate Submittal)

S **EXTERIOR CURTAIN WALL** ELEVATION
OPG1900 (2-1/4" x 7") (Scale: 1/2"=1'-0")
Arch Ref: A2-8.2 (TYPE "S")
- QT'Y : 1 THUS @LOBBY 228

GLASS LEGEND	
MARK	DESCRIPTION
GL-1	1" I.G.U. PER SPEC. 08 80 00
GL-3	1/4 CLEAR TEMPERED GLASS @INTERIOR STOREFRONT
(T)	TEMPERED GLASS

STAMPS

REGISTERED PROFESSIONAL ENGINEER — GARY M. HAMMER — No. 84674 — CIVIL — STATE OF CALIFORNIA
12/11/23
LICENSED ARCHITECT — ROGER CLARKE — Exp.10-31-25 — STATE OF CALIFORNIA

AGENCY APPROVAL
File No: ########-########

CONSULTANT BRANDING

RUHNAU CLARKE ARCHITECTS

arcadia
ARCADIA, INC.
2301 East Vernon Avenue
Vernon, California 90058
Ph: (323) 269-7300
Fx: (323) 261-9927

MOUNT TRANSIT ADMINISTRATION FACILITY: INCREMENT 3: 100% DESIGN DEVELOPMENT

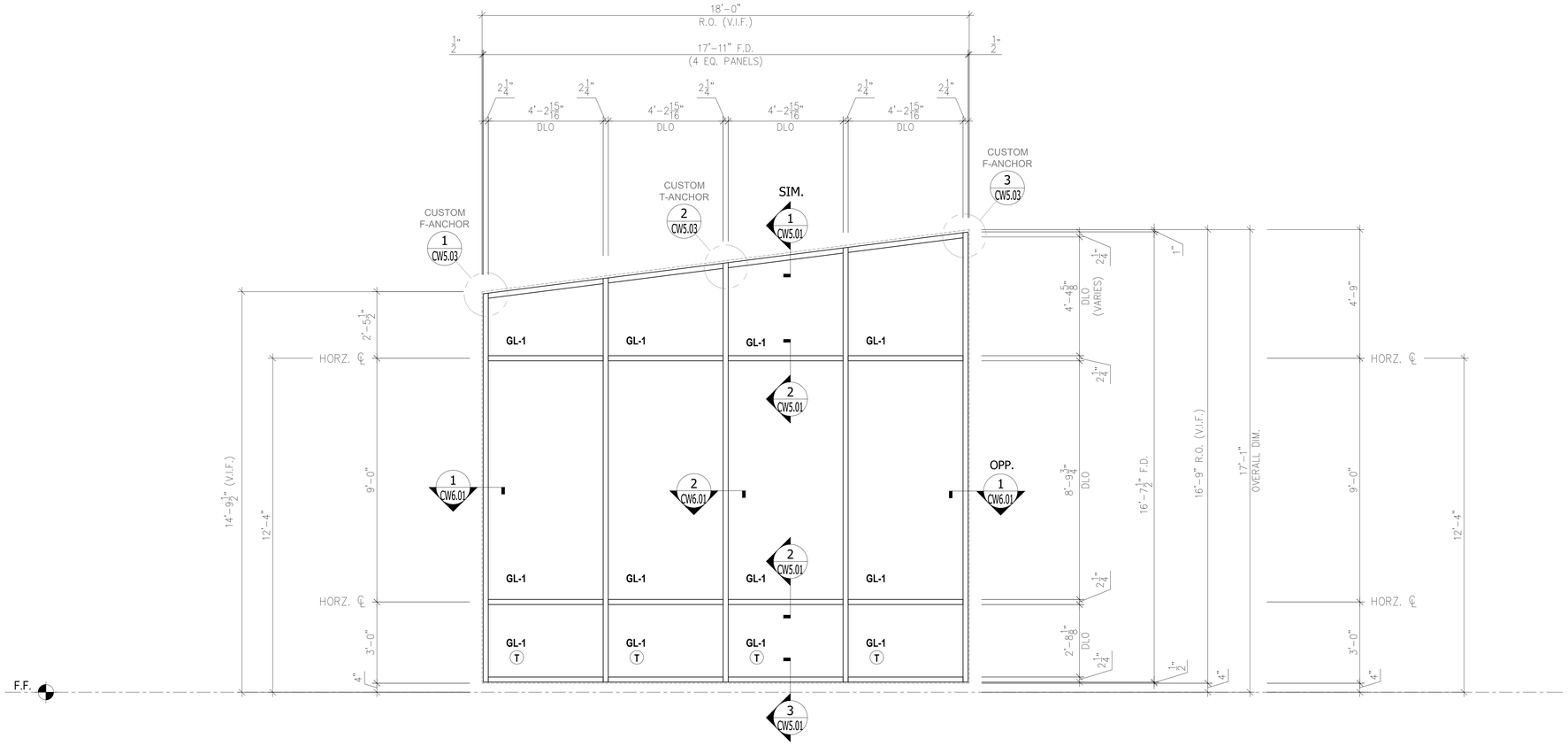

U

EXTERIOR CURTAIN WALL ELEVATION
OPG1900 (2-1/4" x 7") (Scale: 1/2"=1'-0")

Arch Ref: A2-8.2 (TYPE "U")
- QT'Y : 1 THUS @LOBBY 228

GLASS LEGEND	
MARK	DESCRIPTION
GL-1	1" I.G.U. PER SPEC. 08 80 00
GL-3	1/4 CLEAR TEMPERED GLASS @INTERIOR STOREFRONT
(T)	TEMPERED GLASS

STAMPS

REGISTERED PROFESSIONAL ENGINEER — DAVID M. RUHNAU — No. 84674 — CIVIL — STATE OF CALIFORNIA

LICENSED ARCHITECT — ROGER CLARKE — Exp.10-31-25 — STATE OF CALIFORNIA

12/11/23

AGENCY APPROVAL
File No: ########-########

CONSULTANT BRANDING

RUHNAU CLARKE ARCHITECTS

arcadia
ARCADIA, INC.
2301 East Vernon Avenue
Vernon, California 90058
Ph: (323) 269-7300
Fx: (323) 261-9927

MOUNT TRANSIT ADMINISTRATION FACILITY: INCREMENT 3: 100% DESIGN DEVELOPMENT

PROJECT No. :50801
11/17/2023 11:41:15 AM

DRAWN BY: CHECKED BY:

ISSUE No.	DATE	DESCRIPTION	REVISION No.	DATE	DESCRIPTION
ISSUE No.	DATE	DESCRIPTION	REVISION No.	DATE	DESCRIPTION
ISSUE No.	DATE	DESCRIPTION	REVISION No.	DATE	DESCRIPTION
ISSUE No.	DATE	DESCRIPTION	REVISION No.	DATE	DESCRIPTION

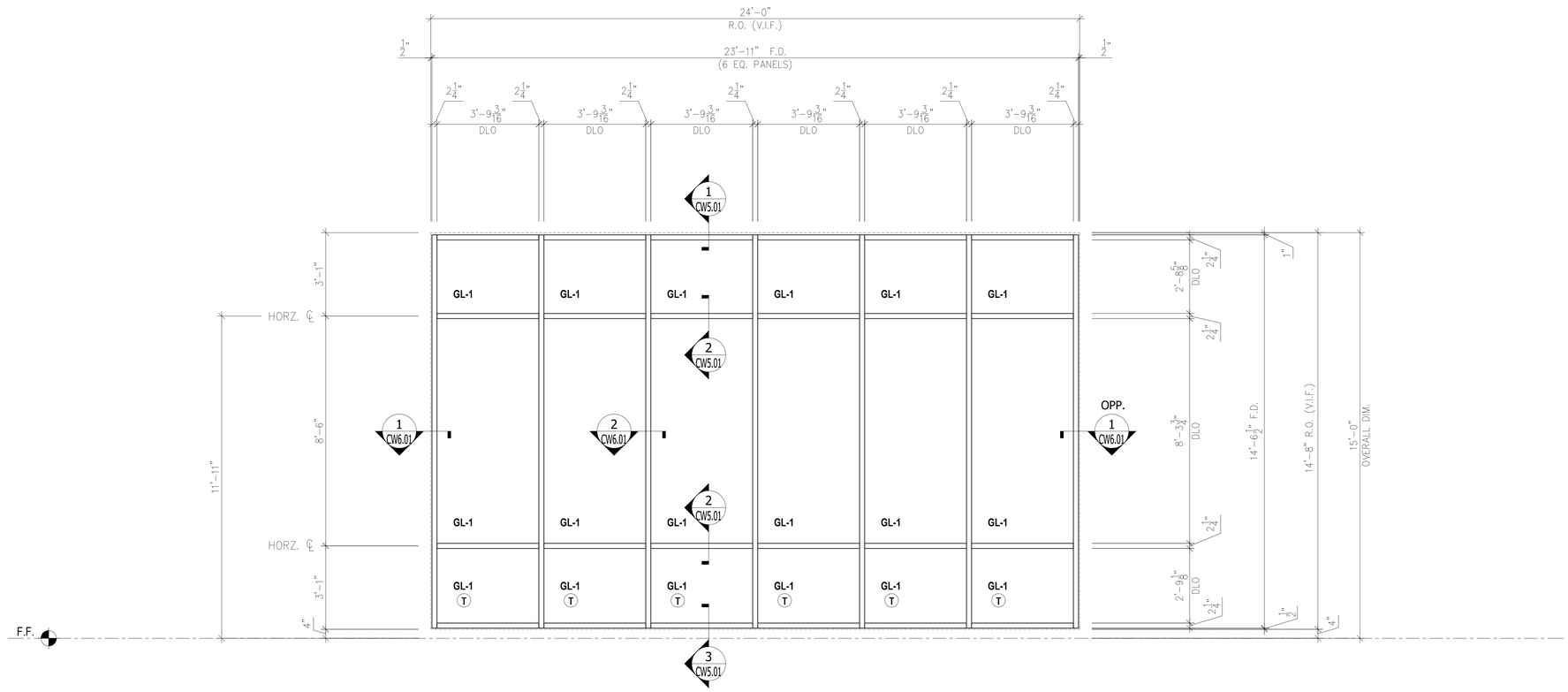

GLASS LEGEND	
MARK	DESCRIPTION
GL-1	1" I.G.U. PER SPEC. 08 80 00
GL-3	1/4 CLEAR TEMPERED GLASS @INTERIOR STOREFRONT
(T)	TEMPERED GLASS

V **EXTERIOR CURTAIN WALL** ELEVATION
OPG1900 (2-1/4" x 7") (Scale: 1/2"=1'-0")
Arch Ref: A2-8.2 (TYPE "V")
- QT'Y : 2 THUS @BOARD ROOM 222

STAMPS
REGISTERED PROFESSIONAL ENGINEER GARY M. HAMM No. 84674 CIVIL STATE OF CALIFORNIA
LICENSED ARCHITECT ROGER CLARKE Exp.10-31-25 STATE OF CALIFORNIA
12/11/23

AGENCY APPROVAL
File No: ########-########

CONSULTANT BRANDING
RUHNAU CLARKE ARCHITECTS

arcadia
ARCADIA, INC.
2301 East Vernon Avenue
Vernon, California 90058
Ph: (323) 269-7300
Fx: (323) 261-9927

MOUNT TRANSIT ADMINISTRATION FACILITY: INCREMENT 3: 100% DESIGN DEVELOPMENT

PROJECT No. :50801
11/17/2023 11:41:15 AM

DRAWN BY: CHECKED BY:

ISSUE No.	DATE	DESCRIPTION	REVISION No.	DATE	DESCRIPTION
ISSUE No.	DATE	DESCRIPTION	REVISION No.	DATE	DESCRIPTION
ISSUE No.	DATE	DESCRIPTION	REVISION No.	DATE	DESCRIPTION
ISSUE No.	DATE	DESCRIPTION	REVISION No.	DATE	DESCRIPTION

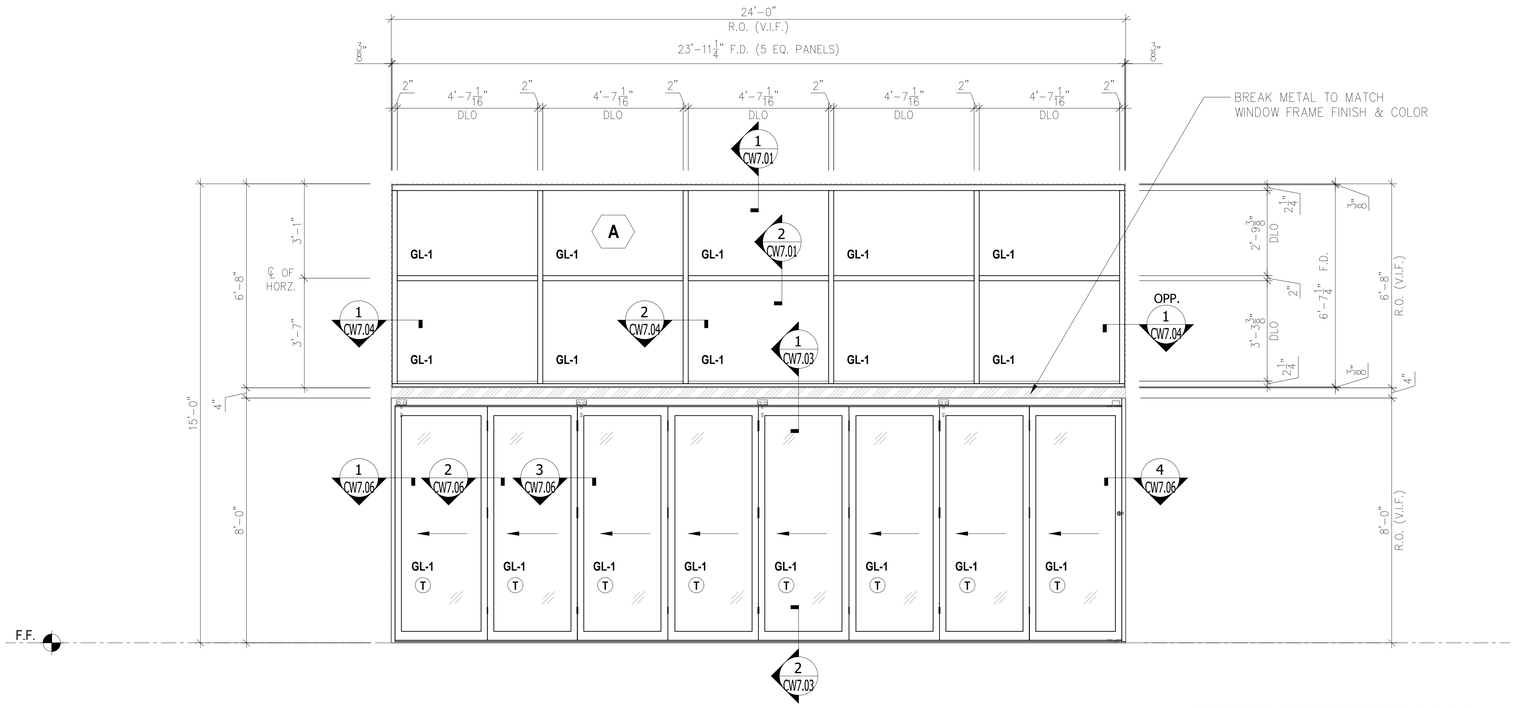

222B **BI-FOLDING DOOR** ELEVATION
ARCADIA 10000 OASIS
Arch Ref: A2-8.1 (DOOR TYPE "F")
- QT'Y : 1 THUS @BOARD ROOM 222

A **EXTERIOR STOREFRONT** ELEVATION
AFG451T (2" x 4-1/2")
Arch Ref: A2-8.1 (TYPE "A")
- QT'Y : 1 THUS @BOARD ROOM 222

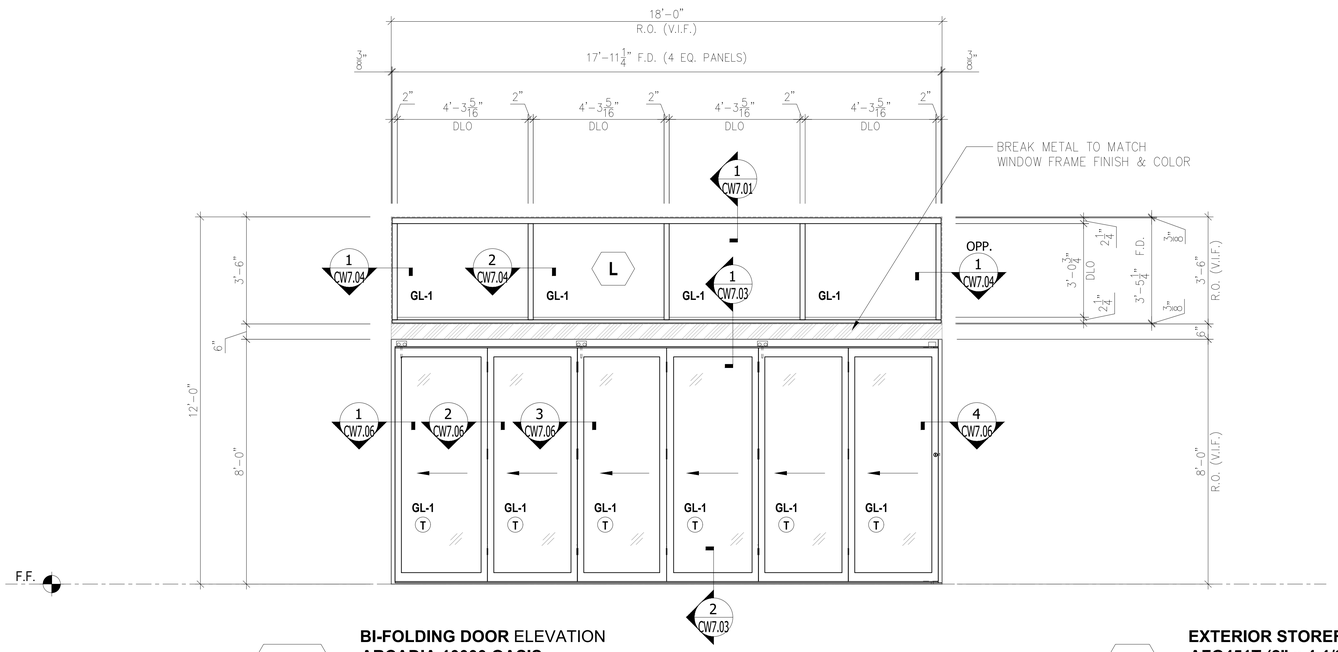

222B **BI-FOLDING DOOR** ELEVATION
ARCADIA 10000 OASIS
Arch Ref: A2-8.1 (DOOR TYPE "E")
- QT'Y : 1 THUS @BREAK ROOM 205

L **EXTERIOR STOREFRONT** ELEVATION
AFG451T (2" x 4-1/2")
Arch Ref: A2-8.2 (TYPE "L")
- QT'Y : 1 THUS @BREAK ROOM 205

GLASS LEGEND	
MARK	DESCRIPTION
GL-1	1" I.G.U. PER SPEC. 08 80 00
GL-3	1/4 CLEAR TEMPERED GLASS @INTERIOR STOREFRONT
(T)	TEMPERED GLASS

STAMPS
12/11/23

AGENCY APPROVAL
File No: ########-########

CONSULTANT BRANDING

RUHNAU CLARKE ARCHITECTS

ARCADIA, INC.
2301 East Vernon Avenue
Vernon, California 90058
Ph: (323) 269-7300
Fx: (323) 261-9927

MOUNT TRANSIT ADMINISTRATION FACILITY: INCREMENT 3: 100% DESIGN DEVELOPMENT

PROJECT No. :50801
11/17/2023 11:41:15 AM

DRAWN BY: CHECKED BY:

ISSUE No.	DATE	DESCRIPTION	REVISION No.	DATE	DESCRIPTION
ISSUE No.	DATE	DESCRIPTION	REVISION No.	DATE	DESCRIPTION
ISSUE No.	DATE	DESCRIPTION	REVISION No.	DATE	DESCRIPTION
ISSUE No.	DATE	DESCRIPTION	REVISION No.	DATE	DESCRIPTION

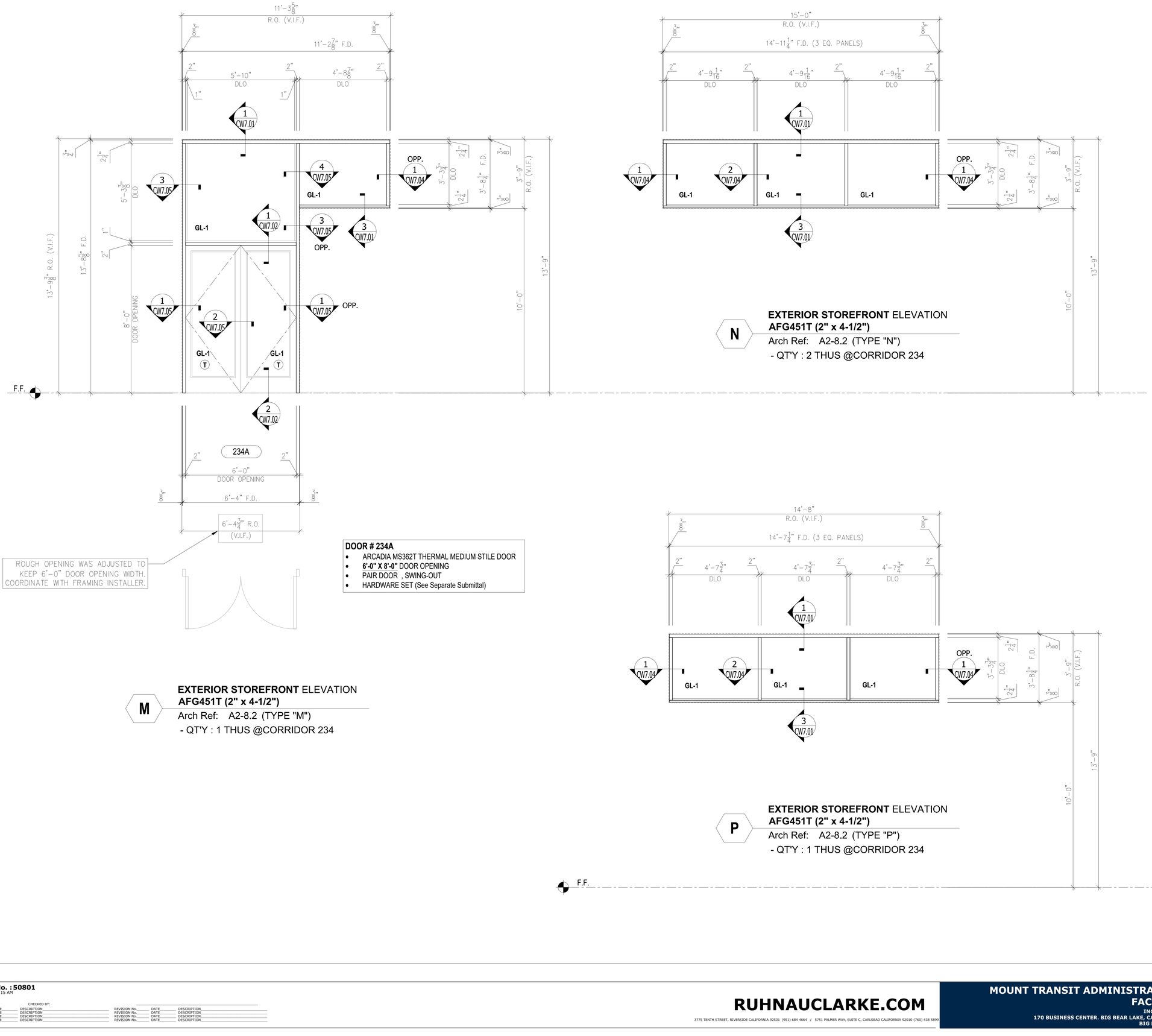

ROUGH OPENING WAS ADJUSTED TO KEEP 6'-0" DOOR OPENING WIDTH. COORDINATE WITH FRAMING INSTALLER.

DOOR # 234A

- ARCADIA MS362T THERMAL MEDIUM STILE DOOR
- **6'-0" X 8'-0"** DOOR OPENING
- PAIR DOOR , SWING-OUT
- HARDWARE SET (See Separate Submittal)

M **EXTERIOR STOREFRONT** ELEVATION
AFG451T (2" x 4-1/2")
Arch Ref: A2-8.2 (TYPE "M")
- QT'Y : 1 THUS @CORRIDOR 234

N **EXTERIOR STOREFRONT** ELEVATION
AFG451T (2" x 4-1/2")
Arch Ref: A2-8.2 (TYPE "N")
- QT'Y : 2 THUS @CORRIDOR 234

P **EXTERIOR STOREFRONT** ELEVATION
AFG451T (2" x 4-1/2")
Arch Ref: A2-8.2 (TYPE "P")
- QT'Y : 1 THUS @CORRIDOR 234

F.F.

GLASS LEGEND	
MARK	DESCRIPTION
GL-1	1" I.G.U. PER SPEC. 08 80 00
GL-3	1/4 CLEAR TEMPERED GLASS @INTERIOR STOREFRONT
(T)	TEMPERED GLASS

STAMPS
REGISTERED PROFESSIONAL ENGINEER — GARY M. HERMAN — No. 84674 — CIVIL — STATE OF CALIFORNIA
LICENSED ARCHITECT — ROGER CLARKE — Exp.10-31-25 — STATE OF CALIFORNIA
12/11/23

AGENCY APPROVAL
File No: ########-########

CONSULTANT BRANDING
RUHNAU CLARKE ARCHITECTS

arcadia
ARCADIA, INC.
2301 East Vernon Avenue
Vernon, California 90058
Ph: (323) 269-7300
Fx: (323) 261-9927

MOUNT TRANSIT ADMINISTRATION FACILITY: INCREMENT 3: 100% DESIGN DEVELOPMENT

PROJECT No. :50801
11/17/2023 11:41:15 AM

DRAWN BY: CHECKED BY:

ISSUE No.	DATE	DESCRIPTION	REVISION No.	DATE	DESCRIPTION
ISSUE No.	DATE	DESCRIPTION	REVISION No.	DATE	DESCRIPTION
ISSUE No.	DATE	DESCRIPTION	REVISION No.	DATE	DESCRIPTION
ISSUE No.	DATE	DESCRIPTION	REVISION No.	DATE	DESCRIPTION

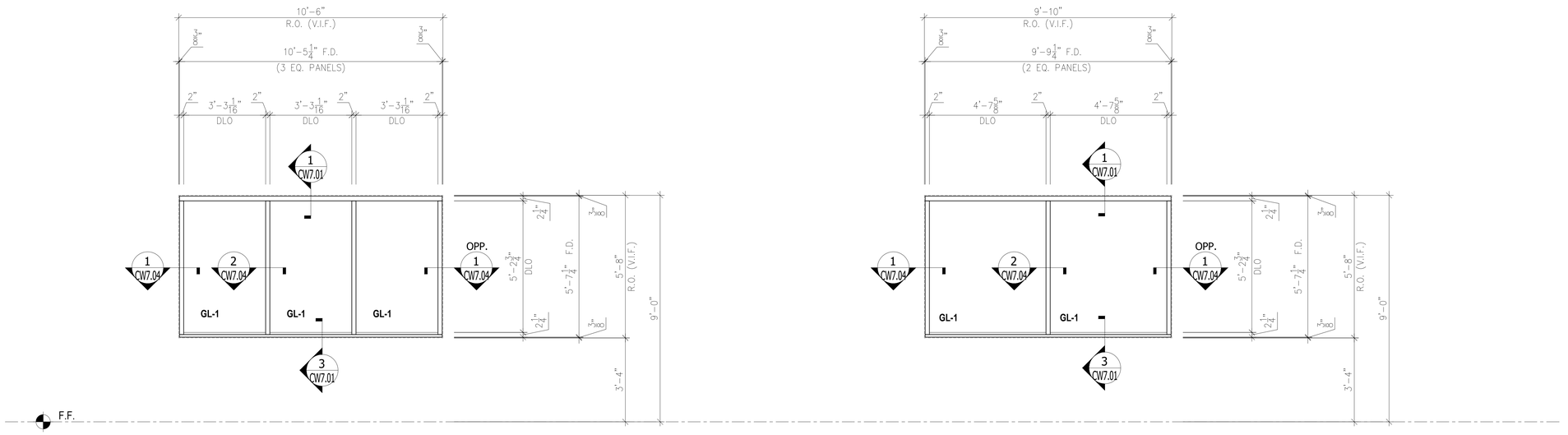

Q **EXTERIOR STOREFRONT** ELEVATION
AFG451T (2" x 4-1/2")
Arch Ref: A2-8.2 (TYPE "Q")
- QT'Y : 2 THUS @OPERATION MANAGER 231

R **EXTERIOR STOREFRONT** ELEVATION
AFG451T (2" x 4-1/2")
Arch Ref: A2-8.2 (TYPE "R")
- QT'Y : 2 THUS @DISPATCH 232

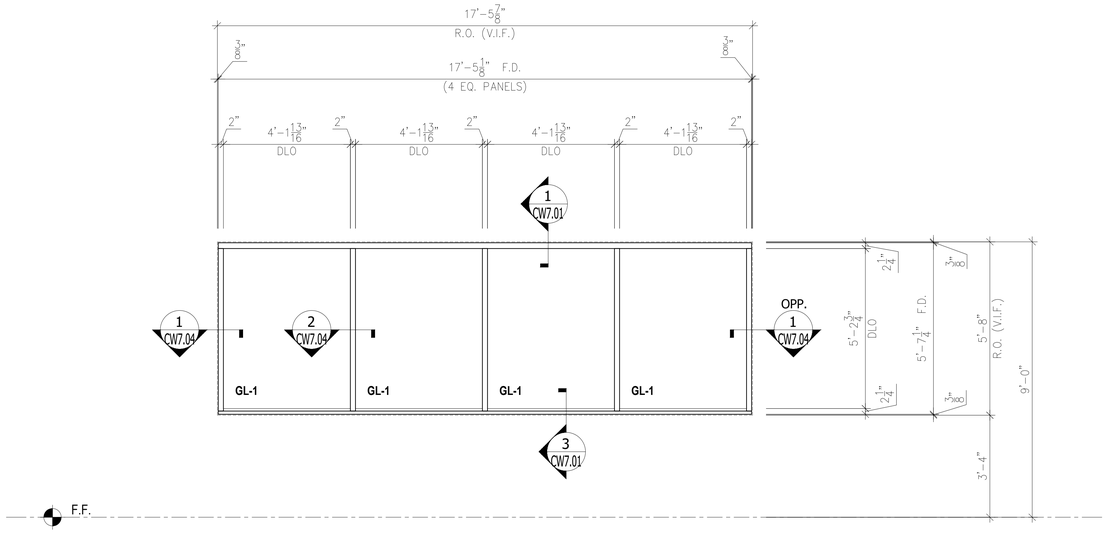

T **EXTERIOR STOREFRONT** ELEVATION
AFG451T (2" x 4-1/2")
Arch Ref: A2-8.2 (TYPE "T")
- QT'Y : 2 THUS @DISPATCH 232

GLASS LEGEND	
MARK	DESCRIPTION
GL-1	1" I.G.U. PER SPEC. 08 80 00
GL-3	1/4 CLEAR TEMPERED GLASS @INTERIOR STOREFRONT
T	TEMPERED GLASS

STAMPS
REGISTERED PROFESSIONAL ENGINEER GARY M. HAMMER No. 84674 CIVIL STATE OF CALIFORNIA
LICENSED ARCHITECT ROGER CLARKE Exp.10-31-25 STATE OF CALIFORNIA
12/11/23

AGENCY APPROVAL
File No: ########-########

CONSULTANT BRANDING
RUHNAU CLARKE ARCHITECTS

arcadia
ARCADIA, INC.
2301 East Vernon Avenue
Vernon, California 90058
Ph: (323) 269-7300
Fx: (323) 261-9927

MOUNT TRANSIT ADMINISTRATION FACILITY: INCREMENT 3: 100% DESIGN DEVELOPMENT

PROJECT No. :50801
11/17/2023 11:41:15 AM

DRAWN BY: CHECKED BY:

ISSUE No.	DATE	DESCRIPTION	REVISION No.	DATE	DESCRIPTION
ISSUE No.	DATE	DESCRIPTION	REVISION No.	DATE	DESCRIPTION
ISSUE No.	DATE	DESCRIPTION	REVISION No.	DATE	DESCRIPTION
ISSUE No.	DATE	DESCRIPTION	REVISION No.	DATE	DESCRIPTION

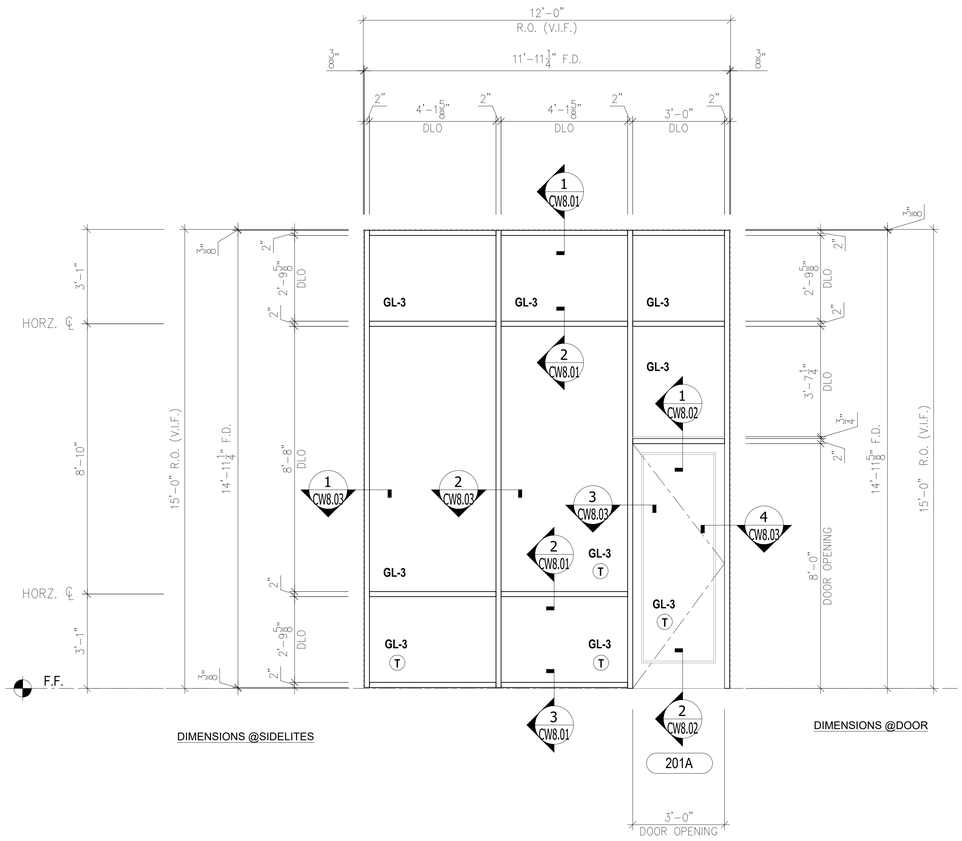

DIMENSIONS @SIDELITES

DIMENSIONS @DOOR

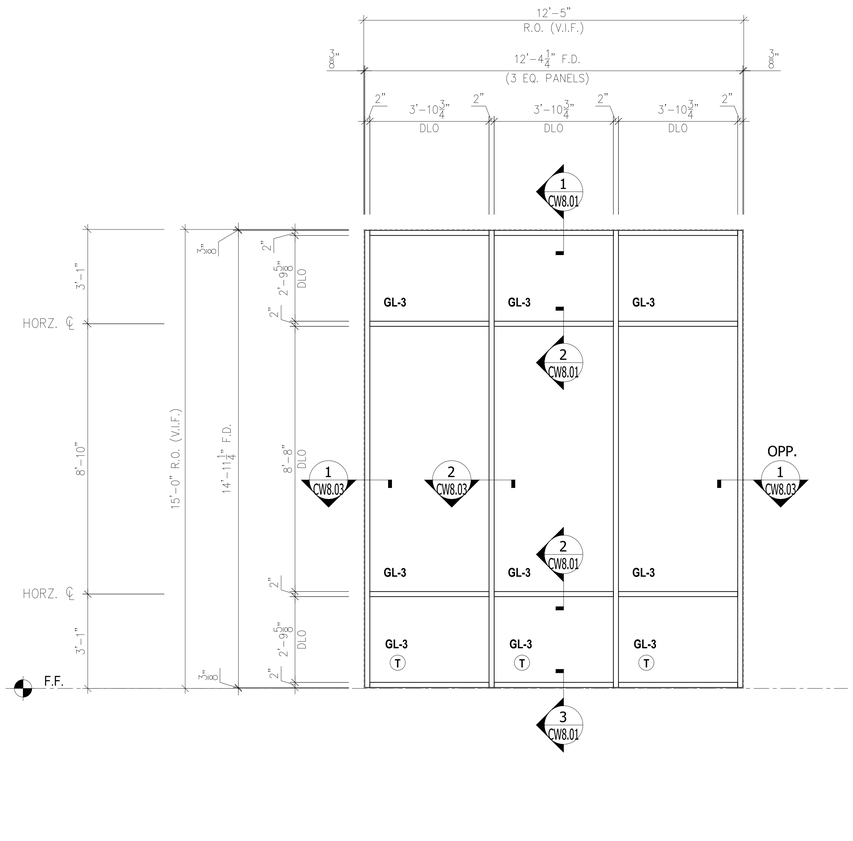

DOOR # 201A
- ARCADIA MS362 MEDIUM STILE DOOR
- **3'-0" X 8'-0"** DOOR OPENING
- HINGE RIGHT , SWING-IN
- HARDWARE SET (See Separate Submittal)

AA **INTERIOR STOREFRONT** ELEVATION
AR600 (2" x 6")
Arch Ref: A2-8.3 (TYPE "AA")
- QT'Y : 1 THUS @HUMAN RESOURCES 201

BB **INTERIOR STOREFRONT** ELEVATION
AR600 (2" x 6")
Arch Ref: A2-8.3 (TYPE "BB")
- QT'Y : 1 THUS @ADMINISTRATIVE ASSISTANT 202

GLASS LEGEND	
MARK	DESCRIPTION
GL-1	1" I.G.U. PER SPEC. 08 80 00
GL-3	1/4 CLEAR TEMPERED GLASS @INTERIOR STOREFRONT
(T)	TEMPERED GLASS

STAMPS
REGISTERED PROFESSIONAL ENGINEER DAVID M. YEOMANS No. 84674 CIVIL STATE OF CALIFORNIA
LICENSED ARCHITECT ROGER CLARKE Exp.10-31-25 STATE OF CALIFORNIA
12/11/23

AGENCY APPROVAL
File No: ########-########

CONSULTANT BRANDING
RUHNAU CLARKE ARCHITECTS

arcadia
ARCADIA, INC.
2301 East Vernon Avenue
Vernon, California 90058
Ph: (323) 269-7300
Fx: (323) 261-9927

MOUNT TRANSIT ADMINISTRATION FACILITY: INCREMENT 3: 100% DESIGN DEVELOPMENT

PROJECT No. : 50801
11/17/2023 11:41:15 AM

DRAWN BY: CHECKED BY:

ISSUE No.	DATE	DESCRIPTION	REVISION No.	DATE	DESCRIPTION
ISSUE No.	DATE	DESCRIPTION	REVISION No.	DATE	DESCRIPTION
ISSUE No.	DATE	DESCRIPTION	REVISION No.	DATE	DESCRIPTION
ISSUE No.	DATE	DESCRIPTION	REVISION No.	DATE	DESCRIPTION

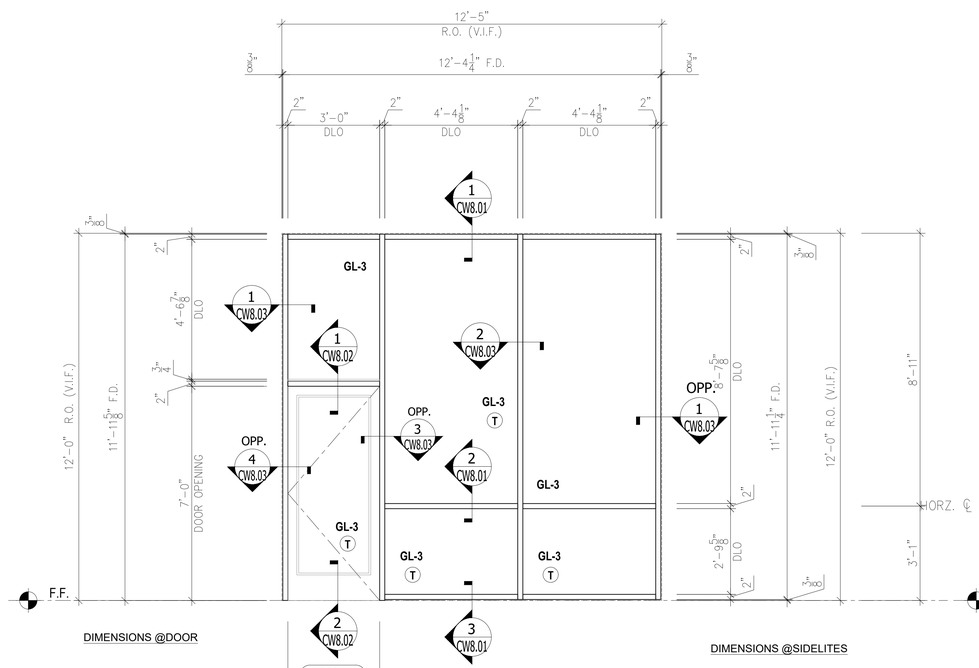

DIMENSIONS @DOOR

DIMENSIONS @SIDELITES

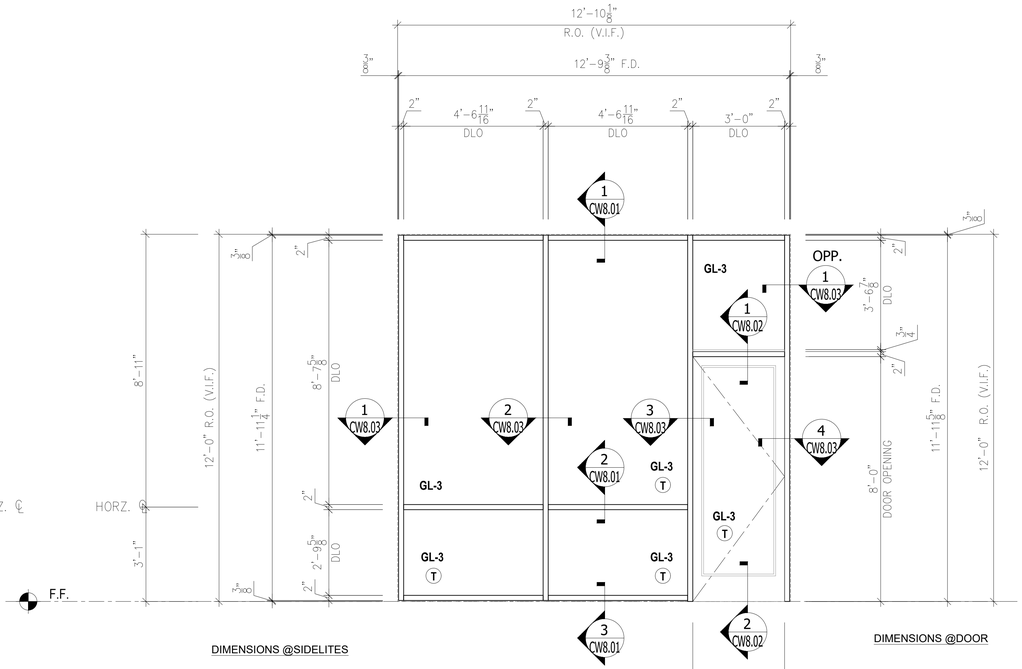

DIMENSIONS @SIDELITES

DIMENSIONS @DOOR

203A

204A

3'-0" DOOR OPENING

DOOR # 203A
- ARCADIA MS362 MEDIUM STILE DOOR
- **3'-0" X 7'-0"** DOOR OPENING
- HINGE LEFT , SWING-IN
- HARDWARE SET (See Separate Submittal)

DOOR # 204A
- ARCADIA MS362 MEDIUM STILE DOOR
- **3'-0" X 7'-0"** DOOR OPENING
- HINGE LEFT , SWING-IN
- HARDWARE SET (See Separate Submittal)

207A

208A

209A

3'-0" DOOR OPENING

DOOR # 207A
- ARCADIA MS362 MEDIUM STILE DOOR
- **3'-0" X 8'-0"** DOOR OPENING
- HINGE RIGHT , SWING-IN
- HARDWARE SET (See Separate Submittal)

DOOR # 208A
- ARCADIA MS362 MEDIUM STILE DOOR
- **3'-0" X 8'-0"** DOOR OPENING
- HINGE RIGHT , SWING-IN
- HARDWARE SET (See Separate Submittal)

DOOR # 209A
- ARCADIA MS362 MEDIUM STILE DOOR
- **3'-0" X 8'-0"** DOOR OPENING
- HINGE RIGHT , SWING-IN
- HARDWARE SET (See Separate Submittal)

CC **INTERIOR STOREFRONT** ELEVATION
AR600 (2" x 6")
Arch Ref: A2-8.3 (TYPE "CC")
- QT'Y : 2 THUS @OFFICE 203 & 204

DD **INTERIOR STOREFRONT** ELEVATION
AR600 (2" x 6")
Arch Ref: A2-8.3 (TYPE "DD")
- QT'Y : 3 THUS
@FINANCE OFFICE 207
@ACCOUNTANTS OFFICE 208
@COMMUNITY OUTREACH 209

GLASS LEGEND	
MARK	DESCRIPTION
GL-1	1" I.G.U. PER SPEC. 08 80 00
GL-3	1/4 CLEAR TEMPERED GLASS @INTERIOR STOREFRONT
(T)	TEMPERED GLASS

STAMPS

REGISTERED PROFESSIONAL ENGINEER — GARY M. HAMMER — No. 84674 — CIVIL — STATE OF CALIFORNIA

LICENSED ARCHITECT — ROGER CLARKE — Exp.10-31-25 — STATE OF CALIFORNIA

12/11/23

AGENCY APPROVAL
File No: ########-########

CONSULTANT BRANDING

RUHNAU CLARKE ARCHITECTS

arcadia
ARCADIA, INC.
2301 East Vernon Avenue
Vernon, California 90058
Ph: (323) 269-7300
Fx: (323) 261-9927

MOUNT TRANSIT ADMINISTRATION FACILITY: INCREMENT 3: 100% DESIGN DEVELOPMENT

PROJECT No. :50801
11/17/2023 11:41:15 AM

DRAWN BY: CHECKED BY:

ISSUE No._____ DATE_____ DESCRIPTION_____ REVISION No._____ DATE_____ DESCRIPTION_____
ISSUE No._____ DATE_____ DESCRIPTION_____ REVISION No._____ DATE_____ DESCRIPTION_____
ISSUE No._____ DATE_____ DESCRIPTION_____ REVISION No._____ DATE_____ DESCRIPTION_____
ISSUE No._____ DATE_____ DESCRIPTION_____ REVISION No._____ DATE_____ DESCRIPTION_____

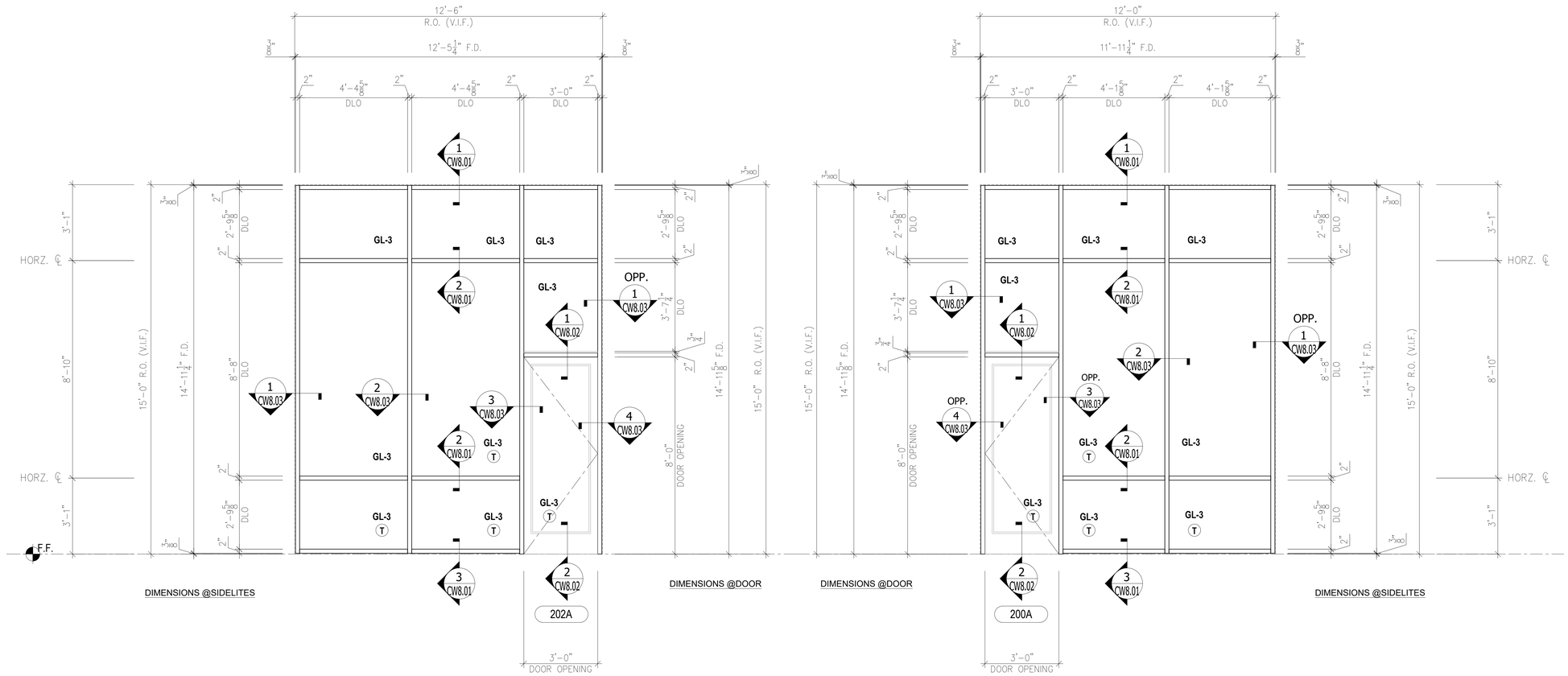

DOOR # 202A
- ARCADIA MS362 MEDIUM STILE DOOR
- **3'-0" X 8'-0"** DOOR OPENING
- HINGE RIGHT , SWING-IN
- HARDWARE SET (See Separate Submittal)

DOOR # 200A
- ARCADIA MS362 MEDIUM STILE DOOR
- **3'-0" X 8'-0"** DOOR OPENING
- HINGE LEFT , SWING-IN
- HARDWARE SET (See Separate Submittal)

EE **INTERIOR STOREFRONT** ELEVATION
AR600 (2" x 6")
Arch Ref: A2-8.3 (TYPE "EE")
- QT'Y : 1 THUS @ADMINISTRATIVE ASSISTANT 202

FF **INTERIOR STOREFRONT** ELEVATION
AR600 (2" x 6")
Arch Ref: A2-8.3 (TYPE "FF")
- QT'Y : 1 THUS @GENERAL MANAGER'S OFFICE 200

GLASS LEGEND	
MARK	DESCRIPTION
GL-1	1" I.G.U. PER SPEC. 08 80 00
GL-3	1/4 CLEAR TEMPERED GLASS @INTERIOR STOREFRONT
(T)	TEMPERED GLASS

STAMPS
REGISTERED PROFESSIONAL ENGINEER · GARY M. HAMMER · No. 84674 · CIVIL · STATE OF CALIFORNIA
LICENSED ARCHITECT · ROGER CLARKE · Exp.10-31-25 · STATE OF CALIFORNIA
12/11/23

AGENCY APPROVAL
File No: ########-########

CONSULTANT BRANDING
RUHNAU CLARKE ARCHITECTS

arcadia
ARCADIA, INC.
2301 East Vernon Avenue
Vernon, California 90058
Ph: (323) 269-7300
Fx: (323) 261-9927

MOUNT TRANSIT ADMINISTRATION FACILITY: INCREMENT 3: 100% DESIGN DEVELOPMENT

PROJECT No. : 50801
11/17/2023 11:41:15 AM

DRAWN BY: CHECKED BY:

ISSUE No.	DATE	DESCRIPTION	REVISION No.	DATE	DESCRIPTION
ISSUE No.	DATE	DESCRIPTION	REVISION No.	DATE	DESCRIPTION
ISSUE No.	DATE	DESCRIPTION	REVISION No.	DATE	DESCRIPTION
ISSUE No.	DATE	DESCRIPTION	REVISION No.	DATE	DESCRIPTION

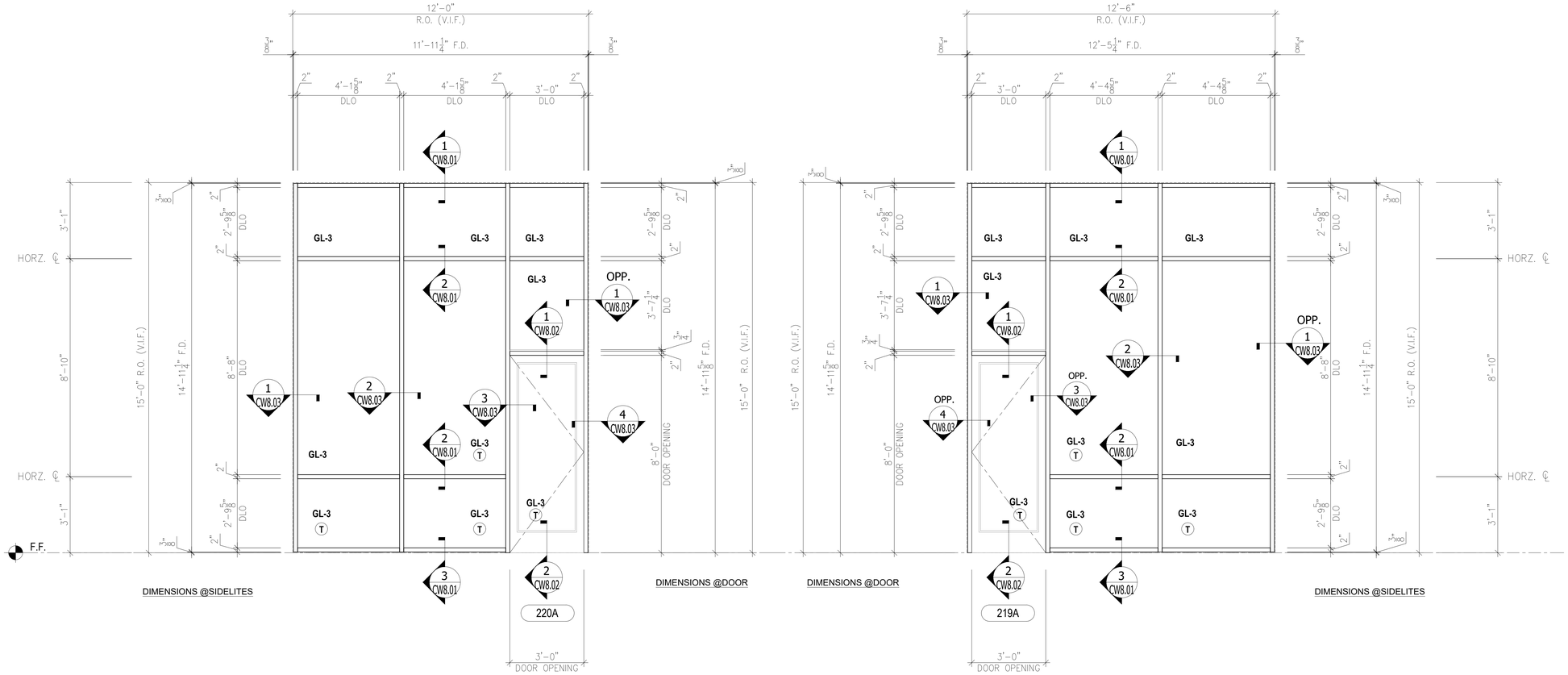

DOOR # 220A
- ARCADIA MS362 MEDIUM STILE DOOR
- **3'-0" X 8'-0"** DOOR OPENING
- HINGE RIGHT , SWING-IN
- HARDWARE SET (See Separate Submittal)

DOOR # 219A
- ARCADIA MS362 MEDIUM STILE DOOR
- **3'-0" X 8'-0"** DOOR OPENING
- HINGE LEFT , SWING-IN
- HARDWARE SET (See Separate Submittal)

GG **INTERIOR STOREFRONT** ELEVATION
AR600 (2" x 6")
Arch Ref: A2-8.3 (TYPE "GG")
- QT'Y : 1 THUS @OFFICE 220

HH **INTERIOR STOREFRONT** ELEVATION
AR600 (2" x 6")
Arch Ref: A2-8.3 (TYPE "HH")
- QT'Y : 1 THUS @OFFICE 219

GLASS LEGEND	
MARK	DESCRIPTION
GL-1	1" I.G.U. PER SPEC. 08 80 00
GL-3	1/4 CLEAR TEMPERED GLASS @INTERIOR STOREFRONT
(T)	TEMPERED GLASS

STAMPS
REGISTERED PROFESSIONAL ENGINEER DAVID M. YOUNGER No. 84674 CIVIL STATE OF CALIFORNIA
LICENSED ARCHITECT ROGER CLARKE Exp.10-31-25 STATE OF CALIFORNIA
12/11/23

AGENCY APPROVAL
File No: ########-########

CONSULTANT BRANDING
RUHNAU CLARKE ARCHITECTS

arcadia
ARCADIA, INC.
2301 East Vernon Avenue
Vernon, California 90058
Ph: (323) 269-7300
Fx: (323) 261-9927

MOUNT TRANSIT ADMINISTRATION FACILITY: INCREMENT 3: 100% DESIGN DEVELOPMENT

PROJECT No. : 50801
11/17/2023 11:41:15 AM

DRAWN BY: CHECKED BY:

ISSUE No.	DATE	DESCRIPTION	REVISION No.	DATE	DESCRIPTION
ISSUE No.	DATE	DESCRIPTION	REVISION No.	DATE	DESCRIPTION
ISSUE No.	DATE	DESCRIPTION	REVISION No.	DATE	DESCRIPTION
ISSUE No.	DATE	DESCRIPTION	REVISION No.	DATE	DESCRIPTION

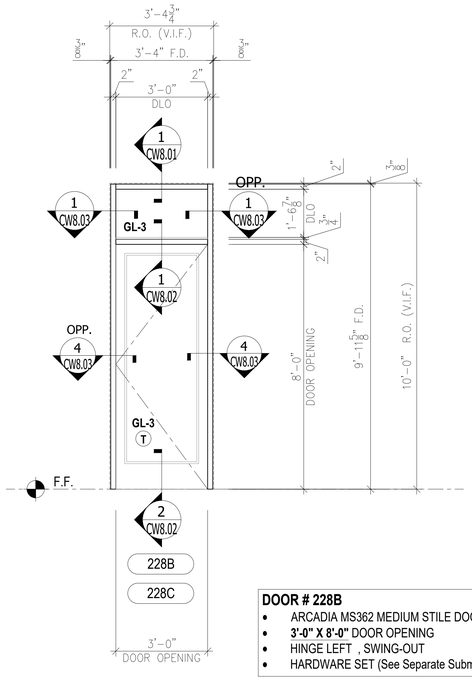

DOOR # 228B
- ARCADIA MS362 MEDIUM STILE DOOR
- **3'-0" X 8'-0"** DOOR OPENING
- HINGE LEFT , SWING-OUT
- HARDWARE SET (See Separate Submittal)

DOOR # 228C
- ARCADIA MS362 MEDIUM STILE DOOR
- **3'-0" X 8'-0"** DOOR OPENING
- HINGE LEFT , SWING-OUT
- HARDWARE SET (See Separate Submittal)

JJ **INTERIOR STOREFRONT** ELEVATION
AR600 (2" x 6")
Arch Ref: A2-8.3 (TYPE "JJ")
- QT'Y : 2 THUS @LOBBY 228

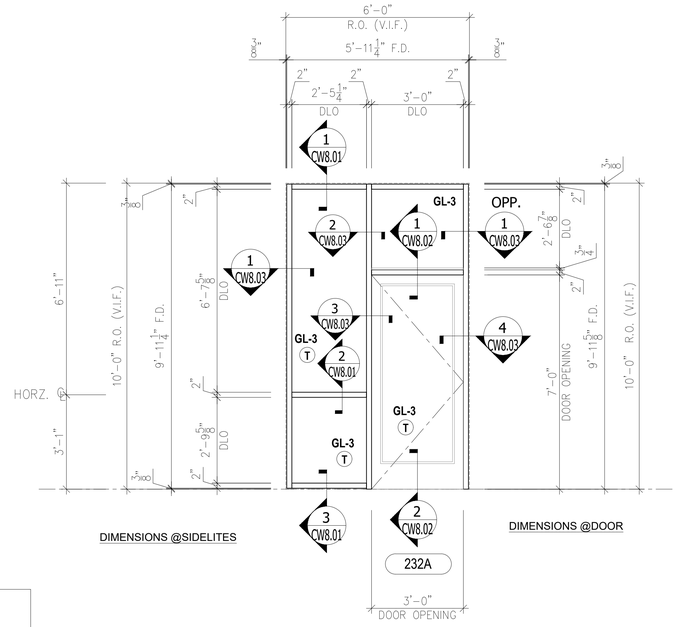

DIMENSIONS @SIDELITES

DIMENSIONS @DOOR

DOOR # 232A
- ARCADIA MS362 MEDIUM STILE DOOR
- **3'-0" X 7'-0"** DOOR OPENING
- HINGE RIGHT , SWING-IN
- HARDWARE SET (See Separate Submittal)

KK1 **INTERIOR STOREFRONT** ELEVATION
AR600 (2" x 6")
Arch Ref: A2-8.3 (TYPE "KK")
- QT'Y : 1 THUS @DISPATCH 232

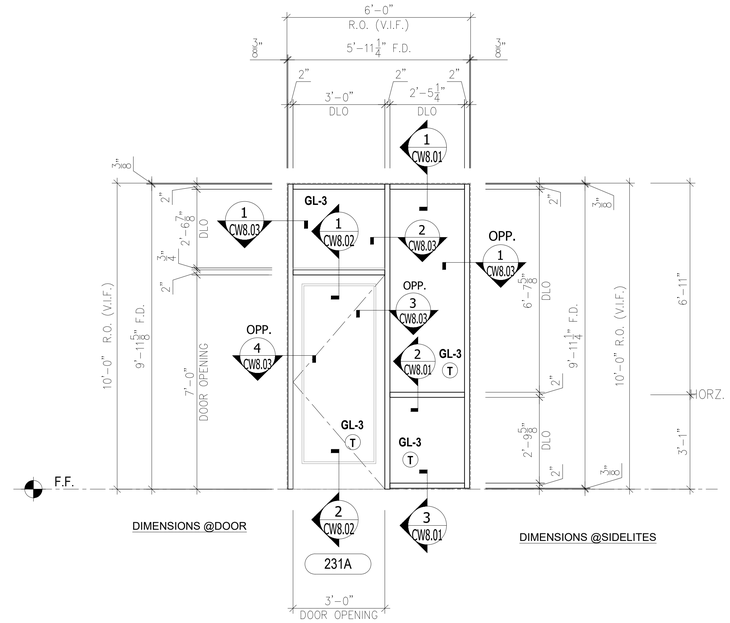

DIMENSIONS @DOOR

DIMENSIONS @SIDELITES

DOOR # 231A
- ARCADIA MS362 MEDIUM STILE DOOR
- **3'-0" X 7'-0"** DOOR OPENING
- HINGE LEFT , SWING-IN
- HARDWARE SET (See Separate Submittal)

KK2 **INTERIOR STOREFRONT** ELEVATION
AR600 (2" x 6")
Arch Ref: A2-8.3 (TYPE "KK")
- QT'Y : 1 THUS @OPERATION MANAGER 231

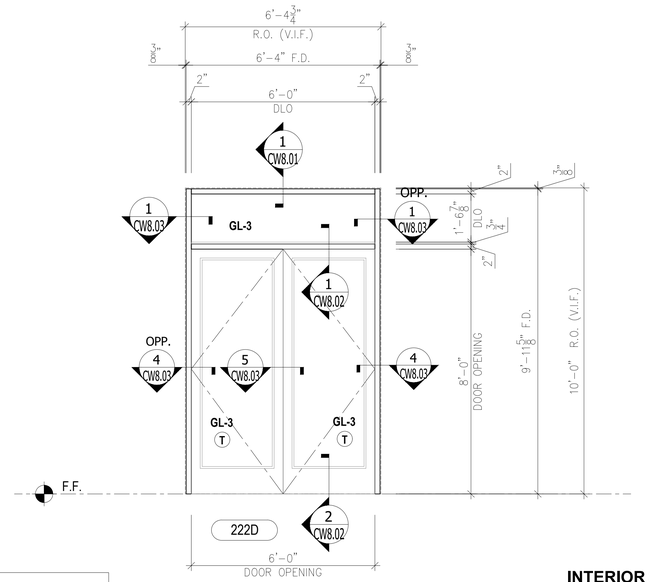

DOOR # 222D
- ARCADIA MS362 MEDIUM STILE DOOR
- **6'-0" X 8'-0"** DOOR OPENING
- PAIR DOOR , SWING-OUT
- HARDWARE SET (See Separate Submittal)

LL **INTERIOR STOREFRONT** ELEVATION
AR600 (2" x 6")
Arch Ref: A2-8.3 (TYPE "LL")
- QT'Y : 1 THUS @BOARD ROOM 222

GLASS LEGEND	
MARK	DESCRIPTION
GL-1	1" I.G.U. PER SPEC. 08 80 00
GL-3	1/4 CLEAR TEMPERED GLASS @INTERIOR STOREFRONT
(T)	TEMPERED GLASS

STAMPS
REGISTERED PROFESSIONAL ENGINEER GARY M. HAMMER No. 84674 CIVIL STATE OF CALIFORNIA
LICENSED ARCHITECT ROGER CLARKE Exp.10-31-25 STATE OF CALIFORNIA
12/11/23

AGENCY APPROVAL
File No: ########-########

CONSULTANT BRANDING

RUHNAU CLARKE ARCHITECTS

arcadia
ARCADIA, INC.
2301 East Vernon Avenue
Vernon, California 90058
Ph: (323) 269-7300
Fx: (323) 261-9927

MOUNT TRANSIT ADMINISTRATION FACILITY: INCREMENT 3: 100% DESIGN DEVELOPMENT

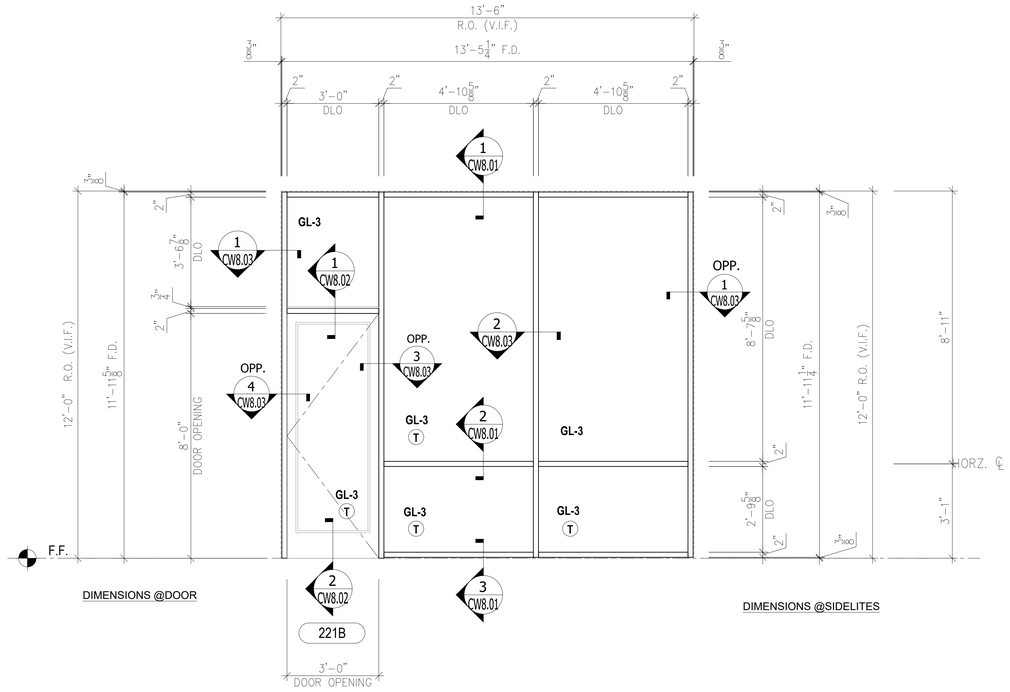

DOOR # 221B

- ARCADIA MS362 MEDIUM STILE DOOR
- **3'-0" X 8'-0"** DOOR OPENING
- HINGE LEFT , SWING-IN
- HARDWARE SET (See Separate Submittal)

MM **INTERIOR STOREFRONT** ELEVATION
AR600 (2" x 6")
Arch Ref: A2-8.3 (TYPE "MM")
- QT'Y : 1 THUS @CLOSED SESSION CONFERENCE ROOM 221

GLASS LEGEND	
MARK	DESCRIPTION
GL-1	1" I.G.U. PER SPEC. 08 80 00
GL-3	1/4 CLEAR TEMPERED GLASS @INTERIOR STOREFRONT
(T)	TEMPERED GLASS

STAMPS
12/11/23

AGENCY APPROVAL
File No: ########-########

CONSULTANT BRANDING

RUHNAU CLARKE ARCHITECTS

ARCADIA, INC.
2301 East Vernon Avenue
Vernon, California 90058
Ph: (323) 269-7300
Fx: (323) 261-9927

MOUNT TRANSIT ADMINISTRATION FACILITY: INCREMENT 3: 100% DESIGN DEVELOPMENT

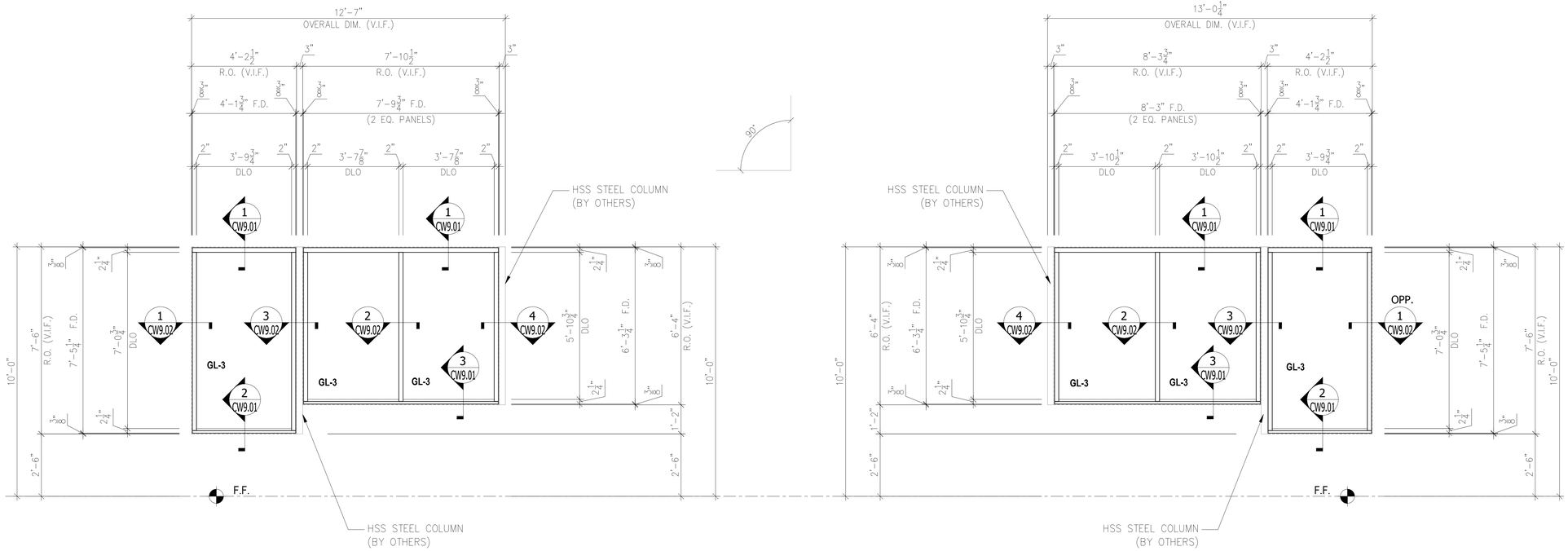

PP **INTERIOR STOREFRONT** ELEVATION
ATL175 (2" x 1-3/4")
Arch Ref: A2-8.3 (TYPE "PP")
- QT'Y : 1 THUS @RECEPTION

NN **INTERIOR STOREFRONT** ELEVATION
ATL175 (2" x 1-3/4")
Arch Ref: A2-8.3 (TYPE "NN")
- QT'Y : 1 THUS @RECEPTION

GLASS LEGEND	
MARK	DESCRIPTION
GL-1	1" I.G.U. PER SPEC. 08 80 00
GL-3	1/4 CLEAR TEMPERED GLASS @INTERIOR STOREFRONT
(T)	TEMPERED GLASS

STAMPS
12/11/23

AGENCY APPROVAL
File No: ########-########

CONSULTANT BRANDING

RUHNAU CLARKE ARCHITECTS

ARCADIA, INC.
2301 East Vernon Avenue
Vernon, California 90058
Ph: (323) 269-7300
Fx: (323) 261-9927

MOUNT TRANSIT ADMINISTRATION FACILITY: INCREMENT 3: 100% DESIGN DEVELOPMENT

PROJECT No. :50801
11/17/2023 11:41:15 AM

DRAWN BY: CHECKED BY:

ISSUE No._____ DATE_____ DESCRIPTION_____
ISSUE No._____ DATE_____ DESCRIPTION_____
ISSUE No._____ DATE_____ DESCRIPTION_____
ISSUE No._____ DATE_____ DESCRIPTION_____

REVISION No._____ DATE_____ DESCRIPTION_____
REVISION No._____ DATE_____ DESCRIPTION_____
REVISION No._____ DATE_____ DESCRIPTION_____
REVISION No._____ DATE_____ DESCRIPTION_____

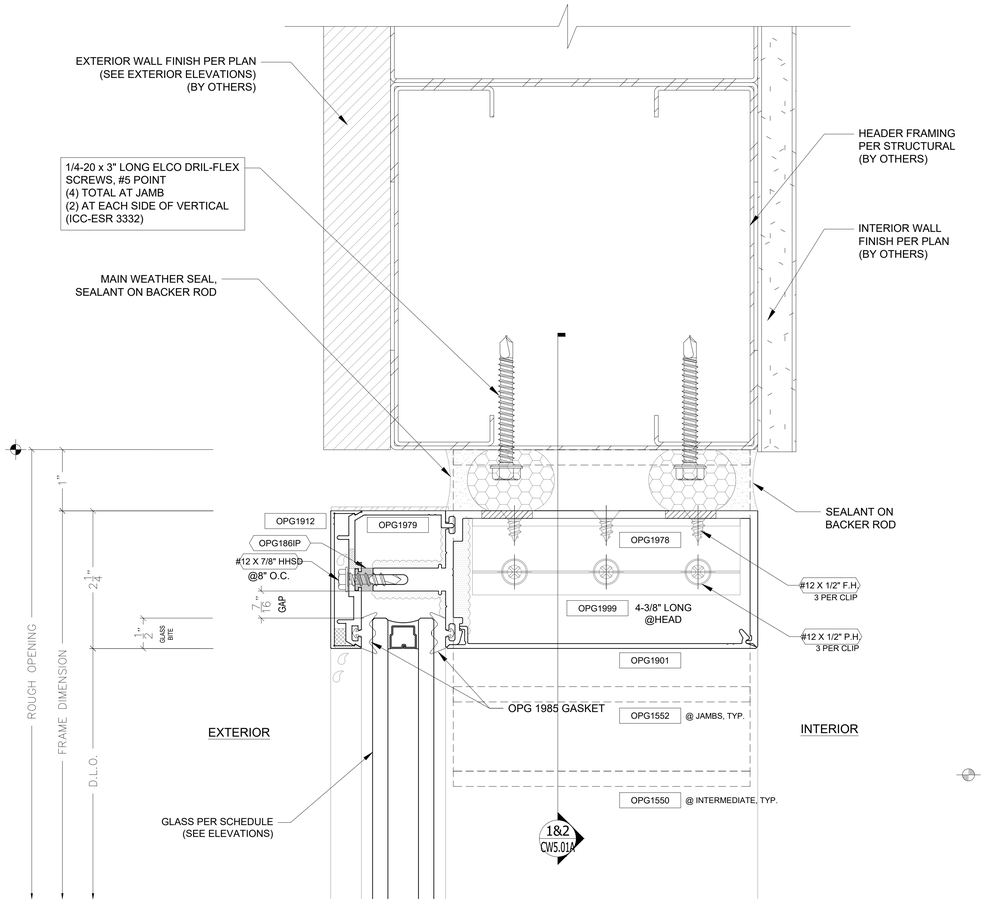

1 OPG1900 (2-1/4" x 7") C/W HEAD

Arch Ref: ~

Shop Ref: CW2.01~CW2.07

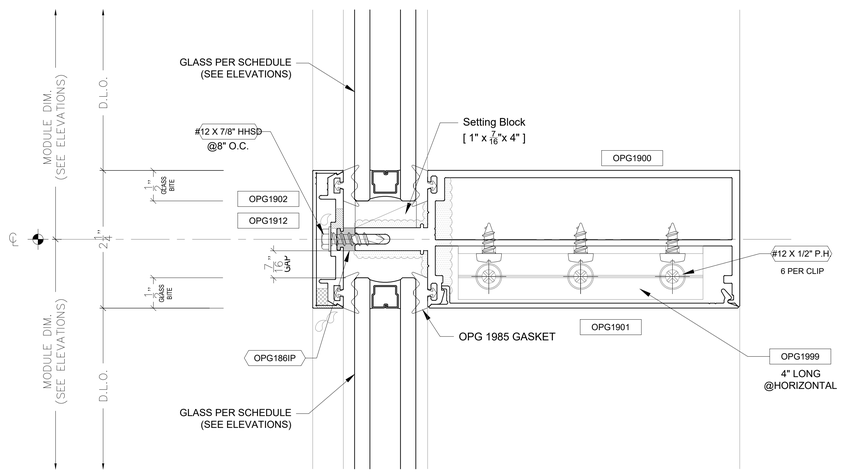

2 OPG1900 (2-1/4" X 7") HORZ. DETAIL

Arch Ref: ~

Shop Ref: CW2.01 ~ CW2.07

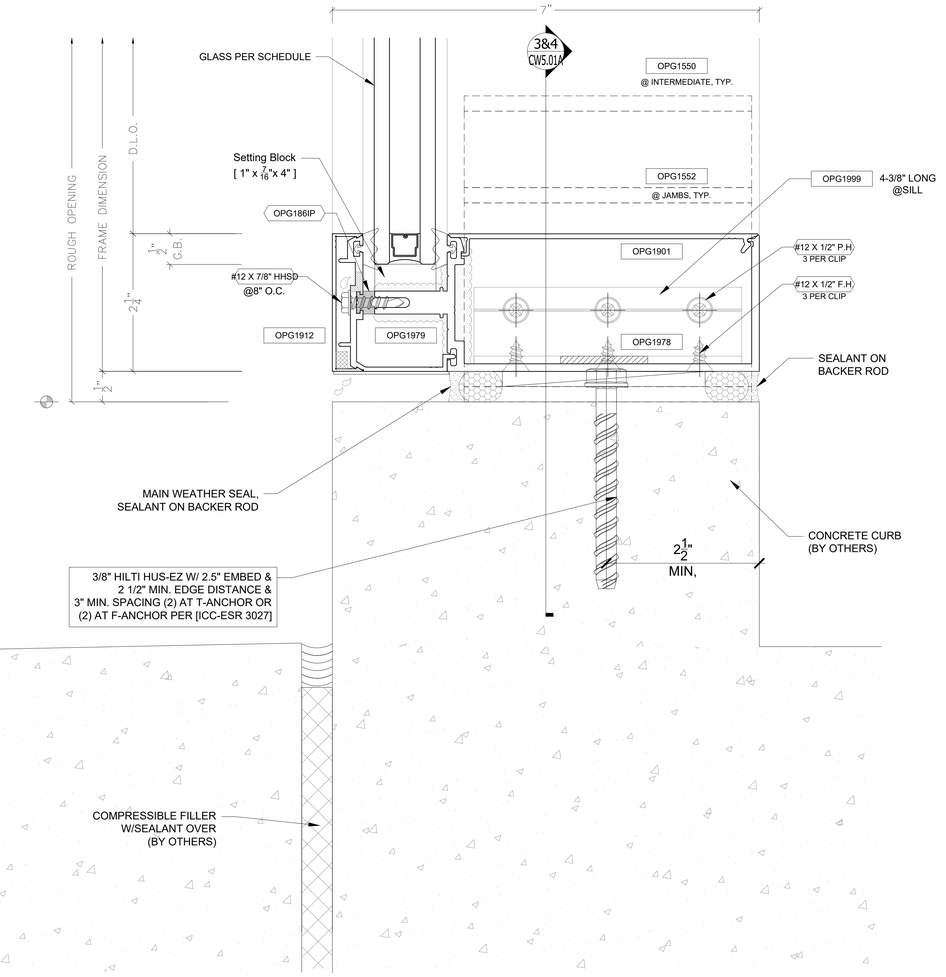

3 OPG1900 (2-1/4" x 7") C/W SILL

Arch Ref: ~

Shop Ref: CW2.01 ~ CW2.07

STAMPS

REGISTERED PROFESSIONAL ENGINEER DAVID M. HERNANDEZ No. 84674 CIVIL STATE OF CALIFORNIA

LICENSED ARCHITECT ROGER CLARKE Exp.10-31-25 STATE OF CALIFORNIA

12/11/23

AGENCY APPROVAL
File No: ########-########

CONSULTANT BRANDING

RUHNAU CLARKE ARCHITECTS

arcadia
ARCADIA, INC.
2301 East Vernon Avenue
Vernon, California 90058
Ph: (323) 269-7300
Fx: (323) 261-9927

MOUNT TRANSIT ADMINISTRATION FACILITY: INCREMENT 3: 100% DESIGN DEVELOPMENT

PROJECT No. :50801
11/17/2023 11:41:15 AM

DRAWN BY: CHECKED BY:

ISSUE No.	DATE	DESCRIPTION	REVISION No.	DATE	DESCRIPTION
ISSUE No.	DATE	DESCRIPTION	REVISION No.	DATE	DESCRIPTION
ISSUE No.	DATE	DESCRIPTION	REVISION No.	DATE	DESCRIPTION
ISSUE No.	DATE	DESCRIPTION	REVISION No.	DATE	DESCRIPTION

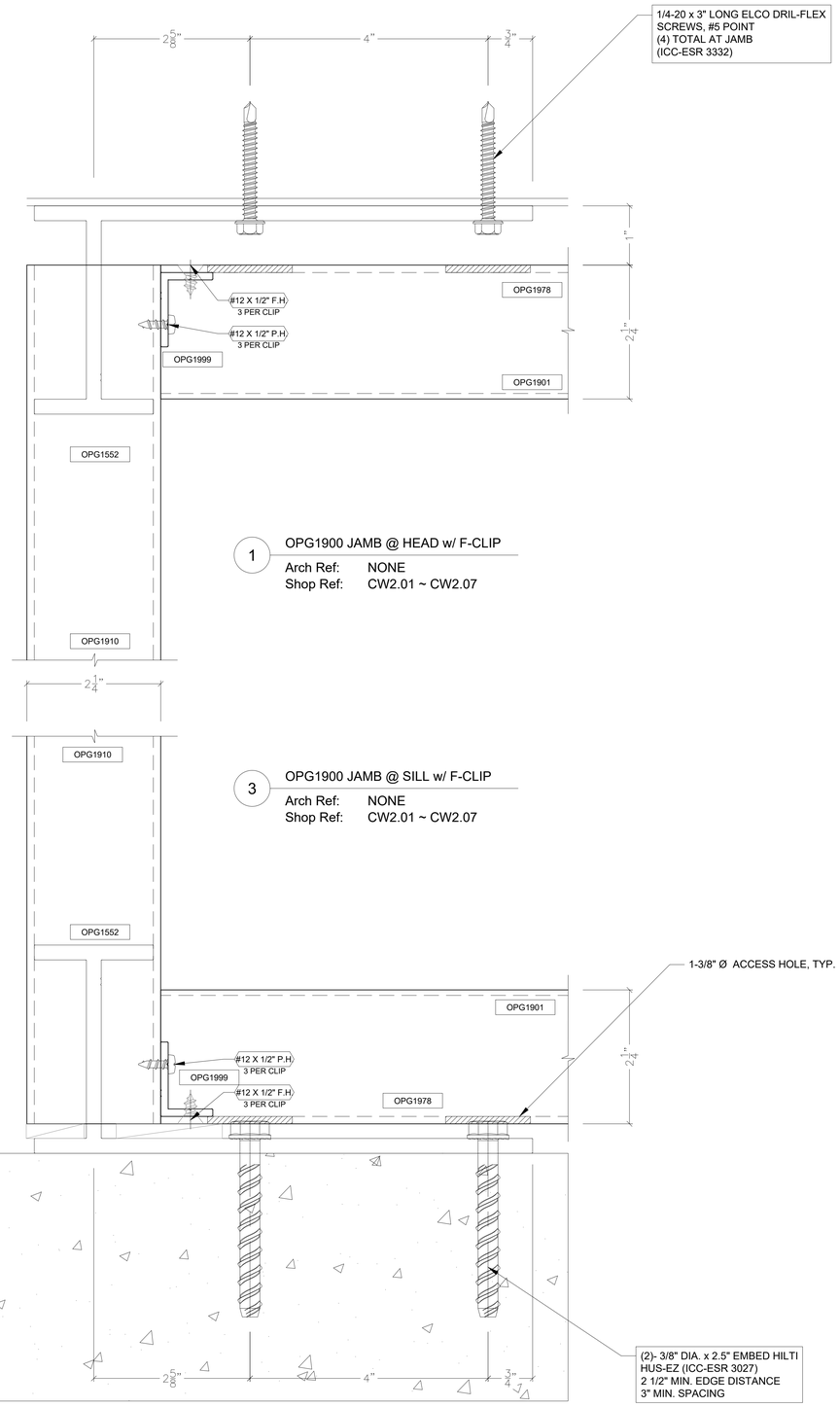

1 OPG1900 JAMB @ HEAD w/ F-CLIP

Arch Ref: NONE
Shop Ref: CW2.01 ~ CW2.07

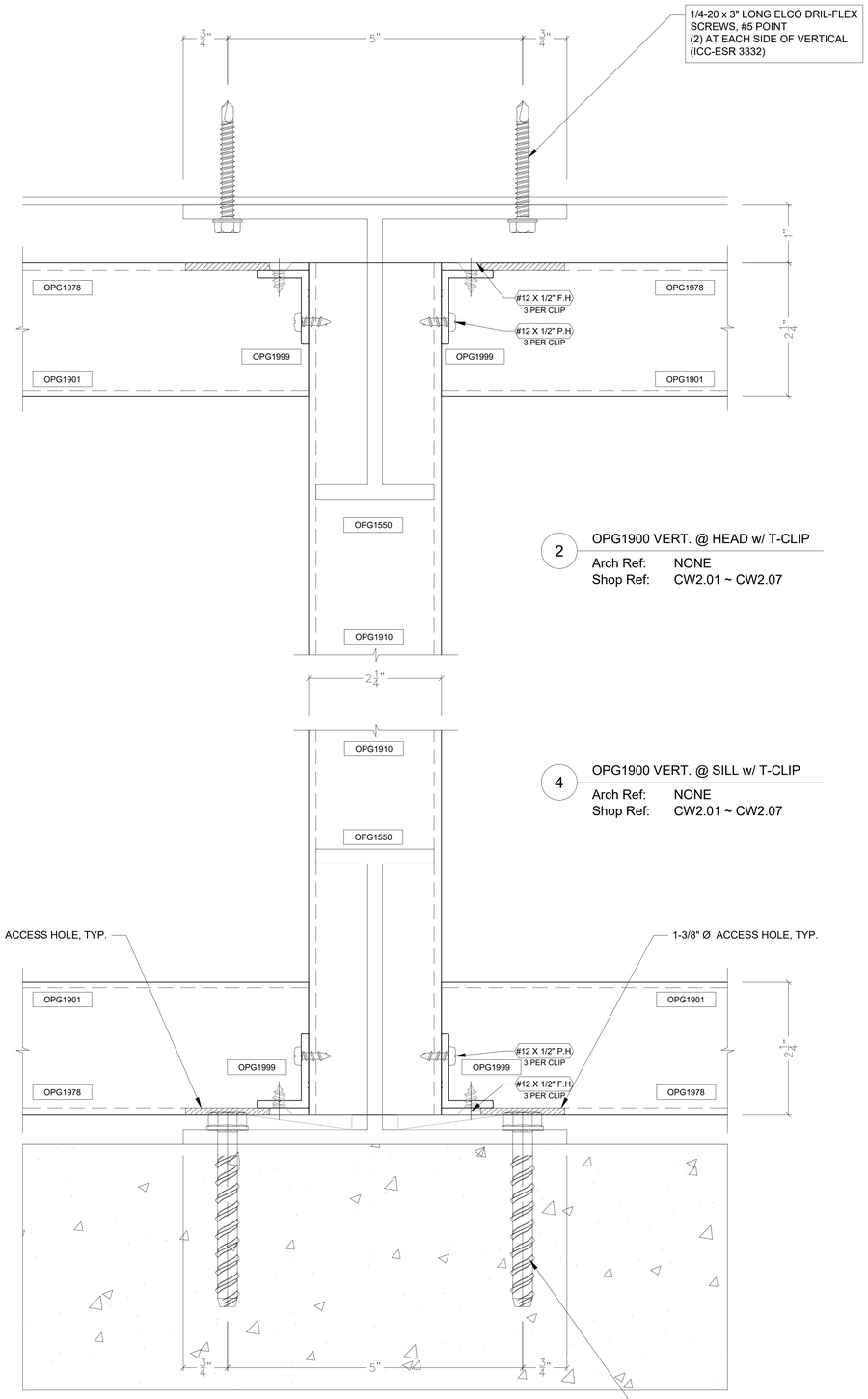

2 OPG1900 VERT. @ HEAD w/ T-CLIP

Arch Ref: NONE
Shop Ref: CW2.01 ~ CW2.07

3 OPG1900 JAMB @ SILL w/ F-CLIP

Arch Ref: NONE
Shop Ref: CW2.01 ~ CW2.07

4 OPG1900 VERT. @ SILL w/ T-CLIP

Arch Ref: NONE
Shop Ref: CW2.01 ~ CW2.07

STAMPS

REGISTERED PROFESSIONAL ENGINEER — DAVID M. HUNNICUTT — No. 84674 — CIVIL — STATE OF CALIFORNIA

LICENSED ARCHITECT — ROGER CLARKE — Exp.10-31-25 — STATE OF CALIFORNIA

12/11/23

AGENCY APPROVAL
File No: ########-########

CONSULTANT BRANDING

RUHNAU CLARKE ARCHITECTS

arcadia
ARCADIA, INC.
2301 East Vernon Avenue
Vernon, California 90058
Ph: (323) 269-7300
Fx: (323) 261-9927

MOUNT TRANSIT ADMINISTRATION FACILITY: INCREMENT 3: 100% DESIGN DEVELOPMENT

PROJECT No. :50801
11/17/2023 11:41:15 AM

DRAWN BY: CHECKED BY:

ISSUE No.	DATE	DESCRIPTION	REVISION No.	DATE	DESCRIPTION
ISSUE No.	DATE	DESCRIPTION	REVISION No.	DATE	DESCRIPTION
ISSUE No.	DATE	DESCRIPTION	REVISION No.	DATE	DESCRIPTION
ISSUE No.	DATE	DESCRIPTION	REVISION No.	DATE	DESCRIPTION

MOUNT TRANSIT ADMINISTRATION FACILITY
INCREMENT 3
170 BUSINESS CENTER. BIG BEAR LAKE, CALIFORNIA
BIG BEAR LAKE

CURTAIN WALL DETAILS
(OPG1900 : 2-1/4" x 7")

CW5.01A

50801

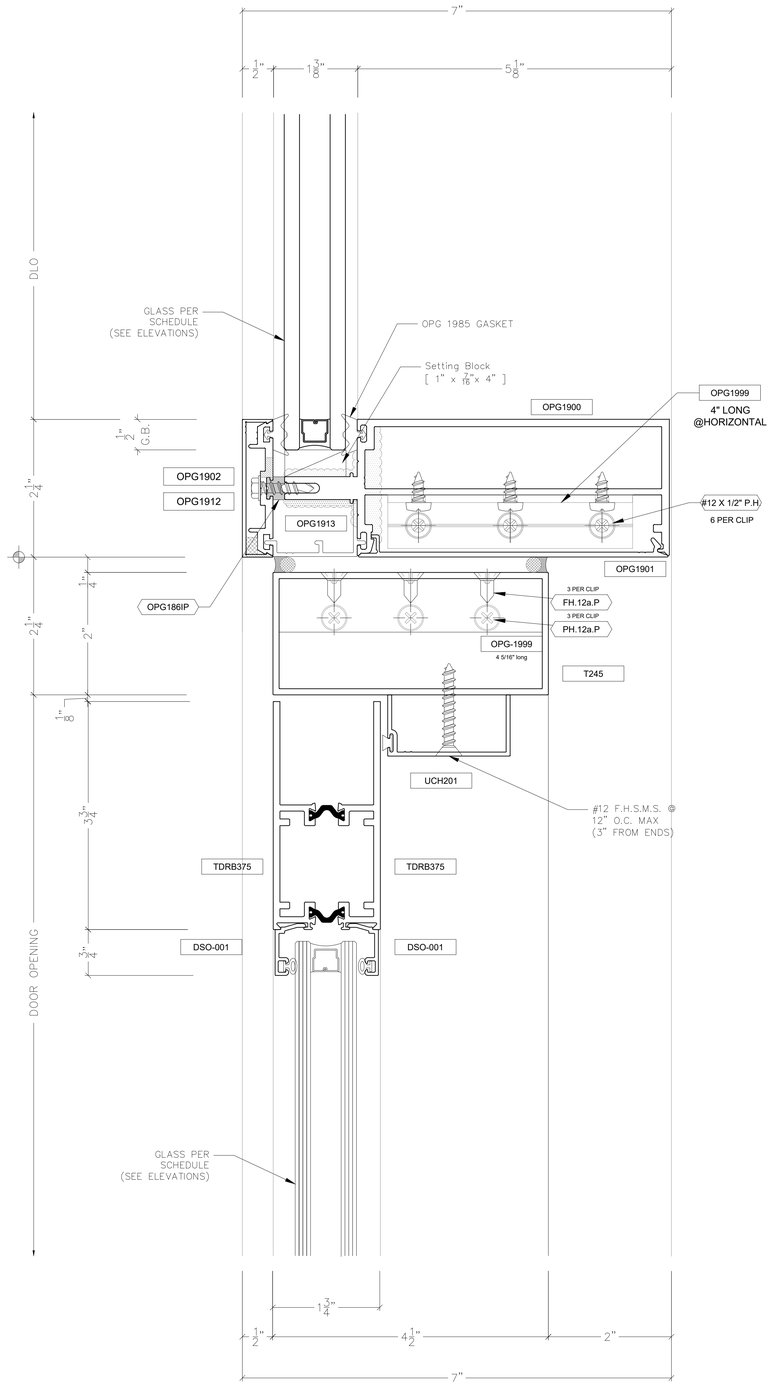

1 OPG1900 (2-1/4" x 7") HORZ. & DOOR

Arch Ref: 12A/A811
Shop Ref: CW2.01 ~ CW2.07

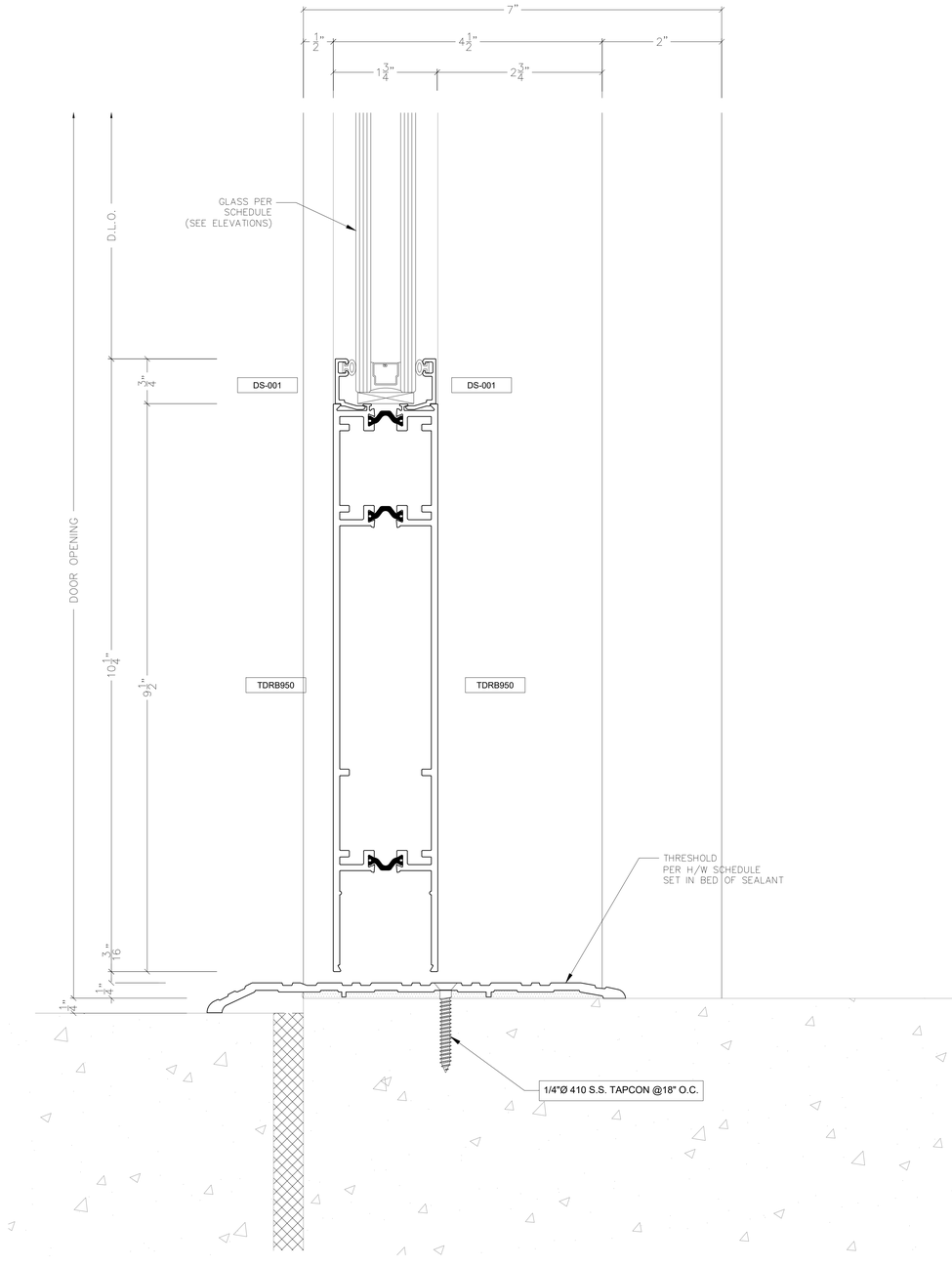

2 DOOR BOTTOM RAIL

Arch Ref: ~
Shop Ref: CW2.01 ~ CW2.07

STAMPS

REGISTERED PROFESSIONAL ENGINEER DAVID M. HARMER No. 84674 CIVIL STATE OF CALIFORNIA

LICENSED ARCHITECT ROGER CLARKE Exp.10-31-25 STATE OF CALIFORNIA

12/11/23

AGENCY APPROVAL
File No: ########-########

CONSULTANT BRANDING

RUHNAU CLARKE ARCHITECTS

arcadia
ARCADIA, INC.
2301 East Vernon Avenue
Vernon, California 90058
Ph: (323) 269-7300
Fx: (323) 261-9927

MOUNT TRANSIT ADMINISTRATION FACILITY: INCREMENT 3: 100% DESIGN DEVELOPMENT

PROJECT No. : 50801
11/17/2023 11:41:15 AM

DRAWN BY: CHECKED BY:

ISSUE No.	DATE	DESCRIPTION	REVISION No.	DATE	DESCRIPTION
ISSUE No.	DATE	DESCRIPTION	REVISION No.	DATE	DESCRIPTION
ISSUE No.	DATE	DESCRIPTION	REVISION No.	DATE	DESCRIPTION
ISSUE No.	DATE	DESCRIPTION	REVISION No.	DATE	DESCRIPTION

RUHNAUCLARKE.COM

3775 TENTH STREET, RIVERSIDE CALIFORNIA 92501 (951) 684 4664 / 5751 PALMER WAY, SUITE C, CARLSBAD CALIFORNIA 92010 (760) 438 5899

MOUNT TRANSIT ADMINISTRATION FACILITY
INCREMENT 3
170 BUSINESS CENTER. BIG BEAR LAKE, CALIFORNIA
BIG BEAR LAKE

CURTAIN WALL DETAILS (OPG1900 : 2-1/4" x 7")

CW5.02

50801

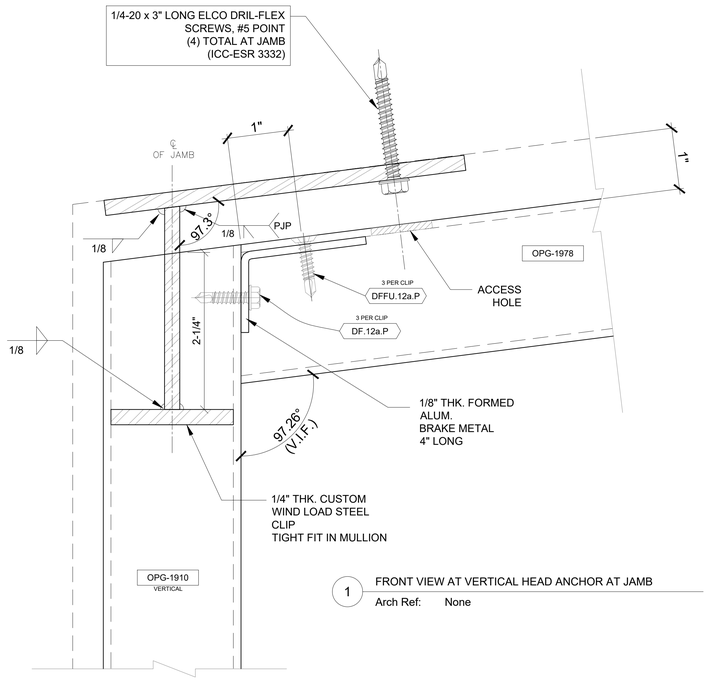

1 FRONT VIEW AT VERTICAL HEAD ANCHOR AT JAMB

Arch Ref: None

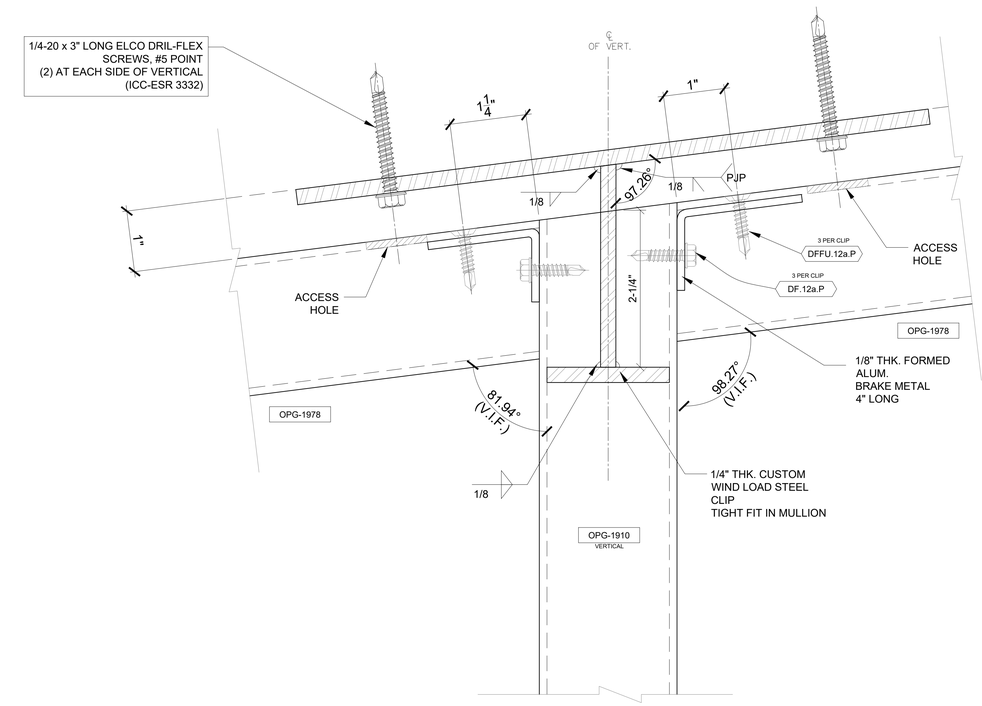

2 FRONT VIEW AT VERTICAL HEAD ANCHOR

Arch Ref: None

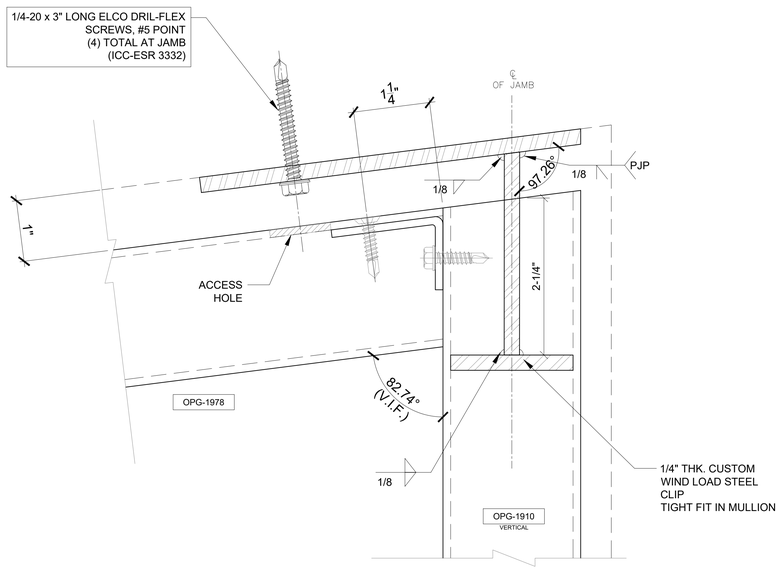

3 FRONT VIEW AT VERTICAL HEAD ANCHOR AT JAMB

Arch Ref: None

STAMPS

REGISTERED PROFESSIONAL ENGINEER — CRAIG M. HUMPHREY — No. 84674 — CIVIL — STATE OF CALIFORNIA

LICENSED ARCHITECT — ROGER CLARKE — Exp.10-31-25 — STATE OF CALIFORNIA

12/11/23

AGENCY APPROVAL
File No: ########-########

CONSULTANT BRANDING

RUHNAU CLARKE ARCHITECTS

arcadia
ARCADIA, INC.
2301 East Vernon Avenue
Vernon, California 90058
Ph: (323) 269-7300
Fx: (323) 261-9927

MOUNT TRANSIT ADMINISTRATION FACILITY: INCREMENT 3: 100% DESIGN DEVELOPMENT

PROJECT No. :50801
11/17/2023 11:41:15 AM

DRAWN BY: CHECKED BY:

ISSUE No.	DATE	DESCRIPTION	REVISION No.	DATE	DESCRIPTION
ISSUE No.	DATE	DESCRIPTION	REVISION No.	DATE	DESCRIPTION
ISSUE No.	DATE	DESCRIPTION	REVISION No.	DATE	DESCRIPTION
ISSUE No.	DATE	DESCRIPTION	REVISION No.	DATE	DESCRIPTION

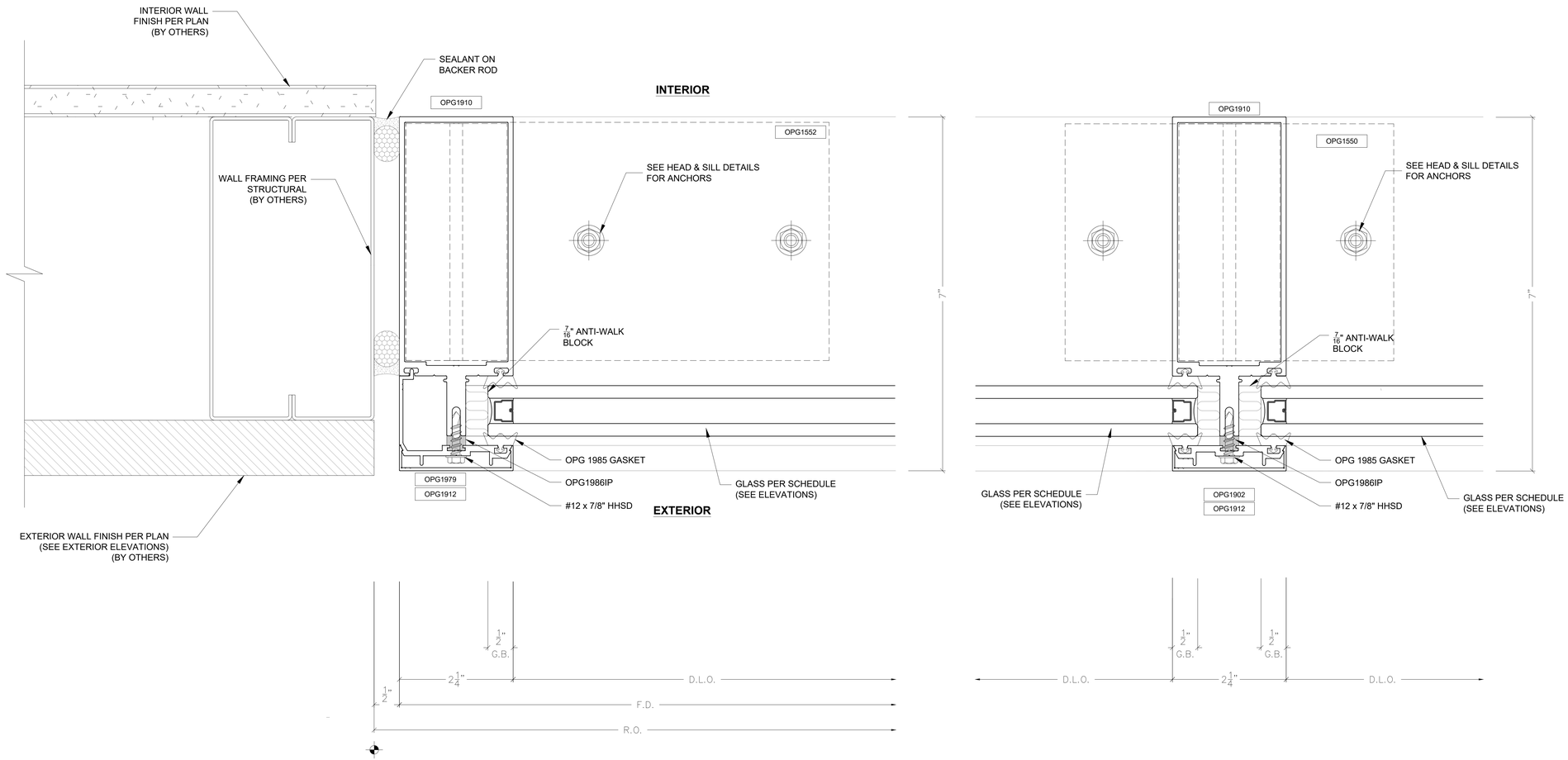

1 OPG1900 (2-1/4" x 7") C/W JAMB

Arch Ref: ~
Shop Ref: CW2.01 ~ CW2.07

2 OPG1900 (2-1/4" x 7") C/W INTERMEDIATE VERTICAL

Arch Ref: ~
Shop Ref: CW2.01 ~ CW2.07

STAMPS

REGISTERED PROFESSIONAL ENGINEER — DAVID M. HERMANN — No. 84674 — CIVIL — STATE OF CALIFORNIA

LICENSED ARCHITECT — ROGER CLARKE — Exp.10-31-25 — STATE OF CALIFORNIA

12/11/23

AGENCY APPROVAL
File No: ########-########

CONSULTANT BRANDING

RUHNAU CLARKE ARCHITECTS

arcadia
ARCADIA, INC.
2301 East Vernon Avenue
Vernon, California 90058
Ph: (323) 269-7300
Fx: (323) 261-9927

MOUNT TRANSIT ADMINISTRATION FACILITY: INCREMENT 3: 100% DESIGN DEVELOPMENT

PROJECT No. :50801
11/17/2023 11:41:15 AM

DRAWN BY: CHECKED BY:

ISSUE No._____ DATE_____ DESCRIPTION_____ REVISION No._____ DATE_____ DESCRIPTION_____
ISSUE No._____ DATE_____ DESCRIPTION_____ REVISION No._____ DATE_____ DESCRIPTION_____
ISSUE No._____ DATE_____ DESCRIPTION_____ REVISION No._____ DATE_____ DESCRIPTION_____
ISSUE No._____ DATE_____ DESCRIPTION_____ REVISION No._____ DATE_____ DESCRIPTION_____

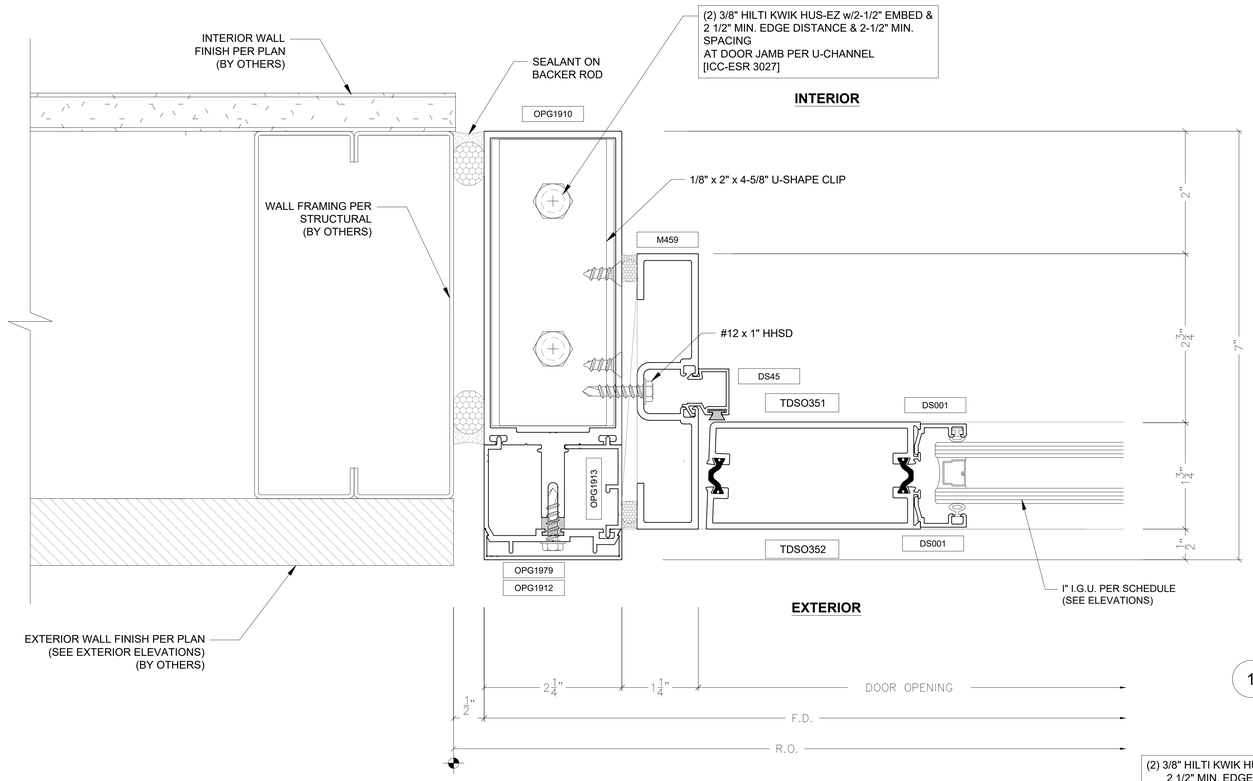

1 OPG1900 (2-1/4" x 7") C/W JAMB

Arch Ref: ~

Shop Ref: CW2.01 ~ CW2.07

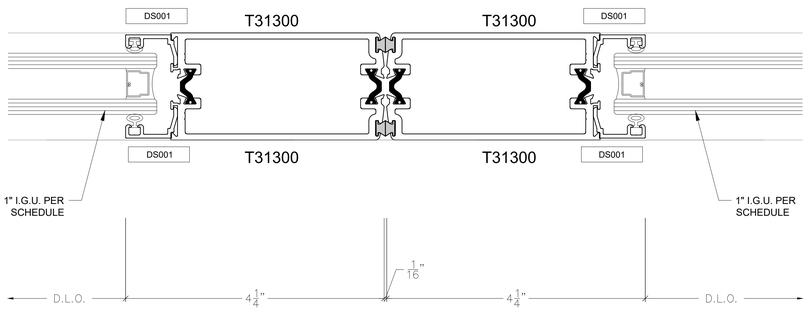

2 THERMAL DOOR MEETING STILE

Arch Ref: ~

Shop Ref: CW2.01 ~ CW2.07

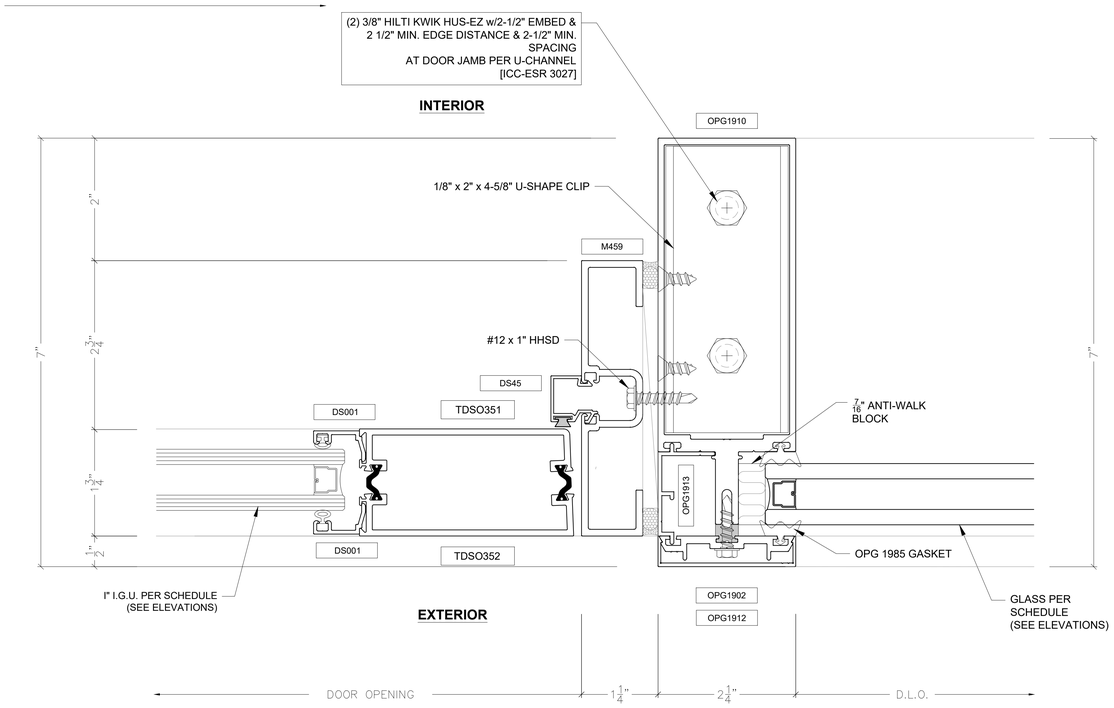

3 THERMAL DOOR & VERTICAL MULLION

Arch Ref: ~

Shop Ref: CW2.01 ~ CW2.07

STAMPS

REGISTERED PROFESSIONAL ENGINEER — DAVID M. RUHNAU — No. 84674 — CIVIL — STATE OF CALIFORNIA

LICENSED ARCHITECT — ROGER CLARKE — Exp.10-31-25 — STATE OF CALIFORNIA

12/11/23

AGENCY APPROVAL

File No.: ########-########

CONSULTANT BRANDING

RUHNAU CLARKE ARCHITECTS

arcadia
ARCADIA, INC.
2301 East Vernon Avenue
Vernon, California 90058
Ph: (323) 269-7300
Fx: (323) 261-9927

MOUNT TRANSIT ADMINISTRATION FACILITY: INCREMENT 3: 100% DESIGN DEVELOPMENT

PROJECT No. : 50801

11/17/2023 11:41:15 AM

DRAWN BY: CHECKED BY:

ISSUE No.	DATE	DESCRIPTION	REVISION No.	DATE	DESCRIPTION
ISSUE No.	DATE	DESCRIPTION	REVISION No.	DATE	DESCRIPTION
ISSUE No.	DATE	DESCRIPTION	REVISION No.	DATE	DESCRIPTION
ISSUE No.	DATE	DESCRIPTION	REVISION No.	DATE	DESCRIPTION

RUHNAUCLARKE.COM

3775 TENTH STREET, RIVERSIDE CALIFORNIA 92501 (951) 684 4664 / 5751 PALMER WAY, SUITE C, CARLSBAD CALIFORNIA 92010 (760) 438 5899

MOUNT TRANSIT ADMINISTRATION FACILITY

INCREMENT 3

170 BUSINESS CENTER. BIG BEAR LAKE, CALIFORNIA

BIG BEAR LAKE

CURTAIN WALL DETAILS (OPG1900 : 2-1/4" x 7")

CW6.02

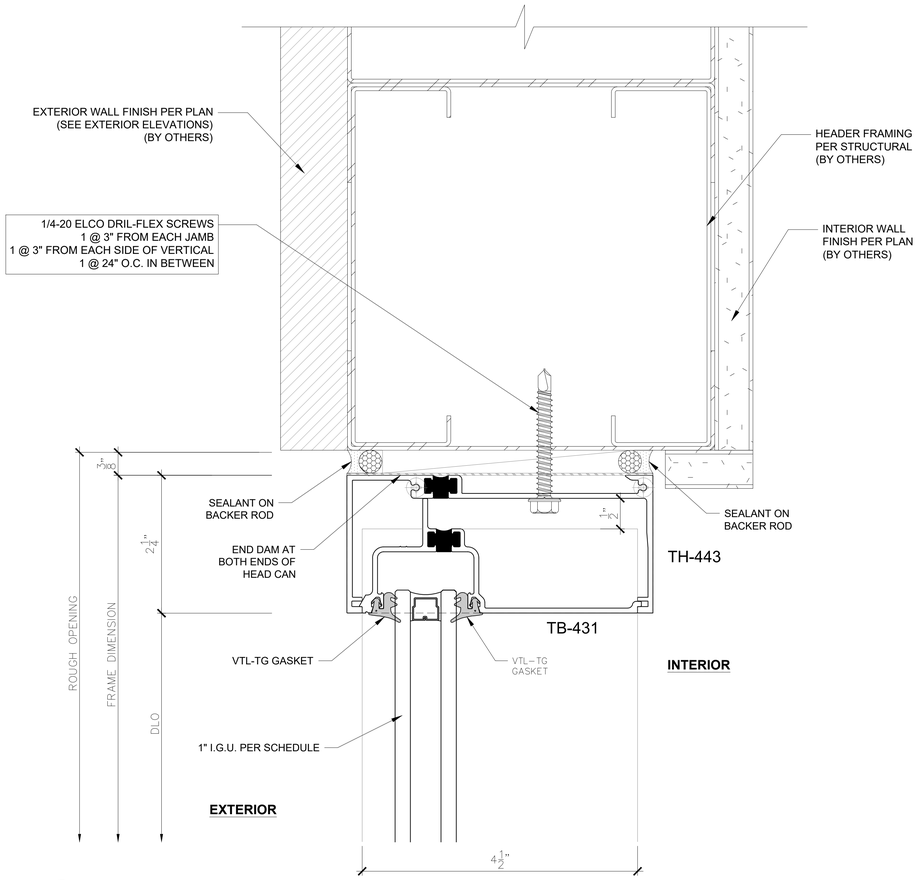

1 AFG451T (2" x 4-1/2") S/F HEAD

Arch Ref: ~
Shop Ref: CW3.01 ~ CW3.03

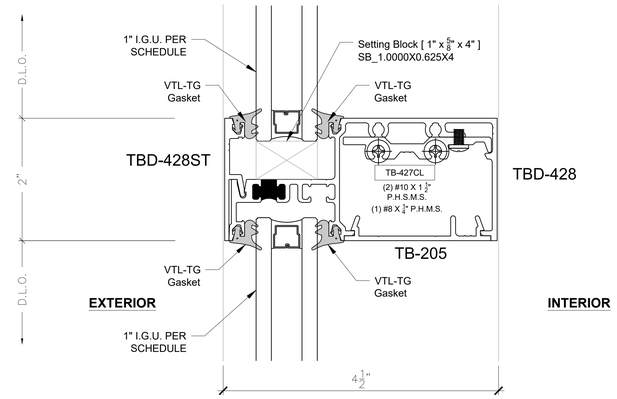

2 AFG451T (2" x 4-1/2") S/F HORIZONTAL

Arch Ref: ~
Shop Ref: CW3.01

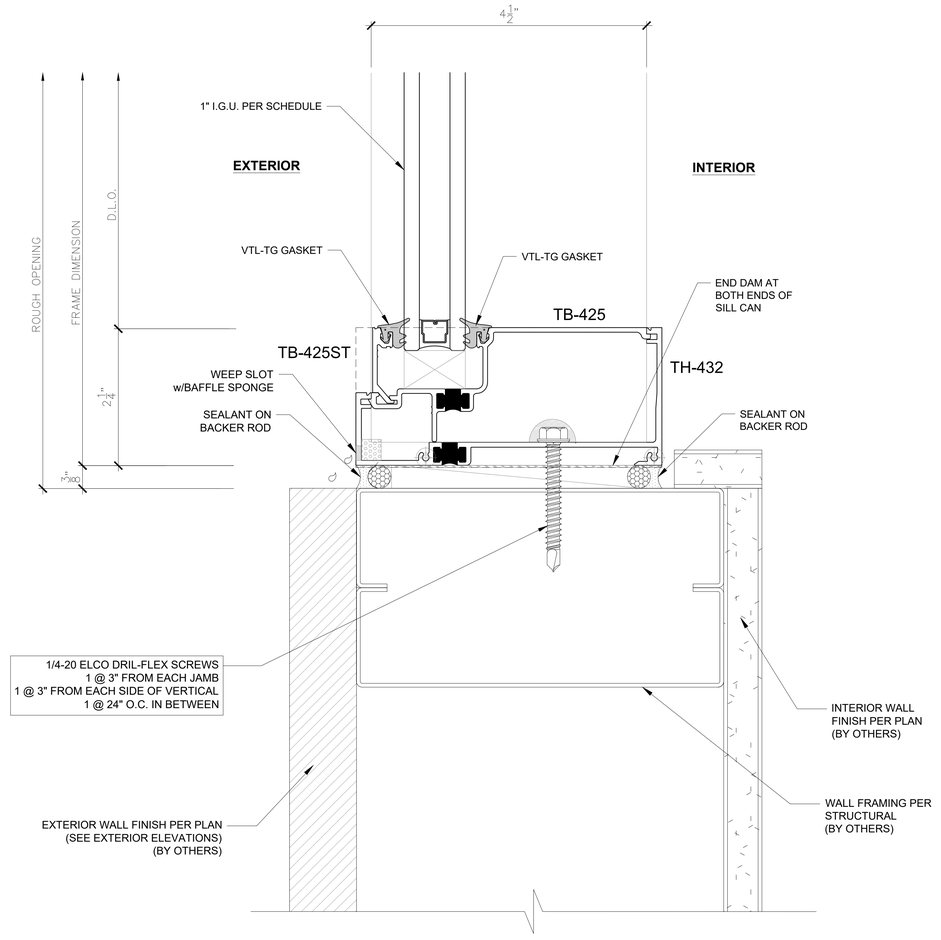

3 AFG451T (2" x 4-1/2") S/F SILL

Arch Ref: ~
Shop Ref: CW3.01 ~ CW3.03

STAMPS

REGISTERED PROFESSIONAL ENGINEER — DAVID M. YOUNGER — No. 84674 — CIVIL — STATE OF CALIFORNIA

LICENSED ARCHITECT — ROGER CLARKE — Exp.10-31-25 — STATE OF CALIFORNIA

12/11/23

AGENCY APPROVAL
File No: ########-########

CONSULTANT BRANDING

RUHNAU CLARKE ARCHITECTS

ARCADIA, INC.
2301 East Vernon Avenue
Vernon, California 90058
Ph: (323) 269-7300
Fx: (323) 261-9927

MOUNT TRANSIT ADMINISTRATION FACILITY: INCREMENT 3: 100% DESIGN DEVELOPMENT

PROJECT No. :50801
11/17/2023 11:41:15 AM

DRAWN BY: CHECKED BY:

ISSUE No.____ DATE____ DESCRIPTION____ REVISION No.____ DATE____ DESCRIPTION____
ISSUE No.____ DATE____ DESCRIPTION____ REVISION No.____ DATE____ DESCRIPTION____
ISSUE No.____ DATE____ DESCRIPTION____ REVISION No.____ DATE____ DESCRIPTION____
ISSUE No.____ DATE____ DESCRIPTION____ REVISION No.____ DATE____ DESCRIPTION____

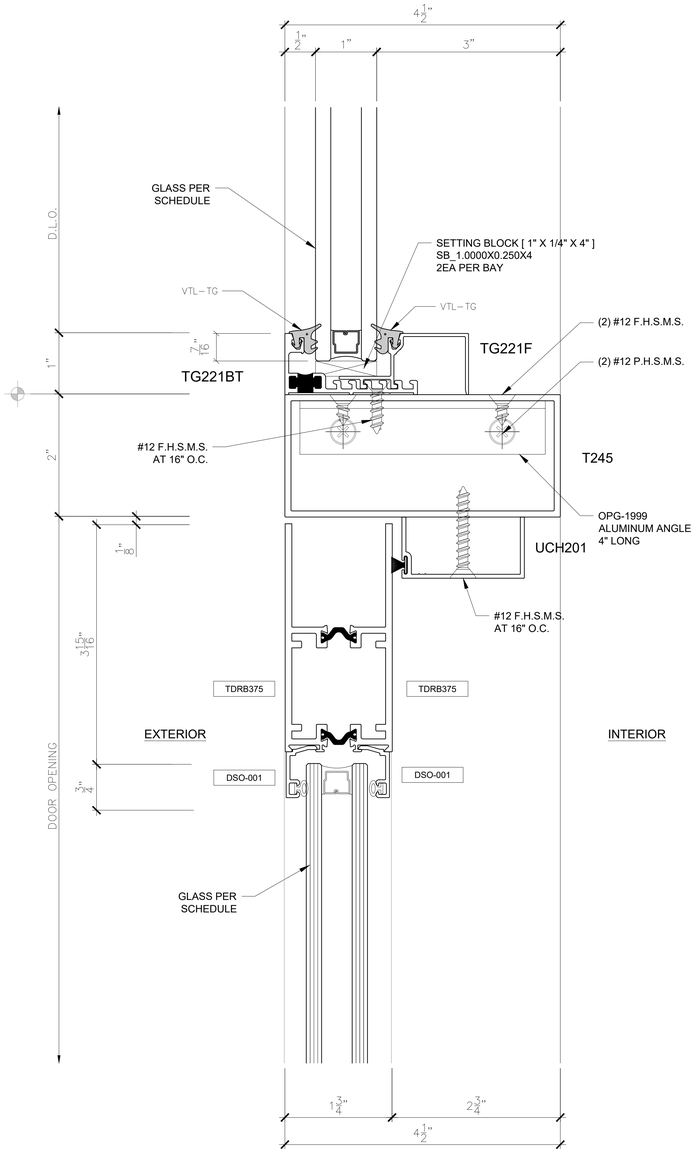

1 DOOR HEADER, TOP RAIL & TRANSOM

Arch Ref: ~
Shop Ref: CW3.02

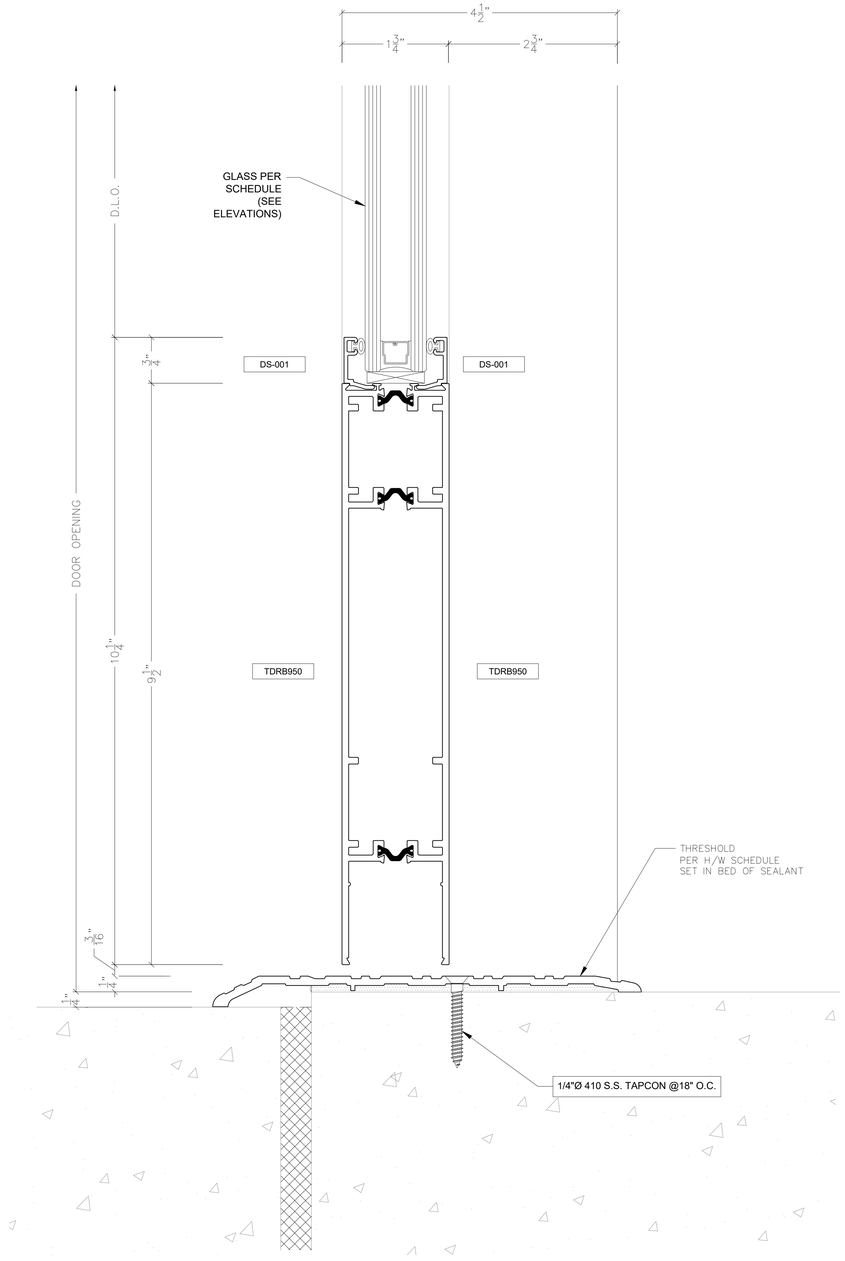

2 DOOR BOTTOM RAIL

Arch Ref: ~
Shop Ref: CW3.02

STAMPS

REGISTERED PROFESSIONAL ENGINEER — GARY M. HAMMER — No. 84674 — CIVIL — STATE OF CALIFORNIA

LICENSED ARCHITECT — ROGER CLARKE — Exp.10-31-25 — STATE OF CALIFORNIA

12/11/23

AGENCY APPROVAL
File No: ########-########

CONSULTANT BRANDING

RUHNAU CLARKE ARCHITECTS

arcadia
ARCADIA, INC.
2301 East Vernon Avenue
Vernon, California 90058
Ph: (323) 269-7300
Fx: (323) 261-9927

MOUNT TRANSIT ADMINISTRATION FACILITY: INCREMENT 3: 100% DESIGN DEVELOPMENT

PROJECT No. :50801
11/17/2023 11:41:15 AM

DRAWN BY: CHECKED BY:

ISSUE No.	DATE	DESCRIPTION	REVISION No.	DATE	DESCRIPTION
ISSUE No.	DATE	DESCRIPTION	REVISION No.	DATE	DESCRIPTION
ISSUE No.	DATE	DESCRIPTION	REVISION No.	DATE	DESCRIPTION
ISSUE No.	DATE	DESCRIPTION	REVISION No.	DATE	DESCRIPTION

RUHNAUCLARKE.COM
3775 TENTH STREET, RIVERSIDE CALIFORNIA 92501 (951) 684 4664 / 5751 PALMER WAY, SUITE C, CARLSBAD CALIFORNIA 92010 (760) 438 5899

MOUNT TRANSIT ADMINISTRATION FACILITY
INCREMENT 3
170 BUSINESS CENTER. BIG BEAR LAKE, CALIFORNIA
BIG BEAR LAKE

STOREFRONT DETAILS
(AFG451T : 2" x 4-1/2")

CW7.02

50801

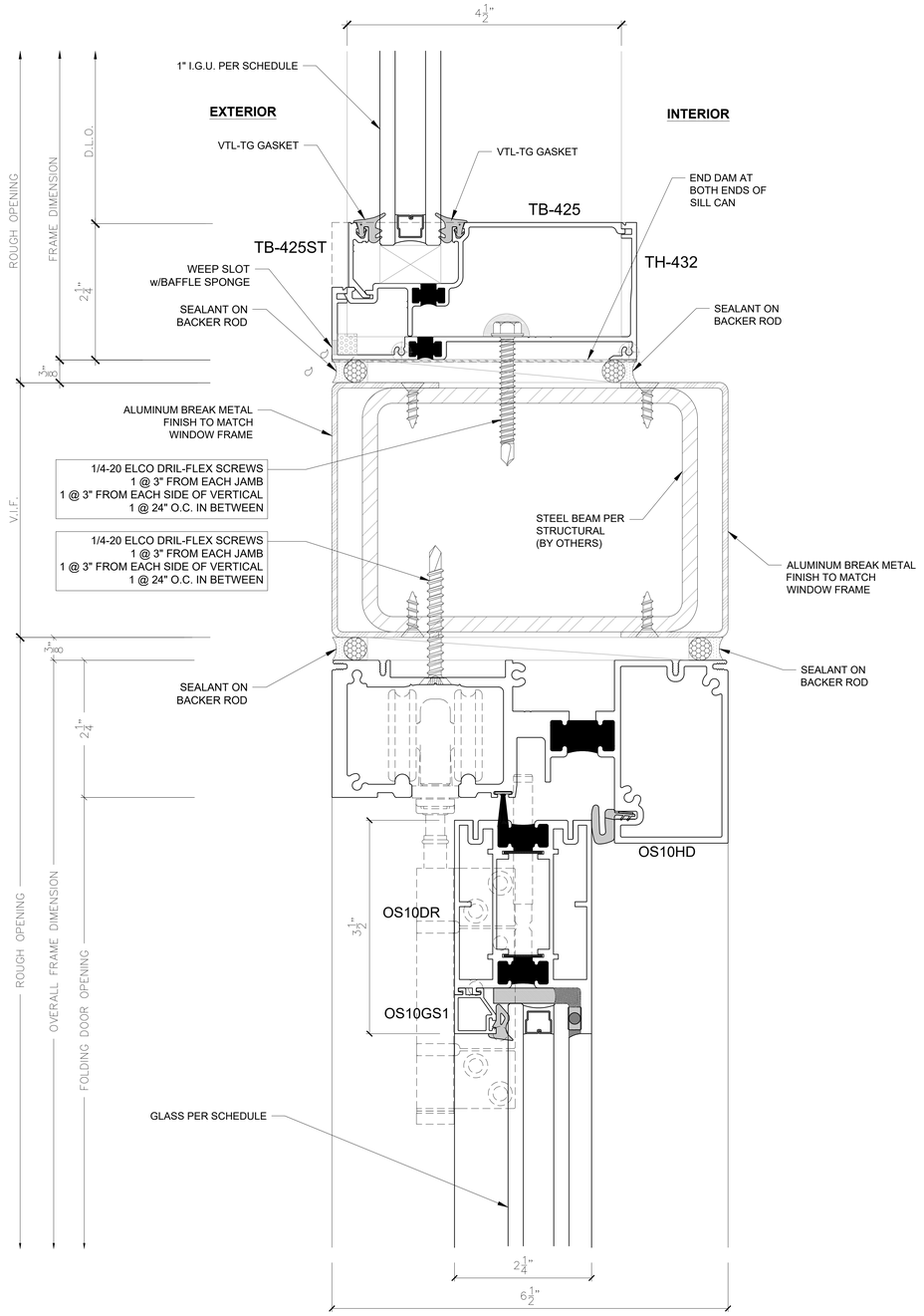

1 BI-FOLDING DOOR TOP & WINDOW SILL

Arch Ref: ~
Shop Ref: CW3.01

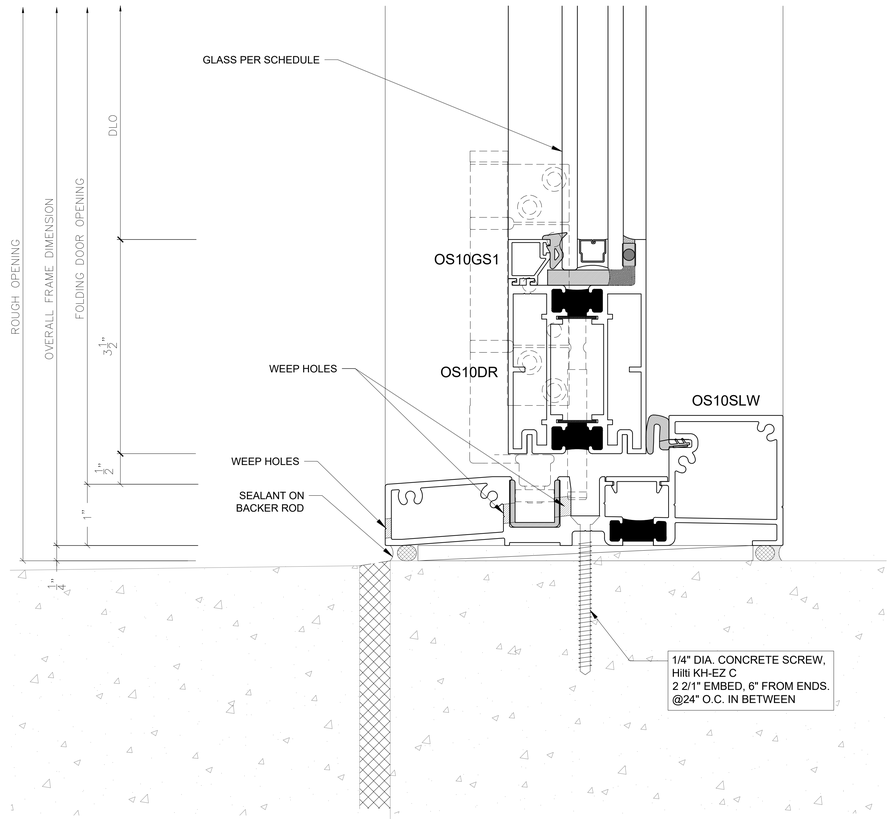

2 BI-FOLDING DOOR BOTTOM & TRACK

Arch Ref: ~
Shop Ref: CW3.01

STAMPS

REGISTERED PROFESSIONAL ENGINEER CARLO M. YSURAGUIRRE No. 84674 CIVIL STATE OF CALIFORNIA

LICENSED ARCHITECT ROGER CLARKE Exp.10-31-25 STATE OF CALIFORNIA

12/11/23

AGENCY APPROVAL
File No: ########-########

CONSULTANT BRANDING

RUHNAU CLARKE ARCHITECTS

arcadia
ARCADIA, INC.
2301 East Vernon Avenue
Vernon, California 90058
Ph: (323) 269-7300
Fx: (323) 261-9927

MOUNT TRANSIT ADMINISTRATION FACILITY: INCREMENT 3: 100% DESIGN DEVELOPMENT

PROJECT No. :50801
11/17/2023 11:41:15 AM

DRAWN BY: CHECKED BY:

ISSUE No.	DATE	DESCRIPTION	REVISION No.	DATE	DESCRIPTION
ISSUE No.	DATE	DESCRIPTION	REVISION No.	DATE	DESCRIPTION
ISSUE No.	DATE	DESCRIPTION	REVISION No.	DATE	DESCRIPTION
ISSUE No.	DATE	DESCRIPTION	REVISION No.	DATE	DESCRIPTION

RUHNAUCLARKE.COM

3775 TENTH STREET, RIVERSIDE CALIFORNIA 92501 (951) 684 4664 / 5751 PALMER WAY, SUITE C, CARLSBAD CALIFORNIA 92010 (760) 438 5899

MOUNT TRANSIT ADMINISTRATION FACILITY
INCREMENT 3
170 BUSINESS CENTER. BIG BEAR LAKE, CALIFORNIA
BIG BEAR LAKE

STOREFRONT DETAILS
(AFG451T : 2" x 4-1/2")

CW7.03

50801

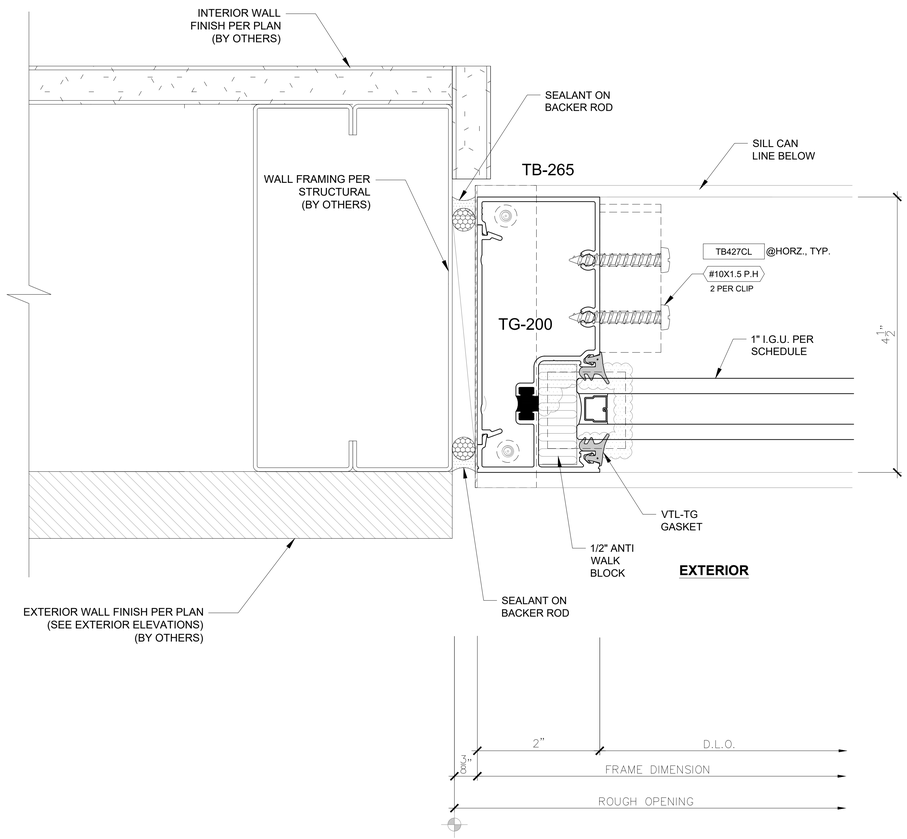

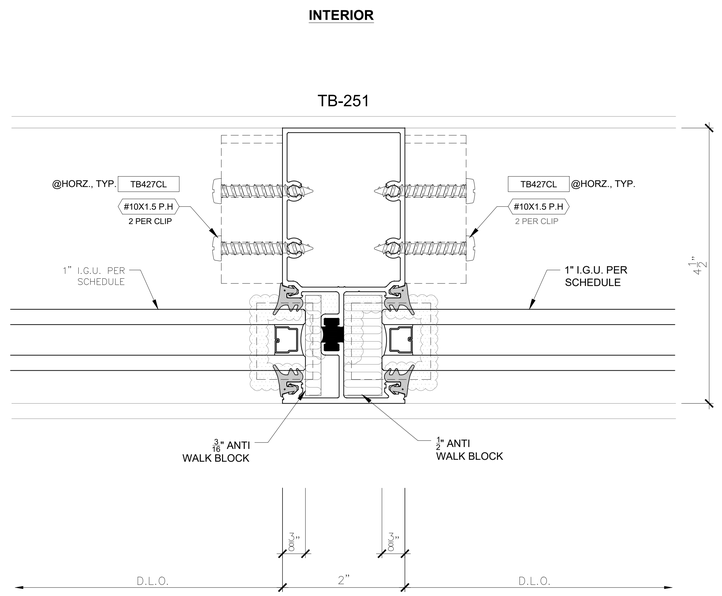

1 AFG451T (2" x 4-1/2") S/F JAMB

Arch Ref: ~
Shop Ref: CW3.01 ~ CW3.03

2 AFG451T (2" x 4-1/2") S/F VERTICAL

Arch Ref: ~
Shop Ref: CW3.01 ~ CW3.03

STAMPS

REGISTERED PROFESSIONAL ENGINEER DAVID M. HUNTSMAN No. 84674 CIVIL STATE OF CALIFORNIA

LICENSED ARCHITECT ROGER CLARKE Exp.10-31-25 STATE OF CALIFORNIA

12/11/23

AGENCY APPROVAL
File No: ########-########

CONSULTANT BRANDING

RUHNAU CLARKE ARCHITECTS

arcadia
ARCADIA, INC.
2301 East Vernon Avenue
Vernon, California 90058
Ph: (323) 269-7300
Fx: (323) 261-9927

MOUNT TRANSIT ADMINISTRATION FACILITY: INCREMENT 3: 100% DESIGN DEVELOPMENT

PROJECT No. :50801
11/17/2023 11:41:15 AM

DRAWN BY: CHECKED BY:

ISSUE No.	DATE	DESCRIPTION	REVISION No.	DATE	DESCRIPTION
ISSUE No.	DATE	DESCRIPTION	REVISION No.	DATE	DESCRIPTION
ISSUE No.	DATE	DESCRIPTION	REVISION No.	DATE	DESCRIPTION
ISSUE No.	DATE	DESCRIPTION	REVISION No.	DATE	DESCRIPTION

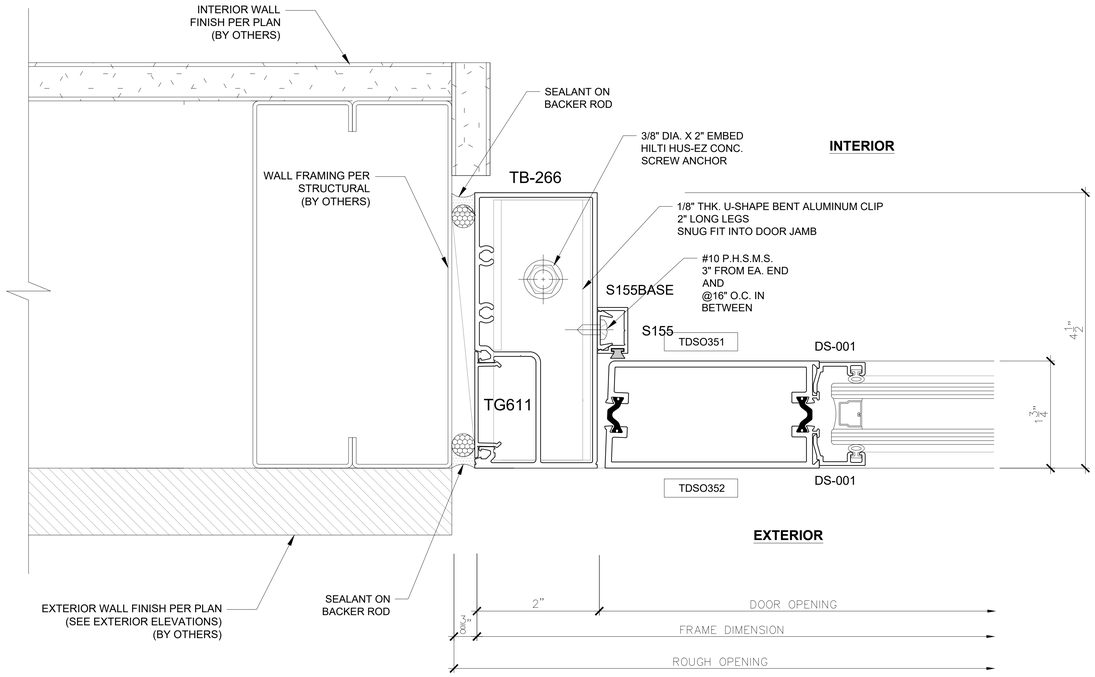

1 AFG451T (2" x 4-1/2") S/F DOOR JAMB

Arch Ref: ~
Shop Ref: CW3.02

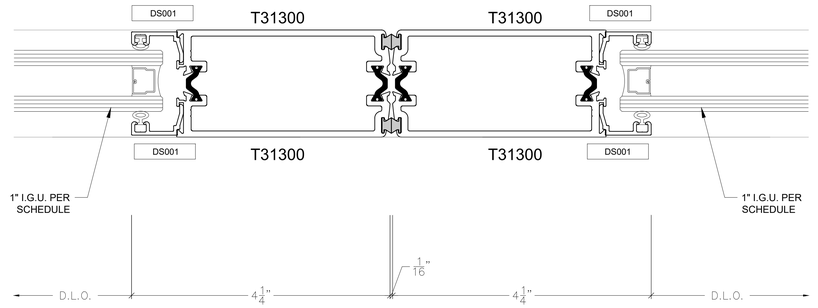

2 THERMAL DOOR MEETING STILE

Arch Ref: ~
Shop Ref: CW3.02

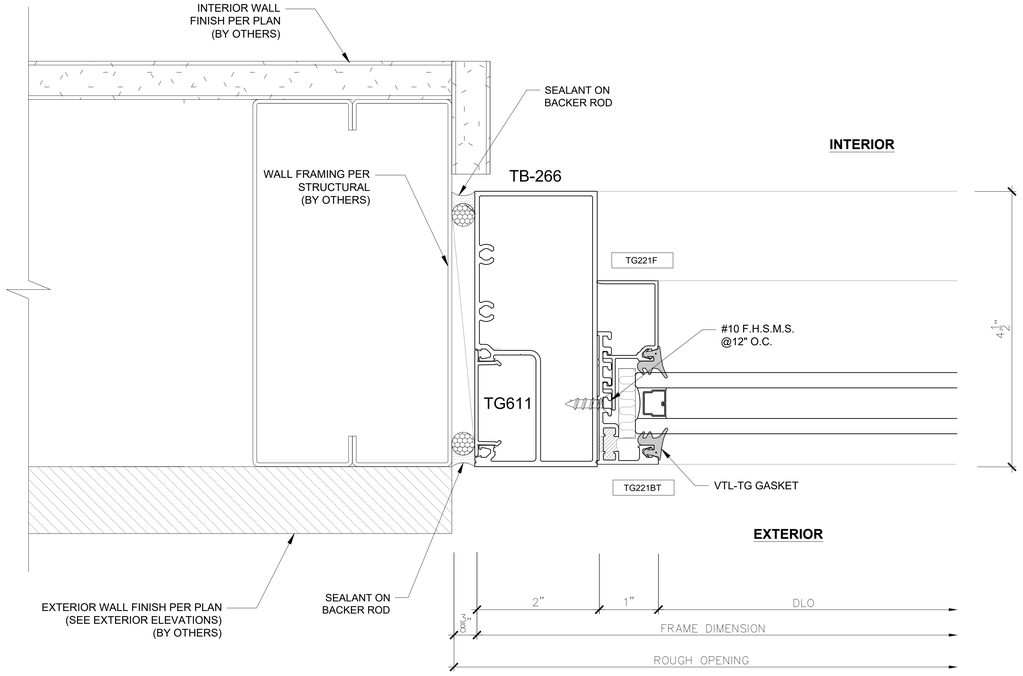

3 AFG451T (2" x 4-1/2") S/F TRANSOM

Arch Ref: ~
Shop Ref: CW3.02

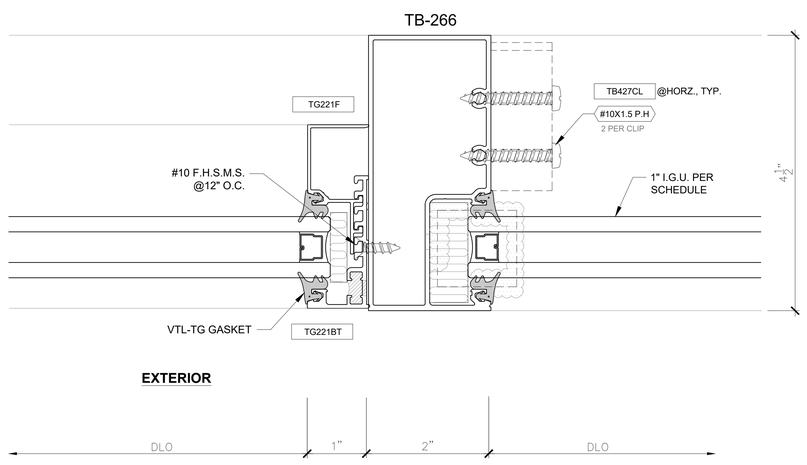

4 AFG451T (2" x 4-1/2") S/F TRANSOM

Arch Ref: ~
Shop Ref: CW3.02

STAMPS

REGISTERED PROFESSIONAL ENGINEER — CRAIG M. YOSHIMURA — No. 84674 — CIVIL — STATE OF CALIFORNIA

LICENSED ARCHITECT — ROGER CLARKE — Exp.10-31-25 — STATE OF CALIFORNIA

12/11/23

AGENCY APPROVAL
File No: ########-########

CONSULTANT BRANDING

RUHNAU CLARKE ARCHITECTS

arcadia
ARCADIA, INC.
2301 East Vernon Avenue
Vernon, California 90058
Ph: (323) 269-7300
Fx: (323) 261-9927

MOUNT TRANSIT ADMINISTRATION FACILITY: INCREMENT 3: 100% DESIGN DEVELOPMENT

PROJECT No. :50801
11/17/2023 11:41:15 AM

DRAWN BY: CHECKED BY:

ISSUE No.	DATE	DESCRIPTION	REVISION No.	DATE	DESCRIPTION
ISSUE No.	DATE	DESCRIPTION	REVISION No.	DATE	DESCRIPTION
ISSUE No.	DATE	DESCRIPTION	REVISION No.	DATE	DESCRIPTION
ISSUE No.	DATE	DESCRIPTION	REVISION No.	DATE	DESCRIPTION

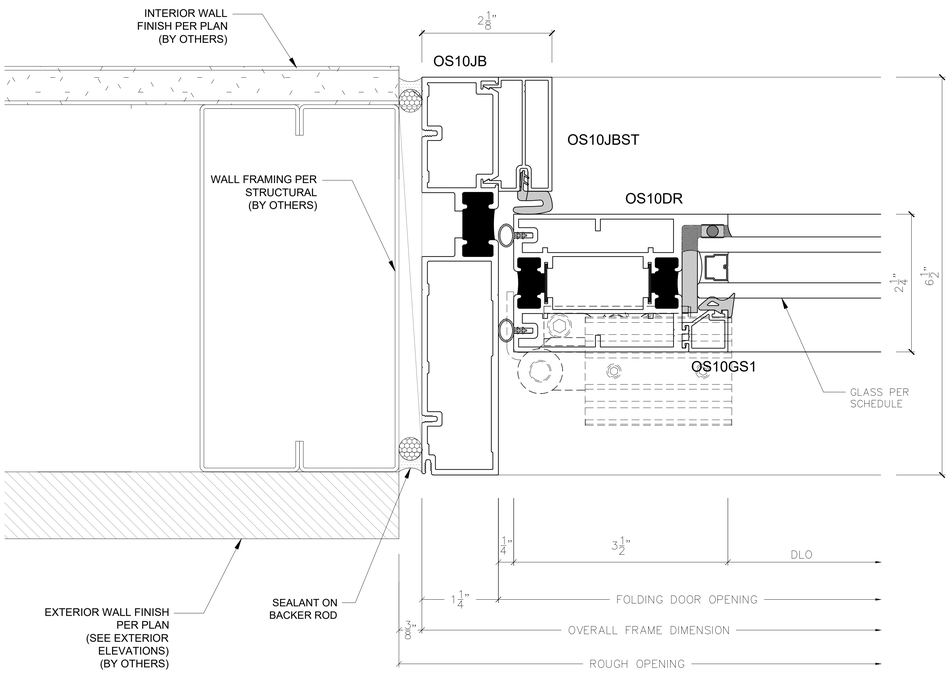

1 OASIS 10000 SERIES BI-FOLDING DOOR

Arch Ref: ~
Shop Ref: CW3.01

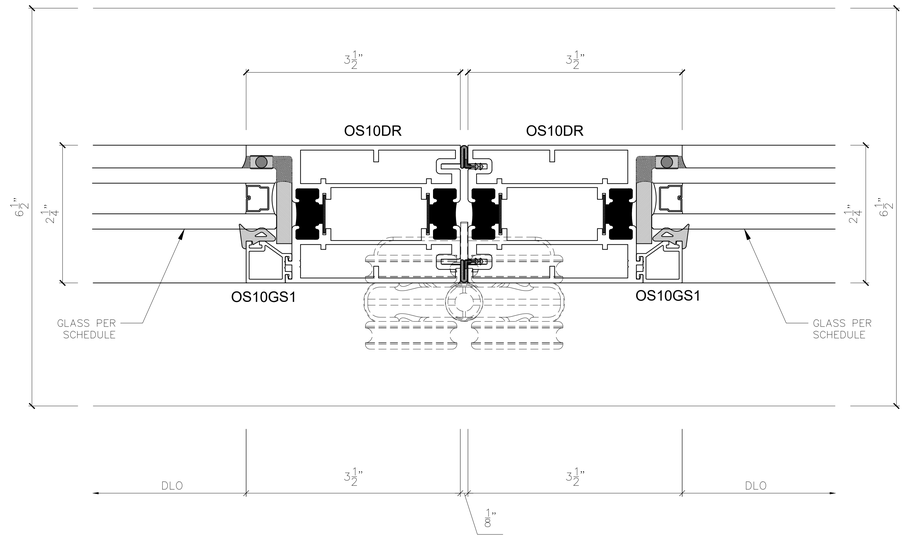

2 OASIS 10000 SERIES BI-FOLDING DOOR

Arch Ref: ~
Shop Ref: CW3.01

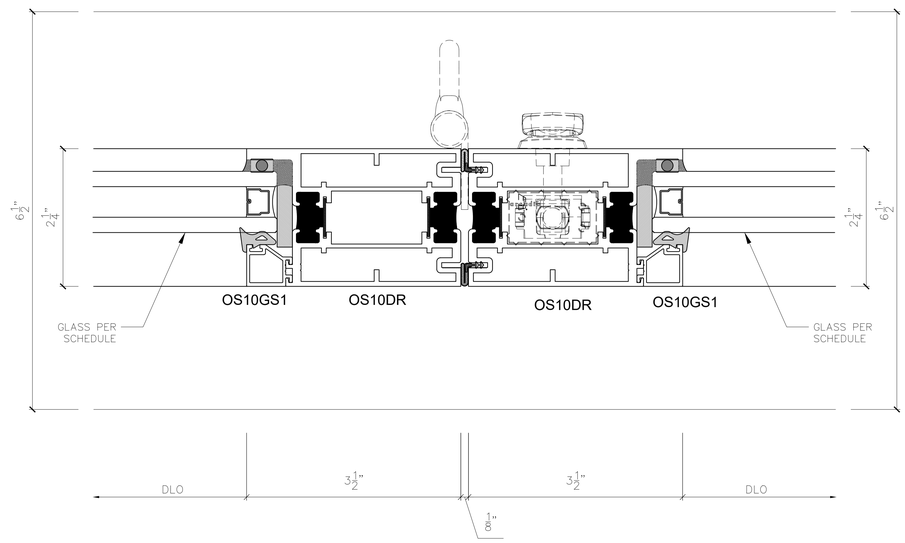

3 OASIS 10000 SERIES BI-FOLDING DOOR

Arch Ref: ~
Shop Ref: CW3.01

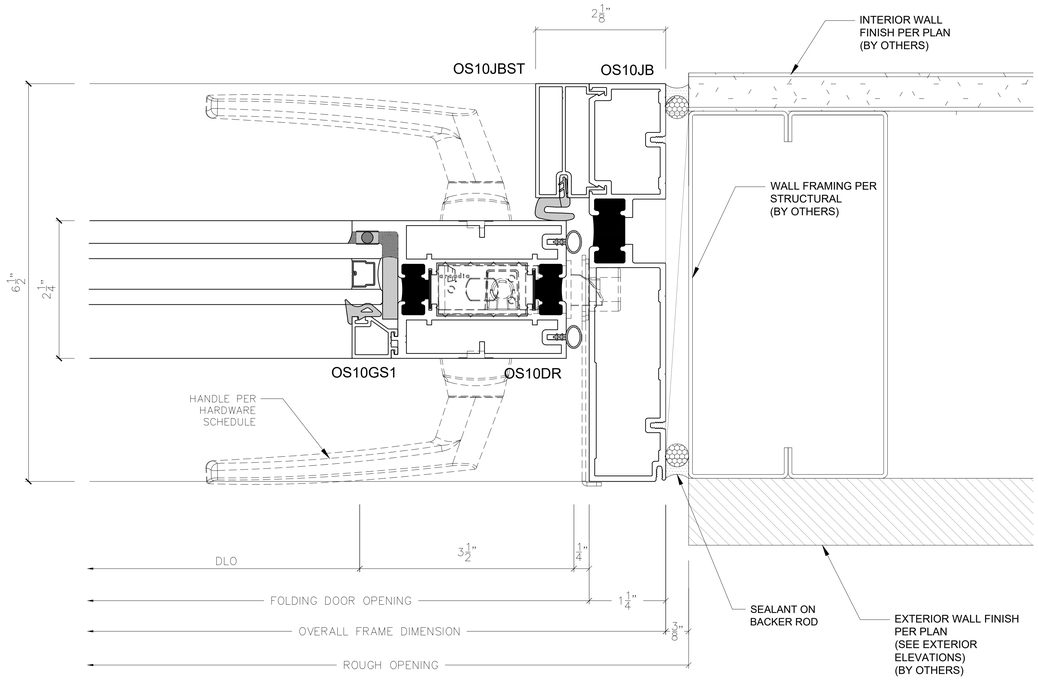

4 OASIS 10000 SERIES BI-FOLDING DOOR

Arch Ref: ~
Shop Ref: CW3.01

STAMPS

REGISTERED PROFESSIONAL ENGINEER — GARY M. HAMMER — No. 84674 — CIVIL — STATE OF CALIFORNIA

LICENSED ARCHITECT — ROGER CLARKE — Exp.10-31-25 — STATE OF CALIFORNIA

12/11/23

AGENCY APPROVAL
File No: ########-########

CONSULTANT BRANDING

RUHNAU CLARKE ARCHITECTS

arcadia
ARCADIA, INC.
2301 East Vernon Avenue
Vernon, California 90058
Ph: (323) 269-7300
Fx: (323) 261-9927

MOUNT TRANSIT ADMINISTRATION FACILITY: INCREMENT 3: 100% DESIGN DEVELOPMENT

PROJECT No. : 50801
11/17/2023 11:41:15 AM

DRAWN BY: CHECKED BY:

ISSUE No.	DATE	DESCRIPTION	REVISION No.	DATE	DESCRIPTION
ISSUE No.	DATE	DESCRIPTION	REVISION No.	DATE	DESCRIPTION
ISSUE No.	DATE	DESCRIPTION	REVISION No.	DATE	DESCRIPTION
ISSUE No.	DATE	DESCRIPTION	REVISION No.	DATE	DESCRIPTION

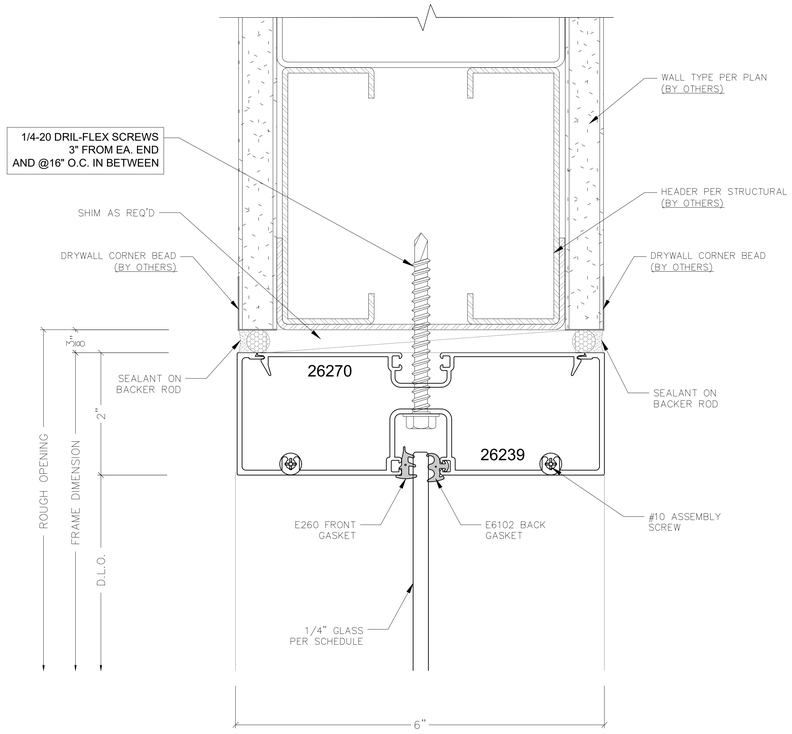

1 AR600 (2" X 6") INT. S/F HEAD

Arch Ref: ~

Shop Ref: CW4.01 ~ CW4.06

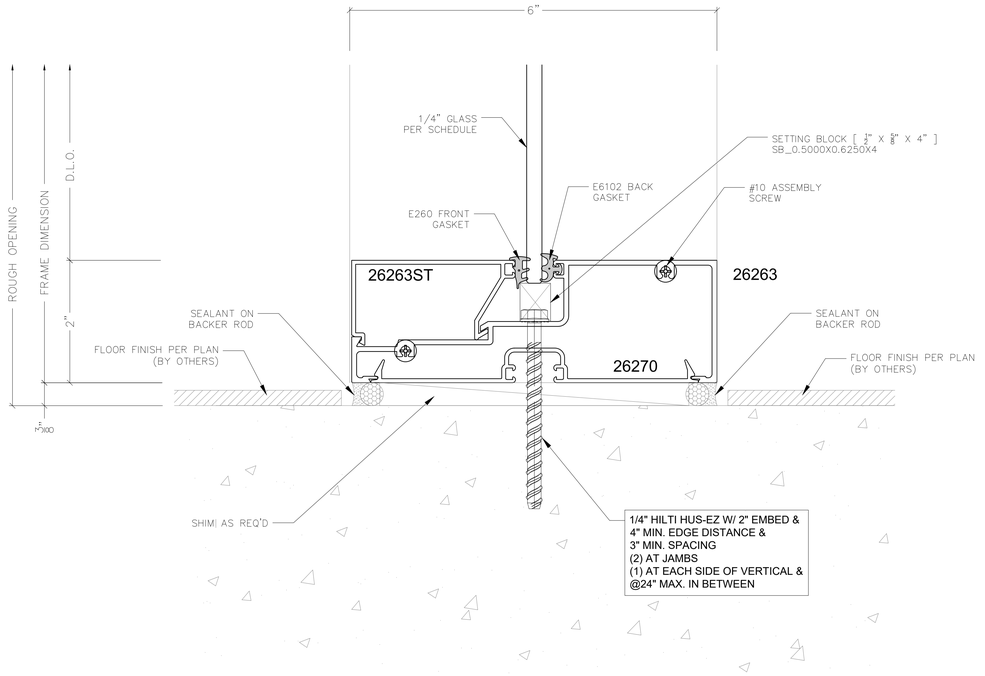

3 AR600 (2" X 6") INT. S/F SILL

Arch Ref: ~

Shop Ref: CW4.01 ~ CW4.06

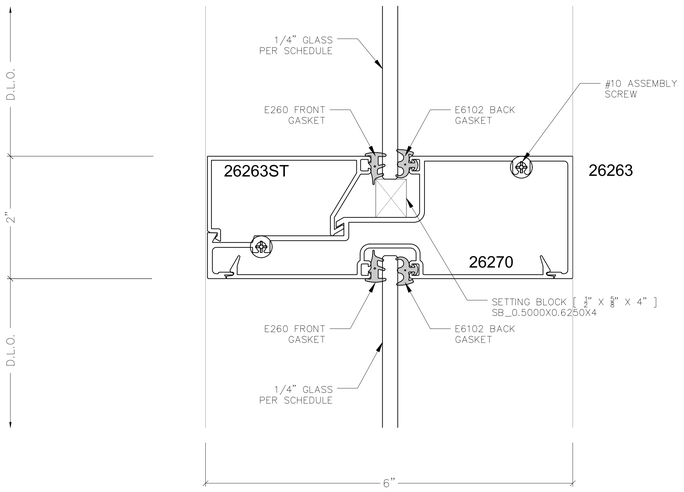

2 AR600 (2" X 6") INT. S/F HORIZONTAL

Arch Ref: ~

Shop Ref: CW4.01 ~ CW4.06

STAMPS

REGISTERED PROFESSIONAL ENGINEER DAVID M. HUMMER No. 84674 CIVIL STATE OF CALIFORNIA

LICENSED ARCHITECT ROGER CLARKE Exp.10-31-25 STATE OF CALIFORNIA

12/11/23

AGENCY APPROVAL
File No: ########-########

CONSULTANT BRANDING

RUHNAU CLARKE ARCHITECTS

arcadia
ARCADIA, INC.
2301 East Vernon Avenue
Vernon, California 90058
Ph: (323) 269-7300
Fx: (323) 261-9927

MOUNT TRANSIT ADMINISTRATION FACILITY: INCREMENT 3: 100% DESIGN DEVELOPMENT

PROJECT No. :50801
11/17/2023 11:41:15 AM

DRAWN BY: CHECKED BY:

ISSUE No.	DATE	DESCRIPTION	REVISION No.	DATE	DESCRIPTION
ISSUE No.	DATE	DESCRIPTION	REVISION No.	DATE	DESCRIPTION
ISSUE No.	DATE	DESCRIPTION	REVISION No.	DATE	DESCRIPTION
ISSUE No.	DATE	DESCRIPTION	REVISION No.	DATE	DESCRIPTION

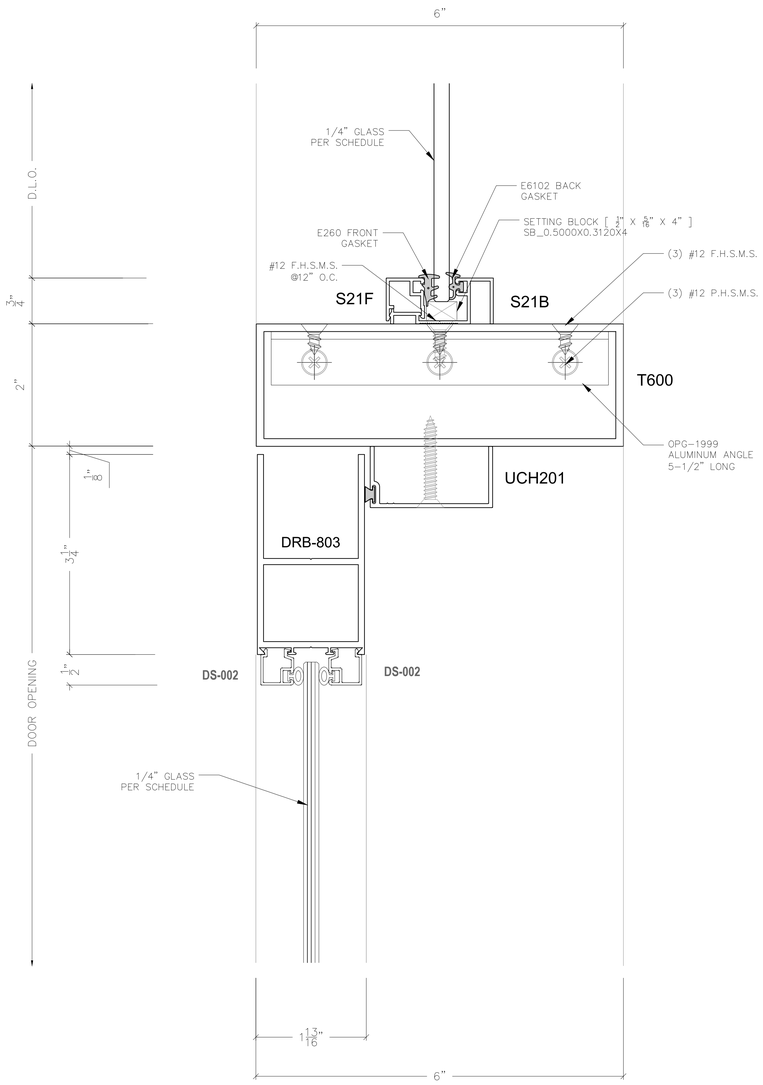

1 AR600 (2" X 6") INT. S/F DOOR HEADER & TOP RAIL

Arch Ref: ~
Shop Ref: CW4.01 ~ CW4.06

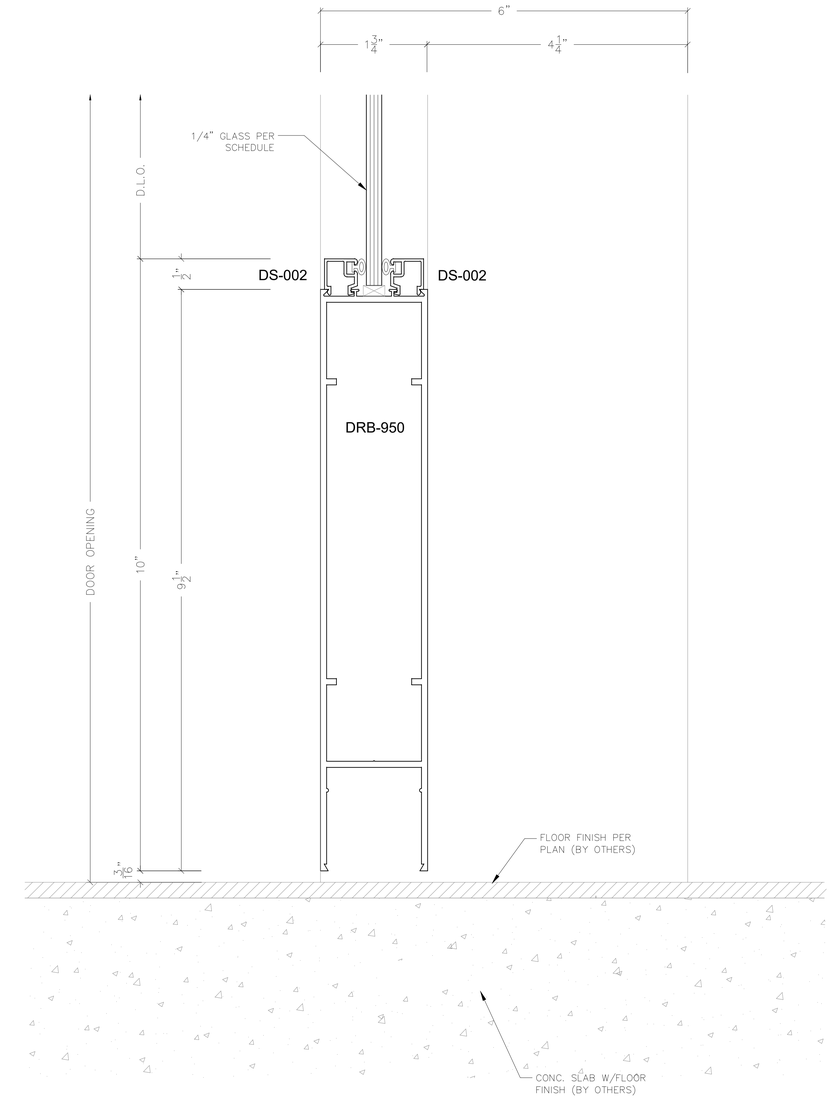

2 AR600 (2" X 6") INT. S/F DOOR BOTTOM RAIL

Arch Ref: ~
Shop Ref: CW4.01 ~ CW4.06

STAMPS

REGISTERED PROFESSIONAL ENGINEER DAVID M. HERRMANN No. 84674 CIVIL STATE OF CALIFORNIA

LICENSED ARCHITECT ROGER CLARKE Exp.10-31-25 STATE OF CALIFORNIA

12/11/23

AGENCY APPROVAL
File No: ########-########

CONSULTANT BRANDING

RUHNAU CLARKE ARCHITECTS

arcadia
ARCADIA, INC.
2301 East Vernon Avenue
Vernon, California 90058
Ph: (323) 269-7300
Fx: (323) 261-9927

MOUNT TRANSIT ADMINISTRATION FACILITY: INCREMENT 3: 100% DESIGN DEVELOPMENT

PROJECT No. : 50801
11/17/2023 11:41:15 AM

DRAWN BY: CHECKED BY:

ISSUE No.	DATE	DESCRIPTION	REVISION No.	DATE	DESCRIPTION
ISSUE No.	DATE	DESCRIPTION	REVISION No.	DATE	DESCRIPTION
ISSUE No.	DATE	DESCRIPTION	REVISION No.	DATE	DESCRIPTION
ISSUE No.	DATE	DESCRIPTION	REVISION No.	DATE	DESCRIPTION

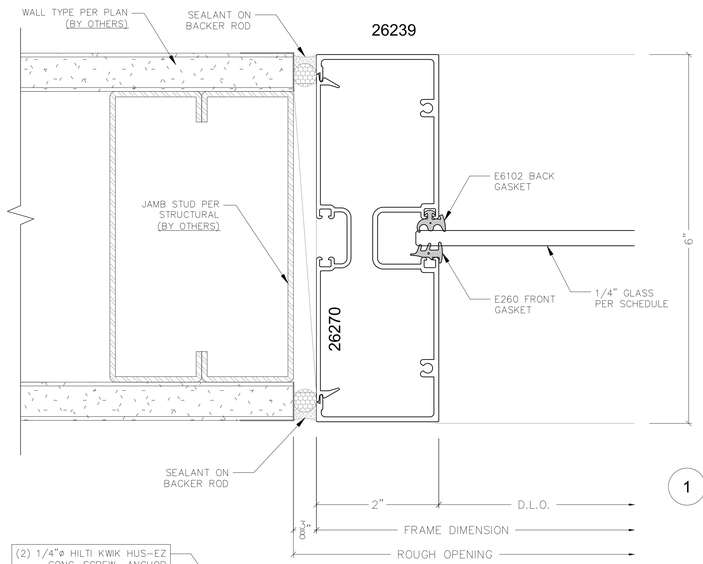

1 AR600 (2" X 6") INT. S/F JAMB

Arch Ref: ~
Shop Ref: CW4.01 ~ CW4.06

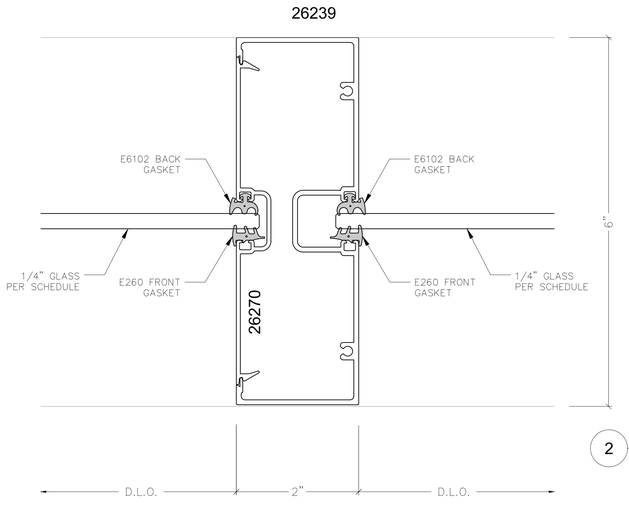

2 AR600 (2" X 6") INT. S/F VERTICAL

Arch Ref: ~
Shop Ref: CW4.01 ~ CW4.06
~

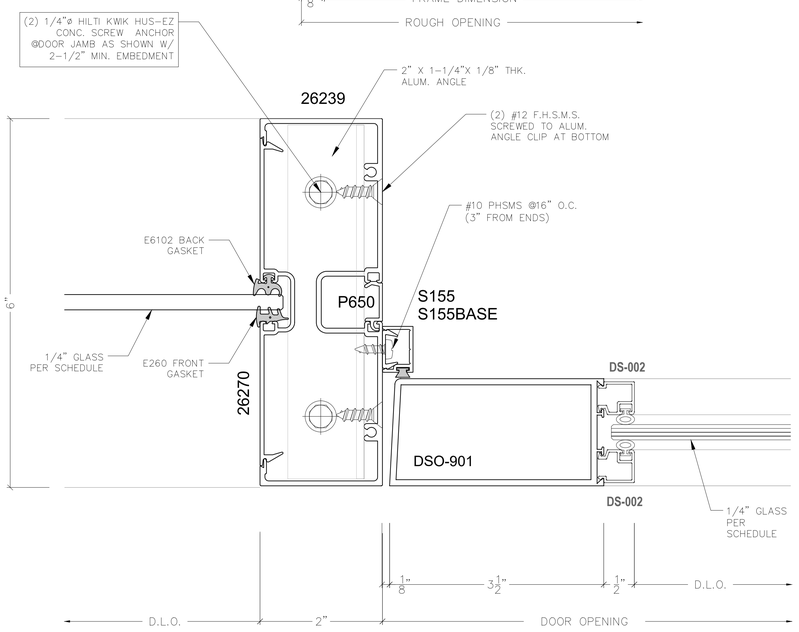

3 AR600 (2" X 6") INT. S/F DOOR JAMB

Arch Ref: ~
Shop Ref: CW4.01 ~ CW4.06

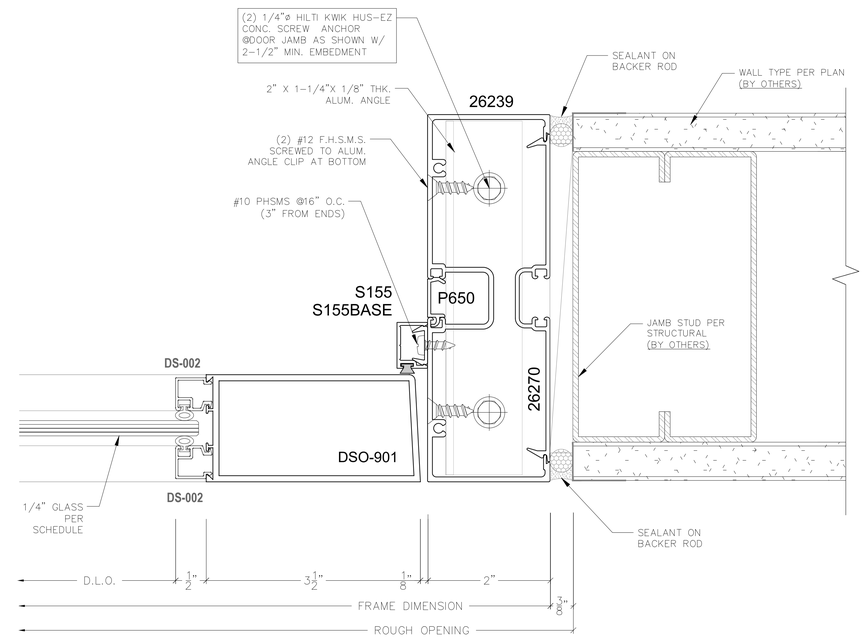

4 AR600 (2" X 6") INT. S/F DOOR JAMB

Arch Ref: ~
Shop Ref: CW4.01 ~ CW4.06

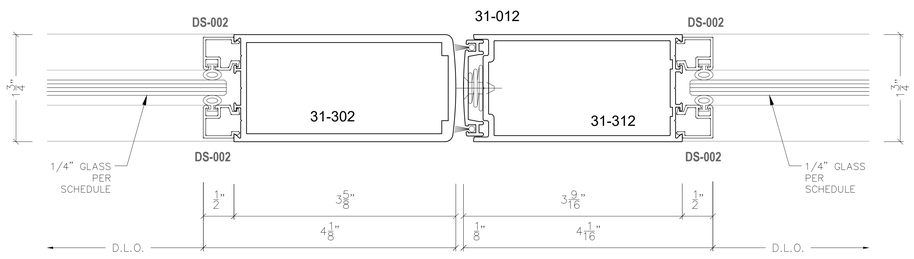

5 DOOR MEETING STILE

Arch Ref: ~
Shop Ref: CW4.06

STAMPS

REGISTERED PROFESSIONAL ENGINEER
GARY M. HOHMANN
No. 84674
CIVIL
STATE OF CALIFORNIA

LICENSED ARCHITECT
ROGER CLARKE
Exp.10-31-25
STATE OF CALIFORNIA

12/11/23

AGENCY APPROVAL
File No: ########-########

CONSULTANT BRANDING

RUHNAU
CLARKE
ARCHITECTS

arcadia
ARCADIA, INC.
2301 East Vernon Avenue
Vernon, California 90058
Ph: (323) 269-7300
Fx: (323) 261-9927

MOUNT TRANSIT ADMINISTRATION FACILITY: INCREMENT 3: 100% DESIGN DEVELOPMENT

PROJECT No. :50801
11/17/2023 11:41:15 AM

DRAWN BY: CHECKED BY:

ISSUE No.	DATE	DESCRIPTION	REVISION No.	DATE	DESCRIPTION
ISSUE No.	DATE	DESCRIPTION	REVISION No.	DATE	DESCRIPTION
ISSUE No.	DATE	DESCRIPTION	REVISION No.	DATE	DESCRIPTION
ISSUE No.	DATE	DESCRIPTION	REVISION No.	DATE	DESCRIPTION

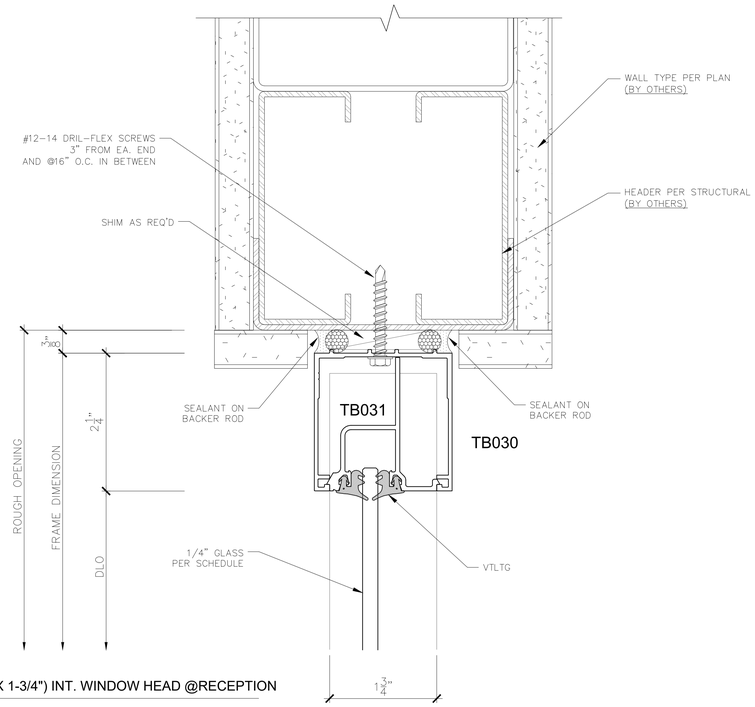

1 ATL175 (2" X 1-3/4") INT. WINDOW HEAD @RECEPTION

Arch Ref: ~
Shop Ref: CW4.07

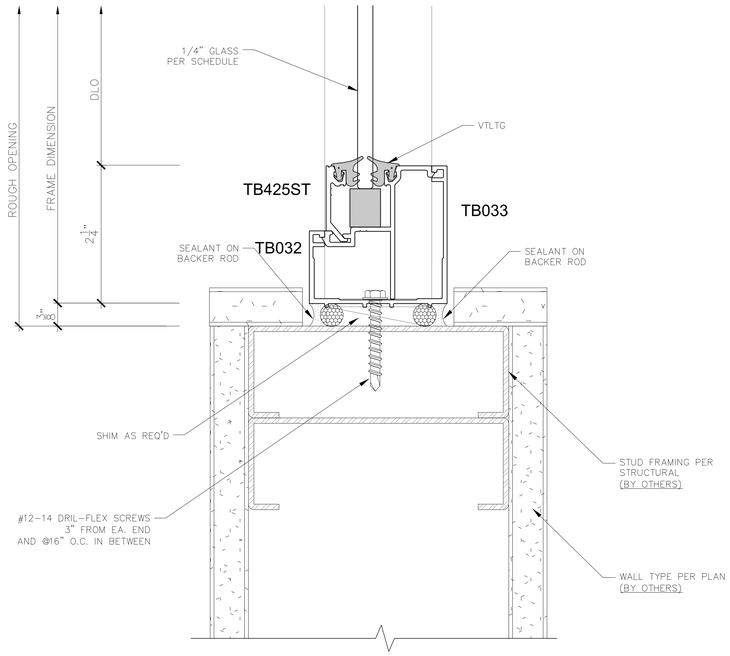

2 ATL175 (2" X 1-3/4") INT. WINDOW SILL @RECEPTION

Arch Ref: ~
Shop Ref: CW4.07

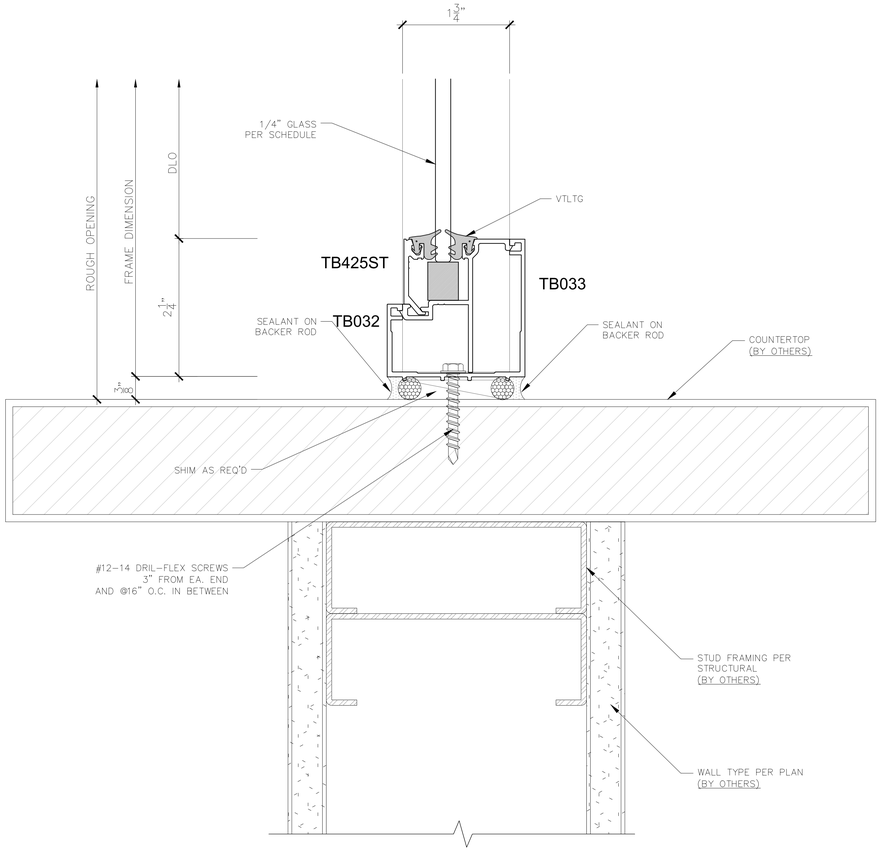

3 ATL175 (2" X 1-3/4") INT. WINDOW SILL AT COUNTERTOP @RECEPTION

Arch Ref: ~
Shop Ref: CW4.07

STAMPS

REGISTERED PROFESSIONAL ENGINEER — DAVID M. HUNTSMAN — No. 84674 — CIVIL — STATE OF CALIFORNIA

LICENSED ARCHITECT — ROGER CLARKE — Exp.10-31-25 — STATE OF CALIFORNIA

12/11/23

AGENCY APPROVAL
File No: ########-########

CONSULTANT BRANDING

RUHNAU CLARKE ARCHITECTS

arcadia
ARCADIA, INC.
2301 East Vernon Avenue
Vernon, California 90058
Ph: (323) 269-7300
Fx: (323) 261-9927

MOUNT TRANSIT ADMINISTRATION FACILITY: INCREMENT 3: 100% DESIGN DEVELOPMENT

PROJECT No. :50801
11/17/2023 11:41:15 AM

DRAWN BY: CHECKED BY:

ISSUE No.	DATE	DESCRIPTION	REVISION No.	DATE	DESCRIPTION
ISSUE No.	DATE	DESCRIPTION	REVISION No.	DATE	DESCRIPTION
ISSUE No.	DATE	DESCRIPTION	REVISION No.	DATE	DESCRIPTION
ISSUE No.	DATE	DESCRIPTION	REVISION No.	DATE	DESCRIPTION

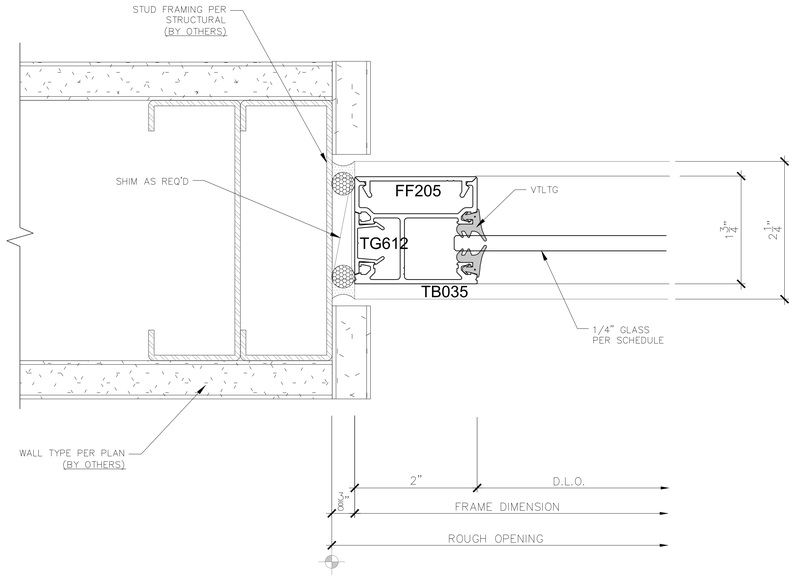

1 ATL175 (2" X 1-3/4") INT. WINDOW JAMB @RECEPTION

Arch Ref: ~
Shop Ref: CW4.07

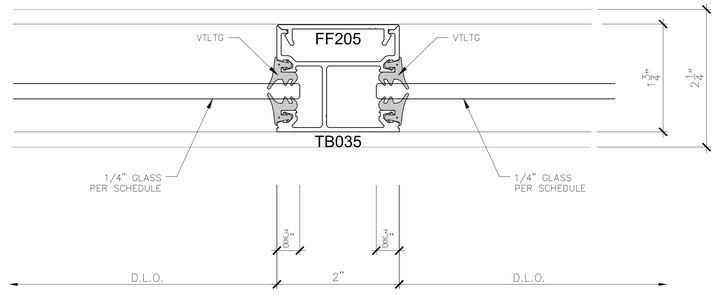

2 ATL175 (2" X 1-3/4") INT. WINDOW VERTICAL @RECEPTION

Arch Ref: ~
Shop Ref: CW4.07

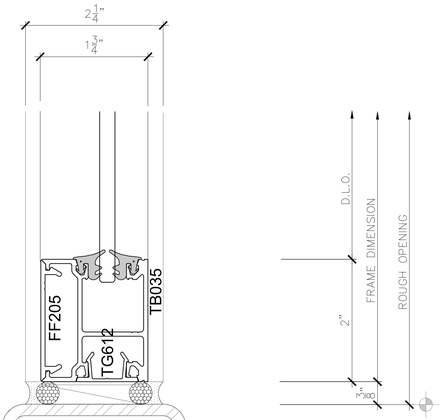

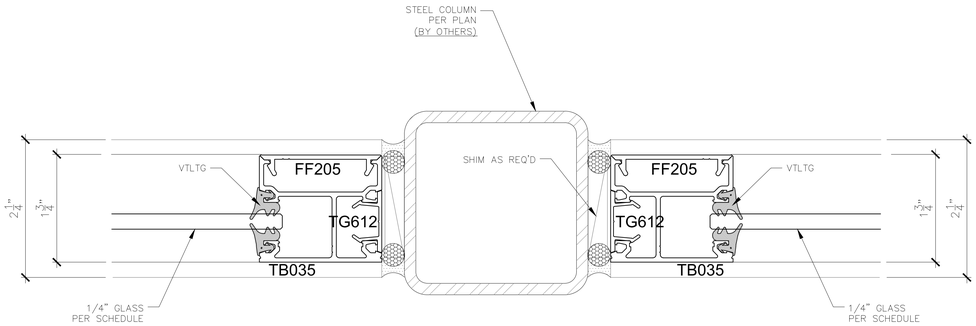

3 ATL175 (2" X 1-3/4") INT. WINDOW JAMB @RECEPTION

Arch Ref: ~
Shop Ref: CW4.07

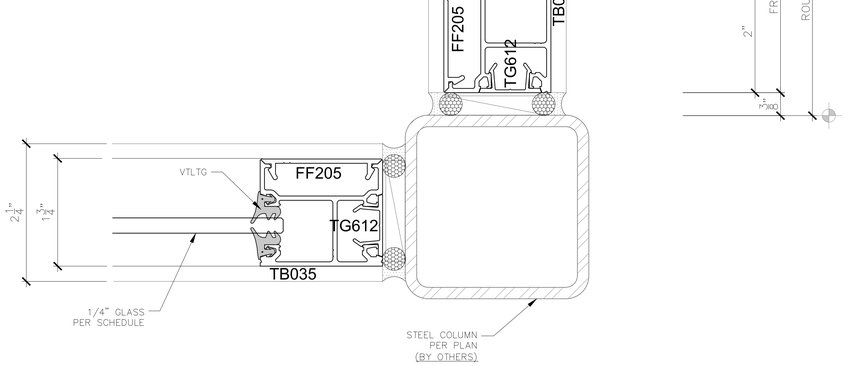

4 ATL175 (2" X 1-3/4") INT. WINDOW JAMB @RECEPTION

Arch Ref: ~
Shop Ref: CW4.07

STAMPS

REGISTERED PROFESSIONAL ENGINEER — DAVID M. HUNTSMAN — No. 84674 — CIVIL — STATE OF CALIFORNIA

LICENSED ARCHITECT — ROGER CLARKE — Exp.10-31-25 — STATE OF CALIFORNIA

12/11/23

AGENCY APPROVAL
File No: ########-########

CONSULTANT BRANDING

RUHNAU CLARKE ARCHITECTS

arcadia
ARCADIA, INC.
2301 East Vernon Avenue
Vernon, California 90058
Ph: (323) 269-7300
Fx: (323) 261-9927

MOUNT TRANSIT ADMINISTRATION FACILITY: INCREMENT 3: 100% DESIGN DEVELOPMENT

PROJECT No. :50801
11/17/2023 11:41:15 AM

DRAWN BY: CHECKED BY:

ISSUE No.	DATE	DESCRIPTION	REVISION No.	DATE	DESCRIPTION
ISSUE No.	DATE	DESCRIPTION	REVISION No.	DATE	DESCRIPTION
ISSUE No.	DATE	DESCRIPTION	REVISION No.	DATE	DESCRIPTION
ISSUE No.	DATE	DESCRIPTION	REVISION No.	DATE	DESCRIPTION