THE GEOTECHNICAL ENGINEER SHALL SUBMIT A COMPREHENSIVE REPORT DOCUMENTING FINAL SOIL IMPROVEMENTS CONSTRUCTED, CONSTRUCTION OBSERVATION, AND THE RESULTS OF THE CONFIRMATION TESTING AND ANALYSIS TO THE CALIFORNIA GEOLOGICAL SURVEY (CGS). THE PROJECT FOUNDATION CONSTRUCTION SHALL NOT COMMENCE UNTIL FINAL CGS ACCEPTANCE LETTER IS ISSUED AND PROCESSED BY DSA AS A DEFERRED SUBMITTAL.

Performing Arts Center

Hacienda La Puente Unified School District
Temple Academy
635 North California Avenue
La Puente, CA 91744

DSA BACK CHECK
09.20.2023

C:\Users\rudy.monico\Documents\RP22_HLPUSD-PAC_Central_rudy.monico.rvt

APPL No. A03-122864

IDENTIFICATION STAMP
DIV. OF THE STATE ARCHITECT
APP: 03-122864 INC:
REVIEWED FOR
SS ☑ FLS ☑ ACS ☑
DATE: 10/03/2023

DSA Stamp

Architect

RACHLIN
PARTNERS
8640 National Boulevard
Culver City, CA 90232
310.204.3400

Disclaimer:

THESE DRAWINGS ARE THE PROPERTY OF THE ARCHITECT. THE DESIGNS SHOWN AND DESCRIBED HEREIN INCLUDING ALL TECHNICAL DRAWINGS ARE PROPRIETARY AND CANNOT BE COPIED, DUPLICATED OR COMMERCIALLY EXPLOITED IN ANY WAY WITHOUT THE ARCHITECT'S EXPRESS WRITTEN CONSENT. SHALL NOT BE USED BY THE OWNER ON OTHER PROJECTS, FOR ADDITIONS TO THIS PROJECT, OR FOR COMPLETION OF THIS PROJECT BY OTHERS. THE OWNER AGREES TO HOLD HARMLESS, INDEMNIFY AND DEFEND THE ARCHITECT AGAINST ALL DAMAGES, CLAIMS AND LOSSES, INCLUDING DEFENSE COSTS, ARISING OUT OF ANY REUSE OF PLANS AND SPECIFICATIONS WITHOUT THE WRITTEN AUTHORIZATION OF THE ARCHITECT OF RECORD.

Copyright © 2022 Rachlin Partners, All Rights Reserved.

Performing Arts Center
Hacienda La Puente Unified School District
635 North California Avenue
La Puente, CA 91744

Rev	Date	Issue
1	7.22.22	50% DD
2	10.21.22	50% CD
3	12.09.22	100% CD DSA SUBMITTAL
4	6.19.23	100% CD DSA RESUBMITTAL
5	9.20.23	DSA BACK CHECK

Date: 9.20.2023
Scale:
Drawn By: JP, NZ
Checked By: RM

Architect / Engineer Stamp

LICENSED ARCHITECT
RONALD M. RACHLIN
NO. C-26229
REN. 8-31-25
STATE OF CALIFORNIA

Consultants
Miyamoto International, Inc.
The Ruzika Company, Inc.
MDC Consulting Engineers
Pocock Design Solutions
Newson Brown Acoustics, LLC
VCA Engineers, Inc.
HJSA Consulting

Sheet Title

Cover Sheet

Sheet Number

G001

SHEET INDEX

Sheet Number	Sheet Name	07.22.2022 50% DD	08.19.2022 100%DD	10.21.2022 50% CD	12.09.2022 100% CD	06.16.2023 100% CD
01 GENERAL						
G001	Cover Sheet	■	■	■	■	■
G002	Sheet Index	■	■	■	■	■
G003	General Notes			■	■	■
G201	Code Analysis Plan	■	■	■	■	■
G202	Code Analysis Site Plan				■	■
01 GENERAL: 5						
02 LANDSCAPE						
L101	Overall Key Plan			■	■	
L300	Hardscape Schedules			■	■	
L301	Hardscape Plan			■	■	■
L301.1	Layout Plan			■	■	■
L501	Site Sections			■	■	■
L502	Site Sections			■	■	■
L601	Construction Details			■	■	■
L602	Construction Details			■	■	■
L603	Construction Details				■	■
L604	GATE, FENCE, AND RAILING DETAILS				■	■
L605	GATE AND FENCE DETAILS				■	■
L606	Landscape Lighting Details				■	■
L700	Irrigation Legends				■	■
L701	Irrigation Plan				■	■
L702	Irrigation Plan				■	■
L703	Irrigation Plan				■	■
L751	Irrigation Details				■	■
L800	Planting Legend			■	■	■
L801	Planting Plan			■	■	■
L802	Planting Plan			■	■	■
L803	Planting Plan			■	■	■
L851	Planting Details			■	■	■
02 LANDSCAPE: 22						
03 CIVIL						
C100	General Notes, Legends, And Abbreviations			■	■	■
C101	Existing Conditions			■	■	■
~~CD100~~	~~Overall Site Demolition Plan~~			■	■	■
~~CD101~~	~~Enlarged Site Demolition Plan~~			■	■	■
~~CD102~~	~~Enlarged Site Demolition Plan~~			■	■	■
CD200	Overall Utility Demolition Plan			■	■	■
CD201	Enlarged Utility Demolition Plan			■	■	■
CD202	Enlarged Utility Demolition Plan			■	■	■
C200	Overall Site Control Plan			■	■	■
C201	Enlarged Site Control Plan			■	■	■
C202	Enlarged Site Control Plan			■	■	■
C203	Enlarged Site Coordinates Plan			■	■	■
C204	Enlarged Site Coordinates Plan			■	■	■
C300	Overall Site Grading Plan			■	■	■
C301	Enlarged Site Grading Plan			■	■	■
C302	Enlarged Site Grading Plan			■	■	■
C303	Grading Sections			■	■	■
C304	Grading Sections			■	■	■
C400	Overall Site Utility Plan			■	■	■
C401	Enlarged Site Utility Plan			■	■	■
C402	Enlarged Site Utility Plan			■	■	■
C403	Enlarged Site Utility Plan and Sewer Profile			■	■	■
C600	Over Excavation Plan			■	■	■
C700	Miscellaneous Details			■	■	■
C701	Miscellaneous Details			■	■	■
C702	Miscellaneous Details			■	■	■
C800	Erosion Control Plan			■	■	■
C801	Erostion Control Details			■	■	■
03 CIVIL: ~~28~~ 25						
04 ARCHITECTURAL						
A101	Site Demolition Plan	■	■	■	■	■
A111	Overall Site Plan	■	■	■	■	■
A112	Site Accessibility Plan				■	■
A113	Fire Department Access Plan				■	■
A121	Enlarged Site Plan		■	■	■	■
A122	Enlarged Site Plan			■	■	■
A210	Rigging Pit Plan	■	■	■	■	■
A211	Orchestra Level Plan	■	■	■	■	■
A212	Control Booth Level Plan	■	■	■	■	■
A213	Follow Spot Level Plan	■	■	■	■	■
A221	Orchestra Level Control Drawing	■	■	■	■	■
A222	Control Booth Level Control Drawing	■	■	■	■	■
A223	Seating Plan			■	■	■
A231	Orchestra Level Floor Finish Plan	■	■	■	■	■
A232	Control Booth Level Floor Finish Plan	■	■	■	■	■
A233	Follow Spot Level Floor Finish Plan	■	■	■	■	■
A241	Orchestra Level - Reflected Ceiling Plan	■	■	■	■	■
A242	Control Booth Level - Reflected Ceiling Plan	■	■	■	■	■
A243	Follow Spot Level - Reflected Ceiling Plan	■	■	■	■	■
A244	Loading Gallery - Reflected Ceiling Plan	■	■	■	■	■
A251	Roof Plan	■	■	■	■	■
A311	Exterior Elevations - North South	■	■	■	■	■
A312	Exterior Elevations - East West	■	■	■	■	■
A321	Curtain Wall and Storefront Elevations	■	■	■	■	■
A331	Curtain Wall Screen Enlarged Plan				■	■
A332	Curtain Wall Screen Elevation and Enlarged Plan		■	■	■	■
A333	Aluminium Canopy Elevations and Plans				■	■
A411	Building Sections	■	■	■	■	■
A412	Building Sections	■	■	■	■	■
A413	Building Sections	■	■	■	■	■
A421	Wall Sections	■	■	■	■	■
A422	Wall Sections	■	■	■	■	■
A423	Wall Sections	■	■	■	■	■
A424	Wall Sections	■	■	■	■	■
A425	Wall Sections				■	■
A426	Wall Sections				■	■
A511	Enlarged Plans - Men's Restroom	■	■	■	■	■
A512	Enlarged Plans - Women's Restroom	■	■	■	■	■
A513	Enlarged Plans - Men's Dressing	■	■	■	■	■
A514	Enlarged Plans - Women's Dressing	■	■	■	■	■
A515	Enlarged Plan - Stage	■	■	■	■	■
A516	Enlarged Plans - Box Boom	■	■	■	■	■
A517	Enlarged Plans - Box Boom	■	■	■	■	■
A518	Enlarged Plans - Side Acoustic Wall Panels		■	■	■	■
A519	Enlarged Plans - Side Acoustic Wall Panels		■	■	■	■

SHEET INDEX (continued)

Sheet Number	Sheet Name	07.22.2022 50% DD	08.19.2022 100%DD	10.21.2022 50% CD	12.09.2022 100% CD	06.16.2023 100% CD
A520	Enlarged Plans - Rear Acoustic Wall Panels		■	■	■	■
A521	Interior Elevations - Lobby	■	■	■	■	■
A522	Interior Elevations - Orchestra/ Parterre	■	■	■	■	■
A523	Interior Elevations - Stage	■	■	■	■	■
A524	Enlarged Plan - Shop	■	■	■	■	■
A541	Wheelchair Lift Plans and Sections	■	■	■	■	■
A611	Door and Window Schedules	■	■	■	■	■
A621	Finish Schedule and Material Legend	■	■	■	■	■
A631	Toilet Accessories Schedule	■	■	■	■	■
A641	Signage Details and Schedule				■	■
A642	Orchestra/Parterre Level Signage Plans				■	■
A643	Control Booth/Follow Spot Level Signage Plans				■	■
A711	Partition Types and Framing Details	■	■	■	■	■
A811	Site Details				■	■
A821	Exterior Details				■	■
A822	Exterior Details				■	■
A823	Exterior Details				■	■
A831	Roof Details				■	■
A832	Roof Details			■	■	■
A841	Door and Window Details			■	■	■
A842	Door and Window Details				■	■
A843	Curtain Wall Screen Details			■	■	■
A861	Interior Details			■	■	■
A862	Interior Details			■	■	■
A863	Interior Details			■	■	■
A864	Interior Details			■	■	■
A865	Interior Details				■	■
A866	Interior Details				■	■
A871	Ceiling Details			■	■	■
A872	Ceiling Details				■	■
A873	Ceiling Details				■	■
A874	Ceiling Details				■	■
A875	Ceiling Details				■	■
A881	Casework Details				■	■
A882	Casework Details				■	■
A901	Catwalk Details			■	■	■
04 ARCHITECTURAL: 81						
05 STRUCTURAL						
S0.1	General Notes and Typical Details	■	■	■	■	■
S0.2	Foundation and Typical Details	■	■	■	■	■
S0.3	Masonry Details	■	■	■	■	■
S0.4	Typical Steel and Misc. Details	■	■	■	■	■
S0.5	Metal Stud, Metal Deck and Misc. Details	■	■	■	■	■
S0.6	Metal Stud and Misc. Details	■	■	■	■	■
S0.7	Mechanical and Misc. Details	■	■	■	■	■
S0.8	Roof and Floor Details	■	■	■	■	■
S0.9	Catwalk Details	■	■	■	■	■
S0.10	Details	■	■	■	■	■
S0.11	Stair Details	■	■	■	■	■
S0.12	Details	■	■	■	■	■
S2.11	Foundation Plan	■	■	■	■	■
S2.12	Control Booth Framing Plan	■	■	■	■	■
S2.13	Low Roof Framing & Catwalk Framing Plan	■	■	■	■	■
S2.14	Roof Framing Plan		■	■	■	■
S4.1	Wall Elevations			■	■	■
S4.2	Wall Elevations			■	■	■
S4.3	Wall Elevations			■	■	■
S5.1	Sections			■	■	■
S5.2	Sections			■	■	■
S5.3	Sections			■	■	■
S5.4	Sections			■	■	■
S5.5	Sections			■	■	■
S5.6	Sections			■	■	■
S5.7	Sections			■	■	■
S5.8	Sections				■	■
05 STRUCTURAL: 27						
05.1 GEOPIER						
GP0.1	GEOPIER NOTES AND DETAILS				■	■
GP0.2	GEOPIER SCHEDULES				■	■
GP1.1	GEOPIER LOCATION PLAN				■	■
05.1 GEOPIER: 3						
06 MECHANICAL						
M001	Mechanical Legend and General Notes	■	■	■	■	■
M002	Mechanical Schedules	■	■	■	■	■
M200	Mechanical Seating Level Floorplan				■	■
M201	Mechanical Orchestra Level Plan	■	■	■	■	■
M202	Mechanical Control Booth Level Plan	■	■	■	■	■
M203	Mechanical Follow Spot Level Plan	■	■	■	■	■
M301	Mechanical Roof Plan	■	■	■	■	■
M401	Mechanical Details		■	■	■	■
M402	Mechanical Details				■	■
M403	Mechanical Details				■	■
M501	Control Details				■	■
M601	Title 24				■	■
M701	Mechanical Sections				■	■
M702	Mechanical Sections				■	■
06 MECHANICAL: 14						
07 ELECTRICAL						
E001	Electrical Notes and Symbols List		■	■	■	■
E002	Electrical Single Line Diagram	■	■	■	■	■
E003	Electrical Panel Schedules	■	■	■	■	■
E004	Electrical Lighting Fixture Schedule		■	■	■	■
E010	Interior Lighting Title 24 Calculations				■	■
E011	Exterior Lighting Title 24 Calculations				■	■
E012	Electrical Distribution Title 24 Calculations				■	■
~~E101~~	~~Electrical Demolition Site Plan~~		■	■	■	■
E111	Electrical Site Plan		■	■	■	■
E121	Electrical Enlarged Lighting Site Plan				■	■
E210	Electrical Rigging Pit Floor Plan				■	■
E211	Electrical Orchestra Level Power Plan	■	■	■	■	■
E212	Electrical Control Booth Level Power Plan		■	■	■	■
E213	Electrical Follow Spot Level Power Plan		■	■	■	■
E214	Electrical Roof Plan		■	■	■	■
E240	Electrical Low Level Lighting Plan		■	■	■	■
E241	Electrical Main Level Lighting Plan		■	■	■	■
E241A	Electrical Main Level Emergency Photometric		■	■	■	■
E242	Electrical Control Booth Lighting Plan		■	■	■	■

SHEET INDEX (continued)

Sheet Number	Sheet Name	07.22.2022 50% DD	08.19.2022 100%DD	10.21.2022 50% CD	12.09.2022 100% CD	06.16.2023 100% CD
E242A	Electrical Control Booth Emergency Photometric Calc.		■	■	■	■
E243	Electrical Catwalk Levels Lighting Plan		■	■	■	■
E310	Fire Alarm Rigging Pit Floor Plan		■	■	■	■
E311	Fire Alarm Orchestra Level Floor Plan		■	■	■	■
E312	Fire Alarm Control Booth Level Floor Plan		■	■	■	■
E313	Fire Alarm Follow Spot Level Floor Plan		■	■	■	■
E314	Fire Alarm Roof Plan		■	■	■	■
E321	Fire Alarm Riser Diagram		■	■	■	■
E331	Fire Alarm Calculations		■	■	■	■
E401	Electrical Details		■	■	■	■
E402	Electrical Details		■	■	■	■
07 ELECTRICAL: ~~39~~ 29						
08 PLUMBING						
P001	Plumbing Legend and General Notes	■	■	■	■	■
P100	Plumbing Site Plan			■	■	■
P201	Plumbing Orchestra Level Plan	■	■	■	■	■
P202	Plumbing Control Booth Level Plan	■	■	■	■	■
P203	Plumbing Follow Spot Level Plan	■	■	■	■	■
P301	Plumbing Roof Plan	■	■	■	■	■
P401	Plumbing Enlarged Plans	■	■	■	■	■
P501	Plumbing Details	■	■	■	■	■
P502	Plumbing Details	■	■	■	■	■
08 PLUMBING: 9						
09 FIRE PROTECTION						
FS001	Fire Sprinkler Site Plan and General Notes		■	■	■	■
FS201	Fire Sprinkler Orchestra Level Plan		■	■	■	■
FS202	Fire Sprinkler Control Booth Level Plan		■	■	■	■
FS203	Fire Sprinkler Follow Spot Level Plan		■	■	■	■
FS301	Fire Sprinkler Sections		■	■	■	■
FS401	Fire Sprinkler Details				■	■
09 FIRE PROTECTION: 6						
10 LIGHTING						
LT000	Lighting Cover Sheet				■	■
LT011	Lighting Fixture Schedule		■	■	■	■
LT012	Lighting Fixture Schedule			■	■	■
LT031	Lighting Control Zone Schedule				■	■
LT210	Lighting Plan - Low Level	■	■	■	■	■
LT211	Lighting Plan - Main Level RCP	■	■	■	■	■
LT212	Lighting Plan - Mezzanine Level RCP	■	■	■	■	■
LT213	Lighting Plan - Catwalk Levels		■	■	■	■
LT701	Lighting Elevations			■	■	■
10 LIGHTING: 9						
11 THEATER LIGHTING						
TL000	Sheet Index and Project Notes	■	■	■	■	■
TL211	Stage Lighting Plan - Stage Level	■	■	■	■	■
TL212	Stage Lighting Plan – Mezzanine level	■	■	■	■	■
TL213	Stage Lighting Plan - Catwalk Level	■	■	■	■	■
TL214	Stage Lighting Plan - Loading Gallery and Arbor Well	■	■	■	■	■
TL711	Stage Lighting Elevations		■	■	■	■
TL712	Stage Lighting Elevations			■	■	■
TL713	Stage Lighting Mounting Details			■	■	■
TL811	Stage Lighting Details -Circuit Devices			■	■	■
TL812	Stage Lighting Details -Circuit Devices			■	■	■
TL821	Stage Lighting Details - Control Devices			■	■	■
TL822	Stage Lighting Details - Control Devices			■	■	■
TL823	Stage Lighting Details - Control Devices			■	■	■
TL911	Stage Lighting Control Riser	■	■	■	■	■
TL912	Lighting Risers				■	■
TL921	Stage Lighting - Schedules	■	■	■	■	■
TL931	Stage Lighting Plot				■	■
11 THEATER LIGHTING: 17						
12 THEATER RIGGING						
TR000	Sheet Index and Project Notes	■	■	■	■	■
TR211	Stage Rigging Plans	■	■	■	■	■
TR611	Stage Rigging Section	■	■	■	■	■
TR711	Stage Rigging Elevations	■	■	■	■	■
TR712	Stage Rigging Elevations		■	■	■	■
TR713	Stage Rigging Elevations		■	■	■	■
TR714	Stage Rigging Elevations		■	■	■	■
TR811	Stage Rigging Details			■	■	■
TR812	Stage Rigging Details			■	■	■
TR911	Stage Rigging Schedules and Risers	■	■	■	■	■
12 THEATER RIGGING: 10						
14 AUDIOVISUAL						
T000	Audiovisual / Security / Telecomm General Notes	■	■	■	■	■
TA210	Audiovisual - Rigging Pit Plan	■	■	■	■	■
TA211	Audiovisual - Orchestra Level Plan	■	■	■	■	■
TA212	Audiovisual - Control Booth Level Plan	■	■	■	■	■
TA213	Audiovisual - Follow Spot Level Plan	■	■	■	■	■
TA232	Audiovisual -Speaker Array Mounting Details				■	■
TA241	Audiovisual - Orchestra Reflected Ceiling Plan	■	■	■	■	■
TA242	Audiovisual - Control Booth Level RCP	■	■	■	■	■
TA243	Audiovisual - Follow Spot Level RCP	■	■	■	■	■
TA411	Audiovisual –	■	■	■	■	■
TA412	Audiovisual - Building Sections			■	■	■
TA413	Audiovisual - Building Sections	■	■	■	■	■
TA500	Audiovisual - One Line Diagrams	■	■	■	■	■
TA501	Audiovisual - One Line Diagrams	■	■	■	■	■
TA502	Audiovisual - Diagrams	■	■	■	■	■
TA503	Audiovisual -					
TA504	Audiovisual -					
14 AUDIOVISUAL: 17						
15 SECURITY						
SC211	Security - Orchestra Level Plan				■	■
SC212	Camera Coverage Security				■	■
15 SECURITY: 2						
16 TELECOMM						
TC211	Telecomm Orchestra Level plan				■	■
TC212	Telecomm Control Booth Level Plan				■	■
TC213	Telecomm Follow Spot Level Plan				■	■
16 TELECOMM: 3						
Grand total: 283						

APPL No. A03-122864

IDENTIFICATION STAMP
DIV. OF THE STATE ARCHITECT
APP: 03-122864 INC:
REVIEWED FOR
SS ☑ FLS ☑ ACS ☑
DATE: 10/03/2023

DSA Stamp

Architect

RACHLIN PARTNERS
8640 National Boulevard
Culver City, CA 90232
310.204.3400

Disclaimer:

THESE DRAWINGS ARE THE PROPERTY OF THE ARCHITECT. THE DESIGNS SHOWN AND DESCRIBED HEREIN INCLUDING ALL TECHNICAL DRAWINGS ARE PROPRIETARY AND CANNOT BE COPIED, DUPLICATED OR COMMERCIALLY EXPLOITED IN ANY WAY. THEY ARE NOT TO BE CHANGED OR ALTERED AND SHALL NOT BE USED BY THE OWNER ON OTHER PROJECTS, FOR ADDITIONS TO THIS PROJECT, OR FOR COMPLETION OF THIS PROJECT BY OTHERS. THE OWNER AGREES TO HOLD HARMLESS, INDEMNIFY AND DEFEND THE ARCHITECT AGAINST ALL DAMAGES, CLAIMS AND LOSSES, INCLUDING DEFENSE COSTS, ARISING OUT OF ANY REUSE OF PLANS AND SPECIFICATIONS WITHOUT THE WRITTEN AUTHORIZATION OF THE ARCHITECT OF RECORD.

Copyright © 2022 Rachlin Partners, All Rights Reserved.

Performing Arts Center
Hacienda La Puente Unified School District
635 North California Avenue
La Puente, CA 91744

Rev	Date	Issue
1	7.22.22	50% DD
2	10.21.22	50% CD
3	12.09.22	100% CD DSA SUBMITTAL
4	6.19.23	100% CD DSA RESUBMITTAL
5	9.20.23	DSA BACK CHECK

Date: 9.20.2023
Scale:
Drawn By: JP, NZ
Checked By: RM

Architect / Engineer Stamp

LICENSED ARCHITECT
JOSEPH PARISEAU
NO. C-28229
REN. 8-31-25
STATE OF CALIFORNIA

Consultants
Miyamoto International, Inc.
The Ruzika Company, Inc.
MDC Consulting Engineers
Pocock Design Solutions
Newson Brown Acoustics, LLC
VCA Engineers, Inc.
HJSA Consulting

Sheet Title

Sheet Index

Sheet Number

G002

C:\Users\rody.monico\Documents\PZ2_HLPUSD-PAC_Central_rody.monico.rvt

ABBREVIATIONS

&	AND	F.O.C.	FACE OF CONCRETE	QT.	QUARRY TILE
∠	ANGLE	F.O.F.	FACE OF FINISH		
@	AT	F.O.S.	FACE OF STUD	R.	RISER
℄	PROPERTY LINE	F.O.M.	FACE OF MASONRY	RAD.	RADIUS
℄	CENTERLINE	F.O.W.	FACE OF WALL	R.D.	ROOF DRAIN
Ø	DIAMETER	F.P.	FIREPROOF	R.E.	RIM ELEVATION
#	NUMBER	F.S.	FACE OF STUDS	R.	REINFORCING BAR
(E)	EXISTING	FT.	FOOT OR FEET	REF.	REFERENCE
(N)	NEW	FTG.	FOOTING	REINF.	REINFORCED
		FURR.	FURRING	REQD.	REQUIRED
A.B.	ANCHOR BOLT	FUT.	FUTURE	RESIL.	RESILIENT
A.C.	ASPHALT CONCRETE	F.V.	FIELD VERIFY	R.F.P.	REINFORCED FIBERGLASS PANEL
ACC.	ACCESSIBILITY			RM.	ROOM
ACOUST.	ACOUSTICAL	G.	GAS	R.O.	ROUGH OPENING
A.D.	AREA DRAIN	GA.	GAUGE	RWD.	REDWOOD
ADJ. SH.	ADJUSTABLE SHELVING	GALV.	GALVANIZED	R.W.L.	RAIN WATER LEADER
AGG.	AGGREGATE	G.B.	GRAB BAR		
ALUM.	ALUMINUM	G.I.	GALVANIZED IRON	S.B.	SPLASH BLOCK
APPROX.	APPROXIMATELY	GLU-LAM.	GLUED LAMINATED	S.C.	SOLID CORE
ARCH.	ARCHITECTURAL	GND.	GROUND	S.C.J.	SAW CUT JOINT
		GYP.	GYPSUM BOARD	SCHED.	SCHEDULE
BD.	BOARD	GYP. BD.	GYPSUM WALL BOARD	S.D.	STORM DRAIN
BLDG.	BUILDING			SEC.	SECURITY
BLK.	BLOCK	H.B.	HOSE BIBB	SHT.	SHEET
BLKG.	BLOCKING	H.C.	HOLLOW CORE	SIM.	SIMILAR
B.M.	BENCH MARK	HDBD.	HARDBOARD	S.J.	SCORE JOINT
BOTT.	BOTTOM	HDWD.	HARDWOOD	S.M.	SHEET METAL
B.U.R.	BUILT UP ROOFING	HDWE.	HARDWARE	SPECS.	SPECIFICATIONS
		H.M.	HOLLOW METAL	SQ.	SQUARE
C.B.	CATCH BASIN	HORIZ.	HORIZONTAL	S/S	SERVICE SINK
CEM.	CEMENT	HR.	HOUR	S.S.	SANITARY SEWER
C.G.	CORNER GUARD	HT.	HEIGHT	S. ST.	STAINLESS STEEL
C.I.	CAST IRON			STL.	STEEL
C.J.	CONSTRUCTION JOINT	I.D.	INSIDE DIAMETER	STD.	STANDARD
CLR.	CHAIN LINK FENCE	I.E.	INVERT ELEVATION	STOR.	STORAGE
CLKG.	CAULKING	INSUL.	INSULATION	STRUCT.	STRUCTURAL
CLG.	CEILING	INT.	INTERIOR	S.T.S.M.S.	SELF-TAPPING SHEET METAL
CLR.	CLEAR			SCREW	
COL.	COLUMN	JAN.	JANITOR	SUSP.	SUSPENDED
C.O.	CLEAN OUT			SVF.	SHEET VINYL FLOORING
CONC.	CONCRETE	KIT.	KITCHEN	SYM.	SYMMETRICAL
CONST.	CONSTRUCTION				
CONT.	CONTINUOUS	LAB.	LABORATORY	T.	TREAD
C.T.G.	CLEAN OUT TO GRADE	LAV.	LAVATORY	T.C.	TOP OF CONCRETE OR CURB
C.P.	CONTROL POINT			TEL.	TELEPHONE
CSK.	COUNTERSUNK	MAX.	MAXIMUM	TEMP.	TEMPERED
C.T.	CERAMIC TILE	MECH.	MECHANICAL	T&G	TONGUE & GROOVE
CTR.	CENTER	MEMB.	MEMBRANE	THK.	THICK
CW.	CURTAIN WALL	MFR.	MANUFACTURER	T.O.F.	TOP OF FRAMING
		M.H.	MAN HOLE	T.O.S.	TOP OF STEEL
DBL.	DOUBLE	MIN.	MINIMUM	TOT.	TOTAL
DEPT.	DEPARTMENT	MISC.	MISCELLANEOUS	T.P.	TOP OF PAVEMENT
DET.	DETAIL	MRGB.	MOISTURE RESISTANT GYPSUM BOARD	TS	STRUCTURAL TUBE
D.F.	DRINKING FOUNTAIN	M.T.	METAL THRESHOLD	T.S.	TRANSITION STRIP
DIAM.	DIAMETER	MTD.	MOUNTED	T.V.	TELEVISION
DIM.	DIMENSION	MTL.	METAL	T.W.	TOP OF WALL
DR.	DRAWER	M.T.P.	METAL TOILET PARTITION	TYP.	TYPICAL
DS.	DOWNSPOUT	MULL.	MULLION		
D.S.P.	DRY STANDPIPE			U.N.O.	UNLESS NOTED OTHERWISE
DWGS.	DRAWINGS	N.I.C.	NOT IN CONTRACT	U.O.N.	UNLESS OTHERWISE NOTED
		NO.	NUMBER	UR.	URINAL
EA.	EACH	NOM.	NOMINAL	U.S.	URINAL SCREEN
E.J.	EXPANSION JOINT	N.T.S.	NOT TO SCALE	U.C.	UNDER COUNTER / CABINET
ELECT.	ELECTRICAL				
ELEV.	ELEVATION			V.C.F.	VINYL COATED FABRIC
EMER.	EMERGENCY	OBSC.	OBSCURE	VERT.	VERTICAL
ENCL.	ENCLOSURE	O.C.	ON CENTER	VEST.	VESTIBULE
E.P.	ELECTRICAL PANEL	O.D.	OUTSIDE DIAMENTER	VIF.	VERIFY IN FIELD
EQ.	EQUAL	OFCI.	OWNER-FURNISH CONTRACTOR-INSTALLED		
EQUIP.	EQUIPMENT			W.	WATER
E.W.	EACH WAY	OFF.	OFFICE	W/	WITH
E.W.C.	ELECTRIC WATER COOLER	OFOI.	OWNER-FURNISHED OWNER-INSTALLED	W.C.	WATER CLOSET
E.	EXISTING			WD.	WOOD
EXP.	EXPANSION	O.H.	OPPOSITE HAND	W.H.	WATER HEATER
EXT.	EXTERIOR	OPNG.	OPENING	W.M.	WATERPROOFING MEMBRANE
		OPP.	OPPOSITE	WNSCT.	WAINSCOT
F.A.	FIRE ALARM			W/O	WITHOUT
F.B.	FLAT BAR	PART.	PARTITION	W.O.	WHERE OCCURS
F.D.	FLOOR DRAIN	P.B.	PANIC BOLT	W.P.	WORKING POINT
F.E.	FIRE EXTINGUISHER	PL.	PLATE	WT.	WEIGHT
F.E.C.	FIRE EXTINGUISHER CABINET	PLAM.	PLASTIC LAMINATE	W.W.F.	WELDED WIRE FABRIC
F.F.	FINISH FACE	PLYWD.	PLYWOOD		
FIN.	FINISH	P.M.F.	PRESSED METAL FRAME		
F.L.	FLOW LINE	PROP.	PROPERTY		
FLR.	FLOOR	P.S.F.	POUNDS PER SQUARE FOOT		
FLUOR.	FLUORESCENT	P.S.I.	POUNDS PER SQUARE INCH		
FND.	FOUNDATION	PT.	POINT		
		P.T.W.R.	PAPER TOWEL WASTE RECEPTACLE		

DSA NOTES

1. ALL WORK SHALL CONFORM TO 2019 EDITION TITLE 24, CALIFORNIA CODE OF REGULATIONS (CCR).
2. NOT USED
3. FABRICATION AND INSTALLATION OF DEFERRED SUBMITTAL ITEMS SHALL NOT BE STARTED UNTIL CONTRACTORS DRAWINGS, SPECIFICATIONS, AND ENGINEERING CALCULATIONS FOR THE ACTUAL SYSTEMS TO BE INSTALLED HAVE BEEN ACCEPTED AND SIGNED BY THE ARCHITECT OR STRUCTURAL ENGINEER AND APPROVED BY DSA. LIST DEFERRED SUBMITTAL ITEMS FOR THIS PROJECT.
4. CHANGES TO THE DIVISION OF THE STATE ARCHITECT-APPROVED DRAWINGS AND SPECIFICATIONS SHALL BE MADE BY ADDENDA OR CONSTRUCTION CHANGE DOCUMENTS FOR CHANGES TO THE STRUCTURAL ACCESSIBILITY OR FIRE-LIFE SAFETY PORTIONS OF THE PROJECT. CHANGES SHALL BE SUBMITTED TO AND APPROVED BY DSA PRIOR TO COMMENCEMENT OF THE WORK SHOWN THEREON.(CAC 4-338 (C))
5. A PROJECT INSPECTOR EMPLOYED BY THE DISTRICT (OWNER) AND APPROVED BY THE DIVISION OF THE STATE ARCHITECT SHALL PROVIDE CONTINUOUS INSPECTION OF THE WORK. THE DUTIES OF THE INSPECTOR ARE DEFINED IN SECTION 4-342, PART 1, TITLE 24, CCR. THE INSPECTOR SHALL BE CLASS 1.
6. A DSA ACCEPTED TESTING LABORATORY DIRECTLY EMPLOYED BY THE DISTRICT (OWNER) SHALL CONDUCT ALL THE REQUIRED TESTS AND INSPECTIONS FOR THE PROJECT.
7. NOT USED
8. AN INSPECTOR WHO IS SPECIFICALLY QUALIFIED IN STRUCTURAL, MECHANICAL, AND ELECTRICAL WORK WILL BE REQUIRED FOR THIS PROJECT.
9. DRINKING WATER SHALL COMPLY WITH ALL LOCAL HEALTH DEPARTMENT REQUIREMENTS.
10. GRADING PLANS, DRAINAGE IMPROVEMENTS, ROAD AND ACCESS REQUIREMENTS, AND ENVIRONMENTAL HEALTH CONSIDERATIONS SHALL COMPLY WITH LOCAL ORDINANCES.
11. THE CALIFORNIA ENERGY CODE SECTION 10-103 REQUIRES ACCEPTANCE TESTING ON ALL NEWLY INSTALLED LIGHTING CONTROLS, MECHANICAL SYSTEMS, ENVELOPES, AND PROCESS EQUIPMENT AFTER INSTALLATION AND BEFORE PROJECT COMPLETION. AN ACCEPTANCE TEST IS A FUNCTIONAL PERFORMANCE TEST TO HELP ENSURE THAT NEWLY INSTALLED EQUIPMENT IS OPERATING AND IN COMPLIANCE WITH THE ENERGY CODE.
12. LIGHTING CONTROLS ACCEPTANCE TESTS MUST BE PERFORMED BY A CERTIFIED LIGHTING CONTROLS ACCEPTANCE TEST TECHNICIAN (ATT).
13. MECHANICAL SYSTEM ACCEPTANCE TESTS MUST BE PERFORMED BY A CERTIFIED MECHANICAL ATT FOR PROJECTS SUBMITTED ON OR AFTER OCTOBER 1, 2021.
14. ENVELOPE AND PROCESS EQUIPMENT ACCEPTANCE TESTS SHALL BE PERFORMED BY THE INSTALLING CONTRACTOR, ENGINEER/ARCHITECT OF RECORD OR THE OWNER'S AGENT.
15. A LISTING OF CERTIFIED ATT CAN BE FOUND AT: HTTPS://WWW.ENERGY.CA.GOV/PROGRAMS-AND-TOPICS/PROGRAMS/ACCEPTANCE-TEST-TECHNICIAN-CERTIFICATION-PROVIDER-PROGRAM/ACCEPTANCE.
16. THE ACCEPTANCE TESTING PROCEDURES MUST BE REPEATED, AND DEFICIENCIES MUST BE CORRECTED BY THE BUILDER OR INSTALLING CONTRACTOR UNTIL THE CONSTRUCTION/INSTALLATION OF THE SPECIFIED SYSTEMS CONFORM AND PASS THE REQUIRED ACCEPTANCE CRITERIA.
17. PROJECT INSPECTORS WILL COLLECT THE FORMS TO CONFIRM THAT THE REQUIRED ACCEPTANCE TESTS HAVE BEEN COMPLETED.
18. NEW BUILDINGS SHALL BE PROVIDED WITH EMERGENCY RESPONDER RADIO COVERAGE IN ACCORDANCE WITH CALIFORNIA FIRE CODE SECTION 510. THE PROJECT ARCHITECT (AOR) SHALL CONTACT THE LOCAL FIRE DEPARTMENT AND/OR EMERGENCY COMMUNICATIONS AUTHORITY TO OBTAIN DESIGN, EQUIPMENT SPECIFICATIONS, TESTING AND ACCEPTANCE CRITERIA. PLANS AND REQUESTED DOCUMENTATION SHALL BE SUBMITTED TO THE LOCAL AUTHORITY HAVING JURISDICTION FOR REVIEW AND APPROVAL. UPON COMPLETION, COPIES OF THE APPROVED PLANS, EQUIPMENT DATA SHEETS, TESTING AND ACCEPTANCE DOCUMENTATION SHALL BE PROVIDED TO THE SCHOOL DISTRICT.

GENERAL NOTES

1. VARIANCES BETWEEN ACTUAL CONDITIONS AND DRAWINGS

   A. THE OWNER OR THE OWNER'S DESIGNATED REPRESENTATIVE, AND THE OWNER'S CONSULTANTS WILL ASSUME NO RESPONSIBILITY FOR VARIANCES BETWEEN ACTUAL EXISTING CONDITIONS AND CONDITIONS DEPICTED AS EXISTING ON THE DRAWINGS.

   B. THE CONTRACTOR SHALL INSPECT THE SITE AND THE BUILDINGS, AND SHALL VERIFY TO HIS OWN SATISFACTION THE CONDITIONS SHOWN ON THE DRAWINGS, WHICH MATERIALLY AFFECT THE CONTRACTOR'S ABILITY TO EXECUTE THE WORK. HE SHALL IMMEDIATELY INFORM THE OWNER OR THE OWNER'S DESIGNATED REPRESENTATIVE OF ANY DISCREPANCIES BETWEEN EXISTING CONDITIONS AND THE DRAWINGS.

   C. THE DRAWINGS AND NOTES DEPICTING EXISTING CONDITIONS ARE INTENDED ONLY AS A MEANS OF PROVIDING THE CONTRACTOR A GENERAL SENSE OF EXISTING SITE AND BUILDING CONDITIONS.

   D. THE CONTRACTOR SHALL ASSUME THAT THERE MAY BE MINOR DIFFERENCES BETWEEN ACTUAL FIELD CONDITIONS AND CONDITIONS DEPICTED AS EXISTING ON THE DRAWINGS. THE OWNER WILL NOT CONSIDER REQUESTS FROM THE CONTRACTOR FOR ADDITIONAL CHARGES DUE TO SAID MINOR DISCREPANCIES.

   E. IF THE CONTRACTOR ENCOUNTERS MAJOR DIFFERENCES BETWEEN ACTUAL FIELD CONDITIONS AND CONDITIONS DEPICTED AS EXISTING ON THE DRAWINGS, THE CONTRACTOR SHALL STOP WORK IN THE AFFECTED AREA, AND SHALL IMMEDIATELY NOTIFY THE OWNER OR OWNER'S DESIGNATED REPRESENTATIVE OF SAID DIFFERENCES. THE OWNER OR OWNERS DESIGNATED REPRESENTATIVE WILL PROVIDE INSTRUCTIONS FOR PROCEEDING IN THE AFFECTED AREA. THE CONTRACTOR SHALL PROCEED WITH ALL OTHER WORK ITEMS AS REQUIRED BY THE CONTRACT DOCUMENTS.

2. INTENT OF THE DRAWINGS

   THE CONTRACTOR SHALL VISIT THE SITE AND EXAMINE THE CONDITIONS THEREON, AND THOROUGHLY ACQUAINT HIMSELF WITH OBSTACLES AND ADVANTAGES FOR PERFORMING THE WORK. THE CONTRACTOR SHALL REVIEW THE DRAWINGS AND SPECIFICATIONS, AS THERE ARE REQUIREMENTS SHOWN THEREIN THAT SIGNIFICANTLY AFFECT THE SCOPE OF THE WORK. NO ADDITIONAL CHARGES WILL BE CONSIDERED FOR WORK CAUSED BY THE CONTRACTOR'S UNFAMILIARITY WITH THE SITE, AND THE DRAWINGS AND SPECIFICATIONS, OR FAILURE OF THE OWNER OR THE OWNER'S DESIGNATED REPRESENTATIVE OR OWNERS CONSULTANTS TO ENUMERATE THE COMPLETE SCOPE OF WORK, AS REQUIRED BY THE CONTRACT DOCUMENTS, IN THE "SCOPE OF WORK" NOTES.

3. GENERIC NAMES

   THE DRAWINGS IDENTIFY MATERIALS BY GENERIC NAME, UNLESS PREFACED WITH "BASIS OF DESIGN". FOR A DESCRIPTION OF APPROVED MATERIALS AND INSTALLATION PROCEDURES SEE THE SPECIFICATIONS.

4. FINISHES

   UNLESS OTHERWISE NOTED ON THE DRAWINGS OR IN THE SPECIFICATIONS, THE SELECTION OF COLORS AND TEXTURES FOR FINISH MATERIALS SHALL BE PROVIDED BY THE ARCHITECT PRIOR TO EXECUTION OF THE WORK.

5. PROJECTS COORDINATION

   SEE THE GENERAL CONDITIONS, THE SUPPLEMENTARY CONDITIONS AND DIVISION 1 OF THE SPECIFICATIONS FOR SPECIFIC REQUIREMENTS RELATED TO PROJECT COORDINATION.

6. CODES AND REGULATIONS

   ALL CONSTRUCTION SHALL FULLY COMPLY WITH THE LOCAL BUILDING CODES AND REGULATIONS. ALL WORK SHALL ALSO CONFORM TO TITLE 24, 2019 CALIFORNIA CODE OF REGULATIONS (CCR).

7. PERMITS

   A. THE CONTRACTOR SHALL OBTAIN AND PAY FOR ALL PERMITS REQUIRED BY GOVERNING AUTHORITIES FOR THE COMPLETION OF THE WORK. THE FEES, CHARGES OR OTHER COSTS PAID BY THE CONTRACTOR FOR SAID PERMITS WILL BE REIMBURSED TO THE CONTRACTOR BY THE OWNER IN THE AMOUNTS SO PAID.

   B. THE CONTRACTOR SHALL PROCURE ALL NOTICES AND LICENSES REQUIRED FOR THE COMPLETION OF THE WORK. THE COST OF THESE NOTICES AND LICENSES IS INCIDENTAL TO OTHER ITEMS OF WORK AND NO ADDITIONAL PAYMENT WILL BE MADE FOR COSTS INCURRED BY OBTAINING NOTICES AND LICENSES OR IN CONFORMING TO THE REQUIREMENTS THEREOF.

   C. TRENCHES OR EXCAVATIONS OF 5 FEET OR MORE IN DEPTH INTO WHICH A PERSON IS REQUIRED TO DESCEND, REQUIRE A SEPARATE PERMIT FROM THE STATE OF CALIFORNIA, DIVISION OF INDUSTRIAL SAFETY.

   D. PRIOR TO THE ISSUANCE OF A BUILDING PERMIT, THE CONTRACTOR SHALL HAVE EVIDENCE OF CURRENT WORKMAN'S COMPENSATION INSURANCE COVERAGE.

8. GENERAL CONDITIONS

   THE GENERAL CONDITIONS AND ANY SUPPLEMENTAL CONDITIONS WHICH MAY BE ATTACHED OR INCLUDED AS PART OF OWNER - CONTRACTOR AGREEMENT ARE A PART OF THESE CONTRACT DOCUMENTS.

9. THE SPECIFICATIONS

   SPECIFICATIONS, WHICH ARE BOUND SEPARATELY, ARE PART OF THE CONTRACT. REFERENCE TO SECTIONS OF THE SPECIFICATION IN THE NOTES DESCRIBING THE SCOPE OF WORK ARE INTENDED AS A GUIDE ONLY AND TO ASSIST THE CONTRACTOR IN UNDERSTANDING THE COMPLETE SCOPE OF WORK.

10. BIDDING

    ALL CONTRACTORS, SUB OR GENERAL, BIDDING OR CONSTRUCTING ANY PORTION OF THIS PROJECT, SHALL BE HELD TO BE RESPONSIBLE TO REVIEW AND INCLUDE IN ANY BID SUBMITTED, ALL OTHER DRAWINGS AND SPECIFICATIONS, WHICH FORM A PART OF THESE CONSTRUCTION DOCUMENTS INCLUDING, BUT NOT LIMITED TO, ARCHITECTURAL GENERAL NOTES, CIVIL LANDSCAPE, STRUCTURAL, MECHANICAL, PLUMBING, ELECTRICAL, AND EQUIPMENT PLANS AS MAY APPLY TO SAID TRADE BIDDING.

11. VERIFICATIONS

    A. THE CONTRACTOR SHALL VERIFY ALL SIZES OR PREPARATORY WORK FOR EQUIPMENT OF OTHERS AND SHALL COORDINATE THE WORK ON THIS CONTRACT WITH ALL WORK FURNISHED BY OTHERS.

    B. SPECIFIC ITEMS NOTED TO BE VERIFIED OR FIELD VERIFIED ARE REQUIRED TO BE VERIFIED PRIOR TO ORDERING MATERIALS OR PROCEEDING WITH THE WORK.

12. DISCREPANCIES

    A. THE CONTRACTOR SHALL VERIFY ALL DIMENSIONS, ELEVATIONS AND ALL EXISTING CONDITIONS AT THE SITE BEFORE COMMENCING WORK AND REPORT AND DISCREPANCIES TO THE ARCHITECT PRIOR TO THE START OF WORK.

    B. CONTRACTOR SHALL FIELD VERIFY ALL DIMENSIONS AND EXISTING CONDITIONS AT THE SITE AND SHALL REPORT ANY DISCREPANCIES IN WRITING TO THE CONSTRUCTION MANAGER AND ARCHITECT BY MEANS OF A REQUEST FOR INFORMATION (RFI) OR AS PART OF THE APPLICABLE SHOP DRAWINGS OR SUBMITTALS.

    C. IF ANY ERRORS OR OMISSIONS APPEAR IN THE CONTRACT DOCUMENTS, THE CONTRACTOR SHALL NOTIFY THE ARCHITECT IN WRITING OF SUCH ERRORS OR OMISSIONS. IF CONTRACTOR FAILS TO GIVE SUCH NOTICE IMMEDIATELY, HE WILL BE HELD RESPONSIBLE FOR THE RESULTS OF SUCH ERRORS OR OMISSIONS AND FOR THE COST OF RECTIFYING SAME.

    D. IN CASE OF DISCREPANCIES BETWEEN ARCHITECTURAL AND CONSULTANT DRAWINGS, THE ARCHITECT WILL DETERMINE THE CORRECT INTENT OF THE WORK.

    E. SHOULD THE DRAWINGS IN THEMSELVES OR WITH THE SPECIFICATIONS OR SHOULD THE SPECIFICATIONS IN THEMSELVES DISAGREE, THE HIGHER QUALITY AND / OR GREATER QUANTITY OF WORK OR MATERIAL SHALL BE ESTIMATED UPON, AND UNLESS OTHERWISE CLARIFIED IN WRITING BY THE ARCHITECT, SHALL BE FURNISHED AND INSTALLED.

13. DESIGN INTENT

    THE CONTRACTOR SHALL NOT DEVIATE FROM THE DESIGN INTENT AND CONSTRUCTION DETAILS WITHOUT OBTAINING PRIOR APPROVAL FROM THE OWNER AND THE ARCHITECT.

14. DETAILS

    DETAILS ARE NOT INTENDED TO SHOW METHOD AND MANNER OF ACCOMPLISHING THE WORK. MINOR MODIFICATIONS MAY BE REQUIRED TO SUIT THE JOB DIMENSIONS OR CONDITIONS AND SHALL BE INCLUDED AS PART OF THE WORK.

15. DIMENSIONS

    DIMENSIONS ARE TO FACE OF STUD (FOS), FACE OF CONCRETE (FOC), OR FACE OF MASONRY (FOM) UNLESS NOTED OTHERWISE. DIMENSIONS AS SHOWN TAKE PRECEDENCE OVER ANY CONDITIONS GRAPHICALLY SHOWN ON THE DRAWINGS. DO NOT SCALE THE DRAWINGS. WHEN IN DOUBT, ASK THE ARCHITECT FOR A CLARIFICATION.

16. DEFINITIONS

    "TYPICAL" MEANS ALL, EXCEPT AS SPECIFICALLY NOTED. "SIMILAR" MEANS THERE ARE SLIGHT VARIATIONS AMONG CONDITIONS WHERE THE DETAILS OCCUR.

17. DAMAGE AND THEFT

    ANY WORK OR MATERIALS OF ONE TRADE DAMAGED BY ANOTHER TRADE BECOMES THE RESPONSIBILITY OF THE OFFENDING TRADE. THE DAMAGED WORK SHALL BE REPAIRED OR REPLACED BY THE ORIGINAL INSTALLER AND THE COSTS BORNE BY THE OFFENDER. ANY MATERIALS STOLEN FROM THE PREMISES OR DAMAGED, EITHER BEFORE OR AFTER INSTALLATION, SHALL BE REPLACED BY CONTRACTOR AT NO ADITIONAL COST TO THE OWNER. THE CONTRACTOR SHALL TAKE ALL NECESSARY PRECAUTIONS SUCH AS BARRICADES, GUARDS, ECT., AS REQUIRED TO PREVENT DAMAGE AND THEFT. SPECIAL CARE SHALL BE TAKEN TO PROTECT WORK IN PLACE, MATERIALS AND EQUIPMENT STORED, ECT., FROM THEFT AND VANDALISM.

18. PROTECTION OF EXISTING UTILITIES

    THE CONTRACTOR SHALL MAINTAIN THE UTILITIES TO THE EXISTING BUILDING OR PROVIDE TEMPORARY SERVICE CONNECTIONS AS REQUIRED.

19. COORDINATION OF TRADES

    A. THE GENERAL CONTRACTOR SHALL BE RESPONSIBLE FOR THE TIMELY ARRIVAL OF ALL SPECIFIED FINISH MATERIALS, EQUIPMENT, LIGHT FIXTURES AND OTHER SUCH MATERIALS TO BE UTILIZED ON THIS PROJECT. THE GENERAL CONTRACTOR SHALL NOTIFY THE ARCHITECT IN WRITING WITHIN 30 DAYS OF THE DATE OF CONTRACT OF THOSE SPECIFIED ITEMS THAT MAY NOT BE READILY AVAILABLE AND OF EQUAL QUANTITY AND DESCRIPTION. IF NOTIFICATION IS NOT RECEIVED BY THE ARCHITECT, THE CONTRACTOR SHALL ACCEPT RESPONSIBILITY FOR THE PROPER ORDERING AND FOLLOW UP ON SPECIFIED ITEMS AND SHALL PURSUE WHATEVER MEANS NECESSARY AT NO ADDITIONAL COST TO THE OWNER, TO INSURE AVAILABILITY OF ALL SPECIFIED ITEMS SO AS NOT TO CREATE A HARDSHIP ON THE OWNER AND NOT TO DELAY PROGRESS OF THE WORK. NO EXTENSION OF TIME TO THE CONTRACT WILL BE ALLOWED FOR THE CONTRACTOR'S INABILITY TO SECURE SPECIFIED ITEMS.

    B. CONTRACTOR SHALL PROVIDE AND LOCATE ACCESS PANELS AS REQUIRED AFTER INSTALLATION OF MECHANICAL DUCTS, PLUMBING, AND ELECTRICAL WORK. COORDINATE WITH ARCHITECT. CONTRACTOR SHALL PROVIDE A LAYOUT OF ALL ACCESS PANELS TO THE OWNER, OWNERS REPRESENTATIVE, AND ARCHITECT FOR REVIEW AND APPROVAL PRIOR TO INSTALLATION OF EQUIPMENT REQUIRING SAID ACCESS PANELS.

    C. WHERE FACTORY FINISHED OR FACTORY PRIMED ITEMS OCCUR, SUCH AS GRILLS, DIFFUSERS, METAL TRIM AND ACCESSORIES, ETC., THEY SHALL BE PAINTED TO MATCH THE ADJACENT SURFACE AS DIRECTED BY THE ARCHITECT.

    D. THE CONTRACTOR SHALL COORDINATE THE WORK AMONG ALL TRADES RELATING TO THE MOUNTING AND ATTACHMENTS OF ALL EQUIPMENT AS REQUIRED.

    E. THE CONTRACTOR SHALL PROVIDE AND COORDINATE THE EXACT DIMENSIONS, SIZES AND POSITIONS OF OPENINGS IN SLABS AND WALLS NECESSARY FOR THE INSTALLATION OF THE WORK.

    F. THE CONTRACTOR SHALL PROVIDE MOUNTING PLATES OR BLOCKING AS REQUIRED BEHIND ALL WALL-MOUNTED ITEMS SUCH AS HANDRAILS, TOILET PARTITIONS, TOILET ROOM ACCESSORIES, LIGHT FIXTURES, ETC.

20. DUST CONTROL AND INTERIOR BARRICADES

    CONTRACTOR SHALL MAINTAIN CONTINUOUS DUST ABATEMENT PROCEDURES INCLUDING VACUUMING, TRASH REMOVAL, AND MATS AT ALL ENTRIES TO THE CONSTRUCTION AREA, AS WELL AS PROVIDE EFFECTIVE DUST CONTROL BY MEANS OF FREQUENT SPRINKLING AND WATERING. EXCESSIVE BLOWING OF DUST OR CONCRETE MAY BE PUMPED. THE JOB SITE SHALL BE LEFT CLEAN AND ORDERLY AT THE END OF EACH DAY.

21. CLEANUP

    THE CONTRACTOR SHALL AT ALL TIMES KEEP THE SITE CLEAN AND FREE OF ALL WASTE MATERIAL OR RUBBISH CAUSED BY HIS OPERATIONS. AT THE COMPLETION OF THE WORK, THE CONTRACTOR SHALL REMOVE ALL WASTE MATERIALS AND RUBBISH FROM AND ABOUT THE PROJECT AS WELL AS ALL TOOLS, CONSTRUCTION EQUIPMENT, MACHINERY, AND SURPLUS MATERIALS.

22. DRAWING CHANGES

    REFER TO DSA NOTE 4 HEREIN FOR DRAWING CHANGES.

23. INSPECTOR OF RECORD

    REFER TO DSA NOTE 5 HEREIN FOR INSPECTOR OF RECORD REQUIREMENTS.

24. LOCAL ORDINANCES

    A. FOOD HANDLING FACILITIES SHALL COMPLY WITH ALL LOCAL HEALTH DEPARTMENTS AND CALIFORNIA UNIFORM RETAIL FOOD FACILITIES LAW.

    B. DRINKING WATER WELL SHALL COMPLY WITH ALL LOCAL HEALTH DEPARTMENT REQUIREMENTS.

    C. GRADING PLANS, DRAINAGE IMPROVEMENTS, ROAD AND ACCESS REQUIREMENTS AND ENVIRONMENTAL HEALTH CONSIDERATIONS SHALL COMPLY WITH ALL LOCAL ORDINANCES.

25. NOT USED

26. WORK IN ITS COMPLETED FORM

    THE CONTRACT DOCUMENTS INCLUDE INFORMATION NECESSARY TO UNDERSTAND THE DESIGN INTENT OF THE WORK IN ITS COMPLETED FORM. THE CONSTRUCTION DOCUMENTS DO NOT INCLUDE EVERY DETAIL REQUIRED FOR CONSTRUCTION. THE CONTRACTOR SHALL FURNISH MATERIALS AND LABOR NECESSARY TO COMPLETE THE WORK IN ITS ENTIRETY.

27. FIRE RATING OF ASSEMBLIES

    WHERE WALLS, PARTITIONS, FLOOR AND ROOF SYSTEMS ARE IDENTIFIED AS RATED ASSEMBLIES, PROVIDE APPROVED FIRE RATED SEALANTS AND OR SAFING (MINERAL FIBER) AT BOUNDARIES, JOINTS, AND PENETRATIONS; GYPSUM BOARD BACKING (DOG-HOUSE) AT RECESSED COMPONENTS; METAL RETAINERS; AND OTHER MATERIALS REQUIRED TO MAINTAIN THE INDICATED RATING FOR THE ASSEMBLY.

28. DEVICE CONTROLS

    IF EMERGENCY WARNING SYSTEMS ARE REQUIRED OR PROVIDED, THEY SHALL ACTIVATE A MEANS OF WARNING THE HEARING- IMPAIRED. FLASHING VISUAL ALARMS SHALL HAVE A FREQUENCY OF NOT MORE THAN 60 FLASHES PER MINUTE, A MAXIMUM PULSE DURATION OF 0.2 SECOND CLEAR OR NOMINAL WHITE XENON STROBE TYPE LAMP WITH AN INTENSITY OF 75 CANDELA AND SHALL BE PLACED 80 INCHES ABOVE THE HIGHEST FLOOR LEVEL WITHIN THE SPACE OR 6 INCHES BELOW THE CEILING, WHICHEVER IS LOWER.

    THE CENTER GRIP OF THE OPERATING HANDLES OF THE CONTROLS OR SWITCHES TO CONTROL LIGHTING AND RECEPTACLES OUTLETS, APPLIANCES, THERMOSTAT, AND OTHER ENVIRONMENT CONTROLS SHALL BE LOCATED NO HIGHER THAN 48 INCHES AND NO LOWER THAN 15 INCHES ABOVE THE FLOOR. IF THE REACH IS OVER AN OBSTRUCTION BETWEEN 20 AND 25 INCHES IN DEPTH, THE MAXIMUM HEIGHT IS REDUCED TO 44 INCHES FOR FORWARD APPROACH, OR 46 INCHES FOR SIDE APPROACH PROVIDED THE OBSTRUCTION IS NO MORE THAN 24 INCHES IN DEPTH. OBSTRUCTION MAY NOT EXTEND MORE THAN 25 INCHES FROM THE WALL BENEATH A CONTROL PER CBC 11B-308.

29. NEW WORK SHALL CONFORM TO THE REQUIREMENTS OF THE 2019 CALIFORNIA BUILDING CODE

SCOPE OF WORK

THE SCOPE OF WORK IS A NEW PERFORMING ARTS CENTER AT TEMPLE ACADEMY FOR THE HACIENDA LA PUENTE UNIFIED SCHOOL DISTRICT.

THE PROJECT INCLUDES A 508 SEAT AUDITORIUM, A PRE-FUNCTION LOBBY WITH RESTOOMS, ORCHESTRA AND PARTERRE LEVEL SEATING, A LEGITIMATE STAGE, STAGE APRON, FLY LOFT WITH LOADING GALLERIES AND COUNTERWEIGHT RIGGING SYSTEM. CATWALKS, CONTROL BOOTH, LIGHTING ROOM AND FOLLOW SPOT ARE PROVIDED WITHIN THE HOUSE.

BACK OF HOUSE FUNCTIONS INCLUDE DRESSING ROOMS WITH RESTROOMS, GREEN ROOM/FLEX SPACE, AND A SCENE SHOP WITH ADJOINING OUTDOOR SCENE YARD.

DEFERRED APPROVALS

1. CURTAIN WALL SYSTEMS AND STOREFRONTS IN COMPLIANCE WITH DSA IR 24-2 SECTIONS 1.1 AND 1.2 .
2. PERFORATED METAL PANEL SUPPORT OUTRIGGERS. OUTRIGGERS ARE PART OF THE CURTAINWALL SYSTEM AND SHALL BE INCLUDED IN THE CURTAINWALL DEFERRED APPROVAL SHOP DRAWINGS.
3. SOIL IMPROVEMENT - CGS FINAL ACCEPTANCE OF GEOHAZARD REPORT.
4. STAGE RIGGING.

INSTALLATION OF DEFERRED APPROVAL ITEMS SHALL NOT BE STARTED UNTIL DETAILED PLANS, SPECIFICATIONS AND ENGINEERING CALCULATIONS FOR ACTUAL SYSTEM TO BE INSTALLED HAVE BEEN ACCEPTED AND STAMPED AND SIGNED BY THE ARCHITECT OF RECORD AND STRUCTURAL ENGINEER OF RECORD AND APPROVED BY DSA. STOP WORK ORDER MAY BE ISSUED FOR UNAUTHORIZED INSTALLTIONS.

PROJECT DIRECTORY

CLIENT
HACIENDA LA PUENTE UNIFIED SCHOOL DISTRICT
CONTACT: JOEL DUARTE
15959 EAST GALE AVENUE
CITY OF INDUSTRY, CA 91745
TEL: 626-933-3932
Email: jduarte@hlpusd.k12.ca.us

ARCHITECT
RACHLIN PARTNERS
CONTACT: RICHARD INGRASSIA
8640 NATIONAL BOULEVARD
CULVER CITY, CALIFORNIA 90232
TEL: 310-204-3400
Email: ringrassia@rachlinpartners.com

MECHANICAL/PLUMBING ENGINEER
POCOCK DESIGN SOLUTIONS
CONTACT: TIM POCOCK
14451 CHAMBERS ROAD, SUITE 210
TUSTIN, CALIFORNIA 92780
TEL: 949-417-3903
Email: tim@pocockdesignsolutions.com

CIVIL ENGINEER
**

SYMBOL LEGEND

SYMBOL	DESCRIPTION
CLASSROOM 200 / E / 964 SF / 20 SF/OCC / 48	ROOM NAME AND NUMBER OCCUPANCY GROUP ROOM AREA PER 2019 CBC FLOOR AREA ALLOWABLE PER OCCUPANT (TABLE 1004.5) TOTAL NUMBER OF OCCUPANTS
(A)	EGRESS DOOR (SEE DOOR EGRESS LEGEND)
	EGRESS PATH OF TRAVEL
(172)	COMMON PATH OF EGRESS WITH LENGTH (TABLE 1006.2.1)
(172)	EXIT ACCESS TRAVEL DISTANCE (TABLE 1017.2)
96	NUMBER OF OCCUPANTS SERVED
	DISTANCE FROM STAIR TO ELEVATOR (113-206.2.3.2)
	1 HOUR FIRE RATED CONSTRUCTION - SEE WALL DETAILS ON A711

STAIR WIDTH CALCULATIONS

STAIR	NO. OF OCCUPANTS	REQUIRED WIDTH	WIDTH PROVIDED
LOBBY STAIR	123	123 X 0.3* = 37"	60"

* PER SECTION 1005.3.1 EXCEPTION 1.
THE BUILDING IS FULLY SPRINKLERED AND PROVIDED WITH EMERGENCY VOICE ALARM COMMUNICATION SYSTEM

DOOR EGRESS LEGEND

DOOR		NO. OF OCCUPANTS	REQUIRED WIDTH	WIDTH PROVIDED
A	MAIN EXIT	486	486 X .2 = 97.2	144"
B		85	85 X .2 = 17"	72"
C		85	85 X .2 = 17"	72"
D	OTHER	364	364 X .2 = 73"	144"
E		90	90 X .2 = 18"	72"
F		86	86 X .2 = 18"	72"
G		8	8 X .2 = 2"	36"

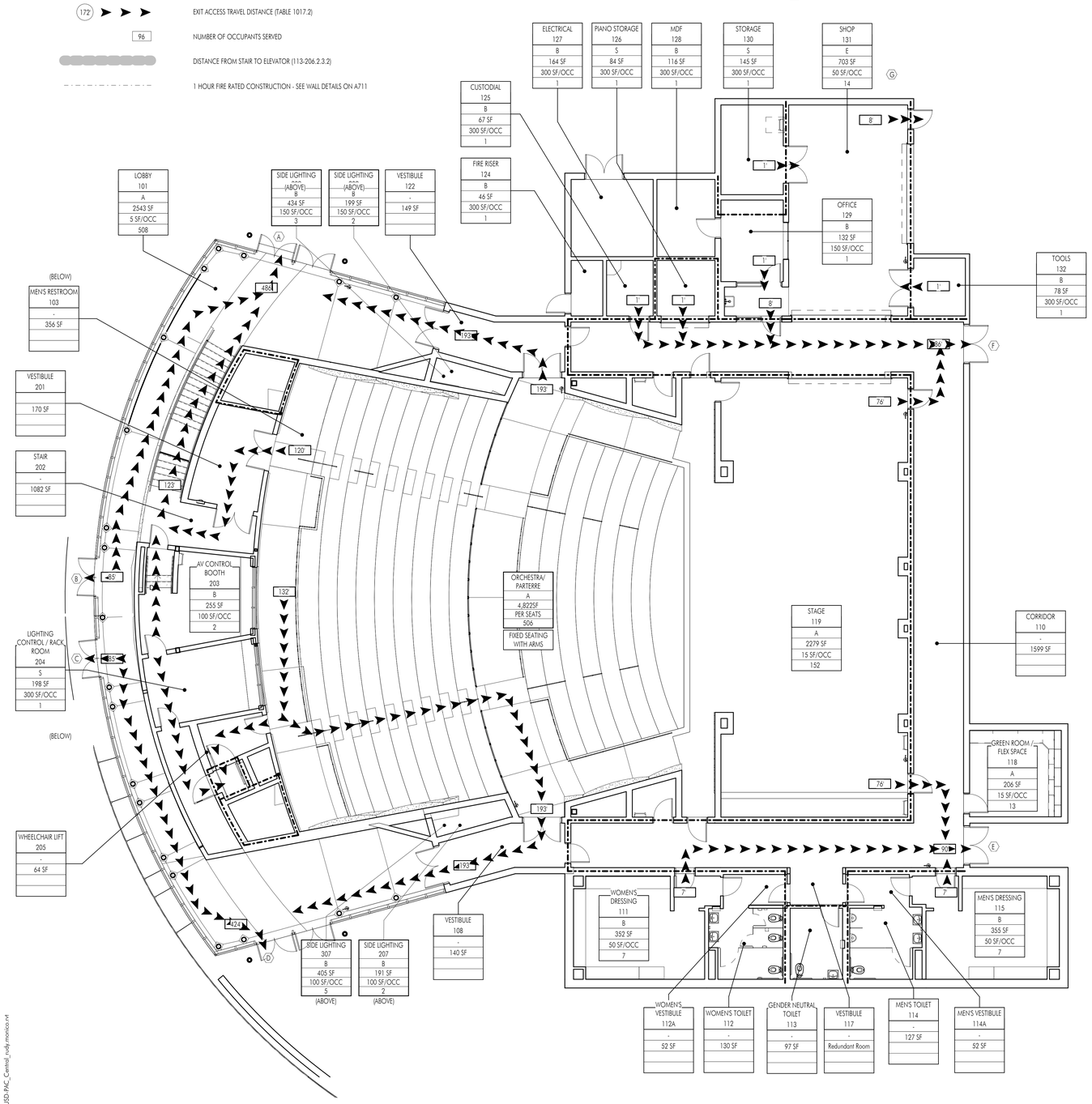

1 CODE ANALYSIS FLOOR PLAN

SCALE: 1/8" = 1'-0"

BUILDING CODE ANALYSIS

CHAPTER 3		USE AND OCCUPANCY CLASSIFICATION
98	SECTION 303.2	OCCUPANCY CLASSIFICATION: A-1 - ASSEMBLY USES, USUALLY WITH FIXED SEATING, INTENDED FOR THE PRODUCTION AND VIEWING OF THE PERFORMING ARTS OR MOTION PICTURES.
CHAPTER 4		SPECIAL DETAILED REQUIREMENTS BASED ON USE AND OCCUPANCY
138	SECTION 410.2.1	STAGE CONSTRUCTION. STAGE CONSTRUCTION SHALL BE CONSTRUCTED OF MATERIALS AS REQUIRED FOR FLOORS FOR THE TYPE OF CONSTRUCTION OF THE BUILDING IN WHICH SUCH STAGES ARE LOCATED.
138	SECTION 410.2.1.1	STAGE HEIGHT AND AREA: STAGE AREAS SHALL BE MEASURED TO INCLUDE THE ENTIRE PERFORMANCE AREA AND ADJACENT BACKSTAGE AND SUPPORT AREAS NOT SEPARATED FROM THE PERFORMANCE AREA BY FIRE-RESISTANCE-RATED CONSTRUCTION. STAGE HEIGHT SHALL BE MEASURED FROM THE LOWEST POINT ON THE STAGE FLOOR TO THE HIGHEST POINT OF THE ROOF OR FLOOR DECK ABOVE THE STAGE.
138	SECTION 410.2.4	PROSCENIUM WALL. WHERE THE STAGE HEIGHT IS GREATER THAN 50', ALL PORTIONS OF THE STAGE SHALL BE COMPLETELY SEPARATED FROM THE SEATING AREA BY A PROSCENIUM WALL WITH NOT LESS THAN A 2 – HOUR FIRE RESISTANCE RATING EXTENDING CONTINUOUSLY FROM THE FOUNDATION TO THE ROOF. **THE STAGE HEIGHT IS LESS THAN 50 FEET. THEREFORE 2-HOUR FIRE RESISTANCE IS NOT REQUIRED**
138	SECTION 410.2.7	STAGE VENTILATION. EMERGENCY VENTILATION SHALL BE PROVIDED FOR STAGES LARGE THAT 1,000 SQUARE FEE IN FLOOR AREA OR WITH A STAGE HEIGHT GREATER THAN 50 FEET. SUCH VENTILATION SHALL COMPLY WITH SECTION 410.3.7.1 OR 410.3.7.2. **ROOF VENTS ARE PROVIDED IN COMPLIANCE WITH SECTION 410.2.7.1**
139	SECTION 410.5	DRESSING AND APPURTENANT ROOMS. DRESSING AND APPURTENANT ROOMS SHALL COMPLY WITH SECTIONS 410.4.1 AND 410.4.2.
139	SECTION 410.4.1	SEPARATION FROM STAGE. THE STAGE SHALL BE SEPARATED FROM DRESSING ROOMS, SCENE DOCKS, PROPERTY ROOMS, WORKSHOPS, STOREROOMS AND COMPARTMENTS APPURTENANT TO THE STAGE AND OTHER PARTS OF THE BUILDING BY FIRE BARRIERS CONSTRUCTED IN ACCORDANCE WITH SECTION 707 OR HORIZONTAL ASSEMBLIES CONSTRUCTED IN ACCORDANCE WITH SECTION 711, OR BOTH. THE FIRE-RESISTANCE RATING SHALL BE NOTE LESS THAN 2 HOURS FOR STAGE HEIGHTS GREATER THAN 50 FEET AND NOT LESS THAN 1 HOUR FOR STAGE HEIGHTS FOR 50 FEET OR LESS. **THE STAGE HEIGHT IS LESS THAN 50 FEET THEREFORE THE SEPARATION SHALL BE 1 HOUR.**
139	SECTION 410.4.2	SEPARATION FROM EACH OTHER. DRESSING ROOMS, SCENE DOCKS, PROPERTY ROOMS, WORKSHOPS, STOREROOMS AND COMPARTMENTS APPURTENANT TO THE STAGE SHALL BE SEPARATED FROM EACH OTHER BY NOT LESS THAN 1-HOUR FIRE BARRIERS CONSTRUCTED IN ACCORDANCE WITH SECTION 707 OR HORIZONTAL ASSEMBLIES CONSTRUCTED IN ACCORDANCE WITH SECTION 711, OR BOTH.
139	SECTION 410.5	MEANS OF EGRESS. EXCEPT AS MODIFIED OR AS PROVIDED FOR THIS IN THE SECTION, THE PROVISIONS OF CHAPTER 10 APPLY.
139	SECTION 410.5.1	ARRANGEMENT. WHERE TWO OR MORE EXITS OR EXIT ACCESS DOORWAYS FROM THE STAGE ARE REQUIRED IN ACCORDANCE WITH SECTION 1006.2, NO FEWER THAN ONE EXIT OR EXIT ACCESS DOORWAY SHALL BE PROVIDED ON EACH SIDE OF THE STAGE. **TWO EXITS ARE PROVIDED, ONE AT EACH SIDE OF THE STAGE.**
139	SECTION 410.5.3	TECHNICAL PRODUCTION AREAS SHALL BE PROVIDED WITH MEANS OF EGRESS AND MEANS OF ESCAPE IN ACCORDANCE WITH SECTIONS 410.5.3.1 THROUGH 410.5.3.5.
139	SECTION 410.5.3.1	MEANS OF EGRESS. NO FEWER THAN ONE MEANS OF EGRESS SHALL BE PROVIDED FROM TECHNICAL PRODUCTION AREAS. **ALL TECHNICAL PRODUCTION AREAS HAVE AT LEAST ONE EXIT.**
139	SECTION 410.5.3.1	EXIT ACCESS TRAVEL DISTANCE. THE EXIT ACCESS TRAVEL SHALL BE NOT GREATER THAN 300 FEET FOR BUILDINGS WITHOUT A SPRINKLER SYSTEM AND 400 FEET FOR BUILDINGS EQUIPPED THROUGHOUT WITH AN AUTOMATIC SPRINKLER SYSTEM IN ACCORDANCE WITH SECTION 903.3.1.1. **THIS BUILDING IS EQUIPPED WITH AN AUTOMATIC SPRINKLER SYSTEM THEREFORE, THE MAXIMUM TRAVEL DISTANCE IS 400 FEET.**
139	SECTION 410.7	AUTOMATIC SPRINKLER SYSTEM. STAGES SHALL BE EQUIPPED WITH AN AUTOMATIC SPRINKLER SYSTEM IN ACCORDANCE WITH SECTION903.3.1.1. SPRINKLERS SHALL BE INSTALLED UNDER THE ROOF AND GRIDIRON AND UNDER ALL CATWALKS AND GALLERIES OVER THE STAGE. SPRINKLERS SHALL BE INSTALLED IN DRESSING ROOMS, PERFORMER LOUNGES, SHOPS AND STOREROOMS ACCESSORY TO SUCH STAGES. **AN AUTOMATIC SPRINKLER SYSTEM SHALL BE INSTALLED ABOVE THE STAGE AND UNDER ALL GALLERIES AND CATWALKS OVER THE STAGE. THERE IS NO GRIDIRON ON THIS PROJECT. THE AREA UNDER THE STAGE IS NOT ACCESSIBLE, THEREFORE DOES NOT REQUIRE AN AUTOMATIC SPRINKLER SYSTEM.**
CHAPTER 5		GENERAL BUILDING HEIGHTS AND AREAS
181 183	TABLE 504.3 TABLE 504.4	CONSTRUCTION TYPE: **IIB, SPRINKLERED** MAXIMUM HEIGHT: (S WITHOUT AREA INCREASE): 75' ACTUAL HEIGHT: 54' THEREFORE OK MAXIMUM STORIES: (S WITHOUT AREA INCREASE: 3 ACTUAL STORIES: 3 THEREFORE OK
185	TABLE 506.2.3	SINGLE OCCUPANCY, MULTISTORY BUILDING ALLOWABLE AREA CALCULATION Aa =m [At + (NS + It)] x SA (EQUATION S-2) Aa = [25,000 SF + (8,500SF X 0)] X 2 Aa = 25,500 SF X 2 Aa = 50,000 SF = ALLOWABLE BUILDING AREA Aa = 25,000 SF = ALLOWABLE AREA INDIVIDUAL STORY
186	TABLE 506.2	MAXIMUM FLOOR AREA (S WITHOUT AREA INCREASE): 25,000 SF ACTUAL FLOOR AREA: 23,200 SF INCLUDES ALL AREAS UNDER ROOF AND FLOOR ABOVE 23,200 SF < 25,000 SF THEREFORE OK NO BUILDING AREA MODIFICATION PER SECTION 506 IS REQUIRED
193	TABLE 509.4	INCIDENTAL USES. SEPERATION AND PROTECTION. THE INCIDENTAL USES LISTED IN TABLE 509 SHALL BE SEPERATED FROM THE REMAINDER OF THE BUILDING OR EQUIPED WITH AN AUTOMATIC SPRINKLER SYSTEM, OR BOTH IN ACCORDANCE WITH THE PROVISIONS OF THE TABLE
CHAPTER 6		TYPES OF CONSTRUCTION
199	TABLE 601	THIS BUILDING IS ANALYZED AS CONSTRUCTION TYPE IIB **PER TABLE 601, ALL BUILDING ELEMENTS REQUIRE A FIRE RESISTIVE RATING OF 0 HOURS.**
200	TABLE 602	FIRE-RESISTANCE RATING AT EXTERIOR WALLS: BASED ON FIRE SEPERATION DISTANCE LESS THAN 10' 1 HOUR 10' OR MORE 0 HOUR
CHAPTER 7		FIRE AND SMOKE PROTECTION FEATURES
209	705.3	BUILDINGS ON THE SAME LOT. FOR THE PURPOSES OF DETERMINING THE REQUIRED WALL AND OPENING PROTECTION, PROJECTIONS AND ROOF COVERING REQIREMENTS, BUILDING ON THE SAME LOT SHALL ASSUME TO HAVE AN IMAGINARY LINE BETWEEN THEM. **SEE DRAWING G202 FOR LOT LINES**
209	705.5	FIRES RESISTANCE RATINGS. FOR GROUP A OCCUPANCIES, EXTERIOR WALLS SHALL BE FIRE RESISTANCE RATED IN ACCORDANCE WITH TABLES 601 AND 602 AND THIS SECTION.
209	TABLE 705.8	MAXIMUM AREA OF EXTERIOR WALL OPENINGS BASED ON FIRE SEPARATION DISTANCE AND DEGREE OF OPENING PROTECTION ASSUMES UNPROTECTED OPENINGS, BUILDING FULLY SPRINKLERED 0 TO LESS THAN 3' NOT PERMITTED 3' TO LESS THAN 5' 15% 5' TO LESS THAN 10' 25% 10' TO LESS THAN 15' 45% 15' TO LESS THAN 20' 75% 20' OR MORE NO LIMIT
CHAPTER 8		INTERIOR FINISHES
309	TABLE 803.13	INTERIOR WALL AND CEILING FINISHES BUILDING IS FULLY SPRINKLERED INTERIOR EXIT STAIRSWAYS CLASS B OR BETTER CORRIDORS CLASS B OR BETTER ROOMS AND SPACES CLASS C OR BETTER

BUILDING CODE ANALYSIS

CHAPTER 9		FIRE PROTECTION SYSTEMS
320	[F] 903.2.1.1	GROUP A-1, AREA > 12,000 SF, OCCUPANT LOAD > 300 **SPRINKLERS REQUIRED**
334	[F] 906.1	PORTABLE FIRE EXTINGUISHERS REQUIRED [F] TABLE 906.3(1) ASSUME LIGHT HAZARD OCCUPANCY (ALL AREAS EXCEPT STAGE) EXTINGUISHER RATING: 2-A MAX FLOOR AREA PER UNIT OF A: 3000 SF MAX FLOOR AREA PER EXTINGUISHER: 11,250 SF MAX DISTANCE TO EXTINGUISHER: 75 FEET
335	[F] TABLE 906.3(1)	ASSUME ORDINARY OCCUPANCY (STAGE) EXTINGUISHER RATING: 2-A MAX FLOOR AREA PER UNIT OF A: 1,500 SF MAX FLOOR AREA PER EXTINGUISHER: 11,250 SF DISTANCE TO EXTINGUISHER: 75 FEET
CHAPTER 10		MEANS OF EGRESS
376	SECTION TABLE 1014.3	STAIRWAYS - SEE 'STAIR WIDTH CALCULATION' ON THIS SHEET
377	SECTION TABLE 1005.3.2	OTHER EGRESS COMPONENTS SEE 'CODE ANALYSIS PLAN' ON THIS SHEET
380	TABLE 1006.3.2	1,204 OCCUPANTS. 4 EXITS REQUIRED = 7 PROVIDED
383	SECTION 109.3.3	AREA OF REFUGE - STAIRWAYS SHALL EITHER INCORPORATE AN AREA OF REFUGE WITHIN AN ENLARGED FLOOR LEVEL LANDING OR SHALL BE ACCESSED FROM AN AREA OF REFUGE COMPLYING WITH SECTION 1009.6 EXCEPTION 2. AREAS OF REFUGE ARE NOT REQUIRED AT STAIRWAYS IN BUILDING EQUIPPED THROUGHOUT WITH AN AUTOMATIC SPRINKLER SYSTEM INSTALLED IN ACCORDANCE WITH SECTION 903.3.1.1 OR 903.3.1.2 THE BUILDING IS EQUIPED WITH AN AUTOMATIC SPRINKLER SYSTEM, THEREFORE NO AREA OF REFUGE IS REQUIRED
405	TABLE 1017.2	MAXIMUM EXIT ACCESS TRAVEL DISTANCE = 250' MAXIMUM DISTANCE MEASURED = 132'
416	SECTION 1029.2	PERFORMING ARTS CENTER OCCUPANT LOAD > 300. THEREFORE ASSEMBLY MAIN EXIT REQUIRED. MAIN EXIT MUST SERVE 50% OF OCCUPANT LOAD MAIN EXIT WIDTH REQUIRED = 1,204/2 X 0.2 = 121" MAIN EXIT WIDTH PROVIDED = (2) DOUBLE AT 72" = 144"

APPLICABLE CODES

2010 ADA STANDARD FOR ACCESSIBLE DESIGN

2019 CALIFORNIA ADMINISTRATIVE CODE (CAC), PART 1, TITLE 24 CCR

2019 CALIFORNIA BUILDING CODE (CBC), PART 2, TITLE 24 CCR
(2018 INTERNATIONAL BUILDING CODE, VOL 1 & 2, AND 2019 CALIFORNIA AMENDMENTS)

2019 CALIFORNIA ELECTRICAL CODE (CEC), PART 3, TITLE 24 CCR
(2017 NATIONAL ELECTRIC CODE AND 2019 CALIFORNIA AMENDMENTS)

2019 CALIFORNIA MECHANICAL CODE (CMC), PART 4, TITLE 24 CCR
(2018 IAPMO UNIFORM MECHANICAL CODE AND 2019 CALIFORNIA AMENDMENTS)

2019 CALIFORNIA PLUMBING CODE (CPC), PART 5, TITLE 24 CCR
(2018 IAPMO UNIFORM PLUMBING CODE AND 2019 CALIFORNIA AMENDMENTS)

2019 CALIFORNIA ENERGY CODE (CEC), PART 6, TITLE 24 CCR

2019 CALIFORNIA FIRE CODE (CFC), PART 9, TITLE 24 CCR
(2018 INTERNATIONAL FIRE CODE AND 2019 CALIFORNIA AMENDMENTS)

2019 CALIFORNIA EXISTING BUILDING CODE (CEBC), PART 10, TITLE 24 CCR
(2018 INTERNATIONAL EXISTING BUILDING CODE AND 2019 CALIFORNIA AMENDMENTS)

2019 CALIFORNIA GREEN BUILDING STANDARDS CODE (CALGREEN), PART 11, TITLE 24 CCR

2019 CALIFORNIA REFERENCED STANDARDS CODE, PART 12, TITLE 24 CCR

TITLE 19 CCR, PUBLIC SAFETY, STATE FIRE MARSHAL REGULATIONS

2016 ASME A17.1/CSA B44-16 SAFETY CODE FOR ELEVATORS AND ESCALATORS *(PER 2019 CBC PART 2 CH 35)*
NOTE: CAL/OSHA ELEVATOR UNIT ENFORCES CCR TITLE 8 AND USES THE 2004 ASME A17.1 BY ADOPTION)

PARTIAL LIST OF APPLICABLE STANDARDS

NFPA 13 STANDARD FOR THE INSTALLATION OF SPRINKLER SYSTEMS (CA AMENDED) 2016 EDITION
NFPA 14 STANDARD FOR THE INSTALLATION OF STANDPIPE AND HOSE SYSTEMS (CA AMENDED) 2016 EDITION
NFPA 17 STANDARD FOR DRY CHEMICAL EXTINGUISHING SYSTEMS 2017 EDITION
NFPA 17A STANDARD FOR WET CHEMICAL EXTINGUISHING SYSTEMS 2017 EDITION
NFPA 20 STANDARD FOR THE INSTALLATION OF STATIONARY PUMPS FOR FIRE PROTECTION 2016 EDITION
NFPA 22 STANDARD FOR WATER TANKS FOR PRIVATE FIRE PROTECTION 2013 EDITION
NFPA 24 STANDARD FOR INSTALLATION OF PRIVATE SERVICE MAINS AND THEIR APPURTENANCES (CA AMENDED) 2016 EDITION
NFPA 72 NATIONAL FIRE ALARM AND SIGNALING CODE (CA AMENDED) 2016 EDITION
NFPA 80 STANDARD FOR FIRE DOORS AND OTHER OPENING PROTECTIVES 2016 EDITION
NFPA 2001 STANDARD ON CLEAN AGENT FIRE EXTINGUISHING SYSTEMS (CA AMENDED) 2015 EDITION

UL 300 STANDARD FOR FIRE TESTING OF FIRE EXTINGUISHING SYSTEMS FOR PROTECTION OF 2005 (R2010) COMMERCIAL COOKING EQUIPMENT
UL 464 AUDIBLE SIGNALING DEVICES FOR FIRE ALARM AND SIGNALING SYSTEMS, 2003 EDITION INCLUDING ACCESSORIES
UL 521 STANDARD FOR HEAT DETECTORS FOR FIRE PROTECTIVE SIGNALING SYSTEMS 1999 EDITION
UL 1971 STANDARD FOR SIGNALING DEVICES FOR THE HEARING IMPAIRED 2002 (R2012)
ICC 300 STANDARD FOR BLEACHERS, FOLDING AND TELESCOPIC SEATING, AND GRANDSTANDS2017 EDITION

FOR A COMPLETE LIST OF APPLICABLE NFPA STANDARDS REFER TO 2019 CBC (SFM) CHAPTER 35 AND CALIFORNIA FIRE CODE (CFC) CHAPTER 80

SEE CALIFORNIA BUILDING CODE, CHAPTER 35, FOR STATE OF CALIFORNIA AMENDMENTS TO THE NFPA STANDARDS

APPL No. A03-122864

IDENTIFICATION STAMP
DIV. OF THE STATE ARCHITECT
APP: 03-122864 INC:
REVIEWED FOR
SS ☑ FLS ☑ ACS ☑
DATE: 10/03/2023

DSA Stamp

Architect

RACHLIN PARTNERS
8640 National Boulevard
Culver City, CA 90232
310.204.3400

Disclaimer:

THESE DRAWINGS ARE THE PROPERTY OF THE ARCHITECT. THE DESIGNS SHOWN AND DESCRIBED HEREIN INCLUDING ALL TECHNICAL DRAWINGS ARE PROPRIETARY AND CANNOT BE COPIED, DUPLICATED OR COMMERCIALLY EXPLOITED IN ANY WAY WITHOUT THE ARCHITECT'S EXPRESS WRITTEN CONSENT. SHALL NOT BE USED BY THE OWNER ON OTHER PROJECTS, FOR ADDITIONS TO THIS PROJECT, OR FOR COMPLETION OF THIS PROJECT BY OTHERS. THE OWNER AGREES TO HOLD HARMLESS, INDEMNIFY AND DEFEND THE ARCHITECT AGAINST ALL DAMAGES, CLAIMS AND LOSSES, INCLUDING DEFENSE COSTS, ARISING OUT OF ANY REUSE OF PLANS AND SPECIFICATIONS WITHOUT THE WRITTEN AUTHORIZATION OF THE ARCHITECT OF RECORD.

Copyright © 2022 Rachlin Partners, All Rights Reserved.

Performing Arts Center

Hacienda La Puente Unified School District
635 North California Avenue
La Puente, CA 91744

Rev	Date	Issue
1	7.22.22	50% DD
2	10.21.22	50% CD
3	12.09.22	100% CD DSA SUBMITTAL
4	6.19.23	100% CD DSA RESUBMITTAL
5	9.20.23	DSA BACK CHECK

Date: 9.20.2023
Scale: As indicated
Drawn By: JP, NZ
Checked By: RM

Architect / Engineer Stamp

LICENSED ARCHITECT — REGISTERED PROFESSIONAL — NO. C-28229 — REN. 8-31-25 — STATE OF CALIFORNIA

Consultants
Miyamoto International, Inc.
The Ruzika Company, Inc.
MDC Consulting Engineers
Pocock Design Solutions
Newson Brown Acoustics, LLC
VCA Engineers, Inc.
HJSA Consulting

Sheet Title

Code Analysis Plan

Sheet Number

G201

C:\Users\rudy.monico\Documents\RT2_HLPUSD-PAC_Central_rudy.monico.rvt

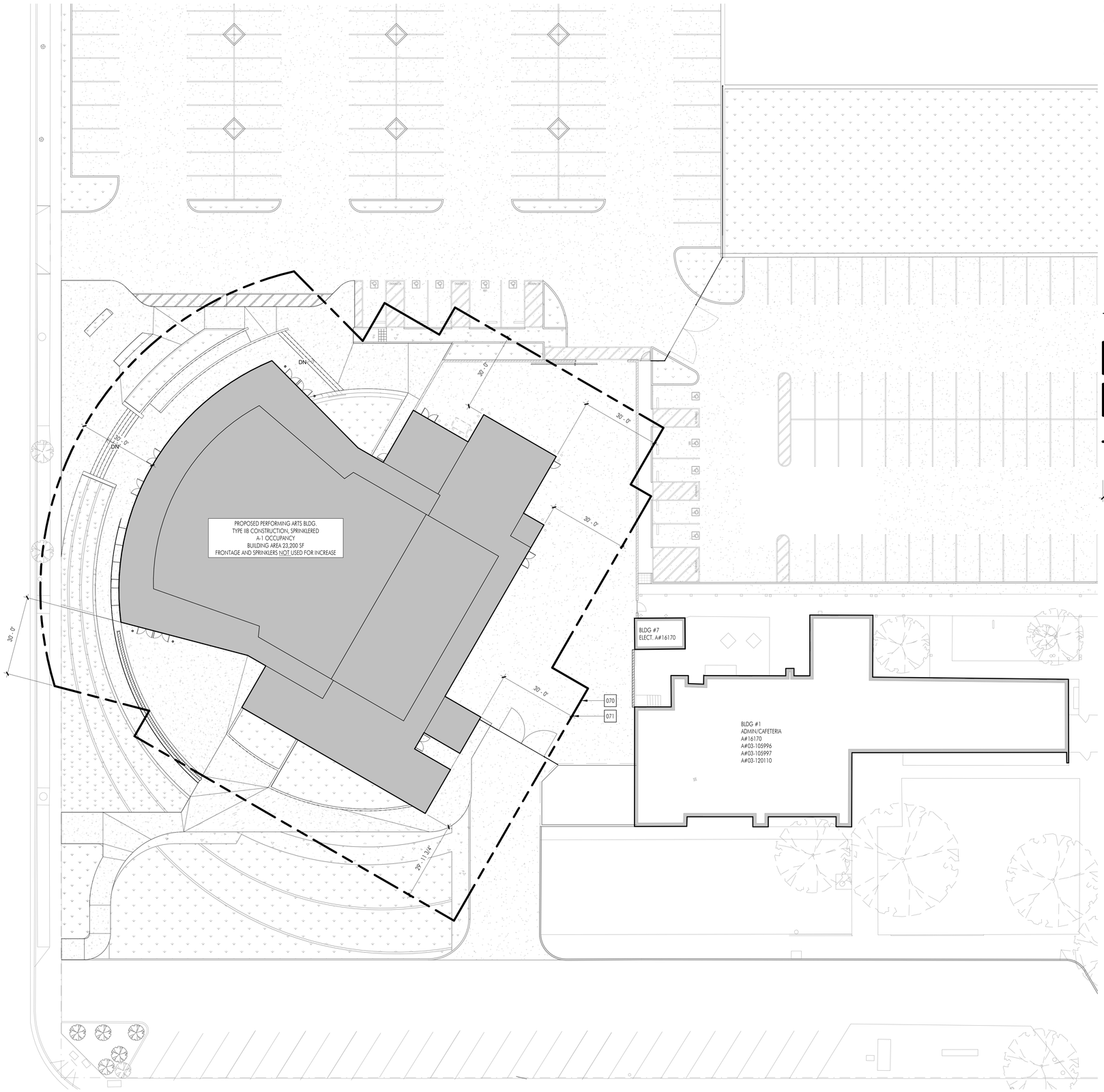

1 ENLARGED SITE PLAN - CODE ANALYSIS

SCALE: 1/16" = 1'-0"

NORTH TRUE

CONSTRUCTION KEYNOTES

No.	DESCRIPTION
070	FIRE SEPARATION DISTANCE FROM EACH BUILDING EXCEEDS 10', THEREFORE, PER TABLE 602, NO FIRE RATING IS REQUIRED FOR EXTERIOR WALL OF EITHER BUILDING
071	THERE IS NO LIMIT ON ALLOWABLE AREA OF OPENINGS IN EXTERIOR WALLS OF EITHER BUILDING PER EXCEPTION 2, 705.8.1. NEITHER BUILDING IS REQUIRED TO HAVE FIRE RESISTIVE RATING ON EXTERIOR WALLS OR ON PRIMARY EXTERIOR STRUCTURAL FRAME

CODE ANALYSSIS SITE PLAN LEGEND

SYMBOL	DESCRIPTION
	NEW CONSTRUCTION
	EXISTING CONSTRUCTION
	ASSUMED PROPERTY LINE
10 - 0"	FIRE SEPARATION DISTANCE

APPL No. A03-122864

IDENTIFICATION STAMP
DIV. OF THE STATE ARCHITECT
APP: 03-122864 INC:
REVIEWED FOR
SS ☑ FLS ☑ ACS ☑
DATE: 10/03/2023

DSA Stamp

Architect

RACHLIN PARTNERS
8640 National Boulevard
Culver City, CA 90232
310.204.3400

Disclaimer:

THESE DRAWINGS ARE THE PROPERTY OF THE ARCHITECT. THE DESIGNS SHOWN AND DESCRIBED HEREIN INCLUDING ALL TECHNICAL DRAWINGS ARE PROPRIETARY AND CANNOT BE COPIED, DUPLICATED OR COMMERCIALLY EXPLOITED IN ANY WAY. THEY ARE NOT TO BE CHANGED OR COPIED AND SHALL NOT BE USED BY THE OWNER ON OTHER PROJECTS, FOR ADDITIONS TO THIS PROJECT, OR FOR COMPLETION OF THIS PROJECT BY OTHERS. THE OWNER AGREES TO HOLD HARMLESS, INDEMNIFY AND DEFEND THE ARCHITECT AGAINST ALL DAMAGES, CLAIMS AND LOSSES, INCLUDING DEFENSE COSTS, ARISING OUT OF ANY REUSE OF PLANS AND SPECIFICATIONS WITHOUT THE WRITTEN AUTHORIZATION OF THE ARCHITECT OF RECORD.

Copyright © 2022 Rachlin Partners, All Rights Reserved.

Performing Arts Center

Hacienda La Puente Unified School District
635 North California Avenue
La Puente, CA 91744

Rev	Date	Issue
1	7.22.22	50% DD
2	10.21.22	50% CD
3	12.09.22	100% CD DSA SUBMITTAL
4	6.19.23	100% CD DSA RESUBMITTAL
5	9.20.23	DSA BACK CHECK

Date: 9.20.2023
Scale: As indicated
Drawn By: Author
Checked By: Checker

Architect / Engineer Stamp

LICENSED ARCHITECT
EDWARD RACHLIN
NO. C-26229
REN. 8-31-25
STATE OF CALIFORNIA

Consultants
Miyamoto International, Inc.
The Ruzika Company, Inc.
MDC Consulting Engineers
Pocock Design Solutions
Newson Brown Acoustics, LLC
VCA Engineers, Inc.
HJSA Consulting

Sheet Title

Code Analysis Site Plan

Sheet Number

G202

C:\Users\rudy.monico\Documents\R22_HLPUSD-PAC_Central_rudy.monico.rvt

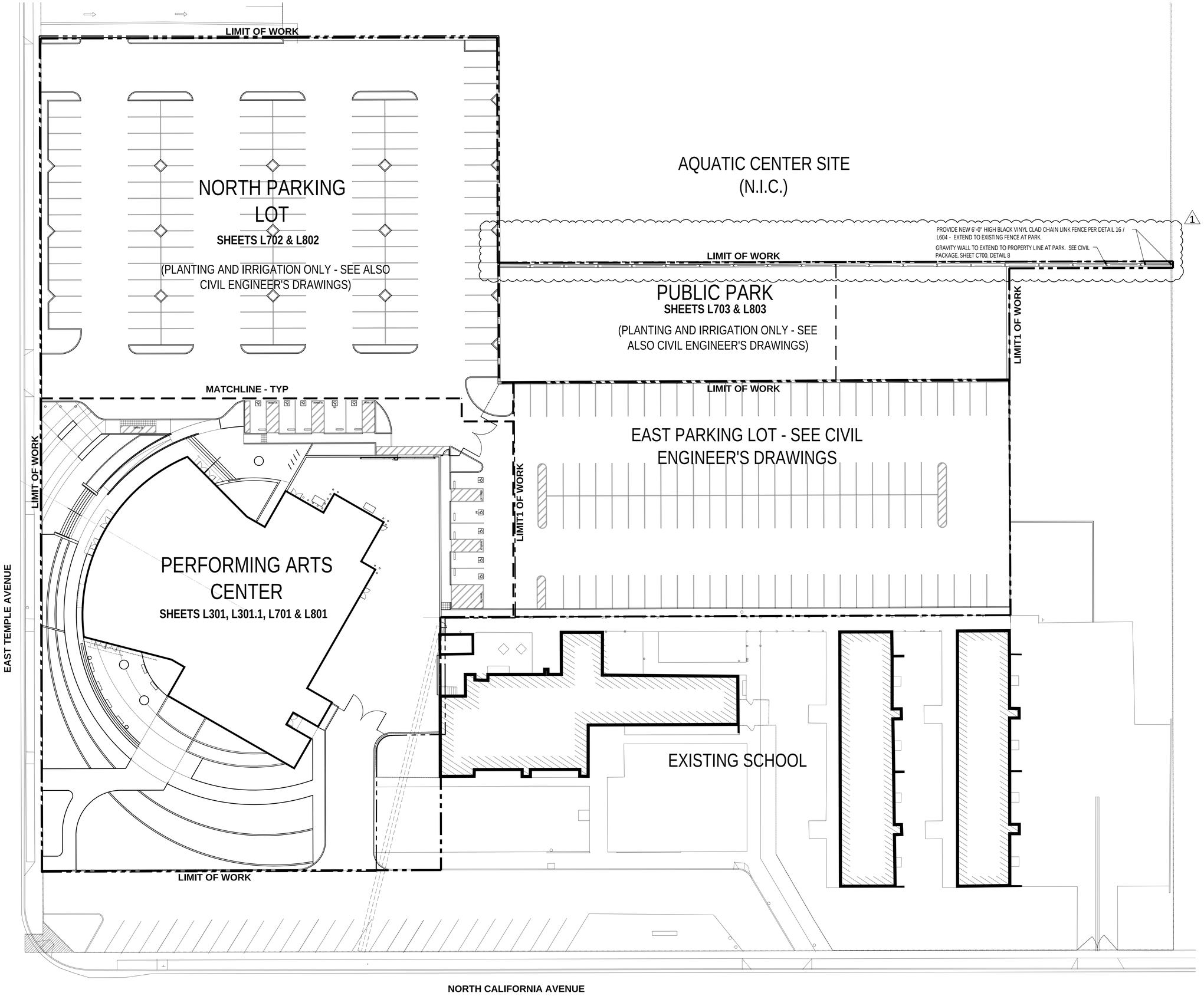

0' 10' 20' 40' 80'
1" = 20'-0"
NORTH

APPL. No. A 03-122864

DSA Stamp

Architect

RACHLIN PARTNERS
8640 National Boulevard
Culver City, CA 90232
310.204.3400

Disclaimer:

THESE DRAWINGS ARE THE PROPERTY OF THE ARCHITECT. THE DESIGNS SHOWN AND DESCRIBED HEREIN INCLUDING ALL TECHNICAL DRAWINGS ARE PROPRIETARY AND CANNOT BE COPIED, DUPLICATED OR COMMERCIALLY EXPLOITED, IN WHOLE OR IN PART. THE DRAWINGS AND SPECIFICATIONS SHALL NOT BE USED BY THE OWNER ON OTHER PROJECTS, FOR ADDITIONS TO THIS PROJECT, OR FOR COMPLETION OF THIS PROJECT BY OTHERS. THE OWNER AGREES TO HOLD HARMLESS, INDEMNIFY AND DEFEND THE ARCHITECT AGAINST ALL DAMAGES, CLAIMS AND LOSSES, INCLUDING DEFENSE COSTS, ARISING OUT OF ANY REUSE OF PLANS AND SPECIFICATIONS WITHOUT THE WRITTEN AUTHORIZATION OF THE ARCHITECT OF RECORD.
Copyright © 2022 Rachlin Partners, All Rights Reserved.

Performing Arts Center
Hacienda La Puente Unified School District
635 North California Avenue
La Puente, CA 91744

Rev	Date	Issue
1	7.22.22	50% DD
2	10.21.22	50% CD
3	12.09.22	100% DSA Submittal
4	06.19.23	100% DSA Resubmittal
5	09.20.23	DSA Back Check
1	11.01.23	Addendum No. 1

Date: 09/20/23
Scale: As Shown
Drawn By: --
Checked By: --

Architect / Engineer Stamp

Consultants
Miyamoto International, Inc.
The Ruzika Company, Inc.
MDC Consulting Engineers
Pocock Design Solutions
Newson Brown Acoustics, LLC
VCA Engineers, Inc.
HJSA Consulting
L.A. Design Associates, Inc.

Sheet Title
Overall Key Plan

Sheet Number
L101

Plot Date: 11/1/2023 8:37:58 PM Last Save By: bbibe Login: Kris Hansen L:\2022\HLP PAC\DWGS\WP\HLPUSD PAC L101.dwg

PAVING SCHEDULE

PAVING LEGEND

P-X
PAVING TYPE

NOTES:
CONTRACTOR TO PROVIDE 6' X 6' MOCK-UP ON SITE TO DEMONSTRATE PATTERN & FINISH

PAVING SCHEDULE

TYPE	MATERIAL	DETAIL	JOINT SIZE	PATTERN	THICKNESS	BASE DEPTH	FINISH	COLOR	STAIN/SEALER	REMARKS
P-1	CONCRETE	2 / L-601	3/16"	SAWCUT	4"	4"	BROOM	NATURAL GREY	SEALER REQUIRED	PEDESTRIAN PAVING - PATHWAYS & SIDEWALKS
P-2	CONCRETE	2 / L-601	3/16"	SAWCUT	4"	4"	HEAVY EXPOSED AGGREGATE	NATURAL GREY	SEALER REQUIRED	PEDESTRIAN PAVING - BAND
P-3	CONCRETE	2 / L-601	3/16"	SAWCUT PER PLAN	4"	4"	LIGHT EXPOSED AGGREGATE	NATURAL GREY	SEALER REQUIRED	PEDESTRIAN PAVING - BAND
P-4	NOT USED	-	-	-	-	-	-	-	-	-
P-5	NOT USED	-	-		-	-	-	-	-	-
P-6	ASPHALTIC CONCRETE	SEE REMARKS	-	-	-	-	-	-	-	SEE CIVIL ENGINEER'S DRAWINGS
P-7	DECOMPOSED GRANITE	6 / L851	-	-	3"	-	-	NATURAL - SEE REMARKS		CONTRACTOR TO SUBMIT COLOR SAMPLES FOR L.A. APPROVAL

FENCE SCHEDULE

FENCE LEGEND

F-X
FENCE TYPE

FENCING SCHEDULE

TYPE	MATERIAL	DETAIL	FRAME	POST	FRAME FINISH	POST FINISH	FRAME COLOR	POST COLOR	REMARKS
F-1	METAL	1 / L604	2x3" TUBE STL.	3x3" TUBE STL.	FACTORY ENAMEL	FACTORY ENAMEL	FACTORY ENAMEL	FACTORY ENAMEL	6' HIGH ORNAMENTAL AMERISTAR METAL FENCING
F-2	EXISTING CHAIN LINK	-	NA	NA	NA	NA	NA	NA	EXISTING FENCE - REPLACE BLUE PRIVACY SLATS WITH BLACK
F-3	VINYL CLAD CHAIN LINK	16 / L604	NA	2½" DIA TUBE STL.	NA	VINYL	NA	BLACK	6' HIGH PERIMETER FENCING, 1" VINYL CLAD MESH, BLACK

WALL SCHEDULE

WALL LEGEND

W-X
WALL TYPE

WALL SCHEDULE

TYPE	STRUCTURE	DETAIL	HEIGHT	FACE MATERIAL	THICKNESS	FINISH	COLOR	REMARKS
W-1	CONCRETE	1/ L-603	VARIES	CONC	16"	SACK	NATURAL GREY	CHEEK WALL - ENTRY STAIRS
W-2	CONCRETE	2/ L-602	VARIES	CONC	8"	SACK	NATURAL GREY	RAISED PLANTER WALLS ADJ. TO FRONT STEPS (RETAINING), 3' MAX. HT.
W-3	CONCRETE	4/ L-602	VARIES	CONC	8"	SACK	NATURAL GREY	CHEEK WALLS AT RAMP (RETAINING) 3' MAX. HT.
W-4	CONCRETE	2/ L-603	18"	CONC	18"	SACK	NATURAL GREY	RAISED PLANTER WALL / SEAT WALL -18" HT.
W-5	CONCRETE	5/ L-603	VARIES	CONC	8"	SACK	NATURAL GREY	LOW WALL (RETAINING), 5' HIGH MAX.
W-6	CONCRETE	6/ L-603	VARIES	CONC	8"	SACK	NATURAL GREY	
W-7	CMU	3/ L-602	8'-0"	CMU FACE	8"	MATCH BUILDING	MATCH BUILDING	BACK OF HOUSE SCREEN WALL

GATE SCHEDULE

GATE LEGEND

S0X
GATE TYPE

GATE SCHEDULE

TYPE	MATERIAL	DETAIL	GATE TYPE	POST O.D.	HINGE	REMARKS
S01	TUBULAR STEEL	3/ L-604	DOUBLE SWING	6x6"x3/16"	HEAVY DUTY BARREL	6' HEIGHT DOUBLE SWING METAL GATE TO BACK OF HOUSE
S02	TUBULAR STEEL	4/ L-604	SINGLE SWING	3x3"x12GA	HEAVY DUTY BARREL	6' HEIGHT SINGLE SWING ACCESSIBLE PEDESTRIAN GATE TO BACK OF HOUSE - 3'-6" CLEAR OPENING MIN.
S03	TUBULAR STEEL	2/ L-605	ROLLING	NA	NA	6' HEIGHT ROLLING METAL VEHICULAR GATE TO BOH
S04	TUBULAR STEEL	4/ L-604	SINGLE SWING	3x3"x12GA.	HEAVY DUTY BARREL	6' HEIGHT SINGLE SWING ACCESSIBLE PEDESTRIAN GATE TO ACCESSIBLE PARKING - 3'-0" CLEAR OPENING MIN.
S05	TUBULAR STEEL	3/ L-604	DOUBLE SWING	6x6"x3/16"	HEAVY DUTY BARREL	6' HEIGHT DOUBLE SWING METAL GATE

3

RAIL SCHEDULE

RAIL LEGEND

R-X
RAIL TYPE

RAILING SCHEDULE

TYPE	MATERIAL	DETAIL	HEIGHT	REMARKS
R-1	GALV. STEEL	9/L604	34"	HANDRAIL @ ENTRY STAIRS
R-2	GALV. STEEL	10/L604	34"	HANDRAIL @ ENTRY STAIRS MOUNTED ON WALL
R-3	GALV. STEEL	11/L604	34"	HANDRAIL @ ENTRY RAMP
R-4	GALV. STEEL	11/L604	42"	DECORATIVE GUARDRAIL @ CONCOURSE
R-5	GALV. STEEL	15/L604	34"	HANDRAIL @ NORTH ENTRY STAIRS MOUNTED ON RAILING

Plot Date: 12/14/2023 12:30:12 PM Last Save By: bbibe Login: Brad Bibee L:\2022\HLP PAC\DWGS\WP-Addendum 3\HLPJSD PAC L300.dwg

APPL. No. A 03-122864

DSA Stamp

Architect

RACHLIN PARTNERS
8840 National Boulevard
Culver City, CA 90232
310.204.3400

Disclaimer:
THESE DRAWINGS ARE THE PROPERTY OF THE ARCHITECT. THE DESIGNS SHOWN AND DESCRIBED HEREIN INCLUDING ALL TECHNICAL DRAWINGS ARE PROPRIETARY AND CANNOT BE COPIED, DUPLICATED OR COMMERCIALLY EXPLOITED, IN WHOLE OR IN PART. THE DRAWINGS AND SPECIFICATIONS SHALL NOT BE USED BY THE OWNER ON OTHER PROJECTS, FOR ADDITIONS TO THIS PROJECT, OR FOR COMPLETION OF THIS PROJECT BY OTHERS. THE OWNER AGREES TO HOLD HARMLESS, INDEMNIFY AND DEFEND THE ARCHITECT AGAINST ALL DAMAGES, CLAIMS AND LOSSES, INCLUDING DEFENSE COSTS, ARISING OUT OF ANY REUSE OF PLANS AND SPECIFICATIONS WITHOUT THE WRITTEN AUTHORIZATION OF THE ARCHITECT OF RECORD.
Copyright © 2022 Rachlin Partners, All Rights Reserved.

Performing Arts Center
Hacienda La Puente Unified School District
635 North California Avenue
La Puente, CA 91744

Rev	Date	Issue
1	7.22.22	50% DD
2	10.21.22	50% CD
3	12.09.22	100% DSA Submittal
4	06.19.23	100% DSA Resubmittal
5	09.20.23	DSA Back Check
1	11.01.23	Addendum No. 1
2	11.01.23	Addendum No. 2
3	12.14.23	Addendum No. 3

Date: 09/20/23
Scale: As Shown
Drawn By: --
Checked By: --

Architect / Engineer Stamp

Consultants
Miyamoto International, Inc.
The Ruzika Company, Inc,
MDC Consulting Engineers
Pocock Design Solutions
Newson Brown Acoustics, LLC
VCA Engineers, Inc.
HJSA Consulting
L.A. Design Associates, Inc.

Sheet Title

Hardscape Schedules

Sheet Number

L300

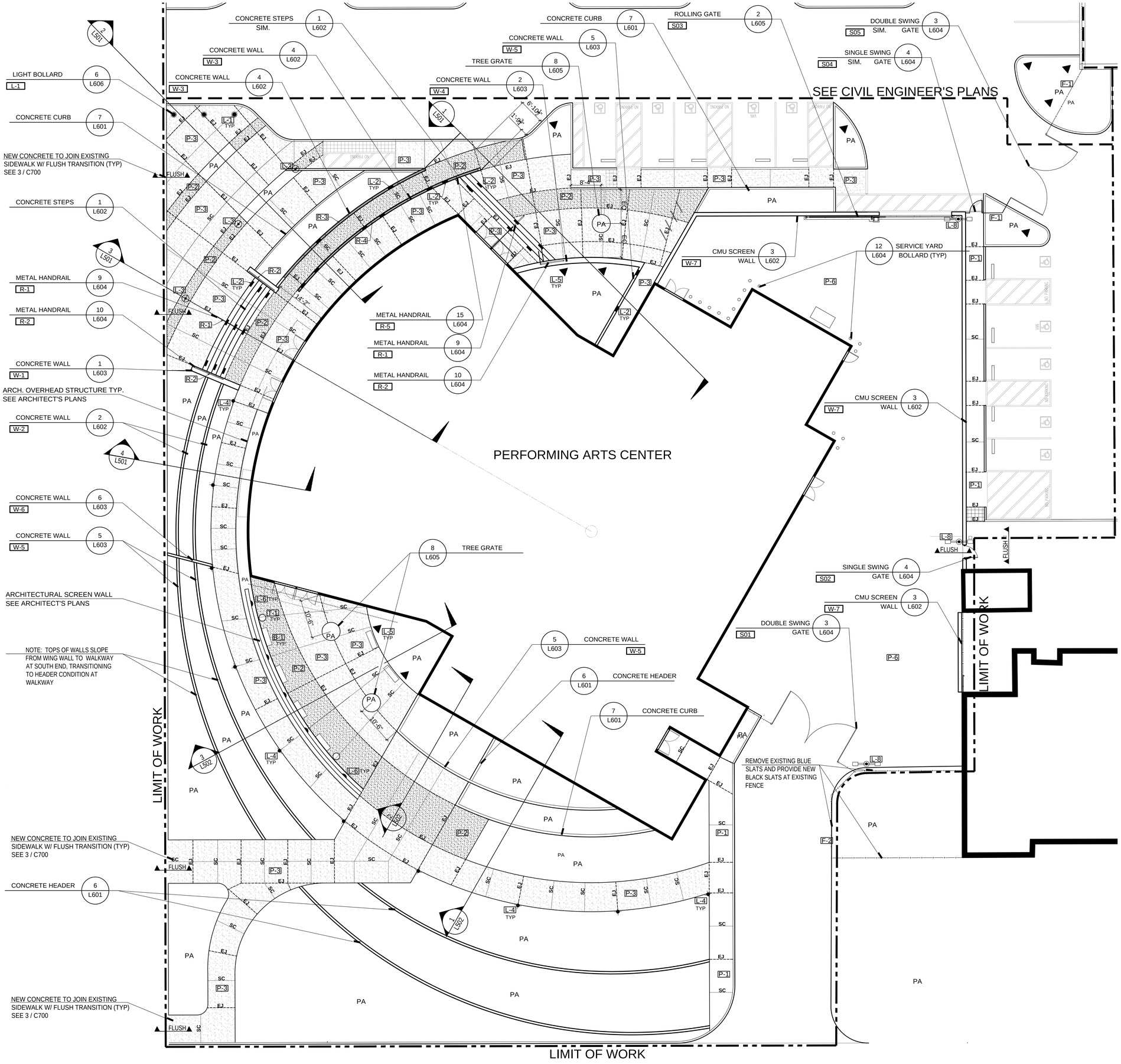

LEGEND

KEY	TYPE	SYMBOL	DET. REF.
EJ	EXPANSION JOINT	----------	1A/L601
SC	SAWCUT JOINT	————	1C/L601
CJ	COLD JOINT	—·—·—·—	1E/L601
PA	PLANTING AREA		

SITE FURNISHINGS KEY:

T-1 TRASH RECEPTACLE
MODEL - WILSHIRE WASTE

B-1 BENCH
MODEL - SHEAR BENCH
SEE DETAILS 14 &16 SHEET L606
SITE FURNISHINGS AVAIL. FROM QCP
866-703-3434 sales@qcp-corp.com

SITE LIGHTING KEY:

L-1 - LIGHT BOLLARD - DET 6/L606
BEGA #99 856, 16.5W LED
POWDER COAT FIN. - STND. COLOR TBD

L-2 - STEP LIGHT - DET 4/L606
BEGA #33 029, 3.8W LED
POWDER COAT FIN. - STND. COLOR TBD

L-3 - PLAZA LIGHT - DET 10/L606
BEGA #84 305, 101W LED
POWDER COAT FIN. - STND. COLOR TBD

L-4 - PATH LIGHT - DET 8/L606
BEGA #84 357, 20W LED
POWDER COAT FIN. - STND. COLOR TBD

L-5 - TREE UP-LIGHT - DET 12/L606
BK LIGHTING #K2-LED-X44-FL-BLP-12-B

L-6 - WALL MOUNT LIGHT - DET 2/L606
BEGA #33 059, 16.4W LED
POWDER COAT FIN. - STND. COLOR TBD

L-8 - PARKING LOT - DOUBLE
SEE ELECTRICAL ENGINEER'S PLANS

NOTE:

1. REFER TO ELECTRICAL ENGINEER'S PLANS FOR CIRCUITRY AND ADDITIONAL INFORMATION.

2. BEGA FIXTURES AVAILABLE FROM BEGA NORTH AMERICA 805-684-0533 www.bega-us.com

3. BK FIXTURES AVAILABLE FROM BK LIGHTING, INC. 559-438-5900 www.bklighting.com

NOTES:

1. SEE SHEET L-300 FOR HARDSCAPE SCHEDULES

2. FOR HORIZONTAL CONTROL OF CURBING, STREETS & PARKING, AND DRAINAGE AND GRADING, SEE CIVIL ENGINEER'S PLANS

APPL. No. A 03-122864

IDENTIFICATION STAMP
DIV. OF THE STATE ARCHITECT
APP: 03-122864 INC:
REVIEWED FOR
SS ☑ FLS ☑ ACS ☑
DATE: 10/03/2023

DSA Stamp

Architect

RACHLIN PARTNERS
8840 National Boulevard
Culver City, CA 90232
310.204.3400

Disclaimer:

THESE DRAWINGS ARE THE PROPERTY OF THE ARCHITECT. THE DESIGNS SHOWN AND DESCRIBED HEREIN INCLUDING ALL TECHNICAL DRAWINGS ARE PROPRIETARY AND CANNOT BE COPIED, DUPLICATED OR COMMERCIALLY EXPLOITED. IN WHOLE OR IN PART. THE DRAWINGS AND SPECIFICATIONS SHALL NOT BE USED BY THE OWNER ON OTHER PROJECTS, FOR ADDITIONS TO THIS PROJECT, OR FOR COMPLETION OF THIS PROJECT BY OTHERS. THE OWNER AGREES TO HOLD HARMLESS, INDEMNIFY AND DEFEND THE ARCHITECT AGAINST ALL DAMAGES, CLAIMS AND LOSSES, INCLUDING DEFENSE COSTS, ARISING OUT OF ANY REUSE OF PLANS AND SPECIFICATIONS WITHOUT THE WRITTEN AUTHORIZATION OF THE ARCHITECT OF RECORD.

Copyright © 2022 Rachlin Partners, All Rights Reserved.

Performing Arts Center
Hacienda La Puente Unified School District

635 North California Avenue
La Puente, CA 91744

Rev	Date	Issue
1	7.22.22	50% DD
2	10.21.22	50% CD
3	12.09.22	100% DSA Submittal
4	06.19.23	100% DSA Resubmittal
5	09.20.23	DSA Back Check

Date: 09/20/23
Scale: As Shown
Drawn By: --
Checked By: --

Architect / Engineer Stamp

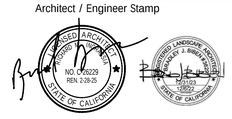

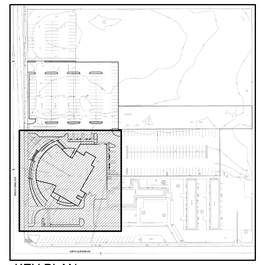

KEY PLAN

Consultants
Miyamoto International, Inc.
The Ruzika Company, Inc,
MDC Consulting Engineers
Pocock Design Solutions
Newson Brown Acoustics, LLC
VCA Engineers, Inc.
HJSA Consulting
L.A. Design Associates, Inc.

Sheet Title

Hardscape Plan

Sheet Number

L301

Plot Date: 9/20/2023 2:54:21 PM Last Save By: bbilbe Login: Kris Hansen L:\2022\HLP PAC\DWGS\WP\HLPUSD PAC L301-L301.1.dwg

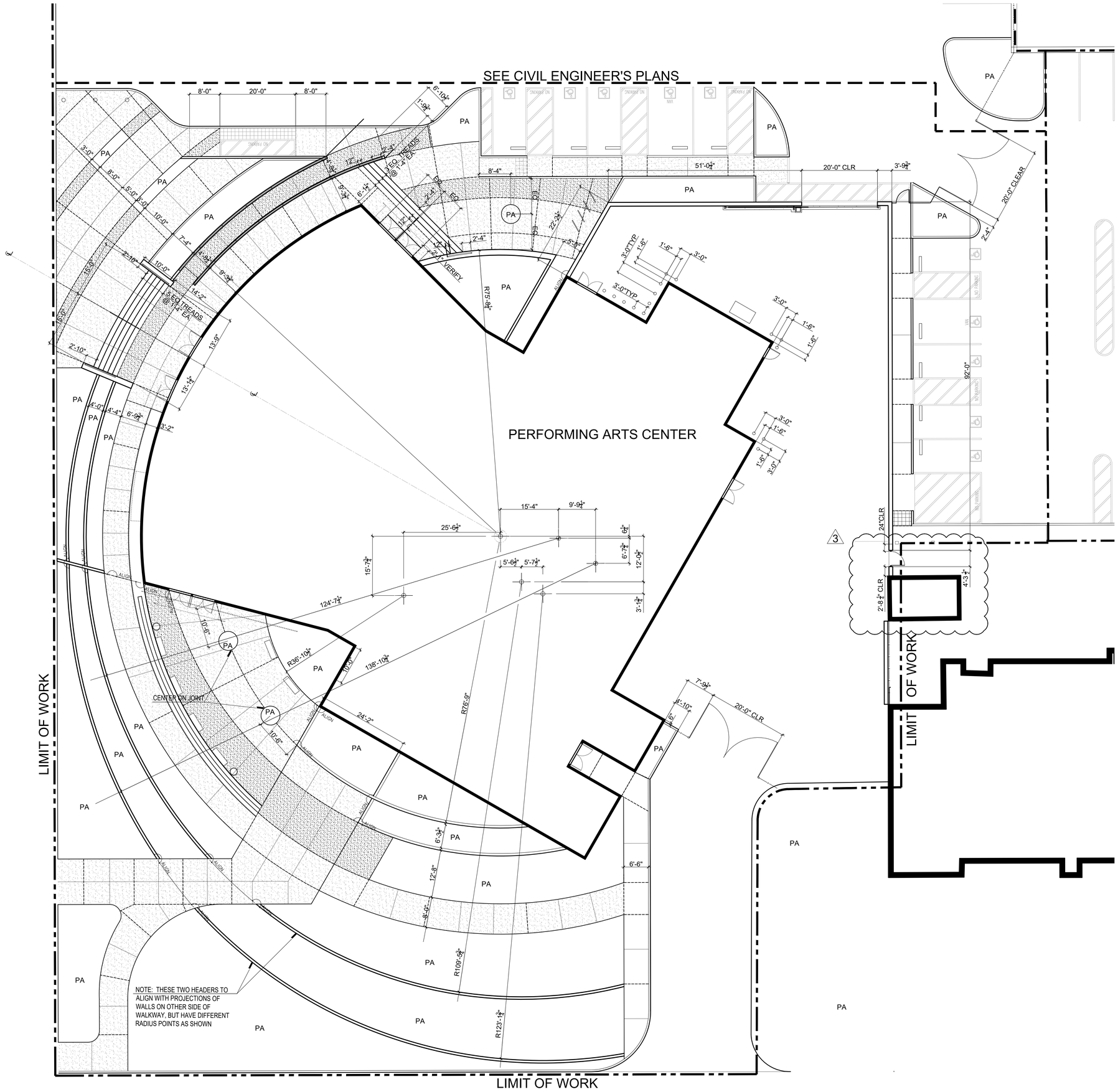

NOTES:

1. ALL DIMENSIONS FROM OUTSIDE FACE OF WALL OR CURB UNLESS NOTED OTHERWISE

2. CONTRACTOR TO LAYOUT ALL HARDSCAPE ELEMENTS, WALKWAYS, WALLS, BENCHES, ETC. FOR LANDSCAPE ARCHITECT'S APPROVAL PRIOR TO CONSTRUCTION

3. OR HORIZONTAL CONTROL OF CURBING, STREETS & PARKING, AND DRAINAGE AND GRADING, SEE CIVIL DWGS

4. FOR PAVING JOINT TYPES AND LOCATION SEE L-301

APPL. No. A 03-122864

DSA Stamp

Architect

RACHLIN PARTNERS
8640 National Boulevard
Culver City, CA 90232
310.204.3400

Disclaimer:
THESE DRAWINGS ARE THE PROPERTY OF THE ARCHITECT. THE DESIGNS SHOWN AND DESCRIBED HEREIN INCLUDING ALL TECHNICAL DRAWINGS ARE PROPRIETARY AND CANNOT BE COPIED, DUPLICATED OR COMMERCIALLY EXPLOITED, IN WHOLE OR IN PART. THE DRAWINGS AND SPECIFICATIONS SHALL NOT BE USED BY THE OWNER ON OTHER PROJECTS, FOR ADDITIONS TO THIS PROJECT, OR FOR COMPLETION OF THIS PROJECT BY OTHERS. THE OWNER AGREES TO HOLD HARMLESS, INDEMNIFY AND DEFEND THE ARCHITECT AGAINST ALL DAMAGES, CLAIMS AND LOSSES, INCLUDING DEFENSE COSTS, ARISING OUT OF ANY REUSE OF PLANS AND SPECIFICATIONS WITHOUT THE WRITTEN AUTHORIZATION OF THE ARCHITECT OF RECORD.
Copyright © 2022 Rachlin Partners, All Rights Reserved.

Performing Arts Center
Hacienda La Puente Unified School District

635 North California Avenue
La Puente, CA 91744

Rev	Date	Issue
1	7.22.22	50% DD
2	10.21.22	50% CD
3	12.09.22	100% DSA Submittal
4	06.19.23	100% DSA Resubmittal
5	09.20.23	DSA Back Check
1	11.01.23	Addendum No. 1
2	11.01.23	Addendum No. 2
3	12.14.23	Addendum No. 3

Date: 09/20/23
Scale: As Shown
Drawn By: --
Checked By: --

Architect / Engineer Stamp

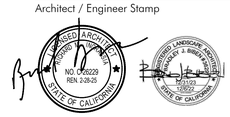

Consultants
Miyamoto International, Inc.
The Ruzika Company, Inc,
MDC Consulting Engineers
Pocock Design Solutions
Newson Brown Acoustics, LLC
VCA Engineers, Inc.
HJSA Consulting
L.A. Design Associates, Inc.

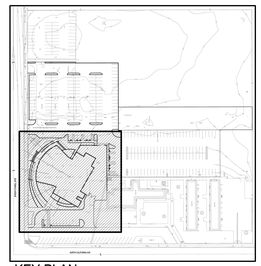

KEY PLAN

Sheet Title

Layout Plan

Sheet Number

L301.1

0' 5' 10' 20' 40'
1" = 10'-0"
NORTH

Plot Date: 12/14/2023 1:21:46 PM Last Save By: bbilbe Login: Brad Bilben L:\2022\HLP PAC\DWGS\WP\HLPLISD PAC_L301-L301.1.dwg

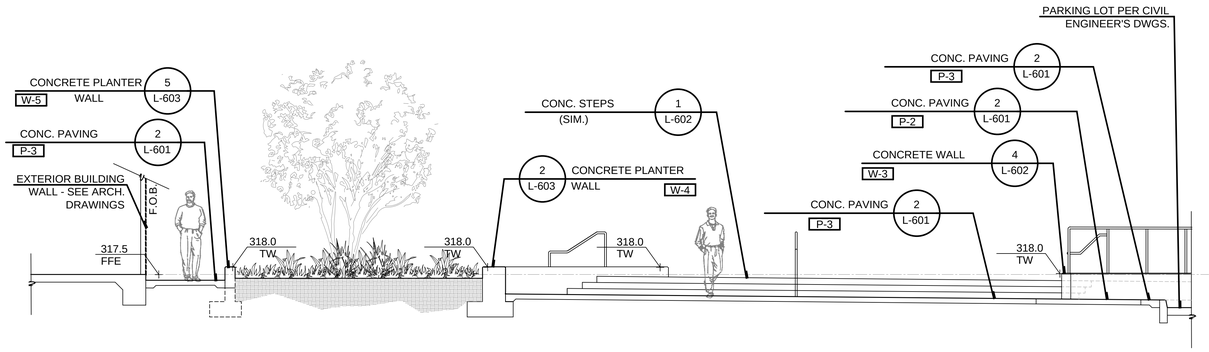

SECTION 1

SCALE: 1/4" = 1'-0"

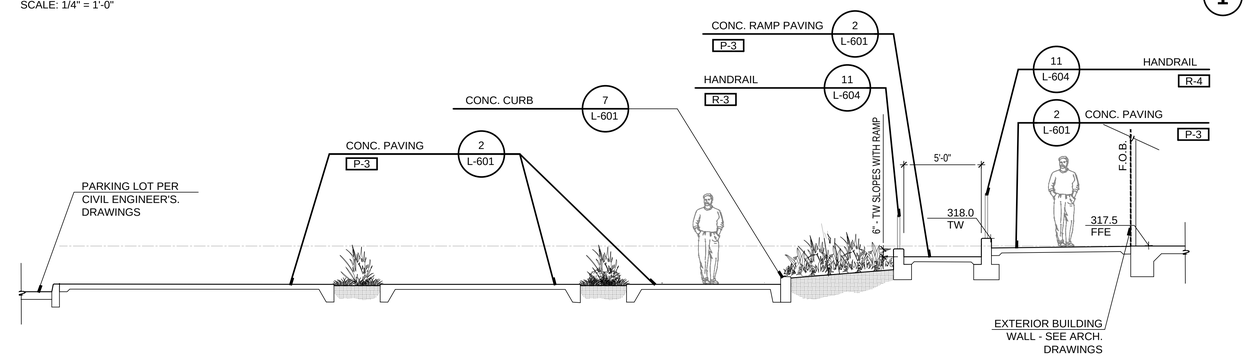

SECTION 2

SCALE: 1/4" = 1'-0"

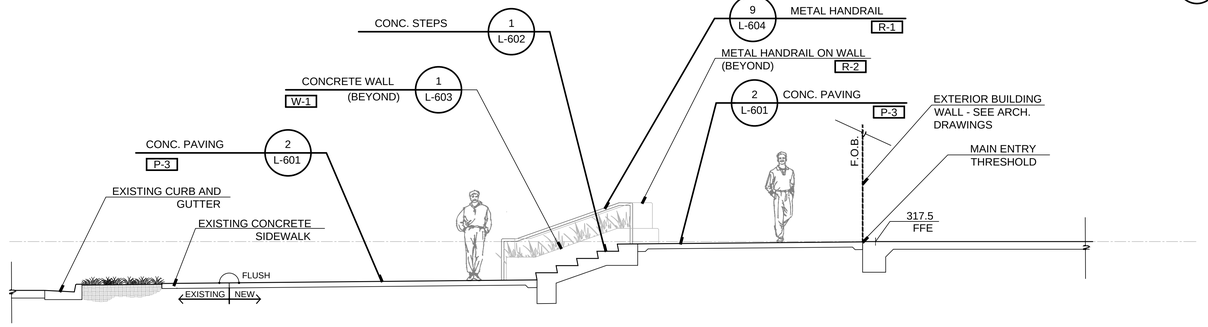

SECTION 3

SCALE: 1/4" = 1'-0"

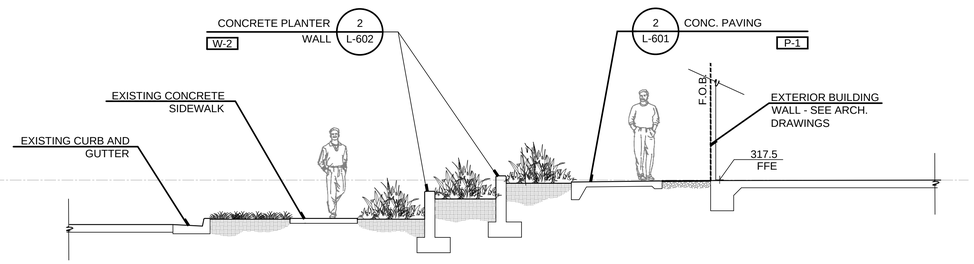

SECTION 4

SCALE: 1/4" = 1'-0"

REFER TO SHEET L300
FOR HARDSCAPE
LEGEND AND NOTES

APPL. No. A 03-122864

DSA Stamp

Architect

RACHLIN PARTNERS
8640 National Boulevard
Culver City, CA 90232
310.204.3400

Disclaimer:

THESE DRAWINGS ARE THE PROPERTY OF THE ARCHITECT. THE DESIGNS SHOWN AND DESCRIBED HEREIN INCLUDING ALL TECHNICAL DRAWINGS ARE PROPRIETARY AND CANNOT BE COPIED, DUPLICATED OR COMMERCIALLY EXPLOITED, IN WHOLE OR IN PART. THE DRAWINGS AND SPECIFICATIONS SHALL NOT BE USED BY THE OWNER ON OTHER PROJECTS, FOR ADDITIONS TO THIS PROJECT, OR FOR COMPLETION OF THIS PROJECT BY OTHERS. THE OWNER AGREES TO HOLD HARMLESS, INDEMNIFY AND DEFEND THE ARCHITECT AGAINST ALL DAMAGES, CLAIMS AND LOSSES, INCLUDING DEFENSE COSTS, ARISING OUT OF ANY REUSE OF PLANS AND SPECIFICATIONS WITHOUT THE WRITTEN AUTHORIZATION OF THE ARCHITECT OF RECORD.

Copyright © 2022 Rachlin Partners, All Rights Reserved.

Performing Arts Center
Hacienda La Puente Unified School District

635 North California Avenue
La Puente, CA 91744

Rev	Date	Issue
1	7.22.22	50% DD
2	10.21.22	50% CD
3	12.09.22	100% DSA Submittal
4	06.19.23	100% DSA Resubmittal
5	09.20.23	DSA Back Check
1	11.01.23	Addendum No. 1
2	11.01.23	Addendum No. 2

Date: 09/20/23
Scale: As Shown
Drawn By: --
Checked By: --

Architect / Engineer Stamp

Consultants
Miyamoto International, Inc.
The Ruzika Company, Inc,
MDC Consulting Engineers
Pocock Design Solutions
Newson Brown Acoustics, LLC
VCA Engineers, Inc.
HJSA Consulting
L.A. Design Associates, Inc.

Sheet Title

Site Sections

Sheet Number

L501

Plot Date: 11/1/2023 3:01:14 PM Last Save By: khans Login: Kris Hansen L:\2022\HLP PAC\DWGS\WIP\HLPLISD PAC_L501-L502-quarterscale Sections.dwg

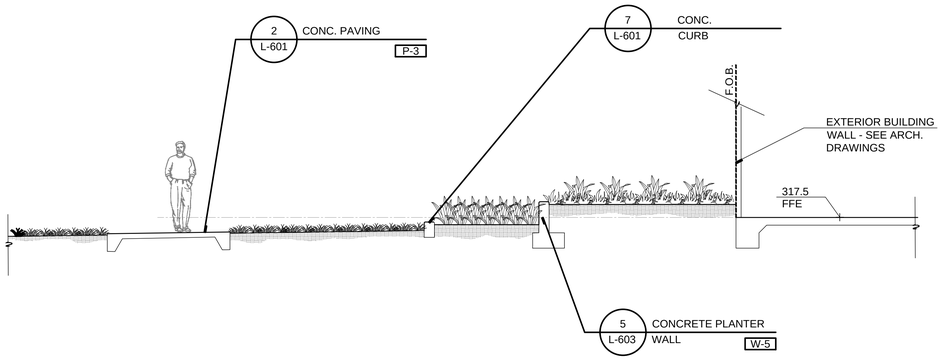

SECTION 1

SCALE: 1/4" = 1'-0"

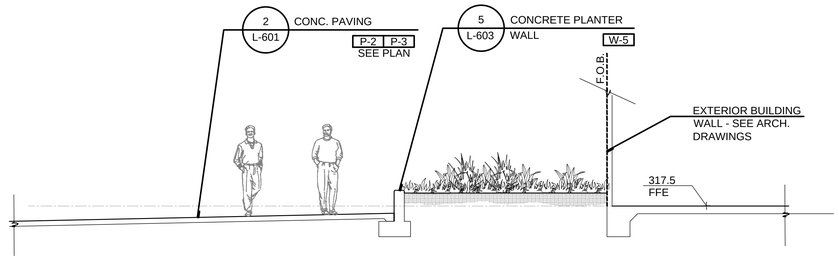

SECTION 2

SCALE: 1/4" = 1'-0"

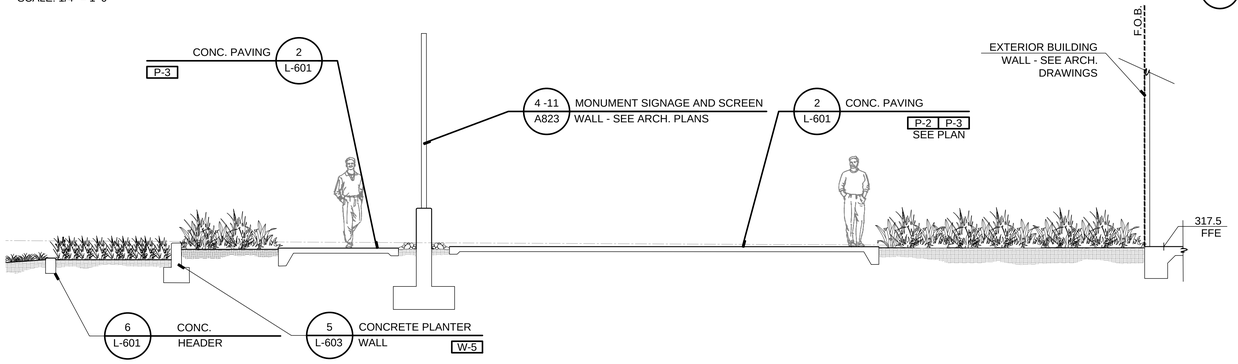

SECTION 3

SCALE: 1/4" = 1'-0"

APPL. No. A 03-122864

IDENTIFICATION STAMP
DIV. OF THE STATE ARCHITECT
APP: 03-122864 INC:
REVIEWED FOR
SS ☑ FLS ☑ ACS ☑
DATE: 10/03/2023

DSA Stamp

Architect

RACHLIN
PARTNERS
8640 National Boulevard
Culver City, CA 90232
310.204.3400

Disclaimer:

THESE DRAWINGS ARE THE PROPERTY OF THE ARCHITECT. THE DESIGNS SHOWN AND DESCRIBED HEREIN INCLUDING ALL TECHNICAL DRAWINGS ARE PROPRIETARY AND CANNOT BE COPIED, DUPLICATED OR COMMERCIALLY EXPLOITED, IN WHOLE OR IN PART. THE DRAWINGS AND SPECIFICATIONS SHALL NOT BE USED BY THE OWNER ON OTHER PROJECTS, FOR ADDITIONS TO THIS PROJECT, OR FOR COMPLETION OF THIS PROJECT BY OTHERS. THE OWNER AGREES TO HOLD HARMLESS, INDEMNIFY AND DEFEND THE ARCHITECT AGAINST ALL DAMAGES, CLAIMS AND LOSSES, INCLUDING DEFENSE COSTS, ARISING OUT OF ANY REUSE OF PLANS AND SPECIFICATIONS WITHOUT THE WRITTEN AUTHORIZATION OF THE ARCHITECT OF RECORD.

Copyright © 2022 Rachlin Partners, All Rights Reserved.

Performing Arts Center
Hacienda La Puente Unified School District

635 North California Avenue
La Puente, CA 91744

Rev	Date	Issue
1	7.22.22	50% DD
2	10.21.22	50% CD
3	12.09.22	100% DSA Submittal
4	06.19.23	100% DSA Resubmittal
5	09.20.23	DSA Back Check

Date: 09/20/23
Scale: As Shown
Drawn By: --
Checked By: --

Architect / Engineer Stamp

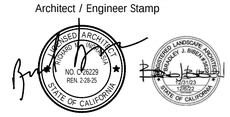

Consultants
Miyamoto International, Inc.
The Ruzika Company, Inc,
MDC Consulting Engineers
Pocock Design Solutions
Newson Brown Acoustics, LLC
VCA Engineers, Inc.
HJSA Consulting
L.A. Design Associates, Inc.

Sheet Title

Site Sections

Sheet Number

L502

Plot Date: 9/20/2023 11:32:49 AM Last Save By: khans Login: Kris Hansen L:\2022\HLP PAC\DWGS\WP\HLPJSD PAC L501-L502-quarterscale Sections.dwg

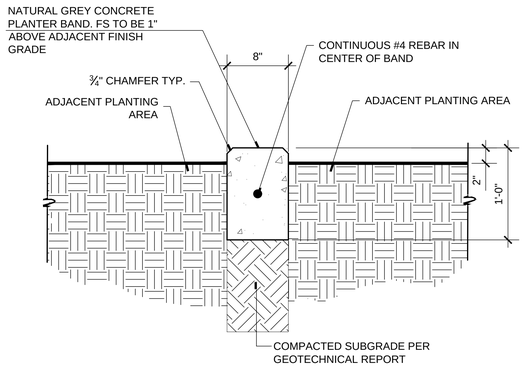

NOTE: REFER TO GEOTECHNICAL REPORT - FOR TREATMENT OF SUBGRADE BELOW ALL PAVING AND WALL FOOTINGS ON GRADE.

CONCRETE HEADER @ PLANTING AREA

SCALE: NTS

6

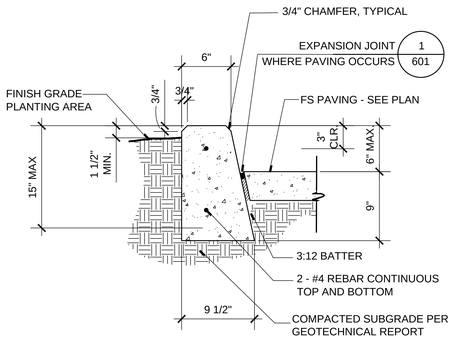

NOTE: REFER TO GEOTECHNICAL REPORT - FOR TREATMENT OF SUBGRADE BELOW ALL PAVING AND WALL FOOTINGS ON GRADE.

CONCRETE CURB

SCALE: NTS

7

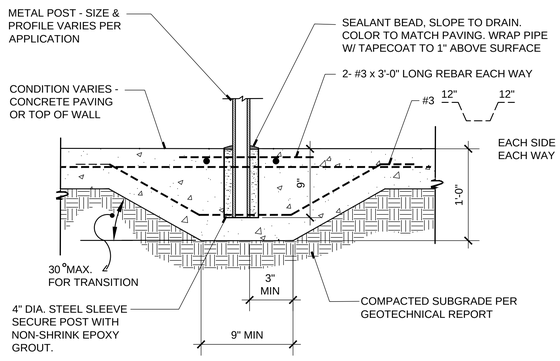

NOTE: REFER TO GEOTECHNICAL REPORT - FOR TREATMENT OF SUBGRADE BELOW ALL PAVING AND WALL FOOTINGS ON GRADE.

POST BASE CONNECTION

SCALE: NTS

8

CONSTRUCTION JOINTS

SCALE: 1 1/2" = 1'-0"

1

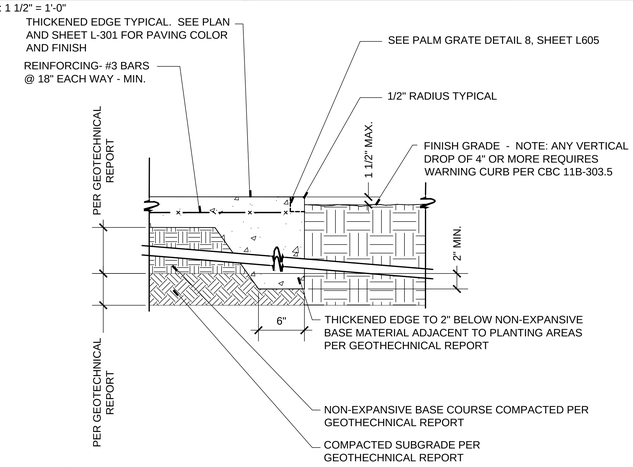

NOTES:
1. SEE ALSO PALM GRATE DETAIL SHEET L605
2. REFER TO GEOTECHNICAL REPORT FOR TREATMENT OF SUBGRADE BELOW ALL PAVING AND WALL FOOTINGS ON GRADE.

THICKENED EDGE AT PLANTING AREA

SCALE: NTS

4

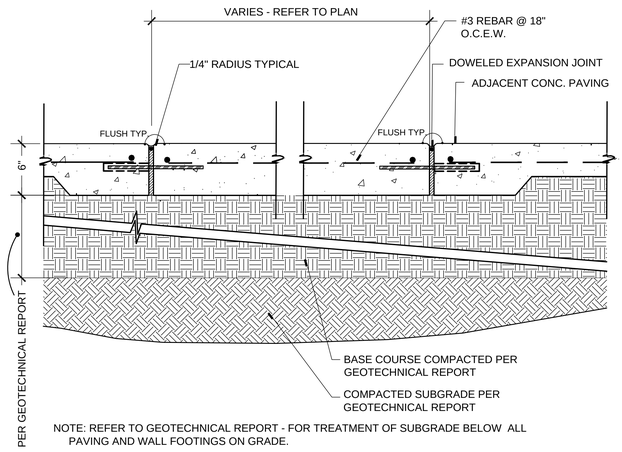

NOTE: REFER TO GEOTECHNICAL REPORT - FOR TREATMENT OF SUBGRADE BELOW ALL PAVING AND WALL FOOTINGS ON GRADE.

PAVING BAND IN PAVING

SCALE: NTS

5

A. EXPANSION JOINT

B. DOWELED EXPANSION JOINT @ 100' O.C. MAX.

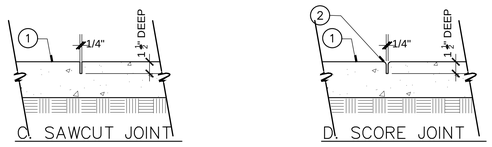

C. SAWCUT JOINT

D. SCORE JOINT

KEYED NOTES

1. CONCRETE PAVING
2. 1/4" TOOLED RADIUS EDGE
3. PREMOLDED EXPANSION JOINT FILLER PER SPECIFICATIONS
4. MASTIC SEALANT, COLOR TO MATCH ADJACENT PAVING. IN THOSE AREAS WITH SIMULATED NATURAL SURFACE (I.E. DIRT) APPLY SAND WHEN WET TO REDUCE MASTIC SHEEN
5. 3/4" DIA. x 24" LONG SMOOTH STEEL SLIP DOWEL, CENTER IN CONCRETE
6. CURB OR WALL FACE WHERE EDGE CONDITION EXISTS
7. ALL TRANSITIONS BETWEEN NEW CONCRETE PAVING AND EXISTING WALKWAYS OR OTHER PAVING MATERIALS SHALL BE FLUSH WITH VERTICAL DIFFERENCE OF NO MORE THAN ¼" PER CBC 11B-303.

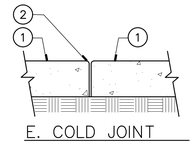

E. COLD JOINT

NOTE: REFER TO GEOTECHNICAL REPORT - FOR TREATMENT OF SUBGRADE BELOW ALL PAVING AND WALL FOOTINGS ON GRADE.

CONCRETE PAVING

SCALE: NTS

2

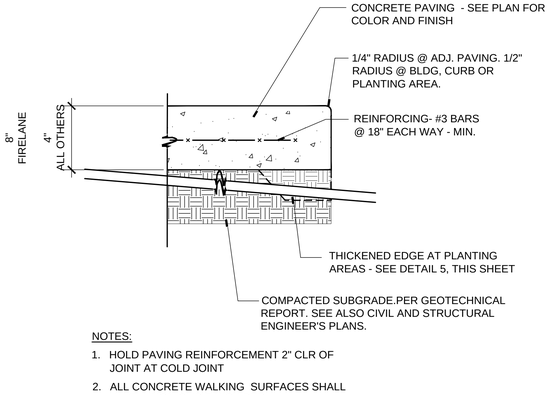

NOTES:
1. HOLD PAVING REINFORCEMENT 2" CLR OF JOINT AT COLD JOINT
2. ALL CONCRETE WALKING SURFACES SHALL HAVE A NON-SLIP FINISH PER SPECIFICATIONS
3. REFER TO GEOTECHNICAL REPORT - FOR TREATMENT OF SUBGRADE BELOW ALL PAVING AND WALL FOOTINGS ON GRADE.

CONCRETE PAVING - BUILDING INTERFACE

SCALE: NTS

3

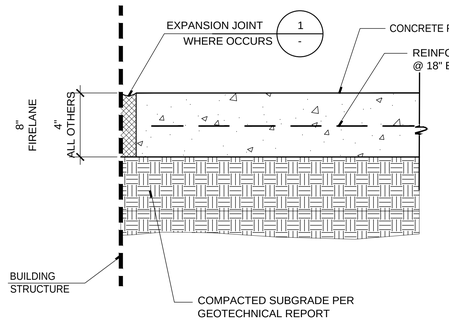

NOTES:
1. HOLD PAVING REINFORCEMENT 2" CLR OF JOINT
2. ALL CONCRETE WALKING SURFACES SHALL HAVE A NON-SLIP FINISH PER SPECIFICATIONS
3. REFER TO GEOTECHNICAL REPORT - FOR TREATMENT OF SUBGRADE BELOW ALL PAVING AND WALL FOOTINGS ON GRADE.

APPL. No. A 03-122864

IDENTIFICATION STAMP
DIV. OF THE STATE ARCHITECT
APP: 03-122864 INC:
REVIEWED FOR
SS ☑ FLS ☑ ACS ☑
DATE: 10/03/2023

DSA Stamp

Architect

RACHLIN PARTNERS
8640 National Boulevard
Culver City, CA 90232
310.204.3400

Disclaimer:

THESE DRAWINGS ARE THE PROPERTY OF THE ARCHITECT. THE DESIGNS SHOWN AND DESCRIBED HEREIN INCLUDING ALL TECHNICAL DRAWINGS ARE PROPRIETARY AND CANNOT BE COPIED, DUPLICATED OR COMMERCIALLY EXPLOITED, IN WHOLE OR IN PART. THE DRAWINGS AND SPECIFICATIONS SHALL NOT BE USED BY THE OWNER ON OTHER PROJECTS, FOR ADDITIONS TO THIS PROJECT, OR FOR COMPLETION OF THIS PROJECT BY OTHERS. THE OWNER AGREES TO HOLD HARMLESS, INDEMNIFY AND DEFEND THE ARCHITECT AGAINST ALL DAMAGES, CLAIMS AND LOSSES, INCLUDING DEFENSE COSTS, ARISING OUT OF ANY REUSE OF PLANS AND SPECIFICATIONS WITHOUT THE WRITTEN AUTHORIZATION OF THE ARCHITECT OF RECORD.

Copyright© 2022 Rachlin Partners, All Rights Reserved.

Performing Arts Center
Hacienda La Puente Unified School District
635 North California Avenue
La Puente, CA 91744

Rev	Date	Issue
1	7.22.22	50% DD
2	10.21.22	50% CD
3	12.09.22	100% DSA Submittal
4	06.19.23	100% DSA Resubmittal
5	09.20.23	DSA Back Check

Date: 09/20/23
Scale: As Shown
Drawn By: --
Checked By: --

Architect / Engineer Stamp

Consultants
Miyamoto International, Inc.
The Ruzika Company, Inc,
MDC Consulting Engineers
Pocock Design Solutions
Newson Brown Acoustics, LLC
VCA Engineers, Inc.
HJSA Consulting
L.A. Design Associates, Inc.

Sheet Title

Construction Details

Sheet Number

L601

Plot Date: 9/20/2023 11:12:43 AM Last Save By: khans Login: Kris Hansen L:\2022\HLP PAC\DWGS\WP\HLPJSD PAC L601.dwg

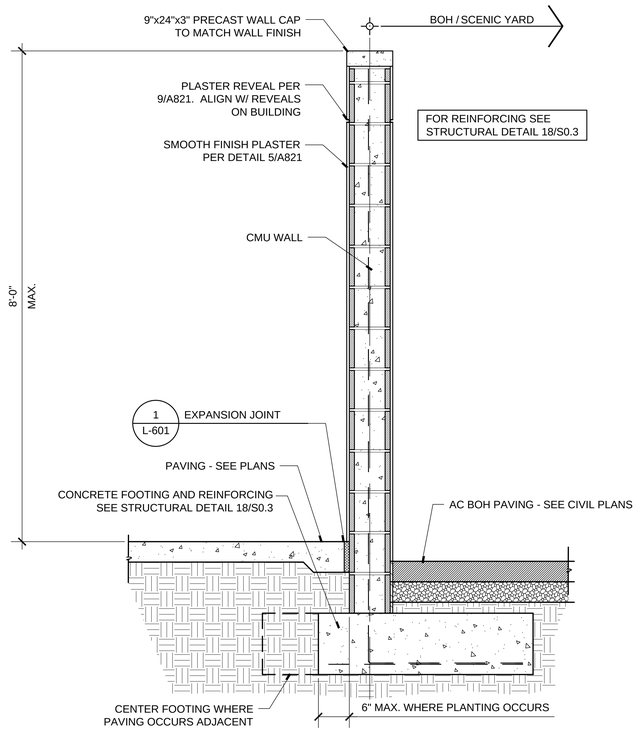

SCREEN WALL AT BOH / SCENIC YARD - W-7

SCALE: 1" = 1'-0"

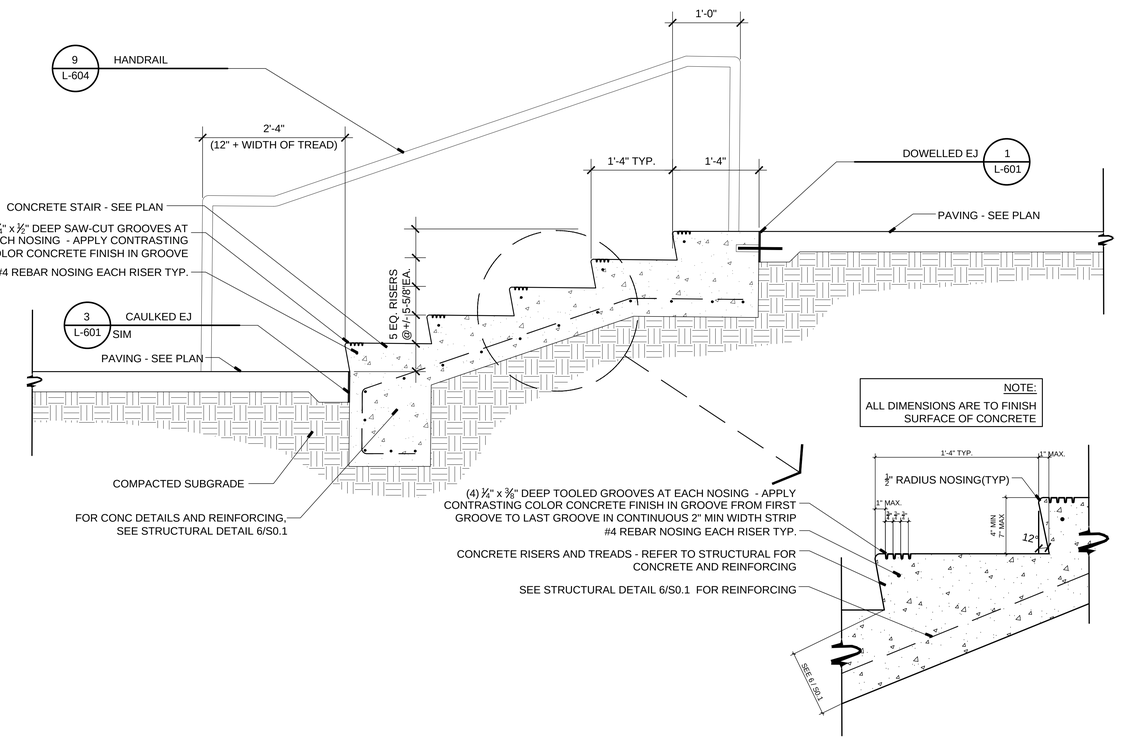

CONCRETE STAIRS AT MAIN ENTRY

SCALE: 1" = 1'-0"

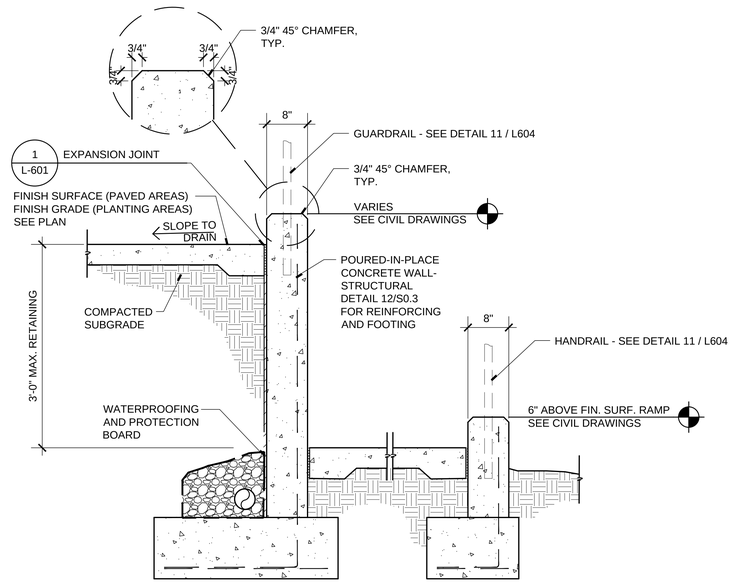

RETAINING WALLS AT MAIN ENTRY RAMP - W-3

SCALE: 1" = 1'-0"

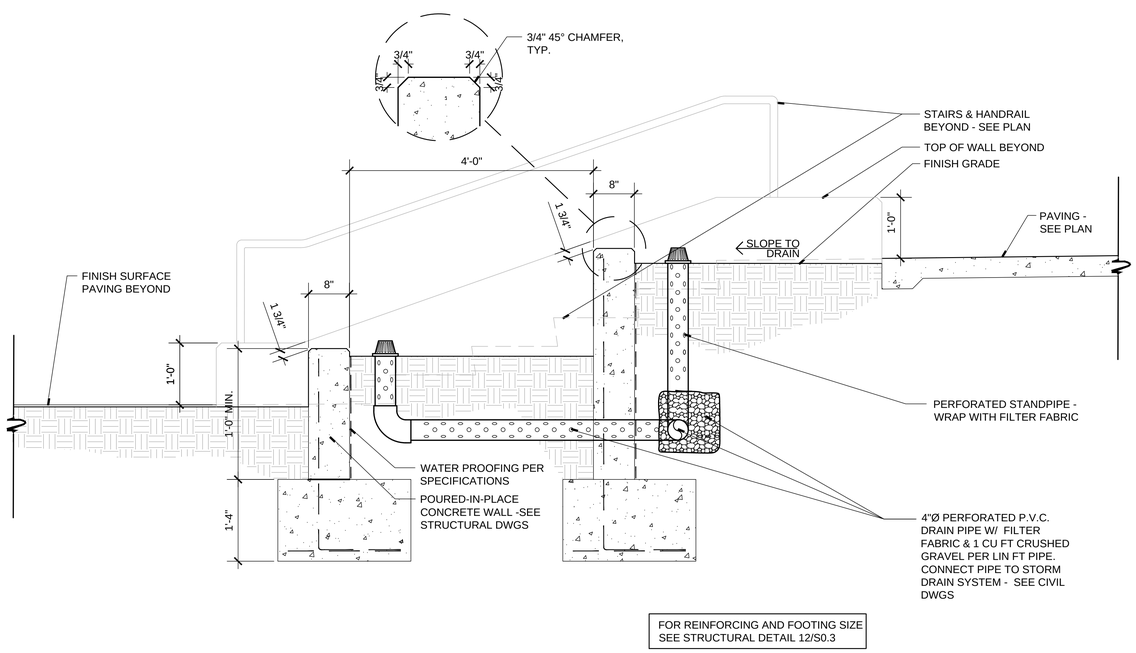

PLANTER WALLS AT MAIN ENTRY STAIR - W-2

SCALE: 1" = 1'-0"

APPL. No. A 03-122864

IDENTIFICATION STAMP
DIV. OF THE STATE ARCHITECT
APP: 03-122864 INC:
REVIEWED FOR
SS ☑ FLS ☑ ACS ☑
DATE: 10/03/2023

DSA Stamp

Architect

RACHLIN PARTNERS
8640 National Boulevard
Culver City, CA 90232
310.204.3400

Disclaimer:

THESE DRAWINGS ARE THE PROPERTY OF THE ARCHITECT. THE DESIGNS SHOWN AND DESCRIBED HEREIN INCLUDING ALL TECHNICAL DRAWINGS ARE PROPRIETARY AND CANNOT BE COPIED, DUPLICATED OR COMMERCIALLY EXPLOITED, IN WHOLE OR IN PART. THE DRAWINGS AND SPECIFICATIONS SHALL NOT BE USED BY THE OWNER ON OTHER PROJECTS, FOR ADDITIONS TO THIS PROJECT, OR FOR COMPLETION OF THIS PROJECT BY OTHERS. THE OWNER AGREES TO HOLD HARMLESS, INDEMNIFY AND DEFEND THE ARCHITECT AGAINST ALL DAMAGES, CLAIMS AND LOSSES, INCLUDING DEFENSE COSTS, ARISING OUT OF ANY REUSE OF PLANS AND SPECIFICATIONS WITHOUT THE WRITTEN AUTHORIZATION OF THE ARCHITECT OF RECORD.

Copyright © 2022 Rachlin Partners, All Rights Reserved.

Performing Arts Center
Hacienda La Puente Unified School District

635 North California Avenue
La Puente, CA 91744

Rev	Date	Issue
1	7.22.22	50% DD
2	10.21.22	50% CD
3	12.09.22	100% DSA Submittal
4	06.19.23	100% DSA Resubmittal
5	09.20.23	DSA Back Check

Date: 09/20/23
Scale: As Shown
Drawn By: --
Checked By: --

Architect / Engineer Stamp

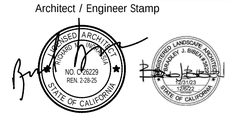

Consultants
Miyamoto International, Inc.
The Ruzika Company, Inc,
MDC Consulting Engineers
Pocock Design Solutions
Newson Brown Acoustics, LLC
VCA Engineers, Inc.
HJSA Consulting
L.A. Design Associates, Inc.

Sheet Title

Construction Details

Sheet Number

L602

Plot Date: 9/20/2023 11:13:27 AM Last Save By: khans Login: Kris Hansen L:\2022\HLP PAC\DWGS\WP\HLPJSD PAC L602.dwg

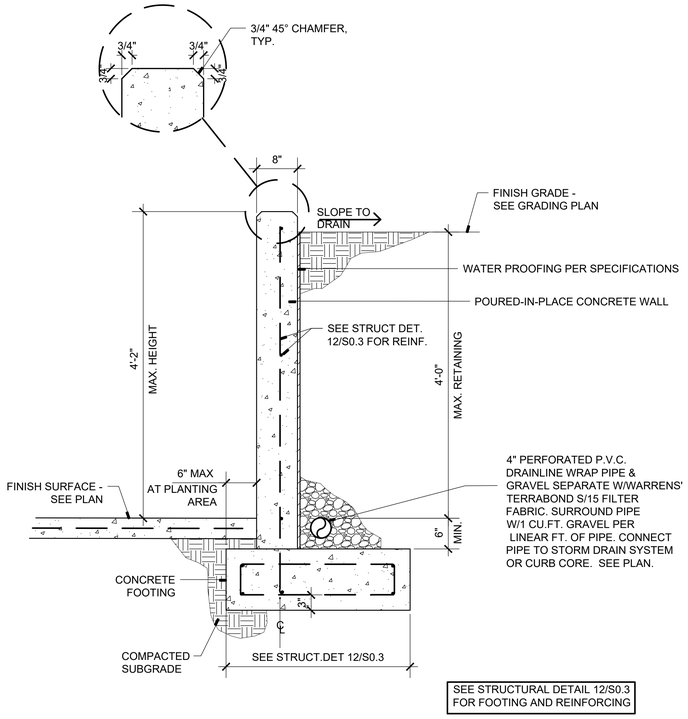

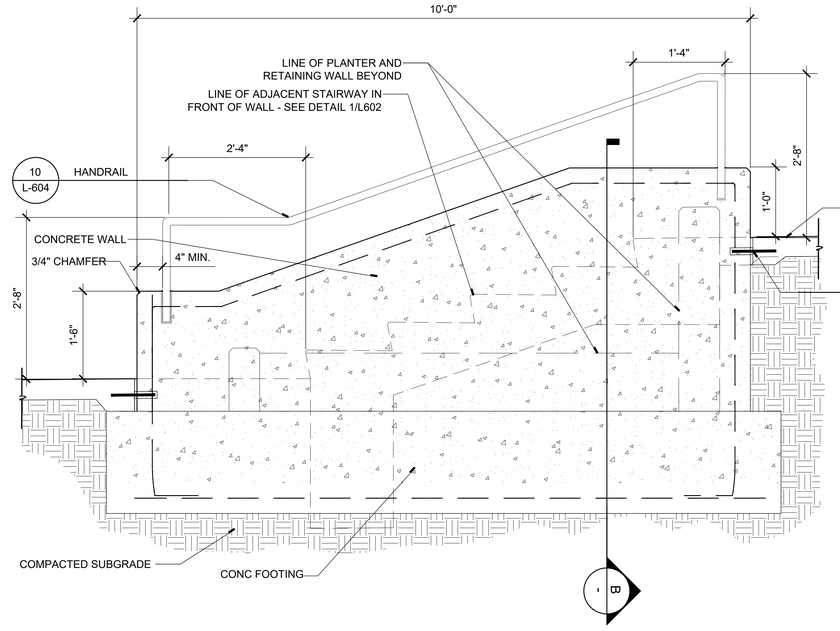

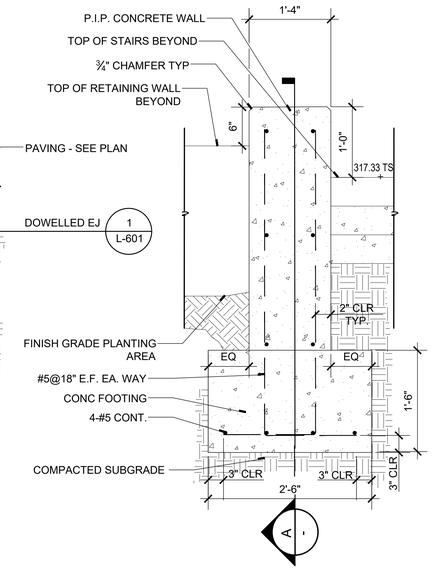

A LONGITUDINAL SECTION

B CROSS-SECTION

TYPICAL PLANTER WALL - W-5

5

SCALE: 3/4" = 1'-0"

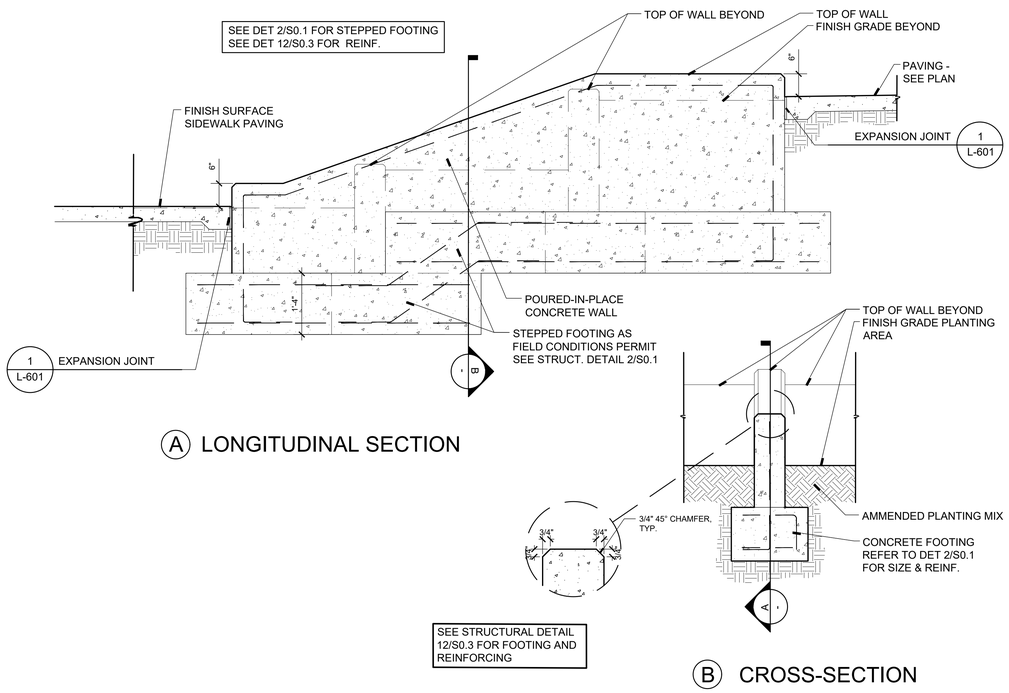

A LONGITUDINAL SECTION

B CROSS-SECTION

WING WALL AT PLANTER WALL TRANSITION - W-6

6

SCALE: 3/4" = 1'-0"

ENTRY STAIRWAY WING WALL - W-1

1

SCALE: 1" = 1'-0"

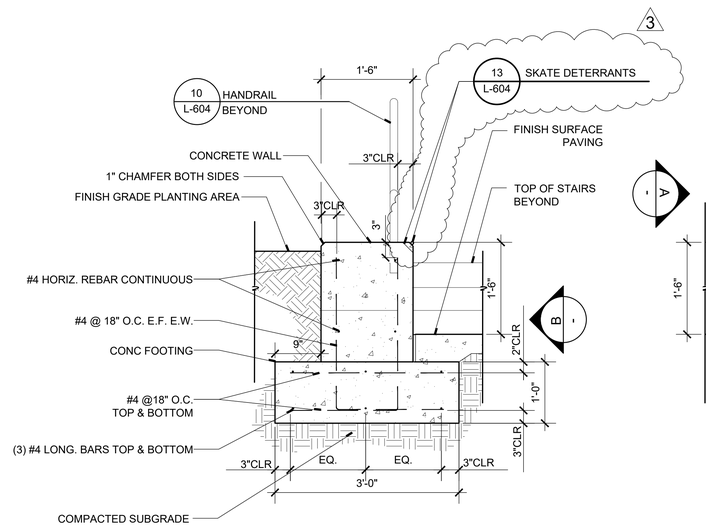

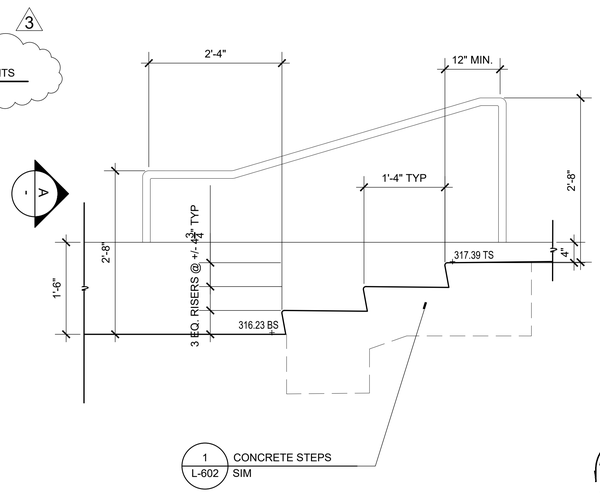

A CROSS-SECTION

B ELEVATION

SEAT WALL AT NORTH PLAZA STEPS - W-4

2

SCALE: X" = 1'-0"

Plot Date: 12/14/2023 12:49:01 PM Last Save By: Nbilbe Login: Brad Biben L:\2022\HLP PAC\DWGS\WP\Addendum 3\HLPJSD PAC L603.dwg

APPL. No. A 03-122864

DSA Stamp

Architect

RACHLIN PARTNERS
8640 National Boulevard
Culver City, CA 90232
310.204.3400

Disclaimer:
THESE DRAWINGS ARE THE PROPERTY OF THE ARCHITECT. THE DESIGNS SHOWN AND DESCRIBED HEREIN INCLUDING ALL TECHNICAL DRAWINGS ARE PROPRIETARY AND CANNOT BE COPIED, DUPLICATED OR COMMERCIALLY EXPLOITED, IN WHOLE OR IN PART. THE DRAWINGS AND SPECIFICATIONS SHALL NOT BE USED BY THE OWNER ON OTHER PROJECTS, FOR ADDITIONS TO THIS PROJECT, OR FOR COMPLETION OF THIS PROJECT BY OTHERS. THE OWNER AGREES TO HOLD HARMLESS, INDEMNIFY AND DEFEND THE ARCHITECT AGAINST ALL DAMAGES, CLAIMS AND LOSSES, INCLUDING DEFENSE COSTS, ARISING OUT OF ANY REUSE OF PLANS AND SPECIFICATIONS WITHOUT THE WRITTEN AUTHORIZATION OF THE ARCHITECT OF RECORD.
Copyright © 2022 Rachlin Partners, All Rights Reserved.

Performing Arts Center
Hacienda La Puente Unified School District

635 North California Avenue
La Puente, CA 91744

Rev	Date	Issue
1	7.22.22	50% DD
2	10.21.22	50% CD
3	12.09.22	100% DSA Submittal
4	06.19.23	100% DSA Resubmittal
5	09.20.23	DSA Back Check
1	11.01.23	Addendum No. 1
2	11.01.23	Addendum No. 2
3	12.14.23	Addendum No. 3

Date: 09/20/23
Scale: As Shown
Drawn By: --
Checked By: --

Architect / Engineer Stamp

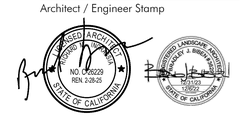

Consultants
Miyamoto International, Inc.
The Ruzika Company, Inc,
MDC Consulting Engineers
Pocock Design Solutions
Newson Brown Acoustics, LLC
VCA Engineers, Inc.
HJSA Consulting
L.A. Design Associates, Inc.

Sheet Title

Construction Details

Sheet Number

L603

SKATE DETERRENT IN CONC. WALL (13)

SCALE: NTS

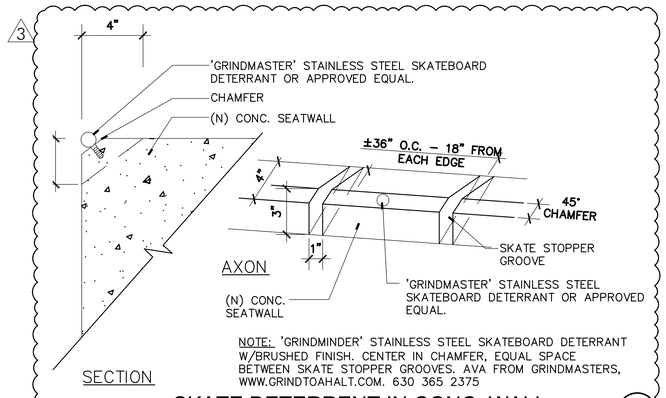

NOTE: 'GRINDMINDER' STAINLESS STEEL SKATEBOARD DETERRANT W/BRUSHED FINISH. CENTER IN CHAMFER, EQUAL SPACE BETWEEN SKATE STOPPER GROOVES. AVA FROM GRINDMASTERS, WWW.GRINDTOAHALT.COM. 630 365 2375

TYP. STAIR HANDRAIL (9)

SCALE: 1/2" = 1'-0"

NOTE: ALL STEEL MATERIAL SHOWN THIS SHEET SHALL CONFORM TO THE REQUIREMENTS OF ASTM A653/A653M, WITH A MINIMUM YIELD STRENGTH OF 45,000 PSI (310 MPA) AND A MINIMUM ZINC (HOT-DIP GALVANIZED) COATING WEIGHT OF 0.90 OZ/FT2 (276 G/M2), COATING DESIGNATION G-90.

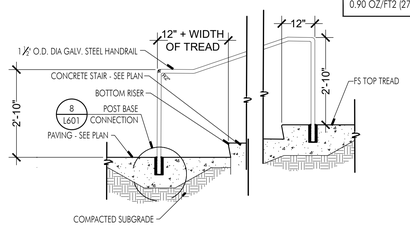

RAIL CONNECTION DETAIL (5)

SCALE: 1/2" = 1'-0"

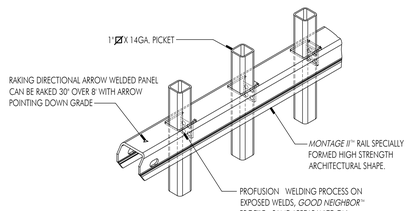

PICKET FENCE DETAIL (1)

SCALE: 1/2" = 1'-0"

NOTE: ALL FENCE AND GATE COMPONENTS TO BE AMERISTAR MONTAGE II GENESIS OR APPROVED EQUAL. AVAILABLE FROM AMERISTAR / ASSA ABLOY GROUP 888-333-3422 www.ameristarperimeter.com

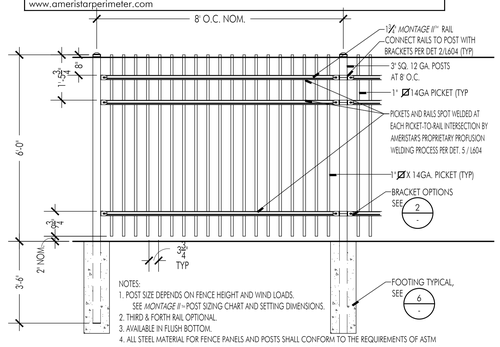

GATE POST CONNECTION TO CMU WALL (14)

SCALE: NTS

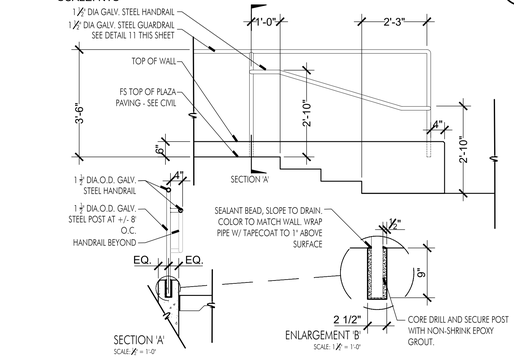

TYP. STAIR HANDRAIL MOUNTED ON WALL (10)

SCALE: 1/2" = 1'-0"

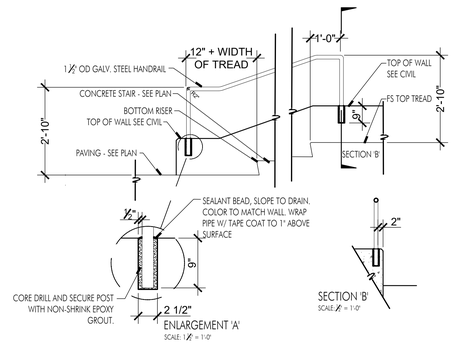

DECORATIVE FENCE POST FOOTING (6)

SCALE: 1" = 1'-0"

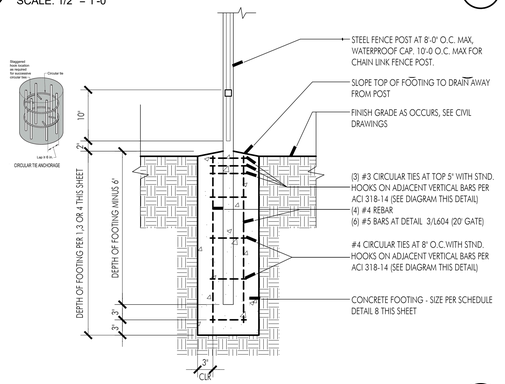

BRACKET DETAILS (2)

SCALE: N.T.S.

VALUES SHOWN ARE NOMINAL AND NOT TO BE USED FOR INSTALLATION PURPOSES. SEE PRODUCT SPECIFICATION SECTION 32 31 19 PART 3.02 FOR INSTALLATION REQUIREMENTS.

HANDRAIL ATTACHED TO GUARDRAIL (15)

SCALE: 1/2" = 1'-0"

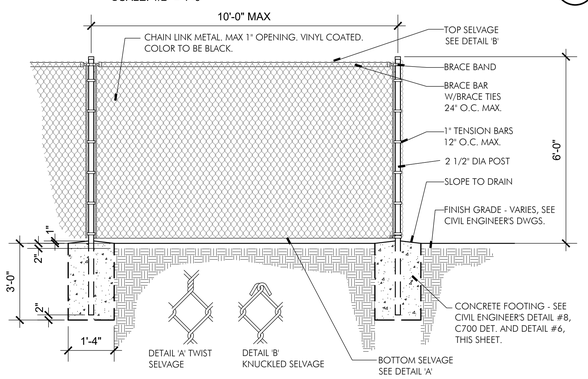

TYP. RAMP HANDRAIL MOUNTED ON WALL (11)

SCALE: 1/2" = 1'-0"

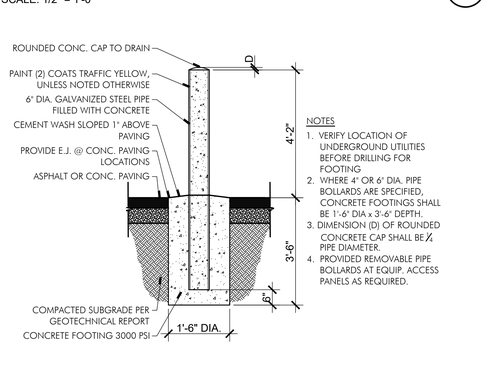

MONTAGE II FENCE POST/FOOTING SIZES & SPACING (8)

NTS

NOTE:
ALL SITE FENCES AND GATES ARE LESS THAN 8'-0" HEIGHT AND THEREFORE EXEMPT FROM DSA STRUCTURAL REVIEW PER DSA IR A-22.

Table 1 – Minimum Sizes for Posts

Fence Posts	Panel Height
2-1/2" x 12 Ga.	Up to & Including 6' Height
3" x 12 Ga.	Over 6' Up to & Including 8' Height

Table 2 – Coating Performance Requirements

Quality Characteristics	ASTM Test Method	Performance Requirements
Adhesion	D3359 – Method B	Adhesion (Retention of Coating) over 90% of test area (Tape and knife test).
Corrosion Resistance	B117, D714 & D1654	Corrosion Resistance over 1,500 hours (Scribed per D1654; failure mode is accumulation of 1/8" coating loss from scribe or medium #8 blisters).
Impact Resistance	D2794	Impact Resistance over 60 inch lb. (Forward impact using 0.625" ball).
Weathering Resistance	D822 D2244, D523 (60° Method)	Weathering Resistance over 1,000 hours (Failure mode is 60% loss of gloss or color variance of more than 3 delta-E color units).

Table 3 – Post Spacing By Bracket Type **

Span	For 'GENESIS' style 8' Nominal (92-5/8" Rail)					
Post Size	2-1/2"	3"	2-1/2"	3"	2-1/2"	3"
Bracket Type	Industrial Universal 2.5" (BB302) 3" (BB303)		Industrial Flat Mount (BB301)		Industrial Swivel (BB304)*	
Post Settings ± ½" O.C.	96"	96-1/2"	96"	96-1/2"	*96"	*96-1/2"

*Note: When using BB304 swivel brackets on either or both ends of a panel installation, care must be taken to ensure the spacing between post and adjoining pickets meets applicable codes. This will require trimming one or both ends of the panel. When using the BB301 flat mount bracket for Invincible style, rail may need to be drilled to accommodate rail to bracket attachment.
**Note: Spacing and brackets in table above are for Ameristar Montage II 'Genesis' and for listed for reference. If a substitute manufacturer is submitted, spacing will need to be verified to match.

E. Schedule of Footings:

Item	Height	Footings*	
		Diameter(inches)	Depth (inches)
Line Posts	Up to 6'-0"	16	36
	6'-1" to 8'-0"	18	42
	8'-1" to 10'-0"	18	48
	10'-1" to 16'-0"	24	56
Terminal, Corner, Angle & Pull Posts	Up to 8'-0"	18	42
	8'-1" to 10'-0"	18	48
	10'-1" to 16'-0"	24	56
Gate Posts	Up to 8'-0"	24	48
Vehicular Swing Gate Posts	Up to 8'-0"	30	60

*Note: Embed posts into footing 5 inches less than the depth of the footing. Deviations from footing schedule will require soil test and Architect review.

SINGLE SWING GATE W/ PANIC HDWR & CLOSER (4)

SCALE: 1/2" = 1'-0"

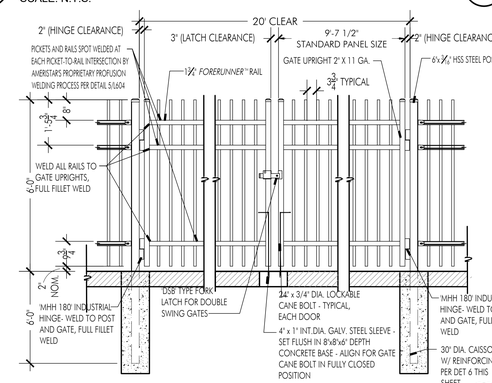

DOUBLE SWING GATE (S01 & S05) (3)

SCALE: 1/2" = 1'-0"

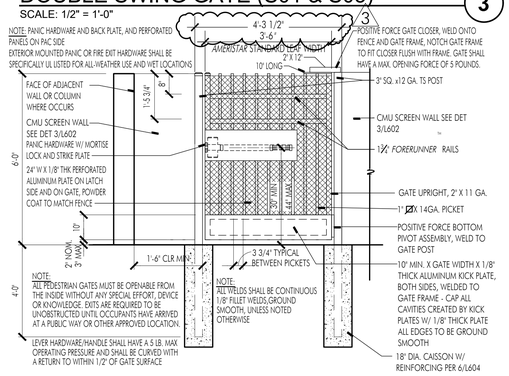

VINYL CLAD CHAIN LINK FENCE (16)

SCALE: 1/2" = 1'-0"

TYP. BACK OF HOUSE BOLLARD (12)

SCALE: 1/2" = 1'-0"

APPL. No. A 03-122864

DSA Stamp

Architect

RACHLIN PARTNERS
8640 National Boulevard
Culver City, CA 90232
310.204.3400

Disclaimer:

THESE DRAWINGS ARE THE PROPERTY OF THE ARCHITECT. THE DESIGNS SHOWN AND DESCRIBED HEREIN INCLUDING ALL TECHNICAL DRAWINGS ARE PROPRIETARY AND CANNOT BE COPIED, DUPLICATED OR COMMERCIALLY EXPLOITED, IN WHOLE OR IN PART. THE DRAWINGS AND SPECIFICATIONS SHALL NOT BE USED BY THE OWNER ON OTHER PROJECTS, FOR ADDITIONS TO THIS PROJECT, OR FOR COMPLETION OF THIS PROJECT BY OTHERS. THE OWNER AGREES TO HOLD HARMLESS, INDEMNIFY AND DEFEND THE ARCHITECT AGAINST ALL DAMAGES, CLAIMS AND LOSSES, INCLUDING DEFENSE COSTS, ARISING OUT OF ANY REUSE OF PLANS AND SPECIFICATIONS WITHOUT THE WRITTEN AUTHORIZATION OF THE ARCHITECT OF RECORD.

Copyright © 2022 Rachlin Partners, All Rights Reserved.

Performing Arts Center
Hacienda La Puente Unified School District

635 North California Avenue
La Puente, CA 91744

Rev	Date	Issue
1	7.22.22	50% DD
2	10.21.22	50% CD
3	12.09.22	100% DSA Submittal
4	06.19.23	100% DSA Resubmittal
5	09.20.23	DSA Back Check
1	11.01.23	Addendum No. 1
2	11.01.23	Addendum No. 2
3	12.14.23	Addendum No. 3

Date: 09/20/23
Scale: As Shown
Drawn By: --
Checked By: --

Architect / Engineer Stamp

REGISTERED ARCHITECT NO. C29229 REN. 2-28-25 STATE OF CALIFORNIA

REGISTERED LANDSCAPE ARCHITECT NO. 6257 REN. 08-31-2025 STATE OF CALIFORNIA

Consultants
Miyamoto International, Inc.
The Ruzika Company, Inc,
MDC Consulting Engineers
Pocock Design Solutions
Newson Brown Acoustics, LLC
VCA Engineers, Inc.
HJSA Consulting
L.A. Design Associates, Inc.

Sheet Title

Gate, Fence and Railing Details

Sheet Number

L604

Plot Date: 12/14/2023 7:40:19 PM Last Save By: bblake Login: Brad Blaen L:\2022\HLP PIAC\DWGS\WP-Addendum 3\HLPJSD PIAC L604.dwg

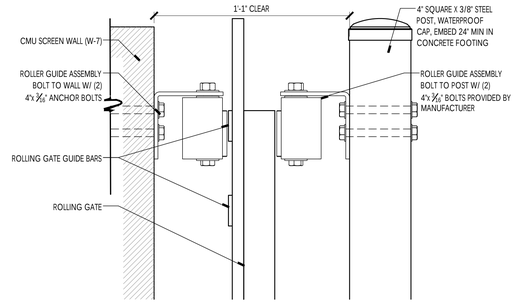

SIDE VIEW

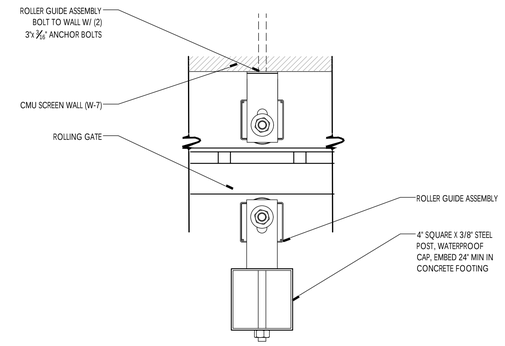

TOP VIEW

ROLLER GUIDE DETAIL

SCALE: 3" = 1'-0"

14

NOTE: ALL STEEL MATERIAL SHOWN THIS SHEET SHALL CONFORM TO THE REQUIREMENTS OF ASTM A653/A653M, WITH A MINIMUM YIELD STRENGTH OF 45,000 PSI (310 MPA) AND A MINIMUM ZINC (HOT-DIP GALVANIZED) COATING WEIGHT OF 0.90 OZ/FT2 (276 G/M2), COATING DESIGNATION G-90.

NOTE:
ALL SITE FENCES AND GATES ARE LESS THAN 8'-0" HEIGHT AND THEREFORE EXEMPT FROM DSA STRUCTURAL REVIEW PER DSA IR A-22.

AMERISTAR PASSPORT II INDUSTRIAL ROLL GATE OR EQUAL
ORNAMENTAL PICKETS: 1" SQUARE
TOP RAIL(S), UPRIGHTS AND DIAGONALS BRACES: 2"SQUARE X 11GA.
BOTTOM RAIL: 2" X 4" X 11GA. (NOTCHED & PLATED FOR V-TRACK WHEELS)
ROLL GATE HARDWARE : KIT #PGKOD

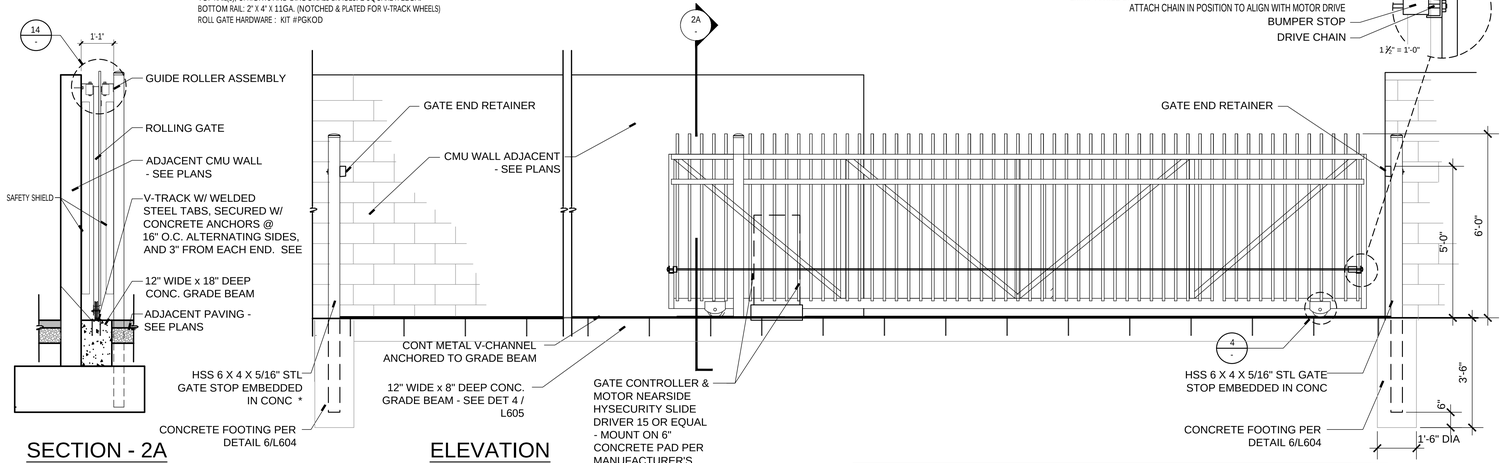

SECTION - 2A

1/2" = 1'-0"

ELEVATION

1/2" = 1'-0"

NOTE:

1. ALL HARDWARE SHALL BE INSTALLED IN ACCORDANCE WITH THE MANUFACTURER'S INSTALLATION INSTRUCTIONS. MOTORIZED GATES SHALL BE INSTALLED SO THEY COMPLY WITH CURRENT ASTM F2200 & UL325 STANDARDS.
2. GATE STOPS SHALL BE INSTALLED ON EACH TRACK IN A WAY THAT CONFORMS TO CURRENT ASTM F2200 STANDARDS.
3. SLIDE GATE OPERATORS WILL REQUIRE A MINIMUM OF TWO MONITORED EXTERNAL ENTRAPMENT PROTECTION SENSORS (ONE FOR EACH DIRECTION) TO PROTECT ENTRAPMENT ZONES IN BOTH THE OPEN AND CLOSE DIRECTION OF TRAVEL IN ACCORDANCE WITH UL325 AND ASTM F2200.

NOTE:
FIELD VERIFICATION OF ALL BUILT CONDITIONS REQUIRED AND SHOP DRAWINGS REQUIRED FOR APPROVAL PRIOR TO FABRICATION OF GATE AND EQUIPMENT.

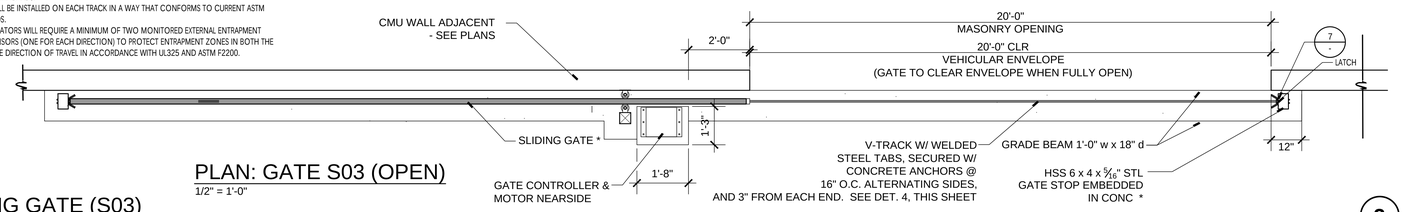

PLAN: GATE S03 (OPEN)

1/2" = 1'-0"

ROLLING GATE (S03)

SCALE: 1/2" = 1'-0"

2

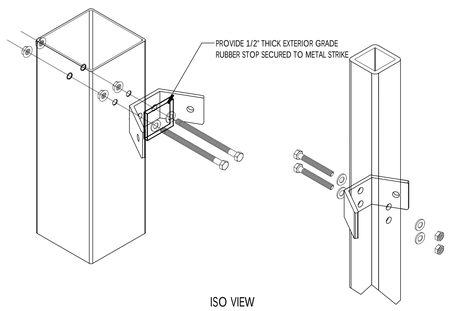

ISO VIEW

METAL STRIKE DETAIL

SCALE: 3/4" = 1'-0"

7

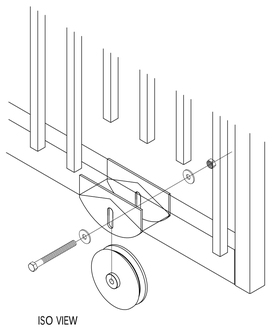

ISO VIEW

WHEEL CARRIER DETAIL

SCALE: 1/2" = 1'-0"

3

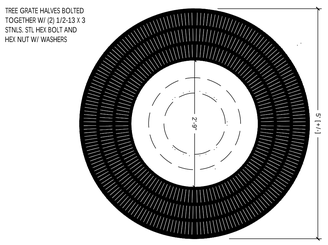

PLAN VIEW

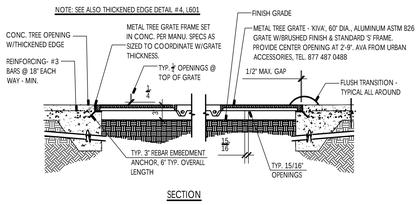

SECTION

PALM TREE GRATE

SCALE: 3/4" = 1'-0"

8

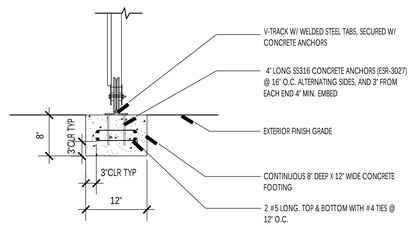

V-TRACK ATTACHMENT

SCALE: 1" = 1'-0"

4

APPL. No. A 03-122864

IDENTIFICATION STAMP
DIV. OF THE STATE ARCHITECT
APP: 03-122864 INC:
REVIEWED FOR
SS ☑ FLS ☑ ACS ☑
DATE: 10/03/2023

DSA Stamp

Architect

RACHLIN PARTNERS
8640 National Boulevard
Culver City, CA 90232
310.204.3400

Disclaimer:
THESE DRAWINGS ARE THE PROPERTY OF THE ARCHITECT. THE DESIGNS SHOWN AND DESCRIBED HEREIN INCLUDING ALL TECHNICAL DRAWINGS ARE PROPRIETARY AND CANNOT BE COPIED, DUPLICATED OR COMMERCIALLY EXPLOITED, IN WHOLE OR IN PART. THE DRAWINGS AND SPECIFICATIONS SHALL NOT BE USED BY THE OWNER ON OTHER PROJECTS, FOR ADDITIONS TO THIS PROJECT, OR FOR COMPLETION OF THIS PROJECT BY OTHERS. THE OWNER AGREES TO HOLD HARMLESS, INDEMNIFY AND DEFEND THE ARCHITECT AGAINST ALL DAMAGES, CLAIMS AND LOSSES, INCLUDING DEFENSE COSTS, ARISING OUT OF ANY REUSE OF PLANS AND SPECIFICATIONS WITHOUT THE WRITTEN AUTHORIZATION OF THE ARCHITECT OF RECORD.

Copyright © 2022 Rachlin Partners, All Rights Reserved.

Performing Arts Center
Hacienda La Puente Unified School District

635 North California Avenue
La Puente, CA 91744

Rev	Date	Issue
1	7.22.22	50% DD
2	10.21.22	50% CD
3	12.09.22	100% DSA Submittal
4	06.19.23	100% DSA Resubmittal
5	09.20.23	DSA Back Check

Date: 09/20/23
Scale: As Shown
Drawn By: --
Checked By: --

Architect / Engineer Stamp

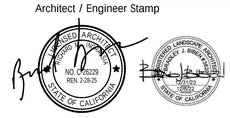

Consultants
Miyamoto International, Inc.
The Ruzika Company, Inc,
MDC Consulting Engineers
Pocock Design Solutions
Newson Brown Acoustics, LLC
VCA Engineers, Inc.
HJSA Consulting
L.A. Design Associates, Inc.

Sheet Title

Gate, Fence and Misc. Details

Sheet Number

L605

Plot Date: 9/20/2023 11:15:19 AM Last Save By: khans Login: Kris Hansen I:\2022\HLP PAC\DWGS\WP\HLPJSD PAC L605.dwg

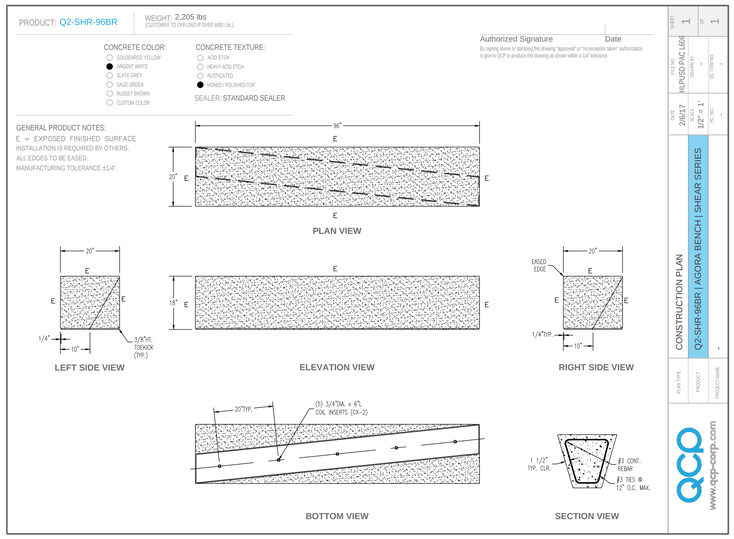

SITE FURNISHINGS - BENCH
NO SCALE

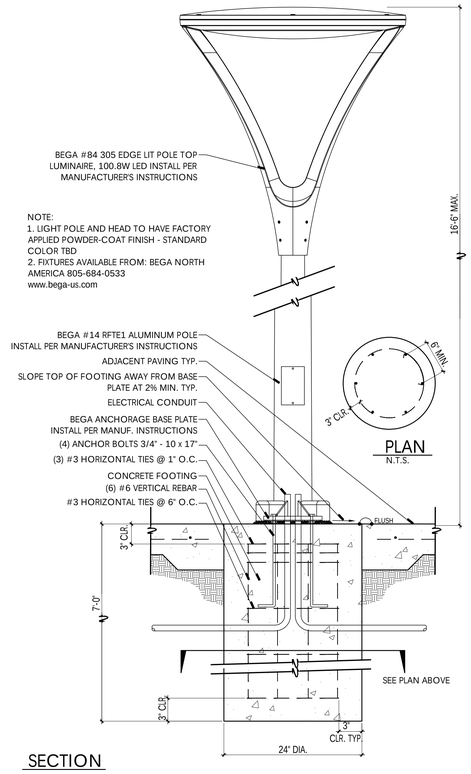

PLAZA LIGHT L-3
SCALE: 1 1/2" = 1'-0"

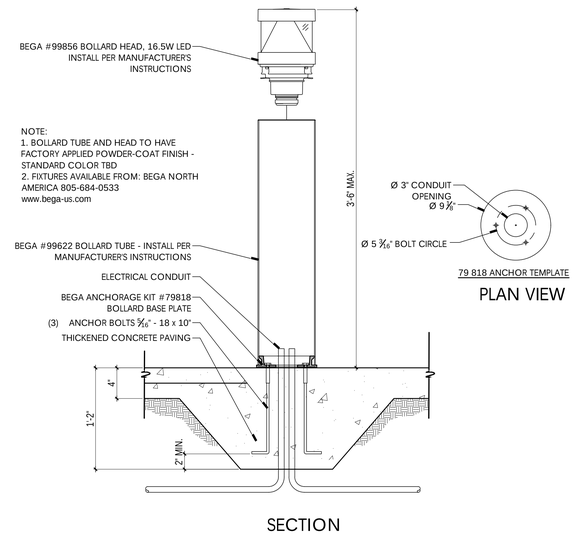

BOLLARD LIGHT L-1
SCALE: 1 1/2" = 1'-0"

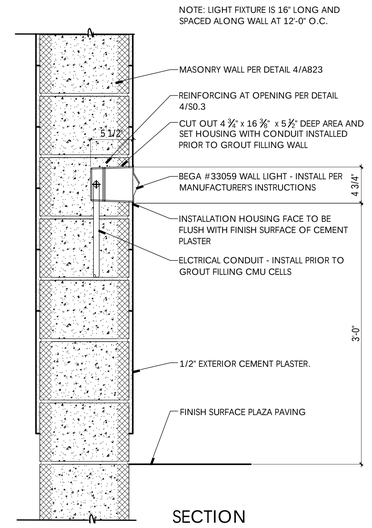

WALL MOUNTED LIGHT L-6
SCALE: 1 1/2" = 1'-0"

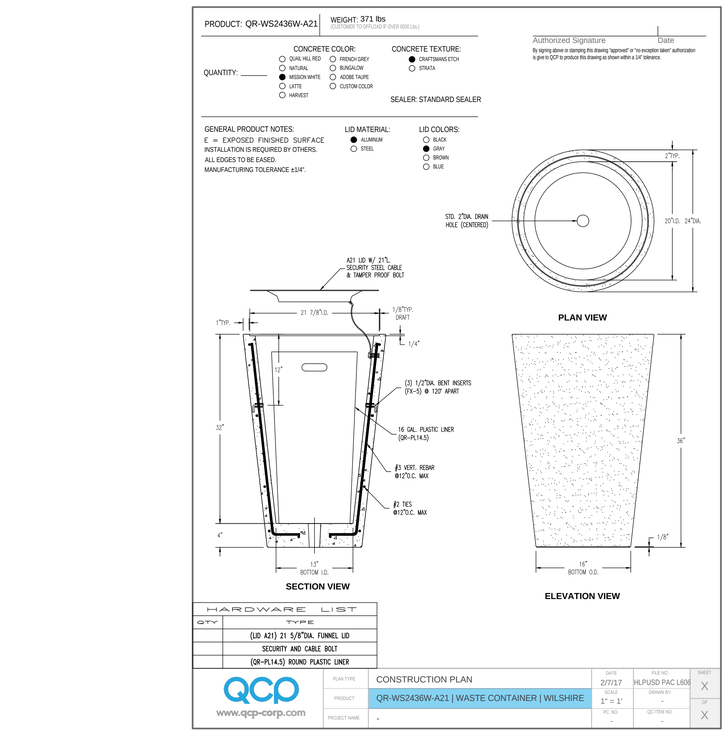

SITE FURNISHINGS - WASTE RECEPTACLE
NO SCALE

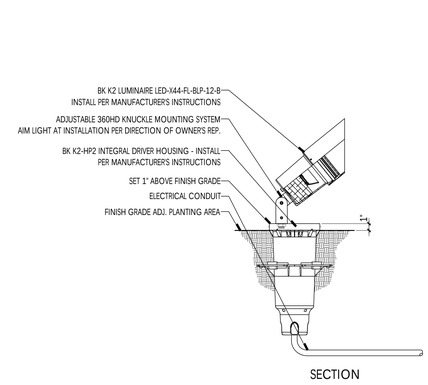

TREE UP-LIGHT L-5
SCALE: 1 1/2" = 1'-0"

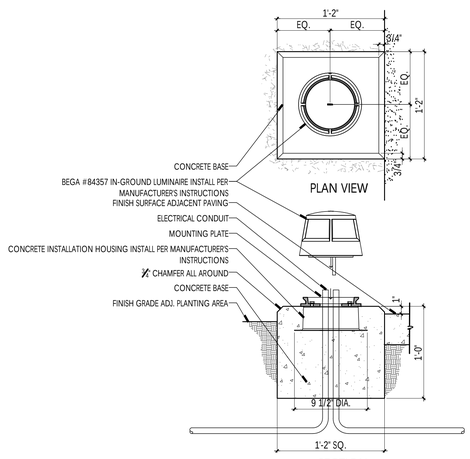

PATH LIGHT L-4
SCALE: 1 1/2" = 1'-0"

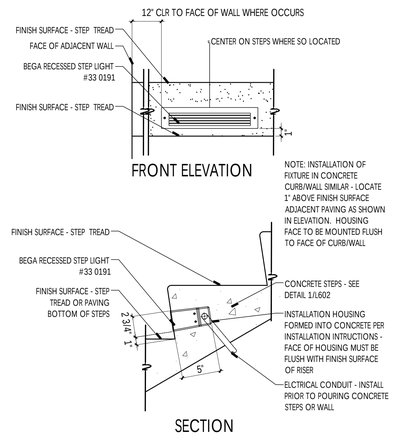

STEP LIGHT L-2
SCALE: 1 1/2" = 1'-0"

APPL. No. A 03-122864

IDENTIFICATION STAMP
DIV. OF THE STATE ARCHITECT
APP: 03-122864 INC:
REVIEWED FOR
SS ☑ FLS ☑ ACS ☑
DATE: 10/03/2023

DSA Stamp

Architect

RACHLIN PARTNERS
8640 National Boulevard
Culver City, CA 90232
310.204.3400

Disclaimer:

THESE DRAWINGS ARE THE PROPERTY OF THE ARCHITECT. THE DESIGNS SHOWN AND DESCRIBED HEREIN INCLUDING ALL TECHNICAL DRAWINGS ARE PROPRIETARY AND CANNOT BE COPIED, DUPLICATED OR COMMERCIALLY EXPLOITED, IN WHOLE OR IN PART. THE DRAWINGS AND SPECIFICATIONS SHALL NOT BE USED BY THE OWNER ON OTHER PROJECTS, FOR ADDITIONS TO THIS PROJECT, OR FOR COMPLETION OF THIS PROJECT BY OTHERS. THE OWNER AGREES TO HOLD HARMLESS, INDEMNIFY AND DEFEND THE ARCHITECT AGAINST ALL DAMAGES, CLAIMS AND LOSSES, INCLUDING DEFENSE COSTS, ARISING OUT OF ANY REUSE OF PLANS AND SPECIFICATIONS WITHOUT THE WRITTEN AUTHORIZATION OF THE ARCHITECT OF RECORD.
Copyright © 2022 Rachlin Partners, All Rights Reserved.

Performing Arts Center
Hacienda La Puente Unified School District
635 North California Avenue
La Puente, CA 91744

Rev	Date	Issue
1	7.22.22	50% DD
2	10.21.22	50% CD
3	12.09.22	100% DSA Submittal
4	06.19.23	100% DSA Resubmittal
5	09.20.23	DSA Back Check

Date: 09/20/23
Scale: As Shown
Drawn By: --
Checked By: --

Architect / Engineer Stamp

Consultants
Miyamoto International, Inc.
The Ruzika Company, Inc,
MDC Consulting Engineers
Pocock Design Solutions
Newson Brown Acoustics, LLC
VCA Engineers, Inc.
HJSA Consulting
L.A. Design Associates, Inc.

Sheet Title

Landscape Lighting Details

Sheet Number

L606

Plot Date: 9/20/2023 11:16:10 AM Last Save By: khans Login: Kris Hansen I:\2022\HLP PAC\DWGS\WP\HLPUSD PAC L606.dwg

IRRIGATION NOTES (AS APPLICABLE) :

1. GENERAL - ALL WORK SHALL BE IN ACCORDANCE WITH APPLICABLE CODES AND THESE PLANS. THE CONTRACTOR SHALL APPLY FOR ALL PERMITS AND PAY SAME.
1.A. THE CONTRACTOR SHALL VERIFY ALL CONDITIONS AND DIMENSIONS SHOWN ON THE PLANS AT THE SITE PRIOR TO COMMENCEMENT OF ANY WORK UNDER THIS CONTRACT.
1.B. THE CONTRACTOR SHALL CARRY ALL WORKERS COMPENSATION, PUBLIC LIABILITY AND PROPERTY DAMAGE INSURANCE, AS REQUIRED BY THE OWNER AND/OR GOVERNING AGENCY.

2. SCOPE OF WORK - UNLESS OTHERWISE SPECIFIED, THE CONSTRUCTION OF IRRIGATION SYSTEMS SHALL INCLUDE THE FURNISHING, INSTALLING AND TESTING OF ALL POINTS OF CONNECTION, BACKFLOW DEVICES, AND MAINLINE; AND THE FURNISHING AND INSTALLING OF CONTROLLERS, ELECTRIC CONTROL VALVES, OTHER SPECIFIED VALVES, LATERAL LINES, RISERS AND FITTINGS, SPRINKLER HEADS, AND DRIP LINES; AND EXCAVATION AND BACKFILL AND ALL OTHER WORK IN ACCORDANCE WITH THESE PLANS, DETAILS, AND NOTES. THE CONTRACTOR SHALL FURNISH ALL LABOR, MATERIAL, EQUIPMENT PROPERTY, TRANSPORTATION, AND PERFORM ALL OPERATIONS REQUIRED FOR A COMPLETE AND OPERABLE IRRIGATION SYSTEM AS INDICATED ON, OR REASONABLY IMPLIED BY THE DRAWINGS, DETAILS, AND NOTES. INCLUDED AS A PART OF THE IRRIGATION WORK, BUT NOT LIMITED BY IT, ARE THE FOLLOWING:
2.A. INSTALL COMPLETE OPERABLE INDEPENDENT IRRIGATION SYSTEMS PER THE PLANS, DETAILS, LEGENDS, AND NOTES.
2.B. ALL IRRIGATION WORK SHALL BE GUARANTEED BY THE CONTRACTOR AS TO MATERIAL AND WORKMANSHIP, INCLUDING SETTLING OF BACKFILLED TRENCHES BELOW GRADE FOR A PERIOD OF ONE YEAR FOLLOWING THE DATE OF FINAL ACCEPTANCE OF THE WORK.

3. CHECK AND VERIFY ALL SITE CONDITIONS AND UTILITY LOCATIONS PRIOR TO ANY SITE WORK. IF IT IS FOUND THAT THE SITE VARIES FROM THE DRAWINGS, NOTIFY THE LANDSCAPE ARCHITECT. THE LANDSCAPE ARCHITECT SHALL DECIDE ALL QUESTIONS RELATING TO THE INTERPRETATION OF THE DRAWINGS AND THE ACCEPTABLE FULFILLMENT OF THE CONTRACT.

4. COORDINATE ALL IRRIGATION WORK WITH PLANTING AND GRADING OPERATIONS TO AVOID ANY CONFLICT WITH PLANTING PITS, DRAINAGE SWALES, ETC.

5. PIPING SHOWN ON THE PLANS IS ESSENTIALLY DIAGRAMMATIC. CONTRACTOR SHALL ROUTE PIPING TO AVOID CONFLICT WITH STATIONARY ELEMENTS AND IN SUCH A MANNER AS TO CONFORM WITH THE VARIOUS DETAILS AND DESIGN INTENT OF THESE PLANS. WHERE TREES, LIGHT STANDARDS, OR OTHER PHYSICAL OBSTRUCTIONS EXIST, THE PIPING AND SPRINKLER HEAD LOCATIONS SHALL BE ADJUSTED AND / OR RELOCATED AS NECESSARY TO OBTAIN FULL COVERAGE WITH MINIMAL OVER SPRAY.

6. THE CONTRACTOR SHALL AT ALL TIMES PROTECT HIS WORK FROM DAMAGE AND THEFT AND REPLACE ALL DAMAGED OR STOLEN PARTS AT HIS EXPENSE UNTIL THE WORK IS ACCEPTED IN WRITING BY THE OWNER AND/OR GOVERNING AGENCY.

7. EXTREME CARE SHALL BE EXERCISED IN EXCAVATING AND WORKING NEAR EXISTING UTILITIES. CONTRACTOR SHALL VERIFY THE LOCATION AND CONDITION OF ALL UTILITIES AND BE RESPONSIBLE FOR ANY DAMAGE. CONTRACTOR SHALL CONTACT UNDERGROUND SERVICE ALERT A MINIMUM OF TWO WORKING DAYS PRIOR TO DIGGING.

8. THE CONTRACTOR SHALL KEEP THE PREMISES CLEAN AND FREE OF EXCESS EQUIPMENT, MATERIALS, AND RUBBISH INCIDENTAL TO HIS WORK.

9. THE IRRIGATION DESIGN IS BASED ON THE METER AND/OR POINT OF CONNECTION SIZE AND WATER PRESSURE INDICATED ON THE WATER SOURCE / POINT OF CONNECTION NOTE ON THE PLANS. CONTRACTOR SHALL VERIFY THE PRESSURE PRIOR TO CONSTRUCTION. SHOULD A DISCREPANCY EXIST, NOTIFY THE LANDSCAPE ARCHITECT PRIOR TO BEGINNING CONSTRUCTION. DO NOT PROCEED WITH ANY IRRIGATION INSTALLATION WORK UNTIL ANY AND ALL WATER SUPPLY AND PRESSURE ISSUES HAVE BEEN RESOLVED.

10. CONTRACTOR SHALL MAKE POINT(S) OF CONNECTION (POC) AS NOTED ON THE PLANS. ALL FEES AND LOCAL REQUIREMENTS SHALL BE THE RESPONSIBILITY OF THE LANDSCAPE CONTRACTOR.

11. IRRIGATION CONTRACTOR SHALL COORDINATE 120V AC POWER TO FINAL CONTROLLER LOCATION WITH GENERAL CONTRACTOR AND/OR ELECTRICAL CONTRACTOR AS NECESSARY. IRRIGATION CONTRACTOR SHALL PAY ALL ASSOCIATED FEES FOR ELECTRICAL SERVICE. IRRIGATION CONTRACTOR SHALL BE RESPONSIBLE FOR MAKING ALL FINAL CONTROLLER CONNECTIONS PER LOCAL CODES.

12. CONTRACTOR SHALL PROVIDE ALL EQUIPMENT REQUIRED TO PERFORM A MAINLINE PRESSURE TEST. THE HYDROSTATIC TEST SHALL HOLD A MINIMUM OF 150 PSI FOR 3 HOURS OR MORE. CONTRACTOR SHALL CONTACT THE OWNER'S REPRESENTATIVE A MINIMUM OF 48 HOURS IN ADVANCE OF THE TEST FOR CERTIFICATION.

13. CONTRACTOR SHALL THOROUGHLY FLUSH THE ENTIRE MAINLINE PRIOR TO INSTALLING REMOTE CONTROL VALVES. ALL LATERAL LINES SHALL BE COMPLETELY FLUSHED PRIOR TO INSTALLING HEADS AND NOZZLES. FOR DRIP SYSTEMS, ALL PIPING / TUBING DOWNSTREAM OF THE CONTROL VALVE SHALL BE THOROUGHLY FLUSHED PRIOR TO 'CLOSING' SYSTEM (FOR GRID SYSTEMS), OR BEFORE INSTALLING FLUSH VALVES.

14. ALL WIRES SHALL BE SOLID COPPER, PLASTIC INSULATED, U.F. DIRECT BURIAL WIRE. ALL COMMON WIRE SHALL BE AWG #14 WHITE; ALL CONTROL WIRES SHALL BE AWG #14 RED OR BLACK. CONTROLLERS SHALL HAVE SEPARATE COLOR CODED COMMON WIRES AND CONTROL WIRES WHEN TWO OR MORE CONTROLLERS ARE ON THE PROJECT.

15. ALL CONTROL WIRES AND IRRIGATION PIPING THAT RUNS UNDER HARDSCAPE / PAVING SHALL BE ENCASED IN PVC SLEEVES PER THE LEGEND. SLEEVES SHALL BE SIZED ACCORDING TO THE SLEEVING CHART ON THE PLANS. SLEEVES SHALL BE STRAIGHT RUNS OF PVC PIPE WITH NO FITTINGS INSTALLED UNDER HARDSCAPED AREAS. IF WIDTH OF HARDSCAPE EXCEEDS A FULL LENGTH OF PIPE, USE BELLED END CONNECTION OR COUPLER WITHIN SLEEVE, ENSURING SLEEVE IS LARGE ENOUGH FOR THE ADDED DIAMETER OF THE CONNECTION.

16. THE FINAL LOCATION FOR CONTROL VALVES AND QUICK COUPLERS SHALL BE APPROVED IN THE FIELD BY THE LANDSCAPE ARCHITECT OR THE OWNER'S AUTHORIZED REPRESENTATIVE. ALL VALVES AND QUICK COUPLERS SHALL BE LOCATED IN SHRUB AREAS WHEREVER POSSIBLE.

17. THE CONTRACTOR SHALL HEAT BRAND VALVE NUMBERS OR OTHER MARKINGS AS CALLED FOR IN THE IRRIGATION DETAILS ON INSIDE AND OUTSIDE OF ALL VALVE BOX LIDS.

18. ALL BRASS OR GALVANIZED CONNECTIONS SHALL BE COATED WITH TEFLON TAPE OR APPROPRIATE PIPE JOINT COMPOUND. ALL PVC TO PVC THREADED CONNECTIONS SHALL BE COATED WITH TEFLON TAPE. NO PIPE DOPE IS ALLOWED AT VALVE OR SPRINKLER HEAD CONNECTIONS. ANY PVC TO METAL CONNECTIONS SHALL BE MADE WITH A MALE THREADED PVC FITTING AND A FEMALE THREADED METAL FITTING.

19. ALL PVC SOLVENT-WELD CONNECTIONS SHALL BE MADE WITH SOLVENT-WELD MATERIALS AS RECOMMENDED BY THE PIPE MANUFACTURER. SOLVENT-WELD PRIMER SHALL BE APPLIED AT ALL CONNECTIONS.

20. LOW HEAD DRAINAGE WILL NOT BE ALLOWED. CONTRACTOR TO DETERMINE IN THE FIELD WHICH HEADS DRAIN AFTER THE VALVE IS SHUT OFF. CONTRACTOR SHALL PROVIDE AND INSTALL ADDITIONAL IN-LINE CHECK VALVES AS NEEDED AT NO ADDITIONAL COST TO THE OWNER.

21. ALL PRESSURE SUPPLY LINES AND CONTROL WIRES TO HAVE 18"-24" MINIMUM COVER. ALL LATERAL LINES TO HAVE 12" MINIMUM COVER. FOR RECYCLED WATER SYSTEMS, PIPE DEPTH TO BE DETERMINED BY THE LOCAL GOVERNING AGENCY.

22. MAINLINE AND WIRE SLEEVING TO HAVE 24" MINIMUM COVER FROM TOP OF SLEEVE TO BOTTOM OF AGGREGATE BASE. MAINLINE AND WIRE SLEEVING UNDER ALL VEHICULAR ACCESS WAYS TO HAVE 36" MINIMUM COVER FROM TOP OF SLEEVE TO BOTTOM OF AGGREGATE BASE. LATERAL LINE SLEEVING TO HAVE 12" MINIMUM COVER FROM TOP OF SLEEVE TO BOTTOM OF AGGREGATE BASE. LATERAL LINE SLEEVING UNDER ALL VEHICULAR ACCESS WAYS TO HAVE 36" MINIMUM COVER FROM TOP OF SLEEVE TO BOTTOM OF AGGREGATE BASE. CONTRACTOR SHALL INSTALL SLEEVING UNDER ALL HARDSCAPE 36" WIDE OR GREATER. DUE TO GRAPHIC CLARITY, NOT ALL SLEEVES MAY BE SHOWN ON THE PLANS. CONTRACTOR SHALL INSTALL ALL SLEEVING PRIOR TO HARDSCAPE AND PAVING INSTALLATION.

23. THE RADIUS OF EACH HEAD IS TO BE ADJUSTED SO THAT HEAD-TO-HEAD COVERAGE IS MAINTAINED, BUT OVER SPRAY ON BUILDINGS, WALKS, WALLS, AND OTHER HARD SURFACES IS MINIMIZED. THIS SHALL INCLUDE, BUT NOT BE LIMITED TO USING THE BEST NOZZLE RADIUS AND PATTERN, USING PRESSURE COMPENSATING DEVICES FOR NOZZLES, USING ADJUSTABLE NOZZLES, OR USING THE RADIUS ADJUST SCREW ON INDIVIDUAL NOZZLES.

24. FINE TUNE EACH CONTROL VALVE FOR OPTIMUM OPERATION. THIS SHALL BE DONE BY TURNING DOWN THE FLOW CONTROL OF THE VALVE UNTIL SYSTEM PERFORMANCE STARTS TO SUFFER. AT THAT POINT, OPEN UP VALVE FLOW CONTROL ABOUT ONE-HALF TURN OR UNTIL THE VALVE IS JUST OPEN ENOUGH FOR DESIRED OPERATION.

25. CONTRACTOR SHALL INSTALL 2 EXTRA WIRES FROM CONTROLLER(S) TO EACH END OF THE MAINLINE. WIRES SHALL COME UP INTO ALL VALVE BOXES ALONG THE MAINLINE PATH WITH 36" EXPANSION COILS IN EACH BOX. SPARE WIRES SHALL BE COLOR-CODED DIFFERENTLY THAN OTHER CONTROL WIRES FOR EACH CONTROLLER.

26. UPON COMPLETION OF THE PROJECT, THE CONTRACTOR IS TO TURN OVER TO THE OWNER THE FOLLOWING:
26.a. A REPRODUCIBLE SET OF "AS-BUILT" DRAWINGS AND CONTROLLER CHART.
26.b. 2 KEYS FOR EACH CONTROLLER / CONTROLLER ENCLOSURE (AS APPLICABLE).
26.c. 2 QUICK COUPLER KEYS AND MATCHING HOSE SWIVELS.
26.d. 4 OF EACH SPRINKLER HEAD SPECIFIED (AS APPLICABLE).
26.e. 100' OF EACH DRIP LINE TUBING SPECIFIED (AS APPLICABLE).
26.f. 10 OF EACH DRIP EMITTER / FLUSH VALVE / DRIP SYSTEM APPARATUS SPECIFIED (AS APPLICABLE).

27. RECORD DRAWINGS - THE CONTRACTOR SHALL PROVIDE AND KEEP UP TO DATE A COMPLETE RECORD SET OF PRINTS WHICH SHALL BE CORRECTED DAILY AND SHOW EVERY CHANGE FROM THE ORIGINAL DRAWINGS. PRIOR TO FINAL INSPECTION, THE CONTRACTOR SHALL TRANSCRIBE ALL INFORMATION FROM THE RECORD SET TO A BLACK-LINE PRINT PROCURED FROM THE OWNER. ALL WORK SHALL BE NEAT AND LEGIBLE, LOCATING THE FOLLOWING ITEMS FROM PERMANENT POINTS OF REFERENCE: SHUT-OFF VALVES, MAINLINE AND CONTROL WIRE ROUTING, POC, BACKFLOW DEVICE, CONTROL VALVES, CONTROLLER, QUICK COUPLING VALVES, AND OTHER PERTINENT UNDERGROUND ITEMS.

28. "CONTROLLER CHART" - UPON APPROVAL OF THE FINAL RECORD DRAWINGS, PROVIDE ONE CHART FOR EACH CONTROLLER INSTALLED.
28.A. THE CHART IS TO BE A REDUCED COPY OF THE APPROVED RECORD DRAWING (A BLACK-LINE PRINT REDUCED TO THE MAXIMUM SIZE THE CONTROLLER DOOR WILL ALLOW, COLORED WITH A DIFFERENT COLOR FOR EACH VALVE STATION'S AREA OF COVERAGE).
28.B. WHEN COMPLETED AND APPROVED, THE CHART SHALL BE LAMINATED BETWEEN TWO (2) PIECES OF 20 MIL. CLEAR PLASTIC AND MOUNTED ON THE INSIDE OF THE CONTROLLER DOOR USING VELCRO TAPE OR EQUAL.

LATERAL PIPE SIZING	
———	3/4" PIPE
—|—	1" PIPE
—||—	1 1/4" PIPE
—|||—	1 1/2" PIPE
—T—	2" PIPE
—T—	2 1/2" PIPE
—TT—	3" PIPE
—TT—	4" PIPE

LATERALS TO BE SCH 40 PVC.
NO 1/2" PIPING ALLOWED.

SCH 40 PVC SLEEVING CHART		
1 1/4" SLEEVE	1-8 WIRES	1/2" PIPE
1 1/2" SLEEVE	9-16 WIRES	3/4" PIPE
2" SLEEVE	17-26 WIRES	1" PIPE
2 1/2" SLEEVE	27-38 WIRES	1 1/4" PIPE
3" SLEEVE	39-54 WIRES	1 1/2" PIPE
4" SLEEVE	55-100 WIRES	2" PIPE
6" SLEEVE	100+ WIRES	3" PIPE

PIPE SLEEVES TO BE A MIN. OF 2x THE LINE SIZE.
WIRE SLEEVES TO BE A MIN. OF 2x THE BUNDLE SIZE.

811
Know what's below.
Call before you dig.

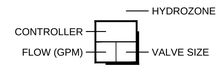

SPRINKLER LEGEND - SPRAY HEADS AND TREE BUBBLERS

SYMBOL	MANUFACTURER / MODEL NUMBER	NOZZLE	RAD	PSI	FLOW - GPM Q	T	H	TT	TQ	F	DETAIL
SHRUB HI-POP SPRAY HEADS WITH CHECK VALVE AND PRESSURE REGULATION											
	RAIN BIRD 1812-SAM-PRS 5' SERIES	Q/H/F	5'	30	0.10		0.20			0.41	A, L-751
	RAIN BIRD 1812-SAM-PRS 8' SERIES	Q/T/H/F	8'	30	0.26	0.35	0.52			1.05	
	RAIN BIRD 1812-SAM-PRS 10' SERIES	Q/T/H/F	10'	30	0.41	0.55	0.82			1.64	
	RAIN BIRD 1812-SAM-PRS 12' SERIES	Q/T/H/TT/TQ/F	12'	30	0.65	0.87	1.30	1.74	1.95	2.60	
	RAIN BIRD 1812-SAM-PRS 15' SERIES	Q/T/H/TT/TQ/F	15'	30	0.92	1.23	1.85	2.48	2.78	3.70	
	RAIN BIRD 1812-SAM-PRS STRIP SERIES	EST/SST/CST	4'x15'	30	0.61/1.21/1.21						
ROOT WATERING SYSTEM TREE BUBBLERS											
	RAIN BIRD RWS-M-B-C-1402 SERIES	N/A	N/A	30	1.0 PER TREE (2 x 0.50 GPM)						B, L-751

NOTE : THE SINGLE SYMBOL ON THE PLANS REPRESENTS TWO (2) ROOT WATERING SYSTEMS BUBBLERS FOR EACH TREE.

DRIP LINE IRRIGATION LEGEND

SYMBOL	MANUFACTURER / MODEL NUMBER	EMITTER SPACING	ROW SPACING	NOTES	DETAIL
----------	RAIN BIRD XFS-06-12 SERIES	12" O.C.	+/- 18" O.C.	SET 1ST ROW IN +/- 6"	D-F, L-751
V	RAIN BIRD ARV-050 AIR / VACUUM RELEASE VALVE - ONE PER ZONE AT SYSTEM HIGH POINT				E, L-751
F	RAIN BIRD 1812-SAM WITH GPH IRRIGATION GDFN MANUAL FLUSH VALVE / OPERATION INDICATOR ASSEMBLY				F, L-751

EQUIPMENT LEGEND

SYMBOL	MANUFACTURER / MODEL NUMBER	SIZE	DETAIL
	NIBCO T-580-70 TWO-PIECE BRONZE BALL VALVE - 2" AND SMALLER	LINE SIZE	G, L-751
	RAIN BIRD #44-LRC QUICK COUPLING VALVE WITH LOCKING VINYL COVER	1"	H, L-751
	SUPERIOR 950 SERIES ELECTRIC CONTROL VALVE (FOR BUBBLERS / SPRAY SYSTEMS)	1"	I, L-751
	950 SERIES VALVE WITH RAIN BIRD PRB-QKCHK-200M PRESSURE REGULATING BASKET STRAINER (200 MESH / 40 PSI) - FOR USE WITH DRIP LINE SYSTEMS	1"	J, L-751
NOT SHOWN	UF DIRECT BURIAL CONTROL WIRE WITH WATERPROOF CONNECTIONS	14 GA UF	K, L-751
----------	PURPLE SCH 40 PVC IRRIGATION PRESSURE MAINLINE (1 1/2" AND SMALLER) - 18" MIN. COVER PURPLE CLASS 315 PVC IRRIGATION MAINLINE (2" AND LARGER) - 24" MIN. COVER	PLAN SIZE	L, L-751
———	PURPLE SCH 40 PVC NON-PRESSURE LATERAL LINE - 12" MINIMUM COVER	PLAN SIZE	L, L-751
= = = = = =	PURPLE SCH 40 PVC PIPE SLEEVE - EXTEND 6" BEYOND EDGE OF HARDSCAPE - 18" MIN. COVER	PLAN SIZE	M, L-751
—·—·—	GRAY SCH 40 PVC WIRE SLEEVE - EXTEND 6" BEYOND EDGE OF HARDSCAPE - 18" MIN. COVER	PLAN SIZE	M, L-751
NOT SHOWN	USE RAIN BIRD VB SERIES VALVE BOXES. STANDARD BOX TO BE VB-STD WITH VB-LOCK-H. 10" ROUND TO BE VB-10RND WITH VB-LOCK-H. FOR DRIP ZONE VALVES USE VB-STD WITH VB-LOCK-H. ALL BOXES WILL HAVE PURPLE LIDS WITH LOCKING SYSTEM. USE THE CORRESPONDING RAIN BIRD VALVE BOX EXTENSIONS AS REQUIRED.		
BP	FEBCO LF825YA REDUCED PRESSURE BACKFLOW PREVENTER - WITH REGULATOR / STRAINER	1"	N, L-751
SM	SENSUS SR-II (OR APPROVED EQUAL) WATER METER USE AS AN IRRIGATION SUB-METER	1"	O, L-751
MV	SUPERIOR 3200-100 SERIES NORMALLY CLOSED MASTER CONTROL VALVE	1"	P, L-751
FS	FLOMEC QS-200-10 SERIES ULTRASONIC FLOW SENSOR IN SCH 80 PVC TEE	1"	Q, L-751
C	HUNTER 'ACC2' A2C-1200-P+(3)A2M-600+A2C-WIFI 'SMART' WEATHER BASED IRRIGATION CONTROLLER IN STAINLESS STEEL ENCLOSURE / MOUNTING PAD PER DETAIL	30 STATION	R, L-751
ET	HUNTER 'SOLAR SYNC' WSS-SEN WIRELESS RAIN SENSOR / ET SENSOR 80 PVC TEE	N/A	S, L-751

HYDROZONE INFORMATION MATRIX

Hydrozone Number	Station Number	Area (sq. ft.)	Percent of Area	Description / Plant Type	Plant Factor (WUCOLS)	Irrigation Type	Zone Flow (GPM)	Precipitation Rate (in./hr.)	Zone Pressure
1	1	1,175	8.2%	Planters - Drip Line	Low	Drip Line	8	0.64	30 psi
1	2	915	6.4%	Planters - Drip Line	Low	Drip Line	7	0.64	30 psi
Trees	3	0	0.0%	Supplemental Tree Bubblers	Low	Bubbler	3	3.00	30 psi
3	4	40	0.3%	Tree Wells	Low	Bubbler	2	3.00	30 psi
1	5	570	4.0%	Planters - Drip Line	Low	Drip Line	4	0.64	30 psi
2	6	665	4.6%	Planters - Spray	Low	Spray	16	1.50	30 psi
2	7	625	4.4%	Planters - Spray	Low	Spray	15	1.50	30 psi
2	8	625	4.4%	Planters - Spray	Low	Spray	15	1.50	30 psi
Trees	9	0	0.0%	Supplemental Tree Bubblers	Low	Bubbler	3	3.00	30 psi
2	10	825	5.8%	Planters - Spray	Low	Spray	17	1.50	30 psi
2	11	825	5.8%	Planters - Spray	Low	Spray	17	1.50	30 psi
Trees	12	0	0.0%	Supplemental Tree Bubblers	Low	Bubbler	8	3.00	30 psi
2	13	695	4.9%	Planters - Spray	Low	Spray	13	1.50	30 psi
2	14	695	4.9%	Planters - Spray	Low	Spray	13	1.50	30 psi
1	15	890	6.2%	Planters - Drip Line	Low	Drip Line	6	0.64	30 psi
1	16	775	5.4%	Planters - Drip Line	Low	Drip Line	5	0.64	30 psi
1	17	1,035	7.2%	Planters - Drip Line	Low	Drip Line	7	0.64	30 psi
Trees	18	0	0.0%	Supplemental Tree Bubblers	Low	Bubbler	6	3.00	30 psi
1	19	405	2.8%	Planters - Drip Line	Low	Drip Line	3	0.64	30 psi
3	20	20	0.1%	Tree Wells	Low	Bubbler	1	3.00	30 psi
1	21	640	4.5%	Planters - Drip Line	Low	Drip Line	5	0.64	30 psi
1	22	800	5.6%	Planters - Drip Line	Low	Drip Line	6	0.64	30 psi
Trees	23	0	0.0%	Supplemental Tree Bubblers	Low	Bubbler	9	3.00	30 psi
1	24	1,570	11.0%	Planters - Drip Line	Low	Drip Line	11	0.64	30 psi
Trees	25	0	0.0%	Supplemental Tree Bubblers	Low	Bubbler	17	3.00	30 psi
4	26	285	2.0%	Parking Lot Trees	Low	Bubbler	15	3.00	30 psi
1	27	245	1.7%	Planters - Drip Line	Low	Drip Line	2	0.64	30 psi
	TOTAL =	14,320	100.0%			Peak Flow =	17		

MWELO - WATER EFFICIENT LANDSCAPE WORKSHEET : NON-RESIDENTIAL (NO SLA) - ETAF = 0.45

Reference Evapotranspiration (ETo) 50.1 (LOS ANGELES) MAWA = Eto X 0.62 X (0.45 X LA)

Hydrozone Number	Plant Factor (PF)	Irrigation Method	Irrigation Efficiency (IE)	(PF/IE)	Landscape Area (sq. ft.)	(PF/IE) x Area	Estimated Total Water Use (ETWU)
REGULAR LANDSCAPE AREAS							
HZ 1 Planters - Drip Line	0.30	Drip Line	0.81	0.37	9,020	3,341	103,770
HZ 2 Planters - Spray	0.30	Sprinkler	0.75	0.40	4,955	1,982	61,565
HZ 3 - Tree Wells	0.30	Bubbler	0.81	0.37	60	22	690
HZ 4 - Parking Lot Trees	0.30	Bubbler	0.81	0.37	285	106	3,279
				Total	14,320	5,451	
						ETWU TOTAL	169,304
					MAXIMUM APPLIED WATER ALLOWANCE (MAWA)		200,164

DRIP LINE IRRIGATION

1. ALL DRIP LINE SYSTEMS SHALL BE INSTALLED PER THE MANUFACTURER'S RECOMMENDATIONS AND DIRECTIONS. THIS SHALL INCLUDE, BUT NOT BE LIMITED TO SOIL TYPE CONSIDERATION, PLANT TYPE CONSIDERATION, SLOPES, TYPICAL TUBING LAYOUT, SUPPLY HEADERS, FLUSH HEADERS, AIR-RELEASE VALVES, FLUSH VALVES, SOIL STAPLES, AND OPERATION INDICATORS, ETC.
2. DRIP LINE TUBING IS SHOWN ON THE PLANS IN THE SUGGESTED LAYOUT. CONTRACTOR SHALL ADJUST LAYOUT AS DETERMINED NECESSARY IN THE FIELD TO MATCH THE ACTUAL SITE CONDITIONS, DIMENSIONS, ETC.
3. CONTRACTOR SHALL CONSULT WITH LOCAL RAIN BIRD REPRESENTATIVE FOR SOIL PREPARATION RECOMMENDATIONS BASED ON ACTUAL SITE CONDITIONS. KEY ELEMENTS SHALL INCLUDE, BUT NOT BE LIMITED TO:
3.A. SOIL SHALL HAVE NO MORE THAN 15%-20% ORGANICS.
3.B. THE SOIL BED SHALL BE FREE OF ROCKS (AIR SPACES).
3.C. THE SOIL TREATMENT SHALL BE UNIFORM AND CONSISTENT.
3.D. BACKFILL AND COMPACT ALL TUBING TRENCHES/BACKFILL TO A DENSITY THAT MATCHES THE EXISTING NON-DISTURBED SOIL.
4. EACH DRIP LINE SYSTEM SHALL HAVE A DRIP ZONE VALVE ASSEMBLY THAT INCLUDES A PRESSURE REGULATOR AND FILTER PER THE IRRIGATION LEGEND.
5. EXTEND PVC LATERAL LINE PIPING PER IRRIGATION LEGEND FROM THE DRIP ZONE VALVE INTO THE PLANTING AREAS. ALL SUPPLY HEADERS AND FLUSH HEADERS SHALL BE PVC PIPING AS SPECIFIED ON THE DRAWINGS.
6. CONNECT THE DRIP LINE TUBING INTO THE PVC / POLY TUBING HEADERS PER THE MANUFACTURER'S DIRECTIONS, USING FITTINGS AS SUPPLIED BY THE MANUFACTURER OF THE DRIP LINE TUBING.
7. DRIP LINE TUBING RUNS SHALL BE SPACED AT APPROXIMATELY 18" O.C. FOR SHRUB AREAS, OR AS NOTED ON THE PLANS.
8. TUBING SHALL RUN GENERALLY PARALLEL TO THE LONG AXIS OF THE PLANTING AREAS. USE CHECK VALVES AS NECESSARY TO MINIMIZE SYSTEM DRAINAGE ON SLOPING AREAS. INSTALL PER MANUFACTURER'S DIRECTIONS.
9. FLUSH VALVE ASSEMBLIES SHALL BE INSTALLED A THE TERMINAL ENDS AND/OR LOW POINTS OF ZONES IN ALL DIRECTIONS.
10. DRIP LINE TUBING SHALL BE EVENLY BURIED 3"-4" DEEP, STAPLED DOWN, AND BACKFILLED PER THE PLANS AND DETAILS.
11. EACH DRIP LINE ZONE SHALL INCLUDE AN OPERATION INDICATOR (PART OF THE FABRICATED FLUSH ASSEMBLY).
12. AIR / VACUUM RELEASE VALVES TO BE INSTALLED AT THE SYSTEM(S) HIGH POINT(S).
13. ALL FITTINGS USED FOR DRIP LINE TUBING CONNECTIONS AND DRIP LINE TUBING TO PVC CONNECTIONS SHALL BE AS PRODUCED AND SUPPLIED BY THE MANUFACTURER OF THE DRIP LINE TUBING.

IRRIGATION MAINTENANCE SCHEDULE

THE IRRIGATION MAINTENANCE SCHEDULE TASKS LISTED BELOW ARE INTENDED AS MINIMUM STANDARDS AND MORE FREQUENT ATTENTION MAY BE REQUIRED DEPENDING ON THE PARTICULAR SITE CONDITIONS.

FREQUENCY	MAINTENANCE TASK
QUARTERLY	CONTROLLER CABINET - OPEN CABINET AND CLEAN OUT DEBRIS AND REPLACE BATTERY AS NECESSARY. CHECK WIRING AND REPAIR AS NEEDED AND CHECK CLOCK AND RESET IF NECESSARY.
MONTHLY	IRRIGATION SCHEDULE - ADJUST SCHEDULE FOR SEASONAL VARIATIONS AND OTHER CONDITIONS WHICH MAY AFFECT THE AMOUNT OF WATER NEEDED TO MAINTAIN PLANT HEALTH. ADJUST AS NECESSARY.
QUARTERLY	POC - VISUALLY INSPECT COMPONENTS FOR LEAKS, PRESSURE SETTINGS, SETTLEMENT OR OTHER DAMAGE AFFECTING THE OPERATION OF A COMPONENT. REPAIR AS NEEDED.
QUARTERLY	REMOTE CONTROL VALVES, ISOLATION VALVES AND QUICK COUPLER VALVES - VISUALLY INSPECT FOR LEAKS, SETTLEMENT, WIRE CONNECTIONS AND PRESSURE SETTINGS. REPAIR OR ADJUST AS NEEDED.
QUARTERLY	MAINLINE AND LATERALS - VISUALLY INSPECT FOR LEAKS OR SETTLEMENT OF TRENCHES. REPAIR AS NEEDED.
WEEKLY	SPRINKLERS - VISUALLY CHECK FOR ANY BROKEN, MISALIGNED OR CLOGGED HEADS, HEADS WITH INCORRECT ARC, INADEQUATE COVERAGE OR OVER-SPRAY AND LOW HEAD DRAINAGE. REPAIR AS NEEDED.
MONTHLY	FILTERS AND STRAINERS - VISUALLY CHECK FOR LEAKS, BROKEN FITTINGS. CLEAN AND FLUSH SCREENS.

APPL. No. A 03-122864

IDENTIFICATION STAMP
DIV. OF THE STATE ARCHITECT
APP: 03-122864 INC:
REVIEWED FOR
SS ☑ FLS ☑ ACS ☑
DATE: 10/03/2023

DSA Stamp

Architect

RACHLIN PARTNERS
8640 National Boulevard
Culver City, CA 90232
310.204.3400

Disclaimer:
THESE DRAWINGS ARE THE PROPERTY OF THE ARCHITECT. THE DESIGNS SHOWN AND DESCRIBED HEREIN INCLUDING ALL TECHNICAL DRAWINGS ARE PROPRIETARY AND CANNOT BE COPIED, DUPLICATED OR COMMERCIALLY EXPLOITED, IN WHOLE OR IN PART. THE DRAWINGS AND SPECIFICATIONS SHALL NOT BE USED BY THE OWNER ON OTHER PROJECTS, FOR ADDITIONS TO THIS PROJECT, OR FOR COMPLETION OF THIS PROJECT BY OTHERS. THE OWNER AGREES TO HOLD HARMLESS, INDEMNIFY AND DEFEND THE ARCHITECT AGAINST ALL DAMAGES, CLAIMS AND LOSSES, INCLUDING DEFENSE COSTS, ARISING OUT OF ANY REUSE OF PLANS AND SPECIFICATIONS WITHOUT THE WRITTEN AUTHORIZATION OF THE ARCHITECT OF RECORD.
Copyright © 2022 Rachlin Partners, All Rights Reserved.

Performing Arts Center
Hacienda La Puente Unified School District
635 North California Avenue
La Puente, CA 91744

Rev	Date	Issue
1	7.22.22	50% DD
2	10.21.22	50% CD
3	12.09.22	100% DSA Submittal
4	06.19.23	100% DSA Resubmittal
5	09.20.23	DSA Back Check

Date: 09/20/23
Scale: As Shown
Drawn By: --
Checked By: --

Architect / Engineer Stamp

Consultants
Miyamoto International, Inc.
The Ruzika Company, Inc,
MDC Consulting Engineers
Pocock Design Solutions
Newson Brown Acoustics, LLC
VCA Engineers, Inc.
HJSA Consulting
L.A. Design Associates, Inc.

Sheet Title
Irrigation

MATCHLINE - SEE SHEET L702

LIMIT OF WORK

LIMIT OF WORK

LIMIT OF WORK

RAIN SENSOR / ET SENSOR.

SUGGESTED LOCATION OF 'SMART' WEATHER-BASED IRRIGATION CONTROLLER. FINAL LOCATION TO BE DETERMINED IN THE FIELD.

POINT OF CONNECTION INTO 2" POTABLE WATER LINE IN THIS APPROXIMATE LOCATION. SEE CIVIL PLANS. INSTALL SHUT-OFF VALVE AT POC.

LOCATE ALL POC EQUIPMENT IN ADJACENT PLANTER. FINAL LOCATION TO BE DETERMINED IN THE FIELD.

SHUT-OFF VALVE

BACKFLOW PREVENTER

SUB-METER

MASTER VALVE

FLOW SENSOR

Trees 23 | 9 | 1"
HZ 3 20 | 1 | 1"
HZ 1 19 | 3 | 1"
HZ 1 21 | 5 | 1"
HZ 1 22 | 6 | 1"
Trees 18 | 6 | 1"
HZ 1 17 | 7 | 1"
HZ 1 16 | 5 | 1"
HZ 1 15 | 6 | 1"
HZ 1 5 | 4 | 1"
HZ 2 8 | 15 | 1"
HZ 2 6 | 16 | 1"
HZ 2 7 | 15 | 1"
Trees 9 | 3 | 1"
HZ 3 4 | 2 | 1"
Trees 3 | 3 | 1"
HZ 1 2 | 7 | 1"
HZ 2 10 | 17 | 1"
HZ 2 14 | 13 | 1"
Trees 12 | 8 | 1"
HZ 2 11 | 17 | 1"
HZ 2 13 | 13 | 1"
HZ 1 1 | 8 | 1"

REFER TO SHEET L700 FOR SYMBOL LEGEND AND NOTES

HYDROZONE
CONTROLLER
FLOW (GPM)
VALVE SIZE

LATERAL PIPE SIZING

	3/4" PIPE
	1" PIPE
	1 1/4" PIPE
	1 1/2" PIPE
	2" PIPE
	2 1/2" PIPE
	3" PIPE
	4" PIPE

LATERALS TO BE SCH 40 PVC. NO 1/2" PIPING ALLOWED.

SCH 40 PVC SLEEVING CHART

1 1/4" SLEEVE	1-8 WIRES	1/2" PIPE
1 1/2" SLEEVE	9-16 WIRES	3/4" PIPE
2" SLEEVE	17-26 WIRES	1" PIPE
2 1/2" SLEEVE	27-38 WIRES	1 1/4" PIPE
3" SLEEVE	39-54 WIRES	1 1/2" PIPE
4" SLEEVE	55-100 WIRES	2" PIPE
6" SLEEVE	100+ WIRES	3" PIPE

PIPE SLEEVES TO BE A MIN. OF 2x THE LINE SIZE. WIRE SLEEVES TO BE A MIN. OF 2x THE BUNDLE SIZE.

811 Know what's below. Call before you dig.

KEY PLAN

L702
L703
L701

0' 5' 10' 20' 40'
1" = 10'-0"
NORTH

APPL. No. A 03-122864

DSA Stamp

Architect

RACHLIN PARTNERS
8640 National Boulevard
Culver City, CA 90232
310.204.3400

Disclaimer:

THESE DRAWINGS ARE THE PROPERTY OF THE ARCHITECT. THE DESIGNS SHOWN AND DESCRIBED HEREIN INCLUDING ALL TECHNICAL DRAWINGS ARE PROPRIETARY AND CANNOT BE COPIED, DUPLICATED OR COMMERCIALLY EXPLOITED, IN WHOLE OR IN PART. THE DRAWINGS AND SPECIFICATIONS SHALL NOT BE USED BY THE OWNER ON OTHER PROJECTS, FOR ADDITIONS TO THIS PROJECT, OR FOR COMPLETION OF THIS PROJECT BY OTHERS. THE OWNER AGREES TO HOLD HARMLESS, INDEMNIFY AND DEFEND THE ARCHITECT AGAINST ALL DAMAGES, CLAIMS AND LOSSES, INCLUDING DEFENSE COSTS, ARISING OUT OF ANY REUSE OF PLANS AND SPECIFICATIONS WITHOUT THE WRITTEN AUTHORIZATION OF THE ARCHITECT OF RECORD.

Copyright© 2022 Rachlin Partners, All Rights Reserved.

Performing Arts Center
Hacienda La Puente Unified School District

635 North California Avenue
La Puente, CA 91744

Rev	Date	Issue
1	7.22.22	50% DD
2	10.21.22	50% CD
3	12.09.22	100% DSA Submittal
4	06.19.23	100% DSA Resubmittal
5	09.20.23	DSA Back Check
1	11.01.23	Addendum No. 1
2	11.01.23	Addendum No. 2

Date: 09/20/23
Scale: As Shown
Drawn By: --
Checked By: --

Architect / Engineer Stamp

LICENSED ARCHITECT NO. C-30229 REN. 2-29-25 STATE OF CALIFORNIA

Consultants
Miyamoto International, Inc.
The Ruzika Company, Inc,
MDC Consulting Engineers
Pocock Design Solutions
Newson Brown Acoustics, LLC
VCA Engineers, Inc.
HJSA Consulting
L.A. Design Associates, Inc.

Sheet Title
Irrigation Plan

Sheet Number
L701

Plot Date: 9/20/2023 11:39:04 AM Last Save By: khans Login: Kris Hansen L:\2022\HLP PAC\DWGS\HLPHJSD PAC Irrigation Plans - Standard\HLPHJSD PAC Irrigation Plans.dwg

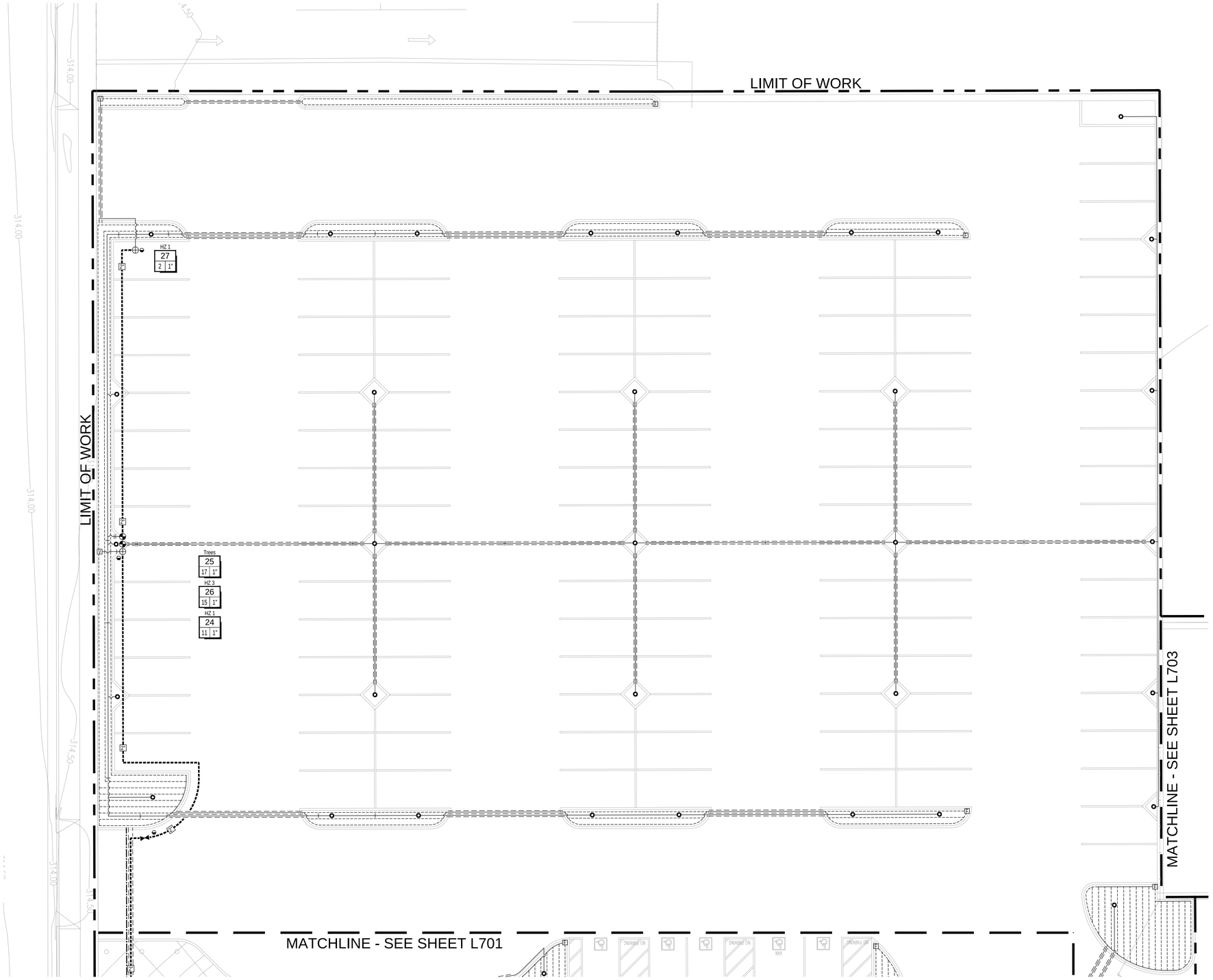

REFER TO SHEET L700 FOR SYMBOL LEGEND AND NOTES

CONTROLLER
FLOW (GPM)
HYDROZONE
VALVE SIZE

LATERAL PIPE SIZING

	3/4" PIPE
I	1" PIPE
II	1 1/4" PIPE
III	1 1/2" PIPE
T	2" PIPE
T	2 1/2" PIPE
H	3" PIPE
H	4" PIPE

LATERALS TO BE SCH 40 PVC.
NO 1/2" PIPING ALLOWED.

SCH 40 PVC SLEEVING CHART

1 1/4" SLEEVE	1-8 WIRES	1/2" PIPE
1 1/2" SLEEVE	9-16 WIRES	3/4" PIPE
2" SLEEVE	17-26 WIRES	1" PIPE
2 1/2" SLEEVE	27-38 WIRES	1 1/4" PIPE
3" SLEEVE	39-54 WIRES	1 1/2" PIPE
4" SLEEVE	55-100 WIRES	2" PIPE
6" SLEEVE	100+ WIRES	3" PIPE

PIPE SLEEVES TO BE A MIN. OF 2x THE LINE SIZE.
WIRE SLEEVES TO BE A MIN. OF 2x THE BUNDLE SIZE.

811 Know what's below. Call before you dig.

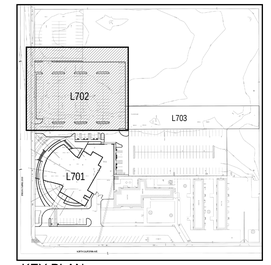

KEY PLAN

0' 5' 10' 20' 40'
1" = 10'-0"
NORTH

APPL. No. A 03-122864

DSA Stamp

Architect

RACHLIN PARTNERS
8640 National Boulevard
Culver City, CA 90232
310.204.3400

Disclaimer:

THESE DRAWINGS ARE THE PROPERTY OF THE ARCHITECT. THE DESIGNS SHOWN AND DESCRIBED HEREIN INCLUDING ALL TECHNICAL DRAWINGS ARE PROPRIETARY AND CANNOT BE COPIED, DUPLICATED OR COMMERCIALLY EXPLOITED, IN WHOLE OR IN PART. THE DRAWINGS AND SPECIFICATIONS SHALL NOT BE USED BY THE OWNER ON OTHER PROJECTS, FOR ADDITIONS TO THIS PROJECT, OR FOR COMPLETION OF THIS PROJECT BY OTHERS. THE OWNER AGREES TO HOLD HARMLESS, INDEMNIFY AND DEFEND THE ARCHITECT AGAINST ALL DAMAGES, CLAIMS AND LOSSES, INCLUDING DEFENSE COSTS, ARISING OUT OF ANY REUSE OF PLANS AND SPECIFICATIONS WITHOUT THE WRITTEN AUTHORIZATION OF THE ARCHITECT OF RECORD.

Copyright © 2022 Rachlin Partners, All Rights Reserved.

Performing Arts Center
Hacienda La Puente Unified School District

635 North California Avenue
La Puente, CA 91744

Rev	Date	Issue
1	7.22.22	50% DD
2	10.21.22	50% CD
3	12.09.22	100% DSA Submittal
4	06.19.23	100% DSA Resubmittal
5	09.20.23	DSA Back Check
1	11.01.23	Addendum No. 1
2	11.01.23	Addendum No. 2

Date: 09/20/23
Scale: As Shown
Drawn By: --
Checked By: --

Architect / Engineer Stamp

LICENSED ARCHITECT — NO. C-35229 — REN. 3-31-25 — STATE OF CALIFORNIA

REGISTERED MECHANICAL ENGINEER — EXPIRATION DATE 12/31/23 — STATE OF CALIFORNIA

Consultants
Miyamoto International, Inc.
The Ruzika Company, Inc,
MDC Consulting Engineers
Pocock Design Solutions
Newson Brown Acoustics, LLC
VCA Engineers, Inc.
HJSA Consulting
L.A. Design Associates, Inc.

Sheet Title

Irrigation Plan

Sheet Number

L702

Plot Date: 11/1/2023 2:59:21 PM Last Save By: khans Login: Kris Hansen L:\20221HLP PAC\DWGS\HLPUSD PAC- irrigation Plans - Standard\HLPUSD PAC- Irrigation Plans.dwg

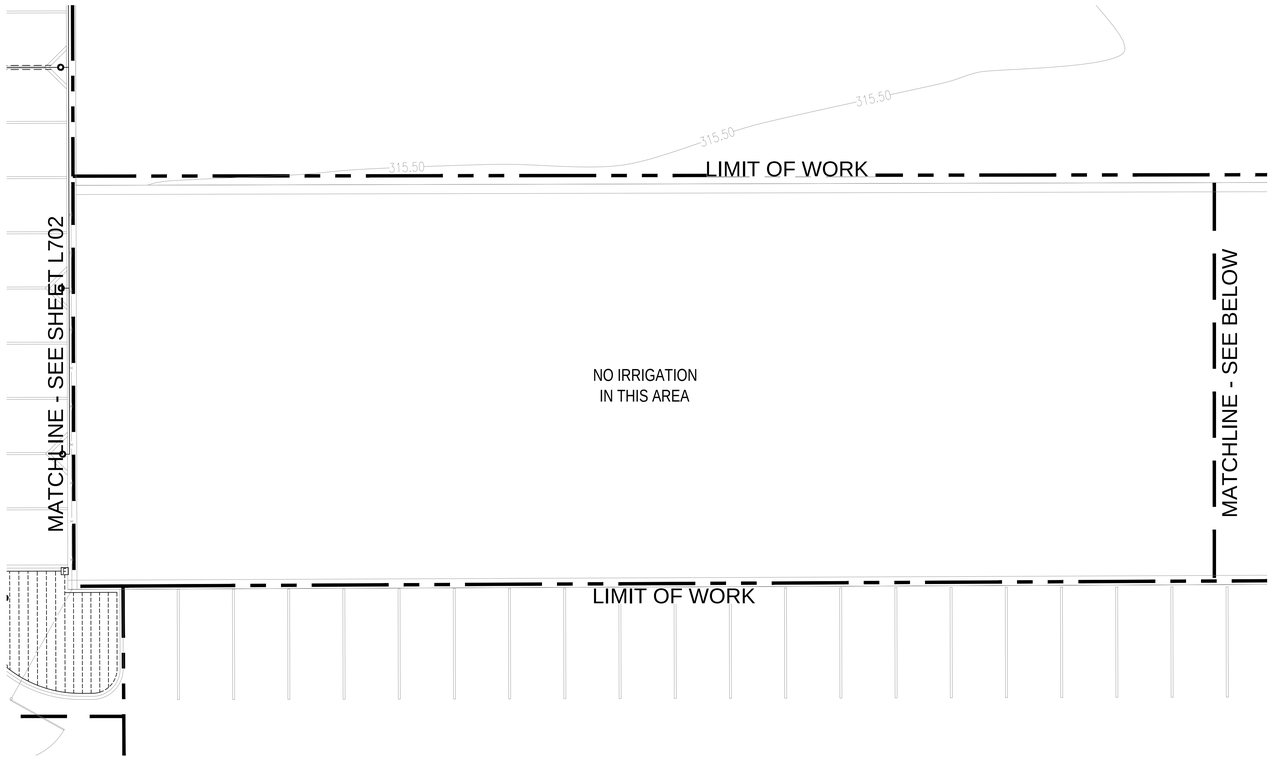

IRRIGATION PLAN - PUBLIC PARK - WEST (A)
SCALE 1"=10'-0"

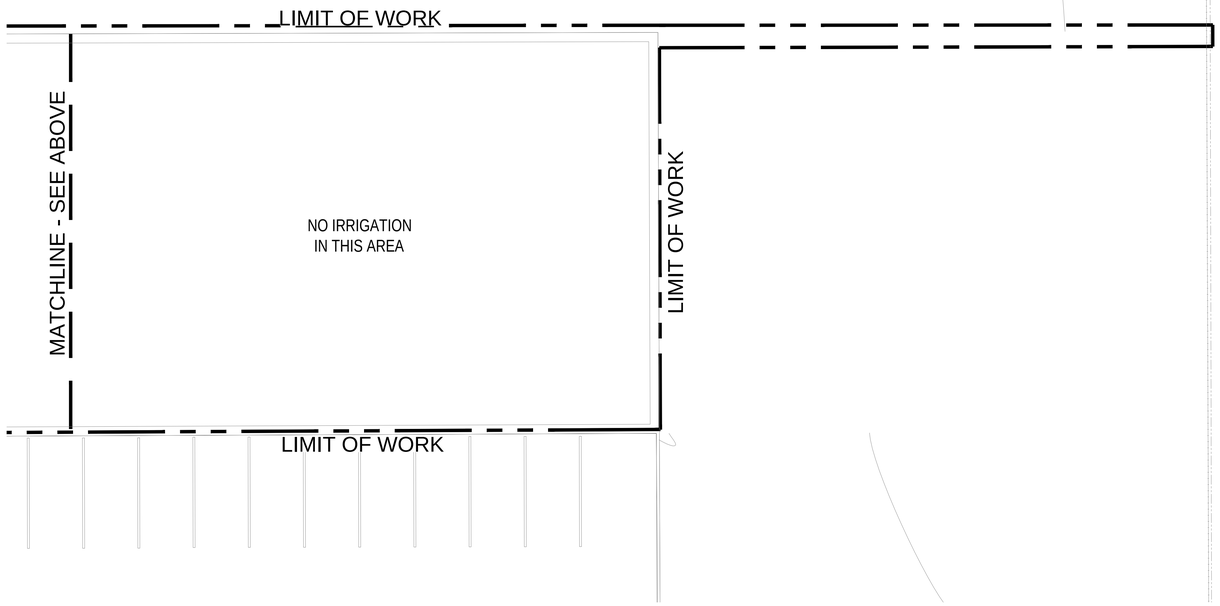

IRRIGATION PLAN - PUBLIC PARK - EAST (B)
SCALE 1"=10'-0"

REFER TO SHEET L700 FOR SYMBOL LEGEND AND NOTES (2)

CONTROLLER — HYDROZONE
FLOW (GPM) — VALVE SIZE

LATERAL PIPE SIZING

	3/4" PIPE
I	1" PIPE
II	1 1/4" PIPE
III	1 1/2" PIPE
T	2" PIPE
T	2 1/2" PIPE
T	3" PIPE
T	4" PIPE

LATERALS TO BE SCH 40 PVC.
NO 1/2" PIPING ALLOWED.

SCH 40 PVC SLEEVING CHART

1 1/4" SLEEVE	1-8 WIRES	1/2" PIPE
1 1/2" SLEEVE	9-16 WIRES	3/4" PIPE
2" SLEEVE	17-26 WIRES	1" PIPE
2 1/2" SLEEVE	27-38 WIRES	1 1/4" PIPE
3" SLEEVE	39-54 WIRES	1 1/2" PIPE
4" SLEEVE	55-100 WIRES	2" PIPE
6" SLEEVE	100+ WIRES	3" PIPE

PIPE SLEEVES TO BE A MIN. OF 2x THE LINE SIZE.
WIRE SLEEVES TO BE A MIN. OF 2x THE BUNDLE SIZE.

811 Know what's below. Call before you dig.

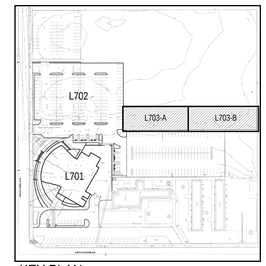

KEY PLAN

0' 5' 10' 20' 40'
1" = 10'-0"
NORTH

APPL. No. A 03-122864

DSA Stamp

Architect

RACHLIN PARTNERS
8640 National Boulevard
Culver City, CA 90232
310.204.3400

Disclaimer:
THESE DRAWINGS ARE THE PROPERTY OF THE ARCHITECT. THE DESIGNS SHOWN AND DESCRIBED HEREIN INCLUDING ALL TECHNICAL DRAWINGS ARE PROPRIETARY AND CANNOT BE COPIED, DUPLICATED OR COMMERCIALLY EXPLOITED, IN WHOLE OR IN PART. THE DRAWINGS AND SPECIFICATIONS SHALL NOT BE USED BY THE OWNER ON OTHER PROJECTS, FOR ADDITIONS TO THIS PROJECT, OR FOR COMPLETION OF THIS PROJECT BY OTHERS. THE OWNER AGREES TO HOLD HARMLESS, INDEMNIFY AND DEFEND THE ARCHITECT AGAINST ALL DAMAGES, CLAIMS AND LOSSES, INCLUDING DEFENSE COSTS, ARISING OUT OF ANY REUSE OF PLANS AND SPECIFICATIONS WITHOUT THE WRITTEN AUTHORIZATION OF THE ARCHITECT OF RECORD.

Copyright © 2022 Rachlin Partners, All Rights Reserved.

Performing Arts Center
Hacienda La Puente Unified School District

635 North California Avenue
La Puente, CA 91744

Rev	Date	Issue
1	7.22.22	50% DD
2	10.21.22	50% CD
3	12.09.22	100% DSA Submittal
4	06.19.23	100% DSA Resubmittal
5	09.20.23	DSA Back Check
1	11.01.23	Addendum No. 1
2	11.01.23	Addendum No. 2

Date: 09/20/23
Scale: As Shown
Drawn By: --
Checked By: --

Architect / Engineer Stamp

Consultants
Miyamoto International, Inc.
The Ruzika Company, Inc,
MDC Consulting Engineers
Pocock Design Solutions
Newson Brown Acoustics, LLC
VCA Engineers, Inc.
HJSA Consulting
L.A. Design Associates, Inc.

Sheet Title
Irrigation Plan

Sheet Number
L703

Plot Date: 11/1/2023 3:00:08 PM Last Save By: khans Login: Kris Hansen L:\2022\HLP PAC\DWGS\HLPUSD PAC irrigation Plans - Standard\HLPUSD PAC irrigation Plans.dwg

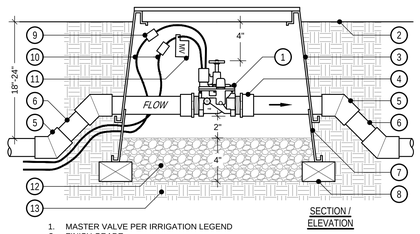

1. MASTER VALVE PER IRRIGATION LEGEND
2. FINISH GRADE
3. RECTANGULAR PLASTIC VALVE BOX WITH PURPLE LOCKING LID (RAIN BIRD VB SERIES OR APPROVED EQUAL) HEAT BRAND "MV" ON LID IN 2" HIGH BLOCK LETTERS
4. SCH 80 PVC MALE ADAPTER (2 REQUIRED) USE REDUCING ADAPTERS WHERE MAINLINE IS LARGER THAN VALVE
5. SCH 80 PVC 45 DEGREE ELL (4 REQUIRED)
6. MAINLINE PIPING PER IRRIGATION LEGEND (PLAN SIZE)
7. RECTANGULAR PLASTIC VALVE BOX EXTENSION AS REQUIRED
8. COMMON BRICK SUPPORTS (4 REQUIRED)
9. WATERPROOF WIRE CONNECTORS (2 REQUIRED)
10. #14 UF WIRES TO CONTROLLER IN 1" SCH 40 PVC CONDUIT- AS SPECIFIED BY MANUFACTURER AND REQUIRED BY THE SCHOOL DISTRICT
11. I.D. TAG WITH "MV" PRINTED ON IT (CHRISTY'S #ID-STD-Y1)
12. FILL BASE OF BOX WITH PEA GRAVEL
13. NATIVE SOIL
* 1/2" IN TURF AREAS, 2" IN SHRUB AREAS

MASTER VALVE P

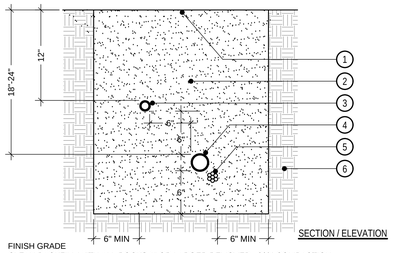

1. FINISH GRADE
2. CLEAN BACKFILL WITH ALL ROCKS 1" OR LARGER REMOVED - 90% COMPACTION REQUIRED - SEE SPECS
3. PURPLE NON-PRESSURE LATERAL LINE PER LEGEND (SNAKE IN TRENCH)
4. PURPLE PRESSURE MAINLINE PER LEGEND (SNAKE IN TRENCH)
5. CONTROL WIRES - INSTALL BELOW PRESSURE MAINLINE
6. UNDISTURBED NATIVE SOIL

NOTES:
BUNDLE AND TAPE WIRES AT 10' O.C. PIGTAIL AND LOOP WIRES AT ALL CHANGES IN DIRECTION. SPLICING OF WIRE RUNS IS NOT PERMITTED WITHOUT PRIOR APPROVAL FROM OWNER AND LANDSCAPE ARCHITECT. RUN CONTROL WIRES IN SAME TRENCH AS MAINLINE WHERE POSSIBLE. INSTALL 12"x12"x12" CONCRETE THRUST BLOCKS AT ALL CHANGES IN DIRECTION OF PRESSURE MAINLINE (45'S, 90'S, TEES, ETC.) AND AT ALL TERMINAL POINTS.

TRENCHING L

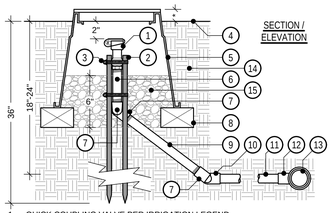

1. QUICK COUPLING VALVE PER IRRIGATION LEGEND
2. #4x36" REBAR SUPPORT STAKE (2 REQUIRED)
3. STAINLESS STEEL CLAMP (2 REQUIRED)
4. FINISH GRADE
5. 10" ROUND PLASTIC VALVE BOX WITH PURPLE LOCKING LID (RAIN BIRD VB SERIES OR APPROVED EQUAL) HEAT BRAND "QC" ON LID IN 2" HIGH BLOCK LETTERS
6. 1"x6" SCH 80 PVC NIPPLE
7. 1" SCH 40 PVC STREET ELL (3 REQUIRED)
8. COMMON BRICK SUPPORTS (3 REQUIRED)
9. 1"x12" SCH 80 PVC NIPPLE
10. 1" SCH 40 PVC ELL (SxT)
11. 1" SCH 40 PVC MAINLINE (12" MINIMUM LENGTH)
12. SCH 80 PVC MAINLINE FITTING (TEE OR ELL) WITH 1" SLIP OUTLET
13. MAINLINE PIPING PER IRRIGATION LEGEND (PLAN SIZE)
14. NATIVE SOIL
15. FILL BASE OF BOX WITH PEA GRAVEL
* 1/2" IN TURF AREAS, 2" IN SHRUB AREAS

QUICK COUPLING VALVE H

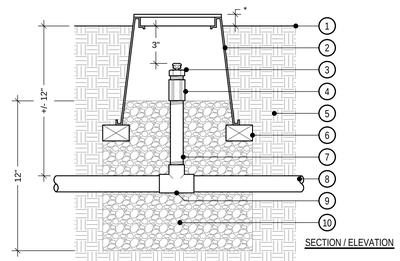

1. FINISH GRADE
2. 6" ROUND PLASTIC VALVE BOX WITH PURPLE SNAP-ON LID (RAIN BIRD VB SERIES OR APPROVED EQUAL) HEAT BRAND "AR" ON LID IN 2" HIGH BLOCK LETTERS
3. AIR RELEASE VALVE (RAIN BIRD ARV-050 OR APPROVED EQUAL)
4. 1/2" SCH 40 PVC THREADED COUPLER
5. NATIVE SOIL
6. COMMON BRICK SUPPORTS (2 REQUIRED)
7. 1/2" SCH 80 PVC NIPPLE (LENGTH AS REQUIRED)
8. LATERAL LINE PIPING PER IRRIGATION LEGEND (PLAN SIZE)
9. SCH 40 PVC TEE SxSxT WITH 1/2" THREADED OUTLET
10. FILL BASE WITH 1 CUBIC FOOT OF PEA GRAVEL
* 1/2" IN MULCH AREAS, 2" IN SHRUB AREAS

AIR / VACUUM RELEASE VALVE E

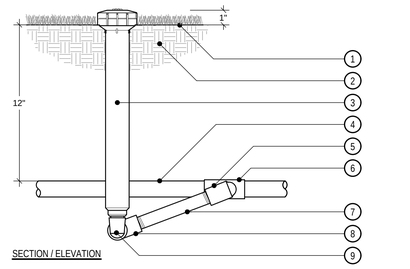

1. FINISH GRADE
2. NATIVE SOIL / BACKFILL PER SPECIFICATIONS
3. 12" HI-POP SPRAY HEAD & NOZZLE PER LEGEND
4. LATERAL LINE PIPING PER LEGEND
5. 1/2" MARLEX STREET ELL
6. SCH 40 PVC LATERAL LINE FITTING WITH 1/2" FEMALE THREADED OUTLET
7. 1/2"x12" MIN. SCH 80 PVC THREADED NIPPLE
8. 1/2" SCH 40 PVC STREET ELL TxT
9. 1/2" MARLEX STREET ELL

NOTES:
USE TEFLON TAPE ON ALL PVC TO PVC CONNECTIONS; NO PIPE DOPE ALLOWED. SET PERIMETER HEADS 4"-6" FROM CURBS AND WALKS AND 6"-12" FROM VERTICAL OBJECTS SUCH AS FENCES AND WALLS, ETC. ONLY USE BOTTOM INLET OF HEAD.

SHRUB POP-UP SPRAY HEAD SPRINKLER A

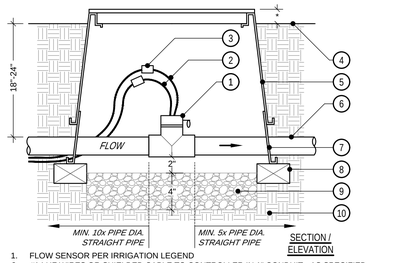

1. FLOW SENSOR PER IRRIGATION LEGEND
2. #14 UF WIRES OR SHIELDED CABLE TO CONTROLLER IN 1" CONDUIT - AS SPECIFIED BY MANUFACTURER AND REQUIRED BY THE SCHOOL DISTRICT
3. WATERPROOF WIRE CONNECTORS (2 REQUIRED)
4. FINISH GRADE
5. RECTANGULAR PLASTIC VALVE BOX WITH PURPLE LOCKING LID (RAIN BIRD VB SERIES OR APPROVED EQUAL) HEAT BRAND "FS" ON LID IN 2" HIGH BLOCK LETTERS
6. MAINLINE PIPING PER IRRIGATION LEGEND (SENSOR SIZE)
7. RECTANGULAR PLASTIC VALVE BOX EXTENSION AS REQUIRED
8. COMMON BRICK SUPPORTS (4 REQUIRED)
9. FILL BASE OF BOX WITH PEA GRAVEL
10. NATIVE SOIL
* 1/2" IN TURF AREAS, 2" IN SHRUB AREAS

FLOW SENSOR Q

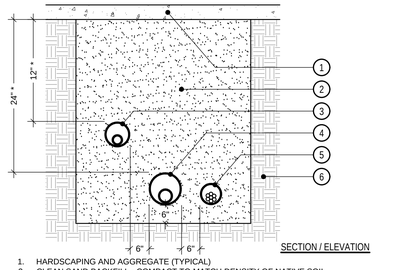

1. HARDSCAPING AND AGGREGATE (TYPICAL)
2. CLEAN SAND BACKFILL - COMPACT TO MATCH DENSITY OF NATIVE SOIL
3. PURPLE LATERAL LINE IN PURPLE SCH 40 PVC SLEEVE
4. PURPLE PRESSURE MAINLINE IN PURPLE SCH 40 PVC SLEEVE
5. CONTROL WIRES IN GRAY SCH 40 PVC SLEEVE
6. UNDISTURBED NATIVE SOIL

NOTES:
SIZE ALL SLEEVES PER THE IRRIGATION PLANS. EXTEND SLEEVES 6" MINIMUM BEYOND EDGE OF HARDSCAPE (AT EACH END) INTO THE PLANTING AREAS.

* SLEEVING UNDER ALL VEHICULAR ACCESS WAYS TO HAVE 36" MINIMUM COVER FROM TOP OF SLEEVE TO BOTTOM OF AGGREGATE BASE.

SLEEVING M

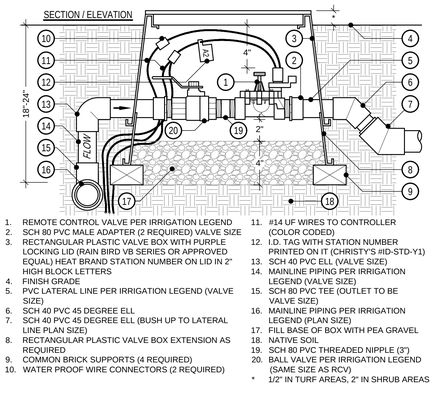

1. REMOTE CONTROL VALVE PER IRRIGATION LEGEND
2. SCH 80 PVC MALE ADAPTER (2 REQUIRED) VALVE SIZE
3. RECTANGULAR PLASTIC VALVE BOX WITH PURPLE LOCKING LID (RAIN BIRD VB SERIES OR APPROVED EQUAL) HEAT BRAND STATION NUMBER ON LID IN 2" HIGH BLOCK LETTERS
4. FINISH GRADE
5. PVC LATERAL LINE PER IRRIGATION LEGEND (VALVE SIZE)
6. SCH 40 PVC 45 DEGREE ELL
7. SCH 40 PVC 45 DEGREE ELL (BUSH UP TO LATERAL LINE PLAN SIZE)
8. RECTANGULAR PLASTIC VALVE BOX EXTENSION AS REQUIRED
9. COMMON BRICK SUPPORTS (4 REQUIRED)
10. WATER PROOF WIRE CONNECTORS (2 REQUIRED)
11. #14 UF WIRES TO CONTROLLER (COLOR CODED)
12. I.D. TAG WITH STATION NUMBER PRINTED ON IT (CHRISTY'S #ID-STD-Y1)
13. SCH 40 PVC ELL (VALVE SIZE)
14. MAINLINE PIPING PER IRRIGATION LEGEND (VALVE SIZE)
15. SCH 80 PVC TEE (OUTLET TO BE VALVE SIZE)
16. MAINLINE PIPING PER IRRIGATION LEGEND (PLAN SIZE)
17. FILL BASE OF BOX WITH PEA GRAVEL
18. NATIVE SOIL
19. SCH 80 PVC THREADED NIPPLE (3")
20. BALL VALVE PER IRRIGATION LEGEND (SAME SIZE AS RCV)
* 1/2" IN TURF AREAS, 2" IN SHRUB AREAS

ELECTRIC CONTROL VALVE I

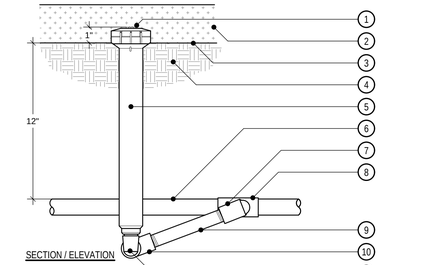

1. 'GPH IRRIGATION' GDFN FLUSH VALVE / INDICATOR
2. MULCH LAYER PER PLANTING PLAN
3. FINISH GRADE
4. NATIVE SOIL / BACKFILL PER SPECIFICATIONS
5. RAIN BIRD 1812-SAM SERIES SPRAY HEAD BODY
6. FLUSH HEADER PIPING PER LEGEND
7. 1/2" MARLEX STREET ELL
8. FLUSH HEADER FITTING WITH 1/2" FEMALE THREADED OUTLET - ADAPT AS NECESSARY
9. 1/2"x12" MIN. SCH 80 PVC THREADED NIPPLE
10. 1/2" SCH 40 PVC STREET ELL TxT

NOTES:
USE TEFLON TAPE ON ALL PVC TO PVC CONNECTIONS; NO PIPE DOPE ALLOWED. ADAPT TO DRIP SYSTEM AS REQUIRED (POLY OR PVC). ONLY USE BOTTOM INLET OF SPRINKLER HEAD. IF POSSIBLE, LOCATE FLUSH / INDICATOR ASSEMBLY IN AREA WITH EASY ACCESS FOR MAINTENANCE.

MANUAL FLUSH VALVE / OPERATION INDICATOR F

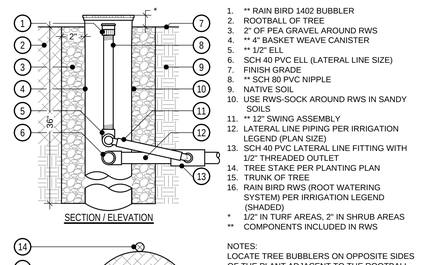

1. ** RAIN BIRD 1402 BUBBLER
2. ROOTBALL OF TREE
3. 2" OF PEA GRAVEL AROUND RWS
4. ** 4" BASKET WEAVE CANISTER
5. ** 1/2" ELL
6. SCH 40 PVC ELL (LATERAL LINE SIZE)
7. FINISH GRADE
8. ** SCH 80 PVC NIPPLE
9. NATIVE SOIL
10. USE RWS-SOCK AROUND RWS IN SANDY SOILS
11. ** 12" SWING ASSEMBLY
12. LATERAL LINE PIPING PER IRRIGATION LEGEND (PLAN SIZE)
13. SCH 40 PVC LATERAL LINE FITTING WITH 1/2" THREADED OUTLET
14. TREE STAKE PER PLANTING PLAN
15. TRUNK OF TREE
16. RAIN BIRD RWS (ROOT WATERING SYSTEM) PER IRRIGATION LEGEND (SHADED)
* 1/2" IN TURF AREAS, 2" IN SHRUB AREAS
** COMPONENTS INCLUDED IN RWS

NOTES:
LOCATE TREE BUBBLERS ON OPPOSITE SIDES OF THE PLANT ADJACENT TO THE ROOTBALL. LOCATE BUBBLERS AND ROUTE PIPING TO AVOID TREE STAKES AND DAMAGE TO ROOTBALL.

TREE ROOT WATERING SYSTEM BUBBLER B

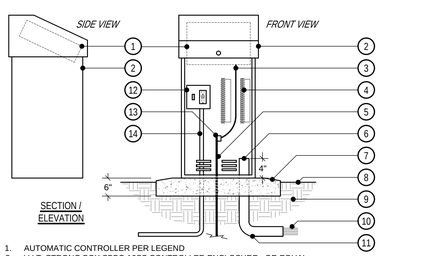

1. AUTOMATIC CONTROLLER PER LEGEND
2. V.I.T. STRONG BOX SBBC-16SS CONTROLLER ENCLOSURE - OR EQUAL
3. #6 AWG BARE COPPER WIRE TO GROUND ROD (PAIGE #160635)
4. TERMINAL STRIPS (PART OF V.I.T. CSA OPTION)
5. 5/8"x10' SOLID COPPER GROUNDING ROD (PAIGE #182007)
6. 3" SCH 40 PVC CONDUIT FOR CONTROL WIRES - EXTEND ABOVE PAD
7. POURED IN PLACE CONCRETE PAD - SLOPE EDGES 1% FOR DRAINAGE
8. FINISH GRADE - 2" BELOW TOP OF CONCRETE PAD
9. NATIVE SOIL
10. DIRECT BURIAL CONTROL WIRES TO VALVES
11. USE LONG PVC SWEEP ELLS FOR WIRES
12. 120V AC OUTLET AND SWITCH (PART OF V.I.T. CSA OPTION)
13. CADWELD #GR116LG "ONE-SHOT" WELDING KIT (PAIGE #1820037P)
14. PVC CONDUIT WITH 120V AC POWER WIRES TO ELECTRICAL SOURCE

ADAPT AS NECESSARY FOR RAIN BIRD ESP-SAT CONTROLLER.

CONTROLLER R

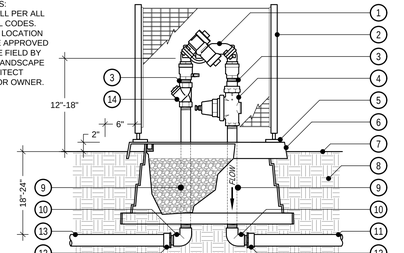

1. FINISH GRADE OF MULCH LAYER
2. MULCH TOP DRESSING PER PLANTING PLAN
3. POLY TUBING PER IRRIGATION LEGEND
4. FINISH GRADE
5. STEEL TUBING-SOIL STAPLE (RAIN BIRD TDS-050 OR APPROVED EQUAL)
6. NATIVE SOIL
7. DEPTH OF MULCH PER PLANTING PLAN OR SPECIFICATIONS

NOTES:
LOCATE STAPLES ALONG TUBING AT ABOUT 5' O.C. AND AT ALL FITTINGS (TEES, ELLS, ETC.) AND CHANGES IN DIRECTION OF TUBING. BURY TUBING PER THE IRRIGATION PLAN / NOTES.

DRIP LINE SYSTEM - TUBING INSTALLATION C

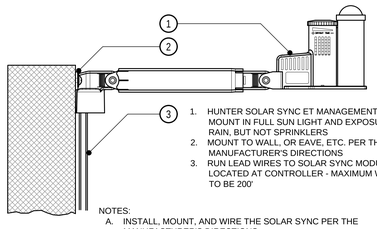

1. FINISH GRADE
2. WATER METER USED AS IRRIGATION SUB METER PER IRRIGATION LEGEND
3. RECTANGULAR PLASTIC VALVE BOX WITH LOCKING LID (RAIN BIRD VB SERIES OR APPROVED EQUAL) HEAT BRAND "SM" ON LID IN 2" HIGH BLOCK LETTERS
4. SCH 80 PVC 45 DEGREE ELL (4 REQUIRED)
5. MAINLINE PIPING PER IRRIGATION LEGEND (PLAN SIZE)
6. RECTANGULAR PLASTIC VALVE BOX EXTENSION AS REQUIRED
7. COMMON BRICK SUPPORTS (4 REQUIRED)
8. SCH 80 PVC FEMALE ADAPTER OR FITTING AS SPECIFIED BY THE WATER METER MANUFACTURER
9. MAINLINE PIPING OR NIPPLE AS SPECIFIED BY THE WATER METER MANUFACTURER
10. FILL BASE OF BOX WITH PEA GRAVEL
11. NATIVE SOIL
* 1/2" IN TURF AREAS, 2" IN SHRUB AREAS

IRRIGATION SUB-METER O

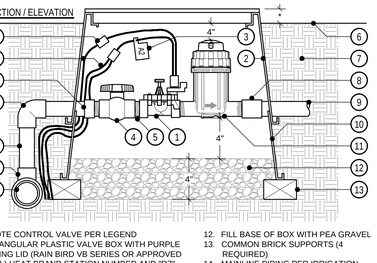

1. REDUCED PRESSURE BACKFLOW PREVENTER PER IRRIGATION LEGEND
2. V.I.T. BACKFLOW PREVENTER ENCLOSURE (#SBBC-30SS)
3. BRASS CLOSE NIPPLE (R/P SIZE)
4. WILKINS 500XL SERIES PRESSURE REGULATOR (R/P SIZE) IF SPECIFIED
5. MOUNT ENCLOSURE TO QUICK PAD PER MANUFACTURER
6. V.I.T. STRONG BOX QP-30BF QUICK PAD (+/- 32"x19" FOOTPRINT)
7. FINISH GRADE
8. NATIVE SOIL
9. BRASS NIPPLE (R/P SIZE) LENGTH AS REQUIRED
10. BRASS ELL (R/P SIZE)
11. MAINLINE PIPING PER IRRIGATION LEGEND (TO SYSTEM)
12. SCH 80 PVC MALE ADAPTER (BUSH UP TO MAINLINE PLAN SIZE WHERE R/P DEVICE IS SMALLER THAN MAINLINE SIZE)
13. MAINLINE PIPING PER IRRIGATION LEGEND (FROM P.O.C.)
14. WILKINS YBP-80 STRAINER (R/P SIZE)

BACKFLOW PREVENTER / ENCLOSURE N

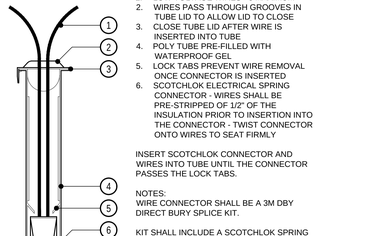

1. REMOTE CONTROL VALVE PER LEGEND
2. RECTANGULAR PLASTIC VALVE BOX WITH PURPLE LOCKING LID (RAIN BIRD VB SERIES OR APPROVED EQUAL) HEAT BRAND STATION NUMBER AND "DZ" ON LID IN 2" HIGH BLOCK LETTERS
3. I.D. TAG WITH STATION NUMBER PRINTED ON IT (CHRISTY'S #ID-STD-Y1)
4. SCH 40 PVC BALL VALVE
5. SCH 80 PVC CLOSE NIPPLE
6. FINISH GRADE
7. NATIVE SOIL
8. SCH 80 PVC FEMALE ADAPTER
9. PVC PIPING TO SYSTEM (CONNECT AND ADAPT AS NECESSARY)
10. RECTANGULAR PLASTIC VALVE BOX EXTENSION AS REQUIRED
11. PRESSURE REGULATING BASKET STRAINER PER LEGEND
12. FILL BASE OF BOX WITH PEA GRAVEL
13. COMMON BRICK SUPPORTS (4 REQUIRED)
14. MAINLINE PIPING PER IRRIGATION LEGEND (PLAN SIZE)
15. SCH 80 PVC MAINLINE FITTING WITH 1" OUTLET
16. 1" SCH 40 PVC ELL
17. 1" SCH 40 PVC MAINLINE PIPING (LENGTH AS REQUIRED)
18. SCH 80 PVC MALE ADAPTER
19. #14 UF WIRES TO CONTROLLER (COLOR CODED)
20. WATERPROOF WIRE CONNECTOR (2 REQUIRED)
* 1/2" IN TURF AREAS, 2" IN SHRUB AREAS

DRIP ZONE CONTROL VALVE ASSEMBLY J

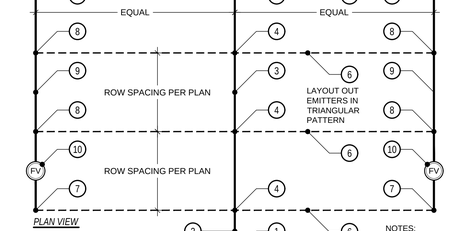

1. DRIP ZONE VALVE PER LEGEND
2. PVC LATERAL LINE - SIZE PER PLAN
3. PVC SUPPLY HEADER - SIZE PER PLAN (LOCATE IN HYDRAULIC CENTER OF ZONE IF POSSIBLE)
4. SUPPLY HEADER CROSS CONNECTION - SEE DETAIL AT RIGHT
5. SUPPLY HEADER TEE CONNECTION - SEE DETAIL AT RIGHT
6. RAIN BIRD DRIP LINE PER LEGEND
7. PVC FLUSH HEADER ELBOW CONNECTION - SEE DETAIL AT RIGHT
8. PVC FLUSH HEADER TEE CONNECTION - SEE DETAIL AT RIGHT
9. PVC FLUSH HEADER - 3/4" UNLESS NOTED OTHERWISE
10. MANUAL FLUSH VALVE / OPERATION INDICATOR PLUMBED TO FLUSH HEADER AT LOW POINT - PLUMB ALL DRIP LINE SYSTEM SO WATER FLOWS TOWARDS A FLUSH VALVE

NOTES:
· SET PERIMETER LATERALS APPROXIMATELY 6" FROM PLANTER EDGE.
· RUN ROWS OF TUBING PARALLEL TO LONG AXIS OF PLANTED AREA
· INSTALL ONE FLUSH VALVE ON EACH FLUSH HEADER.
· REFER TO THE MANUFACTURER'S GUIDELINES AND INSTALLATION DETAILS FOR THE INSTALLATION OF ALL DRIP LINE SYSTEMS.

BALL VALVE - 2" AND SMALLER G

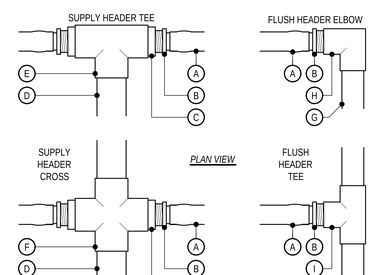

A. RAIN BIRD DRIP LINE PER LEGEND
B. RAIN BIRD INSERT MALE ADAPTER - MODEL XFF-MA-075
C. SCH 40 PVC BUSHING - SUPPLY HEADER SIZE TO 3/4" FIPT
D. PVC SUPPLY HEADER PER LEGEND
E. SCH 40 PVC TEE - SUPPLY HEADER SIZE
F. SCH 40 PVC CROSS - SUPPLY HEADER SIZE
G. PVC FLUSH HEADER PER LEGEND - 3/4" UNLESS NOTED OTHERWISE
H. SCH 40 PVC SxT ELL - EXHAUST HEADER SIZE WITH 3/4" FIPT
I. SCH 40 PVC SxSxT TEE - EXHAUST HEADER SIZE WITH 3/4" FIPT

DRIP LINE SYSTEM - TYPICAL LAYOUT D

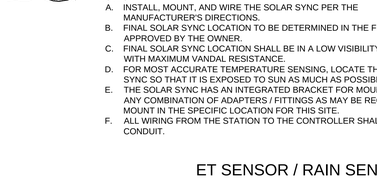

1. HUNTER SOLAR SYNC ET MANAGEMENT SYSTEM - MOUNT IN FULL SUN LIGHT AND EXPOSURE TO RAIN, BUT NOT SPRINKLERS
2. MOUNT TO WALL, OR EAVE, ETC. PER THE MANUFACTURER'S DIRECTIONS
3. RUN LEAD WIRES TO SOLAR SYNC MODULE LOCATED AT CONTROLLER - MAXIMUM WIRE RUN TO BE 200'

NOTES:
A. INSTALL, MOUNT, AND WIRE THE SOLAR SYNC PER THE MANUFACTURER'S DIRECTIONS.
B. FINAL SOLAR SYNC LOCATION TO BE DETERMINED IN THE FIELD AND APPROVED BY THE OWNER.
C. FINAL SOLAR SYNC LOCATION SHALL BE IN A LOW VISIBILITY AREA WITH MAXIMUM VANDAL RESISTANCE.
D. FOR MOST ACCURATE TEMPERATURE SENSING, LOCATE THE SOLAR SYNC SO THAT IT IS EXPOSED TO SUN AS MUCH AS POSSIBLE.
E. THE SOLAR SYNC HAS AN INTEGRATED BRACKET FOR MOUNTING. USE ANY COMBINATION OF ADAPTERS / FITTINGS AS MAY BE REQUIRED TO MOUNT IN THE SPECIFIC LOCATION FOR THIS SITE.
F. ALL WIRING FROM THE STATION TO THE CONTROLLER SHALL BE IN CONDUIT.

ET SENSOR / RAIN SENSOR S

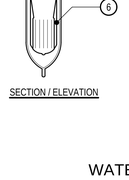

1. LOW VOLTAGE WIRES - 3 MAXIMUM
2. WIRES PASS THROUGH GROOVES IN TUBE LID TO ALLOW LID TO CLOSE
3. CLOSE TUBE LID AFTER WIRE IS INSERTED INTO TUBE
4. POLY TUBE PRE-FILLED WITH WATERPROOF GEL
5. LOCK TABS PREVENT WIRE REMOVAL ONCE CONNECTOR IS INSERTED
6. SCOTCHLOK ELECTRICAL SPRING CONNECTOR - WIRES SHALL BE PRE-STRIPPED OF 1/2" OF THE INSULATION PRIOR TO INSERTION INTO THE CONNECTOR - TWIST CONNECTOR ONTO WIRES TO SEAT FIRMLY

INSERT SCOTCHLOK CONNECTOR AND WIRES INTO TUBE UNTIL THE CONNECTOR PASSES THE LOCK TABS.

NOTES:
WIRE CONNECTOR SHALL BE A 3M DBY DIRECT BURY SPLICE KIT.

KIT SHALL INCLUDE A SCOTCHLOK SPRING CONNECTOR, A POLYPROPYLENE TUBE AND A WATERPROOF SEALING GEL. TUBE SHALL BE SUPPLIED PRE-FILLED WITH GEL.

DIRECT BURY SPLICE KIT SHALL BE USED TO ELECTRICALLY CONNECT 2-3 #14 OR 2 #12 PRE-STRIPPED COPPER WIRES. LARGER OR GREATER QUANTITIES OF WIRES SHALL REQUIRE A LARGER APPROVED WIRE CONNECTOR.

WATERPROOF WIRE CONNECTOR K

APPL. No. A 03-122864

IDENTIFICATION STAMP
DIV. OF THE STATE ARCHITECT
APP: 03-122864 INC:
REVIEWED FOR
SS ☑ FLS ☑ ACS ☑
DATE: 10/03/2023

DSA Stamp

Architect

RACHLIN PARTNERS
8640 National Boulevard
Culver City, CA 90232
310.204.3400

Disclaimer:
THESE DRAWINGS ARE THE PROPERTY OF THE ARCHITECT. THE DESIGNS SHOWN AND DESCRIBED HEREIN INCLUDING ALL TECHNICAL DRAWINGS ARE PROPRIETARY AND CANNOT BE COPIED, DUPLICATED OR COMMERCIALLY EXPLOITED, IN WHOLE OR IN PART. THE DRAWINGS AND SPECIFICATIONS SHALL NOT BE USED BY THE OWNER ON OTHER PROJECTS, FOR ADDITIONS TO THIS PROJECT, OR FOR COMPLETION OF THIS PROJECT BY OTHERS. THE OWNER AGREES TO HOLD HARMLESS, INDEMNIFY AND DEFEND THE ARCHITECT AGAINST ALL DAMAGES, CLAIMS AND LOSSES, INCLUDING DEFENSE COSTS, ARISING OUT OF ANY REUSE OF PLANS AND SPECIFICATIONS WITHOUT THE WRITTEN AUTHORIZATION OF THE ARCHITECT OF RECORD.
Copyright © 2022 Rachlin Partners, All Rights Reserved.

Performing Arts Center
Hacienda La Puente Unified School District

635 North California Avenue
La Puente, CA 91744

Rev	Date	Issue
1	7.22.22	50% DD
2	10.21.22	50% CD
3	12.09.22	100% DSA Submittal
4	06.19.23	100% DSA Resubmittal
5	09.20.23	DSA Back Check

Date: 09/20/23
Scale: As Shown
Drawn By: --
Checked By: --

Architect / Engineer Stamp

LICENSED ARCHITECT NO. C-29229 REN. 2-29-25 STATE OF CALIFORNIA
REGISTERED LANDSCAPE ARCHITECT JAMES R. BRAHAM 5663 STATE OF CALIFORNIA

Consultants
Miyamoto International, Inc.
The Ruzika Company, Inc,
MDC Consulting Engineers
Pocock Design Solutions
Newson Brown Acoustics, LLC
VCA Engineers, Inc.
HJSA Consulting
L.A. Design Associates, Inc.

Sheet Title

Irrigation Details

Sheet Number

L751

Plot Date: 9/20/2023 11:40:46 AM Last Save By: khans Login: Kris Hansen L:\2022\HLP PAC\DWGS\HLPLISD PAC Irrigation Plans - Standard\HLPLISD PAC Irrigation Plans.dwg

PLANT MATERIAL SCHEDULE

TREE SCHEDULE

ABBREV.	BOTANICAL NAME	COMMON NAME	SIZE	QTY.	REMARKS
CAS LEP	CASSIA LEPTOPHYLLA	GOLD MEDALION TREE	24" BOX	18	STANDARD
CHI PIN	CHITALPA TASHKENTENSIS 'PINK DAWN'	PINK DAWN CHITALPA	24" BOX	9	STANDARD
GEI PAR	GEIJERA PARVIFLORA	AUSTRALIAN WILLOW	36" BOX	2	STANDARD
LAG COM	LAGERSTROEMIA FAURIEI HYB. 'COMANCHE'	COMANCHE HYBRID CRAPE MYRTLE	24" BOX	4	MULTI-TRUNK
PHO DAC	PHOENIX DACTYLIFERA	DATE PALM	16' BTH	4	MATCHING HEIGHTS. SELECT FEMALE SPECIMENS, SKINNED

SHRUB SCHEDULE

ABBREV.	BOTANICAL NAME	COMMON NAME	SIZE	QTY.	SPACING (O.C.)	REMARKS
LOR RAZ	LOROPETALUM C. 'RAZZLEBERRI'	RAZZLEBERRI CHINESE FRINGE FLOWER	5 GAL	12	60" O.C.	
MYR CMP	MYRTUS COMMUNIS COMPACTA	DWARF MYRTLE	5 GAL	148	18" O.C.	
PIT CRA	PITTOSPORUM CRASSIFOLIUM 'COMPACTUM'	DWARF KARO	5 GAL	21	48" O.C.	
SAL LEU	SALVIA LEUCOPHYLLA	PURPLE SAGE	5 GAL	16	36" O.C.	
SAN CHA	SANTOLINA CHAMAECYPARISSUS	GRAY LAVENDER COTTON	4" POTS	655	18" O.C.	ALT: CAREX DIVULSA - FLATS @ 12"O.C.

SUCCULENT SCHEDULE

ABBREV.	BOTANICAL NAME	COMMON NAME	SIZE	QTY.	SPACING (O.C.)	REMARKS
AGA DES	AGAVE DESMETTIANA 'VARIEGATA'	DWARF CENTURY PLANT	5 GAL	26	36" O.C.	
ALO CAM	ALOE CAMERONII	RED ALOE	5 GAL	39	24" O.C.	

PERENNIAL SCHEDULE

ABBREV.	BOTANICAL NAME	COMMON NAME	SIZE	QTY.	SPACING (O.C.)	REMARKS
ANI HAR	ANIGOZANTHOS 'HARMONY'	HARMONY KANGAROO PAW	5 GAL	16	36" O.C.	
DIA TAS	DIANELLA TASMANICA VARIEGATA	WHITE STRIPE TASMAN FLAX LILY	5 GAL	39	24" O.C.	
PHO DUS	PHORMIUM 'DUSKY CHIEF'	DUSKY CHIEF NEW ZEALAND FLAX	5 GAL	14	30" O.C.	

GROUNDCOVER SCHEDULE

ABBREV.	BOTANICAL NAME	COMMON NAME	SIZE	QTY.	SPACING (O.C.)	REMARKS
ACH MOO	ACHILLEA 'MOONSHINE'	MOONSHINE YARROW	FLATS	840	12" O.C.	
MYO PAR	MYOPORUM PARVIFOLIUM	DWARF MYOPORUM	1 GAL	125	72" O.C.	
PLE SER	PLECHOSTACHYS SERPYLLIFOLIA	NO COMMON NAME	1 GAL	69	36" O.C.	
SED TEL	SEDUM TELEPHIUM 'AUTUMN JOY'	AUTUMN JOY STONECROP	4" POTS	375	12" O.C.	
SEN MAN	SENECIO MANDRALISCAE	KLEINIA	1 GAL	254	24" O.C.	

GRASSES AND GRASSLIKE SCHEDULE

ABBREV.	BOTANICAL NAME	COMMON NAME	SIZE	QTY.	SPACING (O.C.)	REMARKS
CAR DIV	CAREX DIVULSA	EUROPEAN GREY SEDGE	4" POTS	-	16" O.C.	ALT. ONLY IF REQUESTED IN SUBSTITUTION FOR SANTOLINA CHAMAECYPARIS

CalGreen SHADE REQUIREMENT MATRIX TABLE

AREA DESIGNATION	SIZE (SF)	SHADED AREA REQUIRED FROM TREES (15 years)	SHADED AREA PROVIDED FROM TREES (15 years)
SURFACE PARKING AREA	47115	50% - 23,557 SF	25,446 SF
LANDSCAPE AREAS	36568	20% - 7,314 SF	8,089 SF
HARDSCAPE AREAS	10401	20% - 2,080 SF	3,436 SF

NOTE:
15 YEAR SIZE CANOPY USED FOR SHADE CALCULATIONS INDICATED ON PLANTING PLANS BY DASHED LINE AROUND TREE SYMBOL (TYP).

NOTE:
INSTALL DEWITT P6 PRO-5 WEED BARRIER LANDSCAPE FABRIC OR APPROVED EQUAL IN ALL PLANTING BEDS PER DISTRICT STANDARD. AVAILABLE FROM DEWITT COMPANY, TEL. 800-888-9669 WWW.DEWITTCOMPANY.COM

TREE PROTECTION NOTES AND GUIDELINES

During the course of construction, trees can receive much stress, pollution, soil compaction and lack of water. The following Tree Protection Guidelines should be followed to establish and maintain a healthy environment for all retained trees.

WORKING IN THE TREE PROTECTION ZONE

This area encompasses the area within the dripline of the tree plus additional feet depending on the specie and size of the tree. Any necessary encroachment within a trees protected zone is to follow these guidelines.

Pre-Construction Phase:

- Protective Fencing - Installation of protection fencing should be installed around the Tree Protection Zone. Fencing may be of a flexible configuration and be a minimum of 4 feet in height. A warning sign should be posted on the fencing which states, “Warning: Tree Protection Zone” and stating the requirements of all workers in the protected zone.

Construction Phase:

- Keep Site Clean -Throughout the course of construction, maintain the integrity of the tree protection zone fencing and keep the site clean and maintained at all times. No construction staging or disposal of construction materials or byproducts including but not limited to paint, plaster, or chemical solutions is allowed in the Tree Protection Zone.
- Irrigation - Protection zone should be irrigated sufficiently with clean potable water to keep the tree in good health and vigor before, during, and after construction. This may mean deeply soaking the ground periodically. Any deep soaking should occur generally in the warmer months. If this construction is occurring mainly in the winter, you may not need to supplemental water until late spring.
- No flooding - The Tree Protection Zone should not be subjected to flooding incidental to the construction work.
- Hand Tools - All work conducted in the ground within the Tree Protection Zone should be accomplished with hand tools, unless an air spade is utilized. Trenches in the Tree Protection Zone should be tunneled, or completed with an air spade to avoid damage to small feeder roots within the root protection zone.
- Equipment - Do not back any equipment up to the trunk or within 3 - 5 feet of the trunk, to protect the roots and reduce potential soil compaction. Avoid the use of heavy machinery within the drip-line of the tree.
- Root impact - Where more than 50% of the root zone is impacted or roots greater than 3 inches in diameter are to be removed within four feet of the trunk, the engineer of record should submit acceptable design alternatives to staff for review.
- Trenching and Root pruning - For utilities, any required trenching should be routed in such a manner as to minimize root damage. Radial trenching (radial to the tree trunk) is preferred as it is less harmful than tangential trenching. Construction activity should be diverted from the Root Protection Zone. Cutting of roots should be avoided (i.e. place pipes and cables below uncut roots). Wherever possible and in accordance with applicable code requirements, the same trench should be used for multiple utilities.
- Maintain Grade - “Natural” or pre-construction grade should be maintained in the Tree Protection Zone. At no time during or after construction should additional soil be in contact with the trunk of the tree above the trunk flair.
- Root pruning - In areas where the grade around the protected tree will be lowered, some root cutting may be unavoidable. Cuts should be clean and made at right angles to the roots. When practical, cut roots back to a branching lateral root.
- Mulch - Organic mulch should be placed in all open areas within the Tree Protection Zone. The mulch should be 2 - 4 inches thick, extending out to the edges of the Protection Zone, while not touching the base of the trunk. Mulch touching the trunk can cause chronic moisture and decay.
- Observation - All work within the protected zone should be observed by a certified arborist experienced with each specific trees requirements'. The Contractor is to contact both the District Arborist and the Landscape Architect for a site meeting in a timely manner prior to the beginning of demolition or construction to ensure their availability.

APPL. No. A 03-122864

IDENTIFICATION STAMP
DIV. OF THE STATE ARCHITECT
APP: 03-122864 INC:
REVIEWED FOR
SS ☑ FLS ☑ ACS ☑
DATE: 10/03/2023

DSA Stamp

Architect

RACHLIN PARTNERS
8640 National Boulevard
Culver City, CA 90232
310.204.3400

Disclaimer:
THESE DRAWINGS ARE THE PROPERTY OF THE ARCHITECT. THE DESIGNS SHOWN AND DESCRIBED HEREIN INCLUDING ALL TECHNICAL DRAWINGS ARE PROPRIETARY AND CANNOT BE COPIED, DUPLICATED OR COMMERCIALLY EXPLOITED, IN WHOLE OR IN PART. THE DRAWINGS AND SPECIFICATIONS SHALL NOT BE USED BY THE OWNER ON OTHER PROJECTS, FOR ADDITIONS TO THIS PROJECT, OR FOR COMPLETION OF THIS PROJECT BY OTHERS. THE OWNER AGREES TO HOLD HARMLESS, INDEMNIFY AND DEFEND THE ARCHITECT AGAINST ALL DAMAGES, CLAIMS AND LOSSES, INCLUDING DEFENSE COSTS, ARISING OUT OF ANY REUSE OF PLANS AND SPECIFICATIONS WITHOUT THE WRITTEN AUTHORIZATION OF THE ARCHITECT OF RECORD.
Copyright © 2022 Rachlin Partners, All Rights Reserved.

Performing Arts Center
Hacienda La Puente Unified School District
635 North California Avenue
La Puente, CA 91744

Rev	Date	Issue
1	7.22.22	50% DD
2	10.21.22	50% CD
3	12.09.22	100% DSA Submittal
4	06.19.23	100% DSA Resubmittal
5	09.20.23	DSA Back Check

Date: 09/20/23
Scale: As Shown
Drawn By: --
Checked By: --

Architect / Engineer Stamp

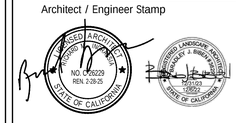

Consultants
Miyamoto International, Inc.
The Ruzika Company, Inc,
MDC Consulting Engineers
Pocock Design Solutions
Newson Brown Acoustics, LLC
VCA Engineers, Inc.
HJSA Consulting
L.A. Design Associates, Inc.

Sheet Title
Planting Legend

Sheet Number
L800

Plot Date: 9/20/2023 11:46:50 AM Last Save By: khans Login: Kris Hansen L:\2022\HLP PAC\DWGS\WIP\HLPLISD PAC L800.dwg

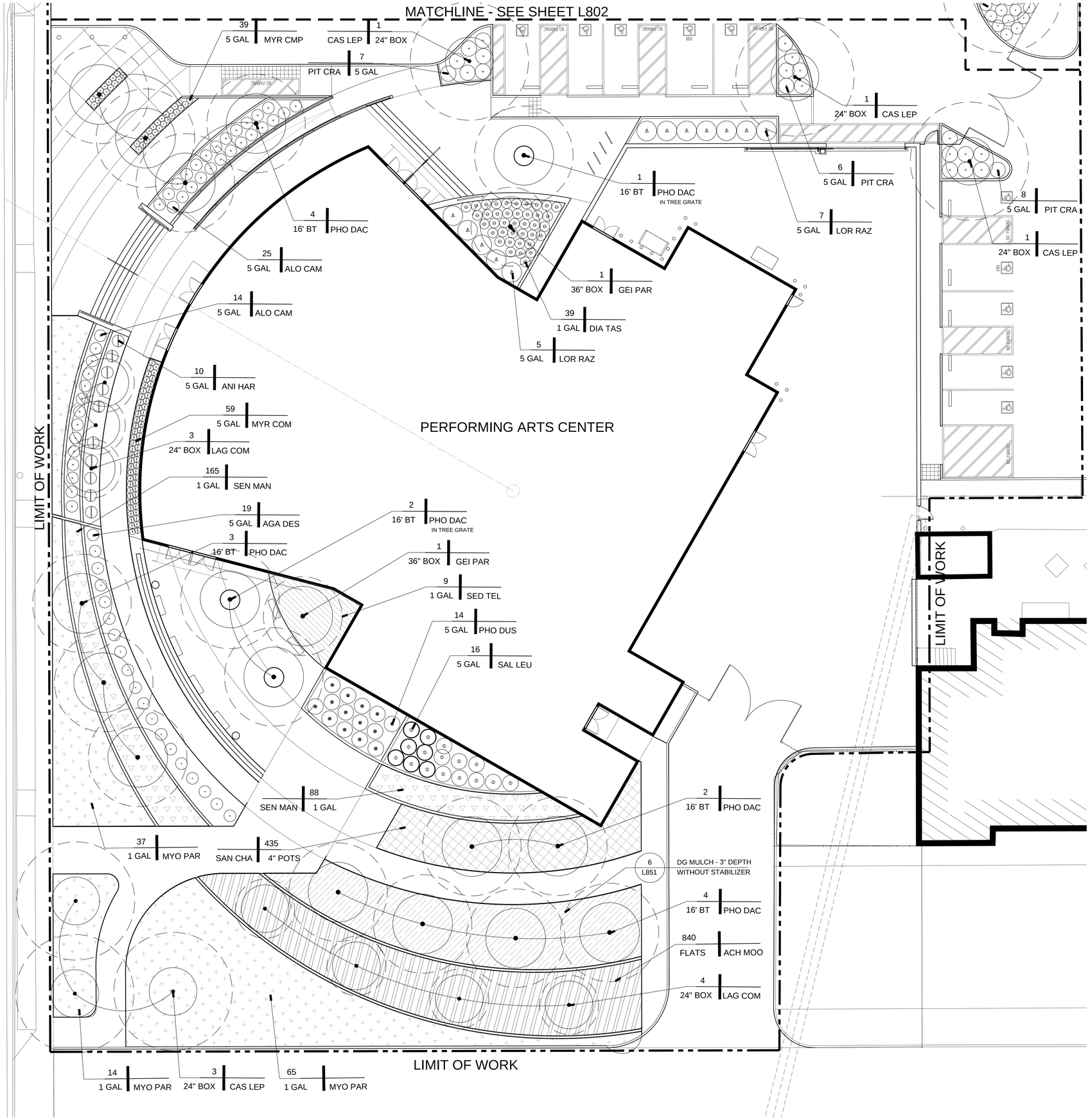

WEED BARRIER NOTE:
INSTALL DEWITT P6 PRO-5 WEED BARRIER LANDSCAPE FABRIC OR APPROVED EQUAL IN ALL SHRUB PLANTING BEDS. AVAILABLE FROM DEWITT COMPANY, TEL. 800-888-9669 WWW.DEWITTCOMPANY.COM

MULCH NOTE:
PROVIDE 3" DEPTH SHREDDED HARDWOOD MULCH PER SPECIFICATIONS IN ALL PLANTING AREAS

NOTES:

1. CONTRACTOR IS TO SPOT ALL PLANT MATERIAL AND HAVE LANDSCAPE ARCHITECT APPROVE THE SPOTTING PRIOR TO THE EXCAVATION OF ANY PLANT PIT. ALLOW 48 HOURS LEAD TIME. ANY TREE, SHRUB OR VINE THAT IS PLANTED WITHOUT APPROVAL OF THE LANDSCAPE ARCHITECT MAY BE MOVED AT THE CONTRACTOR'S EXPENSE.
2. REFER TO SPECIFICATIONS FOR SOIL PREPARATION INFORMATION.
3. CONTRACTOR TO CONTACT LANDSCAPE ARCHITECT FOR FINAL INSPECTION WHEN INSTALLATION IS COMPLETE AND, IF A MAINTENANCE CONTRACT IS IN EFFECT, FOR A FINAL MAINTENANCE INSPECTION AT THE END OF THE MAINTENANCE PERIOD.
4. CONTRACTOR SHALL PROVIDE A SOILS FERTILITY TEST AND ANALYSIS WITH RECOMMENDATIONS FOR SOIL AMENDMENT BY A SOILS TESTING LABORATORY AS REQUIRED BY LA DESIGN ASSOCIATES, INC.
5. SEE SHEET L-800 FOR PLANTING LEGENDS AND L-851 FOR DETAILS.
6. SEE L-700'S SERIES SHEETS FOR IRRIGATION.

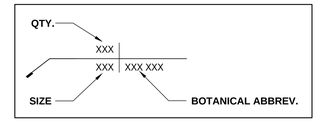

PLANT KEY

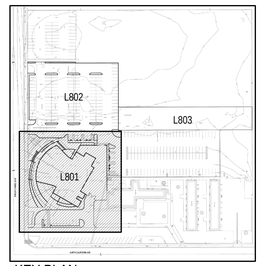

KEY PLAN

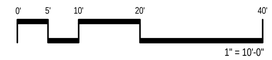

APPL. No. A 03-122864

IDENTIFICATION STAMP
DIV. OF THE STATE ARCHITECT
APP: 03-122864 INC:
REVIEWED FOR
SS ☑ FLS ☑ ACS ☑
DATE: 10/03/2023

DSA Stamp

Architect

RACHLIN
PARTNERS
8640 National Boulevard
Culver City, CA 90232
310.204.3400

Disclaimer:
THESE DRAWINGS ARE THE PROPERTY OF THE ARCHITECT. THE DESIGNS SHOWN AND DESCRIBED HEREIN INCLUDING ALL TECHNICAL DRAWINGS ARE PROPRIETARY AND CANNOT BE COPIED, DUPLICATED OR COMMERCIALLY EXPLOITED, IN WHOLE OR IN PART. THE DRAWINGS AND SPECIFICATIONS SHALL NOT BE USED BY THE OWNER ON OTHER PROJECTS, FOR ADDITIONS TO THIS PROJECT, OR FOR COMPLETION OF THIS PROJECT BY OTHERS. THE OWNER AGREES TO HOLD HARMLESS, INDEMNIFY AND DEFEND THE ARCHITECT AGAINST ALL DAMAGES, CLAIMS AND LOSSES, INCLUDING DEFENSE COSTS, ARISING OUT OF ANY REUSE OF PLANS AND SPECIFICATIONS WITHOUT THE WRITTEN AUTHORIZATION OF THE ARCHITECT OF RECORD.
Copyright © 2022 Rachlin Partners, All Rights Reserved.

Performing Arts Center
Hacienda La Puente Unified School District
635 North California Avenue
La Puente, CA 91744

Rev	Date	Issue
1	7.22.22	50% DD
2	10.21.22	50% CD
3	12.09.22	100% DSA Submittal
4	06.19.23	100% DSA Resubmittal
5	09.20.23	DSA Back Check

Date: 09/20/23
Scale: As Shown
Drawn By: --
Checked By: --

Architect / Engineer Stamp

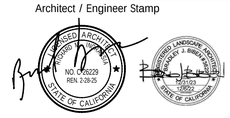

Consultants
Miyamoto International, Inc.
The Ruzika Company, Inc,
MDC Consulting Engineers
Pocock Design Solutions
Newson Brown Acoustics, LLC
VCA Engineers, Inc.
HJSA Consulting
L.A. Design Associates, Inc.

Sheet Title
Planting Plan

Sheet Number
L801

Plot Date: 9/20/2023 11:44:38 AM Last Save By: khans Login: Kris Hansen L:\2022\HLP PAC\DWGS\WP\HLPJSD PAC L801-L803.dwg

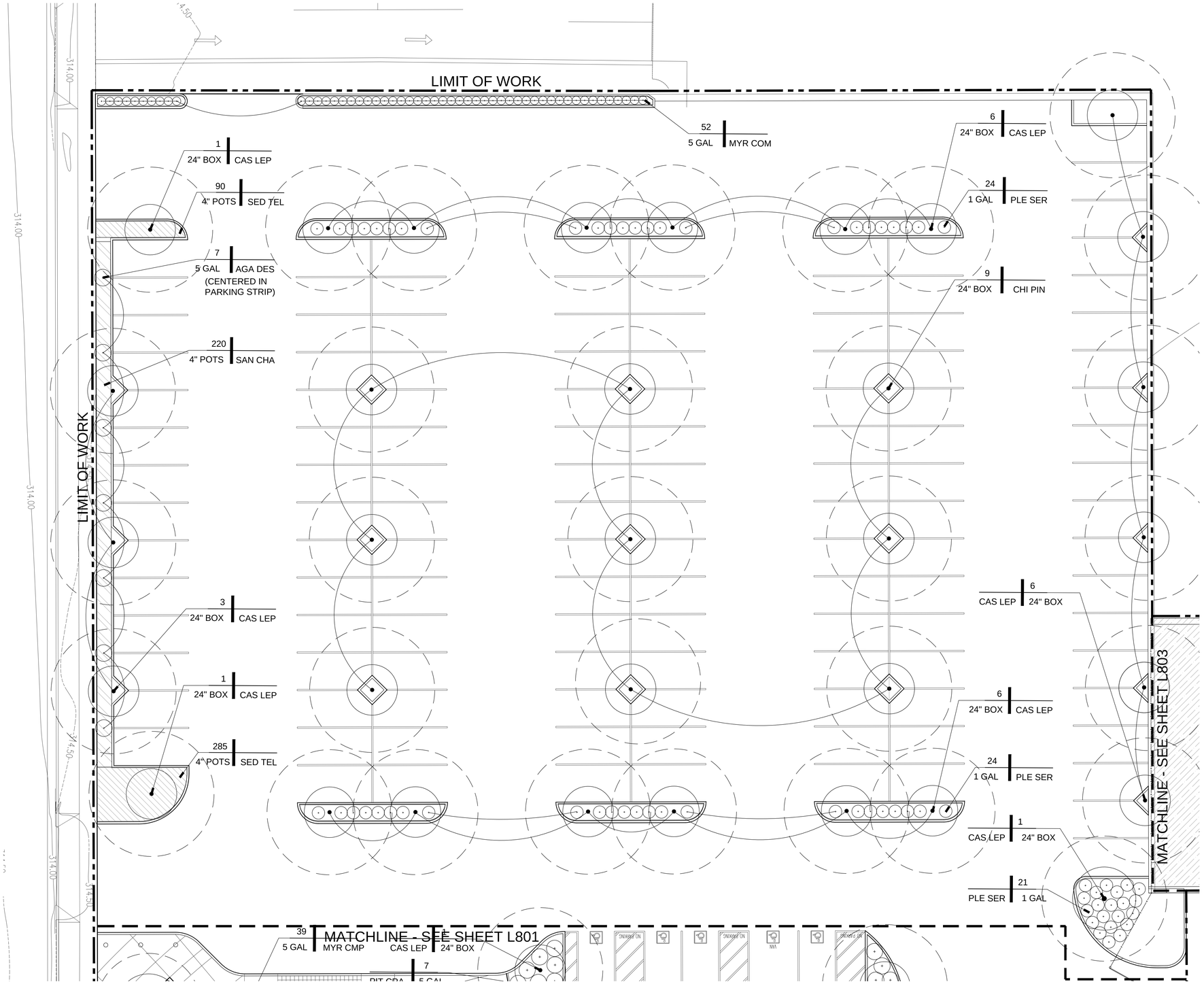

WEED BARRIER NOTE:
INSTALL DEWITT P6 PRO-5 WEED BARRIER LANDSCAPE FABRIC OR APPROVED EQUAL IN ALL SHRUB PLANTING BEDS. AVAILABLE FROM DEWITT COMPANY, TEL. 800-888-9669 WWW.DEWITTCOMPANY.COM

MULCH NOTE:
PROVIDE 3" DEPTH SHREDDED HARDWOOD MULCH PER SPECIFICATIONS IN ALL PLANTING AREAS

NOTES:

1. CONTRACTOR IS TO SPOT ALL PLANT MATERIAL AND HAVE LANDSCAPE ARCHITECT APPROVE THE SPOTTING PRIOR TO THE EXCAVATION OF ANY PLANT PIT. ALLOW 48 HOURS LEAD TIME. ANY TREE, SHRUB OR VINE THAT IS PLANTED WITHOUT APPROVAL OF THE LANDSCAPE ARCHITECT MAY BE MOVED AT THE CONTRACTOR'S EXPENSE.
2. REFER TO SPECIFICATIONS FOR SOIL PREPARATION INFORMATION.
3. CONTRACTOR TO CONTACT LANDSCAPE ARCHITECT FOR FINAL INSPECTION WHEN INSTALLATION IS COMPLETE AND, IF A MAINTENANCE CONTRACT IS IN EFFECT, FOR A FINAL MAINTENANCE INSPECTION AT THE END OF THE MAINTENANCE PERIOD.
4. CONTRACTOR SHALL PROVIDE A SOILS FERTILITY TEST AND ANALYSIS WITH RECOMMENDATIONS FOR SOIL AMENDMENT BY A SOILS TESTING LABORATORY AS REQUIRED BY LA DESIGN ASSOCIATES, INC.
5. SEE SHEET L-800 FOR PLANTING LEGENDS AND L-851 FOR DETAILS.
6. SEE L-700'S SERIES SHEETS FOR IRRIGATION.

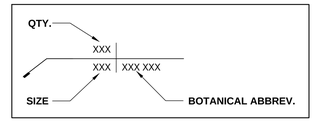

PLANT KEY

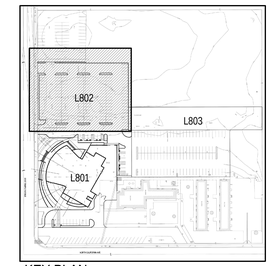

KEY PLAN

0' 5' 10' 20' 40'
1" = 10'-0"
NORTH

APPL. No. A 03-122864

IDENTIFICATION STAMP
DIV. OF THE STATE ARCHITECT
APP: 03-122864 INC:
REVIEWED FOR
SS ☑ FLS ☑ ACS ☑
DATE: 10/03/2023

DSA Stamp

Architect

RACHLIN PARTNERS
8640 National Boulevard
Culver City, CA 90232
310.204.3400

Disclaimer:
THESE DRAWINGS ARE THE PROPERTY OF THE ARCHITECT. THE DESIGNS SHOWN AND DESCRIBED HEREIN INCLUDING ALL TECHNICAL DRAWINGS ARE PROPRIETARY AND CANNOT BE COPIED, DUPLICATED OR COMMERCIALLY EXPLOITED, IN WHOLE OR IN PART. THE DRAWINGS AND SPECIFICATIONS SHALL NOT BE USED BY THE OWNER ON OTHER PROJECTS, FOR ADDITIONS TO THIS PROJECT, OR FOR COMPLETION OF THIS PROJECT BY OTHERS. THE OWNER AGREES TO HOLD HARMLESS, INDEMNIFY AND DEFEND THE ARCHITECT AGAINST ALL DAMAGES, CLAIMS AND LOSSES, INCLUDING DEFENSE COSTS, ARISING OUT OF ANY REUSE OF PLANS AND SPECIFICATIONS WITHOUT THE WRITTEN AUTHORIZATION OF THE ARCHITECT OF RECORD.

Copyright © 2022 Rachlin Partners, All Rights Reserved.

Performing Arts Center
Hacienda La Puente Unified School District

635 North California Avenue
La Puente, CA 91744

Rev	Date	Issue
1	7.22.22	50% DD
2	10.21.22	50% CD
3	12.09.22	100% DSA Submittal
4	06.19.23	100% DSA Resubmittal
5	09.20.23	DSA Back Check

Date: 09/20/23
Scale: As Shown
Drawn By: --
Checked By: --

Architect / Engineer Stamp

Consultants
Miyamoto International, Inc.
The Ruzika Company, Inc,
MDC Consulting Engineers
Pocock Design Solutions
Newson Brown Acoustics, LLC
VCA Engineers, Inc.
HJSA Consulting
L.A. Design Associates, Inc.

Sheet Title
Planting Plan

Sheet Number
L802

Plot Date: 9/20/2023 11:45:17 AM Last Save By: khans Login: Kris Hansen L:\2022\HLP PAC\DWGS\WP\HLPJSD PAC L801-L803.dwg

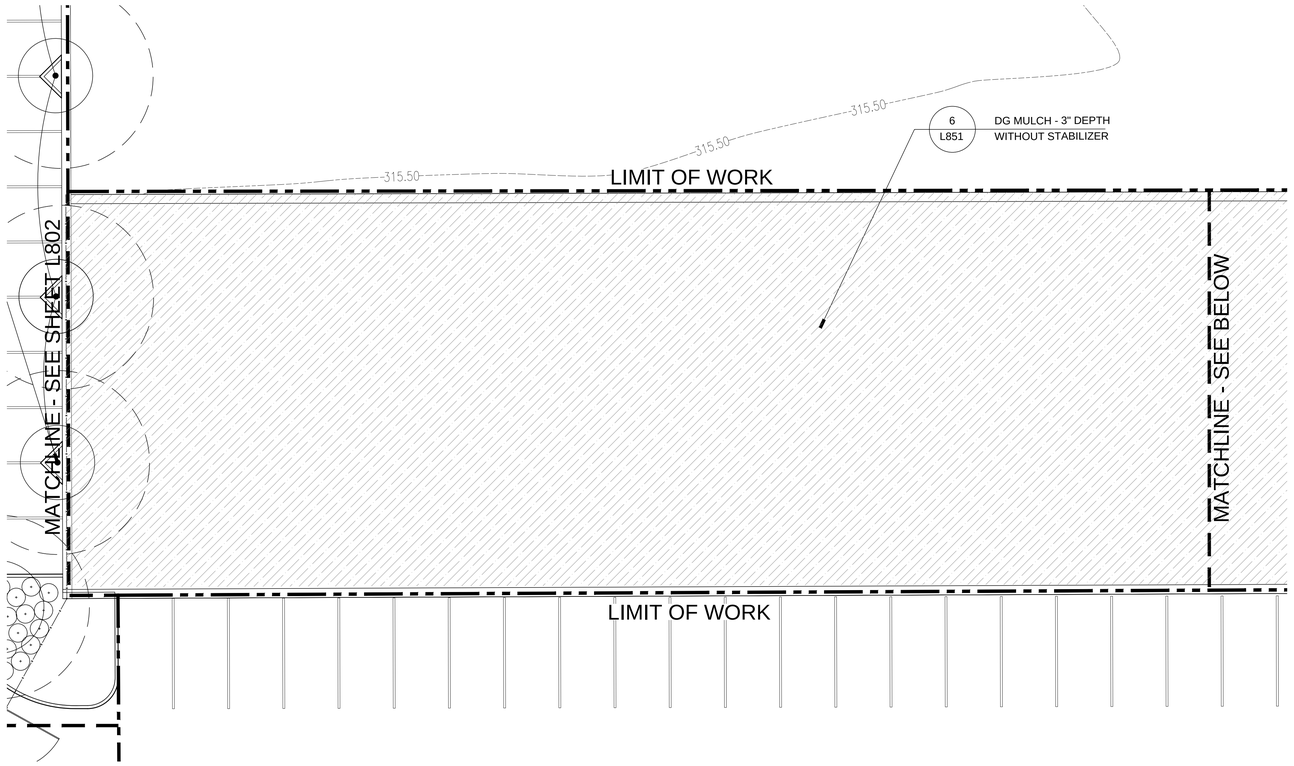

PLANTING PLAN - PUBLIC PARK - WEST

SCALE 1"=10'-0"

A

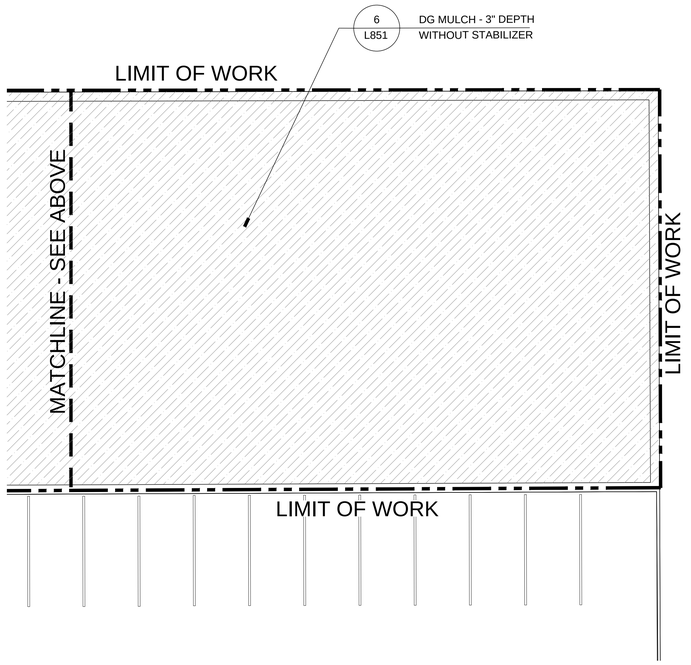

PLANTING PLAN - PUBLIC PARK - EAST

SCALE 1"=10'-0"

B

WEED BARRIER NOTE:

INSTALL DEWITT P6 PRO-5 WEED BARRIER LANDSCAPE FABRIC OR APPROVED EQUAL IN ALL SHRUB PLANTING BEDS. AVAILABLE FROM DEWITT COMPANY, TEL. 800-888-9669 WWW.DEWITTCOMPANY.COM

MULCH NOTE:

PROVIDE 3" DEPTH SHREDDED HARDWOOD MULCH PER SPECIFICATIONS IN ALL PLANTING AREAS

NOTES:

1. CONTRACTOR IS TO SPOT ALL PLANT MATERIAL AND HAVE LANDSCAPE ARCHITECT APPROVE THE SPOTTING PRIOR TO THE EXCAVATION OF ANY PLANT PIT. ALLOW 48 HOURS LEAD TIME. ANY TREE, SHRUB OR VINE THAT IS PLANTED WITHOUT APPROVAL OF THE LANDSCAPE ARCHITECT MAY BE MOVED AT THE CONTRACTOR'S EXPENSE.
2. REFER TO SPECIFICATIONS FOR SOIL PREPARATION INFORMATION.
3. CONTRACTOR TO CONTACT LANDSCAPE ARCHITECT FOR FINAL INSPECTION WHEN INSTALLATION IS COMPLETE AND, IF A MAINTENANCE CONTRACT IS IN EFFECT, FOR A FINAL MAINTENANCE INSPECTION AT THE END OF THE MAINTENANCE PERIOD.
4. CONTRACTOR SHALL PROVIDE A SOILS FERTILITY TEST AND ANALYSIS WITH RECOMMENDATIONS FOR SOIL AMENDMENT BY A SOILS TESTING LABORATORY AS REQUIRED BY LA DESIGN ASSOCIATES, INC.
5. SEE SHEET L-800 FOR PLANTING LEGENDS AND L-851 FOR DETAILS.
6. SEE L-700'S SERIES SHEETS FOR IRRIGATION.

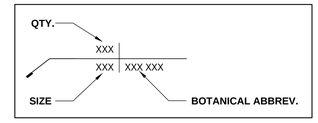

PLANT KEY

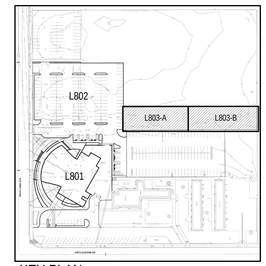

KEY PLAN

0' 5' 10' 20' 40'

1" = 10'-0"

NORTH

APPL. No. A 03-122864

IDENTIFICATION STAMP
DIV. OF THE STATE ARCHITECT
APP: 03-122864 INC:
REVIEWED FOR
SS ☑ FLS ☑ ACS ☑
DATE: 10/03/2023

DSA Stamp

Architect

RACHLIN PARTNERS
8640 National Boulevard
Culver City, CA 90232
310.204.3400

Disclaimer:

THESE DRAWINGS ARE THE PROPERTY OF THE ARCHITECT. THE DESIGNS SHOWN AND DESCRIBED HEREIN INCLUDING ALL TECHNICAL DRAWINGS ARE PROPRIETARY AND CANNOT BE COPIED, DUPLICATED OR COMMERCIALLY EXPLOITED, IN WHOLE OR IN PART. THE DRAWINGS AND SPECIFICATIONS SHALL NOT BE USED BY THE OWNER ON OTHER PROJECTS, FOR ADDITIONS TO THIS PROJECT, OR FOR COMPLETION OF THIS PROJECT BY OTHERS. THE OWNER AGREES TO HOLD HARMLESS, INDEMNIFY AND DEFEND THE ARCHITECT AGAINST ALL DAMAGES, CLAIMS AND LOSSES, INCLUDING DEFENSE COSTS, ARISING OUT OF ANY REUSE OF PLANS AND SPECIFICATIONS WITHOUT THE WRITTEN AUTHORIZATION OF THE ARCHITECT OF RECORD.

Copyright © 2022 Rachlin Partners, All Rights Reserved.

Performing Arts Center
Hacienda La Puente Unified School District

635 North California Avenue
La Puente, CA 91744

Rev	Date	Issue
1	7.22.22	50% DD
2	10.21.22	50% CD
3	12.09.22	100% DSA Submittal
4	06.19.23	100% DSA Resubmittal
5	09.20.23	DSA Back Check

Date: 09/20/23
Scale: As Shown
Drawn By: --
Checked By: --

Architect / Engineer Stamp

Consultants
Miyamoto International, Inc.
The Ruzika Company, Inc,
MDC Consulting Engineers
Pocock Design Solutions
Newson Brown Acoustics, LLC
VCA Engineers, Inc.
HJSA Consulting
L.A. Design Associates, Inc.

Sheet Title

Planting Plan

Sheet Number

L803

Plot Date: 9/20/2023 11:46:11 AM Last Save By: khans Login: Kris Hansen L:\2022\HLP PAC\DWGS\WP\HLP(JSD PAC L801-L803.dwg

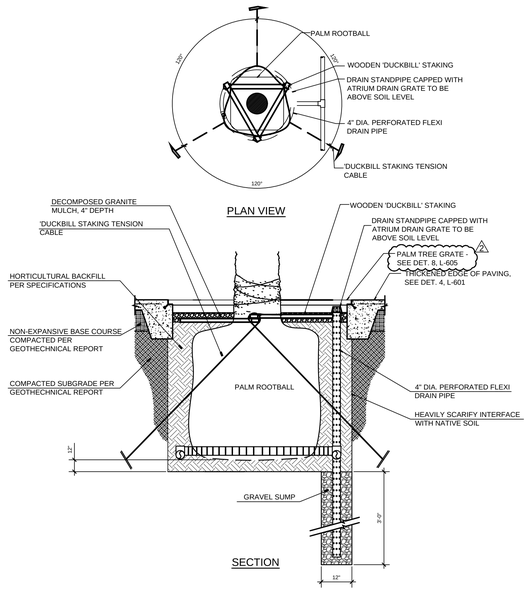

PALM TREE PLANTING 7
SCALE: NTS

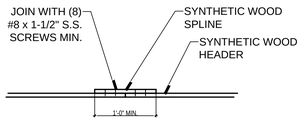

SPLICE DETAIL
PLAN VIEW

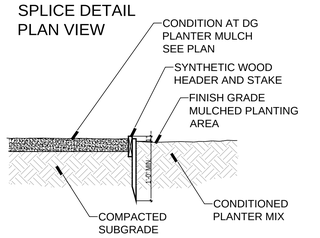

TYPICAL CONDITION AT
DG MULCH EDGE

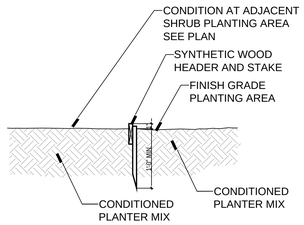

TYPICAL PLANTING AREA
SEPARATION

SYNTHETIC WOOD HEADER 5
SCALE: NTS

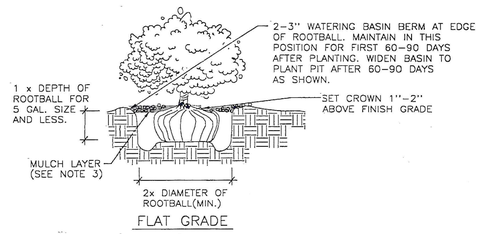

NOTES:
1. SIDES OF PLANT PIT TO BE VERTICAL. SCARIFY SIDES AND BOTTOM.
2. TEMPORARY WATERING BASIN TO BE INSTALLED IF IRRIGATION SYSTEM IS NOT OPERATIVE AT THE TIME OF PLANTING.
3. 2" DEEP LAYER OF MULCH MATERIAL AS PER. SPECIFICATIONS AND APPROVED BY THE CITY LAND-SCAPE ARCHITECT/LANDSCAPE INSPECTOR. KEEP 3" AWAY FROM ROOT CROWN.

SHRUB PLANTING 3
SCALE: NTS.

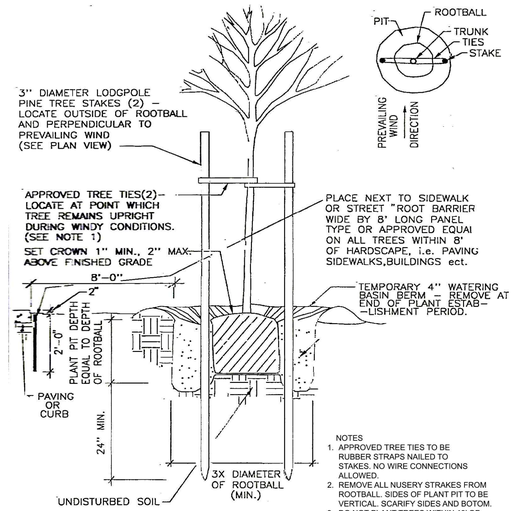

NOTES
1. APPROVED TREE TIES TO BE RUBBER STRAPS NAILED TO STAKES. NO WIRE CONNECTIONS ALLOWED.
2. REMOVE ALL NUSERY STRAKES FROM ROOTBALL. SIDES OF PLANT PIT TO BE VERTICAL. SCARIFY SIDES AND BOTOM.
3. DO NOT PLANT TREES WITHIN 10' OF SEWER OR WATER LINES OR WITHIN 5' OF BUILDING FOUNDATION.

TREE PLANTING W/ROOT BARRIER 1
SCALE: NTS.

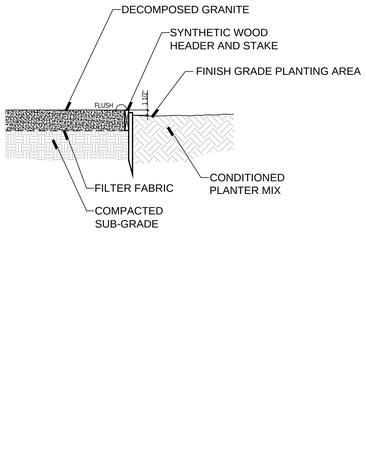

DECOMPOSED GRANITE (DG) 6
SCALE: NTS

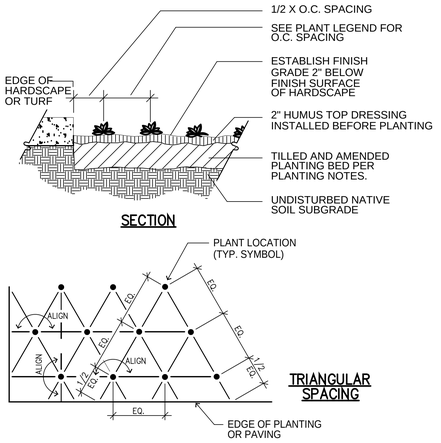

GROUNDCOVER SPACING 4
SCALE: NTS

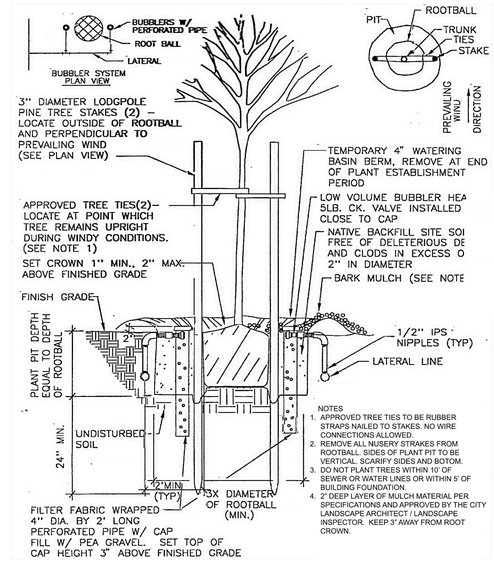

NOTES
1. APPROVED TREE TIES TO BE RUBBER STRAPS NAILED TO STAKES. NO WIRE CONNECTIONS ALLOWED.
2. REMOVE ALL NUSERY STRAKES FROM ROOTBALL. SIDES OF PLANT PIT TO BE VERTICAL. SCARIFY SIDES AND BOTOM.
3. DO NOT PLANT TREES WITHIN 10' OF SEWER OR WATER LINES OR WITHIN 5' OF BUILDING FOUNDATION.
4. 2" DEEP LAYER OF MULCH MATERIAL PER SPECIFICATIONS AND APPROVED BY THE CITY LANDSCAPE ARCHITECT / LANDSCAPE INSPECTOR. KEEP 3" AWAY FROM ROOT CROWN.

TREE PLANTING W/DEEP BUBBLER IRRIG. 2
SCALE: NTS

APPL. No. A 03-122864

DSA Stamp

Architect

RACHLIN PARTNERS
8640 National Boulevard
Culver City, CA 90232
310.204.3400

Disclaimer:
THESE DRAWINGS ARE THE PROPERTY OF THE ARCHITECT. THE DESIGNS SHOWN AND DESCRIBED HEREIN INCLUDING ALL TECHNICAL DRAWINGS ARE PROPRIETARY AND CANNOT BE COPIED, DUPLICATED OR COMMERCIALLY EXPLOITED, IN WHOLE OR IN PART. THE DRAWINGS AND SPECIFICATIONS SHALL NOT BE USED BY THE OWNER ON OTHER PROJECTS, FOR ADDITIONS TO THIS PROJECT, OR FOR COMPLETION OF THIS PROJECT BY OTHERS. THE OWNER AGREES TO HOLD HARMLESS, INDEMNIFY AND DEFEND THE ARCHITECT AGAINST ALL DAMAGES, CLAIMS AND LOSSES, INCLUDING DEFENSE COSTS, ARISING OUT OF ANY REUSE OF PLANS AND SPECIFICATIONS WITHOUT THE WRITTEN AUTHORIZATION OF THE ARCHITECT OF RECORD.
Copyright © 2022 Rachlin Partners, All Rights Reserved.

Performing Arts Center
Hacienda La Puente Unified School District

635 North California Avenue
La Puente, CA 91744

Rev	Date	Issue
1	7.22.22	50% DD
2	10.21.22	50% CD
3	12.09.22	100% DSA Submittal
4	06.19.23	100% DSA Resubmittal
5	09.20.23	DSA Back Check
1	11.01.23	Addendum No. 1
2	11.01.23	Addendum No. 2

Date: 09/20/23
Scale: As Shown
Drawn By: --
Checked By: --

Architect / Engineer Stamp

Consultants
Miyamoto International, Inc.
The Ruzika Company, Inc,
MDC Consulting Engineers
Pocock Design Solutions
Newson Brown Acoustics, LLC
VCA Engineers, Inc.
HJSA Consulting
L.A. Design Associates, Inc.

Sheet Title
Planting Details

Sheet Number
L851

Plot Date: 11/1/2023 2:56:03 PM Last Save By: khans Login: Kris Hansen L:\2022\HLP PAC\DWGS\WIP\HLPLISD PAC L851.dwg

GENERAL NOTES:

1. ALL WORK PERFORMED IN THIS CONTRACT SHALL CONFORM TO:
   - A. PROJECT SPECIFICATIONS.
   - B. THE LATEST EDITION AND SUPPLEMENTS OF THE STANDARD SPECIFICATIONS FOR PUBLIC WORKS CONSTRUCTION (SSPWC) AND STANDARD PLANS FOR PUBLIC WORKS CONSTRUCTION (SPPWC).
   - C. THE LATEST STANDARD PLANS AND SPECIFICATIONS OF HACIENDA LA PUENTE UNIFIED SCHOOL DISTRICT.
   - D. CALIFORNIA BUILDING CODE, 2019.
2. ALL WORK SHALL COMPLY WITH THE REQUIREMENTS OF THE WORK SPECIFIED ON THE DRAWINGS AND WITHIN THE VARIOUS NOTES SHOWN HEREIN.
3. THE EXISTING CONDITIONS SHOWN DIAGRAMMATICALLY ON THE PLANS ORIGINATED FROM AS BUILT DRAWINGS AND FIELD SURVEY. CONTRACTOR TO VERIFY THE EXACT EXISTING CONDITIONS ANY DISCREPANCY SHALL BE REPORTED IMMEDIATELY TO THE ARCHITECT/IOR/OAR USING THE PROPER REQUEST FOR INFORMATION FORMS FOR PROPER ACTION.
4. THE CONTRACTOR SHALL PROTECT ALL EXISTING STRUCTURES IN THE AREA OF WORK WHICH ARE NOT INCLUDED IN THIS CONSTRUCTION. ANY DAMAGE RESULTING FROM THIS WORK SHALL BE REPAIRED AND/OR REPLACED AT NO ADDITIONAL COST TO THE OWNER.
5. UNCLOG, CLEAN AND FLUSH THE ENTIRE SITE DRAINAGE SYSTEM AFTER PAVING AND IMMEDIATELY BEFORE A RAIN FORECAST.

PROTECTION AND RESTORATION OF EXISTING IMPROVEMENTS:

6. THE CONTRACTOR SHALL BE RESPONSIBLE FOR THE PROTECTION OF PRIVATE PROPERTY ADJACENT TO THE WORK.
7. EXISTING FACILITIES WHICH ARE INDICATED ON THESE PLANS TO BE REMOVED SHALL BE TOTALLY REMOVED, UNLESS OTHERWISE INDICATED. EXISTING STRUCTURES TO BE REMOVED, WHICH ARE NOT SHOWN AND/OR INDICATED ON THE PLANS AND DISCOVERED DURING CONSTRUCTION, (INCLUDING WALLS, FOOTINGS AND FOUNDATIONS), SHALL BE REPORTED TO AND COORDINATED WITH THE CONSTRUCTION MANAGEMENT AS TO THEIR REMOVAL.
8. ALL SITE PREPARATION AS INDICATED SHALL BE MADE UNDER THE CONTINUOUS INSPECTION OF THE OWNER'S OFFICER. SHORING OR EXCAVATIONS WHICH ARE 5 FEET OR DEEPER OR WORK THAT MAY JEOPARDIZE THE WORKERS SHALL REQUIRE SHORING WITH CALCULATIONS. CALCULATIONS SHALL BE PROVIDED AS REQUIRED FOR APPROVAL AND PERMITTING.
9. THE CONTRACTOR SHALL KEEP THE CONSTRUCTION AREA SUFFICIENTLY DAMPENED TO CONTROL DUST CAUSED BY WORK ACTIVITIES.
10. ALL FILL OR BACKFILL SHALL BE COMPACTED TO 90% MAXIMUM RELATIVE COMPACTION AT BUILDING PAD AND 90% RELATIVE COMPACTION AT OTHER AREAS.
11. VOIDS RESULTING FROM REMOVAL OF STRUCTURES SHALL BE FILLED WITH SUITABLE MATERIALS APPROVED BY THE CONTRACTING OFFICER AND COMPACTED TO 95% MAXIMUM DENSITY PER ASTM D-1557.
12. UPON COMPLETION OF PROJECT, CONTRACTOR SHALL REMOVE EXISTING CONSTRUCTION FENCING, APPURTENANCES AND OFFICE TRAILERS FROM THE SITE. PAVEMENT SHALL BE PATCHED AND REPAIRED TO MATCH ADJACENT PAVEMENT AND APPROVED BY THE CONTRACTING OFFICER AS APPLICABLE.
13. ANY ADDITIONAL SURVEYS OR TESTING AS A RESULT OF CONTRACTOR ERROR, MISINFORMATION OR NOT FIELD VERIFYING EXISTING AND NEW ELEVATION INFORMATION SHALL BE AT THE CONTRACTOR'S EXPENSE.
14. IF ANY SOIL IS GOING TO BE DISTRIBUTED DURING THE CONSTRUCTION, THE CONTRACTOR SHALL PROVIDE DUST CONTROL.
15. THE CONTRACTOR IS ADVISED TO USE EXTREME CAUTION AND PROTECT ALL EXISTING FACILITIES IN PLACE UNLESS OTHERWISE NOTED.
16. NO CONCRETE SHALL BE PLACED UNTIL THE FORMS AND REINFORCING STEEL HAVE BEEN PLACED, INSPECTED AND APPROVED.
17. ALL CONCRETE INCLUDING PAVEMENT SHALL BE PORTLAND CEMENT CONCRETE WITH AN ULTIMATE 28-DAY COMPRESSIVE STRENGTH OF 2500 PSI FOR SLAB AND 3250 PSI FOR WALL AND FOOTING FOUNDATION, UNLESS OTHERWISE NOTED.
18. REINFORCEMENT SHALL BE DEFORMED BARS OF INTERMEDIATE GRADE STEEL, PER ASTM A-615 GRADE 60.
19. ALL BAR BENDS AND HOOKS SHALL CONFORM TO THE ADOPTED EDITION OF AMERICAN CONCRETE INSTITUTE (ACI) "MANUAL OF STANDARD PRACTICE".
20. DIMENSIONS FROM FACE OF CONCRETE TO STEEL ARE TO CENTERLINE OF STEEL, UNLESS OTHERWISE NOTED.
21. ALL CONTINUOUS STEEL SHALL HAVE A MINIMUM LAP OF 40 BAR DIAMETERS, 18 INCH OR ACI'S RECOMMENDATION, WHICHEVER IS GREATER.
22. ALL CONSTRUCTION JOINTS IN THE PAVEMENT SLAB SHALL BE IN THE SAME PLANE. NO STAGGERING OF JOINTS WILL BE PERMITTED.
23. CEMENT SHALL CONFORM TO ASTM C150, TYPE I,II OR V.
24. ALL CONCRETE UNLESS OTHERWISE NOTED SHALL BE REGULAR WEIGHT (150 PCF), HARD ROCK TYPE.
25. CONCRETE SHALL BE MAINTAINED IN A MOIST CONDITION FOR A MINIMUM OF FIVE (5) DAYS AFTER PLACEMENT. ALTERNATE METHODS WILL BE APPROVED IF SATISFACTORY PERFORMANCE CAN BE ASSURED.
26. ALL CONSTRUCTION JOINTS SHALL BE THOROUGHLY CLEANED, ALL LAITANCE REMOVED, THOROUGHLY WETTED, AND SLUSHED WITH A COAT OF NEAT CEMENT IMMEDIATELY BEFORE PLACING NEW CONCRETE.
27. ALL EXPOSED EDGES SHALL BE FINISHED WITH A 3/4 INCH CHAMFER.
28. ALL DAMAGED VEGETATION SHALL BE REPLACED AND THE SITE SHALL BE KEPT FREE OF DISEASED OR DEAD PLANT MATERIALS AND LITTERS AT ALL TIMES.

GEOTECHNICAL NOTES :

SITE GEOTECHNICAL INVESTIGATION WAS PREPARED BY GEOTECHNICAL PROFESSIONALS INC. 5736 CORPORATE AVENUE CYPRESS, CALIFORNIA 90630. REPORT TITLE: REVISED GEOTECHNICAL INVESTIGATION PROPOSED PERFORMANCE ARTS CENTER TEMPLE ACADEMY 635 N. CALIFORNIA AVENUE LA PUENTE, CALIFORNIA. GPI PROJECT NO. 3097.I CONTRACTOR SHALL OBTAIN A COPY OF THIS REPORT AS THIS DOCUMENT IS PART OF THE CONSTRUCTION DOCUMENTS AND THE RECOMMENDATIONS THEREIN SHALL BE IMPLEMENTED BY THE CONTRACTOR. THE SOILS REPORT SUPERSEDES ANY DISCREPANCY BETWEEN ALL CONSTRUCTION DOCUMENTS.

EARTHWORK:

CLEARING

1. PRIOR TO GRADING, THE AREAS TO BE DEVELOPED SHALL BE STRIPPED OF VEGETATION, PAVEMENTS, FOUNDATIONS, AND CLEARED OF DEBRIS. BURIED OBSTRUCTIONS, SUCH AS UTILITIES AND TREE ROOTS, SHALL BE REMOVED.

EXCAVATIONS

2. FOR PLANNING PURPOSES, REMOVALS SHALL EXTEND AT LEAST 3 FEET BELOW EXISTING GRADE OR 1 FOOT BELOW THE BOTTOM OF THE FLOOR SLAB, WHICHEVER IS DEEPER.
3. THE BASE OF THE EXCAVATIONS SHALL EXTEND LATERALLY BEYOND THE EDGE OF BUILDING, IF SPACE IS AVAILABLE, FOR DISTANCE OF AT LEAST 5 FEET OR EQUAL TO THE DEPTH OF FILL BELOW THE BOTTOM OF THE FLOOR SLAB, WHICHEVER IS GREATER.
4. FOR OTHER MINOR STRUCTURES (SITE WALLS, TRASH ENCLOSURE, ETC.), REMOVALS SHALL EXTEND AT LEAST 3 FEET BELOW EXISTING GRADE OR 2 FEET BELOW THE BASE OF FOUNDATIONS, WHICHEVER IS DEEPER. THE BASE OF THE EXCAVATIONS SHALL EXTEND LATERALLY BEYOND THE EDGE OF FOOTINGS FOR MINOR STRUCTURES, IF SPACE IS AVAILABLE, FOR A DISTANCE OF AT LEAST EQUAL TO THE DEPTH OF FILL BELOW THE BOTTOM OF THE FOOTINGS.

GEOTECHNICAL NOTES (CONT'D):

5. FOR NEW PAVEMENT AND FLATWORK SUBGRADE, REMOVALS SHALL EXTEND AT LEAST 1 FOOT BELOW EXISTING GRADES OR PROPOSED SUBGRADE, WHICHEVER IS DEEPER.

   TEMPORARY CONSTRUCTION EXCAVATIONS MAY BE MADE VERTICALLY WITHOUT SHORING TO A DEPTH OF 4 FEET BELOW ADJACENT GRADE. FOR DEEPER CUTS UP TO 10 FEET, THE SLOPES SHALL BE PROPERLY SHORED OR SLOPED BACK TO AT LEAST 1:1 OR FLATTER. EXCAVATIONS THAT EXTEND BELOW AN IMAGINARY PLANE, INCLINED AT 45 DEGREES BELOW THE EDGE OF ANY ADJACENT EXISTING SITE FACILITIES, SHALL BE PROPERLY SHORED TO MAINTAIN SUPPORT OF ADJACENT EXISTING SITE FACILITIES, SHALL BE PROPERLY SHORED TO MAINTAIN SUPPORT OF ADJACENT ELEMENTS. EXCAVATIONS AND SHORING SYSTEMS SHALL MEET THE MINIMUM REQUIREMENTS GIVEN IN THE MOST CURRENT STATE OF CALIFORNIA OCCUPATIONAL SAFETY AND HEALTH STANDARDS.

SUBGRADE PREPARATION

6. AFTER REMOVALS ARE COMPLETE AND PRIOR TO PLACING FILLS OR CONSTRUCTION OF THE PROPOSED STRUCTURES, THE SUBGRADE SOILS SHALL BE SCARIFIED TO A DEPTH OF 12 INCHES, MOISTURE-CONDITIONED, AND COMPACTED TO DRY DENSITIES EQUAL TO AT LEAST 90 PERCENT OF THE MAXIMUM DRY DENSITY AS DETERMINED IN ACCORDANCE WITH ASTM D 1557.

MATERIAL FOR FILL

7. THE EXISTING SITE SOILS ARE, IN GENERAL, SUITABLE FOR USE AS COMPACTED FILL. HOWEVER, THE ON-SITE SILTS AND CLAYS SHALL NOT BE USED AS RETAINING WALL BACKFILL.
8. IMPORTED FILL MATERIAL SHALL BE PREDOMINATELY GRANULAR (CONTAINING NO MORE THAN 40 PERCENT FINES – PORTION PASSING NO. 200 SIEVE) AND NON-EXPANSIVE (EXPANSION INDEX OF 20 OR LESS). GPI SHALL BE PROVIDED WITH A SAMPLE (AT LEAST 50 POUNDS) AND NOTIFIED OF THE LOCATION OF SOILS PROPOSED FOR IMPORT SOURCE SHALL BE SAMPLED, TESTED AND ACCEPTANCE BY GPI MAY BE REJECTED IF NOT SUITABLE.
9. FILL SOILS SHALL BE PLACED IN HORIZONTAL LIFTS, MOISTURE-CONDITIONED, AND MECHANICALLY COMPACTED TO AT LEAST 90 PERCENT OF THE MAXIMUM DRY DENSITY, IN ACCORDANCE WITH ASTM D-1557.

SHRINKAGE AND BULKING

10. SHRINKAGE IS THE LOSS OF SOIL VOLUME CAUSED BY COMPACTION OF FILLS TO A HIGHER DENSITY THAN BEFORE GRADING. SUBSIDENCE IS THE SETTLEMENT OF IN-PLACE SUBGRADE SOILS CAUSED BY LOADS GENERATED BY LARGE EARTHMOVING EQUIPMENT. FOR EARTHWORK ESTIMATING PURPOSES, AN AVERAGE SHRINKAGE VALUE OF 10 TO 15 PERCENT AND SUBSIDENCE OF 0.1 FEET MAY BE ASSUMED FOR THE SURFICIAL SOILS FOR EARTHWORK VOLUME ESTIMATING PURPOSES. ACTUAL SHRINKAGE AND SUBSIDENCE WILL DEPEND ON THE TYPES OF EARTHWORK EQUIPMENT USED AND CAN BE DETERMINED DURING GRADING.

TRENCH/WALL BACKFILL

11. IN BACKFILL AREAS WHERE MECHANICAL COMPACTION OF SOIL BACKFILL IS IMPRACTICAL DUE TO SPACE CONSTRAINTS, SAND-CEMENT SLURRY MAY BE SUBSTITUTED FOR COMPACTED BACKFILL. THE SLURRY SHALL CONTAIN AT LEAST 1½ SACKS OF CEMENT PER CUBIC YARD AND HAVE A MAXIMUM SLUMP OF 5 INCHES. WITHIN BUILDING AREAS, THE SLURRY SHALL CONTAIN TWO SACKS OF CEMENT PER CUBIC YARD.

FOUNDATIONS

12. THE PROPOSED BUILDING MAY BE SUPPORTED ON CONVENTIONAL ISOLATED AND/OR CONTINUOUS SHALLOW SPREAD FOOTINGS WITH SLAB-ON-GRADE FLOORS PROVIDED THE SUBSURFACE SOILS ARE PREPARED IN ACCORDANCE WITH THE RECOMMENDATIONS GIVEN IN THIS REPORT. THE SPREAD FOOTINGS WILL REQUIRE THE INSTALLATION OF GROUND IMPROVEMENT, SUCH AS IMPACT RAMMED AGGREGATE PIERS, UNDER THE FOOTINGS TO CONTROL STATIC AND SEISMIC SETTLEMENT.

BUILDING FLOOR SLABS

13. SLAB-ON-GRADE FLOORS SHALL BE SUPPORTED ON AT LEAST 1 FOOT OF NON-EXPANSIVE (EXPANSION INDEX OF 20 OR LESS), COMPACTED SOILS. IF THE SEISMIC SETTLEMENTS (LIQUEFACTION OR DRY) DISCUSSED IN THIS REPORT ARE NOT ACCEPTABLE UNDER THE FLOOR SLAB, IMPACT RAMMED AGGREGATE PIERS SHALL BE INSTALLED UNDER THE FLOOR SLAB TO MITIGATE SEISMIC SETTLEMENTS TO AN ACCEPTABLE LEVEL.

CORROSION

14. SOIL CORROSIVITY TESTING WAS PERFORMED BY HDR UNDER SUBCONTRACT TO GPI. THE CORROSIVITY TEST RESULTS ARE PRESENTED IN APPENDIX C. THE ON-SITE SOILS SHALL BE CONSIDERED MODERATELY CORROSIVE TO BURIED METALS. IF CORROSION CONSULTATION IS REQUIRED, A CORROSION ENGINEER SUCH AS HDR SHALL BE CONSULTED.

EXTERIOR CONCRETE AND MASONRY FLATWORK

15. EXTERIOR CONCRETE, MASONRY FLATWORK AND PEDESTRIAN PAVERS SHALL BE SUPPORTED ON A LAYER OF NON-EXPANSIVE, COMPACTED FILL. THE USE OF THE CLAYEY SOILS WITHIN 1 FOOT OF EXTERIOR CONCRETE SHALL NOT BE PERMITTED UNLESS DIFFERENTIAL HEAVING IS TOLERABLE.
16. PEDESTRIAN PAVERS SHALL BE SUPPORTED ON A MINIMUM OF 1 INCH OF CLEAN BEDDING SAND OVER 4 INCHES OF AGGREGATE BASE. PAVERS FOR PEDESTRIAN TRAFFIC SHALL BE A MINIMUM OF 2⅜ INCHES (60 MM) THICK. BASE COURSE MATERIALS SHALL BE COMPACTED TO AT LEAST 95 PERCENT OF THE MAXIMUM DRY DENSITY.

STORM WATER INFILTRATION

17. CURRENT REGULATIONS REQUIRE THAT STORM WATER BE INFILTRATED INTO THE SITE SOILS OF NEW DEVELOPMENTS WHEN POSSIBLE. THE SOIL TYPES PRESENT AT THE SITE CONTROL THE ABILITY OF WATER TO INFILTRATE INTO THE SUBGRADE.
18. WHEN THE LOCATION AND DEPTH OF THE PROPOSED STORM WATER TREATMENT DEVICES ARE PROVIDED BY THE CIVIL ENGINEER, INFILTRATION TESTING AT THE SITE WILL BE REQUIRED TO DETERMINE THE SUITABILITY FOR INFILTRATION OF STORM WATER INTO THE SITE SOILS. THE INFILTRATION TESTING SHALL BE PERFORMED IN ACCORDANCE WITH METHODS ESTABLISHED BY THE COUNTY IF LOS ANGELES.

PAVED AREA

19. THE PAVEMENT SUBGRADE UNDERLYING THE AGGREGATE BASE OR CONCRETE SHALL BE PROPERLY PREPARED AND COMPACTED IN ACCORDANCE WITH THE RECOMMENDATIONS.
20. THE PORTLAND CEMENT CONCRETE USED FOR PAVING SHALL HAVE A MODULUS OF RUPTURE OF AT LEAST 550 PSI AT THE TIME THE PAVEMENT IS SUBJECTED TO TRUCK TRAFFIC.

LEGENDS:

- 3" THICK AC SURFACING OVER 6" THICK CRUSHED AGGREGATE BASE (CAB), PER DETAIL 2 ON SHEET C700.
- 4" THICK CONCRETE PAVEMENT OVER 4" BASE PER DETAIL 1 ON SHEET C700.
- NEW SLURRY COAT OF ASPHALT CONCRETE PAVING PER DETAIL 5 ON SHEET C700.
- INSTALL DETECTABLE WARNING SYSTEM (DWS).
- 3" THICK AC SURFACING OVER 12" THICK CRUSHED AGGREGATE BASE (CAB), PER DETAIL 2 ON SHEET C700.
- PLANTER AREA PER ARCHITECTURAL AND LANDSCAPE DRAWINGS.
- BLDG
- WALL
- REMOVE EXISTING AC PAVEMENT AND BASE MATERIAL, FULL DEPTH.
- REMOVE EXISTING CONCRETE PAVEMENT AND BASE MATERIAL, FULL DEPTH.

LEGENDS (CONT'D)

- CLEAR, GRUB AND REMOVE EXISTING TURF/ PLANTER/SHRUBS/EXPOSED SUBGRADE AREA. REMOVE EXISTING SHRUBS AND ROOTS IN THEIR ENTIRETY.
- REMOVE EXISTING RUBBER PLAY SURFACE
- REMOVE EXISTING BUILDING
- REMOVE EXISTING TMP RAMPS
- LIMIT OF REMOVAL
- LIMIT OF WORK
- CENTER LINE
- PROPERTY LINE
- CHAIN LINK FENCE
- VINYL FENCE
- HANDRAIL
- CONTOUR LINE (72.50 / 71.50)
- WALL
- PILLAR/BUILDING
- CONCRETE
- RUBBER MAT
- TURF
- DESIGN CONTOUR LINE (999.00)
- EXISTING GRADE ELEVATIONS (999.00)
- FINISHED GRADE ELEVATIONS 999.99
- ELECTRICAL, GAS, WATER, SEWER (E G W)
- EXISTING ELECTRICAL, GAS, (E) (G) (W) (S)
- EXISTING CONTOUR LINE (135.00)
- FLOW LINE OR FL
- GRADE CHANGE OR GC
- IRON GRILL FENCE OR IGF
- NEW CHAIN LINK FENCE (XX XX XX)
- PROPERTY LINE
- RIDGE LINE (R R R R R R)
- SAWCUT AND JOIN LIMIT
- STEEL HANDRAIL OR SHR
- WOOD FENCE (WF WF WF)
- BUILDING DOOR
- TREE
- DIA IN INCHES (#)
- PADESTRIAN GATE
- FIRE HYDRANT
- BACKFLOW PREVENTER/FIRE DEPARTMENT CONNECTION

ABBREVIATIONS:

AC	ASPHALT CONCRETE
APWA	AMERICAN PUBLIC WORKS ASSOCIATION
ARCH	ARCHITECTURAL
BBS	BOTTOM OF BOTTOM STEPS
BR	BOTTOM RAMP
C/CONC	CONCRETE
CAB	CRUSHED AGGREGATE BASE
CB	CATCH BASIN
CC	CONCRETE CORNER
CF	CURB FACE
℄ , CL	CENTERLINE
CLF	CHAIN LINK FENCE
CLR	CLEAR
CO	CLEANOUT
DI	DRAIN INLET
DIA	DIAMETER
DWG(S)	DRAWING(S)
DW	DOMESTIC WATER

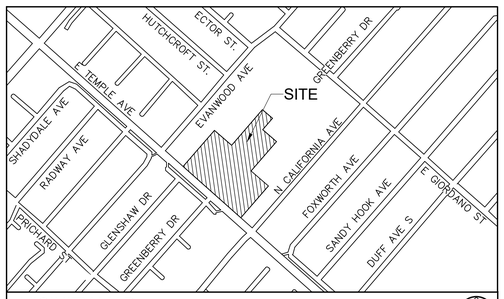

VICINITY MAP
SCALE: NOT TO SCALE

ABBREVIATIONS (CONT'D):

E	EAST OR ELECTRICAL
ELEC	ELECTRICAL
EL, ELEV	ELEVATION
EJ	EXPANSION JOINT
EP	EDGE OF PAVEMENT
EXIST, EX, (E)	EXISTING
EXP	EXPANSION
FD	FRENCH DRAIN
FF	FINISH FLOOR ELEVATION
FG	FINISH GRADE
FL	FLOW LINE
FS	FINISH SURFACE
FT	FEET
FW	FIRE WATER
GB	GRADE BREAK
GND	GROUND
GV	GAS VALVE
HCS	HANDICAP SIGN
INV	INVERT
L	LENGTH
MAX	MAXIMUM
MIN	MINIMUM
N	NORTH
OAR	OWNER AUTHORIZED REPRESENTATIVE
PA	PLANTING AREA
PCC	PORTLAND CEMENT CONCRETE
PL	PROPERTY LINE
PSG	PEDESTRIAN SWING GATE
PVC	POLY VINYL CHLORIDE PIPE
PVMT	PAVEMENT
R	RADIUS (GEOMETRY) OR RIDGE (GRADING) OR RECORD (SURVEY)
REF	REFERENCE
S	SLOPE, SOUTH, SEWER
SD	STORM DRAIN
SMH	SEWER MANHOLE
SS	SANITARY SEWER
STA	STATION
STD(S)	STANDARD(S)
SV	SEWER VALVE
SW	SIDEWALK
TCO	TOP OF CLEAN OUT
TDP	TRUNCATED DOME PAD
TE	TOP OF ELEVATION
TG	TOP OF GRATE
TH	THRESHOLD
TR	TOP RAMP
TTS	TOP OF TOP STEP
TW	TOP OF WALL
TYP	TYPICAL
VIF	VERIFY IN FIELD
W	WEST
WV	WATER VALVE

SHEET INDEX:

C100	GENERAL NOTES, LEGENDS, AND ABBREVIATIONS
C101	EXISTING CONDITIONS
CD100	OVERALL SITE DEMOLITION PLAN
CD101	ENLARGED SITE DEMOLITION PLAN
CD102	ENLARGED SITE DEMOLITION PLAN
CD200	OVERALL UTILITY DEMOLITION PLAN
CD201	ENLARGED UTILITY DEMOLITION PLAN
CD202	ENLARGED UTILITY DEMOLITION PLAN
C200	OVERALL SITE CONTROL PLAN
C201	ENLARGED SITE CONTROL PLAN
C202	ENLARGED SITE CONTROL PLAN
C203	ENLARGED SITE CONTROL COORDINATES PLAN
C204	ENLARGED SITE CONTROL COORDINATES PLAN
C300	OVERALL SITE GRADING PLAN
C301	ENLARGED SITE GRADING PLAN
C302	ENLARGED SITE GRADING PLAN
C303	GRADING SECTIONS
C304	GRADING SECTIONS
C400	OVERALL SITE UTILITY PLAN
C401	ENLARGED SITE UTILITY PLAN
C402	ENLARGED SITE UTILITY PLAN
C403	ENLARGED SITE UTILITY PLAN AND SEWER PROFILE
C600	OVER EXCAVATION PLAN
C700	MISCELLANEOUS DETAILS
C701	MISCELLANEOUS DETAILS
C702	MISCELLANEOUS DETAILS
C800	EROSION CONTROL PLAN
C801	EROSION CONTROL DETAILS

APPL. No. A 03-122864

IDENTIFICATION STAMP
DIV. OF THE STATE ARCHITECT
APP: 03-122864 INC:
REVIEWED FOR
SS ☑ FLS ☑ ACS ☑
DATE: 10/03/2023

DSA Stamp

Architect

RACHLIN PARTNERS
8840 National Boulevard
Culver City, CA 90232
310.204.3400

Disclaimer:
THESE DRAWINGS ARE THE PROPERTY OF THE ARCHITECT. THE DESIGNS SHOWN AND DESCRIBED HEREIN INCLUDING ALL TECHNICAL DRAWINGS ARE PROPRIETARY AND CANNOT BE COPIED, DUPLICATED OR COMMERCIALLY EXPLOITED, IN WHOLE OR IN PART. THE DRAWINGS AND SPECIFICATIONS SHALL NOT BE USED BY THE OWNER ON OTHER PROJECTS, FOR ADDITIONS TO THIS PROJECT, OR FOR COMPLETION OF THIS PROJECT BY OTHERS. THE OWNER AGREES TO HOLD HARMLESS, INDEMNIFY AND DEFEND THE ARCHITECT AGAINST ALL DAMAGES, CLAIMS AND LOSSES, INCLUDING DEFENSE COSTS, ARISING OUT OF ANY REUSE OF PLANS AND SPECIFICATIONS WITHOUT THE WRITTEN AUTHORIZATION OF THE ARCHITECT OF RECORD.
Copyright© 2022 Rachlin Partners, All Rights Reserved.

Performing Arts Center
Hacienda La Puente Unified
School District
635 North California Avenue
La Puente, CA 91744

Rev	Date	Issue
1	7.22.22	50% DD
2	10.21.22	50% CD
3	12.09.22	100% CD DSA
Submittal		
4	6.19.23	100% CD DSA
Resubmittal		
5	9.20.23	DSA BACK CHECK

Date: 9.8.2023
Scale: As Shown
Drawn By: --
Checked By: --

Architect / Engineer Stamp

LICENSED ARCHITECT — NO. C-26229 — REN. 8-31-25 — STATE OF CALIFORNIA
REGISTERED PROFESSIONAL ENGINEER — No. C36079 — Exp. 6/30/24 — CIVIL — STATE OF CALIFORNIA

Consultants
Miyamoto International, Inc.
The Ruzika Company, Inc,
MDC Consulting Engineers
Pocock Design Solutions
Newson Brown Acoustics, LLC
VCA Engineers, Inc.
HJSA Consulting
L.A. Design Associates, Inc.

Sheet Title

GENERAL NOTES, LEGENDS, AND ABBREVIATIONS

Sheet Number

C100

Demolition was completed under a separate contract, Drawing is for reference only.

LEGENDS:

CENTER LINE	C	FIBER OPTIC	FO
PROPERTY LINE	P	TELEVISION	TV
CHAIN LINK FENCE	x x	WATER	W
VINYL FENCE		SEWER	SS
HANDRAIL		STORM DRAIN	SD
CONTOUR LINE	72.50 / 71.50	POSSIBLE LINE LOCATION (UNK)	U
WALL		FIRE HYDRANT	
PILLAR/BUILDING		METER/PULL BOX	
CONCRETE		VAULT	
RUBBER MAT		VALVE	
TURF		SITE LIGHT	
TREE		STREET LIGHT	
DIA IN INCHES	#	UNVERIFIED PATH	
ELECTRICAL	E	GAS MANIFOLD	
TRAFFIC SIGNAL	TS	WATER MAIN	
SITE LIGHT	SL	BACKFLOW	
RAILROAD SIGNAL	RR	OFFSET FROM REFERENCE	10'-8"
GAS	G	DEPTH FROM SURFACE DIA. OF PIPE	1'-6"
TEL/COMM	TEL		
INTERCOM	IC		
FIRE ALARM	FA		

ABBREVIATIONS:

AC	ASPHALT CONCRETE
BBS	BOTTOM OF BOTTOM STEPS
BR	BOTTOM RAMP
C/CONC	CONCRETE
CC	CONCRETE CORNER
DI	DRAIN INLET
EP	EDGE OF PAVEMENT
FL	FLOW LINE
GB	GRADE BREAK
GND	GROUND
GV	GAS VALVE
HCS	HANDICAP SIGN
SMH	SEWER MANHOLE
SV	SEWER VALVE
TDP	TRUNCATED DOME PAD
TR	TOP RAMP
TTS	TOP OF TOP STEP
WV	WATER VALVE
NLP	NO LONGER PUSH
NT	NO TONE
EOS	END OF SIGNAL
NA	NO ACCESS
FDC	FIRE DEPARTMENT CONNECTION
GPR	GROUND PENETRATING RADAR LOCATED LINE

UTILITY NOTES:

1. FACILITIES (UTILITY LINES) SHALL BE LOCATED AND MARKED PRIOR TO EXCAVATION. CALL 811 FOR DIG ALERT.
2. CONTRACTOR SHALL HAND-EXPOSE TO A POINT OF NO CONFLICT 24" ON EITHER SIDE OF THE UNDERGROUND FACILITY, REGARDLESS OF THE ESTIMATED DEPTH.
3. DEPTHS SHOWN ARE APPROXIMATE. ESTIMATED DEPTHS ARE FROM THE GROUND SURFACE TO THE CENTER OF THE FACILITY, INVERT OF WASTE LINES, OR TO THE FACILITY TRACER WIRE. DEPTH ESTIMATES SHOULD BE USED WITH CAUTION AND MAY VARY ALONG THE LENGTH OF THE FACILITY.
4. THE SCOPE OF THIS SURVEY DOES NOT INCLUDE FACILITY SIZE OR NUMBER OF CONDUIT IN MULTIPLE CONDUIT RUNS. IRRIGATION LINES ARE NOT INCLUDED IN THIS SURVEY.
5. THE BACKGROUND SITE PLAN USED IN PREPARING THIS MAP WAS PREPARED BY OTHERS AND PROVIDED TO ULTRA ENGINEERING BY THE CLIENT. ULTRA ENGINEERING MAKES NO REPRESENTATION AS TO THE ACCURACY OF THE PLAN.
6. IN THE EVENT THE INFORMATION SHOWN IN THIS PLAN VARIES FROM THE ACTUAL SITE CONDITIONS, ULTRA ENGINEERING SHALL BE NOTIFIED WITHIN 24 HOURS AFTER DISCOVERY OF THE CONFLICT.

SURVEYORS NOTES:

1. THIS MAP REPRESENTS A TOPOGRAPHIC SURVEY OF VISIBLE FIELD CONDITIONS AT THE TIME OF THIS SURVEY. NO EASEMENTS, COVENANTS, CONDITIONS, OR RESTRICTIONS HAVE BEEN DETERMINED EXCEPT THOSE SHOWN.
2. THE HORIZONTAL BASIS FOR THIS SURVEY IS N 32°26'18" E ON EAST TEMPLE DRIVE PER TRACT NO. 19974 BK. 217 PG. 2–3.
3. THE VERTICAL BASIS FOR THIS SURVEY IS A RDBM TAG IN W CB SUNSET AVE 2FT N/O BCR 39FT W/O C/L & 69FT S/O C/L TEMPLE AVE DESCRIBED AS "KG4550". ELEVATION = 311.015' (QUAD 2013)
4. REFER TO AUTOCAD DRAWING FOR ADDITIONAL POINTS AND DATA FEATURES NOT SHOWN HERE.

EXISTING CONDITIONS

30 15 0 30 60

SCALE: 1"=30'

APPL. No. A 03–122864

IDENTIFICATION STAMP
DIV. OF THE STATE ARCHITECT
APP: 03-122864 INC:
REVIEWED FOR
SS ☑ FLS ☑ ACS ☑
DATE: 10/03/2023

DSA Stamp

Architect

RACHLIN PARTNERS
8640 National Boulevard
Culver City, CA 90232
310.204.3400

Disclaimer:

THESE DRAWINGS ARE THE PROPERTY OF THE ARCHITECT. THE DESIGNS SHOWN AND DESCRIBED HEREIN INCLUDING ALL TECHNICAL DRAWINGS ARE PROPRIETARY AND CANNOT BE COPIED, DUPLICATED OR COMMERCIALLY EXPLOITED, IN WHOLE OR IN PART. THE DRAWINGS AND SPECIFICATIONS SHALL NOT BE USED BY THE OWNER ON OTHER PROJECTS, FOR ADDITIONS TO THIS PROJECT, OR FOR COMPLETION OF THIS PROJECT BY OTHERS. THE OWNER AGREES TO HOLD HARMLESS, INDEMNIFY AND DEFEND THE ARCHITECT AGAINST ALL DAMAGES, CLAIMS AND LOSSES, INCLUDING DEFENSE COSTS, ARISING OUT OF ANY REUSE OF PLANS AND SPECIFICATIONS WITHOUT THE WRITTEN AUTHORIZATION OF THE ARCHITECT OF RECORD.
Copyright© 2022 Rachlin Partners, All Rights Reserved.

Performing Arts Center
Hacienda La Puente Unified
School District
635 North California Avenue
La Puente, CA 91744

Rev	Date	Issue
1	7.22.22	50% DD
2	10.21.22	50% CD
3	12.09.22	100% CD DSA Submittal
4	6.19.23	100% CD DSA Resubmittal
5	9.20.23	DSA BACK CHECK

Date: 9.8.2023
Scale: As Shown
Drawn By: --
Checked By: --

Architect / Engineer Stamp

LICENSED ARCHITECT — CHARLES INGRAHAM — No. C-30229 REN. 8-31-25 — STATE OF CALIFORNIA

REGISTERED PROFESSIONAL ENGINEER — No. C36079 Exp. 6/30/24 CIVIL — STATE OF CALIFORNIA

Consultants
Miyamoto International, Inc.
The Ruzika Company, Inc,
MDC Consulting Engineers
Pocock Design Solutions
Newson Brown Acoustics, LLC
VCA Engineers, Inc.
HJSA Consulting
L.A. Design Associates, Inc.

Sheet Title

EXISTING CONDITIONS

Sheet Number

C101

Demolition was completed under a separate contract,
Drawing is for reference only.

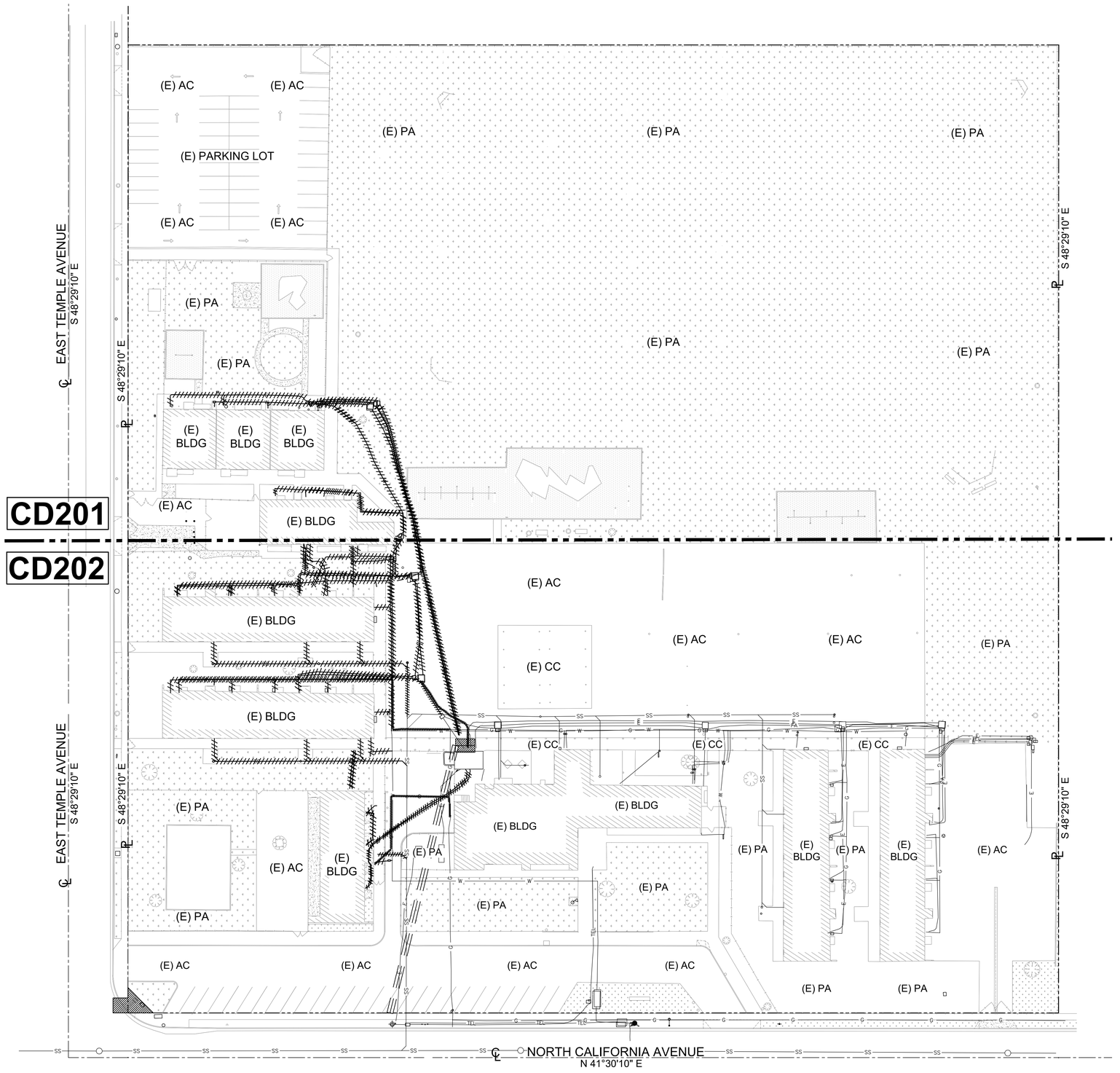

LEGENDS:

//////////// REMOVE EXISTING UNDERGROUND UTILITY LINES AND APPURTENANCES IN ITS ENTIRETY

GENERAL DEMOLITION NOTES:

1. FOR GENERAL NOTES, LEGENDS AND ABBREVIATIONS, SEE SHEET C100.
2. PROTECT IN PLACE EXISTING SEWER LINES, CLEANOUTS, MANHOLES, UNLESS OTHERWISE INDICATED.
3. PROTECT IN PLACE EXISTING WATER LINES, UNLESS OTHERWISE INDICATED.
4. PROTECT IN PLACE EXISTING STORM DRAIN LINES, CLEANOUTS, MANHOLES, UNLESS OTHERWISE INDICATED.
5. CONTRACTOR SHALL VERIFY LOCATION AND ELEVATIONS OF EXISTING ABOVE AND UNDERGROUND UTILITIES AND NOTIFY IOR, OAR, AND DESIGN TEAM OF ANY CONFLICTS WITH DESIGN PRIOR TO THE COMMENCEMENT OF WORK.
6. DAMAGE TO ANY EXISTING UTILITIES AND SERVICES TO REMAIN SHALL BE THE RESPONSIBILITY OF THE CONTRACTOR. IF CAUSED BY THE CONTRACTOR, CONTRACTOR SHALL REPAIR AND/OR REPLACE IN KIND WITH NO ADDITIONAL FEE TO DISTRICT.
7. CONTRACTOR TO PROTECT IN PLACE ALL ELECTRICAL DEVICES/EQUIPMENT/LIGHT POLES WITH FIXTURES & BASES WITH ASSOCIATED CONDUIT & WIRING, UNLESS OTHERWISE INDICATED.
8. EROSION CONTROL MEASURES SHALL BE IMPLEMENTED TO PREVENT DEBRIS AND UNSUITABLE MATERIALS FROM ENTERING STORM DRAINS, SANITARY SEWERS, AND STREETS.
9. PROTECT IN PLACE EXISTING FENCES & GATES WITHIN OR ADJACENT TO PROJECT LIMIT AND ADJUST TO NEW GRADING UNLESS OTHERWISE NOTED.
10. SEE ARCHITECTURAL DRAWINGS FOR OTHER SITE INFORMATION NOT SHOWN ON THIS DRAWING.
11. ALL EXISTING IMPROVEMENTS, UNLESS OTHERWISE INDICATED HEREIN TO BE REMOVED, SHALL BE PROTECTED IN PLACE.
12. UTILITIES TO BE VERIFIED IN FIELD TO ENSURE NOT TO EFFECT SERVICES OF EXISTING FACILITIES TO REMAIN. COORDINATE RELOCATION IF REQUIRED.
13. ADJUST TOP OF GRATES AND CLEAN-OUTS TO NEW GRADE AS SHOWN ON THE PLANS, INCLUDING OTHER UTILITY COVER, UTILITY BOX, ETC., COORDINATE AND NOTIFY WITH IOR PRIOR TO ADJUSTMENT.
14. CONTRACTOR TO COORDINATE WITH THE IOR AND OAR PRIOR REMOVAL, DEMOLITION FOR ANY PORTION OF EXISTING STRUCTURE AFFECTING THE INSTALLATION OF UNDERGROUND UTILITIES. ENCLOSED AREAS WITH TEMPORARY FENCES AS REQUIRED BY THE INSPECTOR.
15. SAWCUT EXISTING PAVEMENT WHERE REQUIRED. SAWCUT TO BE A MINIMUM CUT DEPTH OF 1 1/2".
16. DOCUMENT ALL EXISTING CONDITION BY USE OF PHOTO AND FILM.
17. ALL AREAS TO REMAIN SHALL BE BROUGHT BACK TO ORIGINAL CONDITION SUCH AS AC PAVEMENT, CONCRETE PAVEMENT, PLANTER AREAS, AND ETC..
18. CONTRACTOR SHALL ENSURE THE INTEGRITY OF ALL SURROUNDING STRUCTURES DURING CONSTRUCTION, THIS IS TO INCLUDE BUT NOT LIMITED TO (E) SITE WALLS, (E) BUILDING, (E) UTILITY VAULT, (E) UTILITY MANHOLE, (E) DUCTBANK, (E) POST, (E) STRUCTURES AND (E) UTILITY LINES.
19. CONTRACTOR TO VERIFY IN FIELD THE JOINING ELEVATION AND THE CURRENT SITE CONDITION WITH THE DESIGN GRADES. CONTRACTOR SHALL REPORT ANY DISCREPANCIES TO THE OWNER OR DESIGN TEAM PRIOR TO THE COMMENCEMENT OF WORK.

OVERALL UTILITY DEMOLITION PLAN

30 15 0 30 60

SCALE: 1"=30'

APPL. No. A 03-122864

IDENTIFICATION STAMP
DIV. OF THE STATE ARCHITECT
APP: 03-122864 INC:
REVIEWED FOR
SS ☑ FLS ☑ ACS ☑
DATE: 10/03/2023

DSA Stamp

Architect

RACHLIN PARTNERS
8840 National Boulevard
Culver City, CA 90232
310.204.3400

Disclaimer:
THESE DRAWINGS ARE THE PROPERTY OF THE ARCHITECT. THE DESIGNS SHOWN AND DESCRIBED HEREIN INCLUDING ALL TECHNICAL DRAWINGS ARE PROPRIETARY AND CANNOT BE COPIED, DUPLICATED OR COMMERCIALLY EXPLOITED, IN WHOLE OR IN PART. THE DRAWINGS AND SPECIFICATIONS SHALL NOT BE USED BY THE OWNER ON OTHER PROJECTS, FOR ADDITIONS TO THIS PROJECT, OR FOR COMPLETION OF THIS PROJECT BY OTHERS. THE OWNER AGREES TO HOLD HARMLESS, INDEMNIFY AND DEFEND THE ARCHITECT AGAINST ALL DAMAGES, CLAIMS AND LOSSES, INCLUDING DEFENSE COSTS, ARISING OUT OF ANY REUSE OF PLANS AND SPECIFICATIONS WITHOUT THE WRITTEN AUTHORIZATION OF THE ARCHITECT OF RECORD.
Copyright© 2022 Rachlin Partners, All Rights Reserved.

Performing Arts Center
Hacienda La Puente Unified
School District
635 North California Avenue
La Puente, CA 91744

Rev	Date	Issue
1	7.22.22	50% DD
2	10.21.22	50% CD
3	12.09.22	100% CD DSA Submittal
4	6.19.23	100% CD DSA Resubmittal
5	9.20.23	DSA BACK CHECK

Date: 9.8.2023
Scale: As Shown
Drawn By: --
Checked By: --

Architect / Engineer Stamp

LICENSED ARCHITECT
NO. C-36079
REN. 8-31-25
STATE OF CALIFORNIA

REGISTERED PROFESSIONAL ENGINEER
No. C36079
Exp. 6/30/24
CIVIL
STATE OF CALIFORNIA

Consultants
Miyamoto International, Inc.
The Ruzika Company, Inc,
MDC Consulting Engineers
Pocock Design Solutions
Newson Brown Acoustics, LLC
VCA Engineers, Inc.
HJSA Consulting
L.A. Design Associates, Inc.

Sheet Title

OVERALL UTILITY DEMOLITION PLAN

Sheet Number

CD200

(E) AC
(E) AC
(E) PA
(E) PA
(E) PA

MATCH LINE - SEE SHEET CD201

Demolition was completed under a separate contract,
Drawing is for reference only.

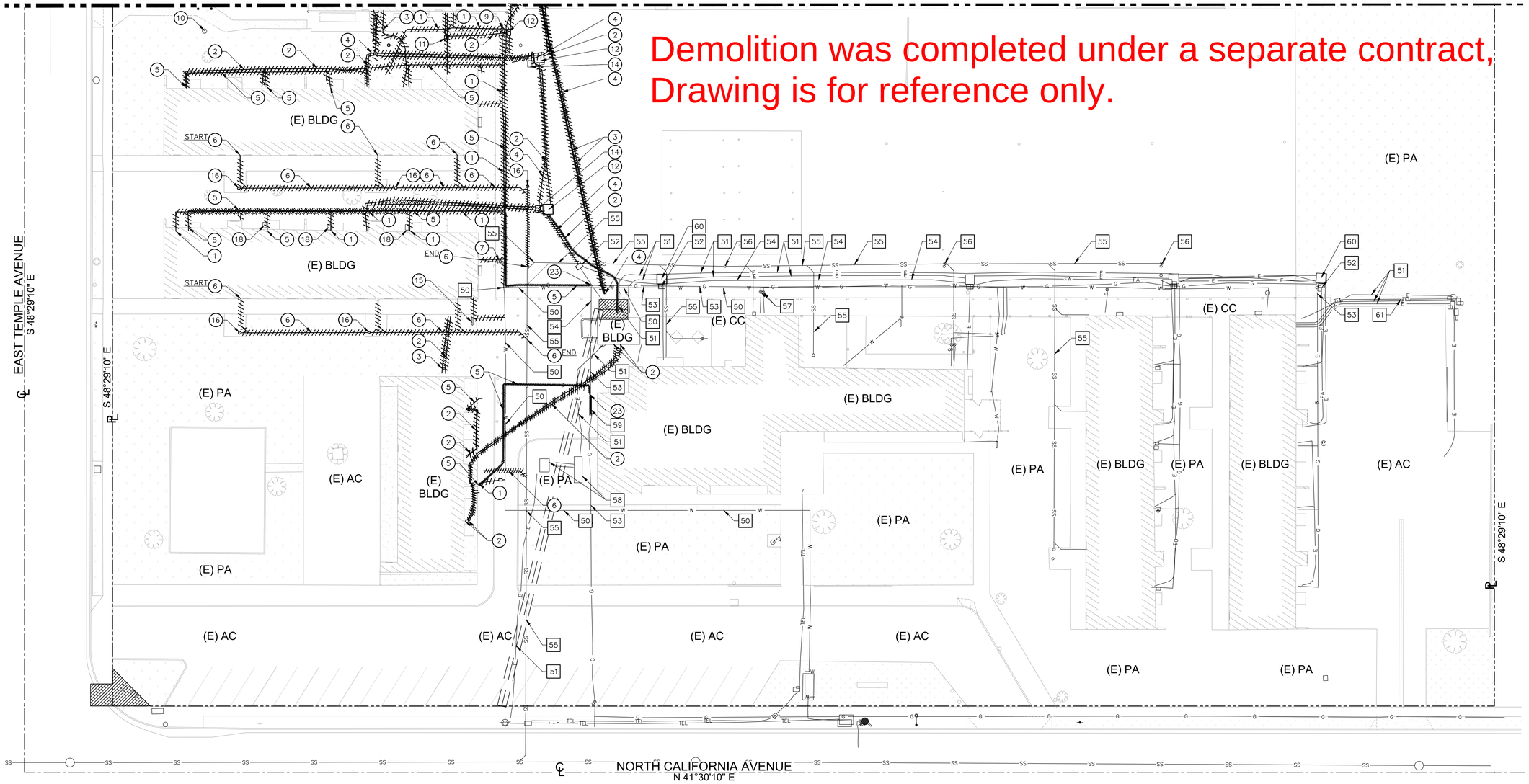

REMOVAL NOTES:

1. REMOVE EXISTING WATER LINE AND APPURTENANCES IN ITS ENTIRETY. CAP AND PLUG AS REQUIRED.
2. REMOVE EXISTING ELECTRICAL LINE PER ELECTRICAL DRAWINGS.
3. REMOVE EXISTING TELECOMMUNICATION LINE PER ELECTRICAL DRAWINGS.
4. REMOVE EXISTING FIRE ALARM LINE PER ELECTRICAL DRAWINGS.
5. REMOVE EXISTING GAS LINE.
6. REMOVE EXISTING SEWER LINE AND APPURTENANCES IN ITS ENTIRETY. CAP AND PLUG AS REQUIRED.
7. REMOVE EXISTING ABOVE GROUND WATER METER AND APPURTENANCES IN ITS ENTIRETY.
9. REMOVE EXISTING ABOVE GROUND WATER/GATE VALVE AND APPURTENANCES IN ITS ENTIRETY.
10. REMOVE EXISTING ABOVE GROUND IRRIGATION CONTROL VALVE AND APPURTENANCES IN ITS ENTIRETY.
11. REMOVE EXISTING ELECTRICAL PULL BOX AND APPURTENANCES IN ITS ENTIRETY.
12. REMOVE EXISTING ELECTRICAL VAULT AND APPURTENANCES IN ITS ENTIRETY.
14. REMOVE EXISTING FIRE ALARM VAULT AND APPURTENANCES IN ITS ENTIRETY.
15. REMOVE EXISTING BACKFLOW PREVENTOR AND APPURTENANCES IN ITS ENTIRETY.
16. REMOVE EXISTING SEWER CLEANOUT AND APPURTENANCES IN ITS ENTIRETY.
18. REMOVE EXISTING PULL BOX AND APPURTENANCES IN ITS ENTIRETY.
22. REMOVE AND RELOCATE EXISTING SEWER LINE.
23. CAP OR PLUG EXISTING GAS PIPE AS REQUIRED.

PROTECT-IN-PLACE NOTES:

50. PROTECT IN PLACE EXISTING WATER LINE.
51. PROTECT IN PLACE EXISTING ELECTRICAL LINE.
52. PROTECT IN PLACE EXISTING FIRE ALARM VAULT. ADJUST TO NEW DESIGN GRADES AS REQUIRED.
53. PROTECT IN PLACE EXISTING GAS LINE.
54. PROTECT IN PLACE EXISTING FIRE ALARM LINE.
55. PROTECT IN PLACE EXISTING SEWER LINE.
56. PROTECT IN PLACE EXISTING CLEANOUT. ADJUST TO NEW DESIGN GRADES AS REQUIRED.
57. PROTECT IN PLACE EXISTING GATE VALVE IN ITS ENTIRETY.
58. PROTECT IN PLACE EXISTING UNKNOWN ABOVE GROUND UTILITIES AND APPURTENANCES IN ITS ENTIRETY.
59. PROTECT IN PLACE EXISTING GAS MANIFOLD AND APPURTENANCES IN ITS ENTIRETY.
60. PROTECT IN PLACE EXISTING ELECTRICAL VAULT AND APPURTENANCES IN ITS ENTIRETY. ADJUST TO NEW DESIGN GRADES AS REQUIRED.
61. PROTECT IN PLACE EXISTING TELEPHONE LINE.

LEGENDS:

//////////// REMOVE EXISTING UNDERGROUND UTILITY LINES AND APPURTENANCES IN ITS ENTIRETY

GENERAL DEMOLITION NOTES:

1. FOR GENERAL NOTES, LEGENDS AND ABBREVIATIONS, SEE SHEET C100.
2. PROTECT IN PLACE EXISTING SEWER LINES, CLEANOUTS, MANHOLES, UNLESS OTHERWISE INDICATED.
3. PROTECT IN PLACE EXISTING WATER LINES, UNLESS OTHERWISE INDICATED.
4. PROTECT IN PLACE EXISTING STORM DRAIN LINES, CLEANOUTS, MANHOLES, UNLESS OTHERWISE INDICATED.
5. CONTRACTOR SHALL VERIFY LOCATION AND ELEVATIONS OF EXISTING ABOVE AND UNDERGROUND UTILITIES AND NOTIFY IOR, OAR, AND DESIGN TEAM OF ANY CONFLICTS WITH DESIGN PRIOR TO THE COMMENCEMENT OF WORK.
6. DAMAGE TO ANY EXISTING UTILITIES AND SERVICES TO REMAIN SHALL BE THE RESPONSIBILITY OF THE CONTRACTOR. IF CAUSED BY THE CONTRACTOR, CONTRACTOR SHALL REPAIR AND/OR REPLACE IN KIND WITH NO ADDITIONAL FEE TO DISTRICT.
7. CONTRACTOR TO PROTECT IN PLACE ALL ELECTRICAL DEVICES/EQUIPMENT/LIGHT POLES WITH FIXTURES & BASES WITH ASSOCIATED CONDUIT & WIRING, UNLESS OTHERWISE INDICATED.
8. EROSION CONTROL MEASURES SHALL BE IMPLEMENTED TO PREVENT DEBRIS AND UNSUITABLE MATERIALS FROM ENTERING STORM DRAINS, SANITARY SEWERS, AND STREETS.
9. PROTECT IN PLACE EXISTING FENCES & GATES WITHIN OR ADJACENT TO PROJECT LIMIT AND ADJUST TO NEW GRADING UNLESS OTHERWISE NOTED.
10. SEE ARCHITECTURAL DRAWINGS FOR OTHER SITE INFORMATION NOT SHOWN ON THIS DRAWING.
11. ALL EXISTING IMPROVEMENTS, UNLESS OTHERWISE INDICATED HEREIN TO BE REMOVED, SHALL BE PROTECTED IN PLACE.
12. UTILITIES TO BE VERIFIED IN FIELD TO ENSURE NOT TO EFFECT SERVICES OF EXISTING FACILITIES TO REMAIN. COORDINATE RELOCATION IF REQUIRED.
13. ADJUST TOP OF GRATES AND CLEAN-OUTS TO NEW GRADE AS SHOWN ON THE PLANS, INCLUDING OTHER UTILITY COVER, UTILITY BOX, ETC., COORDINATE AND NOTIFY WITH IOR PRIOR TO ADJUSTMENT.
14. CONTRACTOR TO COORDINATE WITH THE IOR AND OAR PRIOR REMOVAL, DEMOLITION FOR ANY PORTION OF EXISTING STRUCTURE AFFECTING THE INSTALLATION OF UNDERGROUND UTILITIES. ENCLOSED AREAS WITH TEMPORARY FENCES AS REQUIRED BY THE INSPECTOR.
15. SAWCUT EXISTING PAVEMENT WHERE REQUIRED. SAWCUT TO BE A MINIMUM CUT DEPTH OF 1 1/2".
16. DOCUMENT ALL EXISTING CONDITION BY USE OF PHOTO AND FILM.
17. ALL AREAS TO REMAIN SHALL BE BROUGHT BACK TO ORIGINAL CONDITION SUCH AS AC PAVEMENT, CONCRETE PAVEMENT, PLANTER AREAS, AND ETC..
18. CONTRACTOR SHALL ENSURE THE INTEGRITY OF ALL SURROUNDING STRUCTURES DURING CONSTRUCTION, THIS IS TO INCLUDE BUT NOT LIMITED TO (E) SITE WALLS, (E) BUILDING, (E) UTILITY VAULT, (E) UTILITY MANHOLE, (E) DUCTBANK, (E) POST, (E) STRUCTURES AND (E) UTILITY LINES.
19. CONTRACTOR TO VERIFY IN FIELD THE JOINING ELEVATION AND THE CURRENT SITE CONDITION WITH THE DESIGN GRADES. CONTRACTOR SHALL REPORT ANY DISCREPANCIES TO THE OWNER OR DESIGN TEAM PRIOR TO THE COMMENCEMENT OF WORK.

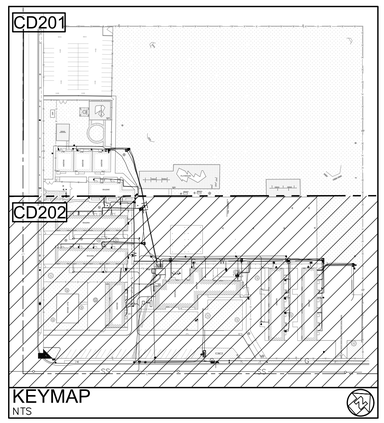

KEYMAP
NTS

ENLARGED UTILITY DEMOLITION PLAN

20 10 0 20 40

SCALE: 1"=20'

APPL. No. A 03-122864

IDENTIFICATION STAMP
DIV. OF THE STATE ARCHITECT
APP: 03-122864 INC:
REVIEWED FOR
SS ☑ FLS ☑ ACS ☑
DATE: 10/03/2023

DSA Stamp

Architect

RACHLIN PARTNERS
8840 National Boulevard
Culver City, CA 90232
310.204.3400

Disclaimer:
THESE DRAWINGS ARE THE PROPERTY OF THE ARCHITECT. THE DESIGNS SHOWN AND DESCRIBED HEREIN INCLUDING ALL TECHNICAL DRAWINGS ARE PROPRIETARY AND CANNOT BE COPIED, DUPLICATED OR COMMERCIALLY EXPLOITED, IN WHOLE OR IN PART. THE DRAWINGS AND SPECIFICATIONS SHALL NOT BE USED BY THE OWNER ON OTHER PROJECTS, FOR ADDITIONS TO THIS PROJECT, OR FOR COMPLETION OF THIS PROJECT BY OTHERS. THE OWNER AGREES TO HOLD HARMLESS, INDEMNIFY AND DEFEND THE ARCHITECT AGAINST ALL DAMAGES, CLAIMS AND LOSSES, INCLUDING DEFENSE COSTS, ARISING OUT OF ANY REUSE OF PLANS AND SPECIFICATIONS WITHOUT THE WRITTEN AUTHORIZATION OF THE ARCHITECT OF RECORD.
Copyright© 2022 Rachlin Partners, All Rights Reserved.

Performing Arts Center
Hacienda La Puente Unified
School District

635 North California Avenue
La Puente, CA 91744

Rev	Date	Issue
1	7.22.22	50% DD
2	10.21.22	50% CD
3	12.09.22	100% CD DSA
Submittal		
4	6.19.23	100% CD DSA
Resubmittal		
5	9.20.23	DSA BACK CHECK

Date: 9.8.2023
Scale: As Shown
Drawn By: --
Checked By: --

Architect / Engineer Stamp

LICENSED ARCHITECT
LICENSED IN CALIFORNIA
NO. C-26229
REN. 8-31-25
STATE OF CALIFORNIA

REGISTERED PROFESSIONAL ENGINEER
MICHELLE C. [illegible]
No. C36079
Exp. 6/30/24
CIVIL
STATE OF CALIFORNIA

Consultants
Miyamoto International, Inc.
The Ruzika Company, Inc,
MDC Consulting Engineers
Pocock Design Solutions
Newson Brown Acoustics, LLC
VCA Engineers, Inc.
HJSA Consulting
L.A. Design Associates, Inc.

Sheet Title

ENLARGED UTILITY DEMOLITION PLAN

Sheet Number

CD202

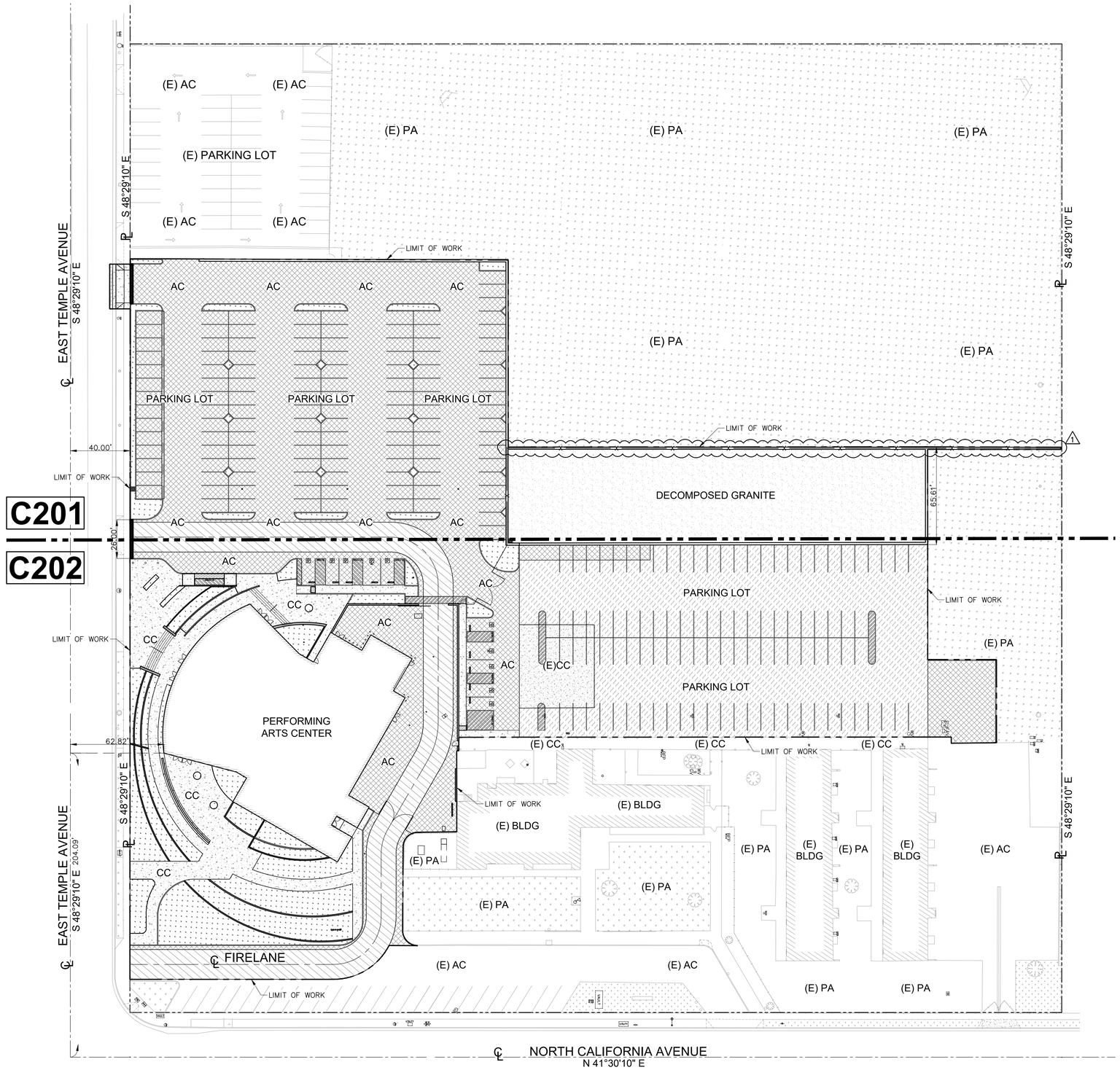

LEGENDS:

- AC PAVEMENT
- CONCRETE PAVEMENT
- NEW SLURRY COAT OF ASPHALT CONCRETE PAVING
- DECOMPOSED GRANITE
- TRUNCATED DOME
- HEAVY-TRAFFIC ASPHALT PAVEMENT
- PLANTER AREA
- BLDG
- WALL
- LIMIT OF WORK

SHEET NOTES:

1. FOR GENERAL NOTES, LEGENDS AND ABBREVIATIONS, SEE SHEET C100.
2. REFER TO ARCHITECTURAL DRAWINGS FOR OTHER SITE DIMENSIONS AND IMPROVEMENTS NOT SHOWN ON THIS DRAWING.

OVERALL SITE CONTROL PLAN

30 15 0 30 60

SCALE: 1"=30'

APPL. No. A 03-122864

DSA Stamp

Architect

RACHLIN PARTNERS
8640 National Boulevard
Culver City, CA 90232
310.204.3400

Disclaimer:
THESE DRAWINGS ARE THE PROPERTY OF THE ARCHITECT. THE DESIGNS SHOWN AND DESCRIBED HEREIN INCLUDING ALL TECHNICAL DRAWINGS ARE PROPRIETARY AND CANNOT BE COPIED, DUPLICATED OR COMMERCIALLY EXPLOITED, IN WHOLE OR IN PART. THE DRAWINGS AND SPECIFICATIONS SHALL NOT BE USED BY THE OWNER ON OTHER PROJECTS, FOR ADDITIONS TO THIS PROJECT, OR FOR COMPLETION OF THIS PROJECT BY OTHERS. THE OWNER AGREES TO HOLD HARMLESS, INDEMNIFY AND DEFEND THE ARCHITECT AGAINST ALL DAMAGES, CLAIMS AND LOSSES, INCLUDING DEFENSE COSTS, ARISING OUT OF ANY REUSE OF PLANS AND SPECIFICATIONS WITHOUT THE WRITTEN AUTHORIZATION OF THE ARCHITECT OF RECORD.
Copyright© 2022 Rachlin Partners, All Rights Reserved.

Performing Arts Center
Hacienda La Puente Unified School District
635 North California Avenue
La Puente, CA 91744

Rev	Date	Issue
1	7.22.22	50% DD
2	10.21.22	50% CD
3	12.09.22	100% CD DSA Submittal
4	6.19.23	100% CD DSA Resubmittal
5	9.20.23	DSA Back Check
1	11.01.23	Addendum No.1

Date: 11.01.2023
Scale: As Shown
Drawn By: --
Checked By: --

Architect / Engineer Stamp

LICENSED ARCHITECT — JOSEPH INGRAM RACHLIN — NO. C-30229 REN. 8-31-25 — STATE OF CALIFORNIA

REGISTERED PROFESSIONAL ENGINEER — JUSTIN C. TAYLOR — No. C36079 Exp. 6/30/24 — CIVIL — STATE OF CALIFORNIA

Consultants
Miyamoto International, Inc.
The Ruzika Company, Inc,
MDC Consulting Engineers
Pocock Design Solutions
Newson Brown Acoustics, LLC
VCA Engineers, Inc.
HJSA Consulting
L.A. Design Associates, Inc.

Sheet Title
OVERALL SITE CONTROL PLAN

Sheet Number
C200

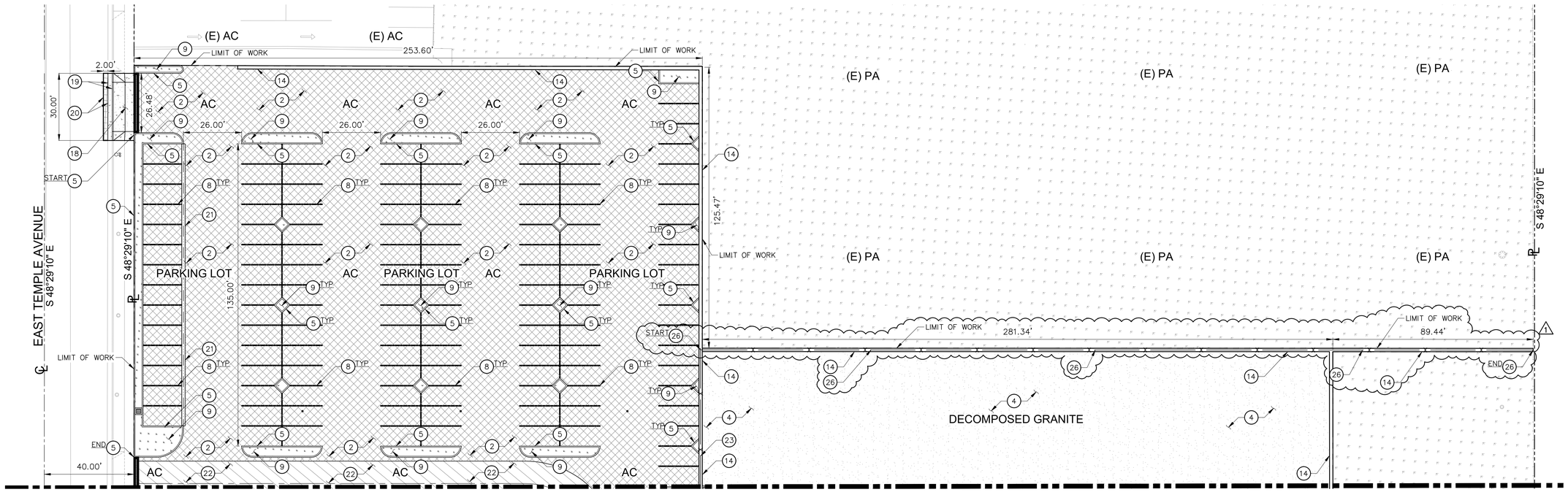

MATCH LINE - SEE SHEET C202

CONSTRUCTION NOTES:

(2) 3" THICK AC SURFACING OVER 6" THICK CRUSHED AGGREGATE BASE (CAB), PER DETAIL 2 ON SHEET C700.

(4) DECOMPOSED GRANITE PER LANDSCAPE DRAWINGS.

(5) CONSTRUCT CONCRETE CURB PER DETAIL 7 ON SHEET C700.

(8) NEW STRIPING PER ARCHITECTURAL DRAWINGS.

(9) PLANTER AREA PER ARCHITECTURAL AND LANDSCAPE DRAWINGS.

(14) CONSTRUCT GRAVITY WALL PER DETAIL 8 ON SHEET C700.

(18) CONSTRUCT DRIVEWAY PER DETAIL 6 ON SHEET C700.

(19) CONSTRUCT CURB AND GUTTER TO MATCH EXISTING.

(20) SAW CUT AND JOIN.

(21) CONSTRUCT CONCRETE V-GUTTER PER DETAIL 9 ON SHEET C700.

(22) 3" THICK AC SURFACING OVER 12" THICK CRUSHED AGGREGATE BASE (CAB), PER DETAIL 2 ON SHEET C700.

(23) INSTALL NEW AMERISTAR FENCE PER ARCHITECTURAL AND LANDSCAPE DRAWINGS.

(26) INSTALL NEW 6' HIGH BLACK VINYL COATED CHAIN LINK FENCE PER LANDSCAPE DRAWINGS. 1

LEGENDS:

AC PAVEMENT

DECOMPOSED GRANITE

DETECTABLE WARNING SYSTEM (DWS)

HEAVY-TRAFFIC ASPHALT PAVEMENT

LIMIT OF WORK

SHEET NOTES:

1. FOR GENERAL NOTES, LEGENDS AND ABBREVIATIONS, SEE SHEET C100.
2. REFER TO ARCHITECTURAL DRAWINGS FOR OTHER SITE DIMENSIONS AND IMPROVEMENTS NOT SHOWN ON THIS DRAWING.

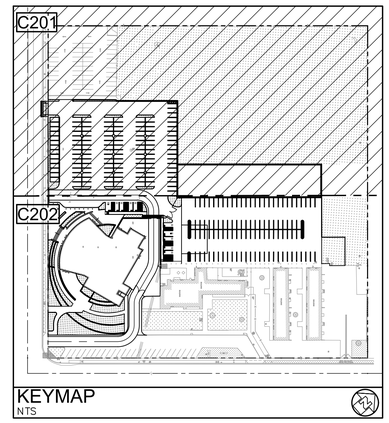

KEYMAP
NTS

ENLARGED SITE CONTROL PLAN

20 10 0 20 40

SCALE: 1"=20'

APPL. No. A 03-122864

DSA Stamp

Architect

RACHLIN PARTNERS
8840 National Boulevard
Culver City, CA 90232
310.204.3400

Disclaimer:
THESE DRAWINGS ARE THE PROPERTY OF THE ARCHITECT. THE DESIGNS SHOWN AND DESCRIBED HEREIN INCLUDING ALL TECHNICAL DRAWINGS ARE PROPRIETARY AND CANNOT BE COPIED, DUPLICATED OR COMMERCIALLY EXPLOITED, IN WHOLE OR IN PART. THE DRAWINGS AND SPECIFICATIONS SHALL NOT BE USED BY THE OWNER OR OTHER PROJECTS, FOR ADDITIONS TO THIS PROJECT, OR FOR COMPLETION OF THIS PROJECT BY OTHERS. THE OWNER AGREES TO HOLD HARMLESS, INDEMNIFY AND DEFEND THE ARCHITECT AGAINST ALL DAMAGES, CLAIMS AND LOSSES, INCLUDING DEFENSE COSTS, ARISING OUT OF ANY REUSE OF PLANS AND SPECIFICATIONS WITHOUT THE WRITTEN AUTHORIZATION OF THE ARCHITECT OF RECORD.
Copyright© 2022 Rachlin Partners, All Rights Reserved.

Performing Arts Center
Hacienda La Puente Unified
School District
635 North California Avenue
La Puente, CA 91744

Rev	Date	Issue
1	7.22.22	50% DD
2	10.21.22	50% CD
3	12.09.22	100% CD DSA Submittal
4	6.19.23	100% CD DSA Resubmittal
5	9.20.23	DSA Back Check
1	11.01.23	Addendum No.1

Date: 11.01.2023
Scale: As Shown
Drawn By: --
Checked By: --

Architect / Engineer Stamp

LICENSED ARCHITECT — NO. C-30229 — REN. 8-31-25 — STATE OF CALIFORNIA

REGISTERED PROFESSIONAL ENGINEER — No. C36079 — Exp. 6/30/24 — CIVIL — STATE OF CALIFORNIA

Consultants
Miyamoto International, Inc.
The Ruzika Company, Inc,
MDC Consulting Engineers
Pocock Design Solutions
Newson Brown Acoustics, LLC
VCA Engineers, Inc.
HJSA Consulting
L.A. Design Associates, Inc.

Sheet Title

ENLARGED SITE CONTROL PLAN

Sheet Number

C201

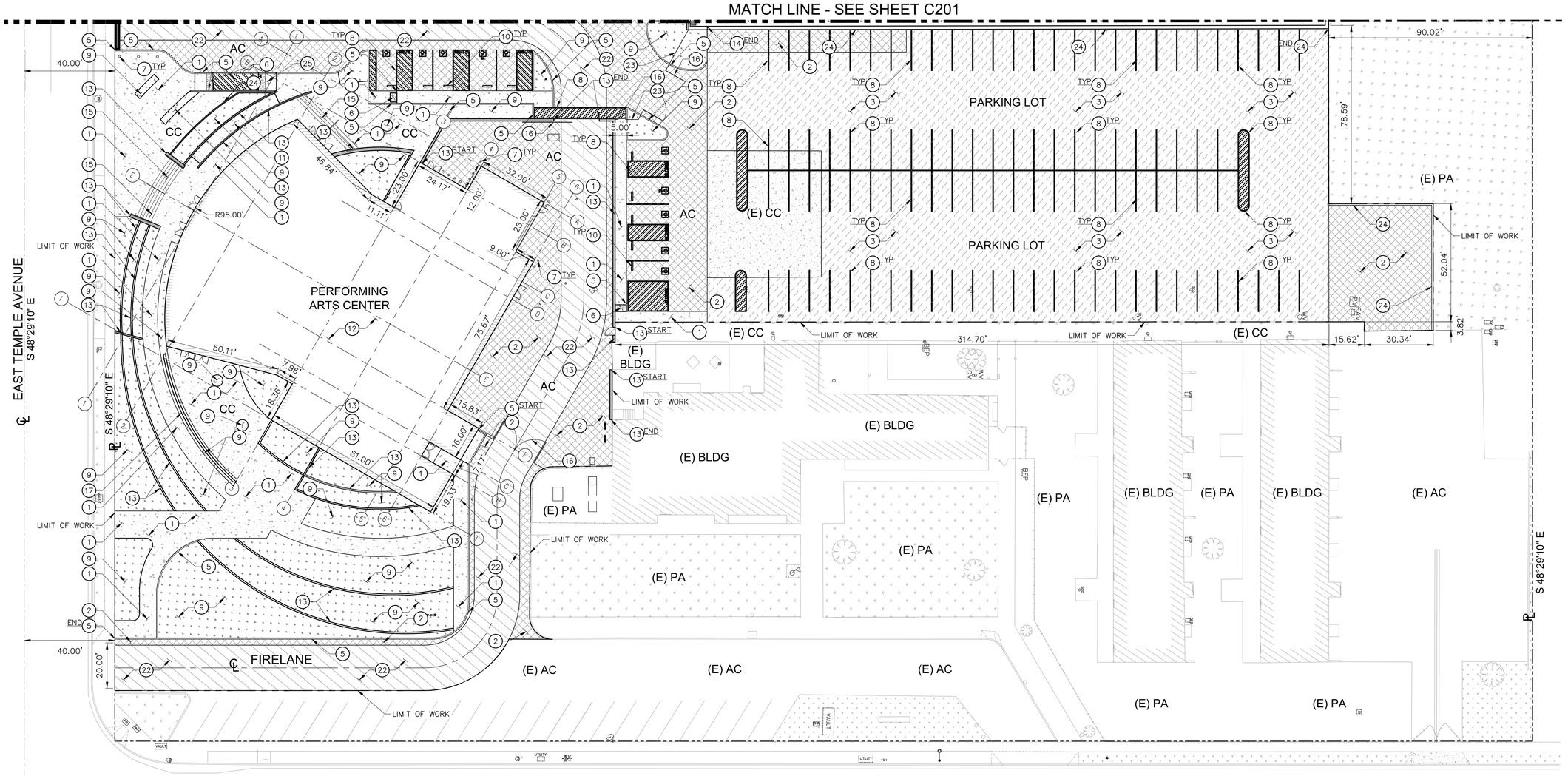

CONSTRUCTION NOTES:

1. 4" THICK CONCRETE PAVEMENT OVER 4" BASE PER DETAIL 1 ON SHEET C700.
2. 3" THICK AC SURFACING OVER 6" THICK CRUSHED AGGREGATE BASE (CAB), PER DETAIL 2 ON SHEET C700.
3. NEW SLURRY COAT OF ASPHALT CONCRETE PAVING PER DETAIL 5 ON SHEET C700.
5. CONSTRUCT CONCRETE CURB PER DETAIL 7 ON SHEET C700.
6. INSTALL DETECTABLE WARNING SYSTEM (DWS) PER ARCHITECTURAL DRAWINGS.
7. INSTALL BOLLARDS PER LANDSCAPE DRAWINGS.
8. NEW STRIPING PER ARCHITECTURAL DRAWINGS.
9. PLANTER AREA PER ARCHITECTURAL AND LANDSCAPE DRAWINGS.
10. CONCRETE WHEEL STOPS PER ARCHITECTURAL DRAWINGS.
11. CONSTRUCT CONCRETE SLOPE WALK WITH HANDRAIL PER ARCHITECTURAL DRAWINGS.
12. CONSTRUCT PERFORMING ARTS CENTER PER ARCHITECTURAL AND STRUCTURAL DRAWINGS.
13. CONSTRUCT WALL PER ARCHITECTURAL AND LANDSCAPE DRAWINGS.
14. CONSTRUCT GRAVITY WALL PER DETAIL 8 ON SHEET C700.
15. CONSTRUCT STAIRS WITH HANDRAILS PER ARCHITECTURAL AND LANDSCAPE DRAWINGS.
16. INSTALL GATE PER ARCHITECTURAL DRAWINGS.
17. INSTALL SCREEN WALL PER ARCHITECTURAL DRAWINGS.
22. 3" THICK AC SURFACING OVER 12" THICK CRUSHED AGGREGATE BASE (CAB), PER DETAIL 2 ON SHEET C700.
23. INSTALL NEW AMERISTAR FENCE PER ARCHITECTURAL AND LANDSCAPE DRAWINGS.
24. CONSTRUCT MOW STRIP PER ARCHITECTURAL DRAWINGS.
25. CONSTRUCT CURB RAMP PER ARCHITECTURAL DRAWINGS.

LEGENDS:

- AC PAVEMENT
- CONCRETE PAVEMENT
- NEW SLURRY COAT OF ASPHALT CONCRETE PAVING
- DETECTABLE WARNING SYSTEM (DWS)
- HEAVY-TRAFFIC ASPHALT PAVEMENT
- PLANTER AREA
- BLDG
- WALL
- LIMIT OF WORK

SHEET NOTES:

1. FOR GENERAL NOTES, LEGENDS AND ABBREVIATIONS, SEE SHEET C100.
2. REFER TO ARCHITECTURAL DRAWINGS FOR OTHER SITE DIMENSIONS AND IMPROVEMENTS NOT SHOWN ON THIS DRAWING.

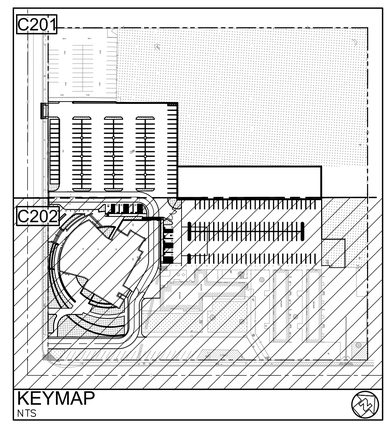

ENLARGED SITE CONTROL PLAN

20 10 0 20 40

SCALE: 1"=20'

APPL. No. A 03-122864

IDENTIFICATION STAMP
DIV. OF THE STATE ARCHITECT
APP: 03-122864 INC:
REVIEWED FOR
SS ☑ FLS ☑ ACS ☑
DATE: 10/03/2023

DSA Stamp

Architect

RACHLIN PARTNERS
8840 National Boulevard
Culver City, CA 90232
310.204.3400

Disclaimer:
THESE DRAWINGS ARE THE PROPERTY OF THE ARCHITECT. THE DESIGNS SHOWN AND DESCRIBED HEREIN INCLUDING ALL TECHNICAL DRAWINGS ARE PROPRIETARY AND CANNOT BE COPIED, DUPLICATED OR COMMERCIALLY EXPLOITED, IN WHOLE OR IN PART. THE DRAWINGS AND SPECIFICATIONS SHALL NOT BE USED BY THE OWNER ON OTHER PROJECTS, FOR ADDITIONS TO THIS PROJECT, OR FOR COMPLETION OF THIS PROJECT BY OTHERS. THE OWNER AGREES TO HOLD HARMLESS, INDEMNIFY AND DEFEND THE ARCHITECT AGAINST ALL DAMAGES, CLAIMS AND LOSSES, INCLUDING DEFENSE COSTS, ARISING OUT OF ANY REUSE OF PLANS AND SPECIFICATIONS WITHOUT THE WRITTEN AUTHORIZATION OF THE ARCHITECT OF RECORD.
Copyright© 2022 Rachlin Partners, All Rights Reserved.

Performing Arts Center
Hacienda La Puente Unified
School District
635 North California Avenue
La Puente, CA 91744

Rev	Date	Issue
1	7.22.22	50% DD
2	10.21.22	50% CD
3	12.09.22	100% CD DSA Submittal
4	6.19.23	100% CD DSA Resubmittal
5	9.20.23	DSA BACK CHECK

Date: 9.8.2023
Scale: As Shown
Drawn By: --
Checked By: --

Architect / Engineer Stamp

LICENSED ARCHITECT — JOSHUA INGRAHAM — NO. C-36229 — REN. 8-31-25 — STATE OF CALIFORNIA

REGISTERED PROFESSIONAL ENGINEER — JUSTIN C. [illegible] — No. C36079 — Exp. 6/30/24 — CIVIL — STATE OF CALIFORNIA

Consultants
Miyamoto International, Inc.
The Ruzika Company, Inc,
MDC Consulting Engineers
Pocock Design Solutions
Newson Brown Acoustics, LLC
VCA Engineers, Inc.
HJSA Consulting
L.A. Design Associates, Inc.

Sheet Title

ENLARGED SITE CONTROL PLAN

Sheet Number

C202

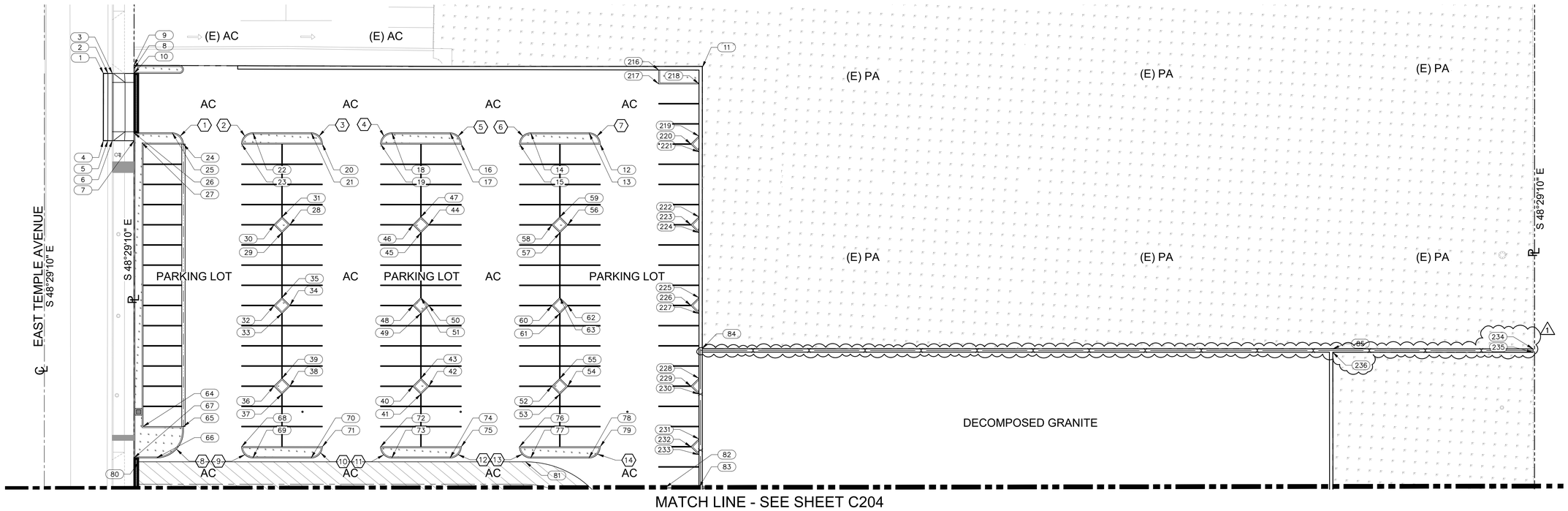

CURVE DATA TABLE

MARK	L	Δ	R	T	REMARKS
1	7.86	90°08'55"	4.99	5.006	–
2	7.85	90°00'40"	5.00	5.001	–
3	7.85	90°00'00"	5.00	5.000	–
4	7.85	90°00'40"	5.00	5.001	–
5	7.85	90°00'00"	5.00	5.000	–
6	7.85	90°00'40"	5.00	5.001	–
7	7.85	90°00'00"	5.00	5.000	–
8	18.85	90°00'00"	12.00	12.000	–
9	7.85	90°00'00"	5.00	5.000	–
10	7.85	90°00'00"	5.00	5.000	–
11	7.85	90°00'00"	5.00	5.000	–
12	7.85	90°00'00"	5.00	5.000	–
13	7.85	90°00'00"	5.00	5.000	–
14	7.85	90°00'00"	5.00	5.000	–

Point Coordinate Table

POINT #	NORTHING	EASTING
1	4,332.80	8,282.64
2	4,334.29	8,283.97
3	4,335.77	8,285.28
4	4,312.88	8,305.08
5	4,314.38	8,306.40
6	4,315.87	8,307.73
7	4,323.13	8,314.18
8	4,344.44	8,290.11
9	4,345.41	8,289.01
10	4,343.02	8,291.71

Point Coordinate Table

POINT #	NORTHING	EASTING
11	4,534.74	8,457.73
12	4,477.93	8,453.18
13	4,477.50	8,446.12
14	4,458.03	8,428.88
15	4,450.97	8,429.31
16	4,431.50	8,412.08
17	4,431.07	8,405.02
18	4,411.60	8,387.79
19	4,404.55	8,388.22
20	4,385.08	8,370.99

Point Coordinate Table

POINT #	NORTHING	EASTING
21	4,384.65	8,363.93
22	4,365.18	8,346.70
23	4,358.12	8,347.13
24	4,338.65	8,329.89
25	4,338.22	8,322.84
26	4,325.46	8,311.54
27	4,325.14	8,317.27
28	4,350.40	8,388.37
29	4,345.41	8,388.65
30	4,345.08	8,383.66

Point Coordinate Table

POINT #	NORTHING	EASTING
31	4,350.07	8,383.38
32	4,321.22	8,410.62
33	4,321.55	8,415.60
34	4,326.54	8,415.32
35	4,326.21	8,410.33
36	4,297.36	8,437.57
37	4,297.69	8,442.56
38	4,302.68	8,442.28
39	4,302.35	8,437.29
40	4,343.78	8,478.66

Point Coordinate Table

POINT #	NORTHING	EASTING
41	4,344.11	8,483.65
42	4,349.11	8,483.37
43	4,348.78	8,478.38
44	4,396.83	8,429.46
45	4,391.83	8,429.74
46	4,391.50	8,424.75
47	4,396.50	8,424.47
48	4,367.64	8,451.71
49	4,367.97	8,456.70
50	4,372.97	8,456.42

Point Coordinate Table

POINT #	NORTHING	EASTING
51	4,372.64	8,451.43
52	4,390.21	8,519.76
53	4,390.54	8,524.75
54	4,395.53	8,524.47
55	4,395.20	8,519.48
56	4,443.25	8,470.55
57	4,438.26	8,470.83
58	4,437.93	8,465.84
59	4,442.92	8,465.56
60	4,414.07	8,492.80

Point Coordinate Table

POINT #	NORTHING	EASTING
61	4,414.40	8,497.79
62	4,419.39	8,497.51
63	4,419.06	8,492.52
64	4,241.67	8,412.32
65	4,255.16	8,424.26
66	4,236.90	8,426.79
67	4,229.36	8,420.12
68	4,268.64	8,448.21
69	4,269.07	8,455.27
70	4,288.54	8,472.50

Point Coordinate Table

POINT #	NORTHING	EASTING
71	4,295.60	8,472.07
72	4,315.07	8,489.31
73	4,315.50	8,496.37
74	4,334.97	8,513.60
75	4,342.02	8,513.17
76	4,361.49	8,530.40
77	4,361.92	8,537.46
78	4,381.39	8,554.69
79	4,388.45	8,554.26
80	4,229.72	8,422.75

Point Coordinate Table

POINT #	NORTHING	EASTING
81	4,359.05	8,537.18
82	4,398.25	8,587.14
83	4,409.46	8,597.06
84	4,451.57	8,551.69
85	4,662.26	8,738.18

Point Coordinate Table

POINT #	NORTHING	EASTING
216	4,519.36	8,445.68
217	4,515.26	8,450.32
218	4,528.74	8,462.25
219	4,513.29	8,479.71
220	4,508.30	8,479.99
221	4,508.62	8,484.98
222	4,489.41	8,506.70
223	4,484.42	8,506.98
224	4,484.75	8,511.97
225	4,465.55	8,533.66

Point Coordinate Table

POINT #	NORTHING	EASTING
226	4,460.56	8,533.94
227	4,460.90	8,539.04
228	4,441.70	8,560.62
229	4,436.71	8,560.90
230	4,437.04	8,565.89
231	4,423.81	8,580.84
232	4,418.81	8,581.12
233	4,419.14	8,586.12
234	4,729.23	8,797.46
235	4,728.24	8,798.58
236	4,661.27	8,739.30

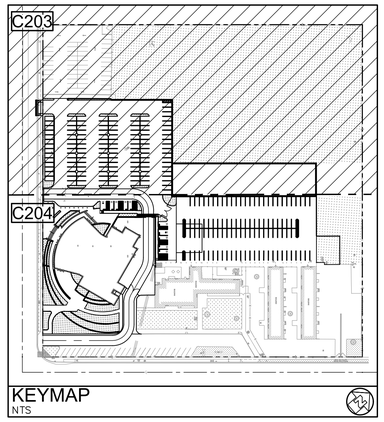

KEYMAP
NTS

ENLARGED SITE COORDINATES PLAN

20 10 0 20 40

SCALE: 1"=20'

APPL. No. A 03–122864

DSA Stamp

Architect

RACHLIN PARTNERS
8840 National Boulevard
Culver City, CA 90232
310.204.3400

Disclaimer:
THESE DRAWINGS ARE THE PROPERTY OF THE ARCHITECT. THE DESIGNS SHOWN AND DESCRIBED HEREIN INCLUDING ALL TECHNICAL DRAWINGS ARE PROPRIETARY AND CANNOT BE COPIED, DUPLICATED OR COMMERCIALLY EXPLOITED, IN WHOLE OR IN PART. THE DRAWINGS AND SPECIFICATIONS SHALL NOT BE USED BY THE OWNER ON OTHER PROJECTS, FOR ADDITIONS TO THIS PROJECT, OR FOR COMPLETION OF THIS PROJECT BY OTHERS. THE OWNER AGREES TO HOLD HARMLESS, INDEMNIFY AND DEFEND THE ARCHITECT AGAINST ALL DAMAGES, CLAIMS AND LOSSES, INCLUDING DEFENSE COSTS, ARISING OUT OF ANY REUSE OF PLANS AND SPECIFICATIONS WITHOUT THE WRITTEN AUTHORIZATION OF THE ARCHITECT OF RECORD.
Copyright© 2022 Rachlin Partners, All Rights Reserved.

Performing Arts Center
Hacienda La Puente Unified
School District
635 North California Avenue
La Puente, CA 91744

Rev	Date	Issue
1	7.22.22	50% DD
2	10.21.22	50% CD
3	12.09.22	100% CD DSA Submittal
4	6.19.23	100% CD DSA Resubmittal
5	9.20.23	DSA Back Check
1	11.01.23	Addendum No.1

Date: 11.01.2023
Scale: As Shown
Drawn By: – –
Checked By: – –

Architect / Engineer Stamp

LICENSED ARCHITECT — REGISTERED PROFESSIONAL ENGINEER — No. C36079 Exp. 6/30/24 CIVIL — STATE OF CALIFORNIA

Consultants
Miyamoto International, Inc.
The Ruzika Company, Inc,
MDC Consulting Engineers
Pocock Design Solutions
Newson Brown Acoustics, LLC
VCA Engineers, Inc.
HJSA Consulting
L.A. Design Associates, Inc.

Sheet Title
ENLARGED SITE COORDINATES PLAN

Sheet Number
C203

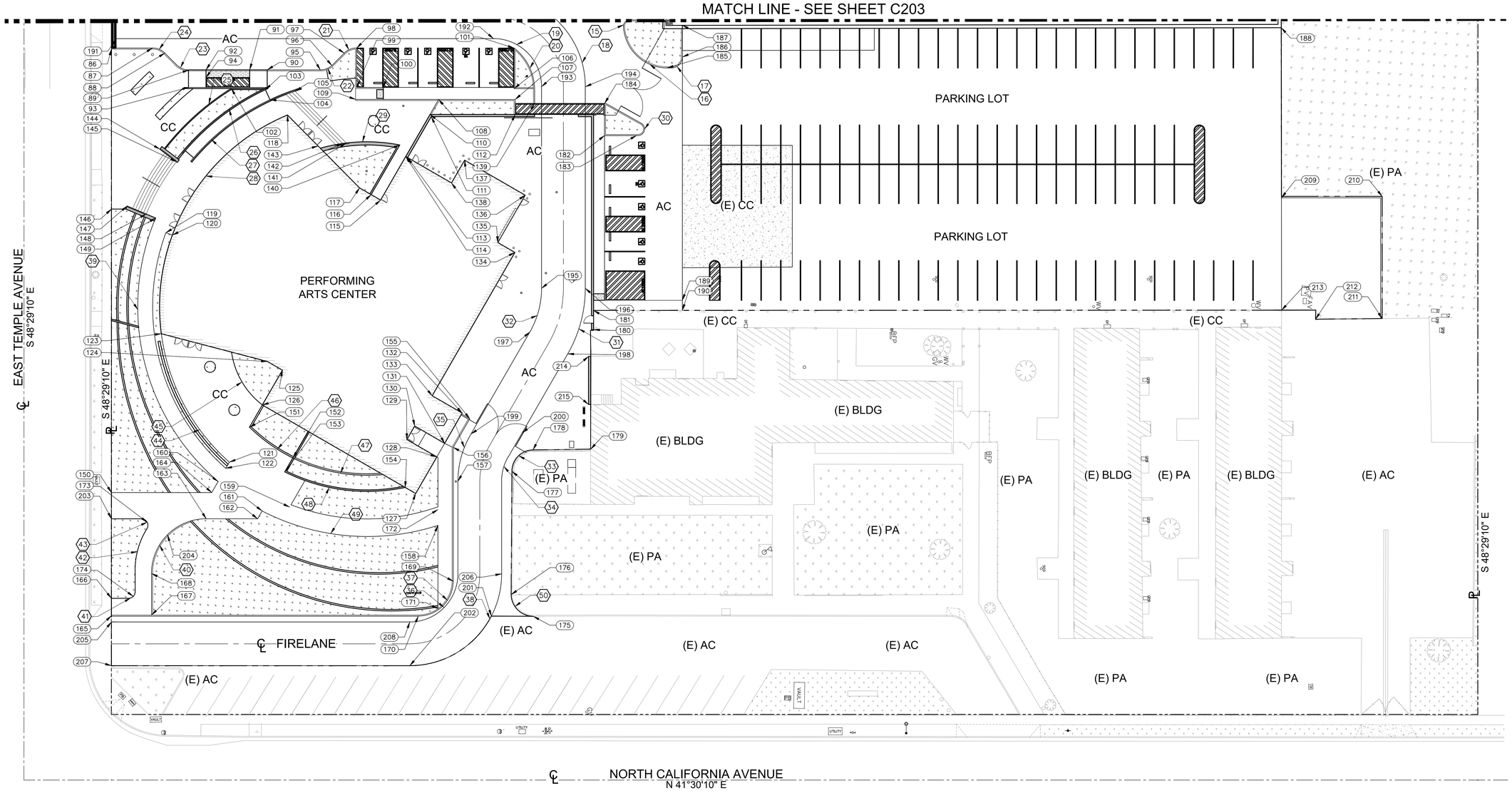

CURVE DATA TABLE

MARK	L	Δ	R	T	REMARKS
15	4.90	93°34'26"	3.00	3.193	–
16	30.20	86°30'37"	20.00	18.818	–
17	7.85	89°54'57"	5.00	4.993	–
18	65.97	90°00'00"	42.00	42.000	–
19	34.56	90°00'00"	22.00	22.000	–
20	20.95	49°53'41"	24.05	11.190	–
21	6.28	44°59'56"	8.00	3.314	–
22	6.28	45°00'00"	8.00	3.314	–
23	6.28	45°00'00"	8.00	3.314	–
24	6.28	45°00'00"	8.00	3.314	–
25	41.30	20°06'26"	117.68	20.864	–
26	51.67	26°49'47"	110.34	26.317	–
27	61.37	33°35'39"	104.67	31.596	–
28	124.07	74°49'48"	95.00	72.672	–
29	36.70	26°42'40"	78.72	18.690	–
30	7.83	149°35'40"	3.00	11.032	–
31	31.42	30°00'00"	60.00	16.077	–
32	20.94	30°00'00"	40.00	10.718	–

CURVE DATA TABLE

MARK	L	Δ	R	T	REMARKS
33	15.25	90°00'24"	9.71	9.711	–
34	11.52	30°00'00"	22.00	5.895	–
35	22.73	30°56'15"	42.09	11.647	–
36	34.56	90°00'00"	22.00	22.000	–
37	25.10	89°55'34"	15.99	15.969	–
38	65.97	90°00'00"	42.00	42.000	–
39	132.40	72°15'56"	104.97	76.638	–
40	39.27	90°00'40"	25.00	25.005	–
41	4.72	90°04'22"	3.00	3.004	–
42	19.92	31°41'52"	36.01	10.223	–
43	6.37	121°36'37"	3.00	5.369	–
44	67.89	40°56'57"	94.99	35.468	–
45	28.69	44°34'14"	36.88	15.113	–
46	24.37	18°08'12"	77.00	12.290	–
47	41.78	31°05'29"	77.00	21.420	–
48	56.66	38°28'21"	84.38	29.443	–
49	82.81	45°11'11"	105.00	43.692	–
50	15.63	88°06'38"	10.16	9.834	–

Point Coordinate Table

POINT #	NORTHING	EASTING
86	4,211.79	8,439.96
87	4,226.17	8,452.02
88	4,228.86	8,457.52
89	4,232.00	8,470.52
90	4,258.84	8,494.29
91	4,252.85	8,488.99
92	4,237.87	8,475.73
93	4,226.58	8,476.42
94	4,235.55	8,478.35
95	4,277.01	8,510.38
96	4,282.32	8,512.39
97	4,290.30	8,511.92
98	4,296.09	8,513.91
99	4,284.16	8,527.39
100	4,293.27	8,535.45
101	4,350.01	8,561.63
102	4,240.88	8,489.74
103	4,252.17	8,500.55
104	4,250.76	8,505.34
105	4,261.92	8,510.09
106	4,337.75	8,575.49
107	4,334.80	8,579.56
108	4,308.60	8,556.37
109	4,280.14	8,531.18
110	4,301.09	8,558.88
111	4,300.86	8,560.01

Point Coordinate Table

POINT #	NORTHING	EASTING
112	4,330.26	8,584.70
113	4,280.34	8,566.87
114	4,280.02	8,565.93
115	4,258.21	8,573.22
116	4,256.63	8,568.48
117	4,254.69	8,562.69
118	4,252.10	8,515.91
119	4,174.80	8,519.33
120	4,176.30	8,522.12
121	4,126.98	8,617.13
122	4,123.91	8,618.15
123	4,142.62	8,552.54
124	4,170.52	8,594.17
125	4,173.05	8,601.71
126	4,155.63	8,607.54
127	4,181.33	8,684.36
128	4,199.67	8,678.22
129	4,194.64	8,663.21
130	4,201.44	8,660.93
131	4,206.46	8,675.95
132	4,221.64	8,670.87
133	4,216.61	8,655.86
134	4,288.37	8,631.85
135	4,285.51	8,623.32
136	4,309.22	8,615.38
137	4,299.07	8,585.04

Point Coordinate Table

POINT #	NORTHING	EASTING
138	4,287.69	8,588.84
139	4,340.22	8,586.83
140	4,281.47	8,560.18
141	4,263.75	8,543.30
142	4,262.37	8,542.36
143	4,253.19	8,535.70
144	4,198.03	8,488.91
145	4,199.88	8,498.22
146	4,163.31	8,494.74
147	4,169.56	8,498.43
148	4,173.69	8,506.99
149	4,175.72	8,511.21
150	4,077.40	8,591.79
151	4,144.50	8,611.27
152	4,150.02	8,634.90
153	4,143.01	8,637.25
154	4,179.58	8,679.12
155	4,222.53	8,675.12
156	4,208.18	8,679.92
157	4,199.50	8,692.96
158	4,179.29	8,702.01
159	4,134.05	8,650.79
160	4,117.32	8,620.36
161	4,123.43	8,643.80
162	4,119.52	8,645.10
163	4,101.92	8,629.52

Point Coordinate Table

POINT #	NORTHING	EASTING
164	4,111.77	8,622.22
165	4,040.05	8,633.99
166	4,045.34	8,628.01
167	4,054.04	8,645.90
168	4,066.62	8,631.68
169	4,167.62	8,725.75
170	4,145.07	8,727.10
171	4,154.05	8,730.54
172	4,184.06	8,696.62
173	4,080.63	8,612.73
174	4,053.40	8,633.97
175	4,184.38	8,762.01
176	4,183.41	8,747.91
177	4,221.03	8,705.94
178	4,234.73	8,704.99
179	4,254.70	8,722.20
180	4,291.93	8,682.15
181	4,297.75	8,675.57
182	4,354.49	8,619.02
183	4,365.41	8,628.68
184	4,364.19	8,608.05
185	4,396.44	8,614.83
186	4,404.98	8,615.70
187	4,414.57	8,604.86
188	4,619.00	8,787.18
189	4,331.23	8,699.02

Point Coordinate Table

POINT #	NORTHING	EASTING
190	4,328.17	8,702.47
191	4,216.31	8,437.91
192	4,345.79	8,552.16
193	4,347.69	8,583.21
194	4,362.67	8,596.46
195	4,286.62	8,652.24
196	4,301.60	8,665.49
197	4,269.35	8,663.66
198	4,275.70	8,682.63
199	4,218.33	8,680.73
200	4,236.21	8,695.84
201	4,170.11	8,749.26
202	4,127.15	8,741.54
203	4,069.44	8,600.78
204	4,083.82	8,623.29
205	4,038.18	8,636.10
206	4,186.44	8,737.91
207	4,024.92	8,651.08
208	4,140.40	8,726.56
209	4,567.49	8,845.51
210	4,602.43	8,875.53
211	4,565.41	8,917.36
212	4,542.40	8,897.39
213	4,533.52	8,884.04

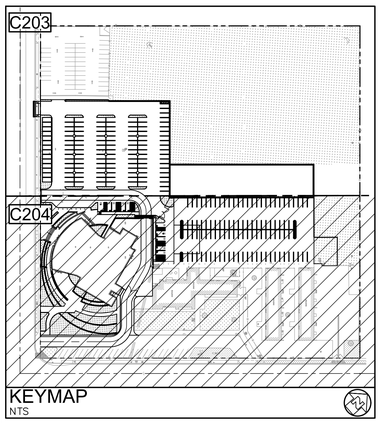

ENLARGED SITE COORDINTES PLAN

20 10 0 20 40

SCALE: 1"=20'

APPL. No. A 03–122864

IDENTIFICATION STAMP
DIV. OF THE STATE ARCHITECT
APP: 03-122864 INC:
REVIEWED FOR
SS ☑ FLS ☑ ACS ☑
DATE: 10/03/2023

DSA Stamp

Architect

RACHLIN PARTNERS
8840 National Boulevard
Culver City, CA 90232
310.204.3400

Disclaimer:

THESE DRAWINGS ARE THE PROPERTY OF THE ARCHITECT. THE DESIGNS SHOWN AND DESCRIBED HEREIN INCLUDING ALL TECHNICAL DRAWINGS ARE PROPRIETARY AND CANNOT BE COPIED, DUPLICATED OR COMMERCIALLY EXPLOITED, IN WHOLE OR IN PART. THE DRAWINGS AND SPECIFICATIONS SHALL NOT BE USED BY THE OWNER ON OTHER PROJECTS, FOR ADDITIONS TO THIS PROJECT, OR FOR COMPLETION OF THIS PROJECT BY OTHERS. THE OWNER AGREES TO HOLD HARMLESS, INDEMNIFY AND DEFEND THE ARCHITECT AGAINST ALL DAMAGES, CLAIMS AND LOSSES, INCLUDING DEFENSE COSTS, ARISING OUT OF ANY REUSE OF PLANS AND SPECIFICATIONS WITHOUT THE WRITTEN AUTHORIZATION OF THE ARCHITECT OF RECORD.
Copyright© 2022 Rachlin Partners, All Rights Reserved.

Performing Arts Center
Hacienda La Puente Unified
School District
635 North California Avenue
La Puente, CA 91744

Rev	Date	Issue
1	7.22.22	50% DD
2	10.21.22	50% CD
3	12.09.22	100% CD DSA Submittal
4	6.19.23	100% CD DSA Resubmittal
5	9.20.23	DSA BACK CHECK

Date: 9.8.2023
Scale: As Shown
Drawn By: --
Checked By: --

Architect / Engineer Stamp

LICENSED ARCHITECT CALIFORNIA IMPERIAL NO. C-30229 REN. 8-31-25 STATE OF CALIFORNIA

REGISTERED PROFESSIONAL ENGINEER MICHAEL C. JAMES No. C36079 Exp. 6/30/24 CIVIL STATE OF CALIFORNIA

Consultants
Miyamoto International, Inc.
The Ruzika Company, Inc,
MDC Consulting Engineers
Pocock Design Solutions
Newson Brown Acoustics, LLC
VCA Engineers, Inc.
HJSA Consulting
L.A. Design Associates, Inc.

Sheet Title

ENLARGED SITE COORDINATES PLAN

Sheet Number

C204

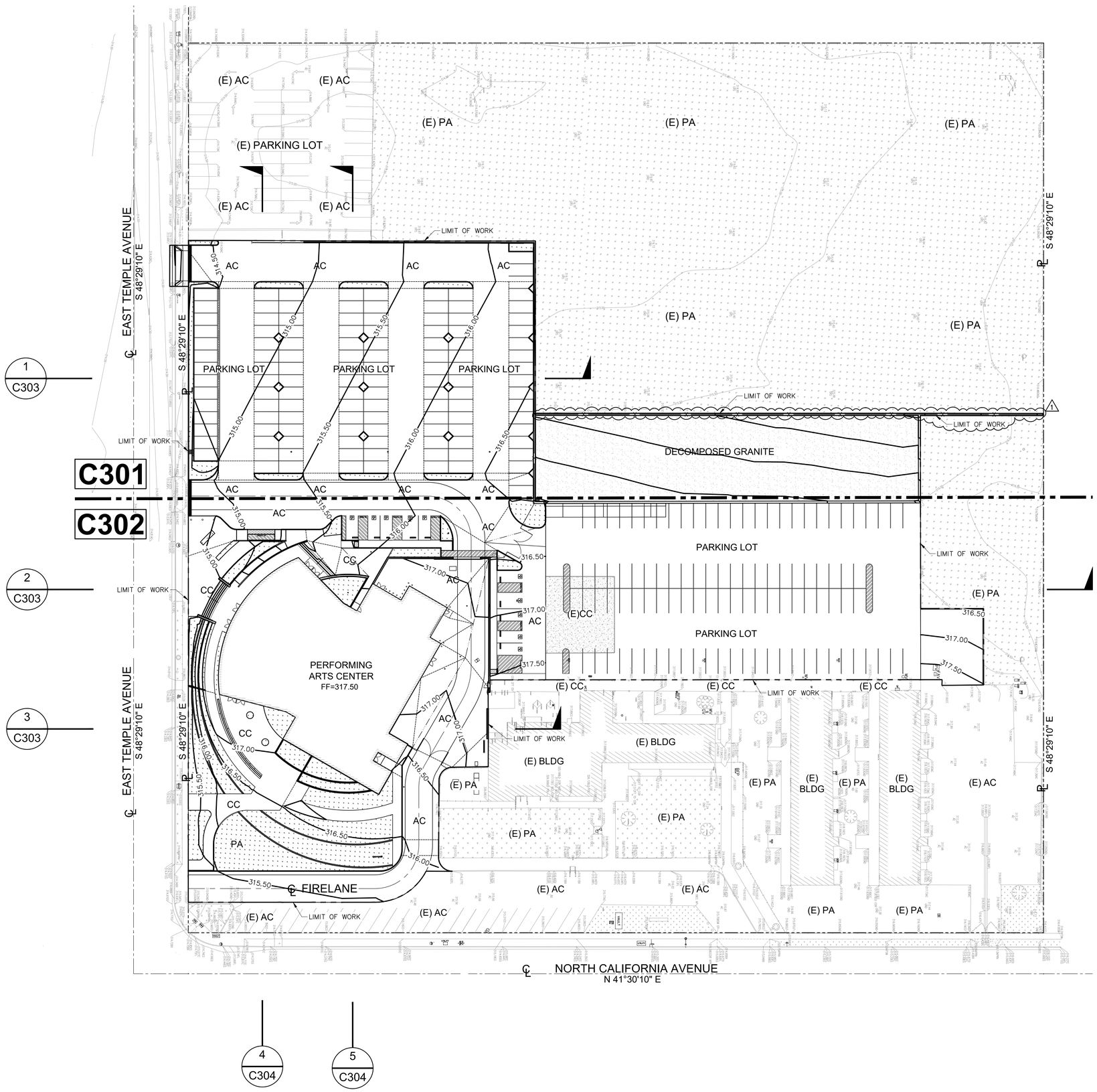

ESTIMATED EARTHWORK QUANTITY

ESTIMATED CUT =	388 CY
ESTIMATED FILL =	1640 CY
ESTIMATED IMPORT =	1252 CY (FILL)

NOTES:

1. THE ESTIMATED QUANTITIES PROVIDED ABOVE ARE FOR REFERENCE ONLY TO BE USED FOR JURISDICTIONAL PLAN CHECKING AND PERMITTING PURPOSES ONLY.
2. ESTIMATED EARTHWORK ABOVE IS BASED ON DESIGN FINISH GRADES TO EXISTING GRADES IN SURVEY. THE ESTIMATED EARTHWORK DOES NOT CONSIDER THE THICKNESS OF EACH PAVEMENT MATERIAL, FOUNDATION AND SLAB ON GRADE VOLUMES, THE REMOVAL OF ANY UNSUITABLE MATERIAL, AND THE REMOVAL OF EXISTING BASEMENTS, PITS, VAULTS, TOP SOIL OR VEGETATION.
3. THE ESTIMATED EARTHWORK QUANTITIES DO NOT INCLUDE SHRINKAGE FACTORS DUE TO COMPACTION OR ANY OVER EXCAVATION QUANTITIES.
4. THE CONTRACTOR SHALL CALCULATE HIS OWN EARTHWORK QUANTITIES NECESSARY FOR HIS BID AND WORK. THE ENGINEER IS NOT RESPONSIBLE AND LIABLE FOR THE CONTRACTOR'S EARTHWORK CALCULATIONS.
5. ESTIMATED EARTHWORK QUANTITIES ABOVE ASSUME THAT ALL ON-SITE MATERIALS ARE SUITABLE FOR BACKFILLING. HOWEVER, ACTUAL EXISTING ON-SITE MATERIALS AND IMPORTED MATERIALS MUST FIRST BE APPROVED BY THE GEOTECHNICAL ENGINEER PRIOR TO INSTALLATION, REMOVAL, OR REPLACEMENT.
6. THE ESTIMATED QUANTITIES WERE CALCULATED AND LIMITED ON ON-SITE AREA ONLY.
7. CONTRACTOR SHALL REFER TO GEOTECHNICAL REPORT ALL OTHER REQUIREMENTS THAT MAY BE REQUIRED IN ORDER TO CALCULATE THE CUT AND FILL QUANTITIES.

SHEET NOTES:

1. FOR GENERAL NOTES, LEGENDS AND ABBREVIATIONS, SEE SHEET C100.
2. SEE ARCHITECTURAL AND LANDSCAPE DRAWINGS FOR OTHER SITE RELATED DIMENSIONS NOT SHOWN ON THIS DRAWING.
3. FOR PAVEMENT MARKINGS AND STRIPING, RAMP WITH HANDRAILS, PLANTER AREA, TRASH ENCLOSURE AND TRANSFORMER ENCLOSURE, SEE ARCHITECTURAL DRAWINGS. FOR LANDSCAPING AND IRRIGATION FEATURES, CONCRETE PAVEMENT PATTERN, TEXTURE AND COLOR INTEGRATION, SEE LANDSCAPE DRAWINGS. FOR GAS, SEWER, ROOF DRAINS, FIRE & DOMESTIC WATER LINES POINTS OF CONNECTION AT BUILDING, SEE MECHANICAL AND PLUMBING DRAWINGS OF THE BUILDING. FOR TRANSFORMER ENCLOSURE AND CONCRETE PAD, SEE ELECTRICAL DRAWINGS.
4. FOR CATCH BASIN LOCATIONS AND GRATE ELEVATIONS AND INVERTS SEE UTILITY PLAN. IF TOP OF GRATE ELEVATIONS ARE DIFFERENT FROM GRADING CATCH BASIN ELEVATIONS SHOWN ON THIS SHEET, NOTIFY CPM AND ENGINEER.

OVERALL SITE GRADING PLAN

30 15 0 30 60

SCALE: 1"=30'

APPL. No. A 03-122864

DSA Stamp

Architect

RACHLIN PARTNERS
8840 National Boulevard
Culver City, CA 90232
310.204.3400

Disclaimer:
THESE DRAWINGS ARE THE PROPERTY OF THE ARCHITECT. THE DESIGNS SHOWN AND DESCRIBED HEREIN INCLUDING ALL TECHNICAL DRAWINGS ARE PROPRIETARY AND CANNOT BE COPIED, DUPLICATED OR COMMERCIALLY EXPLOITED, IN WHOLE OR IN PART. THE DRAWINGS AND SPECIFICATIONS SHALL NOT BE USED BY THE OWNER ON OTHER PROJECTS, FOR ADDITIONS TO THIS PROJECT, OR FOR COMPLETION OF THIS PROJECT BY OTHERS. THE OWNER AGREES TO HOLD HARMLESS, INDEMNIFY AND DEFEND THE ARCHITECT AGAINST ALL DAMAGES, CLAIMS AND LOSSES, INCLUDING DEFENSE COSTS, ARISING OUT OF ANY REUSE OF PLANS AND SPECIFICATIONS WITHOUT THE WRITTEN AUTHORIZATION OF THE ARCHITECT OF RECORD.
Copyright© 2022 Rachlin Partners, All Rights Reserved.

Performing Arts Center
Hacienda La Puente Unified
School District
635 North California Avenue
La Puente, CA 91744

Rev	Date	Issue
1	7.22.22	50% DD
2	10.21.22	50% CD
3	12.09.22	100% CD DSA Submittal
4	6.19.23	100% CD DSA Resubmittal
5	9.20.23	DSA Back Check
⚠1	11.01.23	Addendum No.1

Date: 11.01.2023
Scale: As Shown
Drawn By: --
Checked By: --

Architect / Engineer Stamp

LICENSED ARCHITECT — NO. C-35228 — REN. 8-31-25 — STATE OF CALIFORNIA
REGISTERED PROFESSIONAL ENGINEER — No. C36079 — Exp. 6/30/24 — CIVIL — STATE OF CALIFORNIA

Consultants
Miyamoto International, Inc.
The Ruzika Company, Inc,
MDC Consulting Engineers
Pocock Design Solutions
Newson Brown Acoustics, LLC
VCA Engineers, Inc.
HJSA Consulting
L.A. Design Associates, Inc.

Sheet Title
OVERALL SITE GRADING PLAN

Sheet Number
C300

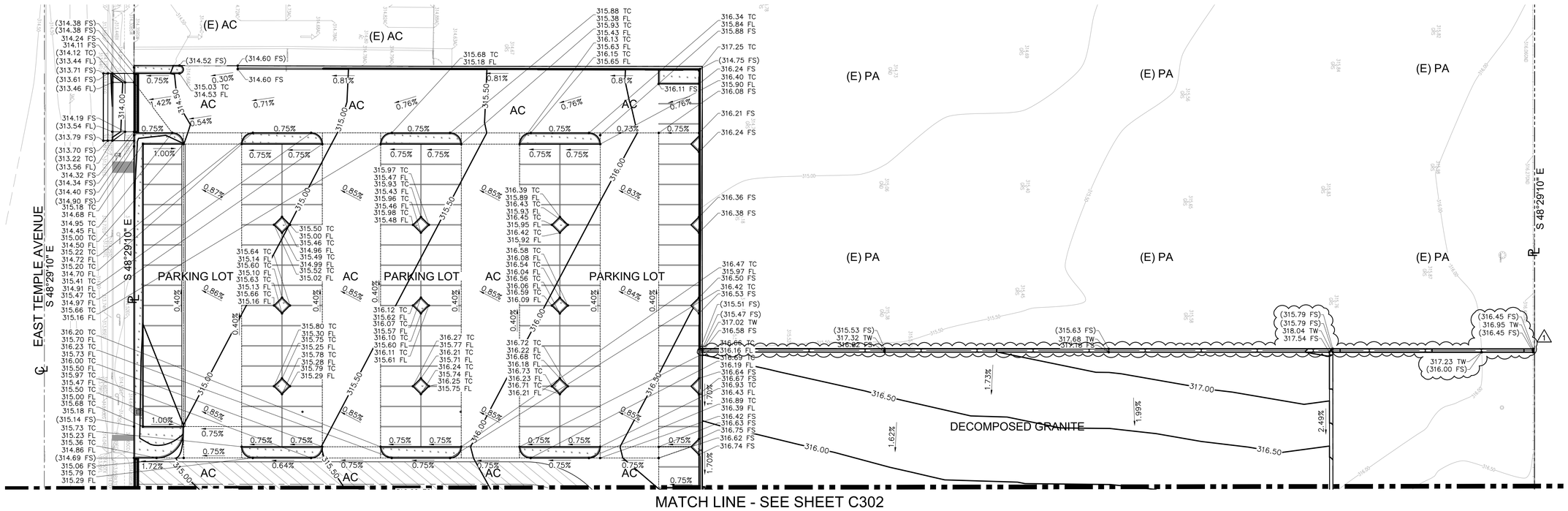

ESTIMATED EARTHWORK QUANTITY

ESTIMATED CUT =	388 CY
ESTIMATED FILL =	1640 CY
ESTIMATED IMPORT =	1252 CY (FILL)

1

NOTES:

1. THE ESTIMATED QUANTITIES PROVIDED ABOVE ARE FOR REFERENCE ONLY TO BE USED FOR JURISDICTIONAL PLAN CHECKING AND PERMITTING PURPOSES ONLY.
2. ESTIMATED EARTHWORK ABOVE IS BASED ON DESIGN FINISH GRADES TO EXISTING GRADES IN SURVEY. THE ESTIMATED EARTHWORK DOES NOT CONSIDER THE THICKNESS OF EACH PAVEMENT MATERIAL, FOUNDATION AND SLAB ON GRADE VOLUMES, THE REMOVAL OF ANY UNSUITABLE MATERIAL, AND THE REMOVAL OF EXISTING BASEMENTS, PITS, VAULTS, TOP SOIL OR VEGETATION.
3. THE ESTIMATED EARTHWORK QUANTITIES DO NOT INCLUDE SHRINKAGE FACTORS DUE TO COMPACTION OR ANY OVER EXCAVATION QUANTITIES.
4. THE CONTRACTOR SHALL CALCULATE HIS OWN EARTHWORK QUANTITIES NECESSARY FOR HIS BID AND WORK. THE ENGINEER IS NOT RESPONSIBLE AND LIABLE FOR THE CONTRACTOR'S EARTHWORK CALCULATIONS.
5. ESTIMATED EARTHWORK QUANTITIES ABOVE ASSUME THAT ALL ON-SITE MATERIALS ARE SUITABLE FOR BACKFILLING. HOWEVER, ACTUAL EXISTING ON-SITE MATERIALS AND IMPORTED MATERIALS MUST FIRST BE APPROVED BY THE GEOTECHNICAL ENGINEER PRIOR TO INSTALLATION, REMOVAL, OR REPLACEMENT.
6. THE ESTIMATED QUANTITIES WERE CALCULATED AND LIMITED ON ON-SITE AREA ONLY.
7. CONTRACTOR SHALL REFER TO GEOTECHNICAL REPORT ALL OTHER REQUIREMENTS THAT MAY BE REQUIRED IN ORDER TO CALCULATE THE CUT AND FILL QUANTITIES.

SHEET NOTES:

1. FOR GENERAL NOTES, LEGENDS AND ABBREVIATIONS, SEE SHEET C100.
2. SEE ARCHITECTURAL AND LANDSCAPE DRAWINGS FOR OTHER SITE RELATED DIMENSIONS NOT SHOWN ON THIS DRAWING.
3. FOR PAVEMENT MARKINGS AND STRIPING, RAMP WITH HANDRAILS, PLANTER AREA, TRASH ENCLOSURE AND TRANSFORMER ENCLOSURE, SEE ARCHITECTURAL DRAWINGS. FOR LANDSCAPING AND IRRIGATION FEATURES, CONCRETE PAVEMENT PATTERN, TEXTURE AND COLOR INTEGRATION, SEE LANDSCAPE DRAWINGS. FOR GAS, SEWER, ROOF DRAINS, FIRE & DOMESTIC WATER LINES POINTS OF CONNECTION AT BUILDING, SEE MECHANICAL AND PLUMBING DRAWINGS OF THE BUILDING. FOR TRANSFORMER ENCLOSURE AND CONCRETE PAD, SEE ELECTRICAL DRAWINGS.
4. FOR CATCH BASIN LOCATIONS AND GRATE ELEVATIONS AND INVERTS SEE UTILITY PLAN. IF TOP OF GRATE ELEVATIONS ARE DIFFERENT FROM GRADING CATCH BASIN ELEVATIONS SHOWN ON THIS SHEET, NOTIFY CPM AND ENGINEER.

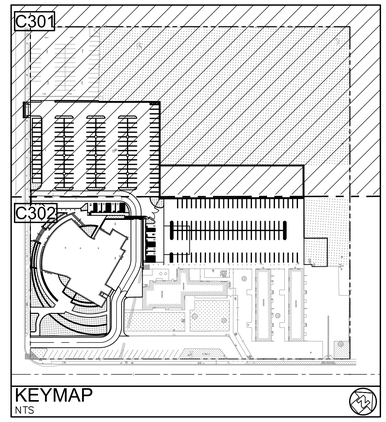

KEYMAP
NTS

ENLARGED SITE GRADING PLAN

20 10 0 20 40

SCALE: 1"=20'

APPL. No. A 03-122864

DSA Stamp

Architect

RACHLIN PARTNERS
8840 National Boulevard
Culver City, CA 90232
310.204.3400

Disclaimer:

THESE DRAWINGS ARE THE PROPERTY OF THE ARCHITECT. THE DESIGNS SHOWN AND DESCRIBED HEREIN INCLUDING ALL TECHNICAL DRAWINGS ARE PROPRIETARY AND CANNOT BE COPIED, DUPLICATED OR COMMERCIALLY EXPLOITED, IN WHOLE OR IN PART. THE DRAWINGS AND SPECIFICATIONS SHALL NOT BE USED BY THE OWNER ON OTHER PROJECTS, FOR ADDITIONS TO THIS PROJECT, OR FOR COMPLETION OF THIS PROJECT BY OTHERS. THE OWNER AGREES TO HOLD HARMLESS, INDEMNIFY AND DEFEND THE ARCHITECT AGAINST ALL DAMAGES, CLAIMS AND LOSSES, INCLUDING DEFENSE COSTS, ARISING OUT OF ANY REUSE OF PLANS AND SPECIFICATIONS WITHOUT THE WRITTEN AUTHORIZATION OF THE ARCHITECT OF RECORD.
Copyright© 2022 Rachlin Partners, All Rights Reserved.

Performing Arts Center
Hacienda La Puente Unified
School District
635 North California Avenue
La Puente, CA 91744

Rev	Date	Issue
1	7.22.22	50% DD
2	10.21.22	50% CD
3	12.09.22	100% CD DSA Submittal
4	6.19.23	100% CD DSA Resubmittal
5	9.20.23	DSA Back Check
1	11.01.23	Addendum No.1

Date: 11.01.2023
Scale: As Shown
Drawn By: --
Checked By: --

Architect / Engineer Stamp

LICENSED ARCHITECT RICHARD H. RACHLIN NO. C-8229 REN. 8-31-25 STATE OF CALIFORNIA

REGISTERED PROFESSIONAL ENGINEER MIGUEL C. ZARAGOZA No. C36079 Exp. 6/30/24 CIVIL STATE OF CALIFORNIA

Consultants
Miyamoto International, Inc.
The Ruzika Company, Inc,
MDC Consulting Engineers
Pocock Design Solutions
Newson Brown Acoustics, LLC
VCA Engineers, Inc.
HJSA Consulting
L.A. Design Associates, Inc.

Sheet Title

ENLARGED SITE GRADING PLAN

Sheet Number

C301

MATCH LINE - SEE SHEET C301

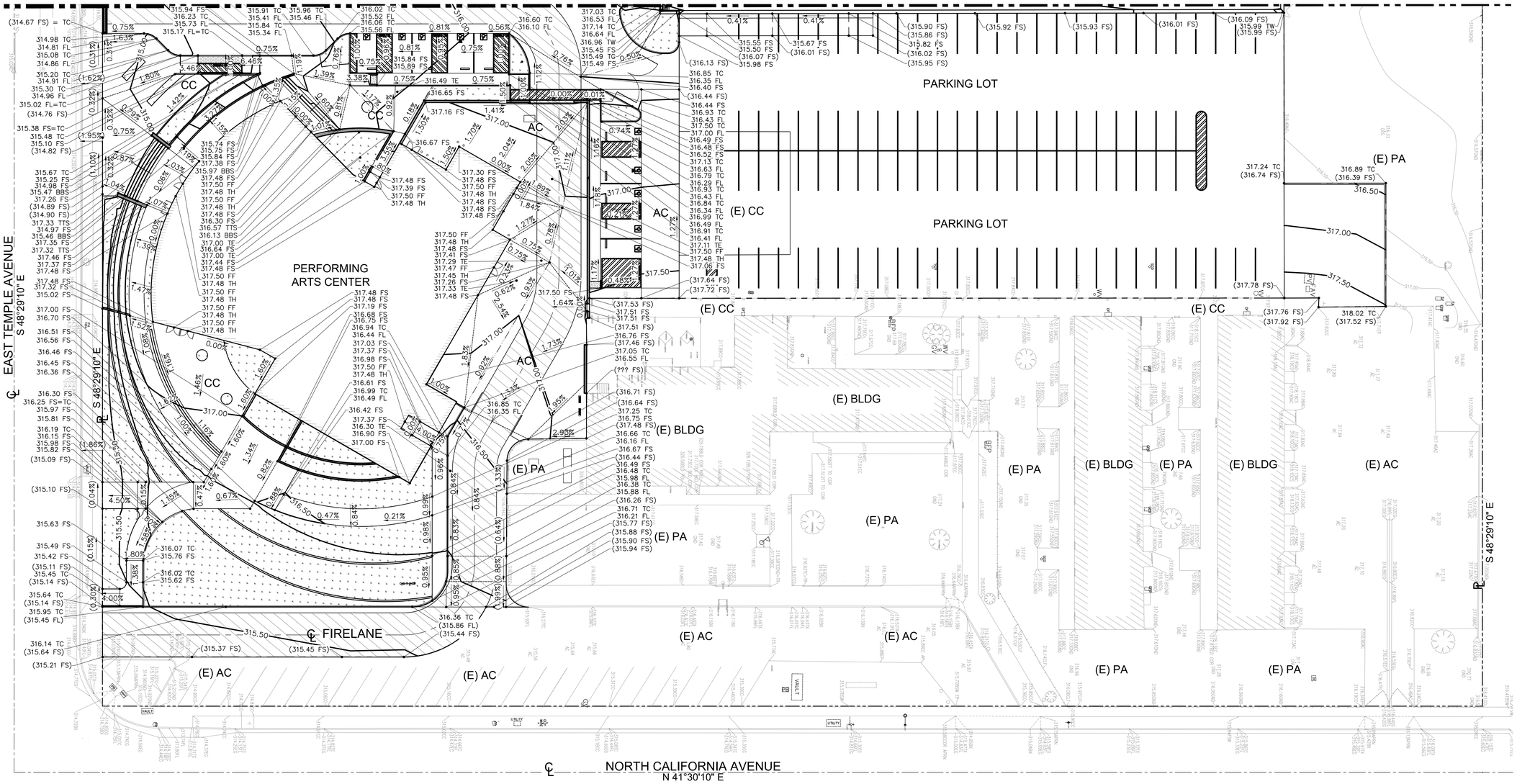

ESTIMATED EARTHWORK QUANTITY

ESTIMATED CUT =	388 CY
ESTIMATED FILL =	1640 CY
ESTIMATED IMPORT =	1252 CY (FILL) 1

NOTES:

1. THE ESTIMATED QUANTITIES PROVIDED ABOVE ARE FOR REFERENCE ONLY TO BE USED FOR JURISDICTIONAL PLAN CHECKING AND PERMITTING PURPOSES ONLY.
2. ESTIMATED EARTHWORK ABOVE IS BASED ON DESIGN FINISH GRADES TO EXISTING GRADES IN SURVEY. THE ESTIMATED EARTHWORK DOES NOT CONSIDER THE THICKNESS OF EACH PAVEMENT MATERIAL, FOUNDATION AND SLAB ON GRADE VOLUMES, THE REMOVAL OF ANY UNSUITABLE MATERIAL, AND THE REMOVAL OF EXISTING BASEMENTS, PITS, VAULTS, TOP SOIL OR VEGETATION.
3. THE ESTIMATED EARTHWORK QUANTITIES DO NOT INCLUDE SHRINKAGE FACTORS DUE TO COMPACTION OR ANY OVER EXCAVATION QUANTITIES.
4. THE CONTRACTOR SHALL CALCULATE HIS OWN EARTHWORK QUANTITIES NECESSARY FOR HIS BID AND WORK. THE ENGINEER IS NOT RESPONSIBLE AND LIABLE FOR THE CONTRACTOR'S EARTHWORK CALCULATIONS.
5. ESTIMATED EARTHWORK QUANTITIES ABOVE ASSUME THAT ALL ON-SITE MATERIALS ARE SUITABLE FOR BACKFILLING. HOWEVER, ACTUAL EXISTING ON-SITE MATERIALS AND IMPORTED MATERIALS MUST FIRST BE APPROVED BY THE GEOTECHNICAL ENGINEER PRIOR TO INSTALLATION, REMOVAL, OR REPLACEMENT.
6. THE ESTIMATED QUANTITIES WERE CALCULATED AND LIMITED ON ON-SITE AREA ONLY.
7. CONTRACTOR SHALL REFER TO GEOTECHNICAL REPORT ALL OTHER REQUIREMENTS THAT MAY BE REQUIRED IN ORDER TO CALCULATE THE CUT AND FILL QUANTITIES.

SHEET NOTES:

1. FOR GENERAL NOTES, LEGENDS AND ABBREVIATIONS, SEE SHEET C100.
2. SEE ARCHITECTURAL AND LANDSCAPE DRAWINGS FOR OTHER SITE RELATED DIMENSIONS NOT SHOWN ON THIS DRAWING.
3. FOR PAVEMENT MARKINGS AND STRIPING, RAMP WITH HANDRAILS, PLANTER AREA, TRASH ENCLOSURE AND TRANSFORMER ENCLOSURE, SEE ARCHITECTURAL DRAWINGS. FOR LANDSCAPING AND IRRIGATION FEATURES, CONCRETE PAVEMENT PATTERN, TEXTURE AND COLOR INTEGRATION, SEE LANDSCAPE DRAWINGS. FOR GAS, SEWER, ROOF DRAINS, FIRE & DOMESTIC WATER LINES POINTS OF CONNECTION AT BUILDING, SEE MECHANICAL AND PLUMBING DRAWINGS OF THE BUILDING. FOR TRANSFORMER ENCLOSURE AND CONCRETE PAD, SEE ELECTRICAL DRAWINGS.
4. FOR CATCH BASIN LOCATIONS AND GRATE ELEVATIONS AND INVERTS SEE UTILITY PLAN. IF TOP OF GRATE ELEVATIONS ARE DIFFERENT FROM GRADING CATCH BASIN ELEVATIONS SHOWN ON THIS SHEET, NOTIFY CPM AND ENGINEER.

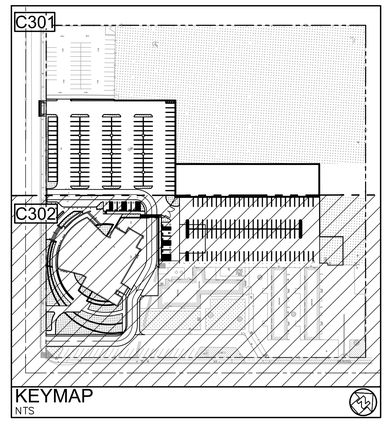

ENLARGED SITE GRADING PLAN

20 10 0 20 40

SCALE: 1"=20'

APPL. No. A 03-122864

DSA Stamp

Architect

RACHLIN PARTNERS
8840 National Boulevard
Culver City, CA 90232
310.204.3400

Disclaimer:
THESE DRAWINGS ARE THE PROPERTY OF THE ARCHITECT. THE DESIGNS SHOWN AND DESCRIBED HEREIN INCLUDING ALL TECHNICAL DRAWINGS ARE PROPRIETARY AND CANNOT BE COPIED, DUPLICATED OR COMMERCIALLY EXPLOITED, IN WHOLE OR IN PART. THE DRAWINGS AND SPECIFICATIONS SHALL NOT BE USED BY THE OWNER ON OTHER PROJECTS, FOR ADDITIONS TO THIS PROJECT, OR FOR COMPLETION OF THIS PROJECT BY OTHERS. THE OWNER AGREES TO HOLD HARMLESS, INDEMNIFY AND DEFEND THE ARCHITECT AGAINST ALL DAMAGES, CLAIMS AND LOSSES, INCLUDING DEFENSE COSTS, ARISING OUT OF ANY REUSE OF PLANS AND SPECIFICATIONS WITHOUT THE WRITTEN AUTHORIZATION OF THE ARCHITECT OF RECORD.
Copyright© 2022 Rachlin Partners, All Rights Reserved.

Performing Arts Center
Hacienda La Puente Unified
School District
635 North California Avenue
La Puente, CA 91744

Rev	Date	Issue
1	7.22.22	50% DD
2	10.21.22	50% CD
3	12.09.22	100% CD DSA Submittal
4	6.19.23	100% CD DSA Resubmittal
5	9.20.23	DSA Back Check
1	11.01.23	Addendum No.1

Date: 11.01.2023
Scale: As Shown
Drawn By: --
Checked By: --

Architect / Engineer Stamp

LICENSED ARCHITECT — NO. C-35229 — REN. 8-31-25 — STATE OF CALIFORNIA

REGISTERED PROFESSIONAL ENGINEER — No. C36079 — Exp. 6/30/24 — CIVIL — STATE OF CALIFORNIA

Consultants
Miyamoto International, Inc.
The Ruzika Company, Inc,
MDC Consulting Engineers
Pocock Design Solutions
Newson Brown Acoustics, LLC
VCA Engineers, Inc.
HJSA Consulting
L.A. Design Associates, Inc.

Sheet Title

ENLARGED SITE GRADING PLAN

Sheet Number

C302

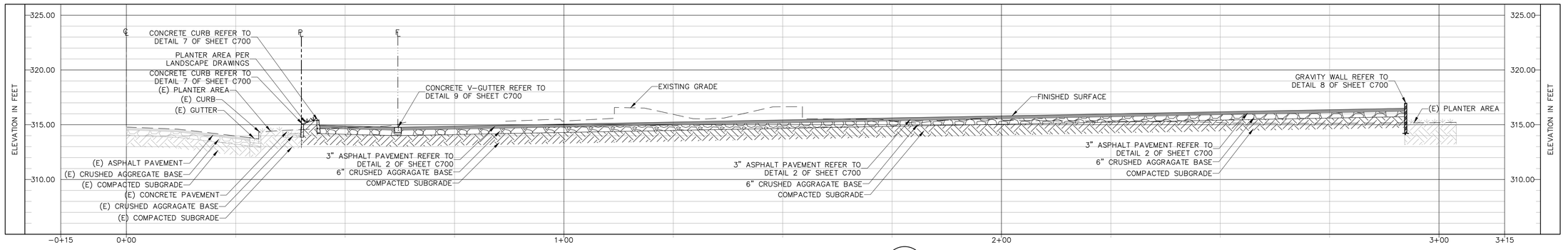

GRADING SECTION 1 / C300
SCALE HOR 1"=10' VER 1"=4'

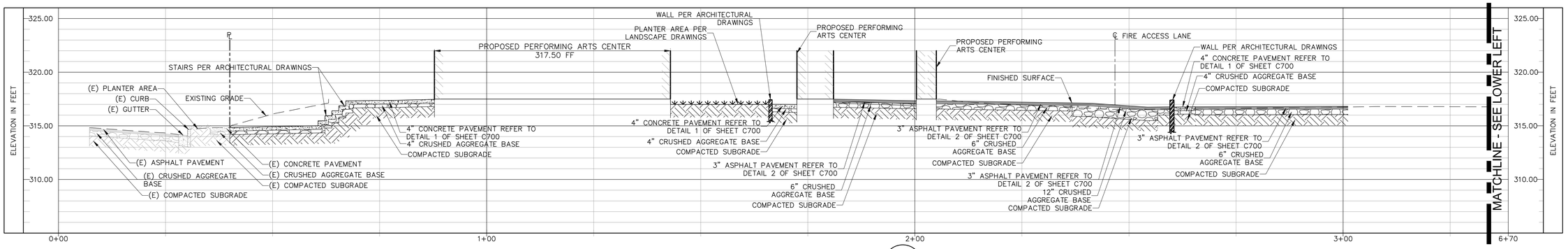

GRADING SECTION 2 / C300
SCALE HOR 1"=10' VER 1"=4'

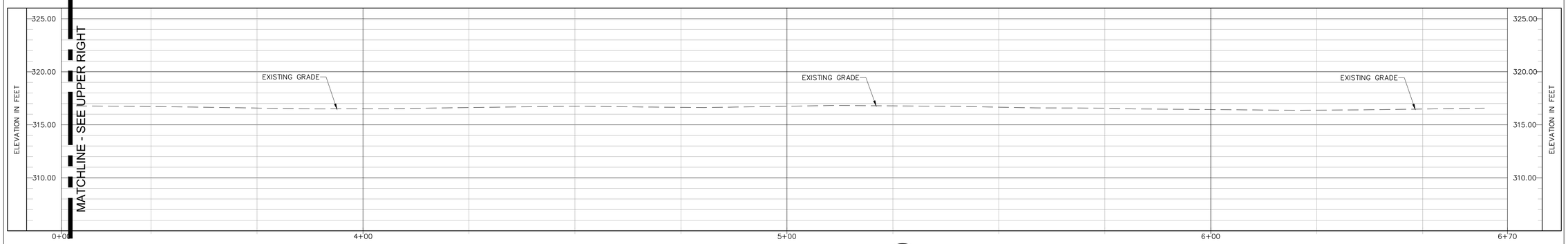

GRADING SECTION 2 / C300
SCALE HOR 1"=10' VER 1"=4'

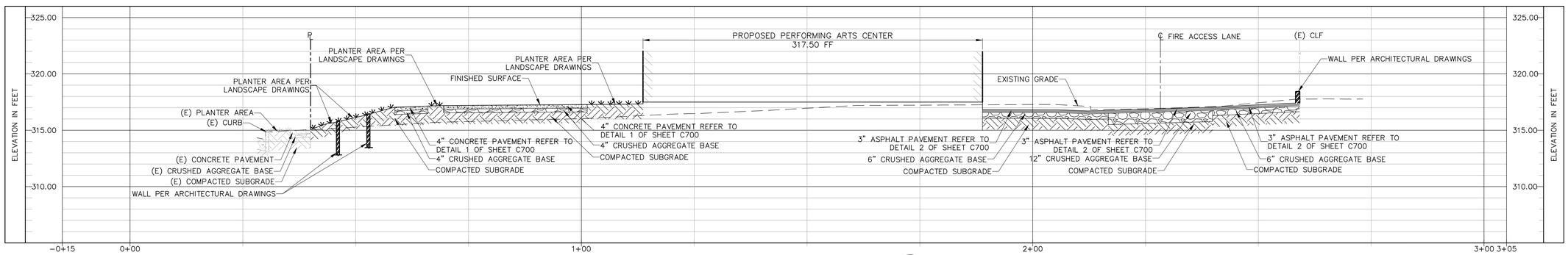

GRADING SECTION 3 / C300
SCALE HOR 1"=10' VER 1"=4'

APPL. No. A 03−122864

IDENTIFICATION STAMP
DIV. OF THE STATE ARCHITECT
APP: 03-122864 INC:
REVIEWED FOR
SS ☑ FLS ☑ ACS ☑
DATE: 10/03/2023

DSA Stamp

Architect

RACHLIN PARTNERS
8640 National Boulevard
Culver City, CA 90232
310.204.3400

Disclaimer:

THESE DRAWINGS ARE THE PROPERTY OF THE ARCHITECT. THE DESIGNS SHOWN AND DESCRIBED HEREIN INCLUDING ALL TECHNICAL DRAWINGS ARE PROPRIETARY AND CANNOT BE COPIED, DUPLICATED OR COMMERCIALLY EXPLOITED, IN WHOLE OR IN PART. THE DRAWINGS AND SPECIFICATIONS SHALL NOT BE USED BY THE OWNER ON OTHER PROJECTS, FOR ADDITIONS TO THIS PROJECT, OR FOR COMPLETION OF THIS PROJECT BY OTHERS. THE OWNER AGREES TO HOLD HARMLESS, INDEMNIFY AND DEFEND THE ARCHITECT AGAINST ALL DAMAGES, CLAIMS AND LOSSES, INCLUDING DEFENSE COSTS, ARISING OUT OF ANY REUSE OF PLANS AND SPECIFICATIONS WITHOUT THE WRITTEN AUTHORIZATION OF THE ARCHITECT OF RECORD.
Copyright© 2022 Rachlin Partners, All Rights Reserved.

Performing Arts Center
Hacienda La Puente Unified School District
635 North California Avenue
La Puente, CA 91744

Rev	Date	Issue
1	7.22.22	50% DD
2	10.21.22	50% CD
3	12.09.22	100% CD DSA Submittal
4	6.19.23	100% CD DSA Resubmittal
5	9.20.23	DSA BACK CHECK

Date: 9.8.2023
Scale: As Shown
Drawn By: −−
Checked By: −−

Architect / Engineer Stamp

LICENSED ARCHITECT — JOSEPH INGRASSIA — NO. C-26229 — REN. 8-31-25 — STATE OF CALIFORNIA

REGISTERED PROFESSIONAL ENGINEER — JONATHAN C. ARMENTA — No. C36079 — Exp. 6/30/24 — CIVIL — STATE OF CALIFORNIA

Consultants

Miyamoto International, Inc.
The Ruzika Company, Inc,
MDC Consulting Engineers
Pocock Design Solutions
Newson Brown Acoustics, LLC
VCA Engineers, Inc.
HJSA Consulting
L.A. Design Associates, Inc.

Sheet Title

GRADING SECTIONS

Sheet Number

C303

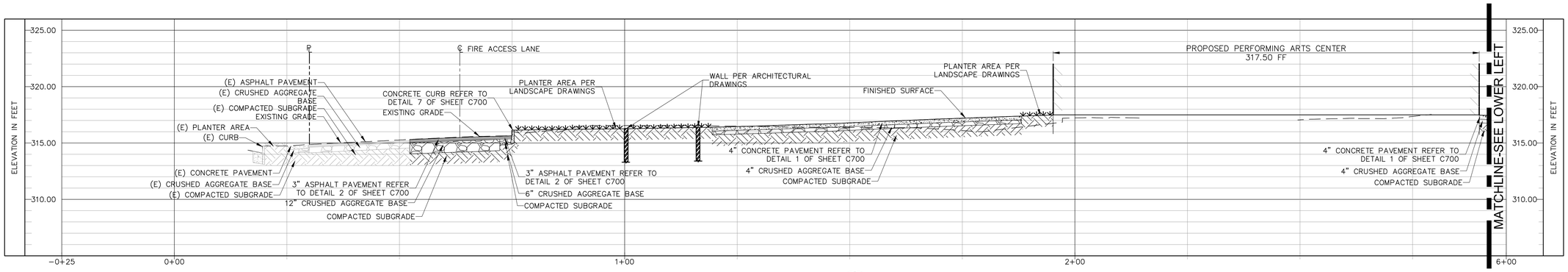

GRADING SECTION 4 / C300
SCALE HOR 1"=10' VER 1"=4'

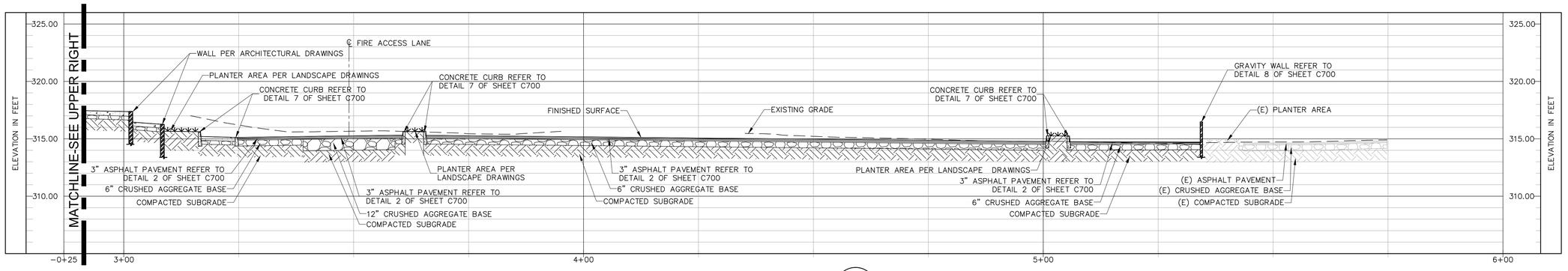

GRADING SECTION 4 / C300
SCALE HOR 1"=10' VER 1"=4'

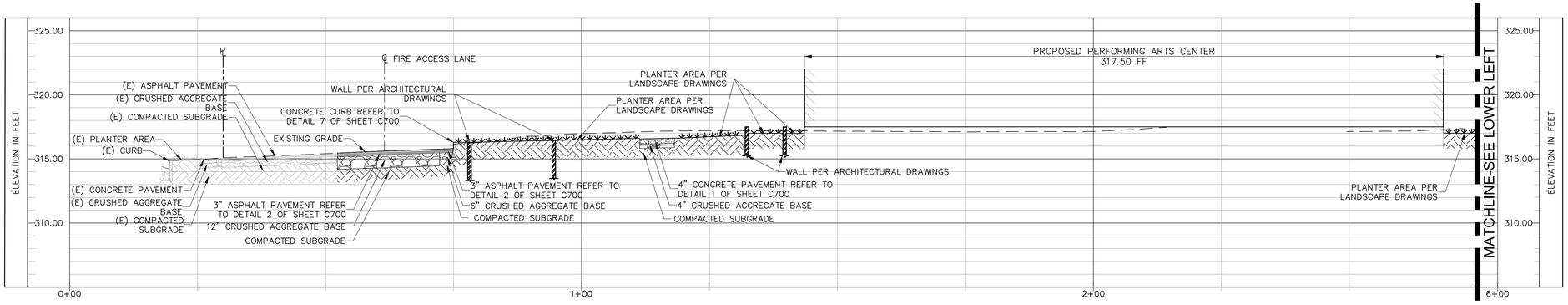

GRADING SECTION 5 / C300
SCALE HOR 1"=10' VER 1"=4'

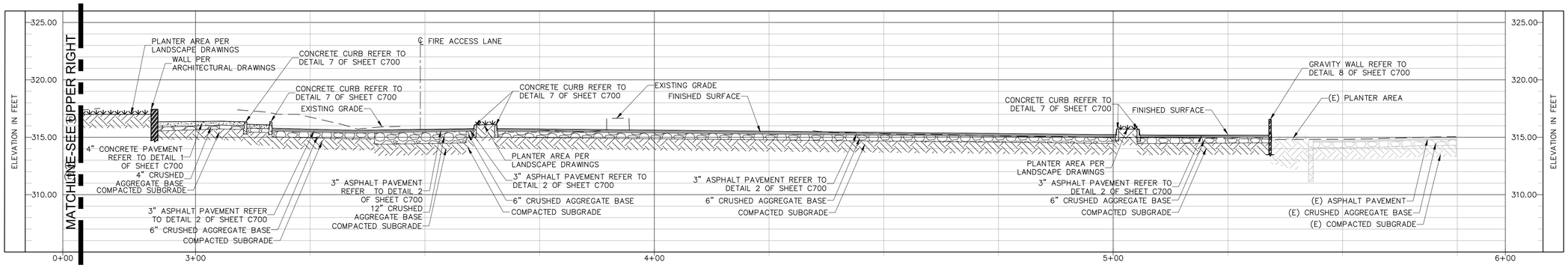

GRADING SECTION 5 / C300
SCALE HOR 1"=10' VER 1"=4'

APPL. No. A 03−122864

IDENTIFICATION STAMP
DIV. OF THE STATE ARCHITECT
APP: 03-122864 INC:
REVIEWED FOR
SS ☑ FLS ☑ ACS ☑
DATE: 10/03/2023

DSA Stamp

Architect

RACHLIN PARTNERS
8640 National Boulevard
Culver City, CA 90232
310.204.3400

Disclaimer:

THESE DRAWINGS ARE THE PROPERTY OF THE ARCHITECT. THE DESIGNS SHOWN AND DESCRIBED HEREIN INCLUDING ALL TECHNICAL DRAWINGS ARE PROPRIETARY AND CANNOT BE COPIED, DUPLICATED OR COMMERCIALLY EXPLOITED, IN WHOLE OR IN PART. THE DRAWINGS AND SPECIFICATIONS SHALL NOT BE USED BY THE OWNER ON OTHER PROJECTS, FOR ADDITIONS TO THIS PROJECT, OR FOR COMPLETION OF THIS PROJECT BY OTHERS. THE OWNER AGREES TO HOLD HARMLESS, INDEMNIFY AND DEFEND THE ARCHITECT AGAINST ALL DAMAGES, CLAIMS AND LOSSES, INCLUDING DEFENSE COSTS, ARISING OUT OF ANY REUSE OF PLANS AND SPECIFICATIONS WITHOUT THE WRITTEN AUTHORIZATION OF THE ARCHITECT OF RECORD.
Copyright© 2022 Rachlin Partners, All Rights Reserved.

Performing Arts Center
Hacienda La Puente Unified
School District
635 North California Avenue
La Puente, CA 91744

Rev	Date	Issue
1	7.22.22	50% DD
2	10.21.22	50% CD
3	12.09.22	100% CD DSA
Submittal		
4	6.19.23	100% CD DSA
Resubmittal		
5	9.20.23	DSA BACK CHECK

Date: 9.8.2023
Scale: As Shown
Drawn By: --
Checked By: --

Architect / Engineer Stamp

LICENSED ARCHITECT — ROBERT CHARLES LEE — NO. C-26229 — REN. 8-31-25 — STATE OF CALIFORNIA

REGISTERED PROFESSIONAL ENGINEER — JENNIFER C. TAM — No. C36079 — Exp. 6/30/24 — CIVIL — STATE OF CALIFORNIA

Consultants
Miyamoto International, Inc.
The Ruzika Company, Inc,
MDC Consulting Engineers
Pocock Design Solutions
Newson Brown Acoustics, LLC
VCA Engineers, Inc.
HJSA Consulting
L.A. Design Associates, Inc.

Sheet Title

GRADING SECTIONS

Sheet Number

C304

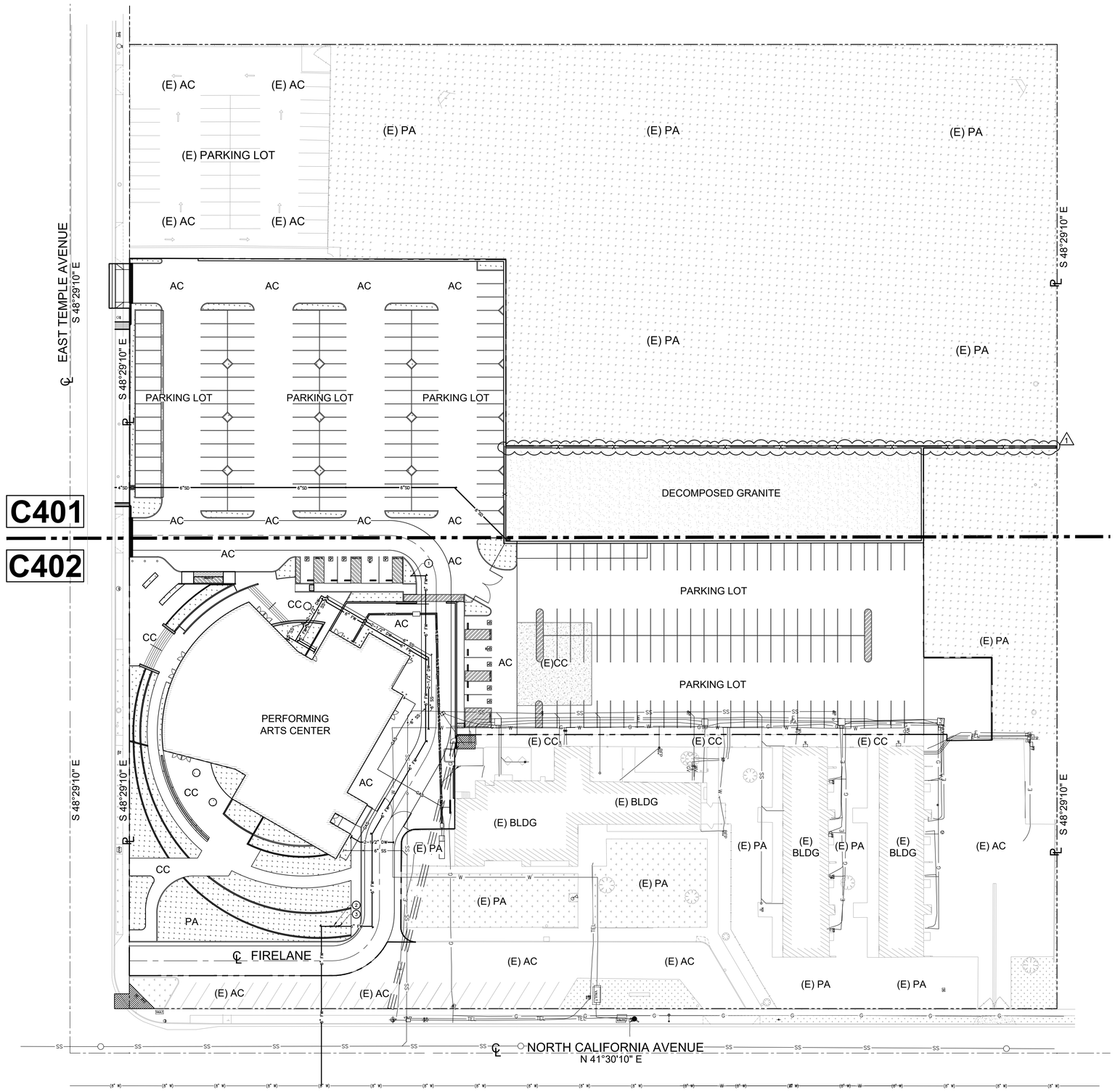

FIRE WATER:

1. INSTALL FIRE HYDRANT PER DETAIL 5 ON SHEET C701.
2. INSTALL 6" WILKINS MODEL 350ADA DOUBLE CHECK DETECTOR ASSEMBLY WITH WATER METER. REFER TO DETAIL 4 ON SHEET C702.
3. INSTALL FIRE DEPARTMENT CONNECTION AT BACKFLOW PREVENTER PER DETAIL 4 ON SHEET C702.

SHEET NOTES:

1. FOR GENERAL NOTES, LEGENDS AND ABBREVIATIONS, SEE SHEET C100.
2. SEE ARCHITECTURAL DRAWINGS FOR OTHER SITE RELATED DIMENSIONS NOT SHOWN ON THIS DRAWING.
3. IT SHALL BE THE RESPONSIBILITY OF THE CONTRACTOR TO VERIFY ALL SURFACE AND/OR UNDERGROUND UTILITIES IN CONFLICT WITH THE PROPOSED DEMOLITION AND DESIGN ITEMS. CONTRACTOR SHALL REPORT ANY DISCREPANCIES AND/OR CONSTRUCTION RELATED ISSUES TO THE OWNER OR DESIGN TEAM PRIOR TO THE COMMENCEMENT OF WORK.
4. CONTRACTOR TO VERIFY IN FIELD THE JOINING TO EXISTING ELEVATION AND THE CURRENT SITE CONDITION WITH THE DESIGN GRADES. CONTRACTOR SHALL REPORT ANY DISCREPANCIES TO THE OWNER OR DESIGN TEAM PRIOR TO THE COMMENCEMENT OF WORK.
5. HAND DIG ONLY AT LOCATIONS WHERE UNDERGROUND UTILITIES NEED TO BE PROTECTED IN PLACE.

OVERALL SITE UTILITY PLAN

30 15 0 30 60

SCALE: 1"=30'

APPL. No. A 03–122864

DSA Stamp

Architect

RACHLIN PARTNERS
8640 National Boulevard
Culver City, CA 90232
310.204.3400

Disclaimer:
THESE DRAWINGS ARE THE PROPERTY OF THE ARCHITECT. THE DESIGNS SHOWN AND DESCRIBED HEREIN INCLUDING ALL TECHNICAL DRAWINGS ARE PROPRIETARY AND CANNOT BE COPIED, DUPLICATED OR COMMERCIALLY EXPLOITED, IN WHOLE OR IN PART. THE DRAWINGS AND SPECIFICATIONS SHALL NOT BE USED BY THE OWNER ON OTHER PROJECTS, FOR ADDITIONS TO THIS PROJECT, OR FOR COMPLETION OF THIS PROJECT BY OTHERS. THE OWNER AGREES TO HOLD HARMLESS, INDEMNIFY AND DEFEND THE ARCHITECT AGAINST ALL DAMAGES, CLAIMS AND LOSSES, INCLUDING DEFENSE COSTS, ARISING OUT OF ANY REUSE OF PLANS AND SPECIFICATIONS WITHOUT THE WRITTEN AUTHORIZATION OF THE ARCHITECT OF RECORD.
Copyright© 2022 Rachlin Partners, All Rights Reserved.

Performing Arts Center
Hacienda La Puente Unified
School District
635 North California Avenue
La Puente, CA 91744

Rev	Date	Issue
1	7.22.22	50% DD
2	10.21.22	50% CD
3	12.09.22	100% CD DSA Submittal
4	6.19.23	100% CD DSA Resubmittal
5	9.20.23	DSA Back Check
1	11.01.23	Addendum No.1

Date: 11.01.2023
Scale: As Shown
Drawn By: --
Checked By: --

Architect / Engineer Stamp

LICENSED ARCHITECT — NO C-30229 — REN 8-31-25 — STATE OF CALIFORNIA
REGISTERED PROFESSIONAL ENGINEER — No. C36079 — Exp. 6/30/24 — CIVIL — STATE OF CALIFORNIA

Consultants
Miyamoto International, Inc.
The Ruzika Company, Inc,
MDC Consulting Engineers
Pocock Design Solutions
Newson Brown Acoustics, LLC
VCA Engineers, Inc.
HJSA Consulting
L.A. Design Associates, Inc.

Sheet Title
OVERALL SITE UTILITY PLAN

Sheet Number
C400

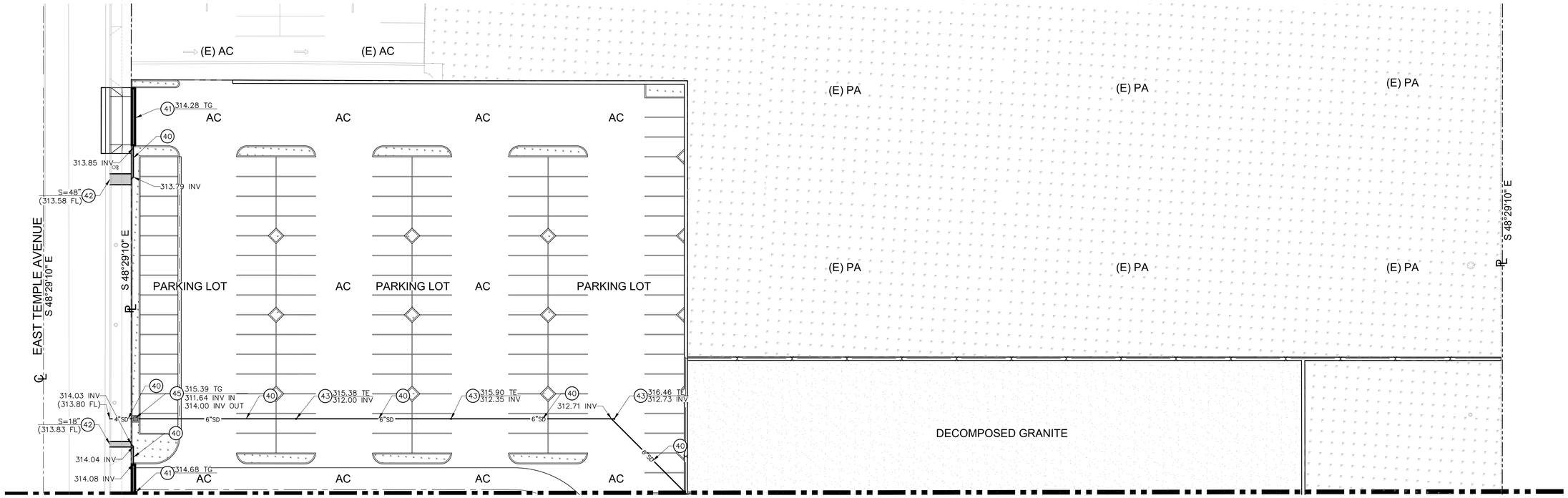

CONSTRUCTION NOTES:

SANITARY SEWER:

1. INSTALL ABS SCHEDULE 40 SANITARY SEWER LINE. SEE PLAN FOR SIZES. FOR TRENCH SECTION REFER TO DETAIL 1 ON SHEET C701.
2. CONNECT TO BUILDING SANITARY SEWER CONNECTION. COORDINATE AND MATCH LOCATION WITH BUILDING PLUMBING DRAWINGS. PROVIDE REDUCING FITTINGS AND COUPLINGS AS NEEDED.
3. CONNECT TO EXISTING ON-SITE SEWER LINE. VERIFY SIZE IN FIELD AND PROVIDE REDUCING FITTINGS AND COUPLINGS AS NEEDED. CONTRACTOR TO VERIFY LOCATION IN FIELD PRIOR TO CONSTRUCTION/INSTALLATION OF SANITARY SEWER SYSTEM.
4. INSTALL SEWER CLEANOUT PER DETAIL 2 ON SHEET C701.
5. EXISTING SEWER LINE TO BE RELOCATED.

DOMESTIC WATER:

20. CONNECT TO BUILDING DOMESTIC WATER CONNECTION. PROVIDE REDUCING FITTINGS AND COUPLINGS AS NEEDED. COORDINATE AND MATCH LOCATION WITH THE BUILDING PLUMBING DRAWINGS.
21. INSTALL COPPER WATER TUBING, TYPE L HARD, ANSI H23.1, ASTM B88, IAPMO IS. MULLER BRASS, CAMBRIDGE-LEE HALSTEAD, OR EQUAL. SEE PLAN FOR SIZES. FOR TRENCH SECTION REFER TO DETAIL 1 ON SHEET C701.
22. INSTALL THRUST BLOCK PER DETAIL 4 ON SHEET C701.
23. CONNECT TO EXISTING WATER MAIN LINE. VERIFY SIZE IN FIELD AND PROVIDE REDUCING FITTINGS AND COUPLINGS AS NEEDED. CONTRACTOR TO VERIFY LOCATION IN FIELD PRIOR TO CONSTRUCTION/INSTALLATION OF NEW DOMESTIC WATER SYSTEM.

FIRE WATER:

30. CONNECT TO BUILDING FIRE WATER LINE CONNECTION. COORDINATE AND MATCH LOCATION WITH THE FIRE PROTECTION DRAWINGS. PROVIDE REDUCING FITTINGS AND COUPLINGS AS NEEDED.
31. INSTALL 6" AWWA C900 PVC, PRESSURE CLASS 200 (DR14) FIRE WATER LINE. SEE PLAN FOR SIZES. FOR TRENCH SECTION REFER TO DETAIL 1 ON SHEET C701. (3)
32. CONNECT TO EXISTING WATER MAIN LINE. VERIFY SIZE IN FIELD AND PROVIDE REDUCING FITTINGS AND COUPLINGS AS NEEDED. CONTRACTOR TO VERIFY LOCATION IN FIELD PRIOR TO CONSTRUCTION/INSTALLATION OF NEW FIRE WATER SYSTEM. CONTRACTOR TO OBTAIN ALL NECESSARY PERMITS PRIOR TO CONNECTION.
33. INSTALL THRUST BLOCK PER DETAIL 4 ON SHEET C701.
34. INSTALL FIRE DEPARTMENT CONNECTION AT BACKFLOW PREVENTER PER DETAIL 4 ON SHEET C702.
35. INSTALL 6" WILKINS MODEL 350ADA DOUBLE CHECK DETECTOR ASSEMBLY WITH WATER METER. REFER TO DETAIL 4 ON SHEET C702.
36. INSTALL FIRE HYDRANT PER DETAIL 5 ON SHEET C701.

STORM DRAIN:

40. INSTALL PVC SDR-26 PIPE STORM DRAIN LINE, SEE PLAN FOR SIZES. FOR TRENCH SECTION REFER TO DETAIL 1 ON SHEET C701.
41. INSTALL TRENCH DRAIN PER DETAIL 3 ON SHEET C701.
42. CONSTRUCT SIDEWALK PARKWAY DRAIN PER SPPWC 151-2.
43. INSTALL CLEANOUT PER DETAIL 2 ON SHEET C701.
44. CONSTRUCT 24"X24" CATCH BASIN WITH KRISTAR FILTER INSERT, PER DETAIL 1 ON SHEET C702.
45. CONSTRUCT 24"X24" BUBBLER CATCH BASIN PER DETAIL 2 ON SHEET C702.

ELECTRICAL:

50. CONSTRUCT ELECTRICAL DUCT BANK PER ELECTRICAL DRAWINGS.
51. CONSTRUCT ELECTRICAL PULL BOX PER ELECTRICAL DRAWINGS.

GAS:

60. INSTALL GAS LINE PER PLUMBING DRAWINGS.
61. CONNECT TO BUILDING GAS LINE. COORDINATE AND MATCH LOCATION WITH THE BUILDING PLUMBING DRAWINGS. PROVIDE A REDUCING FITTING AS APPLICABLE.
62. CONNECT TO EXISTING GAS MAIN LINE. VERIFY SIZE IN FIELD AND PROVIDE REDUCING FITTINGS AND COUPLINGS AS NEEDED. CONTRACTOR TO VERIFY LOCATION IN FIELD PRIOR TO CONSTRUCTION/INSTALLATION OF NEW GAS SYSTEM.

SHEET NOTES:

1. FOR GENERAL NOTES, LEGENDS AND ABBREVIATIONS, SEE SHEET C100.
2. SEE ARCHITECTURAL DRAWINGS FOR OTHER SITE RELATED DIMENSIONS NOT SHOWN ON THIS DRAWING.
3. IT SHALL BE THE RESPONSIBILITY OF THE CONTRACTOR TO VERIFY ALL SURFACE AND/OR UNDERGROUND UTILITIES IN CONFLICT WITH THE PROPOSED DEMOLITION AND DESIGN ITEMS. CONTRACTOR SHALL REPORT ANY DISCREPANCIES AND/OR CONSTRUCTION RELATED ISSUES TO THE OWNER OR DESIGN TEAM PRIOR TO THE COMMENCEMENT OF WORK.
4. CONTRACTOR TO VERIFY IN FIELD THE JOINING TO EXISTING ELEVATION AND THE CURRENT SITE CONDITION WITH THE DESIGN GRADES. CONTRACTOR SHALL REPORT ANY DISCREPANCIES TO THE OWNER OR DESIGN TEAM PRIOR TO THE COMMENCEMENT OF WORK.
5. HAND DIG ONLY AT LOCATIONS WHERE UNDERGROUND UTILITIES NEED TO BE PROTECTED IN PLACE.

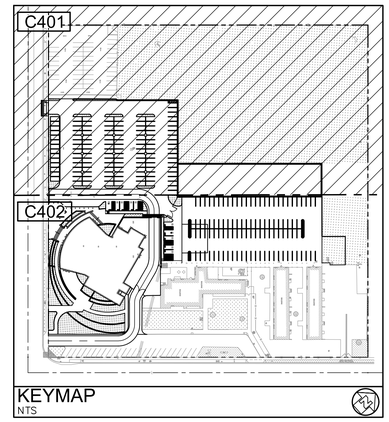

KEYMAP
NTS

ENLARGED SITE UTILITY PLAN

20 10 0 20 40

SCALE: 1"=20'

APPL. No. A 03-122864

DSA Stamp

Architect

RACHLIN PARTNERS
8840 National Boulevard
Culver City, CA 90232
310.204.3400

Disclaimer:
THESE DRAWINGS ARE THE PROPERTY OF THE ARCHITECT. THE DESIGNS SHOWN AND DESCRIBED HEREIN INCLUDING ALL TECHNICAL DRAWINGS ARE PROPRIETARY AND CANNOT BE COPIED, DUPLICATED OR COMMERCIALLY EXPLOITED, IN WHOLE OR IN PART. THE DRAWINGS AND SPECIFICATIONS SHALL NOT BE USED BY THE OWNER ON OTHER PROJECTS, FOR ADDITIONS TO THIS PROJECT, OR FOR COMPLETION OF THIS PROJECT BY OTHERS. THE OWNER AGREES TO HOLD HARMLESS, INDEMNIFY AND DEFEND THE ARCHITECT AGAINST ALL DAMAGES, CLAIMS AND LOSSES, INCLUDING DEFENSE COSTS, ARISING OUT OF ANY REUSE OF PLANS AND SPECIFICATIONS WITHOUT THE WRITTEN AUTHORIZATION OF THE ARCHITECT OF RECORD.
Copyright© 2022 Rachlin Partners, All Rights Reserved.

Performing Arts Center
Hacienda La Puente Unified School District
635 North California Avenue
La Puente, CA 91744

Rev	Date	Issue
1	7.22.22	50% DD
2	10.21.22	50% CD
3	12.09.22	100% CD DSA
4	6.19.23	100% CD DSA Resubmittal
5	9.20.23	DSA Back Check
1	11.01.23	Addendum No.1
2	11.01.23	Addendum No.2
3	12.06.23	Addendum No.3

Date:12.06.2023
Scale: As Shown
Drawn By: --
Checked By: --

Architect / Engineer Stamp

REGISTERED PROFESSIONAL ENGINEER — CHRISTOPHER C. YEE — No. C36079 — Exp. 6/30/24 — CIVIL — STATE OF CALIFORNIA

Consultants
Miyamoto International, Inc.
The Ruzika Company, Inc,
MDC Consulting Engineers
Pocock Design Solutions
Newson Brown Acoustics, LLC
VCA Engineers, Inc.
HJSA Consulting
L.A. Design Associates, Inc.

Sheet Title

ENLARGED SITE UTILITY PLAN

Sheet Number

C401

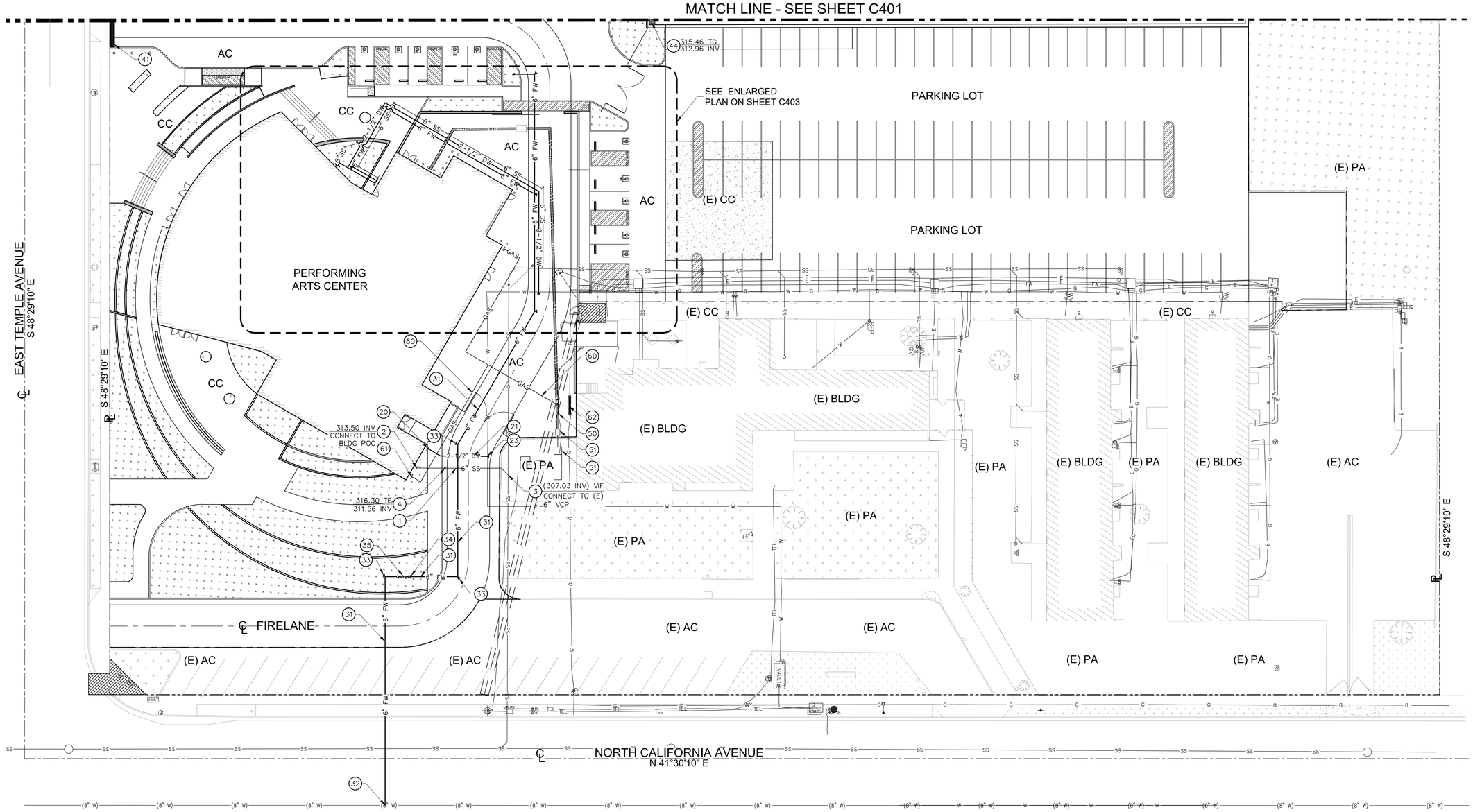

CONSTRUCTION NOTES:

SANITARY SEWER:

1. INSTALL ABS SCHEDULE 40 SANITARY SEWER LINE. SEE PLAN FOR SIZES. FOR TRENCH SECTION REFER TO DETAIL 1 ON SHEET C701.
2. CONNECT TO BUILDING SANITARY SEWER CONNECTION. COORDINATE AND MATCH LOCATION WITH BUILDING PLUMBING DRAWINGS. PROVIDE REDUCING FITTINGS AND COUPLINGS AS NEEDED.
3. CONNECT TO EXISTING ON-SITE SEWER LINE. VERIFY SIZE IN FIELD AND PROVIDE REDUCING FITTINGS AND COUPLINGS AS NEEDED. CONTRACTOR TO VERIFY LOCATION IN FIELD PRIOR TO CONSTRUCTION/INSTALLATION OF SANITARY SEWER SYSTEM.
4. INSTALL SEWER CLEANOUT PER DETAIL 2 ON SHEET C701.
5. EXISTING SEWER LINE TO BE RELOCATED.

DOMESTIC WATER:

20. CONNECT TO BUILDING DOMESTIC WATER CONNECTION. PROVIDE REDUCING FITTINGS AND COUPLINGS AS NEEDED. COORDINATE AND MATCH LOCATION WITH THE BUILDING PLUMBING DRAWINGS.
21. INSTALL COPPER WATER TUBING, TYPE L HARD, ANSI H23.1, ASTM B88, IAPMO IS. MULLER BRASS, CAMBRIDGE-LEE HALSTEAD, OR EQUAL. SEE PLAN FOR SIZES. FOR TRENCH SECTION REFER TO DETAIL 1 ON SHEET C701.
22. INSTALL THRUST BLOCK PER DETAIL 4 ON SHEET C701.
23. CONNECT TO EXISTING WATER MAIN LINE. VERIFY SIZE IN FIELD AND PROVIDE REDUCING FITTINGS AND COUPLINGS AS NEEDED. CONTRACTOR TO VERIFY LOCATION IN FIELD PRIOR TO CONSTRUCTION/INSTALLATION OF NEW DOMESTIC WATER SYSTEM.

FIRE WATER:

30. CONNECT TO BUILDING FIRE WATER LINE CONNECTION. COORDINATE AND MATCH LOCATION WITH THE FIRE PROTECTION DRAWINGS. PROVIDE REDUCING FITTINGS AND COUPLINGS AS NEEDED.
31. INSTALL 6" AWWA C900 PVC, PRESSURE CLASS 200 (DR14) FIRE WATER LINE. SEE PLAN FOR SIZES. FOR TRENCH SECTION REFER TO DETAIL 1 ON SHEET C701.
32. CONNECT TO EXISTING WATER MAIN LINE. VERIFY SIZE IN FIELD AND PROVIDE REDUCING FITTINGS AND COUPLINGS AS NEEDED. CONTRACTOR TO VERIFY LOCATION IN FIELD PRIOR TO CONSTRUCTION/INSTALLATION OF NEW FIRE WATER SYSTEM. CONTRACTOR TO OBTAIN ALL NECESSARY PERMITS PRIOR TO CONNECTION.
33. INSTALL THRUST BLOCK PER DETAIL 4 ON SHEET C701.
34. INSTALL FIRE DEPARTMENT CONNECTION AT BACKFLOW PREVENTER PER DETAIL 4 ON SHEET C702.
35. INSTALL 6" WILKINS MODEL 350ADA DOUBLE CHECK DETECTOR ASSEMBLY WITH WATER METER. REFER TO DETAIL 4 ON SHEET C702.
36. INSTALL FIRE HYDRANT PER DETAIL 5 ON SHEET C701.

STORM DRAIN:

40. INSTALL PVC SDR-26 PIPE STORM DRAIN LINE, SEE PLAN FOR SIZES. FOR TRENCH SECTION REFER TO DETAIL 1 ON SHEET C701.
41. INSTALL TRENCH DRAIN PER DETAIL 3 ON SHEET C701.
42. CONSTRUCT SIDEWALK PARKWAY DRAIN PER SPPWC 151-2.
43. INSTALL CLEANOUT PER DETAIL 2 ON SHEET C701.
44. CONSTRUCT 24"X24" CATCH BASIN WITH KRISTAR FILTER INSERT, PER DETAIL 1 ON SHEET C702.
45. CONSTRUCT 24"X24" BUBBLER CATCH BASIN PER DETAIL 2 ON SHEET C702.

ELECTRICAL:

50. CONSTRUCT ELECTRICAL DUCT BANK PER ELECTRICAL DRAWINGS.
51. CONSTRUCT ELECTRICAL PULL BOX PER ELECTRICAL DRAWINGS.

GAS:

60. INSTALL GAS LINE PER PLUMBING DRAWINGS.
61. CONNECT TO BUILDING GAS LINE. COORDINATE AND MATCH LOCATION WITH THE BUILDING PLUMBING DRAWINGS. PROVIDE A REDUCING FITTING AS APPLICABLE.
62. CONNECT TO EXISTING GAS MAIN LINE. VERIFY SIZE IN FIELD AND PROVIDE REDUCING FITTINGS AND COUPLINGS AS NEEDED. CONTRACTOR TO VERIFY LOCATION IN FIELD PRIOR TO CONSTRUCTION/INSTALLATION OF NEW GAS SYSTEM.

SHEET NOTES:

1. FOR GENERAL NOTES, LEGENDS AND ABBREVIATIONS, SEE SHEET C100.
2. SEE ARCHITECTURAL DRAWINGS FOR OTHER SITE RELATED DIMENSIONS NOT SHOWN ON THIS DRAWING.
3. IT SHALL BE THE RESPONSIBILITY OF THE CONTRACTOR TO VERIFY ALL SURFACE AND/OR UNDERGROUND UTILITIES IN CONFLICT WITH THE PROPOSED DEMOLITION AND DESIGN ITEMS. CONTRACTOR SHALL REPORT ANY DISCREPANCIES AND/OR CONSTRUCTION RELATED ISSUES TO THE OWNER OR DESIGN TEAM PRIOR TO THE COMMENCEMENT OF WORK.
4. CONTRACTOR TO VERIFY IN FIELD THE JOINING TO EXISTING ELEVATION AND THE CURRENT SITE CONDITION WITH THE DESIGN GRADES. CONTRACTOR SHALL REPORT ANY DISCREPANCIES TO THE OWNER OR DESIGN TEAM PRIOR TO THE COMMENCEMENT OF WORK.
5. HAND DIG ONLY AT LOCATIONS WHERE UNDERGROUND UTILITIES NEED TO BE PROTECTED IN PLACE.

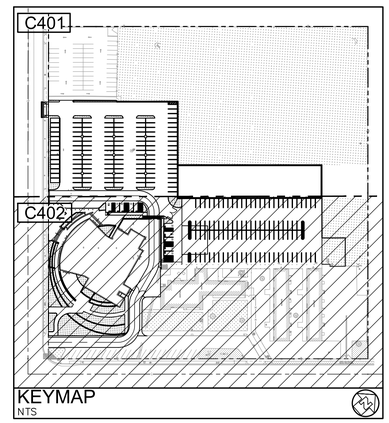

ENLARGED SITE UTILITY PLAN

20 15 0 20 40

SCALE: 1"=20'

APPL. No. A 03-122864

DSA Stamp

Architect

RACHLIN PARTNERS
8840 National Boulevard
Culver City, CA 90232
310.204.3400

Disclaimer:
THESE DRAWINGS ARE THE PROPERTY OF THE ARCHITECT. THE DESIGNS SHOWN AND DESCRIBED HEREIN INCLUDING ALL TECHNICAL DRAWINGS ARE PROPRIETARY AND CANNOT BE COPIED, DUPLICATED OR COMMERCIALLY EXPLOITED, IN WHOLE OR IN PART. THE DRAWINGS AND SPECIFICATIONS SHALL NOT BE USED BY THE OWNER ON OTHER PROJECTS, FOR ADDITIONS TO THIS PROJECT, OR FOR COMPLETION OF THIS PROJECT BY OTHERS. THE OWNER AGREES TO HOLD HARMLESS, INDEMNIFY AND DEFEND THE ARCHITECT AGAINST ALL DAMAGES, CLAIMS AND LOSSES, INCLUDING DEFENSE COSTS, ARISING OUT OF ANY REUSE OF PLANS AND SPECIFICATIONS WITHOUT THE WRITTEN AUTHORIZATION OF THE ARCHITECT OF RECORD.
Copyright© 2022 Rachlin Partners, All Rights Reserved.

Performing Arts Center
Hacienda La Puente Unified
School District
635 North California Avenue
La Puente, CA 91744

Rev	Date	Issue
1	7.22.22	50% DD
2	10.21.22	50% CD
3	12.09.22	100% CD DSA
4	6.19.23	100% CD DSA
Resubmittal		
5	9.20.23	DSA Back Check
1	11.01.23	Addendum No.1
2	11.01.23	Addendum No.2
3	12.06.23	Addendum No.3

Date:12.06.2023
Scale: As Shown
Drawn By: --
Checked By: --

Architect / Engineer Stamp

REGISTERED PROFESSIONAL ENGINEER
MATTHEW C. HUNTER
No. C36079
Exp. 6/30/24
CIVIL
STATE OF CALIFORNIA

Consultants
Miyamoto International, Inc.
The Ruzika Company, Inc,
MDC Consulting Engineers
Pocock Design Solutions
Newson Brown Acoustics, LLC
VCA Engineers, Inc.
HJSA Consulting
L.A. Design Associates, Inc.

Sheet Title

ENLARGED SITE UTILITY PLAN

Sheet Number

C402

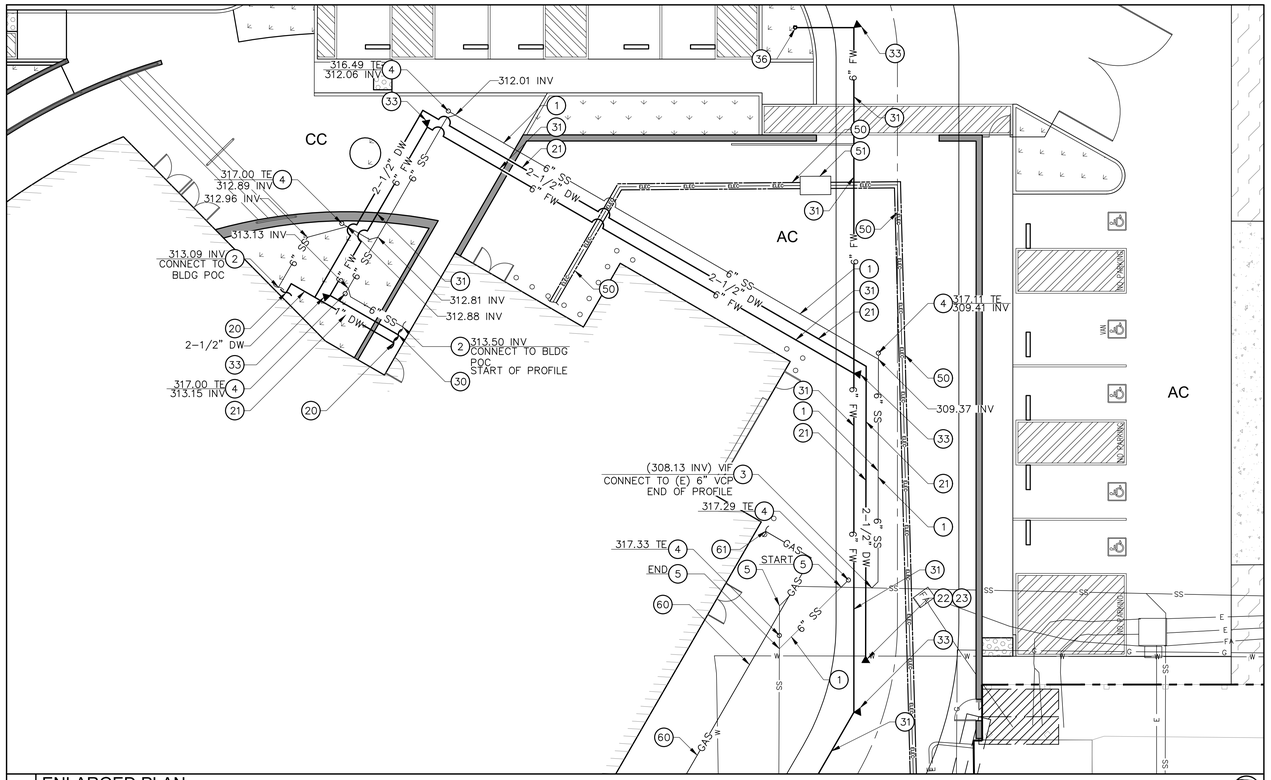

1 ENLARGED PLAN
SCALE: 1" = 10'

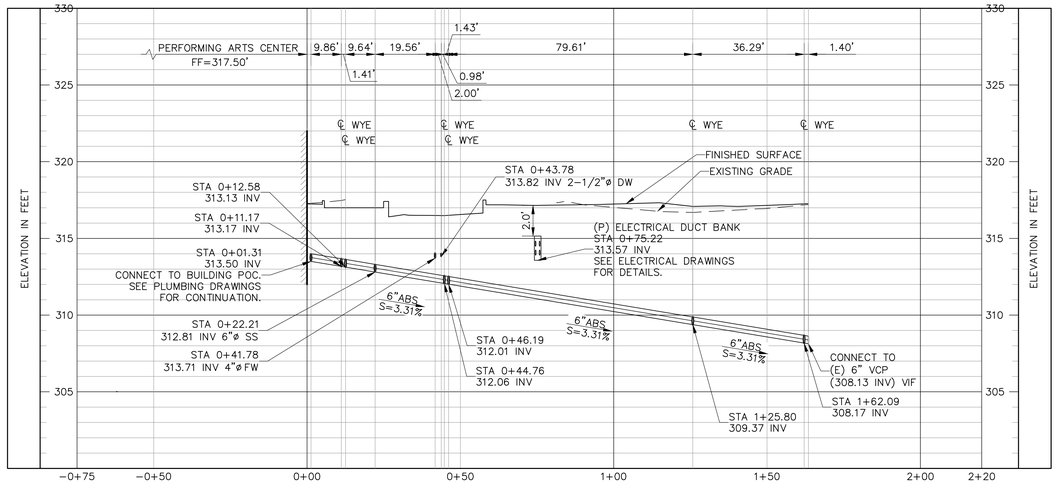

SEWER PROFILE-1
SCALE HOR 1"=20' VER 1"=4'

1
C403

CONSTRUCTION NOTES:

SANITARY SEWER:

1. INSTALL ABS SCHEDULE 40 SANITARY SEWER LINE. SEE PLAN FOR SIZES. FOR TRENCH SECTION REFER TO DETAIL 1 ON SHEET C701.
2. CONNECT TO BUILDING SANITARY SEWER CONNECTION. COORDINATE AND MATCH LOCATION WITH BUILDING PLUMBING DRAWINGS. PROVIDE REDUCING FITTINGS AND COUPLINGS AS NEEDED.
3. CONNECT TO EXISTING ON-SITE SEWER LINE. VERIFY SIZE IN FIELD AND PROVIDE REDUCING FITTINGS AND COUPLINGS AS NEEDED. CONTRACTOR TO VERIFY LOCATION IN FIELD PRIOR TO CONSTRUCTION/INSTALLATION OF SANITARY SEWER SYSTEM.
4. INSTALL SEWER CLEANOUT PER DETAIL 2 ON SHEET C701.
5. EXISTING SEWER LINE TO BE RELOCATED.

DOMESTIC WATER:

20. CONNECT TO BUILDING DOMESTIC WATER CONNECTION. PROVIDE REDUCING FITTINGS AND COUPLINGS AS NEEDED. COORDINATE AND MATCH LOCATION WITH THE BUILDING PLUMBING DRAWINGS.
21. INSTALL COPPER WATER TUBING, TYPE L HARD, ANSI H23.1, ASTM B88, IAPMO IS. MULLER BRASS, CAMBRIDGE-LEE HALSTEAD, OR EQUAL. SEE PLAN FOR SIZES. FOR TRENCH SECTION REFER TO DETAIL 1 ON SHEET C701.
22. INSTALL THRUST BLOCK PER DETAIL 4 ON SHEET C701.
23. CONNECT TO EXISTING WATER MAIN LINE. VERIFY SIZE IN FIELD AND PROVIDE REDUCING FITTINGS AND COUPLINGS AS NEEDED. CONTRACTOR TO VERIFY LOCATION IN FIELD PRIOR TO CONSTRUCTION/INSTALLATION OF NEW DOMESTIC WATER SYSTEM.

FIRE WATER:

30. CONNECT TO BUILDING FIRE WATER LINE CONNECTION. COORDINATE AND MATCH LOCATION WITH THE FIRE PROTECTION DRAWINGS. PROVIDE REDUCING FITTINGS AND COUPLINGS AS NEEDED.
31. INSTALL 6" AWWA C900 PVC, PRESSURE CLASS 200 (DR14) FIRE WATER LINE. SEE PLAN FOR SIZES. FOR TRENCH SECTION REFER TO DETAIL 1 ON SHEET C701. 3
32. CONNECT TO EXISTING WATER MAIN LINE. VERIFY SIZE IN FIELD AND PROVIDE REDUCING FITTINGS AND COUPLINGS AS NEEDED. CONTRACTOR TO VERIFY LOCATION IN FIELD PRIOR TO CONSTRUCTION/INSTALLATION OF NEW FIRE WATER SYSTEM. CONTRACTOR TO OBTAIN ALL NECESSARY PERMITS PRIOR TO CONNECTION.
33. INSTALL THRUST BLOCK PER DETAIL 4 ON SHEET C701.
34. INSTALL FIRE DEPARTMENT CONNECTION AT BACKFLOW PREVENTER PER DETAIL 4 ON SHEET C702.
35. INSTALL 6" WILKINS MODEL 350ADA DOUBLE CHECK DETECTOR ASSEMBLY WITH WATER METER. REFER TO DETAIL 4 ON SHEET C702.
36. INSTALL FIRE HYDRANT PER DETAIL 5 ON SHEET C701.

ELECTRICAL:

50. CONSTRUCT ELECTRICAL DUCT BANK PER ELECTRICAL DRAWINGS.
51. CONSTRUCT ELECTRICAL PULL BOX PER ELECTRICAL DRAWINGS.

GAS:

60. INSTALL GAS LINE PER PLUMBING DRAWINGS.
61. CONNECT TO BUILDING GAS LINE. COORDINATE AND MATCH LOCATION WITH THE BUILDING PLUMBING DRAWINGS. PROVIDE A REDUCING FITTING AS APPLICABLE.

SHEET NOTES:

1. FOR GENERAL NOTES, LEGENDS AND ABBREVIATIONS, SEE SHEET C100.
2. SEE ARCHITECTURAL DRAWINGS FOR OTHER SITE RELATED DIMENSIONS NOT SHOWN ON THIS DRAWING.
3. IT SHALL BE THE RESPONSIBILITY OF THE CONTRACTOR TO VERIFY ALL SURFACE AND/OR UNDERGROUND UTILITIES IN CONFLICT WITH THE PROPOSED DEMOLITION AND DESIGN ITEMS. CONTRACTOR SHALL REPORT ANY DISCREPANCIES AND/OR CONSTRUCTION RELATED ISSUES TO THE OWNER OR DESIGN TEAM PRIOR TO THE COMMENCEMENT OF WORK.
4. CONTRACTOR TO VERIFY IN FIELD THE JOINING TO EXISTING ELEVATION AND THE CURRENT SITE CONDITION WITH THE DESIGN GRADES. CONTRACTOR SHALL REPORT ANY DISCREPANCIES TO THE OWNER OR DESIGN TEAM PRIOR TO THE COMMENCEMENT OF WORK.
5. HAND DIG ONLY AT LOCATIONS WHERE UNDERGROUND UTILITIES NEED TO BE PROTECTED IN PLACE.

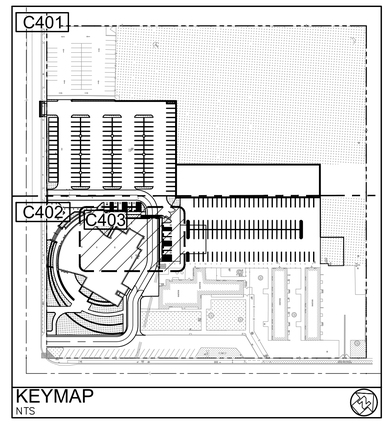

KEYMAP
NTS

APPL. No. A 03-122864

DSA Stamp

Architect

RACHLIN PARTNERS
8840 National Boulevard
Culver City, CA 90232
310.204.3400

Disclaimer:
THESE DRAWINGS ARE THE PROPERTY OF THE ARCHITECT. THE DESIGNS SHOWN AND DESCRIBED HEREIN INCLUDING ALL TECHNICAL DRAWINGS ARE PROPRIETARY AND CANNOT BE COPIED, DUPLICATED OR COMMERCIALLY EXPLOITED, IN WHOLE OR IN PART. THE DRAWINGS AND SPECIFICATIONS SHALL NOT BE USED BY THE OWNER ON OTHER PROJECTS, FOR ADDITIONS TO THIS PROJECT, OR FOR COMPLETION OF THIS PROJECT BY OTHERS. THE OWNER AGREES TO HOLD HARMLESS, INDEMNIFY AND DEFEND THE ARCHITECT AGAINST ALL DAMAGES, CLAIMS AND LOSSES, INCLUDING DEFENSE COSTS, ARISING OUT OF ANY REUSE OF PLANS AND SPECIFICATIONS WITHOUT THE WRITTEN AUTHORIZATION OF THE ARCHITECT OF RECORD.
Copyright© 2022 Rachlin Partners, All Rights Reserved.

Performing Arts Center
Hacienda La Puente Unified
School District
635 North California Avenue
La Puente, CA 91744

Rev	Date	Issue
1	7.22.22	50% DD
2	10.21.22	50% CD
3	12.09.22	100% CD DSA
4	6.19.23	100% CD DSA Resubmittal
5	9.20.23	DSA Back Check
1	11.01.23	Addendum No.1
2	11.01.23	Addendum No.2
3	12.06.23	Addendum No.3

Date:12.06.2023
Scale: As Shown
Drawn By: --
Checked By: --

Architect / Engineer Stamp

REGISTERED PROFESSIONAL ENGINEER
CHRISTOPHER J. CHAMBERS
No. C36079
Exp. 6/30/24
CIVIL
STATE OF CALIFORNIA

Consultants
Miyamoto International, Inc.
The Ruzika Company, Inc,
MDC Consulting Engineers
Pocock Design Solutions
Newson Brown Acoustics, LLC
VCA Engineers, Inc.
HJSA Consulting
L.A. Design Associates, Inc.

Sheet Title
ENLARGED SITE UTILITY PLAN AND SEWER PROFILE

Sheet Number
C403

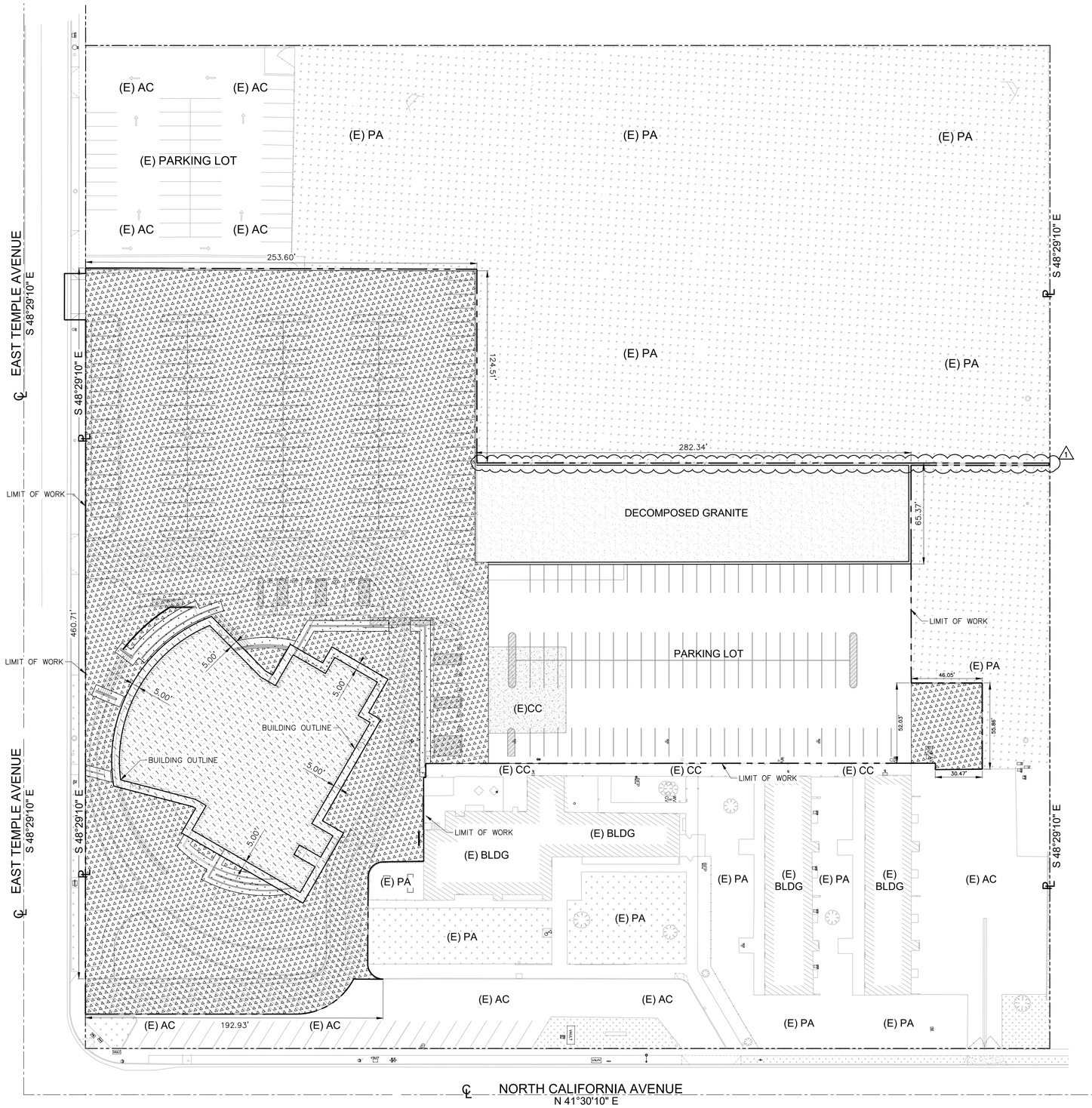

OVER EXCAVATION PLAN

30 15 0 30 60

SCALE: 1"=30'

OVER EXCAVATION LEGENDS:

REFERENCE: SITE GEOTECHNICAL INVESTIGATION REPORT PROJECT NO. 3097.1 DATED JUNE 2022 (REVISED JULY 12, 2022) BY GEOTECHNICAL PROFESSIONALS INC. (GPI)

SECTION 4.4.2 THE BASE OF THE EXCAVATIONS SHOULD EXTEND LATERALLY BEYOND THE EDGE OF BUILDING, IF SPACE IS AVAILABLE, FOR A DISTANCE OF AT LEAST 5 FEET OR EQUAL TO THE DEPTH OF FILL BELOW THE BOTTOM OF THE FLOOR SLAB, WHICHEVER IS GREATER.

SECTION 4.4.2 FOR OTHER MINOR STRUCTURES (SITE WALLS, TRASH ENCLOSURE, ETC.), REMOVALS SHOULD EXTEND AT LEAST 3 FEET BELOW EXISTING GRADE OR 2 FEET BELOW THE BASE OF FOUNDATIONS, WHICHEVER IS DEEPER. THE BASE OF THE EXCAVATIONS SHOULD LATERALLY BEYOND THE EDGE OF FOOTINGS FOE MINOR STRUCTURES, IF SPACE IS AVAILABLE, FOR THE DISTANCE OF AT LEAST EQUAL TO THE DEPTH OF FILL BELOW THE BOTTOM OF THE FOOTINGS.

SECTION 4.4.2 FOR NEW PAVEMENT AND FLATWORK SUBGRADE, REMOVALS SHOULD EXTEND AT LEAST 1 FOOT BELOW EXISTING GRADES OR PROPOSED SUBGRADE, WHICHEVER IS DEEPER.

APPL. No. A 03–122864

DSA Stamp

Architect

RACHLIN
PARTNERS
8840 National Boulevard
Culver City, CA 90232
310.204.3400

Disclaimer:
THESE DRAWINGS ARE THE PROPERTY OF THE ARCHITECT. THE DESIGNS SHOWN AND DESCRIBED HEREIN INCLUDING ALL TECHNICAL DRAWINGS ARE PROPRIETARY AND CANNOT BE COPIED, DUPLICATED OR COMMERCIALLY EXPLOITED, IN WHOLE OR IN PART. THE DRAWINGS AND SPECIFICATIONS SHALL NOT BE USED BY THE OWNER ON OTHER PROJECTS, FOR ADDITIONS TO THIS PROJECT, OR FOR COMPLETION OF THIS PROJECT BY OTHERS. THE OWNER AGREES TO HOLD HARMLESS, INDEMNIFY AND DEFEND THE ARCHITECT AGAINST ALL DAMAGES, CLAIMS AND LOSSES, INCLUDING DEFENSE COSTS, ARISING OUT OF ANY REUSE OF PLANS AND SPECIFICATIONS WITHOUT THE WRITTEN AUTHORIZATION OF THE ARCHITECT OF RECORD.
Copyright© 2022 Rachlin Partners, All Rights Reserved.

Performing Arts Center
Hacienda La Puente Unified
School District
635 North California Avenue
La Puente, CA 91744

Rev	Date	Issue
1	7.22.22	50% DD
2	10.21.22	50% CD
3	12.09.22	100% CD DSA Submittal
4	6.19.23	100% CD DSA Resubmittal
5	9.20.23	DSA Back Check
⚠1	11.01.23	Addendum No.1

Date: 11.01.2023
Scale: As Shown
Drawn By: --
Checked By: --

Architect / Engineer Stamp

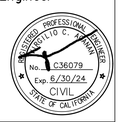

Consultants
Miyamoto International, Inc.
The Ruzika Company, Inc,
MDC Consulting Engineers
Pocock Design Solutions
Newson Brown Acoustics, LLC
VCA Engineers, Inc.
HJSA Consulting
L.A. Design Associates, Inc.

Sheet Title
OVER EXCAVATION PLAN

Sheet Number
C600

LOCATION	CONCRETE PAVEMENT THICKNESS "A"	CRUSHED AGGREGATE BASE THICKNESS "B"	REBAR CLEARANCE
NON-TRAFFIC	4"	4"	1 1/2" MIN
FIRELANE/HEAVY TRAFFIC/PLAYCOURTS	6"	4"	3" MIN

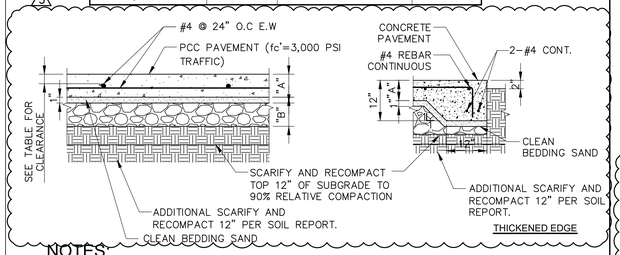

NOTES:

1. CONCRETE, fc'=3000 psi @ 28 DAYS, FOR TRAFFIC ONLY.
2. REBARS, fy=60,000 psi ASTM AG15.
3. FOR WPJ CONSTRUCTION JOINTS AND PATTERN, REFER TO ARCHITECTURAL AND LANDSCAPE DRAWINGS AND SPECIFICATIONS.
4. PAVING SHALL HAVE A MEDIUM BROOM FINISH ON ALL SURFACES LESS THAN 6% AND A HEAVY BROOM FINISH ON ALL SURFACES GREATER THAN 6%.
5. CONCRETE, fc'=2500 PSI @ 28 DAYS, FOR NON TRAFFIC.
6. CRACK CONTROL JOINTS SHOULD BE SPACED @ INTERVALS NOT GREATER THAN 10' USING SAWCUTS AND EXTEND MINIMUM OF 1/4 THE SLAB THICKNESS.
7. FOR FINISH SURFACES, COLOR INTEGRATION, EXPANSION JOINTS AND OTHER PAVEMENT SURFACE FEATURES, SEE ARCHITECTURAL & LANDSCAPE DRAWINGS.
8. PROVIDE 1/2" EXPANSION JOINT AT THE BUILDING.
9. FOR PAVEMENT SUBJECT TO VEHICULAR TRAFFIC, OVEREXCAVATE THE UPPER 2FT OF EXISTING SUBGRADE OR TO A DEPTH THAT PROVIDES 2FT OF COMPACTED FILL BENEATH PAVEMENT SECTION, WHICHEVER IS DEEPER.
10. FOR CONSTRUCTION JOINTS, EXPANSION JOINTS, AND FINISH SURFACE REQUIREMENTS, REFER TO DETAILS 3 & 4 ON THIS SHEET.

1 CONCRETE PAVEMENT SECTION
NOT TO SCALE

LOCATION	A C		BASE COURSE		
	THICKNESS "A"	CLASS	THICKNESS "B"	TYPE	GRADE
TRACK LOCATION/ PARKING/LIGHT TRAFFIC	3"	C2	6"	CAB	FINE
FIRELANE	3"	C2	12"	CAB	FINE

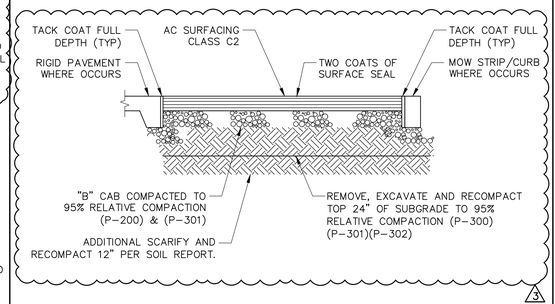

NOTES:

1. FOR PAVEMENT TRANSITION REFER TO DETAIL 3 ON THIS SHEET.
2. THE EXISTING GRADE IN THIS AREA SHOULD BE REMOVED AND RECOMPACTED A MINIMUM OF TWELVE INCHES (12") BELOW THE PROPOSED SUBGRADE ELEVATION.

2 ASPHALT PAVEMENT SECTION
NOT TO SCALE

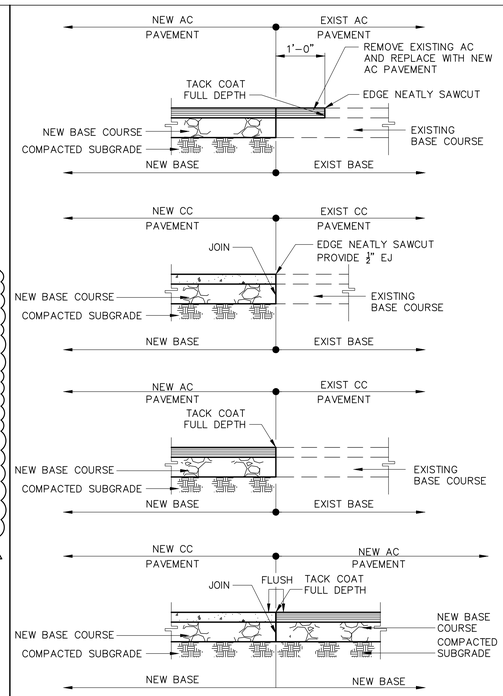

3 PAVEMENT TRANSITION DETAIL
NOT TO SCALE

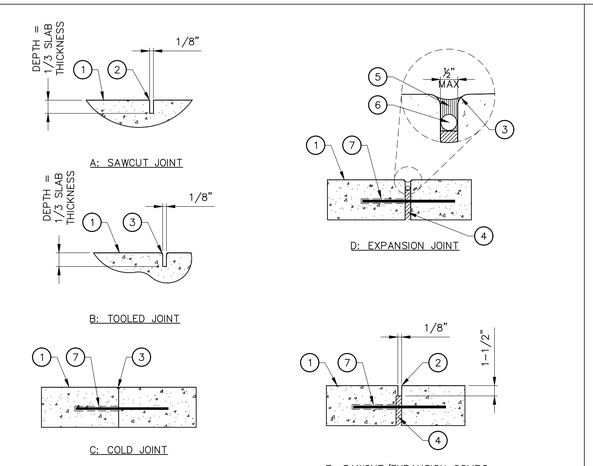

LEGENDS:

1. PAVING FINISH SURFACE.
2. SAWCUT.
3. 1/8" R. @ EDGES, TYP.
4. PREMOLDED E.J. FILLER.
5. JOINT SEALANT. COLOR TO BE SELECTED BY ARCHITECT. SUBMIT COLOR SAMPLES PRIOR TO INSTALLATION.
6. BACKER ROD.
7. 18" #4 REBAR W/ 'SPEED DOWEL' @ 36" O.C., CENTER IN CONC. AT COLD JOINTS & E.J.'S.
8. CONTROL JOINTS 20 O.C MAX. COORDINATE WITH LANDSCAPE DRAWING FOR JOINT LOCATIONS.
9. CONTRACTOR TO SUBMIT SHOP DRAWINGS OF CONTROL JOINT AND EXPANSION JOINT LAYOUT.

4 JOINT DETAIL
NOT TO SCALE

ASPHALT PAVEMENT REPAIR SPECIFICATION:

1. PREPARATION OF SURFACES: PRIOR TO FILLING IN CRACKS, CLEAN EXISTING BITUMINOUS SURFACING OF LOOSE AND FOREIGN MATERIALS WITH A FILM OF ASPHALT EMULSION.
2. REPAIR OF EXISTING SURFACING:
   A. FILL CRACKS ¼ INCH WIDE AND LESS WITH RS-1 EMULSION AND SILICA SAND OR OTHER REQUIRED MATERIAL. CRACKS LARGER THAN ¼ INCH WIDE SHALL BE FILLED WITH TYPE C2 ASPHALT CONCRETE AS SPECIFIED. CRACKS SHALL BE FILLED TO THE LEVEL OF ADJACENT SURFACING.
   B. WHERE LOW AREAS, HOLES, OR DEPRESSIONS OCCUR IN EXISTING SURFACING, REPAIR WITH EMULSIFIED ASPHALT. INSTALL MATERIAL, STRIKE OFF THE EMULSIFIED ASPHALT WITH A STRAIGHTEDGE FLUSH WITH ADJOINING SURFACING. FINISH WITH A STEEL TROWEL, AND AFTER DEHYDRATION, COMPACT BY ROLLING OR TAMPING.
3. TESTING: FLOOD TEST ENTIRE AREA IN PRESENCE OF THE PROJECT INSPECTOR. ENTIRE AREA TESTED SHALL BE FREE OF STANDING WATER OR PUDDLES.
4. SURFACE SEAL: AFTER SURFACE HAS BEEN REPAIRED AND TESTED, INSTALL SEAL COAT OVER ENTIRE AREA INDICATED.
   A. INSTALL SEAL COAT IN STRICT ACCORDANCE WITH MANUFACTURER'S WRITTEN DIRECTIONS AND RECOMMENDATIONS.
   B. INSTALL TWO COATS OF SURFACE SEAL TO NEW BITUMINOUS SURFACING. FIRST COAT SHALL BE INSTALLED BEFORE FLOOD TESTING. CLEAN SURFACE AND ALLOW TO DRY BEFORE INSTALLING SECOND COAT. SECOND COAT SHALL BE INSTALLED AFTER BITUMINOUS SURFACING HAS PASSED FLOOD TEST.

5 SLURRY COAT DETAIL
NOT TO SCALE

6 DRIVEWAY DETAIL
NOT TO SCALE

NOTES:

1. PROVIDE 1/4" EXPANSION JOINT WITH PREFORMED JOINT FILLER AT ALL ANGLE POINTS AND THE BEGINNING AND END OF ALL CURVES.
2. PROVIDE CONTRACTION JOINTS ALONG TOP AND FACE OF CURB CONSISTING OF ONE INCHDEEP CUT SCORES AT 20' O.C. MAX.
3. WHERE A WALK IS ADJACENT TO THE CURB, THE JOINTSSHALL LINE WITH JOINTS IN THE WALK.

7 CONCRETE CURB DETAIL
NOT TO SCALE

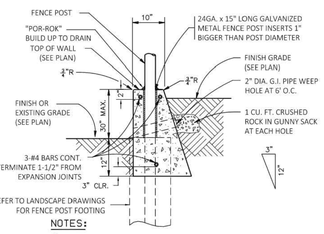

8 GRAVITY WALL DETAIL
NOT TO SCALE

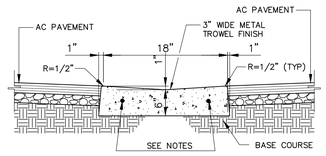

NOTES:

1. USE 2-#4 BARS CONTINUOUS FOR 18" GUTTER.

9 CONCRETE V-GUTTER
NOT TO SCALE

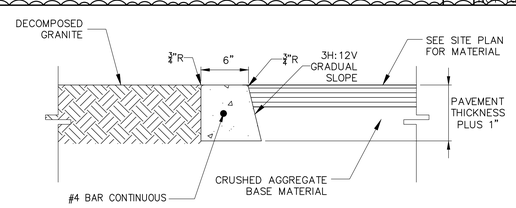

NOTES:

1. CONCRETE, f'c = 2,500 psi @28 DAYS.
2. REBARS, fy = 60,000 psi AS PER ASTM A615.

10 MOWSTRIP DETAIL
NOT TO SCALE

APPL. No. A 03-122864

DSA Stamp

Architect

RACHLIN PARTNERS
8840 National Boulevard
Culver City, CA 90232
310.204.3400

Disclaimer:
THESE DRAWINGS ARE THE PROPERTY OF THE ARCHITECT. THE DESIGNS SHOWN AND DESCRIBED HEREIN INCLUDING ALL TECHNICAL DRAWINGS ARE PROPRIETARY AND CANNOT BE COPIED, DUPLICATED OR COMMERCIALLY EXPLOITED, IN WHOLE OR IN PART. THE DRAWINGS AND SPECIFICATIONS SHALL NOT BE USED BY THE OWNER ON OTHER PROJECTS, FOR ADDITIONS TO THIS PROJECT, OR FOR COMPLETION OF THIS PROJECT BY OTHERS. THE OWNER AGREES TO HOLD HARMLESS, INDEMNIFY AND DEFEND THE ARCHITECT AGAINST ALL DAMAGES, CLAIMS AND LOSSES, INCLUDING DEFENSE COSTS, ARISING OUT OF ANY REUSE OF PLANS AND SPECIFICATIONS WITHOUT THE WRITTEN AUTHORIZATION OF THE ARCHITECT OF RECORD.
Copyright© 2022 Rachlin Partners, All Rights Reserved.

Performing Arts Center
Hacienda La Puente Unified School District
635 North California Avenue
La Puente, CA 91744

Rev	Date	Issue
1	7.22.22	50% DD
2	10.21.22	50% CD
3	12.09.22	100% CD DSA
4	6.19.23	100% CD DSA
Resubmittal		
5	9.20.23	DSA Back Check
1	11.01.23	Addendum No.1
2	11.01.23	Addendum No.2
3	12.13.23	Addendum No.3

Date:12.13.2023
Scale: As Shown
Drawn By: --
Checked By: --

Architect / Engineer Stamp

REGISTERED PROFESSIONAL ENGINEER — No. C36079 — Exp. 6/30/24 — CIVIL — STATE OF CALIFORNIA

Consultants
Miyamoto International, Inc.
The Ruzika Company, Inc,
MDC Consulting Engineers
Pocock Design Solutions
Newson Brown Acoustics, LLC
VCA Engineers, Inc.
HJSA Consulting
L.A. Design Associates, Inc.

Sheet Title

MISCELLANEOUS DETAILS

Sheet Number

C700

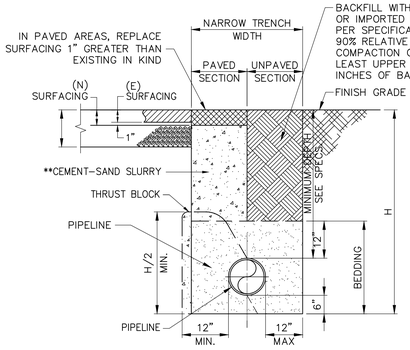

NARROW UNSUPPORTED VERTICAL WALLED TRENCH WIDTH

NOMINAL PIPE DIAMETER (INCHES)	NARROW TRENCH WIDTH MIN. (INCHES)
4	18
6	18
8	18
10	18
12	18

** CEMENT-SAND SLURRY = MIN. 2-SACK MIX HAVING A SLUMP NO GREATER THAN 5 INCHES.

NOTES:

1. PAVEMENT FINISH SURFACE SHALL BE A SMOOTH CONTINUATION OF ADJOINING PAVED SURFACE.
2. PIPELINE BEDDING MATERIAL, TRENCH BACKFILL MATERIAL, AND COMPACTION SHALL COMPLY WITH SSPWC.
3. BEDDING MATERIALS CONSISTING OF SAND, GRAVEL, OR CMB SHOULD BE USED TO BACKFILL AROUND UTILITY PIPES TO APPROXIMATELY ONE FOOT ABOVE THE TOP OF THE PIPE. ONSITE SOILS WHICH HAVE A SAND EQUIVALENT (SE) OF 30 OR GREATER CAN ALSO BE USED AS BEDDING MATERIAL. NO MORE THAN 30% OF BACKFILL VOLUME SHOULD BE LARGER THAN ¾". PRIOR TO PLACING THE PIPES, THE PIPE TRENCH SUBGRADE SHOULD BE OBSERVED BY A REPRESENTATIVE OF THE PROJECT GEOTECHNICAL ENGINEER. IN THE LARGEST DIMENSION. IMPORTED BACKFILL SHOULD BE APPROVED BY PROJECT GEOTECHNICAL CONSULTANT PRIOR TO DELIVERY AT THE SITE.
4. IT IS RECOMMENDED THAT UTILITY TRENCHES ARE NOT BE PLACED OR PARALLELED TO AND BELOW A 1½:1 PLANE PROJECTED DOWN FROM THE BASE OF THE OUTER EDGE OF A CONVENTIONAL FOUNDATION.
5. IF THE EXPOSED SUBGRADE IS LOOSE OR UNSTABLE, THE UNSUITABLE SUBGRADE SOIL MUST BE EXCAVATED AND REPLACED WITH BEDDING MATERIAL. BEDDING MUST BE PLACED UNIFORMLY ON EACH SIDE OF THE PIPE AND MECHANICALLY COMPACTED.
6. FLOODING OR JETTING TO DENSIFY THE BEDDING MATERIALS IS NOT ALLOWED DUE TO THE CLAYEY NATURE OF ONSITE SOILS.
7. THE BACKFILL FOR THE REMAINING PORTION OF THE TRENCH ABOVE THE PIPES SHOULD BE PLACED IN LOOSE LIFTS NOT TO EXCEED 8 INCHES, MOISTURE-CONDITIONED WITHIN OPTIMUM AND 2 PERCENT ABOVE OPTIMUM MOISTURE CONTENT, AND MECHANICALLY COMPACTED TO AT LEAST 90 PERCENT RELATIVE COMPACTION IN ACCORDANCE WITH ASTM D1557. THINNER LIFTS MAY BE NECESSARY TO ACHIEVE THE RECOMMENDED LEVEL OF COMPACTION OF THE BACKFILL DUE TO EQUIPMENT LIMITATIONS.
8. THE HIGHER COMPACTION IS REQUIRED FOR FILL MATERIAL THAT HAS LESS THAN FIFTEEN PERCENT (15%) OF THE MATERIAL FINER THAN 0.005MM.
9. TRENCHES IN PAVEMENT AREAS SHOULD BE CAPPED WITH AT LEAST 12 INCHES OF COMPACTED, ON-SITE SOIL SIMILAR TO THAT OF THE ADJOINING SUBGRADE. THE UPPER 12 INCHES OF TRENCH BACKFILL IN AREAS TO BE PAVED SHOULD BE COMPACTED TO AT LEAST 95 PERCENT RELATIVE COMPACTION. SPECIAL CARE SHOULD BE TAKEN IN THE CONTROL OF UTILITY TRENCH BACKFILLING IN THE PAVEMENT AREAS.
10. PIPELINE BEDDING MAY BE LEAN CONCRETE CONSISTING OF TWO SACKS OF PORTLAND CEMENT PER CUBIC YARD OF SLURRY IN LIEU OF SAND AS LONG AS SLURRY IS VIBRATED IN PLACE.
11. MINIMUM COVERAGE OF UTILITIES IS 36-INCHES. IF THIS CANNOT BE ATTAINED, CAP WITH 1-SACK CONCRETE SLURRY. IN PAVING AREAS, BACKFILL TRENCHES WITH SLURRY UP TO BOTTOM OF PAVING. IN LANDSCAPE AREAS, SLURRY IS ALLOWED UP TO TWO-FEET BELOW GRADE.
12. PROVIDE METALLIC WARNING TAPE 12-INCHES BELOW GRADE ABOVE UTILITIES.
13. A MINIMUM OF 6-INCH THICK BEDDING MATERIAL SHALL BE PLACED BELOW THE BOTTOM OF UTILITY LINES, ON A FIRM AND UNYIELDING SUBGRADE. THE BEDDING MATERIAL SHALL MEET THE SPECIFICATIONS PROVIDED IN THE LATEST EDITION OF THE STANDARD SPECIFICATIONS FOR PUBLIC WORKS CONSTRUCTION (GREENBOOK). SAND OR GRAVEL SHALL BE COMPACTED IN ACCORDANCE WITH GREENBOOK SPECIFICATIONS.
14. THE PIPE INVERT SHALL BE UNDERLAIN WITH AT LEAST 6" OF BEDDING MATERIAL CONSISTING OF SELECT SANDY SOILS WITH A SAND EQUIVALENT (SE) OF 30 OR GREATER AS SPECIFIED IN SECTION 306-1.2.1 OF THE GREENBOOK. BEDDING MATERIAL BELOW THE PIPE INVERT SHALL BE COMPACTED TO AT LEAST 90 PERCENT RELATIVE COMPACTION AS DETERMINED BY ASTM D1557.
15. THE PIPE ZONE BACKFILL SHALL EXTEND FROM THE INVERT OF THE PIPE TO A LEAST 6" ABOVE THE PIPE. THIS ZONE SHALL ALSO BE BACKFILLED WITH SANDY MATERIAL SIMILAR TO THE BEDDING AND MECHANICALLY COMPACTED TO 90 PERCENT RELATIVE COMPACTION.

1 TRENCH SECTION
NOT TO SCALE

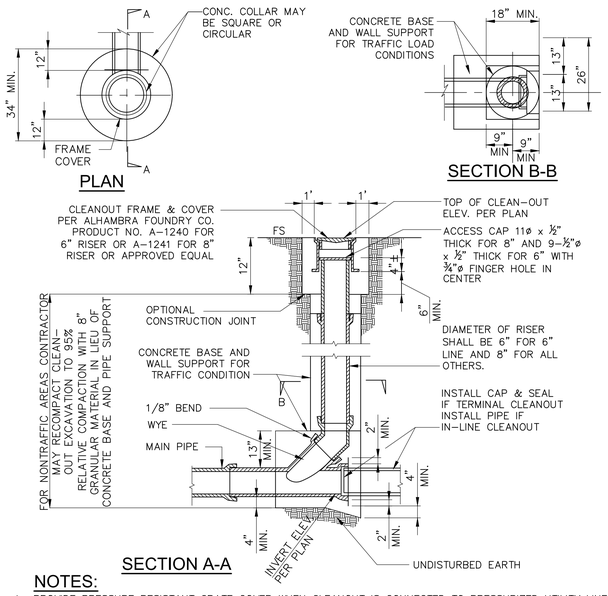

NOTES:

1. PROVIDE PRESSURE RESISTANT GRATE COVER WHEN CLEANOUT IS CONNECTED TO PRESSURIZED UTILITY LINE.

2 STORMDRAIN AND SEWER CLEANOUT DETAIL
NOT TO SCALE

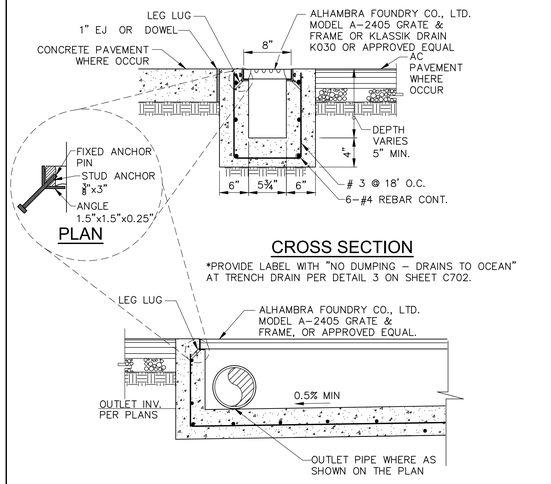

NOTE:

1. GRATE MUST BE VANDAL RESISTANT AND TRAFFIC RATED.
2. CONTRACTOR CAN ALSO USE PRE-CAST TRENCH DRAINS. SUBMIT MANUFACTURER'S CATALOG AND SHOP DRAWING (IF APPLICABLE) FOR APPROVAL.
3. CONTRACTOR SHALL COORDINATE THE CONCRETE FINISH WITH LANDSCAPE DRAWINGS.
4. CONCRETE, fc'=4,500 psi @ 28 DAYS, TYPE V CEMENT. REBARS, fy=60,000 psi ASTM A615.

3 TRENCH DRAIN DETAIL
NOT TO SCALE

TABLE 1

MINIMUM BEARING AREAS IN SQ.FT.

MAIN SIZE	TEE	90° BEND	45° BEND	22 1/2° BEND
6"	4	4	4	3
8"	5	7	4	3
10"	9	12	6	4
12"	12	16	9	6

BASED ON 150 PSI W.W.R. PRESSURE & SOIL BEARING LOADS OF 2000 PSF THE RATIO OF WIDTH TO HEIGHT SHALL NOT EXCEED 1 1/2 TO 1

TEES,PLUGS,CAPS & HYDRANTS.

TABLE II

SOIL TYPE	MAX. ALLOWABLE SOIL BEARING VALUES	FACTORS FOR INCREASING AREAS IN TABLE 1
LOOSE SAND	500 PSF	4
SOFT SANDY CLAY	1000 PSF	2
ADOBE	1000 PSF	2
COMPACT FINE SAND	2000 PSF	1
COMPACT COARSE SAND	2000 PSF	1
MEDIUM STIFF CLAY	2000 PSF	1

THE CONTRACTOR SHALL BE RESPONSIBLE FOR DETERMINING THE SAFE SOIL BEARING VALUES AND SIZE OF BEARING AREAS.

BASED ON 2 FEET MINIMUM DEPTH OF COVER OVER THE PIPE.

GENERAL NOTES:

1. ALL ANCHOR AND THRUST BLOCKS SHALL BEAR AGAINST UNDISTURBED SOIL.
2. MINIMUM ALLOWABLE WATER PRESSURE FOR DESIGN OF THRUST BLOCKS IS 150 PSI. BEARING AREA INCREASE IN PRESSURE.
3. ALL CONCRETE USED IN THRUST BLOCKS SHALL ATTAIN 2000 PSI STRENGTH.
4. ALL ANCHOR RODS SHALL BE REINFORCING STEEL AND A MINIMUM OF 1/2-INCH IN DIAMETER.
5. USE ANCHOR BLOCKS AT VERTICAL BENDS WHEN PIPE IS ABOVE OR BELOW GROUND. SIZE OF BLOCK AND ROD SHALL BE AS SHOWN ON THE PLANS OR AS DETERMINED BY THE ENGINEER IN THE FIELD.
6. USE 30 POUND FELT TO INSURE COLD JOINT.
7. CONCRETE SHALL NOT COME INTO DIRECT WITH ASBESTOS CEMENT PIPE.
8. FOR PIPE 14" IN DIAMETER OR LARGER ENGINEER IS TO SUBMIT CALCULATIONS.

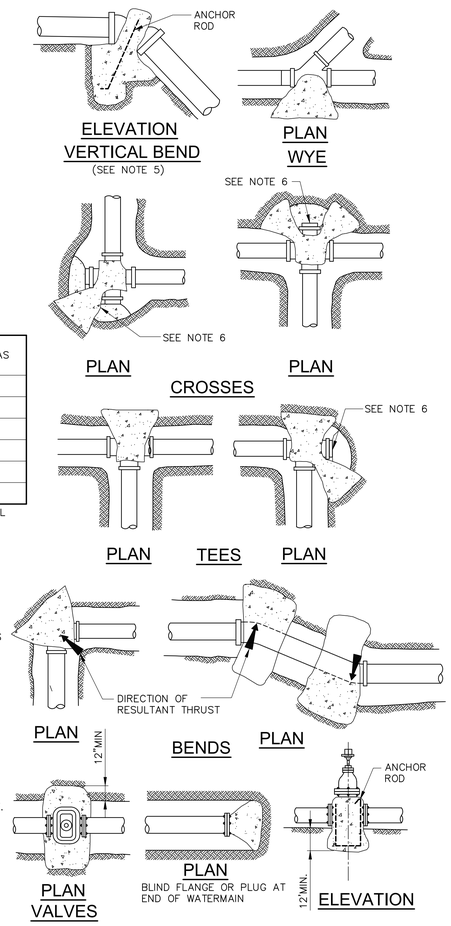

4 THRUST BLOCK DETAILS
NOT TO SCALE

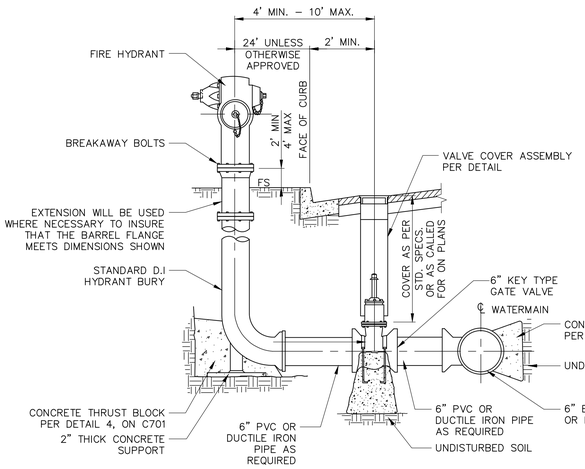

NOTES

1. BARRICADES, FENCES, WALLS, LANDSCAPING, ETC. SHALL NOT BE INSTALLED OR PLANTED WITHIN 3' OF A HYDRANT.
2. FIRE HYDRANT SHALL BE ONE OF THE FOLLOWING
   A. CLOW / RICH - NO. 550, 555 OR 850.
   B. JAMES JONES - NO. J3700 - FLUTED BARREL
   C. MUELLER - A480 - E
3. HYDRANT SHALL BE SUPPLIED WITH 2-1/2" x 4" OUTLETS AND 1-1/4" OR 1-3/4" PENTAGON NUTS ON CUPS AND OPERATING VALVES.
4. HYDRANT SHALL BE PAINTED WITH O.S.H.A. SAFETY YELLOW AMERITONE 719 OR APPROVED EQUAL.
5. HYDRANT BURY, VALVE AND TEE SHALL HAVE EITHER RING-TITE JOINTS OR MECHANICAL JOINTS COMPATIBLE WITH PIPE MATERIAL USED.
6. ALL PIPE AND FITTINGS FOR HYDRANT INSTALLATION SHALL BE CLASS 200.

5 FIRE HYDRANT DETAIL
NOT TO SCALE

APPL. No. A 03-122864

IDENTIFICATION STAMP DIV. OF THE STATE ARCHITECT
APP: 03-122864 INC:
REVIEWED FOR
SS ☑ FLS ☑ ACS ☑
DATE: 10/03/2023

DSA Stamp

Architect

RACHLIN PARTNERS
8840 National Boulevard
Culver City, CA 90232
310.204.3400

Disclaimer:
THESE DRAWINGS ARE THE PROPERTY OF THE ARCHITECT. THE DESIGNS SHOWN AND DESCRIBED HEREIN INCLUDING ALL TECHNICAL DRAWINGS ARE PROPRIETARY AND CANNOT BE COPIED, DUPLICATED OR COMMERCIALLY EXPLOITED, IN WHOLE OR IN PART. THE DRAWINGS AND SPECIFICATIONS SHALL NOT BE USED BY THE OWNER ON OTHER PROJECTS, FOR ADDITIONS TO THIS PROJECT, OR FOR COMPLETION OF THIS PROJECT BY OTHERS. THE OWNER AGREES TO HOLD HARMLESS, INDEMNIFY AND DEFEND THE ARCHITECT AGAINST ALL DAMAGES, CLAIMS AND LOSSES, INCLUDING DEFENSE COSTS, ARISING OUT OF ANY REUSE OF PLANS AND SPECIFICATIONS WITHOUT THE WRITTEN AUTHORIZATION OF THE ARCHITECT OF RECORD.
Copyright© 2022 Rachlin Partners, All Rights Reserved.

Performing Arts Center
Hacienda La Puente Unified
School District
635 North California Avenue
La Puente, CA 91744

Rev	Date	Issue
1	7.22.22	50% DD
2	10.21.22	50% CD
3	12.09.22	100% CD DSA Submittal
4	6.19.23	100% CD DSA Resubmittal
5	9.20.23	DSA BACK CHECK

Date: 9.8.2023
Scale: As Shown
Drawn By: --
Checked By: --

Architect / Engineer Stamp

LICENSED ARCHITECT — NO. C-26229 — REN. 8-31-25 — STATE OF CALIFORNIA
REGISTERED PROFESSIONAL ENGINEER — MARCELLO C. [illegible] — No. C36079 — Exp. 6/30/24 — CIVIL — STATE OF CALIFORNIA

Consultants
Miyamoto International, Inc.
The Ruzika Company, Inc,
MDC Consulting Engineers
Pocock Design Solutions
Newson Brown Acoustics, LLC
VCA Engineers, Inc.
HJSA Consulting
L.A. Design Associates, Inc.

Sheet Title

MISCELLANEOUS DETAILS

Sheet Number

C701

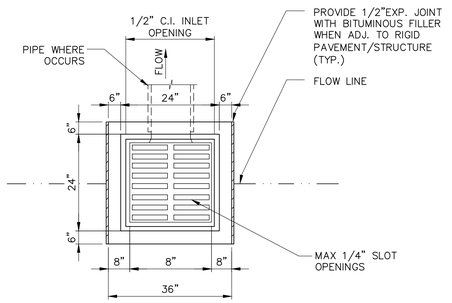

PLAN

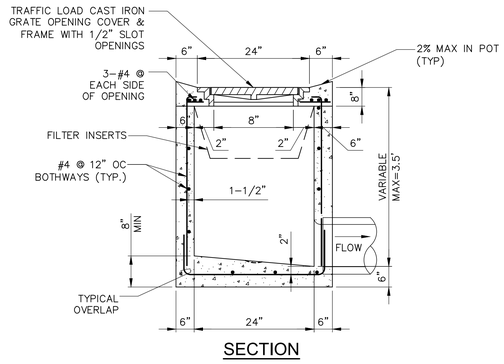

SECTION

NOTES:

1. USE 3/4" DIA. PIPE BAR SPACERS ASSEMBLED ON (2) 1/2" DIA. RODS WITH THREADS AND NUTS AT BOTH ENDS.
2. ALL METAL PARTS SHALL BE GALVANIZED AFTER FABRICATION AND WELDING, AND BEFORE ASSEMBLING.
3. FRAME AND GRATE SHALL BE SIMILAR TO ALHAMBRA FOUNDRY CO. LTD. SERIES MODEL NO. 1581 OR BROOKS PRODUCTS, INC. OR APPROVED EQUAL. GRATES MUST COMPLY WITH ALL ADA REQUIREMENTS.
4. GRATES SHALL BE OF VANDAL-RESISTANT CONSTRUCTION WITH 1/4"MAX OPENINGS.
5. FRAME AND GRATE SHALL BE TRAFFIC-RATED WHEN INSTALLED IN VEHICLE, PARKING AREAS.
6. GRATE MUST COMPLY WITH ADA REQUIREMENTS.
7. PROVIDE 1/2" MAX GRID/OPENINGS IN GRATING IN THE DIRECTION OF TRAFFIC FLOW.
8. INSTALL DEBRIS CATCH WITH SEDIMENT FILTER BAGS-PER CATCHBASINFILTER.COM 714-401-7742 PART NO. RGS304, JOHN@FOSSILFILTER.NET MODEL OR APPROVED EQUAL.
9. PROVIDE "NO DUMPING" STENCIL PER DETAIL 3 ON THIS SHEET.
10. SLOPE ADJACENT PAVEMENT AT 2% MAX TOWARDS GRATE WHEN PLACED WITHIN ACCESSIBLE PATH OF TRAVEL PER ARCHITECTURAL DRAWINGS.
11. CONCRETE, f'c=2,500 PSI @ 28 DAYS PER SSPWC.
12. REBARS, Fy=60,000 PSI ASTM 615, GRADE 60.
13. INSTALL KRISTAR FILTER FABRIC INSERT PER WWW.KRISTAR.COM.

1 CATCH BASIN DETAIL
NOT TO SCALE

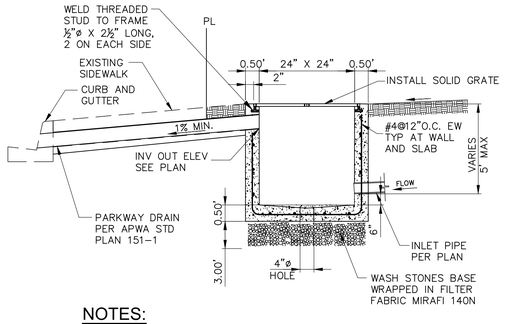

NOTES:

1. ALL METAL PARTS SHALL BE GALVANIZED AFTER FABRICATION AND WELDING, AND BEFORE ASSEMBLING.
2. FRAME AND GRATE SHALL BE SIMILAR TO ALHAMBRA FOUNDRY CO. LTD. SERIES OR BROOKS PRODUCTS, INC. OR APPROVED EQUAL.
3. GRATES SHALL BE OF VANDAL-RESISTANT CONSTRUCTION.
4. FRAME AND GRATE SHALL BE H-20 TRAFFIC-RATED WHEN INSTALLED IN PAVED (ASPHALT OR CONCRETE) AREAS.

2 24"X 24" BUBBLER CATCH BASIN
NOT TO SCALE

NOTES:

1. PROVIDE 8" MIN DIAMETER FOR STENCIL.
2. STENCIL IN BLUE PAINT NEAR ALL CATCH BASIN DRAINS TO READ "NO DUMPING, DRAINS TO OCEAN".
3. STENCILS MAY BE PURCHASED AT THE LOCAL COUNTY BUILDING AND SAFETY OFFICE AT 626-458-6390.

3 NO DUMPING SYMBOL
NOT TO SCALE

ZURN WILKINS

Model 350ADA
Double Check Detector Assembly

Application
Designed for installation on water lines in fire protection systems to protect against both backsiphonage and backpressure of polluted water into the potable water supply. Model 350ADA shall provide protection where a potential health hazard does not exist. Incorporates metered by-pass to detect leaks and unauthorized water use.

Standards Compliance (Horizontal & Vertical)
- ASSE® Listed 1048
- AWWA Compliant C510 (with gates only), and C550
- CSA® Certified B64.5
- UL® Classified
- C-UL® Classified
- FM® Approved
- Approved by the Foundation for Cross Connection Control and Hydraulic Research at the University of Southern California
- NYC MEA 221-04M-2 (2 1/2" - 8")
- Meets the requirements of NSF/ANSI 61*

*0.25% MAX. WEIGHTED AVERAGE LEAD CONTENT.
By-Pass Backflow Assembly 3/4" Model 950XLD

Materials

Main valve body	Ductile Iron ASTM A 536
Access covers	Ductile Iron ASTM A 536
Coatings	NSF Approved electrostatic epoxy finish
Internals	Stainless steel, 300 Series NORYL™
Fasteners & Springs	Stainless Steel, 300 Series
Elastomers	EPDM (FDA approved) Buna Nitrile (FDA approved)
Polymers	NORYL™

Features
Sizes: 2 1/2", 3" , 4", 6", 8", 10"

Maximum working water pressure	175 PSI
Maximum working water temperature	140°F
Hydrostatic test pressure	350 PSI
End connections (Grooved for steel pipe)	AWWA C606
(Flanged)	ANSI B16.1 Class 125

*2 1/2" & 3" sizes use 4" body & reducer couplings

Dimensions & Weights (do not include pkg.)

MODEL 350ADA SIZE	WEIGHT: LESS BUTTERFLY VALVES		OSY GATE VALVES FLANGED		OSY GATE VALVES GROOVED		BUTTERFLY VALVES FLANGED		BUTTERFLY VALVES GROOVED	
in.	mm	lbs.	kg	lbs.	kg	lbs.	kg	lbs.	kg	lbs.	kg
2 1/2	65	105	48	150	67	144	65	137	62	132	60
3	80	104	47	210	95	200	91	160	73	148	67
4	100	91	41	290	134	264	120	143	65	130	59
6	150	143	64	362	164	332	151	248	111	213	96
8	200	202	117	700	345	726	329	455	206	445	202
10	250	355	161	1024	464	902	409	628	285	570	259

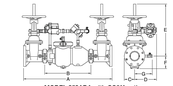

MODEL 350ADA with OS&Y option

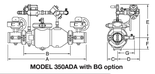

MODEL 350ADA with BG option

MODEL 350ADA SIZE	DIMENSION (approximate) A		A WITH BUTTERFLY VALVES		B LESS GATE VALVES		C		D		E OS&Y OPEN		E OS&Y CLOSED		E WITH BUTTERFLY VALVES		F		G	
in.	mm	in.	mm	in.	mm	in.	mm	in.	mm	in.	mm	in.	mm	in.	mm	in.	mm	in.	mm	in.	mm
2 1/2	65	35 1/8	892	32 1/8	816	25 1/8	511	4 1/2	114	9	229	17 3/4	451	15 3/8	391	8 1/4	210	6	152	7 1/4	184
3	80	36 1/8	918	33	838	25 1/8	511	4 1/2	114	9	229	20 1/4	514	17	430	8 1/2	216	6	152	7 1/4	184
4	100	38 1/4	972	33 1/4	845	19 7/8	505	4 1/2	114	9	229	22 1/2	572	18 1/4	464	9	229	6	152	8	203
6	150	47 1/4	1200	40 1/4	1022	26 7/8	682	5 1/2	140	10 1/2	267	30 1/2	775	24 1/4	616	10 1/4	260	7	178	10	254
8	200	60	1525	55	1397	38 1/2	978	10	254	12	305	37	940	28 1/2	724	12	305	8 1/2	216	11	279
10	250	64 5/8	1641	59	1499	38 1/2	978	10	254	12	305	45 5/8	1159	34 3/4	883	13	330	8 1/2	216	12	305

Attention: Model 350ADA (grooved body) and Model 350DA (flange body) have different lay lengths.

Zurn Industries, LLC | Wilkins
1747 Commerce Way, Paso Robles, CA U.S.A. 93446 Ph. 855-663-9876, Fax 805-238-5766
In Canada | **Zurn Industries Limited**
3544 Nashua Drive, Mississauga, Ontario L4W 1L2 Ph. 905-405-8272, Fax 905-405-1292
www.zurn.com

Rev. H
Date: 4/17
Document No. BF-350ADA
Patent No. 5, 913, 331
Product No. Model 350ADA

Flow Characteristics

◊ Rated Flow (established by approval agencies)

MODEL 350ADA 2 1/2", 3" & 4" (STANDARD & METRIC)

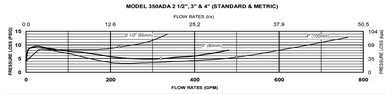

MODEL 350ADA 6", 8" & 10" (STANDARD & METRIC)

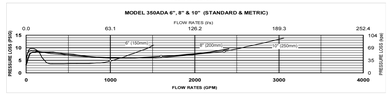

Typical Installation
Local codes shall govern installation requirements. Unless otherwise specified, the assembly shall be mounted at a minimum of 12" (305mm) and a maximum of 30" (762mm) above adequate drains with sufficient side clearance for testing and maintenance. The installation shall be made so that no part of the unit can be submerged.

Capacity thru Schedule 40 Pipe (GPM)				
Pipe size	5 ft/sec	7.5 ft/sec	10ft/sec	15 ft/sec
2 1/2"	75	112	149	224
3"	115	173	230	346
4"	198	298	397	595
6"	450	675	900	1351
8"	780	1169	1559	2339
10"	1229	1843	2458	3687
12"	1763	2644	3525	5288

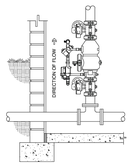

MODEL 350ADABG (Vertical Installation)

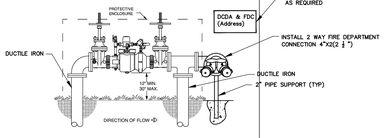

MODEL 350ADA (Outdoor Installation)

Specifications
The Double Check Detector Backflow Prevention Assembly shall be certified to NSF/ANSI 61, ASSE® Listed 1048, and supplied with full port gate valves. The main body and access cover shall be epoxy coated ductile iron (ASTM A 536), the seat ring and check valve shall be Noryl™ (NSF Listed), the stem shall be stainless steel (ASTM A 276) and the seat disc elastomers shall be EPDM. The first and second check valves shall be accessible for maintenance without removing the device from the line. The Double Check Detector Backflow Prevention Assembly shall be a ZURN WILKINS Model 350ADA.

Zurn Industries, LLC | Wilkins
1747 Commerce Way, Paso Robles, CA U.S.A. 93446 Ph. 855-663-9876, Fax 805-238-5766
In Canada | **Zurn Industries Limited**
3544 Nashua Drive, Mississauga, Ontario L4V 1L2 Ph. 905-405-8272, Fax 905-405-1292
www.zurn.com

NOTES:

1. FOR FDC'S PER NFPA 24 SECTION 5.9.5, "THE SIGN SHALL HAVE RAISED OR ENGRAVED LETTERS AT LEAST 1 IN., (25MM), IN HEIGHT ON A PLATE OF FITTING.
2. PER NFPA 24 SECTIONS 5.9.5, SIZE OF SIGN SHALL BE DETERMINED BASED ON THE VERBIAGE/DESCRIPTION FOR THAT GIVEN SIGN CAST ON A PLATE OF FITTING. PROVIDE SHOP DRAWINGS OF VARIOUS SIGNS FOR APPROVAL BY THE DISTRICT.
3. MATERIAL OF SIGN SHALL BE SIMILAR TO TRAFFIC SIGNS OR ACCESSIBLE STALL SIGNS.
4. FOR SIGNAGE VERBIAGE SHOULD READ: "DCDA & FDC FOR AUTO SPKR SERVICING PROVIDE NAME OF BUILDING, ADDRESS." OBTAIN OFFICIAL NAME OF BUILDING FROM THE DISTRICT.

4 FIRE WATER DOUBLE CHECK DETECTOR ASSEMBLY
NOT TO SCALE

APPL. No. A 03-122864

IDENTIFICATION STAMP
DIV. OF THE STATE ARCHITECT
APP: 03-122864 INC:
REVIEWED FOR
SS ☑ FLS ☑ ACS ☑
DATE: 10/03/2023

DSA Stamp

Architect

RACHLIN PARTNERS
8840 National Boulevard
Culver City, CA 90232
310.204.3400

Disclaimer:
THESE DRAWINGS ARE THE PROPERTY OF THE ARCHITECT. THE DESIGNS SHOWN AND DESCRIBED HEREIN INCLUDING ALL TECHNICAL DRAWINGS ARE PROPRIETARY AND CANNOT BE COPIED, DUPLICATED OR COMMERCIALLY EXPLOITED, IN WHOLE OR IN PART. THE DRAWINGS AND SPECIFICATIONS SHALL NOT BE USED BY THE OWNER ON OTHER PROJECTS, FOR ADDITIONS TO THIS PROJECT, OR FOR COMPLETION OF THIS PROJECT BY OTHERS. THE OWNER AGREES TO HOLD HARMLESS, INDEMNIFY AND DEFEND THE ARCHITECT AGAINST ALL DAMAGES, CLAIMS AND LOSSES, INCLUDING DEFENSE COSTS, ARISING OUT OF ANY REUSE OF PLANS AND SPECIFICATIONS WITHOUT THE WRITTEN AUTHORIZATION OF THE ARCHITECT OF RECORD.
Copyright© 2022 Rachlin Partners, All Rights Reserved.

Performing Arts Center
Hacienda La Puente Unified
School District
635 North California Avenue
La Puente, CA 91744

Rev	Date	Issue
1	7.22.22	50% DD
2	10.21.22	50% CD
3	12.09.22	100% CD DSA Submittal
4	6.19.23	100% CD DSA Resubmittal
5	9.20.23	DSA BACK CHECK

Date: 9.8.2023
Scale: As Shown
Drawn By: --
Checked By: --

Architect / Engineer Stamp

LICENSED ARCHITECT — No. C-30229 — REN. 8-31-25 — STATE OF CALIFORNIA

REGISTERED PROFESSIONAL ENGINEER — No. C36079 — Exp. 6/30/24 — CIVIL — STATE OF CALIFORNIA

Consultants
Miyamoto International, Inc.
The Ruzika Company, Inc,
MDC Consulting Engineers
Pocock Design Solutions
Newson Brown Acoustics, LLC
VCA Engineers, Inc.
HJSA Consulting
L.A. Design Associates, Inc.

Sheet Title

MISCELLANEOUS DETAILS

Sheet Number

C702

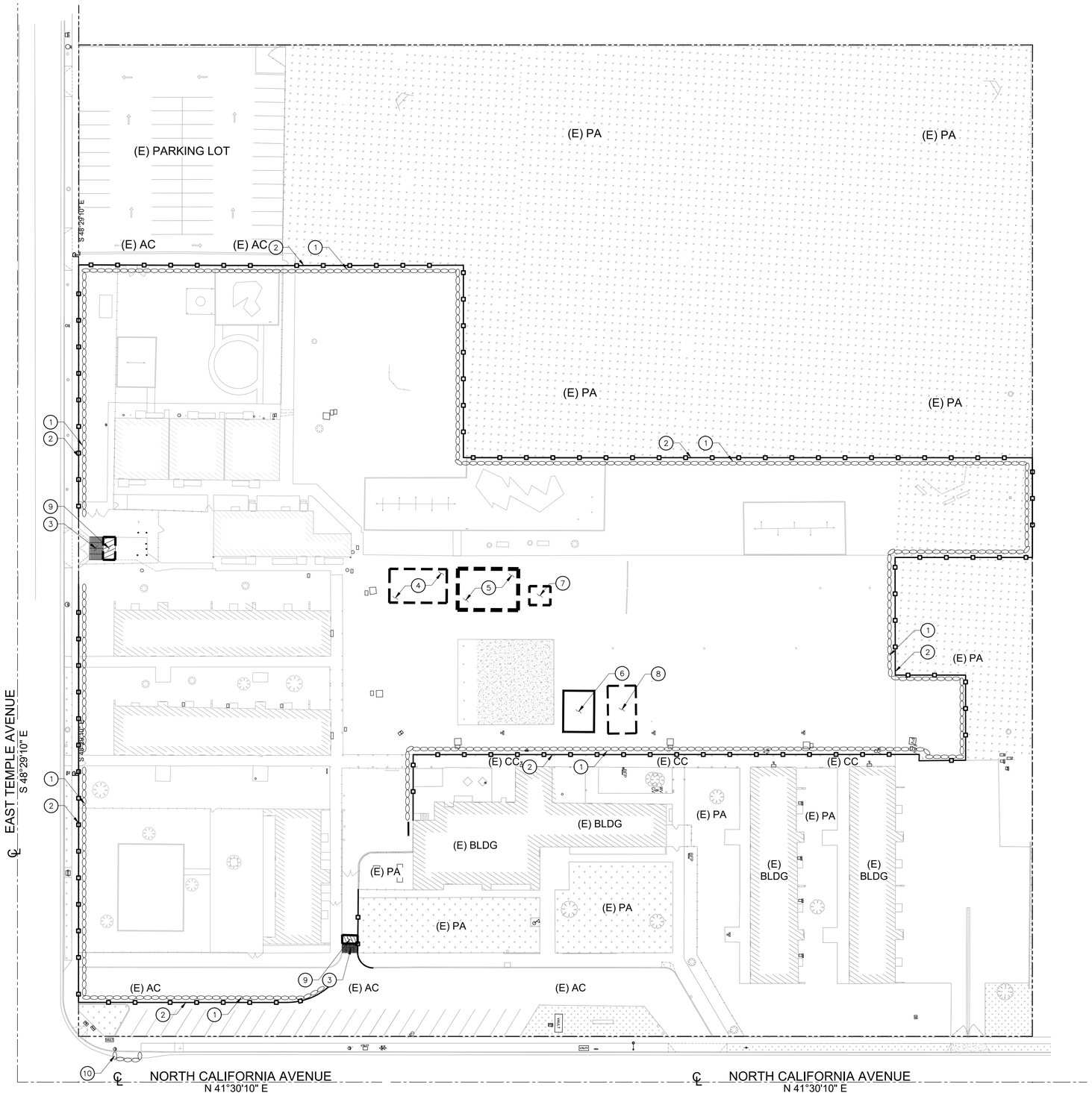

CONSTRUCTION NOTES:

1. INSTALL GRAVEL BAGS UNTIL THE COMPLETION OF THE SITE CONSTRUCTION. REFER TO DETAIL 2 ON SHEET C801.
2. SILT FENCE PER DETAIL 5 ON SHEET C801.
3. STABILIZED CONSTRUCTION ENTRANCE/EXIT PER DETAIL 4 ON SHEET C801.
4. PROPOSED AREA FOR EQUIPMENT STAGING. CONTRACTOR TO VERIFY EXACT LOCATION AND COORDINATE WITH THE CONTRACTOR PROJECT MANAGER.
5. PROPOSED AREA FOR FUELING/OILING. CONTRACTOR TO VERIFY ACTUAL AREA NEEDED AND COORDINATE WITH THE CPM. REFER TO DETAIL 9 ON SHEET C801.
6. PROPOSED AREA FOR LOADING. CONTRACTOR TO VERIFY EXACT LOCATION AND COORDINATE WITH THE CONTRACTOR PROJECT MANAGER.
7. PROPOSED AREA FOR TEMPORARY TOILETS. CONTRACTOR TO VERIFY EXACT LOCATION AND COORDINATE WITH THE CONTRACTOR PROJECT MANAGER.
8. PROPOSED AREA FOR VEHICLE AND EQUIPMENT CLEANING. CONTRACTOR TO VERIFY EXACT LOCATION AND COORDINATE WITH THE CONTRACTOR PROJECT MANAGER.
9. TIRE WASH PER DETAIL 6 ON SHEET C801.
10. CATCH BASIN/INLET PROTECTION PER DETAIL 10 ON SHEET C801.

SHEET NOTES:

1. LOCATION FOR ANY DESIGNATED STOCKPILES SHALL BE COORDINATED AND DETERMINED BY THE CONTRACTOR ON-SITE. CONTRACTOR SHALL APPLY ALL APPLICABLE BMP'S TO PROTECT THE STOCKPILE AS OUTLINED IN DETAIL 7 ON SHEET C801.
2. INSTALL 2" OF TEMPORARY CAB GRAVEL ON ALL ON-SITE CONSTRUCTION ROADWAYS TO STABILIZED AND CONTROL EROSION.
3. CONTRACTOR SHALL FROM TIME TO TIME MONITOR THE CONSTRUCTION SITE TO CLEAN AND SWEEP MATERIALS TRACKED OFF SITE.
4. ALL BMP'S, SILT FENCES, ETC., SHALL BE MONITORED AND MAINTAINED BY THE NTP1 CONTRACTOR FOR THE ENTIRE DURATION OF THE CONTACT.
5. THE CONTRACTOR SHALL MODIFY AS REQUIRED THE CURRENT APPROVED SWPPP/EROSION CONTROL PLANS FOR EACH PHASE OF THE PROJECT OR AS CONSTRUCTION ACTIVITIES PROGRESS THROUGH THE DURATION OF THE CONTRACT. THESE MODIFICATIONS SHALL BE REPORTED AND COORDINATED WITH BOTH THE QSD AND THE QSP. ANY MODIFICATIONS TO THE OVERALL DURATION OF CONSTRUCTION SCHEDULE FROM THAT AS SHOWN ON THE CURRENT SWPPP, SHALL ALSO BE REPORTED TO THE QSD. THE QSD SHALL THAN BE REQUIRED TO FILE AN EXTENSION OF CONSTRUCTION OR COI, (CHANGE OF INFORMATION), WITH THE STATE WATER RESOURCE CONTROL BOARD. ALL BMP'S SHALL BE MAINTAINED YEAR ROUND TO THE SATISFACTION OF THE QSD AND QSP.
6. FOR EROSION CONTROL GENERAL NOTES, AND MISCELLANEOUS REQUIREMENTS, SEE DETAIL 1 ON SHEET C801.

EROSION CONTROL PLAN

30 15 0 30 60

SCALE: 1"=30'

APPL. No. A 03-122864

IDENTIFICATION STAMP
DIV. OF THE STATE ARCHITECT
APP: 03-122864 INC:
REVIEWED FOR
SS ☑ FLS ☑ ACS ☑
DATE: 10/03/2023

DSA Stamp

Architect

RACHLIN PARTNERS
8840 National Boulevard
Culver City, CA 90232
310.204.3400

Disclaimer:
THESE DRAWINGS ARE THE PROPERTY OF THE ARCHITECT. THE DESIGNS SHOWN AND DESCRIBED HEREIN INCLUDING ALL TECHNICAL DRAWINGS ARE PROPRIETARY AND CANNOT BE COPIED, DUPLICATED OR COMMERCIALLY EXPLOITED, IN WHOLE OR IN PART. THE DRAWINGS AND SPECIFICATIONS SHALL NOT BE USED BY THE OWNER ON OTHER PROJECTS, FOR ADDITIONS TO THIS PROJECT, OR FOR COMPLETION OF THIS PROJECT BY OTHERS. THE OWNER AGREES TO HOLD HARMLESS, INDEMNIFY AND DEFEND THE ARCHITECT AGAINST ALL DAMAGES, CLAIMS AND LOSSES, INCLUDING DEFENSE COSTS, ARISING OUT OF ANY REUSE OF PLANS AND SPECIFICATIONS WITHOUT THE WRITTEN AUTHORIZATION OF THE ARCHITECT OF RECORD.
Copyright© 2022 Rachlin Partners, All Rights Reserved.

Performing Arts Center
Hacienda La Puente Unified
School District

635 North California Avenue
La Puente, CA 91744

Rev	Date	Issue
1	7.22.22	50% DD
2	10.21.22	50% CD
3	12.09.22	100% CD DSA Submittal
4	6.19.23	100% CD DSA Resubmittal
5	9.20.23	DSA BACK CHECK

Date: 9.8.2023
Scale: As Shown
Drawn By: --
Checked By: --

Architect / Engineer Stamp

LICENSED ARCHITECT — NO. C-26229 — REN. 8-31-25 — STATE OF CALIFORNIA
REGISTERED PROFESSIONAL ENGINEER — MICHELLO C. [illegible] — No. C36079 — Exp. 6/30/24 — CIVIL — STATE OF CALIFORNIA

Consultants
Miyamoto International, Inc.
The Ruzika Company, Inc,
MDC Consulting Engineers
Pocock Design Solutions
Newson Brown Acoustics, LLC
VCA Engineers, Inc.
HJSA Consulting
L.A. Design Associates, Inc.

Sheet Title

EROSION CONTROL PLAN

Sheet Number

C800

GENERAL NOTES:

1. IN CASE OF EMERGENCY, CALL: CONTRACTOR NAME _____. PHONE NUMBER: _____.
2. A STAND–BY CREW FOR EMERGENCY WORK SHALL BE AVAILABLE AT ALL TIMES DURING THE RAINY SEASON (NOVEMBER 1 TO APRIL 15). NECESSARY MATERIALS SHALL BE AVAILABLE ON–SITE AND STOCKPILED AT CONVENIENT LOCATIONS TO FACILITATE RAPID CONSTRUCTION OF EMERGENCY DEVICES WHEN RAIN IS IMMINENT.
3. EROSION CONTROL DEVICES SHOWN ON THIS PLAN MAY BE REMOVED WHEN APPROVED BY THE BUILDING OFFICIAL IF THE GRADING OPERATION HAS PROGRESSED TO THE POINT WHERE THEY ARE NO LONGER REQUIRED.
4. GRADED AREAS ADJACENT TO FILL SLOPES LOCATED AT THE SITE PERIMETER MUST DRAIN AWAY FROM THE TOP OF SLOPE AT THE CONCLUSION OF EACH WORKING DAY. ALL LOOSE SOILS AND DEBRIS THAT MAY CREATE A POTENTIAL HAZARD TO OFF–SITE PROPERTY SHALL BE STABILIZED OR REMOVED FROM THE SITE ON A DAILY BASIS.
5. ALL SILT AND DEBRIS SHALL BE REMOVED FROM ALL DEVICES WITHIN 24 HOURS AFTER EACH RAINSTORM AND BE DISPOSED OF PROPERLY.
6. A GUARD SHALL BE POSTED ON SITE WHEREVER THE DEPTH OF WATER IN ANY DEVICE EXCEEDS TWO FEET. THE DEVICE SHALL BE DRAINED OR PUMPED DRY WITHIN 24 HOURS AFTER EACH RAINSTORM. PUMPING AND DRAINING OF ALL BASINS AND DRAINAGE DEVICES MUST COMPLY WITH THE APPROPRIATE BMP FOR DEWATERING OPERATIONS.
7. THE PLACEMENT OF ADDITIONAL DEVICES TO REDUCE EROSION DAMAGE AND CONTAIN POLLUTANTS WITHIN THE SITE IS LEFT TO THE DISCRETION OF THE QSP. ADDITIONAL DEVICES AS NEEDED SHALL BE INSTALLED TO RETAIN SEDIMENTS AND OTHER POLLUTANTS ON SITE.
8. DESILTING BASINS MAY NOT BE REMOVED OR MADE INOPERABLE BETWEEN NOVEMBER 1 AND APRIL 15 OF THE FOLLOWING YEAR WITHOUT THE APPROVAL OF THE BUILDING OFFICIAL.
9. STORM WATER POLLUTION AND EROSION CONTROL DEVICES ARE TO BE MODIFIED, AS NEEDED, AS THE PROJECT PROGRESSES. THE DESIGN AND PLACEMENT OF THESE DEVICES IS THE RESPONSIBILITY OF THE FIELD ENGINEER. PLANS REPRESENTING CHANGES MUST BE SUBMITTED FOR APPROVAL IF REQUESTED BY THE BUILDING OFFICIAL.
10. EVERY EFFORT MUST BE MADE TO ELIMINATE THE DISCHARGE OF NONSTORM WATER FROM THE PROJECT SITE AT ALL TIMES.
11. ERODED SEDIMENTS AND OTHER POLLUTANTS MUST BE RETAINED ON–SITE AND MAY NOT BE TRANSPORTED FROM THE SITE VIA SHEET FLOW, SWALES, AREA DRAINS, NATURAL DRAINAGE COURSES, OR WIND.
12. STOCKPILES OF EARTH AND OTHER CONSTRUCTION–RELATED MATERIALS MUST BE PROTECTED FROM BEING TRANSPORTED FROM THE SITE BY THE FORCES OF WIND OR WATER.
13. FUELS, OILS, SOLVENTS, AND OTHER TOXIC MATERIALS MUST BE STORED IN ACCORDANCE WITH THEIR LISTINGS AND ARE NOT TO CONTAMINATE THE SOILS AND SURFACE WATERS. ALL APPROVED STORAGE CONTAINERS ARE TO BE PROTECTED FROM THE WEATHER. SPILLS MUST BE CLEANED UP IMMEDIATELY AND DISPOSED OF IN A PROPER MANNER. SPILLS MAY NOT BE WASHED INTO THE DRAINAGE SYSTEM.
14. EXCESS OR WASTE CONCRETE MAY NOT BE WASTED INTO THE PUBLIC WAY OR ANY OTHER DRAINAGE SYSTEM. PROVISIONS SHALL BE MADE TO RETAIN CONCRETE WASTES ON–SITE UNTIL THEY CAN BE DISPOSED OF AS SOLID WASTE.
15. DEVELOPERS/CONTRACTORS ARE RESPONSIBLE TO INSPECT ALL EROSION CONTROL DEVICES AND BMP's ARE INSTALLED AND FUNCTIONING PROPERLY IF THERE IS A 40% CHANCE OF 0.25 INCHES OR GREATER OF PREDICTED PRECIPITATION, AND AFTER ACTUAL PRECIPITATION. A CONSTRUCTION SITE INSPECTION CHECKLIST AND INSPECTION LOG SHALL BE MAINTAINED AT THE PROJECT SITE AT ALL TIMES AND AVAILABLE FOR REVIEW BY THE BUILDING OFFICIAL (COPIES OF SELF–INSPECTION CHECKLIST AND INSPECTION LOGS ARE AVAILABLE UPON REQUEST). AT HIS/HER EXPENSE THE CONTRACTOR SHALL BE RESPONSIBLE TO PROVIDE A QUALIFIED SWPPP PRACTITIONER FOR THE DURATION OF THE PROJECT.
16. TRASH AND CONSTRUCTION–RELATED SOLID WASTES MUST BE DEPOSITED INTO A COVERED RECEPTACLE TO PREVENT CONTAMINATION OF RAINWATER AND DISPERSAL BY WIND.
17. SEDIMENTS AND OTHER MATERIALS MAY NOT BE TRACKED FROM THE SITE BY VEHICLE TRAFFIC. THE CONSTRUCTION ENTRANCE ROADWAYS MUST BE STABILIZED SO AS TO INHIBIT SEDIMENTS FROM BEING DEPOSITED INTO THE PUBLIC WAY. ACCIDENTAL DEPOSITIONS MUST BE SWEPT UP IMMEDIATELY AND MAY NOT BE WASHED DOWN BY RAIN OR OTHER MEANS.
18. ANY SLOPES WITH DISTURBED SOILS OR DENUDED OF VEGETATION MUST BE STABILIZED SO AS TO INHIBIT EROSION BY WIND AND WATER.
19. AS THE ENGINEER OF RECORD, I HAVE SELECTED APPROPRIATE BMPs TO EFFECTIVELY MINIMIZE THE NEGATIVE IMPACTS OF THIS PROJECT'S CONSTRUCTION ACTIVITIES ON STORM WATER QUALITY. THE PROJECT OWNER AND CONTRACTOR ARE AWARE THAT THE SELECTED BMPs MUST BE INSTALLED, MONITORED, AND MAINTAINED TO ENSURE THEIR EFFECTIVENESS. THE BMPs NOT SELECTED FOR IMPLEMENTATION ARE REDUNDANT OR DEEMED NOT APPLICABLE TO THE PROPOSED CONSTRUCTION QUALITY."
20. THE FOLLOWING BMPs AS OUTLINED IN, BUT NOT LIMITED TO, THE "CALIFORNIA STORMWATER BEST MANAGEMENT PRACTICES HANDBOOK" – JANUARY 2003, OR THE LATEST REVISED EDITION, MAY APPLY DURING THE CONSTRUCTION OF THIS PROJECT (ADDITIONAL MEASURES MAY BE REQUIRED IF DEEMED APPROPRIATE BY THE PROJECT ENGINEER OR THE BUILDING OFFICIAL). _____
BUILDING OFFICIAL SIGNATURE

EROSION CONTROL

EC1 – SCHEDULING
EC2 – PRESERVATION OF EXISTING VEGETATION
EC3 – HYDRAULIC MULCH
EC4 – HYDROSEEDING
EC5 – SOIL BINDERS
EC6 – STRAW MULCH
EC7 – GEOTEXTILES AND MATS
EC8 – WOOD MULCHING
EC9 – EARTH DIKES AND DRAINAGE SWALES
EC10 – VELOCITY DISSIPATION DEVICES
EC11 – SLOPE DRAINS
EC12 – STREAMBANK STABILIZATION
EC13 – RESERVED
EC14 – COMPOST BLANKETS
EC15 – SOIL PREPARATION/ROUGHENING
EC16 – NON–VEGETATED STABILIZATION

TEMPORARY SEDIMENT CONTROL

SE1 – SILT FENCE
SE2 – SEDIMENT BASIN
SE3 – SEDIMENT TRAP
SE4 – CHECK DAM
SE5 – FIBER ROLLS
SE6 – GRAVEL BAG BERM
SE7 – STREET SWEEPING AND VACUUMING
SE8 – GRAVEL BAG BARRIER
SE9 – STRAW BALE BARRIER
SE10 – STORM DRAIN INLET PROTECTION
SE11 – ACTIVE TREATMENT SYSTEMS
SE12 – TEMPORARY SILT DIKE
SE13 – COMPOST SOCKS & BERMS
SE14 – BIOFILTERS BAGS

WIND EROSION CONTROL

WE1 – WIND EROSION CONTROL

EQUIPMENT TRACKING CONTROL

TC1 – STABILIZED CONSTRUCTION ENTRANCE EXIT
TC2 – STABILIZED CONSTRUCTION ROADWAY
TC3 – ENTRANCE/OUTLET TIRE WASH

NON–STORMWATER MANAGEMENT

NS1 – WATER CONSERVATION PRACTICES
NS2 – DEWATERING OPERATIONS
NS3 – PAVING AND GRINDING OPERATIONS
NS4 – TEMPORARY STREAM CROSSING
NS5 – CLEARWATER DIVERSION
NS6 – ILLICIT CONNECTION/DISCHARGE
NS7 – POTABLE WATER/IRRIGATION
NS8 – VEHICLE AND EQUIPMENT CLEANING
NS9 – VEHICLE AND EQUIPMENT FUELING
NS10 – VEHICLE AND EQUIPMENT MAINTENANCE
NS11 – PILE DRIVING OPERATIONS
NS12 – CONCRETE CURING
NS13 – CONCRETE FINISHING
NS14 – MATERIAL AND EQUIPMENT USE
NS15 – DEMOLITION ADJACENT TO WATER
NS16 – TEMPORARY BATCH PLANTS

WASTE MANAGEMENT & MATERIAL POLLUTION CONTROL

WM1 – MATERIAL DELIVERY AND STORAGE
WM2 – MATERIAL USE
WM3 – STOCKPILE MANAGEMENT
WM4 – SPILL PREVENTION AND CONTROL
WM5 – SOLID WASTE MANAGEMENT
WM6 – HAZARDOUS WASTE MANAGEMENT
WM7 – CONTAMINATION SOIL MANAGEMENT
WM8 – CONCRETE WASTE MANAGEMENT
WM9 – SANITARY/SEPTIC WASTE MANAGEMENT
WM10 – LIQUID WASTE MANAGEMENT

1 GENERAL NOTES

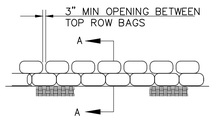

SECTION A-A

2 GRAVEL BAG DETAIL

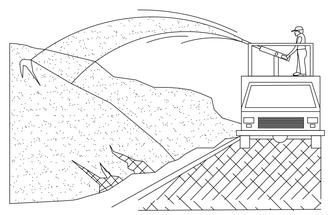

NOTES:

1. SOIL/SLOPE STABILIZATION PRACTICES SHALL BE DESIGNED TO PRESERVE EXISTING VEGETATION WHERE FEASIBLE AND TO REVEGETATE OPEN AREAS AS SOON AS FEASIBLE AFTER GRADING. THESE CONTROL PRACTICES SHALL INCLUDE TEMPORARY SEEDING, PERMANENT SEEDING, MULCHING, SOD STABILIZATION, VEGETATIVE BUFFER STRIPS, PROTECTION OF TREES, OR OTHER SOIL STABILIZATION PRACTICES.
2. SOIL STABILIZATION SHALL BE IMPLEMENTED ON ALL INACTIVE DISTURBED AREAS FROM NOVEMBER 1 THRU APRIL 15 AND ON ALL DISTURBED AREAS DURING A RAIN EVENT OR POTENTIAL RAIN.
3. STABILIZATION PRACTICES SHALL CONTROL/PREVENT EROSION FROM THE FORCES OF WIND AND WATER.
4. STABILIZATION PRACTICES SHALL BE IMPLEMENTED IN CONJUNCTION WITH SEDIMENT TRAPPING/FILTERING PRACTICES AND PRACTICES TO REDUCE THE TRACKING OF SEDIMENT ONTO PAVED ROADS.
5. WHEN USING STRAW MULCHING, THE MINIMUM APPLICATION SHALL BE 2 TONS/ACRE. MULCH MUST BE ANCHORED IMMEDIATELY TO MINIMIZE LOSS BY WIND OR WATER.
6. WHEN USING HYDROSEEDING/MULCHING, THE MINIMUM APPLICATION OF WOOD FIBER SHALL BE 1,500 LBS/ACRE,THAT DOES NOT CONTAIN MORE THAN 50 PERCENT NEWSPRINT.
7. FOR SEEDING RECOMMENDATIONS, USDA, NATURAL RESOURCES CONSERVATION SERVICE.

3 EROSION CONTROL

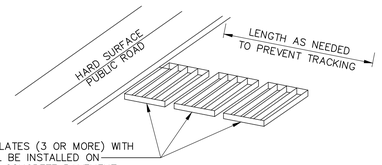

NOTES:

1. SEDIMENTS AND OTHER MATERIALS SHALL NOT BE TRACKED FROM THE SITE BY VEHICLE TRAFFIC. THE CONSTRUCTION ENTRANCE ROADWAYS SHALL BE STABILIZED SO AS TO PREVENT SEDIMENTS FROM BEING DEPOSITED INTO THE PUBLIC ROADS. DEPOSITIONS MUST BE SWEPT UP IMMEDIATELY AND MAY NOT BE WASHED DOWN BY RAIN OR OTHER MEANS INTO THE STORM DRAIN SYSTEM.
2. STABILIZED CONSTRUCTION ENTRANCE SHALL BE:
   A. LOCATED AT ANY POINT WHERE TRAFFIC WILL BE ENTERING OR LEAVING A CONSTRUCTION SITE RD OR FROM A PUBLIC RIGHT OF WAY, STREET, ALLEY, AND SIDEWALK OR PARKING AREA.
   B. A SERIES OF STEEL PLATES WITH "RUMBLE STRIPS", AND/OR MIN 4" COARSE AGGREGATE WITH LENGTH, WIDTH & THICKNESS AS NEEDED TO ADEQUATELY PREVENT ANY TRACKING ONTO PAVED SURFACES.
3. ADDING A WASH RACK WITH A SEDIMENT TRAP LARGE ENOUGH TO COLLECT ALL WASH WATER CAN GREATLY IMPROVE EFFICIENCY.
4. ALL VEHICLES ACCESSING THE CONSTRUCTION SITE SHALL UTILIZE THE STABILIZED CONSTRUCTION ENTRANCE SITES.

STREET MAINTENANCE

1. REMOVE ALL SEDIMENT DEPOSITED ON PAVED ROADWAYS IMMEDIATELY.
2. SWEEP PAVED AREAS THAT RECEIVE CONSTRUCTION TRAFFIC WHENEVER SEDIMENT BECOMES VISIBLE.
3. PAVEMENT WASHING WITH WATER IS PROHIBITED IF IT RESULTS IN A DISCHARGE TO THE STORM DRAIN SYSTEM.

4 STABILIZED CONSTRUCTION ENTRANCE / EXIT

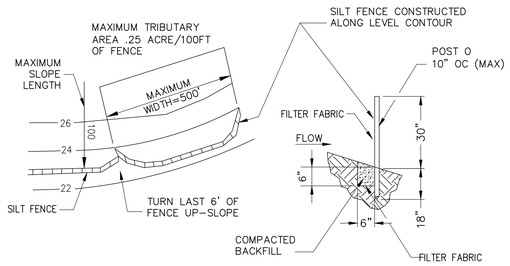

NOTES:

1. CONSTRUCT THE SILT FENCE ALONG A LEVEL CONTOUR.
2. SILT FENCES SHALL REMAIN IN PLACE UNTIL THE DISTURBED AREA IS PERMANENTLY STABILIZED.
3. PROVIDE SUFFICIENT ROOM FOR RUNOFF TO POND BEHIND THE FENCE AND ALLOW SEDIMENT REMOVAL EQUIPMENT TO PASS BETWEEN THE SILT FENCE AND TOE OF SLOPE OR OTHER OBSTRUCTIONS. ABOUT 1200 SQ. FT. OF PONDING AREA SHALL BE PROVIDED FOR EVERY ACRE DRAINING TO THE FENCE.
4. TURN THE ENDS OF THE FILTER FENCE UPHILL TO PREVENT STORMWATER FROM FLOWING AROUND THE FENCE.
5. LEAVE AN UNDISTURBED OR STABILIZED AREA IMMEDIATELY DOWNSLOPE FROM THE FENCE.
6. DO NOT PLACE IN LIVE STREAM OR INTERMITTENTLY FLOWING CHANNELS.
7. WHEN STANDARD FILTER FABRIC IS USED, A WIRE MESH SUPPORT FENCE SHALL BE FASTENED SECURELY TO THE UPSLOPE SIDE OF THE POSTS USING HEAVY–DUTY WIRE STAPLES AT LEAST 1 INCH LONG. TIE WIRES OR HOG RINGS.

5 SILT FENCE

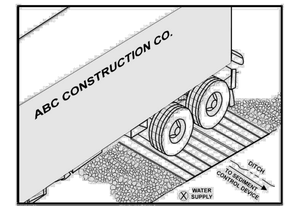

NOTES:

1. THE TIRE WASH REQUIRES A SUPPLY OF WASH WATER.
2. A TURNOUT OR DOUBLEWIDE EXIT IS REQUIRED TO AVOID HAVING ENTERING VEHICLES DRIVE THROUGH THE WASH AREA.
3. DO NOT USE WHERE WET TIRE TRUCKS LEAVING THE SITE LEAVE THE ROAD DANGEROUSLY SLICK.
4. INCORPORATE WITH A STABILIZED CONSTRUCTION ENTRANCE/EXIT.
5. CONSTRUCT ON LEVEL GROUND WHEN POSSIBLE, ON A PAD OF COARSE AGGREGATE GREATER THAN 3 IN. BUT SMALLER THAN 6 IN. A GEOTEXTILE FABRIC SHOULD BE PLACED BELOW THE AGGREGATE.
6. WASH RACK SHOULD BE DESIGNED AND CONSTRUCTED/MANUFACTURED FOR ANTICIPATED TRAFFIC LOADS.

6 ENTRANCE/OUTLET TIRE WASH

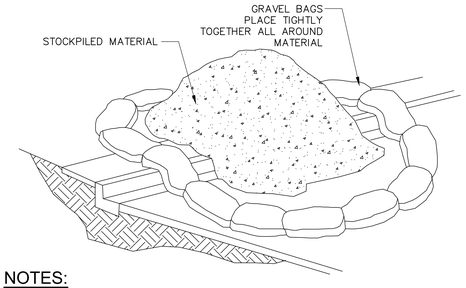

NOTES:

1. DIRT AND OTHER CONSTRUCTION RELATED MATERIALS PLACED IN THE STREET OR ON OTHER IMPERVIOUS SURFACES MUST BE CONTAINED WITH SANDBAGS OR OTHER MEASURES TO PREVENT TRANSPORT TO THE STORMDRAIN SYSTEM.
2. ANY CONSTRUCTION MATERIAL STORED OR STOCKPILED ON–SITE SHALL BE PROTECTED FROM BEING TRANSPORTED BY THE FORCE OF WIND OR WATER.

7 MATERIAL STORAGE
NOT TO SCALE

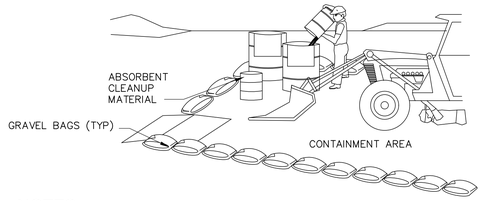

NOTES:

1. LEAKING VEHICLES AND EQUIPMENT SHALL NOT BE ALLOWED ON–SITE. EQUIPMENT AND VEHICLES SHALL BE INSPECTED FREQUENTLY FOR LEAKS AND SHALL BE REPAIRED IMMEDIATELY. CLEAN UP SPILLS AND LEAKS PROMPTLY WITH ABSORBENT; DO NOT FLUSH WITH WATER.
2. VEHICLES AND EQUIPMENT SHALL BE MAINTAINED AND REPAIRED ON–SITE ONLY IN DESIGNATED AREAS. PREVENT RUN–ON AND RUN–OFF FROM DESIGNATED AREAS. CONTAINMENT DEVICES SHALL BE PROVIDED AND AREAS SHALL BE COVERED IF NECESSARY.
3. DESIGNATE ON–SITE VEHICLE AND EQUIPMENT MAINTENANCE AREAS, WAY FROM STORM DRAIN INLETS AND WATERCOURSES.
4. ALWAYS USE SECONDARY CONTAINMENT, SUCH AS A DRAIN PAN OR DROP CLOTH, TO CATCH SPILLS AND LEAKS WHEN REMOVING OR CHANGING FLUIDS.
5. LEGALLY DISPOSE OF USED OILS, FLUIDS, AND LUBRICANTS.
6. PROVIDE SPILL CONTAINMENT DIKES OR SECONDARY CONTAINMENT AROUND STORED OIL, FUEL, AND CHEMICAL DRUMS.
7. MAINTAIN ON ADEQUATE SUPPLY OF ABSORBENT SPILL CLEANUP MATERIALS IN DESIGNATED AREA.

8 EQUIPMENT REPAIR/MAINTENANCE

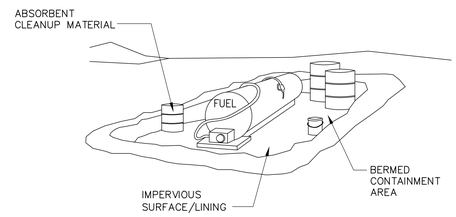

NOTE:

1. FUELING SHALL BE PERFORMED IN A DESIGNATED AREA, AWAY FROM COURSES. ABSORBENT CLEANUP MATERIAL SHALL BE ON SITE AND USED IMMEDIATELY IN THE EVENT OF A SPILL.

9 VEHICLE / EQUIPMENT FUELING

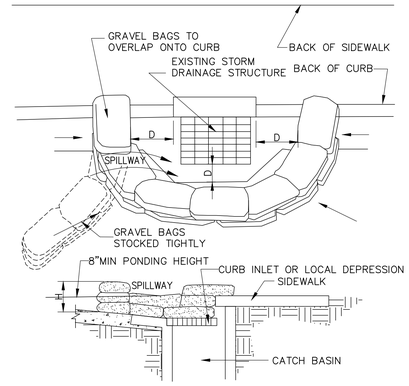

NOTES:

1. INLET PROTECTION IS REQUIRED ALONG WITH OTHER POLLUTION PREVENTION MEASURES SUCH AS: EROSION CONTROL, SOIL STABILIZATION, AND MEASURES TO PREVENT TRACKING ONTO PAVED SURFACES.
2. MODIFY INLET PROTECTION AS NEEDED TO AVOID CREATING TRAFFIC HAZARDS.
3. INCLUDE INLET PROTECTION MEASURES AT HILLSIDE V–DITCHES AND MISCELLANEOUS DRAINAGE SWALES.
4. INLET PROTECTION SHALL BE PROTECTED AND ACCUMULATED SEDIMENTS REMOVED. SEDIMENT SHALL BE DISPOSED OF PROPERTY AND IN A MANNER THAT ASSURES THAT THE SEDIMENT DOES NOT ENTER THE STORM DRAIN SYSTEM.
5. DAMAGED BAGS SHALL BE REPLACED IMMEDIATELY.
6. ADDITIONAL SANDBAG SEDIMENT TRAPS SHALL BE PLACED AT INTERVALS AS INDICATED ON SITE PLANT.

10 CATCH BASIN/INLET PROTECTION
NOT TO SCALE

OWNER STATEMENT OF UNDERSTANDING:

AS THE PROJECT OWNER OR AUTHORIZED AGENT OF THE OWNER, I HAVE READ AND UNDERSTAND THE REQUIREMENTS TO CONTROL STORM WATER POLLUTION FROM SEDIMENTS, EROSION, AND CONSTRUCTION MATERIALS, AND I CERTIFY THAT I WILL COMPLY WITH THESE REQUIREMENTS. I, OR MY REPRESENTATIVE, CONTRACTOR, DEVELOPER, OR ENGINEER, WILL MAKE CERTAIN THAT ALL BMP SHOWN ON THIS PLAN WILL BE FULLY IMPLEMENTED, AND ALL EROSION CONTROL DEVICES WILL BE KEPT CLEAN AND FUNCTIONING. PERIODIC INSPECTIONS OF THE BMPs WILL BE CONDUCTED AND A CURRENT LOG, SPECIFYING THE EXACT NATURE OF THE INSPECTION AND ANY REMEDIAL MEASURES, WILL BE KEPT AT THE CONSTRUCTION SITE AT ALL TIMES AND WILL BE AVAILABLE FOR THE REVIEW BY THE BUILDING OFFICIAL.

AS THE PROJECT OWNER OR AUTHORIZED AGENT OF THE OWNER, "I CERTIFY THAT THIS DOCUMENT AND ALL ATTACHMENTS WERE PREPARED UNDER MY DIRECTION OR SUPERVISION IN ACCORDANCE WITH A SYSTEM DESIGNED TO ASSURE THAT QUALIFIED PERSONNEL PROPERLY GATHER AND EVALUATE THE INFORMATION SUBMITTED. BASED ON MY INQUIRY OF THE PERSON OR PERSONS WHO MANAGE THE SYSTEM OR THOSE PERSONS DIRECTLY RESPONSIBLE FOR GATHERING THE INFORMATION, TO THE BEST OF MY KNOWLEDGE AND BELIEF, THE INFORMATION SUBMITTED IS TRUE, ACCURATE, AND COMPLETE. I AM AWARE THAT SUBMITTING FALSE AND/OR INACCURATE INFORMATION, FAILING TO UPDATE THE LOCAL SWPPP TO REFLECT CURRENT CONDITIONS, OR FAILING TO PROPERLY AND/OR ADEQUATELY IMPLEMENT THE LOCAL SWPPP MAY RESULT IN REVOCATION OF GRADING AND/OR OTHER PERMITS OR OTHER SANCTIONS PROVIDED BY THE LAW."

_____ _____
OWNER OR AUTHORIZED REPRESENTATIVE (PERMITEE) DATE

11 STATEMENT OF UNDERSTANDING

APPL. No. A 03–122864

IDENTIFICATION STAMP
DIV. OF THE STATE ARCHITECT
APP: 03-122864 INC:
REVIEWED FOR
SS ☑ FLS ☑ ACS ☑
DATE: 10/03/2023

DSA Stamp

Architect

RACHLIN PARTNERS
8840 National Boulevard
Culver City, CA 90232
310.204.3400

Disclaimer:
THESE DRAWINGS ARE THE PROPERTY OF THE ARCHITECT. THE DESIGNS SHOWN AND DESCRIBED HEREIN INCLUDING ALL TECHNICAL DRAWINGS ARE PROPRIETARY AND CANNOT BE COPIED, DUPLICATED OR COMMERCIALLY EXPLOITED, IN WHOLE OR IN PART. THE DRAWINGS AND SPECIFICATIONS SHALL NOT BE USED BY THE OWNER ON OTHER PROJECTS, FOR ADDITIONS TO THIS PROJECT, OR FOR COMPLETION OF THIS PROJECT BY OTHERS. THE OWNER AGREES TO HOLD HARMLESS, INDEMNIFY AND DEFEND THE ARCHITECT AGAINST ALL DAMAGES, CLAIMS AND LOSSES, INCLUDING DEFENSE COSTS, ARISING OUT OF ANY REUSE OF PLANS AND SPECIFICATIONS WITHOUT THE WRITTEN AUTHORIZATION OF THE ARCHITECT OF RECORD.
Copyright© 2022 Rachlin Partners, All Rights Reserved.

Performing Arts Center
Hacienda La Puente Unified
School District
635 North California Avenue
La Puente, CA 91744

Rev	Date	Issue
1	7.22.22	50% DD
2	10.21.22	50% CD
3	12.09.22	100% CD DSA Submittal
4	6.19.23	100% CD DSA Resubmittal
5	9.20.23	DSA BACK CHECK

Date: 9.8.2023
Scale: As Shown
Drawn By: --
Checked By: --

Architect / Engineer Stamp

LICENSED ARCHITECT JOSHUA M. RACHLIN NO. C-36029 REN. 8-31-25 STATE OF CALIFORNIA

REGISTERED PROFESSIONAL ENGINEER JOSHUA M. RACHLIN No. C36079 Exp. 6/30/24 CIVIL STATE OF CALIFORNIA

Consultants
Miyamoto International, Inc.
The Ruzika Company, Inc,
MDC Consulting Engineers
Pocock Design Solutions
Newson Brown Acoustics, LLC
VCA Engineers, Inc.
HJSA Consulting
L.A. Design Associates, Inc.

Sheet Title

EROSION CONTROL DETAILS

Sheet Number

C801

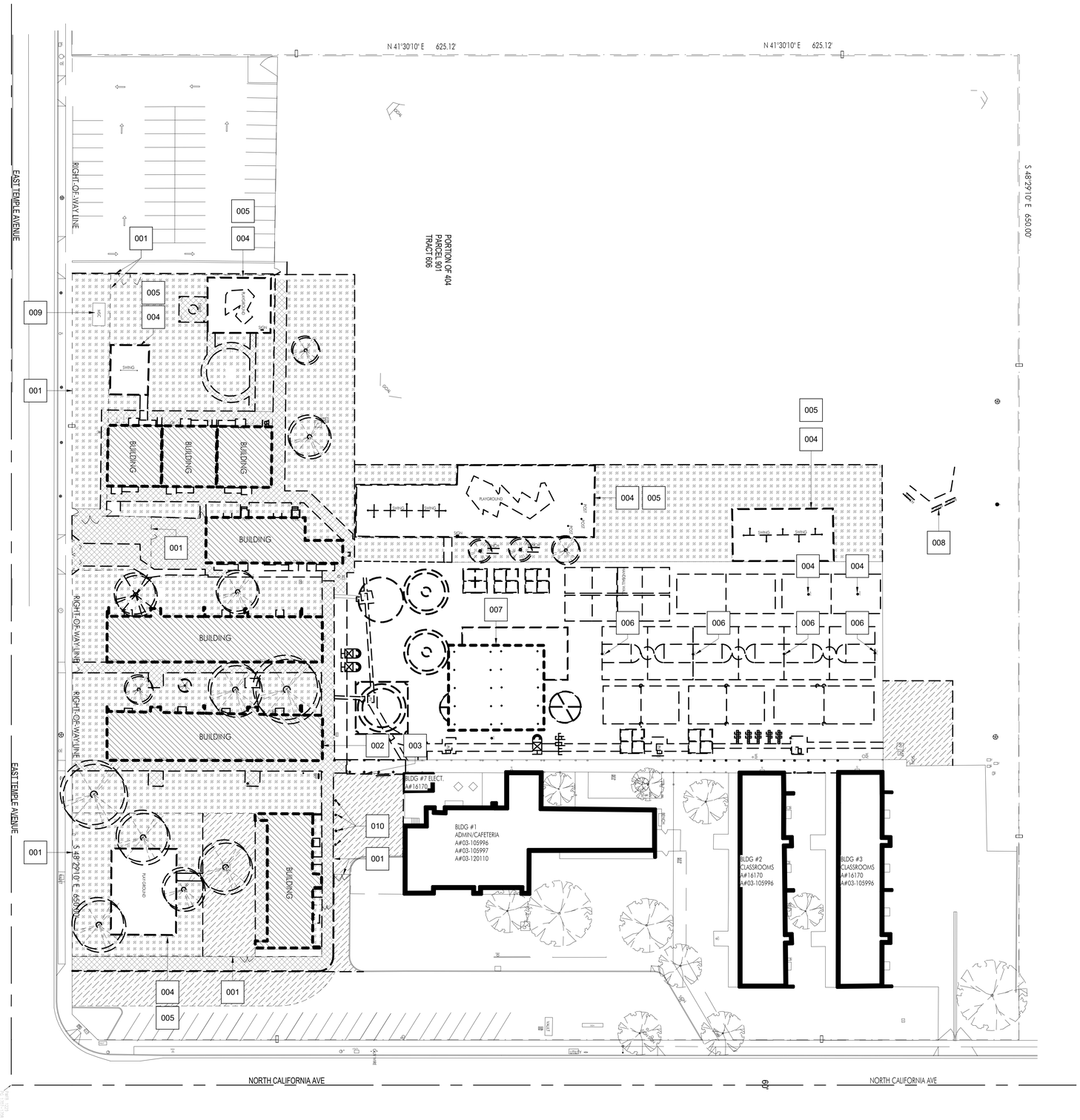

1 SITE DEMOLITION PLAN

SCALE: 1" = 30'-0"

DEMOLITION SITE PLAN KEYNOTES

KEYNOTE	DESCRIPTION
001	REMOVE (E) CHAIN LINK FENCE, FOOTINGS, GATES AND ALL ASSOCIATED ITEMS
002	REMOVE (E) DRINKING FOUNTAIN AND ALL ASSOCIATED ITEMS
003	REMOVE PORTION OF (E) COVERED WALKWAY INCLUDED POSTS, FOOTINGS, CONDUIT, PIPING AND ALL OTHER ATTACHED ITEMS
004	REMOVE EXISTING PLAYGROUND EQUIPMENT INCLUDING FOOTINGS AND ALL ASSOCIATED ITEMS
005	REMOVE EXISTING PLAYGROUND SURFACE, CURBS AND ALL ASSOCIATED ITEMS
006	REMOVE EXISTING BASKETBALL BACKSTOP, POST, FOOTING AND ALL ASSOCIATED ITEMS
007	REMOVE EXISTING LUNCH SHELTERS AND ALL ASSOCIATED ITEMS
008	REMOVE (E) CHAIN LINK BASEBALL BACKSTOP STRUCTURE, INCLUDING FOOTINGS AND ALL ASSOCIATED ITEMS
009	REMOVE (E) STORAGE CONTAINER. PROJECT AND TURN OVER TO DISTRICT PER OWNER'S REPRESENTIVE'S DIRECTION.
010	REMOVE (E) BOLLARD AND ALL ASSOCIATED ITEMS

DEMOLITION SITE PLAN LEGEND

SYMBOL	DESCRIPTION
	EXISTING CONSTRUCTION
	REMOVE EXISTING BUILDING, FOOTINGS, GRADE BEAMS, AND ALL APPURTENANCES
	REMOVE EXISTING CONCRETE PAVEMENT AND BASE MATERIAL, FULL DEPTH SEE CIVIL DRAWINGS FOR MORE INFORMATION
	CLEAR, GRUB, AND REMOVE EXISTING TURF/PLANTER/EXPOSED SUBGRADE AREA. REMOVE EXISTING SHRUBS AND ROOTS
	REMOVE EXISTING ASPHALT PAVING AND BASE MATERIAL, FULL DEPTH. SEE CIVIL DRAWINGS FOR MORE INFORMATION
	REMOVE EXISTING TREE

SITE PLAN GENERAL NOTES:

1. REFER TO CIVIL, MECHANICAL, PLUMBING, ELECTRICAL AND FIRE ALARM DRAWINGS FOR ADDITIONAL SCOPE OF WORK ON CAMPUS

APPL No. A03-122864

IDENTIFICATION STAMP
DIV. OF THE STATE ARCHITECT
APP: 03-122864 INC:
REVIEWED FOR
SS ☑ FLS ☑ ACS ☑
DATE: 10/03/2023

DSA Stamp

Architect

RACHLIN PARTNERS
8640 National Boulevard
Culver City, CA 90232
310.204.3400

Disclaimer:

THESE DRAWINGS ARE THE PROPERTY OF THE ARCHITECT. THE DESIGNS SHOWN AND DESCRIBED HEREIN INCLUDING ALL TECHNICAL DRAWINGS ARE PROPRIETARY AND CANNOT BE COPIED, DUPLICATED OR COMMERCIALLY EXPLOITED IN ANY WAY. THEY ARE NOT TO BE CHANGED OR COPIED AND SHALL NOT BE USED BY THE OWNER ON OTHER PROJECTS, FOR ADDITIONS TO THIS PROJECT, OR FOR COMPLETION OF THIS PROJECT BY OTHERS. THE OWNER AGREES TO HOLD HARMLESS, INDEMNIFY AND DEFEND THE ARCHITECT AGAINST ALL DAMAGES, CLAIMS AND LOSSES, INCLUDING DEFENSE COSTS, ARISING OUT OF ANY REUSE OF PLANS AND SPECIFICATIONS WITHOUT THE WRITTEN AUTHORIZATION OF THE ARCHITECT OF RECORD.

Copyright © 2022 Rachlin Partners, All Rights Reserved.

Performing Arts Center

Hacienda La Puente Unified School District
635 North California Avenue
La Puente, CA 91744

Rev	Date	Issue
1	7.22.22	50% DD
2	10.21.22	50% CD
3	12.09.22	100% CD DSA SUBMITTAL
4	6.19.23	100% CD DSA RESUBMITTAL
5	9.20.23	DSA BACK CHECK

Date: 9.20.2023
Scale: As indicated
Drawn By: JP, NZ
Checked By: RM

Architect / Engineer Stamp

LICENSED ARCHITECT
RICHARD MICHAEL RACHLIN
NO. C-26029
REN. 8-31-25
STATE OF CALIFORNIA

Consultants
Miyamoto International, Inc.
The Ruzika Company, Inc.
MDC Consulting Engineers
Pocock Design Solutions
Newson Brown Acoustics, LLC
VCA Engineers, Inc.
HJSA Consulting

Sheet Title

Site Demolition Plan

Sheet Number

A101

C:\Users\rudy.monico\Documents\R22_HLPUSD-PAC_Central_rudy.monico.rvt

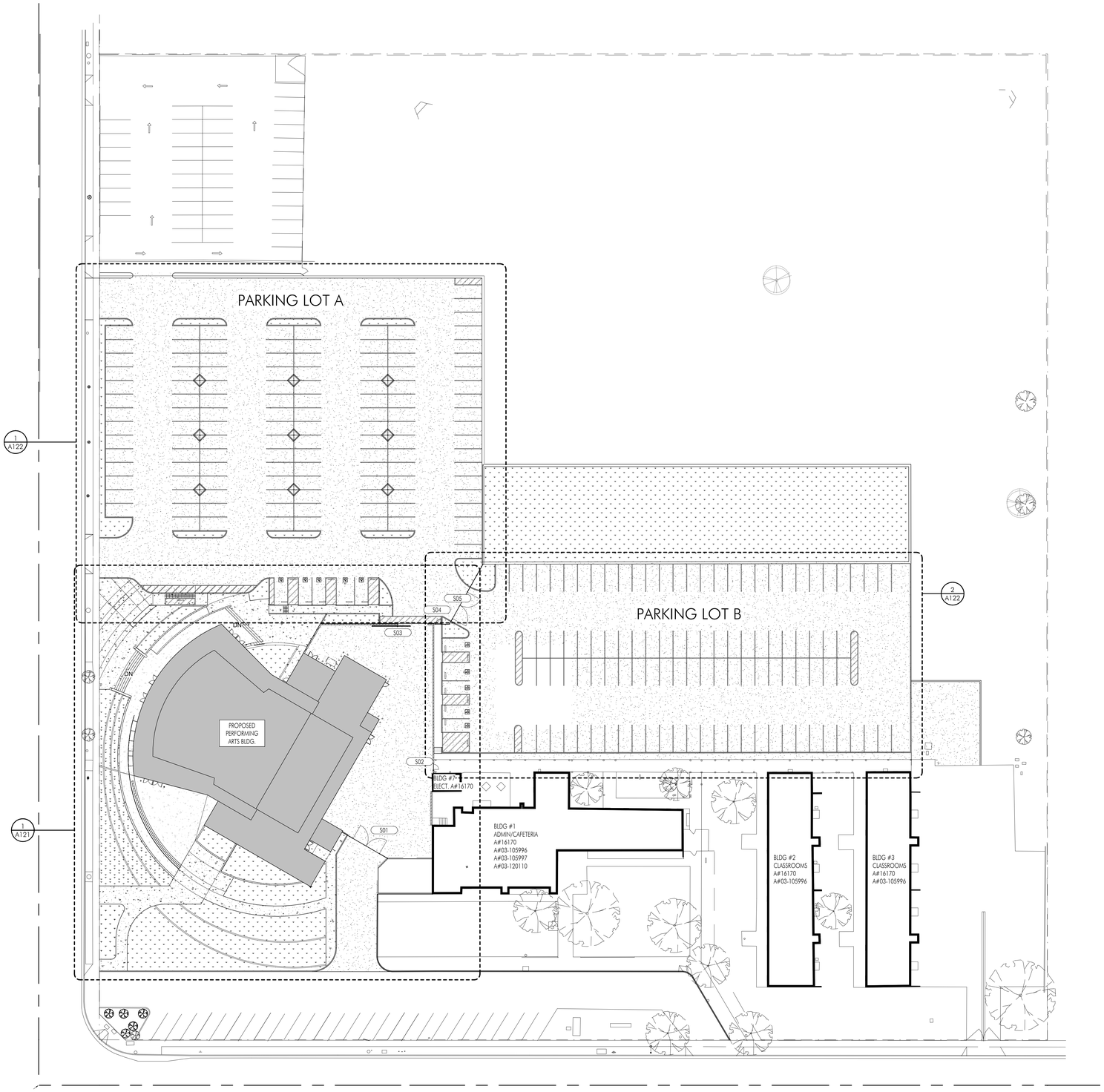

1 OVERALL SITE PLAN

SCALE: 1" = 30'-0"

NORTH TRUE

SITE PLAN LEGEND

SYMBOL	DESCRIPTION
	NEW CONSTRUCTION
	EXISTING CONSTRUCTION
	CONCRETE PAVEMENT. SEE CIVIL DRAWINGS FOR PAVEMENT SECTIONS
	ASPHALT PAVING. SEE CIVIL FOR PAVEMENT SECTIONS
	PLANTER AREA - SEE LANDSCAPE DRAWINGS
S01	GATE, SEE SITE GATE SCHEDULE ON A111

SITE GATE SCHEDULE

S01	20'-0" WIDE X 6'-0" HIGH SWINGING DECORATIVE METAL GATE. SEE LANDSCAPE FOR MORE INFORMATION.
S02	3'-6" WIDE X 6'-0" HIGH SWINGING DECORATIVE METAL GATE. SEE LANDSCAPE FOR MORE INFORMATION.SEE LANDSCAPE FOR MORE INFORMATION.
S03	20'-0" WIDE X 6'-0" HIGH MOTORIZED DECORATIVE METAL ROLLING GATE. SEE LANDSCAPE FOR MORE INFORMATION.SEE LANDSCAPE FOR MORE INFORMATION.
S04	3'-6" WIDE X 6'-0" HIGH SWINGING DECORATIVE METAL GATE. SEE LANDSCAPE FOR MORE INFORMATION.SEE LANDSCAPE FOR MORE INFORMATION.
S05	20'-0" WIDE X 6'-0" HIGH MOTORIZED DECORATIVE METAL ROLLING GATE. SEE LANDSCAPE FOR MORE INFORMATION.SEE LANDSCAPE FOR MORE INFORMATION.

APPL No. A03-122864

IDENTIFICATION STAMP
DIV. OF THE STATE ARCHITECT
APP: 03-122864 INC:
REVIEWED FOR
SS ☑ FLS ☑ ACS ☑
DATE: 10/03/2023

DSA Stamp

Architect

RACHLIN PARTNERS
8640 National Boulevard
Culver City, CA 90232
310.204.3400

Disclaimer:

THESE DRAWINGS ARE THE PROPERTY OF THE ARCHITECT. THE DESIGNS SHOWN AND DESCRIBED HEREIN INCLUDING ALL TECHNICAL DRAWINGS ARE PROPRIETARY AND CANNOT BE COPIED, DUPLICATED OR COMMERCIALLY EXPLOITED IN ANY WAY WITHOUT THE EXPRESS PERMISSION OF THE ARCHITECT. SHALL NOT BE USED BY THE OWNER ON OTHER PROJECTS, FOR ADDITIONS TO THIS PROJECT, OR FOR COMPLETION OF THIS PROJECT BY OTHERS. THE OWNER AGREES TO HOLD HARMLESS, INDEMNIFY AND DEFEND THE ARCHITECT AGAINST ALL DAMAGES, CLAIMS AND LOSSES, INCLUDING DEFENSE COSTS, ARISING OUT OF ANY REUSE OF PLANS AND SPECIFICATIONS WITHOUT THE WRITTEN AUTHORIZATION OF THE ARCHITECT OF RECORD.

Copyright © 2022 Rachlin Partners, All Rights Reserved.

Performing Arts Center

Hacienda La Puente Unified School District
635 North California Avenue
La Puente, CA 91744

Rev	Date	Issue
1	7.22.22	50% DD
2	10.21.22	50% CD
3	12.09.22	100% CD DSA SUBMITTAL
4	6.19.23	100% CD DSA RESUBMITTAL
5	9.20.23	DSA BACK CHECK

Date: 9.20.2023
Scale: As indicated
Drawn By: JP, NZ
Checked By: Checker

Architect / Engineer Stamp

LICENSED ARCHITECT
NO. C-26229
REN. 8-31-25
STATE OF CALIFORNIA

Consultants
Miyamoto International, Inc.
The Ruzika Company, Inc.
MDC Consulting Engineers
Pocock Design Solutions
Newson Brown Acoustics, LLC
VCA Engineers, Inc.
HJSA Consulting

Sheet Title

Overall Site Plan

Sheet Number

A111

C:\Users\rudy.monico\Documents\R22_HLPUSD-PAC_Central_rudy.monico.rvt

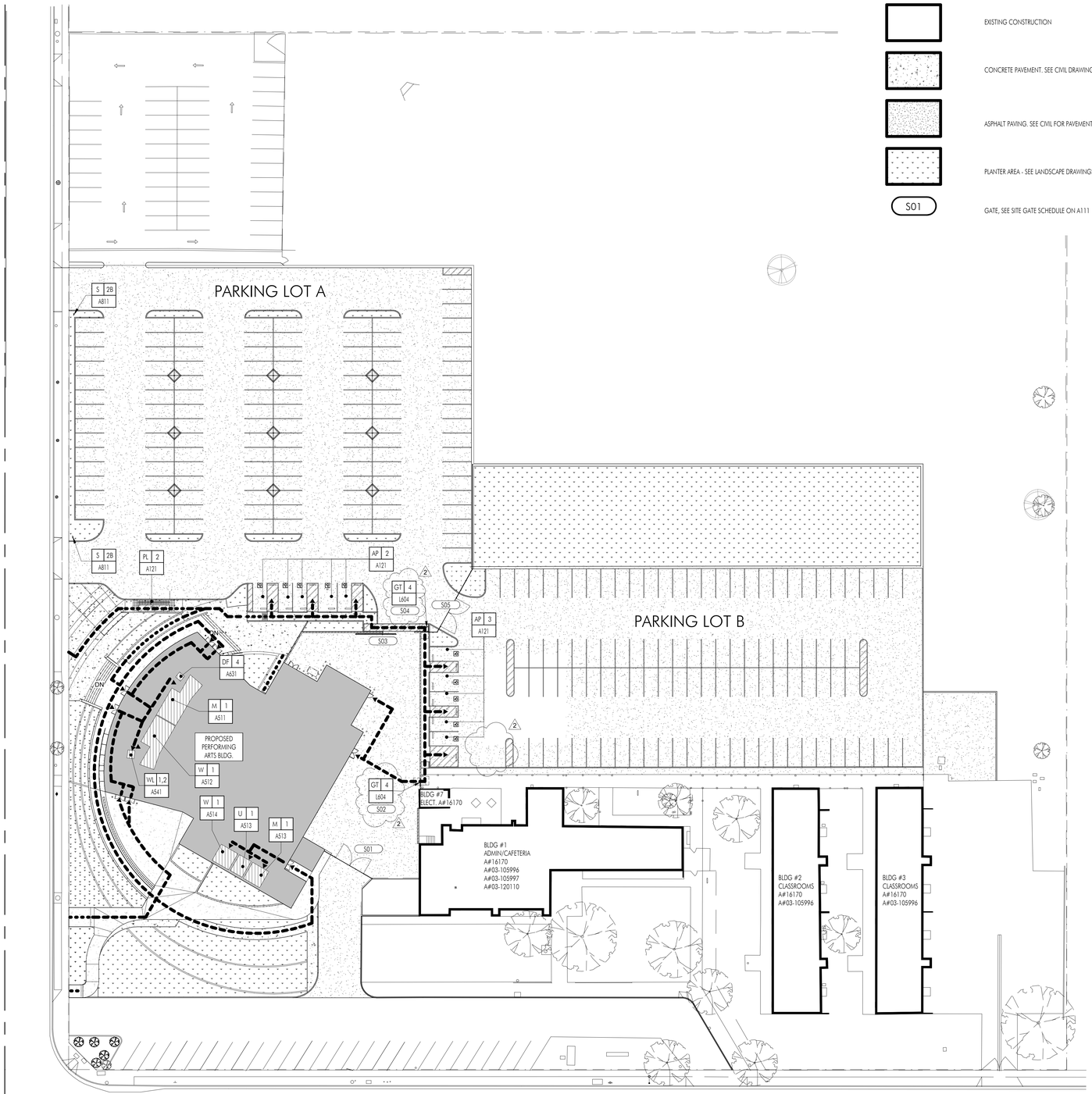

SITE PLAN LEGEND

SYMBOL	DESCRIPTION
	NEW CONSTRUCTION
	EXISTING CONSTRUCTION
	CONCRETE PAVEMENT. SEE CIVIL DRAWINGS FOR PAVEMENT SECTIONS
	ASPHALT PAVING. SEE CIVIL FOR PAVEMENT SECTIONS
	PLANTER AREA - SEE LANDSCAPE DRAWINGS
S01	GATE, SEE SITE GATE SCHEDULE ON A111

ACCESSIBILTY NOTES

SIGNAGE AND ACCESSIBLE PARKING:

EACH PARKING SPACE RESERVED FOR PERSONS WITH PHYSICAL DISABILITIES SHALL BE IDENTIFIED BY A REFLECTORIZED SIGN PERMANENTLY POSTED IMMEDIATELY AND ADJACENT TO AND VISIBLE FROM EACH STALL OR SPACE, CONSISTING OF A PROFILE VIEW OF A WHEELCHAIR WITH OCCUPANT IN WHITE ON DARK BLUE BACKGROUND. THE SIGN SHALL NOT BE SMALLER THAN 70 SQUARE INCHES IN AREA AND, WHEN IN THE PATH OF TRAVEL, SHALL BE POSTED AT A MINIMUM HEIGHT OF 80 INCHES FROM THE PARKING SPACE FINISHED GRADE, GROUND OR SIDEWALK. SIGNS ARE EXISTING.

AN ADDITIONAL SIGN SHALL ALSO BE POSTED, IN A CONSPICUOUS PLACE, AT EACH ENTRANCE TO OFF-STREET PARKING FACILITIES. THE SIGN SHALL NOT BE LESS THAN 17" X 22" IN SIZE WITH LETTERING NOT LESS THAN 1 INCH IN HEIGHT PER DETAIL 10B/A811. SIGN IS EXISTING.

THE CONTRACTOR SHALL VERIFY THE NAME AND PHONE NUMBER OF THE TOWING SERVICE WITH THE OWNER PRIOR TO MANUFACTURING ANY TOWING SIGNS. INFORMATION SHALL BE PERMANENT PART OF THE SIGN. SURFACE SLOPES OF PARKING SPACES AND ACCESS AISLES FOR THE PHYSICALLY DISABLED SHALL NOT EXCEED 1:50 (2%) GRADIENT IN ANY DIRECTION PER CBC 11B-502.6.

A DISABLED PARKING SPACE SHALL BE LOCATED SO AS NOT TO REQUIRE ITS USER TO WHEEL OR WALK BEHIND ANY OTHER DISABLED OR NON-DISABLED PARKING SPACE OTHER THAN THEIR OWN. REFER TO DETAILS 17 & 18/A811.

SITE WALKWAYS AND ACCESSIBLE ROUTES:

PEDESTRIAN WAYS WHICH ARE ACCESSIBLE TO THE PHYSICALLY DISABLED SHALL BE PROVIDED FROM EACH DISABLED PARKING SPACE TO RELATED FACILITIES, INCLUDING CURB CUTS OR RAMPS AS NEEDED.

WALKS AND SIDEWALKS SUBJECT TO THESE REGULATIONS SHALL HAVE A CONTINUOUS COMMON SURFACE, NOT INTERRUPTED BY STEPS OR ABRUPT CHANGES IN LEVEL EXCEEDING 1/2 INCH AND SHALL BE A MINIMUM 48 INCHES IN WIDTH. WALKS SHALL BE SLIP RESISTANT AT LEAST AS SLIP RESISTANT AS THAT DESCRIBED AS A MEDIUM SALT FINISH (CBC 11B-302.1).

SURFACE CROSS SLOPES SHALL NOT EXCEED 1:48 GRADIENT (CBC 11B-403.3). WALKS, SIDEWALKS AND PEDESTRIAN WAYS SHALL BE FREE OF GRATINGS WHENEVER POSSIBLE. FOR GRATINGS LOCATED IN THE SURFACE OF ANY OF THESE AREAS, GRID OPENINGS SHALL BE LIMITED TO 1/2 INCH IN THE DIRECTION OF TRAFFIC FLOW (CBC 1B-302.3).

ABRUPT CHANGES IN LEVEL ALONG ANY ACCESSIBLE ROUTE SHALL NOT EXCEED 1/2 INCH. WHEN CHANGES IN LEVEL DO OCCUR, THEY SHALL BE BEVELED WITH A SLOPE NO GREATER THAN 1:2 EXCEPT THAT LEVEL CHANGES EXCEEDING 1/4 INCH MAY BE VERTICAL (CBC 11B-302.3 AND 11B-303.5).

WHEN CHANGES IN LEVEL GREATER THAN 1/2 INCH OCCUR OR ARE NECESSARY, THEY SHALL COMPLY WITH THE REQUIREMENTS FOR RAMPS.

WALKS SHALL BE PROVIDED WITH A LEVEL AREA NOT LESS THAN 60 INCHES BY 60 INCHES AT A DOOR OR GATE THAT SWINGS TOWARD THE WALK, AND NOT LESS THAN 60 INCHES WIDE BY 48 INCHES DEEP AT A DOOR OR GATE THAT SWINGS AWAY FROM THE WALK. SUCH WALKS SHALL EXTEND 24 INCHES TO THE SIDE OF THE STRIKE EDGE OF A DOOR OR GATE THAT SWINGS TOWARD THE WALK.

ALL WALKS WITH CONTINUOUS GRADIENTS SHALL HAVE LEVEL AREAS AT LEAST 5 FEET IN LENGTH AT INTERVALS OF AT LEAST EVERY 400 FEET.

ANY ACCESSIBLE ROUTE SHALL BE CONSIDERED A RAMP IF ITS SLOPE IS GREATER THAN 1 FOOT RISE IN 20 FEET OF HORIZONTAL RUN.

ACCESSIBLE ROUTES LESS THAN 60 INCHES CLEAR WIDTH SHALL HAVE 60 INCH BY 60 INCH PASSING SPACES LOCATED AT INTERVALS NOT TO EXCEED 200 FEET.

ALL PRIMARY ENTRANCES SHALL BE MADE ACCESSIBLE TO THE PHYSICALLY DISABLED (CBC 11B-206.2.1, 11B-206.2.2, 11B-206.2.4, 11B-206.4 AND 11B-404.2.3).

ALL ACCESSIBLE ENTRANCES SHALL BE IDENTIFIED WITH AT LEAST ONE STANDARD SIGN WITH ADDITIONAL DIRECTIONAL SIGNS, AS REQUIRED, VISIBLE FROM APPROACHING PEDESTRIAN WAYS.

ISA AT ENTRIES 11B-216.6
ISA SIGNS AT ACCESSIBLE ENTRANCES ON EXISTING BUILDINGS ARE ONLY REQUIRED IF ALL EXISTING ENTRANCES TO THE BUILDING OR FACILITY ARE NOT IN COMPLIANCE WITH 11B-404.

SYMBOL LEGEND

PATH OF TRAVEL (POT) AS INDICATED IS A BARRIER FREE ACCESS ROUTE WITHOUT ANY ABRUPT VERTICAL CHANGES EXCEEDING 1/2" BEVELED AT 1:2 MAXIMUM SLOPE, EXCEPT THAT LEVEL CHANGES DO NOT EXCEED 1/4" VERTICAL AND IS AT LEAST 48 INCHES WIDE. SURFACE IS SLIP RESISTANT, STABLE, FIRM, AND SMOOTH. CROSS-SLOPE DOES NOT EXCEED 2% AND SLOPE IN THE DIRECTION OF TRAVEL IS LESS THAN 5%, UNLESS OTHERWISE NOTED. POT SHALL MAINTAIN FREE OF OVERHANGING OBSTRUCTIONS TO 80" MINIMUM (11B-307.4) AND PROTRUDING OBJECTS GREATER THAN 4" PROJECTION FROM WALL ABOVE 27" AND LESS THAN 80" (11B-307.1). ARCHITECT SHALL VERIFY THAT ALL BARRIERS IN THE PATH OF TRAVEL HAVE BEEN REMOVED OR WILL BE REMOVED UNDER THIS PROJECT, AND PATH OF TRAVEL COMPLIES WITH CBC 11B-402. ARCHITECT AND CONTRACTOR TO VERIFY THAT ALL BARRIERS IN THE PATH OF TRAVEL HAVE BEEN REMOVED AND POT COMPLIES CBC 11B-402.

"DESIGN PROFESSIONAL IN GENERAL RESPONSIBLE CHARGE STATEMENT: THE POT IDENTIFIED IN THESE CONSTRUCTION DOCUMENTS IS COMPLIANT WITH THE CURRENT APPLICABLE CALIFORNIA BUILDING CODE ACCESSIBILITY PROVISIONS FOR PATH OF TRAVEL REQUIREMENTS FOR ALTERATIONS, ADDITIONS AND STRUCTURAL REPAIRS. AS PART OF THE DESIGN OF THIS PROJECT, THE POT WAS EXAMINED AND ANY ELEMENTS, COMPONENTS OR PORTIONS OF THE POT THAT WERE DETERMINED TO BE NONCOMPLIANT 1) HAVE BEEN IDENTIFIED AND 2) THE CORRECTIVE WORK NECESSARY TO BRING THEM INTO COMPLIANCE HAS BEEN INCLUDED WITHIN THE SCOPE OF THIS PROJECT'S WORK THROUGH DETAILS, DRAWINGS AND SPECIFICATIONS INCORPORATED INTO THESE CONSTRUCTION DOCUMENTS. ANY NONCOMPLIANT ELEMENTS, COMPONENTS OR PORTIONS OF THE POT THAT WILL NOT BE CORRECTED BY THIS PROJECT BASED ON VALUATION THRESHOLD LIMITATION OR A FINDING OF UNREASONABLE HARDSHIP, ARE SO INDICATED IN THESE CONSTRUCTION DOCUMENTS. DURING CONSTRUCTION, IF POT ITEMS WITHIN THE SCOPE OF THE PROJECT REPRESENTED AS CODE COMPLIANT ARE FOUND TO BE NONCONFORMING BEYOND REASONABLE CONSTRUCTION TOLERANCES, THEY SHALL BE BROUGHT INTO COMPLIANCE WITH THE CURRENT CBC AS A PART OF THIS PROJECT BY MEANS OF A CONSTRUCTION CHANGE DOCUMENT."

NOTE:
OPENINGS IN GRATINGS OR STRAINERS LOCATED IN PEDESTRIAN CIRCULATION PATHS OR POT SHALL NOT ALLOW PASSAGE OF A SPHERE OF MORE THAN 1/2" DIAMETER. ELONGATED OPENINGS SHALL BE PLACED SO THAT THE LONG DIMENSION IS PERPENDICULAR TO THE DOMINANT DIRECTION OF TRAVEL IN COMPLIANCE WITH CBC 11B-302.3.

SLOPED WALKWAY IN PATH OF TRAVEL WITH SLOPE THAT IS LESS THAN 5%. SEE CIVIL DRAWINGS FOR ADDITIONAL INFORMATION.

M 1 A511 — INDICATES ACCESSIBLE MENS TOILET ROOM; INDICATES DETAIL NUMBER; INDICATES SHEET REFERENCE

W 1 A512 — INDICATES ACCESSIBLE WOMENS TOILET ROOM; INDICATES DETAIL NUMBER; INDICATES SHEET REFERENCE

U 1 A513 — INDICATES ACCESSIBLE UNISEX TOILET ROOM; INDICATES DETAIL NUMBER; INDICATES SHEET REFERENCE

WL 1,2 A541 — INDICATES ACCESSIBLE WHEELCHAIR LIFT; INDICATES DETAIL NUMBER; INDICATES SHEET REFERENCE

S 2B A811 — INDICATES ACCESSIBLE PARKING TOW-AWAY SIGN; INDICATES DETAIL NUMBER; INDICATES SHEET REFERENCE

2 GT 4 L604 — INDICATES ACCESSIBLE GATE; 2 INDICATES DETAIL NUMBER; INDICATES SHEET REFERENCE

AP 2 A121 — INDICATES ACCESSIBLE PARKING; DETAIL NUMBER,EXISTING; INDICATES SHEET REFERENCE

DF 4 A631 — INDICATES ACCESSIBLE DRINKING FOUNTAIN; INDICATES DETAIL NUMBER; INDICATES SHEET REFERENCE

2 PL 2 A121 — INDICATES ACCESSIBLE PASSENGER DROP-OFF; INDICATES DETAIL NUMBER; INDICATES SHEET REFERENCE

PARKING COUNT

PARKING TABULATION - PARKING LOT A

TYPE	SPACES PROVIDED	REQUIRED NO. OF SPACES
STANDARD	124	-
ACCESSIBLE	5	5 INCLUDING 1 VAN ACCESSIBLE
TYPE	1	1
TOTAL	129	

PARKING TABULATION - PARKING LOT B

TYPE	SPACES PROVIDED	REQUIRED NO. OF SPACES
STANDARD	106	-
ACCESSIBLE	5	5 INCLUDING 1 VAN ACCESSIBLE
TYPE	1	1
TOTAL	111	

1 SITE ACCESSIBILITY PLAN

SCALE: 1" = 30'-0"

NORTH _TRUE_

APPL No. A03-122864

DSA Stamp

Architect

RACHLIN PARTNERS
8640 National Boulevard
Culver City, CA 90232
310.204.3400

Disclaimer:

THESE DRAWINGS ARE THE PROPERTY OF THE ARCHITECT. THE DESIGNS SHOWN AND DESCRIBED HEREIN INCLUDING ALL TECHNICAL DRAWINGS ARE PROPRIETARY AND CANNOT BE COPIED, DUPLICATED OR COMMERCIALLY EXPLOITED IN ANY WAY WITHOUT THE EXPRESS PERMISSION OF THE ARCHITECT. SHALL NOT BE USED BY THE OWNER ON OTHER PROJECTS, FOR ADDITIONS TO THIS PROJECT, OR FOR COMPLETION OF THIS PROJECT BY OTHERS. THE OWNER AGREES TO HOLD HARMLESS, INDEMNIFY AND DEFEND THE ARCHITECT AGAINST ALL DAMAGES, CLAIMS AND LOSSES, INCLUDING DEFENSE COSTS, ARISING OUT OF ANY REUSE OF PLANS AND SPECIFICATIONS WITHOUT THE WRITTEN AUTHORIZATION OF THE ARCHITECT OF RECORD.

Copyright © 2022 Rachlin Partners, All Rights Reserved.

Performing Arts Center

Hacienda La Puente Unified School District
635 North California Avenue
La Puente, CA 91744

Rev	Date	Issue
1	7.22.22	50% DD
2	10.21.22	50% CD
3	12.09.22	100% CD DSA SUBMITTAL
4	6.19.23	100% CD DSA RESUBMITTAL
5	9.20.23	DSA BACK CHECK
6	11.01.23	ADDENDUM NO. 1
7	11.01.23	ADDENDUM NO. 2

Date: 11.01.2023
Scale: As indicated
Drawn By: Author
Checked By: Checker

Architect / Engineer Stamp

LICENSED ARCHITECT — RONALD PHILLIP HAAS — NO. C-28229 — REN. 8-31-25 — STATE OF CALIFORNIA

Consultants
Miyamoto International, Inc.
The Ruzika Company, Inc.
MDC Consulting Engineers
Pocock Design Solutions
Newson Brown Acoustics, LLC
VCA Engineers, Inc.
HJSA Consulting

Sheet Title

Site Accessibility Plan

Sheet Number

A112

C:\Users\rody.monico\Documents\R22_HLPUSD-PAC_Central_rody.monico.rvt

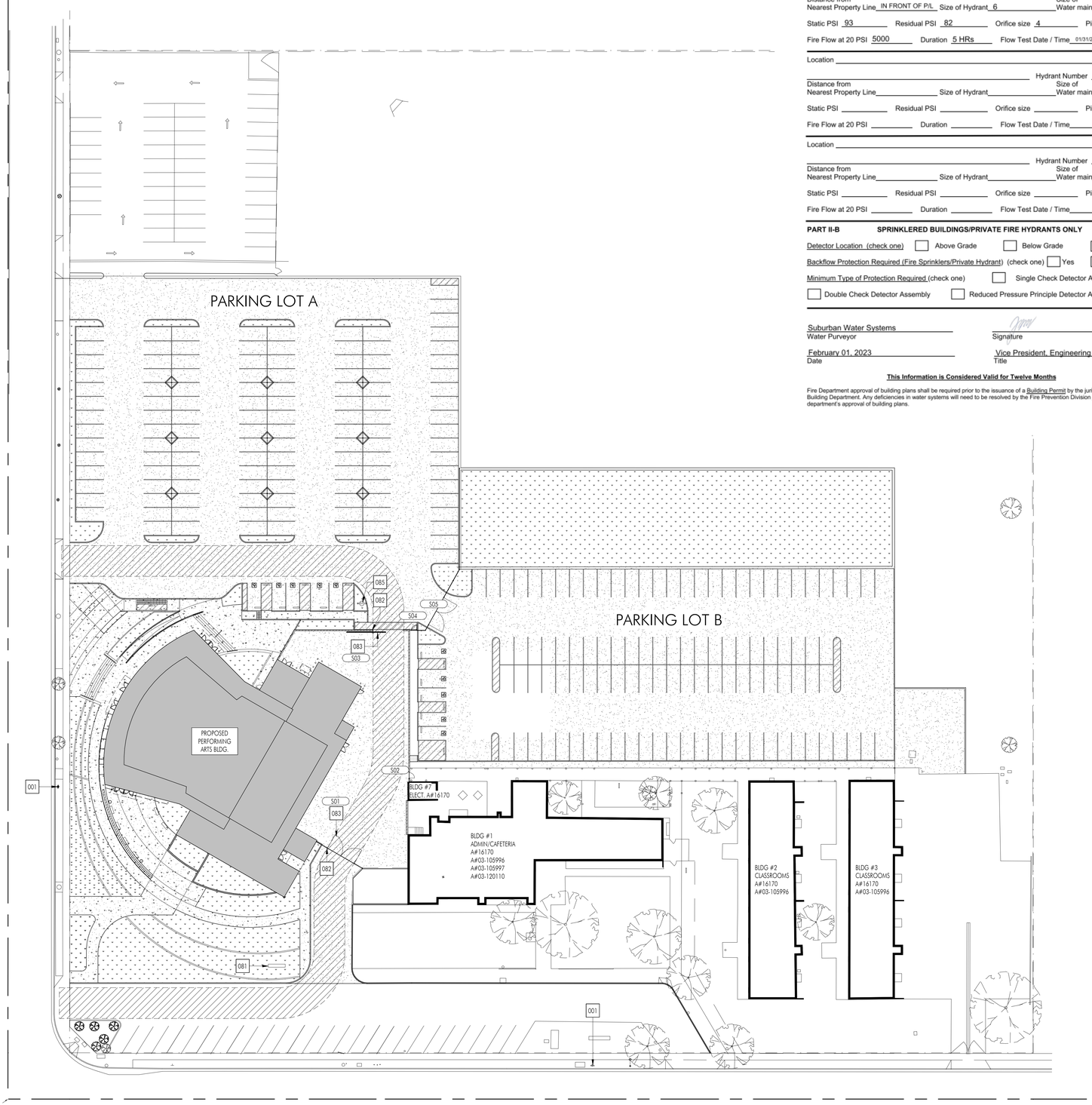

1 FIRE DEPARTMENT ACCESS PLAN

SCALE: 1" = 30'-0"

NORTH TRUE

PART II-A **INFORMATION ON FIRE FLOW AVAILABILITY**
(To be completed by Water Purveyor)

Location NORTH SIDE OF TEMPLE AVE / 130 FT WEST OF CALIFORNIA AVE

Hydrant Number 7426
Distance from Nearest Property Line IN FRONT OF P/L Size of Hydrant 6 Size of Water main 12 AC
Static PSI 93 Residual PSI 82 Orifice size 4 Pitot 35
Fire Flow at 20 PSI 5000 Duration 5 HRs Flow Test Date / Time 01/31/2023 @9:12 AM

Location

Hydrant Number
Distance from Nearest Property Line Size of Hydrant Size of Water main
Static PSI Residual PSI Orifice size Pitot
Fire Flow at 20 PSI Duration Flow Test Date / Time

Location

Hydrant Number
Distance from Nearest Property Line Size of Hydrant Size of Water main
Static PSI Residual PSI Orifice size Pitot
Fire Flow at 20 PSI Duration Flow Test Date / Time

PART II-B **SPRINKLERED BUILDINGS/PRIVATE FIRE HYDRANTS ONLY**

Detector Location (check one) ☐ Above Grade ☐ Below Grade ☐ Either

Backflow Protection Required (Fire Sprinklers/Private Hydrant) (check one) ☐ Yes ☐ No

Minimum Type of Protection Required (check one) ☐ Single Check Detector Assembly ☐ Double Check Detector Assembly ☐ Reduced Pressure Principle Detector Assembly

Suburban Water Systems
Water Purveyor

Signature

February 01, 2023
Date

Vice President, Engineering
Title

This Information is Considered Valid for Twelve Months

Fire Department approval of building plans shall be required prior to the issuance of a Building Permit by the jurisdictional Building Department. Any deficiencies in water systems will need to be resolved by the Fire Prevention Division only prior to this department's approval of building plans.

CONSTRUCTION KEYNOTES

No.	DESCRIPTION
001	(E) FIRE HYDRANT
081	DOUBLE DETECTOR CHECK VALVE ASSEMBLY. SEE CIVIL FOR MORE INFORMATION.
082	PROVIDE AND INSTALL KNOX BOX ON FENCE OR WALL.
083	MINIMUM. 20'-0" WIDE GATE. SEE SITE GATE SCHEDULE ON A111 FOR MORE INFORMATION
085	FIRE HYDRANT. SEE CIVIL FOR MORE INFORMATION.

LEGEND

SYMBOL	DESCRIPTION
	BUILDING IN SCOPE
	BUILDINGS NOT IN SCOPE
	FIRE LANE, SEE CIVL SHEETS C201, C202 AND DETAIL 2/C700
	EXISTING FIRE HYDRANT

DSA **810**

FIRE & LIFE SAFETY SITE CONDITIONS SUBMITTAL

Division of the State Architect (DSA) documents referenced within this publication are available on the DSA Forms or DSA Publications webpages.

To facilitate the Division of the State Architect's (DSA) fire and life safety plan review of project site conditions, DSA requires the design professional to provide the following information at time of project submittal for projects consisting of construction of a new campus, construction of new building(s), additions to existing buildings, and for site alternate design means for fire department emergency vehicle access, and fire suppression water supply.

Information associated with compliance items 1 through 3 below is to be provided for all project types indicated above. Information associated with items 4 through 7 is to be completed when an alternate means is utilized. Acknowledgement by the school district and signature from the Local Fire Authority (LFA) is only required when an alternate design means is being requested.

The Project Information and Fire & Life Safety Information sections are to be completed for all projects and imaged onto the fire access site plan. When an alternate design/means is proposed, all sections on pages 1 and 2 are to be completed and imaged on the fire access site plan.

For additional information refer to the instructions at the end of this form and DSA Policy *PL 09-01: Fire Flow for Buildings*.

PROJECT INFORMATION	
School District/Owner:	Hacienda La Puente Unified School District
Project Name/School:	Performing Arts Center at Temple Academy
Project Address:	635 N California Avenue, La Puente, CA 91744

FIRE & LIFE SAFETY INFORMATION				
1.	Has a fire hydrant flow test been performed within the past 12 months? *(If yes, provide a copy of the test data.)*	Yes ☑		No ☐
2.	Was the fire hydrant water flow test performed as part of this LFA review?	Yes ☑		No ☐
3.	Is the project located within a designated fire hazard severity zone (FHSZ) as established by Cal-Fire? *(If yes, indicate FHSZ classification below.)*	Yes ☐		No ☑
	Refer to the following website for FHSZ locations: http://egis.fire.ca.gov/FHSZ/	Moderate ☐	High ☐	Very High ☐
	Wildland Interface Area (WIFA) *(If any designations are checked, project design must meet the requirements of CBC Chapter 7A.)*			WIFA ☐

DSA 810
FIRE & LIFE SAFETY SITE CONDITIONS SUBMITTAL

CONDITION MEANS AND METHODS RESOLUTION		ALTERNATE ACCEPTED			
		Yes	No	N/A	N/R
4.	Emergency vehicle access roadways do not meet CFC requirements.			✓	
4a.	**Acceptable Alternate:** Emergency vehicle and personnel access as proposed by the project architect is acceptable for providing fire suppression and protection of life and property.				
5.	**Fire Hydrants:** Number and spacing does not meet CFC requirements.			✓	
5a.	**Acceptable Alternate:** Number of fire hydrants and spacing as proposed by the project architect is acceptable for fire suppression and protection of life and property.				
6.	**Fire Hydrants:** Water flow and pressure are less than CFC minimum.			✓	
6a.	**Acceptable Alternate:** The available flow and pressure is acceptable for providing fire suppression and protection of life and property.				
7.	Location of fire department connection(s) serving fire sprinkler systems or standpipe systems does not meet CFC requirements.			✓	
7a.	**Acceptable Alternate:** The location of fire department connection serving the fire sprinkler system and/or standpipe system is acceptable for providing fire suppression and protection of life and property.				

School District Acceptance of Acceptable Design Alternates

By signing this form, the school district acknowledges and accepts the proposed design as an alternative to California Building Code (CBC) and California Fire Code (CFC) minimum requirements, as indicated by one or more of the conditions indicated at items 4a, 5a, 6a or 7a, for providing fire and life safety protection of life and property.

Accepted by: Title:

Signature: Date:

LOCAL FIRE AUTHORITY (LFA) INFORMATION	
LFA Agency Name:	
LFA Review Official:	
Title:	Work Phone:
Work Email:	

LFA Reviewer's Signature: Date:

APPL No. A03-122864

IDENTIFICATION STAMP
DIV. OF THE STATE ARCHITECT
APP: 03-122864 INC:
REVIEWED FOR
SS ☑ FLS ☑ ACS ☑
DATE: 10/03/2023

DSA Stamp

Architect

RACHLIN PARTNERS
8640 National Boulevard
Culver City, CA 90232
310.204.3400

Disclaimer:
THESE DRAWINGS ARE THE PROPERTY OF THE ARCHITECT. THE DESIGNS SHOWN AND DESCRIBED HEREIN INCLUDING ALL TECHNICAL DRAWINGS ARE PROPRIETARY AND CANNOT BE COPIED, DUPLICATED OR COMMERCIALLY EXPLOITED IN ANY WAY WITHOUT THE EXPRESS PERMISSION OF THE ARCHITECT. SHALL NOT BE USED BY THE OWNER ON OTHER PROJECTS, FOR ADDITIONS TO THIS PROJECT, OR FOR COMPLETION OF THIS PROJECT BY OTHERS. THE OWNER AGREES TO HOLD HARMLESS, INDEMNIFY AND DEFEND THE ARCHITECT AGAINST ALL DAMAGES, CLAIMS AND LOSSES, INCLUDING DEFENSE COSTS, ARISING OUT OF ANY REUSE OF PLANS AND SPECIFICATIONS WITHOUT THE WRITTEN AUTHORIZATION OF THE ARCHITECT OF RECORD.

Copyright © 2022 Rachlin Partners, All Rights Reserved.

Performing Arts Center

Hacienda La Puente Unified School District
635 North California Avenue
La Puente, CA 91744

Rev	Date	Issue
1	7.22.22	50% DD
2	10.21.22	50% CD
3	12.09.22	100% CD DSA SUBMITTAL
4	6.19.23	100% CD DSA RESUBMITTAL
5	9.20.23	DSA BACK CHECK

Date: 9.20.2023
Scale: As indicated
Drawn By: Author
Checked By: Checker

Architect / Engineer Stamp

LICENSED ARCHITECT
RICHARD RACHLIN
NO. C-26020
REN 8-31-25
STATE OF CALIFORNIA

Consultants
Miyamoto International, Inc.
The Ruzika Company, Inc.
MDC Consulting Engineers
Pocock Design Solutions
Newson Brown Acoustics, LLC
VCA Engineers, Inc.
HJSA Consulting

Sheet Title

Fire Department Access Plan

Sheet Number

A113

C:\Users\vdy.monico\Documents\R22_HEPJ\3D_PAC_Central_vdy.monico.rvt

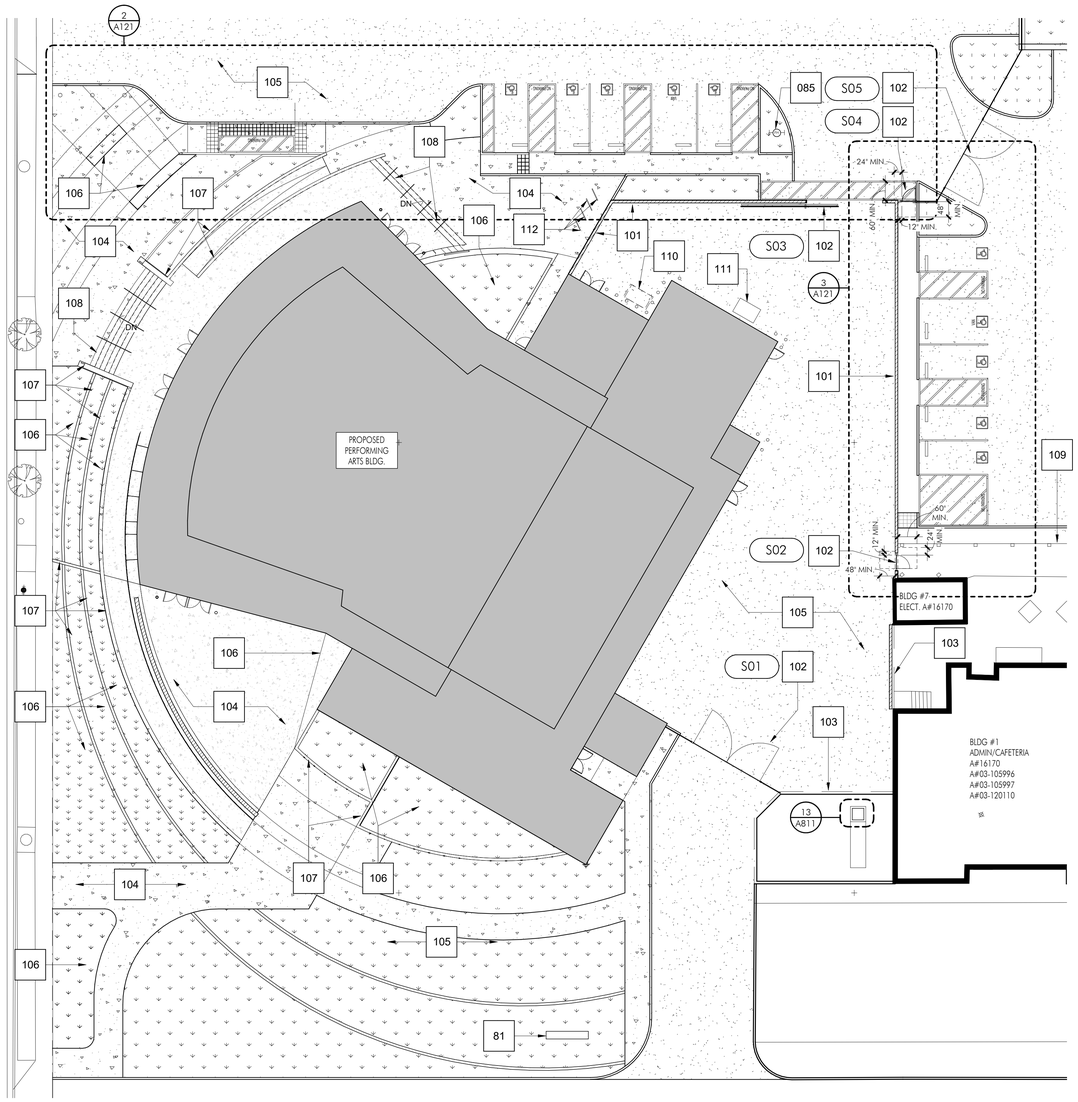

1 ENLARGED SITE PLAN - BUILDING

SCALE: 1/16" = 1'-0"

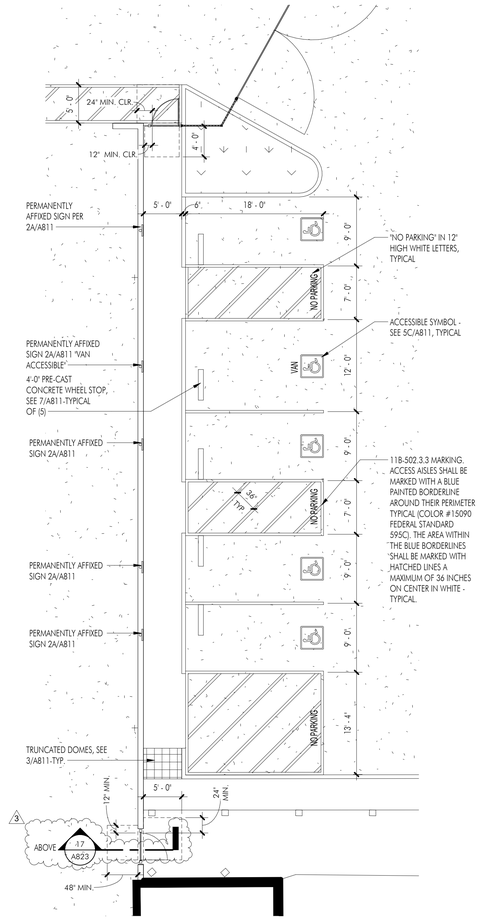

3 ACCESSIBLE PARKING - B - PLAN

SCALE: 1/8" = 1'-0"

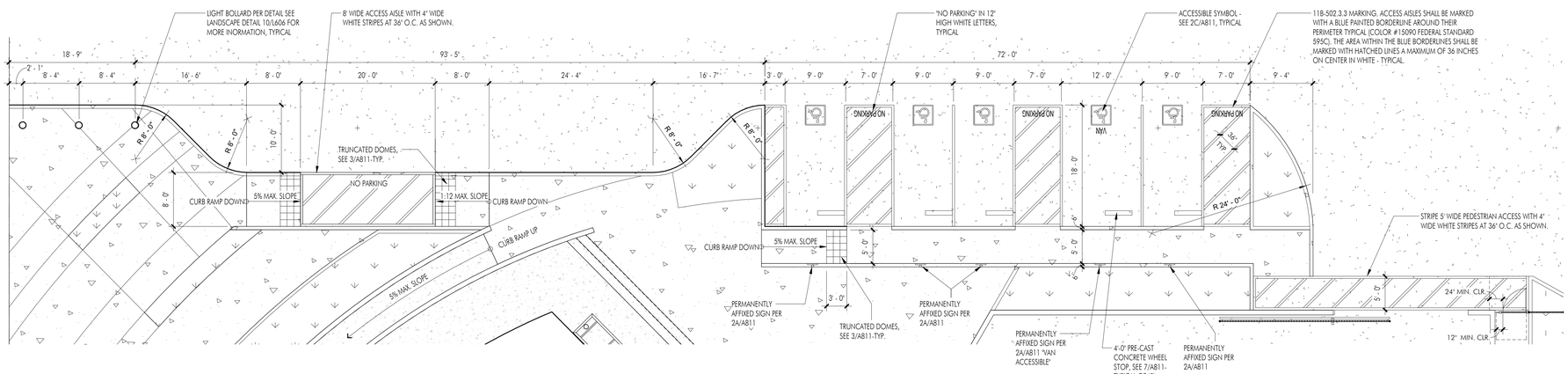

2 PASSENGER DROP-OFF AND ACCESSIBLE PARKING - A - PLAN

SCALE: 1/8" = 1'-0"

SITE PLAN KEYNOTES

KEYNOTE	DESCRIPTION
081	DOUBLE DETECTOR CHECK VALVE ASSEMBLY. SEE CIVIL FOR MORE INFORMATION.
085	FIRE HYDRANT. SEE CIVIL FOR MORE INFORMATION.
101	8' CMU WALL, 8'-0" HIGH WITH 1/2" PLASTER FINISH BOTH SIDES. SEE CIVIL FOR MORE INFORMATION
102	GATE. SEE SITE GATE SCHEDULED ON A111 FOR MORE INFORMATION
103	EXISTING CHAIN LINK FENCE TO REMAIN. PROTECT IN PLACE FOR DURATION OF CONSTRUCTION
104	HARDSCAPE AREA. SEE CIVIL AND LANDSCAPE DRAWINGS FOR MORE INFORMATION
105	ASPHALT PAVED AREA. SEE CIVIL DRAWINGS FOR MORE INFORMATION
106	PLANTED AREA. SEE CIVIL AND LANDSCAPE DRAWINGS FOR MORE INFORMATION
107	SITE PLANTER WALL. SEE CIVIL AND LANDSCAPE DRAWINGS FOR MORE INFORMATION
108	STAIRS WITH HANDRAILS. SEE CIVIL AND LANDSCAPE DRAWINGS FOR MORE INFORMATION
109	EXISTING COVERED WALKWAY TO REMAIN. PROTECT IN PLACE FOR DURATION OF CONSTRUCTION
110	DESIGNATED AREA FOR RECYCLING
111	DOUBLE-BIKE LOCKER, AMERIBIKE BIKE-SHELL 302 OR EQUAL, PERMANENTLY ANCHORED
112	BICYCLE PARKING, 2 BICYCLE CAPACITY EACH (4 TOTAL), AMERBIKE ARC RACK OR EQUAL, PERMANENTLY ANCHORED

SITE PLAN LEGEND

SYMBOL	DESCRIPTION
	NEW CONSTRUCTION
	EXISTING CONSTRUCTION
	CONCRETE PAVEMENT. SEE CIVIL DRAWINGS FOR PAVEMENT SECTIONS
	ASPHALT PAVING. SEE CIVIL FOR PAVEMENT SECTIONS
	PLANTER AREA - SEE LANDSCAPE DRAWINGS
S01	GATE, SEE SITE GATE SCHEDULE ON A111

APPL No. A03-122864

DSA Stamp

Architect

RACHLIN
PARTNERS
8640 National Boulevard
Culver City, CA 90232
310.204.3400

Disclaimer:

THESE DRAWINGS ARE THE PROPERTY OF THE ARCHITECT. THE DESIGNS SHOWN AND DESCRIBED HEREIN INCLUDING ALL TECHNICAL DRAWINGS ARE PROPRIETARY AND CANNOT BE COPIED, DUPLICATED OR COMMERCIALLY EXPLOITED IN ANY WAY. THEY ARE NOT TO BE CHANGED OR COPIED AND SHALL NOT BE USED BY THE OWNER ON OTHER PROJECTS, FOR ADDITIONS TO THIS PROJECT, OR FOR COMPLETION OF THIS PROJECT BY OTHERS. THE OWNER AGREES TO HOLD HARMLESS, INDEMNIFY AND DEFEND THE ARCHITECT AGAINST ALL DAMAGES, CLAIMS AND LOSSES, INCLUDING DEFENSE COSTS, ARISING OUT OF ANY REUSE OF PLANS AND SPECIFICATIONS WITHOUT THE WRITTEN AUTHORIZATION OF THE ARCHITECT OF RECORD.

Copyright © 2022 Rachlin Partners, All Rights Reserved.

Performing Arts Center

Hacienda La Puente Unified School District
635 North California Avenue
La Puente, CA 91744

Rev	Date	Issue
1	7.22.22	50% DD
2	10.21.22	50% CD
3	12.09.22	100% CD DSA SUBMITTAL
4	6.19.23	100% CD DSA RESUBMITTAL
5	9.20.23	DSA BACK CHECK
6	11.01.23	ADDENDUM NO. 1
7	11.01.23	ADDENDUM NO. 2
8	12.15.23	ADDENDUM NO. 3

Date: 11.01.2023
Scale: As indicated
Drawn By: JP, NZ
Checked By: RM

Architect / Engineer Stamp

LICENSED ARCHITECT
LOWELL INGRAM
NO. C-28229
REN. 8-31-25
STATE OF CALIFORNIA

Consultants
Miyamoto International, Inc.
The Ruzika Company, Inc.
MDC Consulting Engineers
Pocock Design Solutions
Newson Brown Acoustics, LLC
VCA Engineers, Inc.
HJSA Consulting

Sheet Title

Enlarged Site Plan

Sheet Number

A121

C:\Users\rudy.monico\Documents\R22_HLPUSD-PAC_Central_rudy.monico.rvt

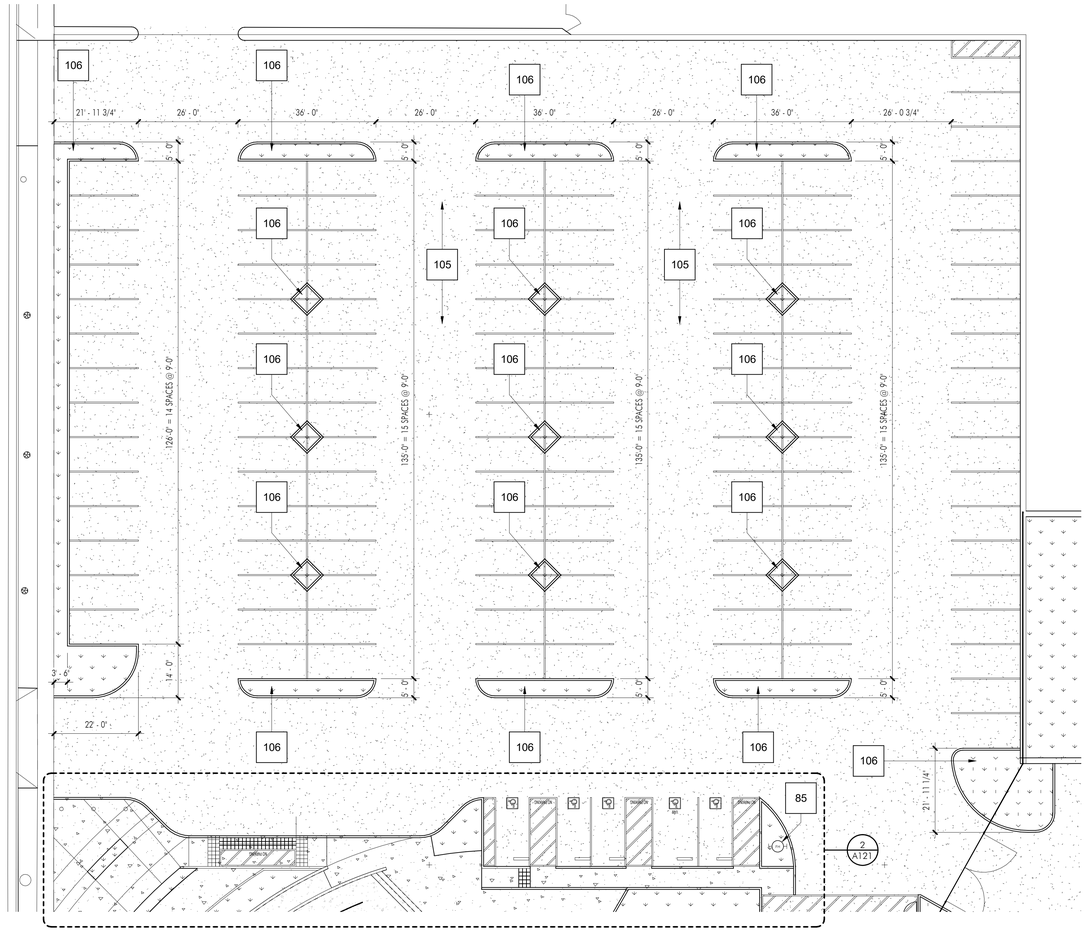

1 ENLARGED SITE PLAN - PARKING LOT - A

SCALE: 1/16" = 1'-0"

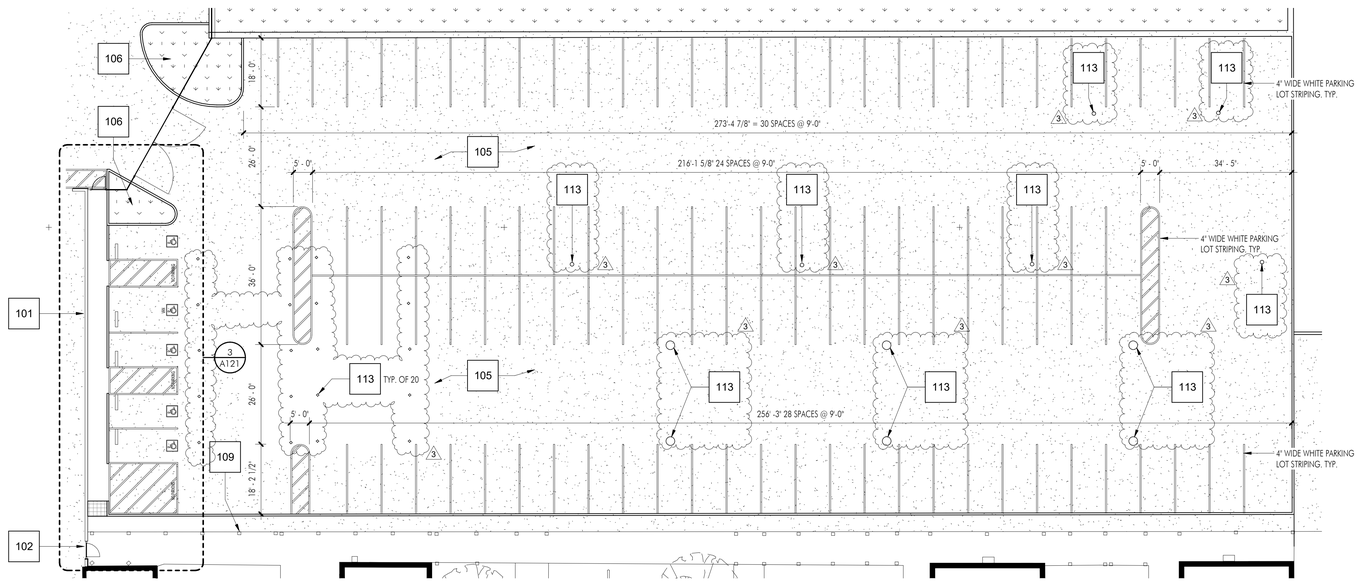

2 ENLARGED SITE PLAN - PARKING LOT - B

SCALE: 1/16" = 1'-0"

C:\Users\rudy.monico\Documents\R22_HLPUSD-PAC_Central_rudy.monico.rvt

SITE PLAN KEYNOTES

KEYNOTE	DESCRIPTION
085	FIRE HYDRANT. SEE CIVIL FOR MORE INFORMATION.
101	8' CMU WALL, 8'-0" HIGH WITH 1/2" PLASTER FINISH BOTH SIDES. SEE CIVIL FOR MORE INFORMATION
102	GATE. SEE SITE GATE SCHEDULED ON A111 FOR MORE INFORMATION
105	ASPHALT PAVED AREA. SEE CIVIL DRAWINGS FOR MORE INFORMATION
106	PLANTED AREA. SEE CIVIL AND LANDSCAPE DRAWINGS FOR MORE INFORMATION
109	EXISTING COVERED WALKWAY TO REMAIN. PROTECT IN PLACE FOR DURATION OF CONSTRUCTION
113	IN PREPARATION FOR NEW PAVEMENT PER CIVIL, GRIND REMAINING PORTIONS OF EXISTING STEEL POST FLUSH WITH EXISING ADJACENT FINISH. FILL CAVITY WITH NON-SHRINK GROUT AND PROVIDE SMOOTH FINISH FLUSH WITH EXISTING ADJACENT FINISH. 3

APPL No. A03-122864

DSA Stamp

Architect

RACHLIN PARTNERS
8640 National Boulevard
Culver City, CA 90232
310.204.3400

Disclaimer:

THESE DRAWINGS ARE THE PROPERTY OF THE ARCHITECT. THE DESIGNS SHOWN AND DESCRIBED HEREIN INCLUDING ALL TECHNICAL DRAWINGS ARE PROPRIETARY AND CANNOT BE COPIED, DUPLICATED OR COMMERCIALLY EXPLOITED EITHER IN WHOLE OR IN PART WITHOUT WRITTEN CONSENT AND SHALL NOT BE USED BY THE OWNER ON OTHER PROJECTS, FOR ADDITIONS TO THIS PROJECT, OR FOR COMPLETION OF THIS PROJECT BY OTHERS. THE OWNER AGREES TO HOLD HARMLESS, INDEMNIFY AND DEFEND THE ARCHITECT AGAINST ALL DAMAGES, CLAIMS AND LOSSES, INCLUDING DEFENSE COSTS, ARISING OUT OF ANY REUSE OF PLANS AND SPECIFICATIONS WITHOUT THE WRITTEN AUTHORIZATION OF THE ARCHITECT OF RECORD.

Copyright © 2022 Rachlin Partners, All Rights Reserved.

Performing Arts Center

Hacienda La Puente Unified School District
635 North California Avenue
La Puente, CA 91744

Rev	Date	Issue
1	7.22.22	50% DD
2	10.21.22	50% CD
3	12.09.22	100% CD DSA SUBMITTAL
4	6.19.23	100% CD DSA RESUBMITTAL
5	9.20.23	DSA BACK CHECK
6	11.01.23	ADDENDUM NO. 1
7	11.01.23	ADDENDUM NO. 2
8	12.15.23	ADDENDUM NO. 3

Date: 11.01.2023
Scale: As indicated
Drawn By: JP, NZ
Checked By: RM

Architect / Engineer Stamp

LICENSED ARCHITECT — RICHARD PACHECO RACHLIN — NO. C-26029 REN. 8-31-25 — STATE OF CALIFORNIA

Consultants
Miyamoto International, Inc.
The Ruzika Company, Inc.
MDC Consulting Engineers
Pocock Design Solutions
Newson Brown Acoustics, LLC
VCA Engineers, Inc.
HJSA Consulting

Sheet Title

Enlarged Site Plan

Sheet Number

A122

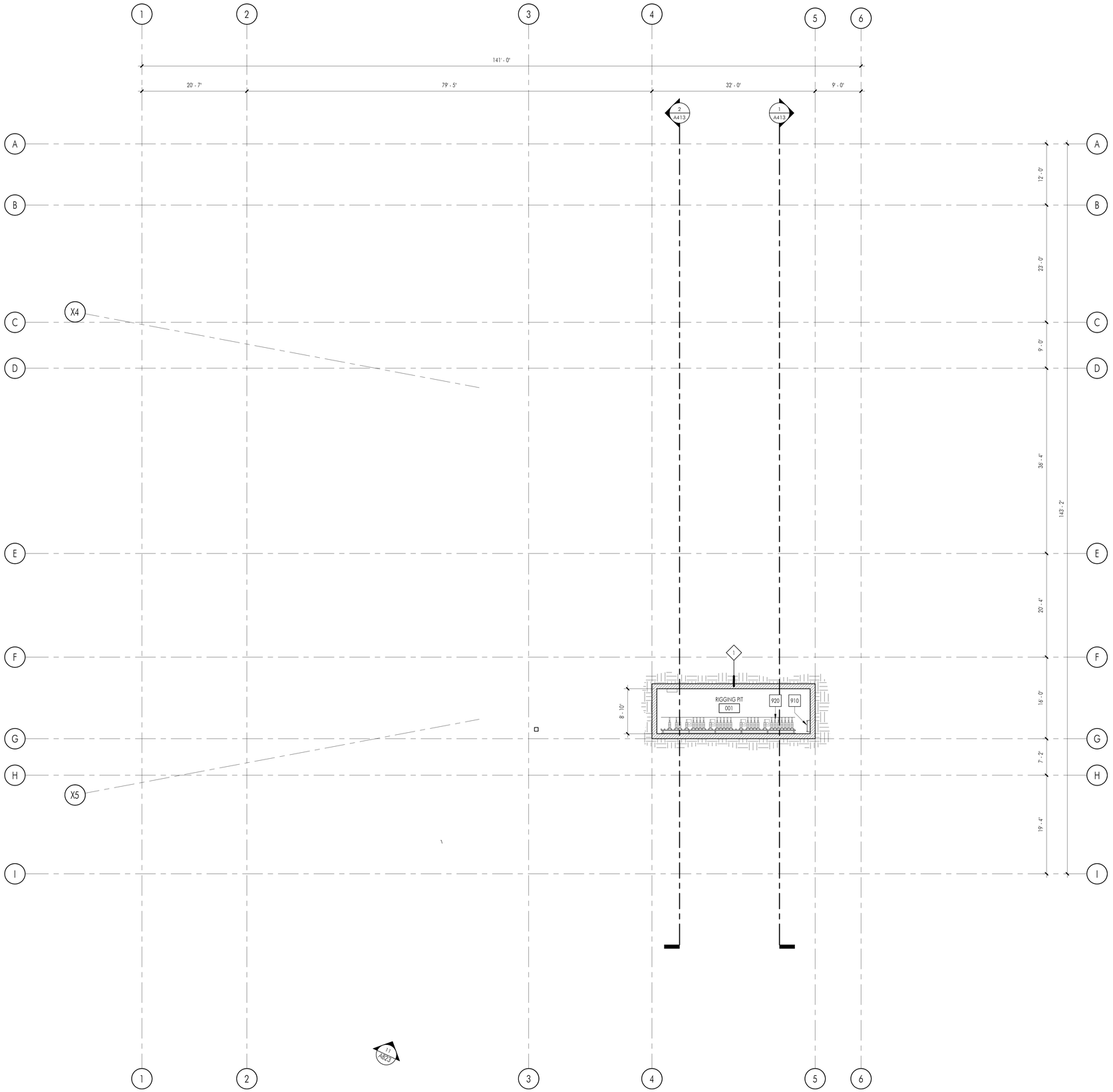

1 RIGGING PIT LEVEL FLOOR PLAN

SCALE: 1/8" = 1'-0"

0' 4' 8' 16' 24'

NORTH

CONSTRUCTION KEYNOTES

No.	DESCRIPTION
910	RIGGING PIT ACCESS LADDER. SEE 1/424 AND 4/A832 FOR MORE INFORMATION
920	STAGE RIGGING, SEE THEATER DRAWINGS. DEFERRED APPROVAL

FLOOR PLAN LEGEND

SYMBOL	DESCRIPTION
1	WALL TAG. FOR WALL TYPE INFORMATION, SEE A711
	FURRED MASONRY WALL ASSEMBLY. REFER TO WALL TYPE AND TYPICAL DETAILS ON A711 FOR MORE INFORMATION
	MASONRY WALL. REFER TO WALL TYPE AND TYPICAL DETAILS ON A711 FOR MORE INFORMATION
	METAL STUD WALL. REFER TO WALL TYPE AND TYPICAL DETAILS ON A711 FOR MORE INFORMATION
D101A	DOOR AS SCHEDULED. REFER TO DOOR TYPE AND SCHEDULE ON A611 FOR MORE INFORMATION
W001	WINDOW AS SCHEDULED. REFER TO WINDOW TYPES ON A611 FOR MORE INFORMATION

FLOOR PLAN GENERAL NOTES:

1. REFER TO MECHANICAL, PLUMBING, ELECTRICAL AND FIRE ALARM DRAWINGS FOR ADDITIONAL SCOPE OF WORK IN EACH ROOM.
2. ALL WALLS SHALL BE FULL HEIGHT TO THE ROOF DECK UNLESS NOTED OTHERWISE, AND SHALL BE CLOSED AND SEALED PER WALL TYPE AND DETAILED ON A711
3. FOR FLOOR MATERIAL PATTERNS, PAINT, AND OTHER FINISH INFORMATION, SEE FINISH PLAN AND FINISH SCHEDULE
4. FOR FINISH SCHEDULE, SEE SHEET A621
5. SEE STRUCTURAL FOR SPACING AND SIZES. ALL GYPSUM BOARD SHALL BE 5/8" TYPE 'X' UNLESS NOTED OTHERWISE. ALL INTERIOR WALLS CALLING FOR INSULATION SHALL HAVE CAVITIES FILLED WITH SOUND ATTENUATION BATT.
6. FOR WALL AND DOOR MOUNTED SIGN TYPES AND LOCATIONS, SEE SIGNAGE PLANS A641, A642, AND A643.
7. DIMENSIONS ARE FACE OF STUD OR CMU TYPICAL UNLESS NOTED OTHERWISE

APPL No. A03-122864

DSA Stamp

Architect

RACHLIN PARTNERS
8640 National Boulevard
Culver City, CA 90232
310.204.3400

Disclaimer:

THESE DRAWINGS ARE THE PROPERTY OF THE ARCHITECT. THE DESIGNS SHOWN AND DESCRIBED HEREIN INCLUDING ALL TECHNICAL DRAWINGS ARE PROPRIETARY AND CANNOT BE COPIED, DUPLICATED OR COMMERCIALLY EXPLOITED EXCEPT BY WRITTEN AGREEMENT. THESE DRAWINGS AND DESIGNS SHALL NOT BE USED BY THE OWNER ON OTHER PROJECTS, FOR ADDITIONS TO THIS PROJECT, OR FOR COMPLETION OF THIS PROJECT BY OTHERS. THE OWNER AGREES TO HOLD HARMLESS, INDEMNIFY AND DEFEND THE ARCHITECT AGAINST ALL DAMAGES, CLAIMS AND LOSSES, INCLUDING DEFENSE COSTS, ARISING OUT OF ANY REUSE OF PLANS AND SPECIFICATIONS WITHOUT THE WRITTEN AUTHORIZATION OF THE ARCHITECT OF RECORD.

Copyright © 2022 Rachlin Partners, All Rights Reserved.

Performing Arts Center

Hacienda La Puente Unified School District
635 North California Avenue
La Puente, CA 91744

Rev	Date	Issue
1	7.22.22	50% DD
2	10.21.22	50% CD
3	12.09.22	100% CD DSA SUBMITTAL
4	6.19.23	100% CD DSA RESUBMITTAL
5	9.20.23	DSA BACK CHECK
6	11.01.23	ADDENDUM NO. 1
7	11.01.23	ADDENDUM NO. 2

Date: 11.01.2023
Scale: As indicated
Drawn By: JP, NZ
Checked By: RM

Architect / Engineer Stamp

LICENSED ARCHITECT
RICHARD MACHLIN
NO. C-26029
REN. 8-31-25
STATE OF CALIFORNIA

Consultants
Miyamoto International, Inc.
The Ruzika Company, Inc.
MDC Consulting Engineers
Pocock Design Solutions
Newson Brown Acoustics, LLC
VCA Engineers, Inc.
HJSA Consulting

Sheet Title

Rigging Pit Plan

Sheet Number

A210

C:\Users\rudy.monico\Documents\R22_HLPUSD-PAC_Central_rudy.monico.rvt

CONSTRUCTION KEYNOTES

No.	DESCRIPTION
106	ACCESSIBLE HI-LO DRINKING FOUNTAIN PER DETAIL 3/A631
122	SURFACE MOUNTED FIRE EXTINGUISHER CABINET (2-A RATED) PER DETAIL 10/A866
123	STAINLESS STEEL CORNER TRIMS 48" HIGH
124	STAINLESS STEEL CORNER TRIMS 96" HIGH
200	ROOF ACCESS LADDER SEE 2 AND 4/A832 FOR MORE INFORMATION
201	MECHANICAL SHAFT
703	STEEL COLUMN, SEE STRUCTURAL DRAWINGS
853	SERVICE SINK, SEE PLUMBING DRAWINGS
901	THEATRICAL SEATING
902	ADA COMPLIANT WHEELCHAIR SPACE. 36" X 48" FOR SINGLE AND 33" X 48" FOR SIDE-BY-SIDE WHEELCHAIRS
906	LOADING/FLY GALLERY ACCESS LADDER. SEE 1/A424 AND 4/A832 FOR MORE INFORMATION
907	GUARDRAIL AT ORCHESTRA/PARTERRE LEVEL. SEE 1/A861 FOR ADDITIONAL INFORMATION
908	HANDRAIL AT AISLE. SEE 1/A861 AND 14/A862 FOR ADDITIONAL INFORMATION
910	RIGGING PIT ACCESS LADDER. SEE 1/424 AND 4/A832 FOR MORE INFORMATION
920	STAGE RIGGING, SEE THEATER DRAWINGS. DEFERRED APPROVAL
934	THEATER ASSISTIVE LISTENING SYSTEM TO BE EQUIPPED WITH 21 HEADSETS [506 OCCUPANTS *.04 = 20.24 (21) HEADSETS]
951	GYPSUM BOARD SOUND REFLECTORS. SEE ENLAREFED PLANS ON A518, A519 AND DETAILS ON A863 FOR ADDITIONAL INFORMATION

FLOOR PLAN LEGEND

SYMBOL	DESCRIPTION
1	WALL TAG. FOR WALL TYPE INFORMATION, SEE A711
	FURRED MASONRY WALL ASSEMBLY. REFER TO WALL TYPE AND TYPICAL DETAILS ON A711 FOR MORE INFORMATION
	MASONRY WALL. REFER TO WALL TYPE AND TYPICAL DETAILS ON A711 FOR MORE INFORMATION
	METAL STUD WALL. REFER TO WALL TYPE AND TYPICAL DETAILS ON A711 FOR MORE INFORMATION
D101A	DOOR AS SCHEDULED. REFER TO DOOR TYPE AND SCHEDULE ON A611 FOR MORE INFORMATION
W001	WINDOW AS SCHEDULED. REFER TO WINDOW TYPES ON A611 FOR MORE INFORMATION

FLOOR PLAN GENERAL NOTES:

1. REFER TO MECHANICAL, PLUMBING, ELECTRICAL AND FIRE ALARM DRAWINGS FOR ADDITIONAL SCOPE OF WORK IN EACH ROOM
2. ALL WALLS SHALL BE FULL HEIGHT TO THE ROOF DECK UNLESS NOTED OTHERWISE, AND SHALL BE CLOSED AND SEALED PER WALL TYPE AND DETAILED ON A711
3. FOR FLOOR MATERIAL PATTERNS, PAINT, AND OTHER FINISH INFORMATION, SEE FINISH PLAN AND FINISH SCHEDULE
4. FOR FINISH SCHEDULE, SEE SHEET A621
5. SEE STRUCTURAL FOR SPACING AND SIZES. ALL GYPSUM BOARD SHALL BE 5/8" TYPE 'X' UNLESS NOTED OTHERWISE. ALL INTERIOR WALLS CALLING FOR INSULATION SHALL HAVE CAVITIES FILLED WITH SOUND ATTENUATION BATT.
6. FOR WALL AND DOOR MOUNTED SIGN TYPES AND LOCATIONS, SEE SIGNAGE PLANS A641, A642, AND A643.
7. DIMENSIONS ARE FACE OF STUD OR CMU TYPICAL UNLESS NOTED OTHERWISE

1 ORCHESTRA/PARTERRE LEVEL FLOOR PLAN

SCALE: 1/8" = 1'-0"

0' 4' 8' 16' 24'

NORTH

APPL No. A03-122864

DSA Stamp

Architect

RACHLIN PARTNERS
8640 National Boulevard
Culver City, CA 90232
310.204.3400

Disclaimer:
THESE DRAWINGS ARE THE PROPERTY OF THE ARCHITECT. THE DESIGNS SHOWN AND DESCRIBED HEREIN INCLUDING ALL TECHNICAL DRAWINGS ARE PROPRIETARY AND CANNOT BE COPIED, DUPLICATED OR COMMERCIALLY EXPLOITED IN ANY WAY, IN WHOLE OR IN PART WITHOUT WRITTEN PERMISSION. SHALL NOT BE USED BY THE OWNER ON OTHER PROJECTS, FOR ADDITIONS TO THIS PROJECT, OR FOR COMPLETION OF THIS PROJECT BY OTHERS. THE OWNER AGREES TO HOLD HARMLESS, INDEMNIFY AND DEFEND THE ARCHITECT AGAINST ALL DAMAGES, CLAIMS AND LOSSES, INCLUDING DEFENSE COSTS, ARISING OUT OF ANY REUSE OF PLANS AND SPECIFICATIONS WITHOUT THE WRITTEN AUTHORIZATION OF THE ARCHITECT OF RECORD.

Copyright © 2022 Rachlin Partners, All Rights Reserved.

Performing Arts Center

Hacienda La Puente Unified School District
635 North California Avenue
La Puente, CA 91744

Rev	Date	Issue
1	7.22.22	50% DD
2	10.21.22	50% CD
3	12.09.22	100% CD DSA SUBMITTAL
4	6.19.23	100% CD DSA RESUBMITTAL
5	9.20.23	DSA BACK CHECK
6	11.01.23	ADDENDUM NO. 1
7	11.01.23	ADDENDUM NO. 2

Date: 11.01.2023
Scale: As indicated
Drawn By: JP, NZ
Checked By: RM

Architect / Engineer Stamp

LICENSED ARCHITECT JAMES PEARSON NO. C-28229 REN. 8-31-25 STATE OF CALIFORNIA

Consultants
Miyamoto International, Inc.
The Ruzika Company, Inc.
MDC Consulting Engineers
Pocock Design Solutions
Newson Brown Acoustics, LLC
VCA Engineers, Inc.
HJSA Consulting

Sheet Title

Orchestra Level Plan

Sheet Number

A211

C:\Users\rudy.monico\Documents\RT2_HLP-SD_PAC_Central_rudy.monico.rvt

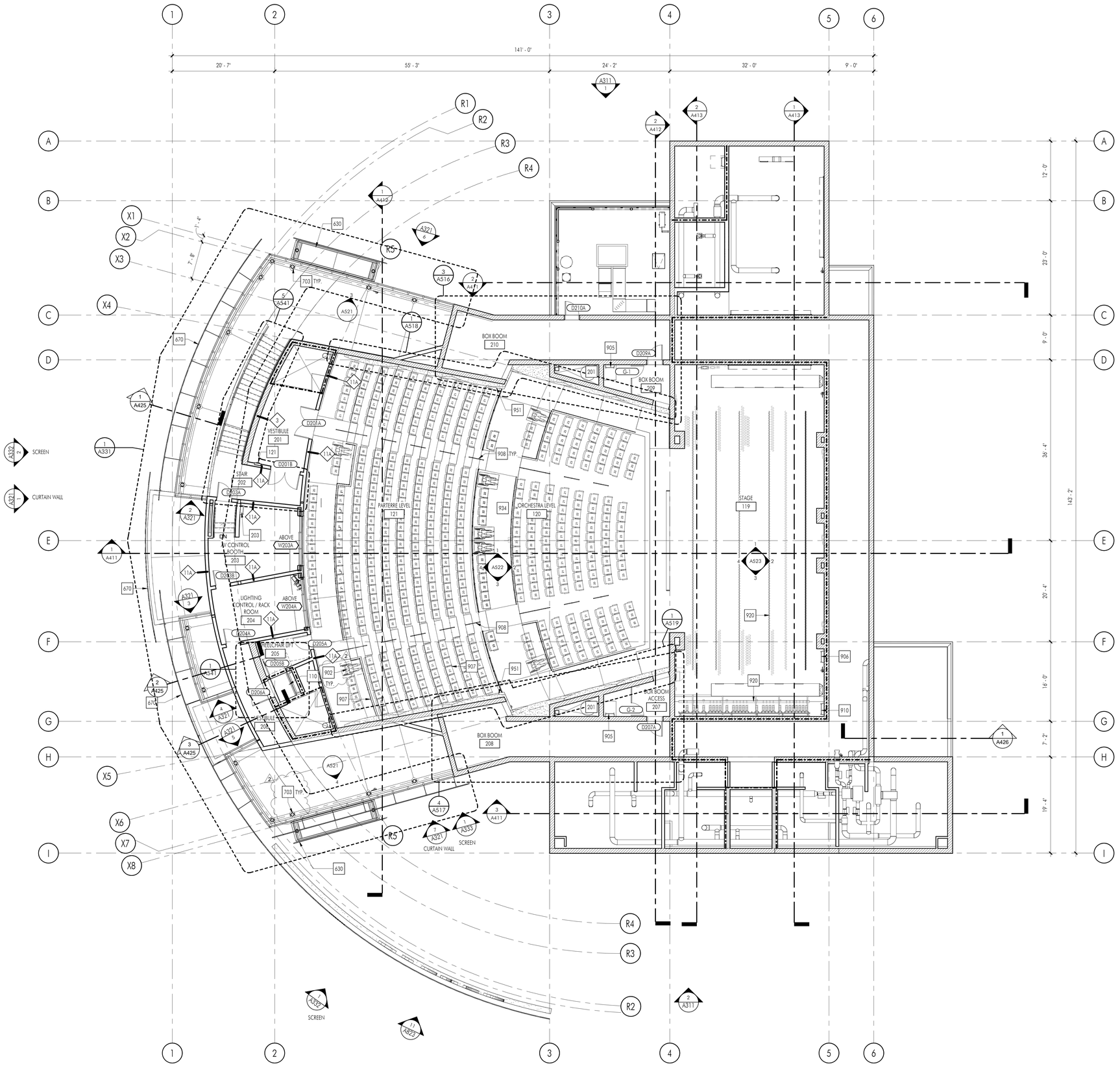

1 CONTROL BOOTH LEVEL FLOOR PLAN

SCALE: 1/8" = 1'-0"

0' 4' 8' 16' 24'

NORTH

CONSTRUCTION KEYNOTES

No.	DESCRIPTION
110	WHEELCHAIR LIFT SEE 1, 2, 4 AND 6/A541
121	RECESS MOUNTED FIRE EXTINGUISHER CABINET (2-A RATED) PER DETAIL 9/A866
201	MECHANICAL SHAFT
203	FOLLOW SPOT ACCESS LADDER. SEE DETAIL 4/A832 SIM.
630	ENTRY CANOPY SEE DETAIL 3/A822 FOR MORE INFORMATION
670	PERFORATED METAL PANEL SCREEN. SEE SHEETS A331, A332 AND A333 FOR MORE INFORMATION.
703	STEEL COLUMN, SEE STRUCTURAL DRAWINGS
902	ADA COMPLIANT WHEELCHAIR SPACE. 36" X 48" FOR SINGLE AND 33" X 48" FOR SIDE-BY-SIDE WHEELCHAIRS
905	BOX BOOM ACCESS LADDER SEE 4B/A832 FOR ANCHORAGE TO WALL
906	LOADING/FLY GALLERY ACCESS LADDER. SEE 1/A424 AND 4/A832 FOR MORE INFORMATION
907	GUARDRAIL AT ORCHESTRA/PARTERRE LEVEL. SEE 1/A861 FOR ADDITIONAL INFORMATION
908	HANDRAIL AT AISLE. SEE 1/A861 AND 14/A862 FOR ADDITIONAL INFORMATION
910	RIGGING PIT ACCESS LADDER. SEE 1/424 AND 4/A832 FOR MORE INFORMATION
920	STAGE RIGGING, SEE THEATER DRAWINGS. DEFERRED APPROVAL
934	THEATER ASSISTIVE LISTENING SYSTEM TO BE EQUIPPED WITH 21 HEADSETS [506 OCCUPANTS *.04 = 20.24 (21) HEADSETS]
951	GYPSUM BOARD SOUND REFLECTORS. SEE ENLAREFED PLANS ON A518, A519 AND DETAILS ON A863 FOR ADDITIONAL INFORMATION

FLOOR PLAN LEGEND

SYMBOL	DESCRIPTION
1	WALL TAG. FOR WALL TYPE INFORMATION, SEE A711
	FURRED MASONRY WALL ASSEMBLY. REFER TO WALL TYPE AND TYPICAL DETAILS ON A711 FOR MORE INFORMATION
	MASONRY WALL. REFER TO WALL TYPE AND TYPICAL DETAILS ON A711 FOR MORE INFORMATION
	METAL STUD WALL. REFER TO WALL TYPE AND TYPICAL DETAILS ON A711 FOR MORE INFORMATION
D101A	DOOR AS SCHEDULED. REFER TO DOOR TYPE AND SCHEDULE ON A611 FOR MORE INFORMATION
W001	WINDOW AS SCHEDULED. REFER TO WINDOW TYPES ON A611 FOR MORE INFORMATION

FLOOR PLAN GENERAL NOTES:

1. REFER TO MECHANICAL, PLUMBING, ELECTRICAL AND FIRE ALARM DRAWINGS FOR ADDITIONAL SCOPE OF WORK IN EACH ROOM
2. ALL WALLS SHALL BE FULL HEIGHT TO THE ROOF DECK UNLESS NOTED OTHERWISE, AND SHALL BE CLOSED AND SEALED PER WALL TYPE AND DETAILED ON A711
3. FOR FLOOR MATERIAL PATTERNS, PAINT, AND OTHER FINISH INFORMATION, SEE FINISH PLAN AND FINISH SCHEDULE
4. FOR FINISH SCHEDULE, SEE SHEET A621
5. SEE STRUCTURAL FOR SPACING AND SIZES. ALL GYPSUM BOARD SHALL BE 5/8" TYPE 'X' UNLESS NOTED OTHERWISE. ALL INTERIOR WALLS CALLING FOR INSULATION SHALL HAVE CAVITIES FILLED WITH SOUND ATTENUATION BATT.
6. FOR WALL AND DOOR MOUNTED SIGN TYPES AND LOCATIONS, SEE SIGNAGE PLANS A641, A642, AND A643.
7. DIMENSIONS ARE FACE OF STUD OR CMU TYPICAL UNLESS NOTED OTHERWISE

APPL No. A03-122864

DSA Stamp

Architect

RACHLIN PARTNERS
8640 National Boulevard
Culver City, CA 90232
310.204.3400

Disclaimer:

THESE DRAWINGS ARE THE PROPERTY OF THE ARCHITECT. THE DESIGNS SHOWN AND DESCRIBED HEREIN INCLUDING ALL TECHNICAL DRAWINGS ARE PROPRIETARY AND CANNOT BE COPIED, DUPLICATED OR COMMERCIALLY EXPLOITED IN ANY WAY. THEY ARE NOT TO BE CHANGED OR USED IN OTHER WORK AND SHALL NOT BE USED BY THE OWNER ON OTHER PROJECTS, FOR ADDITIONS TO THIS PROJECT, OR FOR COMPLETION OF THIS PROJECT BY OTHERS. THE OWNER AGREES TO HOLD HARMLESS, INDEMNIFY AND DEFEND THE ARCHITECT AGAINST ALL DAMAGES, CLAIMS AND LOSSES, INCLUDING DEFENSE COSTS, ARISING OUT OF ANY REUSE OF PLANS AND SPECIFICATIONS WITHOUT THE WRITTEN AUTHORIZATION OF THE ARCHITECT OF RECORD.

Copyright © 2022 Rachlin Partners, All Rights Reserved.

Performing Arts Center

Hacienda La Puente Unified School District
635 North California Avenue
La Puente, CA 91744

Rev	Date	Issue
1	7.22.22	50% DD
2	10.21.22	50% CD
3	12.09.22	100% CD DSA SUBMITTAL
4	6.19.23	100% CD DSA RESUBMITTAL
5	9.20.23	DSA BACK CHECK
6	11.01.23	ADDENDUM NO. 1
7	11.01.23	ADDENDUM NO. 2

Date: 11.01.2023
Scale: As indicated
Drawn By: JP, NZ
Checked By: RM

Architect / Engineer Stamp

LICENSED ARCHITECT
RICHARD MICHAEL ZELINKA
NO. C-28229
REN. 8-31-25
STATE OF CALIFORNIA

Consultants
Miyamoto International, Inc.
The Ruzika Company, Inc.
MDC Consulting Engineers
Pocock Design Solutions
Newson Brown Acoustics, LLC
VCA Engineers, Inc.
HJSA Consulting

Sheet Title

Control Booth Level Plan

Sheet Number

A212

C:\Users\rudy.monico\Documents\RT22_HLPUSD-PAC_Central_rudy.monico.rvt

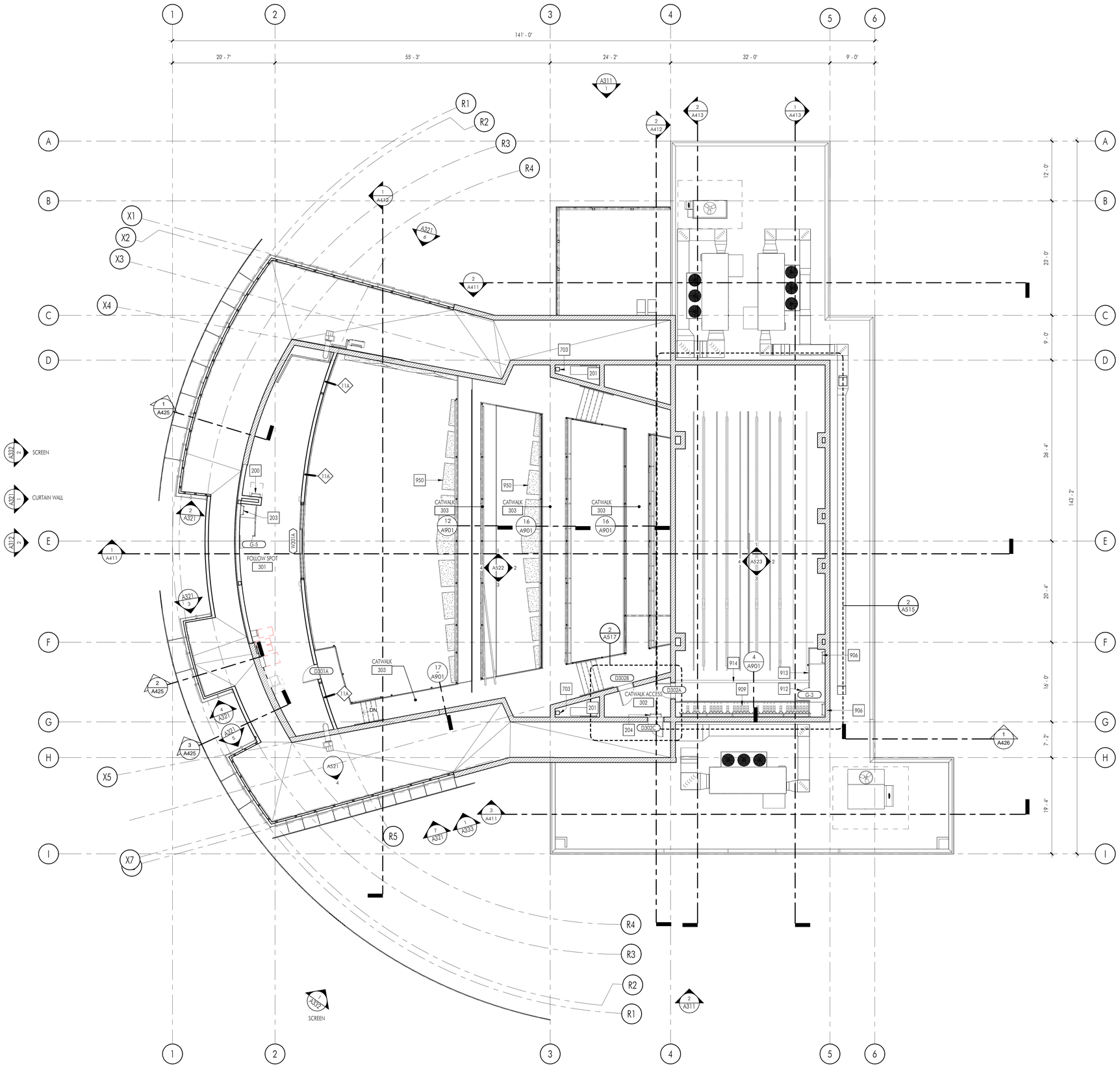

1 FOLLOW SPOT LEVEL FLOOR PLAN

SCALE: 1/8" = 1'-0"

0' 4' 8' 16' 24'

NORTH

C:\Users\rudy.monico\Documents\R22_HUPLISD-PAC_Central_rudy.monico.rvt

CONSTRUCTION KEYNOTES

No.	DESCRIPTION
200	ROOF ACCESS LADDER SEE 2 AND 4/A832 FOR MORE INFORMATION
201	MECHANICAL SHAFT
203	FOLLOW SPOT ACCESS LADDER. SEE DETAIL 4/A832 SIM.
204	ROOF ACCESS LADDER. SEE DETAIL 4/A832
703	STEEL COLUMN, SEE STRUCTURAL DRAWINGS
906	LOADING/FLY GALLERY ACCESS LADDER. SEE 1/A424 AND 4/A832 FOR MORE INFORMATION
909	COUNTER WEIGHT RIGGING PIT
912	ACCESS LADDER SAFETY GATE, SEE 18, 19/A901
913	ACCESS LADDER SAFETY GUARDRAIL, SIMILAR TO CATWALK RAILING DETAIL SEE 7/A901
914	FLY GALLERY ON-STAGE PIN RAIL SEE 4, 8/A901
950	SUSPENDED ACOUSTIC CLOUD REFLECTOR SEE 4/A874 FOR MORE INFORMATION

FLOOR PLAN LEGEND

SYMBOL	DESCRIPTION
1	WALL TAG. FOR WALL TYPE INFORMATION, SEE A711
	FURRED MASONRY WALL ASSEMBLY. REFER TO WALL TYPE AND TYPICAL DETAILS ON A711 FOR MORE INFORMATION
	MASONRY WALL. REFER TO WALL TYPE AND TYPICAL DETAILS ON A711 FOR MORE INFORMATION
	METAL STUD WALL. REFER TO WALL TYPE AND TYPICAL DETAILS ON A711 FOR MORE INFORMATION
D101A	DOOR AS SCHEDULED. REFER TO DOOR TYPE AND SCHEDULE ON A611 FOR MORE INFORMATION
W001	WINDOW AS SCHEDULED. REFER TO WINDOW TYPES ON A611 FOR MORE INFORMATION

FLOOR PLAN GENERAL NOTES:

1. REFER TO MECHANICAL, PLUMBING, ELECTRICAL AND FIRE ALARM DRAWINGS FOR ADDITIONAL SCOPE OF WORK IN EACH ROOM
2. ALL WALLS SHALL BE FULL HEIGHT TO THE ROOF DECK UNLESS NOTED OTHERWISE, AND SHALL BE CLOSED AND SEALED PER WALL TYPE AND DETAILED ON A711
3. FOR FLOOR MATERIAL PATTERNS, PAINT, AND OTHER FINISH INFORMATION, SEE FINISH PLAN AND FINISH SCHEDULE
4. FOR FINISH SCHEDULE, SEE SHEET A621
5. SEE STRUCTURAL FOR SPACING AND SIZES. ALL GYPSUM BOARD SHALL BE 5/8" TYPE 'X' UNLESS NOTED OTHERWISE. ALL INTERIOR WALLS CALLING FOR INSULATION SHALL HAVE CAVITIES FILLED WITH SOUND ATTENUATION BATT.
6. FOR WALL AND DOOR MOUNTED SIGN TYPES AND LOCATIONS, SEE SIGNAGE PLANS A641, A642, AND A643.
7. DIMENSIONS ARE FACE OF STUD OR CMU TYPICAL UNLESS NOTED OTHERWISE

APPL No. A03-122864

DSA Stamp

Architect

RACHLIN PARTNERS
8640 National Boulevard
Culver City, CA 90232
310.204.3400

Disclaimer:

THESE DRAWINGS ARE THE PROPERTY OF THE ARCHITECT. THE DESIGNS SHOWN AND DESCRIBED HEREIN INCLUDING ALL TECHNICAL DRAWINGS ARE PROPRIETARY AND CANNOT BE COPIED, DUPLICATED OR COMMERCIALLY EXPLOITED IN ANY WAY WITHOUT THE ARCHITECT'S EXPRESS WRITTEN CONSENT. SHALL NOT BE USED BY THE OWNER ON OTHER PROJECTS, FOR ADDITIONS TO THIS PROJECT, OR FOR COMPLETION OF THIS PROJECT BY OTHERS. THE OWNER AGREES TO HOLD HARMLESS, INDEMNIFY AND DEFEND THE ARCHITECT AGAINST ALL DAMAGES, CLAIMS AND LOSSES, INCLUDING DEFENSE COSTS, ARISING OUT OF ANY REUSE OF PLANS AND SPECIFICATIONS WITHOUT THE WRITTEN AUTHORIZATION OF THE ARCHITECT OF RECORD.

Copyright © 2022 Rachlin Partners, All Rights Reserved.

Performing Arts Center

Hacienda La Puente Unified School District
635 North California Avenue
La Puente, CA 91744

Rev	Date	Issue
1	7.22.22	50% DD
2	10.21.22	50% CD
3	12.09.22	100% CD DSA SUBMITTAL
4	6.19.23	100% CD DSA RESUBMITTAL
5	9.20.23	DSA BACK CHECK
6	11.01.23	ADDENDUM NO. 1
7	11.01.23	ADDENDUM NO. 2

Date: 11.01.2023
Scale: As indicated
Drawn By: JP, NZ
Checked By: RM

Architect / Engineer Stamp

LICENSED ARCHITECT
RICHARD MICHAEL
NO. C-26029
REN. 8-31-25
STATE OF CALIFORNIA

Consultants
Miyamoto International, Inc.
The Ruzika Company, Inc.
MDC Consulting Engineers
Pocock Design Solutions
Newson Brown Acoustics, LLC
VCA Engineers, Inc.
HJSA Consulting

Sheet Title

Follow Spot Level Plan

Sheet Number

A213

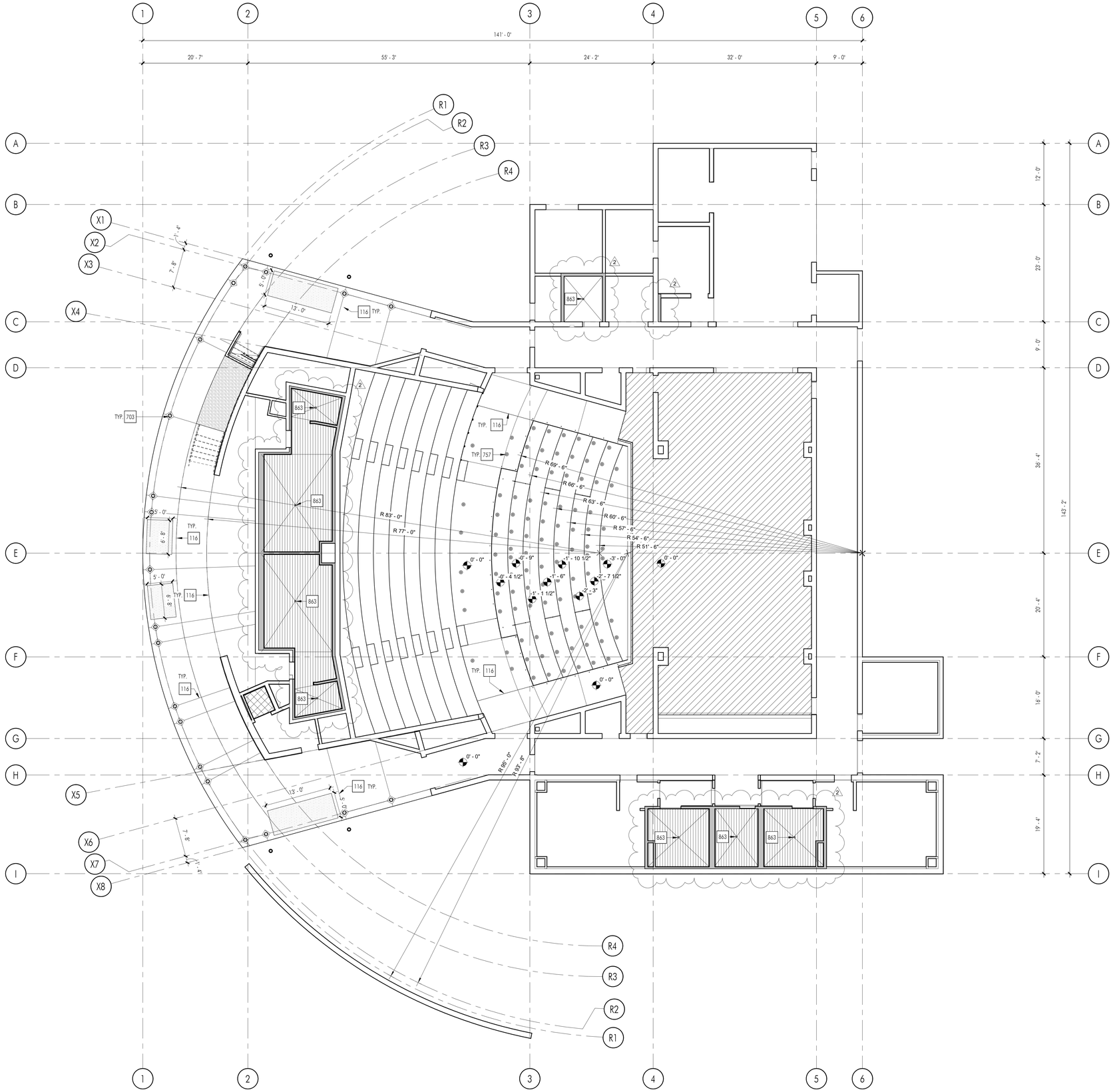

1 ORCHESTRA LEVEL CONTROL DRAWING

SCALE: 1/8" = 1'-0"

0' 4' 8' 16' 24'

NORTH

CONSTRUCTION KEYNOTES

No.	DESCRIPTION
116	CONCRETE SLAB CONTROL JOINT. TYP. SEE DETAIL 4/S0.1
703	STEEL COLUMN, SEE STRUCTURAL DRAWINGS
757	FLOOR MOUNTED MECHANICAL DIFFUSER OR GRILLE OPENING AT SLAB ON GRADE, SEE MECHANICAL DRAWINGS
863	FLOOR DRAIN - TOP OF DRAIN PLATE FLUSH WITH ADJACENT FINISH FLOOR

FLOOR SLAB LEGEND

SYMBOL	DESCRIPTION
	4" DEPRESSED SLAB FOR THEATER FLOORING
	DEPRESSED SLAB AT WHEELCHAIR LIFT PIT. COORDINATE WITH WHEELCHAIR LIFT MANUFACTURER
	DEPRESSED FLOOR SLAB FOR FLOOR TILE. SLOPE TO DRAIN
	5/8" DEPRESSED SLAB FOR WALK-OFF MAT. REF. DETAIL 11/A866
	ROCK PLANTER AREA WITH DECOMPOSED GRANITE
	CONCRETE CURB, SEE WALL TYPE ON A711 AND 10/S0.2 FOR MORE INFORMATION

SLAB PLAN GENERAL NOTES:

1. REFER TO STRUCTURAL DRAWINGS FOR ADDITIONAL SCOPE OF WORK IN EACH ROOM.
2. COORDINATE CURB LOCATIONS WITH DETAILS ON A711.
3. REFER TO STRUCTURAL DRAWINGS FOR FURTHER CONTROL JOINT REQUIREMENTS.
4. ALL DIMENSIONS ARE TO EDGE OF SLAB UNLESS OTHERWISE NOTED.

APPL No. A03-122864

DSA Stamp

Architect

RACHLIN PARTNERS
8640 National Boulevard
Culver City, CA 90232
310.204.3400

Disclaimer:

THESE DRAWINGS ARE THE PROPERTY OF THE ARCHITECT. THE DESIGNS SHOWN AND DESCRIBED HEREIN INCLUDING ALL TECHNICAL DRAWINGS ARE PROPRIETARY AND CANNOT BE COPIED, DUPLICATED OR COMMERCIALLY EXPLOITED EITHER IN WHOLE OR IN PART WITHOUT PRIOR WRITTEN CONSENT. SHALL NOT BE USED BY THE OWNER ON OTHER PROJECTS, FOR ADDITIONS TO THIS PROJECT, OR FOR COMPLETION OF THIS PROJECT BY OTHERS. THE OWNER AGREES TO HOLD HARMLESS, INDEMNIFY AND DEFEND THE ARCHITECT AGAINST ALL DAMAGES, CLAIMS AND LOSSES, INCLUDING DEFENSE COSTS, ARISING OUT OF ANY REUSE OF PLANS AND SPECIFICATIONS WITHOUT THE WRITTEN AUTHORIZATION OF THE ARCHITECT OF RECORD.

Copyright © 2022 Rachlin Partners, All Rights Reserved.

Performing Arts Center

Hacienda La Puente Unified School District
635 North California Avenue
La Puente, CA 91744

Rev	Date	Issue
1	7.22.22	50% DD
2	10.21.22	50% CD
3	12.09.22	100% CD DSA SUBMITTAL
4	6.19.23	100% CD DSA RESUBMITTAL
5	9.20.23	DSA BACK CHECK
6	11.01.23	ADDENDUM NO. 1
7	11.01.23	ADDENDUM NO. 2

Date: 11.01.2023
Scale: As indicated
Drawn By: JP, NZ
Checked By: RM

Architect / Engineer Stamp

LICENSED ARCHITECT
RICHARD MICHAEL SWIFT
NO. C-26229
REN. 8-31-25
STATE OF CALIFORNIA

Consultants
Miyamoto International, Inc.
The Ruzika Company, Inc.
MDC Consulting Engineers
Pocock Design Solutions
Newson Brown Acoustics, LLC
VCA Engineers, Inc.
HJSA Consulting

Sheet Title

Orchestra Level Control Drawing

Sheet Number

A221

C:\Users\rudy.monico\Documents\R22_HLPUSD-PAC_Central_rudy.monico.rvt

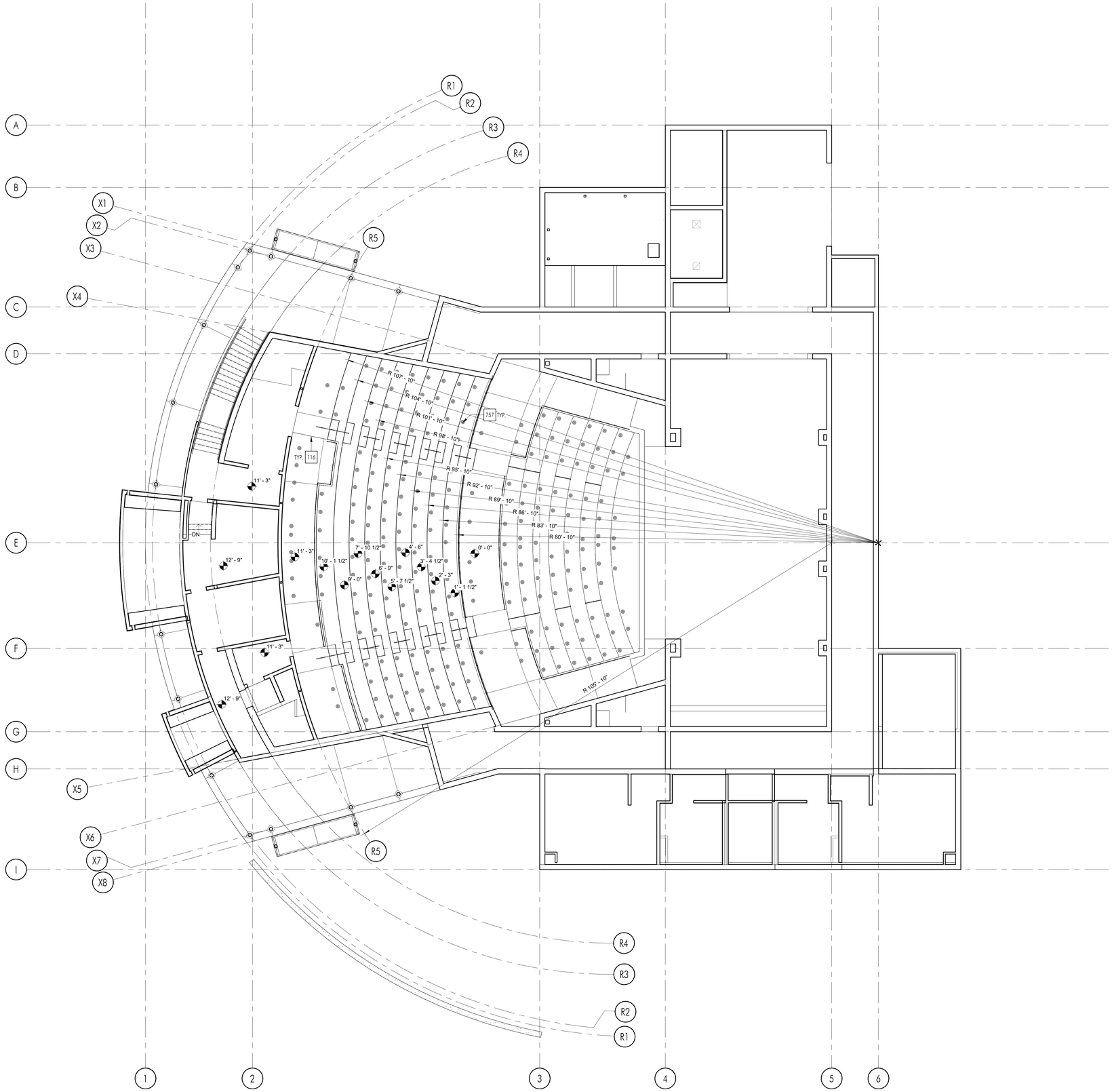

1 CONTROL BOOTH LEVEL CONTROL DRAWING

SCALE: 1/8" = 1'-0"

0' 4' 8' 16' 24'

NORTH

CONSTRUCTION KEYNOTES

No.	DESCRIPTION
116	CONCRETE SLAB CONTROL JOINT. TYP. SEE DETAIL 4/S0.1
757	FLOOR MOUNTED MECHANICAL DIFFUSER OR GRILLE OPENING AT SLAB ON GRADE, SEE MECHANICAL DRAWINGS

FLOOR SLAB LEGEND

SYMBOL	DESCRIPTION
	4" DEPRESSED SLAB FOR THEATER FLOORING
	DEPRESSED SLAB AT WHEELCHAIR LIFT PIT. COORDINATE WITH WHEELCHAIR LIFT MANUFACTURER
	DEPRESSED FLOOR SLAB FOR FLOOR TILE. SLOPE TO DRAIN
	5/8" DEPRESSED SLAB FOR WALK-OFF MAT. REF. DETAIL 11/A866
	ROCK PLANTER AREA WITH DECOMPOSED GRANITE

SLAB PLAN GENERAL NOTES:

1. REFER TO STRUCTURAL DRAWINGS FOR ADDITIONAL SCOPE OF WORK IN EACH ROOM.
2. COORDINATE CURB LOCATIONS WITH DETAILS ON A711.
3. REFER TO STRUCTURAL DRAWINGS FOR FURTHER CONTROL JOINT REQUIREMENTS.
4. ALL DIMENSIONS ARE TO EDGE OF SLAB UNLESS OTHERWISE NOTED.

APPL No. A03-122864

DSA Stamp

Architect

RACHLIN PARTNERS
8640 National Boulevard
Culver City, CA 90232
310.204.3400

Disclaimer:
THESE DRAWINGS ARE THE PROPERTY OF THE ARCHITECT. THE DESIGNS SHOWN AND DESCRIBED HEREIN INCLUDING ALL TECHNICAL DRAWINGS ARE PROPRIETARY AND CANNOT BE COPIED, DUPLICATED OR COMMERCIALLY EXPLOITED EXCEPT WITH THE WRITTEN PERMISSION OF THE ARCHITECT AND SHALL NOT BE USED BY THE OWNER ON OTHER PROJECTS, FOR ADDITIONS TO THIS PROJECT, OR FOR COMPLETION OF THIS PROJECT BY OTHERS. THE OWNER AGREES TO HOLD HARMLESS, INDEMNIFY AND DEFEND THE ARCHITECT AGAINST ALL DAMAGES, CLAIMS AND LOSSES, INCLUDING DEFENSE COSTS, ARISING OUT OF ANY REUSE OF PLANS AND SPECIFICATIONS WITHOUT THE WRITTEN AUTHORIZATION OF THE ARCHITECT OF RECORD.

Copyright © 2022 Rachlin Partners, All Rights Reserved.

Performing Arts Center

Hacienda La Puente Unified School District
635 North California Avenue
La Puente, CA 91744

Rev	Date	Issue
1	7.22.22	50% DD
2	10.21.22	50% CD
3	12.09.22	100% CD DSA SUBMITTAL
4	6.19.23	100% CD DSA RESUBMITTAL
5	9.20.23	DSA BACK CHECK
6	11.01.23	ADDENDUM NO. 1
7	11.01.23	ADDENDUM NO. 2

Date: 11.01.2023
Scale: As indicated
Drawn By: JP, NZ
Checked By: RM

Architect / Engineer Stamp

LICENSED ARCHITECT RICHARD PACHECO RACHLIN NO. C-26229 REN. 8-31-25 STATE OF CALIFORNIA

Consultants
Miyamoto International, Inc.
The Ruzika Company, Inc.
MDC Consulting Engineers
Pocock Design Solutions
Newson Brown Acoustics, LLC
VCA Engineers, Inc.
HJSA Consulting

Sheet Title

Control Booth Level Control Drawing

Sheet Number

A222

C:\Users\rudy.monico\Documents\RT2_HLPUSD-PAC_Central_rudy.monico.rvt

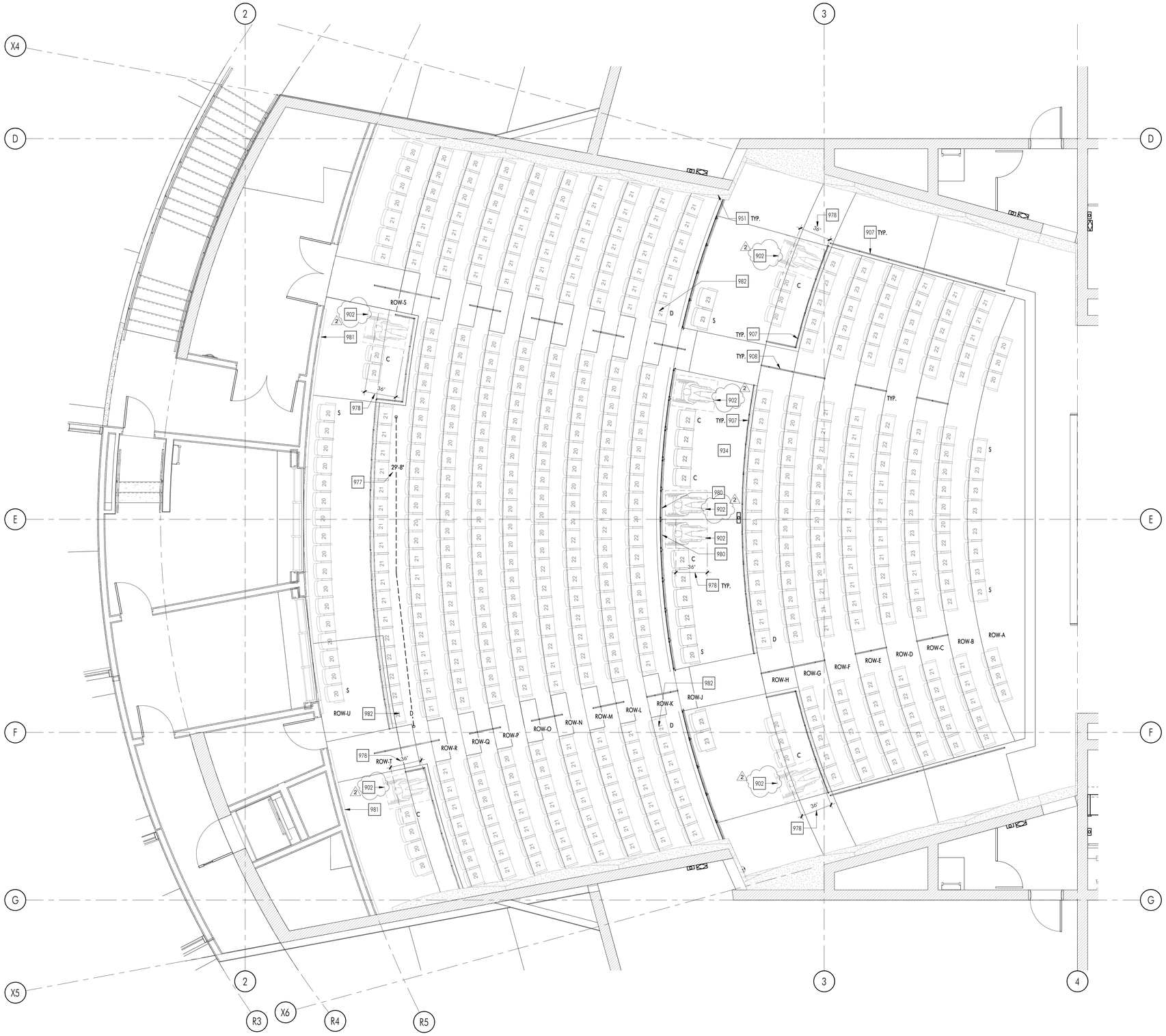

1 SEATING PLAN

SCALE: 1/4" = 1'-0"

0' 4' 8' 16' 24'

NORTH

CONSTRUCTION KEYNOTES

No.	DESCRIPTION
902	ADA COMPLIANT WHEELCHAIR SPACE. 36" X 48" FOR SINGLE AND 33" X 48" FOR SIDE-BY-SIDE WHEELCHAIRS
907	GUARDRAIL AT ORCHESTRA/PARTERRE LEVEL. SEE 1/A861 FOR ADDITIONAL INFORMATION
908	HANDRAIL AT AISLE. SEE 1/A861 AND 14/A862 FOR ADDITIONAL INFORMATION
934	THEATER ASSISTIVE LISTENING SYSTEM TO BE EQUIPPED WITH 21 HEADSETS [506 OCCUPANTS *.04 = 20.24 (21) HEADSETS]
951	GYPSUM BOARD SOUND REFLECTORS. SEE ENLAREFED PLANS ON A518, A519 AND DETAILS ON A863 FOR ADDITIONAL INFORMATION
977	COMMON PATH OF EGRESS TRAVEL PER SECTION 1029.8 SHALL NOT EXCEED 30 FEET FROM THE POINT WHERE THE OCCUPANT IS SEATED TO A POINT WHERE THE OCCUPANT HAS A CHOICE OF TWO DIRECTIONS OF TRAVEL TO TWO EXITS. INDICATED DISTANCE IS 17-10" WHICH DOES NOT EXCEED THE MAXIMUM ALLOWED.
978	SHOULDER ALIGNMENT OF THE COMPANION SEAT SHALL BE 36" AS MEASURED FROM THE FRONT OF THE WHEELCHAIR SPACE
980	PROVIDE ISA SIGNAGE PER DETAIL K/A641 MOUNTED TO GUARDRAIL ADJACENT TO WHEELCHAIR OPEN SEATING.
981	PROVIDE ISA SIGNAGE PER DETAIL K/A641 MOUNTED TO WALL ADJACENT TO WHEELCHAIR OPEN SEATING.
982	DESIGNATED AISLE SEAT W/ ISA SYMBOL OF ACCESSIBLITY COMPLYING WITH CBC 11B 703.7.2.1

SEATING LEGEND

SEATING COUNTS

ROW	WHEELCHAIR SPACES	COMPANION SEATS (C)	DESIGNATED AISLE SEATS (D)	SEMI-AMBULATORY (S)	TOTAL SEATS INSTALLED	ALS RECIEVERS
ORCHESTRA						
A	0	0	0	2	14	-
B	0	0	0	0	20	-
C	0	0	0	0	20	-
D	0	0	0	0	21	-
E	0	0	0	0	22	-
F	0	0	0	0	23	-
G	0	0	0	0	24	-
H	2	2	1	0	19	-
	2	2	1	2	**165**	165*.04 = **6.6**
PARTERRE						
J	3	3	0	2	17	-
K	0	0	2	0	31	-
L	0	0	0	0	32	-
M	0	0	0	0	32	-
N	0	0	0	0	33	-
O	0	0	0	0	34	-
P	0	0	0	0	35	-
Q	0	0	0	0	35	-
R	0	0	0	0	36	-
S	0	0	1	1	24	-
T	2	2	0	0	15	-
U	0	0	0	2	17	-
	5	5	3	4	**341**	341*.04 = **13.64**
TOTALS PROVIDED	**7**	**7**	**4**	**6**	**506***	6.6+13.64= **20.24**
TOTALS REQUIRED	7	7	4**	5***		

(*) 499 SEATS PLUS 7 WHEELCHAIR SPACES 506 **TOTAL**
506 x .04 = 20.24 = **21 ALS RECIEVERS TOTAL**

(**) 70 AISLE SEAT x 0.05 = 3.5 = **4 DESIGNATED AISLE SEATS REQUIRED**

(***) 499 SEATS x 0.01 = 4.99 = **5 SEMI AMBULATORY SEATS REQUIRED**

GENERAL NOTES

1. SEATING LAYOUT INDICATES DESIGN INTENT ONLY. FINAL LAYOUT ON SHOP DRAWINGS INCLUDING CHAIR DIMENSIONS AND QUANTITIES ARE THE SOLE RESPONSIBILITY OF THE THEATRICAL SEATING CONTRACTOR.

2. CLEAR AISLE DIMENSIONS INDICATED ON THE DRAWINGS ARE TO BE FOLLOWED WHEN PREPARING SHOP DRAWINGS. THESE DIMENSIONS ARE BASED ON PROJECT CODE REQUIREMENTS.

3. VERIFY ALL DIMENSIONS AND CONDITIONS IN FIELD PRIOR TO PREPARATION OF SHOP DRAWINGS.

4. WHEN LAYING OUT SEATS IN ROWS WHICH CONTAIN VARYING WIDTH SEATS, ADHERE TO THE FOLLOWING GUIDELINES WHERE POSSIBLE:
- A NARROWER SEAT IS TO BE MOUNTED ADJACENT TO AN AISLE.
- A WIDER SEAT IS TO BE MOUNTED ADJACENT TO SIDE WALLS OR RAILINGS.
- THE REMAINING VERYING WIDTH SEATS ARE TO BE DISTRIBUTED THROUGHOUT THE ROW SO THAT NARROW SEATS ARE NOT MOUNTED ADJACENT TO ONE ANOTHER.
- WHERE POSSIBLE, SEATS SHOULD BE STAGGERED FROM ROW TO ROW.

5. ALL EQUIPMENT BY SEATING CONTRACTOR UNLESS OTHERWISE NOTED.

6. AISLE LIGHT FIXTURES PREWIRED BY SEATING CONTRACTOR AND TERMINATED BY DIVISION 16. AISLE LIGHT JUNCTION BOX, WIRE, AND CONDUIT PROVIDED BY DIVISION 16.

7. AISLE LIGHT TRANSFORMER(S) SUPPLIED BY SEATING CONTRACTOR AND INSTALLED BY DIVISION 16.

APPL No. A03-122864

DSA Stamp

Architect

RACHLIN PARTNERS
8640 National Boulevard
Culver City, CA 90232
310.204.3400

Disclaimer:

THESE DRAWINGS ARE THE PROPERTY OF THE ARCHITECT. THE DESIGNS SHOWN AND DESCRIBED HEREIN INCLUDING ALL TECHNICAL DRAWINGS ARE PROPRIETARY AND CANNOT BE COPIED, DUPLICATED OR COMMERCIALLY EXPLOITED IN ANY WAY. THEY ARE NOT TO BE CHANGED OR ALTERED AND SHALL NOT BE USED BY THE OWNER ON OTHER PROJECTS, FOR ADDITIONS TO THIS PROJECT, OR FOR COMPLETION OF THIS PROJECT BY OTHERS. THE OWNER AGREES TO HOLD HARMLESS, INDEMNIFY AND DEFEND THE ARCHITECT AGAINST ALL DAMAGES, CLAIMS AND LOSSES, INCLUDING DEFENSE COSTS, ARISING OUT OF ANY REUSE OF PLANS AND SPECIFICATIONS WITHOUT THE WRITTEN AUTHORIZATION OF THE ARCHITECT OF RECORD.

Copyright © 2022 Rachlin Partners, All Rights Reserved.

Performing Arts Center

Hacienda La Puente Unified School District
635 North California Avenue
La Puente, CA 91744

Rev	Date	Issue
1	7.22.22	50% DD
2	10.21.22	50% CD
3	12.09.22	100% CD DSA SUBMITTAL
4	6.19.23	100% CD DSA RESUBMITTAL
5	9.20.23	DSA BACK CHECK
6	11.01.23	ADDENDUM NO. 1
7	11.01.23	ADDENDUM NO. 2

Date: 11.01.2023
Scale: As indicated
Drawn By: JP, NZ
Checked By: RM

Architect / Engineer Stamp

LICENSED ARCHITECT
RICHARD MICHAEL
NO. C-28229
REN. 8-31-25
STATE OF CALIFORNIA

Consultants
Miyamoto International, Inc.
The Ruzika Company, Inc.
MDC Consulting Engineers
Pocock Design Solutions
Newson Brown Acoustics, LLC
VCA Engineers, Inc.
HJSA Consulting

Sheet Title

Seating Plan

Sheet Number

A223

C:\Users\rudy.monico\Documents\R22_HLPUSD-PAC_Central_rudy.monico.rvt

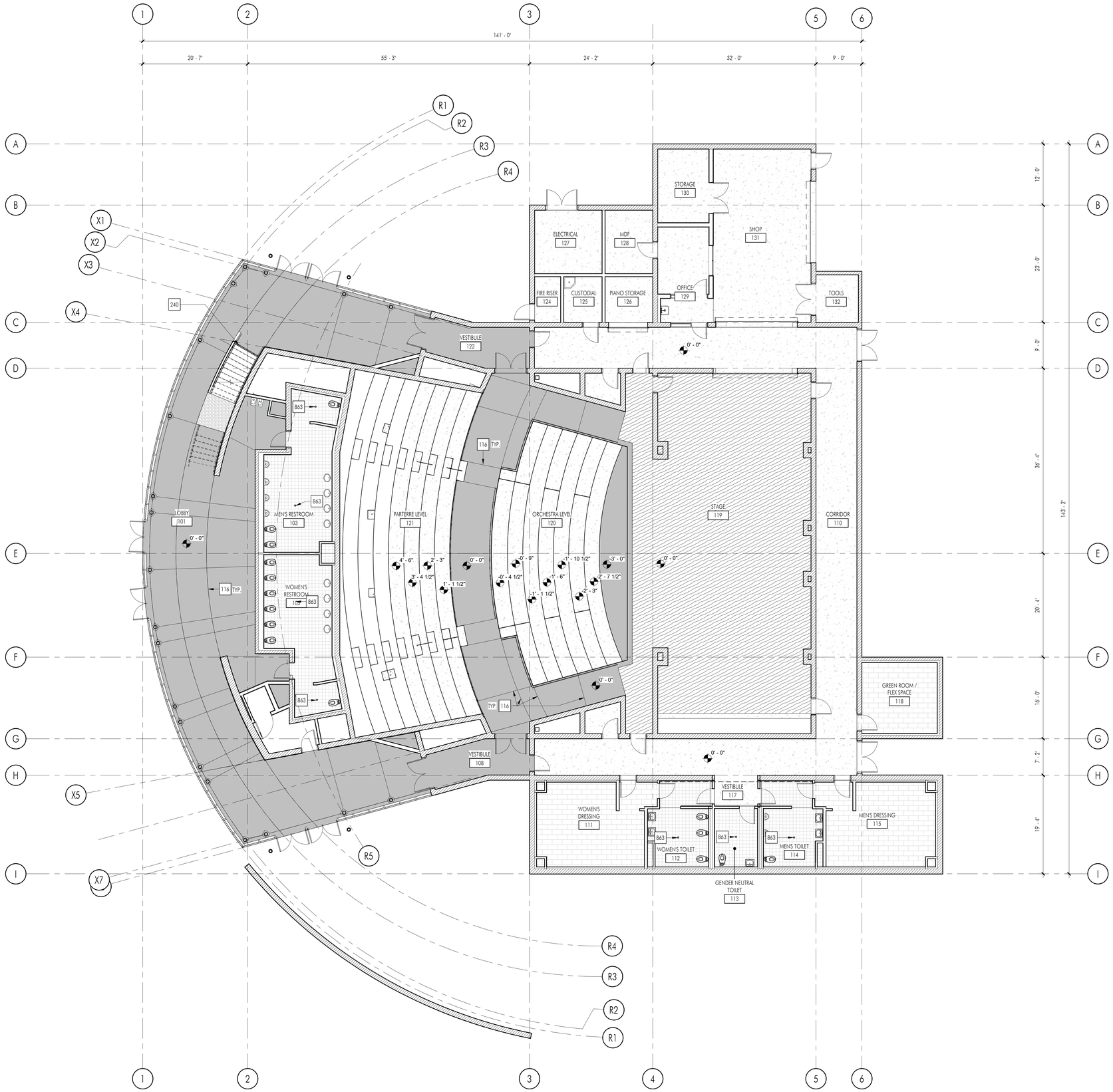

1 ORCHESTRA/PARTERRE LEVEL FLOOR FINISH PLAN

SCALE: 1/8" = 1'-0"

CONSTRUCTION KEYNOTES

No.	DESCRIPTION
116	CONCRETE SLAB CONTROL JOINT. TYP. SEE DETAIL 4/S0.1
240	PROVIDE CONTRASTING STRIPE AT TOP AND BOTTOM OF EACH STAIR RUN. SEE DETAIL 6/A862
863	FLOOR DRAIN - TOP OF DRAIN PLATE FLUSH WITH ADJACENT FINISH FLOOR

FLOOR FINISH LEGEND

SYMBOL	DESCRIPTION
	STAINED AND POLISHED CONCRETE C-2
	SEALED CONCRETE C-3
	CARPET CA-1
	CATWALK FLOOR, PAINTED P-4
	PORCELAIN TILE T-1
	VCT VCT-1
	WOOD STAGE FLOORING W-1 (1-7 A866)
	ROCK PLANTER AREA WITH DECOMPOSED GRANITE

FINISH FLOOR PLAN GENERAL NOTES:

1. FOR FINISH SCHEDULE AND MATERIAL LEGEND, SEE SHEET A621.
2. ALL GYPSUM BOARD WALLS, SOFFITS, AND CEILINGS SHALL BE PAINTED UNLES NOTED OTHERWISE.
3. FOR ALL THRESHOLD DETAILS, SEE DOOR AND FRAME TYPES ON SHEET A611.

APPL No. A03-122864

DSA Stamp

Architect

RACHLIN PARTNERS
8640 National Boulevard
Culver City, CA 90232
310.204.3400

Disclaimer:

THESE DRAWINGS ARE THE PROPERTY OF THE ARCHITECT. THE DESIGNS SHOWN AND DESCRIBED HEREIN INCLUDING ALL TECHNICAL DRAWINGS ARE PROPRIETARY AND CANNOT BE COPIED, DUPLICATED OR COMMERCIALLY EXPLOITED IN ANY WAY. THEY ARE NOT TO BE CHANGED OR USED BY ANYONE SHALL NOT BE USED BY THE OWNER ON OTHER PROJECTS, FOR ADDITIONS TO THIS PROJECT, OR FOR COMPLETION OF THIS PROJECT BY OTHERS. THE OWNER AGREES TO HOLD HARMLESS, INDEMNIFY AND DEFEND THE ARCHITECT AGAINST ALL DAMAGES, CLAIMS AND LOSSES, INCLUDING DEFENSE COSTS, ARISING OUT OF ANY REUSE OF PLANS AND SPECIFICATIONS WITHOUT THE WRITTEN AUTHORIZATION OF THE ARCHITECT OF RECORD.

Copyright © 2022 Rachlin Partners, All Rights Reserved.

Performing Arts Center

Hacienda La Puente Unified School District
635 North California Avenue
La Puente, CA 91744

Rev	Date	Issue
1	7.22.22	50% DD
2	10.21.22	50% CD
3	12.09.22	100% CD DSA SUBMITTAL
4	6.19.23	100% CD DSA RESUBMITTAL
5	9.20.23	DSA BACK CHECK
6	11.01.23	ADDENDUM NO. 1
7	11.01.23	ADDENDUM NO. 2

Date: 11.01.2023
Scale: As indicated
Drawn By: RM, NZ
Checked By: RM

Architect / Engineer Stamp

LICENSED ARCHITECT LEONARD M. RACHLIN NO. C-28229 REN. 8-31-25 STATE OF CALIFORNIA

Consultants
Miyamoto International, Inc.
The Ruzika Company, Inc.
MDC Consulting Engineers
Pocock Design Solutions
Newson Brown Acoustics, LLC
VCA Engineers, Inc.
HJSA Consulting

Sheet Title

Orchestra Level Floor Finish Plan

Sheet Number

A231

C:\Users\rudy.monico\Documents\M22_HLPUSD-PAC_Central_rudy.monico.rvt

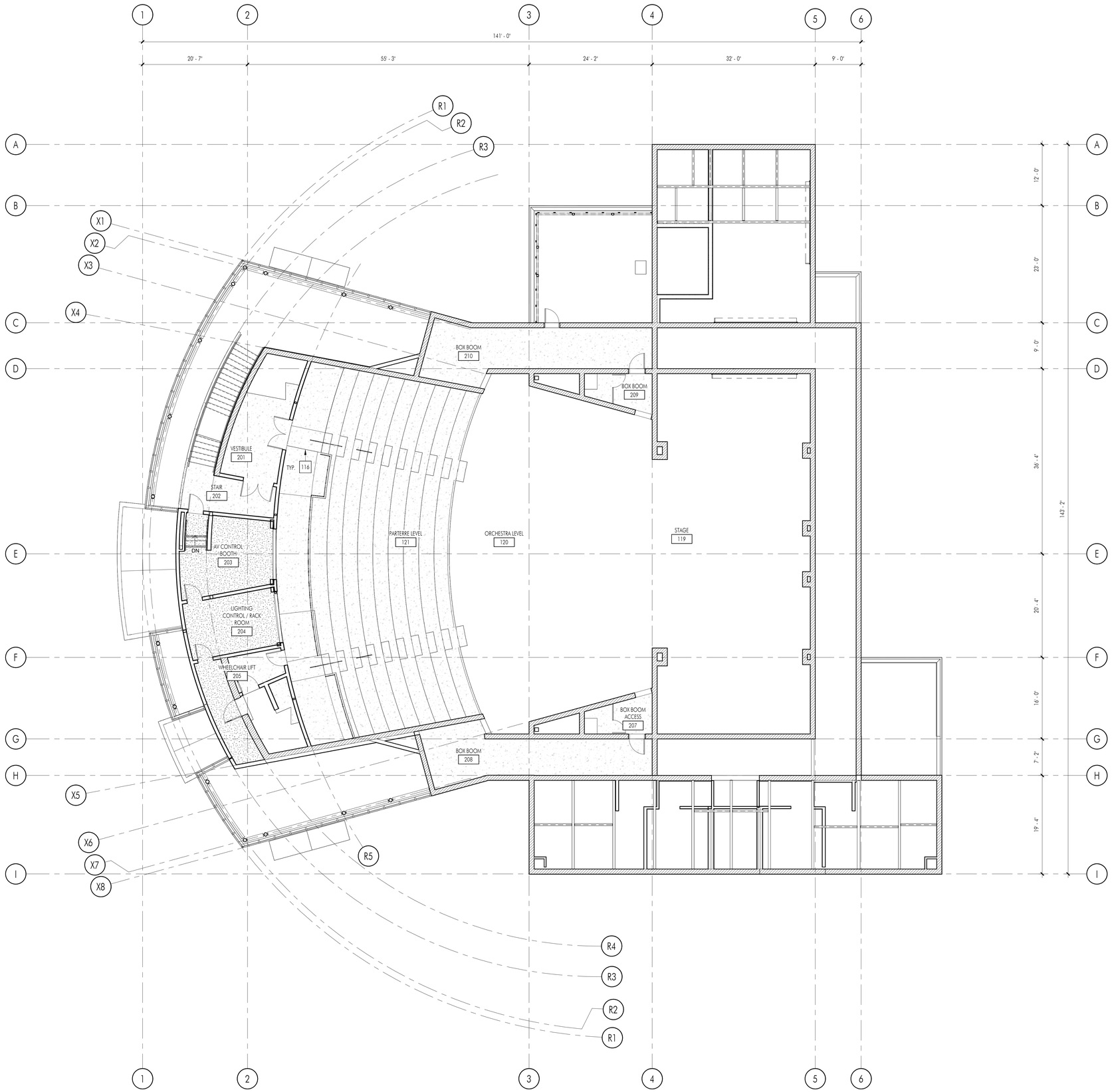

1 CONTROL BOOTH LEVEL FLOOR FINISH PLAN

SCALE: 1/8" = 1'-0"

CONSTRUCTION KEYNOTES

No.	DESCRIPTION
116	CONCRETE SLAB CONTROL JOINT, TYP. SEE DETAIL 4/S0.1

FLOOR FINISH LEGEND

SYMBOL	DESCRIPTION
	STAINED AND POLISHED CONCRETE C-2
	SEALED CONCRETE C-3
	CARPET CA-1
	CATWALK FLOOR. PAINTED P-4
	PORCELAIN TILE T-1
	VCT VCT-1
	WOOD STAGE FLOORING W-1 (1-7 A866)
	ROCK PLANTER AREA WITH DECOMPOSED GRANITE

FINISH FLOOR PLAN GENERAL NOTES:

1. FOR FINISH SCHEDULE AND MATERIAL LEGEND, SEE SHEET A621.
2. ALL GYPSUM BOARD WALLS, SOFFITS, AND CEILINGS SHALL BE PAINTED UNLES NOTED OTHERWISE.
3. FOR ALL THRESHOLD DETAILS, SEE DOOR AND FRAME TYPES ON SHEET A611.

APPL No. A03-122864

DSA Stamp

Architect

RACHLIN PARTNERS
8640 National Boulevard
Culver City, CA 90232
310.204.3400

Disclaimer:

THESE DRAWINGS ARE THE PROPERTY OF THE ARCHITECT. THE DESIGNS SHOWN AND DESCRIBED HEREIN INCLUDING ALL TECHNICAL DRAWINGS ARE PROPRIETARY AND CANNOT BE COPIED, DUPLICATED OR COMMERCIALLY EXPLOITED EITHER IN WHOLE OR IN PART WITHOUT PRIOR WRITTEN CONSENT. SHALL NOT BE USED BY THE OWNER ON OTHER PROJECTS, FOR ADDITIONS TO THIS PROJECT, OR FOR COMPLETION OF THIS PROJECT BY OTHERS. THE OWNER AGREES TO HOLD HARMLESS, INDEMNIFY AND DEFEND THE ARCHITECT AGAINST ALL DAMAGES, CLAIMS AND LOSSES, INCLUDING DEFENSE COSTS, ARISING OUT OF ANY REUSE OF PLANS AND SPECIFICATIONS WITHOUT THE WRITTEN AUTHORIZATION OF THE ARCHITECT OF RECORD.

Copyright © 2022 Rachlin Partners, All Rights Reserved.

Performing Arts Center

Hacienda La Puente Unified School District
635 North California Avenue
La Puente, CA 91744

Rev	Date	Issue
1	7.22.22	50% DD
2	10.21.22	50% CD
3	12.09.22	100% CD DSA SUBMITTAL
4	6.19.23	100% CD DSA RESUBMITTAL
5	9.20.23	DSA BACK CHECK
6	11.01.23	ADDENDUM NO. 1
7	11.01.23	ADDENDUM NO. 2

Date: 11.01.2023
Scale: As indicated
Drawn By: JP, NZ
Checked By: RM

Architect / Engineer Stamp

LICENSED ARCHITECT
RICHARD MICHAEL ZWEIG
NO. C-26029
REN. 8-31-25
STATE OF CALIFORNIA

Consultants
Miyamoto International, Inc.
The Ruzika Company, Inc.
MDC Consulting Engineers
Pocock Design Solutions
Newson Brown Acoustics, LLC
VCA Engineers, Inc.
HJSA Consulting

Sheet Title

Control Booth Level Floor Finish Plan

Sheet Number

A232

C:\Users\rudy.monico\Documents\RP2_HLPUSD-PAC_Central_rudy.monico.rvt

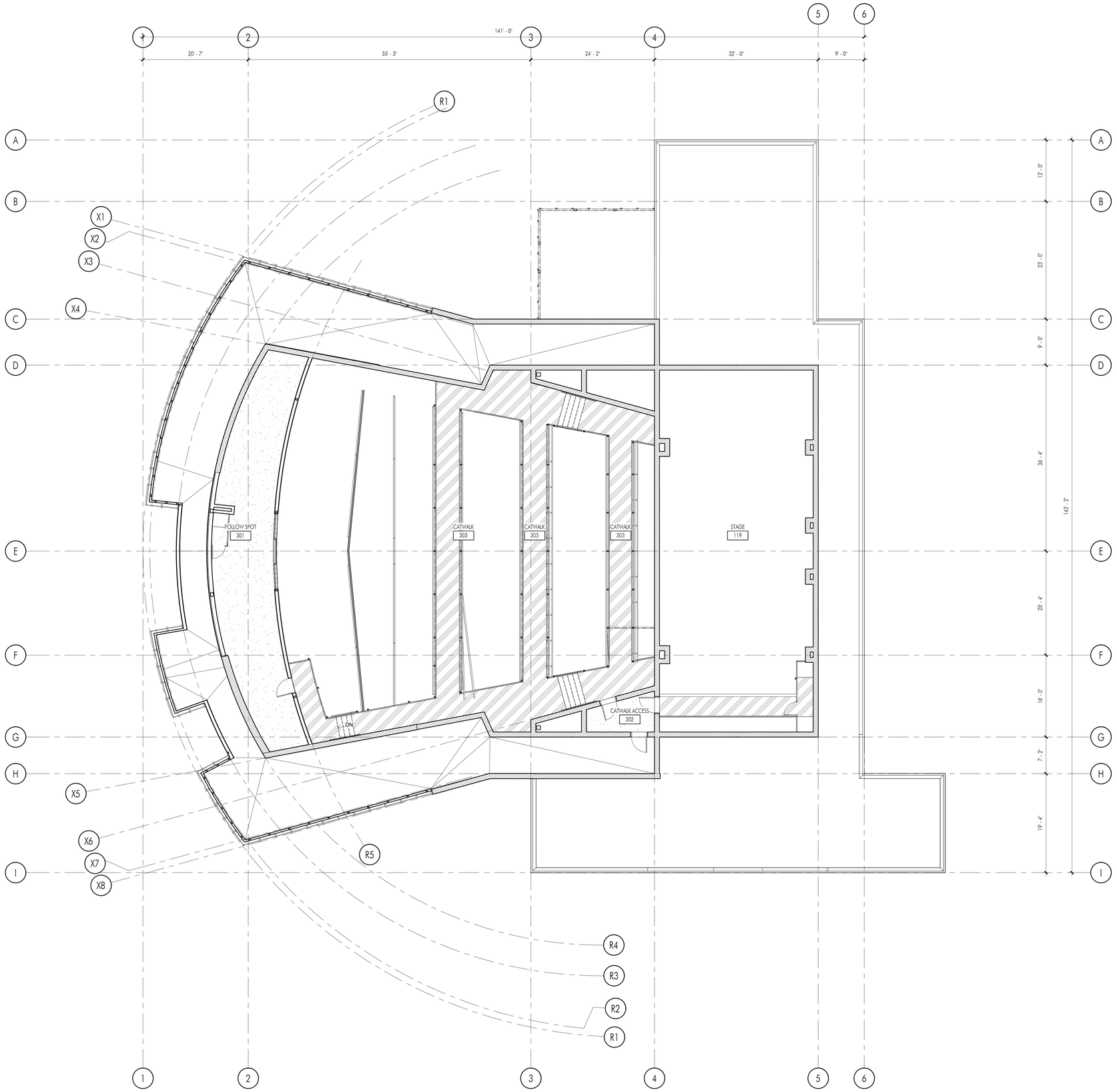

1 FOLLOW SPOT LEVEL FLOOR FINISH PLAN

SCALE: 1/8" = 1'-0"

0' 4' 8' 16' 24'

NORTH

CONSTRUCTION KEYNOTES

No.	DESCRIPTION

FLOOR FINISH LEGEND

SYMBOL	DESCRIPTION
	STAINED AND POLISHED CONCRETE C-2
	SEALED CONCRETE C-3
	CARPET CA-1
	CATWALK FLOOR: PAINTED P-4
	PORCELAIN TILE T-1
	VCT VCT-1
	WOOD STAGE FLOORING W-1 (1-7 / A866)
	ROCK PLANTER AREA WITH DECOMPOSED GRANITE

FINISH FLOOR PLAN GENERAL NOTES:

1. FOR FINISH SCHEDULE AND MATERIAL LEGEND, SEE SHEET A621.
2. ALL GYPSUM BOARD WALLS, SOFFITS, AND CEILINGS SHALL BE PAINTED UNLES NOTED OTHERWISE.
3. FOR ALL THRESHOLD DETAILS, SEE DOOR AND FRAME TYPES ON SHEET A611.

APPL No. A03-122864

IDENTIFICATION STAMP
DIV. OF THE STATE ARCHITECT
APP: 03-122864 INC:
REVIEWED FOR
SS ☑ FLS ☑ ACS ☑
DATE: 10/03/2023

DSA Stamp

Architect

RACHLIN PARTNERS
8640 National Boulevard
Culver City, CA 90232
310.204.3400

Disclaimer:

THESE DRAWINGS ARE THE PROPERTY OF THE ARCHITECT. THE DESIGNS SHOWN AND DESCRIBED HEREIN INCLUDING ALL TECHNICAL DRAWINGS ARE PROPRIETARY AND CANNOT BE COPIED, DUPLICATED OR COMMERCIALLY EXPLOITED IN ANY WAY WITHOUT THE ARCHITECT'S EXPRESS WRITTEN CONSENT. SHALL NOT BE USED BY THE OWNER ON OTHER PROJECTS, FOR ADDITIONS TO THIS PROJECT, OR FOR COMPLETION OF THIS PROJECT BY OTHERS. THE OWNER AGREES TO HOLD HARMLESS, INDEMNIFY AND DEFEND THE ARCHITECT AGAINST ALL DAMAGES, CLAIMS AND LOSSES, INCLUDING DEFENSE COSTS, ARISING OUT OF ANY REUSE OF PLANS AND SPECIFICATIONS WITHOUT THE WRITTEN AUTHORIZATION OF THE ARCHITECT OF RECORD.

Copyright © 2022 Rachlin Partners, All Rights Reserved.

Performing Arts Center

Hacienda La Puente Unified School District
635 North California Avenue
La Puente, CA 91744

Rev	Date	Issue
1	7.22.22	50% DD
2	10.21.22	50% CD
3	12.09.22	100% CD DSA SUBMITTAL
4	6.19.23	100% CD DSA RESUBMITTAL
5	9.20.23	DSA BACK CHECK

Date: 9.20.2023
Scale: As indicated
Drawn By: JP, NZ
Checked By: RM

Architect / Engineer Stamp

LICENSED ARCHITECT
RICHARD ROSENSTEIN
NO. C26020
REN 8-31-25
STATE OF CALIFORNIA

Consultants
Miyamoto International, Inc.
The Ruzika Company, Inc.
MDC Consulting Engineers
Pocock Design Solutions
Newson Brown Acoustics, LLC
VCA Engineers, Inc.
HJSA Consulting

Sheet Title

Follow Spot Level Floor Finish Plan

Sheet Number

A233

C:\Users\vudy.monico\Documents\R22_HEPUSD-PAC_Central_vudy.monico.rvt

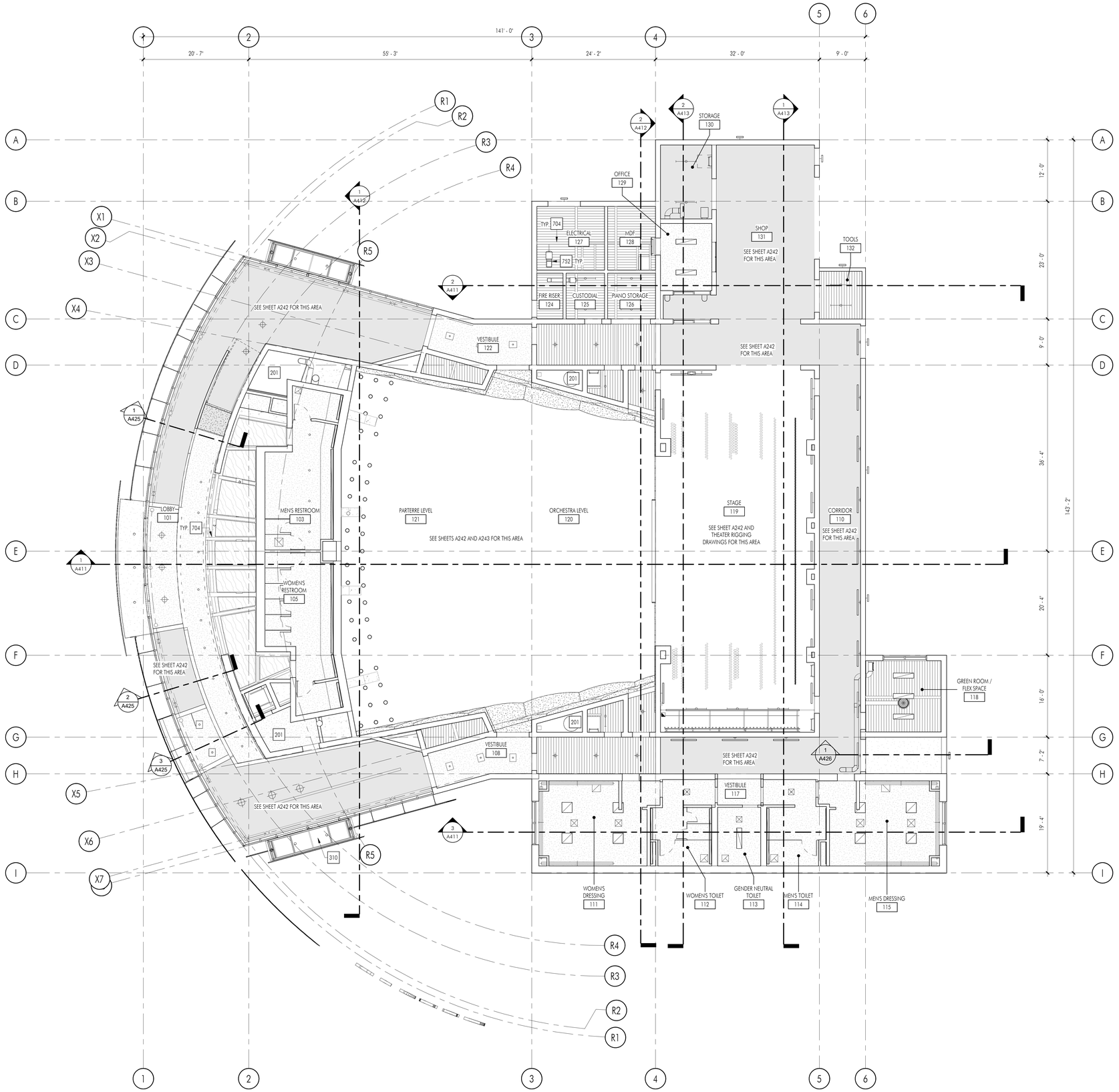

1 ORCHESTRA LEVEL REFLECTED CEILING PLAN

SCALE: 1/8" = 1'-0"

0' 4' 8' 16' 24'

NORTH

CONSTRUCTION KEYNOTES

No.	DESCRIPTION
201	MECHANICAL SHAFT
310	EXPOSED CANOPY DECK, PAINTED P-1 PER FINISH SCHEDULE
704	STEEL BEAM, SEE STRUCTURAL DRAWINGS
752	MECHANICAL DUCTWORK, SEE MECHANICAL DRAWINGS

LIGHTING LEGEND

SYMBOL	DESCRIPTION
	PENDANT FIXTURE MOUNTED
	RECESSED DOWNLIGHT FIXTURE
	RECESSED DOWNLIGHT FIXTURE
	SURFACE MOUNTED LINEAR LIGHT FIXTURE
	WALL MOUNTED LINEAR LIGHT FIXTURE
	PENDANT LINEAR FIXTURE
	2X4 RECESS MOUNTED LIGHT FIXTURE
	WALL MOUNTED DOWNLIGHT FIXTURE
	EXIT LIGHT

CEILING LEGEND

SYMBOL	DESCRIPTION
	EXPOSED METAL DECK
	FRAMED GYPSUM BOARD CEILING (4,15,20 / SD.6)
	EXPOSED CONCRETE SLAB
	SPRINKLER HEAD
	WOOD PANEL GRILL CEILING VR-1 (9,10 / A871) (11,12 / A871)
	BLACK FIBERGLASS INSULATION PANELS FP-1 (16 / A871)
	CATWALK DECK PAINTED P-4

REFLECTED CEILING PLAN GENERAL NOTES:

1. REFER TO MECHANICAL, PLUMBING, ELECTRICAL AND FIRE ALARM DRAWINGS FOR ADDITIONAL SCOPE OF WORK IN EACH ROOM.
2. FOR HVAC SUPPLY, RETURN, AND EXHAUST GRILLES, SEE REFLECTED CEILING PLAN LEGEND AND MECHANICAL DRAWINGS.
3. PROVIDE THERMAL BATT INSULATION (FILL CAVITIES) AT ALL NEW EXTERIOR FULL HEIGHT WALLS AND ALL NEW FULL HEIGHT FRAMED FURRING OVER EXTERIOR CONCRETE OR MASONRY.
4. FOR REFERENCES TO WALL TYPES, BUILDING AND WALL SECTIONS, AND ENLARGED PLANS SEE FLOOR PLAN.

APPL No. A03-122864

IDENTIFICATION STAMP
DIV. OF THE STATE ARCHITECT
APP: 03-122864 INC:
REVIEWED FOR
SS ☑ FLS ☑ ACS ☑
DATE: 10/03/2023

DSA Stamp

Architect

RACHLIN PARTNERS
8640 National Boulevard
Culver City, CA 90232
310.204.3400

Disclaimer:

THESE DRAWINGS ARE THE PROPERTY OF THE ARCHITECT. THE DESIGNS SHOWN AND DESCRIBED HEREIN INCLUDING ALL TECHNICAL DRAWINGS ARE PROPRIETARY AND CANNOT BE COPIED, DUPLICATED OR COMMERCIALLY EXPLOITED EITHER IN WHOLE OR IN PART WITHOUT WRITTEN CONSENT AND SHALL NOT BE USED BY THE OWNER ON OTHER PROJECTS, FOR ADDITIONS TO THIS PROJECT, OR FOR COMPLETION OF THIS PROJECT BY OTHERS. THE OWNER AGREES TO HOLD HARMLESS, INDEMNIFY AND DEFEND THE ARCHITECT AGAINST ALL DAMAGES, CLAIMS AND LOSSES, INCLUDING DEFENSE COSTS, ARISING OUT OF ANY REUSE OF PLANS AND SPECIFICATIONS WITHOUT THE WRITTEN AUTHORIZATION OF THE ARCHITECT OF RECORD.

Copyright © 2022 Rachlin Partners, All Rights Reserved.

Performing Arts Center

Hacienda La Puente Unified School District
635 North California Avenue
La Puente, CA 91744

Rev	Date	Issue
1	7.22.22	50% DD
2	10.21.22	50% CD
3	12.09.22	100% CD DSA SUBMITTAL
4	6.19.23	100% CD DSA RESUBMITTAL
5	9.20.23	DSA BACK CHECK

Date: 9.20.2023
Scale: As indicated
Drawn By: JP, NZ
Checked By: RM

Architect / Engineer Stamp

LICENSED ARCHITECT RICHARD MICHAEL NO. C-26220 REN. 8-31-25 STATE OF CALIFORNIA

Consultants
Miyamoto International, Inc.
The Ruzika Company, Inc.
MDC Consulting Engineers
Pocock Design Solutions
Newson Brown Acoustics, LLC
VCA Engineers, Inc.
HJSA Consulting

Sheet Title

Orchestra Level - Reflected Ceiling Plan

Sheet Number

A241

C:\Users\vudy.monico\Documents\R22_HJPJSD-PAC_Central_vudy.monico.rvt

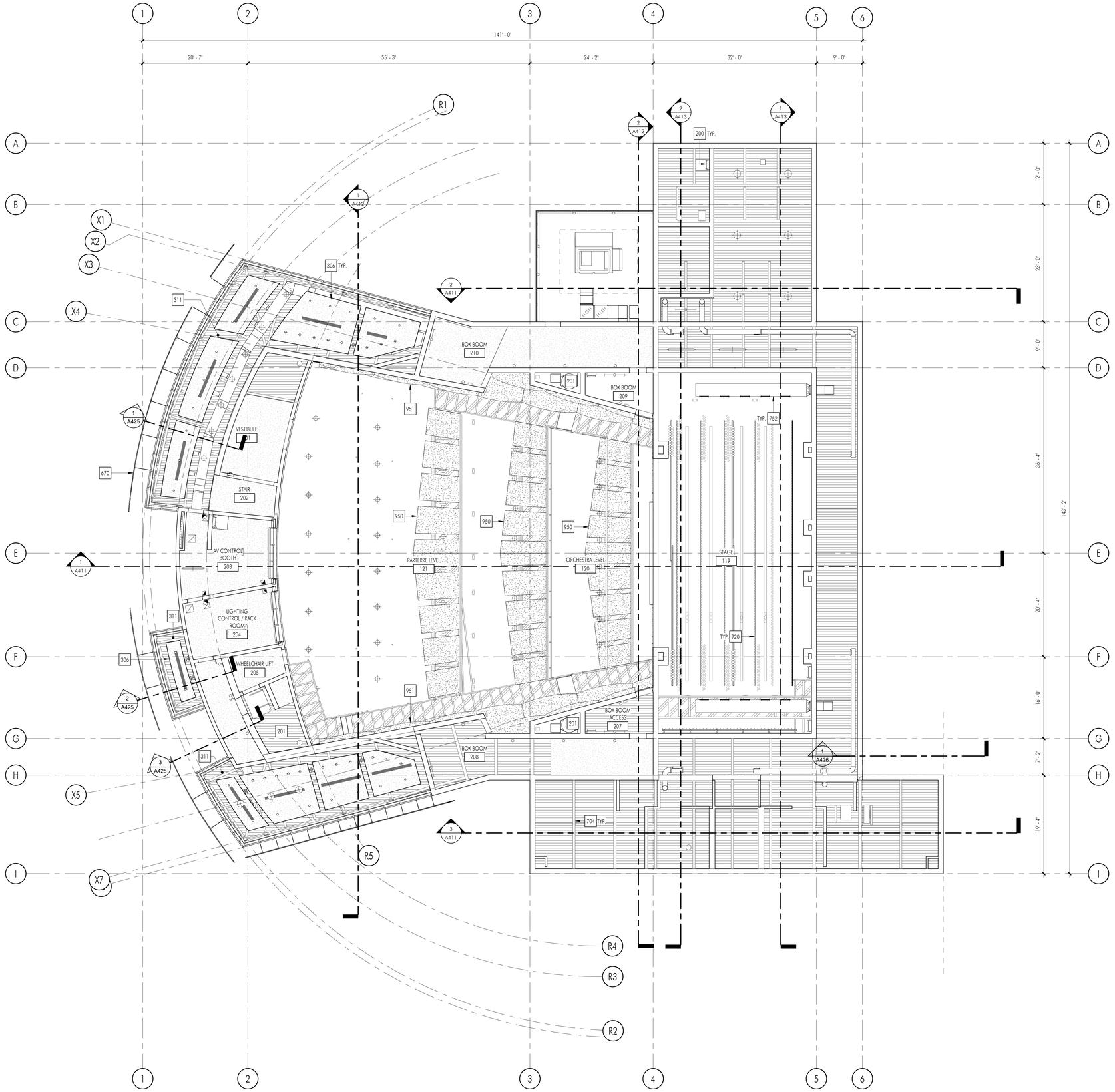

1 CONTROL BOOTH LEVEL REFLECTED CEILING PLAN

SCALE: 1/8" = 1'-0"

0' 4' 8' 16' 24'

NORTH

CONSTRUCTION KEYNOTES

No.	DESCRIPTION
200	ROOF ACCESS LADDER SEE 2 AND 4/A832 FOR MORE INFORMATION
201	MECHANICAL SHAFT
306	SUSPENDED CEILING CLOUD. FOR MORE INFORMATION SEE DETAILS 1/A872 AND 1/A873
311	PROVIDE BLACK FIBERGLASS INSULATION PANELS FP-1 UNDER ENTIRE AREA OF DECK AT LOBBY.
670	PERFORATED METAL PANEL SCREEN. SEE SHEETS A331, A332 AND A333 FOR MORE INFORMATION.
704	STEEL BEAM, SEE STRUCTURAL DRAWINGS
752	MECHANICAL DUCTWORK, SEE MECHANICAL DRAWINGS
920	STAGE RIGGING, SEE THEATER DRAWINGS. DEFERRED APPROVAL
950	SUSPENDED ACOUSTIC CLOUD REFLECTOR SEE 4/A874 FOR MORE INFORMATION
951	GYPSUM BOARD SOUND REFLECTORS. SEE ENLAREFED PLANS ON A518, A519 AND DETAILS ON A863 FOR ADDITIONAL INFORMATION

LIGHTING LEGEND

SYMBOL	DESCRIPTION
	PENDANT FIXTURE MOUNTED
	RECESSED DOWNLIGHT FIXTURE
	RECESSED DOWNLIGHT FIXTURE
	SURFACE MOUNTED LINEAR LIGHT FIXTURE
	WALL MOUNTED LINEAR LIGHT FIXTURE
	PENDANT LINEAR FIXTURE
	2X4 RECESS MOUNTED LIGHT FIXTURE
	WALL MOUNTED DOWNLIGHT FIXTURE
	EXIT LIGHT

CEILING LEGEND

SYMBOL	DESCRIPTION
	EXPOSED METAL DECK
	FRAMED GYPSUM BOARD CEILING — 14,15,24 / 50.6
	EXPOSED CONCRETE SLAB
	SPRINKLER HEAD
	WOOD PANEL GRILL CEILING WP-1 — 9,10 A871 — 11,12 A871
	BLACK FIBERGLASS INSULATION PANELS FP-1 — 16 A871
	CATWALK DECK PAINTED P-4

REFLECTED CEILING PLAN GENERAL NOTES:

1. REFER TO MECHANICAL, PLUMBING, ELECTRICAL AND FIRE ALARM DRAWINGS FOR ADDITIONAL SCOPE OF WORK IN EACH ROOM.
2. FOR HVAC SUPPLY, RETURN, AND EXHAUST GRILLES, SEE REFLECTED CEILING PLAN LEGEND AND MECHANICAL DRAWINGS.
3. PROVIDE THERMAL BATT INSULATION (FILL CAVITIES) AT ALL NEW EXTERIOR FULL HEIGHT WALLS AND ALL NEW FULL HEIGHT FRAMED FURRING OVER EXTERIOR CONCRETE OR MASONRY.
4. FOR REFERENCES TO WALL TYPES, BUILDING AND WALL SECTIONS, AND ENLARGED PLANS SEE FLOOR PLAN.

APPL No. A03-122864

DSA Stamp

Architect

RACHLIN PARTNERS
8640 National Boulevard
Culver City, CA 90232
310.204.3400

Disclaimer:
THESE DRAWINGS ARE THE PROPERTY OF THE ARCHITECT. THE DESIGNS SHOWN AND DESCRIBED HEREIN INCLUDING ALL TECHNICAL DRAWINGS ARE PROPRIETARY AND CANNOT BE COPIED, DUPLICATED OR COMMERCIALLY EXPLOITED IN ANY WAY. THEY ARE NOT TO BE CHANGED OR COPIED AND SHALL NOT BE USED BY THE OWNER ON OTHER PROJECTS, FOR ADDITIONS TO THIS PROJECT, OR FOR COMPLETION OF THIS PROJECT BY OTHERS. THE OWNER AGREES TO HOLD HARMLESS, INDEMNIFY AND DEFEND THE ARCHITECT AGAINST ALL DAMAGES, CLAIMS AND LOSSES, INCLUDING DEFENSE COSTS, ARISING OUT OF ANY REUSE OF PLANS AND SPECIFICATIONS WITHOUT THE WRITTEN AUTHORIZATION OF THE ARCHITECT OF RECORD.

Copyright © 2022 Rachlin Partners, All Rights Reserved.

Performing Arts Center

Hacienda La Puente Unified School District
635 North California Avenue
La Puente, CA 91744

Rev	Date	Issue
1	7.22.22	50% DD
2	10.21.22	50% CD
3	12.09.22	100% CD DSA SUBMITTAL
4	6.19.23	100% CD DSA RESUBMITTAL
5	9.20.23	DSA BACK CHECK
6	11.01.23	ADDENDUM NO. 1
7	11.01.23	ADDENDUM NO. 2

Date: 11.01.2023
Scale: As indicated
Drawn By: JP, NZ
Checked By: RM

Architect / Engineer Stamp

LICENSED ARCHITECT — REGISTERED PROFESSIONAL — NO. C-28229 — REN. 8-31-25 — STATE OF CALIFORNIA

Consultants
Miyamoto International, Inc.
The Ruzika Company, Inc.
MDC Consulting Engineers
Pocock Design Solutions
Newson Brown Acoustics, LLC
VCA Engineers, Inc.
HJSA Consulting

Sheet Title

Control Booth Level - Reflected Ceiling Plan

Sheet Number

A242

C:\Users\rudy.monico\Documents\RT2_HLPUSD-PAC_Central_rudy.monico.rvt

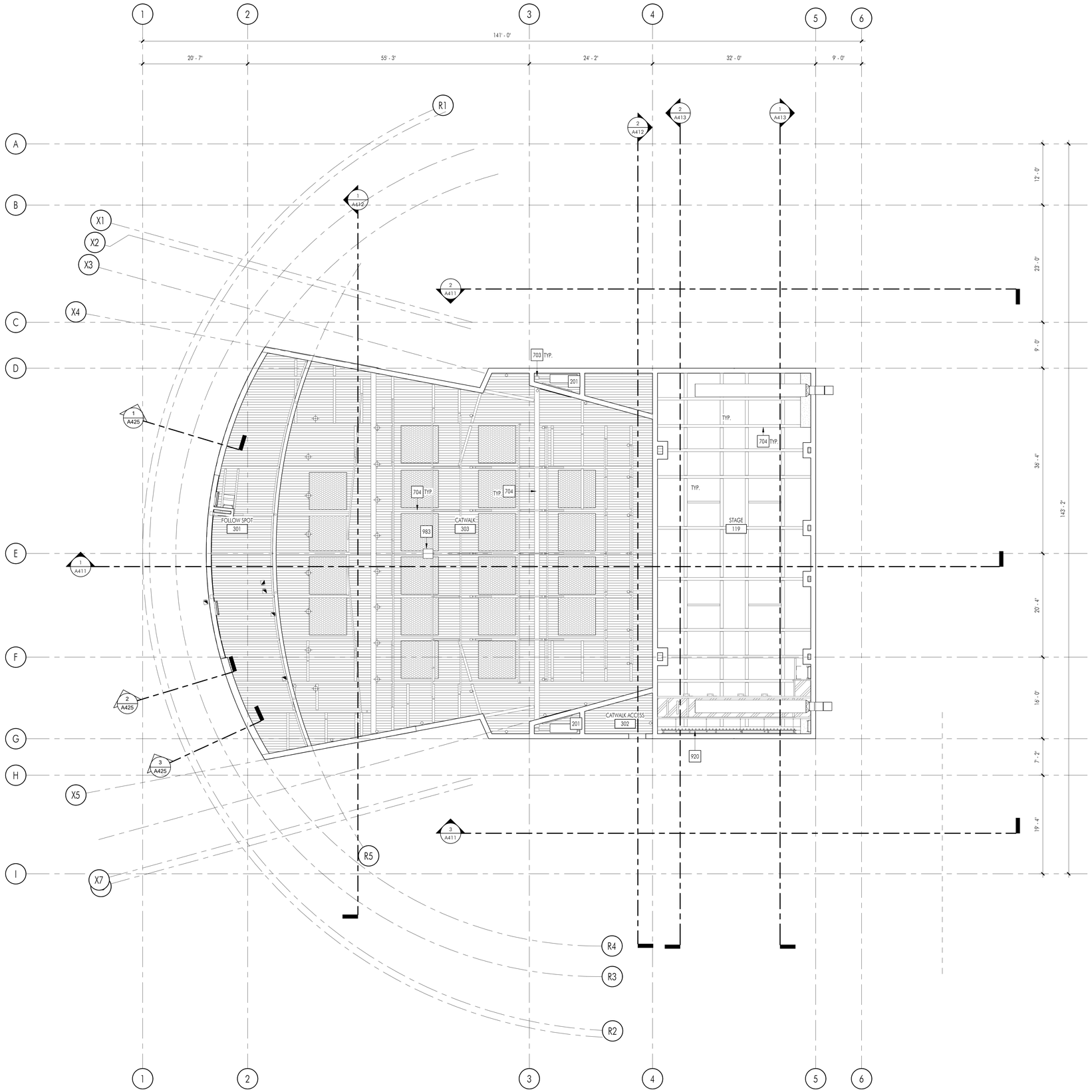

1 FOLLOW SPOT LEVEL REFLECTED CEILING PLAN

SCALE: 1/8" = 1'-0"

0' 4' 8' 16' 24'

NORTH

CONSTRUCTION KEYNOTES

No.	DESCRIPTION
201	MECHANICAL SHAFT
703	STEEL COLUMN, SEE STRUCTURAL DRAWINGS
704	STEEL BEAM, SEE STRUCTURAL DRAWINGS
920	STAGE RIGGING, SEE THEATER DRAWINGS. DEFERRED APPROVAL
983	PROJECTOR LIFT PER AUDIOVISUAL. SEE 13/A866 FOR MOUNTING DETAIL.

LIGHTING LEGEND

SYMBOL	DESCRIPTION
	PENDANT FIXTURE MOUNTED
	RECESSED DOWNLIGHT FIXTURE
	RECESSED DOWNLIGHT FIXTURE
	SURFACE MOUNTED LINEAR LIGHT FIXTURE
	WALL MOUNTED LINEAR LIGHT FIXTURE
	PENDANT LINEAR FIXTURE
	2X4 RECESS MOUNTED LIGHT FIXTURE
	WALL MOUNTED DOWNLIGHT FIXTURE
	EXIT LIGHT

CEILING LEGEND

SYMBOL	DESCRIPTION
	EXPOSED METAL DECK
	FRAMED GYPSUM BOARD CEILING (4.15.2A / 50.6)
	EXPOSED CONCRETE SLAB
	SPRINKLER HEAD
	WOOD PANEL GRILL CEILING WP-1 (9,10 A871) (11,12 A871)
	BLACK FIBERGLASS INSULATION PANELS FP-1 (16 A871)
	CATWALK DECK PAINTED P-4

REFLECTED CEILING PLAN GENERAL NOTES:

1. REFER TO MECHANICAL, PLUMBING, ELECTRICAL AND FIRE ALARM DRAWINGS FOR ADDITIONAL SCOPE OF WORK IN EACH ROOM.
2. FOR HVAC SUPPLY, RETURN, AND EXHAUST GRILLES, SEE REFLECTED CEILING PLAN LEGEND AND MECHANICAL DRAWINGS.
3. PROVIDE THERMAL BATT INSULATION (FILL CAVITIES) AT ALL NEW EXTERIOR FULL HEIGHT WALLS AND ALL NEW FULL HEIGHT FRAMED FURRING OVER EXTERIOR CONCRETE OR MASONRY.
4. FOR REFERENCES TO WALL TYPES, BUILDING AND WALL SECTIONS, AND ENLARGED PLANS SEE FLOOR PLAN.

APPL No. A03-122864

IDENTIFICATION STAMP
DIV. OF THE STATE ARCHITECT
APP: 03-122864 INC:
REVIEWED FOR
SS ☑ FLS ☑ ACS ☑
DATE: 10/03/2023

DSA Stamp

Architect

RACHLIN PARTNERS
8640 National Boulevard
Culver City, CA 90232
310.204.3400

Disclaimer:

THESE DRAWINGS ARE THE PROPERTY OF THE ARCHITECT. THE DESIGNS SHOWN AND DESCRIBED HEREIN INCLUDING ALL TECHNICAL DRAWINGS ARE PROPRIETARY AND CANNOT BE COPIED, DUPLICATED OR COMMERCIALLY EXPLOITED EXCEPT BY WRITTEN AGREEMENT. THESE DRAWINGS AND DESIGNS SHALL NOT BE USED BY THE OWNER ON OTHER PROJECTS, FOR ADDITIONS TO THIS PROJECT, OR FOR COMPLETION OF THIS PROJECT BY OTHERS. THE OWNER AGREES TO HOLD HARMLESS, INDEMNIFY AND DEFEND THE ARCHITECT AGAINST ALL DAMAGES, CLAIMS AND LOSSES, INCLUDING DEFENSE COSTS, ARISING OUT OF ANY REUSE OF PLANS AND SPECIFICATIONS WITHOUT THE WRITTEN AUTHORIZATION OF THE ARCHITECT OF RECORD.

Copyright © 2022 Rachlin Partners, All Rights Reserved.

Performing Arts Center

Hacienda La Puente Unified School District
635 North California Avenue
La Puente, CA 91744

Rev	Date	Issue
1	7.22.22	50% DD
2	10.21.22	50% CD
3	12.09.22	100% CD DSA SUBMITTAL
4	6.19.23	100% CD DSA RESUBMITTAL
5	9.20.23	DSA BACK CHECK

Date: 9.20.2023
Scale: As indicated
Drawn By: JP, NZ
Checked By: RM

Architect / Engineer Stamp

LICENSED ARCHITECT
RENEWAL 08/31/2025
NO. C-28229
REN. 8-31-25
STATE OF CALIFORNIA

Consultants
Miyamoto International, Inc.
The Ruzika Company, Inc.
MDC Consulting Engineers
Pocock Design Solutions
Newson Brown Acoustics, LLC
VCA Engineers, Inc.
HJSA Consulting

Sheet Title

Follow Spot Level - Reflected Ceiling Plan

Sheet Number

A243

C:\Users\rudy.monico\Documents\R22_HUPUSD-PAC_Central_rudy.monico.rvt

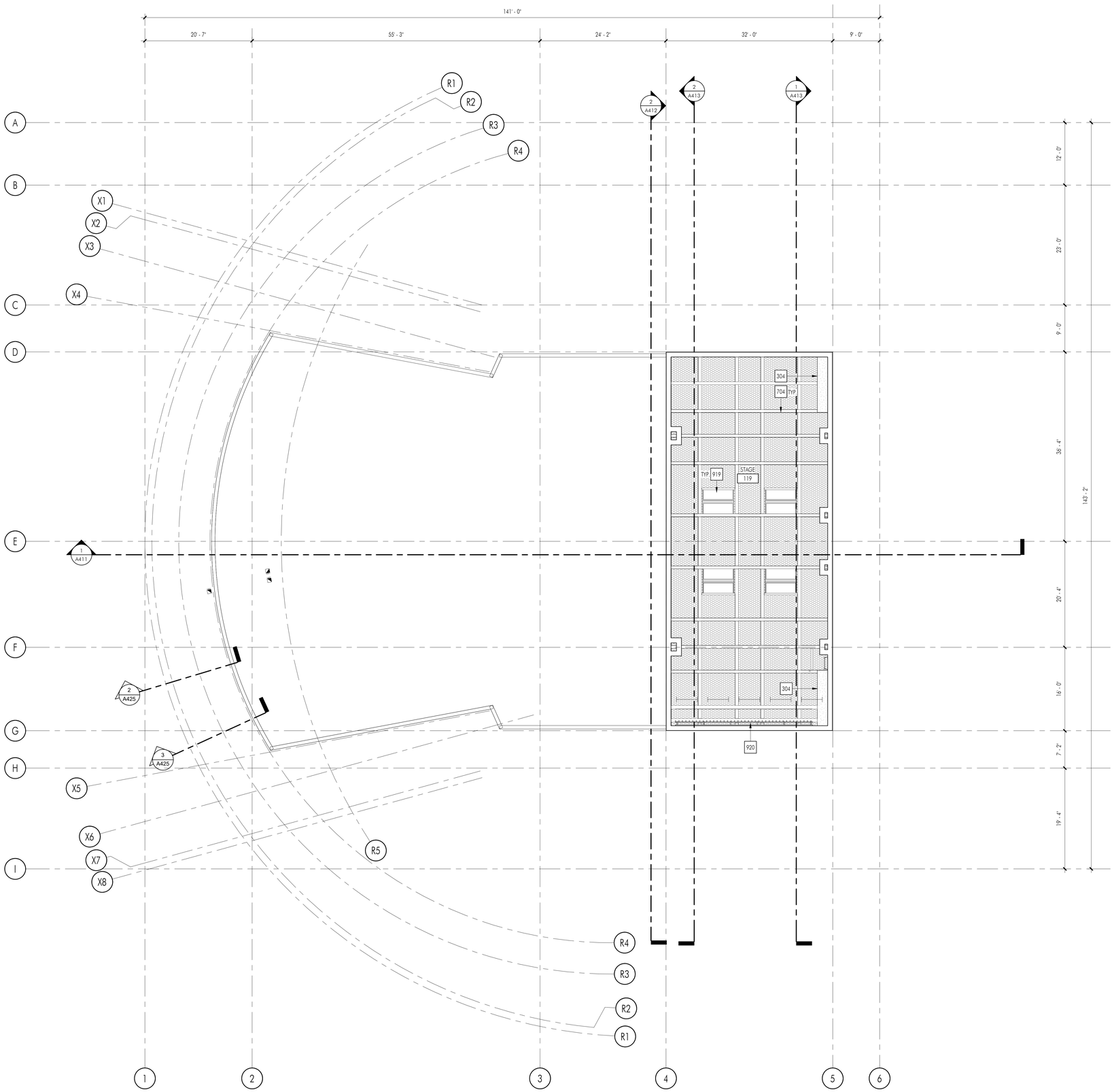

1 LOADING GALLERY LEVEL REFLECTED CEILING PLAN

SCALE: 1/8" = 1'-0"

0' 4' 8' 16' 24'

NORTH

CONSTRUCTION KEYNOTES

No.	DESCRIPTION
304	FRAMED GYPSUM BOARD CEILING WITH GYPSYM BOARD ON BOTH SIDES AND ACOUSTIC INSULATION. SEE DETAILS 14,15, 20/S0.6
704	STEEL BEAM, SEE STRUCTURAL DRAWINGS
919	5'-0"X6'-0" SMOKE EXHAUST VENT HATCH, SEE 9 AND 12/A832
920	STAGE RIGGING, SEE THEATER DRAWINGS. DEFERRED APPROVAL

LIGHTING LEGEND

SYMBOL	DESCRIPTION
	PENDANT FIXTURE MOUNTED
	RECESSED DOWNLIGHT FIXTURE
	RECESSED DOWNLIGHT FIXTURE
	SURFACE MOUNTED LINEAR LIGHT FIXTURE
	WALL MOUNTED LINEAR LIGHT FIXTURE
	PENDANT LINEAR FIXTURE
	2X4 RECESS MOUNTED LIGHT FIXTURE
	WALL MOUNTED DOWNLIGHT FIXTURE
	EXIT LIGHT

CEILING LEGEND

SYMBOL	DESCRIPTION
	EXPOSED METAL DECK
	FRAMED GYPSUM BOARD CEILING 14,15,20 / S0.6
	EXPOSED CONCRETE SLAB
	SPRINKLER HEAD
	WOOD PANEL GRILL CEILING WP-1 9,10 A871 11,12 A871
	BLACK FIBERGLASS INSULATION PANELS FP-1 16 A871
	CATWALK DECK PAINTED P-4

REFLECTED CEILING PLAN GENERAL NOTES:

1. REFER TO MECHANICAL, PLUMBING, ELECTRICAL AND FIRE ALARM DRAWINGS FOR ADDITIONAL SCOPE OF WORK IN EACH ROOM.
2. FOR HVAC SUPPLY, RETURN, AND EXHAUST GRILLES, SEE REFLECTED CEILING PLAN LEGEND AND MECHANICAL DRAWINGS.
3. PROVIDE THERMAL BATT INSULATION (FILL CAVITIES) AT ALL NEW EXTERIOR FULL HEIGHT WALLS AND ALL NEW FULL HEIGHT FRAMED FURRING OVER EXTERIOR CONCRETE OR MASONRY.
4. FOR REFERENCES TO WALL TYPES, BUILDING AND WALL SECTIONS, AND ENLARGED PLANS SEE FLOOR PLAN.

APPL No. A03-122864

IDENTIFICATION STAMP
DIV. OF THE STATE ARCHITECT
APP: 03-122864 INC:
REVIEWED FOR
SS ☑ FLS ☑ ACS ☑
DATE: 10/03/2023

DSA Stamp

Architect

RACHLIN PARTNERS
8640 National Boulevard
Culver City, CA 90232
310.204.3400

Disclaimer:

THESE DRAWINGS ARE THE PROPERTY OF THE ARCHITECT. THE DESIGNS SHOWN AND DESCRIBED HEREIN INCLUDING ALL TECHNICAL DRAWINGS ARE PROPRIETARY AND CANNOT BE COPIED, DUPLICATED OR COMMERCIALLY EXPLOITED EITHER IN WHOLE OR IN PART WITHOUT WRITTEN CONSENT AND SHALL NOT BE USED BY THE OWNER ON OTHER PROJECTS, FOR ADDITIONS TO THIS PROJECT, OR FOR COMPLETION OF THIS PROJECT BY OTHERS. THE OWNER AGREES TO HOLD HARMLESS, INDEMNIFY AND DEFEND THE ARCHITECT AGAINST ALL DAMAGES, CLAIMS AND LOSSES, INCLUDING DEFENSE COSTS, ARISING OUT OF ANY REUSE OF PLANS AND SPECIFICATIONS WITHOUT THE WRITTEN AUTHORIZATION OF THE ARCHITECT OF RECORD.

Copyright © 2022 Rachlin Partners, All Rights Reserved.

Performing Arts Center

Hacienda La Puente Unified School District
635 North California Avenue
La Puente, CA 91744

Rev	Date	Issue
1	7.22.22	50% DD
2	10.21.22	50% CD
3	12.09.22	100% CD DSA SUBMITTAL
4	6.19.23	100% CD DSA RESUBMITTAL
5	9.20.23	DSA BACK CHECK

Date: 9.20.2023
Scale: As indicated
Drawn By: JP, NZ
Checked By: RM

Architect / Engineer Stamp

LICENSED ARCHITECT
RONALD RACHLIN
NO. C-26229
REN. 8-31-25
STATE OF CALIFORNIA

Consultants
Miyamoto International, Inc.
The Ruzika Company, Inc.
MDC Consulting Engineers
Pocock Design Solutions
Newson Brown Acoustics, LLC
VCA Engineers, Inc.
HJSA Consulting

Sheet Title

Loading Gallery - Reflected Ceiling Plan

Sheet Number

A244

C:\Users\rudy.monico\Documents\R22_HUPUSD-PAC_Central_rudy.monico.rvt

CONSTRUCTION KEYNOTES

No.	DESCRIPTION
405	CRICKET BUILT FROM RIGID INSULATION
406	ROOF SCUPPER PER DETAIL 5/A831
421	COMBINATION PRIMARY AND OVERFLOW ROOF DRAINS PER 2/A831
423	ROOF ACCESS HATCH. SEE 2/A832
670	PERFORATED METAL PANEL SCREEN. SEE SHEETS A331, A332 AND A333 FOR MORE INFORMATION.
751	AIR HANDLER UNIT. SEE MECHANICAL DRAWINGS FOR EQUIPMENT SCHEDULE. SEE STRUCTURAL DRAWINGS FOR SUPPORT. SEE DETAIL 16/A831 FOR FLASHING
752	MECHANICAL DUCTWORK, SEE MECHANICAL DRAWINGS
754	EXHAUST FAN. SEE MECHANICAL DRAWINGS FOR EQUIPMENT SCHEDULE. SEE STRUCTURAL DRAWINGS FOR SUPPORT. SEE DETAIL 9/A831 FOR FLASHING
919	5'-0"X6'-0" SMOKE EXHAUST VENT HATCH, SEE 9 AND 12/A832

ROOF PLAN GENERAL NOTES:

1. FOR PENETRATIONS THROUGH ROOF, SEE DETAILS 10,11 ON SHEET A831 2
2. FOR OVERFLOW DRAIN THROUGH-WALL COVER, SEE DETAIL 5 ON SHEET A831
3. FOR RUBBER PIPE ROOFTOP SUPPORT DETAIL SEE 11 ON SHEET A831 2
4. FOR TYPICAL ROOF SECTION, SEE DETAIL 1/A831

1 ROOF PLAN

SCALE: 1/8" = 1'-0"

0' 4' 8' 16' 24'

NORTH

C:\Users\rudy.monico\Documents\RZ2_HUPUSD-PAC_Central_rudy.monico.rvt

APPL No. A03-122864

DSA Stamp

Architect

RACHLIN PARTNERS
8640 National Boulevard
Culver City, CA 90232
310.204.3400

Disclaimer:
THESE DRAWINGS ARE THE PROPERTY OF THE ARCHITECT. THE DESIGNS SHOWN AND DESCRIBED HEREIN INCLUDING ALL TECHNICAL DRAWINGS ARE PROPRIETARY AND CANNOT BE COPIED, DUPLICATED OR COMMERCIALLY EXPLOITED IN ANY WAY. THEY ARE NOT TO BE CHANGED OR COPIED AND SHALL NOT BE USED BY THE OWNER ON OTHER PROJECTS, FOR ADDITIONS TO THIS PROJECT, OR FOR COMPLETION OF THIS PROJECT BY OTHERS. THE OWNER AGREES TO HOLD HARMLESS, INDEMNIFY AND DEFEND THE ARCHITECT AGAINST ALL DAMAGES, CLAIMS AND LOSSES, INCLUDING DEFENSE COSTS, ARISING OUT OF ANY REUSE OF PLANS AND SPECIFICATIONS WITHOUT THE WRITTEN AUTHORIZATION OF THE ARCHITECT OF RECORD.

Copyright © 2022 Rachlin Partners, All Rights Reserved.

Performing Arts Center

Hacienda La Puente Unified School District
635 North California Avenue
La Puente, CA 91744

Rev	Date	Issue
1	7.22.22	50% DD
2	10.21.22	50% CD
3	12.09.22	100% CD DSA SUBMITTAL
4	6.19.23	100% CD DSA RESUBMITTAL
5	9.20.23	DSA BACK CHECK
6	11.01.23	ADDENDUM NO. 1
7	11.01.23	ADDENDUM NO. 2

Date: 11.01.2023
Scale: As indicated
Drawn By: JP, NZ
Checked By: RM

Architect / Engineer Stamp

LICENSED ARCHITECT
RICHARD PACHECO
NO. C-28229
REN. 8-31-25
STATE OF CALIFORNIA

Consultants
Miyamoto International, Inc.
The Ruzika Company, Inc.
MDC Consulting Engineers
Pocock Design Solutions
Newson Brown Acoustics, LLC
VCA Engineers, Inc.
HJSA Consulting

Sheet Title

Roof Plan

Sheet Number

A251

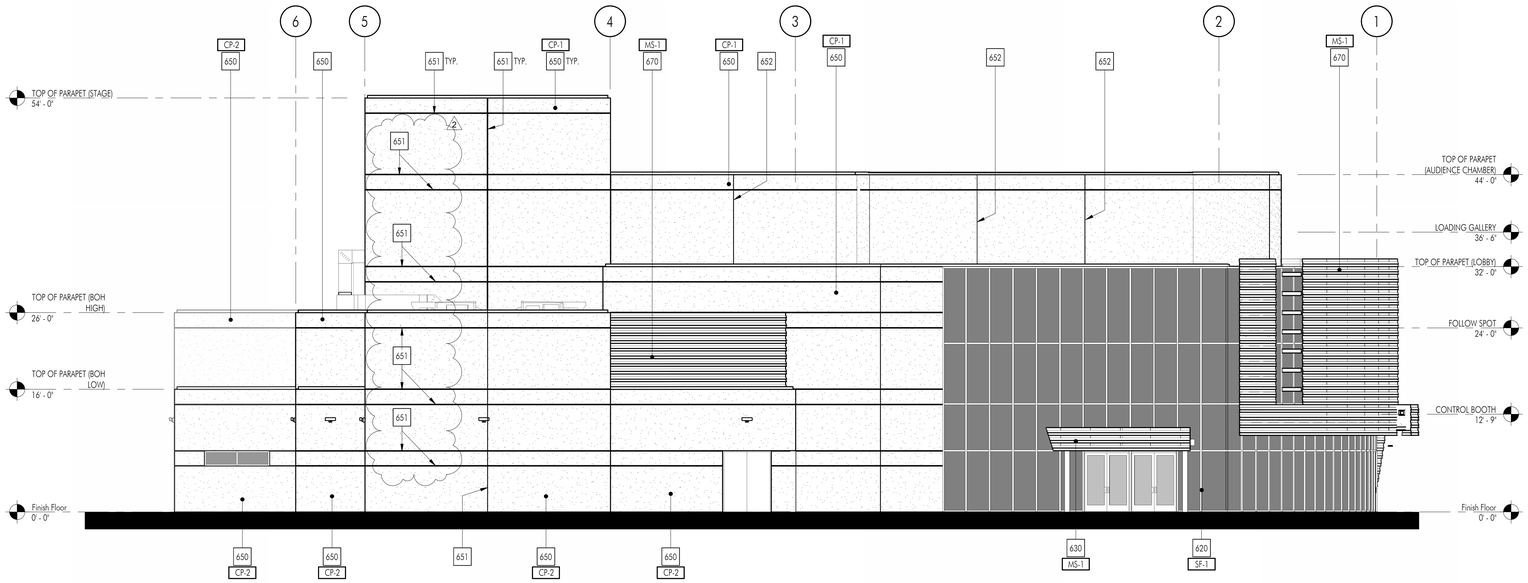

1 NORTH ELEVATION

SCALE: 1/8" = 1'-0"

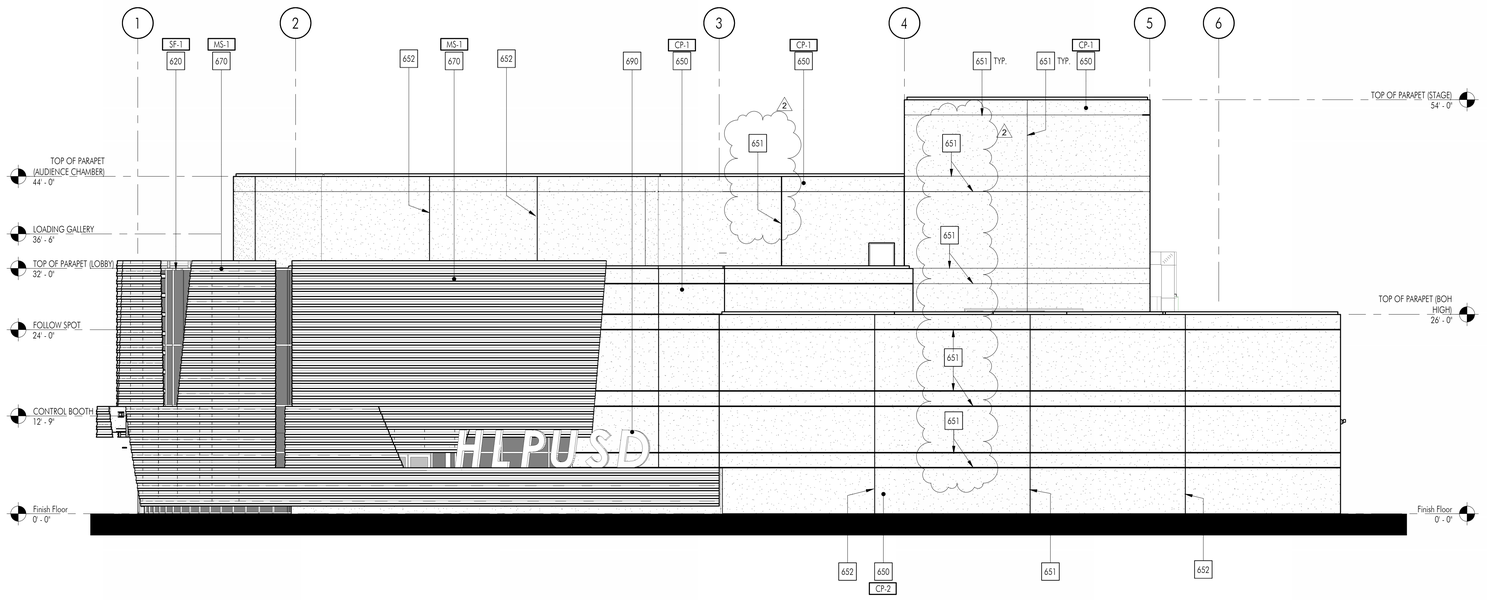

2 SOUTH ELEVATION

SCALE: 1/8" = 1'-0"

CONSTRUCTION KEYNOTES

No.	DESCRIPTION
620	GLASS CURTAIN WALL SYSTEM, SEE FLOOR PLAN FOR WINDOW TYPE AND SCHEDULE FOR MORE INFORMATION. DEFERRED APPROVAL
630	ENTRY CANOPY SEE DETAIL 3/A822 FOR MORE INFORMATION
650	SMOOTH FINISH CEMENT PLASTER ON CMU. SEE DETAIL 5/A821
651	CEMENT PLASTER REVEAL PER 10/A821
652	CEMENT PLASTER CONTROL JOINT. SEE 6/A821
670	PERFORATED METAL PANEL SCREEN. SEE SHEETS A331, A332 AND A333 FOR MORE INFORMATION.
690	3/4" ALUMINUM OPEN BACK REVERSE CHANNEL LETTERING 5'-0" HIGH X 8" DEEP. FACTORY PAINTED ALL WELDS GROUND SMOOTH. SEE DETAILS 4, 10 AND 11/A823 FOR MORE INFORMATION.

FINISH NOTES LEGEND

MS-1	MATERIAL TAG. REFER TO SHEET A621 FOR MATERIALS LEGEND

APPL No. A03-122864

DSA Stamp

Architect

RACHLIN PARTNERS
8640 National Boulevard
Culver City, CA 90232
310.204.3400

Disclaimer:

THESE DRAWINGS ARE THE PROPERTY OF THE ARCHITECT. THE DESIGNS SHOWN AND DESCRIBED HEREIN INCLUDING ALL TECHNICAL DRAWINGS ARE PROPRIETARY AND CANNOT BE COPIED, DUPLICATED OR COMMERCIALLY EXPLOITED EXCEPT BY WRITTEN AGREEMENT. THESE DRAWINGS AND DESIGNS SHALL NOT BE USED BY THE OWNER ON OTHER PROJECTS, FOR ADDITIONS TO THIS PROJECT, OR FOR COMPLETION OF THIS PROJECT BY OTHERS. THE OWNER AGREES TO HOLD HARMLESS, INDEMNIFY AND DEFEND THE ARCHITECT AGAINST ALL DAMAGES, CLAIMS AND LOSSES, INCLUDING DEFENSE COSTS, ARISING OUT OF ANY REUSE OF PLANS AND SPECIFICATIONS WITHOUT THE WRITTEN AUTHORIZATION OF THE ARCHITECT OF RECORD.

Copyright © 2022 Rachlin Partners, All Rights Reserved.

Performing Arts Center

Hacienda La Puente Unified School District
635 North California Avenue
La Puente, CA 91744

Rev	Date	Issue
1	7.22.22	50% DD
2	10.21.22	50% CD
3	12.09.22	100% CD DSA SUBMITTAL
4	6.19.23	100% CD DSA RESUBMITTAL
5	9.20.23	DSA BACK CHECK
6	11.01.23	ADDENDUM NO. 1
7	11.01.23	ADDENDUM NO. 2

Date: 11.01.2023
Scale: As indicated
Drawn By: JP, NZ
Checked By: RM

Architect / Engineer Stamp

LICENSED ARCHITECT
RONALD RACHLIN
NO. C-26229
REN. 8-31-25
STATE OF CALIFORNIA

Consultants
Miyamoto International, Inc.
The Ruzika Company, Inc.
MDC Consulting Engineers
Pocock Design Solutions
Newson Brown Acoustics, LLC
VCA Engineers, Inc.
HJSA Consulting

Sheet Title

Exterior Elevations - North South

Sheet Number

A311

C:\Users\rudy.monico\Documents\R22_HLPUSD-PAC_Central_rudy.monico.rvt

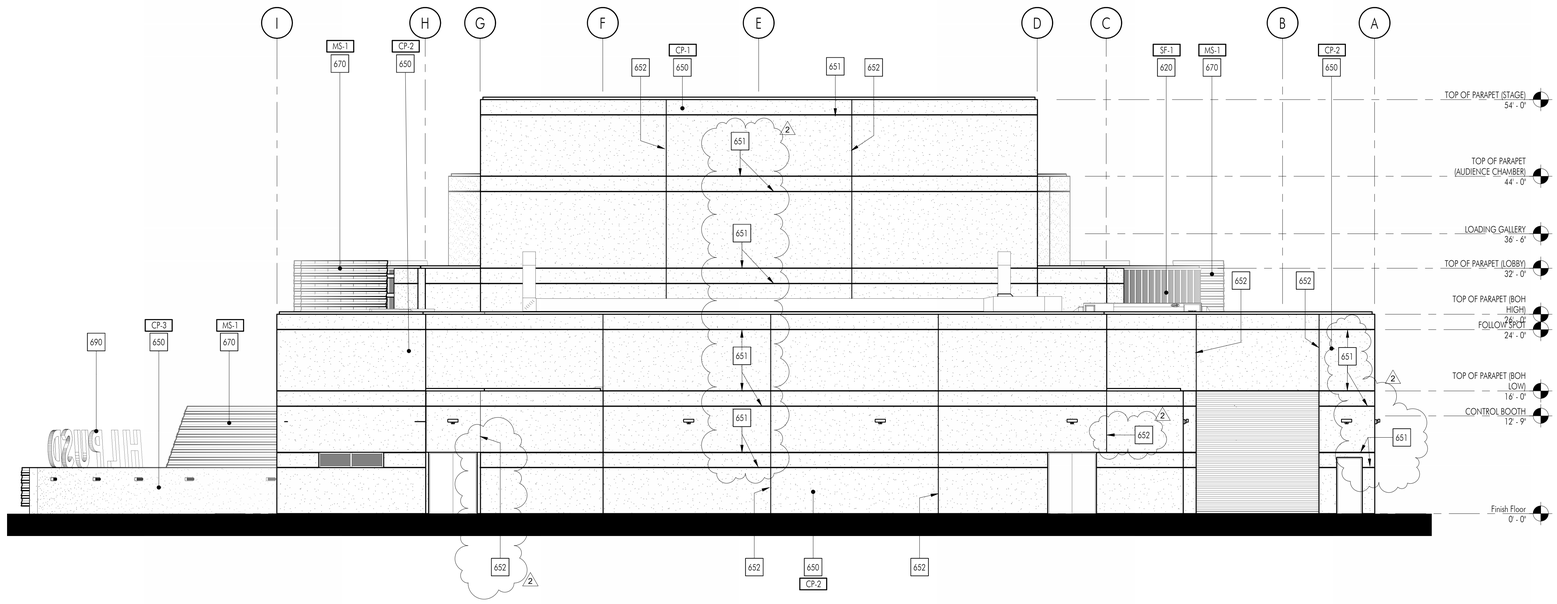

1 EAST ELEVATION

SCALE: 1/8" = 1'-0"

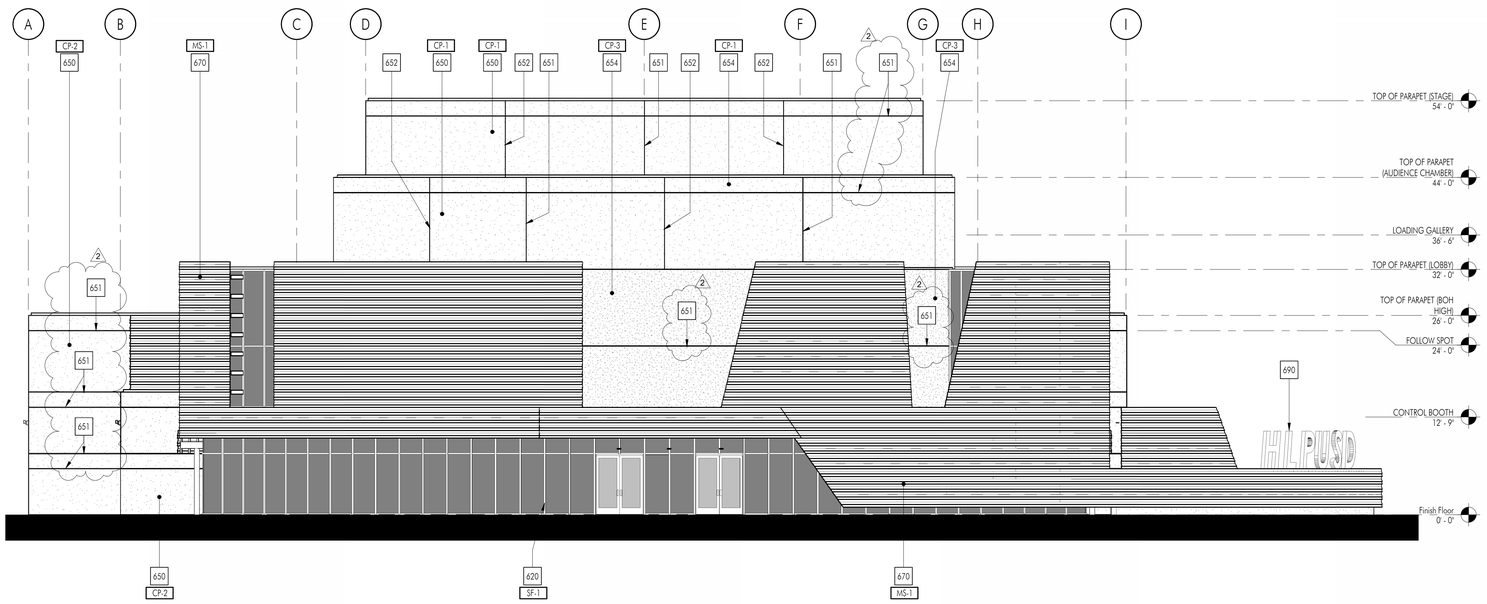

2 WEST ELEVATION

SCALE: 1/8" = 1'-0"

CONSTRUCTION KEYNOTES

No.	DESCRIPTION
620	GLASS CURTAIN WALL SYSTEM, SEE FLOOR PLAN FOR WINDOW TYPE AND SCHEDULE FOR MORE INFORMATION. DEFERRED APPROVAL
650	SMOOTH FINISH CEMENT PLASTER ON CMU. SEE DETAIL 5/A821
651	CEMENT PLASTER REVEAL PER 10/A821
652	CEMENT PLASTER CONTROL JOINT. SEE 6/A821
654	SMOOTH FINISH CEMENT PLASTER ON METAL STUDS. SEE DETAIL 1/A821
670	PERFORATED METAL PANEL SCREEN. SEE SHEETS A331, A332 AND A333 FOR MORE INFORMATION.
690	3/4" ALUMINUM OPEN BACK REVERSE CHANNEL LETTERING 5'-0" HIGH X 8" DEEP. FACTORY PAINTED ALL WELDS GROUND SMOOTH. SEE DETAILS 4, 10 AND 11/A823 FOR MORE INFORMATION.

FINISH NOTES LEGEND

MS-1	MATERIAL TAG. REFER TO SHEET A621 FOR MATERIALS LEGEND

APPL No. A03-122864

DSA Stamp

Architect

RACHLIN PARTNERS
8640 National Boulevard
Culver City, CA 90232
310.204.3400

Disclaimer:

THESE DRAWINGS ARE THE PROPERTY OF THE ARCHITECT. THE DESIGNS SHOWN AND DESCRIBED HEREIN INCLUDING ALL TECHNICAL DRAWINGS ARE PROPRIETARY AND CANNOT BE COPIED, DUPLICATED OR COMMERCIALLY EXPLOITED EITHER IN WHOLE OR IN PART WITHOUT WRITTEN CONSENT AND SHALL NOT BE USED BY THE OWNER ON OTHER PROJECTS, FOR ADDITIONS TO THIS PROJECT, OR FOR COMPLETION OF THIS PROJECT BY OTHERS. THE OWNER AGREES TO HOLD HARMLESS, INDEMNIFY AND DEFEND THE ARCHITECT AGAINST ALL DAMAGES, CLAIMS AND LOSSES, INCLUDING DEFENSE COSTS, ARISING OUT OF ANY REUSE OF PLANS AND SPECIFICATIONS WITHOUT THE WRITTEN AUTHORIZATION OF THE ARCHITECT OF RECORD.

Copyright © 2022 Rachlin Partners, All Rights Reserved.

Performing Arts Center

Hacienda La Puente Unified School District
635 North California Avenue
La Puente, CA 91744

Rev	Date	Issue
1	7.22.22	50% DD
2	10.21.22	50% CD
3	12.09.22	100% CD DSA SUBMITTAL
4	6.19.23	100% CD DSA RESUBMITTAL
5	9.20.23	DSA BACK CHECK
6	11.01.23	ADDENDUM NO. 1
7	11.01.23	ADDENDUM NO. 2

Date: 11.01.2023
Scale: As indicated
Drawn By: JP, NZ
Checked By: RM

Architect / Engineer Stamp

LICENSED ARCHITECT
EDWARD PACKARD
NO. C-28229
REN. 8-31-25
STATE OF CALIFORNIA

Consultants
Miyamoto International, Inc.
The Ruzika Company, Inc.
MDC Consulting Engineers
Pocock Design Solutions
Newson Brown Acoustics, LLC
VCA Engineers, Inc.
HJSA Consulting

Sheet Title

Exterior Elevations - East West

Sheet Number

A312

C:\Users\rudy.monico\Documents\R22_HLPUSD-PAC_Central_rudy.monico.rvt

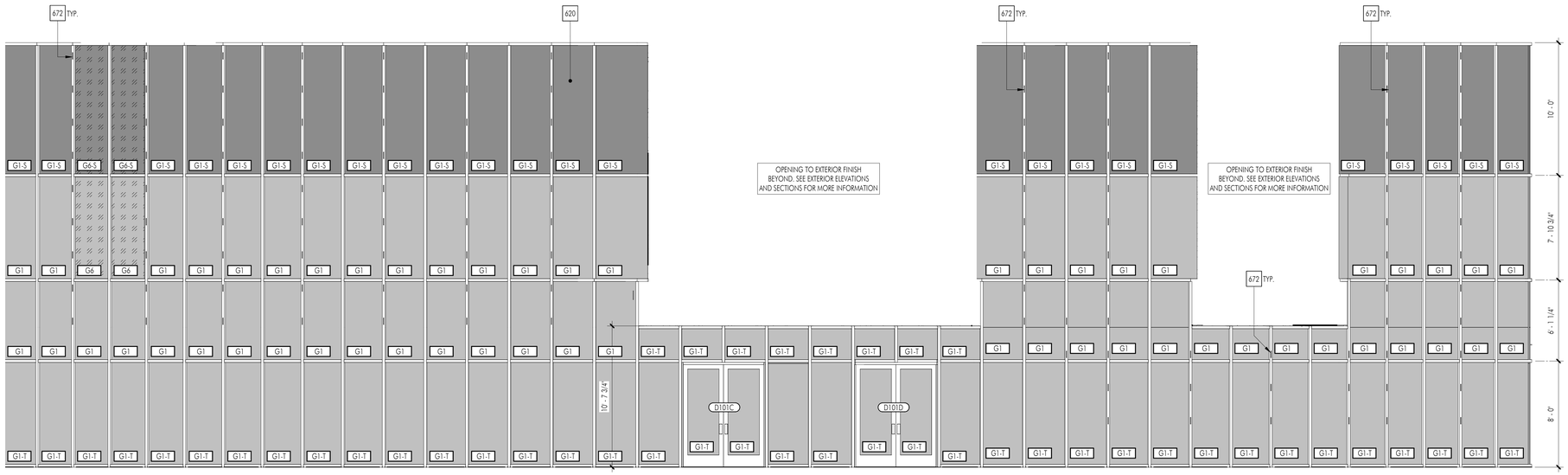

1 CURTAIN WALL WEST ELEVATION

SCALE: 1/4" = 1'-0"

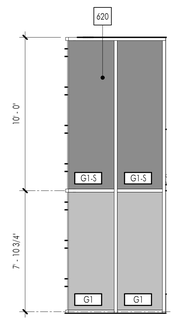

2 CURTAIN WALL ELEV.

SCALE: 1/4" = 1'-0"

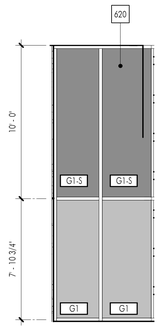

3 CURTAIN WALL ELEV.

SCALE: 1/4" = 1'-0"

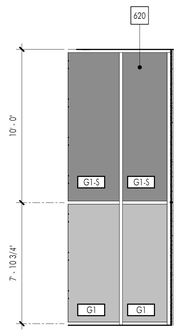

4 CURTAIN WALL ELEV.

SCALE: 1/4" = 1'-0"

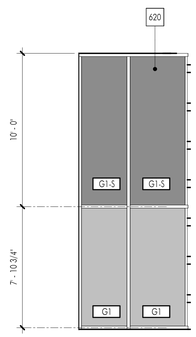

5 CURTAIN WALL ELEV.

SCALE: 1/4" = 1'-0"

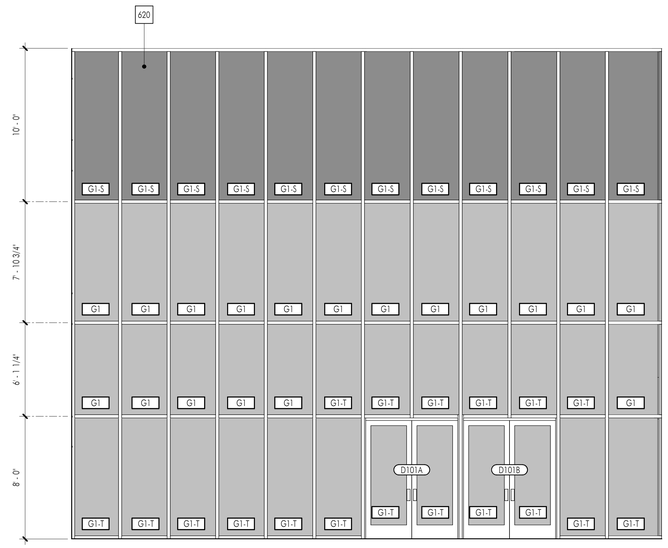

6 CURTAIN WALL NORTH ELEVATION

SCALE: 1/4" = 1'-0"

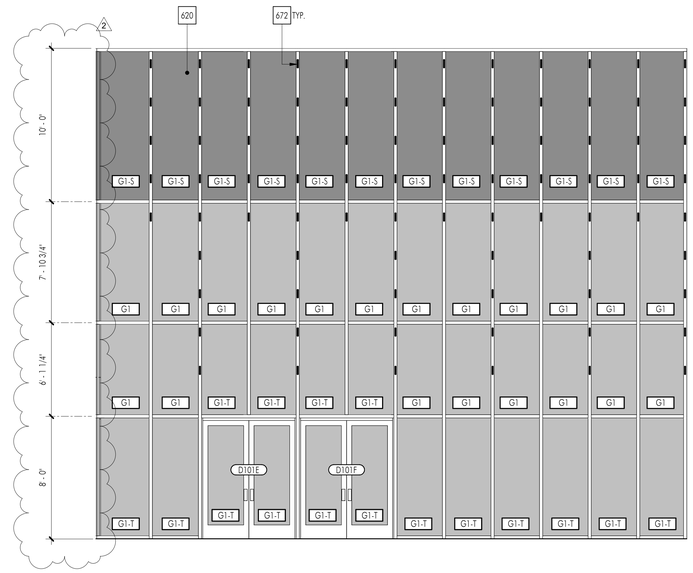

7 CURTAIN WALL SOUTH ELEVATION

SCALE: 1/4" = 1'-0"

CONSTRUCTION KEYNOTES

No.	DESCRIPTION
620	GLASS CURTAIN WALL SYSTEM, SEE FLOOR PLAN FOR WINDOW TYPE AND SCHEDULE FOR MORE INFORMATION. DEFERRED APPROVAL
672	PERFORATED METAL PANEL SCREEN OUTRIGGER PER CURTAINWALL MANUFACTURER, SEE DETAILS ON A843 FOR MORE INFORMATION. DEFERRED APPROVAL

FINISH NOTES LEGEND

MS-T	MATERIAL TAG. REFER TO SHEET A621 FOR MATERIALS LEGEND

APPL No. A03-122864

DSA Stamp

Architect

RACHLIN PARTNERS
8640 National Boulevard
Culver City, CA 90232
310.204.3400

Disclaimer:

THESE DRAWINGS ARE THE PROPERTY OF THE ARCHITECT. THE DESIGNS SHOWN AND DESCRIBED HEREIN INCLUDING ALL TECHNICAL DRAWINGS ARE PROPRIETARY AND CANNOT BE COPIED, DUPLICATED OR COMMERCIALLY EXPLOITED EITHER IN WHOLE OR IN PART WITHOUT WRITTEN CONSENT AND SHALL NOT BE USED BY THE OWNER ON OTHER PROJECTS, FOR ADDITIONS TO THIS PROJECT, OR FOR COMPLETION OF THIS PROJECT BY OTHERS. THE OWNER AGREES TO HOLD HARMLESS, INDEMNIFY AND DEFEND THE ARCHITECT AGAINST ALL DAMAGES, CLAIMS AND LOSSES, INCLUDING DEFENSE COSTS, ARISING OUT OF ANY REUSE OF PLANS AND SPECIFICATIONS WITHOUT THE WRITTEN AUTHORIZATION OF THE ARCHITECT OF RECORD.

Copyright © 2022 Rachlin Partners, All Rights Reserved.

Performing Arts Center

Hacienda La Puente Unified School District
635 North California Avenue
La Puente, CA 91744

Rev	Date	Issue
1	7.22.22	50% DD
2	10.21.22	50% CD
3	12.09.22	100% CD DSA SUBMITTAL
4	6.19.23	100% CD DSA RESUBMITTAL
5	9.20.23	DSA BACK CHECK
6	11.01.23	ADDENDUM NO. 1
7	11.01.23	ADDENDUM NO. 2

Date: 11.01.2023
Scale: As indicated
Drawn By: JP, NZ
Checked By: RM

Architect / Engineer Stamp

LICENSED ARCHITECT — LEONARD MASSARO — NO. C-26229 — REN. 8-31-25 — STATE OF CALIFORNIA

Consultants
Miyamoto International, Inc.
The Ruzika Company, Inc.
MDC Consulting Engineers
Pocock Design Solutions
Newson Brown Acoustics, LLC
VCA Engineers, Inc.
HJSA Consulting

Sheet Title

Curtain Wall and Storefront Elevations

Sheet Number

A321

C:\Users\rudy.monico\Documents\M22_HLPUSD-PAC_Central_rudy.monico.rvt

FINISH NOTES LEGEND

MS-1	MATERIAL TAG. REFER TO SHEET A621 FOR MATERIALS LEGEND

CONSTRUCTION KEYNOTES

No.	DESCRIPTION
620	GLASS CURTAIN WALL SYSTEM, SEE FLOOR PLAN FOR WINDOW TYPE AND SCHEDULE FOR MORE INFORMATION. DEFERRED APPROVAL
670	PERFORATED METAL PANEL SCREEN. SEE SHEETS A331, A332 AND A333 FOR MORE INFORMATION.
672	PERFORATED METAL PANEL SCREEN OUTRIGGER PER CURTAINWALL MANUFACTURER, SEE DETAILS ON A843 FOR MORE INFORMATION. DEFERRED APPROVAL
673	PERFORATED METAL PANEL SCREEN BENT CORNER OUTRIGGER PER CURTAINWALL MANUFACTURER, MAY VARY WITH ANGLE OF PERORATED METAL PANEL SCREEN, SEE CURTAIN WALL DRAWINGS AND DETAILS ON A843 FOR MORE INFORMATION
703	STEEL COLUMN, SEE STRUCTURAL DRAWINGS
716	HSS HORIZONTAL GIRT PER STRUCTURAL, SEE STRUCTURAL 18, 19/S0.10 AND D/S5.1 FOR MORE INFORMATION
717	CURTAIN WALL SUPPORT OUTRIGGER PER STUCTURAL, SEE STRUCTURAL 19/S0.10 FOR MORE INFORMATION

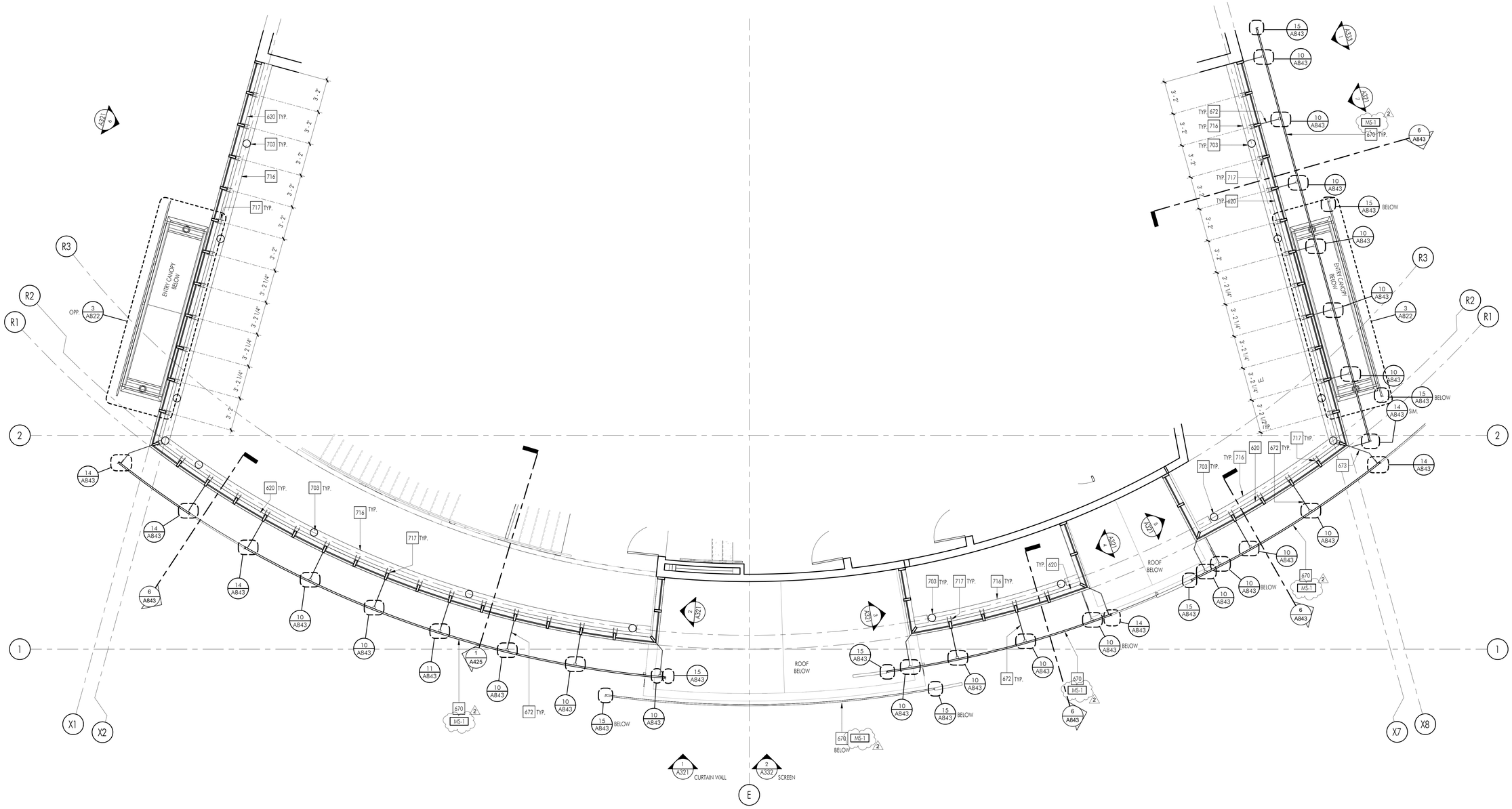

1 CURTAIN WALL SCREEN PLAN

SCALE: 1/4" = 1'-0"

APPL No. A03-122864

DSA Stamp

Architect

RACHLIN PARTNERS
8640 National Boulevard
Culver City, CA 90232
310.204.3400

Disclaimer:

THESE DRAWINGS ARE THE PROPERTY OF THE ARCHITECT. THE DESIGNS SHOWN AND DESCRIBED HEREIN INCLUDING ALL TECHNICAL DRAWINGS ARE PROPRIETARY AND CANNOT BE COPIED, DUPLICATED OR COMMERCIALLY EXPLOITED EXCEPT BY WRITTEN AGREEMENT. THESE DRAWINGS AND DESIGNS SHALL NOT BE USED BY THE OWNER ON OTHER PROJECTS, FOR ADDITIONS TO THIS PROJECT, OR FOR COMPLETION OF THIS PROJECT BY OTHERS. THE OWNER AGREES TO HOLD HARMLESS, INDEMNIFY AND DEFEND THE ARCHITECT AGAINST ALL DAMAGES, CLAIMS AND LOSSES, INCLUDING DEFENSE COSTS, ARISING OUT OF ANY REUSE OF PLANS AND SPECIFICATIONS WITHOUT THE WRITTEN AUTHORIZATION OF THE ARCHITECT OF RECORD.

Copyright © 2022 Rachlin Partners, All Rights Reserved.

Performing Arts Center

Hacienda La Puente Unified School District
635 North California Avenue
La Puente, CA 91744

Rev	Date	Issue
1	7.22.22	50% DD
2	10.21.22	50% CD
3	12.09.22	100% CD DSA SUBMITTAL
4	6.19.23	100% CD DSA RESUBMITTAL
5	9.20.23	DSA BACK CHECK
6	11.01.23	ADDENDUM NO. 1
7	11.01.23	ADDENDUM NO. 2

Date: 11.01.2023
Scale: As indicated
Drawn By: Author
Checked By: Checker

Architect / Engineer Stamp

LICENSED ARCHITECT RICHARD RACHLIN NO. C-20220 REN. 8-31-25 STATE OF CALIFORNIA

Consultants
Miyamoto International, Inc.
The Ruzika Company, Inc.
MDC Consulting Engineers
Pocock Design Solutions
Newson Brown Acoustics, LLC
VCA Engineers, Inc.
HJSA Consulting

Sheet Title

Curtain Wall Screen Enlarged Plan

Sheet Number

A331

C:\Users\vudy.monico\Documents\R22_HJPUSD-PAC_Central_vudy.monico.rvt

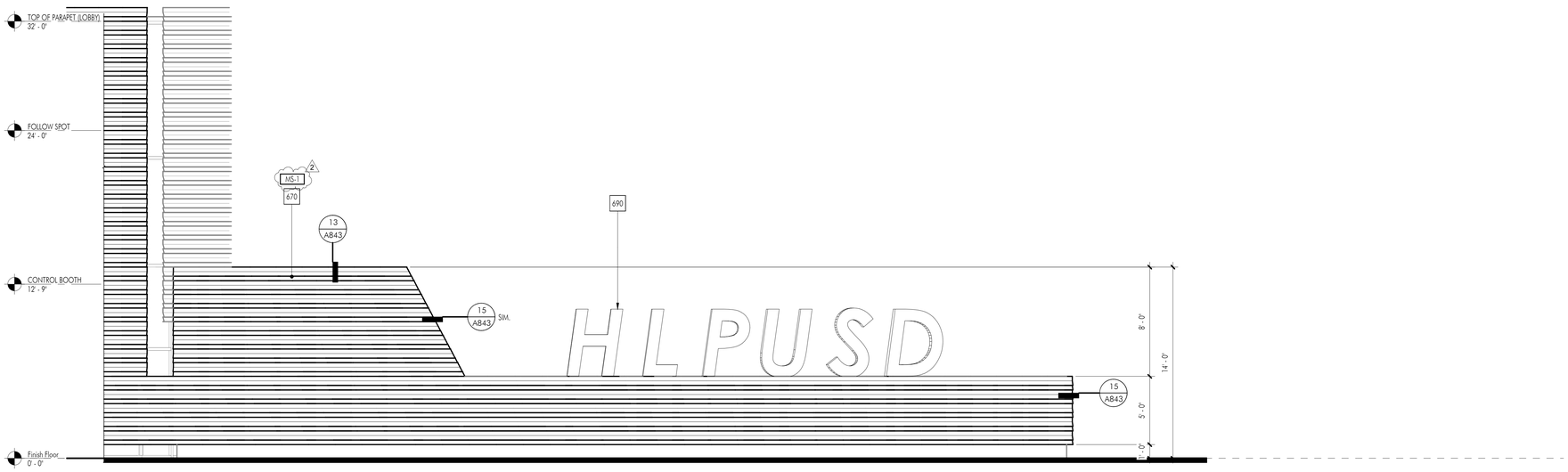

1 CURTAIN WALL SCREEN ELEVATION

SCALE: 1/4" = 1'-0"

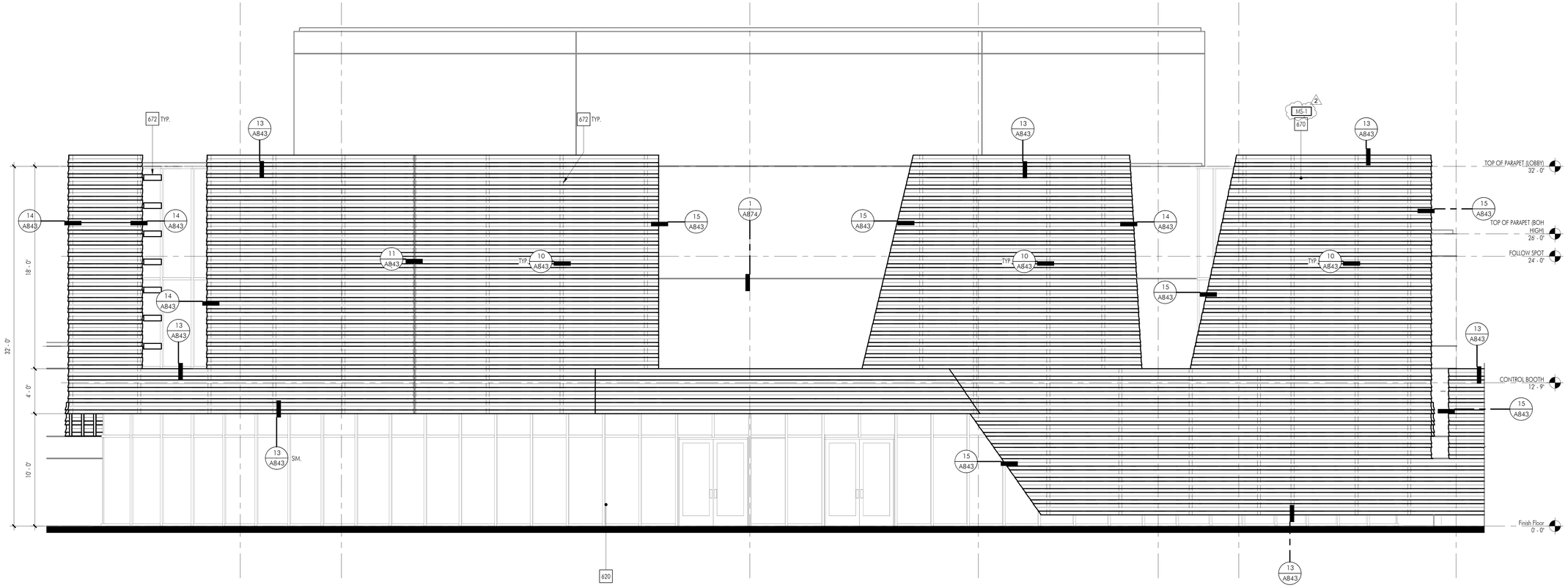

2 CURTAIN WALL SCREEN WEST ELEVATION

SCALE: 1/4" = 1'-0"

C:\Users\rvidy.monico\Documents\M22_HLPUSD-PAC_Central_rvidy.monico.rvt

CONSTRUCTION KEYNOTES

No.	DESCRIPTION
620	GLASS CURTAIN WALL SYSTEM, SEE FLOOR PLAN FOR WINDOW TYPE AND SCHEDULE FOR MORE INFORMATION. DEFERRED APPROVAL
670	PERFORATED METAL PANEL SCREEN. SEE SHEETS A331, A332 AND A333 FOR MORE INFORMATION. 2
672	PERFORATED METAL PANEL SCREEN OUTRIGGER PER CURTAINWALL MANUFACTURER, SEE DETAILS ON A843 FOR MORE INFORMATION. DEFERRED APPROVAL
690	3/4" ALUMINUM OPEN BACK REVERSE CHANNEL LETTERING 5'-0" HIGH X 8" DEEP. FACTORY PAINTED ALL WELDS GROUND SMOOTH. SEE DETAILS 4, 10 AND 11/A823 FOR MORE INFORMATION.

FINISH NOTES LEGEND

MS-1	MATERIAL TAG. REFER TO SHEET A621 FOR MATERIALS LEGEND

APPL No. A03-122864

DSA Stamp

Architect

RACHLIN PARTNERS
8640 National Boulevard
Culver City, CA 90232
310.204.3400

Disclaimer:

THESE DRAWINGS ARE THE PROPERTY OF THE ARCHITECT. THE DESIGNS SHOWN AND DESCRIBED HEREIN INCLUDING ALL TECHNICAL DRAWINGS ARE PROPRIETARY AND CANNOT BE COPIED, DUPLICATED OR COMMERCIALLY EXPLOITED IN ANY WAY WITHOUT THE ARCHITECT'S EXPRESS WRITTEN CONSENT. SHALL NOT BE USED BY THE OWNER ON OTHER PROJECTS, FOR ADDITIONS TO THIS PROJECT, OR FOR COMPLETION OF THIS PROJECT BY OTHERS. THE OWNER AGREES TO HOLD HARMLESS, INDEMNIFY AND DEFEND THE ARCHITECT AGAINST ALL DAMAGES, CLAIMS AND LOSSES, INCLUDING DEFENSE COSTS, ARISING OUT OF ANY REUSE OF PLANS AND SPECIFICATIONS WITHOUT THE WRITTEN AUTHORIZATION OF THE ARCHITECT OF RECORD.

Copyright © 2022 Rachlin Partners, All Rights Reserved.

Performing Arts Center

Hacienda La Puente Unified School District
635 North California Avenue
La Puente, CA 91744

Rev	Date	Issue
1	7.22.22	50% DD
2	10.21.22	50% CD
3	12.09.22	100% CD DSA SUBMITTAL
4	6.19.23	100% CD DSA RESUBMITTAL
5	9.20.23	DSA BACK CHECK
6	11.01.23	ADDENDUM NO. 1
7	11.01.23	ADDENDUM NO. 2

Date: 11.01.2023
Scale: As indicated
Drawn By: Author
Checked By: Checker

Architect / Engineer Stamp

LICENSED ARCHITECT
LEONARD RACHLIN
NO. C-26229
REN. 8-31-25
STATE OF CALIFORNIA

Consultants
Miyamoto International, Inc.
The Ruzika Company, Inc.
MDC Consulting Engineers
Pocock Design Solutions
Newson Brown Acoustics, LLC
VCA Engineers, Inc.
HJSA Consulting

Sheet Title

Curtain Wall Screen Elevation and Enlarged Plan

Sheet Number

A332

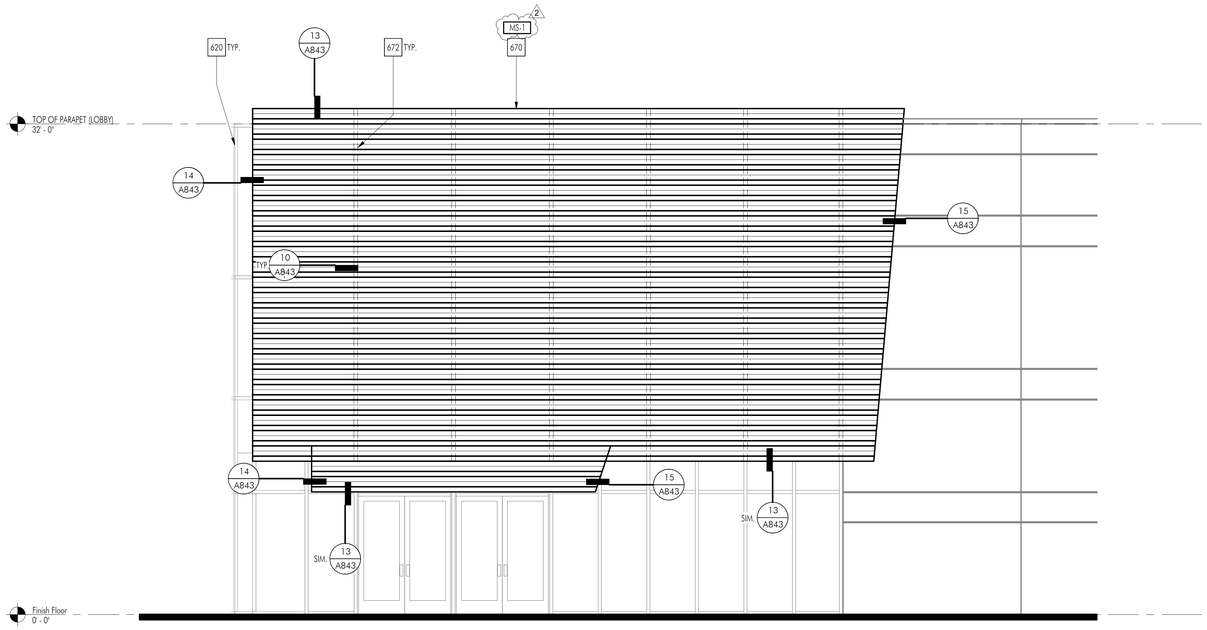

1 CURTAIN WALL SCREEN SOUTH ELEVATION

SCALE: 1/4" = 1'-0"

CONSTRUCTION KEYNOTES

No.	DESCRIPTION
620	GLASS CURTAIN WALL SYSTEM, SEE FLOOR PLAN FOR WINDOW TYPE AND SCHEDULE FOR MORE INFORMATION. DEFERRED APPROVAL
670	PERFORATED METAL PANEL SCREEN. SEE SHEETS A331, A332 AND A333 FOR MORE INFORMATION. (2)
672	PERFORATED METAL PANEL SCREEN OUTRIGGER PER CURTAINWALL MANUFACTURER, SEE DETAILS ON A843 FOR MORE INFORMATION. DEFERRED APPROVAL

FINISH NOTES LEGEND

MS-1 MATERIAL TAG. REFER TO SHEET A621 FOR MATERIALS LEGEND

APPL No. A03-122864

DSA Stamp

Architect

RACHLIN PARTNERS
8640 National Boulevard
Culver City, CA 90232
310.204.3400

Disclaimer:

THESE DRAWINGS ARE THE PROPERTY OF THE ARCHITECT. THE DESIGNS SHOWN AND DESCRIBED HEREIN INCLUDING ALL TECHNICAL DRAWINGS ARE PROPRIETARY AND CANNOT BE COPIED, DUPLICATED OR COMMERCIALLY EXPLOITED EXCEPT BY WRITTEN AGREEMENT. THESE DRAWINGS AND DESIGNS SHALL NOT BE USED BY THE OWNER ON OTHER PROJECTS, FOR ADDITIONS TO THIS PROJECT, OR FOR COMPLETION OF THIS PROJECT BY OTHERS. THE OWNER AGREES TO HOLD HARMLESS, INDEMNIFY AND DEFEND THE ARCHITECT AGAINST ALL DAMAGES, CLAIMS AND LOSSES, INCLUDING DEFENSE COSTS, ARISING OUT OF ANY REUSE OF PLANS AND SPECIFICATIONS WITHOUT THE WRITTEN AUTHORIZATION OF THE ARCHITECT OF RECORD.

Copyright © 2022 Rachlin Partners, All Rights Reserved.

Performing Arts Center
Hacienda La Puente Unified School District
635 North California Avenue
La Puente, CA 91744

Rev	Date	Issue
1	7.22.22	50% DD
2	10.21.22	50% CD
3	12.09.22	100% CD DSA SUBMITTAL
4	6.19.23	100% CD DSA RESUBMITTAL
5	9.20.23	DSA BACK CHECK
6	11.01.23	ADDENDUM NO. 1
7	11.01.23	ADDENDUM NO. 2

Date: 11.01.2023
Scale: As indicated
Drawn By: Author
Checked By: Checker

Architect / Engineer Stamp

LICENSED ARCHITECT
RONALD RACHLIN
NO. C-26229
REN 8-31-25
STATE OF CALIFORNIA

Consultants
Miyamoto International, Inc.
The Ruzika Company, Inc.
MDC Consulting Engineers
Pocock Design Solutions
Newson Brown Acoustics, LLC
VCA Engineers, Inc.
HJSA Consulting

Sheet Title

Aluminium Canopy Elevations and Plans

Sheet Number

A333

C:\Users\rudy.monico\Documents\R22_HLPUSD-PAC_Central_rudy.monico.rvt

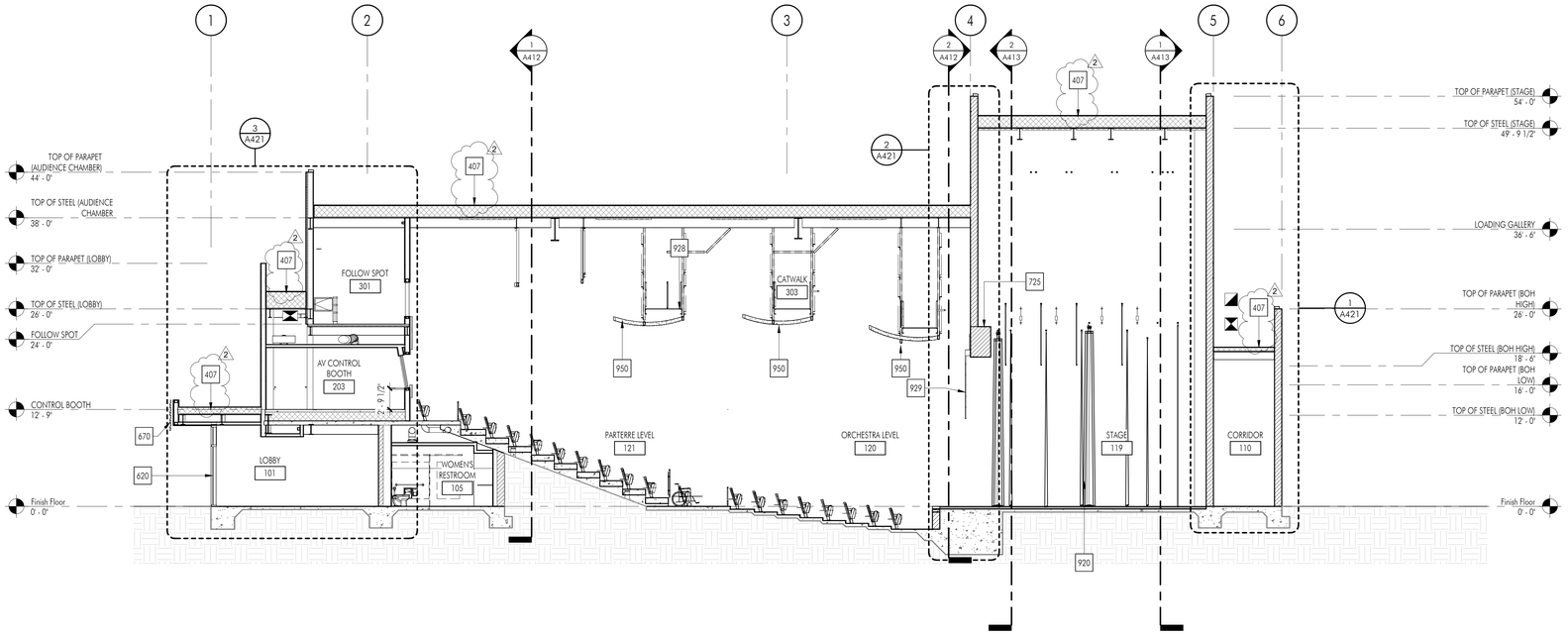

1 LONGITUDINAL BUILDING SECTION

SCALE: 1/8" = 1'-0"

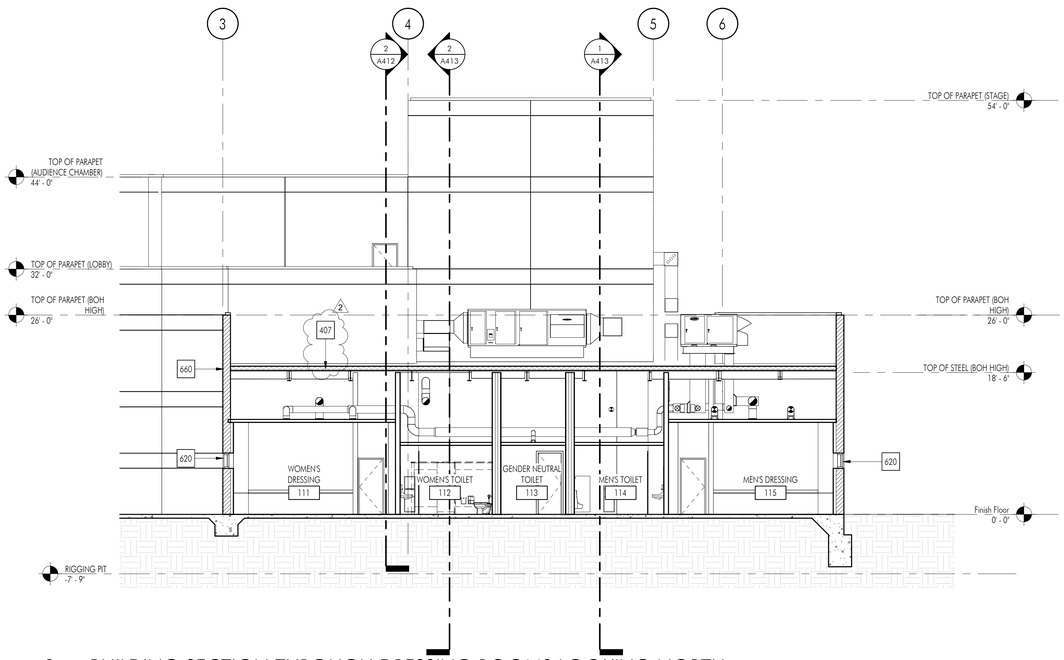

3 BUILDING SECTION THROUGH DRESSING ROOMS LOOKING NORTH

SCALE: 1/8" = 1'-0"

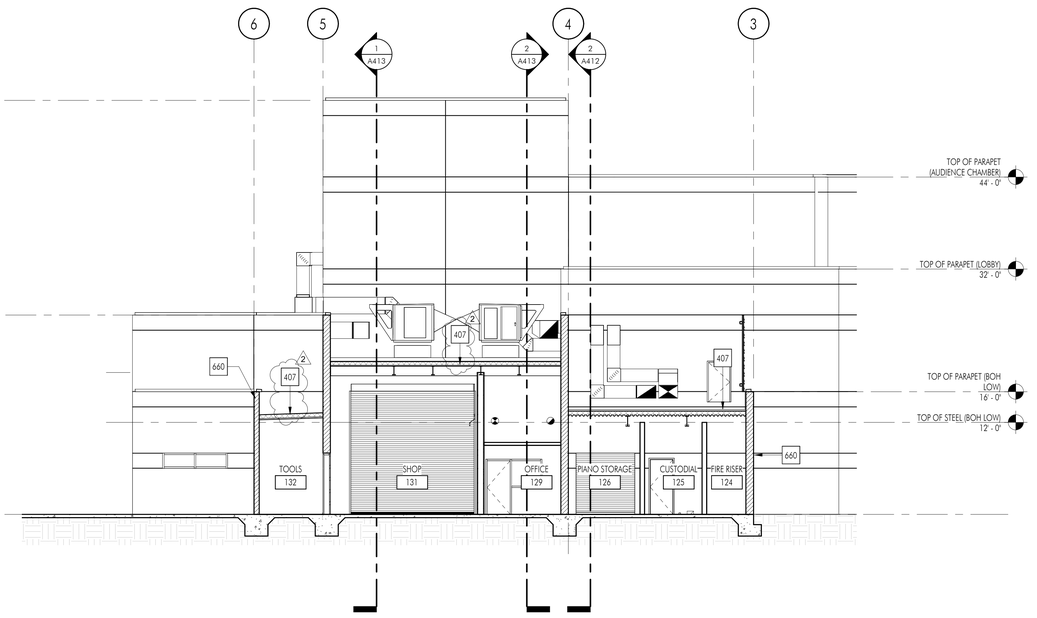

2 BUILDING SECTION THROUGH SHOP LOOKING SOUTH

SCALE: 1/8" = 1'-0"

CONSTRUCTION KEYNOTES

No.	DESCRIPTION
407	MODIFIED BITUMINOUS MEMBRANE ROOFING OVER RIGID INSULATION (CLASS A). SEE DETAIL 1/A831 FOR MORE INFORMATION
620	GLASS CURTAIN WALL SYSTEM, SEE FLOOR PLAN FOR WINDOW TYPE AND SCHEDULE FOR MORE INFORMATION. DEFERRED APPROVAL
660	CONCRETE MASONRY WALL (CMU) PER STRUCTURAL
670	PERFORATED METAL PANEL SCREEN. SEE SHEETS A331, A332 AND A333 FOR MORE INFORMATION.
725	CMU BOND BEAM PER STRUCTURAL
920	STAGE RIGGING, SEE THEATER DRAWINGS. DEFERRED APPROVAL
928	CATWALK. SEE SHEET A213
929	SCREEN, SEE AUDIO VISUAL DRAWINGS. SEE DETAIL 12/A866 FOR MOUNTING DETAIL
950	SUSPENDED ACOUSTIC CLOUD REFLECTOR SEE 4/A874 FOR MORE INFORMATION

FINISH NOTES LEGEND

MS-1	MATERIAL TAG. REFER TO SHEET A621 FOR MATERIALS LEGEND

APPL No. A03-122864

DSA Stamp

Architect

RACHLIN PARTNERS
8640 National Boulevard
Culver City, CA 90232
310.204.3400

Disclaimer:

THESE DRAWINGS ARE THE PROPERTY OF THE ARCHITECT. THE DESIGNS SHOWN AND DESCRIBED HEREIN INCLUDING ALL TECHNICAL DRAWINGS ARE PROPRIETARY AND CANNOT BE COPIED, DUPLICATED OR COMMERCIALLY EXPLOITED EITHER IN WHOLE OR IN PART WITHOUT WRITTEN CONSENT AND SHALL NOT BE USED BY THE OWNER ON OTHER PROJECTS, FOR ADDITIONS TO THIS PROJECT, OR FOR COMPLETION OF THIS PROJECT BY OTHERS. THE OWNER AGREES TO HOLD HARMLESS, INDEMNIFY AND DEFEND THE ARCHITECT AGAINST ALL DAMAGES, CLAIMS AND LOSSES, INCLUDING DEFENSE COSTS, ARISING OUT OF ANY REUSE OF PLANS AND SPECIFICATIONS WITHOUT THE WRITTEN AUTHORIZATION OF THE ARCHITECT OF RECORD.

Copyright © 2022 Rachlin Partners, All Rights Reserved.

Performing Arts Center

Hacienda La Puente Unified School District
635 North California Avenue
La Puente, CA 91744

Rev	Date	Issue
1	7.22.22	50% DD
2	10.21.22	50% CD
3	12.09.22	100% CD DSA SUBMITTAL
4	6.19.23	100% CD DSA RESUBMITTAL
5	9.20.23	DSA BACK CHECK
6	11.01.23	ADDENDUM NO. 1
7	11.01.23	ADDENDUM NO. 2

Date: 11.01.2023
Scale: As indicated
Drawn By: JP, NZ
Checked By: RM

Architect / Engineer Stamp

Consultants
Miyamoto International, Inc.
The Ruzika Company, Inc.
MDC Consulting Engineers
Pocock Design Solutions
Newson Brown Acoustics, LLC
VCA Engineers, Inc.
HJSA Consulting

Sheet Title

Building Sections

Sheet Number

A411

C:\Users\rudy.monico\Documents\R22_HLPUSD-PAC_Central_rudy.monico.rvt

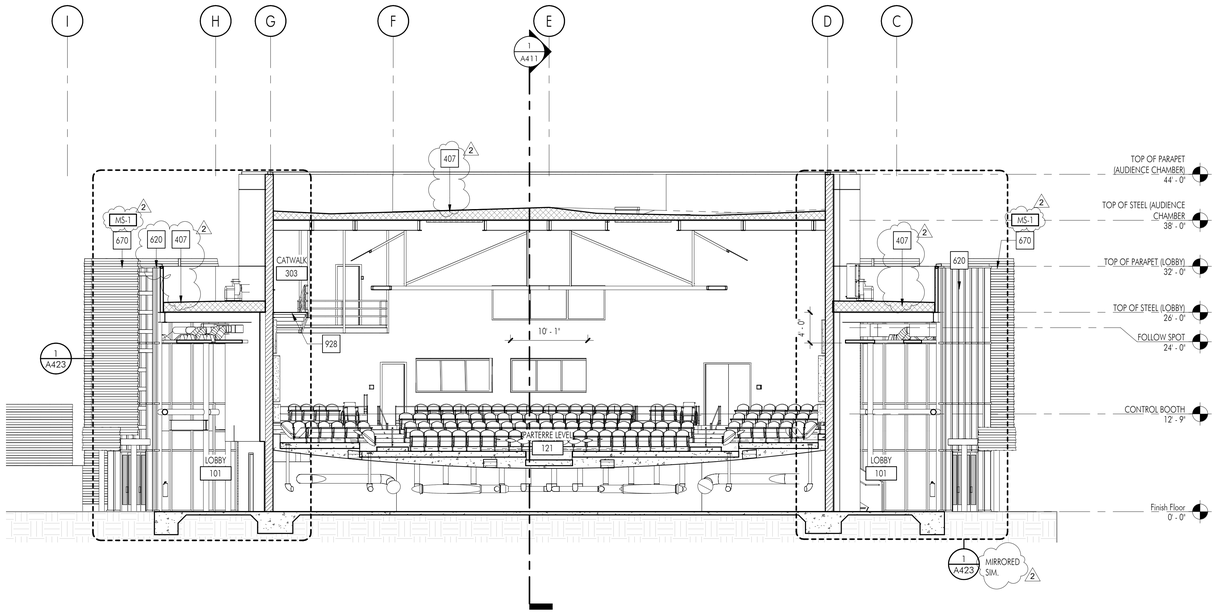

1 BUILDING CROSS SECTION LOOKING WEST

SCALE: 1/8" = 1'-0"

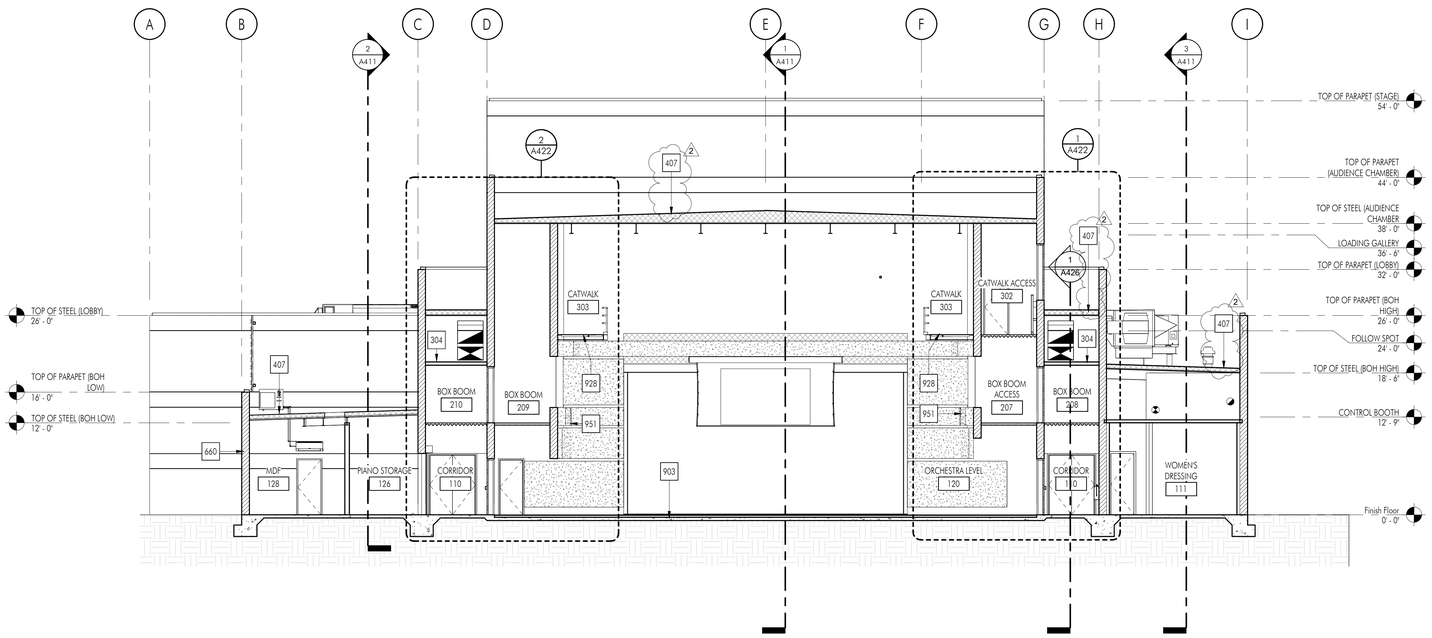

2 BUILDING SECTION LOOKING EAST (PROSCENIUM)

SCALE: 1/8" = 1'-0"

CONSTRUCTION KEYNOTES

No.	DESCRIPTION
304	FRAMED GYPSUM BOARD CEILING WITH GYPSYM BOARD ON BOTH SIDES AND ACOUSTIC INSULATION. SEE DETAILS 14,15, 20/50.6
407	MODIFIED BITUMINOUS MEMBRANE ROOFING OVER RIGID INSULATION (CLASS A). SEE DETAIL 1/A831 FOR MORE INFORMATION
620	GLASS CURTAIN WALL SYSTEM, SEE FLOOR PLAN FOR WINDOW TYPE AND SCHEDULE FOR MORE INFORMATION. DEFERRED APPROVAL
660	CONCRETE MASONRY WALL (CMU) PER STRUCTURAL
670	PERFORATED METAL PANEL SCREEN. SEE SHEETS A331, A332 AND A333 FOR MORE INFORMATION.
903	WOOD STAGE FLOOR SEE DETAILS 1-7/A866 FOR MORE INFORMATION
928	CATWALK. SEE SHEET A213
951	GYPSUM BOARD SOUND REFLECTORS. SEE ENLAREFED PLANS ON A518, A519 AND DETAILS ON A863 FOR ADDITIONAL INFORMATION

FINISH NOTES LEGEND

MS-1 MATERIAL TAG. REFER TO SHEET A621 FOR MATERIALS LEGEND

APPL No. A03-122864

DSA Stamp

Architect

RACHLIN PARTNERS
8640 National Boulevard
Culver City, CA 90232
310.204.3400

Disclaimer:
THESE DRAWINGS ARE THE PROPERTY OF THE ARCHITECT. THE DESIGNS SHOWN AND DESCRIBED HEREIN INCLUDING ALL TECHNICAL DRAWINGS ARE PROPRIETARY AND CANNOT BE COPIED, DUPLICATED OR COMMERCIALLY EXPLOITED IN ANY WAY, IN WHOLE OR IN PART WITHOUT WRITTEN CONSENT AND SHALL NOT BE USED BY THE OWNER ON OTHER PROJECTS, FOR ADDITIONS TO THIS PROJECT, OR FOR COMPLETION OF THIS PROJECT BY OTHERS. THE OWNER AGREES TO HOLD HARMLESS, INDEMNIFY AND DEFEND THE ARCHITECT AGAINST ALL DAMAGES, CLAIMS AND LOSSES, INCLUDING DEFENSE COSTS, ARISING OUT OF ANY REUSE OF PLANS AND SPECIFICATIONS WITHOUT THE WRITTEN AUTHORIZATION OF THE ARCHITECT OF RECORD.

Copyright © 2022 Rachlin Partners, All Rights Reserved.

Performing Arts Center

Hacienda La Puente Unified School District
635 North California Avenue
La Puente, CA 91744

Rev	Date	Issue
1	7.22.22	50% DD
2	10.21.22	50% CD
3	12.09.22	100% CD DSA SUBMITTAL
4	6.19.23	100% CD DSA RESUBMITTAL
5	9.20.23	DSA BACK CHECK
6	11.01.23	ADDENDUM NO. 1
7	11.01.23	ADDENDUM NO. 2

Date: 11.01.2023
Scale: As indicated
Drawn By: JP, NZ
Checked By: RM

Architect / Engineer Stamp

LICENSED ARCHITECT
RONALD M. RACHLIN
NO. C-28229
REN. 8-31-25
STATE OF CALIFORNIA

Consultants
Miyamoto International, Inc.
The Ruzika Company, Inc.
MDC Consulting Engineers
Pocock Design Solutions
Newson Brown Acoustics, LLC
VCA Engineers, Inc.
HJSA Consulting

Sheet Title

Building Sections

Sheet Number

A412

C:\Users\rudy.monico\Documents\R22_HLPUSD-PAC_Central_rudy.monico.rvt

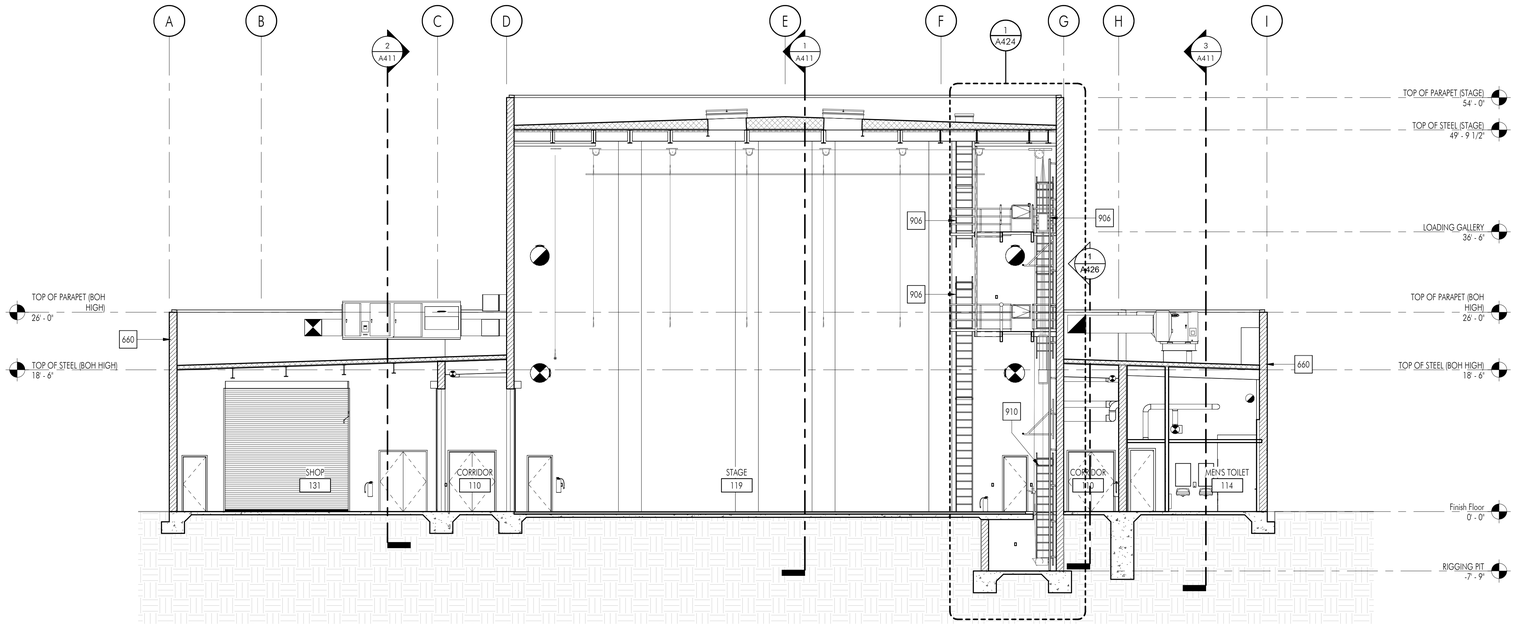

1 BUILDING CROSS SECTION THROUGH STAGE LOOKING EAST

SCALE: 1/8" = 1'-0"

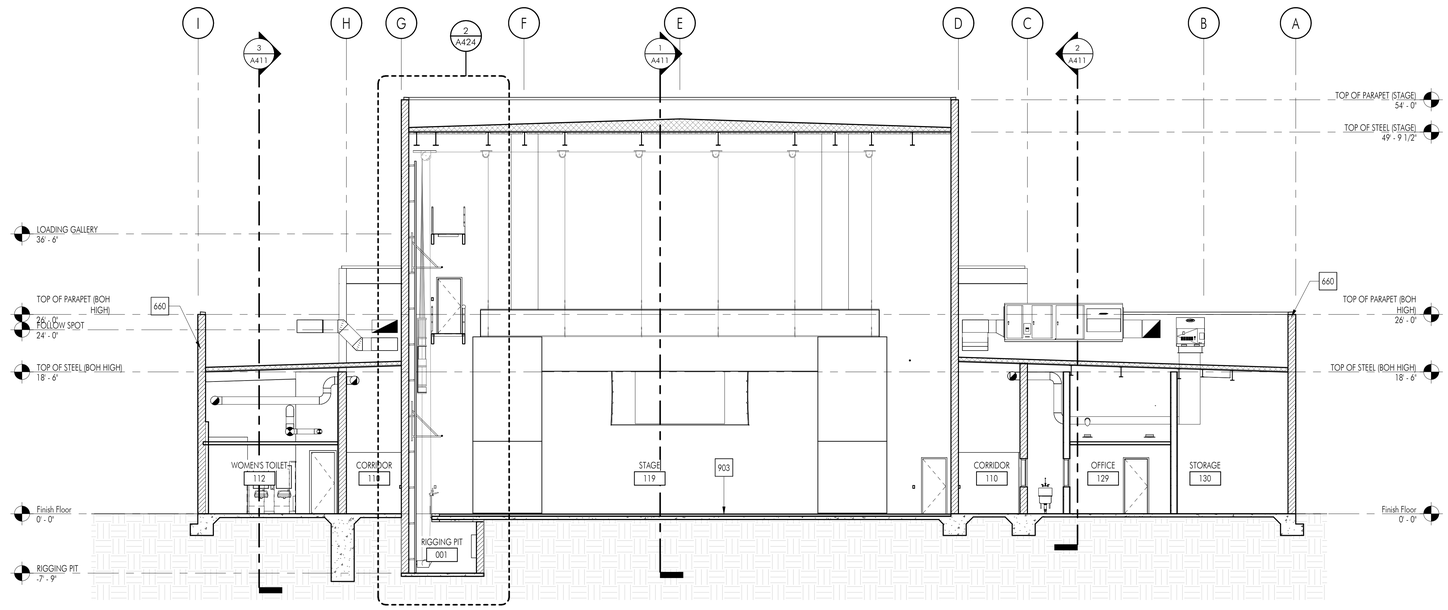

2 BUILDING CROSS SECTION THROUGH STAGE LOOKING WEST

SCALE: 1/8" = 1'-0"

CONSTRUCTION KEYNOTES

No.	DESCRIPTION
660	CONCRETE MASONRY WALL (CMU)
903	WOOD STAGE FLOOR SEE DETAILS 1-7/A866 FOR MORE INFORMATION
906	LOADING/FLY GALLERY ACCESS LADDER. SEE 1/A424 AND 4/A832 FOR MORE INFORMATION
910	RIGGING PIT ACCESS LADDER. SEE 1/424 AND 4/A832 FOR MORE INFORMATION

FINISH NOTES LEGEND

MS-1 MATERIAL TAG. REFER TO SHEET A621 FOR MATERIALS LEGEND

APPL No. A03-122864

IDENTIFICATION STAMP
DIV. OF THE STATE ARCHITECT
APP: 03-122864 INC:
REVIEWED FOR
SS ☑ FLS ☑ ACS ☑
DATE: 10/03/2023

DSA Stamp

Architect

RACHLIN PARTNERS
8640 National Boulevard
Culver City, CA 90232
310.204.3400

Disclaimer:

THESE DRAWINGS ARE THE PROPERTY OF THE ARCHITECT. THE DESIGNS SHOWN AND DESCRIBED HEREIN INCLUDING ALL TECHNICAL DRAWINGS ARE PROPRIETARY AND CANNOT BE COPIED, DUPLICATED OR COMMERCIALLY EXPLOITED EITHER IN WHOLE OR IN PART WITHOUT WRITTEN CONSENT AND SHALL NOT BE USED BY THE OWNER ON OTHER PROJECTS, FOR ADDITIONS TO THIS PROJECT, OR FOR COMPLETION OF THIS PROJECT BY OTHERS. THE OWNER AGREES TO HOLD HARMLESS, INDEMNIFY AND DEFEND THE ARCHITECT AGAINST ALL DAMAGES, CLAIMS AND LOSSES, INCLUDING DEFENSE COSTS, ARISING OUT OF ANY REUSE OF PLANS AND SPECIFICATIONS WITHOUT THE WRITTEN AUTHORIZATION OF THE ARCHITECT OF RECORD.

Copyright © 2022 Rachlin Partners, All Rights Reserved.

Performing Arts Center

Hacienda La Puente Unified School District
635 North California Avenue
La Puente, CA 91744

Rev	Date	Issue
1	7.22.22	50% DD
2	10.21.22	50% CD
3	12.09.22	100% CD DSA SUBMITTAL
4	6.19.23	100% CD DSA RESUBMITTAL
5	9.20.23	DSA BACK CHECK

Date: 9.20.2023
Scale: As indicated
Drawn By: JP, NZ
Checked By: RM

Architect / Engineer Stamp

LICENSED ARCHITECT
RONALD RACHLIN
NO. C-28229
REN. 8-31-25
STATE OF CALIFORNIA

Consultants
Miyamoto International, Inc.
The Ruzika Company, Inc.
MDC Consulting Engineers
Pocock Design Solutions
Newson Brown Acoustics, LLC
VCA Engineers, Inc.
HJSA Consulting

Sheet Title

Building Sections

Sheet Number

A413

C:\Users\rudy.monico\Documents\R22_HLPUSD-PAC_Central_rudy.monico.rvt

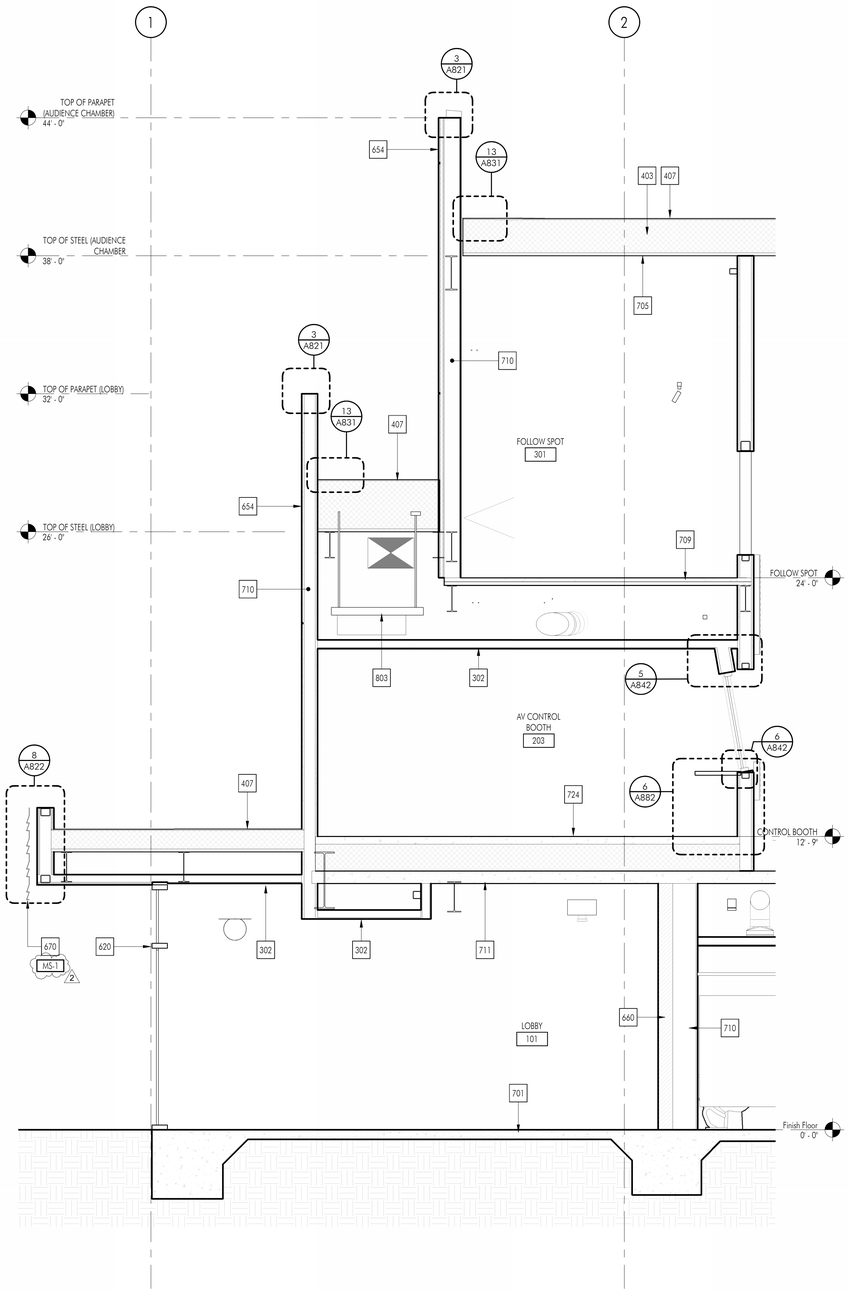

3 WALL SECTION

SCALE: 3/8" = 1'-0"

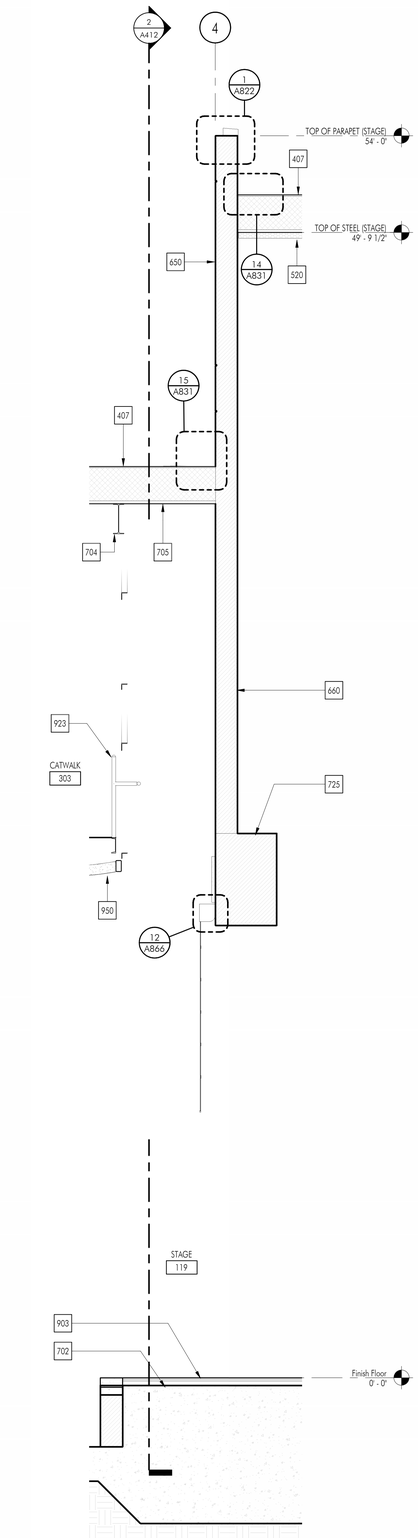

2 WALL SECTION

SCALE: 3/8" = 1'-0"

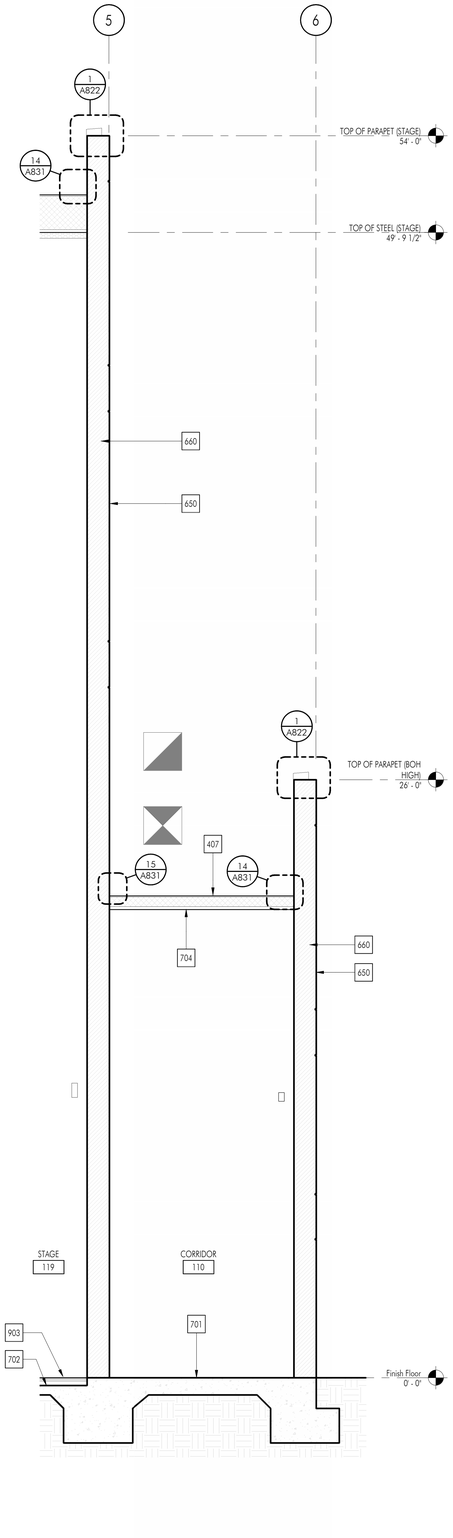

1 WALL SECTION

SCALE: 3/8" = 1'-0"

CONSTRUCTION KEYNOTES

No.	DESCRIPTION
302	FRAMED GYPSUM BOARD CEILING PER DETAILS 14, 15 AND 20/S0.6
403	RIGID INSULATION
407	MODIFIED BITUMINOUS MEMBRANE ROOFING OVER RIGID INSULATION (CLASS A). SEE DETAIL 1/A831 FOR MORE INFORMATION
520	FIBERGLASS ACOUSTIC PANELS ATTACHED TO BOTTOM OF DECK. FP-1
620	GLASS CURTAIN WALL SYSTEM, SEE FLOOR PLAN FOR WINDOW TYPE AND SCHEDULE FOR MORE INFORMATION. DEFERRED APPROVAL
650	SMOOTH FINISH CEMENT PLASTER ON CMU. SEE DETAIL 5/A821
654	SMOOTH FINISH CEMENT PLASTER ON METAL STUDS. SEE DETAIL 1/A821
660	CONCRETE MASONRY WALL (CMU) PER STRUCTURAL
670	PERFORATED METAL PANEL SCREEN. SEE SHEETS A331, A332 AND A333 FOR MORE INFORMATION.
701	CONCRETE SLAB ON GRADE, SEE STRUCTURAL DRAWINGS
702	DEPRESSED SLAB, SEE STRUCTURAL DRAWINGS
704	STEEL BEAM, SEE STRUCTURAL DRAWINGS
705	METAL DECK, SEE STRUCTURAL DRAWINGS
709	CONCRETE FILLED METAL DECK, SEE STRUCTURAL DRAWINGS
710	METAL STUD FRAMING, SEE STRUCTURAL DRAWINGS
711	RAISED CONCRETE SLAB, SEE STRUCTURAL DRAWINGS
724	4" RAISED CONCRETE SLAB OVER 14" STYROFOAM. SEE STRUCTURAL R/S5.7
725	CMU BOND BEAM PER STRUCTURAL
803	LIGHT FIXTURE, SEE ELECTRICAL DRAWINGS
903	WOOD STAGE FLOOR SEE DETAILS 1-7/A866 FOR MORE INFORMATION
923	CATWALK RAILING. SEE 16/A901 FOR ADDITIONAL INFORMATION
950	SUSPENDED ACOUSTIC CLOUD REFLECTOR SEE 4/A874 FOR MORE INFORMATION

FINISH NOTES LEGEND

MS-1	MATERIAL TAG. REFER TO SHEET A621 FOR MATERIALS LEGEND

APPL No. A03-122864

DSA Stamp

Architect

RACHLIN PARTNERS
8640 National Boulevard
Culver City, CA 90232
310.204.3400

Disclaimer:

THESE DRAWINGS ARE THE PROPERTY OF THE ARCHITECT. THE DESIGNS SHOWN AND DESCRIBED HEREIN INCLUDING ALL TECHNICAL DRAWINGS ARE PROPRIETARY AND CANNOT BE COPIED, DUPLICATED OR COMMERCIALLY EXPLOITED IN ANY WAY. THEY MAY NOT BE ASSIGNED TO ANY THIRD PARTY AND SHALL NOT BE USED BY THE OWNER ON OTHER PROJECTS, FOR ADDITIONS TO THIS PROJECT, OR FOR COMPLETION OF THIS PROJECT BY OTHERS. THE OWNER AGREES TO HOLD HARMLESS, INDEMNIFY AND DEFEND THE ARCHITECT AGAINST ALL DAMAGES, CLAIMS AND LOSSES, INCLUDING DEFENSE COSTS, ARISING OUT OF ANY REUSE OF PLANS AND SPECIFICATIONS WITHOUT THE WRITTEN AUTHORIZATION OF THE ARCHITECT OF RECORD.

Copyright © 2022 Rachlin Partners, All Rights Reserved.

Performing Arts Center

Hacienda La Puente Unified School District
635 North California Avenue
La Puente, CA 91744

Rev	Date	Issue
1	7.22.22	50% DD
2	10.21.22	50% CD
3	12.09.22	100% CD DSA SUBMITTAL
4	6.19.23	100% CD DSA RESUBMITTAL
5	9.20.23	DSA BACK CHECK
6	11.01.23	ADDENDUM NO. 1
7	11.01.23	ADDENDUM NO. 2

Date: 11.01.2023
Scale: As indicated
Drawn By: JP, NZ
Checked By: RM

Architect / Engineer Stamp

LICENSED ARCHITECT RONALD PAUL RACHLIN NO. C-28229 REN. 8-31-25 STATE OF CALIFORNIA

Consultants
Miyamoto International, Inc.
The Ruzika Company, Inc.
MDC Consulting Engineers
Pocock Design Solutions
Newson Brown Acoustics, LLC
VCA Engineers, Inc.
HJSA Consulting

Sheet Title

Wall Sections

Sheet Number

A421

C:\Users\rudy.monico\Documents\KPZ_HLPUSD-PAC_Central_rudy.monico.rvt

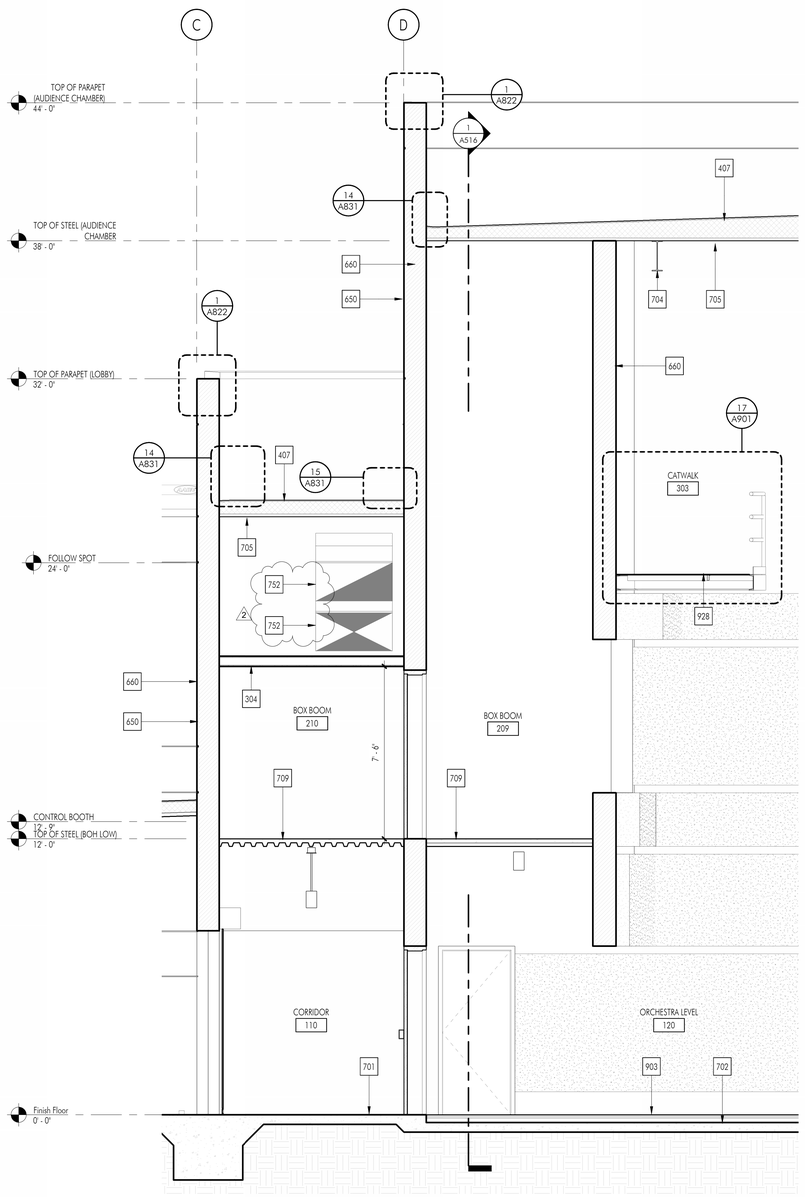

2 WALL SECTION

SCALE: 3/8" = 1'-0"

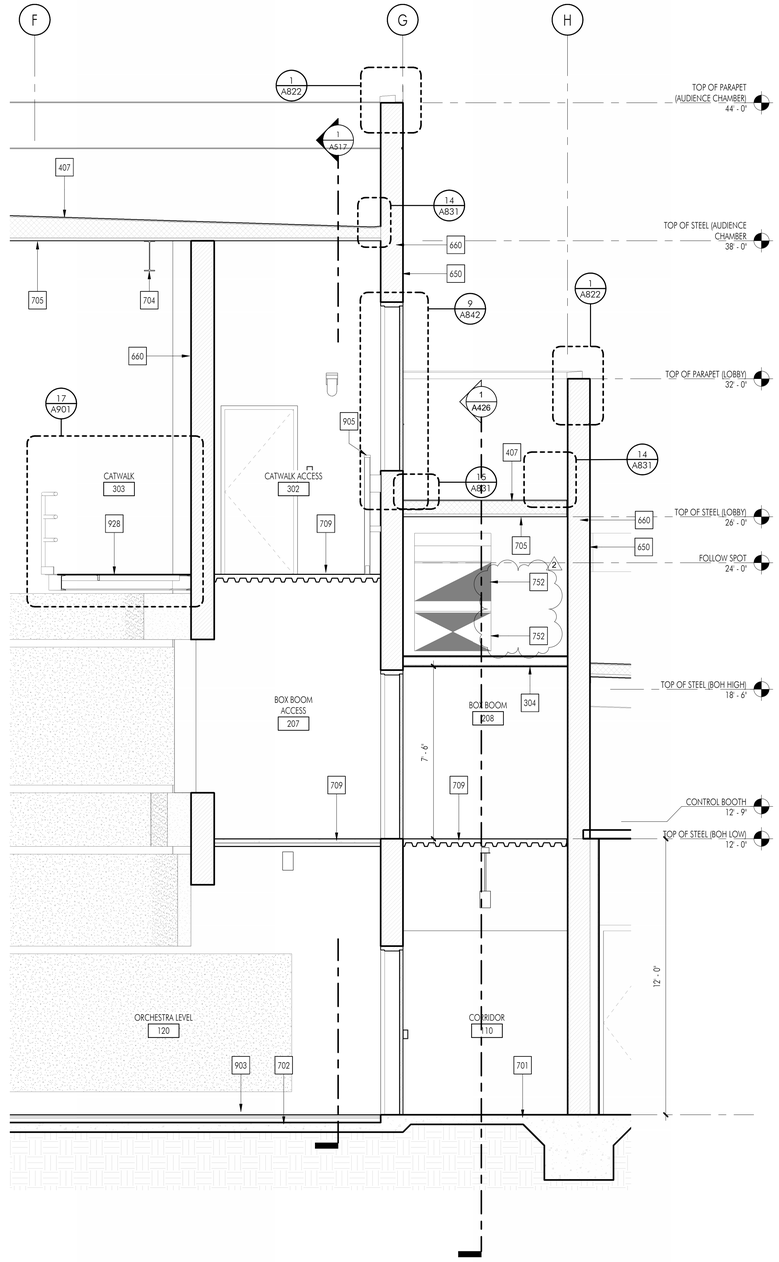

1 WALL SECTION

SCALE: 3/8" = 1'-0"

CONSTRUCTION KEYNOTES

No.	DESCRIPTION
304	FRAMED GYPSUM BOARD CEILING WITH GYPSYM BOARD ON BOTH SIDES AND ACOUSTIC INSULATION. SEE DETAILS 14,15, 20/S0.6
407	MODIFIED BITUMINOUS MEMBRANE ROOFING OVER RIGID INSULATION (CLASS A). SEE DETAIL 1/A831 FOR MORE INFORMATION
650	SMOOTH FINISH CEMENT PLASTER ON CMU. SEE DETAIL 5/A821
660	CONCRETE MASONRY WALL (CMU) PER STRUCTURAL
701	CONCRETE SLAB ON GRADE, SEE STRUCTURAL DRAWINGS
702	DEPRESSED SLAB, SEE STRUCTURAL DRAWINGS
704	STEEL BEAM, SEE STRUCTURAL DRAWINGS
705	METAL DECK, SEE STRUCTURAL DRAWINGS
709	CONCRETE FILLED METAL DECK, SEE STRUCTURAL DRAWINGS
752	MECHANICAL DUCTWORK, SEE MECHANICAL DRAWINGS
903	WOOD STAGE FLOOR SEE DETAILS 1-7/A866 FOR MORE INFORMATION
905	BOX BOOM ACCESS LADDER SEE 4B/A832 FOR ANCHORAGE TO WALL
928	CATWALK. SEE SHEET A213

FINISH NOTES LEGEND

MS-1	MATERIAL TAG. REFER TO SHEET A621 FOR MATERIALS LEGEND

APPL No. A03-122864

DSA Stamp

Architect

RACHLIN PARTNERS
8640 National Boulevard
Culver City, CA 90232
310.204.3400

Disclaimer:

THESE DRAWINGS ARE THE PROPERTY OF THE ARCHITECT. THE DESIGNS SHOWN AND DESCRIBED HEREIN INCLUDING ALL TECHNICAL DRAWINGS ARE PROPRIETARY AND CANNOT BE COPIED, DUPLICATED OR COMMERCIALLY EXPLOITED IN ANY WAY WITHOUT THE ARCHITECT'S EXPRESS WRITTEN CONSENT. SHALL NOT BE USED BY THE OWNER ON OTHER PROJECTS, FOR ADDITIONS TO THIS PROJECT, OR FOR COMPLETION OF THIS PROJECT BY OTHERS. THE OWNER AGREES TO HOLD HARMLESS, INDEMNIFY AND DEFEND THE ARCHITECT AGAINST ALL DAMAGES, CLAIMS AND LOSSES, INCLUDING DEFENSE COSTS, ARISING OUT OF ANY REUSE OF PLANS AND SPECIFICATIONS WITHOUT THE WRITTEN AUTHORIZATION OF THE ARCHITECT OF RECORD.

Copyright © 2022 Rachlin Partners, All Rights Reserved.

Performing Arts Center

Hacienda La Puente Unified School District
635 North California Avenue
La Puente, CA 91744

Rev	Date	Issue
1	7.22.22	50% DD
2	10.21.22	50% CD
3	12.09.22	100% CD DSA SUBMITTAL
4	6.19.23	100% CD DSA RESUBMITTAL
5	9.20.23	DSA BACK CHECK
6	11.01.23	ADDENDUM NO. 1
7	11.01.23	ADDENDUM NO. 2

Date: 11.01.2023
Scale: As indicated
Drawn By: JP, NZ
Checked By: RM

Architect / Engineer Stamp

LICENSED ARCHITECT RICHARD MORRIS RACHLIN NO. C-26029 REN. 8-31-25 STATE OF CALIFORNIA

Consultants
Miyamoto International, Inc.
The Ruzika Company, Inc.
MDC Consulting Engineers
Pocock Design Solutions
Newson Brown Acoustics, LLC
VCA Engineers, Inc.
HJSA Consulting

Sheet Title

Wall Sections

Sheet Number

A422

C:\Users\rudy.monico\Documents\822_HLPUSD_PAC_Central_rudy.monico.rvt

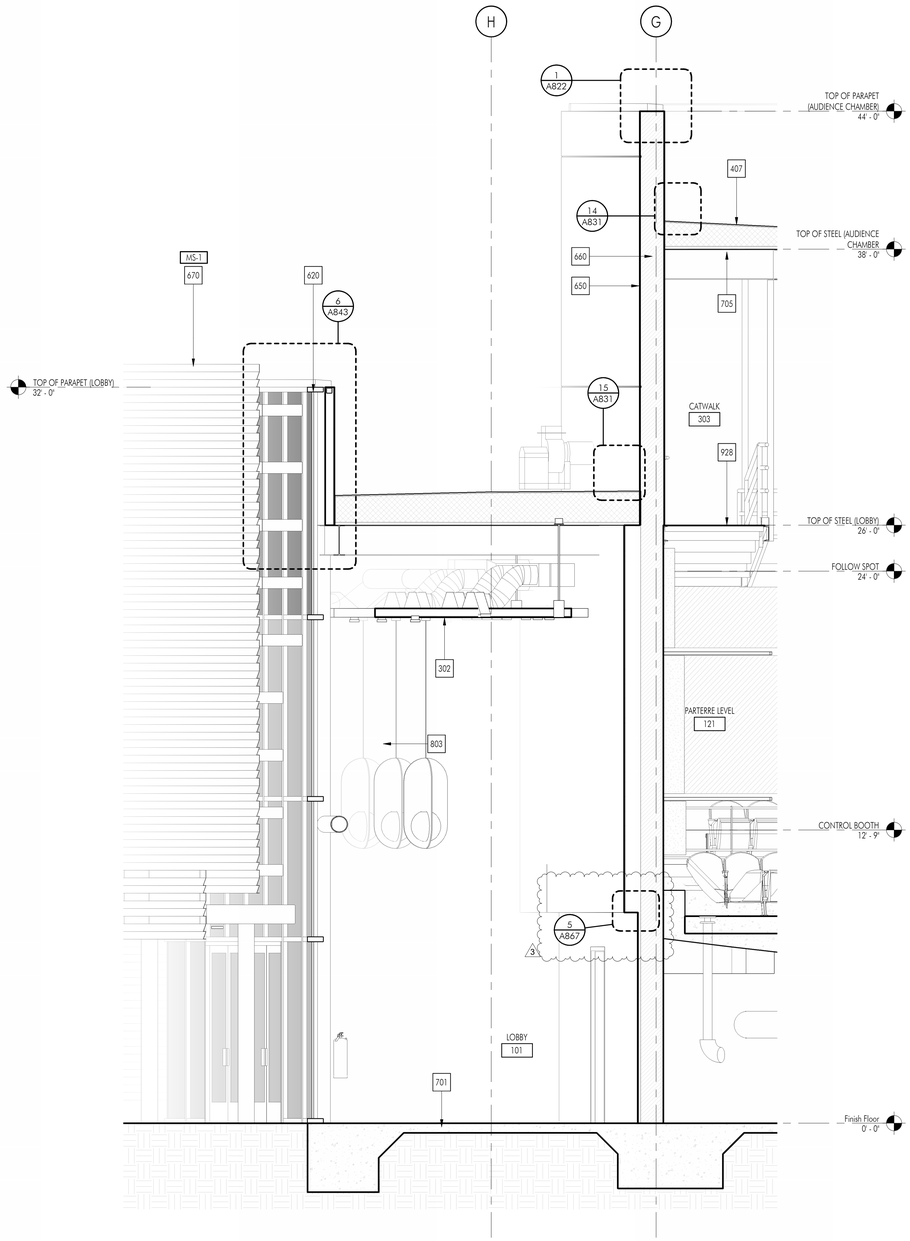

1 WALL SECTION

SCALE: 3/8" = 1'-0"

CONSTRUCTION KEYNOTES

No.	DESCRIPTION
302	FRAMED GYPSUM BOARD CEILING PER DETAILS 14, 15 AND 20/S0.6
407	MODIFIED BITUMINOUS MEMBRANE ROOFING OVER RIGID INSULATION (CLASS A). SEE DETAIL 1/A831 FOR MORE INFORMATION
620	GLASS CURTAIN WALL SYSTEM, SEE FLOOR PLAN FOR WINDOW TYPE AND SCHEDULE FOR MORE INFORMATION. DEFERRED APPROVAL
650	SMOOTH FINISH CEMENT PLASTER ON CMU. SEE DETAIL 5/A821
660	CONCRETE MASONRY WALL (CMU) PER STRUCTURAL
670	PERFORATED METAL PANEL SCREEN. SEE SHEETS A331, A332 AND A333 FOR MORE INFORMATION.
701	CONCRETE SLAB ON GRADE, SEE STRUCTURAL DRAWINGS
705	METAL DECK, SEE STRUCTURAL DRAWINGS
803	LIGHT FIXTURE, SEE ELECTRICAL DRAWINGS
928	CATWALK. SEE SHEET A213

FINISH NOTES LEGEND

MS-1	MATERIAL TAG. REFER TO SHEET A621 FOR MATERIALS LEGEND

APPL No. A03-122864

DSA Stamp

Architect

RACHLIN PARTNERS
8640 National Boulevard
Culver City, CA 90232
310.204.3400

Disclaimer:

THESE DRAWINGS ARE THE PROPERTY OF THE ARCHITECT. THE DESIGNS SHOWN AND DESCRIBED HEREIN INCLUDING ALL TECHNICAL DRAWINGS ARE PROPRIETARY AND CANNOT BE COPIED, DUPLICATED OR COMMERCIALLY EXPLOITED EITHER IN WHOLE OR IN PART WITHOUT WRITTEN CONSENT AND SHALL NOT BE USED BY THE OWNER ON OTHER PROJECTS, FOR ADDITIONS TO THIS PROJECT, OR FOR COMPLETION OF THIS PROJECT BY OTHERS. THE OWNER AGREES TO HOLD HARMLESS, INDEMNIFY AND DEFEND THE ARCHITECT AGAINST ALL DAMAGES, CLAIMS AND LOSSES, INCLUDING DEFENSE COSTS, ARISING OUT OF ANY REUSE OF PLANS AND SPECIFICATIONS WITHOUT THE WRITTEN AUTHORIZATION OF THE ARCHITECT OF RECORD.

Copyright © 2022 Rachlin Partners, All Rights Reserved.

Performing Arts Center

Hacienda La Puente Unified School District
635 North California Avenue
La Puente, CA 91744

Rev	Date	Issue
1	7.22.22	50% DD
2	10.21.22	50% CD
3	12.09.22	100% CD DSA SUBMITTAL
4	6.19.23	100% CD DSA RESUBMITTAL
5	9.20.23	DSA BACK CHECK
6	11.01.23	ADDENDUM NO. 1
7	11.01.23	ADDENDUM NO. 2
8	12.15.23	ADDENDUM NO. 3

Date: 11.01.2023
Scale: As indicated
Drawn By: JP, NZ
Checked By: RM

Architect / Engineer Stamp

LICENSED ARCHITECT
LOWELL RICHARDS
NO. C-28229
REN. 8-31-25
STATE OF CALIFORNIA

Consultants
Miyamoto International, Inc.
The Ruzika Company, Inc.
MDC Consulting Engineers
Pocock Design Solutions
Newson Brown Acoustics, LLC
VCA Engineers, Inc.
HJSA Consulting

Sheet Title

Wall Sections

Sheet Number

A423

C:\Users\rudy.monico\Documents\RT2_HLPUSD-PAC_Central_rudy.monico.rvt

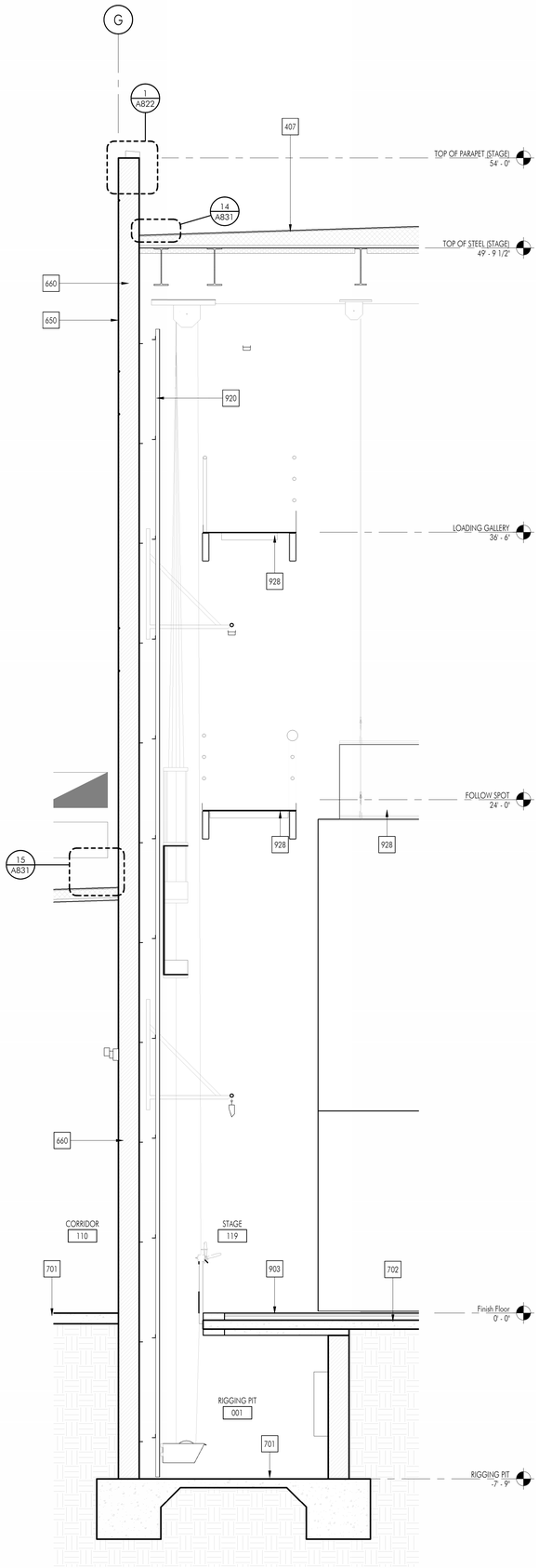

2 WALL SECTION

SCALE: 3/8" = 1'-0"

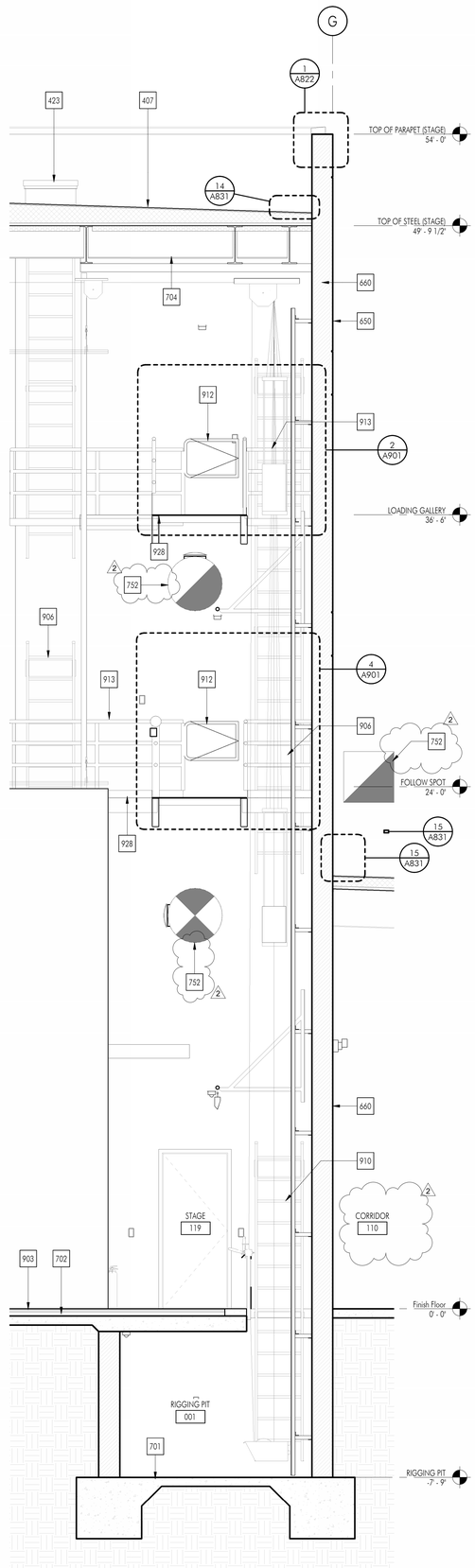

1 WALL SECTION

SCALE: 3/8" = 1'-0"

CONSTRUCTION KEYNOTES

No.	DESCRIPTION
407	MODIFIED BITUMINOUS MEMBRANE ROOFING OVER RIGID INSULATION (CLASS A). SEE DETAIL 1/A831 FOR MORE INFORMATION
423	ROOF ACCESS HATCH. SEE 2/A832
650	SMOOTH FINISH CEMENT PLASTER ON CMU. SEE DETAIL 5/A821
660	CONCRETE MASONRY WALL (CMU) PER STRUCTURAL
701	CONCRETE SLAB ON GRADE, SEE STRUCTURAL DRAWINGS
702	DEPRESSED SLAB, SEE STRUCTURAL DRAWINGS
704	STEEL BEAM, SEE STRUCTURAL DRAWINGS
752	MECHANICAL DUCTWORK, SEE MECHANICAL DRAWINGS
903	WOOD STAGE FLOOR SEE DETAILS 1-7/A866 FOR MORE INFORMATION
906	LOADING/FLY GALLERY ACCESS LADDER. SEE 1/A424 AND 4/A832 FOR MORE INFORMATION
910	RIGGING PIT ACCESS LADDER. SEE 1/424 AND 4/A832 FOR MORE INFORMATION
912	ACCESS LADDER SAFETY GATE, SEE 18, 19/A901
913	ACCESS LADDER SAFETY GUARDRAIL, SIMILAR TO CATWALK RAILING DETAIL SEE 7/A901
920	STAGE RIGGING, SEE THEATER DRAWINGS. DEFERRED APPROVAL
928	CATWALK. SEE SHEET A213

FINISH NOTES LEGEND

MS-1 MATERIAL TAG. REFER TO SHEET A621 FOR MATERIALS LEGEND

APPL No. A03-122864

DSA Stamp

Architect

RACHLIN PARTNERS
8640 National Boulevard
Culver City, CA 90232
310.204.3400

Disclaimer:

THESE DRAWINGS ARE THE PROPERTY OF THE ARCHITECT. THE DESIGNS SHOWN AND DESCRIBED HEREIN INCLUDING ALL TECHNICAL DRAWINGS ARE PROPRIETARY AND CANNOT BE COPIED, DUPLICATED OR COMMERCIALLY EXPLOITED IN ANY WAY. THEY ARE NOT TO BE CHANGED OR USED BY ANYONE AND SHALL NOT BE USED BY THE OWNER ON OTHER PROJECTS, FOR ADDITIONS TO THIS PROJECT, OR FOR COMPLETION OF THIS PROJECT BY OTHERS. THE OWNER AGREES TO HOLD HARMLESS, INDEMNIFY AND DEFEND THE ARCHITECT AGAINST ALL DAMAGES, CLAIMS AND LOSSES, INCLUDING DEFENSE COSTS, ARISING OUT OF ANY REUSE OF PLANS AND SPECIFICATIONS WITHOUT THE WRITTEN AUTHORIZATION OF THE ARCHITECT OF RECORD.

Copyright © 2022 Rachlin Partners, All Rights Reserved.

Performing Arts Center

Hacienda La Puente Unified School District
635 North California Avenue
La Puente, CA 91744

Rev	Date	Issue
1	7.22.22	50% DD
2	10.21.22	50% CD
3	12.09.22	100% CD DSA SUBMITTAL
4	6.19.23	100% CD DSA RESUBMITTAL
5	9.20.23	DSA BACK CHECK
6	11.01.23	ADDENDUM NO. 1
7	11.01.23	ADDENDUM NO. 2

Date: 11.01.2023
Scale: As indicated
Drawn By: JP, NZ
Checked By: RM

Architect / Engineer Stamp

LICENSED ARCHITECT
EDWARD MICHAEL RACHLIN
NO. C-28229
REN. 8-31-25
STATE OF CALIFORNIA

Consultants
Miyamoto International, Inc.
The Ruzika Company, Inc.
MDC Consulting Engineers
Pocock Design Solutions
Newson Brown Acoustics, LLC
VCA Engineers, Inc.
HJSA Consulting

Sheet Title

Wall Sections

Sheet Number

A424

C:\Users\rudy.monico\Documents\M22_HLPUSD-PAC_Central_rudy.monico.rvt

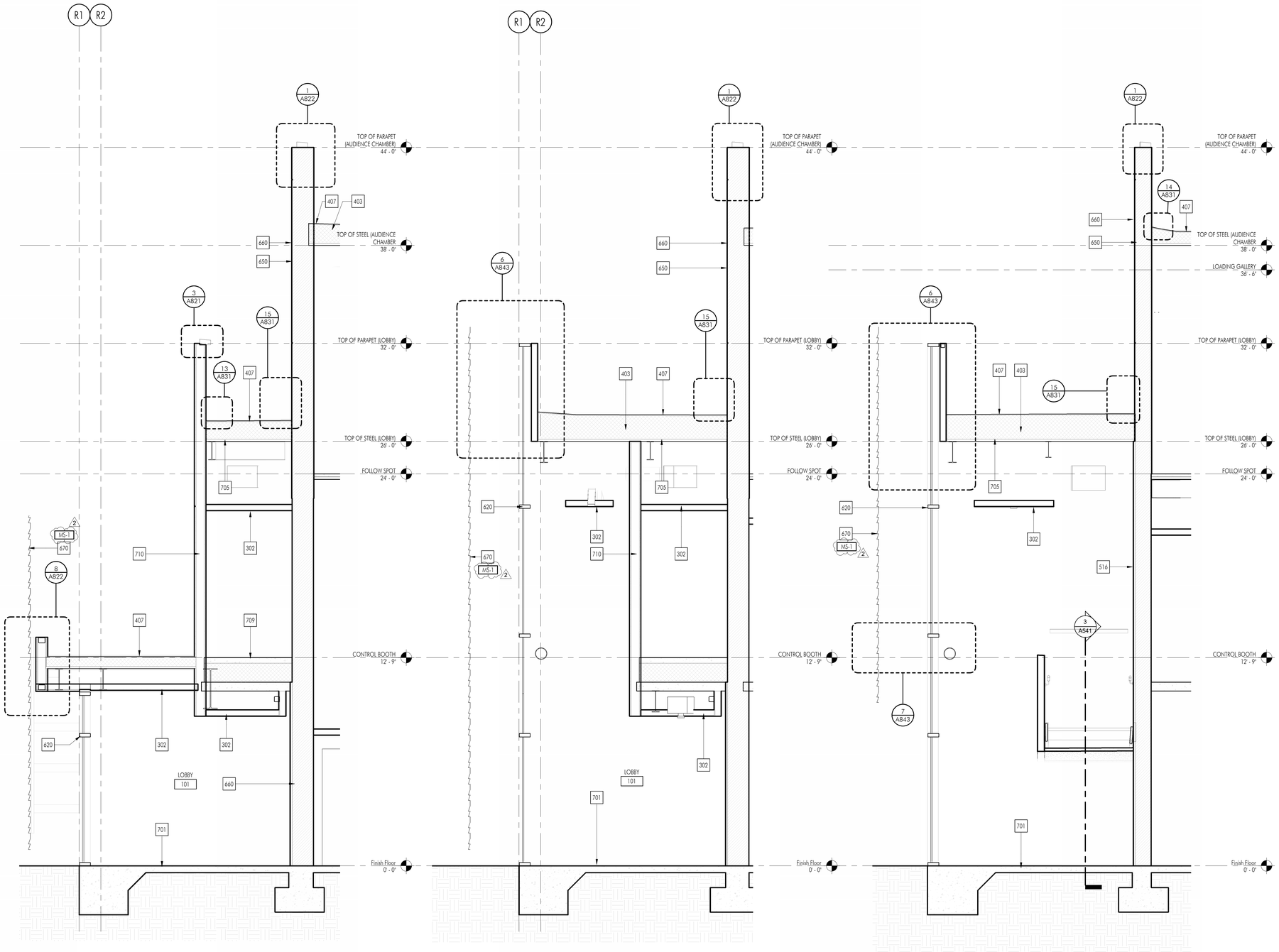

3 WALL SECTION

SCALE: 3/8" = 1'-0"

2 WALL SECTION

SCALE: 3/8" = 1'-0"

1 WALL SECTION

SCALE: 3/8" = 1'-0"

CONSTRUCTION KEYNOTES

No.	DESCRIPTION
302	FRAMED GYPSUM BOARD CEILING PER DETAILS 14, 15 AND 20/S0.6
403	RIGID INSULATION
407	MODIFIED BITUMINOUS MEMBRANE ROOFING OVER RIGID INSULATION (CLASS A). SEE DETAIL 1/A831 FOR MORE INFORMATION
516	(1) LAYER OF 5/8" TYPE 'X' GYPSUM WALL BOARD OVER 7/8" FURRING CHANNELS. PAINTED AS SCHEDULED UNLESS NOTED OTHERWISE. SEE DETAIL 3/A711
620	GLASS CURTAIN WALL SYSTEM, SEE FLOOR PLAN FOR WINDOW TYPE AND SCHEDULE FOR MORE INFORMATION. DEFERRED APPROVAL
650	SMOOTH FINISH CEMENT PLASTER ON CMU. SEE DETAIL 5/A821
660	CONCRETE MASONRY WALL (CMU) PER STRUCTURAL
670	PERFORATED METAL PANEL SCREEN. SEE SHEETS A331, A332 AND A333 FOR MORE INFORMATION.
701	CONCRETE SLAB ON GRADE, SEE STRUCTURAL DRAWINGS
705	METAL DECK, SEE STRUCTURAL DRAWINGS
709	CONCRETE FILLED METAL DECK, SEE STRUCTURAL DRAWINGS
710	METAL STUD FRAMING, SEE STRUCTURAL DRAWINGS

FINISH NOTES LEGEND

MS-1	MATERIAL TAG. REFER TO SHEET A621 FOR MATERIALS LEGEND

APPL No. A03-122864

DSA Stamp

Architect

RACHLIN PARTNERS
8640 National Boulevard
Culver City, CA 90232
310.204.3400

Disclaimer:

THESE DRAWINGS ARE THE PROPERTY OF THE ARCHITECT. THE DESIGNS SHOWN AND DESCRIBED HEREIN INCLUDING ALL TECHNICAL DRAWINGS ARE PROPRIETARY AND CANNOT BE COPIED, DUPLICATED OR COMMERCIALLY EXPLOITED EXCEPT BY WRITTEN AGREEMENT. THESE DRAWINGS AND DESIGNS SHALL NOT BE USED BY THE OWNER ON OTHER PROJECTS, FOR ADDITIONS TO THIS PROJECT, OR FOR COMPLETION OF THIS PROJECT BY OTHERS. THE OWNER AGREES TO HOLD HARMLESS, INDEMNIFY AND DEFEND THE ARCHITECT AGAINST ALL DAMAGES, CLAIMS AND LOSSES, INCLUDING DEFENSE COSTS, ARISING OUT OF ANY REUSE OF PLANS AND SPECIFICATIONS WITHOUT THE WRITTEN AUTHORIZATION OF THE ARCHITECT OF RECORD.

Copyright © 2022 Rachlin Partners, All Rights Reserved.

Performing Arts Center

Hacienda La Puente Unified School District
635 North California Avenue
La Puente, CA 91744

Rev	Date	Issue
1	7.22.22	50% DD
2	10.21.22	50% CD
3	12.09.22	100% CD DSA SUBMITTAL
4	6.19.23	100% CD DSA RESUBMITTAL
5	9.20.23	DSA BACK CHECK
6	11.01.23	ADDENDUM NO. 1
7	11.01.23	ADDENDUM NO. 2

Date: 11.01.2023
Scale: As indicated
Drawn By: Author
Checked By: Checker

Architect / Engineer Stamp

LICENSED ARCHITECT RICHARD RACHLIN NO. C-26220 REN. 8-31-25 STATE OF CALIFORNIA

Consultants
Miyamoto International, Inc.
The Ruzika Company, Inc.
MDC Consulting Engineers
Pocock Design Solutions
Newson Brown Acoustics, LLC
VCA Engineers, Inc.
HJSA Consulting

Sheet Title

Wall Sections

Sheet Number

A425

C:\Users\vudy.monico\Documents\R22_HJPJSD-PAC_Central_vudy.monico.rvt

CONSTRUCTION KEYNOTES

No.	DESCRIPTION
301	FRAMED PLASTER CEILING PER DETAILS 14, 15 AND 20/S0.6
407	MODIFIED BITUMINOUS MEMBRANE ROOFING OVER RIGID INSULATION (CLASS A). SEE DETAIL 1/A831 FOR MORE INFORMATION
650	SMOOTH FINISH CEMENT PLASTER ON CMU. SEE DETAIL 5/A821
660	CONCRETE MASONRY WALL (CMU)
701	CONCRETE SLAB ON GRADE, SEE STRUCTURAL DRAWINGS
705	METAL DECK, SEE STRUCTURAL DRAWINGS

FINISH NOTES LEGEND

MS-1 MATERIAL TAG. REFER TO SHEET A621 FOR MATERIALS LEGEND

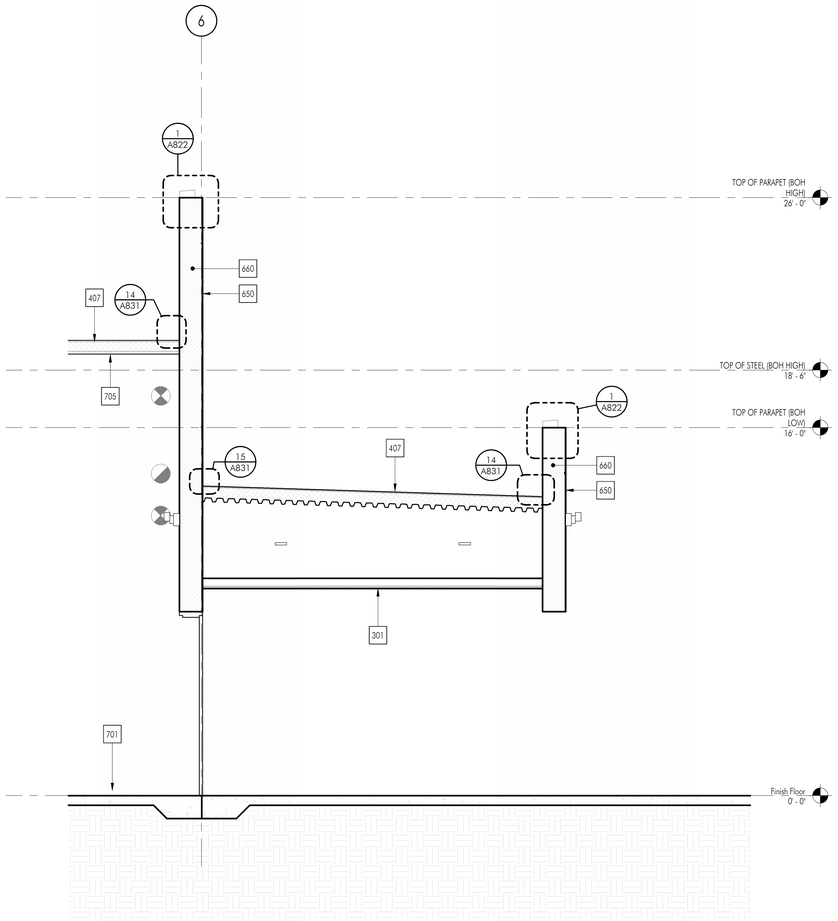

1 WALL SECTION

SCALE: 3/8" = 1'-0"

C:\Users\rudy.monico\Documents\R22_HLPUSD-PAC_Central_rudy.monico.rvt

APPL No. A03-122864

IDENTIFICATION STAMP
DIV. OF THE STATE ARCHITECT
APP: 03-122864 INC:
REVIEWED FOR
SS ☑ FLS ☑ ACS ☑
DATE: 10/03/2023

DSA Stamp

Architect

RACHLIN
PARTNERS
8640 National Boulevard
Culver City, CA 90232
310.204.3400

Disclaimer:

THESE DRAWINGS ARE THE PROPERTY OF THE ARCHITECT. THE DESIGNS SHOWN AND DESCRIBED HEREIN INCLUDING ALL TECHNICAL DRAWINGS ARE PROPRIETARY AND CANNOT BE COPIED, DUPLICATED OR COMMERCIALLY EXPLOITED EITHER IN WHOLE OR IN PART WITHOUT PRIOR WRITTEN CONSENT. SHALL NOT BE USED BY THE OWNER ON OTHER PROJECTS, FOR ADDITIONS TO THIS PROJECT, OR FOR COMPLETION OF THIS PROJECT BY OTHERS. THE OWNER AGREES TO HOLD HARMLESS, INDEMNIFY AND DEFEND THE ARCHITECT AGAINST ALL DAMAGES, CLAIMS AND LOSSES, INCLUDING DEFENSE COSTS, ARISING OUT OF ANY REUSE OF PLANS AND SPECIFICATIONS WITHOUT THE WRITTEN AUTHORIZATION OF THE ARCHITECT OF RECORD.

Copyright © 2022 Rachlin Partners, All Rights Reserved.

Performing Arts Center

Hacienda La Puente Unified School District
635 North California Avenue
La Puente, CA 91744

Rev	Date	Issue
1	7.22.22	50% DD
2	10.21.22	50% CD
3	12.09.22	100% CD DSA SUBMITTAL
4	6.19.23	100% CD DSA RESUBMITTAL
5	9.20.23	DSA BACK CHECK

Date: 9.20.2023
Scale: As indicated
Drawn By: Author
Checked By: Checker

Architect / Engineer Stamp

REGISTERED ARCHITECT
RONALD RACHLIN
NO. C-28229
REN. 8-31-25
STATE OF CALIFORNIA

Consultants
Miyamoto International, Inc.
The Ruzika Company, Inc.
MDC Consulting Engineers
Pocock Design Solutions
Newson Brown Acoustics, LLC
VCA Engineers, Inc.
HJSA Consulting

Sheet Title

Wall Sections

Sheet Number

A426

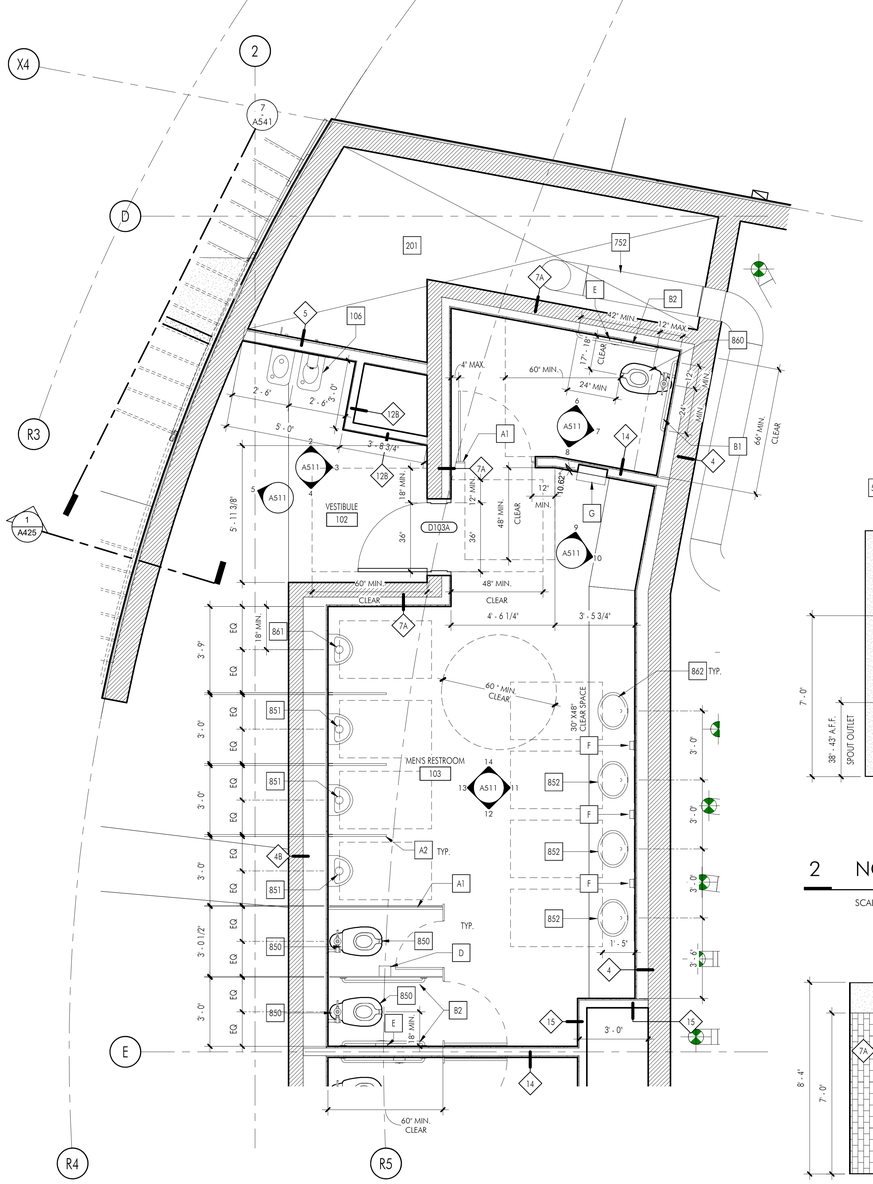

FINISH NOTES LEGEND

MS-1	MATERIAL TAG. REFER TO SHEET A621 FOR MATERIALS LEGEND

CONSTRUCTION KEYNOTES

No.	DESCRIPTION
106	ACCESSIBLE HI-LO DRINKING FOUNTAIN PER DETAIL 3/A631
201	MECHANICAL SHAFT
502	TYPE 'X' GYPSUM WALL BOARD. PAINTED AS SCHEDULED. U.N.O.
504	CERAMIC WALL TILE
516	(1) LAYER OF 5/8" TYPE 'X' GYPSUM WALL BOARD OVER 7/8" FURRING CHANNELS. PAINTED AS SCHEDULED UNLESS NOTED OTHERWISE. SEE DETAIL 3/A711
752	MECHANICAL DUCTWORK, SEE MECHANICAL DRAWINGS
850	WATER CLOSET, SEE PLUMBING DRAWINGS
851	URINAL, SEE PLUMBING DRAWINGS
852	LAVATORY, SEE PLUMBING DRAWINGS
860	WATER CLOSET, ACCESSIBLE, SEE PLUMBING DRAWINGS
861	URINAL, ACCESSIBLE, SEE PLUMBING DRAWINGS
862	LAVATORY, ACCESSIBLE, SEE PLUMBING DRAWINGS AND DETAIL 8/A882

CONSTRUCTION KEYNOTES

No.	DESCRIPTION
A1	TOILET PARTITIONS, FLOOR-MOUNTED OVERHEAD-BRACED, SEE TOILET ACCESSORIES SCHEDULE ON SHEET A631
A2	URINAL SCREENS, WALL HUNG, SEE TOILET ACCESSORIES SCHEDULE AND TYPICAL ACCESSIBLE MOUNTING HEIGHTS ON SHEET A631
B1	GRAB BAR, 36', SEE TOILET ACCESSORIES SCHEDULE AND TYPICAL ACCESSIBLE MOUNTING HEIGHTS ON SHEET A631
B2	GRAB BAR, 42', SEE TOILET ACCESSORIES SCHEDULE AND TYPICAL ACCESSIBLE MOUNTING HEIGHTS ON SHEET A631
C	MIRROR, SEE TOILET ACCESSORIES SCHEDULE AND TYPICAL ACCESSIBLE MOUNTING HEIGHTS ON SHEET A631
D	TOILET PAPER DISPENSER, SURFACE-MOUNTED, SEE TOILET ACCESSORIES SCHEDULE AND TYPICAL ACCESSIBLE MOUNTING HEIGHTS ON SHEET A631
E	TOILET PAPER HOLDER, RECESSED, SEE TOILET ACCESSORIES SCHEDULE AND TYPICAL ACCESSIBLE MOUNTING HEIGHTS ON SHEET A631
F	SOAP DISPENSER, SEE TOILET ACCESSORIES SCHEDULE AND TYPICAL ACCESSIBLE MOUNTING HEIGHTS ON SHEET A631
G	PAPER TOWEL DISPENSER AND WASTE RECEPTACLE, RECESSED, SEE TOILET ACCESSORIES SCHEDULE AND TYPICAL ACCESSIBLE MOUNTING HEIGHTS ON SHEET A631
H	TOILET SEAT COVER DISPENSER, RECESSED, SEE TOILET ACCESSORIES SCHEDULE AND TYPICAL ACCESSIBLE MOUNTING HEIGHTS ON SHEET A631

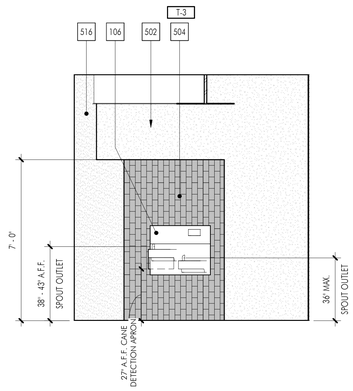

2 NORTH ELEV. - VESTIBULE 102

SCALE: 3/8" = 1'-0"

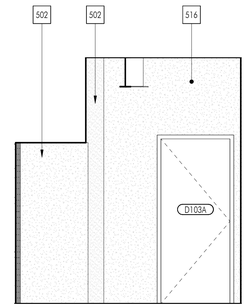

3 EAST ELEV. - VESTIBULE 102

SCALE: 3/8" = 1'-0"

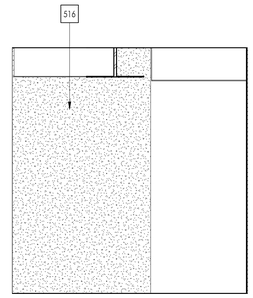

4 SOUTH ELEV. - VESTIBULE 102

SCALE: 3/8" = 1'-0"

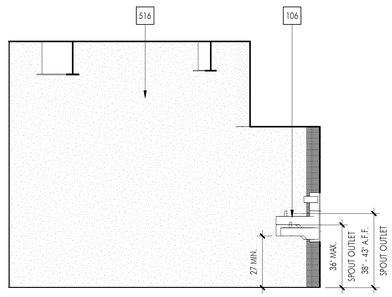

5 WEST ELEV. - VESTIBULE 102

SCALE: 3/8" = 1'-0"

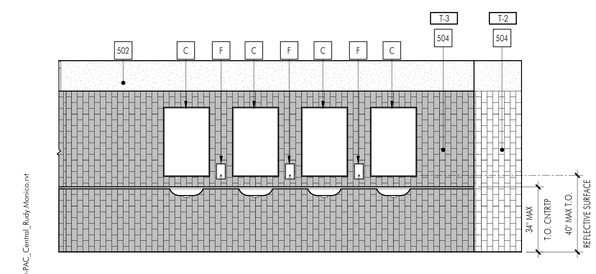

11 EAST ELEVATION - MEN'S RESTROOM

SCALE: 3/8" = 1'-0"

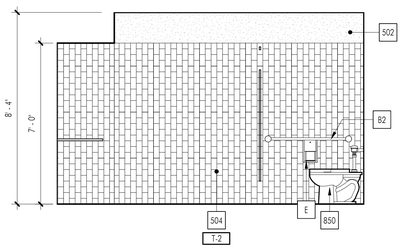

12 SOUTH ELEVATION - MEN'S RESTROOM

SCALE: 3/8" = 1'-0"

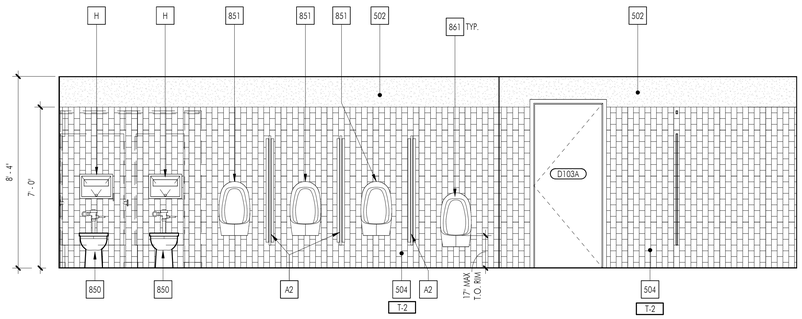

13 WEST ELEVATION - MEN'S RESTROOM

SCALE: 3/8" = 1'-0"

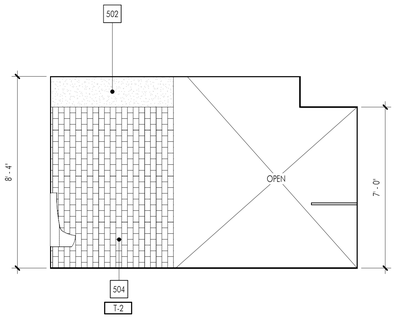

14 NORTH ELEVATION - MEN'S RESTROOM

SCALE: 3/8" = 1'-0"

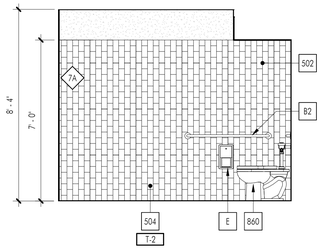

6 NORTH ELEV. - ADA STALL

SCALE: 3/8" = 1'-0"

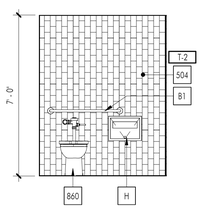

7 EAST ELEV. - ADA STALL

SCALE: 3/8" = 1'-0"

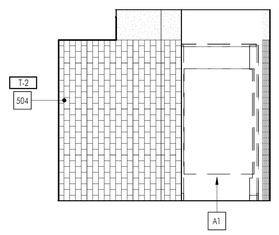

8 SOUTH ELEV. - ADA STALL

SCALE: 3/8" = 1'-0"

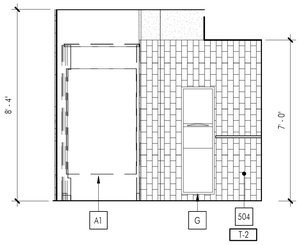

9 NORTHEAST ELEV. - MEN'S

SCALE: 3/8" = 1'-0"

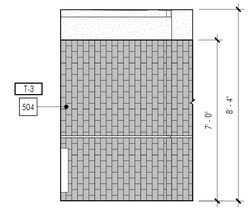

10 SOUTHEAST ELEV. - MEN'S

SCALE: 3/8" = 1'-0"

C:\Users\Rudy.Monico\Documents\M22_HEPUSD-PAC_Central_Rudy.Monico.rvt

APPL No. A03-122864

DSA Stamp

Architect

RACHLIN PARTNERS
8640 National Boulevard
Culver City, CA 90232
310.204.3400

Disclaimer:

THESE DRAWINGS ARE THE PROPERTY OF THE ARCHITECT. THE DESIGNS SHOWN AND DESCRIBED HEREIN INCLUDING ALL TECHNICAL DRAWINGS ARE PROPRIETARY AND CANNOT BE COPIED, DUPLICATED OR COMMERCIALLY EXPLOITED IN ANY WAY. THEY ARE NOT TO BE CHANGED OR USED AND SHALL NOT BE USED BY THE OWNER ON OTHER PROJECTS, FOR ADDITIONS TO THIS PROJECT, OR FOR COMPLETION OF THIS PROJECT BY OTHERS. THE OWNER AGREES TO HOLD HARMLESS, INDEMNIFY AND DEFEND THE ARCHITECT AGAINST ALL DAMAGES, CLAIMS AND LOSSES, INCLUDING DEFENSE COSTS, ARISING OUT OF ANY REUSE OF PLANS AND SPECIFICATIONS WITHOUT THE WRITTEN AUTHORIZATION OF THE ARCHITECT OF RECORD.

Copyright © 2022 Rachlin Partners, All Rights Reserved.

Performing Arts Center

Hacienda La Puente Unified School District
635 North California Avenue
La Puente, CA 91744

Rev	Date	Issue
1	7.22.22	50% DD
2	10.21.22	50% CD
3	12.09.22	100% CD DSA SUBMITTAL
4	6.19.23	100% CD DSA RESUBMITTAL
5	9.20.23	DSA BACK CHECK
6	11.01.23	ADDENDUM NO. 1
7	11.01.23	ADDENDUM NO. 2
8	12.15.23	ADDENDUM NO. 3

Date: 11.01.2023
Scale: As indicated
Drawn By: JP, NZ
Checked By: RM

Architect / Engineer Stamp

LICENSED ARCHITECT
LORANNE RUTH MASSEY
NO. C-26229
REN. 8-31-25
STATE OF CALIFORNIA

Consultants
Miyamoto International, Inc.
The Ruzika Company, Inc.
MDC Consulting Engineers
Pocock Design Solutions
Newson Brown Acoustics, LLC
VCA Engineers, Inc.
HJSA Consulting

Sheet Title

Enlarged Plans - Men's Restroom

Sheet Number

A511

FINISH NOTES LEGEND

MS-1	MATERIAL TAG. REFER TO SHEET A621 FOR MATERIALS LEGEND

CONSTRUCTION KEYNOTES

No.	DESCRIPTION
110	WHEELCHAIR LIFT SEE 1, 2, 4 AND 6/A541
201	MECHANICAL SHAFT
502	TYPE 'X' GYPSUM WALL BOARD. PAINTED AS SCHEDULED. U.N.O.
504	CERAMIC WALL TILE
516	(1) LAYER OF 5/8" TYPE 'X' GYPSUM WALL BOARD OVER 7/8" FURRING CHANNELS. PAINTED AS SCHEDULED UNLESS NOTED OTHERWISE. SEE DETAIL 3/A711
752	MECHANICAL DUCTWORK, SEE MECHANICAL DRAWINGS
850	WATER CLOSET, SEE PLUMBING DRAWINGS
852	LAVATORY, SEE PLUMBING DRAWINGS
860	WATER CLOSET, ACCESSIBLE, SEE PLUMBING DRAWINGS
862	LAVATORY, ACCESSIBLE, SEE PLUMBING DRAWINGS AND DETAIL 8/A882
A1	TOILET PARTITIONS, FLOOR-MOUNTED OVERHEAD-BRACED, SEE TOILET ACCESSORIES SCHEDULE ON SHEET A631

CONSTRUCTION KEYNOTES

No.	DESCRIPTION
B1	GRAB BAR, 36", SEE TOILET ACCESSORIES SCHEDULE AND TYPICAL ACCESSIBLE MOUNTING HEIGHTS ON SHEET A631
B2	GRAB BAR, 42", SEE TOILET ACCESSORIES SCHEDULE AND TYPICAL ACCESSIBLE MOUNTING HEIGHTS ON SHEET A631
C	MIRROR, SEE TOILET ACCESSORIES SCHEDULE AND TYPICAL ACCESSIBLE MOUNTING HEIGHTS ON SHEET A631
D	TOILET PAPER DISPENSER, SURFACE-MOUNTED, SEE TOILET ACCESSORIES SCHEDULE AND TYPICAL ACCESSIBLE MOUNTING HEIGHTS ON SHEET A631
E	TOILET PAPER HOLDER, RECESSED, SEE TOILET ACCESSORIES SCHEDULE AND TYPICAL ACCESSIBLE MOUNTING HEIGHTS ON SHEET A631
F	SOAP DISPENSER, SEE TOILET ACCESSORIES SCHEDULE AND TYPICAL ACCESSIBLE MOUNTING HEIGHTS ON SHEET A631
G	PAPER TOWEL DISPENSER AND WASTE RECEPTACLE, RECESSED, SEE TOILET ACCESSORIES SCHEDULE AND TYPICAL ACCESSIBLE MOUNTING HEIGHTS ON SHEET A631
H	TOILET SEAT COVER DISPENSER, RECESSED, SEE TOILET ACCESSORIES SCHEDULE AND TYPICAL ACCESSIBLE MOUNTING HEIGHTS ON SHEET A631
N	SANITARY NAPKIN DISPOSAL, SURFACE-MOUNTED, SEE TOILET ACCESSORIES SCHEDULE AND TYPICAL ACCESSIBLE MOUNTING HEIGHTS ON SHEET A631
P	SANITARY NAPKIN DISPOSAL, RECESSED-MOUNTED, SEE TOILET ACCESSORIES SCHEDULE ON SHEET A631

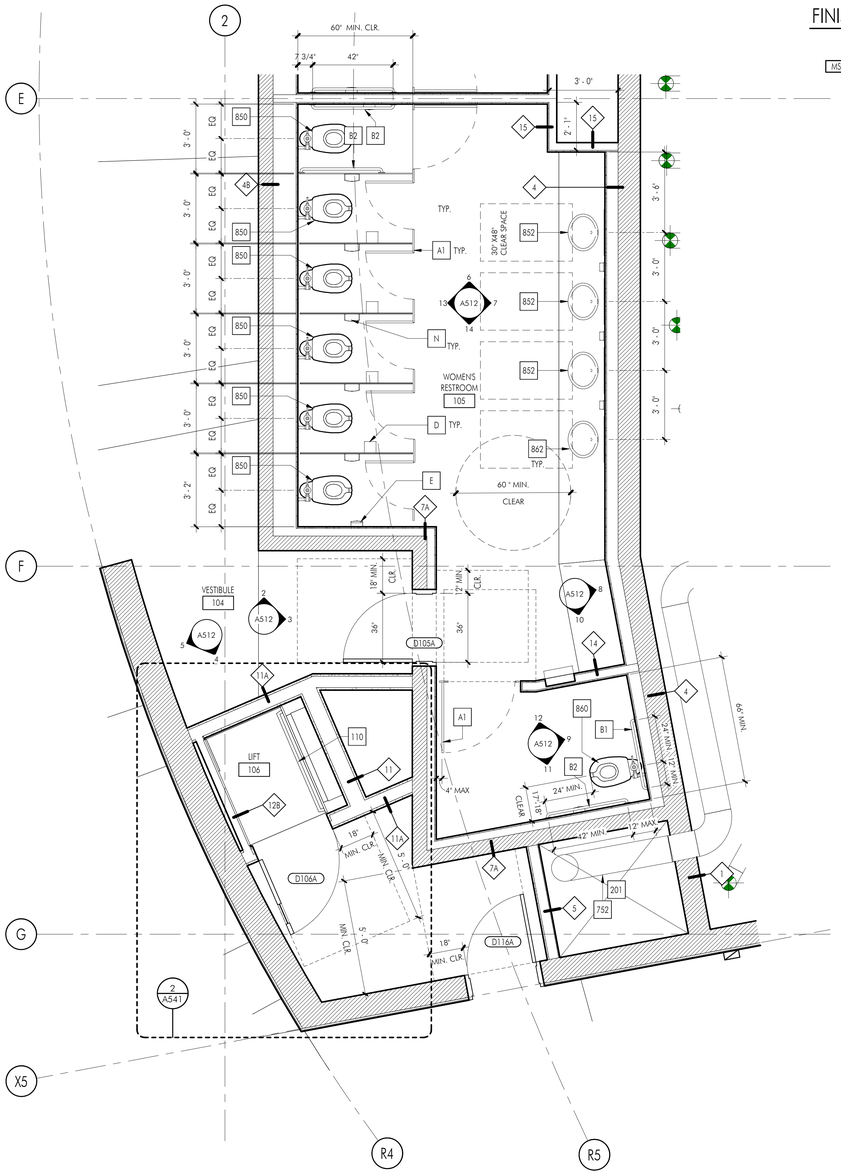

1 ENLARGED PLAN - WOMEN'S RESTROOM

SCALE: 3/8" = 1'-0"

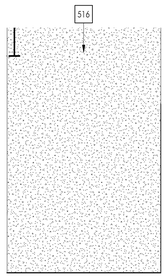

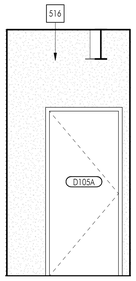

2 NORTH ELEV. - VESTIBULE 104

SCALE: 3/8" = 1'-0"

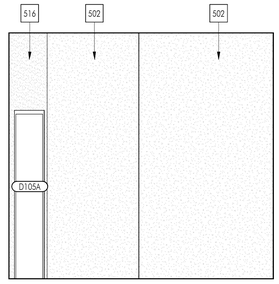

3 EAST ELEV. - VESTIBULE 104

SCALE: 3/8" = 1'-0"

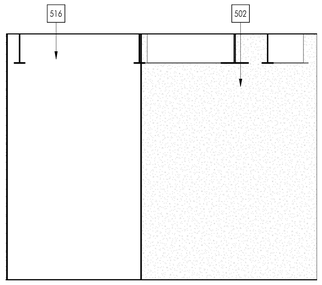

4 SOUTH ELEVATION - VESTIBULE 104

SCALE: 3/8" = 1'-0"

5 WEST ELEV. - VESTIBULE 104

SCALE: 3/8" = 1'-0"

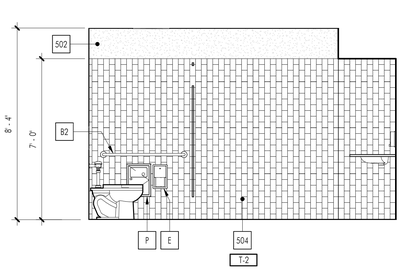

6 NORTH ELEV. - WOMEN'S RESTROOM

SCALE: 3/8" = 1'-0"

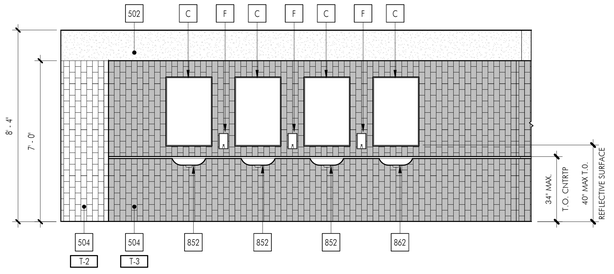

7 EAST ELEVATION - WOMEN'S RESTROOM

SCALE: 3/8" = 1'-0"

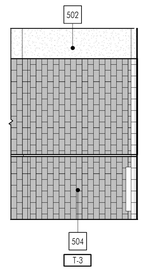

8 NE ELEV. - WOMEN'S

SCALE: 3/8" = 1'-0"

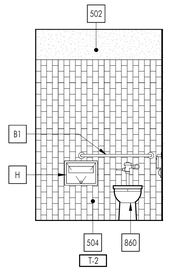

9 NE ELEV. - ADA STALL

SCALE: 3/8" = 1'-0"

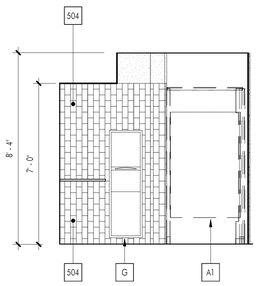

10 SOUTHEAST ELEV. - WOMEN'S

SCALE: 3/8" = 1'-0"

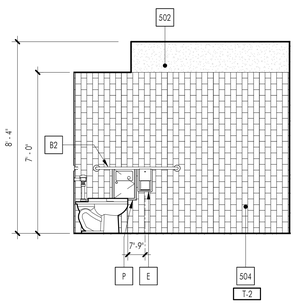

11 SOUTHEAST ELEV. - ADA STALL

SCALE: 3/8" = 1'-0"

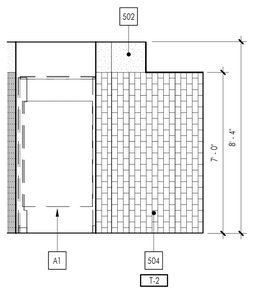

12 NORTHWEST ELEV. - ADA STALL

SCALE: 3/8" = 1'-0"

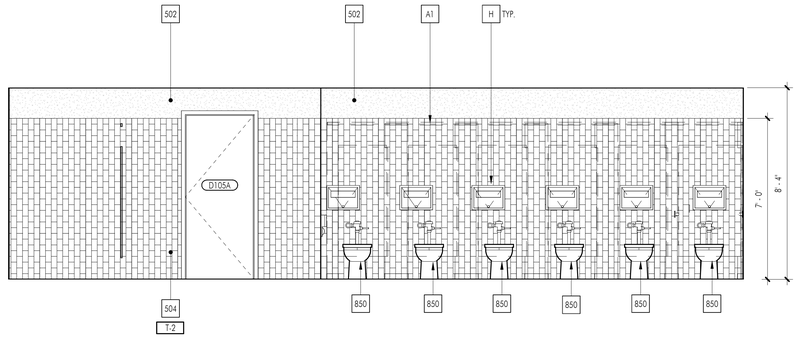

13 WEST ELEVATION - WOMEN'S RESTROOM

SCALE: 3/8" = 1'-0"

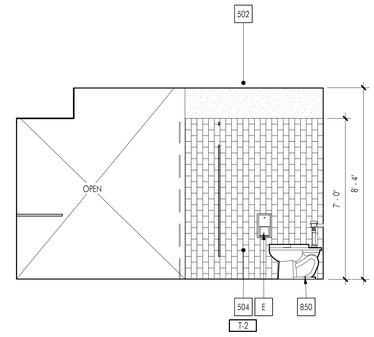

14 SOUTH ELEV. - WOMEN'S RESTROOM

SCALE: 3/8" = 1'-0"

C:\Users\Rudy.Monico\Documents\R22_HEPUSD-PAC_Central_Rudy.Monico.rvt

APPL No. A03-122864

DSA Stamp

Architect

RACHLIN PARTNERS
8640 National Boulevard
Culver City, CA 90232
310.204.3400

Disclaimer:
THESE DRAWINGS ARE THE PROPERTY OF THE ARCHITECT. THE DESIGNS SHOWN AND DESCRIBED HEREIN INCLUDING ALL TECHNICAL DRAWINGS ARE PROPRIETARY AND CANNOT BE COPIED, DUPLICATED OR COMMERCIALLY EXPLOITED IN ANY WAY IN PART OR IN WHOLE WITHOUT PRIOR WRITTEN CONSENT. SHALL NOT BE USED BY THE OWNER ON OTHER PROJECTS, FOR ADDITIONS TO THIS PROJECT, OR FOR COMPLETION OF THIS PROJECT BY OTHERS. THE OWNER AGREES TO HOLD HARMLESS, INDEMNIFY AND DEFEND THE ARCHITECT AGAINST ALL DAMAGES, CLAIMS AND LOSSES, INCLUDING DEFENSE COSTS, ARISING OUT OF ANY REUSE OF PLANS AND SPECIFICATIONS WITHOUT THE WRITTEN AUTHORIZATION OF THE ARCHITECT OF RECORD.

Copyright © 2022 Rachlin Partners, All Rights Reserved.

Performing Arts Center

Hacienda La Puente Unified School District
635 North California Avenue
La Puente, CA 91744

Rev	Date	Issue
1	7.22.22	50% DD
2	10.21.22	50% CD
3	12.09.22	100% CD DSA SUBMITTAL
4	6.19.23	100% CD DSA RESUBMITTAL
5	9.20.23	DSA BACK CHECK
6	11.01.23	ADDENDUM NO. 1
7	11.01.23	ADDENDUM NO. 2
8	12.15.23	ADDENDUM NO. 3

Date: 11.01.2023
Scale: As indicated
Drawn By: JP, NZ
Checked By: RM

Architect / Engineer Stamp

LICENSED ARCHITECT
LICENSED INSPECTOR
NO. C-28229
REN. 8-31-25
STATE OF CALIFORNIA

Consultants
Miyamoto International, Inc.
The Ruzika Company, Inc.
MDC Consulting Engineers
Pocock Design Solutions
Newson Brown Acoustics, LLC
VCA Engineers, Inc.
HJSA Consulting

Sheet Title

Enlarged Plans - Women's Restroom

Sheet Number

A512

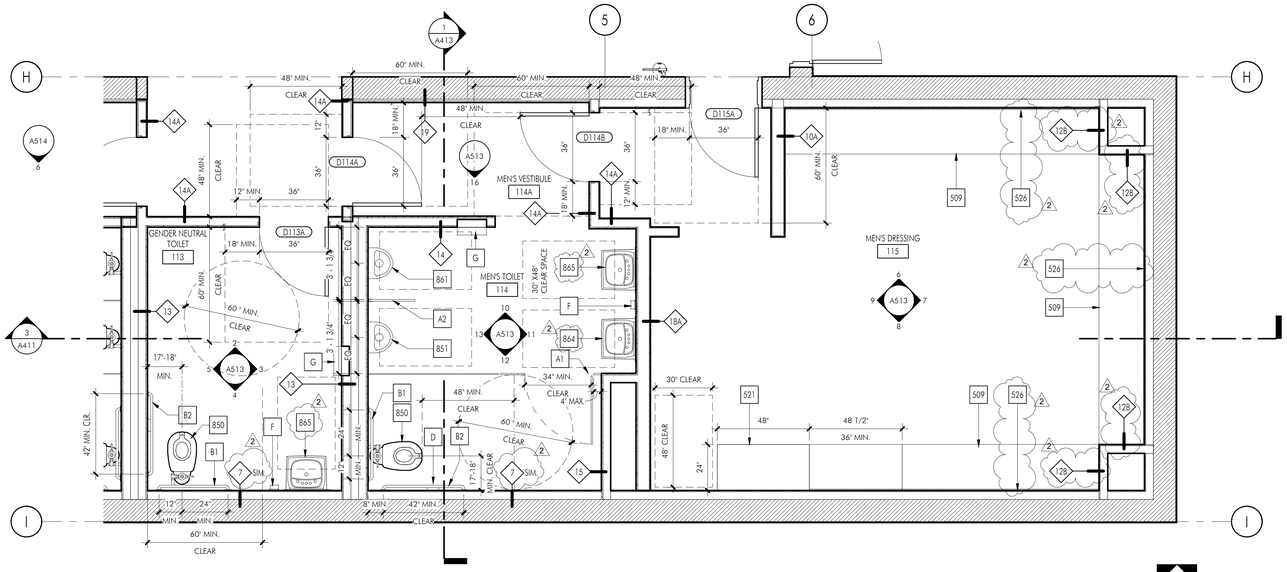

1 ENLARGED PLAN - MEN'S DRESSING ROOMS

SCALE: 3/8" = 1'-0"

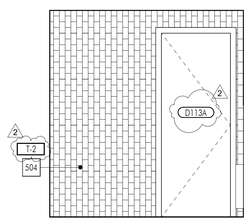

2 NORTH ELEVATION - TOILET

SCALE: 3/8" = 1'-0"

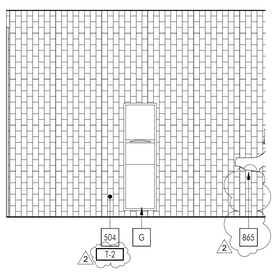

3 EAST ELEVATION - TOILET

SCALE: 3/8" = 1'-0"

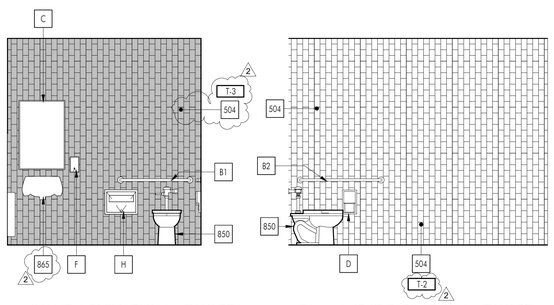

4 SOUTH ELEVATION - TOILET

SCALE: 3/8" = 1'-0"

5 WEST ELEVATION - TOILET

SCALE: 3/8" = 1'-0"

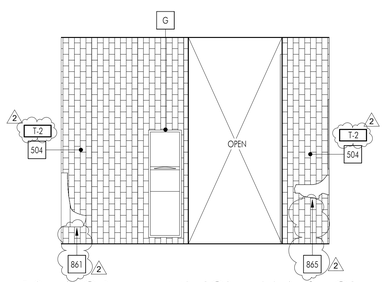

10 NORTH ELEVATION - MEN'S TOILET

SCALE: 3/8" = 1'-0"

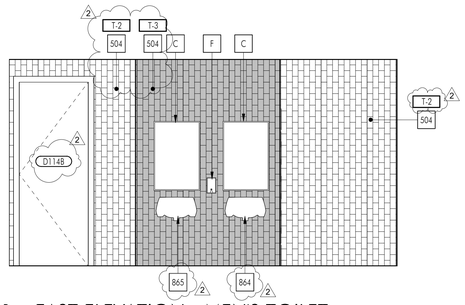

11 EAST ELEVATION - MEN'S TOILET

SCALE: 3/8" = 1'-0"

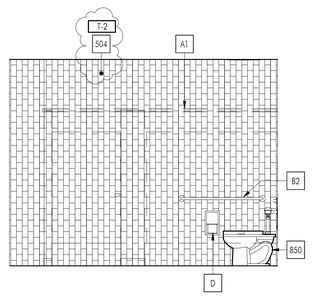

12 SOUTH ELEVATION - MEN'S TOILET

SCALE: 3/8" = 1'-0"

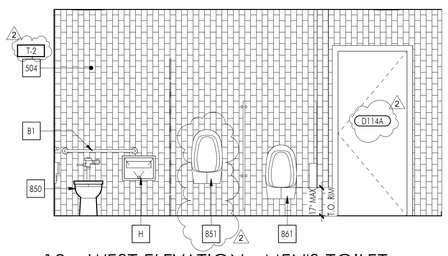

13 WEST ELEVATION - MEN'S TOILET

SCALE: 3/8" = 1'-0"

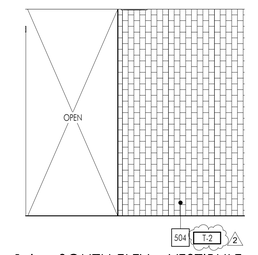

16 SOUTH ELEV. - VESTIBULE

SCALE: 3/8" = 1'-0"

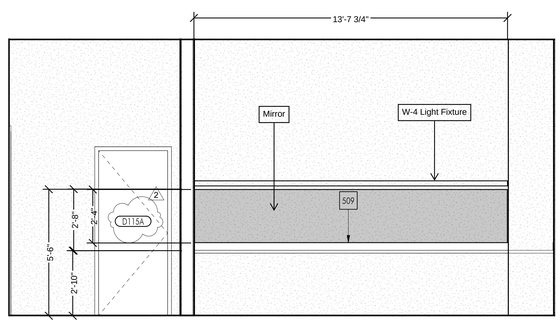

6 NORTH ELEVATION - MEN'S DRESSING

SCALE: 3/8" = 1'-0"

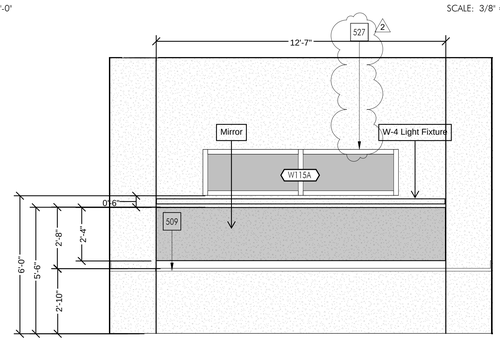

7 EAST ELEVATION - MEN'S DRESSING

SCALE: 3/8" = 1'-0"

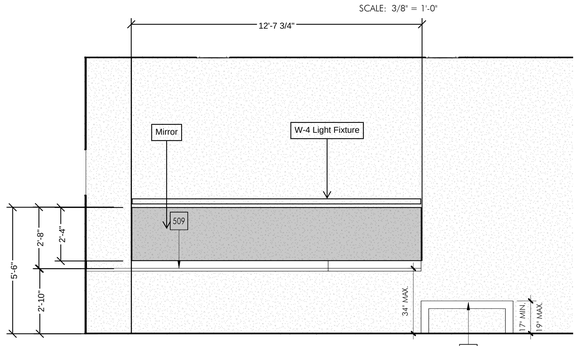

8 SOUTH ELEVATION - MEN'S DRESSING

SCALE: 3/8" = 1'-0"

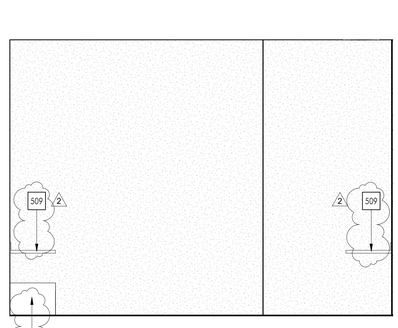

9 WEST ELEVATION - MEN'S DRESSING

SCALE: 3/8" = 1'-0"

CONSTRUCTION KEYNOTES

No.	DESCRIPTION
504	CERAMIC WALL TILE
509	CASEWORK, SEE A882 FOR MORE INFORMATION
521	ACCESSIBLE BENCH TO BE AFFIXED TO WALL, SEE PLAN ENGLARGED DRESSING ROOM PLANS AND ELEVATIONS FOR DIMENSIONS
526	(1) LAYER OF 5/8" TYPE 'X' GYPSUM WALL BOARD OVER 4" METAL STUD FURRING. PAINTED AS SCHEDULED U.N.O. SEE B/SS.1 FOR ATTACHMENT TO CMU.
527	WINDOW AS SCHEDULED. SEE WINDOW SCHEDULE ON A611 FOR MORE INFORMATION
850	WATER CLOSET, SEE PLUMBING DRAWINGS
851	URINAL, SEE PLUMBING DRAWINGS
861	URINAL, ACCESSIBLE, SEE PLUMBING DRAWINGS
864	WALL LAVATORY, SEE PLUMBING DRAWINGS
865	WALL LAVATORY, ACCESSIBLE, SEE PLUMBING DRAWINGS
A1	TOILET PARTITIONS, FLOOR-MOUNTED OVERHEAD-BRACED, SEE TOILET ACCESSORIES SCHEDULE ON SHEET A631
A2	URINAL SCREENS, WALL HUNG, SEE TOILET ACCESSORIES SCHEDULE AND TYPICAL ACCESSIBLE MOUNTING HEIGHTS ON SHEET A631
B1	GRAB BAR, 36', SEE TOILET ACCESSORIES SCHEDULE AND TYPICAL ACCESSIBLE MOUNTING HEIGHTS ON SHEET A631
B2	GRAB BAR, 42', SEE TOILET ACCESSORIES SCHEDULE AND TYPICAL ACCESSIBLE MOUNTING HEIGHTS ON SHEET A631
C	MIRROR, SEE TOILET ACCESSORIES SCHEDULE AND TYPICAL ACCESSIBLE MOUNTING HEIGHTS ON SHEET A631
D	TOILET PAPER DISPENSER, SURFACE-MOUNTED, SEE TOILET ACCESSORIES SCHEDULE AND TYPICAL ACCESSIBLE MOUNTING HEIGHTS ON SHEET A631
F	SOAP DISPENSER, SEE TOILET ACCESSORIES SCHEDULE AND TYPICAL ACCESSIBLE MOUNTING HEIGHTS ON SHEET A631
G	PAPER TOWEL DISPENSER AND WASTE RECEPTACLE, RECESSED, SEE TOILET ACCESSORIES SCHEDULE AND TYPICAL ACCESSIBLE MOUNTING HEIGHTS ON SHEET A631
H	TOILET SEAT COVER DISPENSER, RECESSED, SEE TOILET ACCESSORIES SCHEDULE AND TYPICAL ACCESSIBLE MOUNTING HEIGHTS ON SHEET A631

FINISH NOTES LEGEND

MS-1	MATERIAL TAG. REFER TO SHEET A621 FOR MATERIALS LEGEND

APPL No. A03-122864

DSA Stamp

Architect

RACHLIN PARTNERS
8640 National Boulevard
Culver City, CA 90232
310.204.3400

Disclaimer:

THESE DRAWINGS ARE THE PROPERTY OF THE ARCHITECT. THE DESIGNS SHOWN AND DESCRIBED HEREIN INCLUDING ALL TECHNICAL DRAWINGS ARE PROPRIETARY AND CANNOT BE COPIED, DUPLICATED OR COMMERCIALLY EXPLOITED EXCEPT WITH THE WRITTEN PERMISSION OF THE ARCHITECT AND SHALL NOT BE USED BY THE OWNER ON OTHER PROJECTS, FOR ADDITIONS TO THIS PROJECT, OR FOR COMPLETION OF THIS PROJECT BY OTHERS. THE OWNER AGREES TO HOLD HARMLESS, INDEMNIFY AND DEFEND THE ARCHITECT AGAINST ALL DAMAGES, CLAIMS AND LOSSES, INCLUDING DEFENSE COSTS, ARISING OUT OF ANY REUSE OF PLANS AND SPECIFICATIONS WITHOUT THE WRITTEN AUTHORIZATION OF THE ARCHITECT OF RECORD.

Copyright © 2022 Rachlin Partners, All Rights Reserved.

Performing Arts Center

Hacienda La Puente Unified School District
635 North California Avenue
La Puente, CA 91744

Rev	Date	Issue
1	7.22.22	50% DD
2	10.21.22	50% CD
3	12.09.22	100% CD DSA SUBMITTAL
4	6.19.23	100% CD DSA RESUBMITTAL
5	9.20.23	DSA BACK CHECK
6	11.01.23	ADDENDUM NO. 1
7	11.01.23	ADDENDUM NO. 2

Date: 11.01.2023
Scale: As indicated
Drawn By: JP, NZ
Checked By: RM

Architect / Engineer Stamp

LICENSED ARCHITECT
REGISTERED PROFESSIONAL
NO. C-28225
REN. 8-31-25
STATE OF CALIFORNIA

Consultants
Miyamoto International, Inc.
The Ruzika Company, Inc.
MDC Consulting Engineers
Pocock Design Solutions
Newson Brown Acoustics, LLC
VCA Engineers, Inc.
HJSA Consulting

Sheet Title

Enlarged Plans - Men's Dressing

Sheet Number

A513

C:\Users\rudy.monico\Documents\822_HLPUSD PAC_Central_rudy.monico.rvt

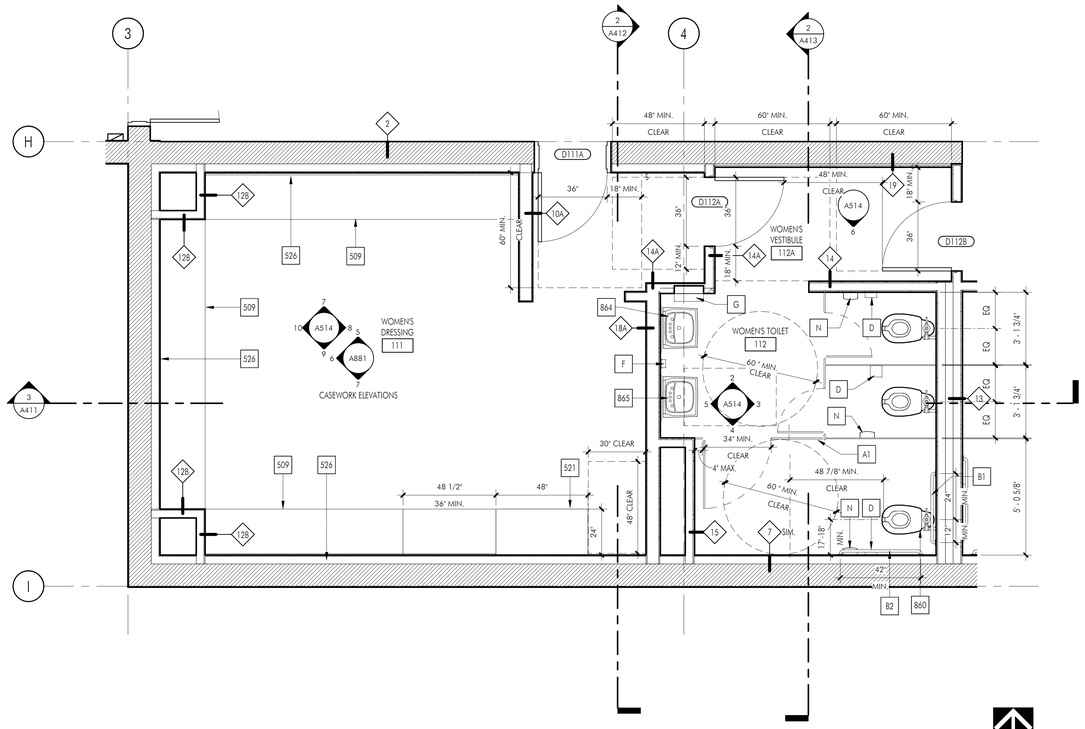

1 ENLARGED PLAN - WOMEN'S DRESSING ROOM

SCALE: 3/8" = 1'-0"

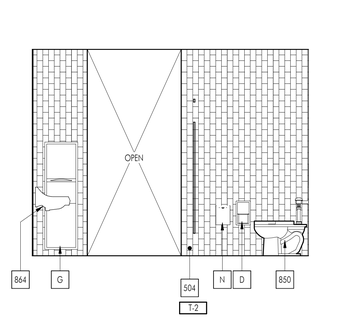

2 NORTH ELEVATION - WOMEN'S TOILET

SCALE: 3/8" = 1'-0"

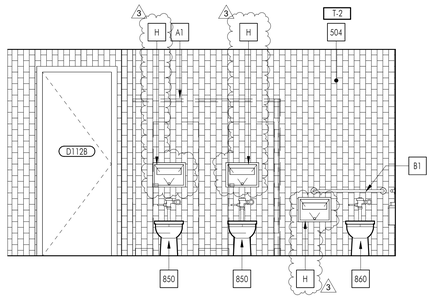

3 EAST ELEVATION - WOMEN'S TOILET

SCALE: 3/8" = 1'-0"

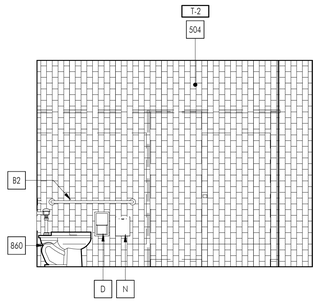

4 SOUTH ELEVATION - WOMEN'S TOILET

SCALE: 3/8" = 1'-0"

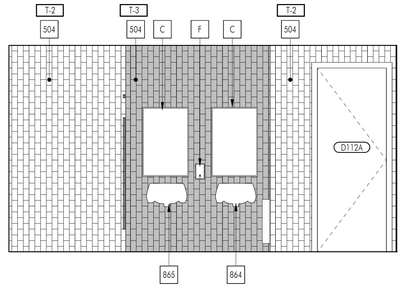

5 WEST ELEVATION - WOMEN'S TOILET

SCALE: 3/8" = 1'-0"

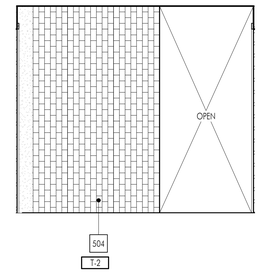

6 SOUTH ELEV. - VESTIBULE

SCALE: 3/8" = 1'-0"

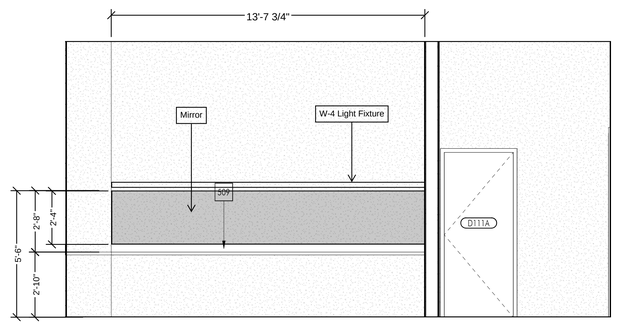

7 NORTH ELEVATION - WOMEN'S DRESSING

SCALE: 3/8" = 1'-0"

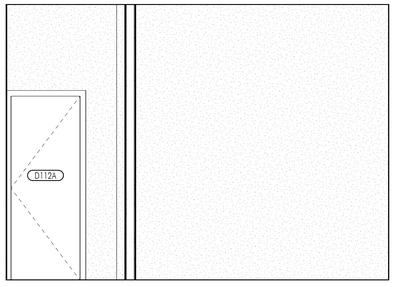

8 EAST ELEVATION - WOMEN'S DRESSING

SCALE: 3/8" = 1'-0"

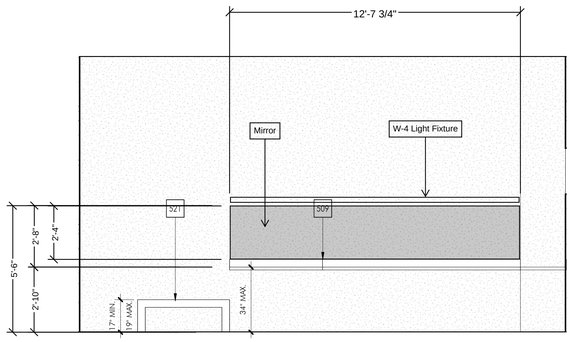

9 SOUTH ELEVATION - WOMEN'S DRESSING

SCALE: 3/8" = 1'-0"

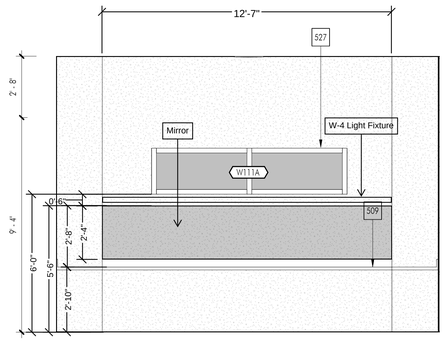

10 WEST ELEVATION - WOMEN'S DRESSING

SCALE: 3/8" = 1'-0"

C:\Users\Rudy.Monico\Documents\R22_HEPUSD-PAC_Central_Rudy.Monico.rvt

CONSTRUCTION KEYNOTES

No.	DESCRIPTION
504	CERAMIC WALL TILE
509	CASEWORK, SEE A882 FOR MORE INFORMATION
521	ACCESSIBLE BENCH TO BE AFFIXED TO WALL, SEE PLAN ENGLARGED DRESSING ROOM PLANS AND ELEVATIONS FOR DIMENSIONS
526	(1) LAYER OF 5/8" TYPE 'X' GYPSUM WALL BOARD OVER 4" METAL STUD FURRING. PAINTED AS SCHEDULED U.N.O. SEE B/S5.1 FOR ATTACHMENT TO CMU.
527	WINDOW AS SCHEDULED. SEE WINDOW SCHEDULE ON A611 FOR MORE INFORMATION
850	WATER CLOSET, SEE PLUMBING DRAWINGS
860	WATER CLOSET, ACCESSIBLE, SEE PLUMBING DRAWINGS
864	WALL LAVATORY, SEE PLUMBING DRAWINGS
865	WALL LAVATORY, ACCESSIBLE, SEE PLUMBING DRAWINGS
A1	TOILET PARTITIONS, FLOOR-MOUNTED OVERHEAD-BRACED, SEE TOILET ACCESSORIES SCHEDULE ON SHEET A631
B1	GRAB BAR, 36", SEE TOILET ACCESSORIES SCHEDULE AND TYPICAL ACCESSIBLE MOUNTING HEIGHTS ON SHEET A631
B2	GRAB BAR, 42", SEE TOILET ACCESSORIES SCHEDULE AND TYPICAL ACCESSIBLE MOUNTING HEIGHTS ON SHEET A631
C	MIRROR, SEE TOILET ACCESSORIES SCHEDULE AND TYPICAL ACCESSIBLE MOUNTING HEIGHTS ON SHEET A631
D	TOILET PAPER DISPENSER, SURFACE-MOUNTED, SEE TOILET ACCESSORIES SCHEDULE AND TYPICAL ACCESSIBLE MOUNTING HEIGHTS ON SHEET A631
F	SOAP DISPENSER, SEE TOILET ACCESSORIES SCHEDULE AND TYPICAL ACCESSIBLE MOUNTING HEIGHTS ON SHEET A631
G	PAPER TOWEL DISPENSER AND WASTE RECEPTACLE, RECESSED, SEE TOILET ACCESSORIES SCHEDULE AND TYPICAL ACCESSIBLE MOUNTING HEIGHTS ON SHEET A631
H	TOILET SEAT COVER DISPENSER, RECESSED, SEE TOILET ACCESSORIES SCHEDULE AND TYPICAL ACCESSIBLE MOUNTING HEIGHTS ON SHEET A631
N	SANITARY NAPKIN DISPOSAL, SURFACE-MOUNTED, SEE TOILET ACCESSORIES SCHEDULE AND TYPICAL ACCESSIBLE MOUNTING HEIGHTS ON SHEET A631

FINISH NOTES LEGEND

MS-1	MATERIAL TAG. REFER TO SHEET A621 FOR MATERIALS LEGEND

APPL No. A03-122864

DSA Stamp

Architect

RACHLIN PARTNERS
8640 National Boulevard
Culver City, CA 90232
310.204.3400

Disclaimer:

THESE DRAWINGS ARE THE PROPERTY OF THE ARCHITECT. THE DESIGNS SHOWN AND DESCRIBED HEREIN INCLUDING ALL TECHNICAL DRAWINGS ARE PROPRIETARY AND CANNOT BE COPIED, DUPLICATED OR COMMERCIALLY EXPLOITED EXCEPT WITH THE WRITTEN PERMISSION OF THE ARCHITECT AND SHALL NOT BE USED BY THE OWNER ON OTHER PROJECTS, FOR ADDITIONS TO THIS PROJECT, OR FOR COMPLETION OF THIS PROJECT BY OTHERS. THE OWNER AGREES TO HOLD HARMLESS, INDEMNIFY AND DEFEND THE ARCHITECT AGAINST ALL DAMAGES, CLAIMS AND LOSSES, INCLUDING DEFENSE COSTS, ARISING OUT OF ANY REUSE OF PLANS AND SPECIFICATIONS WITHOUT THE WRITTEN AUTHORIZATION OF THE ARCHITECT OF RECORD.

Copyright © 2022 Rachlin Partners, All Rights Reserved.

Performing Arts Center

Hacienda La Puente Unified School District
635 North California Avenue
La Puente, CA 91744

Rev	Date	Issue
1	7.22.22	50% DD
2	10.21.22	50% CD
3	12.09.22	100% CD DSA SUBMITTAL
4	6.19.23	100% CD DSA RESUBMITTAL
5	9.20.23	DSA BACK CHECK
6	11.01.23	ADDENDUM NO. 1
7	11.01.23	ADDENDUM NO. 2
8	12.15.23	ADDENDUM NO. 3

Date: 11.01.2023
Scale: As indicated
Drawn By: JP, NZ
Checked By: RM

Architect / Engineer Stamp

Consultants
Miyamoto International, Inc.
The Ruzika Company, Inc.
MDC Consulting Engineers
Pocock Design Solutions
Newson Brown Acoustics, LLC
VCA Engineers, Inc.
HJSA Consulting

Sheet Title

Enlarged Plans - Women's Dressing

Sheet Number

A514

FLOOR PLAN LEGEND

SYMBOL	DESCRIPTION
1	WALL TAG. FOR WALL TYPE INFORMATION, SEE A711
	FURRED MASONRY WALL ASSEMBLY. REFER TO WALL TYPE AND TYPICAL DETAILS ON A711 FOR MORE INFORMATION
	MASONRY WALL. REFER TO WALL TYPE AND TYPICAL DETAILS ON A711 FOR MORE INFORMATION
	METAL STUD WALL. REFER TO WALL TYPE AND TYPICAL DETAILS ON A711 FOR MORE INFORMATION
D101A	DOOR AS SCHEDULED. REFER TO DOOR TYPE AND SCHEDULE ON A611 FOR MORE INFORMATION
W001	WINDOW AS SCHEDULED. REFER TO WINDOW TYPES ON A611 FOR MORE INFORMATION

CONSTRUCTION KEYNOTES

No.	DESCRIPTION
906	LOADING/FLY GALLERY ACCESS LADDER. SEE 1/A424 AND 4/A832 FOR MORE INFORMATION
910	RIGGING PIT ACCESS LADDER. SEE 1/424 AND 4/A832 FOR MORE INFORMATION
912	ACCESS LADDER SAFETY GATE, SEE 18, 19/A901
913	ACCESS LADDER SAFETY GUARDRAIL, SIMILAR TO CATWALK RAILING DETAIL SEE 7/A901
914	FLY GALLERY ON-STAGE PIN RAIL SEE 4, 8/A901
915	FLY GALLERY OFF-STAGE RAIL, SEE 4, 7/A901
916	LOADING GALLERY ON-STAGE RAIL SEE 2, 5/A901
917	LOADING GALLERY OFF-STAGE RAIL SEE 2, 6/A901
920	STAGE RIGGING, SEE THEATER DRAWINGS. DEFERRED APPROVAL

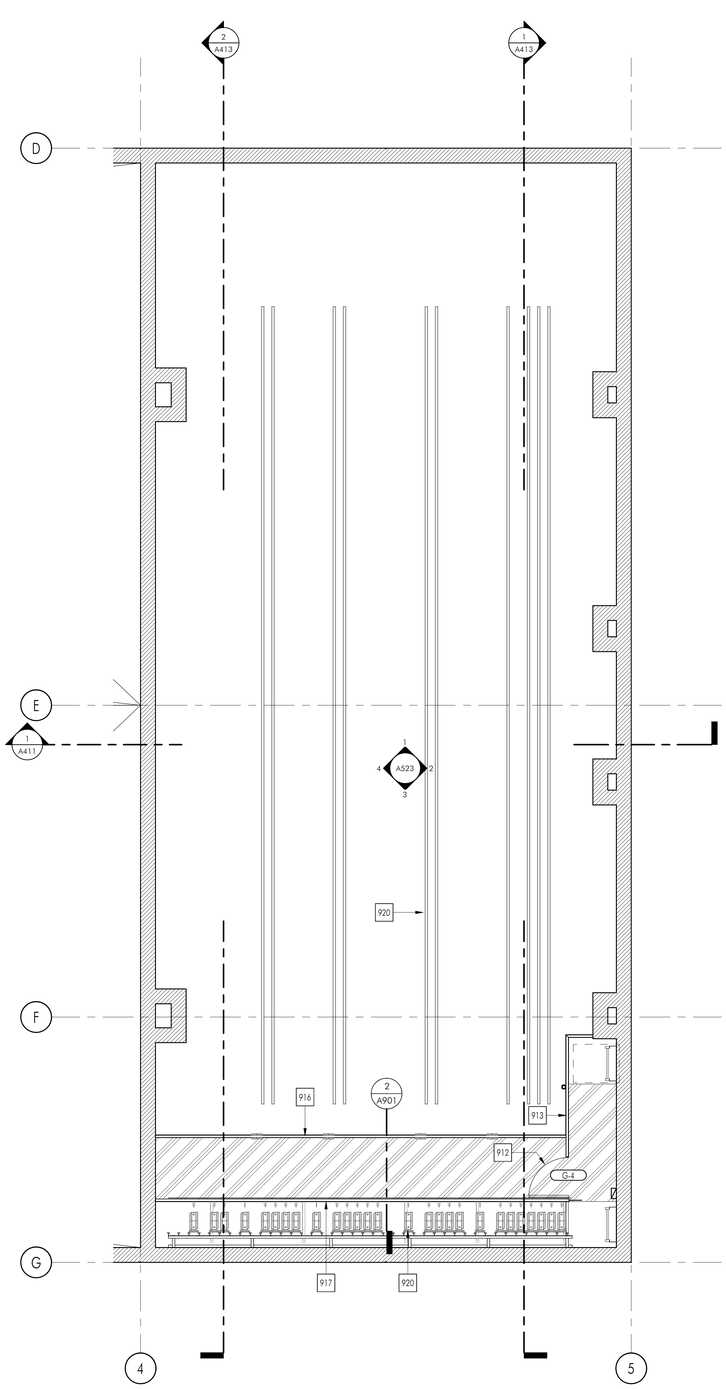

3 STAGE - LOADING GALLERY LEVEL ENLARGED PLAN (+36'-6")

SCALE: 1/4" = 1'-0"

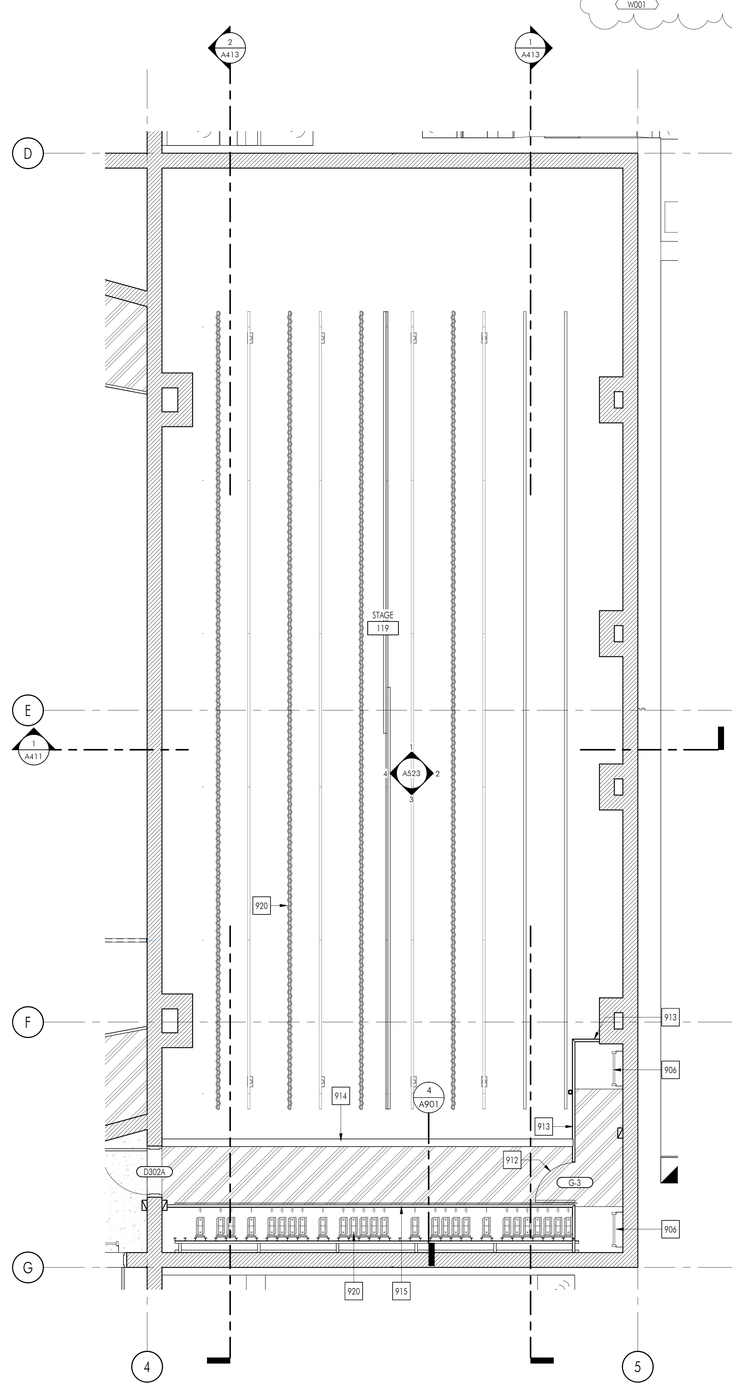

2 STAGE - FOLLOW SPOT LEVEL ENLARGED PLAN (+24-0")

SCALE: 1/4" = 1'-0"

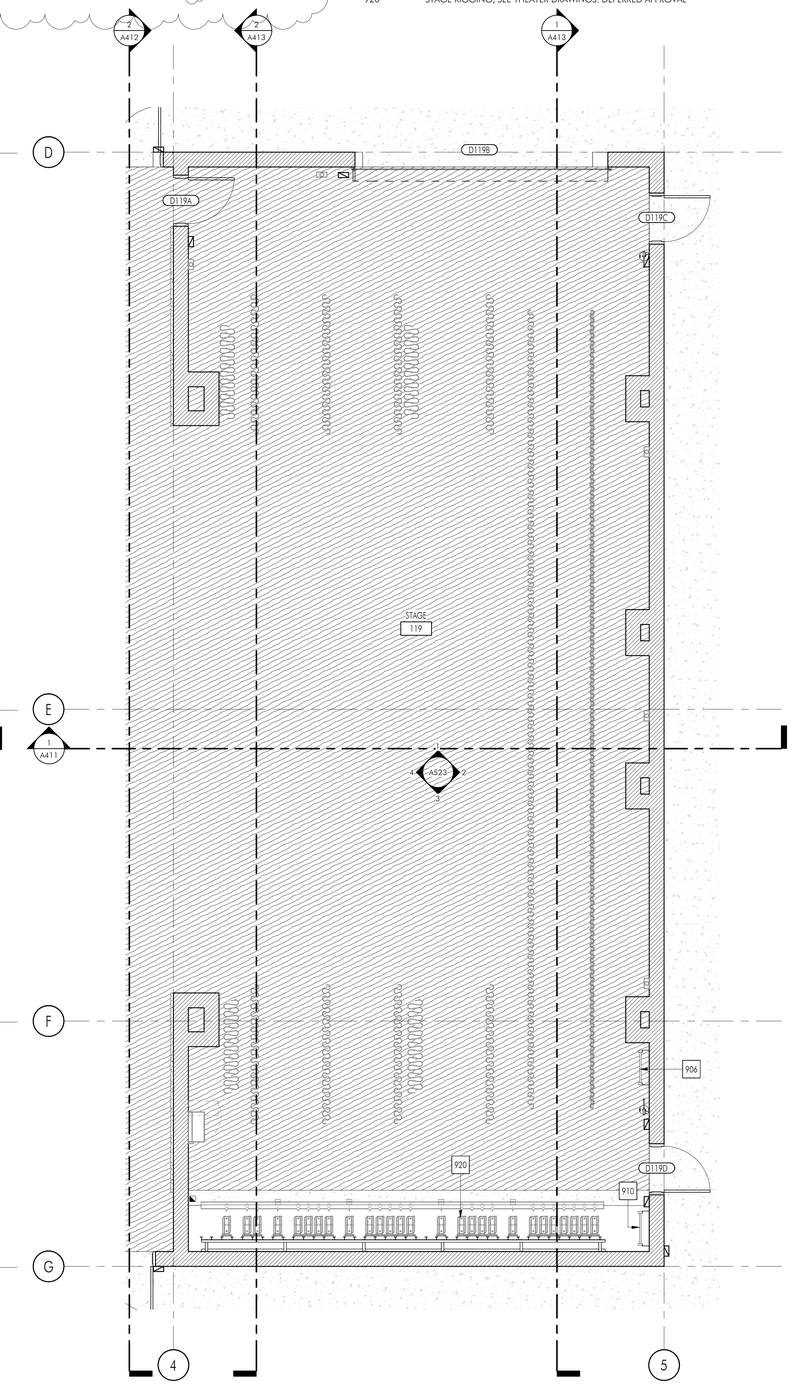

1 STAGE - ORCHESTRA/PARTERRE LEVEL ENLARGED PLAN (+0'-0")

SCALE: 1/4" = 1'-0"

APPL No. A03-122864

DSA Stamp

Architect

RACHLIN PARTNERS
8640 National Boulevard
Culver City, CA 90232
310.204.3400

Disclaimer:

THESE DRAWINGS ARE THE PROPERTY OF THE ARCHITECT. THE DESIGNS SHOWN AND DESCRIBED HEREIN INCLUDING ALL TECHNICAL DRAWINGS ARE PROPRIETARY AND CANNOT BE COPIED, DUPLICATED OR COMMERCIALLY EXPLOITED EXCEPT WITH THE WRITTEN PERMISSION OF THE ARCHITECT AND SHALL NOT BE USED BY THE OWNER ON OTHER PROJECTS, FOR ADDITIONS TO THIS PROJECT, OR FOR COMPLETION OF THIS PROJECT BY OTHERS. THE OWNER AGREES TO HOLD HARMLESS, INDEMNIFY AND DEFEND THE ARCHITECT AGAINST ALL DAMAGES, CLAIMS AND LOSSES, INCLUDING DEFENSE COSTS, ARISING OUT OF ANY REUSE OF PLANS AND SPECIFICATIONS WITHOUT THE WRITTEN AUTHORIZATION OF THE ARCHITECT OF RECORD.

Copyright © 2022 Rachlin Partners, All Rights Reserved.

Performing Arts Center

Hacienda La Puente Unified School District
635 North California Avenue
La Puente, CA 91744

Rev	Date	Issue
1	7.22.22	50% DD
2	10.21.22	50% CD
3	12.09.22	100% CD DSA SUBMITTAL
4	6.19.23	100% CD DSA RESUBMITTAL
5	9.20.23	DSA BACK CHECK
6	11.01.23	ADDENDUM NO. 1
7	11.01.23	ADDENDUM NO. 2

Date: 11.01.2023
Scale: As indicated
Drawn By: JP, NZ
Checked By: RM

Architect / Engineer Stamp

LICENSED ARCHITECT RICHARD RACHLIN NO. C-26229 REN. 8-31-25 STATE OF CALIFORNIA

Consultants
Miyamoto International, Inc.
The Ruzika Company, Inc.
MDC Consulting Engineers
Pocock Design Solutions
Newson Brown Acoustics, LLC
VCA Engineers, Inc.
HJSA Consulting

Sheet Title

Enlarged Plan - Stage

Sheet Number

A515

C:\Users\vidy.monico\Documents\R22_HLPM3D-PAC_Central_vidy.monico.rvt

FLOOR PLAN LEGEND

SYMBOL	DESCRIPTION
1	WALL TAG. FOR WALL TYPE INFORMATION, SEE A711
	FURRED MASONRY WALL ASSEMBLY. REFER TO WALL TYPE AND TYPICAL DETAILS ON A711 FOR MORE INFORMATION
	MASONRY WALL. REFER TO WALL TYPE AND TYPICAL DETAILS ON A711 FOR MORE INFORMATION
	METAL STUD WALL. REFER TO WALL TYPE AND TYPICAL DETAILS ON A711 FOR MORE INFORMATION
D101A	DOOR AS SCHEDULED. REFER TO DOOR TYPE AND SCHEDULE ON A611 FOR MORE INFORMATION
W001	WINDOW AS SCHEDULED. REFER TO WINDOW TYPES ON A611 FOR MORE INFORMATION

CONSTRUCTION KEYNOTES

No.	DESCRIPTION
660	CONCRETE MASONRY WALL (CMU) PER STRUCTURAL
701	CONCRETE SLAB ON GRADE, SEE STRUCTURAL DRAWINGS
702	DEPRESSED SLAB, SEE STRUCTURAL DRAWINGS
709	CONCRETE FILLED METAL DECK, SEE STRUCTURAL DRAWINGS
903	WOOD STAGE FLOOR SEE DETAILS 1-7/A866 FOR MORE INFORMATION
904	SIDE LIGHTING POSITION
905	BOX BOOM ACCESS LADDER SEE 4B/A832 FOR ANCHORAGE TO WALL
912	ACCESS LADDER SAFETY GATE, SEE 1B, 19/A901
913	ACCESS LADDER SAFETY GUARDRAIL, SIMILAR TO CATWALK RAILING DETAIL SEE 7/A901
925	BOX BOOM LIGHTING PIPES, SEE 4,5/A864 AND THEATER DRAWINGS FOR MORE INFORMATION
951	GYPSUM BOARD SOUND REFLECTORS. SEE ENLAREFED PLANS ON A518, A519 AND DETAILS ON A863 FOR ADDITIONAL INFORMATION

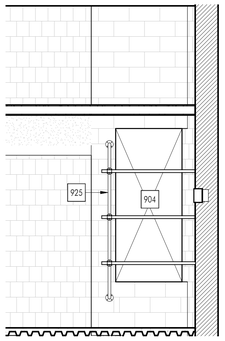

2 ELEVATION - BOX BOOM 210

SCALE: 3/8" = 1'-0"

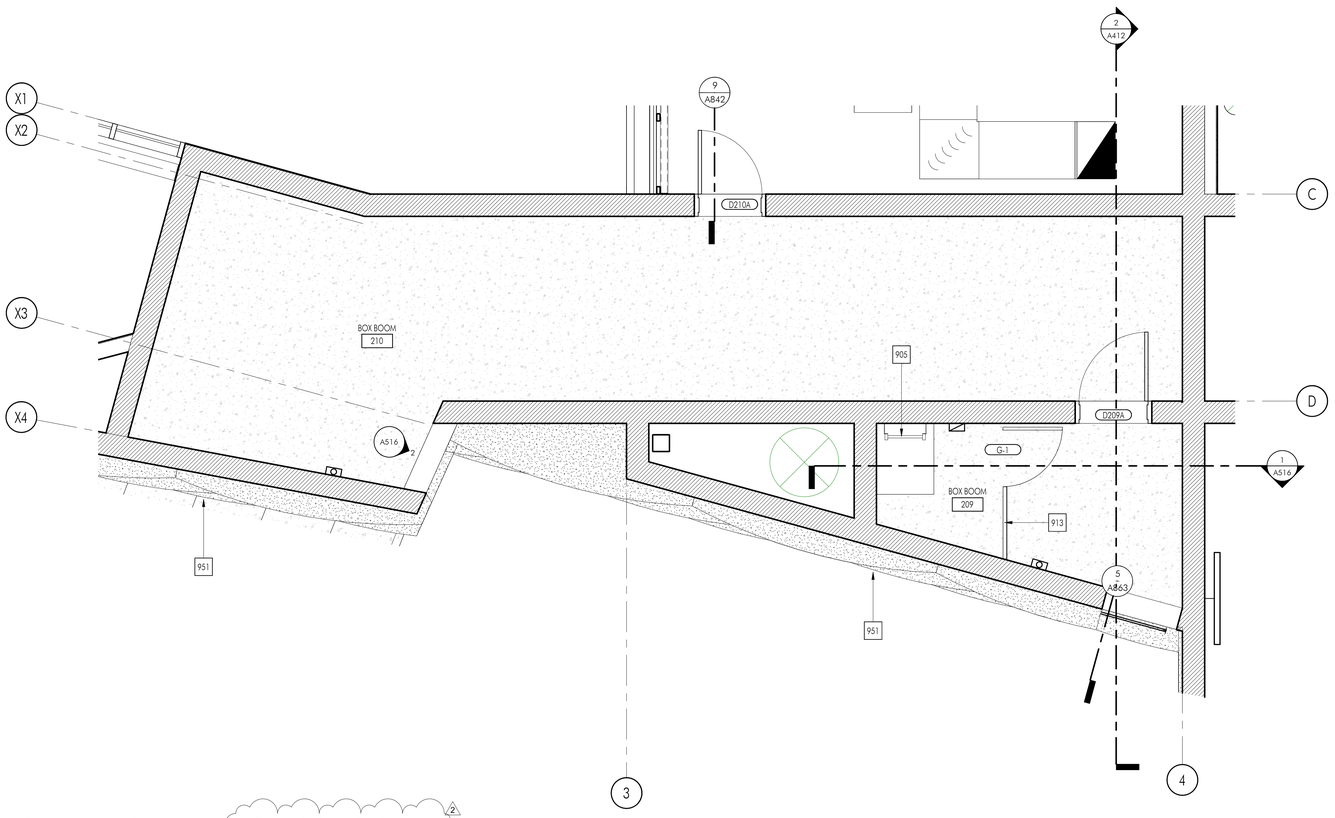

3 ENLARGED PLAN - BOX BOOM 209, 210

SCALE: 3/8" = 1'-0"

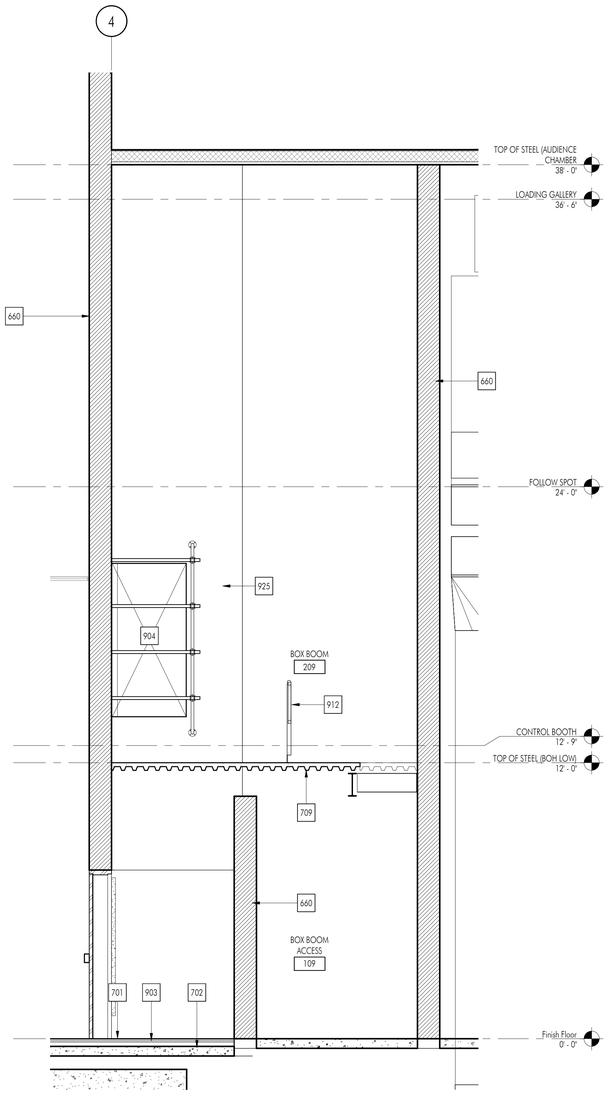

1 SECTION - BOX BOOM 109, 209

SCALE: 3/8" = 1'-0"

APPL No. A03-122864

DSA Stamp

Architect

RACHLIN PARTNERS
8640 National Boulevard
Culver City, CA 90232
310.204.3400

Disclaimer:

THESE DRAWINGS ARE THE PROPERTY OF THE ARCHITECT. THE DESIGNS SHOWN AND DESCRIBED HEREIN INCLUDING ALL TECHNICAL DRAWINGS ARE PROPRIETARY AND CANNOT BE COPIED, DUPLICATED OR COMMERCIALLY EXPLOITED EXCEPT BY WRITTEN AGREEMENT. THESE DRAWINGS AND DESIGNS SHALL NOT BE USED BY THE OWNER ON OTHER PROJECTS, FOR ADDITIONS TO THIS PROJECT, OR FOR COMPLETION OF THIS PROJECT BY OTHERS. THE OWNER AGREES TO HOLD HARMLESS, INDEMNIFY AND DEFEND THE ARCHITECT AGAINST ALL DAMAGES, CLAIMS AND LOSSES, INCLUDING DEFENSE COSTS, ARISING OUT OF ANY REUSE OF PLANS AND SPECIFICATIONS WITHOUT THE WRITTEN AUTHORIZATION OF THE ARCHITECT OF RECORD.

Copyright © 2022 Rachlin Partners, All Rights Reserved.

Performing Arts Center

Hacienda La Puente Unified School District
635 North California Avenue
La Puente, CA 91744

Rev	Date	Issue
1	7.22.22	50% DD
2	10.21.22	50% CD
3	12.09.22	100% CD DSA SUBMITTAL
4	6.19.23	100% CD DSA RESUBMITTAL
5	9.20.23	DSA BACK CHECK
6	11.01.23	ADDENDUM NO. 1
7	11.01.23	ADDENDUM NO. 2

Date: 11.01.2023
Scale: As indicated
Drawn By: JP, NZ
Checked By: RM

Architect / Engineer Stamp

LICENSED ARCHITECT
LICENSED PROFESSIONAL
NO. C-26229
REN. 8-31-25
STATE OF CALIFORNIA

Consultants
Miyamoto International, Inc.
The Ruzika Company, Inc.
MDC Consulting Engineers
Pocock Design Solutions
Newson Brown Acoustics, LLC
VCA Engineers, Inc.
HJSA Consulting

Sheet Title

Enlarged Plans - Box Boom

Sheet Number

A516

C:\Users\vdy.monico\Documents\M22_HEPUSD-PAC_Central_vdy.monico.rvt

FLOOR PLAN LEGEND

SYMBOL	DESCRIPTION
1	WALL TAG. FOR WALL TYPE INFORMATION, SEE A711
	FURRED MASONRY WALL ASSEMBLY. REFER TO WALL TYPE AND TYPICAL DETAILS ON A711 FOR MORE INFORMATION
	MASONRY WALL. REFER TO WALL TYPE AND TYPICAL DETAILS ON A711 FOR MORE INFORMATION
	METAL STUD WALL. REFER TO WALL TYPE AND TYPICAL DETAILS ON A711 FOR MORE INFORMATION
D101A	DOOR AS SCHEDULED. REFER TO DOOR TYPE AND SCHEDULE ON A611 FOR MORE INFORMATION
W001	WINDOW AS SCHEDULED. REFER TO WINDOW TYPES ON A611 FOR MORE INFORMATION

CONSTRUCTION KEYNOTES

No.	DESCRIPTION
660	CONCRETE MASONRY WALL (CMU) PER STRUCTURAL
701	CONCRETE SLAB ON GRADE, SEE STRUCTURAL DRAWINGS
702	DEPRESSED SLAB, SEE STRUCTURAL DRAWINGS
709	CONCRETE FILLED METAL DECK, SEE STRUCTURAL DRAWINGS
903	WOOD STAGE FLOOR SEE DETAILS 1-7/A866 FOR MORE INFORMATION
904	SIDE LIGHTING POSITION
905	BOX BOOM ACCESS LADDER SEE 4B/A832 FOR ANCHORAGE TO WALL
912	ACCESS LADDER SAFETY GATE, SEE 18, 19/A901
913	ACCESS LADDER SAFETY GUARDRAIL, SIMILAR TO CATWALK RAILING DETAIL SEE 7/A901
925	BOX BOOM LIGHTING PIPES, SEE 4,5/A864 AND THEATER DRAWINGS FOR MORE INFORMATION
951	GYPSUM BOARD SOUND REFLECTORS. SEE ENLAREFED PLANS ON A518, A519 AND DETAILS ON A863 FOR ADDITIONAL INFORMATION

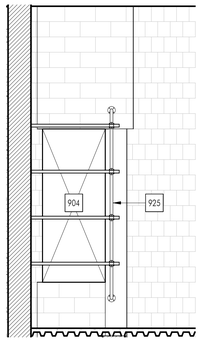

3 ELEVATION - BOX BOOM 208

SCALE: 3/8" = 1'-0"

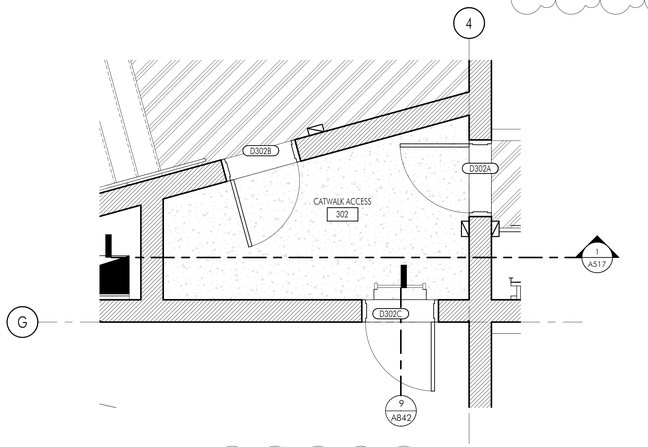

2 ENLARGED PLAN - CATWALK ACCESS 302

SCALE: 3/8" = 1'-0"

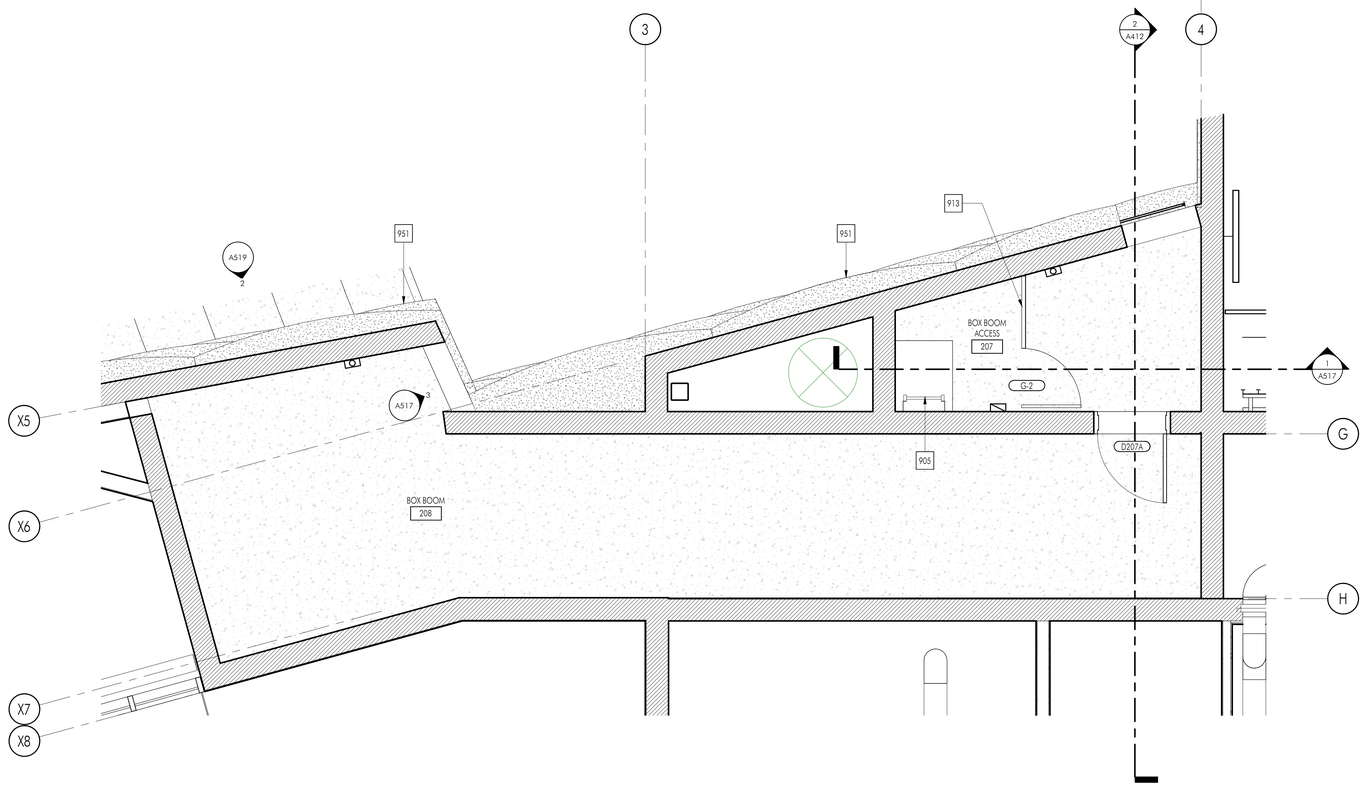

4 ENLARGED PLAN - BOX BOOM 208

SCALE: 3/8" = 1'-0"

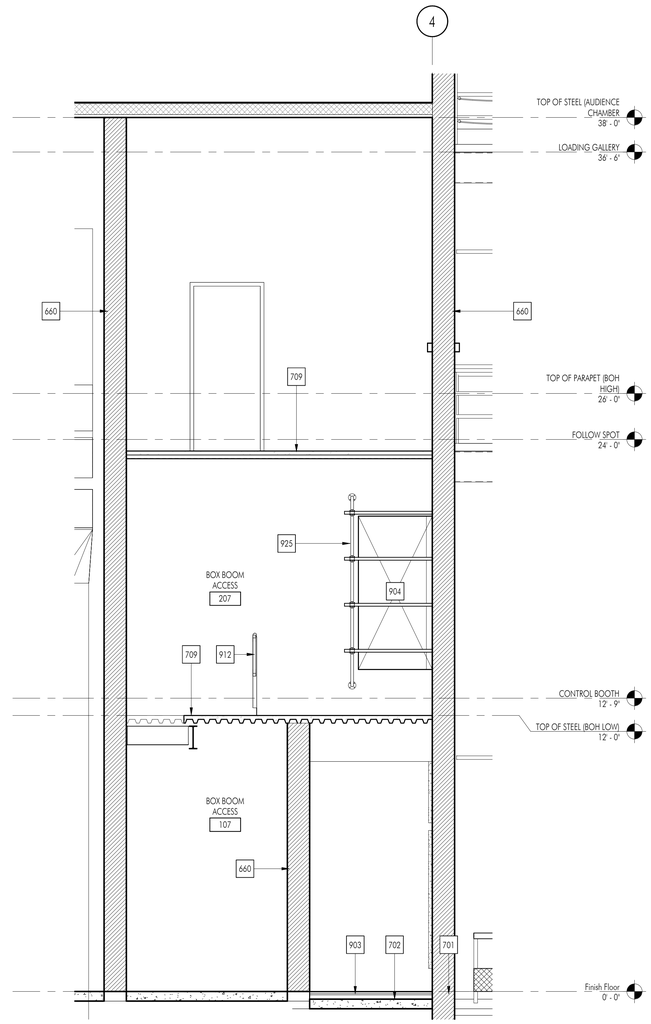

1 SECTION -BOX BOOM ACCESS 107, 207

SCALE: 3/8" = 1'-0"

APPL No. A03-122864

DSA Stamp

Architect

RACHLIN PARTNERS
8640 National Boulevard
Culver City, CA 90232
310.204.3400

Disclaimer:

THESE DRAWINGS ARE THE PROPERTY OF THE ARCHITECT. THE DESIGNS SHOWN AND DESCRIBED HEREIN INCLUDING ALL TECHNICAL DRAWINGS ARE PROPRIETARY AND CANNOT BE COPIED, DUPLICATED OR COMMERCIALLY EXPLOITED EXCEPT BY WRITTEN AGREEMENT. THESE DRAWINGS AND DESIGNS SHALL NOT BE USED BY THE OWNER ON OTHER PROJECTS, FOR ADDITIONS TO THIS PROJECT, OR FOR COMPLETION OF THIS PROJECT BY OTHERS. THE OWNER AGREES TO HOLD HARMLESS, INDEMNIFY AND DEFEND THE ARCHITECT AGAINST ALL DAMAGES, CLAIMS AND LOSSES, INCLUDING DEFENSE COSTS, ARISING OUT OF ANY REUSE OF PLANS AND SPECIFICATIONS WITHOUT THE WRITTEN AUTHORIZATION OF THE ARCHITECT OF RECORD.

Copyright © 2022 Rachlin Partners, All Rights Reserved.

Performing Arts Center

Hacienda La Puente Unified School District
635 North California Avenue
La Puente, CA 91744

Rev	Date	Issue
1	7.22.22	50% DD
2	10.21.22	50% CD
3	12.09.22	100% CD DSA SUBMITTAL
4	6.19.23	100% CD DSA RESUBMITTAL
5	9.20.23	DSA BACK CHECK
6	11.01.23	ADDENDUM NO. 1
7	11.01.23	ADDENDUM NO. 2

Date: 11.01.2023
Scale: As indicated
Drawn By: JP, NZ
Checked By: RM

Architect / Engineer Stamp

LICENSED ARCHITECT
JOHANNES PAASSEN
NO. C-26229
REN. 8-31-25
STATE OF CALIFORNIA

Consultants
Miyamoto International, Inc.
The Ruzika Company, Inc.
MDC Consulting Engineers
Pocock Design Solutions
Newson Brown Acoustics, LLC
VCA Engineers, Inc.
HJSA Consulting

Sheet Title

Enlarged Plans - Box Boom

Sheet Number

A517

C:\Users\rvolly.monico\Documents\M22_HLPUSD-PAC_Central_rvolly.monico.rvt

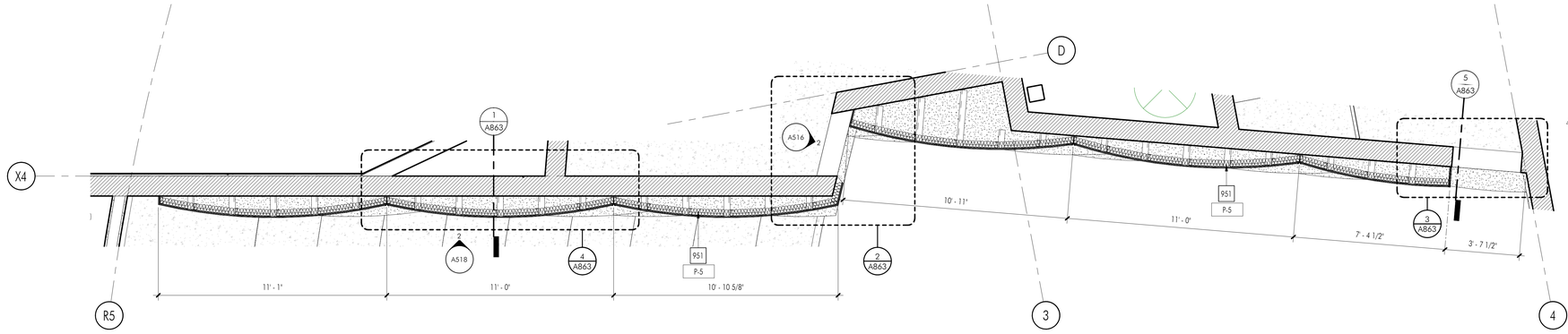

1 ENLARGED PLAN - NORTH SIDE ACOUSTIC WALL PANELS

SCALE: 3/8" = 1'-0"

CONSTRUCTION KEYNOTES

No.	DESCRIPTION
507	(2) LAYERs OF 1/2" TYPE "X" GYPSUM WALL BOARD OVER 7/8" FURRING CHANNELS
514	RECESSED WOOD WALL BASE, WB-1
517	PAINT EXPOSED CMU (OR WALL AS OCCURS) AT GAP BETWEEN ACOUSTIC WALL PANELS BLACK (P-4)
904	SIDE LIGHTING POSITION
951	GYPSUM BOARD SOUND REFLECTORS. SEE ENLAREFED PLANS ON A518, A519 AND DETAILS ON A863 FOR ADDITIONAL INFORMATION

FLOOR PLAN LEGEND

SYMBOL	DESCRIPTION
1	WALL TAG. FOR WALL TYPE INFORMATION, SEE A711
	FURRED MASONRY WALL ASSEMBLY. REFER TO WALL TYPE AND TYPICAL DETAILS ON A711 FOR MORE INFORMATION
	MASONRY WALL. REFER TO WALL TYPE AND TYPICAL DETAILS ON A711 FOR MORE INFORMATION
	METAL STUD WALL. REFER TO WALL TYPE AND TYPICAL DETAILS ON A711 FOR MORE INFORMATION
D101A	DOOR AS SCHEDULED. REFER TO DOOR TYPE AND SCHEDULE ON A611 FOR MORE INFORMATION
W001	WINDOW AS SCHEDULED. REFER TO WINDOW TYPES ON A611 2 FOR MORE INFORMATION

FINISH NOTES LEGEND

MS-1	MATERIAL TAG. REFER TO SHEET A621 FOR MATERIALS LEGEND

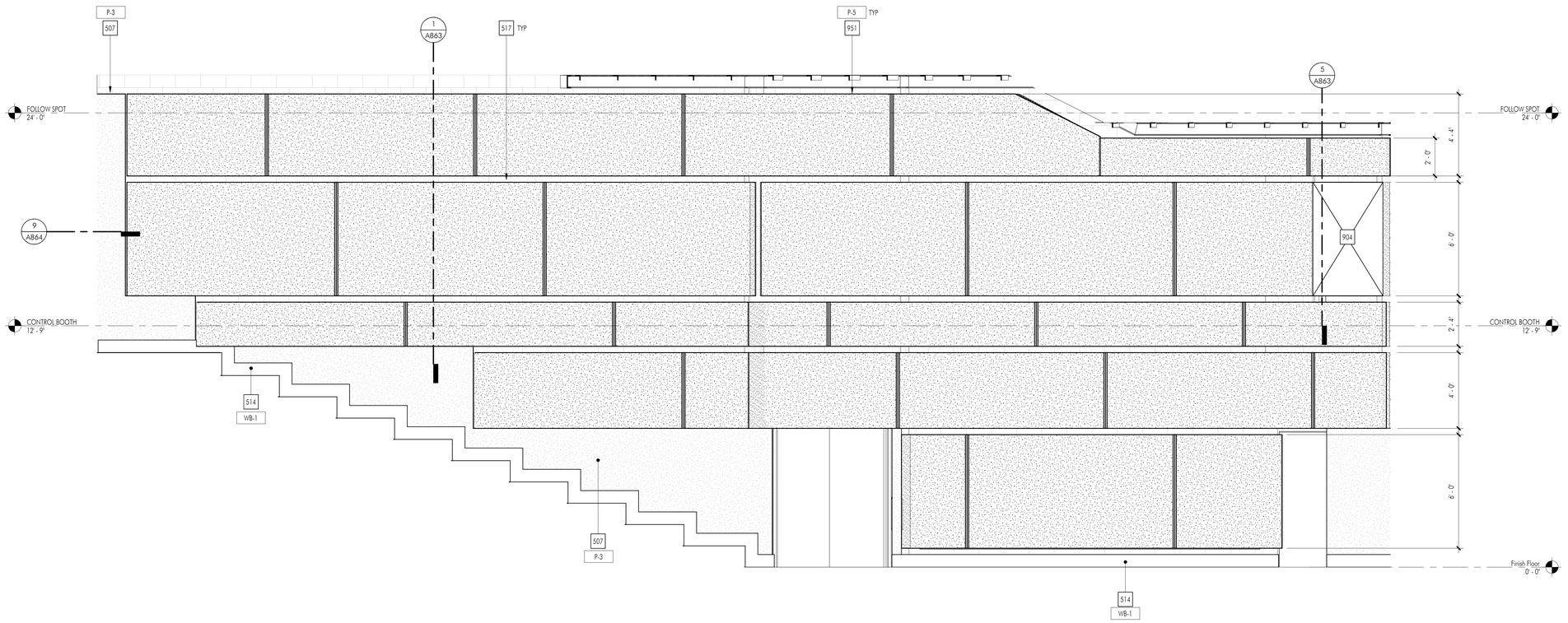

2 NORTH ELEVATION - ACOUSTIC WALL PANELS

SCALE: 3/8" = 1'-0"

C:\Users\rudy.monico\Documents\R22_HLPUSD-PAC_Central_rudy.monico.rvt

APPL No. A03-122864

DSA Stamp

Architect

RACHLIN PARTNERS
8640 National Boulevard
Culver City, CA 90232
310.204.3400

Disclaimer:

THESE DRAWINGS ARE THE PROPERTY OF THE ARCHITECT. THE DESIGNS SHOWN AND DESCRIBED HEREIN INCLUDING ALL TECHNICAL DRAWINGS ARE PROPRIETARY AND CANNOT BE COPIED, DUPLICATED OR COMMERCIALLY EXPLOITED EITHER IN WHOLE OR IN PART WITHOUT PRIOR WRITTEN CONSENT. SHALL NOT BE USED BY THE OWNER ON OTHER PROJECTS, FOR ADDITIONS TO THIS PROJECT, OR FOR COMPLETION OF THIS PROJECT BY OTHERS. THE OWNER AGREES TO HOLD HARMLESS, INDEMNIFY AND DEFEND THE ARCHITECT AGAINST ALL DAMAGES, CLAIMS AND LOSSES, INCLUDING DEFENSE COSTS, ARISING OUT OF ANY REUSE OF PLANS AND SPECIFICATIONS WITHOUT THE WRITTEN AUTHORIZATION OF THE ARCHITECT OF RECORD.

Copyright © 2022 Rachlin Partners, All Rights Reserved.

Performing Arts Center

Hacienda La Puente Unified School District
635 North California Avenue
La Puente, CA 91744

Rev	Date	Issue
1	7.22.22	50% DD
2	10.21.22	50% CD
3	12.09.22	100% CD DSA SUBMITTAL
4	6.19.23	100% CD DSA RESUBMITTAL
5	9.20.23	DSA BACK CHECK
6	11.01.23	ADDENDUM NO. 1
7	11.01.23	ADDENDUM NO. 2

Date: 11.01.2023
Scale: As indicated
Drawn By: JP, NZ
Checked By: RM

Architect / Engineer Stamp

LICENSED ARCHITECT
RICHARD MACIAS
NO. C-28229
REN 8-31-25
STATE OF CALIFORNIA

Consultants
Miyamoto International, Inc.
The Ruzika Company, Inc.
MDC Consulting Engineers
Pocock Design Solutions
Newson Brown Acoustics, LLC
VCA Engineers, Inc.
HJSA Consulting

Sheet Title

Enlarged Plans - Side Acoustic Wall Panels

Sheet Number

A518

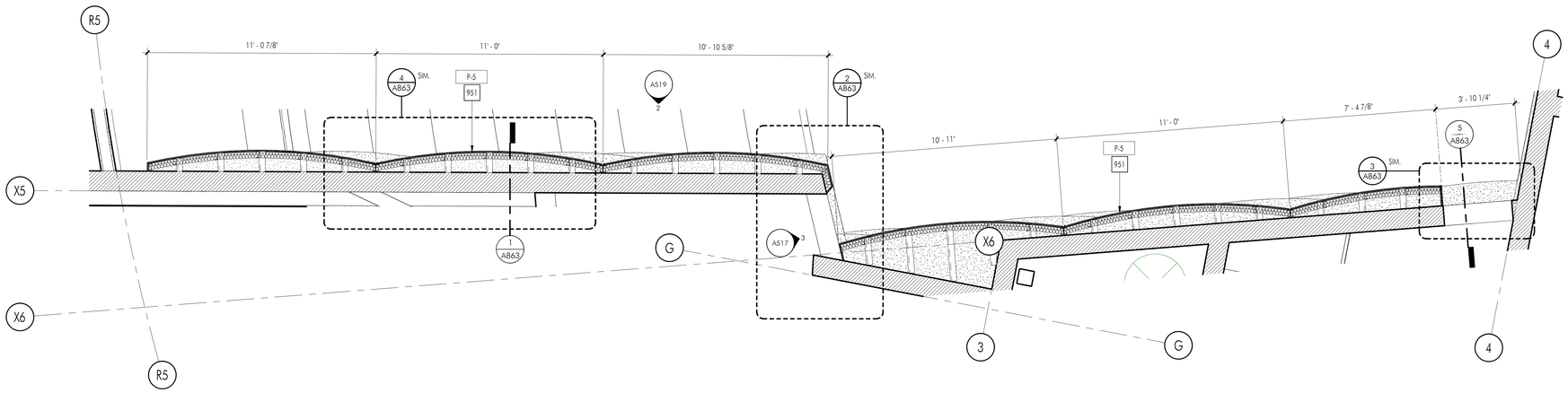

1 ENLARGED PLAN - SOUTH SIDE ACOUSTIC WALL PANELS

SCALE: 3/8" = 1'-0"

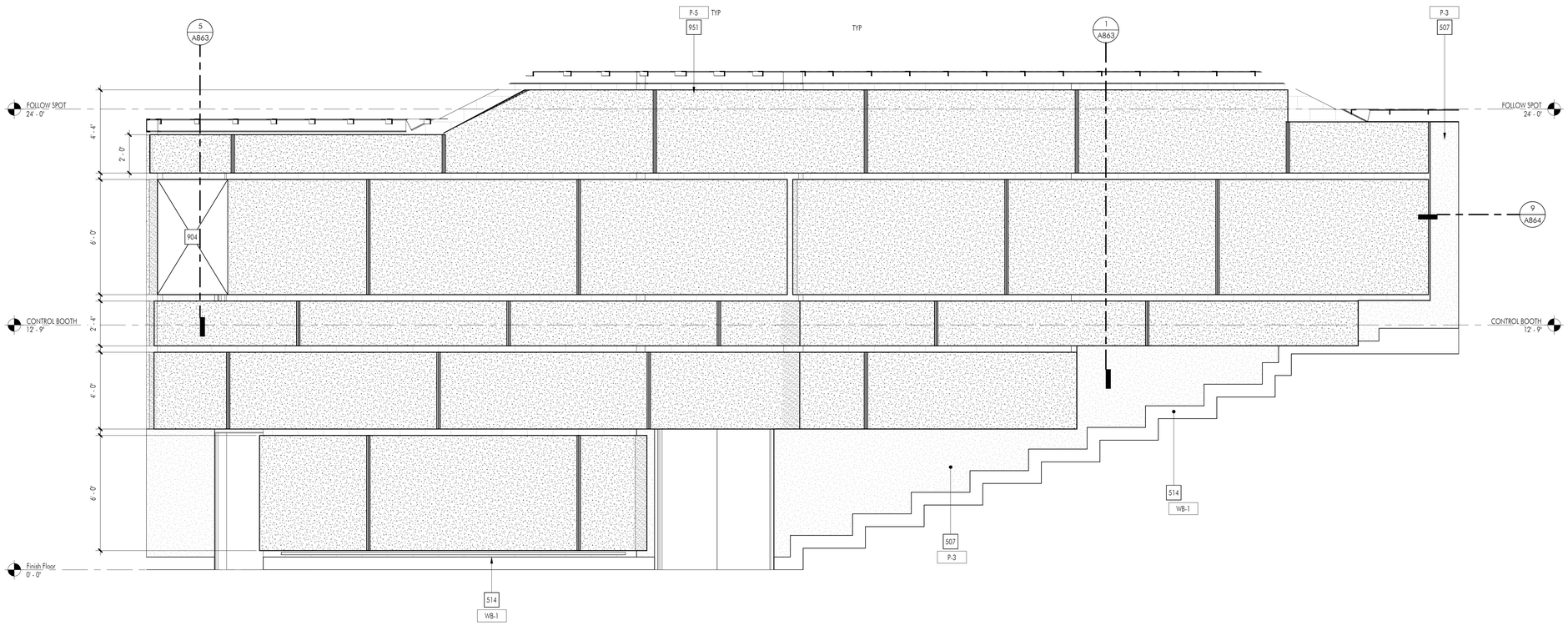

2 SOUTH ELEVATION - ACOUSTIC WALL PANELS

SCALE: 3/8" = 1'-0"

CONSTRUCTION KEYNOTES

No.	DESCRIPTION
507	(2) LAYERs OF 1/2" TYPE 'X' GYPSUM WALL BOARD OVER 7/8" FURRING CHANNELS
514	RECESSED WOOD WALL BASE, WB-1
904	SIDE LIGHTING POSITION
951	GYPSUM BOARD SOUND REFLECTORS. SEE ENLAREFED PLANS ON A518, A519 AND DETAILS ON A863 FOR ADDITIONAL INFORMATION

FLOOR PLAN LEGEND

SYMBOL	DESCRIPTION
1	WALL TAG. FOR WALL TYPE INFORMATION, SEE A711
	FURRED MASONRY WALL ASSEMBLY. REFER TO WALL TYPE AND TYPICAL DETAILS ON A711 FOR MORE INFORMATION
	MASONRY WALL. REFER TO WALL TYPE AND TYPICAL DETAILS ON A711 FOR MORE INFORMATION
	METAL STUD WALL. REFER TO WALL TYPE AND TYPICAL DETAILS ON A711 FOR MORE INFORMATION
D101A	DOOR AS SCHEDULED. REFER TO DOOR TYPE AND SCHEDULE ON A611 FOR MORE INFORMATION
W001	WINDOW AS SCHEDULED. REFER TO WINDOW TYPES ON A611 2 FOR MORE INFORMATION

FINISH NOTES LEGEND

MS-1	MATERIAL TAG. REFER TO SHEET A621 FOR MATERIALS LEGEND

APPL No. A03-122864

DSA Stamp

Architect

RACHLIN PARTNERS
8640 National Boulevard
Culver City, CA 90232
310.204.3400

Disclaimer:
THESE DRAWINGS ARE THE PROPERTY OF THE ARCHITECT. THE DESIGNS SHOWN AND DESCRIBED HEREIN INCLUDING ALL TECHNICAL DRAWINGS ARE PROPRIETARY AND CANNOT BE COPIED, DUPLICATED OR COMMERCIALLY EXPLOITED EXCEPT BY WRITTEN AGREEMENT. THESE DRAWINGS AND DESIGNS SHALL NOT BE USED BY THE OWNER ON OTHER PROJECTS, FOR ADDITIONS TO THIS PROJECT, OR FOR COMPLETION OF THIS PROJECT BY OTHERS. THE OWNER AGREES TO HOLD HARMLESS, INDEMNIFY AND DEFEND THE ARCHITECT AGAINST ALL DAMAGES, CLAIMS AND LOSSES, INCLUDING DEFENSE COSTS, ARISING OUT OF ANY REUSE OF PLANS AND SPECIFICATIONS WITHOUT THE WRITTEN AUTHORIZATION OF THE ARCHITECT OF RECORD.

Copyright © 2022 Rachlin Partners, All Rights Reserved.

Performing Arts Center

Hacienda La Puente Unified School District
635 North California Avenue
La Puente, CA 91744

Rev	Date	Issue
1	7.22.22	50% DD
2	10.21.22	50% CD
3	12.09.22	100% CD DSA SUBMITTAL
4	6.19.23	100% CD DSA RESUBMITTAL
5	9.20.23	DSA BACK CHECK
6	11.01.23	ADDENDUM NO. 1
7	11.01.23	ADDENDUM NO. 2

Date: 11.01.2023
Scale: As indicated
Drawn By: JP, NZ
Checked By: RM

Architect / Engineer Stamp

LICENSED ARCHITECT
RICHARD MACIAS
NO. C-28229
REN. 8-31-25
STATE OF CALIFORNIA

Consultants
Miyamoto International, Inc.
The Ruzika Company, Inc.
MDC Consulting Engineers
Pocock Design Solutions
Newson Brown Acoustics, LLC
VCA Engineers, Inc.
HJSA Consulting

Sheet Title

Enlarged Plans - Side Acoustic Wall Panels

Sheet Number

A519

C:\Users\rudy.monico\Documents\R22_HLPUSD-PAC_Central_rudy.monico.rvt

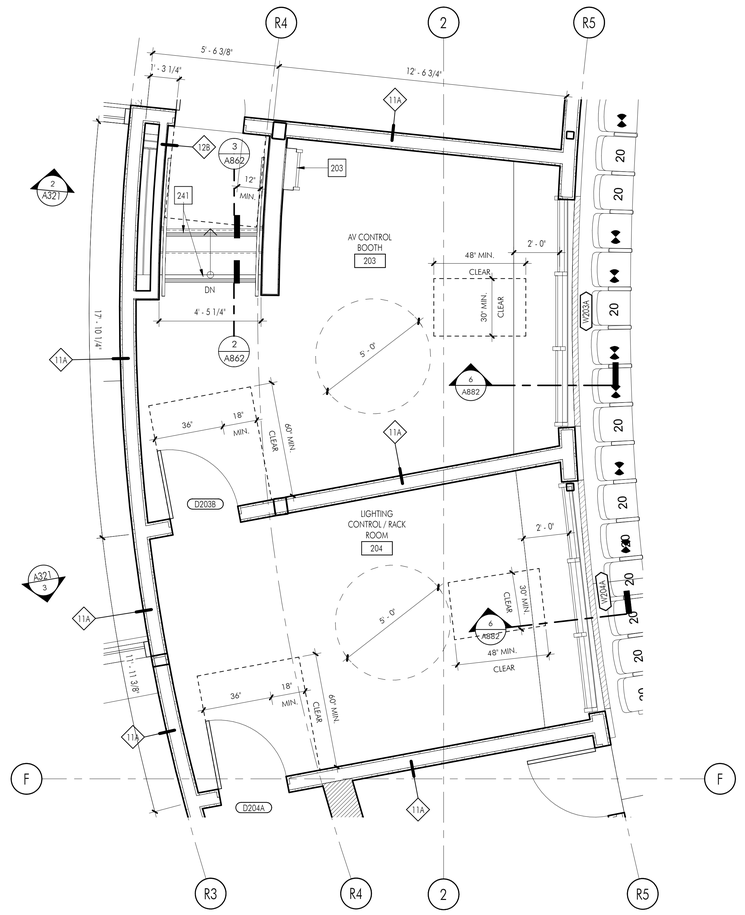

1 ENLARGED PLAN - COUNTER AT LIGHTING BOOTH PLAN

SCALE: 3/8" = 1'-0"

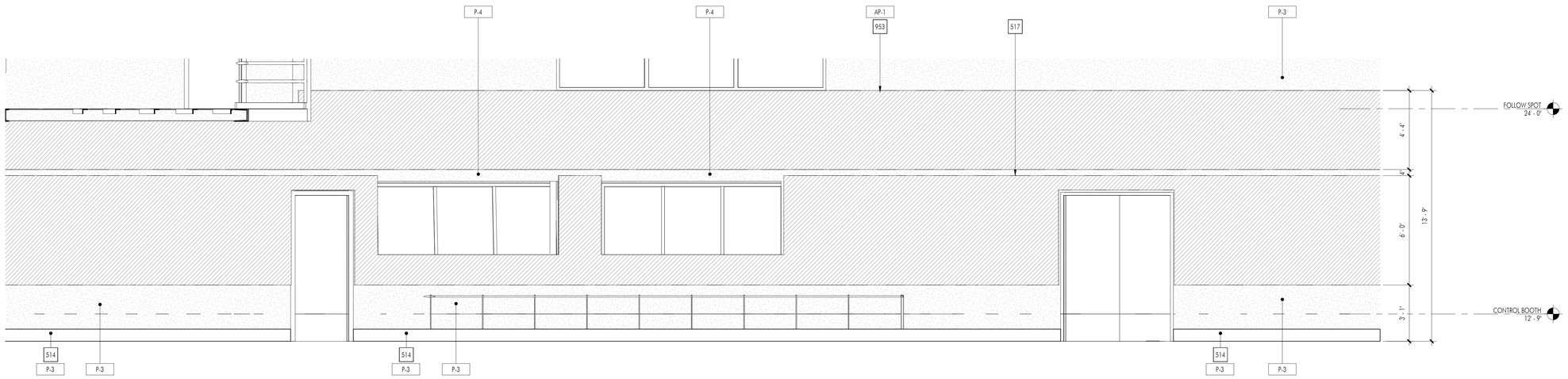

2 WEST ELEVATION - ACOUSTIC WALL PANELS

SCALE: 3/8" = 1'-0"

CONSTRUCTION KEYNOTES

No.	DESCRIPTION
203	FOLLOW SPOT ACCESS LADDER. SEE DETAIL 4/A832 SIM.
241	PROVIDE CONTRASTING STRIP OF WHITE CARPET TOP AND BOTTOM OF EACH STAIR RUN.
514	RECESSED WOOD WALL BASE, WB-1
517	PAINT EXPOSED CMU (OR WALL AS OCCURS) AT GAP BETWEEN ACOUSTIC WALL PANELS BLACK (P-4)
953	ACOUSTIC WALL PANELS. SEE A86X FOR ADDITIONAL INFORMATION

FLOOR PLAN LEGEND

SYMBOL	DESCRIPTION
1	WALL TAG. FOR WALL TYPE INFORMATION, SEE A711
	FURRED MASONRY WALL ASSEMBLY. REFER TO WALL TYPE AND TYPICAL DETAILS ON A711 FOR MORE INFORMATION
	MASONRY WALL. REFER TO WALL TYPE AND TYPICAL DETAILS ON A711 FOR MORE INFORMATION
	METAL STUD WALL. REFER TO WALL TYPE AND TYPICAL DETAILS ON A711 FOR MORE INFORMATION
D101A	DOOR AS SCHEDULED. REFER TO DOOR TYPE AND SCHEDULE ON A611 FOR MORE INFORMATION
W001	WINDOW AS SCHEDULED. REFER TO WINDOW TYPES ON 2/A611 FOR MORE INFORMATION

FINISH NOTES LEGEND

MS-1	MATERIAL TAG. REFER TO SHEET A621 FOR MATERIALS LEGEND

APPL No. A03-122864

DSA Stamp

Architect

RACHLIN PARTNERS
8640 National Boulevard
Culver City, CA 90232
310.204.3400

Disclaimer:
THESE DRAWINGS ARE THE PROPERTY OF THE ARCHITECT. THE DESIGNS SHOWN AND DESCRIBED HEREIN INCLUDING ALL TECHNICAL DRAWINGS ARE PROPRIETARY AND CANNOT BE COPIED, DUPLICATED OR COMMERCIALLY EXPLOITED IN ANY WAY WITHOUT THE ARCHITECT'S EXPRESS WRITTEN CONSENT. SHALL NOT BE USED BY THE OWNER ON OTHER PROJECTS, FOR ADDITIONS TO THIS PROJECT, OR FOR COMPLETION OF THIS PROJECT BY OTHERS. THE OWNER AGREES TO HOLD HARMLESS, INDEMNIFY AND DEFEND THE ARCHITECT AGAINST ALL DAMAGES, CLAIMS AND LOSSES, INCLUDING DEFENSE COSTS, ARISING OUT OF ANY REUSE OF PLANS AND SPECIFICATIONS WITHOUT THE WRITTEN AUTHORIZATION OF THE ARCHITECT OF RECORD.

Copyright © 2022 Rachlin Partners, All Rights Reserved.

Performing Arts Center

Hacienda La Puente Unified School District
635 North California Avenue
La Puente, CA 91744

Rev	Date	Issue
1	7.22.22	50% DD
2	10.21.22	50% CD
3	12.09.22	100% CD DSA SUBMITTAL
4	6.19.23	100% CD DSA RESUBMITTAL
5	9.20.23	DSA BACK CHECK
6	11.01.23	ADDENDUM NO. 1
7	11.01.23	ADDENDUM NO. 2

Date: 11.01.2023
Scale: As indicated
Drawn By: JP, NZ
Checked By: RM

Architect / Engineer Stamp

LICENSED ARCHITECT
LEONARD RACHLIN
NO. C-26229
REN. 8-31-25
STATE OF CALIFORNIA

Consultants
Miyamoto International, Inc.
The Ruzika Company, Inc.
MDC Consulting Engineers
Pocock Design Solutions
Newson Brown Acoustics, LLC
VCA Engineers, Inc.
HJSA Consulting

Sheet Title

Enlarged Plans - Rear Acoustic Wall Panels

Sheet Number

A520

C:\Users\vidy.monico\Documents\M22_HLPUSD-PAC_Central_vidy.monico.rvt

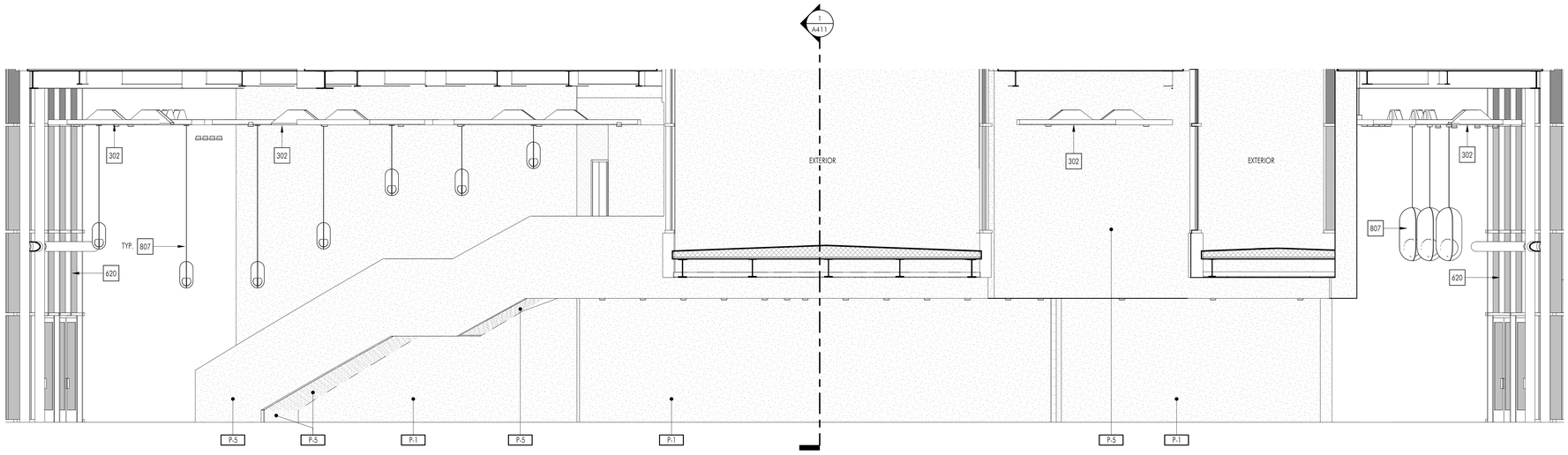

1 EAST ELEVATION - LOBBY

SCALE: 1/4" = 1'-0"

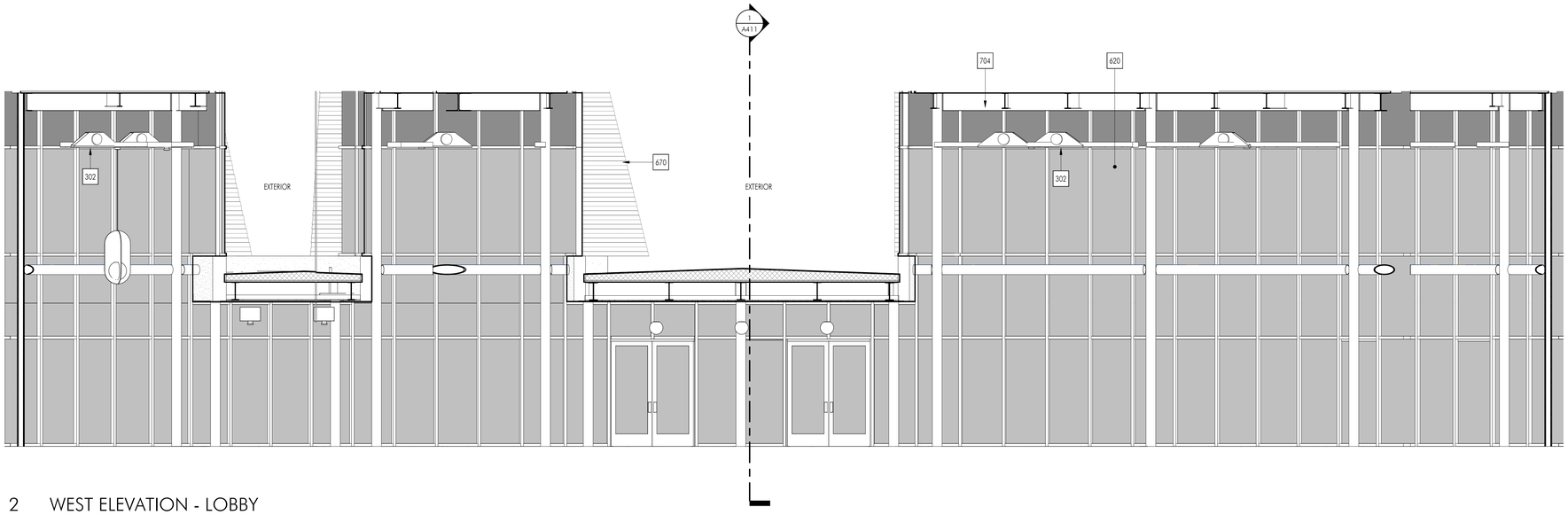

2 WEST ELEVATION - LOBBY

SCALE: 1/4" = 1'-0"

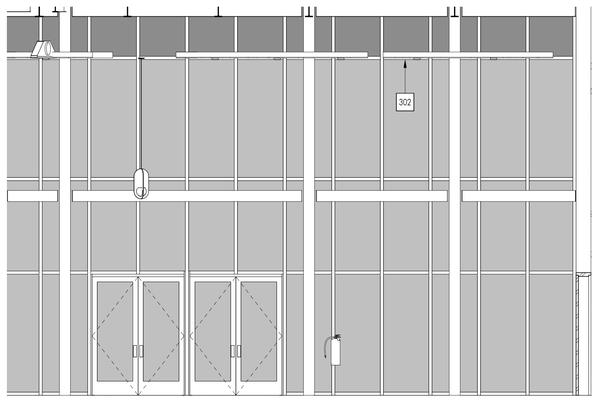

3 NORTH ELEVATION - LOBBY

SCALE: 1/4" = 1'-0"

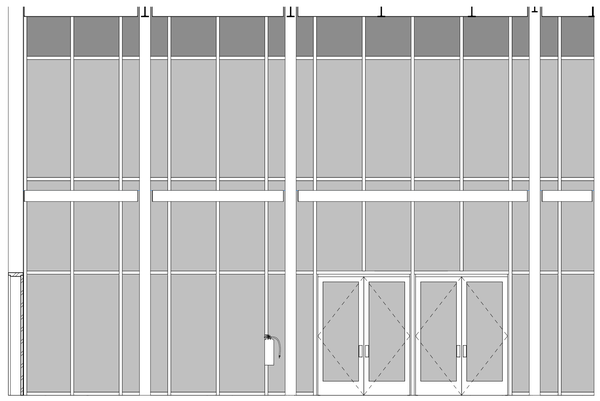

4 SOUTH ELEVATION - LOBBY

SCALE: 1/4" = 1'-0"

CONSTRUCTION KEYNOTES

No.	DESCRIPTION
302	FRAMED GYPSUM BOARD CEILING PER DETAILS 14, 15 AND 20/S0.6
620	GLASS CURTAIN WALL SYSTEM, SEE FLOOR PLAN FOR WINDOW TYPE AND SCHEDULE FOR MORE INFORMATION. DEFERRED APPROVAL
670	PERFORATED METAL PANEL SCREEN
704	STEEL BEAM, SEE STRUCTURAL DRAWINGS
807	PENDANT LIGHT FIXTURE, SEE 5/A871 FOR BRACING REQUIREMENTS. SEE ELECTRICAL AND LIGHTING FOR MORE INFORMATION.

FINISH NOTES LEGEND

MS-1	MATERIAL TAG. REFER TO SHEET A621 FOR MATERIALS LEGEND

APPL No. A03-122864

IDENTIFICATION STAMP
DIV. OF THE STATE ARCHITECT
APP: 03-122864 INC:
REVIEWED FOR
SS ☑ FLS ☑ ACS ☑
DATE: 10/03/2023

DSA Stamp

Architect

RACHLIN PARTNERS
8640 National Boulevard
Culver City, CA 90232
310.204.3400

Disclaimer:

THESE DRAWINGS ARE THE PROPERTY OF THE ARCHITECT. THE DESIGNS SHOWN AND DESCRIBED HEREIN INCLUDING ALL TECHNICAL DRAWINGS ARE PROPRIETARY AND CANNOT BE COPIED, DUPLICATED OR COMMERCIALLY EXPLOITED EITHER IN WHOLE OR IN PART WITHOUT WRITTEN CONSENT AND SHALL NOT BE USED BY THE OWNER ON OTHER PROJECTS, FOR ADDITIONS TO THIS PROJECT, OR FOR COMPLETION OF THIS PROJECT BY OTHERS. THE OWNER AGREES TO HOLD HARMLESS, INDEMNIFY AND DEFEND THE ARCHITECT AGAINST ALL DAMAGES, CLAIMS AND LOSSES, INCLUDING DEFENSE COSTS, ARISING OUT OF ANY REUSE OF PLANS AND SPECIFICATIONS WITHOUT THE WRITTEN AUTHORIZATION OF THE ARCHITECT OF RECORD.

Copyright © 2022 Rachlin Partners, All Rights Reserved.

Performing Arts Center

Hacienda La Puente Unified School District
635 North California Avenue
La Puente, CA 91744

Rev	Date	Issue
1	7.22.22	50% DD
2	10.21.22	50% CD
3	12.09.22	100% CD DSA SUBMITTAL
4	6.19.23	100% CD DSA RESUBMITTAL
5	9.20.23	DSA BACK CHECK

Date: 9.20.2023
Scale: As indicated
Drawn By: JP, NZ
Checked By: RM

Architect / Engineer Stamp

LICENSED ARCHITECT
NO. C-26229
REN. 8-31-25
STATE OF CALIFORNIA

Consultants
Miyamoto International, Inc.
The Ruzika Company, Inc.
MDC Consulting Engineers
Pocock Design Solutions
Newson Brown Acoustics, LLC
VCA Engineers, Inc.
HJSA Consulting

Sheet Title

Interior Elevations - Lobby

Sheet Number

A521

C:\Users\rudy.monico\Documents\M22_HLPUSD-PAC_Central_rudy.monico.rvt

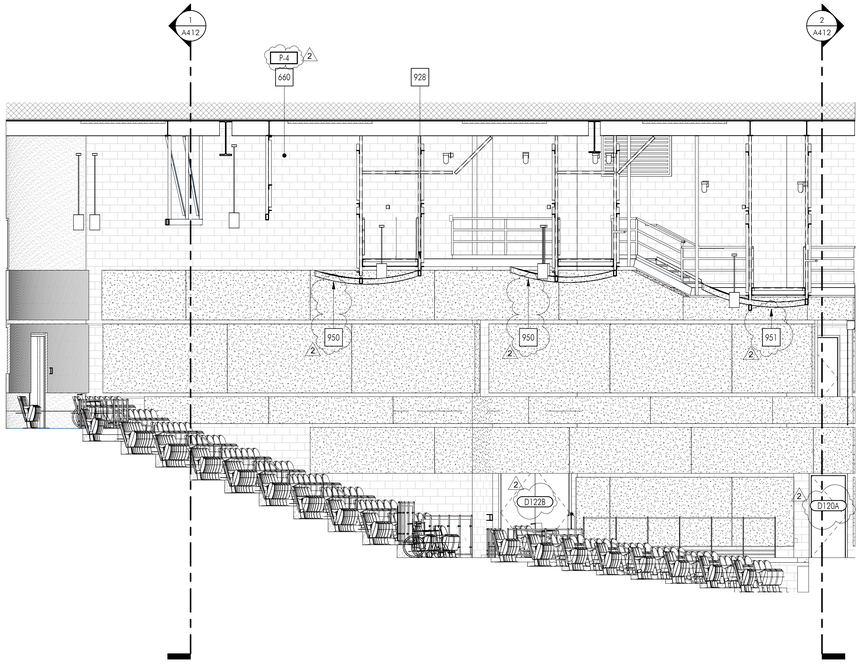

1 NORTH ELEVATION - ORCHESTRA/PARTERRE

SCALE: 3/16" = 1'-0"

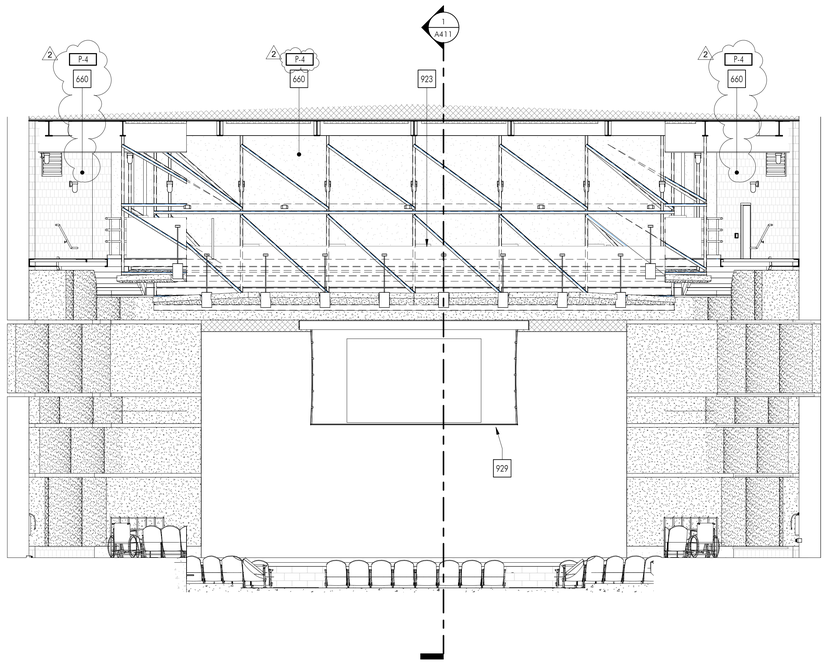

2 EAST ELEVATION - ORCHESTRA/PARTERRE

SCALE: 3/16" = 1'-0"

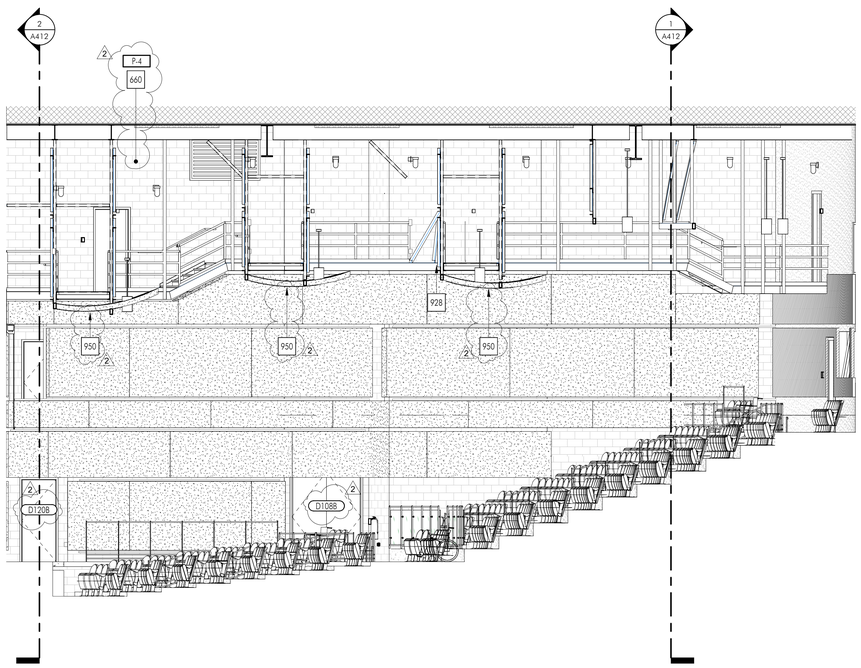

3 SOUTH ELEVATION - ORCHESTRA/PARTERRE

SCALE: 3/16" = 1'-0"

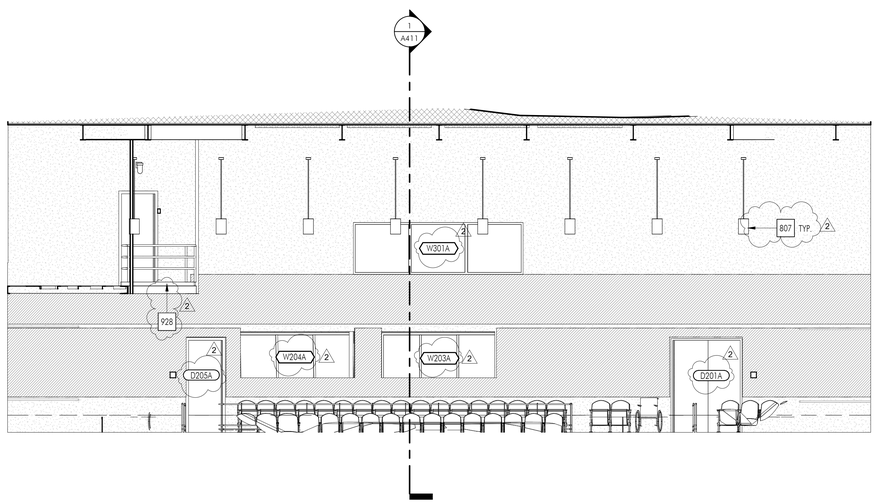

4 WEST ELEVATION - ORCHESTRA/PARTERRE

SCALE: 3/16" = 1'-0"

CONSTRUCTION KEYNOTES

No.	DESCRIPTION
660	CONCRETE MASONRY WALL (CMU) PER STRUCTURAL
807	PENDANT LIGHT FIXTURE, SEE 5/A871 FOR BRACING REQUIREMENTS. SEE ELECTRICAL AND LIGHTING FOR MORE INFORMATION.
923	CATWALK RAILING. SEE 16/A901 FOR ADDITIONAL INFORMATION
928	CATWALK. SEE SHEET A213
929	SCREEN, SEE AUDIO VISUAL DRAWINGS. SEE DETAIL 12/A866 FOR MOUNTING DETAIL
950	SUSPENDED ACOUSTIC CLOUD REFLECTOR SEE 4/A874 FOR MORE INFORMATION
951	GYPSUM BOARD SOUND REFLECTORS. SEE ENLAREFED PLANS ON A518, A519 AND DETAILS ON A862 FOR ADDITIONAL INFORMATION

FINISH NOTES LEGEND

MS-1	MATERIAL TAG. REFER TO SHEET A621 FOR MATERIALS LEGEND

APPL No. A03-122864

DSA Stamp

Architect

RACHLIN PARTNERS
8640 National Boulevard
Culver City, CA 90232
310.204.3400

Disclaimer:

THESE DRAWINGS ARE THE PROPERTY OF THE ARCHITECT. THE DESIGNS SHOWN AND DESCRIBED HEREIN INCLUDING ALL TECHNICAL DRAWINGS ARE PROPRIETARY AND CANNOT BE COPIED, DUPLICATED OR COMMERCIALLY EXPLOITED EITHER IN WHOLE OR IN PART WITHOUT WRITTEN CONSENT AND SHALL NOT BE USED BY THE OWNER ON OTHER PROJECTS, FOR ADDITIONS TO THIS PROJECT, OR FOR COMPLETION OF THIS PROJECT BY OTHERS. THE OWNER AGREES TO HOLD HARMLESS, INDEMNIFY AND DEFEND THE ARCHITECT AGAINST ALL DAMAGES, CLAIMS AND LOSSES, INCLUDING DEFENSE COSTS, ARISING OUT OF ANY REUSE OF PLANS AND SPECIFICATIONS WITHOUT THE WRITTEN AUTHORIZATION OF THE ARCHITECT OF RECORD.

Copyright © 2022 Rachlin Partners, All Rights Reserved.

Performing Arts Center

Hacienda La Puente Unified School District
635 North California Avenue
La Puente, CA 91744

Rev	Date	Issue
1	7.22.22	50% DD
2	10.21.22	50% CD
3	12.09.22	100% CD DSA SUBMITTAL
4	6.19.23	100% CD DSA RESUBMITTAL
5	9.20.23	DSA BACK CHECK
6	11.01.23	ADDENDUM NO. 1
7	11.01.23	ADDENDUM NO. 2

Date: 11.01.2023
Scale: 3/16" = 1'-0"
Drawn By: JP, NZ
Checked By: RM

Architect / Engineer Stamp

LICENSED ARCHITECT
LOWELL INGRAM
NO. C-28229
REN. 8-31-25
STATE OF CALIFORNIA

Consultants
Miyamoto International, Inc.
The Ruzika Company, Inc.
MDC Consulting Engineers
Pocock Design Solutions
Newson Brown Acoustics, LLC
VCA Engineers, Inc.
HJSA Consulting

Sheet Title

Interior Elevations - Orchestra/ Parterre

Sheet Number

A522

C:\Users\rudy.monico\Documents\R22_HLPUSD-PAC_Central_rudy.monico.rvt

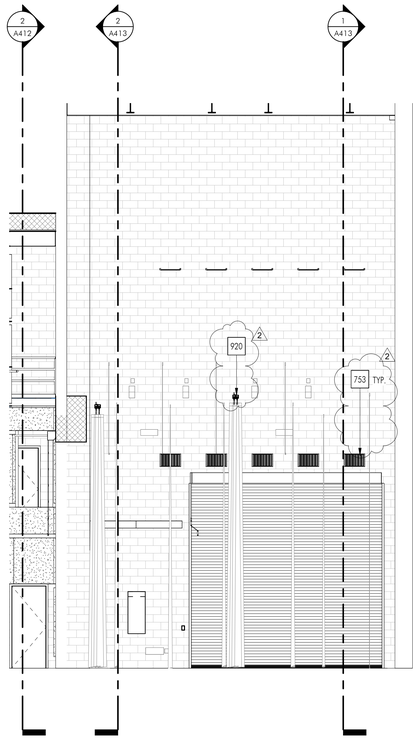

1 NORTH ELEVATION - STAGE

SCALE: 3/16" = 1'-0"

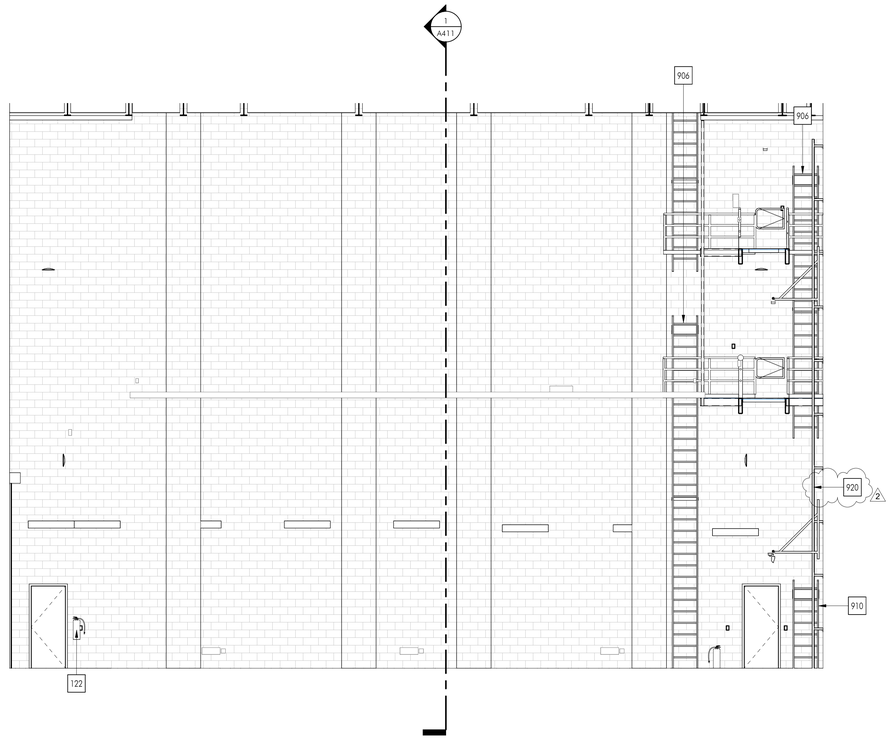

2 EAST ELEVATION - STAGE

SCALE: 3/16" = 1'-0"

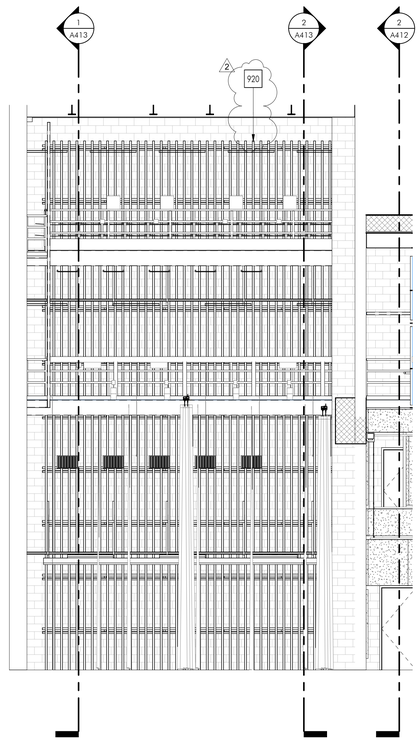

3 SOUTH ELEVATION - STAGE

SCALE: 3/16" = 1'-0"

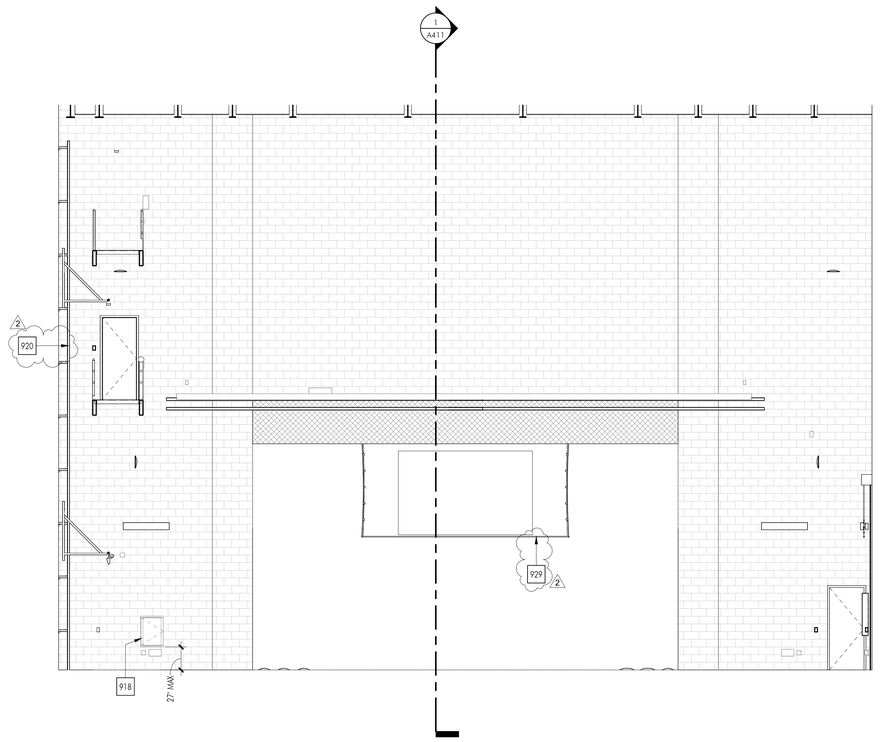

4 WEST ELEVATION - STAGE

SCALE: 3/16" = 1'-0"

CONSTRUCTION KEYNOTES

No.	DESCRIPTION
122	SURFACE MOUNTED FIRE EXTINGUISHER CABINET (2-A RATED) PER DETAIL 10/A866
753	MECHANICAL DIFFUSER OR GRILLE, SEE MECHANICAL DRAWINGS
906	LOADING/FLY GALLERY ACCESS LADDER. SEE 1/A424 AND 4/A832 FOR MORE INFORMATION
910	RIGGING PIT ACCESS LADDER. SEE 1/424 AND 4/A832 FOR MORE INFORMATION
918	THEATRICAL EQUIPMENT. SEE THEATER DRAWING FOR MORE INFORMATION.
920	STAGE RIGGING, SEE THEATER DRAWINGS. DEFERRED APPROVAL
929	SCREEN, SEE AUDIO VISUAL DRAWINGS. SEE DETAIL 12/A866 FOR MOUNTING DETAIL

FINISH NOTES LEGEND

MS-1 MATERIAL TAG. REFER TO SHEET A621 FOR MATERIALS LEGEND

APPL No. A03-122864

DSA Stamp

Architect

RACHLIN
PARTNERS
8640 National Boulevard
Culver City, CA 90232
310.204.3400

Disclaimer:
THESE DRAWINGS ARE THE PROPERTY OF THE ARCHITECT. THE DESIGNS SHOWN AND DESCRIBED HEREIN INCLUDING ALL TECHNICAL DRAWINGS ARE PROPRIETARY AND CANNOT BE COPIED, DUPLICATED OR COMMERCIALLY EXPLOITED EITHER IN WHOLE OR IN PART WITHOUT WRITTEN CONSENT AND SHALL NOT BE USED BY THE OWNER ON OTHER PROJECTS, FOR ADDITIONS TO THIS PROJECT, OR FOR COMPLETION OF THIS PROJECT BY OTHERS. THE OWNER AGREES TO HOLD HARMLESS, INDEMNIFY AND DEFEND THE ARCHITECT AGAINST ALL DAMAGES, CLAIMS AND LOSSES, INCLUDING DEFENSE COSTS, ARISING OUT OF ANY REUSE OF PLANS AND SPECIFICATIONS WITHOUT THE WRITTEN AUTHORIZATION OF THE ARCHITECT OF RECORD.

Copyright © 2022 Rachlin Partners, All Rights Reserved.

Performing Arts Center
Hacienda La Puente Unified School District
635 North California Avenue
La Puente, CA 91744

Rev	Date	Issue
1	7.22.22	50% DD
2	10.21.22	50% CD
3	12.09.22	100% CD DSA SUBMITTAL
4	6.19.23	100% CD DSA RESUBMITTAL
5	9.20.23	DSA BACK CHECK
6	11.01.23	ADDENDUM NO. 1
7	11.01.23	ADDENDUM NO. 2

Date: 11.01.2023
Scale: 3/16" = 1'-0"
Drawn By: JP, NZ
Checked By: RM

Architect / Engineer Stamp

LICENSED ARCHITECT
LOVORD INGRAM
NO. C-28229
REN. 8-31-25
STATE OF CALIFORNIA

Consultants
Miyamoto International, Inc.
The Ruzika Company, Inc.
MDC Consulting Engineers
Pocock Design Solutions
Newson Brown Acoustics, LLC
VCA Engineers, Inc.
HJSA Consulting

Sheet Title

Interior Elevations - Stage

Sheet Number

A523

C:\Users\rudy.monico\Documents\R22_HLPUSD-PAC_Central_rudy.monico.rvt

FLOOR PLAN LEGEND

SYMBOL	DESCRIPTION
1	WALL TAG. FOR WALL TYPE INFORMATION, SEE A711
	FURRED MASONRY WALL ASSEMBLY. REFER TO WALL TYPE AND TYPICAL DETAILS ON A711 FOR MORE INFORMATION
	MASONRY WALL. REFER TO WALL TYPE AND TYPICAL DETAILS ON A711 FOR MORE INFORMATION
	METAL STUD WALL. REFER TO WALL TYPE AND TYPICAL DETAILS ON A711 FOR MORE INFORMATION
D101A	DOOR AS SCHEDULED. REFER TO DOOR TYPE AND SCHEDULE ON A611 FOR MORE INFORMATION
W001	WINDOW AS SCHEDULED. REFER TO WINDOW TYPES ON A611 FOR MORE INFORMATION

CONSTRUCTION KEYNOTES

No.	DESCRIPTION
124	STAINLESS STEEL CORNER TRIMS 96" HIGH
200	ROOF ACCESS LADDER SEE 2 AND 4/A832 FOR MORE INFORMATION
853	SERVICE SINK, SEE PLUMBING DRAWINGS

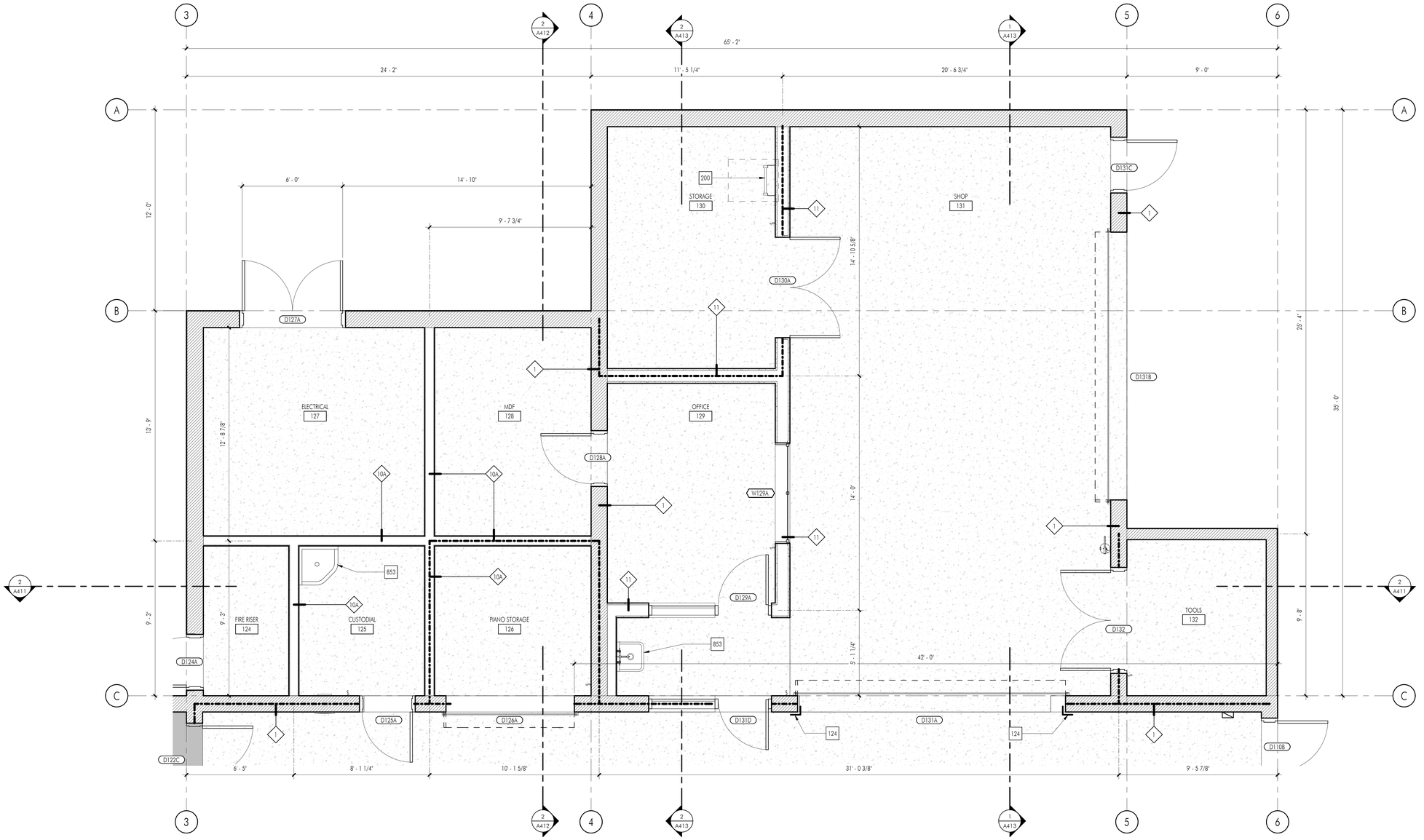

1 ENLARGED SHOP FLOOR PLAN

SCALE: 3/8" = 1'-0"

APPL No. A03-122864

DSA Stamp

Architect

RACHLIN PARTNERS
8640 National Boulevard
Culver City, CA 90232
310.204.3400

Disclaimer:

THESE DRAWINGS ARE THE PROPERTY OF THE ARCHITECT. THE DESIGNS SHOWN AND DESCRIBED HEREIN INCLUDING ALL TECHNICAL DRAWINGS ARE PROPRIETARY AND CANNOT BE COPIED, DUPLICATED OR COMMERCIALLY EXPLOITED EITHER IN WHOLE OR IN PART WITHOUT WRITTEN CONSENT AND SHALL NOT BE USED BY THE OWNER ON OTHER PROJECTS, FOR ADDITIONS TO THIS PROJECT, OR FOR COMPLETION OF THIS PROJECT BY OTHERS. THE OWNER AGREES TO HOLD HARMLESS, INDEMNIFY AND DEFEND THE ARCHITECT AGAINST ALL DAMAGES, CLAIMS AND LOSSES, INCLUDING DEFENSE COSTS, ARISING OUT OF ANY REUSE OF PLANS AND SPECIFICATIONS WITHOUT THE WRITTEN AUTHORIZATION OF THE ARCHITECT OF RECORD.

Copyright © 2022 Rachlin Partners, All Rights Reserved.

Performing Arts Center

Hacienda La Puente Unified School District
635 North California Avenue
La Puente, CA 91744

Rev	Date	Issue
1	7.22.22	50% DD
2	10.21.22	50% CD
3	12.09.22	100% CD DSA SUBMITTAL
4	6.19.23	100% CD DSA RESUBMITTAL
5	9.20.23	DSA BACK CHECK
6	11.01.23	ADDENDUM NO. 1
7	11.01.23	ADDENDUM NO. 2

Date: 11.01.2023
Scale: As indicated
Drawn By: JP, NZ
Checked By: RM

Architect / Engineer Stamp

LICENSED ARCHITECT
NO. C-28229
REN. 8-31-25
STATE OF CALIFORNIA

Consultants
Miyamoto International, Inc.
The Ruzika Company, Inc.
MDC Consulting Engineers
Pocock Design Solutions
Newson Brown Acoustics, LLC
VCA Engineers, Inc.
HJSA Consulting

Sheet Title

Enlarged Plan - Shop

Sheet Number

A524

C:\Users\rudy.monico\Documents\R22_HLPUSD-PAC_Central_rudy.monico.rvt

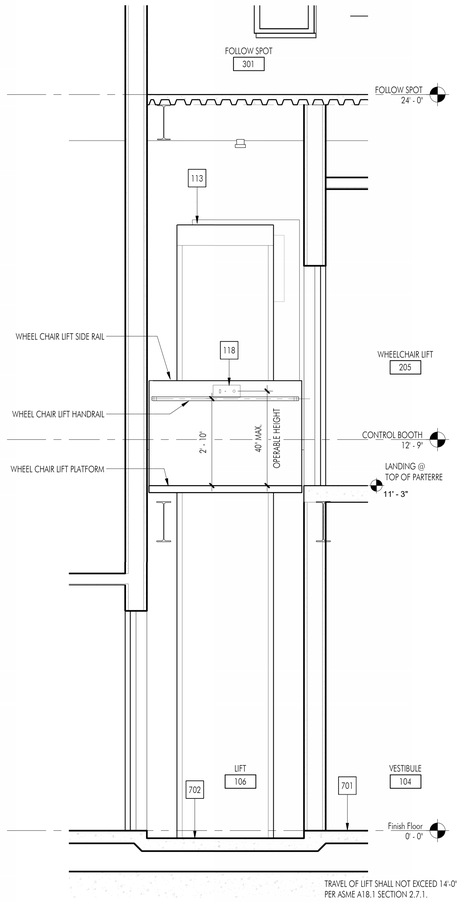

6 WHEELCHAIR LIFT SECTION

SCALE: 1/2" = 1'-0"

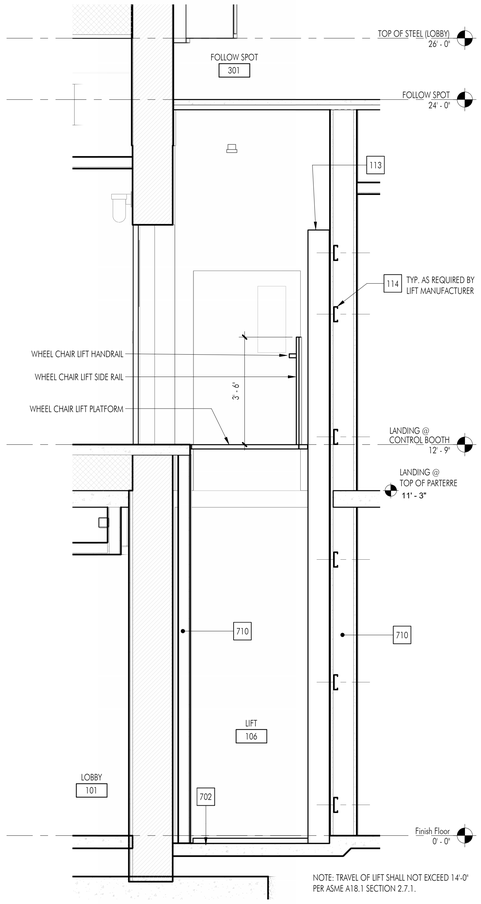

4 WHEELCHAIR LIFT SECTION

SCALE: 1/2" = 1'-0"

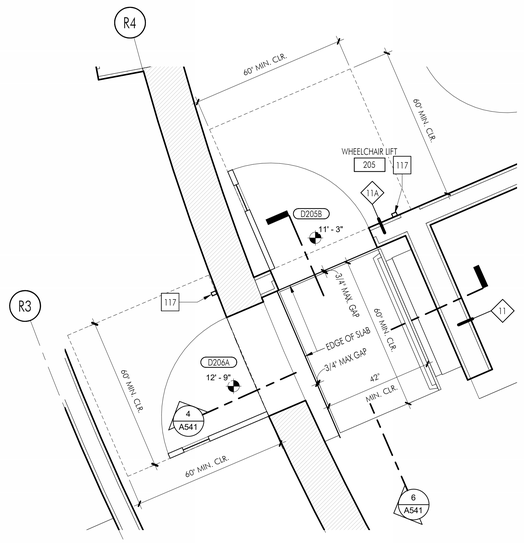

1 ENLARGED PLAN - WHEELCHAIR LIFT (11'-3" and 12' - 9")

SCALE: 1/2" = 1'-0"

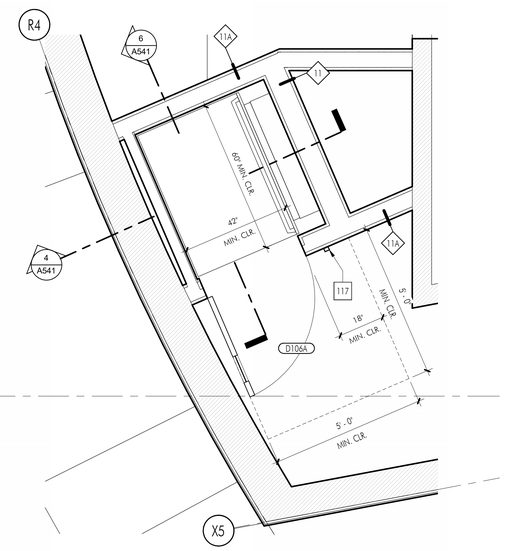

2 ENLARGED PLAN - WHEELCHAIR LIFT (0'-0")

SCALE: 1/2" = 1'-0"

NOTES:

1) BOULDERS TO BE "APACHE SUNSET" OR "CRESTA BLONDE" GRANITE

2) CONTRACTOR TO SUBMERGE LARGEST BOULDERS PER ARCHITECTS DIRECTION. DRESS WITH SMALLER BOULDERS

3) CONTRACTOR TO INSTALL BOULDERS PRIOR TO INSTALLING SURROUNDING CONCRETE PAVING

BOULDER SCHEDULE:

QTY	SIZES
60%	2'X3.5'
40%	1'X2.5'

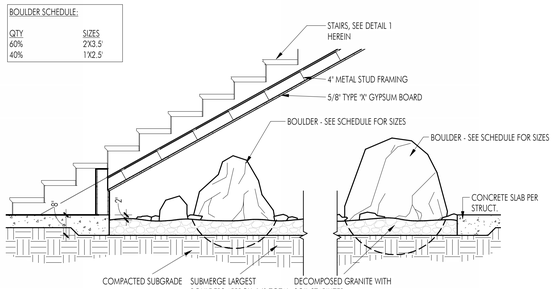

7 ROCK PLANTER BELOW STAIRS

SCALE: 1/2" = 1'-0"

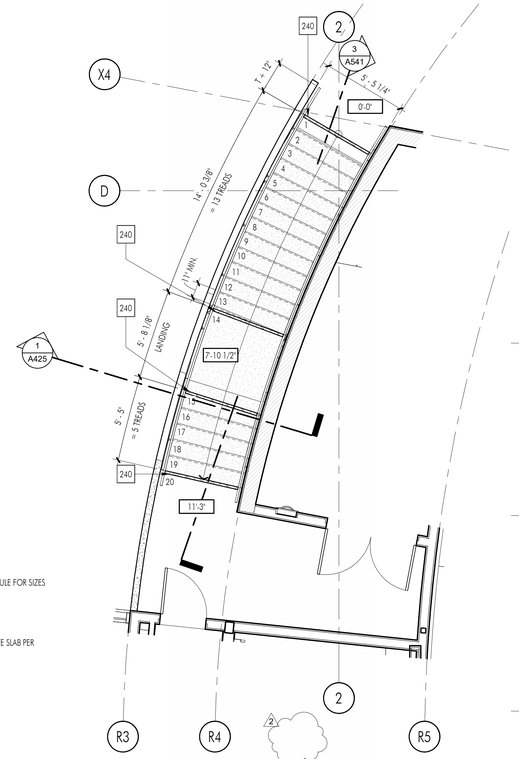

5 ENLARGED STAIR PLAN

SCALE: 1/4" = 1'-0"

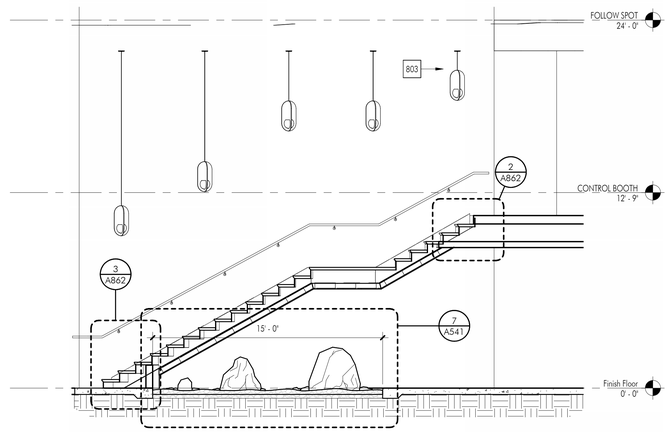

3 STAIR SECTION

SCALE: 1/4" = 1'-0"

FLOOR PLAN LEGEND

SYMBOL	DESCRIPTION
1	WALL TAG. FOR WALL TYPE INFORMATION, SEE A711
	FURRED MASONRY WALL ASSEMBLY. REFER TO WALL TYPE AND TYPICAL DETAILS ON A711 FOR MORE INFORMATION
	MASONRY WALL. REFER TO WALL TYPE AND TYPICAL DETAILS ON A711 FOR MORE INFORMATION
	METAL STUD WALL. REFER TO WALL TYPE AND TYPICAL DETAILS ON A711 FOR MORE INFORMATION
D101A	DOOR AS SCHEDULED. REFER TO DOOR TYPE AND SCHEDULE ON A611 FOR MORE INFORMATION
W001	WINDOW AS SCHEDULED. REFER TO WINDOW TYPES ON A611 FOR MORE INFORMATION

CONSTRUCTION KEYNOTES

No.	DESCRIPTION
113	WHEELCHAIR LIFT HOISTWAY
114	WHEELCHAIR LIFT HOISTWAY BRACKET BACKING PER 12/A882 TYP.
117	WHEELCHAIR LIFT LANDING CALL BUTTONS
118	WHEELCHAIR LIFT IN-CAR CONTROLS TO BE CENTERED IN CAB FOR ACCESSIBLE USE BY WHEELCHAIR FACING EITHER DIRECTION
240	PROVIDE CONTRASTING STRIPE AT TOP AND BOTTOM OF EACH STAIR RUN. SEE DETAIL 6/A862
701	CONCRETE SLAB ON GRADE, SEE STRUCTURAL DRAWINGS
702	DEPRESSED SLAB, SEE STRUCTURAL DRAWINGS
710	METAL STUD FRAMING, SEE STRUCTURAL DRAWINGS
803	LIGHT FIXTURE, SEE ELECTRICAL DRAWINGS

APPL No. A03-122864

DSA Stamp

Architect

RACHLIN PARTNERS
8640 National Boulevard
Culver City, CA 90232
310.204.3400

Disclaimer:

THESE DRAWINGS ARE THE PROPERTY OF THE ARCHITECT. THE DESIGNS SHOWN AND DESCRIBED HEREIN INCLUDING ALL TECHNICAL DRAWINGS ARE PROPRIETARY AND CANNOT BE COPIED, DUPLICATED OR COMMERCIALLY EXPLOITED EITHER IN WHOLE OR IN PART WITHOUT WRITTEN CONSENT AND SHALL NOT BE USED BY THE OWNER ON OTHER PROJECTS, FOR ADDITIONS TO THIS PROJECT, OR FOR COMPLETION OF THIS PROJECT BY OTHERS. THE OWNER AGREES TO HOLD HARMLESS, INDEMNIFY AND DEFEND THE ARCHITECT AGAINST ALL DAMAGES, CLAIMS AND LOSSES, INCLUDING DEFENSE COSTS, ARISING OUT OF ANY REUSE OF PLANS AND SPECIFICATIONS WITHOUT THE WRITTEN AUTHORIZATION OF THE ARCHITECT OF RECORD.

Copyright © 2022 Rachlin Partners, All Rights Reserved.

Performing Arts Center

Hacienda La Puente Unified School District
635 North California Avenue
La Puente, CA 91744

Rev	Date	Issue
1	7.22.22	50% DD
2	10.21.22	50% CD
3	12.09.22	100% CD DSA SUBMITTAL
4	6.19.23	100% CD DSA RESUBMITTAL
5	9.20.23	DSA BACK CHECK
6	11.01.23	ADDENDUM NO. 1
7	11.01.23	ADDENDUM NO. 2

Date: 11.01.2023
Scale: As indicated
Drawn By: JP, NZ
Checked By: RM

Architect / Engineer Stamp

Consultants
Miyamoto International, Inc.
The Ruzika Company, Inc.
MDC Consulting Engineers
Pocock Design Solutions
Newson Brown Acoustics, LLC
VCA Engineers, Inc.
HJSA Consulting

Sheet Title

Wheelchair Lift
Plans and Sections

Sheet Number

A541

C:\Users\rudy.monico\Documents\R22_HLPUSD-PAC_Central_rudy.monico.rvt

WINDOW TYPES

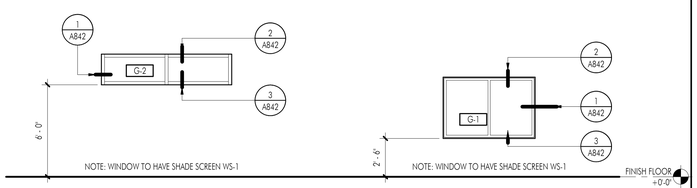

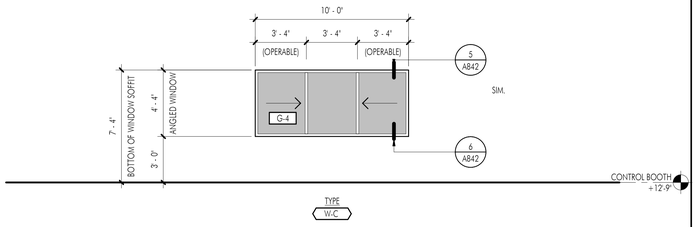

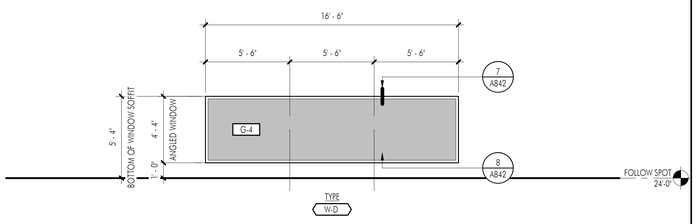

DOOR NOTES

1. EXIT DOORS SHALL BE OPENABLE FROM THE INSIDE WITHOUT USE OF A KEY OR ANY SPECIAL KNOWLEDGE OR EFFORT. (TITLE 24, SECTION 1008.1.9)
2. WIDTH AND HEIGHT OF REQUIRED EXIT DOORWAYS TO COMPLY WITH TITLE 24, SECTION 1008.1.1.
3. PROVIDE APPROVED PANIC HARDWARE ON REQUIRED EXIT DOORS. (TITLE 24, SECTIONS 1008.1.10)
4. EVERY REQUIRED DOORWAY SERVING AN OCCUPANT LOAD OF 10 OR MORE SHALL NOT BE LESS THAN 3'-0" WIDE & 6'-8" HIGH.
5. DOORS SHALL SWING IN THE DIRECTION OF EGRESS TRAVEL WHERE SERVING AN OCCUPANT LOAD OF 50 OR MORE PERSONS.
6. PROVIDE A LANDING WIDTH NOT LESS THAN THE WIDTH OF THE DOOR OR THE STAIR SERVED (WHICHEVER IS GREATER). DOORS FULLY OPEN SHALL NOT REDUCE THE WIDTH OF THE LANDING BY MORE THAN 7 INCHES.
7. UNDERCUT DOORS 1" WHERE INDICATED ON MECHANICAL DRAWINGS.
8. ACOUSTICAL PARTITION, SEE REFERENCED FRAME TYPE FOR REFERENCE TO DOOR DETAILS, AND MATERIAL LEGEND.
9. LATCHING AND LOCKING DOORS THAT ARE HAND ACTIVATED AND WHICH ARE ON AN ACCESSIBLE ROUTE, SHALL BE OPERABLE WITH A SINGLE EFFORT BY LEVER-TYPE HARDWARE, PANIC BARS, PUSH-PULL ACTIVATING BARS, OR OTHER HARDWARE DESIGNED TO PROVIDE PASSAGE WITHOUT REQUIRING THE ABILITY TO GRASP THE OPENING HARDWARE.
10. HAND-ACTIVATED DOOR OPENING HARDWARE SHALL BE CENTERED BETWEEN 34 INCHES AND 44 INCHES ABOVE THE FLOOR.
11. THE FLOOR OR LANDING ON EACH SIDE OF AN ENTRANCE OR PASSAGE DOOR SHALL BE LEVEL AND CLEAR. THE LEVEL AND CLEAR AREA SHALL HAVE A LENGTH IN THE DIRECTION OF THE DOOR SWING OF AT LEAST 60 INCHES AND THE LENGTH OPPOSITE THE DOOR SWING OF 48 INCHES AS MEASURED AT RIGHT ANGLES TO THE PLANE OF THE DOOR IN ITS CLOSED POSITION.
12. THE WIDTH OF THE LEVEL AND CLEAR ON THE SIDE TO WHICH THE DOOR SWINGS SHALL EXTEND 24 INCHES PAST THE STRIKE EDGE OF THE DOOR FOR OUTSWINGING, EXTERIOR DOORS AND 18 INCHES PAST THE STRIKE EDGE FOR INTERIOR DOORS.
13. THE FLOOR OR LANDING SHALL BE NOT MORE THAN 1/2 INCH LOWER THAN THE THRESHOLD OF THE DOORWAY. THE CHANGE IN LEVEL BETWEEN 1/4 INCH AND 1/2 INCH SHALL BE BEVELED WITH A SLOPE NO GREATER THAN 1:2, CBC 11B-404.2.5.
14. THE BOTTOM 10 INCHES OF ALL DOORS EXCEPT AUTOMATIC AND SLIDING DOORS SHALL HAVE A SMOOTH AND UNINTERRUPTED SURFACE TO ALLOW THE DOOR TO BE OPENED BY A WHEELCHAIR FOOTREST WITHOUT CREATING A TRAP OR HAZARDOUS CONDITION. WHERE NARROW FRAME DOORS ARE USED, A 10 INCH HIGH SMOOTH PANEL SHALL BE INSTALLED ON THE PUSH SIDE OF THE DOOR, WHICH WILL ALLOW THE DOOR TO BE OPENED BY A WHEELCHAIR FOOTREST WITHOUT CREATING A HAZARDOUS CONDITION PER CBC 11B-404.2.10.
15. MAXIMUM EFFORT TO OPERATE DOORS SHALL NOT EXCEED 5 LBS. FOR EXTERIOR DOORS AND 5 LBS. FOR INTERIOR DOORS. SUCH PUSH OR PULL EFFORT BEING APPLIED AT RIGHT ANGLES TO HINGED DOORS AND AT THE CENTER PLANE OF SLIDING OR FOLDING DOORS. COMPENSATING DEVICES OR AUTOMATIC OPENERS MAY BE UTILIZED TO MEET THE ABOVE STANDARDS. WHEN FIRE DOORS ARE REQUIRED, THE AUTHORITY HAVING JURISDICTION, MAY INCREASE THE MAXIMUM EFFORT TO OPERATE FIRE DOORS TO ACHIEVE POSITIVE LATCHING, BUT NOT TO EXCEED 15 LBS MAX. PER CBC 11B-404.2.9.

DOOR TYPES

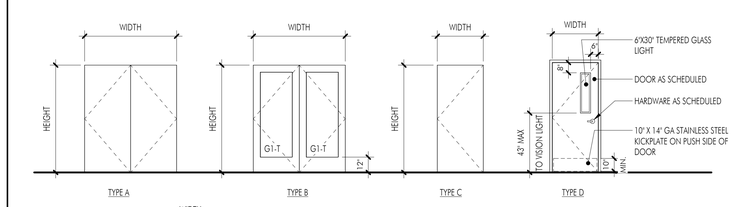

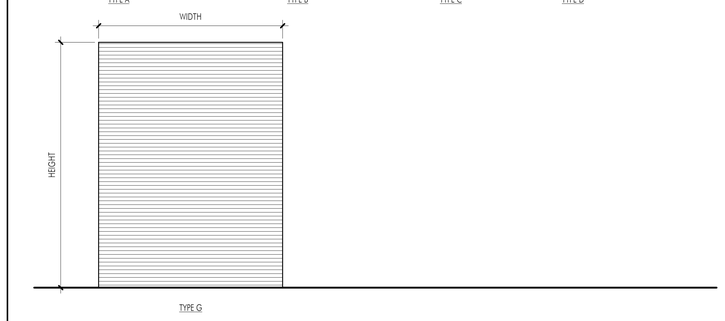

FRAME TYPES

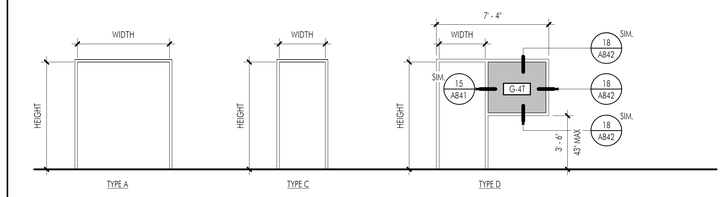

GATE TYPES

GLASS LEGEND

SYMBOL	MATERIAL	MANUFACTURER	COLOR/FINISH	REMARKS
G-1	GLASS	AS SPECIFIED	GREEN (EVERGREEN)	INSULATED TINTED GLASS, LOW E COATING
G-1S	GLASS	AS SPECIFIED	GREEN (EVERGREEN)	INSULATED TINTED GLASS, LOW E COATING
G-1T	GLASS	AS SPECIFIED	GREEN (EVERGREEN)	INSULATED TINTED GLASS, LOW E COATING, TEMPERED
G-2	GLASS	AS SPECIFIED	GREEN (EVERGREEN)	INSULATED TINTED GLASS, LOW E COATING WITH SANDBLAST
G-3	GLASS	AS SPECIFIED	CLEAR	9/16" CLEAR LAMINATED GLASS
G-4	GLASS	AS SPECIFIED	CLEAR	CLEAR FLOAT GLASS
G-4T	GLASS	AS SPECIFIED	CLEAR	CLEAR TEMPERED GLASS
G-5	GLASS	AS SPECIFIED	GREEN (EVERGREEN)	LAMINATED GLASS
G-6	GLASS	AS SPECIFIED	YELLOW TO MATCH PAINT P-5	LAMINATED GLASS
G-6T	GLASS	AS SPECIFIED	YELLOW TO MATCH PAINT P-5	LAMINATED GLASS

DOOR SCHEDULE

	DOOR						FRAME									
NUMBER	TYPE	HARDWARE GROUP	WIDTH	HEIGHT	MATERIAL	FINISH	TYPE	HEAD	JAMB	THRESHOLD	MATERIAL	FINISH	RO/MO WIDTH	RO/MO HEIGHT	FIRE RATING	COMMENTS
D101A	B	01	6' - 0"	7' - 8 3/4"	ALUM	SF-1	B	13/A841	15/A841	14/A841	ALUM					PANIC HARDWARE
D101B	B	01	6' - 0"	7' - 8 3/4"	ALUM	SF-1	B	13/A841	15/A841	14/A841	ALUM					PANIC HARDWARE
D101C	B	01	6' - 1"	7' - 8 3/4"	ALUM	SF-1	B	13/A841	15/A841	14/A841	ALUM					PANIC HARDWARE
D101D	B	01	6' - 1"	7' - 8 3/4"	ALUM	SF-1	B	13/A841	15/A841	14/A841	ALUM					PANIC HARDWARE
D101E	B	01	6' - 0"	7' - 8 3/4"	ALUM	SF-1	B	13/A841	15/A841	14/A841	ALUM					PANIC HARDWARE
D101F	B	01	6' - 0"	7' - 8 3/4"	ALUM	SF-1	B	13/A841	15/A841	14/A841	ALUM					PANIC HARDWARE
D103A	C	12	3' - 0"	7' - 2"	HM		C	6/A841	6/A841	18/A841	HM		3'-4"	7'-4"		
D105A	C	12	3' - 0"	7' - 2"	HM		C	6/A841	6/A841	18/A841	HM		3'-4"	7'-4"		
D106A	D	15	3' - 6"	7' - 2"	HM		-	-	-	-	HM				60	DOOR AND FRAME BY LIFT MANUFACTURER
D107A	C	18	3' - 0"	7' - 2"	HM		C	1/A841	2/A841	17/A841	HM		3'-4"	7'-4"	60	
D108A	A	19	6' - 0"	7' - 10"	HM	P-3	A	5/A841	5/A841	17/A841	HM	P-3	6'-4"	7'-8"		PANIC HARDWARE
D108B	A	22	6' - 0"	7' - 10"	HM	P-1	A	5/A841	5/A841	17/A841	HM	P-1	6'-4"	8'-0"		
D108C	C	06	3' - 0"	7' - 2"	HM		C	1/A841	2/A841	17/A841	HM		3'-4"	7'-4"	60	
D109A	C	18	3' - 0"	7' - 2"	HM		C	1/A841	2/A841	17/A841	HM		3'-4"	7'-4"	60	
D110A	A	02	6' - 0"	7' - 10"	HM	P-1	A	3/A841	4/A841	14/A841	HM	P-1	6'-8 3/8"	8'-0"		PANIC HARDWARE
D110B	A	02	6' - 0"	7' - 10"	HM	P-1	A	3/A841	4/A841	14/A841	HM	P-1	6'-8 3/8"	8'-0"		PANIC HARDWARE
D111A	C	06	3' - 0"	7' - 2"	HM		C	6/A841	6/A841	17/A841	HM		3'-4"	7'-4"	60	
D112A	C	06	3' - 0"	7' - 2"	HM		C	11/A841	12/A841	18/A841	HM					
D112B	C	06	3' - 0"	7' - 2"	HM		C	11/A841	12/A841	18/A841	HM				60	
D113A	C	11	3' - 0"	7' - 2"	HM		C	11/A841	12/A841	18/A841	HM				60	
D114A	C	06	3' - 0"	7' - 2"	HM		C	11/A841	12/A841	18/A841	HM				60	
D114B	C	06	3' - 0"	7' - 2"	HM		C	11/A841	12/A841	18/A841	HM					
D115A	C	06	3' - 0"	7' - 2"	HM		C	6/A841	6/A841	17/A841	HM		3'-4"	7'-4"	60	
D116A	C	06	3' - 0"	7' - 2"	HM	P-1	C	1/A841	2/A841	17/A841	HM	P-1	3'-4"	7'-4"	60	
D118A	C	06	3' - 0"	7' - 2"	HM		C	1/A841	2/A841	17/A841	HM		3'-4"	7'-4"	60	
D119A	C	10	3' - 0"	7' - 2"	HM		C	1/A841	2/A841	3/A866	HM		3'-4"	7'-4"		
D119B	G	23	16' - 0"	16' - 0"	STL	F	-	7/A841	8/A841	3/A866	STL	F	16'-0"	16'-0"	90	TO BE FACTORY PAINTED RAL 9011
D119C	C	09	3' - 0"	7' - 2"	HM		C	1/A841	2/A841	3/A866	HM		3'-4"	7'-4"	60	PANIC HARDWARE
D119D	C	09	3' - 0"	7' - 2"	HM		C	1/A841	2/A841	3/A866	HM		3'-4"	7'-4"	60	PANIC HARDWARE
D120A	C	09	3' - 0"	7' - 2"	HM		C	1/A841	2/A841	3/A866	HM		3'-4"	7'-4"	60	PANIC HARDWARE
D120B	C	09	3' - 0"	7' - 2"	HM		C	1/A841	2/A841	3/A866	HM		3'-4"	7'-4"	60	PANIC HARDWARE
D122A	A	19	6' - 0"	7' - 10"	HM	P-3	A	5/A841	5/A841	17/A841	HM	P-3	6'-4"	8'-0"		PANIC HARDWARE
D122B	A	22	6' - 0"	7' - 10"	HM	P-1	A	5/A841	5/A841	17/A841	HM	P-1	6'-4"	8'-0"		
D122C	C	06	3' - 0"	7' - 2"	HM		C	1/A841	2/A841	17/A841	HM		3'-4"	7'-4"	60	
D124A	C	04	3' - 0"	7' - 2"	HM		C	3/A841	4/A841	14/A841	HM		3'-4"	8'-0"		
D125A	C	16	3' - 0"	7' - 2"	HM		C	1/A841	2/A841	17/A841	HM		3'-4"	7'-4"	60	
D126A	G	23	6' - 0"	8' - 0"	STL	F	-	7/A841	8/A841	17/A841	STL	F	7'-8"	8'-0"	60	TO BE PAINTED RAL 9006
D127A	A	05	6' - 0"	7' - 10"	HM	P-1	A	3/A841	4/A841	14/A841	HM	P-1	6'-4"	8'-0"		
D128A	C	24	3' - 0"	7' - 2"	HM		C	1/A841	2/A841	17/A841	HM		3'-4"	7'-4"		
D129A	C	24	3' - 0"	7' - 0"	HM	P-3	D	11/A841	12/A841	17/A841	HM	P-3				
D130A	A	13	6' - 4"	7' - 2"	HM	P-1	A	11/A841	12/A841	17/A841	HM	P-1				
D131A	G	23	16' - 0"	16' - 0"	STL	F	-	7/A841	8/A841	17/A841	STL	F	16'-0"	16'-0"	90	TO BE PAINTED RAL 9006
D131B	G	23	16' - 0"	16' - 0"	STL	F	-	7/A841	8/A841	14/A841	STL	F	16'-0"	16'-0"		TO BE PAINTED RAL 9006
D131C	C	03	3' - 0"	7' - 2"	HM		C	3/A841	4/A841	14/A841	HM		3'-4"	7'-4"		PANIC HARDWARE
D131D	C	08	3' - 0"	7' - 0"	HM	P-3	D	1/A841	2/A841	17/A841	HM	P-3	3'-4"	7'-4"	60	
D132	A	14	6' - 0"	7' - 10"	HM	P-1	A	1/A841	2/A841	17/A841	HM	P-1	6'-4"	8'-0"		
D201A	A	20	6' - 4"	7' - 2"	HM		A	11/A841	12/A841	17/A841	HM					PANIC HARDWARE
D201B	A	21	6' - 4"	7' - 2"	HM		A	11/A841	12/A841	17/A841	HM					PANIC HARDWARE
D203A	C	08	3' - 0"	7' - 2"	HM		C	11/A841	12/A841	17/A841	HM					
D203B	C	17	3' - 0"	7' - 2"	HM		C	11/A841	12/A841	17/A841	HM					
D204A	C	07	3' - 0"	7' - 2"	HM		C	11/A841	12/A841	17/A841	HM					
D205A	C	15	3' - 0"	7' - 2"	HM		C	11/A841	12/A841	17/A841	HM					
D205B	D	15	3' - 6"	7' - 2"	HM		A	-	-	-	HM				60	DOOR AND FRAME BY LIFT MANUFACTURER
D206A	D	15	3' - 6"	7' - 2"	HM		C	-	-	-	HM		3'-4"	7'-4"	60	DOOR AND FRAME BY LIFT MANUFACTURER
D207A	C	16	3' - 0"	7' - 2"	HM		C	1/A841	2/A841	17/A841	HM		3'-4"	7'-4"		
D209A	C	16	3' - 0"	7' - 2"	HM		C	1/A841	2/A841	17/A841	HM		3'-4"	7'-4"		
D210A	C	18	3' - 0"	5' - 2"	HM		C	3/A841	4/A841		HM		3'-4"	7'-4"		ROOF ACCESS DOOR
D301A	C	18	3' - 0"	7' - 2"	HM		C	11/A841	12/A841	17/A841	HM					
D302A	C	16	3' - 0"	7' - 2"	HM	P-4	C	1/A841	2/A841	17/A841	HM	P-4	3'-4"	7'-4"		
D302B	C	16	3' - 0"	7' - 2"	HM		C	1/A841	2/A841	17/A841	HM		3'-4"	7'-4"		
D302C	C	25	3' - 0"	7' - 2"	ALUM		C	3/A841	4/A841		HM		3'-4"	7'-4"		ROOF ACCESS DOOR
G-1	J	26	2' - 8"		STL	P-4	-				-	-	-	-		
G-2	J	26	2' - 8"		STL	P-4	-				-	-	-	-		
G-3	J	26	2' - 8"		STL	P-4					-	-	-	-		
G-4	J	26	2' - 8"		STL	P-4					-	-	-	-		
G-5	J	26	2' - 8"		STL	P-4										

WINDOW SCHEDULE

WINDOW			FRAME				REMARKS	
NUMBER	TYPE	GLAZING TYPE	MATERIAL	FINISH	FIRE RATING IN MINUTE	WINDOW COVERING	HM = HOLLOW METAL (FILL CAVITY WITH INSULATION AT INTERIOR FRAMES ALUM = ALUMINUM RS = ROLLER SHADE	P = PAINT 1 = OPERABLE WINDOW TO PROJECT NOT MORE THAN 4" BEYOND FACE OF MULLION SYSTEM
W111A	W-A	G-2	HM	P				
W115A	W-A	G-2	HM	P				
W118A	W-A	G-1	HM	P		RS		RS
W129A	W-B	G-4T	HM	P		RS		RS
W203A	W-C	G-4	HM	P				
W204A	W-C	G-4	HM	P				
W301A	W-D	G-4T	HM	P				

APPL No. A03-122864

DSA Stamp

Architect

RACHLIN PARTNERS
8640 National Boulevard
Culver City, CA 90232
310.204.3400

Disclaimer:

THESE DRAWINGS ARE THE PROPERTY OF THE ARCHITECT. THE DESIGNS SHOWN AND DESCRIBED HEREIN INCLUDING ALL TECHNICAL DRAWINGS ARE PROPRIETARY AND CANNOT BE COPIED, DUPLICATED OR COMMERCIALLY EXPLOITED IN ANY WAY. THEY ARE NOT TO BE CHANGED OR COPIED AND SHALL NOT BE USED BY THE OWNER ON OTHER PROJECTS, FOR ADDITIONS TO THIS PROJECT, OR FOR COMPLETION OF THIS PROJECT BY OTHERS. THE OWNER AGREES TO HOLD HARMLESS, INDEMNIFY AND DEFEND THE ARCHITECT AGAINST ALL DAMAGES, CLAIMS AND LOSSES, INCLUDING DEFENSE COSTS, ARISING OUT OF ANY REUSE OF PLANS AND SPECIFICATIONS WITHOUT THE WRITTEN AUTHORIZATION OF THE ARCHITECT OF RECORD.

Copyright © 2022 Rachlin Partners, All Rights Reserved.

Performing Arts Center

Hacienda La Puente Unified School District
635 North California Avenue
La Puente, CA 91744

Rev	Date	Issue
1	7.22.22	50% DD
2	10.21.22	50% CD
3	12.09.22	100% CD DSA SUBMITTAL
4	6.19.23	100% CD DSA RESUBMITTAL
5	9.20.23	DSA BACK CHECK
6	11.01.23	ADDENDUM NO. 1
7	11.01.23	ADDENDUM NO. 2
8	12.15.23	ADDENDUM NO. 3

Date: 11.01.2023
Scale: As indicated
Drawn By: JP, NZ
Checked By: RM

Architect / Engineer Stamp

LICENSED ARCHITECT
RICHARD MICHALSKI
NO. C-26225
REN. 8-31-25
STATE OF CALIFORNIA

Consultants

Miyamoto International, Inc.
The Ruzika Company, Inc.
MDC Consulting Engineers
Pocock Design Solutions
Newson Brown Acoustics, LLC
VCA Engineers, Inc.
HJSA Consulting

Sheet Title

Door and Window Schedules

Sheet Number

A611

C:\Users\Rudy.Monroy\Documents\R22_HEPUSD PAC_Central_Rudy.Monroy.rvt

MATERIAL LEGEND

SYMBOL	MATERIAL FINISH	MANUFACTURER	COLOR/FINISH	REMARKS
AP-1	ACOUSTIC WALL PANELS	RPG ACOUSTICAL SYSTEMS	BAD PANEL CUSTOM COLOR TO MATCH P-4	3" THICK
C-1	CONCRETE	GENERAL CONTRACTOR	NATURAL	POURED IN PLACE
C-2	CONCRETE	GENERAL CONTRACTOR	STAINED AND POLISHED BLACK POLISH	SEE SPECIFICATIONS SECTION 03 3543
C-3	CONCRETE	GENERAL CONTRACTOR	SEALED	SEE SPECIFICATIONS SECTION 09 9100
CA-1	CARPET	TANDUS	SURI 44043, FELT NOIR 38201	ANTI-STATIC, DENSE SHORT NAP ADHERED
CB-1	CONCRETE BLOCK	ORCO BLOCK COMPANY	GRAY PRECISION BLOCK	
CP-1	CEMENT PLASTER	LA HABRA	SMOOTH FINISH	PAINTED P-1
CP-2	CEMENT PLASTER	LA HABRA	SMOOTH FINISH	PAINTED P-2
CP-3	CEMENT PLASTER	LA HABRA	SMOOTH FINISH	PAINTED P-5
FP-1	FIBERGLASS ACOUSTIC PANELS	JOHN'S MANVILLE	INSULSHIELD BLACK-FACED ROLLS	3" THICK
FRP-1	FIBERGLASS REINFORCED PANELS	MARLITE	SMOOTH S 490N LIGHT GREY	BEHIND SERVICE SINK AT CUSTODIAL
MS-1	METAL SCREEN	MORIN	PULSE P-3 - PERFORATED COLOR: ZINC GRAY	1/8" HOLE 3/16" SPACING 40% OPEN AREA
P-1	PAINT	DUNN EDWARDS	DET617 WINTER MORN	INTERIOR ELASTOMERIC PAINT AT EXTERIOR: CP-1
P-2	PAINT	DUNN EDWARDS	DET 625 RECLAIMED WOOD	INTERIOR ELASTOMERIC PAINT AT EXTERIOR: CP-2 AND EXPOSED STEEL
P-3	PAINT	DUNN EDWARDS	DET 629 FADE TO BLACK	INTERIOR
P-4	PAINT	DUNN EDWARDS	DE6350 DARK ENGINE	INTERIOR
P-5	PAINT	DUNN EDWARDS	DE5319 LION'S MANE	INTERIOR ELASTOMERIC PAINT AT EXTERIOR: CP-3
P-6	PAINT	DUNN EDWARDS	DEW383 COOL DECEMBER	INTERIOR
PL-1	PLASTIC LAMINATE	NEVAMAR	VOUS TEMPEST - V56002T	DRESSING ROOM AND CONTROL BOOTH COUNTER TOPS
PL-2	PLASTIC LAMINATE	NEVAMAR	SUNRAY S4022T	FACE OF CABINETS AND PANELS AT GUARDRAILS IN THEATER
RB-1	RUBBER WALL BASE	JOHNSONITE	24 GRAY HAZE	
RB-2	RUBBER WALL BASE	JOHNSONITE	195 ASH	
RB-3	RUBBER WALL BASE	JOHNSONITE	20 CHARCOAL	
RB-4	RUBBER VENT COVE WALL BASE	.....	BLACK	STAGE
RB-5	RUBBER WALL BASE	JOHNSONITE	TBS SUNSPOT	
RB-6	RUBBER WALL BASE	JOHNSONITE	40 BLACK	
SF-1	ALUMINUM CURTAIN WALL	ARCADIA	COLOR TBD	DEFERRED APPROVAL
SS-1	SOLID SURFACE COUNTERTOP	CAMBRIA	JEWEL COLLECTION, WHITNEY 0115	RESTROOMS
T-1	PORCELAIN TILE	DALTILE, KEYSTONES	BLACK, D311	2"X2" FLOOR TILE
T-2	CERAMIC TILE	DALTILE, COLOR WHEEL LINEAR	ARCTIC WHITE 0190	4"X12" WALL TILE, 4"X12" COVE BASE
T-3	CERAMIC TILE	DALTILE, COLOR WHEEL LINEAR	MUSTARD 1012	4"X12" WALL TILE, 4"X12" COVE BASE
VCT-1	VINYL COMPOSITION TILE	TBD	TBD	EQUAL PERCENTAGE EACH COLOR, RANDOMLY DISTRIBUTED W/ NO MORE THAN 2 OF THE SAME COLOR ADJACENT TO ONE ANOTHER IN THE SAME LINEAR ROW
W-1	WOOD STAGE FLOORING	.....	BLACK	FINISH PER SPECIFICATIONS SECTION 09 9456
WB-1	WOOD WALL BASE	GENERAL CONTRACTOR	HARDWOOD PAINTED TO MATCH ADJACENT WALL	RECESSED, SEE DETAIL 8/A865
WP-1	WOOD PANEL GRILLE	RULON COMPANY	PANEL GRILLE PG 6-12-37WD SPECIES: MAPLE, FINISH SATIN CLEAR	FLEX DOWEL, WOOD BACKED. SEE SPECIFICATIONS
WS-1	WINDOW SHADES	MECHO SHADE	WHITE	

NOTES:
ALL FINISHES SHALL COMPLY WITH CBC, CFC, AND TITLE 19 CCR.
ALL INTERIOR FINISHES SHALL BE HAVE A MINIMUM CLASS C FIRE RATING PER 2019 CBC TABLE 803.13
SAFETY GLAZING SHALL BE IDENTIFIED IN ACCORDANCE WITH CBC 2406.3

FINISH SCHEDULE

NUMBER	TITLE	FLOOR	BASE	NORTH	EAST	SOUTH	WEST	BEAMS	CEILINGS	FIN. HEIGHT	COMMENTS
001	RIGGING PIT	C-3	RB-6	P-4	P-4	P-4	P-4				
101	LOBBY	C-2	RB-1/RB-5	P-1	P-1	P-1	P-1	P-4	P-4/P-6	22'-4"	SEE ELEVATIONS FOR MORE INFROMATION. ALL EXPOSED STUDS, DECK AND BEAMS P-4. COLUMNS AND HORIZONTAL GIRTS P-1
102	VESTIBULE	C-2	RB-1	P-1	P-1	P-1	P-1	P-4	WP-1/P-4	9'-3"	SEE ELEVATIONS FOR MORE INFROMATION. EXPOSED DECK P-4
103	MEN'S RESTROOM	T-1	T-2/T-3	T-2	T-2/T/3	T-2	T-2	-	P-6	8'-4"	SEE ELEVATIONS FOR MORE INFORMATION
104	VESTIBULE	C-2	RB-1	P-1	P-1	P-1	P-1	P-4	WP-1/P-4	9'-3"	SEE ELEVATIONS FOR MORE INFROMATION. EXPOSED DECK P-4
105	WOMEN'S RESTROOM	T-1	T-2/T-3	T-2	T-2/T/3	T-2	T-2	-	P-6	8'-4"	SEE ELEVATIONS FOR MORE INFORMATION
106	LIFT	C-3	RB-1	P-1	P-1	P-1	P-1	P-4	P-4	23'-8"	
107	BOX BOOM ACCESS	C-3	RB-1	P-1	P-1	P-1	P-1	P-4	P-4	11'-8"	
108	VESTIBULE	C-2	RB-1	P-1	P-1	P-1	P-1	-	P-6	9'-0"	
109	BOX BOOM ACCESS	C-3	RB-1	P-1	P-1	P-1	P-1	P-4	P-4	11'-8"	
110	CORRIDOR	C-3	RB-2	P-2/P-4	P-2/P-4	P-2/P-4	P-2/P-4	P-4	P-4	VARIES	PAINT WALLS P-2 UP TO 16'-0", P-4 ABOVE
111	WOMEN'S DRESSING	VCT-1	RB-2/RB/5	P-2	P-2	P-5	P-2	-	P-6	12'-0"	
112	WOMEN'S TOILET	T-1	T-2/T-3	T-2	T-2	T-2	T-3	-	P-6	9'-0"	
112A	WOMEN'S VESTIBULE	T-1	T-2	T-2	T-2	T-2	T-2	-	P-6	9'-0"	
113	GENDER NEUTRAL TOILET	T-1	T-2/T-3	T-2	T-2	T-3	T-2	-	P-6	9'-0"	
114	MEN'S TOILET	T-1	T-2/T-3	T-2	T-3	T-2	T-2	-	P-6	9'-0"	
114A	MEN'S VESTIBULE	T-1	T-2	T-2	T-2	T-2	T-2	-	P-6	9'-0"	
115	MEN'S DRESSING	VCT-1	RB-2/RB/5	P-2	P-2	P-5	P-2	-	P-6	12'-0"	
116	LIFT VISTIBULE	C-2	RB-1	P-1	P-1	P-1	P-1	-	P-6	8'-0"	
118	GREEN ROOM / FLEX SPACE	VCT-1	RB-2	P-2	P-2	P-2	P-2	P-4	P-4	VARIES	
119	STAGE	W-1	RB-4	P-4	P-4	P-4	P-4	P-4	P-4/FP-1	49'-9 1/2"	
120	ORCHESTRA LEVEL	C-2/C-3	WB-1	-	-	-	-	P-4	P-4/P-5	38'-0"	REFER TO INTERIOR ELEVATIONS FOR FINISHES, EXPOSED DECK TO BE P-4
121	PARTERRE LEVEL	C-3	WB-1	-	-	-	-	P-4	P-4/P-5	38'-0"	REFER TO INTERIOR ELEVATIONS FOR FINISHES, EXPOSED DECK TO BE P-4
122	VESTIBULE	C-2	RB-1	P-1	P-1	P-1	P-1	-	P-6	9'-0"	
124	FIRE RISER	C-3	RB-2	P-2	P-2	P-2	P-2	P-4	P-4	VARIES	
125	CUSTODIAL	C-3	RB-2	P-2/FRP-1	P-2	P-2	P-2/FRP-1	P-4	P-4	VARIES	5'-0" HIGH FRP BEHIND SERVICE SINK
126	PIANO STORAGE	C-3	RB-2	P-2	P-2	P-2	P-2	P-4	P-4	VARIES	
127	ELECTRICAL	C-3	RB-2	P-2	P-2	P-2	P-2	P-4	P-4	VARIES	
128	MDF	C-3	RB-2	P-2	P-2	P-2	P-2	P-4	P-4	VARIES	
129	OFFICE	C-3	RB-2/RB/5	P-2	P-2	P-2	P-5	-	P-6	9'-0"	
130	STORAGE	C-3	RB-2	P-2	P-2	P-2	P-2	P-4	P-4	VARIES	
131	SHOP	C-3	RB-2	P-2/P-4	P-2/P-4	P-2/P-4	P-2/P-4	P-4	P-4	VARIES	PAINT WALLS P-2 UP TO 16'-0", P-4 ABOVE
132	TOOLS	C-3	RB-2	P-2	P-2	P-2	P-2	P-4	P-4	VARIES	
201	VESTIBULE	C-3	RB-1	P-1	P-1	P-1	P-1	-	P-6	9'-0"	
202	STAIR	C-3	RB-5	P-5	P-5	P-5	P-5	P-4	P-4/P-6	22'-4"	
203	AV CONTROL BOOTH	CA-1	RB-4	P-4	P-4	P-4	P-4	-	P-4	8'-2"	
204	LIGHTING CONTROL / RACK ROOM	CA-1	RB-4	P-4	P-4	P-4	P-4	-	P-4	8'-2"	
205	WHEELCHAIR LIFT	C-3	RB-1	P-1	P-1	P-1	P-1	P-4	P-4	23'-8"	
206	VESTIBULE	CA-1	RB-5	P-5	P-5	P-5	P-5	-	P-6	9'-0"	
207	BOX BOOM ACCESS	C-3	RB-4	P-4	P-4	P-4	P-4	P-4	P-4	11'-2"	
208	BOX BOOM	C-3	RB-4	P-4	P-4	P-4	P-4	-	P-4	8'-3"	
209	BOX BOOM	C-3	RB-4	P-4	P-4	P-4	P-4	P-4	P-4	26-0"	
210	BOX BOOM	C-3	RB-4	P-4	P-4	P-4	P-4	P-4	P-4	VARIES	
301	FOLLOW SPOT	C-3	RB-4	P-4	P-4	P-4	P-4	P-4	P-4	14'-0"	
302	CATWALK ACCESS	C-3	RB-4	P-4	P-4	P-4	P-4	P-4	P-4	14'-6"	
303	CATWALK	-	-	-	-	-	-	-	-	-	CATWALK FLOORS, RAILS, STUCTURAL SUPPORTS AND ALL ATTACHED ITEMS PAINTED BLACK

APPL No. A03-122864

DSA Stamp

Architect

RACHLIN PARTNERS
8640 National Boulevard
Culver City, CA 90232
310.204.3400

Disclaimer:
THESE DRAWINGS ARE THE PROPERTY OF THE ARCHITECT. THE DESIGNS SHOWN AND DESCRIBED HEREIN INCLUDING ALL TECHNICAL DRAWINGS ARE PROPRIETARY AND CANNOT BE COPIED, DUPLICATED OR COMMERCIALLY EXPLOITED IN ANY WAY. THEY ARE NOT TO BE CHANGED OR COPIED AND SHALL NOT BE USED BY THE OWNER ON OTHER PROJECTS, FOR ADDITIONS TO THIS PROJECT, OR FOR COMPLETION OF THIS PROJECT BY OTHERS. THE OWNER AGREES TO HOLD HARMLESS, INDEMNIFY AND DEFEND THE ARCHITECT AGAINST ALL DAMAGES, CLAIMS AND LOSSES, INCLUDING DEFENSE COSTS, ARISING OUT OF ANY REUSE OF PLANS AND SPECIFICATIONS WITHOUT THE WRITTEN AUTHORIZATION OF THE ARCHITECT OF RECORD.

Copyright © 2022 Rachlin Partners, All Rights Reserved.

Performing Arts Center
Hacienda La Puente Unified School District
635 North California Avenue
La Puente, CA 91744

Rev	Date	Issue
1	7.22.22	50% DD
2	10.21.22	50% CD
3	12.09.22	100% CD DSA SUBMITTAL
4	6.19.23	100% CD DSA RESUBMITTAL
5	9.20.23	DSA BACK CHECK
6	11.01.23	ADDENDUM NO. 1
7	11.01.23	ADDENDUM NO. 2
8	12.15.23	ADDENDUM NO. 3

Date: 11.01.2023
Scale: 12" = 1'-0"
Drawn By: JP, NZ
Checked By: RM

Architect / Engineer Stamp

LICENSED ARCHITECT
LONDON PEACOCK
NO. C-26229
REN. 8-31-25
STATE OF CALIFORNIA

Consultants
Miyamoto International, Inc.
The Ruzika Company, Inc.
MDC Consulting Engineers
Pocock Design Solutions
Newson Brown Acoustics, LLC
VCA Engineers, Inc.
HJSA Consulting

Sheet Title

Finish Schedule and Material Legend

Sheet Number

A621

C:\Users\rudy.monico\Documents\M22_HLPUSD-PAC_Central_rudy.monico.rvt

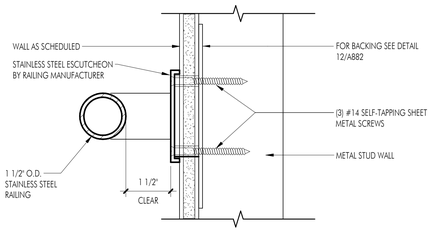

2 GRAB BAR AT METAL STUD WALL

SCALE: 6" = 1'-0"

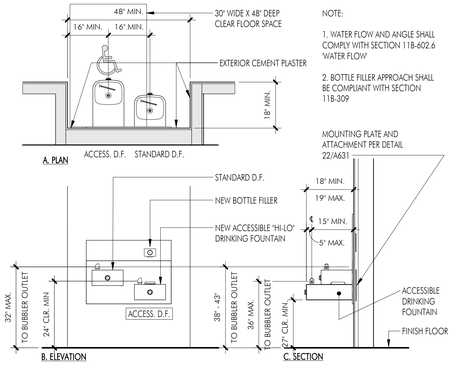

3 DRINKING FOUNTAIN IN ALCOVE

SCALE: 1/2" = 1'-0"

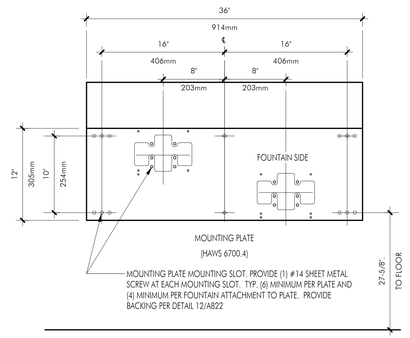

4 DRINKING FOUNTAIN MOUNTING BRACKET

SCALE: 1 1/2" = 1'-0"

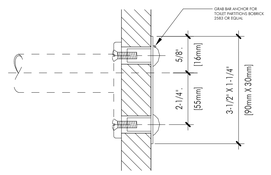

5 PARTITION-MOUNTED GRAB BAR

SCALE: 6" = 1'-0"

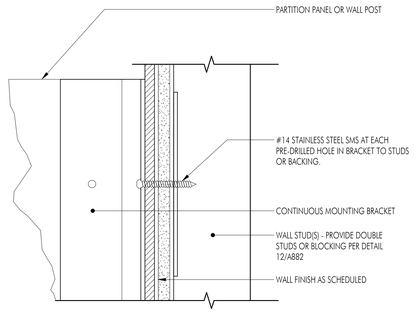

PARTITION ANCHORAGE TO WALL

1A

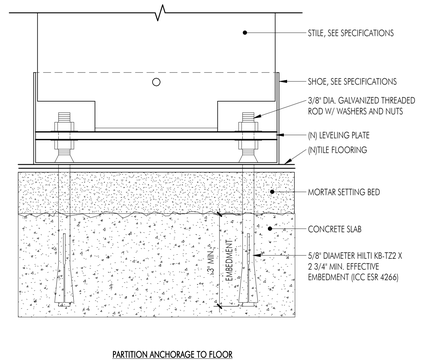

PARTITION ANCHORAGE TO FLOOR

1B

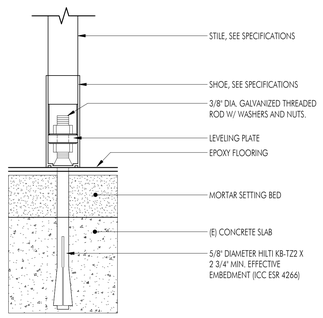

PARTITION ANCHORAGE TO FLOOR

1C

1 TOILET PARTITION ANCHORAGE

SCALE: 6" = 1'-0"

TOILET ACCESSORIES SCHEDULE

TYPE	DESCRIPTION	MANUFACTURER	FINISH	REMARKS
A1	FLOOR-MOUNTED, OVERHEAD BRACED TOILET PARTITIONS	SCRANTON PRODUCTS HINY HIDERS	STAINLESS EX	STAINLESS STEEL HARDWARE. ACCESSIBLE STALLS. PROVIDE BACKING PER 12/A882 TO RECEIVE SLIDE BOLT LATCH SELF-CLOSING DOOR AND ACCESSIBLE JAMB. SEE DETAIL 1/A631 FOR ANCHORAGE.
A2	WALL-HUNG URINAL SCREEN	SCRANTON PRODUCTS HINY HIDERS	STAINLESS EX	STAINLESS STEEL HARDWARE. CUSTOM SIZE 48" X 24". SEE DETAIL 1/A631 FOR ANCHORAGE.
B1	GRAB BAR	BOBRICK B-5806	STAINLESS STEEL WITH SATIN FINISH	36", SNAP FLANGE, 1 1/4" DIAMETER. PROVIDE BACKING PER 12/A882
B2	GRAB BAR	BOBRICK B-5806	STAINLESS STEEL WITH SATIN FINISH	36", SNAP FLANGE, 1 1/4" DIAMETER.
C	MIRROR WITH STAINLESS STEEL CHANNEL FRAME	BOBRICK B-290	STAINLESS STEEL FRAME	24" X 36"
D	SURFACE-MOUNTED MULTI-ROLL TOILET TISSUE DISPENSER	BOBRICK B-4288	SATIN STAINLESS STEEL	2 PER STALL
E	RECESSED MULTI-ROLL TOILET TISSUE DISPENSER	BOBRICK B-4388	SATIN STAINLESS STEEL	2 PER STALL
F	SOAP DISPENSER	BOBRICK B-2111	SATIN STAINLESS STEEL	
G	PAPER TOWEL AND TRASH RECEPTACLE	BOBRICK B-3944	SATIN STAINLESS STEEL	
H	TOILET SEAT COVER DISPENSER	BOBRICK B-4221	SATIN STAINLESS STEEL	MOUNT 60" AT REGULAR STALL MOUNT 44" AT REGULAR STALL
J	CLOTHES HOOK	BOBRICK B-6827	STAINLESS STEEL WITH SATIN FINISH	
N	SURFACE-MOUNTED SANITARY NAPKIN DISPOSAL	BOBRICK B-270	STAINLESS STEEL WITH SATIN FINISH	TO BE INSTALLED AT EACH NON-ACCESSIBLE STALL IN GIRLS'S TOILETS
P	RECESSED-MOUNTED SANITARY NAPKIN (ACCESSIBLE)	BOBRICK B-353	STAINLESS STEEL WITH SATIN FINISH	TO BE INSTALLED AT EACH ACCESSIBLE STALL IN GIRLS'S AND UNISEX TOILETS

TOILET ROOM FIXTURE AND ACCESSORY CLEARANCES AND HEIGHTS SCHEDULE

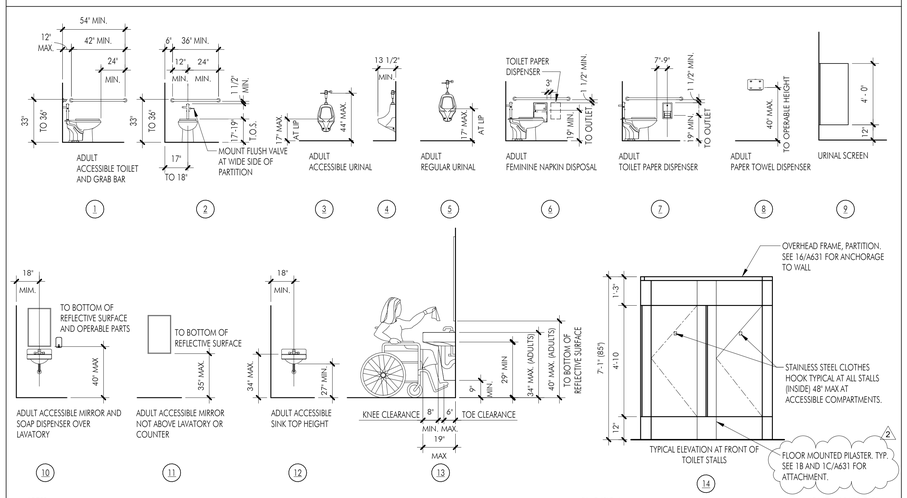

NOTES:

1. SEE PLANS AND INTERIOR ELEVATIONS FOR SIZE, LOCATION AND SPECIAL CONDITIONS. NOTE, DIMENSIONS FOR STAFF AND FOR STUDENTS VARY.
2. SEE PLUMBING DRAWINGS FOR MANUFACTURER.
3. VERIFY ALL ACCESSORY SIZES AND DIMENSIONS WITH APPROVED MANUFACTURER'S SHOP DRAWINGS.
4. ALL RECESSED ACCESSORIES SHALL HAVE WALL STUD FRAMING AS CALLED FOR BY THE PLANS.
5. ALL BACKING FOR ACCESSORIES SHALL BE AS REQUIRED BY THE ARCHITECTURAL DETAILS AND PRODUCT MANUFACTURERS REQUIREMENTS.
6. AT GRAB BARS MAINTAIN 1-1/2" MINIMUM CLEARANCE FROM WALL OR TOILET PARTITION. THE SPACE BETWEEN THE GRAB BARS AND PROJECTING OBJECTS BELOW AT THE ENDS SHALL BE 1-1/2" MINIMUM. THE SPACE BETWEEN THE GRAB BAR AND PROJECTING OBJECTS ABOVE SHALL BE 12" MINIMUM.
7. SUPPLY (HOT AND COLD WATER) AND DRAIN PIPES UNDER ACCESSIBLE LAVATORIES SHALL BE INSULATED OR OTHERWISE COVERED. THERE SHALL BE NO SHARP OR ABRASIVE SURFACES UNDER LAVATORIES.
8. FAUCET CONTROLS AND OPERATING MECHANICS SHALL BE OPERABLE WITH ONE HAND, AND SHALL NOT REQUIRE TIGHT GRASPING, PINCHING OR TWISTING OF THE WRIST, THE FORCE REQUIRED TO ACTIVATE CONTROLS SHALL BE NO GREATER THAN 5 LB/F. LEVER OPERATED, PUSH TYPE AND ELECTRONICALLY CONTROLLED MECHANISMS ARE EXAMPLES OF ACCEPTABLE DESIGNS. SELF-CLOSING VALVES ARE ALLOWED IF THE FAUCET REMAINS OPEN FOR AT LEAST 10 SECONDS.
9. WATER CLOSET COMPARTMENT SHALL BE EQUIPPED WITH A DOOR THAT HAS AN AUTOMATIC-CLOSING DEVICE. THE INSIDE AND OUTSIDE OF THE COMPARTMENT DOOR SHALL BE EQUIPPED WITH A LOOP OR U-SHAPED HANDLE IMMEDIATELY BELOW THE LATCH. THE LATCH SHALL BE FLIP-OVER STYLE, SLIDING, OR OTHER HARDWARE NOT REQUIRING THE USER TO GRASP OR TWIST.
10. MIRROR MOUNTING HEIGHT IS TO BOTTOM OF REFLECTIVE SURFACE.

DIMENSION	ADULT (>12 YRS OLD)
TOILET CENTERLINE FROM WALL	17" TO 18"
TOILET CENTERLINE FROM WALL (AMBULATORY)	17" TO 19"
TOILET SEAT HEIGHT	17" TO 19"
TOILET SEAT COVER DISPENSER	40" MAX
GRAB BAR HEIGHT TO TOP	33" TO 36"
TOILET PAPER IN FRONT OF TOILET	7" TO 9"
TOILET PAPER HEIGHT TO OUTLET	19"
NAPKIN DISPOSAL IN FRONT OF TOILET	PER DETAIL 5 HEREIN
DISPENSER OR MIRROR HEIGHT	40" MAX
LAVATORY / SINK TOP HEIGHT	34" MAX
LAVATORY / SINK KNEE CLEARANCE	27" MIN
URINAL LIP HEIGHT	17" MAX
URINAL LIP DEPTH FROM WALL	13 1/2" MIN
URINAL FLUSH HANDLE HEIGHT	44" MAX
DRINKING FOUNTAIN BUBBLE HEIGHT	36" MAX
DRINKING FOUNTAIN KNEE CLEARANCE	27" MIN

APPL No. A03-122864

DSA Stamp

Architect

RACHLIN PARTNERS
8640 National Boulevard
Culver City, CA 90232
310.204.3400

Disclaimer:

THESE DRAWINGS ARE THE PROPERTY OF THE ARCHITECT. THE DESIGNS SHOWN AND DESCRIBED HEREIN INCLUDING ALL TECHNICAL DRAWINGS ARE PROPRIETARY AND CANNOT BE COPIED, DUPLICATED OR COMMERCIALLY EXPLOITED IN ANY WAY. THEY ARE NOT TO BE CHANGED OR ALTERED AND SHALL NOT BE USED BY THE OWNER ON OTHER PROJECTS, FOR ADDITIONS TO THIS PROJECT, OR FOR COMPLETION OF THIS PROJECT BY OTHERS. THE OWNER AGREES TO HOLD HARMLESS, INDEMNIFY AND DEFEND THE ARCHITECT AGAINST ALL DAMAGES, CLAIMS AND LOSSES, INCLUDING DEFENSE COSTS, ARISING OUT OF ANY REUSE OF PLANS AND SPECIFICATIONS WITHOUT THE WRITTEN AUTHORIZATION OF THE ARCHITECT OF RECORD.

Copyright © 2022 Rachlin Partners, All Rights Reserved.

Performing Arts Center

Hacienda La Puente Unified School District
635 North California Avenue
La Puente, CA 91744

Rev	Date	Issue
1	7.22.22	50% DD
2	10.21.22	50% CD
3	12.09.22	100% CD DSA SUBMITTAL
4	6.19.23	100% CD DSA RESUBMITTAL
5	9.20.23	DSA BACK CHECK
6	11.01.23	ADDENDUM NO. 1
7	11.01.23	ADDENDUM NO. 2

Date: 11.01.2023
Scale: As indicated
Drawn By: JP, NZ
Checked By: RM

Architect / Engineer Stamp

LICENSED ARCHITECT RONALD RACHLIN NO. C-26229 REN. 8-31-25 STATE OF CALIFORNIA

Consultants
Miyamoto International, Inc.
The Ruzika Company, Inc.
MDC Consulting Engineers
Pocock Design Solutions
Newson Brown Acoustics, LLC
VCA Engineers, Inc.
HJSA Consulting

Sheet Title

Toilet Accessories Schedule

Sheet Number

A631

C:\Users\rvoly.monico\Documents\M22_HLPUSD-PAC_Central_rvoly.monico.rvt

APPL No. A03-122864

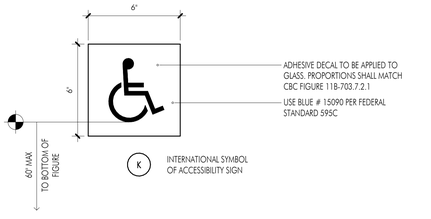

K INTERNATIONAL SYMBOL OF ACCESSIBILITY SIGN

A DOOR-MOUNTED MEN'S RESTROOM SIGN

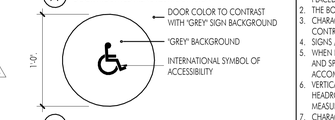

B DOOR-MOUNTED WOMEN'S RESTROOM SIGN

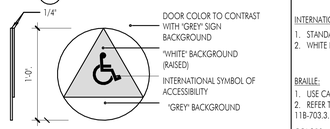

C DOOR-MOUNTED UNISEX RESTROOM SIGN

SIGNAGE NOTES

LETTERS AND NUMBERS:

1. WIDTH TO HEIGHT RATIO BETWEEN 3 : 5 AND 1.1 : 1.
2. STROKE WIDTH TO HEIGHT BETWEEN 1 : 5 AND 1 : 10.
3. CONTRAST CHARACTERS AND SYMBOLS WITH BACKGROUND.
4. SANS SERIF CHARACTERS.

SIGNS AND PICTOGRAMS:

1. PICTOGRAMS / PICTORIAL SYMBOL SIGNS SHALL BE ACCOMPANIED BY THE EQUIVALENT VERBAL DESCRIPTION PLACED DIRECTLY BELOW THE PICTOGRAM.
2. THE BORDER DIMENSION SHALL BE 6' MINIMUM HEIGHT.
3. CHARACTERS AND BACKGROUNDS SHALL BE OF NON-GLARE CONTRASTING COLORS
4. SIGNS / PICTOGRAMS SHALL BE INSTALLED AS INDICATED ON
5. WHEN PERMANENT IDENTIFICATION IS PROVIDED FOR ROOMS AND SPACES, RAISED LETTERS SHALL BE PROVIDED AND SHALL BE ACCOMPANIED BY BRAILLE.
6. VERTICAL CLEARANCE AT SUSPENDED SIGNS WITH MINIMUM HEADROOM OF 80" REQUIRE MINIMUM 3" CHARACTER HEIGHT MEASURED BY USING UPPERCASE 'X'
7. CHARACTERS AND NUMBERS SHALL BE SIZED ACCORDING TO VIEWING DISTANCE FROM WHICH READ.

INTERNATIONAL SYMBOL OF ACCESSIBILITY

1. STANDARD USED TO IDENTIFY ACCESSIBLE FACILITIES.
2. WHITE FIGURE ON GREY BACKGROUND.

BRAILLE:

1. USE CALIFORNIA CONTRACTED GRADE 2 BRAILLE.
2. REFER TO DETAIL 3/-- FOR BRAILLE DIMENSION TABLE 11B-703.3.1

COLORS:

1. 'WHITE' SHALL WHITE 5687 TO MATCH EXISTING CAMPUS
2. 'GREY' SHALL BE GREY 4310 TO MATCH EXISTING CAMPUS

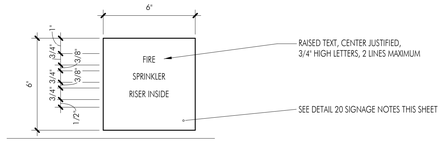

L 'FIRE SPRINKLER RISER INSIDE' SIGN

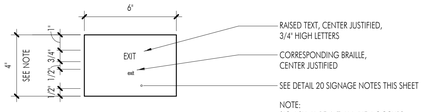

D 'EXIT' SIGN

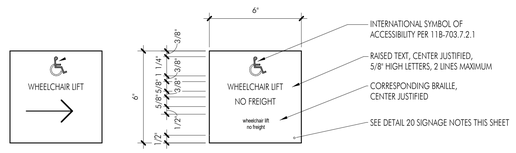

M2 M 'WHEELCHAIR LIFT' SIGN

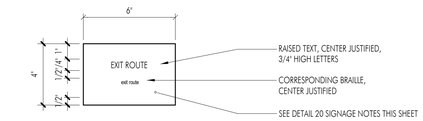

E 'EXIT ROUTE' SIGN

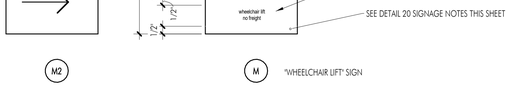

N 'ASSISTIVE LISTENING SYSTEM' SIGN

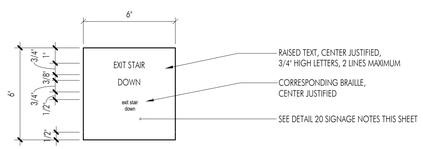

F 'EXIT STAIR DOWN' SIGN

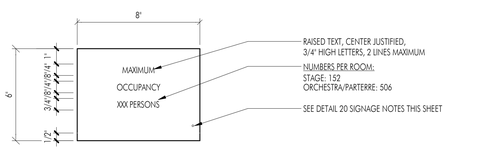

P 'MAXIMUM OCCUPANCY' SIGN

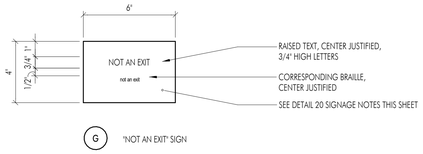

G 'NOT AN EXIT' SIGN

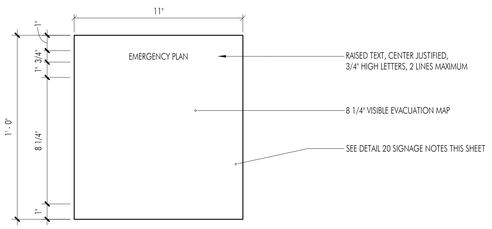

Q 'EMERGENCY EXIT PLAN' SIGN

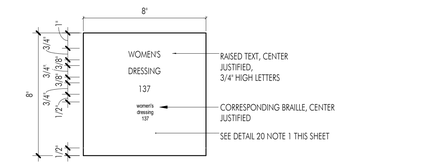

H ROOM ID SIGN RESTROOM ID

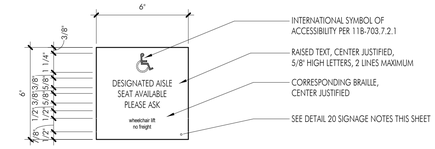

J 'DESIGNATED AISLE SEAT' SIGN

20 SIGN ATTACHMENT LOCATION

SCALE: 3" = 1'-0"

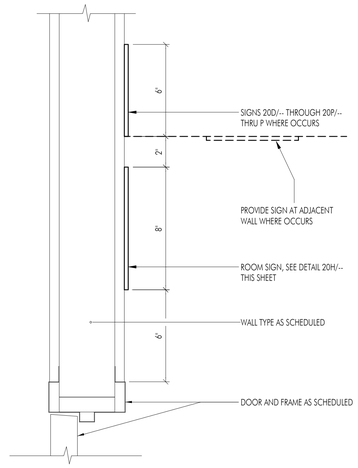

PLAN VIEW AT WALL SIGANGE

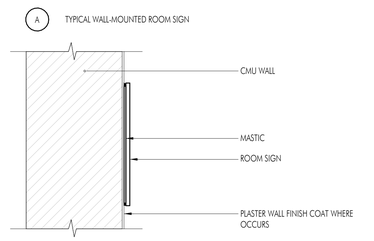

A TYPICAL WALL-MOUNTED ROOM SIGN

B CMU SIGN ATTACHMENT (GLASS SIMILAR)

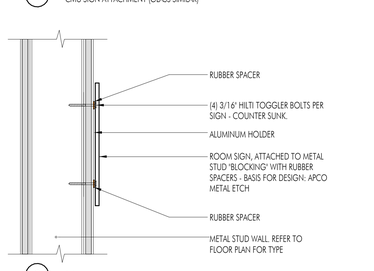

C SIGN ATTACHMENT

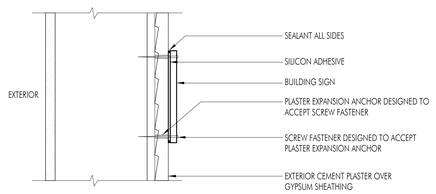

D PLASTER SIGN ATTACHMENT

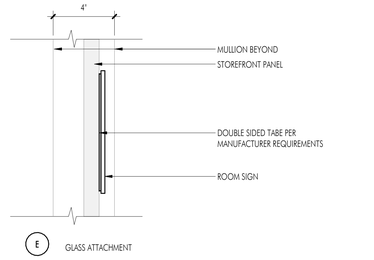

E GLASS ATTACHMENT

2 SIGN ATTACHMENT LOCATION

SCALE: 3" = 1'-0"

INTERIOR ROOM SIGNAGE

DOOR NUMBER PER PLAN	ROOM NAME PER PLAN	ROOM NUMBER PER PLAN	SIGN TEXT	FOR ALL "LETTER" DESIGNATIONS BELOW SEE DETAIL 20 THIS SHEET		
				PUSH	PULL	NOTES
			ORCHESTRA/PARTERRE LEVEL			
D101A	LOBBY	101	LOBBY 101	D	H,K	-
D101B	LOBBY	101	LOBBY 101	D	K	-
D101C	LOBBY	101	LOBBY 101	D	H,K	-
D101D	LOBBY	101	LOBBY 101	D	K	-
D101E	LOBBY	101	LOBBY 101	D	K	-
D101F	LOBBY	101	LOBBY 101	D	H,K	-
D103A	MEN'S RESTROOM	103	MEN'S 103	-	A,H	SIGN A ON DOOR PER DETAIL 2/A642
D105A	WOMEN'S RESTROOM	105	WOMEN'S 105	-	B,H	SIGN B ON DOOR PER DETAIL 2/A642
D106A	LIFT	106	WHEEL CHAIR LIFT NO FREIGHT	-	M	-
D107A	BOX BOOM ACCESS	107	BOX BOOM ACCESS 107	-	H	-
D108A	VESTIBULE	108	LOBBY (PUSH) / AUDITORIUM (PULL)	E,H	H,N	-
D108B	VESTIBULE	108	LOBBY VESTIBULE (PUSH) / AUDITORIUM (PULL)	E,H	G,H	-
D108C	VESTIBULE	108	CORRIDOR (PUSH) /LOBBY VESTIBULE (PULL)	G,H	H	-
D109A	BOX BOOM ACCESS	109	BOX BOOM ACCESS 109	-	H	-
D110A	CORRIDOR	110	STAGE ENTRANCE 110	D	H	-
D110B	CORRIDOR	110	STAGE ENTRANCE 110	D	H	-
D111A	WOMEN'S DRESSING	111	WOMEN'S DRESSING 111	H	-	-
D112A	WOMEN'S TOILET	112	WOMEN'S 112	B,H	-	SIGN B ON DOOR PER DETAIL 2/A642
D112B	WOMEN'S TOILET	112	WOMEN'S 112	B,H	-	SIGN B ON DOOR PER DETAIL 2/A642
D113A	GENDER NEUTRAL TOILET	113	GENDER NEUTRAL TOILET 113	C,H	-	SIGN C ON DOOR PER DETAIL 2/A642
D114A	MEN'S TOILET	114	MEN'S 114	A,H	-	SIGN A ON DOOR PER DETAIL 2/A642
D114B	MEN'S TOILET	114	MEN'S 114	A,H	-	SIGN A ON DOOR PER DETAIL 2/A642
D115A	MEN'S DRESSING	115	MEN'S DRESSING 115	H	-	-
D116A	LIFT VESTIBULE	116	WHEELCHAIR LIFT (PUSH), LOBBY 101 (PULL)	H, M	H	-
D118A	GREEN ROOM / FLEX SPACE	118	GREEN ROOM 118	H	-	-
D119A	STAGE	119	STAGE 119	G,H,P	H,P	-
D119C	STAGE	119	STAGE 119	E	H	-
D119D	STAGE	119	STAGE 119	E	H	-
D120A	ORCHESTRA LEVEL	120	CORRIDOR(PUSH) / AUDITORIUM(PULL)	E	H	-
D120B	ORCHESTRA LEVEL	120	CORRIDOR(PUSH) /AUDITORIUMPULL)	E	H	-
D122A	VESTIBULE	122	LOBBY (PUSH) / AUDITORIUM VESTIBULE (PULL)	E,H	H	-
D122B	VESTIBULE	122	LOBBY VESTIBULE (PUSH) / AUDITORIUM (PULL)	E,H	G,H	-
D122C	VESTIBULE	122	CORRIDOR (PUSH) / LOBBY VESTIBULE (PULL)	G,H	E,H	-
D124A	FIRE RISER	124	FIRE RISER	H	-	-
D125A	CUSTODIAL	125	CUSTODIAL	-	H	-
D126A	PIANO STORAGE	126	PIANO STORAGE	-	H	-
D127A	ELECTRICAL	127	ELECTRICAL	-	H	-
D128A	MDF	128	MDF	H	-	-
D129A	OFFICE	129	OFFICE	H	-	-
D130A	STORAGE	130	STORGAE	-	H	-
D131A	SHOP	131	SHOP	-	H	-
D131B	SHOP	131	SHOP	H	H	-
D131C	SHOP	131	EXIT(PUSH) / SHOP (PULL)	D	H	-
D131D	SHOP	131	CORRIDOR (PUSH) / SHOP (PULL)	-	H	-
D132	TOOLS	132	TOOLS(PULL)	-	H	-
			CONTROL BOOTH LEVEL			
D201A	VESTIBULE	201	STAIR VESTIBULE(PUSH) / AUDITORIUM(PULL)	H	H	-
D201B	VESTIBULE	201	STAIR(PUSH/) / VESTIBULE(PULL)	F	H	-
D203A	AV CONTROL BOOTH	203	STAIR (PUSH) / AV CONTROL BOOTH(PULL)	H	F	-
D203B	AV CONTROL BOOTH	203	AV CONTROL BOOTH(PUSH) / LIGHTING CONTROL/RACK ROOM	H	H	-
D204A	LIGHTING CONTROL/RACK ROOM	204	LIGHTING CONTROL - RACK ROOM (PUSH) / WHEEL CHAIR LIFT VESTIBULE (PULL)	H	H	-
D205A	WHEELCHAIR LIFT	205	AUDITORIUM (PULL) / WHEEL CHAIR LIFT (PUSH)	H	H	-
D205B	WHEELCHAIR LIFT	205	WHEEL CHAIR LIFT NO FREIGHT	-	M	-
D206A	VESTIBULE	206	WHEEL CHAIR LIFT NO FREIGHT	-	M	-
D207A	BOX BOOM ACCESS	207	BOX BOOM ACCESS (PUSH) / BOOM BOX ACCESS (PULL)	H	H	-
D209A	BOX BOOM	209	BOX BOOM(PUSH) / BOX BOOM (PULL)	H	H	-
D210A	ROOF ACCESS	210	ROOF ACCESS	H	-	-
			FOLLOW SPOT LEVEL			
D301A	FOLLOW SPOT	310	FOLLOW SPOT (PUSH) / CATWALK (PULL)	H	H	
D302A	CATWALK ACCESS	302	ROOF ACCESS	-	H	-
D302B	CATWALK ACCESS	302	CATWALK ACCESS (PUSH) / CATWALK (PULL)	H	H	-
D302C	CATWALK ACCESS	302	ROOF ACCESS	-	H	-

TABLE *11B*-703.3.1
BRAILLE DIMENSIONS

MEASUREMENT RANGE	MINIMUM IN INCHES MAXIMUM IN INCHES
Dot base diameter	0.059 (1.5 mm) to 0.063 (1.6 mm)
Distance between two dots in the same cell[1]	*0.100 (2.5 mm)*
Distance between corresponding dots in adjacent cells[1]	*0.300 (7.6 mm)*
Dot height	0.025 (0.6 mm) to 0.037 (0.9 mm)
Distance between corresponding dots from one cell directly below[1]	0.395 (10 mm) to 0.400 (10.2 mm)

1. Measured center to center.

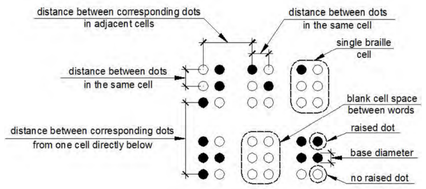

3 TABLE 11B-703.3.1

SCALE: 1 1/2" = 1'-0"

DSA Stamp

Architect

RACHLIN PARTNERS
8640 National Boulevard
Culver City, CA 90232
310.204.3400

Disclaimer:

THESE DRAWINGS ARE THE PROPERTY OF THE ARCHITECT. THE DESIGNS SHOWN AND DESCRIBED HEREIN INCLUDING ALL TECHNICAL DRAWINGS ARE PROPRIETARY AND CANNOT BE COPIED, DUPLICATED OR COMMERCIALLY EXPLOITED IN ANY WAY. THEY ARE NOT TO BE CHANGED OR ASSIGNED AND SHALL NOT BE USED BY THE OWNER ON OTHER PROJECTS, FOR ADDITIONS TO THIS PROJECT, OR FOR COMPLETION OF THIS PROJECT BY OTHERS. THE OWNER AGREES TO HOLD HARMLESS, INDEMNIFY AND DEFEND THE ARCHITECT AGAINST ALL DAMAGES, CLAIMS AND LOSSES, INCLUDING DEFENSE COSTS, ARISING OUT OF ANY REUSE OF PLANS AND SPECIFICATIONS WITHOUT THE WRITTEN AUTHORIZATION OF THE ARCHITECT OF RECORD.

Copyright © 2022 Rachlin Partners, All Rights Reserved.

Performing Arts Center
Hacienda La Puente Unified School District
635 North California Avenue
La Puente, CA 91744

Rev	Date	Issue
1	7.22.22	50% DD
2	10.21.22	50% CD
3	12.09.22	100% CD DSA SUBMITTAL
4	6.19.23	100% CD DSA RESUBMITTAL
5	9.20.23	DSA BACK CHECK
6	11.01.23	ADDENDUM NO. 1
7	11.01.23	ADDENDUM NO. 2
8	12.15.23	ADDENDUM NO. 3

Date: 11.01.2023
Scale: As indicated
Drawn By: Author
Checked By: Checker

Architect / Engineer Stamp

LICENSED ARCHITECT RICHARD RACHLIN NO. C-26020 REN 8-31-25 STATE OF CALIFORNIA

Consultants
Miyamoto International, Inc.
The Ruzika Company, Inc.
MDC Consulting Engineers
Pocock Design Solutions
Newson Brown Acoustics, LLC
VCA Engineers, Inc.
HJSA Consulting

Sheet Title

Signage Details and Schedule

Sheet Number

A641

C:\Users\Rudy.Monico\Documents\#22_HEPUSD-PAC_Central_Rudy.Monico.rvt

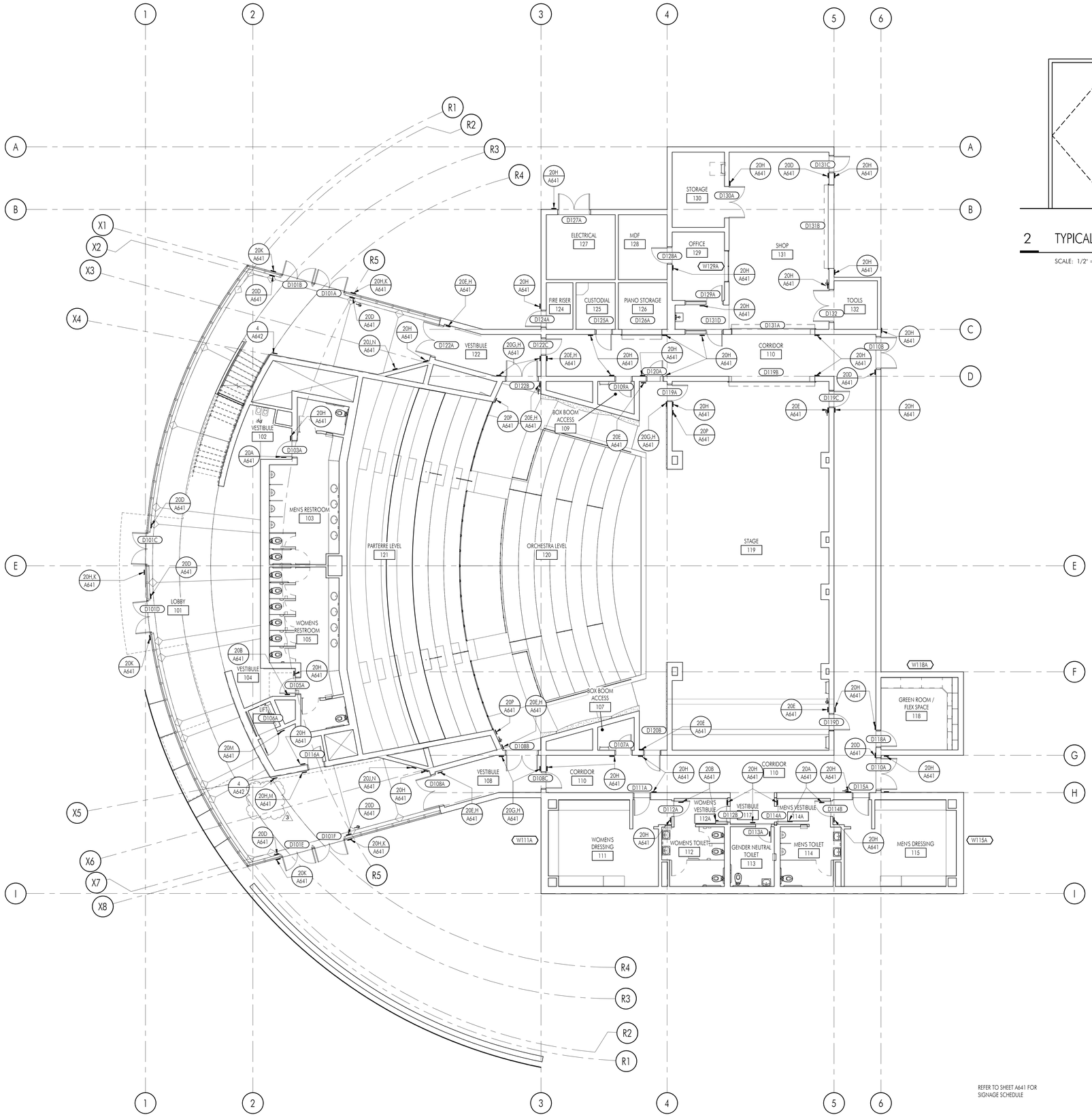

1 ORCHESTRA/PARTERRE LEVEL SIGNAGE PLAN

SCALE: 1/8" = 1'-0"

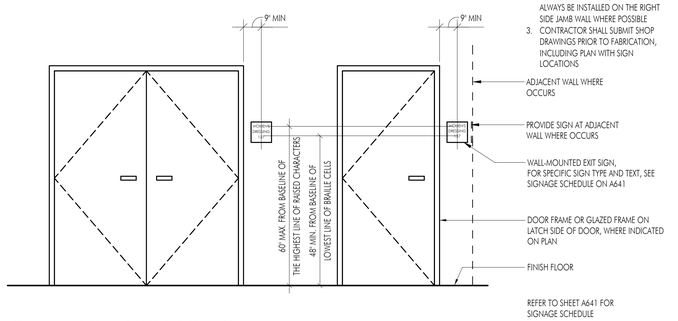

2 TYPICAL DOOR SIGNAGE

SCALE: 1/2" = 1'-0"

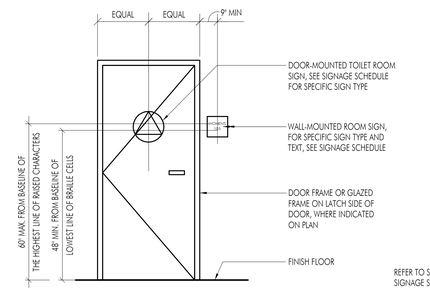

3 TYPICAL RESTROOM DOOR SIGNAGE

SCALE: 1/2" = 1'-0"

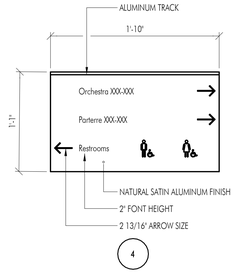

4 DIRECTIONAL SIGNAGE DETAIL

SCALE: 1 1/2" = 1'-0"

C:\Users\Rudy.Monico\Documents\R22_HJPUSD-PAC_Central_Rudy.Monico.rvt

APPL No. A03-122864

DSA Stamp

Architect

RACHLIN PARTNERS
8640 National Boulevard
Culver City, CA 90232
310.204.3400

Disclaimer:

THESE DRAWINGS ARE THE PROPERTY OF THE ARCHITECT. THE DESIGNS SHOWN AND DESCRIBED HEREIN INCLUDING ALL TECHNICAL DRAWINGS ARE PROPRIETARY AND CANNOT BE COPIED, DUPLICATED OR COMMERCIALLY EXPLOITED IN ANY WAY. THEY ARE NOT TO BE CHANGED OR ASSIGNED AND SHALL NOT BE USED BY THE OWNER ON OTHER PROJECTS, FOR ADDITIONS TO THIS PROJECT, OR FOR COMPLETION OF THIS PROJECT BY OTHERS. THE OWNER AGREES TO HOLD HARMLESS, INDEMNIFY AND DEFEND THE ARCHITECT AGAINST ALL DAMAGES, CLAIMS AND LOSSES, INCLUDING DEFENSE COSTS, ARISING OUT OF ANY REUSE OF PLANS AND SPECIFICATIONS WITHOUT THE WRITTEN AUTHORIZATION OF THE ARCHITECT OF RECORD.

Copyright © 2022 Rachlin Partners, All Rights Reserved.

Performing Arts Center

Hacienda La Puente Unified School District
635 North California Avenue
La Puente, CA 91744

Rev	Date	Issue
1	7.22.22	50% DD
2	10.21.22	50% CD
3	12.09.22	100% CD DSA SUBMITTAL
4	6.19.23	100% CD DSA RESUBMITTAL
5	9.20.23	DSA BACK CHECK
6	11.01.23	ADDENDUM NO. 1
7	11.01.23	ADDENDUM NO. 2
8	2.15.23	ADDENDUM NO. 3

Date: 11.01.2023
Scale: As indicated
Drawn By: Author
Checked By: Checker

Architect / Engineer Stamp

Consultants
Miyamoto International, Inc.
The Ruzika Company, Inc.
MDC Consulting Engineers
Pocock Design Solutions
Newson Brown Acoustics, LLC
VCA Engineers, Inc.
HJSA Consulting

Sheet Title

Orchestra/Parterre Level Signage Plans

Sheet Number

A642

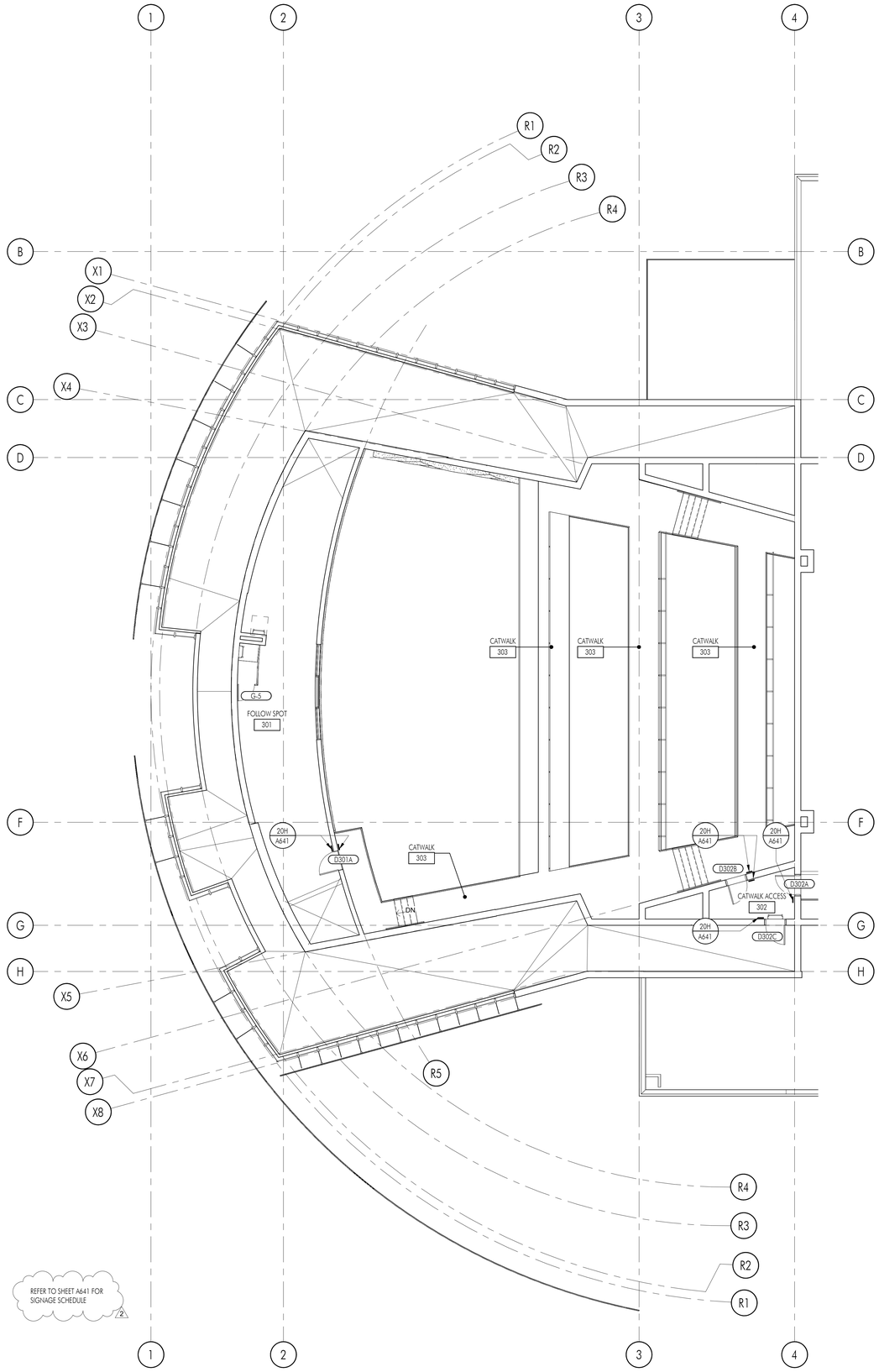

2 FOLLOW SPOT LEVEL SIGNAGE PLAN

SCALE: 1/8" = 1'-0"

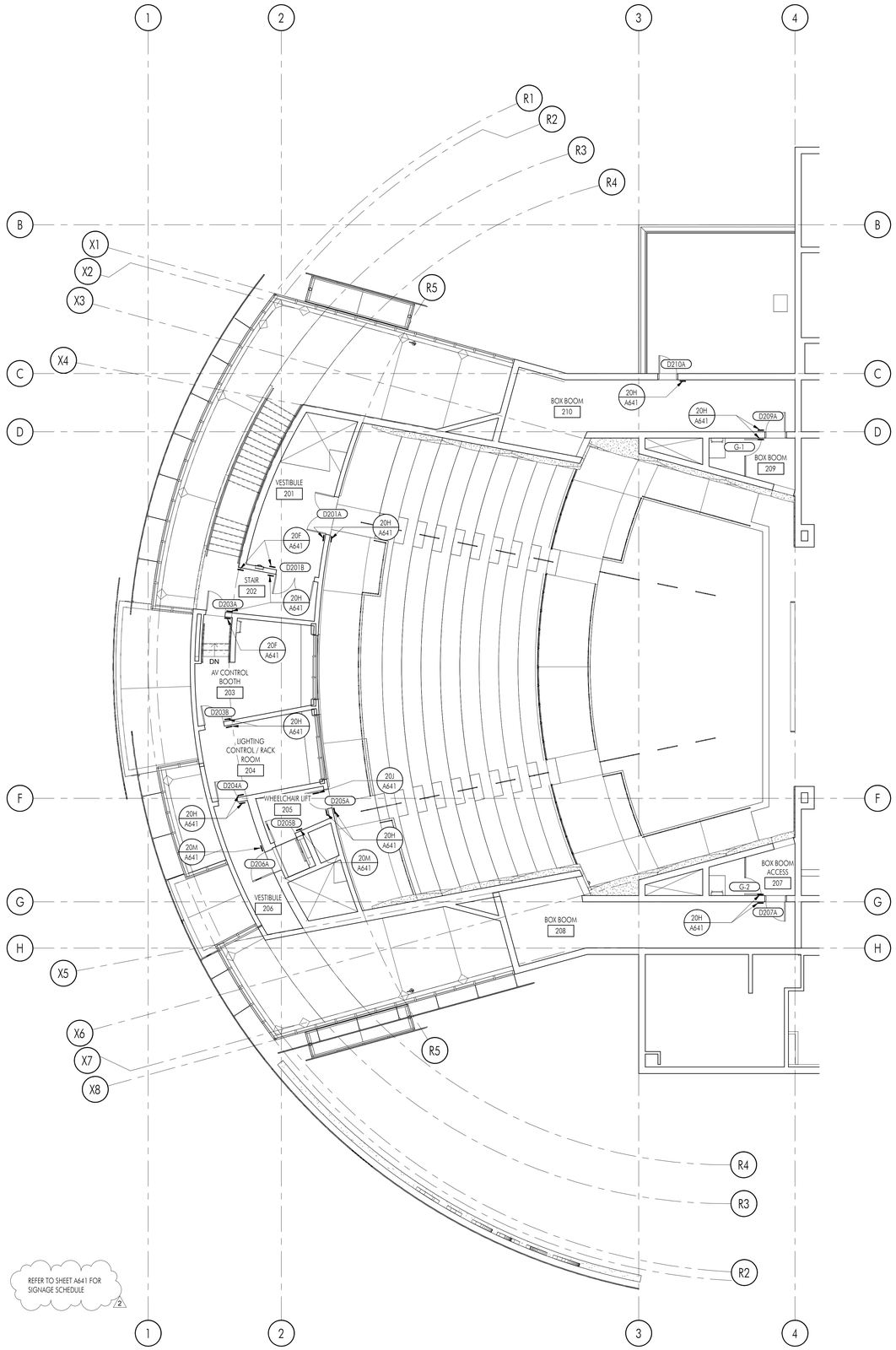

1 CONTROL BOOTH LEVEL SIGNAGE PLAN

SCALE: 1/8" = 1'-0"

C:\Users\rudy.monico\Documents\M22_HEPUSD-PAC_Central_rudy.monico.rvt

APPL No. A03-122864

DSA Stamp

Architect

RACHLIN
PARTNERS
8640 National Boulevard
Culver City, CA 90232
310.204.3400

Disclaimer:

THESE DRAWINGS ARE THE PROPERTY OF THE ARCHITECT. THE DESIGNS SHOWN AND DESCRIBED HEREIN INCLUDING ALL TECHNICAL DRAWINGS ARE PROPRIETARY AND CANNOT BE COPIED, DUPLICATED OR COMMERCIALLY EXPLOITED EXCEPT FOR USE IN THE CONSTRUCTION OF THIS PROJECT AND SHALL NOT BE USED BY THE OWNER ON OTHER PROJECTS, FOR ADDITIONS TO THIS PROJECT, OR FOR COMPLETION OF THIS PROJECT BY OTHERS. THE OWNER AGREES TO HOLD HARMLESS, INDEMNIFY AND DEFEND THE ARCHITECT AGAINST ALL DAMAGES, CLAIMS AND LOSSES, INCLUDING DEFENSE COSTS, ARISING OUT OF ANY REUSE OF PLANS AND SPECIFICATIONS WITHOUT THE WRITTEN AUTHORIZATION OF THE ARCHITECT OF RECORD.

Copyright © 2022 Rachlin Partners, All Rights Reserved.

Performing Arts Center

Hacienda La Puente Unified School District
635 North California Avenue
La Puente, CA 91744

Rev	Date	Issue
1	7.22.22	50% DD
2	10.21.22	50% CD
3	12.09.22	100% CD DSA SUBMITTAL
4	6.19.23	100% CD DSA RESUBMITTAL
5	9.20.23	DSA BACK CHECK
6	11.01.23	ADDENDUM NO. 1
7	11.01.23	ADDENDUM NO. 2

Date: 11.01.2023
Scale: 1/8" = 1'-0"
Drawn By: Author
Checked By: Checker

Architect / Engineer Stamp

LICENSED ARCHITECT
LEONARD RUDY MONICO
NO. C-26229
REN. 8-31-25
STATE OF CALIFORNIA

Consultants
Miyamoto International, Inc.
The Ruzika Company, Inc.
MDC Consulting Engineers
Pocock Design Solutions
Newson Brown Acoustics, LLC
VCA Engineers, Inc.
HJSA Consulting

Sheet Title

Control Booth/Follow Spot Level Signage Plans

Sheet Number

A643

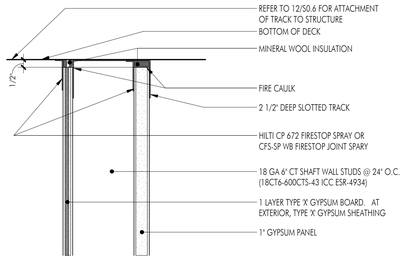

SECTION

NOTE: HEAD OF WALL CONSTRUCTION SHALL BE PER UL DESIGN HW-D-0570. WALL CONSTRUCTION SHALL BE PER UL DESIGN U415 FOR 1 HOUR CONSTRUCTION

17 1-HOUR HEAD OF SHAFT WALL

SCALE: 3" = 1'-0"

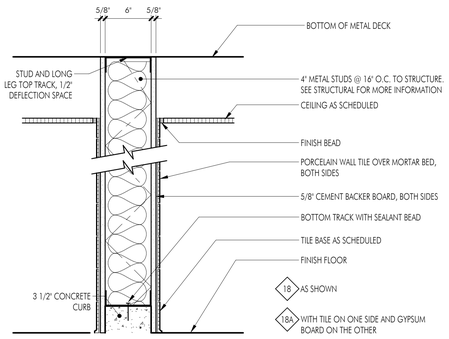

13 WALL TYPE 13

SCALE: 1 1/2" = 1'-0"

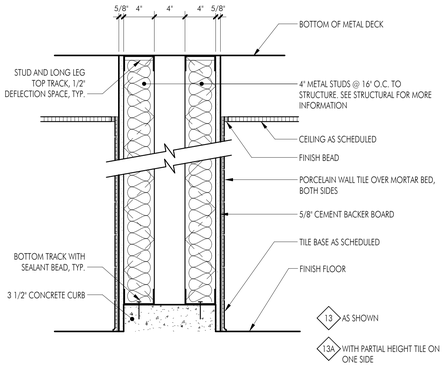

9 WALL TYPE 9

SCALE: 1 1/2" = 1'-0"

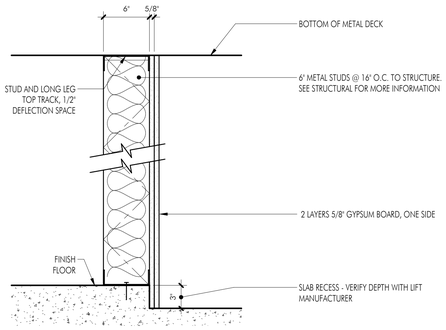

5 WALL TYPE 5 1-HOUR UL U415

SCALE: 1 1/2" = 1'-0"

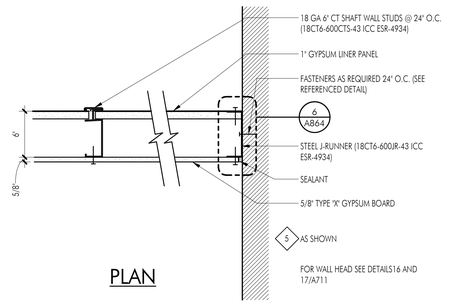

PLAN

1 WALL TYPE 1

SCALE: 1 1/2" = 1'-0"

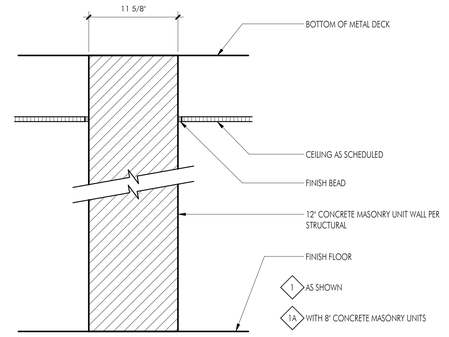

1-HOUR RATED ASSEMBLY PER CBC TABLE 721.1 ITEM 3-1.4 AS OCCURS ON PLAN

18 WALL TYPE 18

SCALE: 1 1/2" = 1'-0"

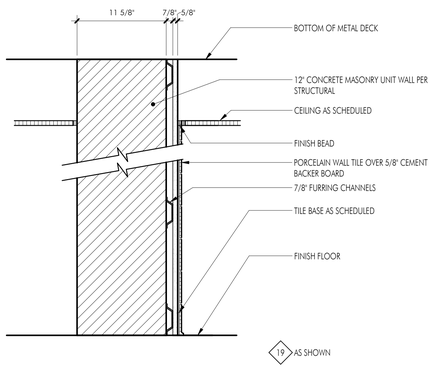

1-HOUR RATED ASSEMBLY PER CBC TABLE 721.1 ITEM 3-1.4 AS OCCURS ON PLAN

14 WALL TYPE 14

SCALE: 1 1/2" = 1'-0"

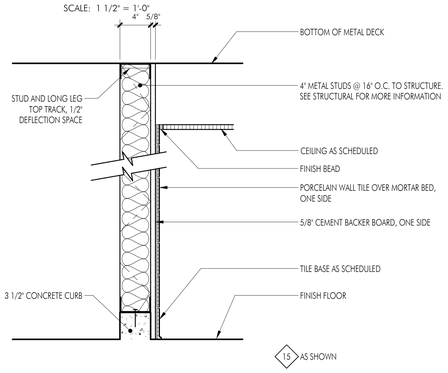

10 WALL TYPE 10

SCALE: 1 1/2" = 1'-0"

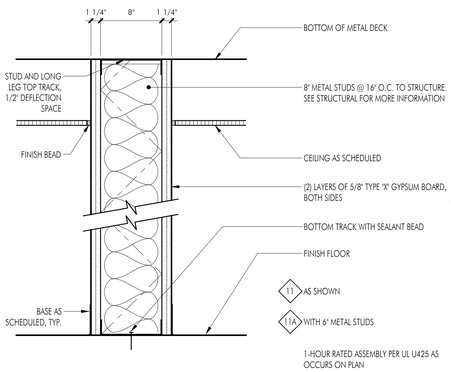

1-HOUR RATED ASSEMBLY PER UL U425 AS OCCURS ON PLAN

6 WALL TYPE 6

SCALE: 1 1/2" = 1'-0"

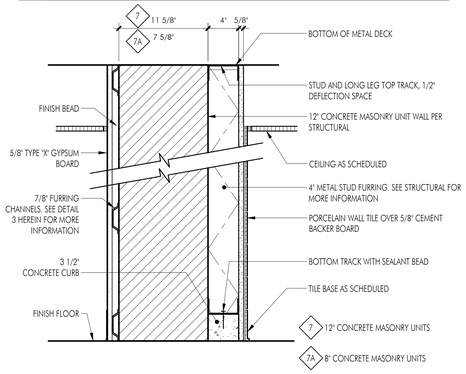

1-HOUR RATED ASSEMBLY PER CBC TABLE 721.1 ITEM 3-1.4 AS OCCURS ON PLAN

2 WALL TYPE 2

SCALE: 1 1/2" = 1'-0"

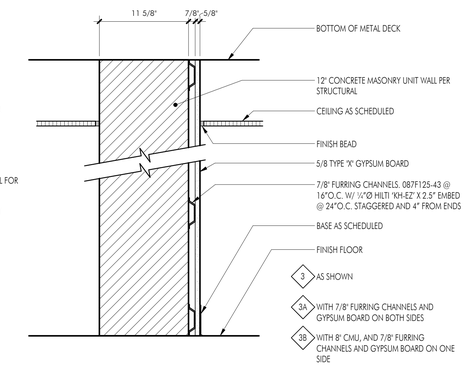

1-HOUR RATED ASSEMBLY PER CBC TABLE 721.1 ITEM 3-1.4 AS OCCURS ON PLAN

19 WALL TYPE 19

SCALE: 1 1/2" = 1'-0"

15 WALL TYPE 15

SCALE: 1 1/2" = 1'-0"

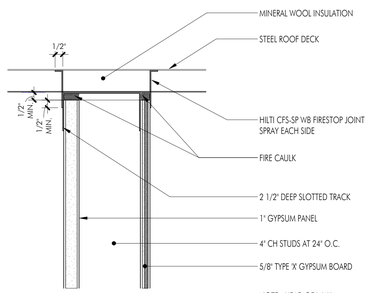

SECTION

NOTE: HEAD OF WALL CONSTRUCTION SHALL BE PER UL DESIGN CJ-D-0004. WALL CONSTRUCTION SHALL BE PER UL DESIGN U415 FOR 1 HOUR CONSTRUCTION

11 WALL TYPE 11

SCALE: 1 1/2" = 1'-0"

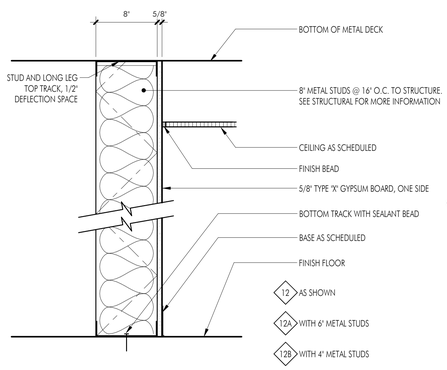

7 WALL TYPE 7

SCALE: 1 1/2" = 1'-0"

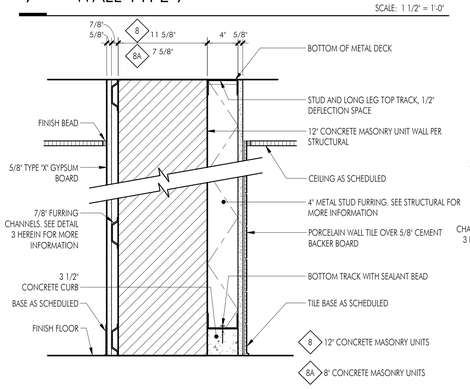

1-HOUR RATED ASSEMBLY PER CBC TABLE 721.1 ITEM 3-1.4 AS OCCURS ON PLAN

3 WALL TYPE 3

SCALE: 1 1/2" = 1'-0"

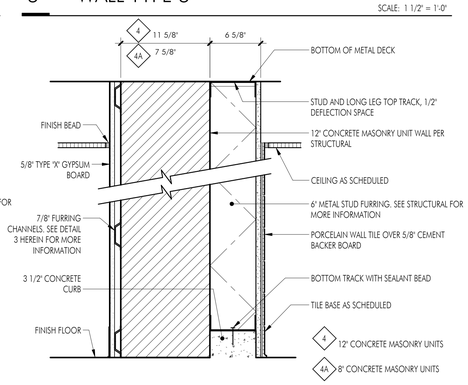

1-HOUR RATED ASSEMBLY PER CBC TABLE 721.1 ITEM 3-1.4 AS OCCURS ON PLAN

16 1-HOUR HEAD OF SHAFT WALL

SCALE: 3" = 1'-0"

12 WALL TYPE 12

SCALE: 1 1/2" = 1'-0"

8 WALL TYPE 8

SCALE: 1 1/2" = 1'-0"

4 WALL TYPE 4

SCALE: 1 1/2" = 1'-0"

C:\Users\rudy.monico\Documents\R22_HUPUSD-PAC_Central_rudy.monico.rvt

APPL No. A03-122864

IDENTIFICATION STAMP
DIV. OF THE STATE ARCHITECT
APP: 03-122864 INC:
REVIEWED FOR
SS ☑ FLS ☑ ACS ☑
DATE: 10/03/2023

DSA Stamp

Architect

RACHLIN PARTNERS
8640 National Boulevard
Culver City, CA 90232
310.204.3400

Disclaimer:

THESE DRAWINGS ARE THE PROPERTY OF THE ARCHITECT. THE DESIGNS SHOWN AND DESCRIBED HEREIN INCLUDING ALL TECHNICAL DRAWINGS ARE PROPRIETARY AND CANNOT BE COPIED, DUPLICATED OR COMMERCIALLY EXPLOITED IN ANY WAY. THEY ARE NOT TO BE CHANGED OR COPIED AND SHALL NOT BE USED BY THE OWNER ON OTHER PROJECTS, FOR ADDITIONS TO THIS PROJECT, OR FOR COMPLETION OF THIS PROJECT BY OTHERS. THE OWNER AGREES TO HOLD HARMLESS, INDEMNIFY AND DEFEND THE ARCHITECT AGAINST ALL DAMAGES, CLAIMS AND LOSSES, INCLUDING DEFENSE COSTS, ARISING OUT OF ANY REUSE OF PLANS AND SPECIFICATIONS WITHOUT THE WRITTEN AUTHORIZATION OF THE ARCHITECT OF RECORD.

Copyright © 2022 Rachlin Partners, All Rights Reserved.

Performing Arts Center

Hacienda La Puente Unified School District
635 North California Avenue
La Puente, CA 91744

Rev	Date	Issue
1	7.22.22	50% DD
2	10.21.22	50% CD
3	12.09.22	100% CD DSA SUBMITTAL
4	6.19.23	100% CD DSA RESUBMITTAL
5	9.20.23	DSA BACK CHECK

Date: 9.20.2023
Scale: As indicated
Drawn By: JP, NZ
Checked By: RM

Architect / Engineer Stamp

LICENSED ARCHITECT
RUDOLPH MONICO
NO. C-28229
REN. 8-31-25
STATE OF CALIFORNIA

Consultants
Miyamoto International, Inc.
The Ruzika Company, Inc.
MDC Consulting Engineers
Pocock Design Solutions
Newson Brown Acoustics, LLC
VCA Engineers, Inc.
HJSA Consulting

Sheet Title

Partition Types and Framing Details

Sheet Number

A711

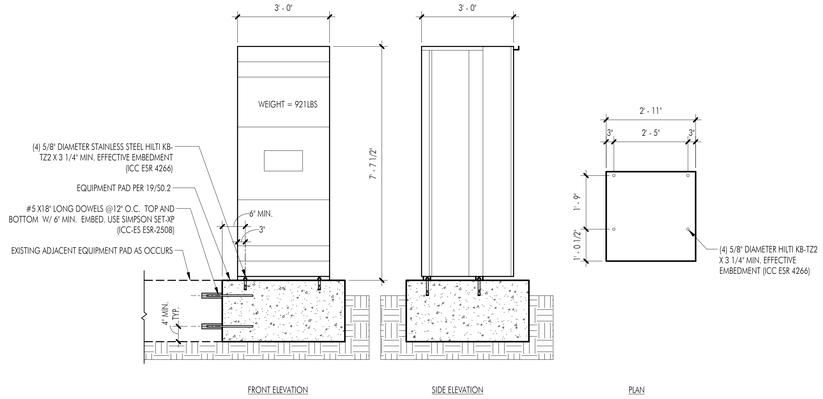

13 SWITCHBOARD ANCHORAGE DETAIL

SCALE: 1/2" = 1'-0"

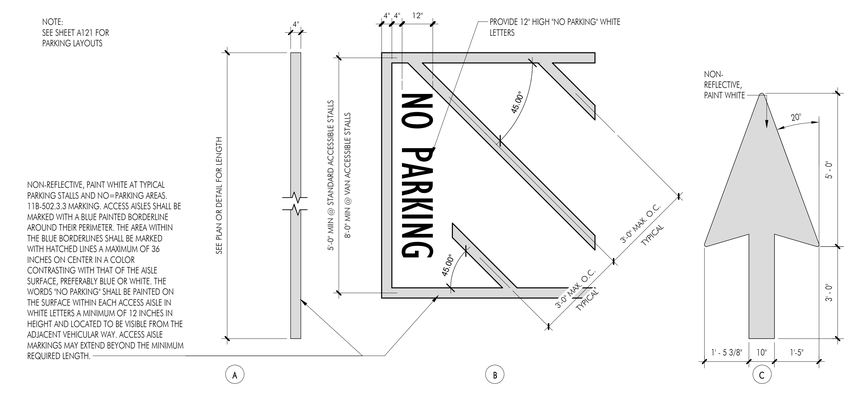

5 PAVEMENT MARKINGS

SCALE: 1/2" = 1'-0"

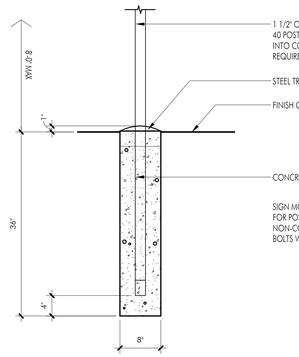

6 TRAFFIC SIGN POST

SCALE: 1" = 1'-0"

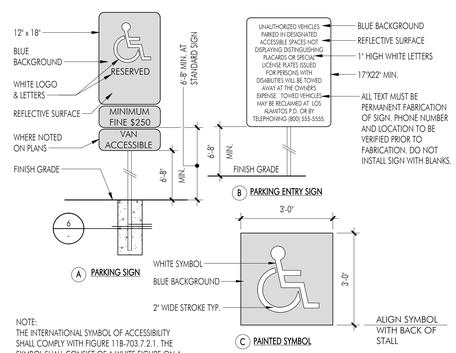

2 SITE PARKING SIGN

SCALE: 12" = 1'-0"

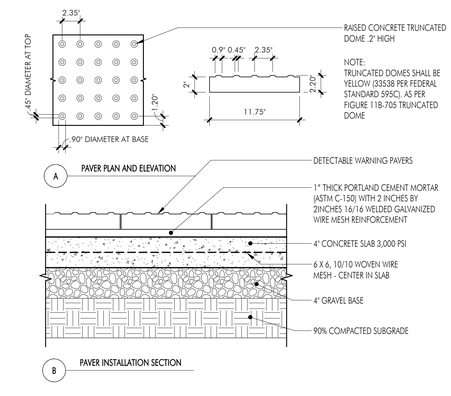

3 DETECTABLE WARNING PAVERS

SCALE: 1 1/2" = 1'-0"

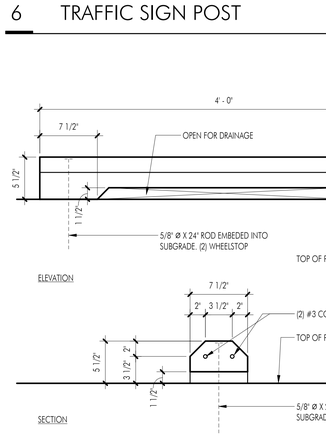

7 PRECAST CONCRETE WHEELSTOP

SCALE: 1 1/2" = 1'-0"

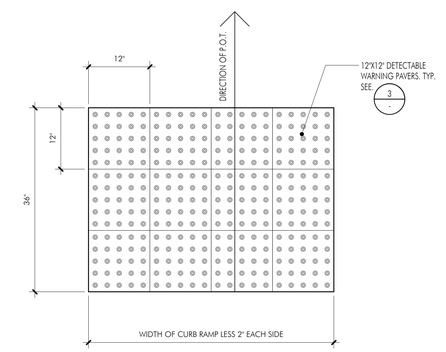

4 DETECTABLE WARNING PAVERS PLAN

SCALE: 1" = 1'-0"

C:\Users\rudy.monico\Documents\R22_HLPUSD-PAC_Central_rudy.monico.rvt

APPL No. A03-122864

IDENTIFICATION STAMP
DIV. OF THE STATE ARCHITECT
APP: 03-122864 INC:
REVIEWED FOR
SS ☑ FLS ☑ ACS ☑
DATE: 10/03/2023

DSA Stamp

Architect

RACHLIN PARTNERS
8640 National Boulevard
Culver City, CA 90232
310.204.3400

Disclaimer:

THESE DRAWINGS ARE THE PROPERTY OF THE ARCHITECT. THE DESIGNS SHOWN AND DESCRIBED HEREIN INCLUDING ALL TECHNICAL DRAWINGS ARE PROPRIETARY AND CANNOT BE COPIED, DUPLICATED OR COMMERCIALLY EXPLOITED IN ANY WAY, IN WHOLE OR IN PART, WITHOUT PRIOR WRITTEN CONSENT. SHALL NOT BE USED BY THE OWNER ON OTHER PROJECTS, FOR ADDITIONS TO THIS PROJECT, OR FOR COMPLETION OF THIS PROJECT BY OTHERS. THE OWNER AGREES TO HOLD HARMLESS, INDEMNIFY AND DEFEND THE ARCHITECT AGAINST ALL DAMAGES, CLAIMS AND LOSSES, INCLUDING DEFENSE COSTS, ARISING OUT OF ANY REUSE OF PLANS AND SPECIFICATIONS WITHOUT THE WRITTEN AUTHORIZATION OF THE ARCHITECT OF RECORD.

Copyright © 2022 Rachlin Partners, All Rights Reserved.

Performing Arts Center

Hacienda La Puente Unified School District
635 North California Avenue
La Puente, CA 91744

Rev	Date	Issue
1	7.22.22	50% DD
2	10.21.22	50% CD
3	12.09.22	100% CD DSA SUBMITTAL
4	6.19.23	100% CD DSA RESUBMITTAL
5	9.20.23	DSA BACK CHECK

Date: 9.20.2023
Scale: As indicated
Drawn By: Author
Checked By: Checker

Architect / Engineer Stamp

LICENSED ARCHITECT
RUDY MONICO
NO. C-28229
REN. 8-31-25
STATE OF CALIFORNIA

Consultants
Miyamoto International, Inc.
The Ruzika Company, Inc.
MDC Consulting Engineers
Pocock Design Solutions
Newson Brown Acoustics, LLC
VCA Engineers, Inc.
HJSA Consulting

Sheet Title

Site Details

Sheet Number

A811

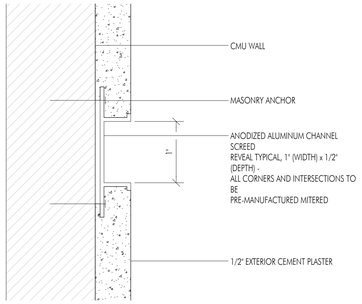

9 PLASTER REVEAL OVER CMU

SCALE: 12" = 1'-0"

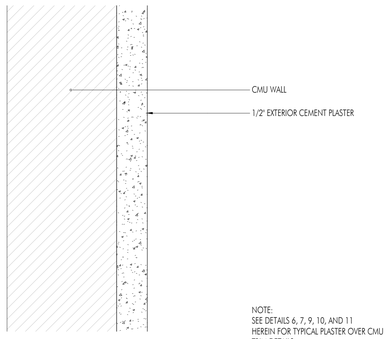

5 PLASTER OVER CMU

SCALE: 12" = 1'-0"

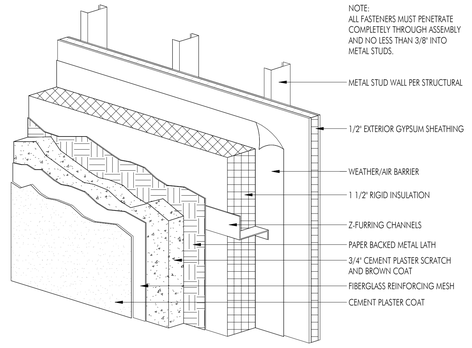

1 PLASTER ASSEMBLY OVER METAL LATH

SCALE: 12" = 1'-0"

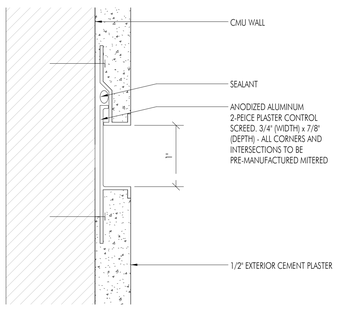

10 PLASTER CONTROL JOINT OVER CMU

SCALE: 12" = 1'-0"

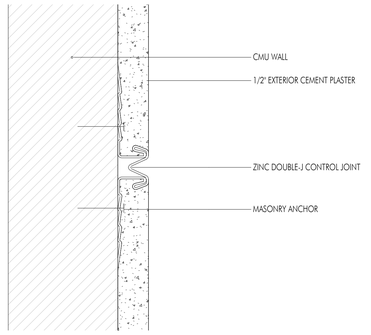

6 PLASTER CONTROL JOINT

SCALE: 12" = 1'-0"

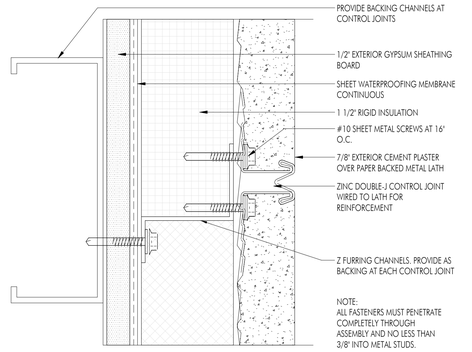

2 PLASTER CONTROL JOINT 1

SCALE: 12" = 1'-0"

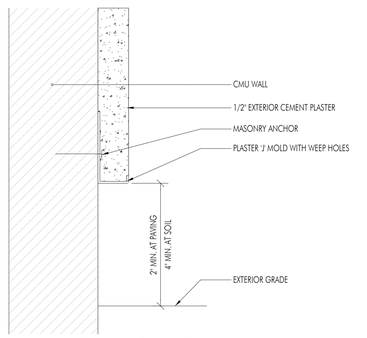

11 PLASTER BASE AT CMU

SCALE: 12" = 1'-0"

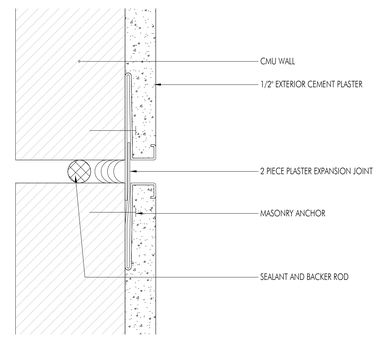

7 PLASTER EXPANSION JOINT

SCALE: 12" = 1'-0"

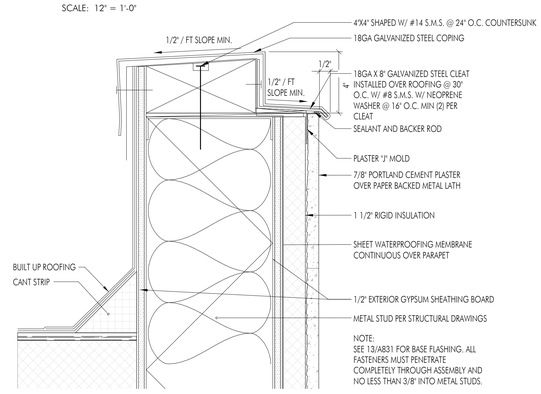

3 PARAPET CAP DETAIL

SCALE: 3" = 1'-0"

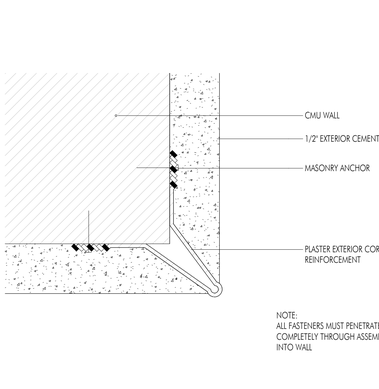

8 PLASTER CORNER TRIM

SCALE: 12" = 1'-0"

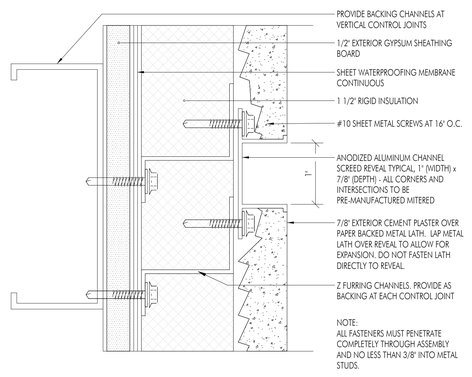

4 PLASTER CONTROL JOINT

SCALE: 12" = 1'-0"

C:\Users\rudy.monico\Documents\R22_HUPUSD-PAC_Central_rudy.monico.rvt

APPL No. A03-122864

IDENTIFICATION STAMP
DIV. OF THE STATE ARCHITECT
APP: 03-122864 INC:
REVIEWED FOR
SS ☑ FLS ☑ ACS ☑
DATE: 10/03/2023

DSA Stamp

Architect

RACHLIN PARTNERS
8640 National Boulevard
Culver City, CA 90232
310.204.3400

Disclaimer:

THESE DRAWINGS ARE THE PROPERTY OF THE ARCHITECT. THE DESIGNS SHOWN AND DESCRIBED HEREIN INCLUDING ALL TECHNICAL DRAWINGS ARE PROPRIETARY AND CANNOT BE COPIED, DUPLICATED OR COMMERCIALLY EXPLOITED EXCEPT BY WRITTEN AGREEMENT. THESE DRAWINGS AND DESIGNS SHALL NOT BE USED BY THE OWNER ON OTHER PROJECTS, FOR ADDITIONS TO THIS PROJECT, OR FOR COMPLETION OF THIS PROJECT BY OTHERS. THE OWNER AGREES TO HOLD HARMLESS, INDEMNIFY AND DEFEND THE ARCHITECT AGAINST ALL DAMAGES, CLAIMS AND LOSSES, INCLUDING DEFENSE COSTS, ARISING OUT OF ANY REUSE OF PLANS AND SPECIFICATIONS WITHOUT THE WRITTEN AUTHORIZATION OF THE ARCHITECT OF RECORD.

Copyright © 2022 Rachlin Partners, All Rights Reserved.

Performing Arts Center

Hacienda La Puente Unified School District
635 North California Avenue
La Puente, CA 91744

Rev	Date	Issue
1	7.22.22	50% DD
2	10.21.22	50% CD
3	12.09.22	100% CD DSA SUBMITTAL
4	6.19.23	100% CD DSA RESUBMITTAL
5	9.20.23	DSA BACK CHECK

Date: 9.20.2023
Scale: As indicated
Drawn By: Author
Checked By: Checker

Architect / Engineer Stamp

LICENSED ARCHITECT
RUDY MONICO
NO. C-28229
REN. 8-31-25
STATE OF CALIFORNIA

Consultants
Miyamoto International, Inc.
The Ruzika Company, Inc.
MDC Consulting Engineers
Pocock Design Solutions
Newson Brown Acoustics, LLC
VCA Engineers, Inc.
HJSA Consulting

Sheet Title

Exterior Details

Sheet Number

A821

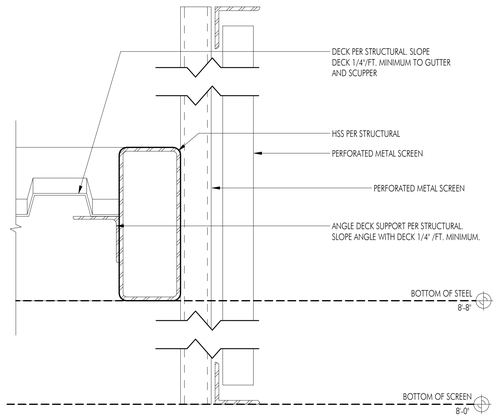

5 AWNING DETAIL

SCALE: 3" = 1'-0"

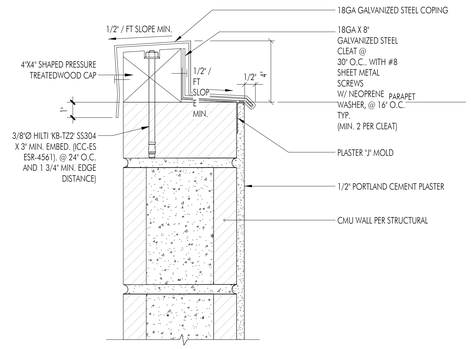

1 PARAPET AT CMU WALL

SCALE: 3" = 1'-0"

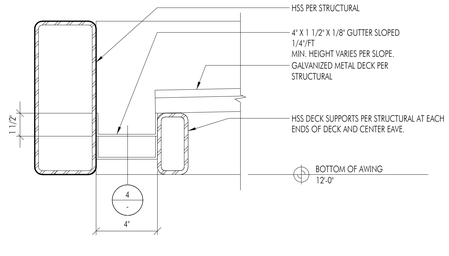

6 AWNING GUTTER DETAIL

SCALE: 3" = 1'-0"

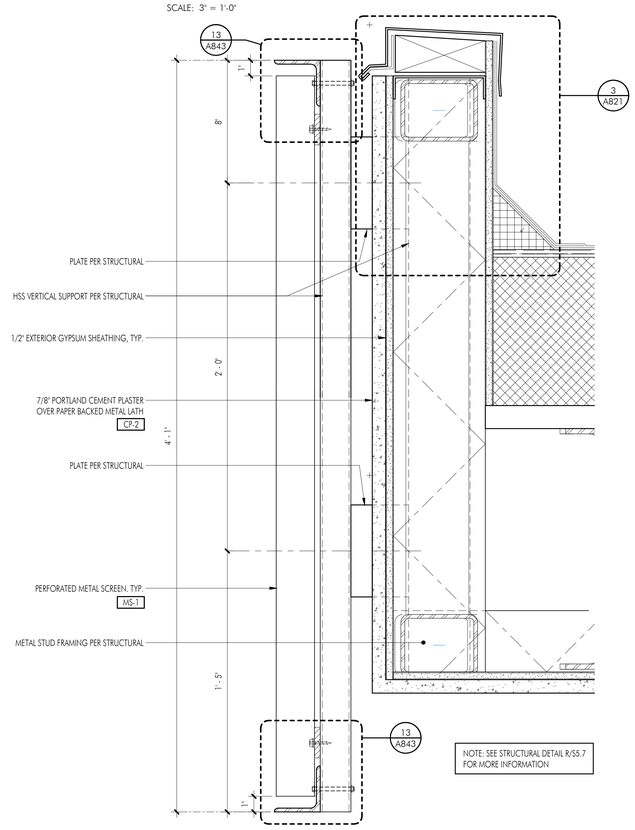

8 METAL SCREEN DETAIL AT OVERHANG

SCALE: 3" = 1'-0"

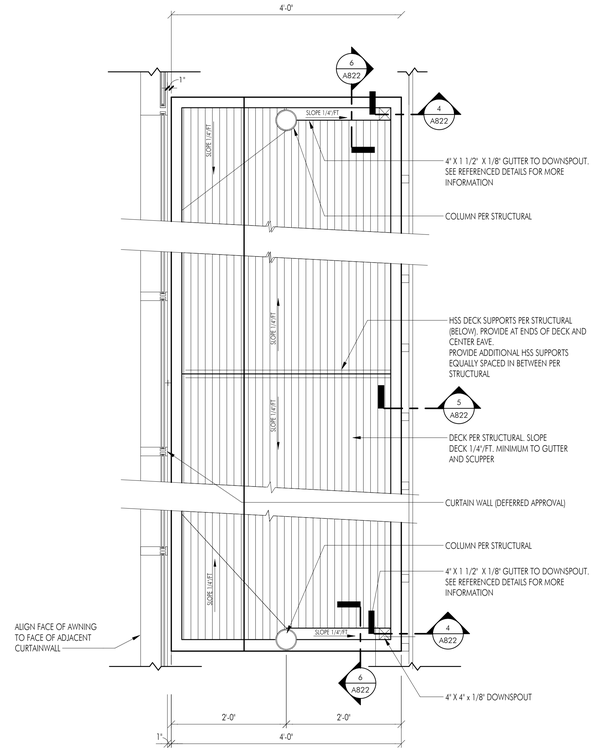

3 AWNING DETAIL - PLAN

SCALE: 3/4" = 1'-0"

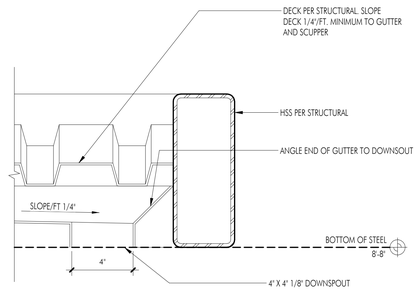

4 AWNING GUTTER AND DOWNSOUT DETAIL

SCALE: 3" = 1'-0"

C:\Users\rudy.monico\Documents\R22_HUPUSD-PAC_Central_rudy.monico.rvt

APPL No. A03-122864

IDENTIFICATION STAMP
DIV. OF THE STATE ARCHITECT
APP: 03-122864 INC:
REVIEWED FOR
SS ☑ FLS ☑ ACS ☑
DATE: 10/03/2023

DSA Stamp

Architect

RACHLIN
PARTNERS
8640 National Boulevard
Culver City, CA 90232
310.204.3400

Disclaimer:

THESE DRAWINGS ARE THE PROPERTY OF THE ARCHITECT. THE DESIGNS SHOWN AND DESCRIBED HEREIN INCLUDING ALL TECHNICAL DRAWINGS ARE PROPRIETARY AND CANNOT BE COPIED, DUPLICATED OR COMMERCIALLY EXPLOITED EITHER IN WHOLE OR IN PART WITHOUT WRITTEN CONSENT AND SHALL NOT BE USED BY THE OWNER ON OTHER PROJECTS, FOR ADDITIONS TO THIS PROJECT, OR FOR COMPLETION OF THIS PROJECT BY OTHERS. THE OWNER AGREES TO HOLD HARMLESS, INDEMNIFY AND DEFEND THE ARCHITECT AGAINST ALL DAMAGES, CLAIMS AND LOSSES, INCLUDING DEFENSE COSTS, ARISING OUT OF ANY REUSE OF PLANS AND SPECIFICATIONS WITHOUT THE WRITTEN AUTHORIZATION OF THE ARCHITECT OF RECORD.

Copyright © 2022 Rachlin Partners, All Rights Reserved.

Performing Arts Center

Hacienda La Puente Unified School District
635 North California Avenue
La Puente, CA 91744

Rev	Date	Issue
1	7.22.22	50% DD
2	10.21.22	50% CD
3	12.09.22	100% CD DSA SUBMITTAL
4	6.19.23	100% CD DSA RESUBMITTAL
5	9.20.23	DSA BACK CHECK

Date: 9.20.2023
Scale: As indicated
Drawn By: Author
Checked By: Checker

Architect / Engineer Stamp

LICENSED ARCHITECT
RONALD RACHLIN
NO. C-26229
REN. 8-31-25
STATE OF CALIFORNIA

Consultants
Miyamoto International, Inc.
The Ruzika Company, Inc.
MDC Consulting Engineers
Pocock Design Solutions
Newson Brown Acoustics, LLC
VCA Engineers, Inc.
HJSA Consulting

Sheet Title

Exterior Details

Sheet Number

A822

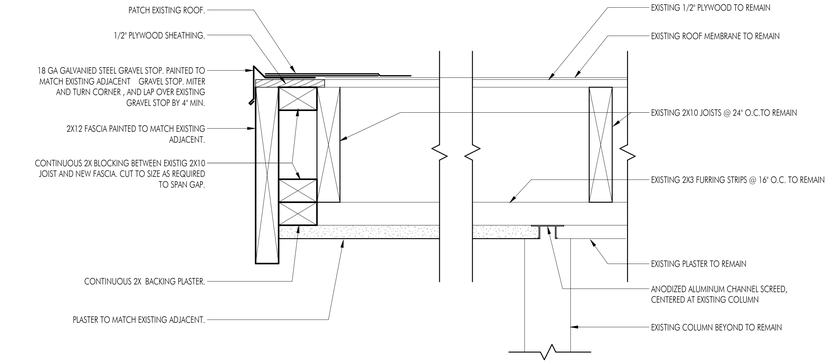

17 PATCH DETAIL AT EDGE OF EXISTING CONVERED WALK

SCALE: 3" = 1'-0"

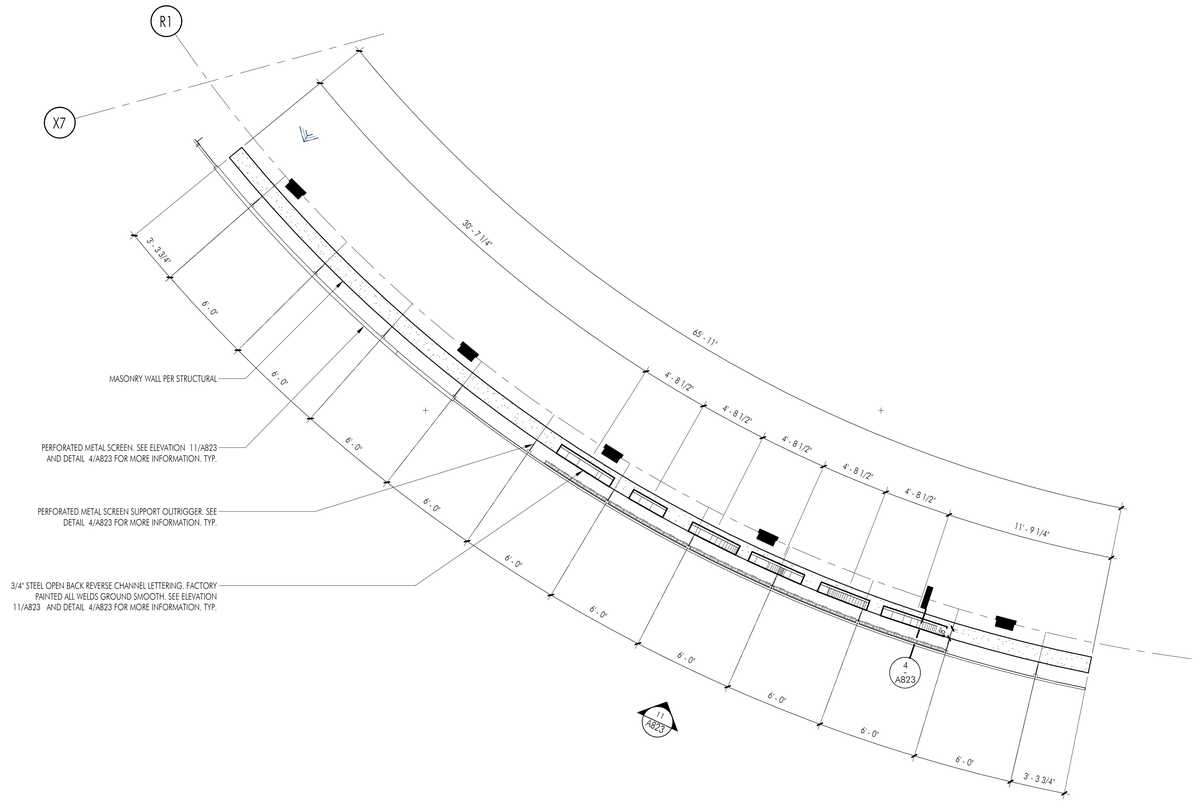

10 MONUMENT SIGNAGE AND SCREEN PLAN

SCALE: 1/4" = 1'-0"

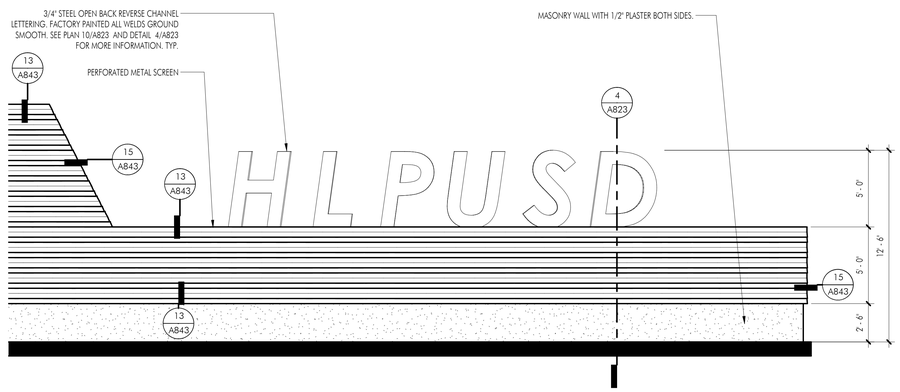

11 MONUMENT SIGNAGE AND SCREEN ELEVATION

SCALE: 1/4" = 1'-0"

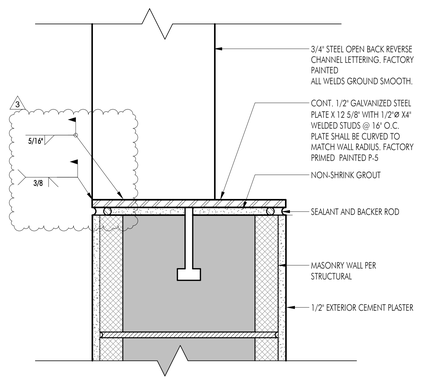

8 MONUMENT SIGNAGE ATTACHMENT

SCALE: 3" = 1'-0"

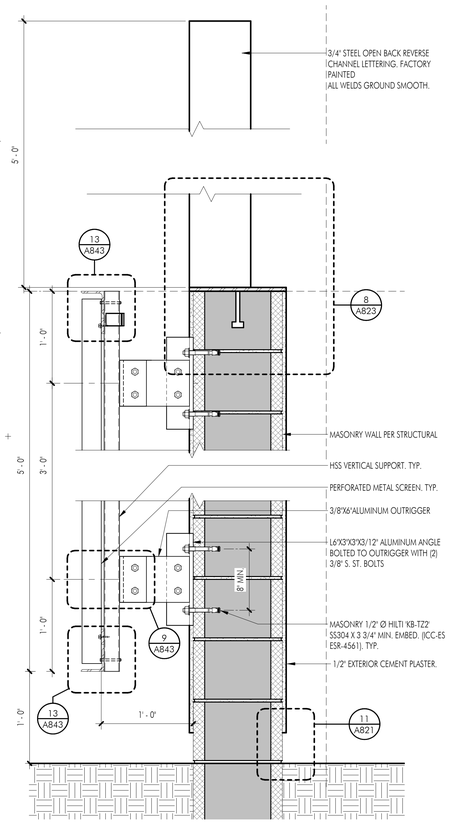

4 MONUMENT SIGNAGE DETAIL

SCALE: 1 1/2" = 1'-0"

APPL No. A03-122864

DSA Stamp

Architect

RACHLIN PARTNERS
8640 National Boulevard
Culver City, CA 90232
310.204.3400

Disclaimer:

THESE DRAWINGS ARE THE PROPERTY OF THE ARCHITECT. THE DESIGNS SHOWN AND DESCRIBED HEREIN INCLUDING ALL TECHNICAL DRAWINGS ARE PROPRIETARY AND CANNOT BE COPIED, DUPLICATED OR COMMERCIALLY EXPLOITED IN ANY WAY WITHOUT THE EXPRESS WRITTEN CONSENT AND SHALL NOT BE USED BY THE OWNER ON OTHER PROJECTS, FOR ADDITIONS TO THIS PROJECT, OR FOR COMPLETION OF THIS PROJECT BY OTHERS. THE OWNER AGREES TO HOLD HARMLESS, INDEMNIFY AND DEFEND THE ARCHITECT AGAINST ALL DAMAGES, CLAIMS AND LOSSES, INCLUDING DEFENSE COSTS, ARISING OUT OF ANY REUSE OF PLANS AND SPECIFICATIONS WITHOUT THE WRITTEN AUTHORIZATION OF THE ARCHITECT OF RECORD.

Copyright © 2022 Rachlin Partners, All Rights Reserved.

Performing Arts Center

Hacienda La Puente Unified School District
635 North California Avenue
La Puente, CA 91744

Rev	Date	Issue
1	7.22.22	50% DD
2	10.21.22	50% CD
3	12.09.22	100% CD DSA SUBMITTAL
4	6.19.23	100% CD DSA RESUBMITTAL
5	9.20.23	DSA BACK CHECK
6	11.01.23	ADDENDUM NO. 1
7	11.01.23	ADDENDUM NO. 2
8	12.15.23	ADDENDUM NO. 3

Date: 11.01.2023
Scale: As indicated
Drawn By: Author
Checked By: Checker

Architect / Engineer Stamp

LICENSED ARCHITECT RICHARD RACHLIN NO. C26020 REN 8-31-25 STATE OF CALIFORNIA

Consultants
Miyamoto International, Inc.
The Ruzika Company, Inc.
MDC Consulting Engineers
Pocock Design Solutions
Newson Brown Acoustics, LLC
VCA Engineers, Inc.
HJSA Consulting

Sheet Title

Exterior Details

Sheet Number

A823

C:\Users\Rudy.Monico\Documents\R22_HLPUSD-PAC_Central_Rudy.Monico.rvt

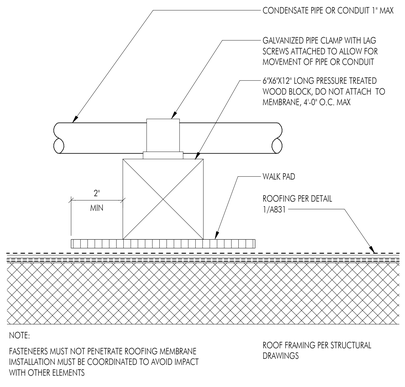

17 SLEEPER

SCALE: 3" = 1'-0"

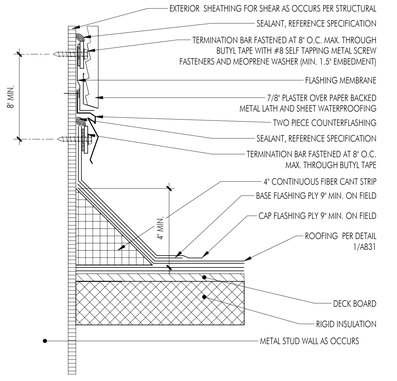

13 BASE FLASHING

SCALE: 3" = 1'-0"

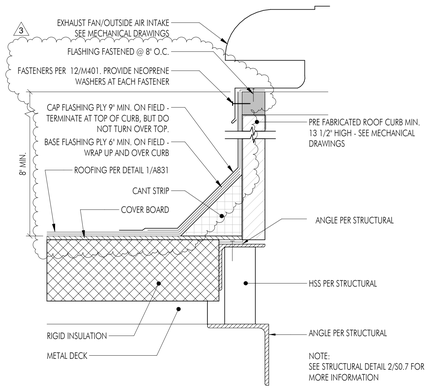

9 EXHAUST FAN OR OUTSIDE AIR INTAKE

SCALE: 3" = 1'-0"

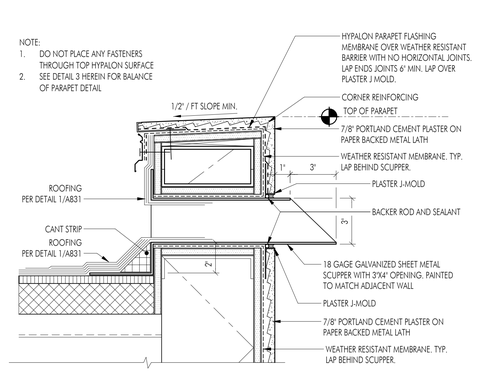

5 SCUPPER AT OVERHANG PARAPET

SCALE: 3" = 1'-0"

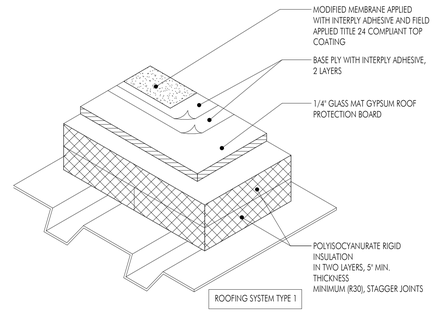

1 COLD APPLIED ROOFING SYSTEM

SCALE: 3" = 1'-0"

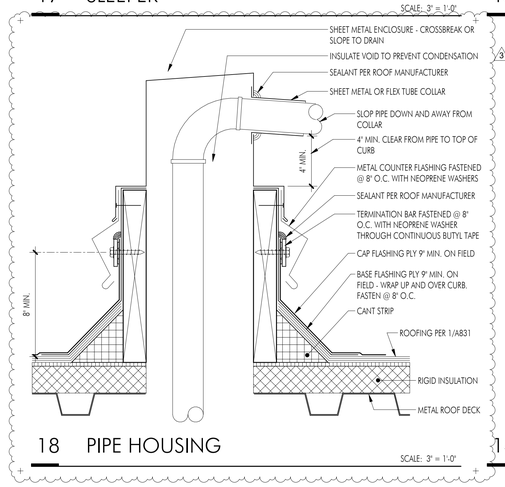

18 PIPE HOUSING

SCALE: 3" = 1'-0"

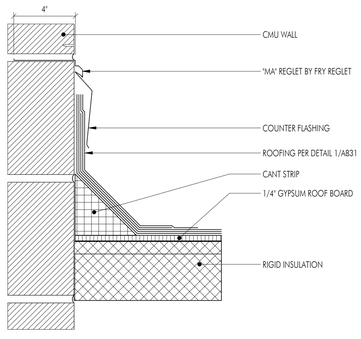

14 BASE FLASHING AT CMU

SCALE: 3" = 1'-0"

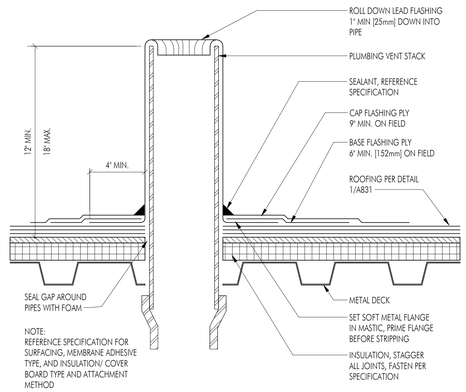

10 VENT PIPE ROOF PENETRATION

SCALE: 3" = 1'-0"

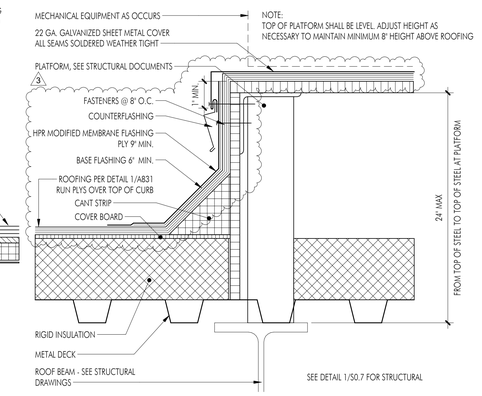

6 MECHANICAL PLATFORM

SCALE: 3" = 1'-0"

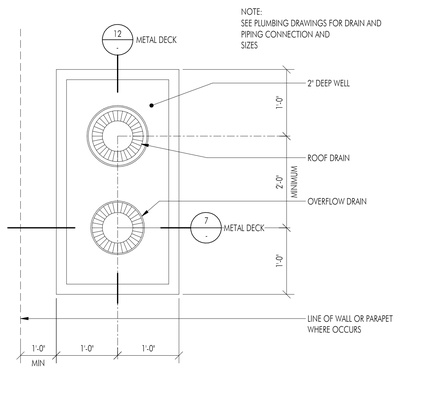

2 ROOF AND OVERFLOW DRAIN

SCALE: 1" = 1'-0"

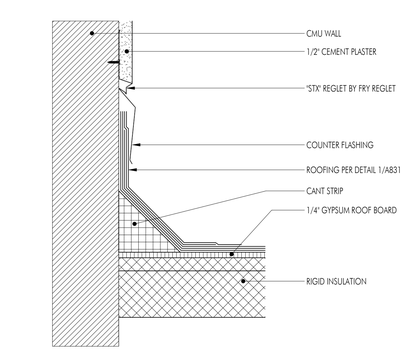

15 BASE FLASHING AT CMU WITH STUCCO

SCALE: 3" = 1'-0"

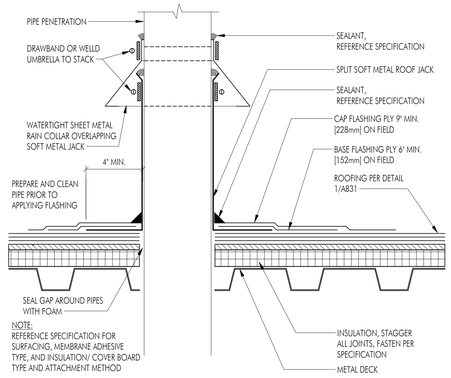

11 CONDUIT/PIPE ROOF PENETRATION

SCALE: 3" = 1'-0"

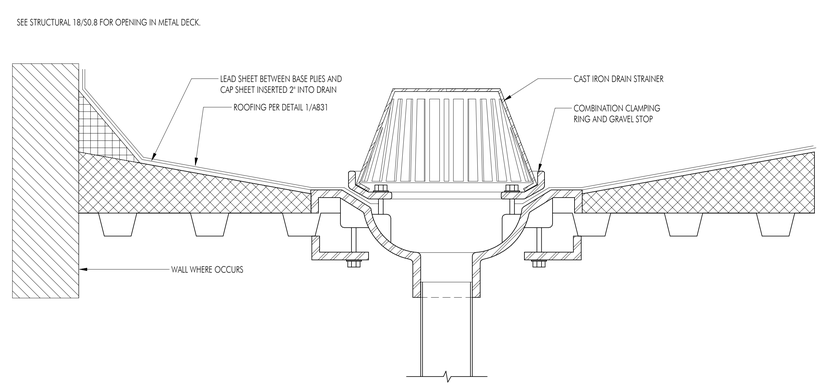

7 ROOF DRAIN WELL

SCALE: 3" = 1'-0"

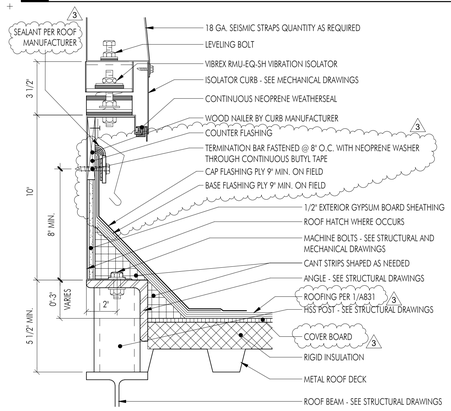

16 MECH. CURB DETAIL (ROOF HATCH SIM.)

SCALE: 3" = 1'-0"

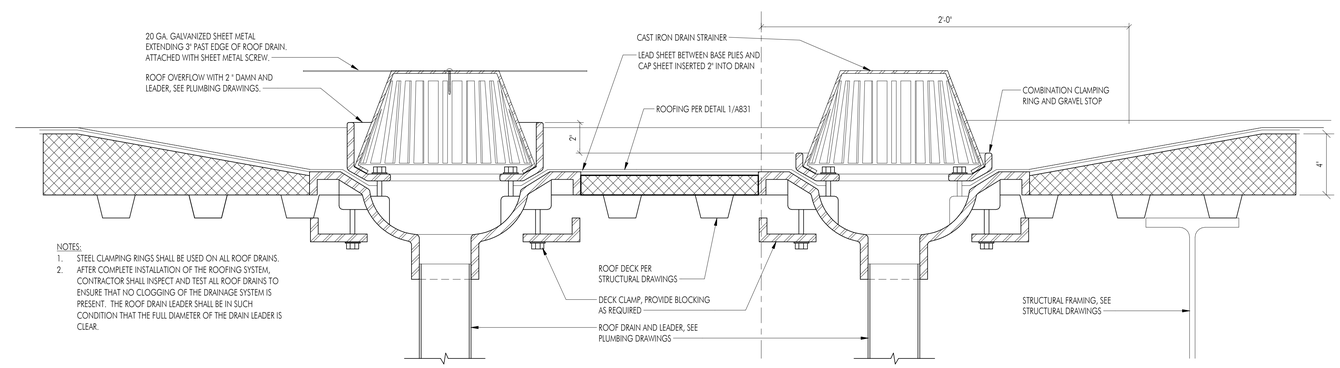

12 ROOF DRAIN AND OVERFLOW WELL

SCALE: 3" = 1'-0"

C:\Users\Rudy.Monico\Documents\R22_HEPUSD-PAC_Central_Rudy.Monico.rvt

APPL No. A03-122864

DSA Stamp

Architect

RACHLIN PARTNERS
8640 National Boulevard
Culver City, CA 90232
310.204.3400

Disclaimer:

THESE DRAWINGS ARE THE PROPERTY OF THE ARCHITECT. THE DESIGNS SHOWN AND DESCRIBED HEREIN INCLUDING ALL TECHNICAL DRAWINGS ARE PROPRIETARY AND CANNOT BE COPIED, DUPLICATED OR COMMERCIALLY EXPLOITED IN ANY WAY. THEY ARE NOT TO BE CHANGED OR USED AND SHALL NOT BE USED BY THE OWNER ON OTHER PROJECTS, FOR ADDITIONS TO THIS PROJECT, OR FOR COMPLETION OF THIS PROJECT BY OTHERS. THE OWNER AGREES TO HOLD HARMLESS, INDEMNIFY AND DEFEND THE ARCHITECT AGAINST ALL DAMAGES, CLAIMS AND LOSSES, INCLUDING DEFENSE COSTS, ARISING OUT OF ANY REUSE OF PLANS AND SPECIFICATIONS WITHOUT THE WRITTEN AUTHORIZATION OF THE ARCHITECT OF RECORD.

Copyright © 2022 Rachlin Partners, All Rights Reserved.

Performing Arts Center

Hacienda La Puente Unified School District
635 North California Avenue
La Puente, CA 91744

Rev	Date	Issue
1	7.22.22	50% DD
2	10.21.22	50% CD
3	12.09.22	100% CD DSA SUBMITTAL
4	6.19.23	100% CD DSA RESUBMITTAL
5	9.20.23	DSA BACK CHECK
6	11.01.23	ADDENDUM NO. 1
7	11.01.23	ADDENDUM NO. 2
8	12.15.23	ADDENDUM NO. 3

Date: 11.01.2023
Scale: As indicated
Drawn By: Author
Checked By: Checker

Architect / Engineer Stamp

LICENSED ARCHITECT
RUDOLPH MONICO
NO. C-28229
REN. 8-31-25
STATE OF CALIFORNIA

Consultants
Miyamoto International, Inc.
The Ruzika Company, Inc.
MDC Consulting Engineers
Pocock Design Solutions
Newson Brown Acoustics, LLC
VCA Engineers, Inc.
HJSA Consulting

Sheet Title

Roof Details

Sheet Number

A831

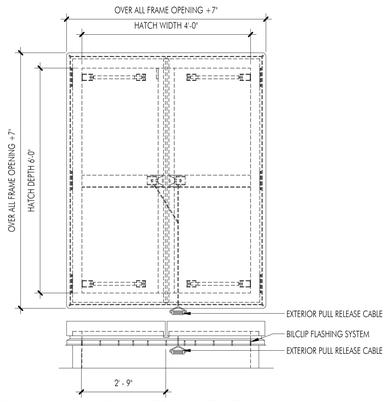

9 SMOKE HATCH VENT

SCALE: 1/2" = 1'-0"

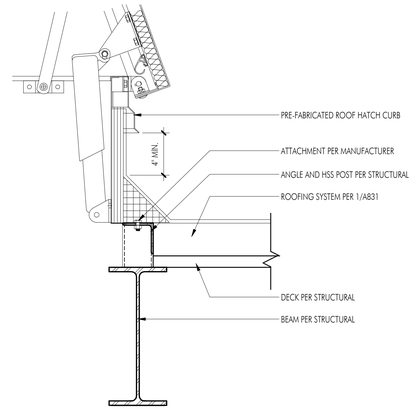

5 ROOF HATCH ENLARGED DETAIL

SCALE: 1 1/2" = 1'-0"

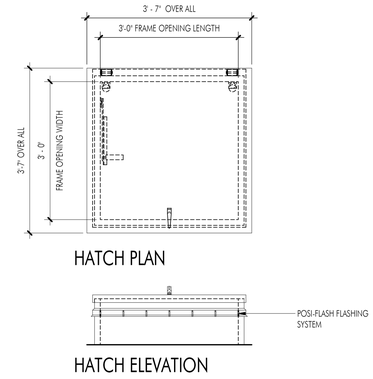

HATCH PLAN

HATCH ELEVATION

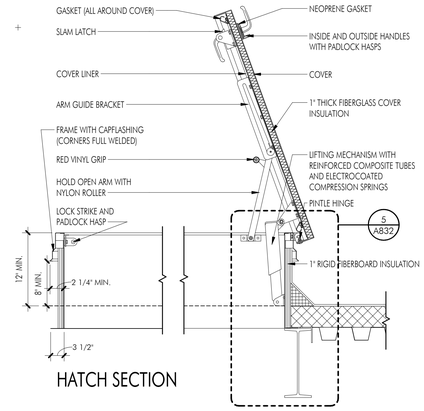

HATCH SECTION

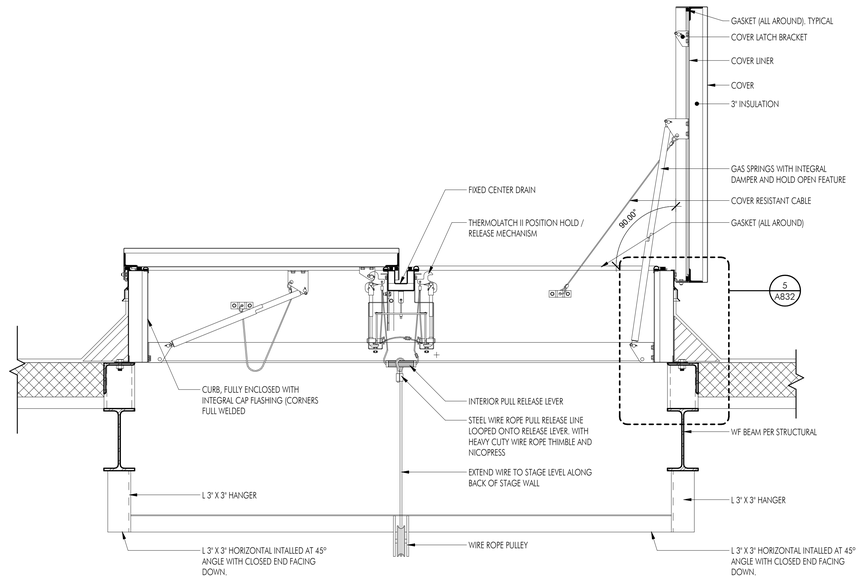

2 ROOF HATCH DETAIL

SCALE: 3/4" = 1'-0"

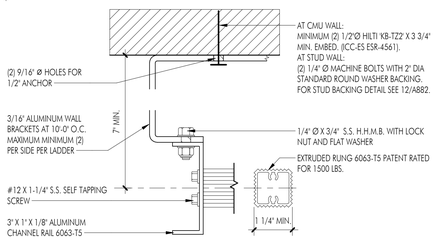

B. LADDER DETAIL

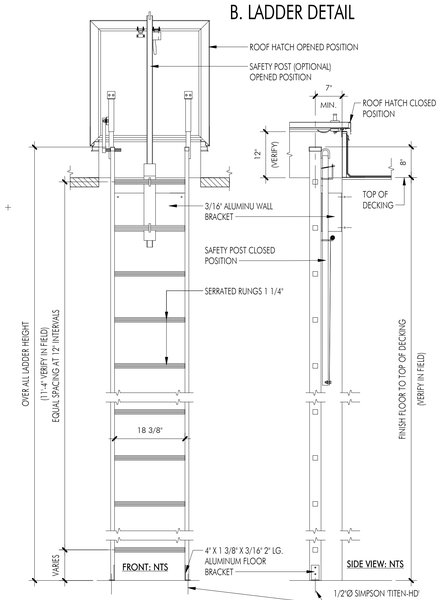

A.

4 FIXED ACCESS ALUMINUM LADDER

SCALE: 3/4" = 1'-0"

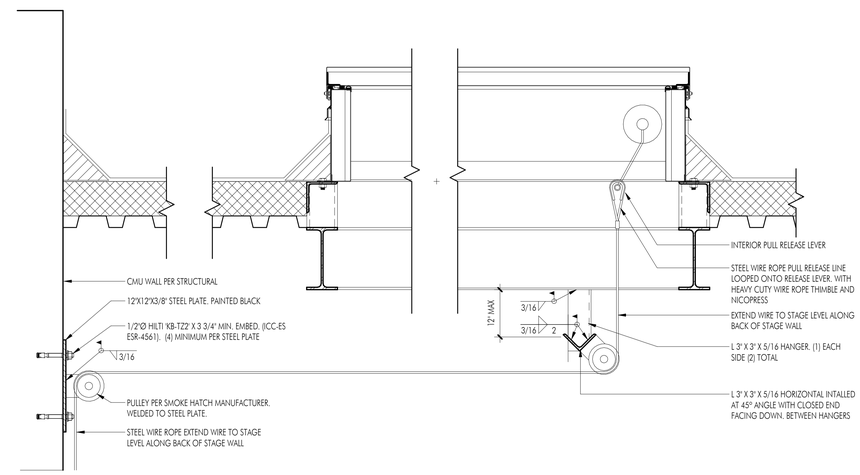

12 SMOKE HATCH VENT AND MANUAL RELEASE DETAILS

SCALE: 1 1/2" = 1'-0"

APPL No. A03-122864

IDENTIFICATION STAMP
DIV. OF THE STATE ARCHITECT
APP: 03-122864 INC:
REVIEWED FOR
SS ☑ FLS ☑ ACS ☑
DATE: 10/03/2023

DSA Stamp

Architect

RACHLIN PARTNERS
8640 National Boulevard
Culver City, CA 90232
310.204.3400

Disclaimer:

THESE DRAWINGS ARE THE PROPERTY OF THE ARCHITECT. THE DESIGNS SHOWN AND DESCRIBED HEREIN INCLUDING ALL TECHNICAL DRAWINGS ARE PROPRIETARY AND CANNOT BE COPIED, DUPLICATED OR COMMERCIALLY EXPLOITED IN ANY WAY. THEY ARE NOT TO BE CHANGED OR ALTERED AND SHALL NOT BE USED BY THE OWNER ON OTHER PROJECTS, FOR ADDITIONS TO THIS PROJECT, OR FOR COMPLETION OF THIS PROJECT BY OTHERS. THE OWNER AGREES TO HOLD HARMLESS, INDEMNIFY AND DEFEND THE ARCHITECT AGAINST ALL DAMAGES, CLAIMS AND LOSSES, INCLUDING DEFENSE COSTS, ARISING OUT OF ANY REUSE OF PLANS AND SPECIFICATIONS WITHOUT THE WRITTEN AUTHORIZATION OF THE ARCHITECT OF RECORD.

Copyright © 2022 Rachlin Partners, All Rights Reserved.

Performing Arts Center

Hacienda La Puente Unified School District
635 North California Avenue
La Puente, CA 91744

Rev	Date	Issue
1	7.22.22	50% DD
2	10.21.22	50% CD
3	12.09.22	100% CD DSA SUBMITTAL
4	6.19.23	100% CD DSA RESUBMITTAL
5	9.20.23	DSA BACK CHECK

Date: 9.20.2023
Scale: As indicated
Drawn By: MS
Checked By: RM

Architect / Engineer Stamp

LICENSED ARCHITECT
RONALD M. RACHLIN
NO. C-28229
REN. 8-31-25
STATE OF CALIFORNIA

Consultants
Miyamoto International, Inc.
The Ruzika Company, Inc.
MDC Consulting Engineers
Pocock Design Solutions
Newson Brown Acoustics, LLC
VCA Engineers, Inc.
HJSA Consulting

Sheet Title

Roof Details

Sheet Number

A832

C:\Users\rudy.monico\Documents\R22_HLPUSD_PAC_Central_rudy.monico.rvt

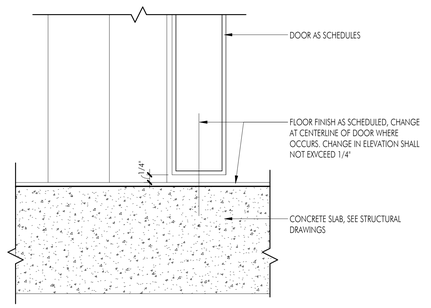

17 INTERIOR DOOR THRESHOLD

SCALE: 6" = 1'-0"

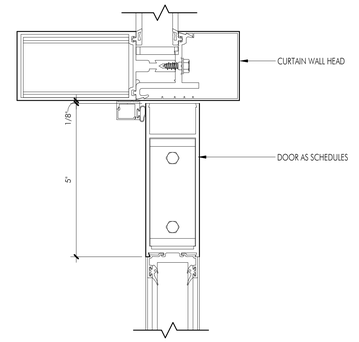

13 EXTERIOOR DOOR HEAD

SCALE: 6" = 1'-0"

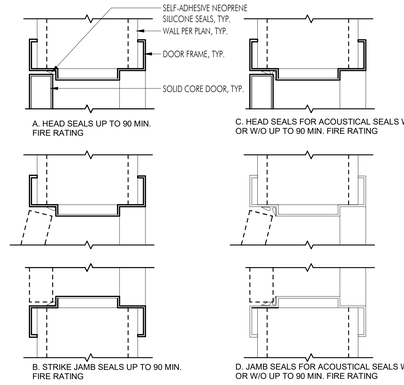

9 ACOUSTIC AND FIRE DOOR SEALS

SCALE: 3" = 1'-0"

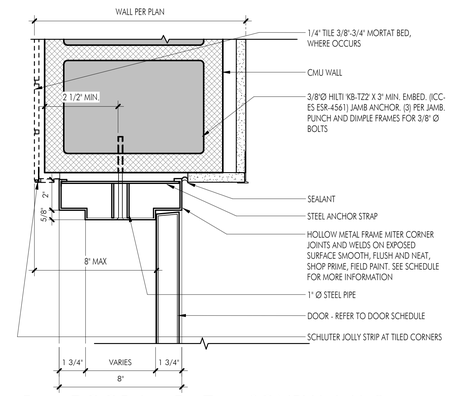

5 DOOR JAMB AT MASONRY WALL 3

SCALE: 3" = 1'-0"

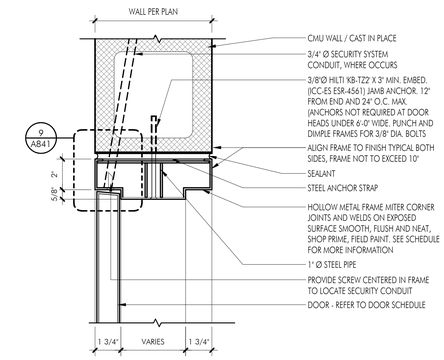

1 DOOR HEAD AT MASONRY WALL

SCALE: 3" = 1'-0"

18 MARBLE THRESHOLD

SCALE: 6" = 1'-0"

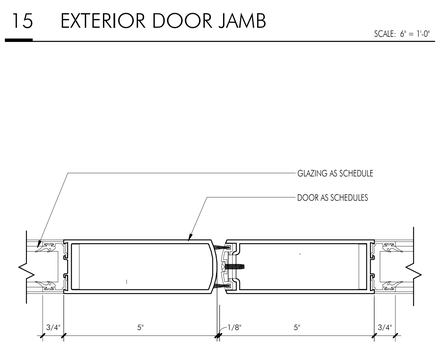

14 EXTERIOR DOOR THRESHOLD

SCALE: 6" = 1'-0"

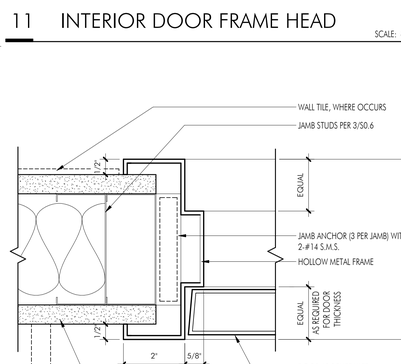

10 ACOUSTIC AND FIRE SEALS AT ASTRAGAL

SCALE: 3" = 1'-0"

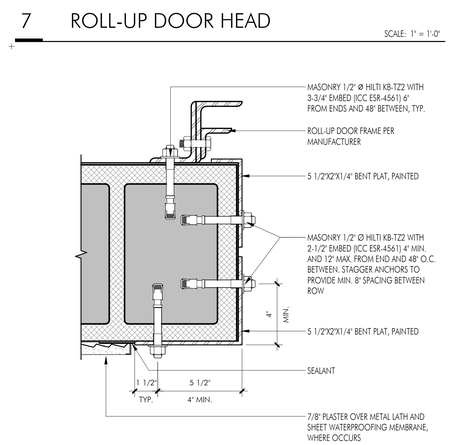

6 DOOR JAMB AT MASONRY WALL 4

SCALE: 3" = 1'-0"

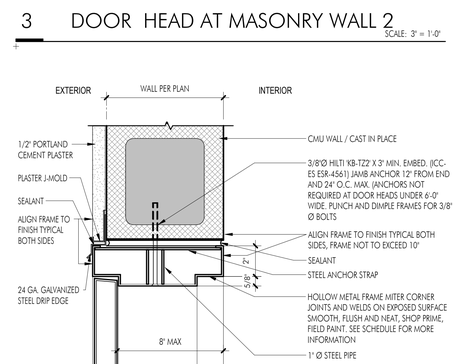

2 DOOR JAMB AT MASONRY WALL

SCALE: 3" = 1'-0"

15 EXTERIOR DOOR JAMB

SCALE: 6" = 1'-0"

11 INTERIOR DOOR FRAME HEAD

SCALE: 6" = 1'-0"

7 ROLL-UP DOOR HEAD

SCALE: 1" = 1'-0"

3 DOOR HEAD AT MASONRY WALL 2

SCALE: 3" = 1'-0"

16 EXTERIOR DOOR CENTER JAMB

SCALE: 6" = 1'-0"

12 INTERIOR DOOR FRAME JAMB

SCALE: 6" = 1'-0"

8 ROLL-UP DOOR JAMB

SCALE: 3" = 1'-0"

4 DOOR JAMB PLAN MASONRY WALL

SCALE: 3" = 1'-0"

C:\Users\rudy.monico\Documents\M22_HLFUSD-PAC_Central_rudy.monico.rvt

APPL No. A03-122864

IDENTIFICATION STAMP
DIV. OF THE STATE ARCHITECT
APP: 03-122864 INC:
REVIEWED FOR
SS ☑ FLS ☑ ACS ☑
DATE: 10/03/2023

DSA Stamp

Architect

RACHLIN PARTNERS
8640 National Boulevard
Culver City, CA 90232
310.204.3400

Disclaimer:

THESE DRAWINGS ARE THE PROPERTY OF THE ARCHITECT. THE DESIGNS SHOWN AND DESCRIBED HEREIN INCLUDING ALL TECHNICAL DRAWINGS ARE PROPRIETARY AND CANNOT BE COPIED, DUPLICATED OR COMMERCIALLY EXPLOITED IN ANY WAY. THEY ARE NOT TO BE CHANGED OR USED AND SHALL NOT BE USED BY THE OWNER ON OTHER PROJECTS, FOR ADDITIONS TO THIS PROJECT, OR FOR COMPLETION OF THIS PROJECT BY OTHERS. THE OWNER AGREES TO HOLD HARMLESS, INDEMNIFY AND DEFEND THE ARCHITECT AGAINST ALL DAMAGES, CLAIMS AND LOSSES, INCLUDING DEFENSE COSTS, ARISING OUT OF ANY REUSE OF PLANS AND SPECIFICATIONS WITHOUT THE WRITTEN AUTHORIZATION OF THE ARCHITECT OF RECORD.

Copyright © 2022 Rachlin Partners, All Rights Reserved.

Performing Arts Center

Hacienda La Puente Unified School District
635 North California Avenue
La Puente, CA 91744

Rev	Date	Issue
1	7.22.22	50% DD
2	10.21.22	50% CD
3	12.09.22	100% CD DSA SUBMITTAL
4	6.19.23	100% CD DSA RESUBMITTAL
5	9.20.23	DSA BACK CHECK

Date: 9.20.2023
Scale: As indicated
Drawn By: MS
Checked By: RM

Architect / Engineer Stamp

LICENSED ARCHITECT
LONNIE RUDY MONICO
NO. C-26229
REN. 8-31-25
STATE OF CALIFORNIA

Consultants
Miyamoto International, Inc.
The Ruzika Company, Inc.
MDC Consulting Engineers
Pocock Design Solutions
Newson Brown Acoustics, LLC
VCA Engineers, Inc.
HJSA Consulting

Sheet Title

Door and Window Details

Sheet Number

A841

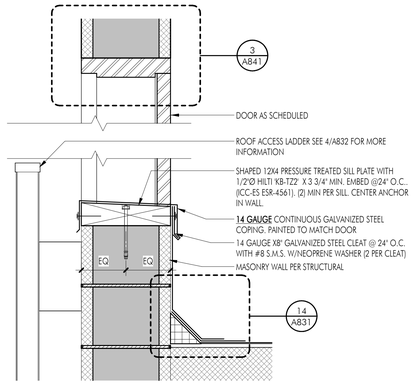

9 ROOF ACCESS DOOR DETAIL

SCALE: 1 1/2" = 1'-0"

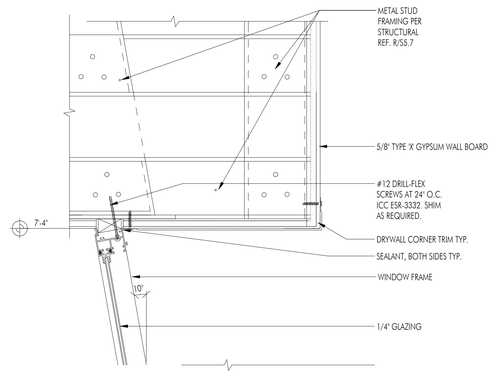

5 CONTROL BOOTH WINDOW HEAD DETAIL

SCALE: 3" = 1'-0"

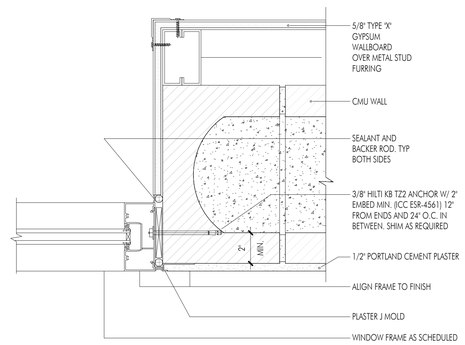

1 WINDOW JAMB

SCALE: 3" = 1'-0"

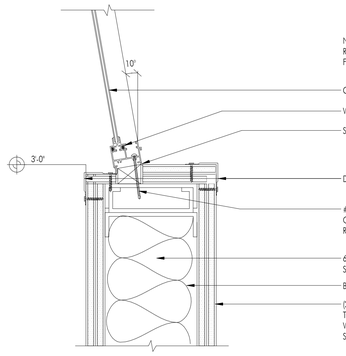

6 CONTROL BOOTH WINDOW SILL DETAIL

SCALE: 3" = 1'-0"

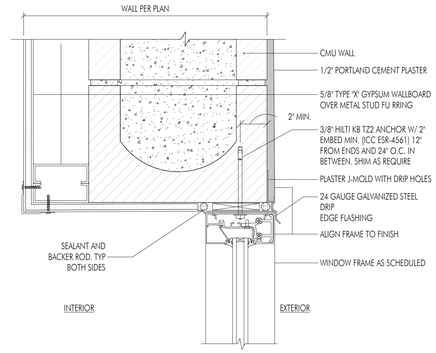

2 WINDOW HEAD DETAIL

SCALE: 3" = 1'-0"

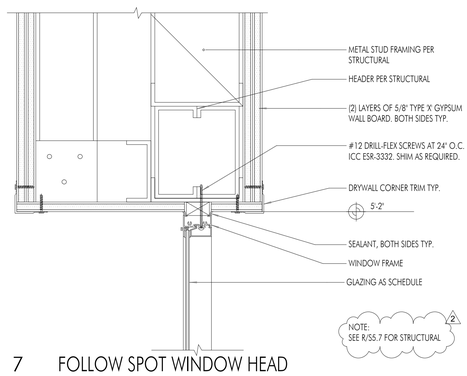

7 FOLLOW SPOT WINDOW HEAD

SCALE: 3" = 1'-0"

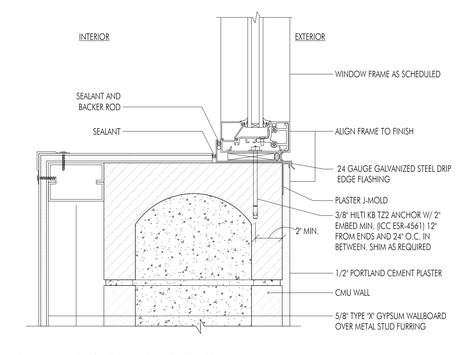

3 WINDOW SILL DETAIL

SCALE: 3" = 1'-0"

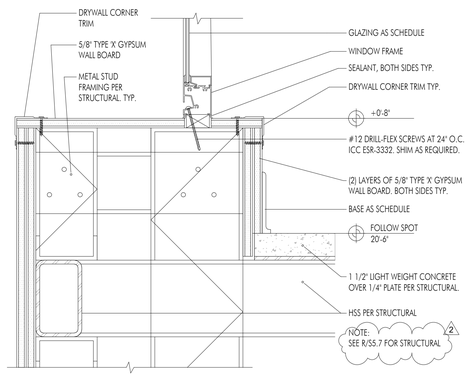

8 FOLLOW SPOT WINDOW SILL

SCALE: 3" = 1'-0"

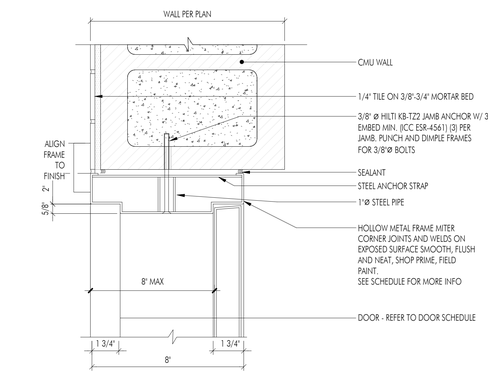

4 DOOR JAMB AT TILE/ MASONRY WALL (HEAD SIM.)

SCALE: 3" = 1'-0"

C:\Users\rudy.monico\Documents\RT22_HLPUSD-PAC_Central_rudy.monico.rvt

APPL No. A03-122864

DSA Stamp

Architect

RACHLIN PARTNERS
8640 National Boulevard
Culver City, CA 90232
310.204.3400

Disclaimer:

THESE DRAWINGS ARE THE PROPERTY OF THE ARCHITECT. THE DESIGNS SHOWN AND DESCRIBED HEREIN INCLUDING ALL TECHNICAL DRAWINGS ARE PROPRIETARY AND CANNOT BE COPIED, DUPLICATED OR COMMERCIALLY EXPLOITED IN ANY WAY. THEY ARE NOT TO BE CHANGED OR USED AND SHALL NOT BE USED BY THE OWNER ON OTHER PROJECTS, FOR ADDITIONS TO THIS PROJECT, OR FOR COMPLETION OF THIS PROJECT BY OTHERS. THE OWNER AGREES TO HOLD HARMLESS, INDEMNIFY AND DEFEND THE ARCHITECT AGAINST ALL DAMAGES, CLAIMS AND LOSSES, INCLUDING DEFENSE COSTS, ARISING OUT OF ANY REUSE OF PLANS AND SPECIFICATIONS WITHOUT THE WRITTEN AUTHORIZATION OF THE ARCHITECT OF RECORD.

Copyright © 2022 Rachlin Partners, All Rights Reserved.

Performing Arts Center

Hacienda La Puente Unified School District
635 North California Avenue
La Puente, CA 91744

Rev	Date	Issue
1	7.22.22	50% DD
2	10.21.22	50% CD
3	12.09.22	100% CD DSA SUBMITTAL
4	6.19.23	100% CD DSA RESUBMITTAL
5	9.20.23	DSA BACK CHECK
6	11.01.23	ADDENDUM NO. 1
7	11.01.23	ADDENDUM NO. 2

Date: 11.01.2023
Scale: As indicated
Drawn By: Author
Checked By: Checker

Architect / Engineer Stamp

LICENSED ARCHITECT
EDWARD PACHECO
NO. C-28229
REN. 8-31-25
STATE OF CALIFORNIA

Consultants
Miyamoto International, Inc.
The Ruzika Company, Inc.
MDC Consulting Engineers
Pocock Design Solutions
Newson Brown Acoustics, LLC
VCA Engineers, Inc.
HJSA Consulting

Sheet Title

Door and Window Details

Sheet Number

A842

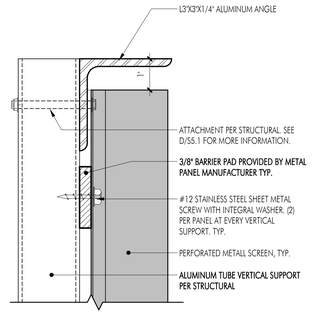

13 METAL SCREEN TOP EDGE (BOTTOM SIM.)

SCALE: 6" = 1'-0"

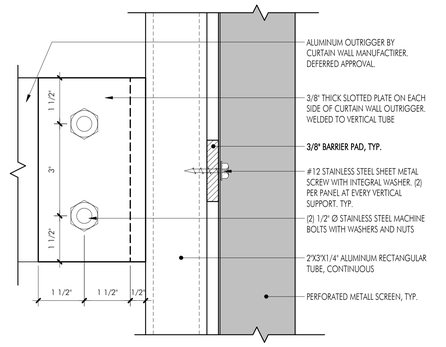

9 METAL SCREEN VERTICAL SECTION

SCALE: 6" = 1'-0"

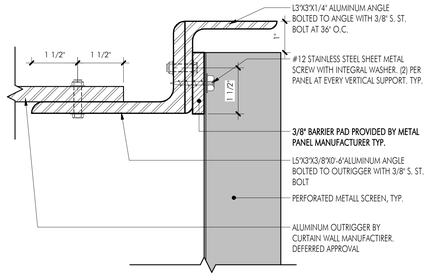

14 METAL SCREEN EDGE 2

SCALE: 6" = 1'-0"

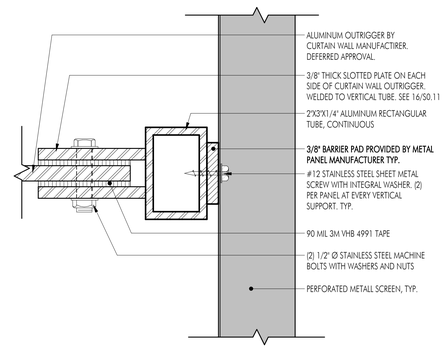

10 METAL SCREEN HORIZONTAL SECTION

SCALE: 6" = 1'-0"

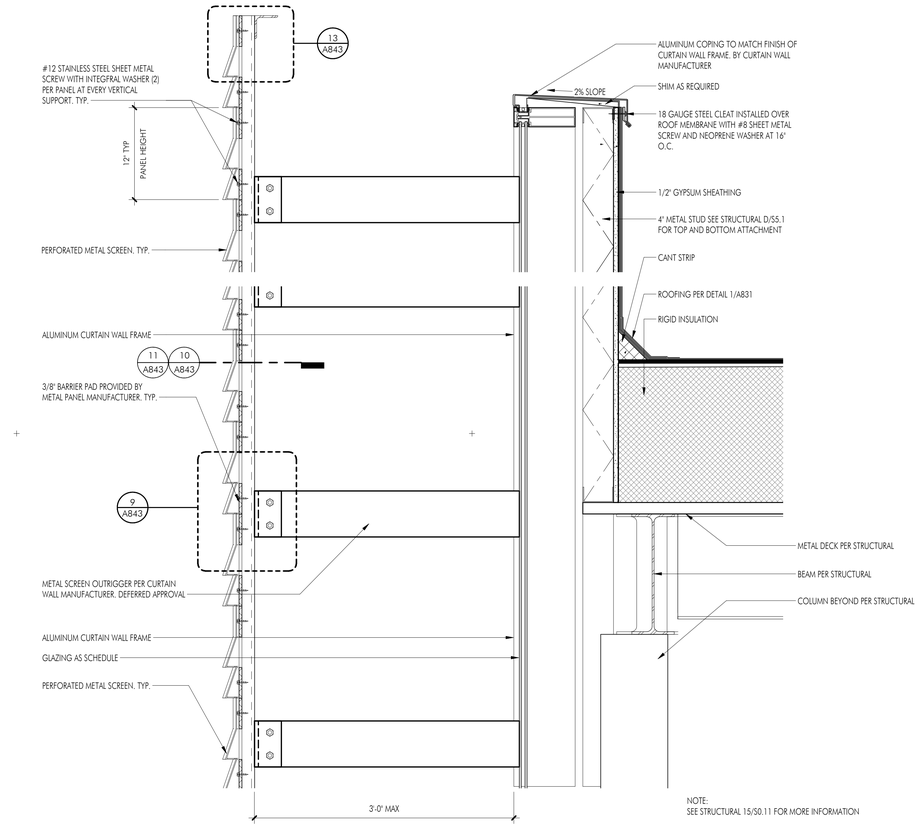

6 PARAPET AT CURTAIN WALL AND METAL SCREEN DETAIL

SCALE: 1 1/2" = 1'-0"

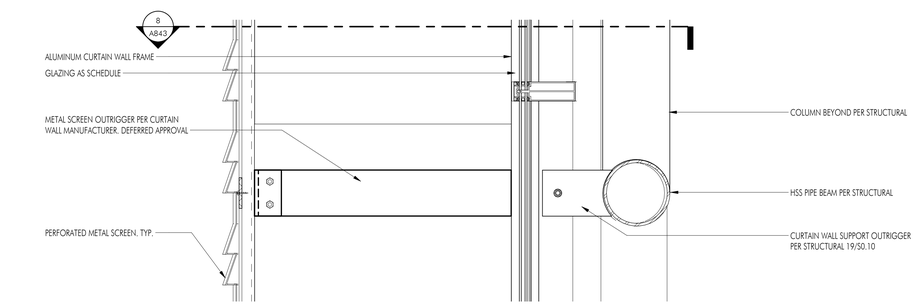

7 METAL SCREEN AT HSS BEAM

SCALE: 1 1/2" = 1'-0"

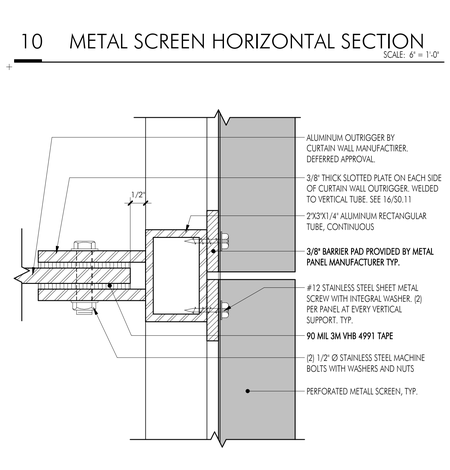

11 METAL SCREEN JOINT

SCALE: 6" = 1'-0"

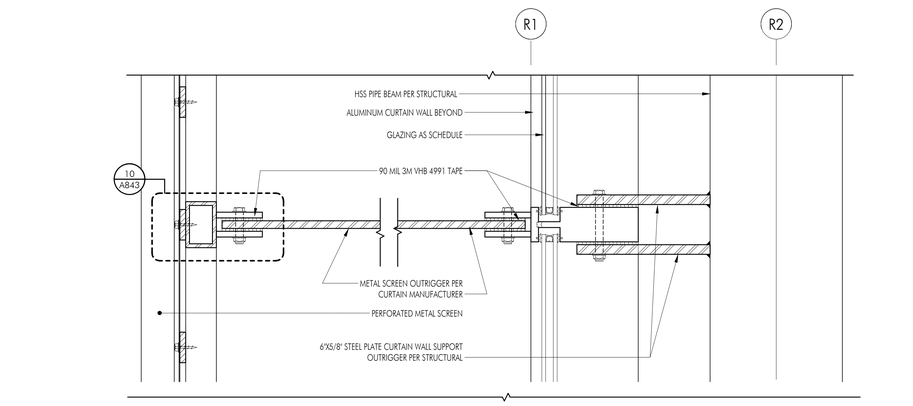

8 METAL SCREEN AT HSS PIPE BEAM PLAN VIEW

SCALE: 3" = 1'-0"

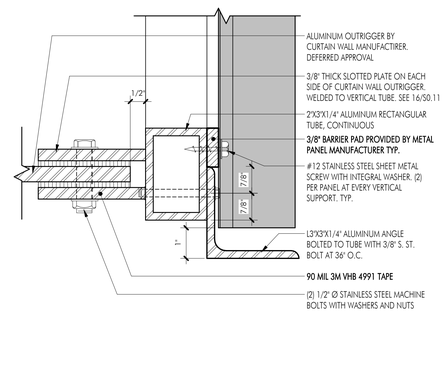

15 METAL SCREEN EDGE 3

SCALE: 6" = 1'-0"

12 METAL SCREEN EDGE

SCALE: 6" = 1'-0"

C:\Users\rudy.monico\Documents\R22_HLPUSD-PAC_Central_rudy.monico.rvt

APPL No. A03-122864

IDENTIFICATION STAMP
DIV. OF THE STATE ARCHITECT
APP: 03-122864 INC:
REVIEWED FOR
SS ☑ FLS ☑ ACS ☑
DATE: 10/03/2023

DSA Stamp

Architect

RACHLIN PARTNERS
8640 National Boulevard
Culver City, CA 90232
310.204.3400

Disclaimer:

THESE DRAWINGS ARE THE PROPERTY OF THE ARCHITECT. THE DESIGNS SHOWN AND DESCRIBED HEREIN INCLUDING ALL TECHNICAL DRAWINGS ARE PROPRIETARY AND CANNOT BE COPIED, DUPLICATED OR COMMERCIALLY EXPLOITED IN ANY WAY. THEY ARE NOT TO BE CHANGED OR ALTERED AND SHALL NOT BE USED BY THE OWNER ON OTHER PROJECTS, FOR ADDITIONS TO THIS PROJECT, OR FOR COMPLETION OF THIS PROJECT BY OTHERS. THE OWNER AGREES TO HOLD HARMLESS, INDEMNIFY AND DEFEND THE ARCHITECT AGAINST ALL DAMAGES, CLAIMS AND LOSSES, INCLUDING DEFENSE COSTS, ARISING OUT OF ANY REUSE OF PLANS AND SPECIFICATIONS WITHOUT THE WRITTEN AUTHORIZATION OF THE ARCHITECT OF RECORD.

Copyright © 2022 Rachlin Partners, All Rights Reserved.

Performing Arts Center

Hacienda La Puente Unified School District
635 North California Avenue
La Puente, CA 91744

Rev	Date	Issue
1	7.22.22	50% DD
2	10.21.22	50% CD
3	12.09.22	100% CD DSA SUBMITTAL
4	6.19.23	100% CD DSA RESUBMITTAL
5	9.20.23	DSA BACK CHECK

Date: 9.20.2023
Scale: As indicated
Drawn By: MS
Checked By: RM

Architect / Engineer Stamp

Consultants
Miyamoto International, Inc.
The Ruzika Company, Inc.
MDC Consulting Engineers
Pocock Design Solutions
Newson Brown Acoustics, LLC
VCA Engineers, Inc.
HJSA Consulting

Sheet Title

Curtain Wall Screen Details

Sheet Number

A843

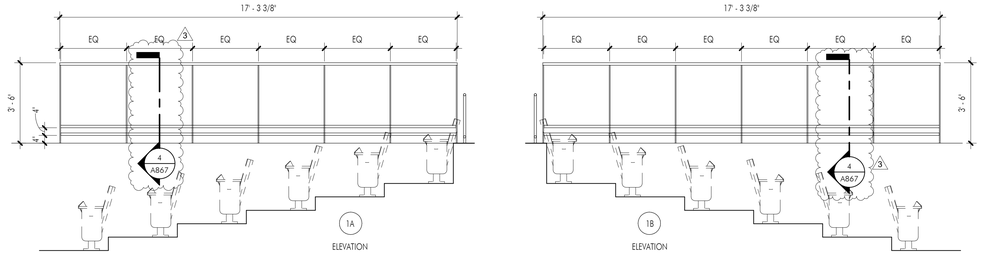

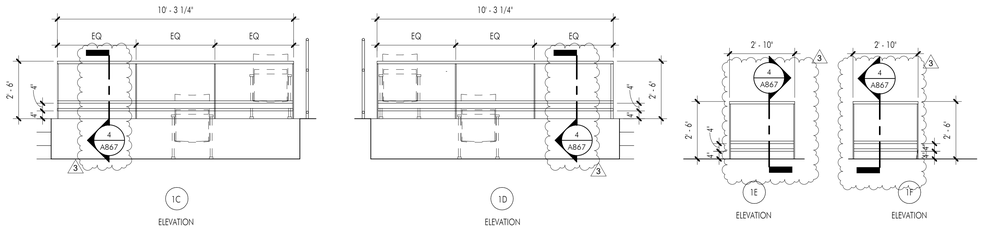

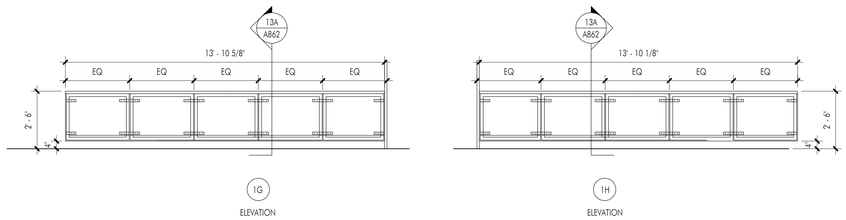

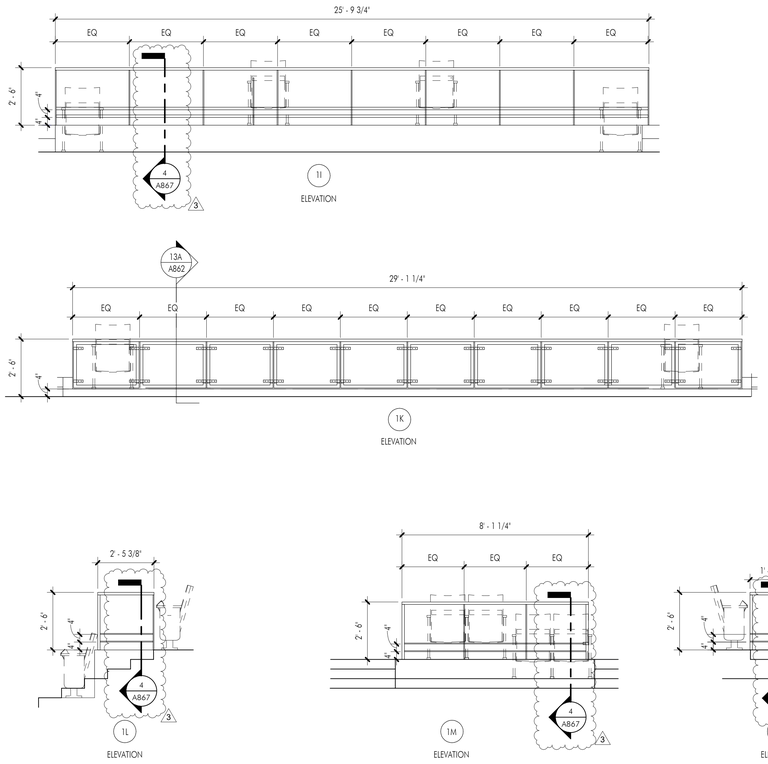

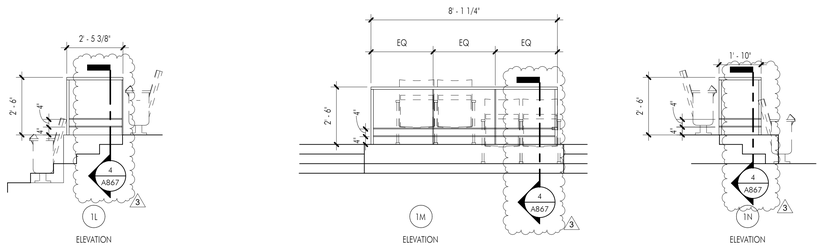

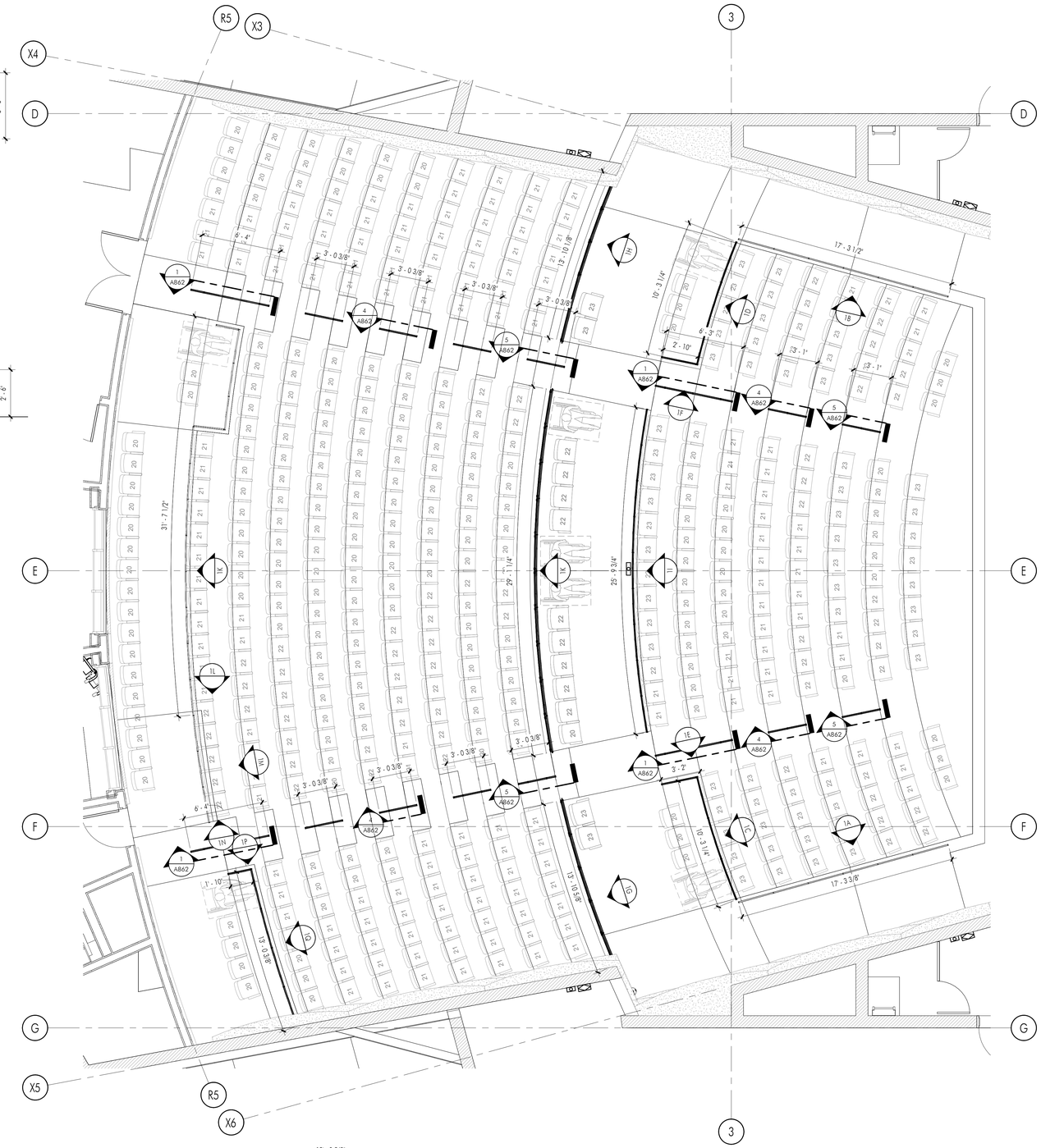

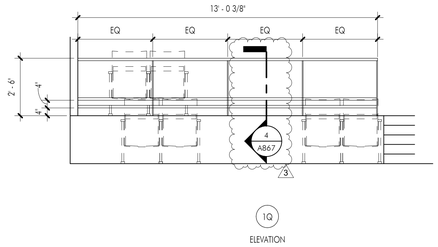

1 GUARDRAIL AT ORCHESTRA /PARTERRE/AISLE - PLAN AND ELEVATIONS

SCALE: 3/8" = 1'-0"

APPL No. A03-122864

DSA Stamp

Architect

RACHLIN PARTNERS
8640 National Boulevard
Culver City, CA 90232
310.204.3400

Disclaimer:

THESE DRAWINGS ARE THE PROPERTY OF THE ARCHITECT. THE DESIGNS SHOWN AND DESCRIBED HEREIN INCLUDING ALL TECHNICAL DRAWINGS ARE PROPRIETARY AND CANNOT BE COPIED, DUPLICATED OR COMMERCIALLY EXPLOITED EXCEPT WITH THE WRITTEN PERMISSION OF THE ARCHITECT AND SHALL NOT BE USED BY THE OWNER ON OTHER PROJECTS, FOR ADDITIONS TO THIS PROJECT, OR FOR COMPLETION OF THIS PROJECT BY OTHERS. THE OWNER AGREES TO HOLD HARMLESS, INDEMNIFY AND DEFEND THE ARCHITECT AGAINST ALL DAMAGES, CLAIMS AND LOSSES, INCLUDING DEFENSE COSTS, ARISING OUT OF ANY REUSE OF PLANS AND SPECIFICATIONS WITHOUT THE WRITTEN AUTHORIZATION OF THE ARCHITECT OF RECORD.

Copyright © 2022 Rachlin Partners, All Rights Reserved.

Performing Arts Center

Hacienda La Puente Unified School District
635 North California Avenue
La Puente, CA 91744

Rev	Date	Issue
1	7.22.22	50% DD
2	10.21.22	50% CD
3	12.09.22	100% CD DSA SUBMITTAL
4	6.19.23	100% CD DSA RESUBMITTAL
5	9.20.23	DSA BACK CHECK
6	11.01.23	ADDENDUM NO. 1
7	11.01.23	ADDENDUM NO. 2
8	12.15.23	ADDENDUM NO. 3

Date: 11.01.2023
Scale: As indicated
Drawn By: JP, NZ
Checked By: RM

Architect / Engineer Stamp

LICENSED ARCHITECT
RONALD M. RACHLIN
NO. C-26229
REN. 8-31-25
STATE OF CALIFORNIA

Consultants
Miyamoto International, Inc.
The Ruzika Company, Inc.
MDC Consulting Engineers
Pocock Design Solutions
Newson Brown Acoustics, LLC
VCA Engineers, Inc.
HJSA Consulting

Sheet Title

Interior Details

Sheet Number

A861

C:\Users\rudy.monico\Documents\M22_HLPUSD-PAC_Central_rudy.monico.rvt

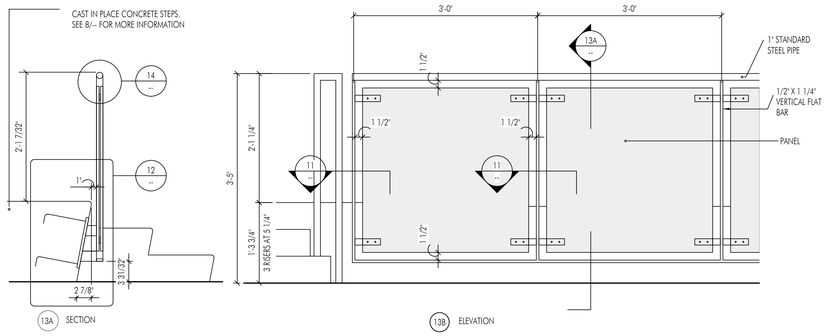

13 PARTERRE GUARDRAIL

SCALE: 1" = 1'-0"

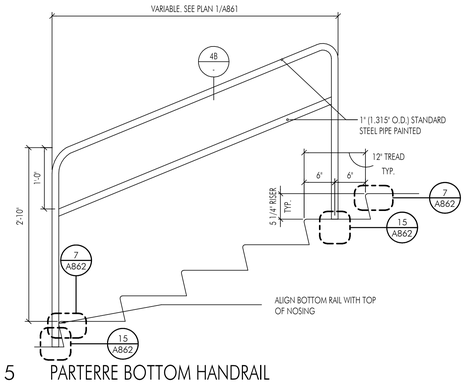

5 PARTERRE BOTTOM HANDRAIL

SCALE: 1" = 1'-0"

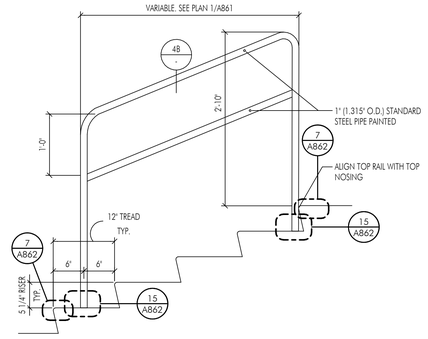

1 PARTERRE TOP HANDRAIL

SCALE: 1" = 1'-0"

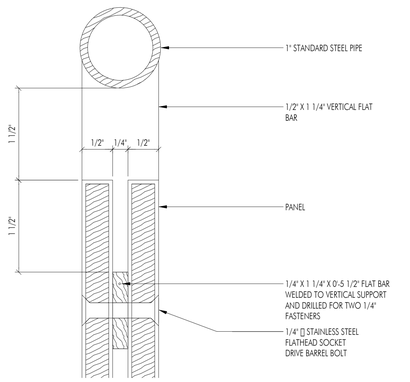

14 PARTERRE BOTTOM HANDRAIL

SCALE: 12" = 1'-0"

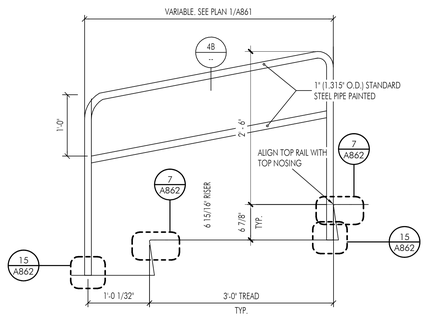

10 PARTERRE TOP HANDRAIL 2

SCALE: 1" = 1'-0"

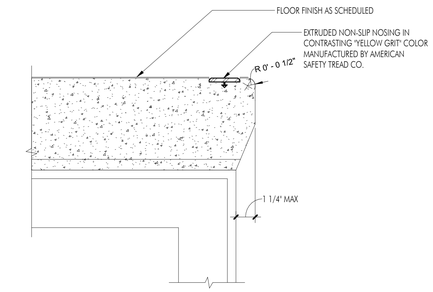

6 INTERIOR STAIR @ LOBBY NOSING

SCALE: 3" = 1'-0"

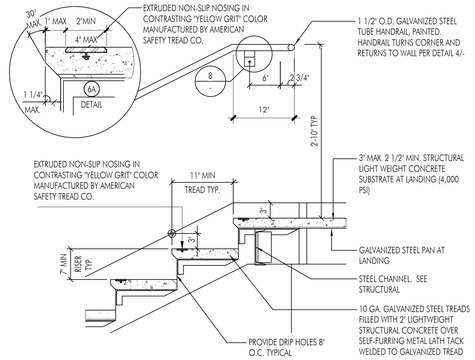

2 DETAIL AT TOP LANDING

SCALE: 1" = 1'-0"

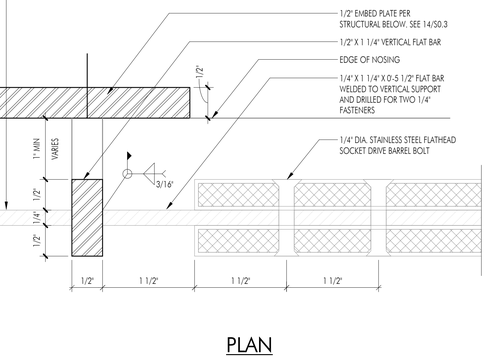

PLAN

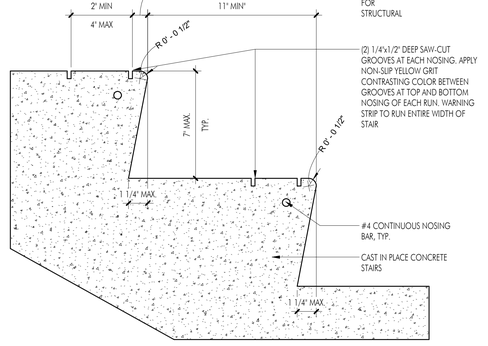

7 CAST-IN-PLACE CONCRETE STEPS @ AUDIENCE CHAMBER

SCALE: 3" = 1'-0"

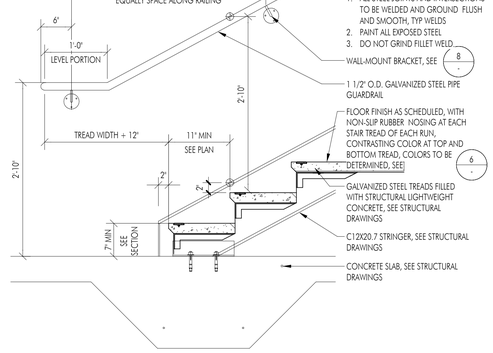

3 DETAIL AT BASE LANDING

SCALE: 1" = 1'-0"

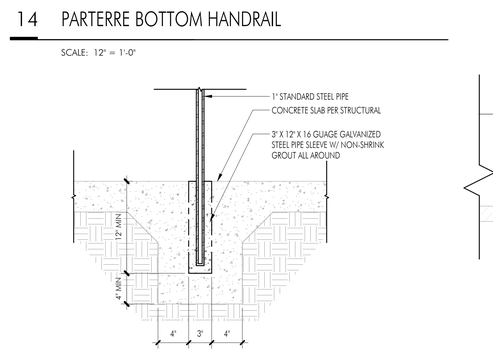

15 HANDRAIL BASE CONNECTION

SCALE: 1 1/2" = 1'-0"

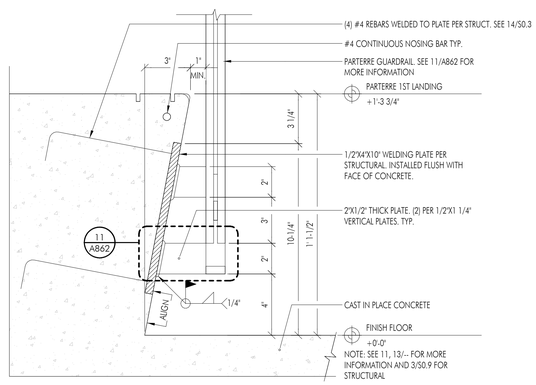

12 PARTERRE GUARDRAIL ATTACHEMTN DETAIL

SCALE: 3" = 1'-0"

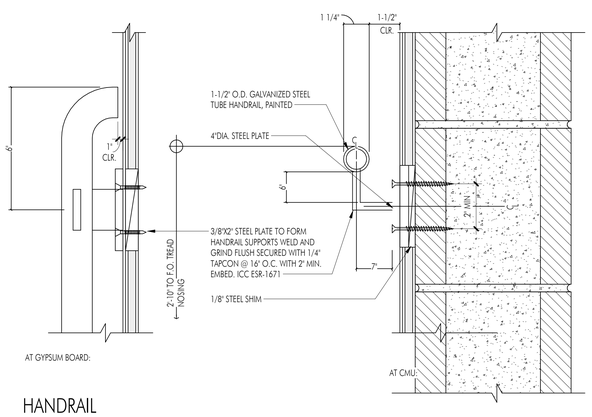

8 HANDRAIL

SCALE: 1" = 1'-0"

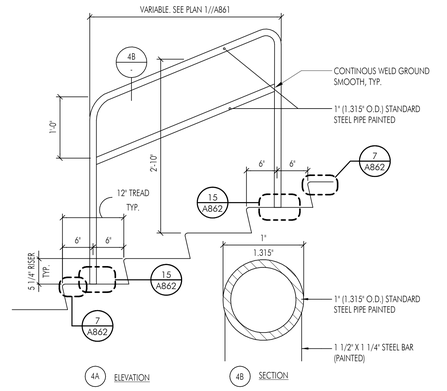

4 HANDRAIL

SCALE: 1" = 1'-0"

APPL No. A03-122864

IDENTIFICATION STAMP
DIV. OF THE STATE ARCHITECT
APP: 03-122864 INC:
REVIEWED FOR
SS ☑ FLS ☑ ACS ☑
DATE: 10/03/2023

DSA Stamp

Architect

RACHLIN PARTNERS
8640 National Boulevard
Culver City, CA 90232
310.204.3400

Disclaimer:

THESE DRAWINGS ARE THE PROPERTY OF THE ARCHITECT. THE DESIGNS SHOWN AND DESCRIBED HEREIN INCLUDING ALL TECHNICAL DRAWINGS ARE PROPRIETARY AND CANNOT BE COPIED, DUPLICATED OR COMMERCIALLY EXPLOITED IN WHOLE OR IN PART. THESE DRAWINGS AND SPECIFICATIONS SHALL NOT BE USED BY THE OWNER ON OTHER PROJECTS, FOR ADDITIONS TO THIS PROJECT, OR FOR COMPLETION OF THIS PROJECT BY OTHERS. THE OWNER AGREES TO HOLD HARMLESS, INDEMNIFY AND DEFEND THE ARCHITECT AGAINST ALL DAMAGES, CLAIMS AND LOSSES, INCLUDING DEFENSE COSTS, ARISING OUT OF ANY REUSE OF PLANS AND SPECIFICATIONS WITHOUT THE WRITTEN AUTHORIZATION OF THE ARCHITECT OF RECORD.

Copyright © 2022 Rachlin Partners, All Rights Reserved.

Performing Arts Center

Hacienda La Puente Unified School District
635 North California Avenue
La Puente, CA 91744

Rev	Date	Issue
1	7.22.22	50% DD
2	10.21.22	50% CD
3	12.09.22	100% CD DSA SUBMITTAL
4	6.19.23	100% CD DSA RESUBMITTAL
5	9.20.23	DSA BACK CHECK

Date: 9.20.2023
Scale: As indicated
Drawn By: JP, NZ
Checked By: RM

Architect / Engineer Stamp

LICENSED ARCHITECT
JAMES PAPASSIS
NO. C-26229
REN. 8-31-25
STATE OF CALIFORNIA

Consultants

Miyamoto International, Inc.
The Ruzika Company, Inc.
MDC Consulting Engineers
Pocock Design Solutions
Newson Brown Acoustics, LLC
VCA Engineers, Inc.
HJSA Consulting

Sheet Title

Interior Details

Sheet Number

A862

C:\Users\rvidy.monico\Documents\M22_HEPUSD-PAC_Central_rvidy.monico.rvt

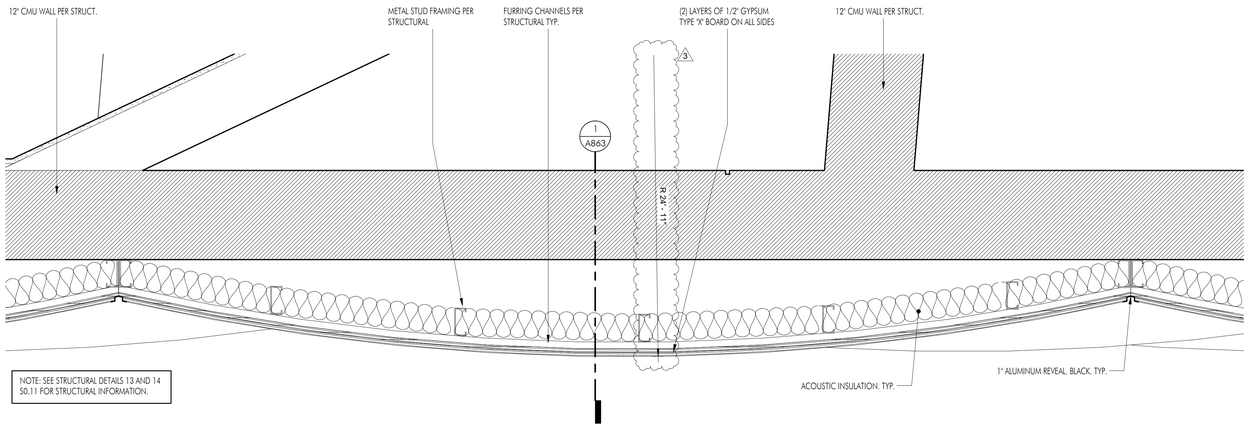

4 ACOUSTICAL WALL PANEL DETAIL

SCALE: 1 1/2" = 1'-0"

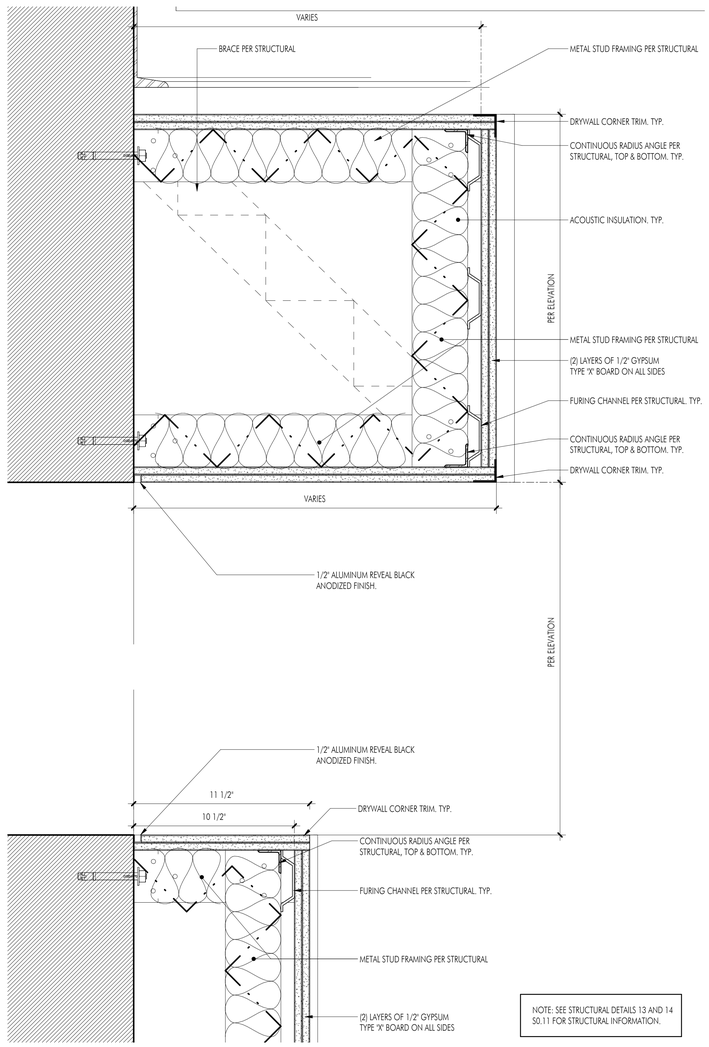

5 OPENING AT ACOUSTIC PANELS

SCALE: 3" = 1'-0"

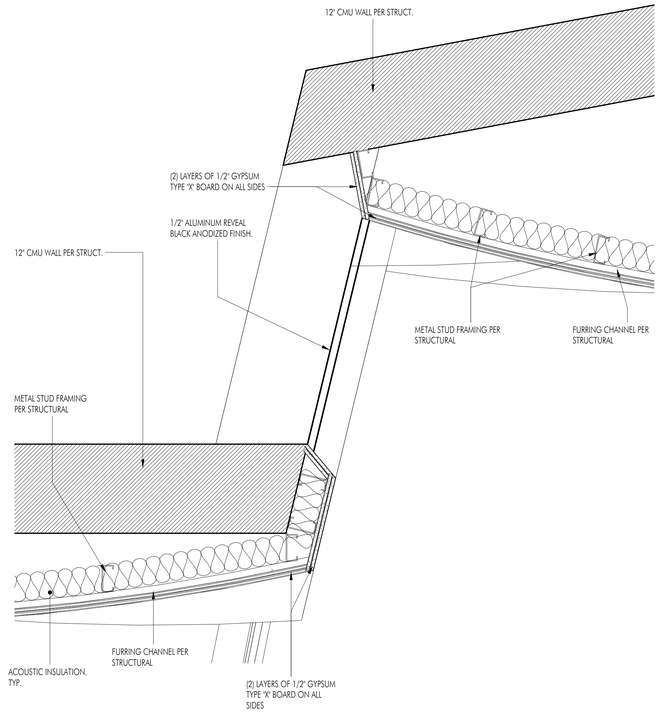

2 ACOUSTIC WALL PANEL DETAIL @ OPENING

SCALE: 1 1/2" = 1'-0"

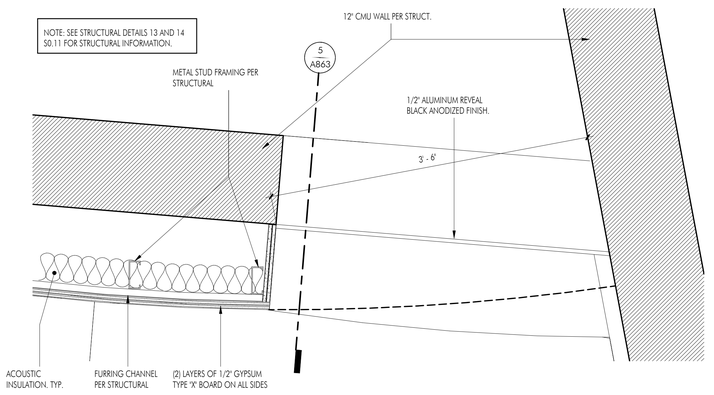

3 ACOUSTIC WALL PANEL DETAIL @ OPENING

SCALE: 1 1/2" = 1'-0"

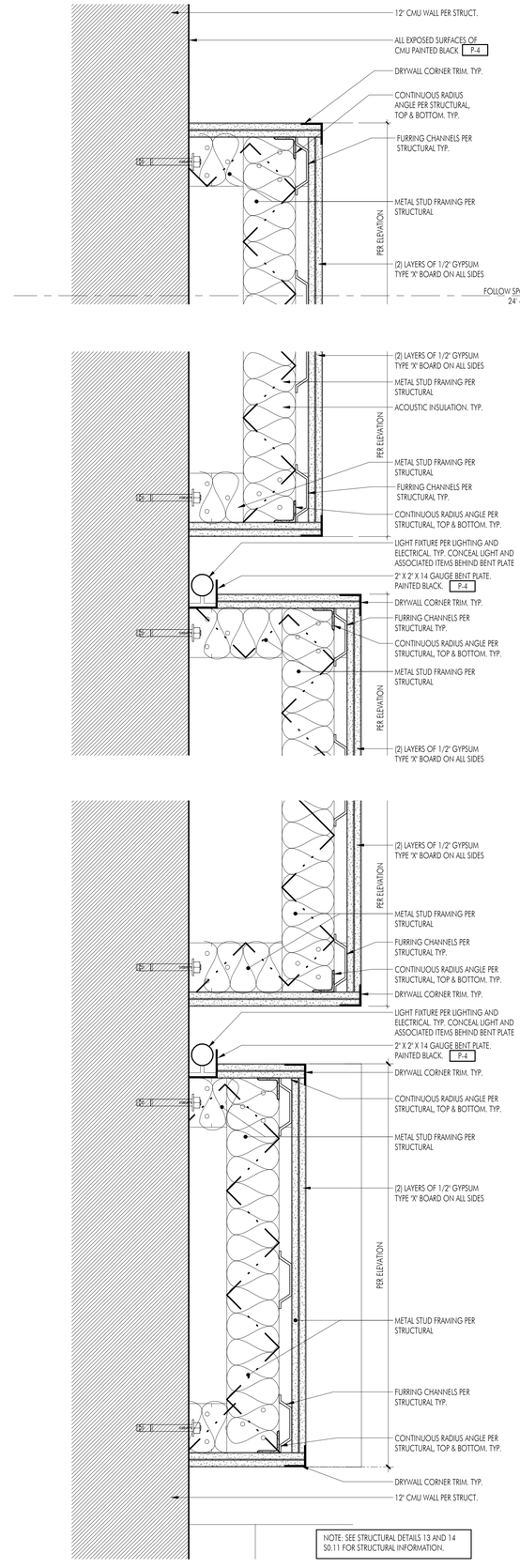

1 ACOUSTIC WALL PANEL DETAIL

SCALE: 3" = 1'-0"

APPL No. A03-122864

DSA Stamp

Architect

RACHLIN PARTNERS
8640 National Boulevard
Culver City, CA 90232
310.204.3400

Disclaimer:

THESE DRAWINGS ARE THE PROPERTY OF THE ARCHITECT. THE DESIGNS SHOWN AND DESCRIBED HEREIN INCLUDING ALL TECHNICAL DRAWINGS ARE PROPRIETARY AND CANNOT BE COPIED, DUPLICATED OR COMMERCIALLY EXPLOITED EITHER IN WHOLE OR IN PART WITHOUT WRITTEN CONSENT AND SHALL NOT BE USED BY THE OWNER ON OTHER PROJECTS, FOR ADDITIONS TO THIS PROJECT, OR FOR COMPLETION OF THIS PROJECT BY OTHERS. THE OWNER AGREES TO HOLD HARMLESS, INDEMNIFY AND DEFEND THE ARCHITECT AGAINST ALL DAMAGES, CLAIMS AND LOSSES, INCLUDING DEFENSE COSTS, ARISING OUT OF ANY REUSE OF PLANS AND SPECIFICATIONS WITHOUT THE WRITTEN AUTHORIZATION OF THE ARCHITECT OF RECORD.

Copyright © 2022 Rachlin Partners, All Rights Reserved.

Performing Arts Center

Hacienda La Puente Unified School District
635 North California Avenue
La Puente, CA 91744

Rev	Date	Issue
1	7.22.22	50% DD
2	10.21.22	50% CD
3	12.09.22	100% CD DSA SUBMITTAL
4	6.19.23	100% CD DSA RESUBMITTAL
5	9.20.23	DSA BACK CHECK
6	11.01.23	ADDENDUM NO. 1
7	11.01.23	ADDENDUM NO. 2
8	12.15.23	ADDENDUM NO. 3

Date: 11.01.2023
Scale: As indicated
Drawn By: JP, NZ
Checked By: RM

Architect / Engineer Stamp

LICENSED ARCHITECT RICHARD MORRISON NO. C26020 REN 8-31-25 STATE OF CALIFORNIA

Consultants
Miyamoto International, Inc.
The Ruzika Company, Inc.
MDC Consulting Engineers
Pocock Design Solutions
Newson Brown Acoustics, LLC
VCA Engineers, Inc.
HJSA Consulting

Sheet Title

Interior Details

Sheet Number

A863

C:\Users\rudy.monico\Documents\RZ2_HEPUSD-PAC_Central_rudy.monico.rvt

NOTE: SEE DETAILS 1,4/A863 FOR ACOUSTIC WALL PANEL DETAILS.

SEE DETAILS 13 AND 14/S0.11 FOR STRUCTURAL.

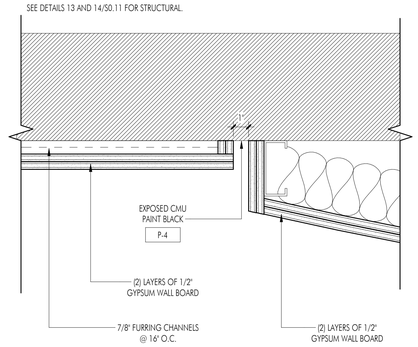

9 ACCOUSTIC PANEL EDGE - PLAN DETAIL

SCALE: 3" = 1'-0"

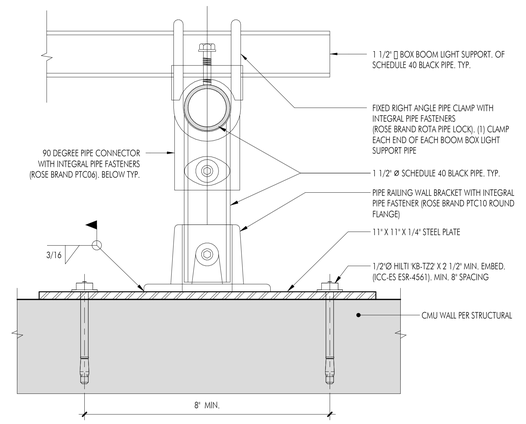

5 BOX BOOM LIGHTING PIPE RAIL DETAIL 2

SCALE: 6" = 1'-0"

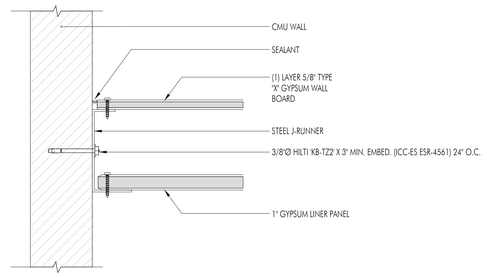

6 SHAFT WALL INTERSECTION

SCALE: 3" = 1'-0"

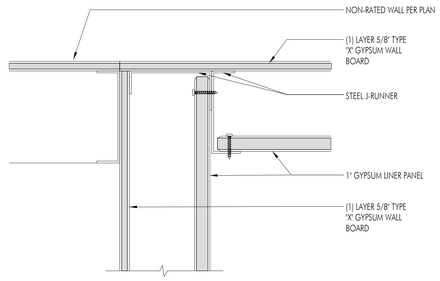

7 SHAFT WALL OUTSIDE CORNER

SCALE: 3" = 1'-0"

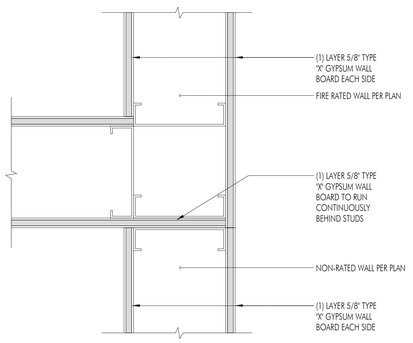

8 RATED WALL INTERSECTION

SCALE: 3" = 1'-0"

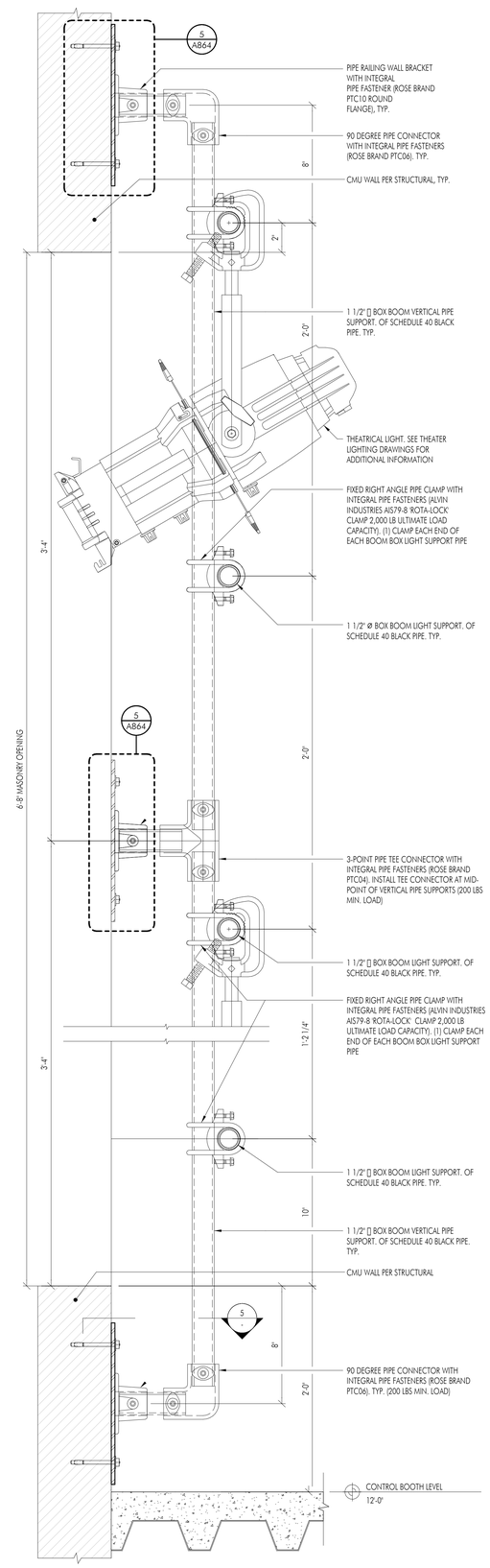

4 BOX BOOM LIGHTING PIPE RAIL DETAIL

SCALE: 3" = 1'-0"

C:\Users\rudy.monico\Documents\M22_HEPUSD-PAC_Central_rudy.monico.rvt

APPL No. A03-122864

IDENTIFICATION STAMP
DIV. OF THE STATE ARCHITECT
APP: 03-122864 INC:
REVIEWED FOR
SS ☑ FLS ☑ ACS ☑
DATE: 10/03/2023

DSA Stamp

Architect

RACHLIN PARTNERS
8640 National Boulevard
Culver City, CA 90232
310.204.3400

Disclaimer:

THESE DRAWINGS ARE THE PROPERTY OF THE ARCHITECT. THE DESIGNS SHOWN AND DESCRIBED HEREIN INCLUDING ALL TECHNICAL DRAWINGS ARE PROPRIETARY AND CANNOT BE COPIED, DUPLICATED OR COMMERCIALLY EXPLOITED IN ANY WAY. THEY ARE NOT TO BE ASSIGNED TO ANY THIRD PARTY, NOR SHALL NOT BE USED BY THE OWNER ON OTHER PROJECTS, FOR ADDITIONS TO THIS PROJECT, OR FOR COMPLETION OF THIS PROJECT BY OTHERS. THE OWNER AGREES TO HOLD HARMLESS, INDEMNIFY AND DEFEND THE ARCHITECT AGAINST ALL DAMAGES, CLAIMS AND LOSSES, INCLUDING DEFENSE COSTS, ARISING OUT OF ANY REUSE OF PLANS AND SPECIFICATIONS WITHOUT THE WRITTEN AUTHORIZATION OF THE ARCHITECT OF RECORD.

Copyright © 2022 Rachlin Partners, All Rights Reserved.

Performing Arts Center

Hacienda La Puente Unified School District
635 North California Avenue
La Puente, CA 91744

Rev	Date	Issue
1	7.22.22	50% DD
2	10.21.22	50% CD
3	12.09.22	100% CD DSA SUBMITTAL
4	6.19.23	100% CD DSA RESUBMITTAL
5	9.20.23	DSA BACK CHECK

Date: 9.20.2023
Scale: As indicated
Drawn By: JP, NZ
Checked By: RM

Architect / Engineer Stamp

LICENSED ARCHITECT
RONALD M. RACHLIN
NO. C-26229
REN. 8-31-25
STATE OF CALIFORNIA

Consultants
Miyamoto International, Inc.
The Ruzika Company, Inc.
MDC Consulting Engineers
Pocock Design Solutions
Newson Brown Acoustics, LLC
VCA Engineers, Inc.
HJSA Consulting

Sheet Title

Interior Details

Sheet Number

A864

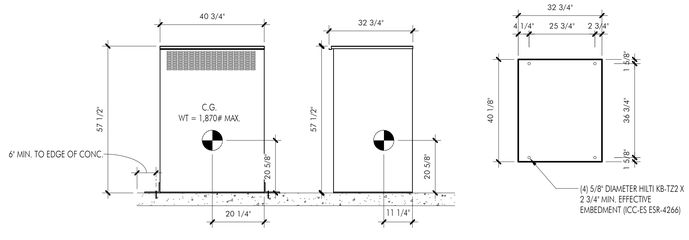

9 FLOOR MOUNTED TRANSFORMER

SCALE: 1/2" = 1'-0"

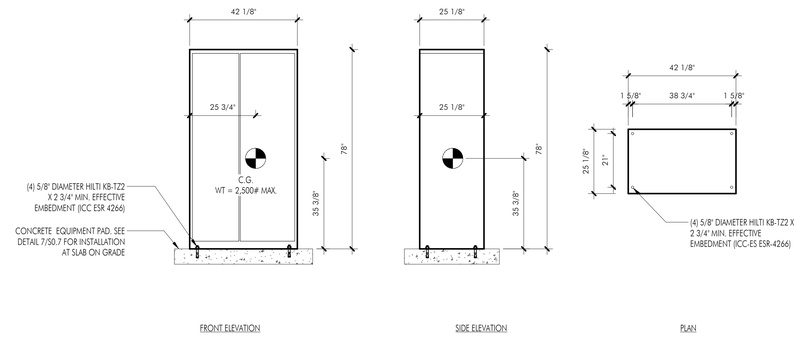

10 FLOOR MOUNTED INVERTER ANCHORAGE

SCALE: 1/2" = 1'-0"

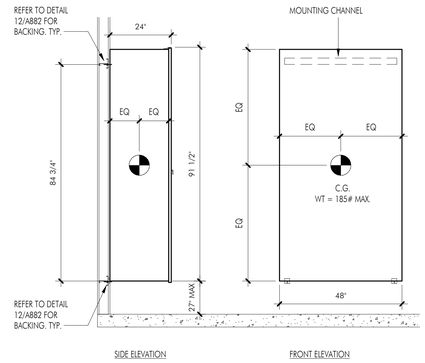

PANEL - DPL

1 WALL MOUNTED PANEL ANCHORAGE

SCALE: 1/2" = 1'-0"

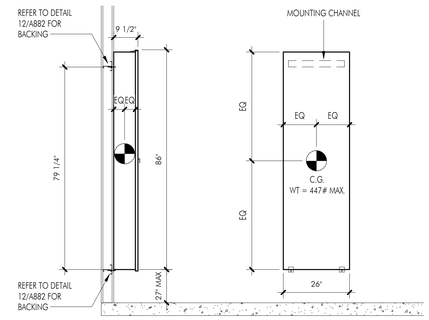

PANELS - DTL, HV

2 WALL MOUNTED PANEL ANCHORAGE

SCALE: 1/2" = 1'-0"

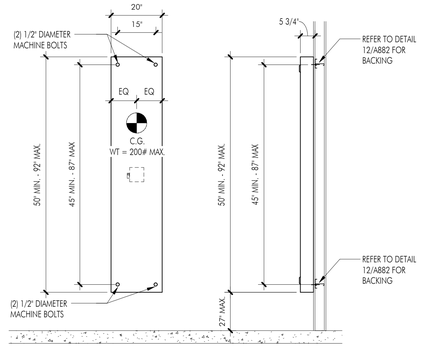

PANELS - HV1, AV, LTG, PL11, PL21 & PL31

3 WALL MOUNTED PANEL ANCHORAGE

SCALE: 1/2" = 1'-0"

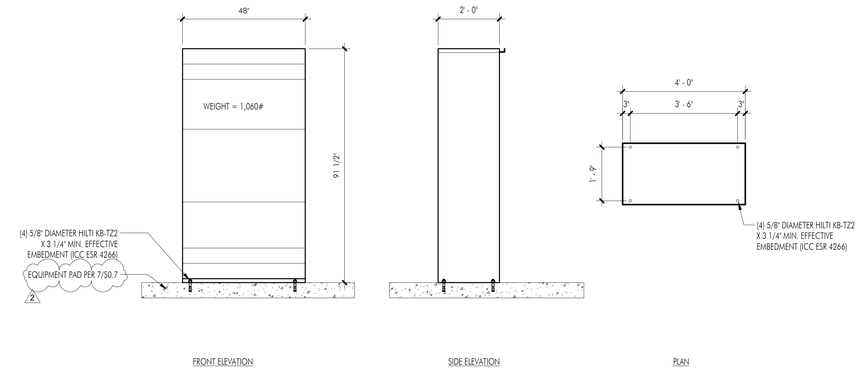

8 FLOOR MOUNTED SWITCHBOARD ANCHORAGE

SCALE: 1/2" = 1'-0"

C:\Users\rudy.monico\Documents\R22_HUHJSD-PAC_Central_rudy.monico.rvt

APPL No. A03-122864

DSA Stamp

Architect

RACHLIN
PARTNERS
8640 National Boulevard
Culver City, CA 90232
310.204.3400

Disclaimer:

THESE DRAWINGS ARE THE PROPERTY OF THE ARCHITECT. THE DESIGNS SHOWN AND DESCRIBED HEREIN INCLUDING ALL TECHNICAL DRAWINGS ARE PROPRIETARY AND CANNOT BE COPIED, DUPLICATED OR COMMERCIALLY EXPLOITED IN ANY WAY. THEY ARE NOT TO BE CHANGED OR USED IN ANY WAY AND SHALL NOT BE USED BY THE OWNER ON OTHER PROJECTS, FOR ADDITIONS TO THIS PROJECT, OR FOR COMPLETION OF THIS PROJECT BY OTHERS. THE OWNER AGREES TO HOLD HARMLESS, INDEMNIFY AND DEFEND THE ARCHITECT AGAINST ALL DAMAGES, CLAIMS AND LOSSES, INCLUDING DEFENSE COSTS, ARISING OUT OF ANY REUSE OF PLANS AND SPECIFICATIONS WITHOUT THE WRITTEN AUTHORIZATION OF THE ARCHITECT OF RECORD.

Copyright © 2022 Rachlin Partners, All Rights Reserved.

Performing Arts Center

Hacienda La Puente Unified School District
635 North California Avenue
La Puente, CA 91744

Rev	Date	Issue
1	7.22.22	50% DD
2	10.21.22	50% CD
3	12.09.22	100% CD DSA SUBMITTAL
4	6.19.23	100% CD DSA RESUBMITTAL
5	9.20.23	DSA BACK CHECK
6	11.01.23	ADDENDUM NO. 1
7	11.01.23	ADDENDUM NO. 2

Date: 11.01.2023
Scale: 1/2" = 1'-0"
Drawn By: Author
Checked By: Checker

Architect / Engineer Stamp

LICENSED ARCHITECT
RONALD RACHLIN
NO. C-26229
REN. 8-31-25
STATE OF CALIFORNIA

Consultants
Miyamoto International, Inc.
The Ruzika Company, Inc.
MDC Consulting Engineers
Pocock Design Solutions
Newson Brown Acoustics, LLC
VCA Engineers, Inc.
HJSA Consulting

Sheet Title

Interior Details

Sheet Number

A865

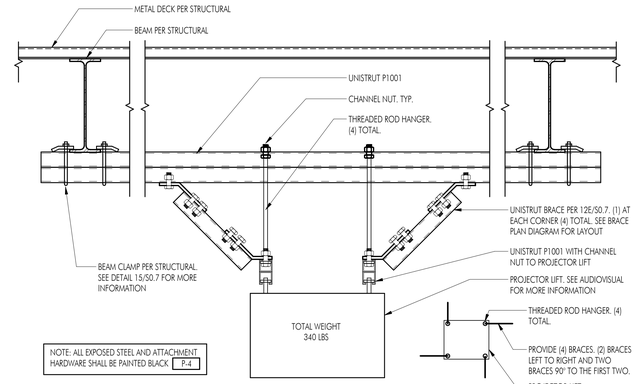

13 PROJECTOR LIFT MOUNTING DETAIL

SCALE: 1 1/2" = 1'-0"

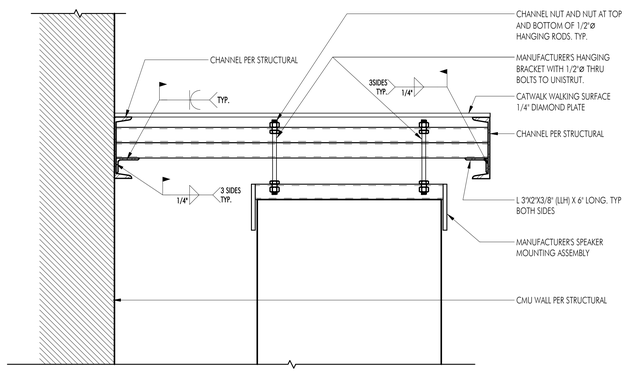

15 SPEAKER ATTACHMENT DETAIL

SCALE: 1 1/2" = 1'-0"

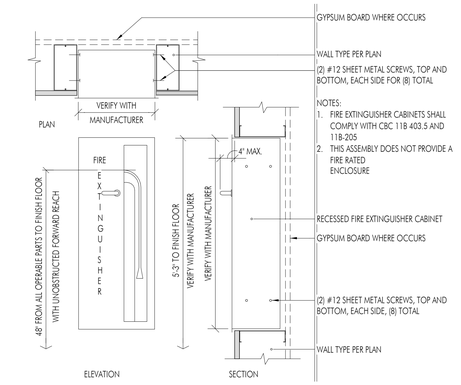

9 RECESSED FIRE EXTINGUISHER CABINET

SCALE: 1 1/2" = 1'-0"

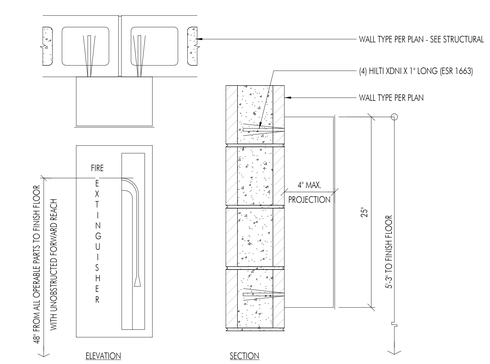

10 SURFACE MOUNTED FIRE EXTINGUISHERS

SCALE: 1 1/2" = 1'-0"

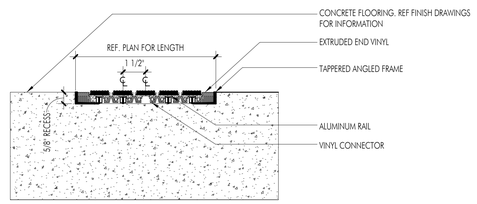

11 WALK-OFF MAT - TRANSITION TO CONCRETE

SCALE: 3" = 1'-0"

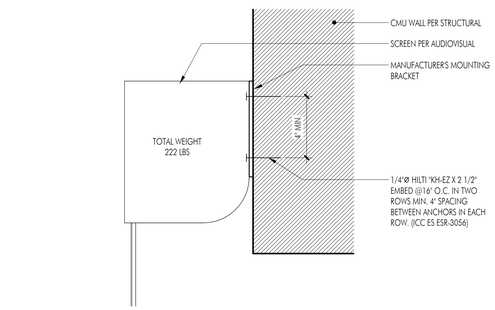

12 SCREEN MOUNTING DETAIL

SCALE: 3" = 1'-0"

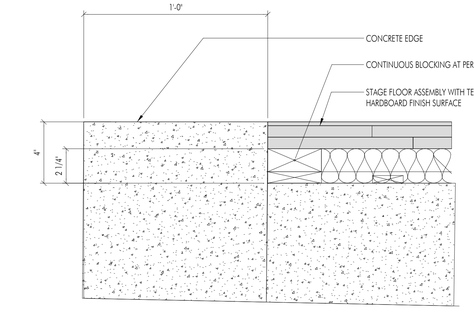

5 STAGE FLOOR AT FRONT EDGE

SCALE: 3" = 1'-0"

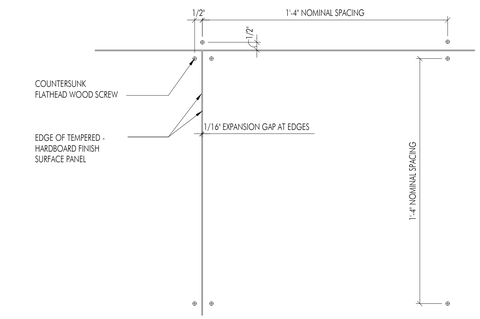

6 FINISH PANEL EDGE GAPS AND SCREW SPACING

SCALE: 3" = 1'-0"

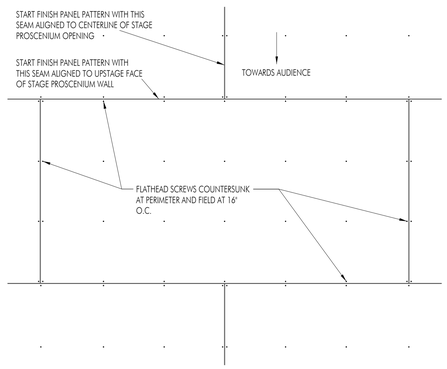

7 FINISH SURFACE SCREW PATTERN

SCALE: 3/4" = 1'-0"

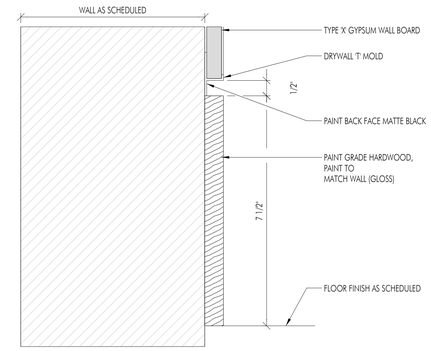

8 WB-1 RECESSED WALL BASE

SCALE: 6" = 1'-0"

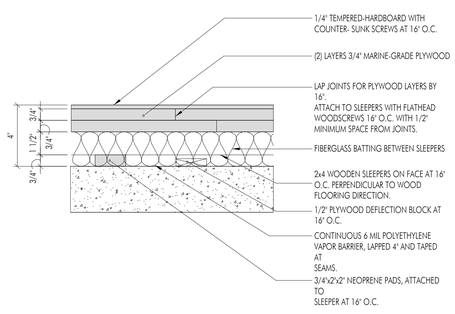

1 TYPICAL STAGE FLOOR ASSEMBLY

SCALE: 3" = 1'-0"

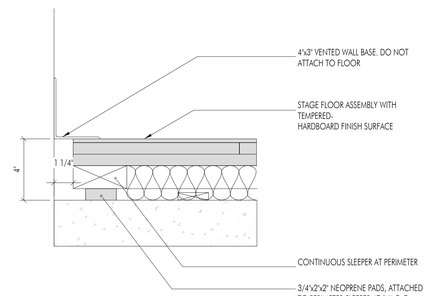

2 STAGE FLOOR AT WALL BASE

SCALE: 3" = 1'-0"

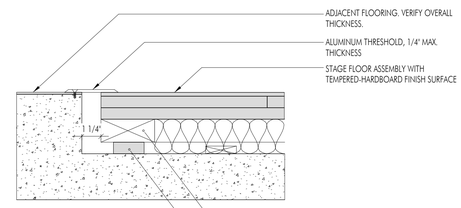

3 STAGE FLOOR AT TRANSITION

SCALE: 3" = 1'-0"

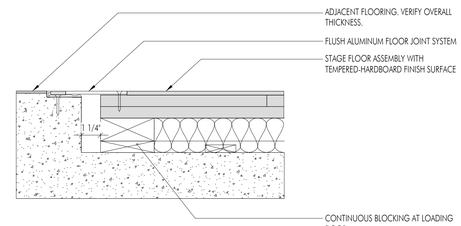

4 STAGE FLOOR AT LOADING DOOR

SCALE: 3" = 1'-0"

C:\Users\rudy.monico\Documents\RT22_HLPUSD-PAC_Central_rudy.monico.rvt

APPL No. A03-122864

IDENTIFICATION STAMP
DIV. OF THE STATE ARCHITECT
APP: 03-122864 INC:
REVIEWED FOR
SS ☑ FLS ☑ ACS ☑
DATE: 10/03/2023

DSA Stamp

Architect

RACHLIN PARTNERS
8640 National Boulevard
Culver City, CA 90232
310.204.3400

Disclaimer:

THESE DRAWINGS ARE THE PROPERTY OF THE ARCHITECT. THE DESIGNS SHOWN AND DESCRIBED HEREIN INCLUDING ALL TECHNICAL DRAWINGS ARE PROPRIETARY AND CANNOT BE COPIED, DUPLICATED OR COMMERCIALLY EXPLOITED IN ANY WAY. THEY ARE NOT TO BE CHANGED OR COPIED AND SHALL NOT BE USED BY THE OWNER ON OTHER PROJECTS, FOR ADDITIONS TO THIS PROJECT, OR FOR COMPLETION OF THIS PROJECT BY OTHERS. THE OWNER AGREES TO HOLD HARMLESS, INDEMNIFY AND DEFEND THE ARCHITECT AGAINST ALL DAMAGES, CLAIMS AND LOSSES, INCLUDING DEFENSE COSTS, ARISING OUT OF ANY REUSE OF PLANS AND SPECIFICATIONS WITHOUT THE WRITTEN AUTHORIZATION OF THE ARCHITECT OF RECORD.

Copyright © 2022 Rachlin Partners, All Rights Reserved.

Performing Arts Center

Hacienda La Puente Unified School District
635 North California Avenue
La Puente, CA 91744

Rev	Date	Issue
1	7.22.22	50% DD
2	10.21.22	50% CD
3	12.09.22	100% CD DSA SUBMITTAL
4	6.19.23	100% CD DSA RESUBMITTAL
5	9.20.23	DSA BACK CHECK

Date: 9.20.2023
Scale: As indicated
Drawn By: Author
Checked By: Checker

Architect / Engineer Stamp

LICENSED ARCHITECT
RUDY MONICO
NO. C-28229
REN. 8-31-25
STATE OF CALIFORNIA

Consultants
Miyamoto International, Inc.
The Ruzika Company, Inc.
MDC Consulting Engineers
Pocock Design Solutions
Newson Brown Acoustics, LLC
VCA Engineers, Inc.
HJSA Consulting

Sheet Title

Interior Details

Sheet Number

A866

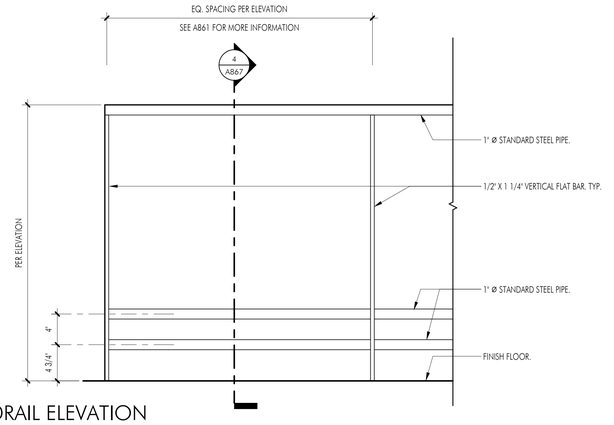

3 GUARDRAIL ELEVATION

SCALE: 1 1/2" = 1'-0"

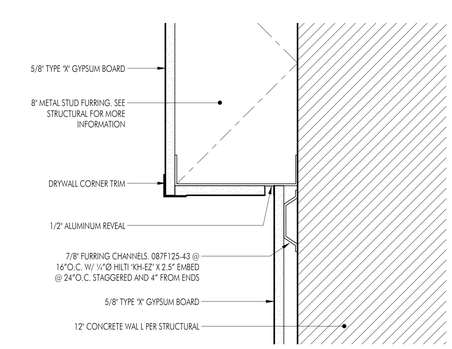

5 WALL TRANSITION DETAIL

SCALE: 3" = 1'-0"

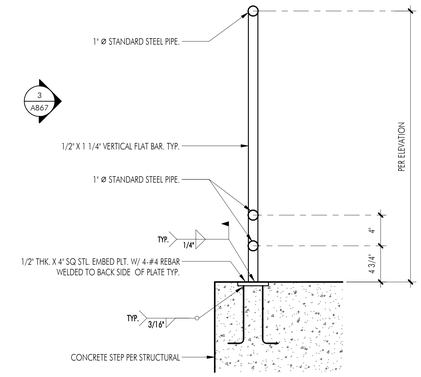

4 GUARDRAIL SECTION

SCALE: 1 1/2" = 1'-0"

C:\Users\rudy.monico\Documents\R22_HLPUSD-PAC_Central_rudy.monico.rvt

APPL No. A03-122864

DSA Stamp

Architect

RACHLIN
PARTNERS
8640 National Boulevard
Culver City, CA 90232
310.204.3400

Disclaimer:

THESE DRAWINGS ARE THE PROPERTY OF THE ARCHITECT. THE DESIGNS SHOWN AND DESCRIBED HEREIN INCLUDING ALL TECHNICAL DRAWINGS ARE PROPRIETARY AND CANNOT BE COPIED, DUPLICATED OR COMMERCIALLY EXPLOITED EXCEPT BY WRITTEN AGREEMENT. THESE DRAWINGS AND DESIGNS SHALL NOT BE USED BY THE OWNER ON OTHER PROJECTS, FOR ADDITIONS TO THIS PROJECT, OR FOR COMPLETION OF THIS PROJECT BY OTHERS. THE OWNER AGREES TO HOLD HARMLESS, INDEMNIFY AND DEFEND THE ARCHITECT AGAINST ALL DAMAGES, CLAIMS AND LOSSES, INCLUDING DEFENSE COSTS, ARISING OUT OF ANY REUSE OF PLANS AND SPECIFICATIONS WITHOUT THE WRITTEN AUTHORIZATION OF THE ARCHITECT OF RECORD.

Copyright © 2022 Rachlin Partners, All Rights Reserved.

Performing Arts Center

Hacienda La Puente Unified School District
635 North California Avenue
La Puente, CA 91744

Rev	Date	Issue
1	7.22.22	50% DD
2	10.21.22	50% CD
3	12.09.22	100% CD DSA SUBMITTAL
4	6.19.23	100% CD DSA RESUBMITTAL
5	9.20.23	DSA BACK CHECK
6	11.01.23	ADDENDUM NO. 1
7	11.01.23	ADDENDUM NO. 2
8	12.15.23	ADDENDUM NO. 3

Date: 11.01.2023
Scale: As indicated
Drawn By: Author
Checked By: Checker

Architect / Engineer Stamp

Consultants

Miyamoto International, Inc.
The Ruzika Company, Inc.
MDC Consulting Engineers
Pocock Design Solutions
Newson Brown Acoustics, LLC
VCA Engineers, Inc.
HJSA Consulting

Sheet Title

Interior Details

Sheet Number

A867

STRUCTURAL CONDITION OF FLOOR / ROOF ABOVE COMPRESSION STRUT	APPLICABLE DETAIL
METAL DECK	16/A875
CONCRETE OVER METAL DECK	18/A875
CONCRETE SLAB, BEAM, OR JOIST	N.A.
STRUCTURAL STEEL	20/A875

DSA IR 25-2.13, SHEET NO. 5.10
COMPRESSION STRUT CONNECTION TO STRUCTURE - CONNECTION MATRIX

13 COMPRESSION STRUT CONNECTION TO STRUCTURE

SCALE: 3" = 1'-0"

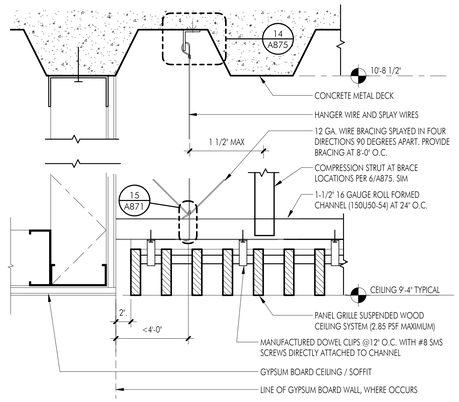

9 WOOD PANEL GRILLE CLNG. SOFFIT/WALL

SCALE: 3" = 1'-0"

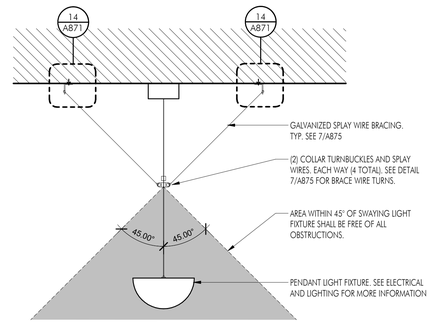

5 SWAY BRACING AT PENDANT LIGHT

SCALE: 1 1/2" = 1'-0"

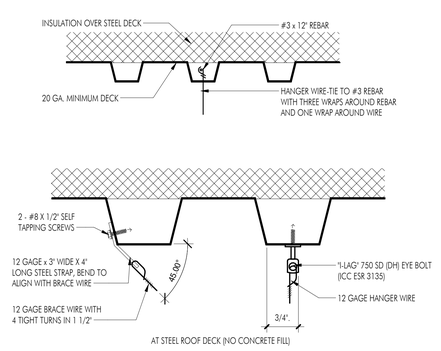

1 HANGER ANCHORAGE

SCALE: 1" = 0'-1"

STRUCTURAL CONDITION OF FLOOR/ ROOF ABOVE SUSPENDED CEILING	APPLICABLE HANGER WIRE DETAIL	APPLICABLE BRACING WIRE DETAIL
METAL DECK	1/A871	3/A871
CONCRETE OVER METAL DECK	10/A875	14/A875
CONCRETE SLAB, BEAM, OR JOIST	N.A.	N.A.
STRUCTURAL STEEL	11/A875	8/A871
METAL STUD WALL	12/A875	7/A871
SAWN TIMBER	N.A.	N.A.
WOOD I JOIST	N.A.	N.A.
WOOD CHORD TRUSS	N.A.	N.A.
OPEN WEB STEEL JOIST	N.A.	N.A.

DSA IR 25-2.13, SHEET NO. 4.11
HANGER AND BRACING WIRE CONNECTION MATRIX

14 HANGER AND BRACING WIRE CONNECTION MATRIX

SCALE: 3" = 1'-0"

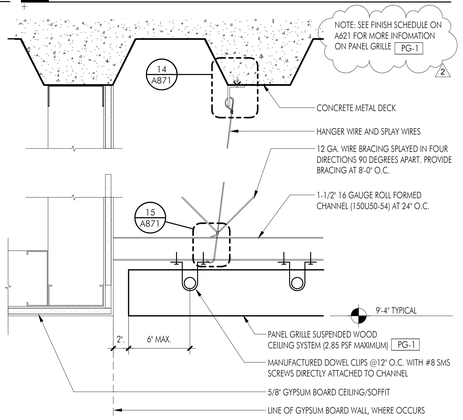

10 WOOD PANEL GRILLE CEILING AT SOFFIT

SCALE: 3" = 1'-0"

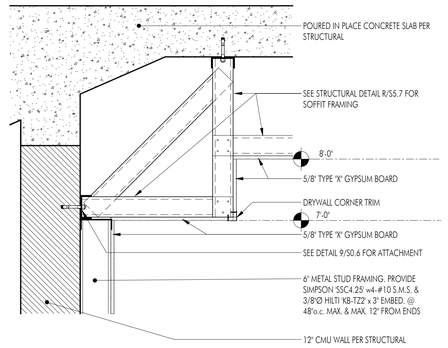

6 SOFFIT DETAIL

SCALE: 1" = 1'-0"

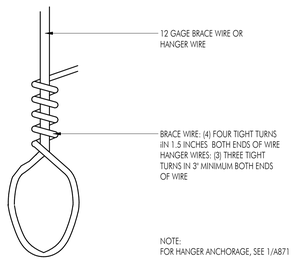

2 HANGER/BRACE WIRE TIES

SCALE: 1" = 0'-1"

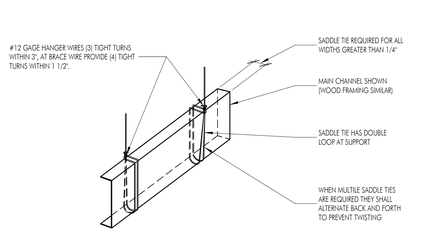

TYPICAL SADDLE TIE DETAIL

HANGER WIRE CONDITION SHOWN. BRACE WIRE CONDITION SIMILAR

DSA IR 25-2.13, SHEET NO. 4.29
TYPICAL SADDLE TIE DETAIL

15 TYPICAL SADDLE TIE

SCALE: 3" = 1'-0"

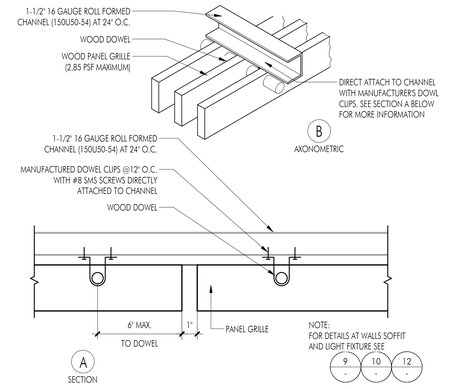

11 WOOD PANEL GRILLE SUSP CLNG SYSTEM

SCALE: 3" = 1'-0"

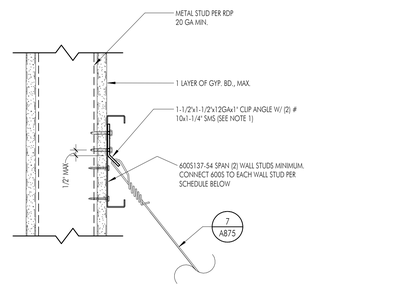

DSA IR 25-2.13, SHEET NO. 4.34
BRACING WIRE CONNECTION TO METAL STUD WALL

7 BRACING WIRE TO METAL STUD WALL

SCALE: 3" = 1'-0"

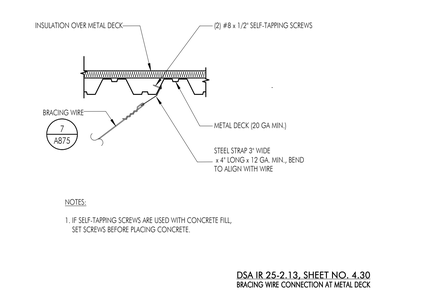

NOTES:

1. IF SELF-TAPPING SCREWS ARE USED WITH CONCRETE FILL, SET SCREWS BEFORE PLACING CONCRETE.

DSA IR 25-2.13, SHEET NO. 4.30
BRACING WIRE CONNECTION AT METAL DECK

3 BRACING WIRE CONNECTION AT METAL DECK

SCALE: 1" = 1'-0"

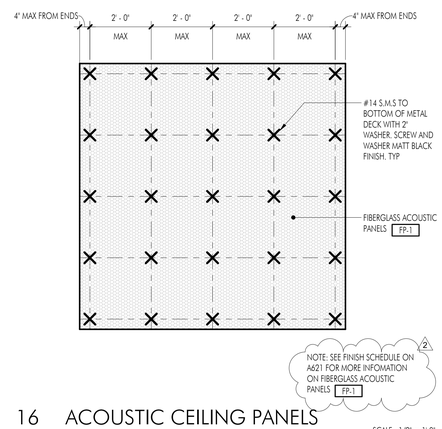

16 ACOUSTIC CEILING PANELS

SCALE: 1/2" = 1'-0"

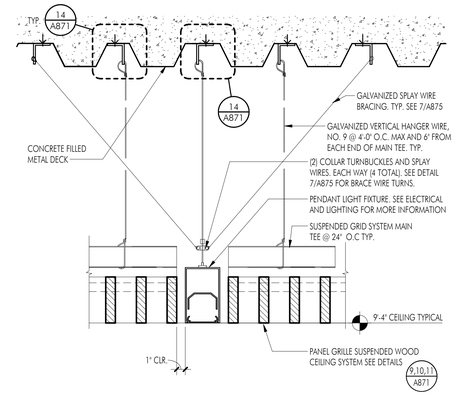

12 PENDANT LIGHT AT WOOD PANEL GRILLE

SCALE: 3" = 1'-0"

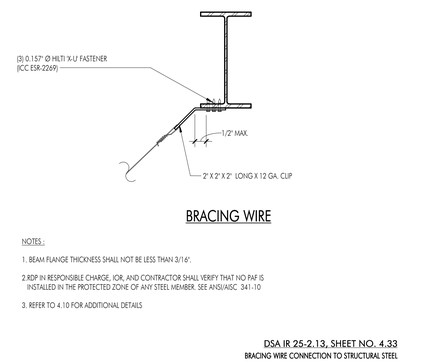

BRACING WIRE

NOTES:

1. BEAM FLANGE THICKNESS SHALL NOT BE LESS THAN 3/16".
2. RDP IN RESPONSIBLE CHARGE, IOR, AND CONTRACTOR SHALL VERIFY THAT NO PAF IS INSTALLED IN THE PROTECTED ZONE OF ANY STEEL MEMBER. SEE ANSI/AISC 341-10
3. REFER TO A.10 FOR ADDITIONAL DETAILS

DSA IR 25-2.13, SHEET NO. 4.33
BRACING WIRE CONNECTION TO STRUCTURAL STEEL

8 BRACING WIRE TO STRUCTURAL STEEL

SCALE: 1 1/2" = 1'-0"

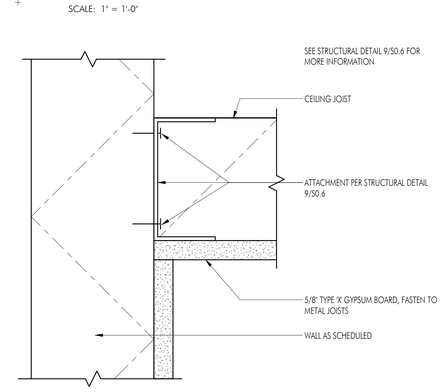

4 FRAMED GYPSUM BOARD CEILING AT WALL

SCALE: 6" = 1'-0"

C:\Users\rudy.monico\Documents\M22_HUHSD-PAC_Central_rudy.monico.rvt

APPL No. A03-122864

DSA Stamp

Architect

RACHLIN PARTNERS
8640 National Boulevard
Culver City, CA 90232
310.204.3400

Disclaimer:
THESE DRAWINGS ARE THE PROPERTY OF THE ARCHITECT. THE DESIGNS SHOWN AND DESCRIBED HEREIN INCLUDING ALL TECHNICAL DRAWINGS ARE PROPRIETARY AND CANNOT BE COPIED, DUPLICATED OR COMMERCIALLY EXPLOITED EITHER IN WHOLE OR IN PART WITHOUT WRITTEN CONSENT AND SHALL NOT BE USED BY THE OWNER ON OTHER PROJECTS, FOR ADDITIONS TO THIS PROJECT, OR FOR COMPLETION OF THIS PROJECT BY OTHERS. THE OWNER AGREES TO HOLD HARMLESS, INDEMNIFY AND DEFEND THE ARCHITECT AGAINST ALL DAMAGES, CLAIMS AND LOSSES, INCLUDING DEFENSE COSTS, ARISING OUT OF ANY REUSE OF PLANS AND SPECIFICATIONS WITHOUT THE WRITTEN AUTHORIZATION OF THE ARCHITECT OF RECORD.

Copyright © 2022 Rachlin Partners, All Rights Reserved.

Performing Arts Center

Hacienda La Puente Unified School District
635 North California Avenue
La Puente, CA 91744

Rev	Date	Issue
1	7.22.22	50% DD
2	10.21.22	50% CD
3	12.09.22	100% CD DSA SUBMITTAL
4	6.19.23	100% CD DSA RESUBMITTAL
5	9.20.23	DSA BACK CHECK
6	11.01.23	ADDENDUM NO. 1
7	11.01.23	ADDENDUM NO. 2

Date: 11.01.2023
Scale: As indicated
Drawn By: MS
Checked By: RM

Architect / Engineer Stamp

LICENSED ARCHITECT — LONDON PHILLIP MASSEY — NO. C-26229 — REN. 8-31-25 — STATE OF CALIFORNIA

Consultants
Miyamoto International, Inc.
The Ruzika Company, Inc.
MDC Consulting Engineers
Pocock Design Solutions
Newson Brown Acoustics, LLC
VCA Engineers, Inc.
HJSA Consulting

Sheet Title

Ceiling Details

Sheet Number

A871

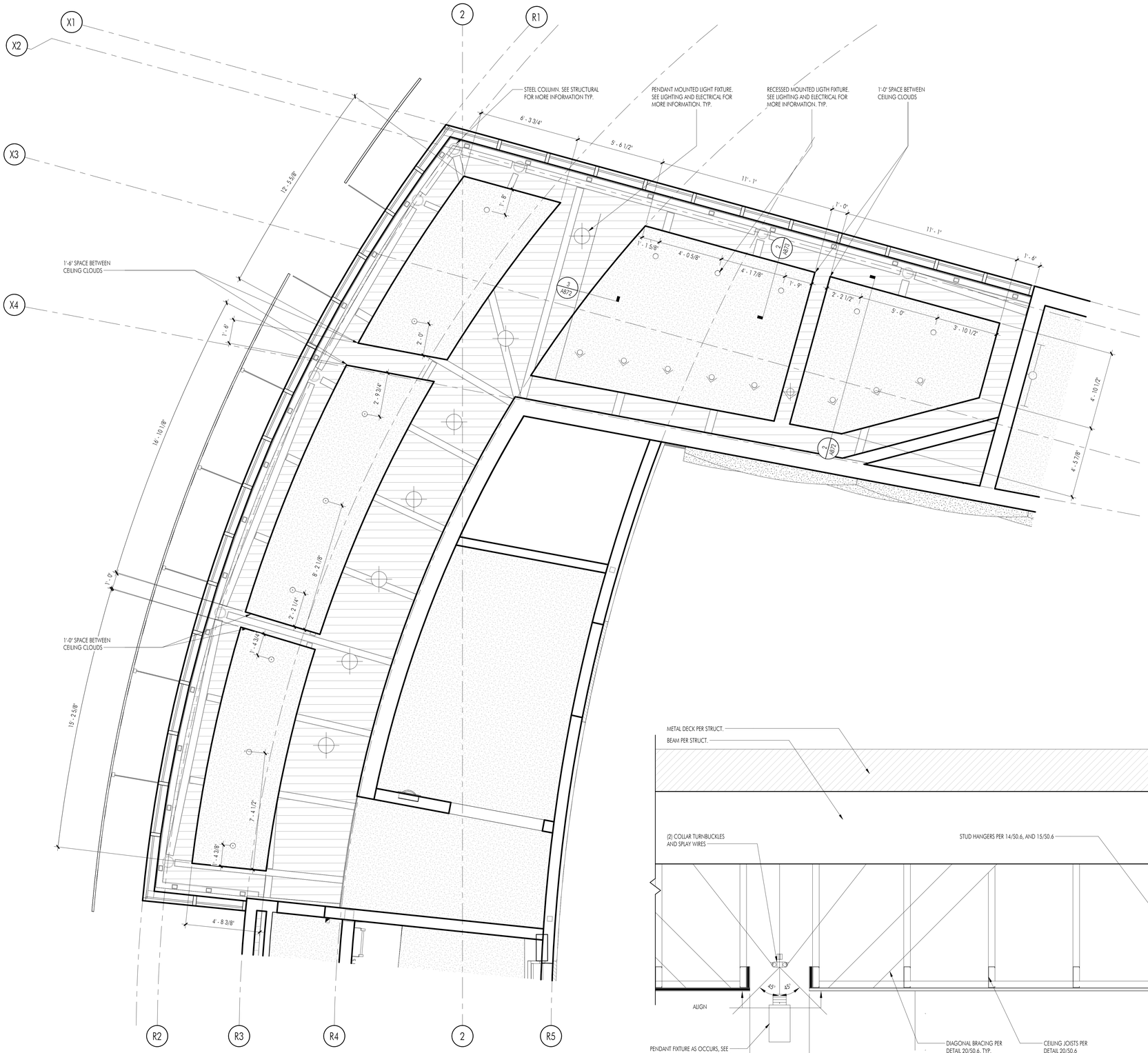

1 LOBBY CEILING CLOUD PLAN A

SCALE: 3/8" = 1'-0"

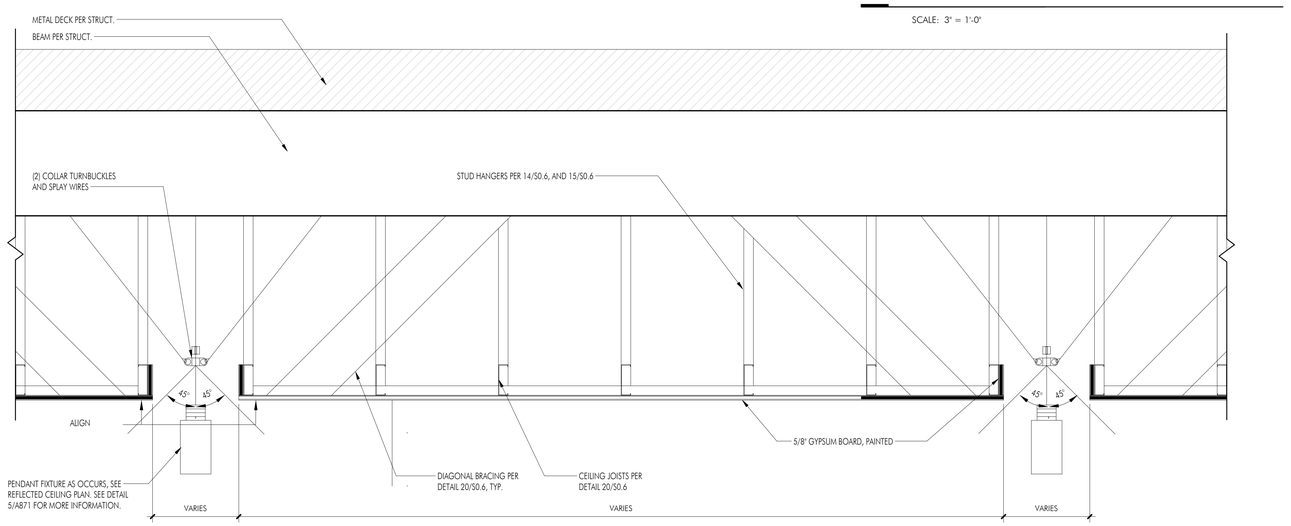

NOTE: PAINT ALL FRAMING, PIPES, DUCTS, AND LIKE ITEMS BLACK ABOVE CEILING

2 SECTION THROUGH LOBBY CEILIING

SCALE: 1 1/2" = 1'-0"

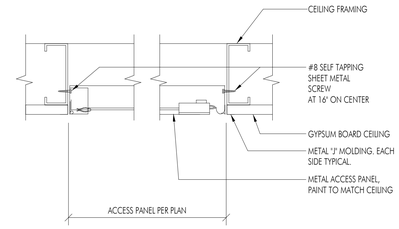

NOTE:
PROVIDE ACCESS PANELS IN GYPSUM BOARD CEILINGS WHEREVER ACCESS TO MECHANICAL OR ELECTRICAL EQUIPMENT IS REQUIRED. SUBMIT LOCATIONS FOR ARCHITECTURAL REVIEW PRIOR TO INSTALLATION.

3 ACCESS PANEL

SCALE: 3" = 1'-0"

C:\Users\rudy.monico\Documents\M22_HLPUSD-PAC_Central_rudy.monico.rvt

APPL No. A03-122864

IDENTIFICATION STAMP
DIV. OF THE STATE ARCHITECT
APP: 03-122864 INC:
REVIEWED FOR
SS ☑ FLS ☑ ACS ☑
DATE: 10/03/2023

DSA Stamp

Architect

RACHLIN PARTNERS
8640 National Boulevard
Culver City, CA 90232
310.204.3400

Disclaimer:

THESE DRAWINGS ARE THE PROPERTY OF THE ARCHITECT. THE DESIGNS SHOWN AND DESCRIBED HEREIN INCLUDING ALL TECHNICAL DRAWINGS ARE PROPRIETARY AND CANNOT BE COPIED, DUPLICATED OR COMMERCIALLY EXPLOITED IN ANY WAY. THEY ARE NOT TO BE CHANGED OR USED IN ANY WAY AND SHALL NOT BE USED BY THE OWNER ON OTHER PROJECTS, FOR ADDITIONS TO THIS PROJECT, OR FOR COMPLETION OF THIS PROJECT BY OTHERS. THE OWNER AGREES TO HOLD HARMLESS, INDEMNIFY AND DEFEND THE ARCHITECT AGAINST ALL DAMAGES, CLAIMS AND LOSSES, INCLUDING DEFENSE COSTS, ARISING OUT OF ANY REUSE OF PLANS AND SPECIFICATIONS WITHOUT THE WRITTEN AUTHORIZATION OF THE ARCHITECT OF RECORD.

Copyright © 2022 Rachlin Partners, All Rights Reserved.

Performing Arts Center

Hacienda La Puente Unified School District
635 North California Avenue
La Puente, CA 91744

Rev	Date	Issue
1	7.22.22	50% DD
2	10.21.22	50% CD
3	12.09.22	100% CD DSA SUBMITTAL
4	6.19.23	100% CD DSA RESUBMITTAL
5	9.20.23	DSA BACK CHECK

Date: 9.20.2023
Scale: As indicated
Drawn By: Author
Checked By: Checker

Architect / Engineer Stamp

LICENSED ARCHITECT
RUDOLPH RICHARD MONICO
NO. C-26229
REN. 8-31-25
STATE OF CALIFORNIA

Consultants
Miyamoto International, Inc.
The Ruzika Company, Inc.
MDC Consulting Engineers
Pocock Design Solutions
Newson Brown Acoustics, LLC
VCA Engineers, Inc.
HJSA Consulting

Sheet Title

Ceiling Details

Sheet Number

A872

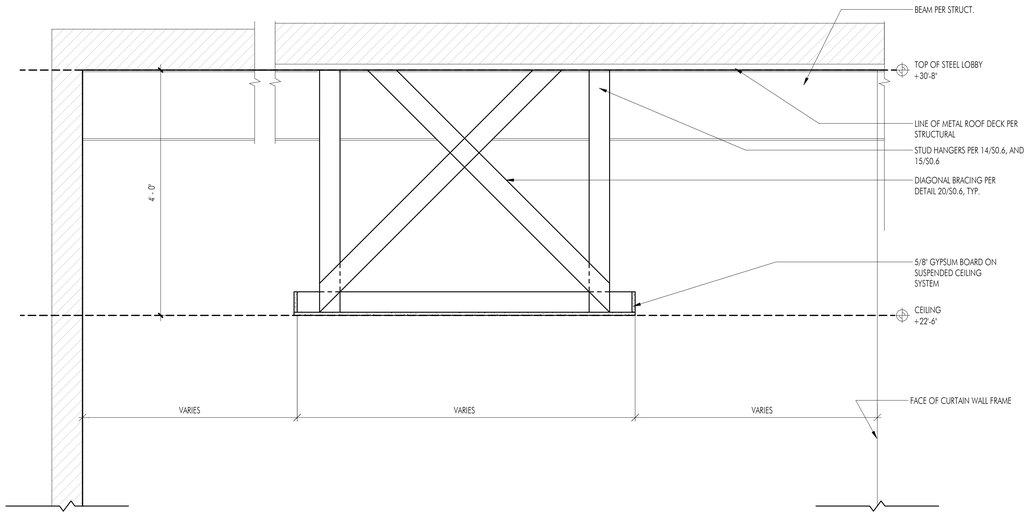

2 SECTION THROUGH LOBBY SUSPENDED GYPSUM BOARD CEILING CLOUD A

SCALE: 1" = 1'-0"

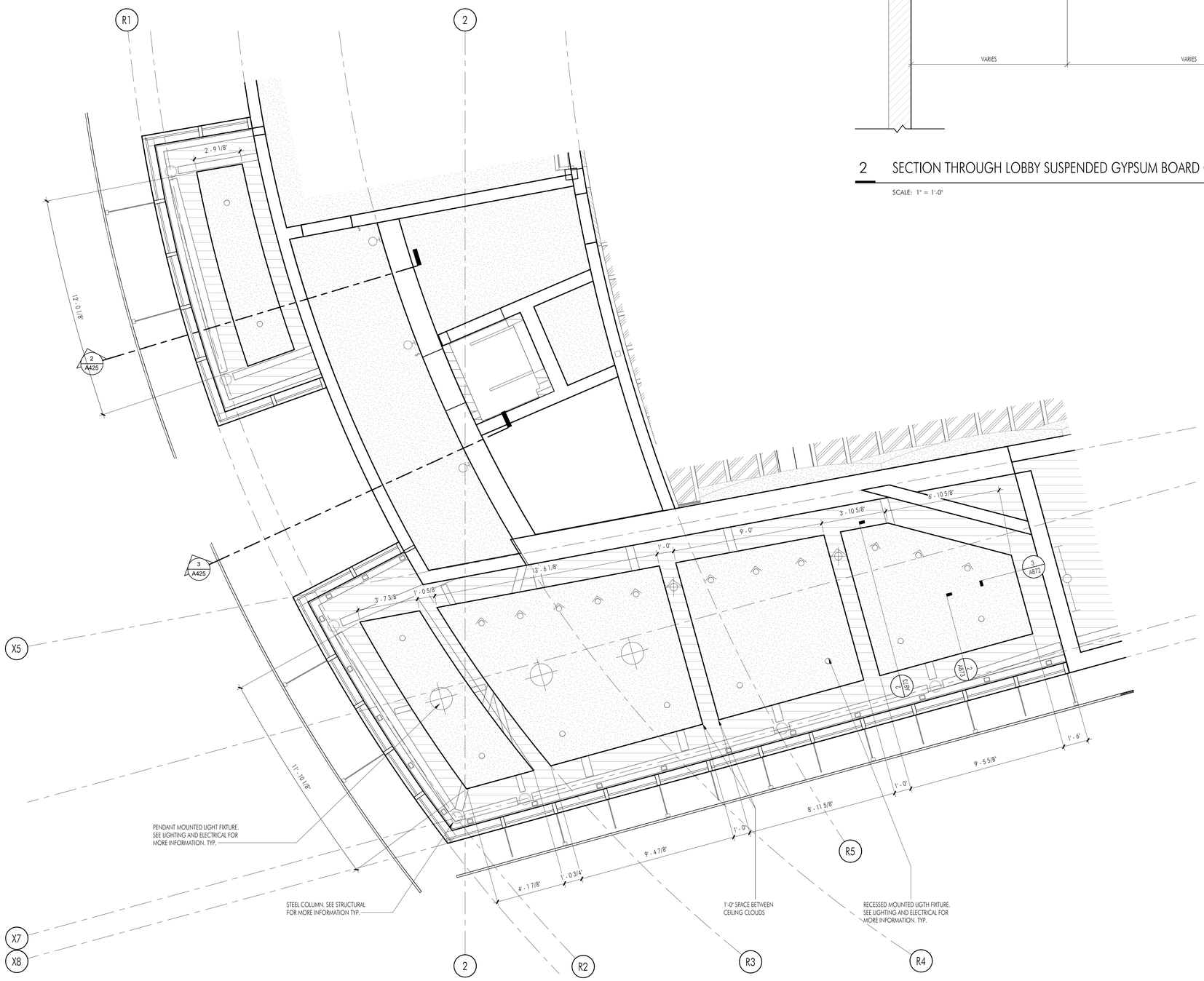

1 LOBBY CEILING CLOUD PLAN B

SCALE: 3/8" = 1'-0"

C:\Users\rudy.monico\Documents\M22_HLPUSD-PAC_Central_rudy.monico.rvt

APPL No. A03-122864

IDENTIFICATION STAMP
DIV. OF THE STATE ARCHITECT
APP: 03-122864 INC:
REVIEWED FOR
SS ☑ FLS ☑ ACS ☑
DATE: 10/03/2023

DSA Stamp

Architect

RACHLIN
PARTNERS
8640 National Boulevard
Culver City, CA 90232
310.204.3400

Disclaimer:

THESE DRAWINGS ARE THE PROPERTY OF THE ARCHITECT. THE DESIGNS SHOWN AND DESCRIBED HEREIN INCLUDING ALL TECHNICAL DRAWINGS ARE PROPRIETARY AND CANNOT BE COPIED, DUPLICATED OR COMMERCIALLY EXPLOITED EXCEPT WITH THE WRITTEN PERMISSION OF THE ARCHITECT AND SHALL NOT BE USED BY THE OWNER ON OTHER PROJECTS, FOR ADDITIONS TO THIS PROJECT, OR FOR COMPLETION OF THIS PROJECT BY OTHERS. THE OWNER AGREES TO HOLD HARMLESS, INDEMNIFY AND DEFEND THE ARCHITECT AGAINST ALL DAMAGES, CLAIMS AND LOSSES, INCLUDING DEFENSE COSTS, ARISING OUT OF ANY REUSE OF PLANS AND SPECIFICATIONS WITHOUT THE WRITTEN AUTHORIZATION OF THE ARCHITECT OF RECORD.

Copyright © 2022 Rachlin Partners, All Rights Reserved.

Performing Arts Center

Hacienda La Puente Unified School District
635 North California Avenue
La Puente, CA 91744

Rev	Date	Issue
1	7.22.22	50% DD
2	10.21.22	50% CD
3	12.09.22	100% CD DSA SUBMITTAL
4	6.19.23	100% CD DSA RESUBMITTAL
5	9.20.23	DSA BACK CHECK

Date: 9.20.2023
Scale: As indicated
Drawn By: Author
Checked By: Checker

Architect / Engineer Stamp

LICENSED ARCHITECT
EDWARD RACHLIN
NO. C-28229
REN. 8-31-25
STATE OF CALIFORNIA

Consultants
Miyamoto International, Inc.
The Ruzika Company, Inc.
MDC Consulting Engineers
Pocock Design Solutions
Newson Brown Acoustics, LLC
VCA Engineers, Inc.
HJSA Consulting

Sheet Title

Ceiling Details

Sheet Number

A873

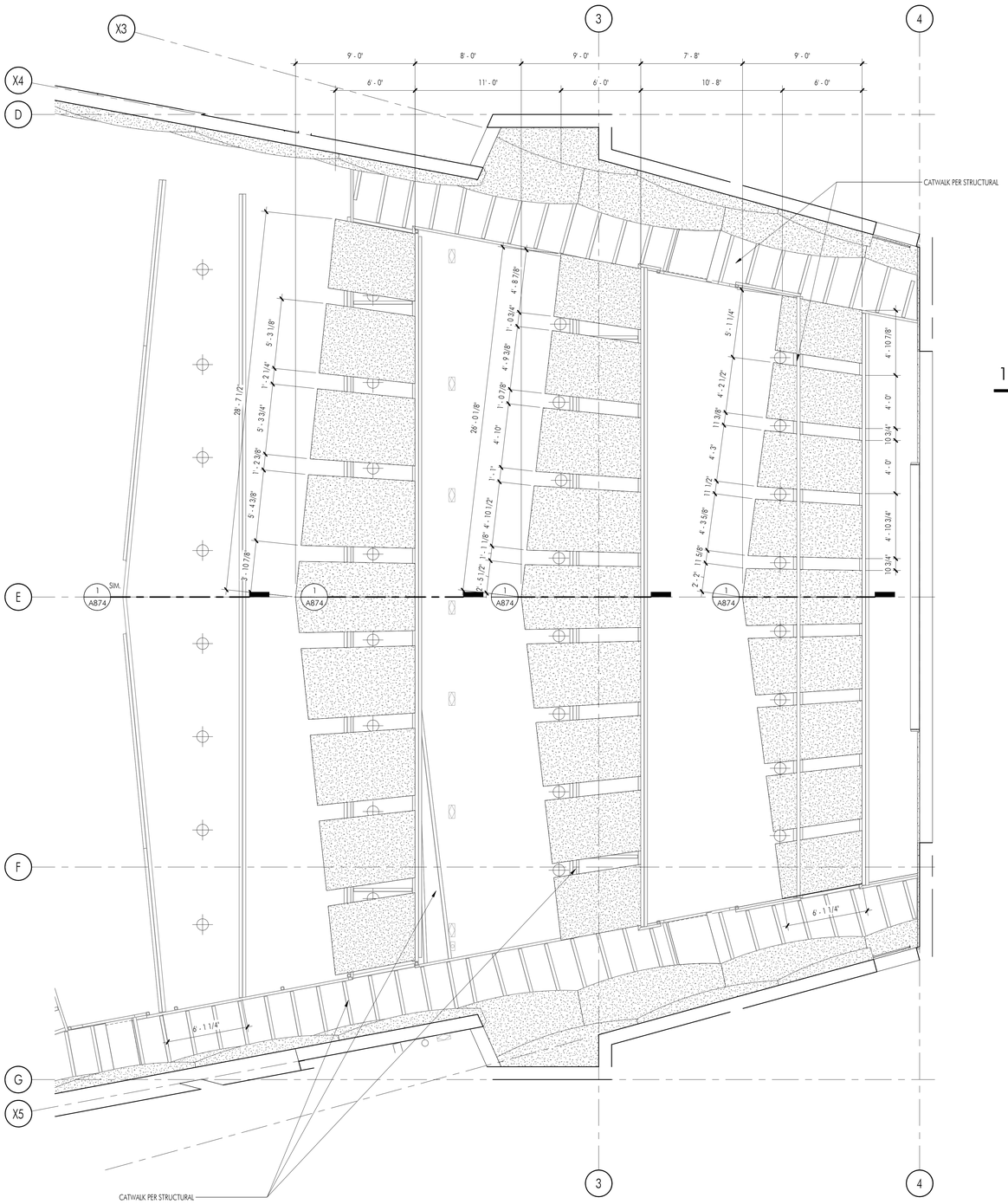

4 ACOUSTIC REFLECTOR REFLECTED CEILING PLAN

SCALE: 1/4" = 1'-0"

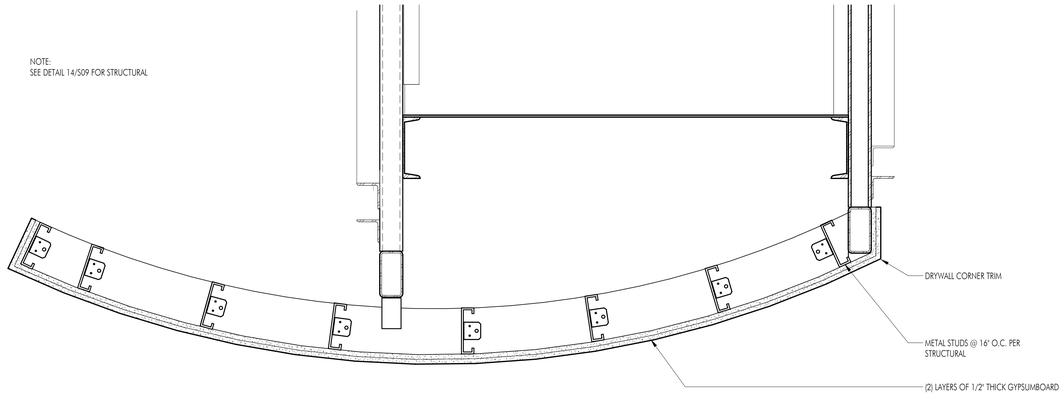

1 ACOUSTIC REFLECTOR DETAIL - 1

SCALE: 1 1/2" = 1'-0"

C:\Users\rudy.monico\Documents\R22_HUPUSD-PAC_Central_rudy.monico.rvt

APPL No. A03-122864

IDENTIFICATION STAMP
DIV. OF THE STATE ARCHITECT
APP: 03-122864 INC:
REVIEWED FOR
SS ☑ FLS ☑ ACS ☑
DATE: 10/03/2023

DSA Stamp

Architect

RACHLIN PARTNERS
8640 National Boulevard
Culver City, CA 90232
310.204.3400

Disclaimer:

THESE DRAWINGS ARE THE PROPERTY OF THE ARCHITECT. THE DESIGNS SHOWN AND DESCRIBED HEREIN INCLUDING ALL TECHNICAL DRAWINGS ARE PROPRIETARY AND CANNOT BE COPIED, DUPLICATED OR COMMERCIALLY EXPLOITED EXCEPT BY WRITTEN AGREEMENT. THESE DRAWINGS AND DESIGNS SHALL NOT BE USED BY THE OWNER ON OTHER PROJECTS, FOR ADDITIONS TO THIS PROJECT, OR FOR COMPLETION OF THIS PROJECT BY OTHERS. THE OWNER AGREES TO HOLD HARMLESS, INDEMNIFY AND DEFEND THE ARCHITECT AGAINST ALL DAMAGES, CLAIMS AND LOSSES, INCLUDING DEFENSE COSTS, ARISING OUT OF ANY REUSE OF PLANS AND SPECIFICATIONS WITHOUT THE WRITTEN AUTHORIZATION OF THE ARCHITECT OF RECORD.

Copyright © 2022 Rachlin Partners, All Rights Reserved.

Performing Arts Center

Hacienda La Puente Unified School District
635 North California Avenue
La Puente, CA 91744

Rev	Date	Issue
1	7.22.22	50% DD
2	10.21.22	50% CD
3	12.09.22	100% CD DSA SUBMITTAL
4	6.19.23	100% CD DSA RESUBMITTAL
5	9.20.23	DSA BACK CHECK

Date: 9.20.2023
Scale: As indicated
Drawn By: Author
Checked By: Checker

Architect / Engineer Stamp

LICENSED ARCHITECT
RICHARD RACHLIN
NO. C-26229
REN. 8-31-25
STATE OF CALIFORNIA

Consultants
Miyamoto International, Inc.
The Ruzika Company, Inc.
MDC Consulting Engineers
Pocock Design Solutions
Newson Brown Acoustics, LLC
VCA Engineers, Inc.
HJSA Consulting

Sheet Title

Ceiling Details

Sheet Number

A874

CHANNEL STRUT

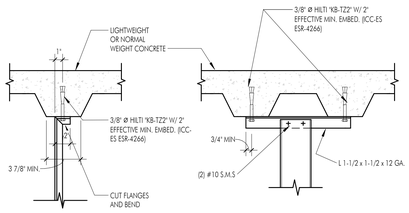

OPTION 1 OPTION 2

TUBE STRUT

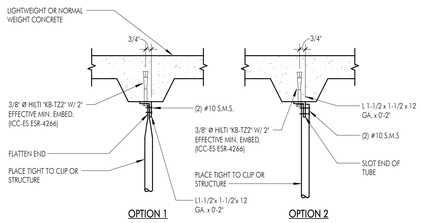

OPTION 1 OPTION 2

NOTES:

1. POST INSTALLED ANCHORS TO BE PLACED NO MORE THAN 1" OFFSET FROM CENTERLINE OF DECK LOW FLUTE
2. TEST POST INSTALLED ANCHORS IN ACCORDANCE WITH CEILING NOTE 5.01

DSA IR 25-2.13, SHEET NO. 5.21
STRUT CONNECTION TO CONCRETE OVER METAL DECK

18 STRUT TO CONC. METAL DECK

SCALE: 1 1/2" = 1'-0"

LIGHTWEIGHT OR NORMAL WEIGHT CONCRETE

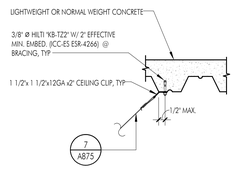

OPTION 1

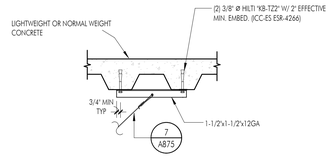

OPTION 2

NOTES:

1. TEST POST INSTALLED ANCHORS IN ACCORDANCE WITH CEILING NOTE 5.02
2. REFER TO 4.10 FOR ADDITIONAL DETAILS
3. POST INSTALLED ANCHORS TO BE PLACED NO MORE THAN 1" OFFSET FROM CENTERLINE OF DECK LOW FLUTE.

DSA IR 25-2.13, SHEET NO. 4.31
BRACING WIRE CONNECTION TO CONCRETE OVER METAL DECK

14 BRACING WIRE TO CONC. METAL DECK

SCALE: 1" = 1'-0"

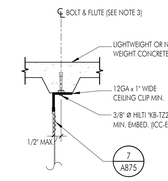

OPTION 1

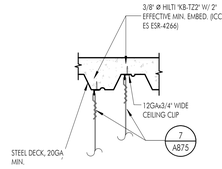

OPTION 2

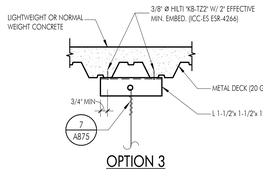

OPTION 3

NOTES:

1. REFER TO 4.10 FOR ADDITIONAL DETAILS.
2. POST INSTALLED ANCHORS TO BE PLACED NO MORE THAN 1" OFFSET FROM CENTERLINE OF DECK LOW FLUTE
3. TEST POST INSTALLED ANCHORS IN ACCORDANCE WITH CEILING NOTE 5.01.

DSA IR 25-2.13, SHEET NO. 4.21
HANGER WIRE CONNECTION TO CONCRETE OVER METAL DECK

10 HANGER TO CONC. METAL DECK

SCALE: 1" = 1'-0"

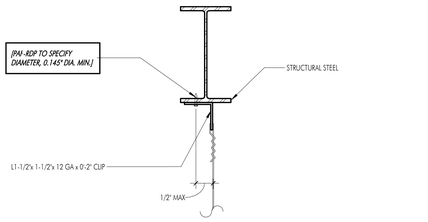

HANGER WIRE

NOTES :

1. BEAM FLANGE THICKNESS SHALL NOT BE LESS THAN 3/16".
2. RDP IN RESPONSIBLE CHARGE, IOR AND CONTRACTOR SHALL VERIFY THAT NO PAF IS INSTALLED IN THE PROTECTED ZONE OF ANY STEEL MEMBER. SEE ANSI/AISC 341-10
3. REFER TO 4.10 FOR ADDITIONAL DETAILS

DSA IR 25-2.13, SHEET NO. 4.23
HANGER WIRE CONNECTION TO STRUCTURAL STEEL

11 HANGER TO STRUCTURAL STEEL

SCALE: 1 1/2" = 1'-0"

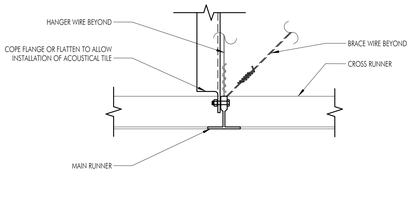

DSA IR 25-2.13, SHEET NO. 3.10
SUSPENDED ACOUSTICAL CEILING CHANNEL TYPE STRUT - SECTION "A"

5 CHANNEL STRUCT SECTION

SCALE: 3" = 1'-0"

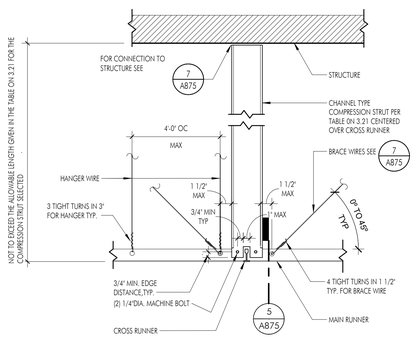

DSA IR 25-2.13, SHEET NO.3.10
SUSPENDED ACOUSTICAL CEILING - CHANNEL TYPE STRUT

6 CHANNEL TYPE STRUT

SCALE: 1 1/2" = 1'-0"

HANGER WIRE

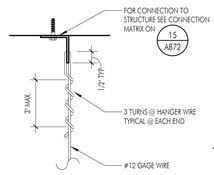

BRACING WIRE

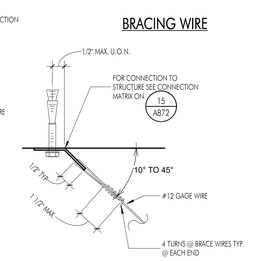

DSA IR 25-2.13, SHEET NO. 4.10
HANGER AND BRACING WIRE CONNECTION - TYPICAL WIRE TURNS

7 TYP. HANGER AND BRACING WIRE TURNS

SCALE: 3" = 1'-0"

OPTION 1

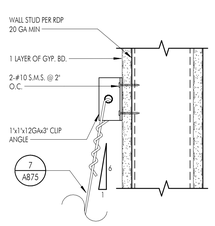

OPTION 2

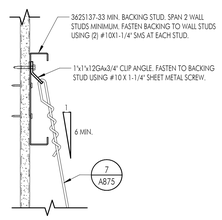

NOTE:

1. THIS IS APPLIED FOR PERIMETER WIRE ATTACHEMENT OR WHERE OBSTRUCTION PREVENTS ATTACHMENT TO STRUCTURE ABOVE

OPTION 3

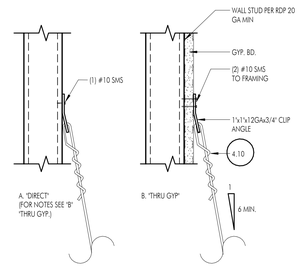

DSA IR 25-2.13, SHEET NO. 4.24
HANGER WIRE CONNECTION TO METAL STUD WALL

12 HANGER WIRE CONNECTION TO METAL STUD WALL

SCALE: 3" = 1'-0"

EMT COMPRESSION STRUT	MAXIMUM LENGTH
1/2" DIAMETER EMT (0.042" WALL THICKNESS)	4'-7"
3/4" DIAMETER EMT (0.049" WALL THICKNESS)	7'-5"
1" DIAMETER EMT (0.057" WALL THICKNESS)	9'-9"
1 1/4" DIAMETER EMT (0.065" WALL THICKNESS)	12'-9"
1 1/2" DIAMETER EMT (0.065" WALL THICKNESS)	14'-9"
2" DIAMETER EMT (0.065" WALL THICKNESS)	18'-10"

CHANNEL COMPRESSION STRUT	MAXIMUM LENGTH
2505125-33	5'-0"
2505137-33	6'-10"
3625137-33	8'-0"
250137-43	810"
4005137-43	10'-10"

DSA IR 25-2.13, SHEET NO. 3.21
COMPRESSION STRUT TABLE

4 COMPRESSION STRUT TABLE

SCALE: 3" = 1'-0"

CHANNEL STRUT

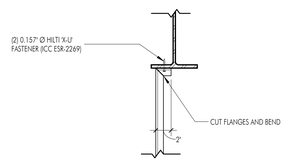

TUBE STRUT

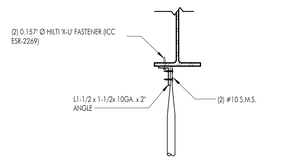

OPTION 1

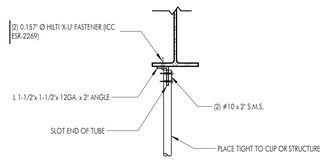

OPTION 2

NOTES:

1. STRUCTURAL STEEL MEMBER SHALL NOT BE LESS THAN 3/16".
2. RDP IN RESPONSIBLE CHARGE, I.O.R. AND CONTRACTOR SHALL VERIFY THAT NO PAF IS INSTALLED IN THE PROTECTED ZONE OF ANY STEEL MEMBER, SEE ANSI/AISC 341-10.
3. REFER TO 4.4875 FOR ADDITIONAL INFORMATION.

DSA IR 25-2.13, SHEET NO. 5.40
STRUT CONNECTION TO STRUCTURAL STEEL

20 STRUT CONNECTION TO STRUCT. STEEL

SCALE: 1 1/2" = 1'-0"

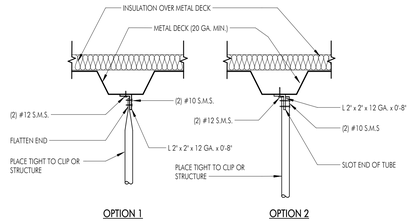

OPTION 1 OPTION 2

TUBE STRUT

DSA IR 25-2.13, SHEET NO. 5.20
STRUT CONNECTION TO METAL DECK

16 STRUT CONNECTION TO METAL DECK

SCALE: 1 1/2" = 1'-0"

C:\Users\rudy.monico\Documents\R22_HLPUSD-PAC_Central_rudy.monico.rvt

APPL No. A03-122864

DSA Stamp

Architect

RACHLIN PARTNERS
8640 National Boulevard
Culver City, CA 90232
310.204.3400

Disclaimer:

THESE DRAWINGS ARE THE PROPERTY OF THE ARCHITECT. THE DESIGNS SHOWN AND DESCRIBED HEREIN INCLUDING ALL TECHNICAL DRAWINGS ARE PROPRIETARY AND CANNOT BE COPIED, DUPLICATED OR COMMERCIALLY EXPLOITED IN ANY MANNER WITHOUT PERMISSION. THESE DRAWINGS SHALL NOT BE USED BY THE OWNER ON OTHER PROJECTS, FOR ADDITIONS TO THIS PROJECT, OR FOR COMPLETION OF THIS PROJECT BY OTHERS. THE OWNER AGREES TO HOLD HARMLESS, INDEMNIFY AND DEFEND THE ARCHITECT AGAINST ALL DAMAGES, CLAIMS AND LOSSES, INCLUDING DEFENSE COSTS, ARISING OUT OF ANY REUSE OF PLANS AND SPECIFICATIONS WITHOUT THE WRITTEN AUTHORIZATION OF THE ARCHITECT OF RECORD.

Copyright © 2022 Rachlin Partners, All Rights Reserved.

SUSPENDED CEILING NOTES:

REFERENCE DSA IR 25-2 (REV 03/18/22); 2019 CBC SEC. 1617A.1.21 & 1616.10.16; ASTM C635, C636 & E580; AND ASCE 7.

1. CEILING SYSTEM GENERAL NOTES:

1.01 CEILING SYSTEM COMPONENTS SHALL COMPLY WITH ASTM C635 AND SECTION 5.1 OF ASTM E580.
1.02 THE CEILING GRID SYSTEM MUST BE RATED HEAVY DUTY AS DEFINED BY ASTM C635.
1.03 CEILING SYSTEMS. THE FOLLOWING CEILING SYSTEM IS PART OF THE SCOPE OF THIS PROJECT:
MANUFACTURER: ARMSTRONG (WOOD PANELS MANUFACTURED BY RULON.
PRODUCT NAMED: PRELUDE XL SUSPENSION SYSTEM
PRODUCT EVALUATION REPORT TYPE AND NUMBER: ESR 1308
MANUFACTURER'S MODEL NUMBER - MAIN RUNNER: 7301
MANUFACTURER'S CATALOG NUMBER - CROSS RUNNER: XL7341
1.04 SEISMIC WALL CLIP: MANUFACTURER'S MODEL: N/A
1.05 CEILING PANELS SHALL NOT SUPPORT ANY LIGHT FIXTURES, AIR TERMINALS OR DEVICES.
1.06 FOR CEILING INSTALLATIONS UTILIZING ACOUSTICAL TILE PANELS OF MINERAL OR GLASS FIBER, IT IS NOT MANDATORY TO PROVIDE 3/4" CLEARANCE BETWEEN THE ACOUSTICAL TILE PANELS AND THE WALL ON THE SIDES OF THE CEILING WHICH ARE FREE TO SLIP. FOR ALL OTHER CEILING PANEL TYPES, PROVIDE 3/4" CLEARANCE BETWEEN THE CEILING PANEL AND THE WALL ON THE SIDES OF THE CEILING FREE TO SLIP. CLEARANCE BETWEEN CEILING GRID RUNNERS/MEMBERS AND WALLS SHALL COMPLY WITH THE DETAILS ON THESE DRAWINGS REGARDLESS OF CEILING TILE MATERIAL.

2. MATERIALS:

2.01 CEILING WIRE SHALL BE CLASS 1 ZINC COATED (GALVANIZED) CARBON STEEL CONFORMING TO ASTM A641-09a. WIRE SHALL BE #12 GAGE (0.106' DIAMETER) WITH SOFT TEMPER AND MINIMUM ULTIMATE TENSILE STRENGTH = 70 KSI.
2.02 GALVANIZED SHEET STEEL (INCLUDING THAT USED FOR METAL STUD AND TRACK COMPRESSION STRUTS/POSTS) SHALL CONFORM TO ASTM A653, OR OTHER EQUIVALENT SHEET STEEL LISTED IN SECTION A3.1 OF THE NORTH AMERICAN SPECIFICATION FOR THE DESIGN OF COLD-FORMED STEEL STRUCTURAL MEMBERS (AISI S100). MATERIAL 43 MIL (18 GAGE) AND LIGHTER SHALL HAVE MINIMUM YIELD STRENGTH OF 33 KSI. MATERIAL 54 MIL (16 GAGE) AND HEAVIER SHALL HAVE A MINIMUM YIELD STRENGTH OF 50 KSI.
2.03 ELECTRICAL METALLIC TUBE (EMT) SHALL BE ANSI C80.3/UL 797 CARBON STEEL WITH G90 GALVANIZING. EMT SHALL HAVE MINIMUM YIELD STRENGTH (F_y) OF 30 KSI AND MINIMUM ULTIMATE STRENGTH (F_u) OF 48 KSI.

3. ATTACHMENT OF HANGER AND BRACING WIRES:

3.01 SEPARATE ALL CEILING HANGER AND BRACING WIRES AT LEAST SIX (6)INCHES FROM ALL UNBRACED DUCTS, PIPES,CONDUITS,ETC.
3.02 HANGER AND BRACING WIRES SHALL NOT ATTACH TO OR BEND AROUND OBSTRUCTIONS INCLUDING BUT NOT LIMITED TO: PIPING, DUCTWORK, CONDUIT AND EQUIPMENT.
3.03 HANGER WIRES THAT ARE MORE THAN ONE (HORIZONTAL) IN SIX (VERTICAL) OUT OF PLUMB SHALL HAVE COUNTER-SLOPING WIRES.
3.04 SLACK SAFETY WIRES SHALL BE CONSIDERED HANGER WIRES FOR INSTALLATION AND TESTING REQUIREMENTS.
3.05 HANGER AND BRACING WIRE ANCHORAGE TO THE STRUCTURE SHALL BE INSTALLED IN SUCH A MANNER THAT THE DIRECTION OF THE ANCHORAGE ALIGNS CLOSELY WITH THE DIRECTION OF THE WIRE (E.G., BRACING WIRE CEILING CLIPS MUST BE BENT AS SHOWN IN THE DETAILS AND ROTATED AS REQUIRED TO ALIGN CLOSELY WITH THE DIRECTION OF THE WIRE, SCREW EYES IN WOOD MUST BE INSTALLED SO THEY ALIGN CLOSELY WITH THE DIRECTION OF THE WIRE, ETC.).

4. FASTENERS AND WELDING:

4.01 SHEET METAL SCREWS SHALL COMPLY WITH ASTM C1513, ASME B18.6.3. PENETRATION OF SCREWS THROUGH JOINED MATERIAL SHALL NOT BE LESS THAN THREE EXPOSED THREADS.
4.02 EXPANSION ANCHORS SHALL BE: N/A
4.03 POWER-ACTUATED FASTENERS SHALL BE: HILTI X-U FASTENER (ICC ESR-2269)
4.04 IF NOT OTHERWISE SPECIFIED IN THE EVALUATION REPORT, POWER-ACTUATED FASTENERS INSTALLED IN STEEL SHALL BE INSTALLED SO THE ENTIRE POINTED END OF THE FASTENER IS DRIVEN THROUGH THE STEEL MEMBER.
4.05 POWER-ACTUATED FASTENERS INTO CONCRETE OR MASONRY ARE NOT PERMITTED FOR BRACING WIRES.
4.06 CONCRETE REINFORCEMENT AND PRESTRESSING TENDONS SHALL BE LOCATED BY NON-DESTRUCTIVE MEANS PRIOR TO INSTALLING POST-INSTALLED ANCHOR.
4.07 WELDING SHALL BE IN ACCORDANCE WITH AWS D1.3 USING E60XX SERIES ELECTRODES.

5. TESTING:

5.01 ALL FIELD TESTING MUST BE PERFORMED IN THE PRESENCE OF THE PROJECT INSPECTOR.
5.02 POST-INSTALLED ANCHORS IN CONCRETE USED TO SUPPORT HANGER WIRES SHALL BE TESTED AT A FREQUENCY OF 10 PERCENT. POWER ACTUATED FASTENERS IN CONCRETE SHALL BE FIELD TESTED FOR 200 LBS. IN TENSION. ALL OTHER POST-INSTALLED ANCHORS IN CONCRETE SHALL BE TESTED IN ACCORDANCE WITH CBC SECTION 1910A.5.
5.03 POST-INSTALLED ANCHORS IN CONCRETE USED TO ATTACH BRACING WIRES SHALL BE TESTED AT A FREQUENCY OF 50 PERCENT IN ACCORDANCE WITH CBC SECTION 1910A.5.

6. LUMINAIRES:

6.01 ALL LUMINAIRES SHALL BE POSITIVELY ATTACHED TO THE CEILING SUSPENSION SYSTEMS BY MECHANICAL MEANS TO RESIST A HORIZONTAL FORCE EQUAL TO THE WEIGHT OF THE LUMINAIRE. A MINIMUM OF TWO SCREWS OR APPROVED FASTENERS ARE REQUIRED AT EACH LUMINAIRE, PER ASTM E580, SECTION 5.3.1.
6.02 SURFACE-MOUNTED LUMINAIRES SHALL BE ATTACHED TO THE MAIN RUNNER WITH AT LEAST TWO POSITIVE CLAMPING DEVICES. THE CLAMPING DEVICES SHALL COMPLETELY SURROUND THE SUPPORTING CEILING RUNNER AND BE MADE OF STEEL WITH A MINIMUM THICKNESS OF #14 GAGE. ROTATIONAL SPRING CATCHES DO NOT COMPLY. A #12 GAGE SLACK SAFETY WIRE SHALL BE CONNECTED FROM EACH CLAMPING DEVICE TO THE STRUCTURE ABOVE. PROVIDE ADDITIONAL SUPPORTS WHEN A LUMINAIRE IS EIGHT (8) FEET OR LONGER OR EXCEEDS 56 LBS. MAXIMUM SPACING BETWEEN SUPPORTS SHALL NOT EXCEED EIGHT (8) FEET.
6.03 LUMINAIRES WEIGHING LESS THAN OR EQUAL TO 10 LBS. MAY BE SUPPORTED DIRECTLY ON THE CEILING RUNNERS, SHALL HAVE A MINIMUM OF ONE #12 GAUGE SLACK SAFETY WIRE CONNECTED FROM THE FIXTURE HOUSING TO THE STRUCTURE ABOVE.
6.04 LUMINAIRES WEIGHING GREATER THAN 10 POUNDS BUT LESS THAN OR EQUAL TO 56 POUNDS MAY BE SUPPORTED DIRECTLY ON THE CEILING RUNNERS, BUT THEY SHALL HAVE A MINIMUM OF TWO #12 GAUGE SLACK SAFETY WIRES CONNECTED FROM THE FIXTURE HOUSING AT DIAGONAL CORNERS TO THE STRUCTURE ABOVE.
EXCEPTION: ALL LUMINAIRES GREATER THAN TWO BY FOUR FEET WEIGHING LESS THAN 56 POUNDS SHALL HAVE A #12 GAUGE SLACK SAFETY WIRE AT EACH CORNER.
6.05 ALL LUMINAIRES WEIGHING GREATER THAN 56 POUNDS SHALL BE INDEPENDENTLY SUPPORTED BY NOT LESS THAN FOUR TAUT #12 GAUGE HANGER WIRES (ONE AT EACH CORNER) ATTACHED FROM THE FIXTURE HOUSING TO THE STRUCTURE ABOVE OR OTHER APPROVED HANGERS. THE FOUR TAUT #12 GAUGE WIRES OR OTHER APPROVED HANGERS, INCLUDING THEIR ATTACHMENT TO THE STRUCTURE ABOVE, SHALL BE CAPABLE OF SUPPORTING FOUR TIMES THE WEIGHT OF THE FIXTURE.

7. SERVICES WITHIN THE CEILING:

7.01 ALL FLEXIBLE SPRINKLER HOSE FITTING MOUNTING BRACKETS, CEILING-MOUNTED AIR TERMINALS OR OTHER SERVICES SHALL BE POSITIVELY ATTACHED TO THE CEILING SUSPENSION SYSTEMS BY MECHANICAL MEANS. SCREWS OR APPROVED FASTENERS ARE REQUIRED. A MINIMUM OF TWO ATTACHMENTS ARE REQUIRED AT EACH COMPONENT.
7.02 CEILING-MOUNTED AIR TERMINALS OR OTHER SERVICES WEIGHTING LESS THAN OR EQUAL TO 20 LBS. SHALL HAVE ONE (1) #12 GAGE SLACK SAFETY WIRE ATTACHED FROM THE TERMINAL OR SERVICE TO THE STRUCTURE ABOVE.
7.03 FLEXIBLE SPRINKLER HOSE FITTINGS, CEILING-MOUNTED AIR TERMINALS OR OTHER SERVICES WEIGHING MORE THAN 20 LBS. BUT LESS THAN OR EQUAL TO 56 LBS. SHALL HAVE TWO (2) #12 GAGE SLACK SAFETY WIRES (AT DIAGONAL CORNERS) CONNECTED FROM THE TERMINAL OR SERVICE TO THE STRUCTURE ABOVE.
7.04 FLEXIBLE SPRINKLER HOSE FITTINGS, CEILING-MOUNTED AIR TERMINALS OR OTHER SERVICES WEIGHING MORE THAN 56 LBS. SHALL BE SUPPORTED DIRECTLY FROM THE STRUCTURE ABOVE BY NOT LESS THAN FOUR (4) TAUT #12 GAGE HANGER WIRES ATTACHED FROM THE TERMINAL OR SERVICE TO THE STRUCTURE ABOVE OR OTHER APPROVED HANGERS.

8. OTHER DEVICES WITHIN THE CEILING:

8.01 ALL LIGHTWEIGHT MISCELLANEOUS DEVICES, SUCH AS STROBE LIGHTS, OCCUPANCY SENSORS, SPEAKERS, EXIT SIGNS, ETC. SHALL BE ATTACHED TO THE CEILING GRID. IN ADDITION, DEVICES WEIGHING MORE THAN 10 LBS. SHALL HAVE A #12 GAGE SLACK SAFETY WIRE ANCHORED TO THE STRUCTURE ABOVE. DEVICES WEIGHING MORE THAN 20 LBS. SHALL BE SUPPORTED INDEPENDENTLY FROM THE STRUCTURE ABOVE.

Performing Arts Center

Hacienda La Puente Unified School District
635 North California Avenue
La Puente, CA 91744

Rev	Date	Issue
1	7.22.22	50% DD
2	10.21.22	50% CD
3	12.09.22	100% CD DSA SUBMITTAL
4	6.19.23	100% CD DSA RESUBMITTAL
5	9.20.23	DSA BACK CHECK
6	11.01.23	ADDENDUM NO. 1
7	11.01.23	ADDENDUM NO. 2

Date: 11.01.2023
Scale: As indicated
Drawn By: Author
Checked By: Checker

Architect / Engineer Stamp

LICENSED ARCHITECT — RONALD RACHLIN — NO. C-28229 — REN. 8-31-25 — STATE OF CALIFORNIA

Consultants
Miyamoto International, Inc.
The Ruzika Company, Inc.
MDC Consulting Engineers
Pocock Design Solutions
Newson Brown Acoustics, LLC
VCA Engineers, Inc.
HJSA Consulting

Sheet Title

Ceiling Details

Sheet Number

A875

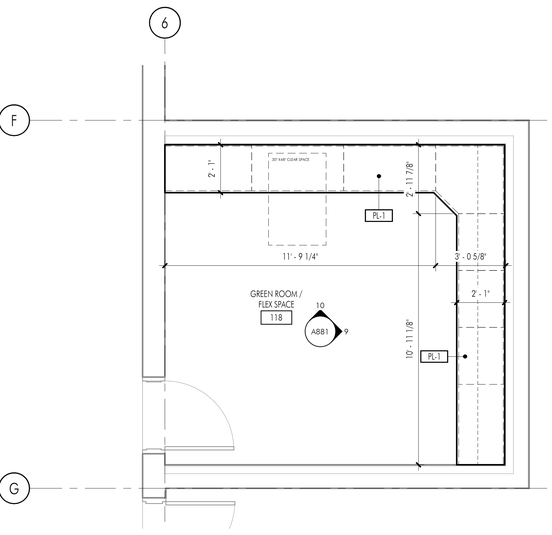

8 ENLARGED PLAN - GREEN ROOM CASEWORK

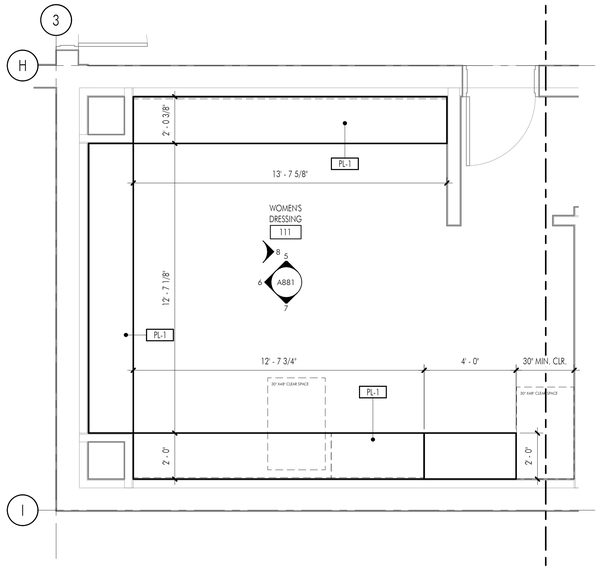

4 ENLARGED PLAN - WOMEN'S DRESSING ROOM CASEWORK

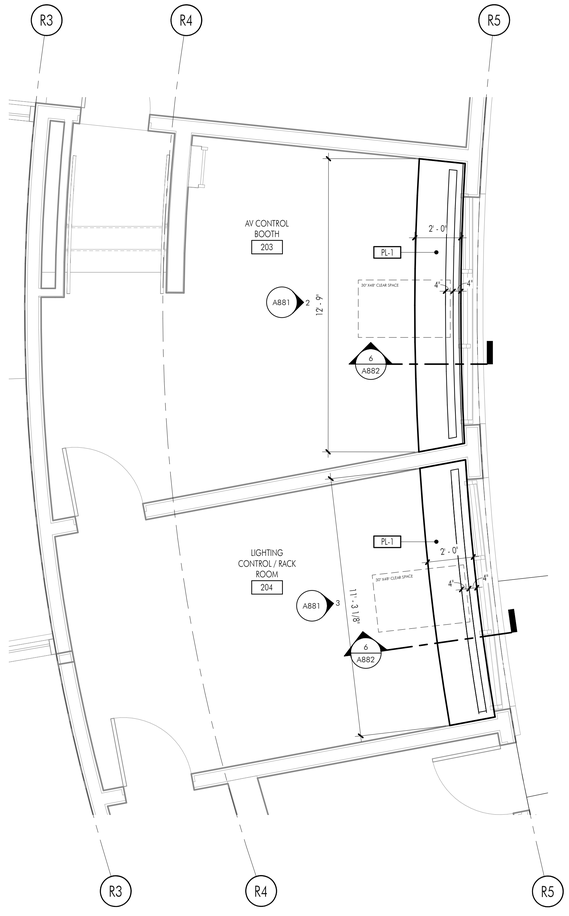

1 ENLARGED PLAN - COUNTER AT LIGHTING BOOTH PLAN CASEWORK

SCALE: 3/8" = 1'-0"

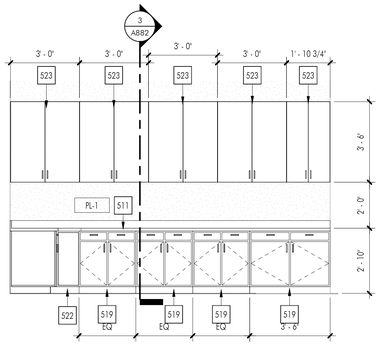

9 CASEWORK ELEVATION 6

SCALE: 3/8" = 1'-0"

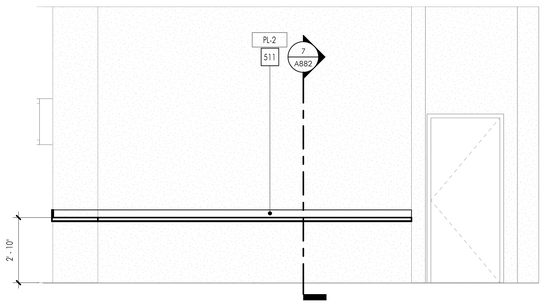

5 CASEWORK ELEVATION 3

SCALE: 3/8" = 1'-0"

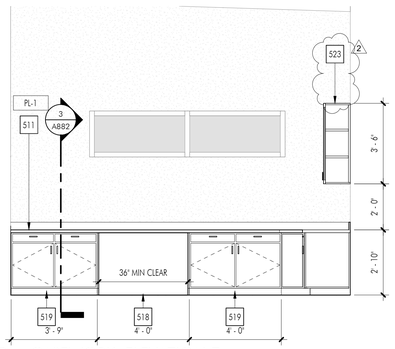

10 CASEWORK ELEVATION 7

SCALE: 3/8" = 1'-0"

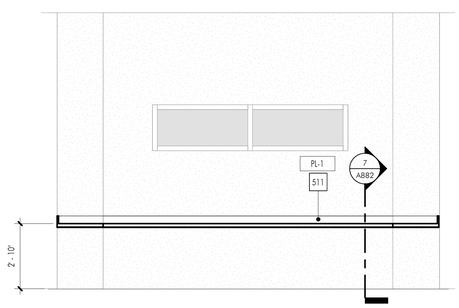

6 CASEWORK ELEVATION 4

SCALE: 3/8" = 1'-0"

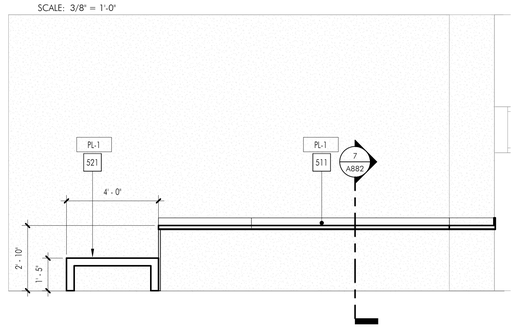

7 CASEWORK ELEVATION 5

SCALE: 3/8" = 1'-0"

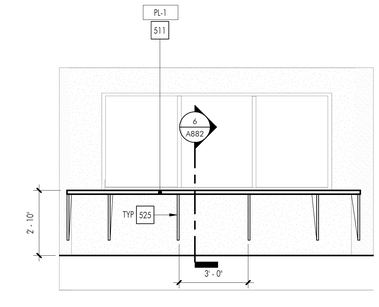

2 CASEWORK ELEVATION 1

SCALE: 3/8" = 1'-0"

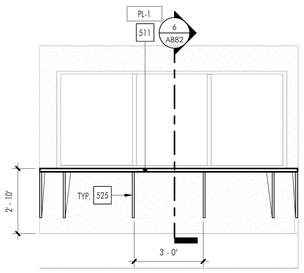

3 CASEWORK ELEVATION 2

SCALE: 3/8" = 1'-0"

CONSTRUCTION KEYNOTES

No.	DESCRIPTION
511	CASEWORK, HORIZONTAL SURFACE, FINISH AS SPECIFIED
518	CASEWORK DESIGN (CDS) 154B
519	CASEWORK DESIGN (CDS) 212
521	ACCESSIBLE BENCH TO BE AFFIXED TO WALL, SEE PLAN ENGLARGED DRESSING ROOM PLANS AND ELEVATIONS FOR DIMENSIONS
522	CASEWORK DESIGN (CDS) 186
523	WALL MOUNTED CASEWORK DESIGN SERIES (CDS) 302
525	LET IN CORBEL. SEE DETAIL 6/A882 FOR MORE INFORMATION

FINISH NOTES LEGEND

MS-1	MATERIAL TAG. REFER TO SHEET A621 FOR MATERIALS LEGEND

APPL No. A03-122864

DSA Stamp

Architect

RACHLIN PARTNERS
8640 National Boulevard
Culver City, CA 90232
310.204.3400

Disclaimer:

THESE DRAWINGS ARE THE PROPERTY OF THE ARCHITECT. THE DESIGNS SHOWN AND DESCRIBED HEREIN INCLUDING ALL TECHNICAL DRAWINGS ARE PROPRIETARY AND CANNOT BE COPIED, DUPLICATED OR COMMERCIALLY EXPLOITED IN ANY WAY WITHOUT THE ARCHITECT'S EXPRESS WRITTEN CONSENT. SHALL NOT BE USED BY THE OWNER ON OTHER PROJECTS, FOR ADDITIONS TO THIS PROJECT, OR FOR COMPLETION OF THIS PROJECT BY OTHERS. THE OWNER AGREES TO HOLD HARMLESS, INDEMNIFY AND DEFEND THE ARCHITECT AGAINST ALL DAMAGES, CLAIMS AND LOSSES, INCLUDING DEFENSE COSTS, ARISING OUT OF ANY REUSE OF PLANS AND SPECIFICATIONS WITHOUT THE WRITTEN AUTHORIZATION OF THE ARCHITECT OF RECORD.

Copyright © 2022 Rachlin Partners, All Rights Reserved.

Performing Arts Center

Hacienda La Puente Unified School District
635 North California Avenue
La Puente, CA 91744

Rev	Date	Issue
1	7.22.22	50% DD
2	10.21.22	50% CD
3	12.09.22	100% CD DSA SUBMITTAL
4	6.19.23	100% CD DSA RESUBMITTAL
5	9.20.23	DSA BACK CHECK
6	11.01.23	ADDENDUM NO. 1
7	11.01.23	ADDENDUM NO. 2

Date: 11.01.2023
Scale: As indicated
Drawn By: Author
Checked By: Checker

Architect / Engineer Stamp

LICENSED ARCHITECT
NO. C-26225
REN. 8-31-25
STATE OF CALIFORNIA

Consultants
Miyamoto International, Inc.
The Ruzika Company, Inc.
MDC Consulting Engineers
Pocock Design Solutions
Newson Brown Acoustics, LLC
VCA Engineers, Inc.
HJSA Consulting

Sheet Title

Casework Details

Sheet Number

A881

C:\Users\rudy.monico\Documents\R22_HLPUSD-PAC_Central_rudy.monico.rvt

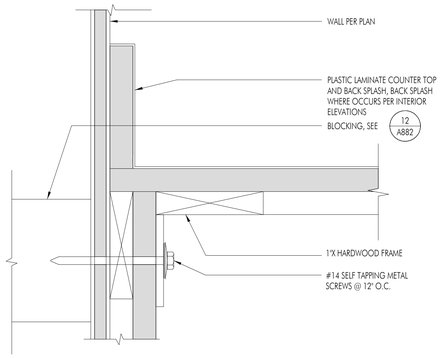

13 COUNTERTOP AT WALL WITH SPLASH

SCALE: 6" = 1'-0"

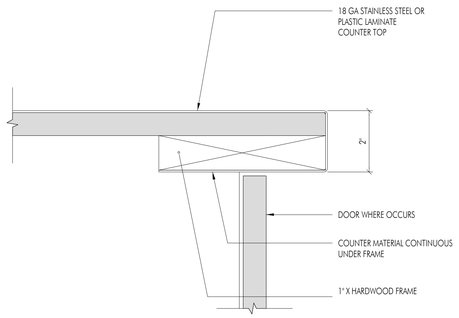

9 COUNTER TOP EDGE

SCALE: 6" = 1'-0"

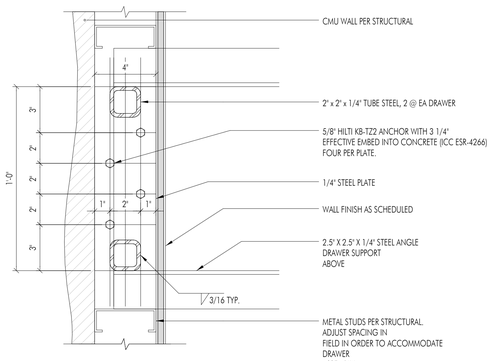

10 COUNTER SUPPORT ATTATCHMENT

SCALE: 3" = 1'-0"

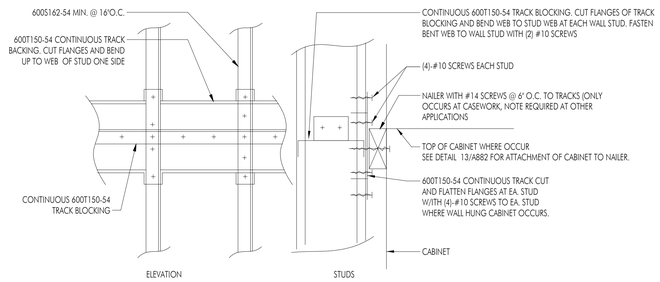

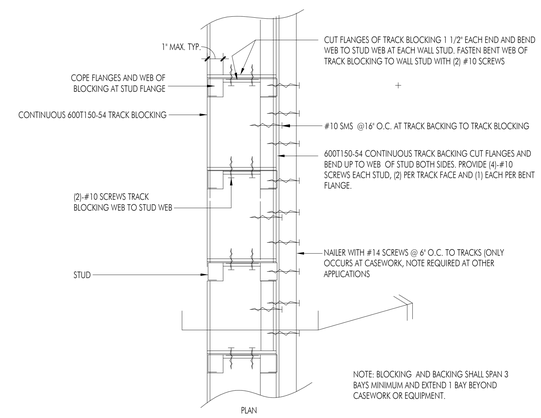

12 BACKING DETAIL

SCALE: 3/4" = 1'-0"

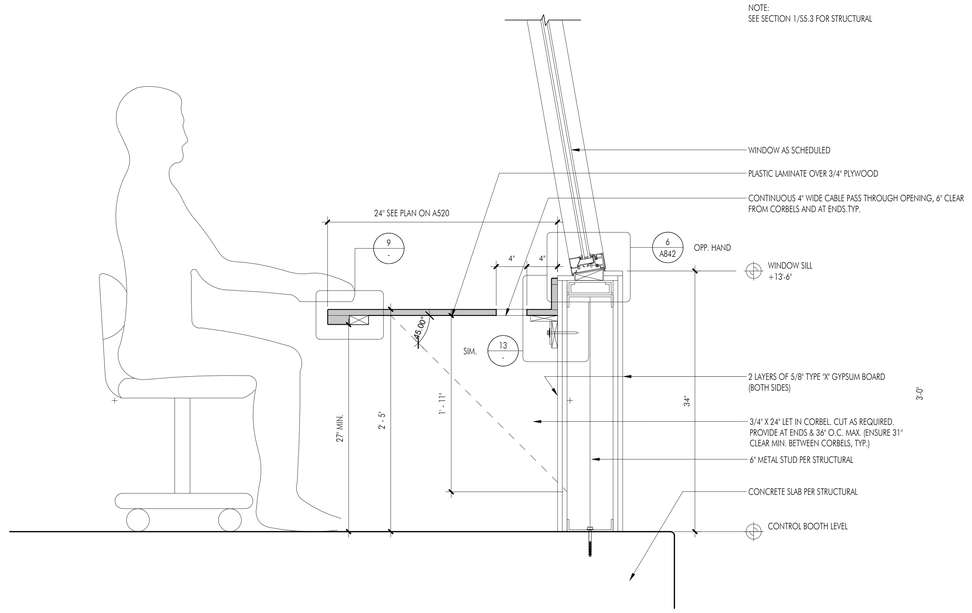

6 LIGHTING CONTROL BOOTH SECTION - ACCESSIBLE

SCALE: 1 1/2" = 1'-0"

7 DRESSING ROOM COUNTER DETAIL

SCALE: 1 1/2" = 1'-0"

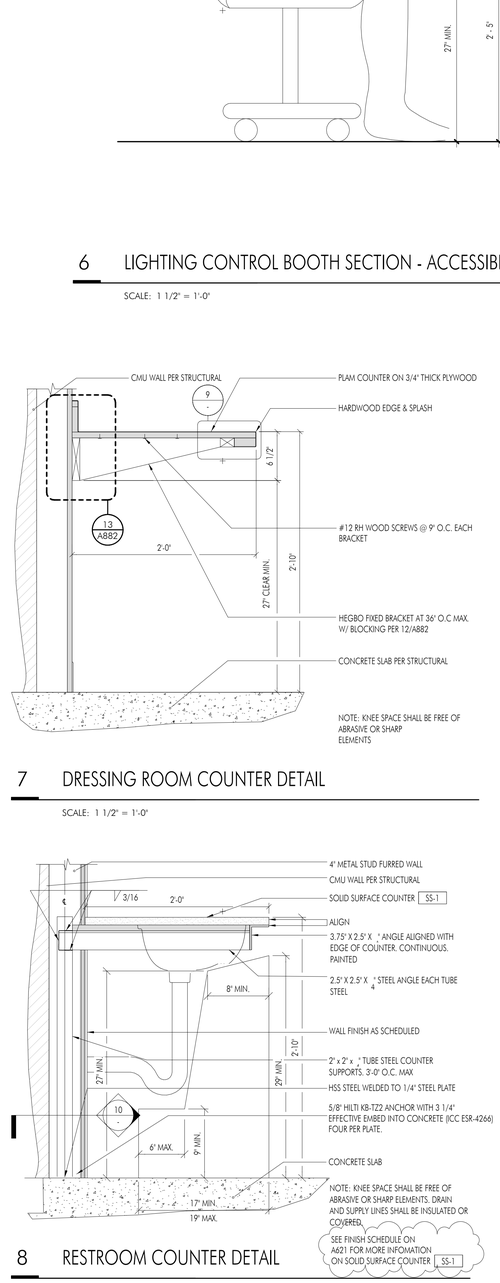

8 RESTROOM COUNTER DETAIL

SCALE: 1 1/2" = 1'-0"

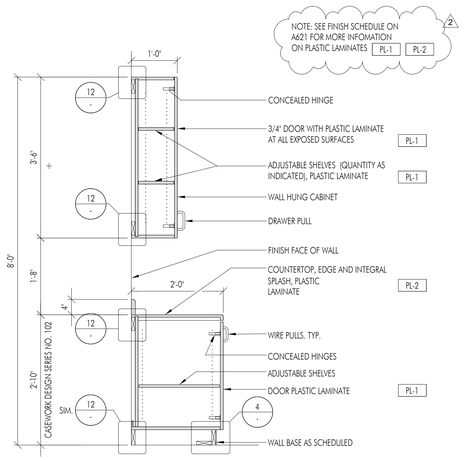

3 CASEWORK SECTION UPPER/LOWER

SCALE: 3/4" = 1'-0"

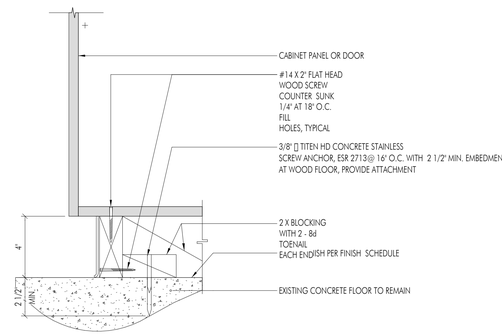

4 CABINET BASE DETAIL

SCALE: 3" = 1'-0"

C:\Users\rudy.monico\Documents\R22_HUPUSD-PAC_Central_rudy.monico.rvt

APPL No. A03-122864

DSA Stamp

Architect

RACHLIN PARTNERS
8640 National Boulevard
Culver City, CA 90232
310.204.3400

Disclaimer:

THESE DRAWINGS ARE THE PROPERTY OF THE ARCHITECT. THE DESIGNS SHOWN AND DESCRIBED HEREIN INCLUDING ALL TECHNICAL DRAWINGS ARE PROPRIETARY AND CANNOT BE COPIED, DUPLICATED OR COMMERCIALLY EXPLOITED IN ANY WAY. THEY ARE NOT TO BE CHANGED OR ALTERED AND SHALL NOT BE USED BY THE OWNER ON OTHER PROJECTS, FOR ADDITIONS TO THIS PROJECT, OR FOR COMPLETION OF THIS PROJECT BY OTHERS. THE OWNER AGREES TO HOLD HARMLESS, INDEMNIFY AND DEFEND THE ARCHITECT AGAINST ALL DAMAGES, CLAIMS AND LOSSES, INCLUDING DEFENSE COSTS, ARISING OUT OF ANY REUSE OF PLANS AND SPECIFICATIONS WITHOUT THE WRITTEN AUTHORIZATION OF THE ARCHITECT OF RECORD.

Copyright © 2022 Rachlin Partners, All Rights Reserved.

Performing Arts Center

Hacienda La Puente Unified School District
635 North California Avenue
La Puente, CA 91744

Rev	Date	Issue
1	7.22.22	50% DD
2	10.21.22	50% CD
3	12.09.22	100% CD DSA SUBMITTAL
4	6.19.23	100% CD DSA RESUBMITTAL
5	9.20.23	DSA BACK CHECK
6	11.01.23	ADDENDUM NO. 1
7	11.01.23	ADDENDUM NO. 2

Date: 11.01.2023
Scale: As indicated
Drawn By: Author
Checked By: Checker

Architect / Engineer Stamp

REGISTERED ARCHITECT
RUDY MONICO
NO. C-28229
REN 8-31-25
STATE OF CALIFORNIA

Consultants
Miyamoto International, Inc.
The Ruzika Company, Inc.
MDC Consulting Engineers
Pocock Design Solutions
Newson Brown Acoustics, LLC
VCA Engineers, Inc.
HJSA Consulting

Sheet Title

Casework Details

Sheet Number

A882

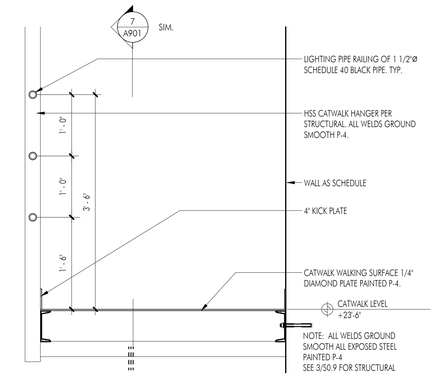

17 CATWALK RAILING DETAIL 1

SCALE: 1" = 1'-0"

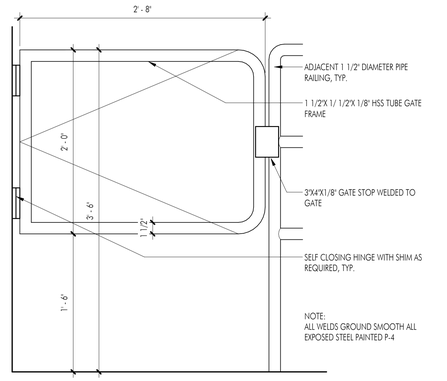

18 ACCESS LADDER SAFETY GATE ELEVATION

SCALE: 1 1/2" = 1'-0"

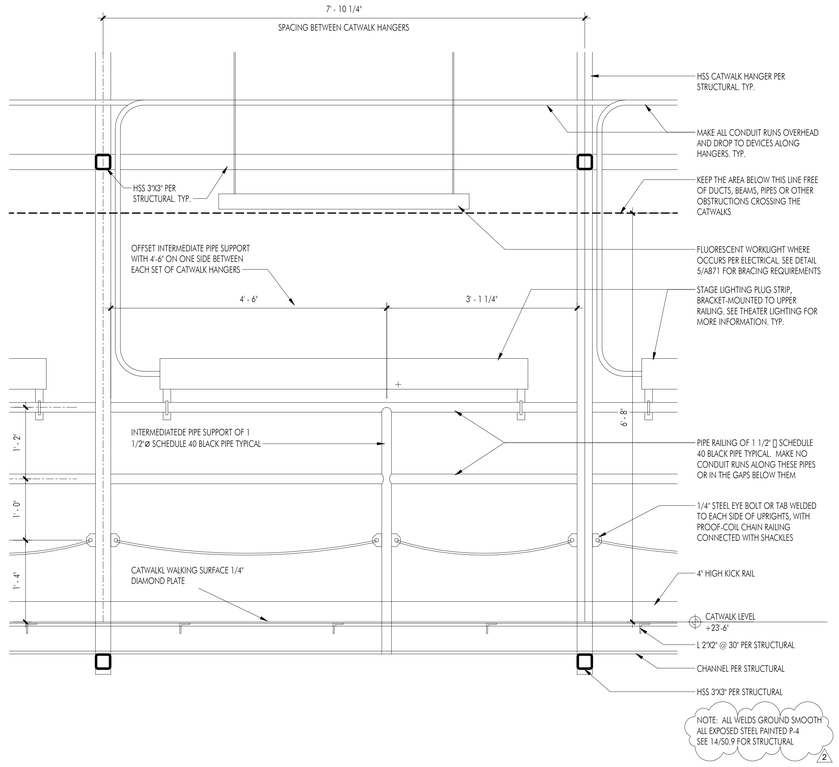

14 CATWALK ELEVATION

SCALE: 1" = 1'-0"

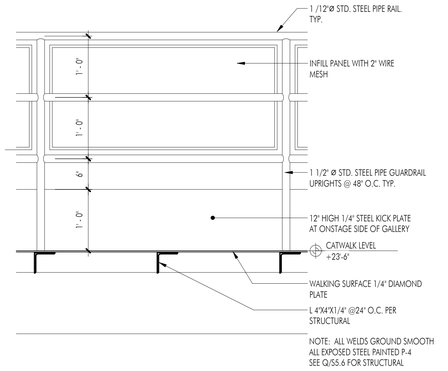

5 LOADING GALLERY ON STAGE ELEVATION

SCALE: 1" = 1'-0"

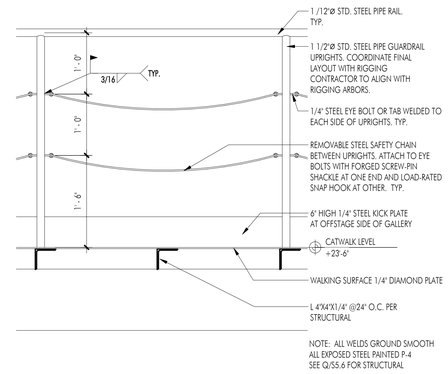

6 LOADING GALLERY OFF STAGE ELEVATION

SCALE: 1" = 1'-0"

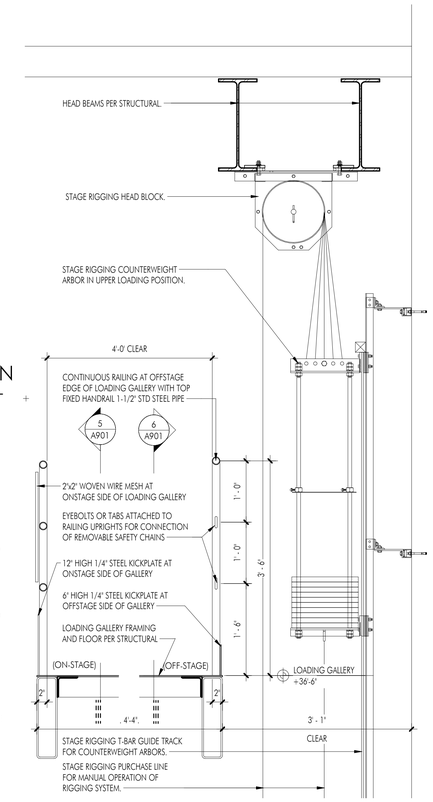

2 LOADING GALLERY 36'-6"

SCALE: 1" = 1'-0"

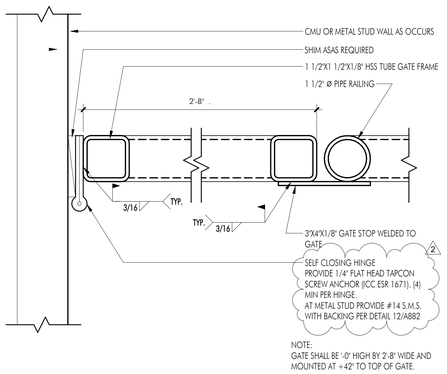

19 ACCESSS LADDER SAFETY PLAN

SCALE: 6" = 1'-0"

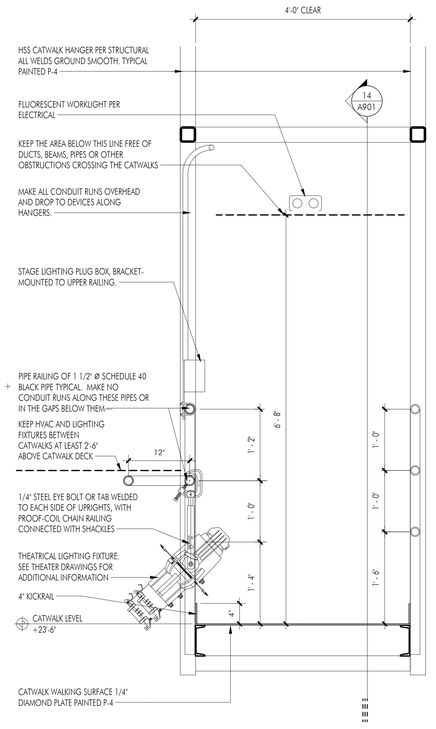

16 CATWALK RAILING DETAIL 3

SCALE: 1" = 1'-0"

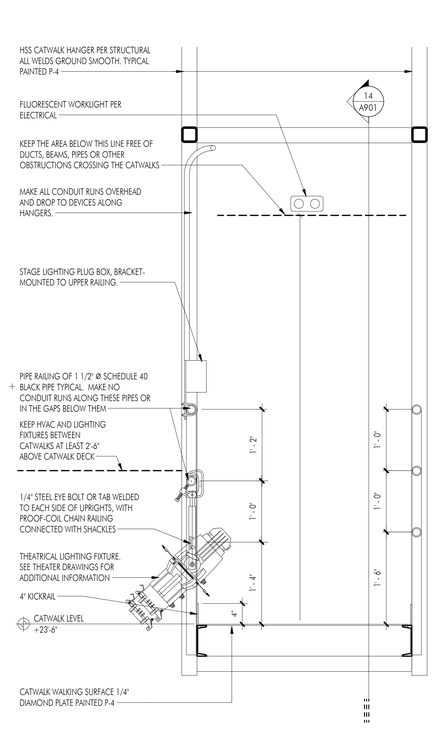

12 CATWALK RAILING DETAIL 2

SCALE: 1" = 1'-0"

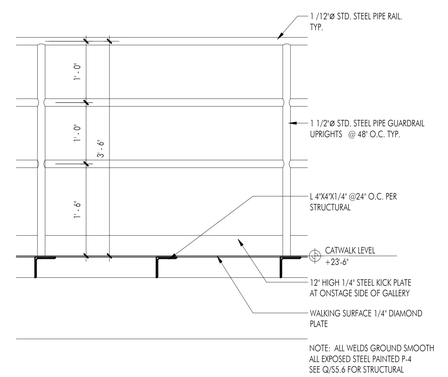

7 TYPICAL CATWALK RAILING DETAIL

SCALE: 1" = 1'-0"

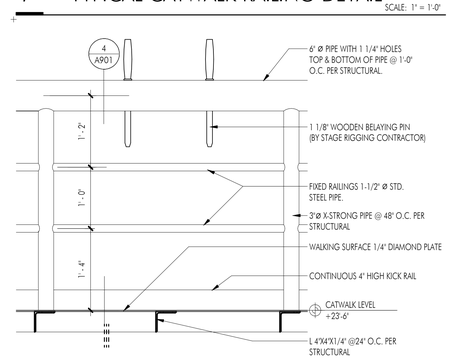

8 ELEVATION AT PINRAIL

SCALE: 1" = 1'-0"

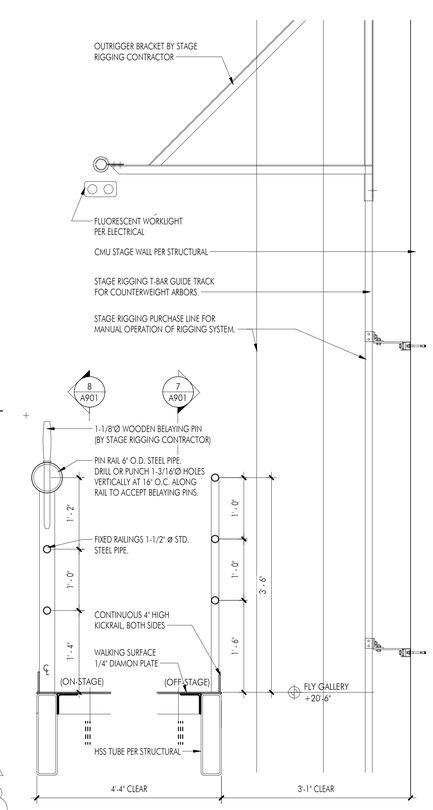

4 FLY GALLERY 20'-6"

SCALE: 1" = 1'-0"

C:\Users\rudy.monico\Documents\M22_HLFUSD-PAC_Central_rudy.monico.rvt

APPL No. A03-122864

DSA Stamp

Architect

RACHLIN PARTNERS
8640 National Boulevard
Culver City, CA 90232
310.204.3400

Disclaimer:

THESE DRAWINGS ARE THE PROPERTY OF THE ARCHITECT. THE DESIGNS SHOWN AND DESCRIBED HEREIN INCLUDING ALL TECHNICAL DRAWINGS ARE PROPRIETARY AND CANNOT BE COPIED, DUPLICATED OR COMMERCIALLY EXPLOITED IN ANY WAY. THEY ARE NOT TO BE CHANGED OR COPIED AND SHALL NOT BE USED BY THE OWNER ON OTHER PROJECTS, FOR ADDITIONS TO THIS PROJECT, OR FOR COMPLETION OF THIS PROJECT BY OTHERS. THE OWNER AGREES TO HOLD HARMLESS, INDEMNIFY AND DEFEND THE ARCHITECT AGAINST ALL DAMAGES, CLAIMS AND LOSSES, INCLUDING DEFENSE COSTS, ARISING OUT OF ANY REUSE OF PLANS AND SPECIFICATIONS WITHOUT THE WRITTEN AUTHORIZATION OF THE ARCHITECT OF RECORD.

Copyright © 2022 Rachlin Partners, All Rights Reserved.

Performing Arts Center

Hacienda La Puente Unified School District
635 North California Avenue
La Puente, CA 91744

Rev	Date	Issue
1	7.22.22	50% DD
2	10.21.22	50% CD
3	12.09.22	100% CD DSA SUBMITTAL
4	6.19.23	100% CD DSA RESUBMITTAL
5	9.20.23	DSA BACK CHECK
6	11.01.23	ADDENDUM NO. 1
7	11.01.23	ADDENDUM NO. 2

Date: 11.01.2023
Scale: As indicated
Drawn By: MS
Checked By: RM

Architect / Engineer Stamp

Consultants

Miyamoto International, Inc.
The Ruzika Company, Inc.
MDC Consulting Engineers
Pocock Design Solutions
Newson Brown Acoustics, LLC
VCA Engineers, Inc.
HJSA Consulting

Sheet Title

Catwalk Details

Sheet Number

A901

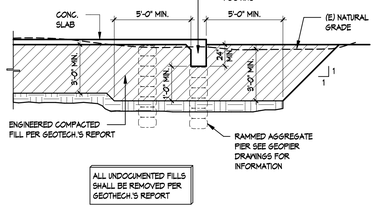

OVER EXCAVATION REQUIREMENTS (8)

1" = 1'-0"

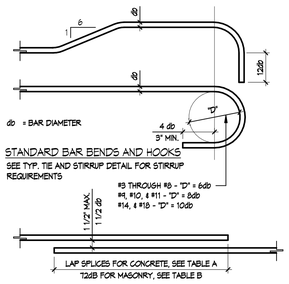

STANDARD BAR BENDS AND HOOKS

SEE TYP. TIE AND STIRRUP DETAIL FOR STIRRUP REQUIREMENTS

TYP - WELDED REINFORCING SPLICE (10)

1" = 1'-0"

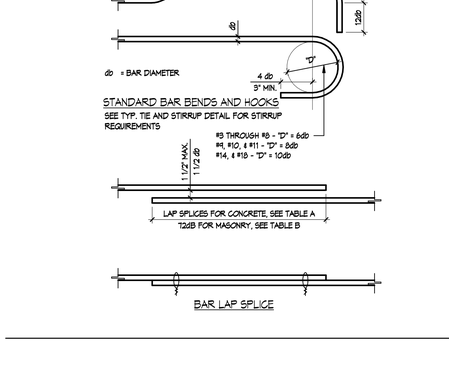

TYP - REINF. AT FTG CORNERS AND INTERSECTIONS (11)

1" = 1'-0"

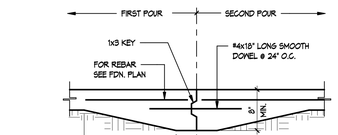

CONSTRUCTION JOINT

(C.J. ON PLANS AND 30'-0" O.C. MAX. U.N.O.)

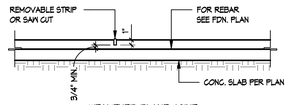

WEAKENED PLANE JOINT

(W.P.J. ON PLANS AND 15'-0" O.C. MAX. U.N.O.)

TYP - SLAB JOINT DETAILS (4)

1" = 1'-0"

TABLE A

BAR LAP SPLICES IN CONC. (CLASS B) 3500 P.S.I.			BAR LAP SPLICES IN CONC. (CLASS B) 4000 P.S.I.		
	BAR SIZE	BAR LAP		BAR SIZE	BAR LAP
52 db	#4	27"	44 db	#4	25"
	#5	33"		#5	31"
	#6	40"		#6	37"
69 db	#7	58"	61 db	#7	54"
	#8	66"		#8	62"
	#9	75"		#9	70"
	#10	84"		#10	78"

TABLE B

BAR LAP SPLICES IN CMU		
	BAR SIZE	BAR LAP
72 db	#4	36"
	#5	45"
	#6	54"
	#7	63"
	#8	72"

NOTES - TABLE A:
1. ALL TABULATED BAR LAPS SHALL BE MULTIPLIED BY 1.33 FOR LIGHT WEIGHT CONCRETE.
2. ALL TABULATED BAR LAPS SHALL BE MULTIPLIED BY 1.33 FOR HORIZONTAL WALL BARS, FOOTING AND GRADE BEAM TOP BARS.
3. CLEAR SPACING OF BARS BEING DEVELOPED OR SPLICED NOT LESS THAN db, CLEAR COVER NOT LESS THAN db, AND STIRRUPS OR TIES THROUGHOUT Ld NOT LESS THAN THE MINIMUM OR CLEAR SPACING OF BARS BEING DEVELOPED OR SPLICED NOT LESS THAN 2db AND CLEAR COVER NOT LESS THAN db.

NOTES - TABLE B:
1. STAGGER VERTICAL SPLICE LOCATIONS FOR #8 REINFORCING.

TYP - REINFORCING BAR DETAILS (5)

1" = 1'-0"

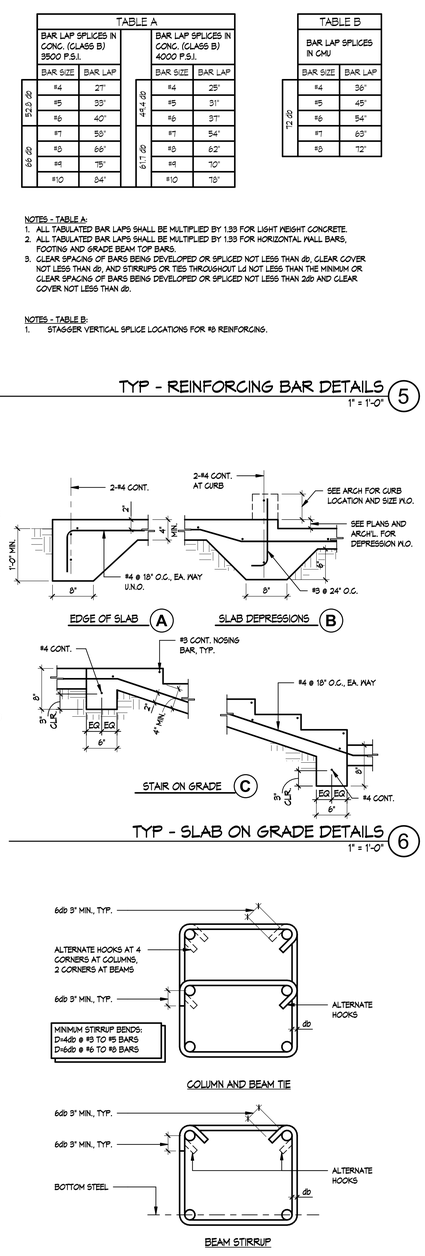

TYP - SLAB ON GRADE DETAILS (6)

1" = 1'-0"

TYP - TIE AND STIRRUP DETAILS (7)

1" = 1'-0"

LEGEND

A.B.	ANCHOR BOLT	H.A.B.	HEADED ANCHOR BOLT
ABV.	ABOVE	H.D.	HOLD DOWN
BEL.	BELOW	HORIZ.	HORIZONTAL
BLK'G.	BLOCKING	H.S.A.	HEADED STUD ANCHOR
BM.	BEAM	H.S.B.	HIGH STRENGTH BOLT
B.N.	BOUNDARY NAILING	H.S.S.	HOLLOW STRUCTURAL SECTION
B.O.M.D.	BOTTOM OF METAL DECK	JST.	JOIST
BOTT.	BOTTOM	LDGR.	LEDGER
C.	CAMBER	MAS.	MASONRY
C.B.	CARRIAGE BOLT	MDR	METAL DECK ROOF
CLR.	CLEAR	M.B.	MACHINE BOLT
C.J.	CONSTRUCTION JOINT	(N)	NEW
C.N.	CONTINUOUS NAILING	N.T.S.	NOT TO SCALE
COL.	COLUMN	O.C.	ON CENTER
CONC.	CONCRETE	O.H.	OPPOSITE HAND
CONN.	CONNECTION	OPNG.	OPENING
CONT.	CONTINUOUS	PLT.	PLATE
C.P.	COMPLETE PENETRATION	PLYWD.	PLYWOOD
C.P.E.	CONTINUOUS PANEL EDGES	REQ'D.	REQUIRED
DBL.	DOUBLE	REM.	REMAINDER
D.C.N.	DEMAND CRITICAL WELD	R.S.	ROUGH SAWN
DIA.	DIAMETER	SHTG	SHEATHING
DRWG.	DRAWING	S.J.	SEPARATION JOINT
EA.	EACH	SQ.	SQUARE
ELEV.	ELEVATION	SIM.	SIMILAR
(E)	EXISTING	SHT.	SHEET METAL
E.N.	EDGE NAILING	SHT.S.	SHEET METAL SCREW
E.S.	EDGE SCREW	S.P.	SEE PLAN
EQ.	EQUAL	STAGG.	STAGGERED
EXT.	EXTERIOR	STD.	STANDARD
FDN.	FOUNDATION	STL.	STEEL
F.S.	FINISH GRADE	T.O.C.	TOP OF CONCRETE
F.H.H.S.	FLAT HEAD WOOD SCREWS	T.O.M.	TOP OF MASONRY
F.N.	FIELD NAILING	T.O.M.D.	TOP OF METAL DECK
F.O.C.	FACE OF CONCRETE	T.O.P.	TOP OF PLYWOOD
F.O.M.	FACE OF MASONRY	T.O.PARAP.	TOP OF PARAPET
F.O.S.	FACE OF STUD	T.O.S.	TOP OF STEEL
FRMG.	FRAMING	TYP.	TYPICAL
FTG.	FOOTING	U.N.O.	UNLESS NOTED OTHERWISE
GALV.	GALVANIZED	VERT.	VERTICAL
GA.	GAUGE	W.O.	WHERE OCCURS
G.L.B.	GLUE LAMINATED BEAM	W.P.J.	WEAKENED PLANE JOINT
GYP. BD.	GYPSUM BOARD	W.S.A.	WELDED STUD ANCHORS

DETAIL NUMBER / SHEET NUMBER

WALL ELEV./SECTION LETTER / SHEET NUMBER

XX.XX FOOTING MARK

STEP FOOTING

-0'-0" REFERENCE ELEVATION

-0'-0" BOTTOM OF FOOTING ELEVATION

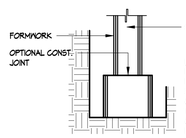

NOTE:
FOOTING AND FOUNDATION WALL MAY BE POURED MONOLITHIC PROVIDED THE SIDES OF THE FOOTING ARE FORMED AND THE EXCAVATION IS LARGE ENOUGH TO PROPERLY CLEAN THE EXCAVATION AND TIE THE REINFORCING. A POUR JOINT IS MANDATORY AT THE SIDES OF THE FOOTING ARE NOT FORMED

FULLY FORMED FOOTING (MONOLITHIC POUR)

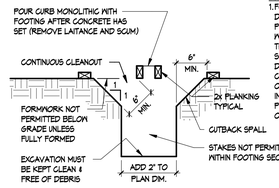

NOTE:
1.FOUNDATION CONC. MAY BE PLACED DIRECTLY INTO NEAT EXCAVATIONS, PROVIDED BY THE GENERAL CONTRACTOR AND COORDINATED WITH THE ACTUAL MECHANICAL UNIT CURB DIMENSIONS. THE HEIGHT OF THE ANGLE FRAME SUPPORTING THE MECH. UNIT SHALL BE COORDINATED BY THE GENERAL CONTRACTOR PRIOR TO THE SHOP DRAWING PHASE.

UNFORMED FOOTING POURED AGAINST GRADE
MANDATORY MINIMUM FORMWORK UNLESS FULLY FORMED

TYP - FOUNDATION FORMING DETAILS (1)

1" = 1'-0"

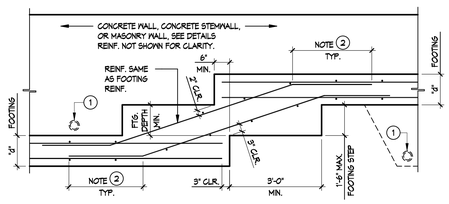

TYP - STEPPED FOOTING DETAIL (2)

1/2" = 1'-0"

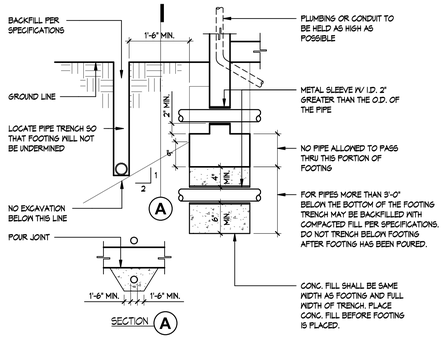

TYP - PIPE TRENCH AND FOOTING DETAIL (3)

1" = 1'-0"

CONCRETE

1. THE MINIMUM STRENGTH OF CONCRETE AT END OF 28 DAYS SHALL BE:
   SLABS ON GRADE ---------- 4000 P.S.I. ---- 150 P.C.F.
   FOOTINGS AND GRADE BEAMS, WALLS ---------- 4000 P.S.I. ---- 150 P.C.F.
   LT. WT. CONC. OVER MTL. DECK 4 METAL STAIR PANS - - 3500 P.S.I. ---- 110 P.C.F.
2. REINFORCING
   A. BOLTS IN CONCRETE : ASTM F1554 GRADE 55 (S-1) U.N.O.
   B. REINFORCING STEEL: ASTM A-615
      TYPICAL REINFORCING: GRADE 60 (#9 AND LARGER)
      GRADE 40 (#4 AND SMALLER)
      GRADE BEAM LONGITUDINAL REINFORCING STEEL AND VERTICAL SHEAR REINFORCING AT CONCRETE WALLS SHALL BE ASTM A706, GR. 60 OR SHALL CONFORM TO ACI 318-14 SECTION 20.2.2.5 (b).
   C. REINFORCING FABRIC: ASTM A1064/A1064M
   D. WELDING OF REINFORCING STEEL: AWS D1.4 LOW HYDROGEN ALL REINFORCING TO BE WELDED: ASTM A-706
   E. PROVIDE MINIMUM LAP ON ALL BARS PER TABLE A ON S / S0.1 U.N.O.
   F. PROVIDE BENT BAR LAPS OF ALL HORIZONTAL REINFORCEMENT AT FOOTING CORNERS PER 11 / S0.1
   G. STAGGER ALL SPLICES OF ALL HORIZONTAL REINFORCING
   H. PROVIDE MILL CERTIFICATE ON ALL REINFORCING STEEL.
   I. THE FOLLOWING MINIMUM CONCRETE COVERAGES SHALL BE MAINTAINED UNLESS NOTED OTHERWISE:
      1. SLABS ON GRADE ---------- CENTER OF SLAB
      2. CAST AGAINST AND EXPOSED TO EARTH ---------- 3"
      3. FORMED, EXPOSED TO EARTH AND WEATHER:
         #6 AND LARGER ---------- 2"
         #5 AND SMALLER ---------- 1 1/2"
      4. NOT EXPOSED TO WEATHER OR EARTH:
         WALLS, SLABS, AND JOISTS: #14 AND #18 ------ 1 1/2"
         #11 AND SMALLER ---------- 3/4"
      5. THE MINIMUM CLEAR SPACING BETWEEN PARALLEL BARS IN A LAYER SHALL BE 4/3db BUT NOT LESS THAN 1 INCH.
3. CONCRETE: READY-MIXED CONCRETE ASTM C94.
4. CEMENT: PORTLAND CEMENT TYPE I/II LOW ALKALI ASTM C-150 AT NORMAL WT. CONC. PORTLAND CEMENT TYPE II LOW ALKALI ASTM C-150 AT LIGHT WT. CONC.
5. NORMAL WT. CONC. - AGGREGATES: NATURAL ROCK AND SAND: ASTM C-33 LIGHT WT. CONC. - AGGREGATES: NATURAL ROCK AND SAND: ASTM C-330
6. DOWELS, ANCHOR BOLTS, INSERTS, ETC., SHALL BE SECURELY TIED IN PLACE PRIOR TO POURING OF CONCRETE OR GROUT.
7. ANCHOR BOLTS WITH UPSET THREADS SHALL NOT BE USED.
8. NO PIPES, DUCTS, OR CONDUIT SHALL BE PLACED IN CONCRETE UNLESS SPECIFICALLY DETAILED OR NOTED.
9. CONSTRUCTION JOINT SHALL BE CLEAN, FREE OF LAITANCE, AND INTENTIONALLY ROUGHENED TO A FULL AMPLITUDE OF 1/4" PER ACI 318-14 18.12.10.

MASONRY (Fm = 2000 P.S.I.)

1. ALL MASONRY CONSTRUCTION SHALL COMPLY WITH THE 2019 C.B.C. CHAPTER 21A.
2. REINFORCING SHALL HAVE A MINIMUM ONE BAR DIAMETER GROUT COVERAGE.
3. REINFORCING SPLICES SHALL HAVE A MINIMUM 12 BAR DIA. LAP, SEE S / S0.1 PROVIDE MIN. 12 BAR DIA. LAP TYP. FOR ALL THE FOLLOWING CONDITIONS:
   A. ALL VERTICAL JAMB REINFORCING SPLICES
   B. VERTICAL REINFORCING SPLICES OCCURING AT MID 1/3 HEIGHT OF WALL
   C. ALL CHORD BAR SPLICES
4. MASONRY CONSTRUCTION SHALL BE REINFORCED AND GROUTED SOLID.
5. PIPES OR DUCTS ARE NOT PERMITTED WITHIN MASONRY CONSTRUCTION U.N.O.
6. CEMENT: PORTLAND CEMENT TYPE I OR II, LOW ALKALI, ASTM C-150.
7. MORTAR SHALL CONFORM TO C.B.C. 2103A.2, TYPE S - 2000 P.S.I.
8. GROUT: 1 PART CEMENT, 3 PART SAND, 2 PART GRAVEL 2000 P.S.I. MINIMUM GROUT COMPRESSIVE STRENGTH.
9. CONCRETE BLOCK SHALL CONFORM ASTM C90 MINIMUM COMPRESSIVE STRENGTH, 2000 PSI (MEDIUM HEIGHT).
10. MASONRY SHALL BE LAID IN RUNNING BOND.
11. ALL BOLTS IN MASONRY SHALL BE ACCURATELY SET WITH TEMPLATES.
12. GORE TESTS:
    COMPRESSION 2000 P.S.I.
    SHEAR 112 P.S.I.
13. HEIGHT OF GROUT LIFTS SHALL NOT EXCEED 4'-0" AND SHALL CONFORM TO C.B.C. 2104A.1.3.1.2.2.
14. STEEL REINFORCEMENT SHALL BE LOCATED IN ACCORDANCE WITH THE PLANS AND SPECIFICATIONS. REINFORCEMENT SHALL BE SECURED AGAINST DISPLACEMENT PRIOR TO GROUTING BY WIRE POSITIONERS OR OTHER SUITABLE DEVICES AT INTERVALS NOT EXCEEDING 200 BAR DIAMETERS.
15. CONTRACTOR SHALL ROUTE PIPES OR CONDUITS THROUGH MASONRY PER THE REQUIREMENTS OF S / S0.3

MECHANICAL UNIT FRAMING

1. THE DIMENSIONS FOR THE SUPPORT OF THE MECHANICAL UNITS,EXHAUST FANS, CONDENSING UNITS, ETC., AS SHOWN IN THE STRUCTURAL DRAWINGS ARE APPROXIMATE. THE GENERAL CONTRACTOR SHALL COORDINATE THE UNIT TYPE AND QUANTITY WITH THE STRUCTURAL DRAWINGS. NOTIFY THE ARCHITECT OF ANY DISCREPANCY PRIOR TO THE SHOP DRAWINGS PHASE.
2. IT SHALL BE THE RESPONSIBILITY OF THE GENERAL CONTRACTOR TO FULLY COORDINATE THE ACTUAL STRUCTURAL DIMENSIONS WITH THE MECHANICAL CONTRACTOR AND SUBCONTRACTORS. COORDINATION SHALL OCCUR PRIOR TO THE STRUCTURAL SHOP DRAWING PHASE.
3. FURTHER COORDINATION OF THE FIELD WELDED ANGLE FRAME SUPPORTING THE UNIT CURB SHALL BE PROVIDED BY THE GENERAL CONTRACTOR AND COORDINATED WITH THE ACTUAL MECHANICAL UNIT CURB DIMENSIONS. THE HEIGHT OF THE ANGLE FRAME SUPPORTING THE MECH. UNIT SHALL BE COORDINATED BY THE GENERAL CONTRACTOR PRIOR TO THE SHOP DRAWING PHASE.
4. MECHANICAL UNIT SUBSTITUTIONS MAY IMPACT THE SUPPORT FRAMING DUE TO UNIT HEIGHT OR SIZE AS SHOWN ON THE MECHANICAL DRAWINGS. INCREASED WEIGHT OF UNIT WILL REQUIRE DSA APPROVAL. ANY COSTS INCURRED FROM ANY SUBSTITUTIONS MADE BY THE CONTRACTOR WHICH REQUIRES RE-DESIGN OR MODIFICATIONS TO THE CONSTRUCTION DOCUMENTS SHALL BE THE RESPONSIBILITY OF THE CONTRACTOR. THE CONTRACTOR MAY WISH TO INQUIRE AS TO THE PROBABLE EXTENT OF THESE COSTS PRIOR TO INTRODUCING A SUBSTITUTION.

POWER ACTIVATED FASTENER

1. SHOT PINS MAY BE USED FOR SHEAR LOADS, THEY MAY BE USED IN TENSION TO SUPPORT LOADS LESS THAN 90 POUNDS FOR MINOR LOADS SUCH AS ACOUSTICAL CEILINGS, DUCT WORK, CONDUIT, ETC. ANY SHOT ANCHORS MUST HAVE ICC-ES APPROVAL FOR THE TYPE OF CONCRETE USED ON THE JOB. SHOT PINS MAY NOT BE USED IN CONCRETE CURBS.
2. THE ALLOWABLE LOADS SHALL BE 90 POUNDS OR 80% OF ICC-ES APPROVED VALUES, WHICHEVER IS LESS. QUALIFICATION FOR USE OF ALL POWER ACTUATED TOOLS MUST MEET ANSI A10.3 STANDARD AS REQUIRED BY THE MANUFACTURER AND ALL OSHA REQUIREMENTS.
3. TESTING- THE OPERATOR, TOOL AND FASTENER SHALL BE PRE-QUALIFIED BY THE PROJECT INSPECTOR. THE INSPECTOR SHALL OBSERVE THE TESTING OF THE FIRST 10 FASTENER INSTALLATIONS. A TEST "PULL-OUT" LOAD OF NOT LESS THAN TWICE THE DESIGN LOAD SHALL BE APPLIED TO THE PIN IN SUCH A MANNER AS NOT TO RESIST THE SPALLING TENDENCY OF THE CONCRETE SURROUNDING THE PIN. THEREAFTER, RANDOM TESTS UNDER THE PROJECT INSPECTOR'S SUPERVISION SHALL BE MADE OF APPROXIMATELY 1 IN 10 PINS. IF ANY PIN FAILS TESTING, TEST ALL PINS OF THE SAME CATEGORY NOT PREVIOUSLY TESTED UNTIL TWENTY (20) CONSECUTIVE PASS, THEN RESUME THE INITIAL TESTING FREQUENCY.

COLD-FORMED METAL FRAMING

1. ALL ERECTION AND FABRICATION SHALL COMPLY WITH THE LATEST EDITION OF AISI S202.
2. COLD ROLLED GALVANIZED STEEL MUST MEET THE MINIMUM REQUIREMENTS OF ASTM A653 SS GRADE 50, CLASS 1 OR ASTM A1003, GRADE 50 TYPE H (ST50H) (F_y= 50 KSI) FOR 12, 14 AND 16 GAGE MEMBERS. GALVANIZED COATINGS MUST MEET THE ASTM C955 (660 MIN.) SPECIFICATION.
3. COLD ROLLED GALVANIZED STEEL MUST MEET THE MINIMUM REQUIREMENTS OF ASTM A653 SS GRADE 33, OR ASTM A1003, GRADE 33 TYPE H (ST33H) (F_y=33 KSI) FOR 18 GAGE AND LIGHTER MEMBERS. GALVANIZED COATINGS MUST MEET THE ASTM C955 (660 MIN.).
4. METAL STUDS AND/OR JOISTS:
   A. FOR METAL STUD WALLS, UNLESS OTHERWISE SHOWN ON THE DRAWINGS, PROVIDE STANDARD PUNCHED STEEL MEMBERS.
   B. FOR JOISTS, UNLESS OTHERWISE SHOWN ON THE DRAWINGS, PROVIDE STANDARD PUNCHED STEEL MEMBERS.
   C. STUD BLOCKING SHALL BE UNPUNCHED.
5. ACCESSORIES: PROVIDE ALL ACCESSORIES INCLUDING, BUT NOT NECESSARILY LIMITED TO, TRACKS, CLIPS, WEB STIFFENERS, ANCHORS, FASTENING DEVICES, RESILIENT CLIPS, AND OTHER ACCESSORIES REQUIRED FOR A COMPLETE AND PROPER INSTALLATION, AND AS RECOMMENDED BY THE MANUFACTURER FOR THE STEEL MEMBERS USED.
6. SELF TAPPING SCREW FASTENERS SHALL BE IN COMPLIANCE WITH ASTM C1513 AND SHALL BE HEX WASHER, U.N.O., SCREWS SHALL HAVE MINIMUM CENTER-TO-CENTER SPACING OF 3 TIMES THE NOMINAL DIAMETER AND SHALL BE LOCATED A MINIMUM OF 1.5 TIMES THE NOMINAL DIAMETER FROM THE EDGE OF STEEL. MIN. THREE THREADS SHALL BE EXPOSED. PERMANENT SEPARATION BETWEEN MEMBERS SHALL NOT BE PERMITTED.
7. WELDED CONNECTIONS SHALL COMPLY WITH AWS D1.3 FIELD FILLER MATERIAL SHALL BE A MINIMUM OF 70 KSI.
8. CONCRETE, UNIFORM AND LEVEL BEARING SUPPORT SHALL BE PROVIDED FOR THE BOTTOM TRACK. PROVIDE A COMMERCIAL GRADE GROUT FOR LEVELING THE FLOOR TRACK MEMBER OF STEEL STUD PARTITIONS AS REQUIRED.
9. WHERE STUDS IN TOP TRACK ARE REQUIRED SEE DETAIL 13/S0.6. SPLICES IN OTHER MEMBERS SHALL NOT BE PERMITTED UNLESS DETAILED ON PLANS.
10. WEB STIFFENERS SHALL BE PROVIDED AT REACTION POINTS AND/OR AT POINTS OF CONCENTRATED LOADS WHERE INDICATED ON THE DRAWINGS OR AS REQUIRED BY AISI.
11. JOIST BRIDGING SHALL BE PROVIDED WHERE INDICATED ON THE DRAWINGS.

SEISMIC FORCE RESITING SYSTEM (SFRS) REQUIREMENTS

1. MEMBERS LABELLED AS SFRS ARE PART OF THE SFRS, SEE DETAILS FOR ADDITIONAL LOCATIONS AND CRITERIA.
2. BOLTED CONNECTIONS FAYING SURFACES SHALL COMPLY WITH AISC 360-16 J3.8 FOR CLASS A SURFACES. BOLTS SHALL BE PRETENSIONED.
3. ALL WELD FILLER SHALL COMPLY WITH AISC 341-16 A3.4 AND AWS D1.8 CLAUSE 6.3 AND HAVE A MINIMUM CHARPY V-NOTCH TOUGHNESS OF 20FT-LB @ 0°F. WELDS INDICATED AS DEMAND CRITICAL (AWS-DC) SHALL HAVE A CHARPY V-NOTCH TOUGHNESS OF 40FT-LB @ 70°F.
4. CONTRACTOR SHALL COMPLY WITH AISC 341-16 CHAPTER J QUALITY CONTROL PLAN
5. INSPECTION SHALL COMPLY WITH AISC 341-16 CHAPTER J QUALITY ASSURANCE PLAN

DESIGN LOADS

1. ROOF LIVE LOAD (REDUCIBLE PER SECTION 1607A.12) ---------- 20 P.S.F.
   STAGE ROOF SCENERY BEAMS LIVE LOAD ---------- 300 P.L.F.
2. ROOF DEAD LOAD ---------- 28 P.S.F. (INCLUDES 4PSF FOR SOLAR)
   AUDIENCE CHAMBER DEAD LOAD ---------- 40 P.S.F. (INCLUDES CAT WALKS)
   STAGE ROOF DEAD LOAD ---------- 38 P.S.F.
3. CAT WALKS LIVE LOAD (UNREDUCIBLE) ---------- 40 P.S.F.
4. LOADING AND FLY GALLERY DEAD LOAD ---------- 38 P.S.F.
   LOADING GALLERY LIVE LOAD (UNREDUCIBLE) ---------- 150 P.S.F. (INCLUDES 600 P.S.F. CONCENTRATED LOAD OVER 10 FT?)
   FLYING GALLERY LIVE LOAD (UNREDUCIBLE) ---------- 125 P.S.F.
5. FOLLOW SPOT FLOOR DEAD LOAD ---------- 51 P.S.F.
6. CONTROL BOOTH FLOOR WITH 4" CONCRETE TOPPING DEAD LOAD ------ 101 P.S.F
7. WIND DESIGN:
   BASIC WIND SPEED (3 SECOND GUST) ---------- V = 102 M.P.H.,
   RISK CATEGORY ---------- II
   WIND EXPOSURE ---------- C
   INTERNAL PRESSURE COEFFICIENT (GC_{pi}) ---------- ±0.18/-0.18
   COMPONENTS AND CLADDING DESIGN PRESSURE ---------- 34 P.S.F. (WALL CASE VARIES)
8. SEISMIC DESIGN:
   RISK CATEGORY ---------- II
   SEISMIC IMPORTANCE FACTOR (Ie) ---------- 1.25
   MAPPED SPECTRAL RESPONSE ACCELERATIONS:
   Ss: 1.726
   S1: 0.621
   SITE CLASS ---------- D
   STRUCTURAL RESPONSE COEFFICIENTS:
   Sds: 1.151
   Sd1: 0.700
   SEISMIC DESIGN CATEGORY ---------- E
   SEISMIC FORCE RESISTING SYSTEM: ---------- SPECIAL REINFORCED MASONRY SHEAR WALLS
   RESPONSE MODIFICATION FACTOR (R) ---------- 5

GENERAL

1. ALL CONSTRUCTION SHALL COMPLY WITH THE 2019 CALIFORNIA BUILDING CODE AND ALL APPLICABLE ORDINANCES.
2. FRAMING CONDITIONS NOT SPECIFICALLY SHOWN OR INDICATED SHALL BE FRAMED SIMILAR TO DETAILS SHOWN FOR THE RESPECTIVE MATERIALS OR CONDITIONS.
3. CONTRACTOR SHALL BE RESPONSIBLE FOR VERIFYING ALL DIMENSIONS BEFORE STARTING WORK AND REPORT ANY DISCREPANCIES TO THE ARCHITECT.
4. WITHOUT EXCLUSION OF ANY REFERENCE IN THE CONSTRUCTION DOCUMENT TO ANY RULE OR REGULATION, THE STRUCTURAL ENGINEER IS NOT ASSUMING ANY PROVISIONS OF SUPERVISION OF CONSTRUCTION METHODS OR PROCESSES.
5. CONTRACT DOCUMENTS REPRESENT THE FINISHED STRUCTURE. THE CONTRACTOR IS RESPONSIBLE FOR THE STABILITY OF THE STRUCTURE UNTIL COMPLETION OF THE STRUCTURE.
6. CHANGES TO THE APPROVED DRAWINGS AND SPECIFICATION SHALL BE MADE BY AN ADDENDA, CHANGE ORDER OR CONSTRUCTION CHANGE DOCUMENT, IN ACCORDANCE WITH CCR, TITLE 24, PART 1, SECTION 4-338(C) AND DSA IR A-6.

FOUNDATIONS

1. CONTRACTOR SHALL REVIEW REPORT AND ADDENDUM OF SOILS INVESTIGATION BY: GEOTECHNICAL PROFESSIONALS, INC.
   REPORT DATE: JUNE 2, 2022(REVISED JULY 12, 2022) PROJECT # 3091.1
2. ALL FILL SHALL BE COMPACTED TO A MINIMUM OF 90% IN ACCORDANCE WITH THE SPECIFICATIONS.
3. TYPE OF SOIL: SILTY SANDS
4. MAXIMUM ALLOWABLE SOIL BEARING PRESSURE: 2500 P.S.F. (INCREASABLE UP TO A MAX. OF 5000 PSF)
5. ALL FOOTINGS SHALL BE CARRIED A MINIMUM OF 24" BELOW ENGINEERED COMPACTED FILL.
6. ALL FOOTINGS SHALL REST ENTIRELY ON GEOPIER COLUMNS.
7. PRIOR TO FORMING AND PLACING OF THE REINFROCING, ALL EXCAVATIONS SHALL BE INSPECTED AND APPROVED BY THE GEO-TECHNICAL ENGINEER.
8. IT IS THE CONTRACTORS RESPONSIBILITY TO COORDINATE ALL FOOTINGS AND UTILITY LINE RELATIONSHIPS SO THAT THE REQUIREMENTS OF DETAIL 3 / S0.1 ARE MET. THE COST OF STEPPING THE FOOTINGS TO MEET THE REQUIREMENTS OF 2 / S0.1 AND 3 / S0.1 SHALL BE THE CONTRACTORS RESPONSIBILITY AND NEW UTILITY LINES SHALL BE LOCATED PRIOR TO FOUNDATION EXCAVATION.

SPECIAL INSPECTION

1. A PROJECT INSPECTOR APPROVED BY D.S.A. AND EMPLOYED BY THE OWNER SHALL PROVIDE CONTINUOUS INSPECTION OF THE WORK OF CONSTRUCTION AS DEFINED IN 2019 C.A.C. PART 1, TITLE 24, SECTION 4-333. PROJECT INSPECTOR DUTIES AND RESPONSIBILITIES ARE SPECIFICALLY DEFINED IN 2019 C.A.C. SECTION 4-342.
2. IN ADDITION TO THE PROJECT INSPECTOR, ONE OR MORE SPECIAL INSPECTORS APPROVED BY D.S.A. AND EMPLOYED BY THE OWNER SHALL PROVIDE INSPECTION DURING CONSTRUCTION ON THE TYPES OF WORK DEFINED IN 2019 C.B.C. SECTION 1101A.4 AND AS NOTED ON DRAWINGS. SPECIAL INSPECTORS DUTIES AND RESPONSIBILITIES ARE SPECIFICALLY DEFINED IN 2019 C.B.C. SECTION 1704A.
3. ALL FIELD AND SHOP WELDING OF STRUCTURAL STEEL AND REINF. SHALL BE INSPECTED BY AN AWS CERTIFIED WELDING INSPECTOR PER SECTION 1705A.2.5, 1705A.3.1, TABLE 1705A.2.1 AND TABLE 1705A.3.
4. SPECIAL INSPECTION IS REQUIRED FOR ALL HIGH STRENGTH BOLTS PER SECTION 1705A.2.1.
5. SPECIAL INSPECTION IS REQUIRED FOR MASONRY PER SECTION 1705A.4.
6. SPECIAL INSPECTION IS REQUIRED FOR CONCRETE PER 1705A.3 & TABLE 1705A.3.
7. SPEC

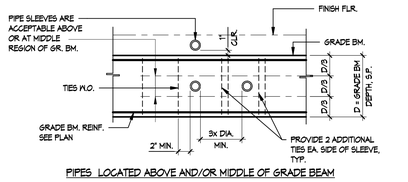

PIPES LOCATED ABOVE AND/OR MIDDLE OF GRADE BEAM

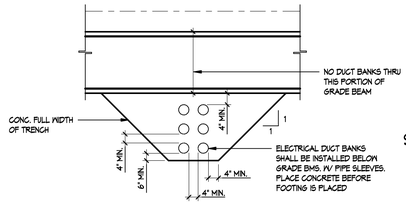

PIPES LOCATED BELOW GRADE BEAM

NOTE:

1. PRIOR TO INSTALLATION OF GRADE BEAMS, CONTRACTOR SHALL COORDINATE LOCATION OF ALL UNDERGROUND LINES W/ THE RELATED DISCIPLINES (STRUCTURAL, MECHANICAL, ETC.)
2. IT IS THE CONTRACTORS ULTIMATE RESPONSIBILITY TO COORDINATE ALL UTILITY PENETRATIONS THRU FOOTINGS AND GRADE BEAMS. PRIOR TO UTILITY PLACEMENT, CONTRACTOR SHALL COORDINATE THE RELATIONSHIPS OF THE FOOTING TO THE UTILITY LINE AND INCORPORATE STEP FOOTING, SLEEVES AND ADDITIONAL REINORCING AS REQUIRED.
3. NO PIPE SLEEVES ALLOWED IN THE TOP 3rd REGION OR BOTT. 3RD REGION OF GR. BM.
4. PIPE SLEEVES THRU GRADE BEAM SHALL BE NO GREATER THAN 8" DIA. MAX. OR D/3 (WHICHEVER SMALLER). PIPES GREATER THAN 8" DIA. SHALL BE PLACED BELOW GRADE BEAM PER 3/S0.1
5. PIPE SLEEVES SHALL BE 1" MIN. CLEAR ALL AROUND PIPE.

TYP - PIPES THRU GRADE BEAM (18) 1" = 1'-0"

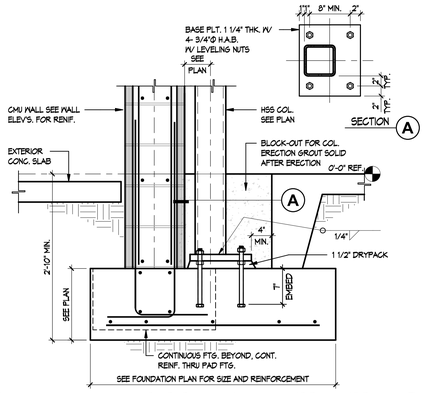

STL. COLUMN ADJACENT TO MAS. WALL FTG. DETAIL (14) 1" = 1'-0"

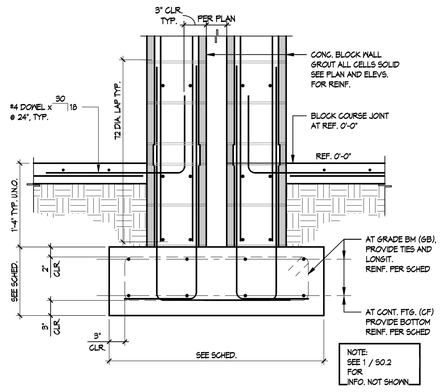

TYP - EXTERIOR DBL. 12" MAS. TO FOOTING (9) 1" = 1'-0"

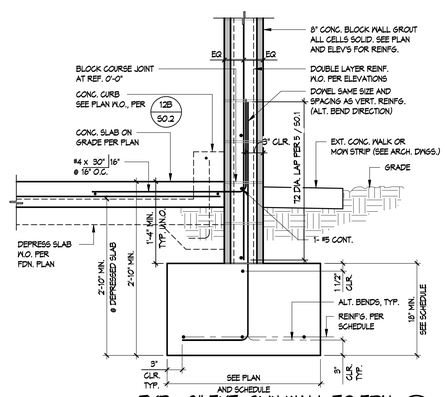

TYP - 8" EXT. CMU WALL TO FDN. (5) 1" = 1'-0"

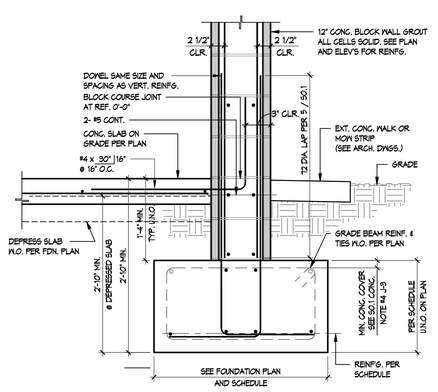

TYP - 12" EXT. CMU WALL TO FDN. (1) 1" = 1'-0"

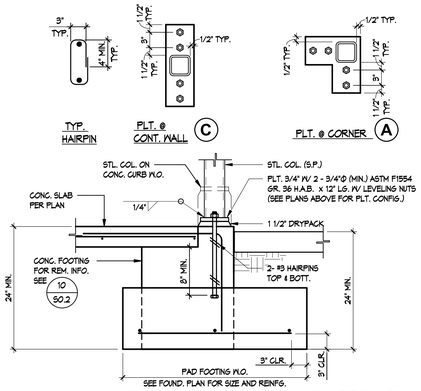

TYP - COLUMN IN WALL TO FTG. (15) 1" = 1'-0"

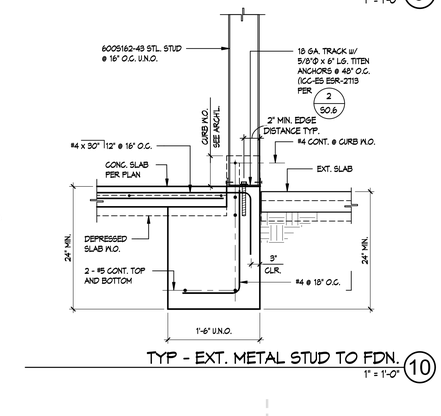

TYP - EXT. METAL STUD TO FDN. (10) 1" = 1'-0"

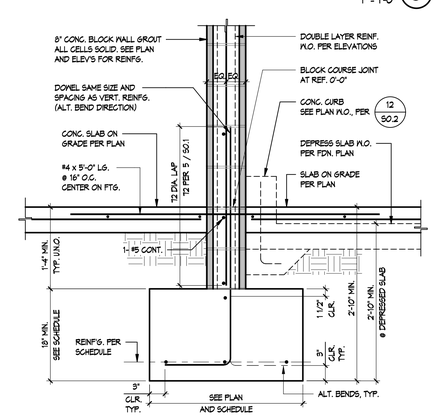

TYP - 8" INT. CMU WALL TO FDN. (6) 1" = 1'-0"

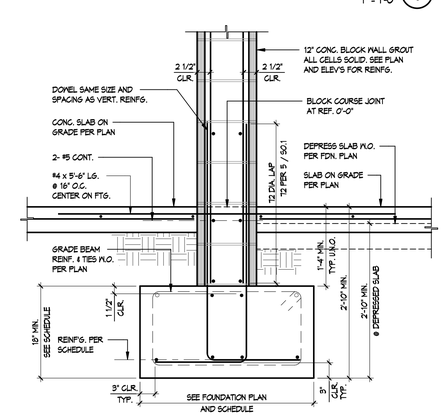

TYP - 12" INT. CMU WALL TO FDN. (2) 1" = 1'-0"

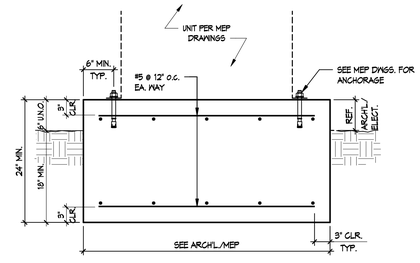

TYP - EXTERIOR EQUIPMENT PAD (19) 1" = 1'-0"

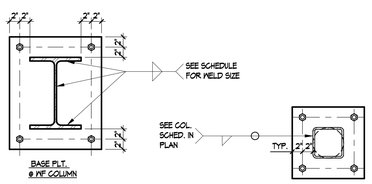

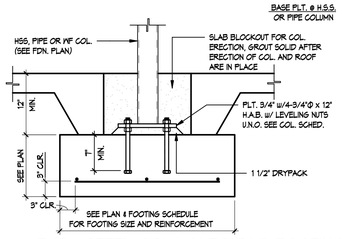

TYP - STEEL COLUMN TO PAD FOOTING (16) 1" = 1'-0"

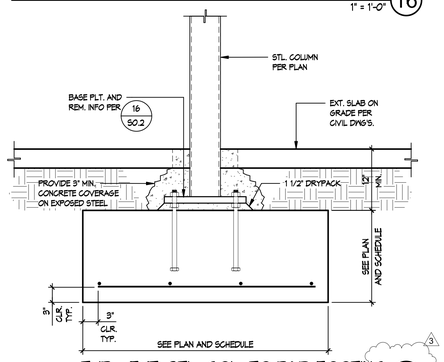

TYP - EXT. STL. COL. TO PAD FOOTING (17) 1" = 1'-0"

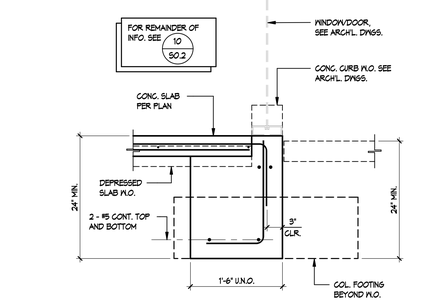

TYP - SLAB DETAIL AT WINDOW/DOOR OPENING (11) 1" = 1'-0"

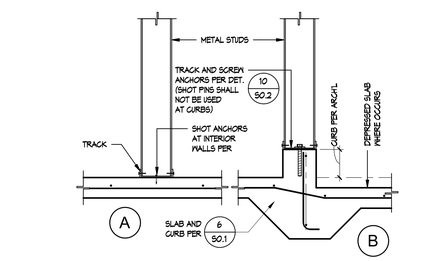

TYP - NON-BRG WALL TO SLAB DET. (12) 1" = 1'-0"

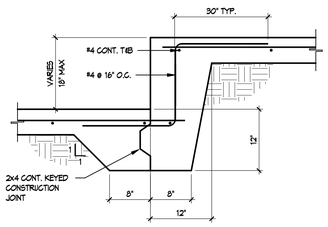

SLAB STEP AT CONSTRUCTION JOINT (13) 1" = 1'-0"

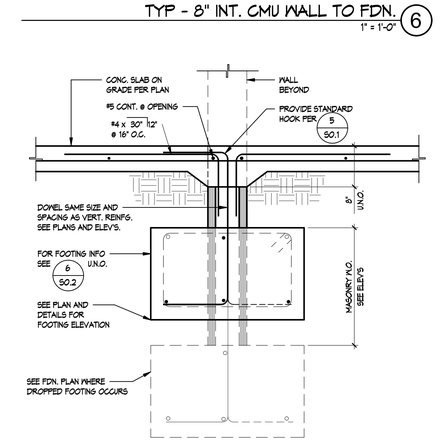

TYP - SLAB DETAIL AT INT. 8" CMU OPENING (7) 1" = 1'-0"

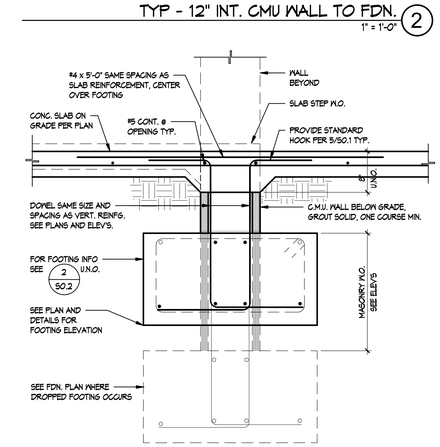

TYP - SLAB DETAIL AT INT. 12" CMU OPENING (3) 1" = 1'-0"

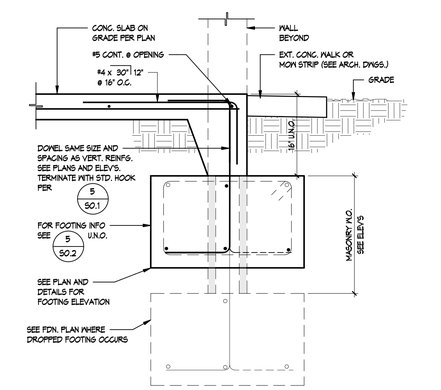

TYP - SLAB DETAIL AT EXT. 8" CMU OPENING (8) 1" = 1'-0"

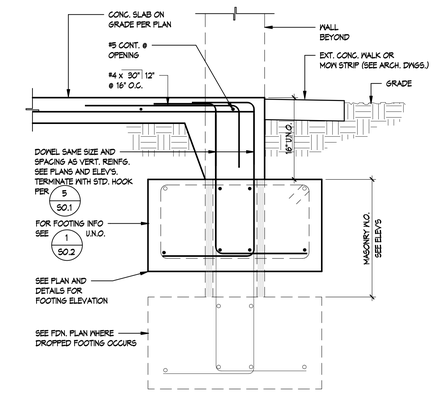

TYP - SLAB DETAIL AT EXT. 12" CMU OPENING (4) 1" = 1'-0"

C:\Users\dstozier\Documents\693-582-R22_Central_Struct_dstozierWYNL4.rvt

APPL No. A03-122864

DSA

Archite

RACHLIN PARTNERS
8640 National Boulevard
Culver City, CA 90232
310.204.3400

Disclaim

THESE DRAWINGS ARE THE PROPERTY OF THE ARCHITECT. THE DESIGNS SHOWN AND DESCRIBED HEREIN INCLUDING ALL TECHNICAL DRAWINGS ARE PROPRIETARY AND CANNOT BE COPIED, DUPLICATED OR COMMERCIALLY EXPLOITED EXCEPT BY WRITTEN AGREEMENT. THESE DRAWINGS AND DESIGNS SHALL NOT BE USED BY THE OWNER ON OTHER PROJECTS, FOR ADDITIONS TO THIS PROJECT, OR FOR COMPLETION OF THIS PROJECT BY OTHERS. THE OWNER AGREES TO HOLD HARMLESS, INDEMNIFY AND DEFEND THE ARCHITECT AGAINST ALL DAMAGES, CLAIMS AND LOSSES, INCLUDING DEFENSE COSTS, ARISING OUT OF ANY REUSE OF PLANS AND SPECIFICATIONS WITHOUT THE WRITTEN AUTHORIZATION OF THE ARCHITECT OF RECORD.

Copyright © 2022 Rachlin Partners, All Rights Reserved.

Performing Arts Center

Hacienda La Puente Unified School District
635 North California Avenue
La Puente, CA 91744

Re	Dat	Issu
1	7.22.22	50%
2	10.21.22	50%
3	12.09.22	100% CD DSA
2	10.31.23	ADDENDUM NO. 2
3	12.11.23	ADDENDUM NO. 3

Date: 06/30/2020
Scale: 1" = 1'-0"
Drawn By: DF.
Checked By: AM

Architect / Engineer

LICENSED ARCHITECT Donald Rachlin EXPIRES NO. C-26229 REN. 8-31-25 STATE OF CALIFORNIA

REGISTERED PROFESSIONAL ENGINEER Frank J. Rice No. S5392 Exp. 09-30-23 STRUCTURAL STATE OF CALIFORNIA

Consulta

Miyamoto International, Inc.
The Ruzika Company, Inc.
MDC Consulting Engineers
Pocock Design Solutions
Newson Brown Acoustics, LLC
VCA Engineers, Inc.
HJSA Consulting

Sheet Title

FOUNDATION AND TYPICAL DETAILS

Sheet

S0.2

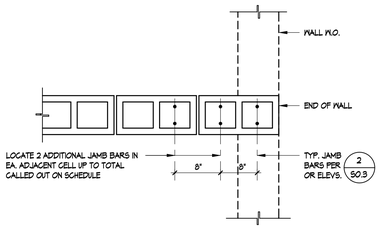

JAMB BARS CONDITION AT MASONRY WALL (17)
1" = 1'-0"

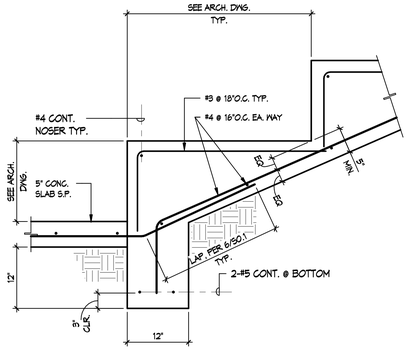

CONCRETE STEPPED SEATING DETAIL (13)
1" = 1'-0"

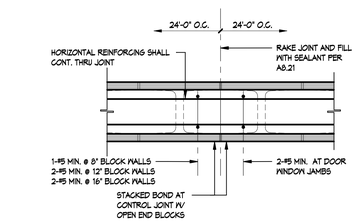

TYP - MASONRY WALL CONTROL JOINT (9)
1" = 1'-0"

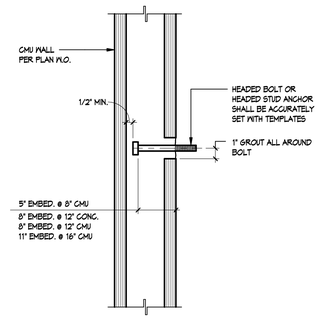

TYP - BOLT IN MAS. WALL (5)
1" = 1'-0"

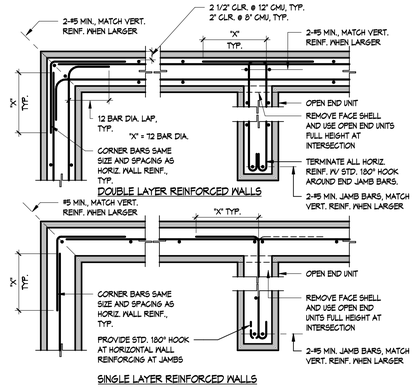

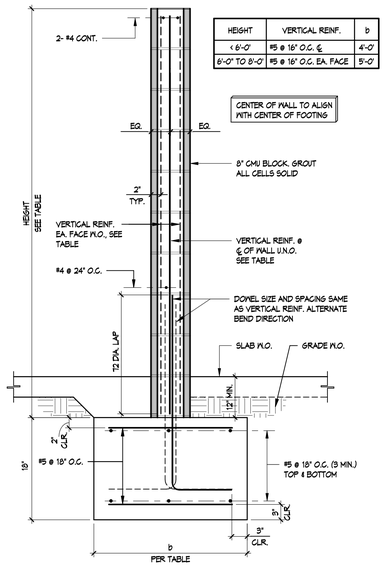

HEIGHT	VERTICAL REINF.	b
< 6'-0"	#5 @ 16" O.C. ℄	4'-0"
6'-0" TO 8'-0"	#5 @ 16" O.C. EA. FACE	5'-0"

CMU SITE WALL DETAIL (18)
1" = 1'-0"

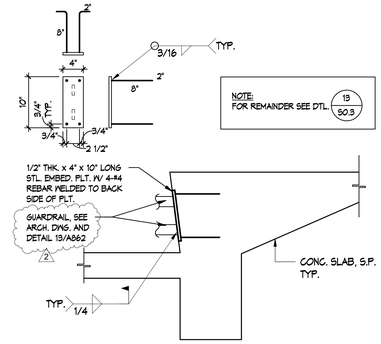

TYP - GUARDRAIL EMBED. (14)
1" = 1'-0"

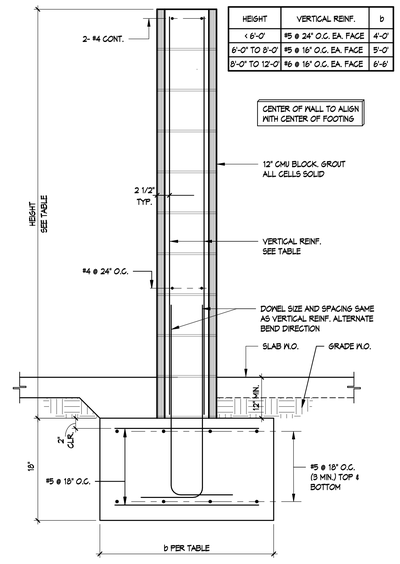

HEIGHT	VERTICAL REINF.	b
< 6'-0"	#5 @ 24" O.C. EA. FACE	4'-0"
6'-0" TO 8'-0"	#5 @ 16" O.C. EA. FACE	5'-0"
8'-0" TO 12'-0"	#6 @ 16" O.C. EA. FACE	6'-6"

CMU SITE WALL DETAIL (11)
1" = 1'-0"

NOTES:
1. 1" O.D. MAX. AT 8" WALLS. 2" O.D. MAX. AT 12" WALLS
2. ONLY STEEL OR PVC, ALUMINUM CONDUITS ARE RESTRICTED FROM USE.
3. CONDUITS SHALL NOT BE ALLOWED IN ANY OF THE FOLLOWING CONDITIONS:
   A. ANY VERTICAL CELL CONTAINING REINFORCING.
   B. WITHIN 6" OF ANY HORIZONTAL BARS EXCEPT AT CROSSINGS.
4. NO JUNCTION BOXES ARE ALLOWED WHERE VERTICAL REBARS ARE SPACED AT 8" O.C.
5. HORIZONTAL CONDUIT RUNS SHALL NOT EXCEED 4'-0".
6. CONDUITS SHALL NOT BE PLACED IN BOND BEAMS.
7. ALL HORIZONTAL CONDUITS SHALL BE A MINIMUM OF 6" AWAY FROM HORIZONTAL BARS.
8. STRUCTURAL ENGINEER RESERVES THE RIGHT TO MODIFY OR RESTRICT THE USE OF THESE RULES BASED ON ACTUAL FIELD CONDITIONS AND QUALITY EXECUTION.

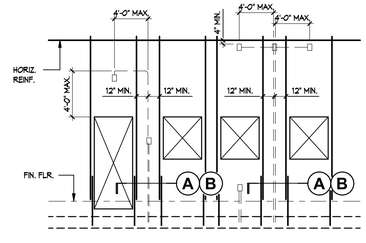

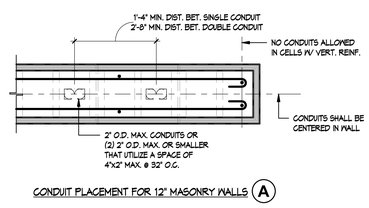

CONDUIT PLACEMENT FOR 12" MASONRY WALLS (A)

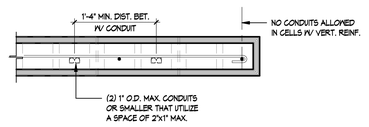

CONDUIT PLACEMENT FOR 8" MASONRY OR CONC. WALLS (B)

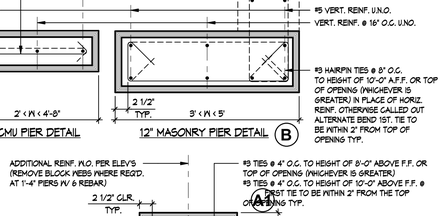

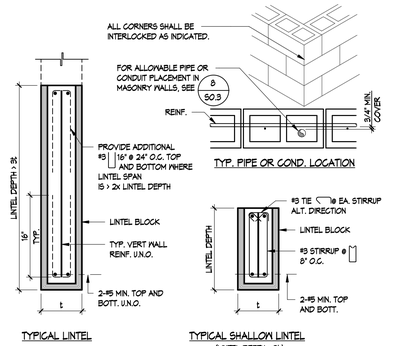

TYP - MASONRY WALL REINF. DETAILS (2)
1" = 1'-0"

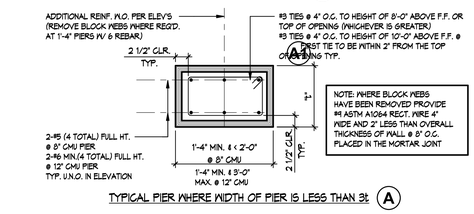

TYP - MASONRY PIER DETAILS (3)
1" = 1'-0"

TYP - ALT. MASONRY WALL REINF. DETAILS (20)
1" = 1'-0"

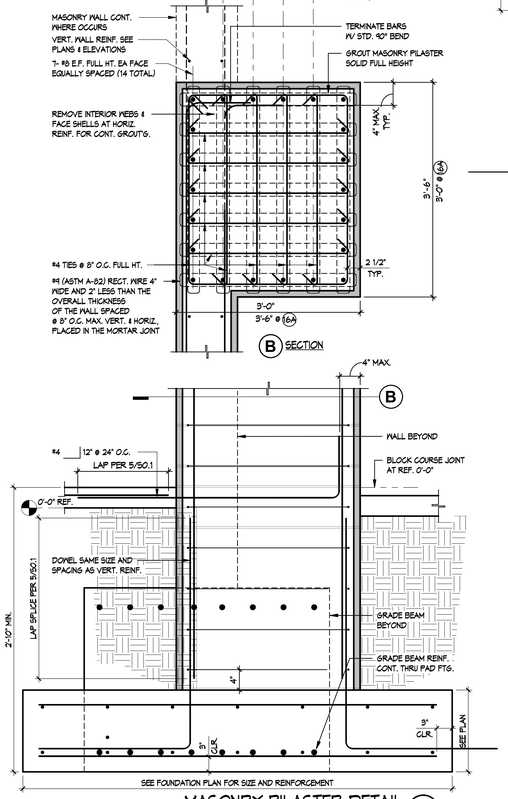

MASONRY PILASTER DETAIL (16)
1" = 1'-0"

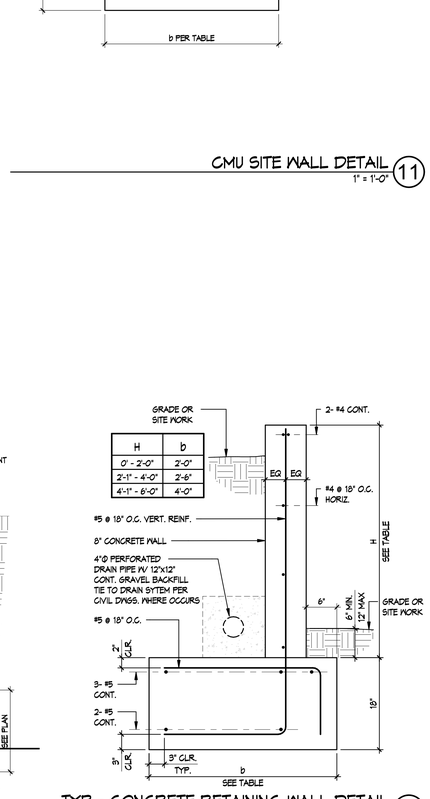

H	b
0' - 2'-0"	2'-0"
2'-1" - 4'-0"	2'-6"
4'-1" - 6'-0"	4'-0"

TYP - CONCRETE RETAINING WALL DETAIL (12)
1" = 1'-0"

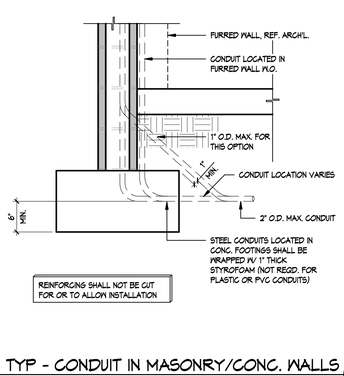

TYP - CONDUIT IN MASONRY/CONC. WALLS (8)
1" = 1'-0"

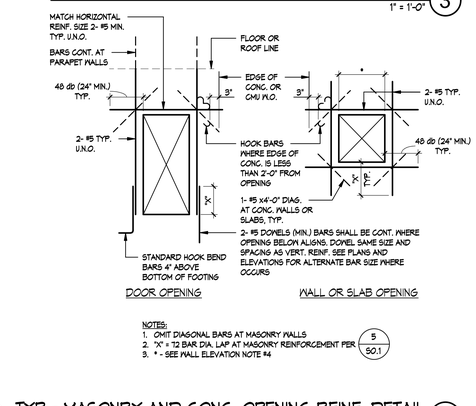

TYP - MASONRY AND CONC. OPENING REINF. DETAIL (4)
1" = 1'-0"

C:\Users\ddozier\Documents\695-562-R22_Central_Struct_ddozierWYNL4.rvt

APPL No. A03-122864

DSA

Archite

RACHLIN PARTNERS
8640 National Boulevard
Culver City, CA 90232
310.204.3400

Disclaim

THESE DRAWINGS ARE THE PROPERTY OF THE ARCHITECT. THE DESIGNS SHOWN AND DESCRIBED HEREIN INCLUDING ALL TECHNICAL DRAWINGS ARE PROPRIETARY AND CANNOT BE COPIED, DUPLICATED OR COMMERCIALLY EXPLOITED EXCEPT WITH THE WRITTEN PERMISSION OF THE ARCHITECT AND SHALL NOT BE USED BY THE OWNER ON OTHER PROJECTS, FOR ADDITIONS TO THIS PROJECT, OR FOR COMPLETION OF THIS PROJECT BY OTHERS. THE OWNER AGREES TO HOLD HARMLESS, INDEMNIFY, AND DEFEND THE ARCHITECT AGAINST ALL DAMAGES, CLAIMS AND LOSSES, INCLUDING DEFENSE COSTS, ARISING OUT OF ANY REUSE OF PLANS AND SPECIFICATIONS WITHOUT THE WRITTEN AUTHORIZATION OF THE ARCHITECT OF RECORD.

Copyright © 2022 Rachlin Partners, All Rights Reserved.

Performing Arts Center

Hacienda La Puente Unified School District
635 North California Avenue
La Puente, CA 91744

Re	Dat	Issu
1	7.22.22	50%
2	10.21.22	50%
3	12.09.22	100% CD DSA
2.	10.31.23	ADDENDUM NO. 2

Date: 06/30/2020
Scale: 1" = 1'-0"
Drawn By: DD
Checked By: ZD

Architect / Engineer

LICENSED ARCHITECT — Frank J. Rice — NO. C-26229 — REN. 8-31-23 — STATE OF CALIFORNIA
REGISTERED PROFESSIONAL ENGINEER — Frank J. Rice — No. S5372 — Exp. 09-30-23 — STRUCTURAL — STATE OF CALIFORNIA

Consulta

Miyamoto International, Inc.
The Ruzika Company, Inc.
MDC Consulting Engineers
Pocock Design Solutions
Newson Brown Acoustics, LLC
VCA Engineers, Inc.
HJSA Consulting

Sheet Title

MASONRY DETAILS

Sheet

S0.3

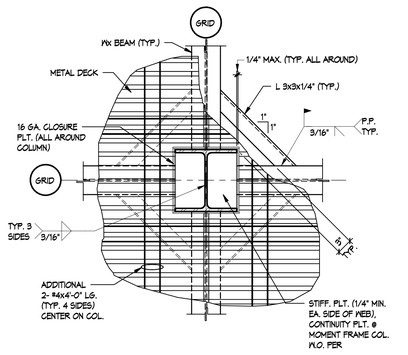

TYP - DECK PLAN @ INTERIOR COLUMN 17

1" = 1'-0"

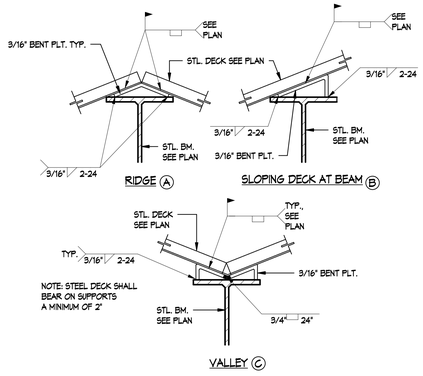

TYP - BENT PLATE TO STEEL BEAM 13

1" = 1'-0"

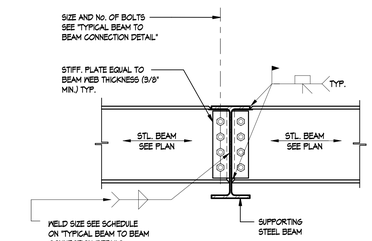

TYP - BEAM TO BEAM MOMENT CONNECTION 9

1" = 1'-0"

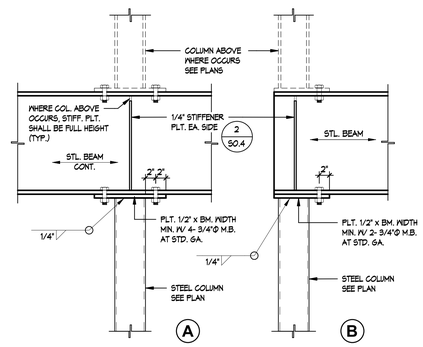

TYP - COLUMN TO BEAM DETAILS 5

1" = 1'-0"

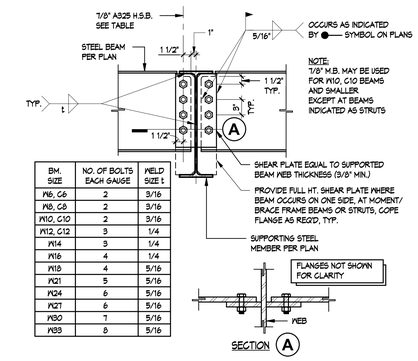

BM. SIZE	NO. OF BOLTS EACH GAUGE	WELD SIZE t
W6, C6	2	3/16
W8, C8	2	3/16
W10, C10	2	3/16
W12, C12	3	1/4
W14	3	1/4
W16	4	1/4
W18	4	5/16
W21	5	5/16
W24	6	5/16
W27	6	5/16
W30	7	5/16
W33	8	5/16

TYP - BEAM TO BEAM CONNECTION 1

1" = 1'-0"

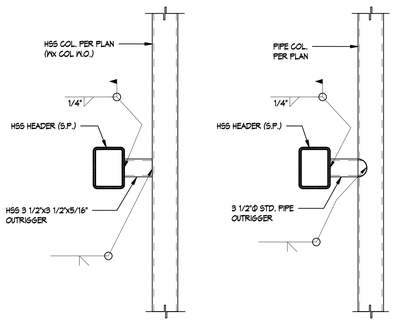

TYP - HEADER SUPPORT AT STEEL COLUMN 18

1" = 1'-0"

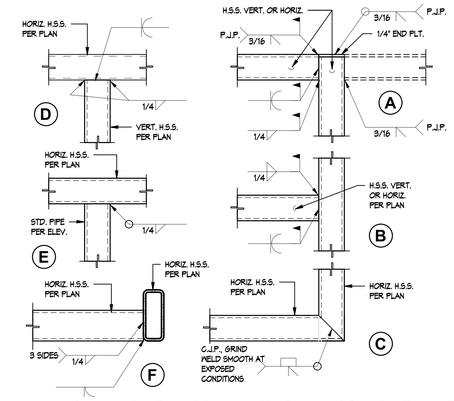

TYP - HSS TO HSS CONNECTION DETAILS 14

1" = 1'-0"

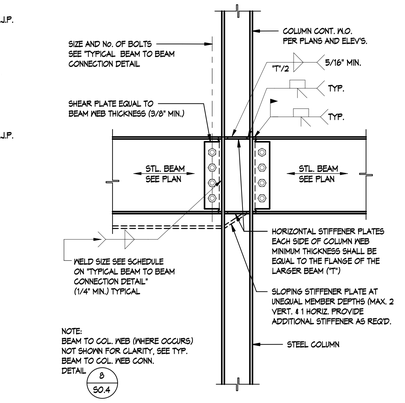

TYP - BEAM TO COL. FLANGE MOM. CONNECTION 10

1" = 1'-0"

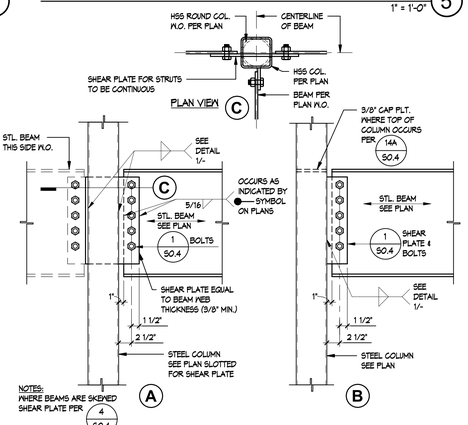

TYP - BEAM TO HSS/HSS ROUND CONN. 6

1" = 1'-0"

TYP - STIFFENER PLATE DETAIL 2

1" = 1'-0"

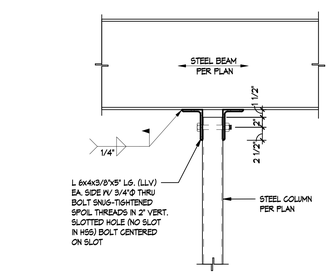

TYP - NON-BEARING COL. TO BEAM ABOVE 19

1" = 1'-0"

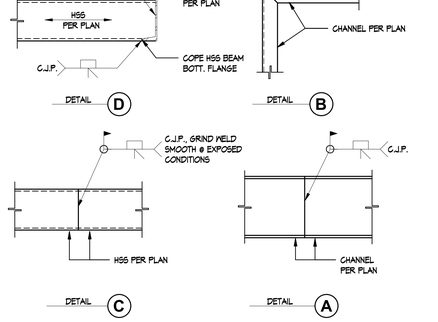

TYP - CHANNEL DETAILS 15

1" = 1'-0"

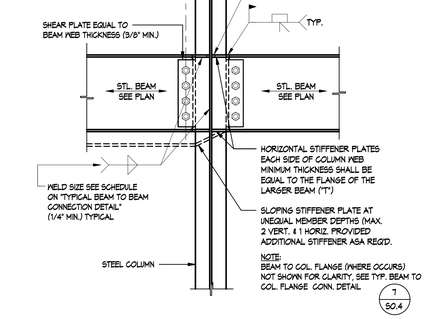

TYP - BEAM TO COL. WEB MOM. CONN. 11

1" = 1'-0"

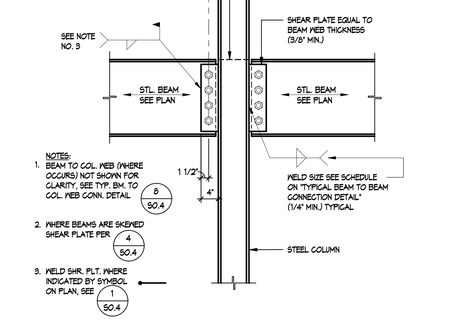

TYP - BEAM TO COLUMN FLANGE CONNECTION 7

1" = 1'-0"

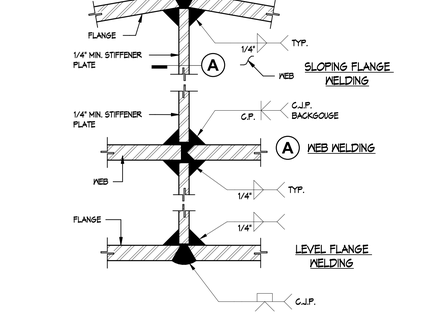

TYP - BENT BEAM WELDING 3

1" = 1'-0"

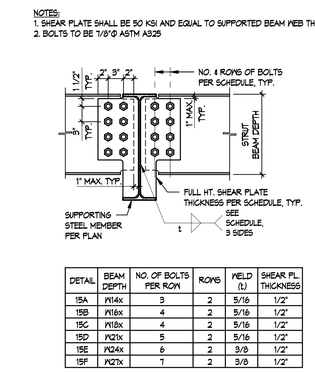

DETAIL	BEAM DEPTH	NO. OF BOLTS PER ROW	ROWS	WELD (t)	SHEAR PL. THICKNESS
15A	W14x	3	2	5/16	1/2"
15B	W16x	4	2	5/16	1/2"
15C	W18x	4	2	5/16	1/2"
15D	W21x	5	2	5/16	1/2"
15E	W24x	6	2	3/8	1/2"
15F	W27x	7	2	3/8	1/2"

BM TO BM DOUBLE ROW BOLTED CONNECTION 20

1" = 1'-0"

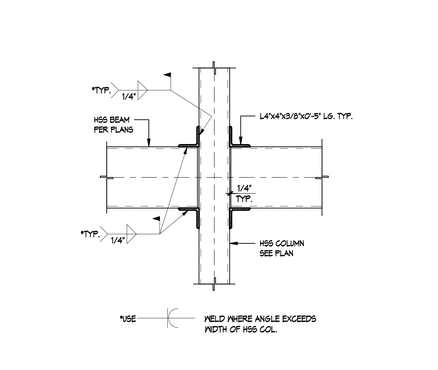

TYP - HSS BEAM TO HSS COL. DETAIL 16

1" = 1'-0"

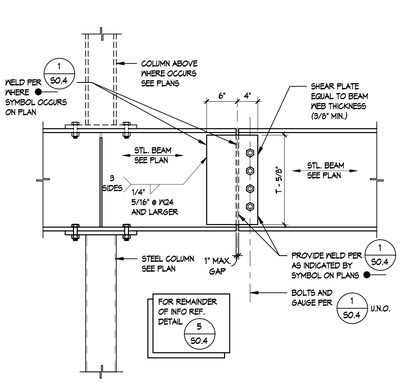

TYP - BEAM TO COLUMN CANTILEVER 12

1" = 1'-0"

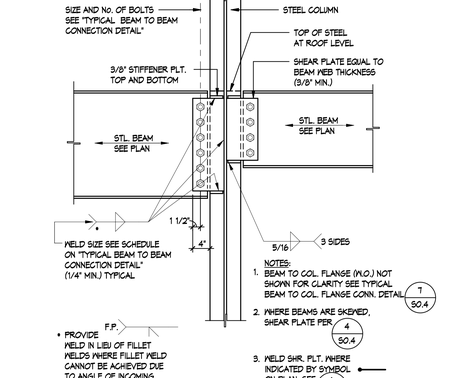

TYP - BEAM TO COLUMN WEB CONNECTION 8

1" = 1'-0"

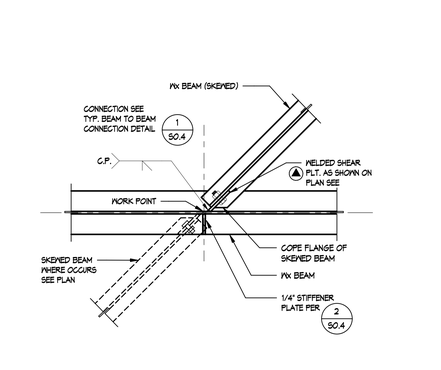

TYP - SKEWED BEAM CONNECTION 4

1" = 1'-0"

APPL No. A03-122864

IDENTIFICATION STAMP
DIV. OF THE STATE ARCHITECT
APP: 03-122864 INC:
REVIEWED FOR
SS ☑ FLS ☑ ACS ☑
DATE: 10/03/2023

DSA

Archite

RACHLIN PARTNERS
8640 National Boulevard
Culver City, CA 90232
310.204.3400

Disclaim

THESE DRAWINGS ARE THE PROPERTY OF THE ARCHITECT. THE DESIGNS SHOWN AND DESCRIBED HEREIN INCLUDING ALL TECHNICAL DRAWINGS ARE PROPRIETARY AND CANNOT BE COPIED, DUPLICATED OR COMMERCIALLY EXPLOITED EXCEPT AS AGREED TO IN WRITING. THESE DRAWINGS AND SPECS SHALL NOT BE USED BY THE OWNER ON OTHER PROJECTS, FOR ADDITIONS TO THIS PROJECT, OR FOR COMPLETION OF THIS PROJECT BY OTHERS. THE OWNER AGREES TO HOLD HARMLESS, INDEMNIFY, AND DEFEND THE ARCHITECT AGAINST ALL DAMAGES, CLAIMS AND LOSSES, INCLUDING DEFENSE COSTS, ARISING OUT OF ANY REUSE OF PLANS AND SPECIFICATIONS WITHOUT THE WRITTEN AUTHORIZATION OF THE ARCHITECT OF RECORD.

Copyright © 2022 Rachlin Partners, All Rights Reserved.

Performing Arts Center

Hacienda La Puente Unified School District
635 North California Avenue
La Puente, CA 91744

Re	Dat	Issu
1	7.22.22	50%
2	10.21.22	50%
3	12.09.22	100% CD DSA
4	6.19.23	100% CD DSA RESUBMITTAL
5	9.20.23	DSA BACK CHECK

Date: 9.20.2023
Scale: 1" = 1'-0"
Drawn By: Author
Checked By: Checker

Architect / Engineer

LICENSED ARCHITECT — RICHARD W. RACHLIN — NO. C-26029 REN. 8-31-25 — STATE OF CALIFORNIA

REGISTERED PROFESSIONAL ENGINEER — Frank J. Rice — No. S5372 Exp. 09/30/23 — STRUCTURAL — STATE OF CALIFORNIA

Consulta
Miyamoto International, Inc.
The Ruzika Company, Inc.
MDC Consulting Engineers
Pocock Design Solutions
Newson Brown Acoustics, LLC
VCA Engineers, Inc.
HJSA Consulting

Sheet Title

TYPICAL STEEL AND MISC. DETAILS

Sheet

S0.4

C:\Users\ddozier\Documents\89-S62-R22_Central_Strud_ddozierWYN14.rvt

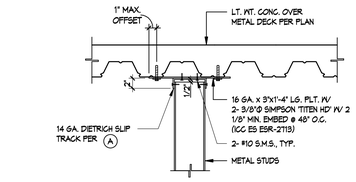

STUD PARALLEL TO FLOOR DECK SPAN

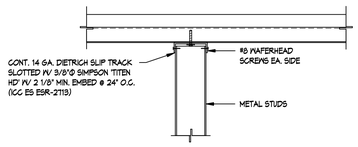

STUD PERPENDICULAR TO FLOOR DECK SPAN

TYP - METAL STUD ATTACHMENT TO FLOOR (17)

1" = 1'-0"

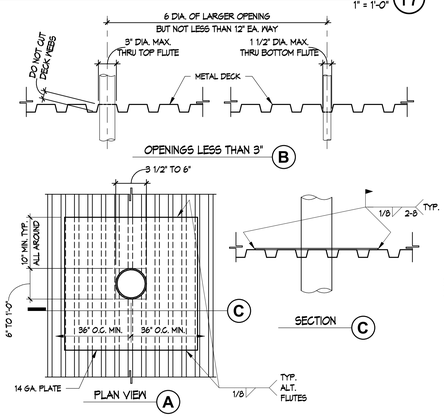

OPENINGS LESS THAN 6" (18)

1" = 1'-0"

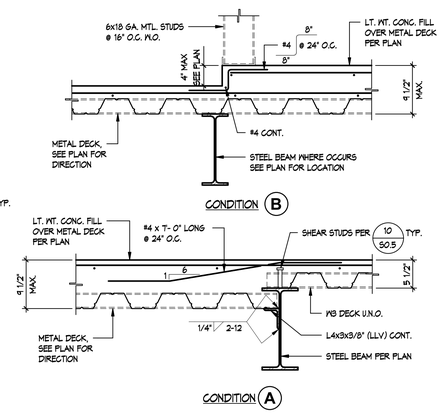

TYP - FLOOR SLAB DEPRESSION DETAILS (14)

1" = 1'-0"

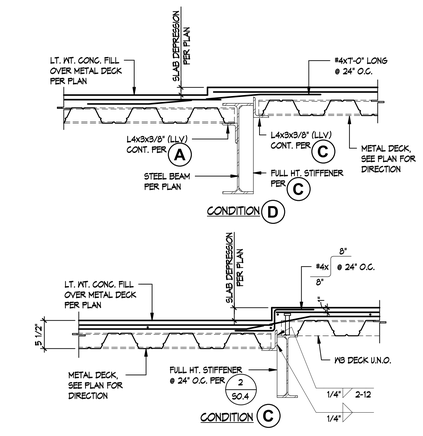

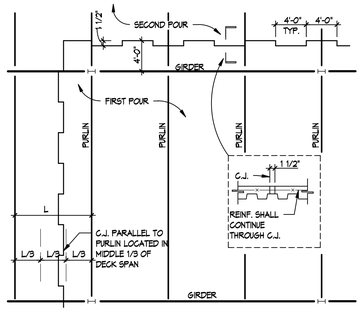

TYP - CONST. JOINT AT COMPOSITE SLAB (9)

1" = 1'-0"

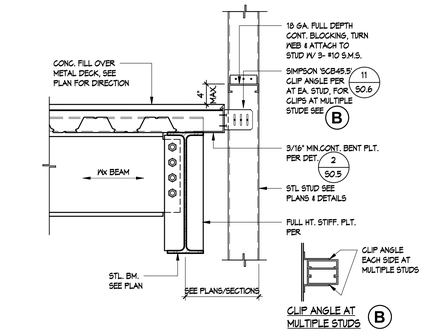

TYP - DEFLECTION CLIP ATTACHMENT AT FLOOR BEAM (5)

1" = 1'-0"

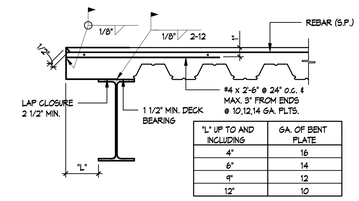

A DECK PARALLEL TO EDGE OF SLAB (L ≤ 12')

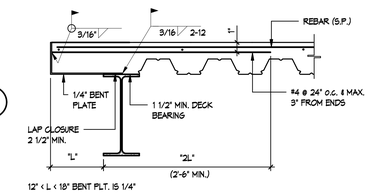

B DECK PARALLEL TO EDGE OF SLAB (12" < L ≤ 18')

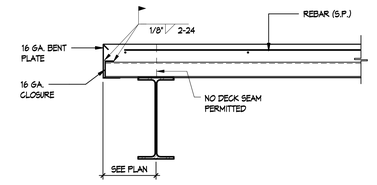

C DECK PERPENDICULAR TO EDGE OF SLAB

TYP - SLAB EDGE AT METAL DECK DETAILS (2)

1" = 1'-0"

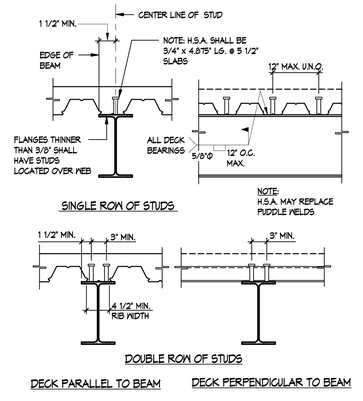

TYP - COMPOSITE BEAM SHEAR STUD DETAIL (10)

1" = 1'-0"

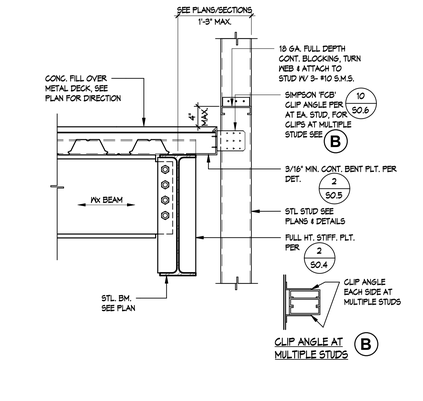

TYP - RIGID CLIP ATTACHMENT AT FLOOR STEEL BEAM (6)

1" = 1'-0"

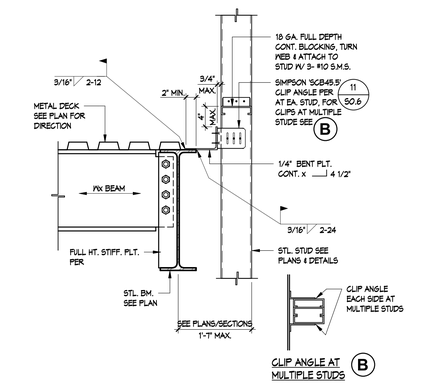

TYP - RIGID CLIP ATTACHMENT AT FLOOR STEEL BEAM (6)

1" = 1'-0"

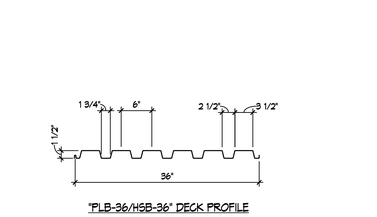

"PLB-36/HSB-36" DECK PROFILE

SECTION PROPERTIES (PER FOOT OF WIDTH) VERCO PLB-36/HSB-36 DECK (IAPMO ER #217)			
GA.	I (IN⁴)	+S (IN³)	-S (IN³)
22	.193	.176	.188
20	.231	.230	.237
18	.306	.314	.331
16	.381	.398	.410

TYP - PLB/HSB-36 DECK PROPERTIES (3)

1" = 1'-0"

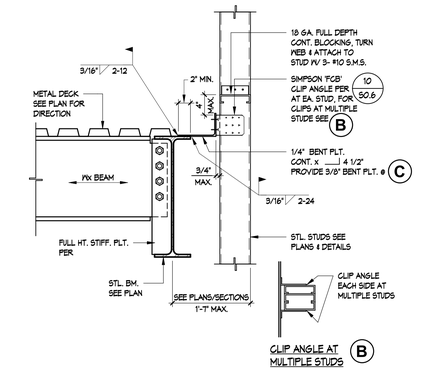

TYP - RIGID CLIP ATTACHMENT AT ROOF STEEL BEAM (8)

1" = 1'-0"

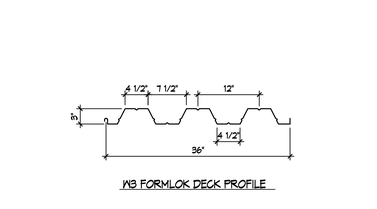

W3 FORMLOK DECK PROFILE

SECTION PROPERTIES (PER FOOT OF WIDTH) W3 FORMLOK (IAPMO ER #217)			
GA.	I (IN⁴)	+S (IN³)	-S (IN³)
22	.761	.348	.410
20	.914	.510	.528
18	1.214	.752	.766
16	1.517	.968	.966

TYP - W3 FLOOR DECK PROPERTIES (4)

1" = 1'-0"

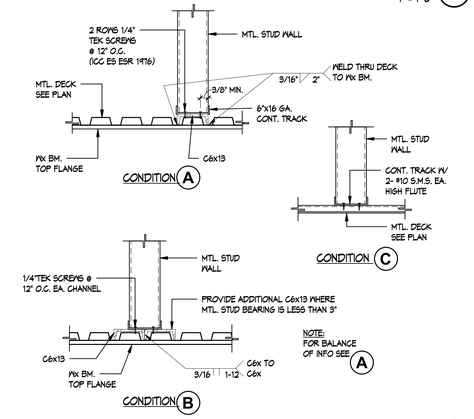

TYP - HSS COL. BRACE AT FLOOR/ROOF (20)

1" = 1'-0"

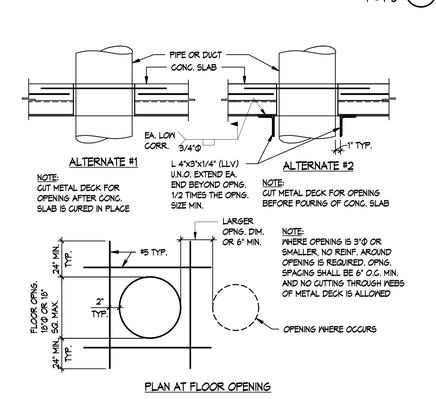

PLAN AT FLOOR OPENING

MTL. STUD BRACE ATTACHMENT TO FLOOR DECK (16)

1" = 1'-0"

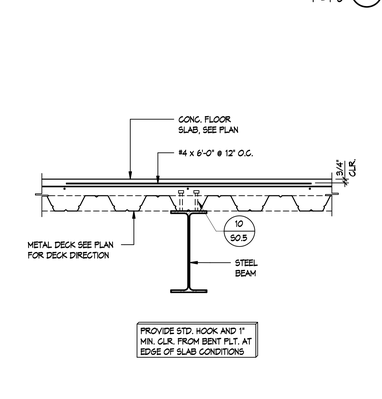

MTL. STUD BRACE ATTACHMENT TO ROOF DECK (12)

1" = 1'-0"

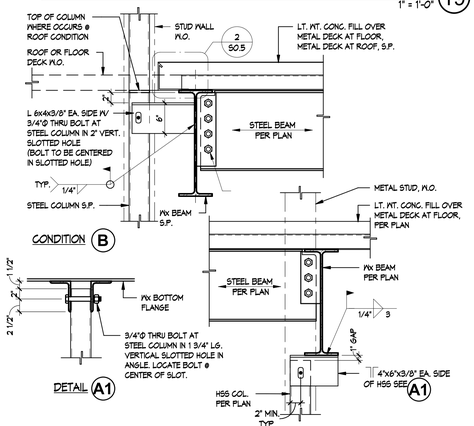

TYP - PIPE OR DUCT OPENING THRU FLOOR (15)

1" = 1'-0"

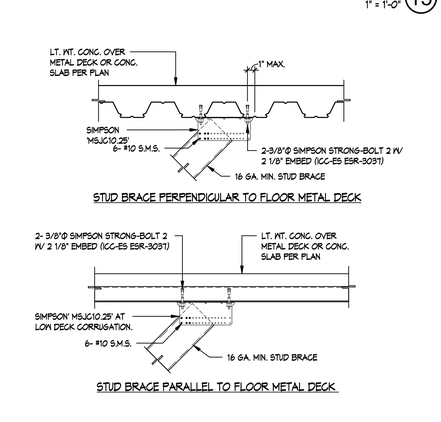

TYP - SLAB REINF. AT BMS. & GIRDERS (11)

1" = 1'-0"

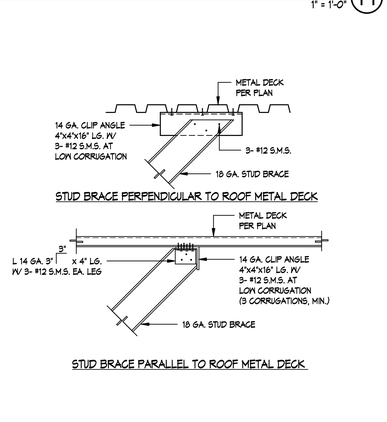

TYP - DEFLECTION CLIP ATTACHMENT AT ROOF BEAM (7)

1" = 1'-0"

TYP - SLAB EDGE AT METAL DECK DETAILS (2)

1" = 1'-0"

"PLB-36/HSB-36" DECK PROFILE

SECTION PROPERTIES (PER FOOT OF WIDTH) VERCO PLB-36/HSB-36 DECK (IAPMO ER #217)			
GA.	I (IN⁴)	+S (IN³)	-S (IN³)
22	.193	.176	.188
20	.231	.230	.237
18	.306	.314	.331
16	.381	.398	.410

TYP - PLB/HSB-36 DECK PROPERTIES (3)

1" = 1'-0"

C:\Users\ddozier\Documents\89-562-R22_Central_Struct_ddozierWYN4.rvt

APPL No. A03-122864

IDENTIFICATION STAMP
DIV. OF THE STATE ARCHITECT
APP: 03-122864 INC:
REVIEWED FOR
SS ☑ FLS ☑ ACS ☑
DATE: 10/03/2023

DSA

Archite

RACHLIN PARTNERS
8640 National Boulevard
Culver City, CA 90232
310.204.3400

Disclaim

THESE DRAWINGS ARE THE PROPERTY OF THE ARCHITECT. THE DESIGNS SHOWN AND DESCRIBED HEREIN INCLUDING ALL TECHNICAL DRAWINGS ARE PROPRIETARY AND CANNOT BE COPIED, DUPLICATED OR COMMERCIALLY EXPLOITED EXCEPT BY WRITTEN AGREEMENT. THESE DRAWINGS AND SPECS SHALL NOT BE USED BY THE OWNER ON OTHER PROJECTS, FOR ADDITIONS TO THIS PROJECT, OR FOR COMPLETION OF THIS PROJECT BY OTHERS. THE OWNER AGREES TO HOLD HARMLESS, INDEMNIFY AND DEFEND THE ARCHITECT AGAINST ALL DAMAGES, CLAIMS AND LOSSES, INCLUDING DEFENSE COSTS, ARISING OUT OF ANY REUSE OF PLANS AND SPECIFICATIONS WITHOUT THE WRITTEN AUTHORIZATION OF THE ARCHITECT OF RECORD.

Copyright © 2022 Rachlin Partners, All Rights Reserved.

Performing Arts Center

Hacienda La Puente Unified School District
635 North California Avenue
La Puente, CA 91744

Re	Dat	Issu
1	7.22.22	50%
2	10.21.22	50%
3	12.09.22	100% CD DSA
4	6.19.23	100% CD DSA RESUBMITTAL
5	9.20.23	DSA BACK CHECK

Date: 9.20.2023
Scale: 1" = 1'-0"
Drawn By: Author
Checked By: Checker

Architect / Engineer

LICENSED ARCHITECT FRANK J. RICE NO. C-26229 REN. 8-31-25 STATE OF CALIFORNIA

REGISTERED PROFESSIONAL ENGINEER Frank J. Rice No. S5372 Exp. 09/30/23 STRUCTURAL STATE OF CALIFORNIA

Consulta

Miyamoto International, Inc.
The Ruzika Company, Inc.
MDC Consulting Engineers
Pocock Design Solutions
Newson Brown Acoustics, LLC
VCA Engineers, Inc.
HJSA Consulting

Sheet Title

METAL STUD, METAL DECK AND MISC. DETAILS

Sheet

S0.5

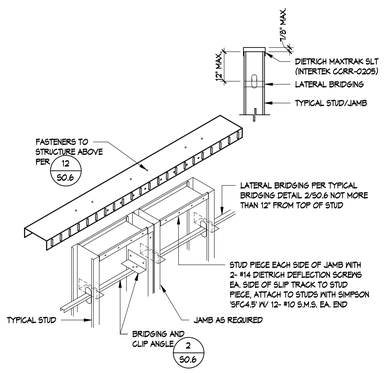

TYP - SLIP TRACK DETAIL (17)
1" = 1'-0"

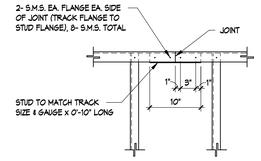

TOP TRACK SPLICE (13)
1" = 1'-0"

CEILING JOIST SCHEDULE	ICC ESR-3064P		ALLOW. SPAN	BRIDGING
	S_x[3]	I_x [4]		
GYPSUM BOARD CEILINGS 13 P.S.F. (D.L.) L/240 (INTERIOR)				
600S162-43 18 GA. @ 16" O.C.	0.712	2.316	17'-11"	ONE LOCATED AT MIDSPAN
400S162-43 18 GA. @ 16" O.C.	0.446	0.892	15'-0"	ONE LOCATED AT MIDSPAN
PLASTER CEILINGS 20 P.S.F. (D.L.) -43 P.S.F. (WIND UPLIFT) L/360 (EXTERIOR)				
600S162-43 18 GA. @ 16" O.C.	0.712	2.316	15'-1"	ONE LOCATED AT MIDSPAN
400S162-43 18 GA. @ 16" O.C.	0.446	0.892	11'-4"	ONE LOCATED AT MIDSPAN

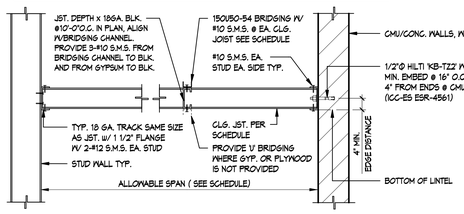

TYP - METAL STUD CEILING JOIST SCHED. (9)
1" = 1'-0"

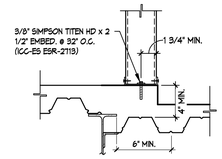

EXTERIOR CONC. OVER METAL DECK DEPRESSION CONNECTION (E)

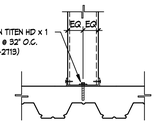

EXTERIOR CONC. OVER METAL DECK CONNECTION (D)

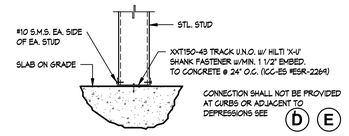

TYP. INTERIOR NON-BEARING STUD CONNECTION (C)

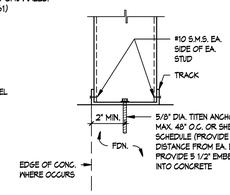

STUD TO TRACK DETAIL

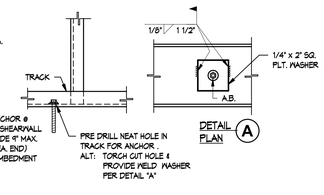

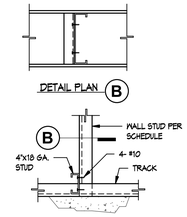

WEB STIFFENER

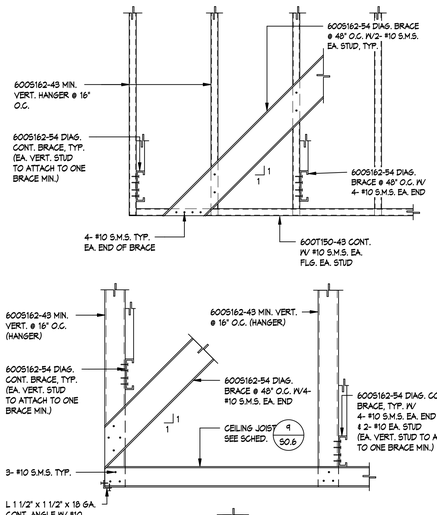

TYP - SOFFIT FRAMING (20)
1" = 1'-0"

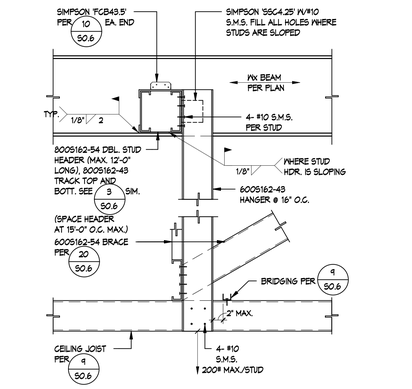

TYP - CLG. JOIST PARALLEL TO STEEL BEAM (14)
1" = 1'-0"

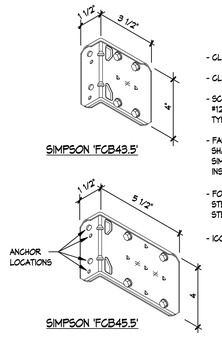

- CLIP IS SIMPSON 'FCB' BYPASS FRAMING FIXED-CLIP
- CLIP IS 16 GA MATERIAL (50ksi)
- SCREWS TO METAL STUDS SHALL BE #12-14 S.M.S., FILL ALL ROUND HOLES TYP., U.N.O. ON SECTIONS
- FASTENERS TO STRUCTURAL STEEL SHALL BE 3- #12 SELF-DRILLING SCREWS SIMPSON X-METAL SCREW. INSTALL IN TOP THREE ANCHOR HOLES
- FOR SCREW FASTENER INSTALLATION INTO STEEL BACKED BY CONCRETE, PRE-DRILL STEEL 4 CONCRETE, MAX. 3/16"Ø DRILL BIT
- ICC-ES ESR-4294

TYP - CLIP ANGLE DETAIL (SIMPSON - FCB) (10)
1" = 1'-0"

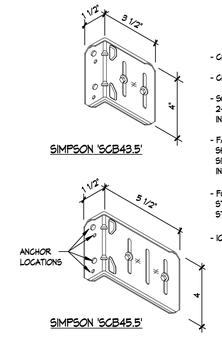

- CLIP IS SIMPSON 'SCB' BYPASS FRAMING SLIDE-CLIP
- CLIP IS 16 GA MATERIAL (50ksi)
- SCREWS TO METAL STUDS SHALL BE 2- #14 SIMPSON SHOULDERED SCREWS, INSTALLED IN THE CENTER OF EACH SLOT
- FASTENERS TO STRUCTURAL STEEL SHALL BE 3- #12 SELF-DRILLING SCREWS SIMPSON X-METAL SCREW, INSTALL IN TOP ANCHOR HOLES
- FOR SCREW FASTENER INSTALLATION INTO STEEL BACKED BY CONCRETE, PRE-DRILL STEEL 4 CONCRETE, MAX. 3/16"Ø DRILL BIT
- ICC-ES ESR-4294

TYP - DEFLECTION CLIP DETAILS (SIMPSON - SCB) (11)
1" = 1'-0"

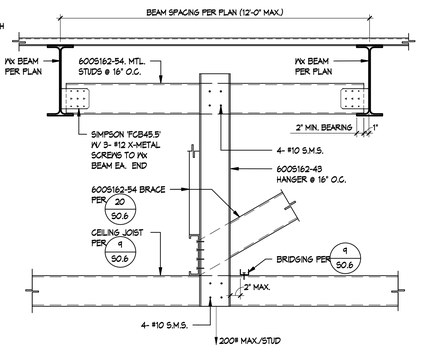

TYP - CLG. JOIST PERPENDICULAR TO STEEL BEAM (15)
1" = 1'-0"

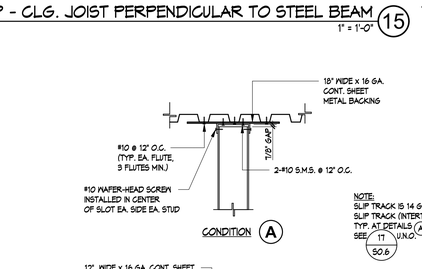

TYP - SOFFIT FRAMING (20)
1" = 1'-0"

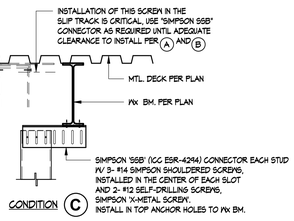

TYP - NON-BEARING STUD PARTITION TO STEEL (12)
1" = 1'-0"

TYP - NON-BEARING STUD PARTITION TO STEEL (12)
1" = 1'-0"

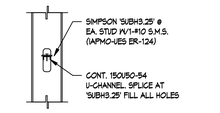

STUD BRACING FOR INTERIOR NON-BEARING WALLS IS REQUIRED WHEN EITHER STUD FLANGE IS NOT CONTINUOUSLY BRACED BY SOLID SHEATHING SUCH AS GYP-BOARD, PLYWOOD OR PLASTER, STRONGBACK NOT REQUIRED

INTERIOR/EXTERIOR NON-BEARING BRACING CONNECTION (F)

STEEL STUD PROPERTIES (ICC-ES #ESR-4943P)				STUD BRACING REQUIREMENTS		INTERIOR ALLOWABLE WALL HEIGHTS L/120 (LAT. LD-5psf NON-BEARING)		INTERIOR TILE/PLASTER ALLOWABLE WALL HEIGHTS L/360 (LAT. LD-5.2psf NON-BEARING)	
SIZE/TYPE	GA.	I_x**	S_x**	SIZE	MAX. O.C. SPACING	STUD @16" O.C.	STUD @12" O.C.	STUD @16" O.C.	STUD @12" O.C.
12005200-68(50KSI)	14	21.447	3.265	150U50-54 MIN.	4'-0"	---	---	---	---
10005162-43(33KSI)	18	8.025	1.605		4'-0"	---	---	---	---
800S162-43(33KSI)	18	4.633	1.158		4'-0"	35'-6"	41'-6"	34'-3"	37'-4"
600S162-68(50KSI)	14	3.525	1.175		4'-0"	41'-1"	48'-3"	31'-6"	34'-4"
600S162-54(50KSI)	16	2.86	0.953		4'-0"	36'-4"	42'-2"	28'-6"	32'-6"
600S162-43(33KSI)	18	2.316	0.767		4'-0"	31'-6"	35'-4"	27'-6"	30'-3"
400S162-43(33KSI)	18	0.892	0.443		4'-0"	23'-4"	26'-6"	20'-0"	22'-0"
800S162-33(33KSI)	20	1.769	0.571		4'-0"	26'-3"	30'-0"		
400S162-33(33KSI)	20	0.642	0.332		4'-0"	20'-3"	23'-0"		
12007150-68(50KSI)	14	11.140	2.207						
800T150-68(50KSI)	14	3.262	0.963						
800T150-43(33KSI)	18	3.825	0.741						
600T150-43(33KSI)	18	1.868	0.534						
400T150-43(33KSI)	18	0.714	0.249						
800T150-33(33KSI)	20	1.395	0.335						
400T150-33(33KSI)	20	0.514	0.208						

NOTES:
1. PROVIDE WEB STIFFENER WHEN INDICATED BY *

TYP - STEEL STUD PROP. AND DETAILS (2)
1" = 1'-0"

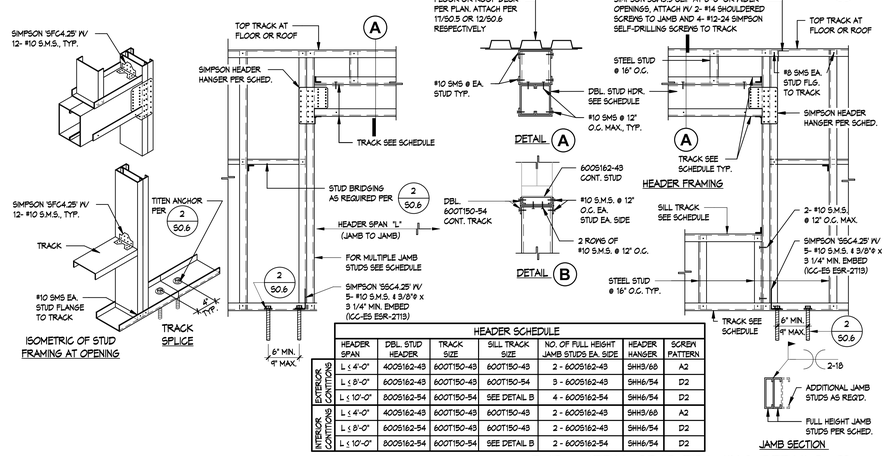

HEADER SCHEDULE							
	HEADER SPAN	DBL. STUD HEADER	TRACK SIZE	SILL TRACK SIZE	NO. OF FULL HEIGHT JAMB STUDS EA. SIDE	HEADER HANGER	SCREW PATTERN
EXTERIOR CONDITIONS	L ≤ 4'-0"	400S162-43	600T150-43	600T150-43	2 - 6005162-43	SHH3/6B	A2
	L ≤ 8'-0"	600S162-43	600T150-43	600T150-54	3 - 6005162-43	SHH6/54	D2
	L ≤ 10'-0"	800S162-54	600T150-54	SEE DETAIL B	4 - 6005162-54	SHH6/54	D2
INTERIOR CONDITIONS	L ≤ 4'-0"	400S162-43	600T150-43	600T150-43	2 - 6005162-43	SHH3/6B	A2
	L ≤ 8'-0"	600S162-54	600T150-43	600T150-43	2 - 6005162-43	SHH6/54	D2
	L ≤ 10'-0"	800S162-54	600T150-54	SEE DETAIL B	2 - 6005162-54	SHH6/54	D2

TYP - METAL STUD FRAMING DETAILS (3)
1" = 1'-0"

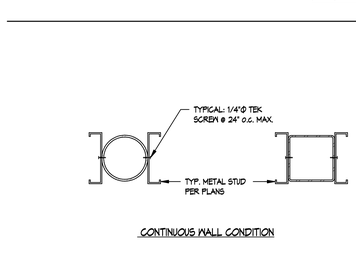

TYP - METAL STUD ATTACHMENT TO COLUMN (8)
1" = 1'-0"

TYP - WALL INTERSECTIONS (4)
1" = 1'-0"

APPL No. A03-122864

IDENTIFICATION STAMP
DIV. OF THE STATE ARCHITECT
APP: 03-122864 INC:
REVIEWED FOR
SS ☑ FLS ☑ ACS ☑
DATE: 10/03/2023

DSA

Archite

RACHLIN PARTNERS
8640 National Boulevard
Culver City, CA 90232
310.204.3400

Disclaim

THESE DRAWINGS ARE THE PROPERTY OF THE ARCHITECT. THE DESIGNS SHOWN AND DESCRIBED HEREIN INCLUDING ALL TECHNICAL DRAWINGS ARE PROPRIETARY AND CANNOT BE COPIED, DUPLICATED OR COMMERCIALLY EXPLOITED IN WHOLE OR IN PART. THESE DRAWINGS AND SPECIFICATIONS SHALL NOT BE USED BY THE OWNER ON OTHER PROJECTS, FOR ADDITIONS TO THIS PROJECT, OR FOR COMPLETION OF THIS PROJECT BY OTHERS. THE OWNER AGREES TO HOLD HARMLESS, INDEMNIFY AND DEFEND THE ARCHITECT AGAINST ALL DAMAGES, CLAIMS AND LOSSES, INCLUDING DEFENSE COSTS, ARISING OUT OF ANY REUSE OF PLANS AND SPECIFICATIONS WITHOUT THE WRITTEN AUTHORIZATION OF THE ARCHITECT OF RECORD.

Copyright © 2022 Rachlin Partners, All Rights Reserved.

Performing Arts Center

Hacienda La Puente Unified School District
635 North California Avenue
La Puente, CA 91744

Re	Dat	Issu
1	7.22.22	50%
2	10.21.22	50%
3	12.09.22	100% CD DSA
4	6.19.23	100% CD DSA RESUBMITTAL
5	9.20.23	DSA BACK CHECK

Date: 9.20.2023
Scale: 1" = 1'-0"
Drawn By: DF,
Checked By: MSJ ZD

Architect / Engineer

LICENSED ARCHITECT RICHARD INGRAM NO. C-26029 REN. 8-31-25 STATE OF CALIFORNIA

REGISTERED PROFESSIONAL ENGINEER Frank J. Rice No. 55392 Exp. 09/30/23 CIVIL STRUCTURAL STATE OF CALIFORNIA

Consulta

Miyamoto International, Inc.
The Ruzika Company, Inc.
MDC Consulting Engineers
Pocock Design Solutions
Newson Brown Acoustics, LLC
VCA Engineers, Inc.
HJSA Consulting

Sheet Title

METAL STUD AND MISC. DETAILS

Sheet

S0.6

C:\Users\ddoorn\Documents\68-582-R22_Central_Struct_ddoorn\WYNL4.rvt

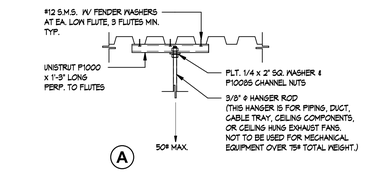

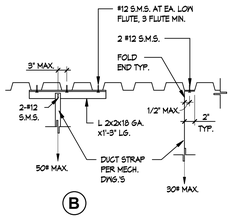

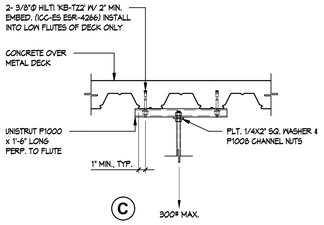

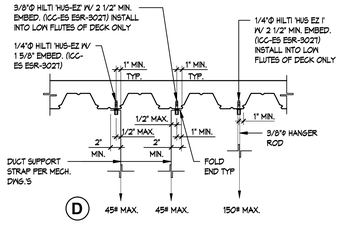

NOTES:
1. MAXIMUM LOADING AT METAL DECK ON A SINGLE 24" WIDTH OF DECK SHALL NOT EXCEED 150# CUMULATIVE OF ALL HANGERS.
2. MAXIMUM LOADING AT CONCRETE OVER METAL DECK IN ANY 8'-0"X8'-0" AREA, SHALL NOT BE MORE THAN 1000# CUMULATIVE OF ALL HANGERS
3. HANGER SPACING IN A SINGLE FLUTE SHALL BE 18" O.C. MINIMUM. TOTAL NUMBER OF HANGERS NOT TO EXCEED 4 PER FLUTE.
4. CONTRACTOR SHALL LOCATE REINFORCING BY NONDESTRUCTIVE METHODS PRIOR TO DRILLING HOLES. REINFORCING SHALL NOT BE CUT OR DAMAGED DURING DRILLING OR INSTALLATION.
5. LOADS EXCEEDING THE LIMITS ABOVE SHALL BE HUNG PER 15/50.7

TYP - HANGER ROD FOR PIPING, CABLE TRAY AND EQUIPMENT WEIGHING LESS THAN 400 LBS 14
1" = 1'-0"

NOTES:
1. MAXIMUM ALLOWABLE HANGING LOADS TO BE AS FOLLOWS (MAXIMUM HANGER LOAD MAY BE FROM A SINGLE HANGER OR TOTAL LOAD FROM ALL HANGERS SUPPORTED FROM A COMMON STRUT)

UNISTRUT SIZE	BEAM SPACING	MAX. HANGER LOADS
P1000	10'-0" MAX.	60 LBS.
P1001	10'-0" MAX.	305 LBS.
P5000	10'-0" MAX.	142 LBS.
P5001	10'-0" MAX.	825 LBS.

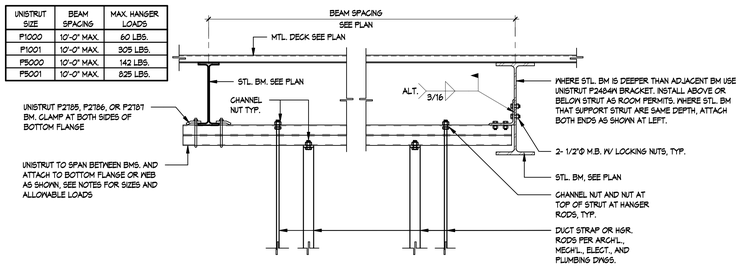

TYP - PIPING, CABLE TRAY AND DUCT SUPPORT DETAIL 15
1" = 1'-0"

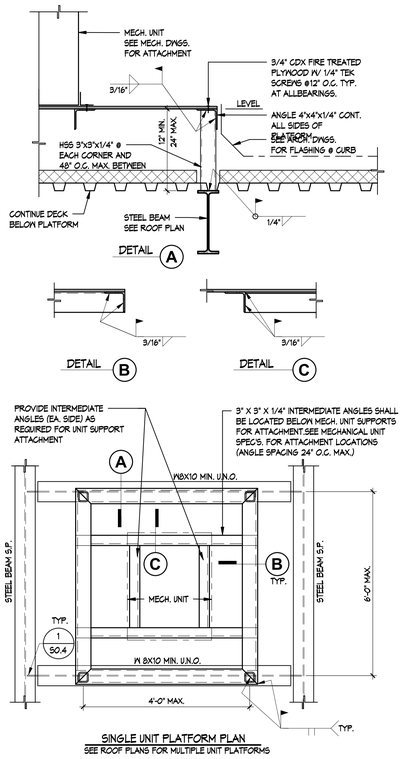

TYP - CONDENSING UNIT PLATFORM PLAN AND DETAILS 11
1" = 1'-0"

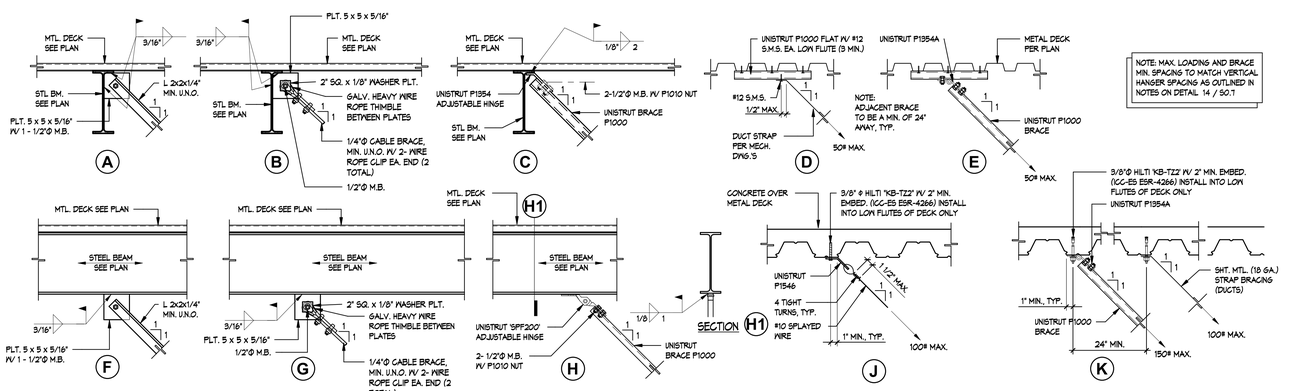

TYP - SEISMIC BRACING DETAIL OF DUCTS, PIPING, CABLE TRAYS AND EQUIPMENT WEIGHING LESS THAN 400 LBS 12
1" = 1'-0"

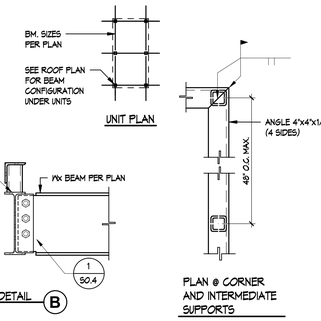

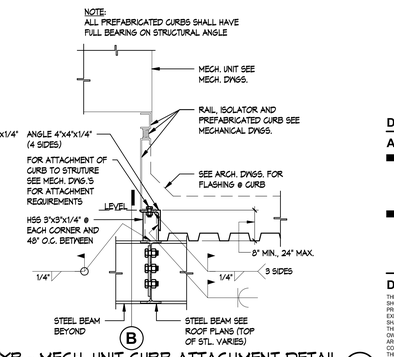

TYP - MECH. UNIT CURB ATTACHMENT DETAIL 1
1" = 1'-0"

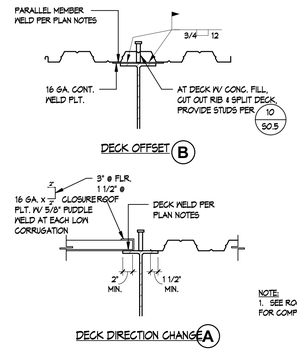

NOTE:
1. SEE ROOF OR FLOOR NOTES FOR COMPLETE INFORMATION

TYP - METAL DECK JOINT OVER SUPPORT 6
1/8" = 1'-0"

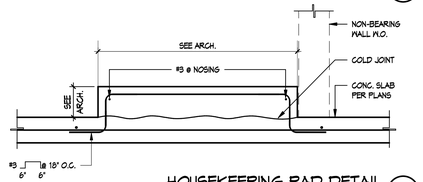

HOUSEKEEPING PAD DETAIL 7
1" = 1'-0"

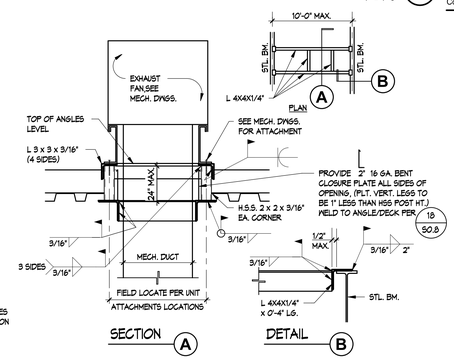

TYP - EXHAUST FAN SUPPORT DETAIL 2
1" = 1'-0"

APPL No. A03-122864

IDENTIFICATION STAMP
DIV. OF THE STATE ARCHITECT
APP: 03-122864 INC:
REVIEWED FOR
SS ☑ FLS ☑ ACS ☑
DATE: 10/03/2023

DSA

Archite

RACHLIN PARTNERS
8640 National Boulevard
Culver City, CA 90232
310.204.3400

Disclaim

THESE DRAWINGS ARE THE PROPERTY OF THE ARCHITECT. THE DESIGNS SHOWN AND DESCRIBED HEREIN INCLUDING ALL TECHNICAL DRAWINGS ARE PROPRIETARY AND CANNOT BE COPIED, DUPLICATED OR COMMERCIALLY EXPLOITED IN WHOLE OR IN PART. THESE DRAWINGS AND SPECIFICATIONS SHALL NOT BE USED BY THE OWNER ON OTHER PROJECTS, FOR ADDITIONS TO THIS PROJECT, OR FOR COMPLETION OF THIS PROJECT BY OTHERS. THE OWNER AGREES TO HOLD HARMLESS, INDEMNIFY AND DEFEND THE ARCHITECT AGAINST ALL DAMAGES, CLAIMS AND LOSSES, INCLUDING DEFENSE COSTS, ARISING OUT OF ANY REUSE OF PLANS AND SPECIFICATIONS WITHOUT THE WRITTEN AUTHORIZATION OF THE ARCHITECT OF RECORD.

Copyright © 2022 Rachlin Partners, All Rights Reserved.

Perforn

Hacienda La Puente Unified School District
635 North California Avenue
La Puente, CA 91744

Re	Dat	Issu
1	7.22.22	50%
2	10.21.22	50%
3	12.09.22	100% CD DSA
4	6.19.23	100% CD DSA RESUBMITTAL
5	9.20.23	DSA BACK CHECK

Date: 9.20.2023
Scale: As indicated
Drawn By: DF, MSM, ZD
Checked By:

Architect / Engineer

LICENSED ARCHITECT — NO. C-28229 REN. 8-31-25 — STATE OF CALIFORNIA
REGISTERED PROFESSIONAL ENGINEER — Frank J. Rice — No. S5382 — Exp. 09-30-24 — STRUCTURAL — STATE OF CALIFORNIA

Consulta

Miyamoto International, Inc.
The Ruzika Company, Inc.
MDC Consulting Engineers
Pocock Design Solutions
Newson Brown Acoustics, LLC
VCA Engineers, Inc.
HJSA Consulting

Sheet Title

MECHANICAL AND MISC. DETAILS

Sheet

S0.7

C:\Users\sdozier\Documents\689-502-R22_Central_Struct_sdozierWYNN.4.rvt

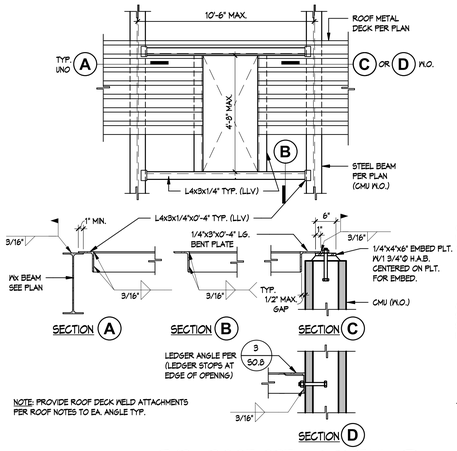

TYP - ROOF OPENING DETAIL (17)
1" = 1'-0"

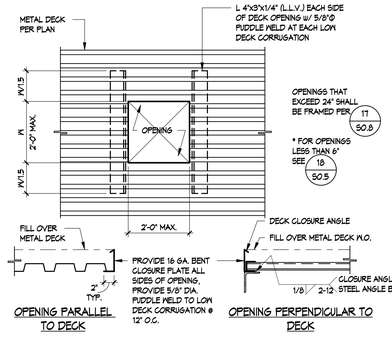

TYP - ROOF DECK OPENING (18)
1" = 1'-0"

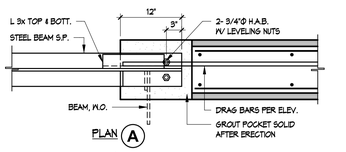

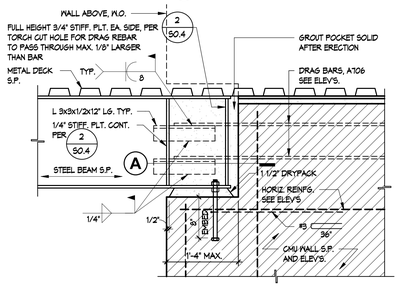

TYP - STEEL BEAM DRAG TO CMU WALL END (19)
1" = 1'-0"

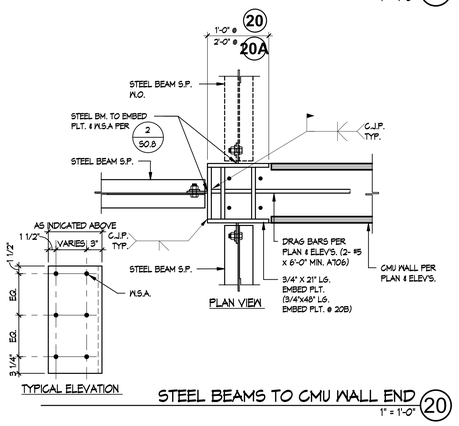

STEEL BEAMS TO CMU WALL END (20)
1" = 1'-0"

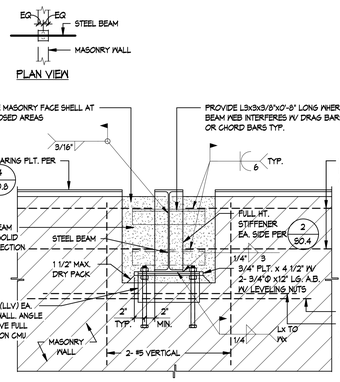

TYP - STL. BEAM TO MASONRY CONNECTION (13)
1" = 1'-0"

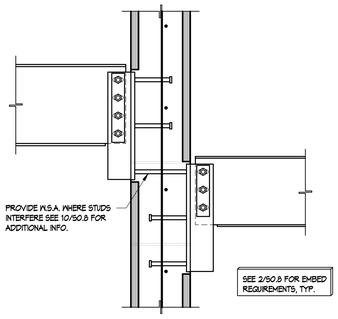

BACK TO BACK OFFSET BMS AT MASONRY WALL (9)
1" = 1'-0"

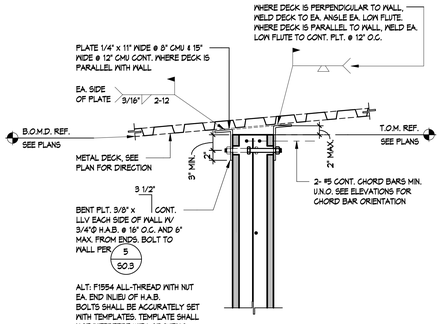

TYP - SLOPING DECK BEARING CONN. TO MAS. WALL (5)
1" = 1'-0"

EMBED. PLATE AND BOLT SCHEDULE				
BEAM SIZE	EMBED. PLT. SIZE T	PLT. SIZE W	PLT. SIZE L	NUMBER OF HEADED STUD ANCHORS AND SIZE
2 W8x TO W10x	3/4"	12"	12"	4-3/4"Ø H.S.A. IN 2 VERT. ROWS
2 W12x TO W18x, C12x	3/4"	12"	21"	6-3/4"Ø H.S.A. IN 2 VERT. ROWS
2 W21x TO W24x	3/4"	12"	30"	8-3/4"Ø H.S.A. IN 2 VERT. ROWS
2 W27x	7/8"	12"	36"	10-3/4"Ø H.S.A. IN 2 VERT. ROWS
2A W24x PER PLAN	3/4"	12"	30"	8-3/4"Ø H.S.A. IN 2 VERT. ROWS
2B W27x PER PLAN	7/8"	21"	36"	15-3/4"Ø H.S.A. IN 3 VERT. ROWS
2C W* PER PLAN	7/8"	21"	36"	15-7/8"Ø H.S.A. IN 3 VERT. ROWS
2D W21x TO W24x	7/8"	21"	30"	12-3/4"Ø H.S.A. IN 3 VERT. ROWS
2E W12x TO W18x	3/4"	21"	21"	9-3/4"Ø H.S.A. IN 3 VERT. ROWS

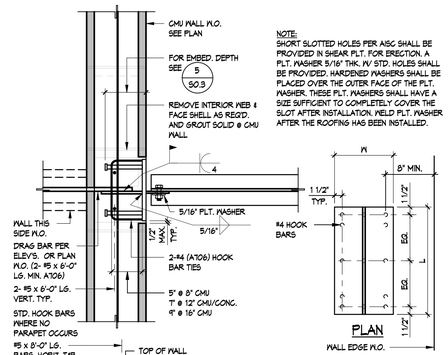

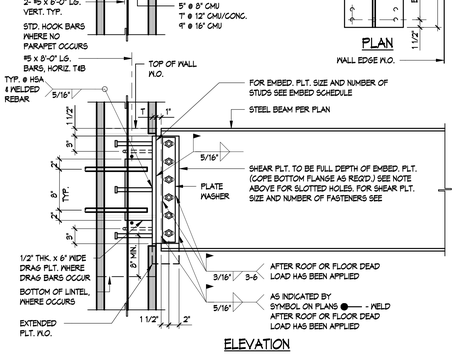

TYP - STEEL BEAM TO EMBED. IN WALL (2)
1" = 1'-0"

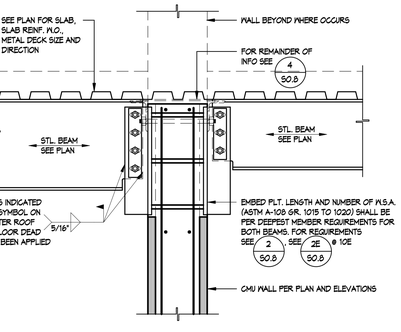

TYP - BACK TO BACK TO MASONRY WALL DETAIL (10)
1" = 1'-0"

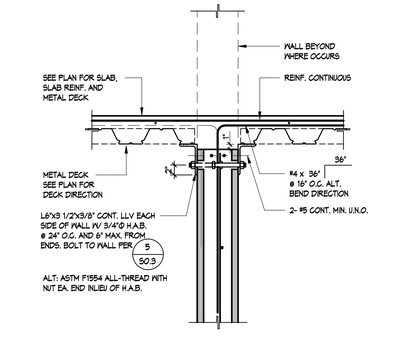

TYP - CONC. ON METAL DECK AT MAS. WALL (6)
1" = 1'-0"

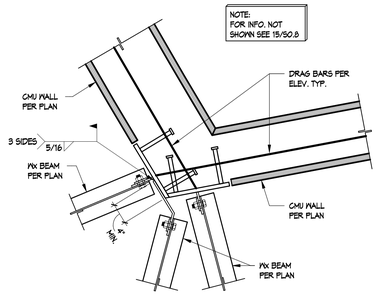

EMBED AT CORNER CONNECTION (11)
1" = 1'-0"

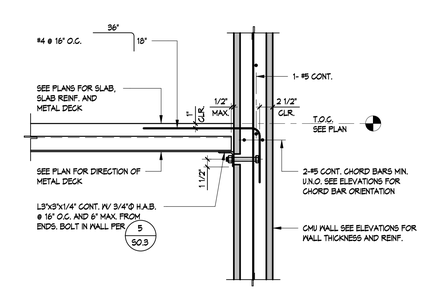

TYP - CONC. ON METAL DECK TO MAS. WALL (7)
1" = 1'-0"

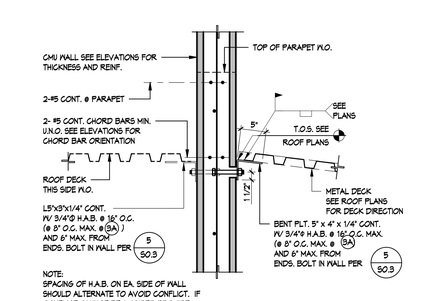

TYP - LEDGER ANGLE TO MAS. WALL (3)
1" = 1'-0"

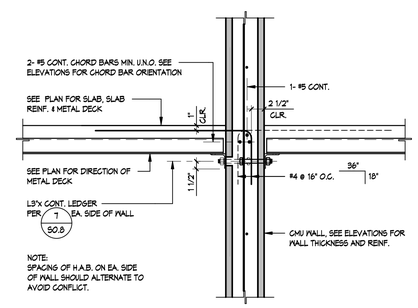

TYP. CONC. ON METAL DECK TO MAS. WALL (8)
1" = 1'-0"

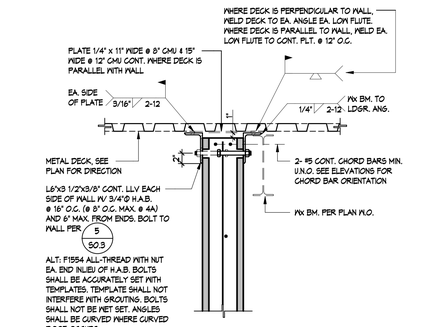

TYP - METAL DECK TO MASONRY WALL (4)
1" = 1'-0"

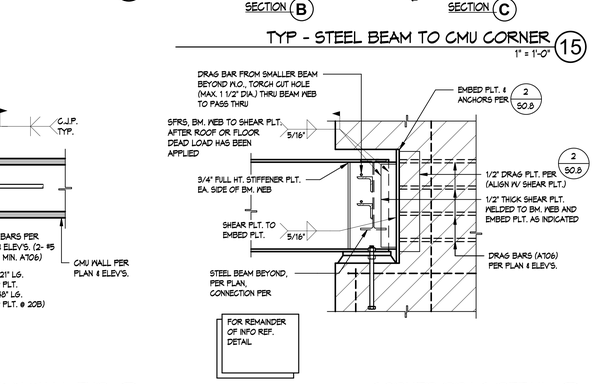

CORNER DRAG DETAIL (16)
1" = 1'-0"

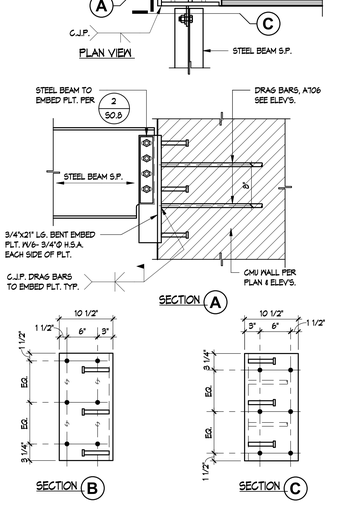

TYP - STEEL BEAM TO CMU CORNER (15)
1" = 1'-0"

C:\Users\ddozier\Documents\89-S92-R22_Central_Struct_ddozierWYNL4.rvt

APPL No. A03-122864

IDENTIFICATION STAMP
DIV. OF THE STATE ARCHITECT
APP: 03-122864 INC:
REVIEWED FOR
SS ☑ FLS ☑ ACS ☑
DATE: 10/03/2023

DSA

Archite

RACHLIN PARTNERS
8640 National Boulevard
Culver City, CA 90232
310.204.3400

Disclaim

THESE DRAWINGS ARE THE PROPERTY OF THE ARCHITECT. THE DESIGNS SHOWN AND DESCRIBED HEREIN INCLUDING ALL TECHNICAL DRAWINGS ARE PROPRIETARY AND CANNOT BE COPIED, DUPLICATED OR COMMERCIALLY EXPLOITED EITHER IN WHOLE OR IN PART. THESE DRAWINGS AND DESIGNS SHALL NOT BE USED BY THE OWNER ON OTHER PROJECTS, FOR ADDITIONS TO THIS PROJECT, OR FOR COMPLETION OF THIS PROJECT BY OTHERS, THE OWNER AGREES TO HOLD HARMLESS, INDEMNIFY AND DEFEND THE ARCHITECT AGAINST ALL DAMAGES, CLAIMS AND LOSSES, INCLUDING DEFENSE COSTS, ARISING OUT OF ANY REUSE OF PLANS AND SPECIFICATIONS WITHOUT THE WRITTEN AUTHORIZATION OF THE ARCHITECT OF RECORD.

Copyright © 2022 Rachlin Partners, All Rights Reserved.

Performing Arts Center

Hacienda La Puente Unified School District
635 North California Avenue
La Puente, CA 91744

Re	Dat	Issu
1	7.22.22	50%
2	10.21.22	50%
3	12.09.22	100% CD DSA
4	6.19.23	100% CD DSA RESUBMITTAL
5	9.20.23	DSA BACK CHECK

Date: 9.20.2023
Scale: 1" = 1'-0"
Drawn By: DF,
Checked By: MS/ ZD

Architect / Engineer

LICENSED ARCHITECT — NO. C-26229 — REN. 8-31-25 — STATE OF CALIFORNIA
REGISTERED PROFESSIONAL ENGINEER — Frank J. Rice — No. S5372 — Exp. 09/30/23 — STRUCTURAL — STATE OF CALIFORNIA

Consulta

Miyamoto International, Inc.
The Ruzika Company, Inc.
MDC Consulting Engineers
Pocock Design Solutions
Newson Brown Acoustics, LLC
VCA Engineers, Inc.
HJSA Consulting

Sheet Title

ROOF AND FLOOR DETAILS

Sheet

S0.8

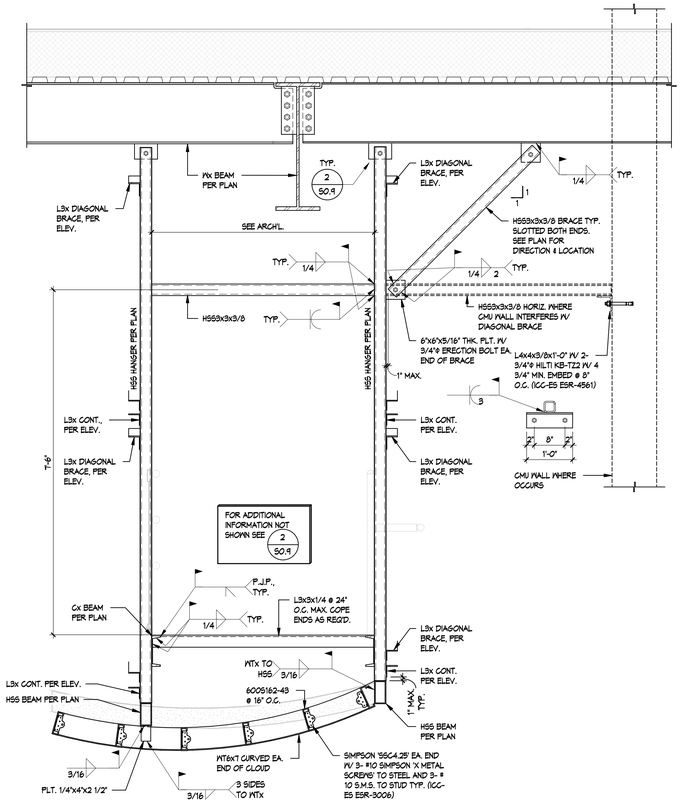

CATWALK FRAME SECTION 14
3/4" = 1'-0"

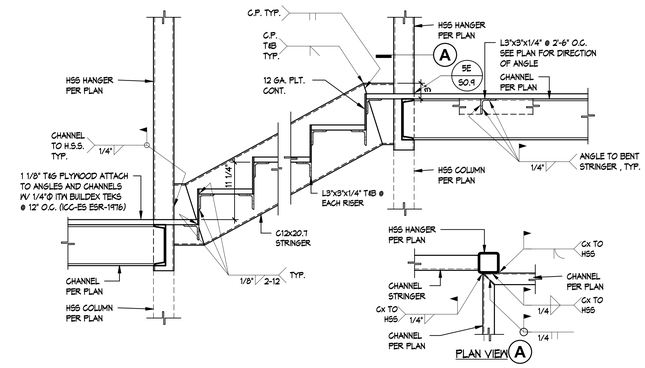

DETAIL 9
1" = 1'-0"

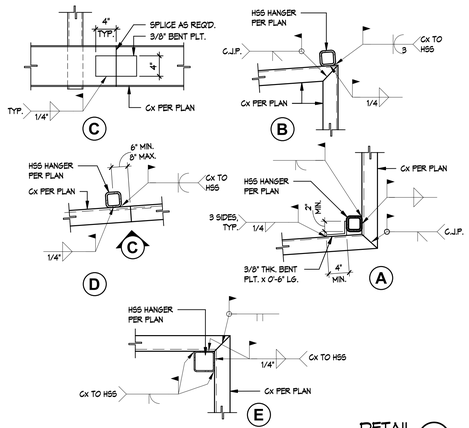

DETAIL 5
1" = 1'-0"

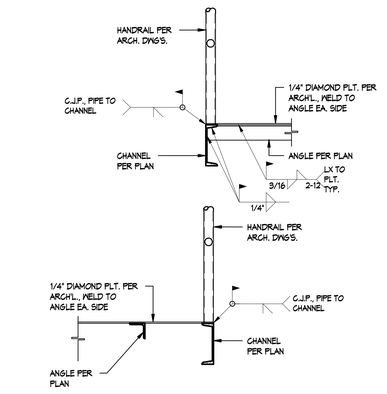

DETAIL 1
1" = 1'-0"

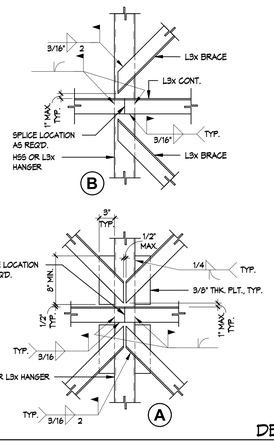

DETAIL 6
1" = 1'-0"

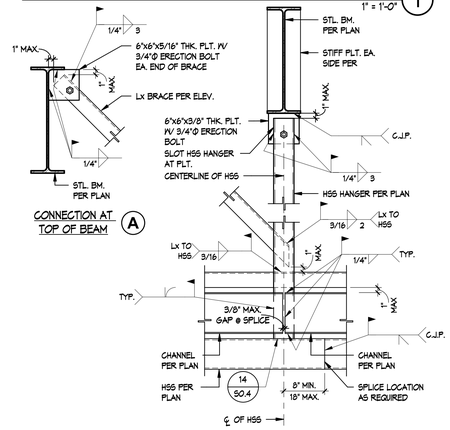

DETAIL 2
1" = 1'-0"

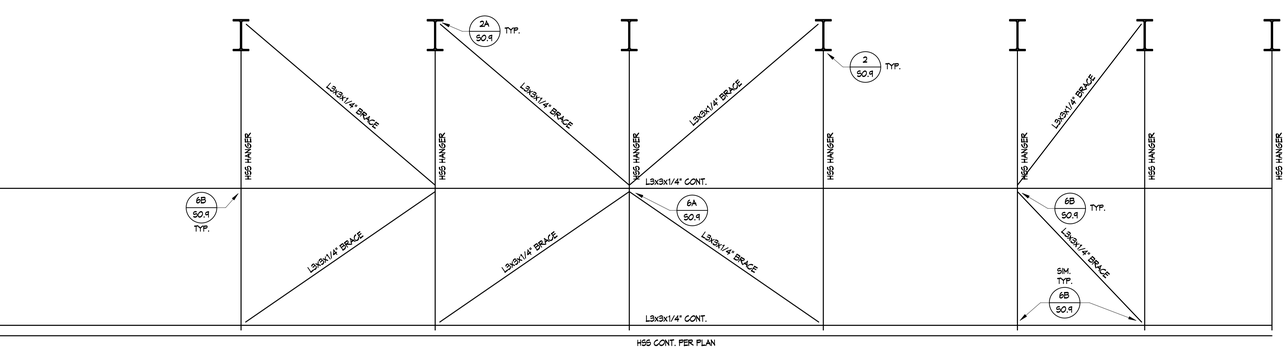

DETAIL 11
3/4" = 1'-0"

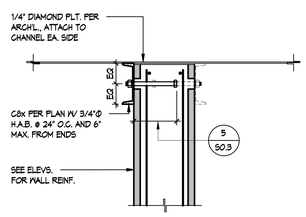

DETAIL 7
1" = 1'-0"

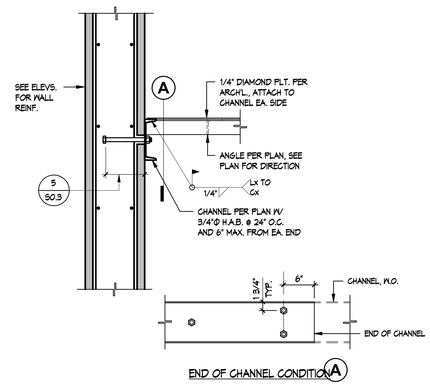

CHANNEL CONNECTION @ MASONRY WALL 3
1" = 1'-0"

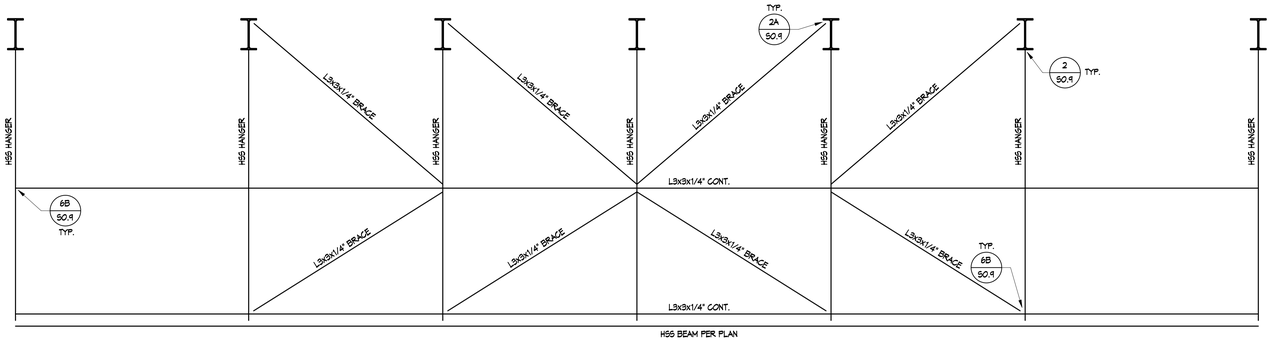

DETAIL 12
3/4" = 1'-0"

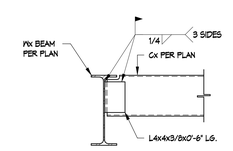

CHANNEL TO MX CONNECTION 8
1" = 1'-0"

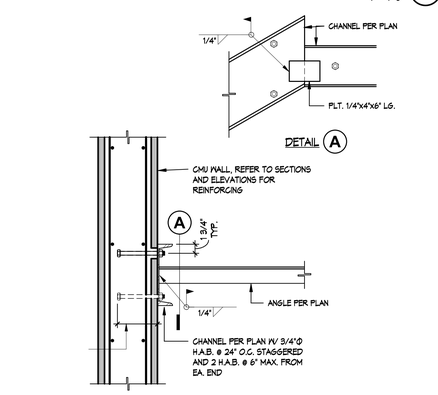

CHANNEL TO CMU WALL 4
1" = 1'-0"

C:\Users\ddozier\Documents\89-662-R22_Central_Stud_ddozierWYNL4.rvt

APPL No. A03-122864

IDENTIFICATION STAMP
DIV. OF THE STATE ARCHITECT
APP: 03-122864 INC:
REVIEWED FOR
SS ☑ FLS ☑ ACS ☑
DATE: 10/03/2023

DSA

Archite

RACHLIN
PARTNERS
8640 National Boulevard
Culver City, CA 90232
310.204.3400

Disclaim

THESE DRAWINGS ARE THE PROPERTY OF THE ARCHITECT. THE DESIGNS SHOWN AND DESCRIBED HEREIN INCLUDING ALL TECHNICAL DRAWINGS ARE PROPRIETARY AND CANNOT BE COPIED, DUPLICATED OR COMMERCIALLY EXPLOITED EXCEPT BY WRITTEN AGREEMENT WITH THE ARCHITECT. THEY SHALL NOT BE USED BY THE OWNER ON OTHER PROJECTS, FOR ADDITIONS TO THIS PROJECT, OR FOR COMPLETION OF THIS PROJECT BY OTHERS. THE OWNER AGREES TO HOLD HARMLESS, INDEMNIFY AND DEFEND THE ARCHITECT AGAINST ALL DAMAGES, CLAIMS AND LOSSES, INCLUDING DEFENSE COSTS, ARISING OUT OF ANY REUSE OF PLANS AND SPECIFICATIONS WITHOUT THE WRITTEN AUTHORIZATION OF THE ARCHITECT OF RECORD.

Copyright © 2022 Rachlin Partners, All Rights Reserved.

Performing Arts Center

Hacienda La Puente Unified School District
635 North California Avenue
La Puente, CA 91744

Re	Dat	Issu
1	7.22.22	50%
2	10.21.22	50%
3	12.09.22	100% CD DSA
4	6.19.23	100% CD DSA RESUBMITTAL
5	9.20.23	DSA BACK CHECK

Date: 9.20.2023
Scale: As indicated
Drawn By: DF, MSJ
Checked By: ZD

Architect / Engineer

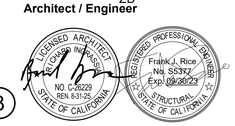

Consulta

Miyamoto International, Inc.
The Ruzika Company, Inc.
MDC Consulting Engineers
Pocock Design Solutions
Newson Brown Acoustics, LLC
VCA Engineers, Inc.
HJSA Consulting

Sheet Title

CATWALK DETAILS

Sheet

S0.9

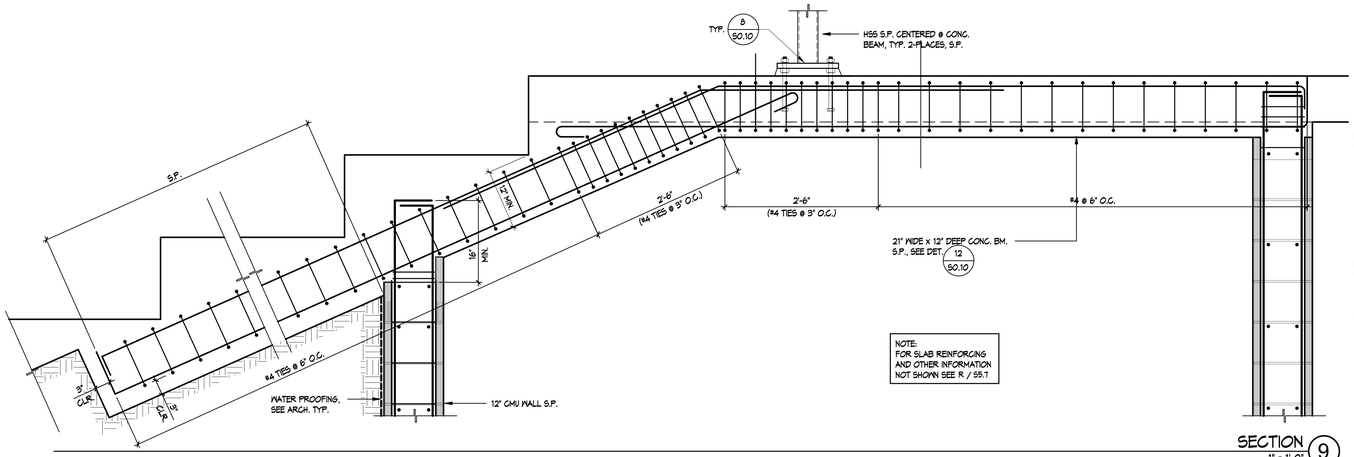

SECTION 9
1" = 1'-0"

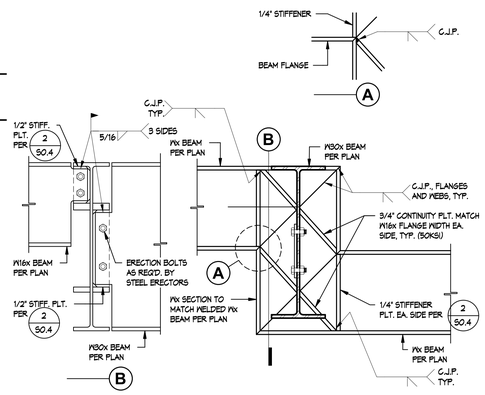

BENT BEAM DETAIL 5
1" = 1'-0"

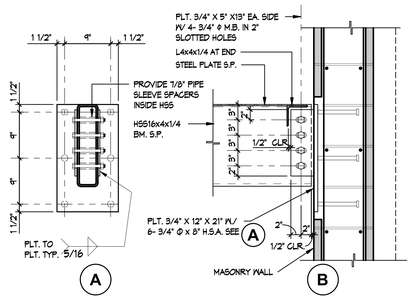

HSS16X TO WALL 1
1" = 1'-0"

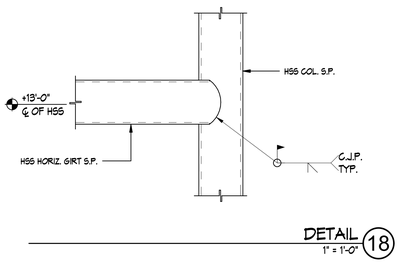

DETAIL 18
1" = 1'-0"

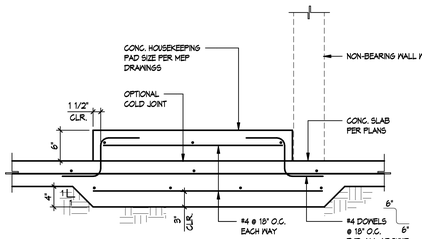

TYP - HOUSEKEEPING PAD DETAIL 14
1" = 1'-0"

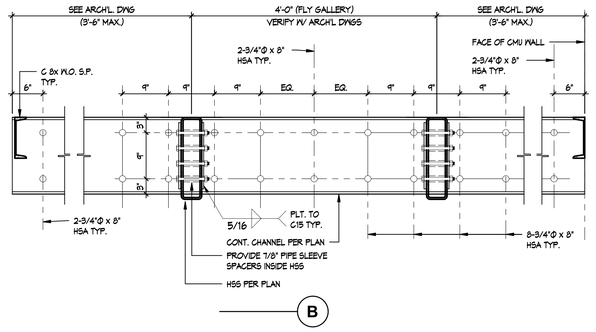

HSS16X TO WALL 6
1" = 1'-0"

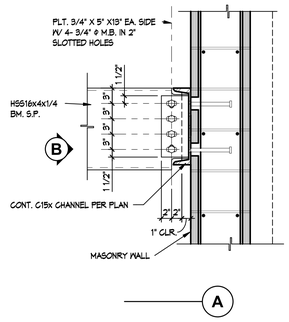

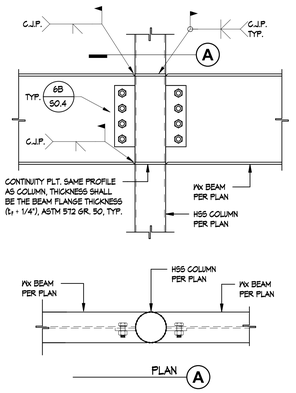

DETAIL 2
1" = 1'-0"

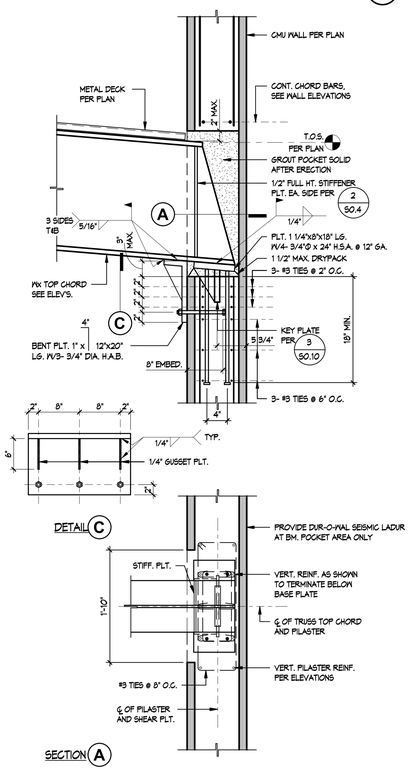

DETAIL 19
1" = 1'-0"

TRUSS TO CMU WALL 20
1" = 1'-0"

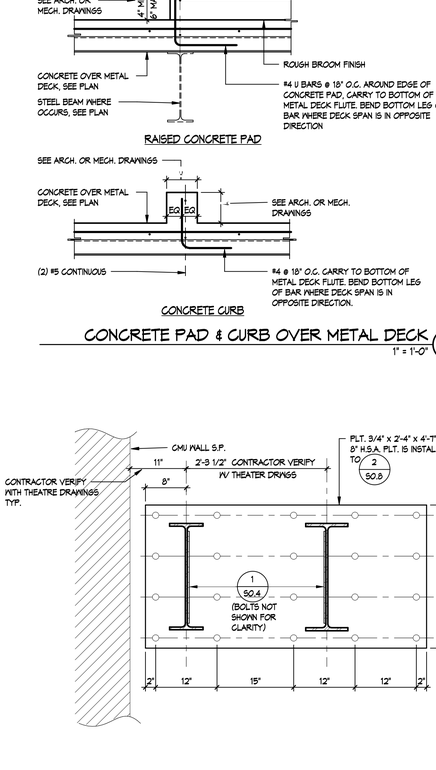

CONCRETE PAD & CURB OVER METAL DECK 15
1" = 1'-0"

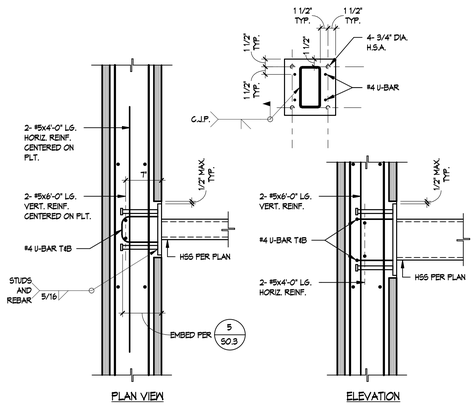

DETAIL 11
1" = 1'-0"

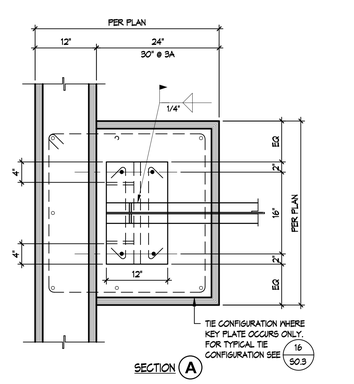

STEEL BEAM TO CMU PILASTER 3
1" = 1'-0"

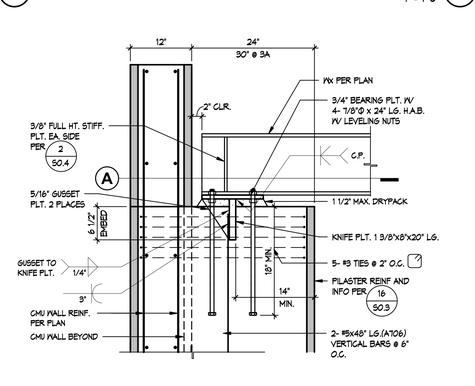

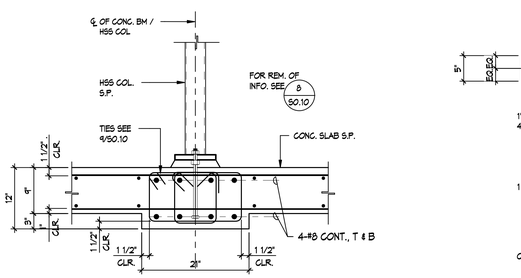

DETAIL 16
1" = 1'-0"

DETAIL 12
1" = 1'-0"

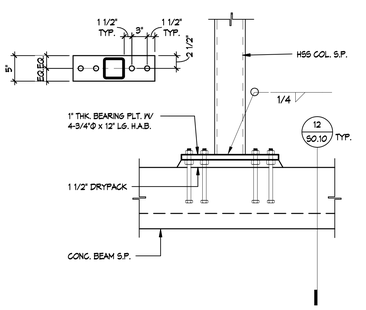

COLUMN OVER CONC. BEAM 8
1" = 1'-0"

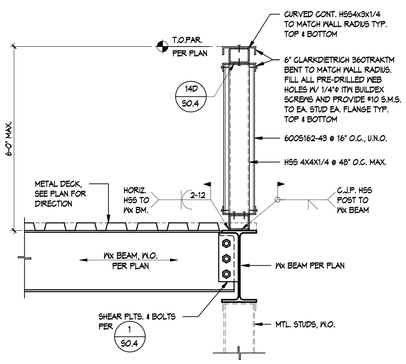

DETAIL 4
1" = 1'-0"

APPL No. A03-122864

IDENTIFICATION STAMP
DIV. OF THE STATE ARCHITECT
APP: 03-122864 INC:
REVIEWED FOR
SS ☑ FLS ☑ ACS ☑
DATE: 10/03/2023

DSA

Archite

RACHLIN PARTNERS
8640 National Boulevard
Culver City, CA 90232
310.204.3400

Disclaim

THESE DRAWINGS ARE THE PROPERTY OF THE ARCHITECT. THE DESIGNS SHOWN AND DESCRIBED HEREIN INCLUDING ALL TECHNICAL DRAWINGS ARE PROPRIETARY AND CANNOT BE COPIED, DUPLICATED OR COMMERCIALLY EXPLOITED EXCEPT BY WRITTEN AGREEMENT. THESE DRAWINGS AND DESIGNS SHALL NOT BE USED BY THE OWNER ON OTHER PROJECTS, FOR ADDITIONS TO THIS PROJECT, OR FOR COMPLETION OF THIS PROJECT BY OTHERS. THE OWNER AGREES TO HOLD HARMLESS, INDEMNIFY AND DEFEND THE ARCHITECT AGAINST ALL DAMAGES, CLAIMS AND LOSSES, INCLUDING DEFENSE COSTS, ARISING OUT OF ANY REUSE OF PLANS AND SPECIFICATIONS WITHOUT THE WRITTEN AUTHORIZATION OF THE ARCHITECT OF RECORD.

Copyright © 2022 Rachlin Partners, All Rights Reserved.

Performing Arts Center

Hacienda La Puente Unified School District
635 North California Avenue
La Puente, CA 91744

Re	Dat	Issu
1	7.22.22	50%
2	10.21.22	50%
3	12.09.22	100% CD DSA
4	6.19.23	100% CD DSA RESUBMITTAL
5	9.20.23	DSA BACK CHECK

Date: 9.20.2023
Scale: 1" = 1'-0"
Drawn By: Author
Checked By: Checker

Architect / Engineer

LICENSED ARCHITECT — Frank J. Rice — NO. C-26229 — REN. 8-31-25 — STATE OF CALIFORNIA
REGISTERED PROFESSIONAL ENGINEER — Frank J. Rice — No. S5372 — Exp. 09/30/23 — STRUCTURAL — STATE OF CALIFORNIA

Consulta

Miyamoto International, Inc.
The Ruzika Company, Inc.
MDC Consulting Engineers
Pocock Design Solutions
Newson Brown Acoustics, LLC
VCA Engineers, Inc.
HJSA Consulting

Sheet Title

DETAILS

Sheet

S0.10

C:\Users\ddozier\Documents\89-S62-R22_Central_Struct_ddozierWYN4.rvt

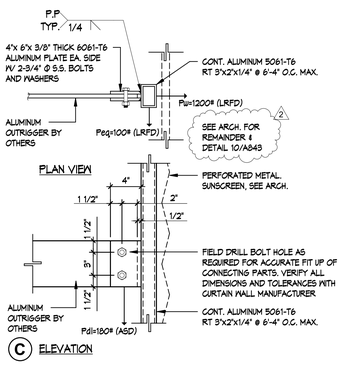

OUTRIGGER DETAIL 16
1 1/2" = 1'-0"

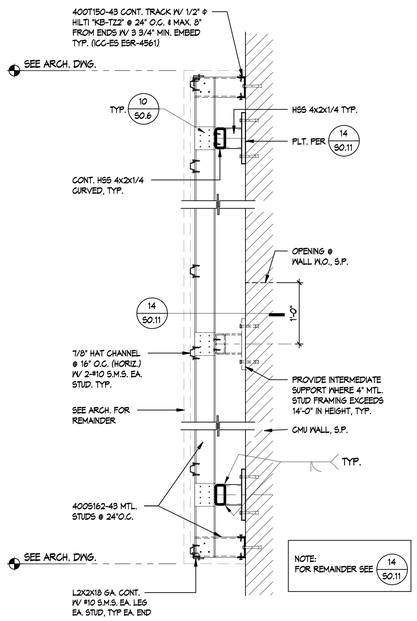

ACOUSTIC WALL PANEL DETAIL 13
1" = 1'-0"

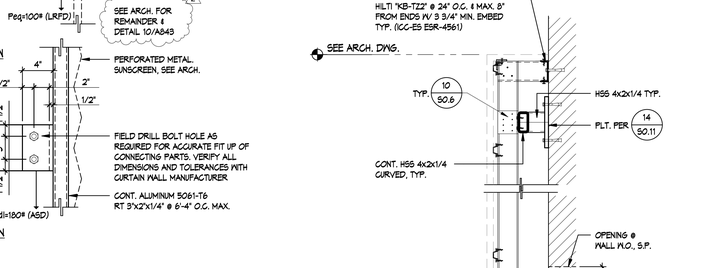

ACOUSTIC WALL PANEL DETAIL 14
1" = 1'-0"

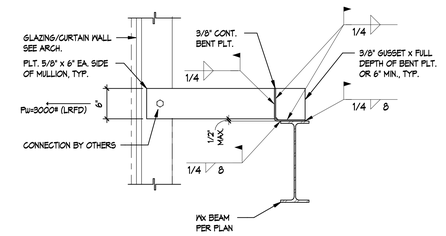

DETAIL 15
1" = 1'-0"

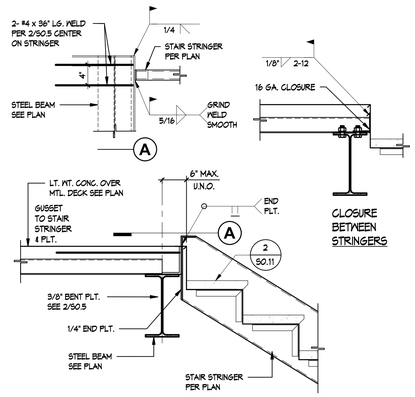

TYP - STAIR STRINGER TO W BEAM AT FLOOR 9
1" = 1'-0"

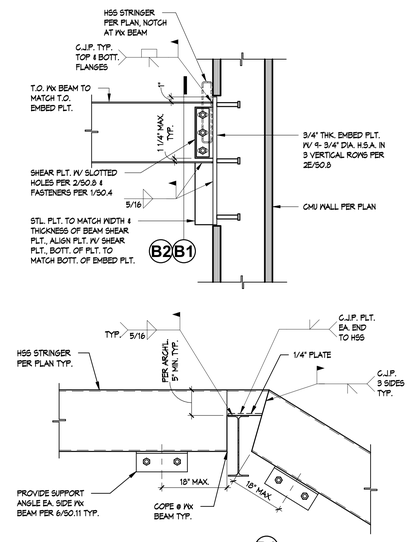

STEEL BEAM TO CMU WALL CONN. 11
1" = 1'-0"

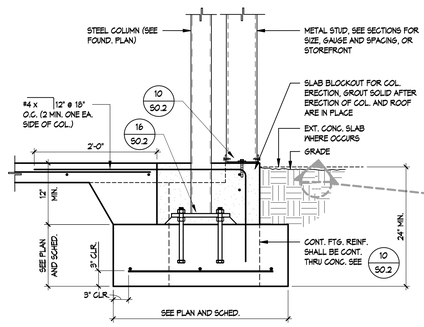

STEEL COLUMN ADJACENT TO METAL STUD WALL 12
1" = 1'-0"

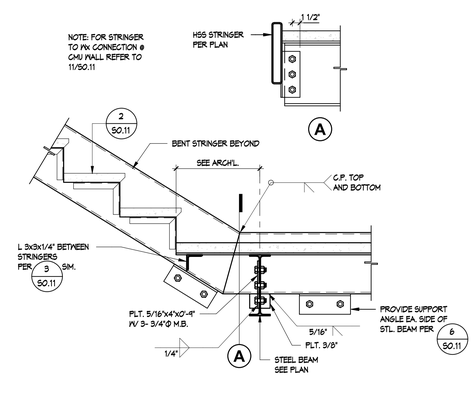

TYP - BENT STRINGER DETAIL 5
1" = 1'-0"

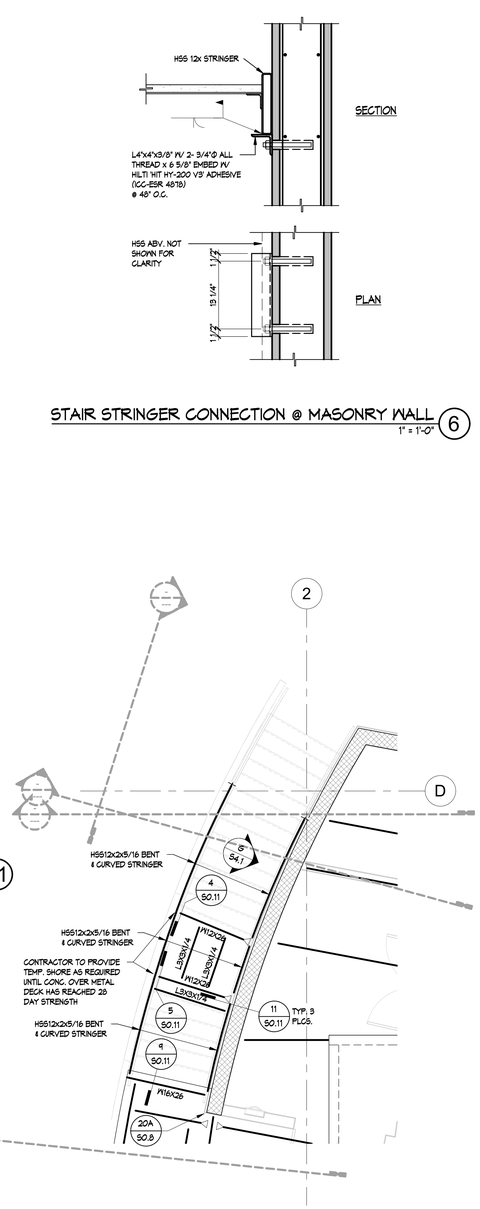

STAIR STRINGER CONNECTION @ MASONRY WALL 6
1" = 1'-0"

ENLARGED STAIR FRAMING PLAN 7
1/4" = 1'-0"

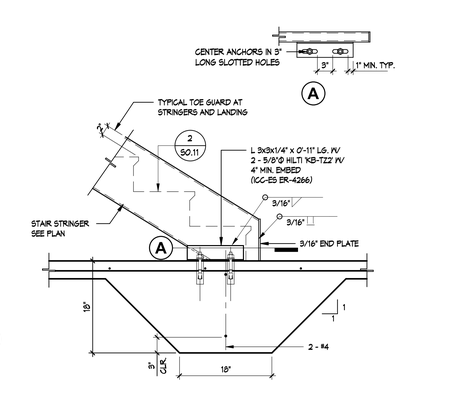

TYP - STAIR STRINGER TO FOUNDATION DETAIL 1
1" = 1'-0"

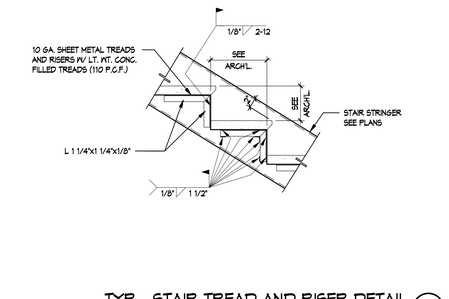

TYP - STAIR TREAD AND RISER DETAIL 2
1" = 1'-0"

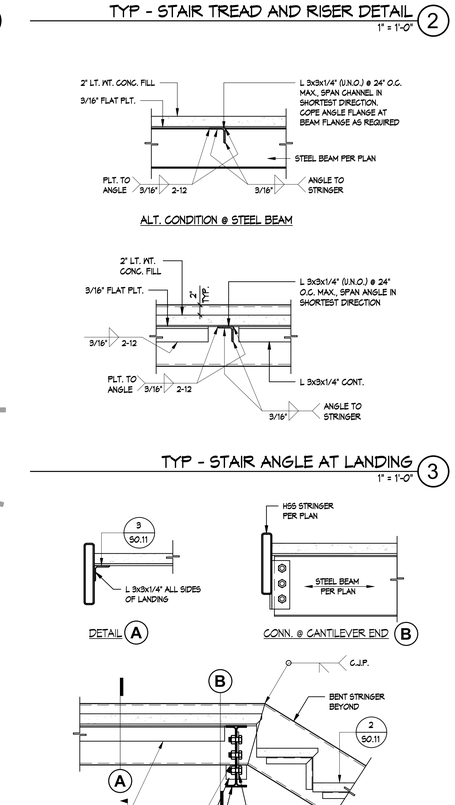

TYP - STAIR ANGLE AT LANDING 3
1" = 1'-0"

TYP - BENT STRINGER AT LANDING 4
1" = 1'-0"

APPL No. A03-122864

DSA

Archite

RACHLIN PARTNERS
8640 National Boulevard
Culver City, CA 90232
310.204.3400

Disclaim

THESE DRAWINGS ARE THE PROPERTY OF THE ARCHITECT. THE DESIGNS SHOWN AND DESCRIBED HEREIN INCLUDING ALL TECHNICAL DRAWINGS ARE PROPRIETARY AND CANNOT BE COPIED, DUPLICATED OR COMMERCIALLY EXPLOITED EXCEPT BY WRITTEN AGREEMENT. THESE DRAWINGS AND DESIGNS SHALL NOT BE USED BY THE OWNER ON OTHER PROJECTS, FOR ADDITIONS TO THIS PROJECT, OR FOR COMPLETION OF THIS PROJECT BY OTHERS. THE OWNER AGREES TO HOLD HARMLESS, INDEMNIFY AND DEFEND THE ARCHITECT AGAINST ALL DAMAGES, CLAIMS AND LOSSES, INCLUDING DEFENSE COSTS, ARISING OUT OF ANY REUSE OF PLANS AND SPECIFICATIONS WITHOUT THE WRITTEN AUTHORIZATION OF THE ARCHITECT OF RECORD.

Copyright © 2022 Rachlin Partners, All Rights Reserved.

Performing Arts Center

Hacienda La Puente Unified School District
635 North California Avenue
La Puente, CA 91744

Re	Dat	Issu
1	7.22.22	50%
2	10.21.22	50%
3	12.09.22	100% CD DSA
2.	10.31.23	ADDENDUM NO. 2

Date: 11/21/22
Scale: As indicated
Drawn By: Author
Checked By: Checker

Architect / Engineer

LICENSED ARCHITECT — Frank J. Rice — No. C-26029 — REN. 8-31-23 — STATE OF CALIFORNIA
REGISTERED PROFESSIONAL ENGINEER — Frank J. Rice — No. S5372 — Exp. 09/30/23 — STRUCTURAL — STATE OF CALIFORNIA

Consulta
Miyamoto International, Inc.
The Ruzika Company, Inc.
MDC Consulting Engineers
Pocock Design Solutions
Newson Brown Acoustics, LLC
VCA Engineers, Inc.
HJSA Consulting

Sheet Title

STAIR DETAILS

Sheet

S0.11

C:\Users\ddozier\Documents\89-S62-R22_Central_Strud_ddozierWYN14.rvt

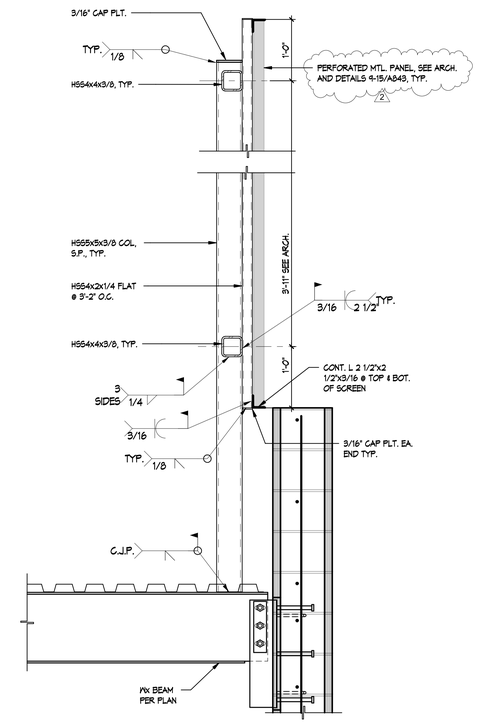

SCREEN WALL DETAIL 2
1" = 1'-0"

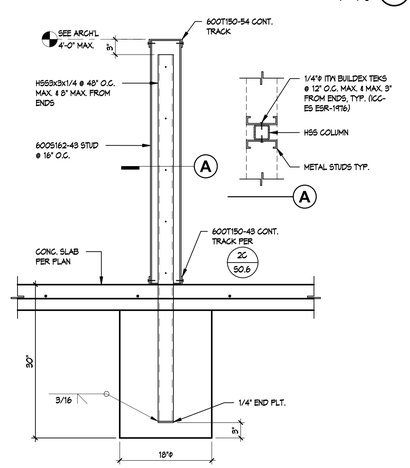

TYP - INTERIOR SUPPORT DETAIL 3
1" = 1'-0"

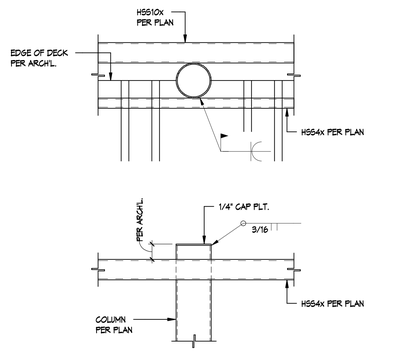

COLUMN AT CANOPY 8
1" = 1'-0"

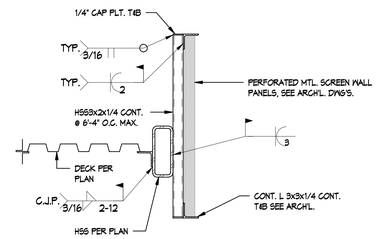

SCREEN WALL AT CANOPY 4
1" = 1'-0"

C:\Users\ddozier\Documents\89-562-R22_Central_Struct_ddozierWYNL4.rvt

APPL No. A03-122864

DSA

Archite

RACHLIN
PARTNERS
8640 National Boulevard
Culver City, CA 90232
310.204.3400

Disclaim

THESE DRAWINGS ARE THE PROPERTY OF THE ARCHITECT. THE DESIGNS SHOWN AND DESCRIBED HEREIN INCLUDING ALL TECHNICAL DRAWINGS ARE PROPRIETARY AND CANNOT BE COPIED, DUPLICATED OR COMMERCIALLY EXPLOITED EXCEPT BY WRITTEN AGREEMENT. THESE DRAWINGS AND DESIGNS SHALL NOT BE USED BY THE OWNER ON OTHER PROJECTS, FOR ADDITIONS TO THIS PROJECT, OR FOR COMPLETION OF THIS PROJECT BY OTHERS. THE OWNER AGREES TO HOLD HARMLESS, INDEMNIFY AND DEFEND THE ARCHITECT AGAINST ALL DAMAGES, CLAIMS AND LOSSES, INCLUDING DEFENSE COSTS, ARISING OUT OF ANY REUSE OF PLANS AND SPECIFICATIONS WITHOUT THE WRITTEN AUTHORIZATION OF THE ARCHITECT OF RECORD.

Copyright © 2022 Rachlin Partners, All Rights Reserved.

Performing Arts Center

Hacienda La Puente Unified School District
635 North California Avenue
La Puente, CA 91744

Re	Dat	Issu
1	7.22.22	50%
2	10.21.22	50%
3	12.09.22	100% CD DSA
2	10.31.23	ADDENDUM NO. 2

Date: 05/24/23
Scale: 1" = 1'-0"
Drawn By: Author
Checked By: Checker

Architect / Engineer

LICENSED ARCHITECT — CHRISTOPHER RACHLIN — NO. C-26229 — REN. 8-31-23 — STATE OF CALIFORNIA

REGISTERED PROFESSIONAL ENGINEER — Frank J. Rice — No. S5397 — Exp. 09-30-23 — STRUCTURAL — STATE OF CALIFORNIA

Consulta

Miyamoto International, Inc.
The Ruzika Company, Inc.
MDC Consulting Engineers
Pocock Design Solutions
Newson Brown Acoustics, LLC
VCA Engineers, Inc.
HJSA Consulting

Sheet Title

DETAILS

Sheet

S0.12

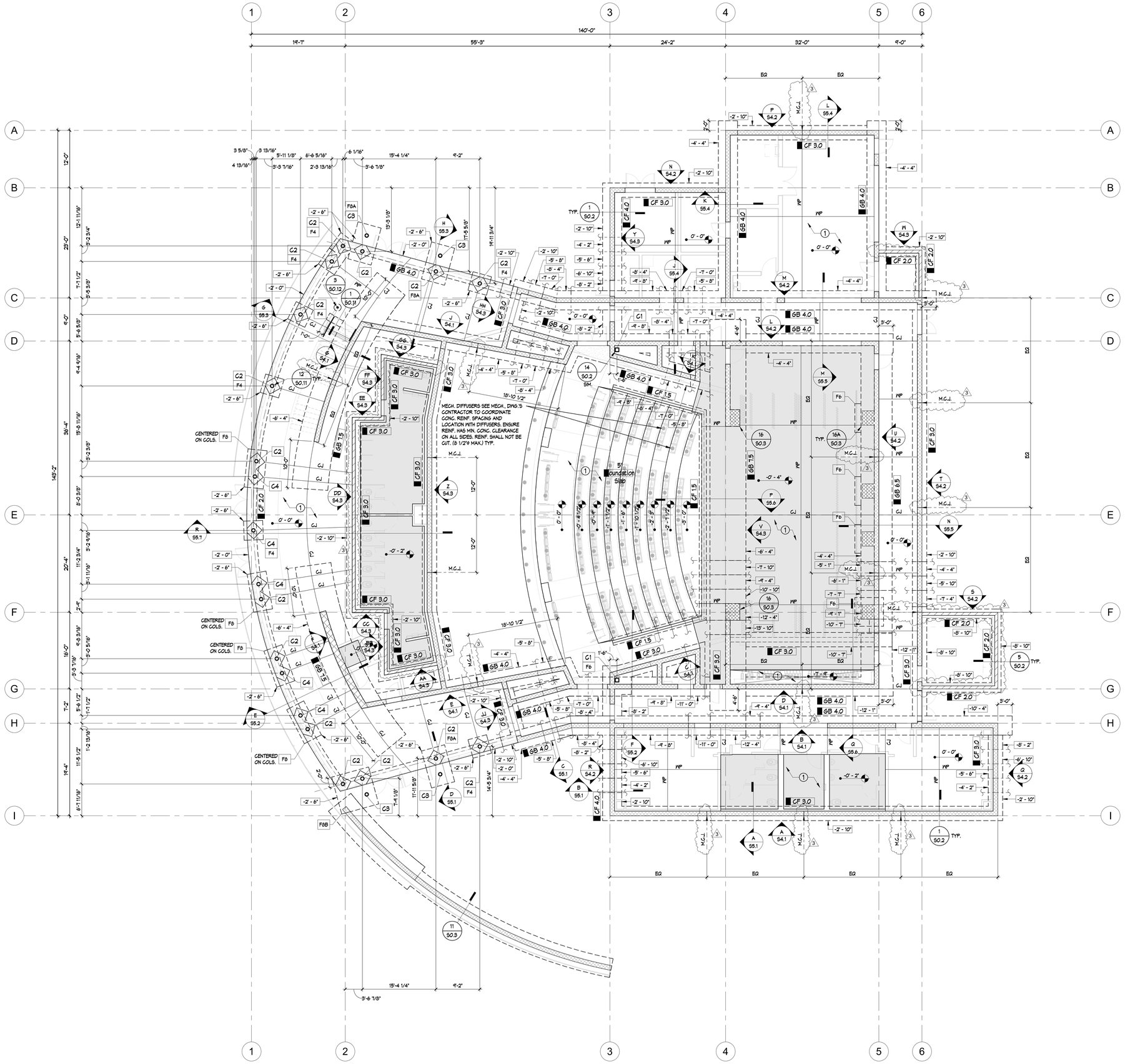

FOUNDATION PLAN NOTES

1. TYPICAL THROUGHOUT BUILDING:
   5" CONCRETE SLAB W/ #4 @ 16" O.C. EA. WAY AT MID SLAB OVER 15 MIL VAPOR BARRIER OVER 2" SAND OVER 4" AGGREGATE BASE OVER COMPACTED FILL PER SPECIFICATIONS. FOR ADDITIONAL EXCAVATION AND RECOMPACTION REQUIREMENTS SEE 8/S0.1
2. SEE GENERAL NOTES AND ABBREVIATIONS ON SHEET S0.1
3. VERIFY ALL DIMENSIONS & ELEVATIONS WITH ARCHITECTURAL DRAWINGS.
4. C.J. V.P.J. INDICATES SLAB JOINTS PER 4/S0.1
5. SHADED AREA INDICATES EXTENTS OF SLAB DEPRESSION ON PLAN. VERIFY WITH ARCH'L. DRAWINGS.
6. -0'-0" INDICATES BOTTOM OF FOOTING ELEVATION FROM REFERENCE ELEVATION 0'-0".
7. INDICATES STEP FOOTINGS ON PLANS, SEE 2/S0.1
8. STEP FOOTINGS AT ELEC./PLUMBING LINES PER 3/S0.1 AS REQUIRED.
9. REINF. AT FOOTING CORNERS PER 11/S0.1
10. TERMINATE ALL LONGITUDINAL FOOTING REINFORCING W/ STD. HOOK AT END OF ALL GRADE BEAMS.
11. REINF. FOR CONTINUOUS FOOTINGS SHALL EXTEND THROUGH THE PAD FOOTINGS, WHERE OCCURS.
12. ALL PAD FOOTINGS SHALL BE CENTERED BELOW STEEL COLUMNS OR MASONRY PILASTERS, TYPICAL, U.N.O.
13. FOR TYPICAL METAL STUD WALL DETAILS SEE SHEET S0.6
14. INDICATES 8" CONC. BLOCK WALL W/ #5 @ 24" O.C. EACH WAY AT CENTERLINE OF WALL GROUT ALL CELLS SOLID. (UNLESS NOTED OTHERWISE ON PLANS OR ELEVATIONS)
    INDICATES 12" CONC. BLOCK WALL W/ #5 @ 24" O.C. EACH WAY, EACH FACE GROUT ALL CELLS SOLID. (UNLESS NOTED OTHERWISE ON PLANS OR ELEVATIONS)
    INDICATES 16" CONC. BLOCK WALL W/ #5 @ 24" O.C. EACH WAY, EACH FACE GROUT ALL CELLS SOLID. (UNLESS NOTED OTHERWISE ON PLANS OR ELEVATIONS)
15. M.C.J. INDICATES MASONRY CONTROL JOINT (M.C.J.) SEE 9/S0.3

COLUMN SCHEDULE

MARK	COLUMN SIZE	BASE PLATE (U.N.O.)	WELD SIZE U.N.O.	SIZE AND NO. OF A.B. U.N.O.
C1	HSS6X6X5/16	1" THK	5/16"	4- 3/4" DIA. x 12" A.B.
C2	HSS8.625X.500	1" THK	5/16"	4- 3/4" DIA. x 12" A.B.
C3	HSS8.625X.500	1 1/4" THK	C.J.P.	4- 3/4" DIA. x 14" A.B.
C4	HSS8.625X.375	1" THK	C.J.P.	4- 3/4" DIA. x 12" A.B.

PAD FOOTING SCHEDULE

MARK	SIZE	REINFORCEMENT
F4	4'-0"x4'-0"x1'-6"	4- #5 BARS TOP & BOTTOM, EACH WAY
F6	6'-0"x6'-0"x1'-6"	6- #6 BARS TOP & BOTTOM, EACH WAY
F8	8'-0"x8'-0"x1'-6"	#5 BARS @ 12" O.C. TOP & BOTTOM, EACH WAY
F8A	8'-0"x8'-0"x1'-6"	#5 BARS @ 12" O.C. TOP & BOTTOM, EACH WAY
F8B	8'-0"x8'-0"x1'-6"	#5 BARS @ 12" O.C. TOP & BOTTOM, EACH WAY

CONTINUOUS FOOTING SCHEDULE

MARK	WIDTH	THICKNESS	REINFORCING
CF 1.5	1' - 6"	1' - 6"	3- #5 @ TOP & BOTTOM
CF 2.0	2' - 0"	1' - 6"	3- #5 @ TOP & BOTTOM
CF 3.0	3' - 0"	1' - 6"	4- #5 @ TOP & BOTTOM
CF 4.0	4' - 0"	1' - 6"	5- #5 @ TOP & BOTTOM

GRADE BEAM SCHEDULE

MARK	WIDTH	THICKNESS	REINFORCING	TIE CONFIG.
GB 4.0	4' - 0"	3'-0"	8- #9 TOP & BOTTOM W/ 4- #4 TIES @ 12" O.C.	
GB 6.5	6' - 6"	3'-0"	8- #9 TOP & BOTTOM W/ 4- #4 TIES @ 12" O.C.	
GB 7.5	7' - 6"	5'-0"	11 #10 TOP & BOTTOM W/ 6- #4 TIES @ 12" O.C.	

FINISH FLOOR
1/8" = 1'-0"

N

C:\Users\ddozier\Documents\689-582-R22_Central_Stud_ddozierWYNL4.rvt

APPL No. A03-122864

DSA

Archite

RACHLIN PARTNERS
8640 National Boulevard
Culver City, CA 90232
310.204.3400

Disclaim

THESE DRAWINGS ARE THE PROPERTY OF THE ARCHITECT. THE DESIGNS SHOWN AND DESCRIBED HEREIN INCLUDING ALL TECHNICAL DRAWINGS ARE PROPRIETARY AND CANNOT BE COPIED, DUPLICATED OR COMMERCIALLY EXPLOITED EXCEPT WITH THE WRITTEN PERMISSION OF THE ARCHITECT AND SHALL NOT BE USED BY THE OWNER ON OTHER PROJECTS FOR ADDITIONS TO THIS PROJECT OR FOR COMPLETION OF THIS PROJECT BY OTHERS. THE OWNER AGREES TO HOLD HARMLESS, INDEMNIFY AND DEFEND THE ARCHITECT AGAINST ALL DAMAGES, CLAIMS AND LOSSES, INCLUDING DEFENSE COSTS, ARISING OUT OF ANY REUSE OF PLANS AND SPECIFICATIONS WITHOUT THE WRITTEN AUTHORIZATION OF THE ARCHITECT OF RECORD.

Copyright © 2022 Rachlin Partners, All Rights Reserved.

Performing Arts Center

Hacienda La Puente Unified School District
635 North California Avenue
La Puente, CA 91744

Re	Dat	Issu
1	7.22.22	50%
2	10.21.22	50%
3	12.09.22	100% CD DSA
2	10.31.23	ADDENDUM NO. 2
3	12.11.23	ADDENDUM NO. 3

Date: 07/18/22
Scale: As indicated
Drawn By: Author
Checked By: Checker

Architect / Engineer

LICENSED ARCHITECT — RICHARD RACHLIN — NO. C-20229 — REN. 8-31-23 — STATE OF CALIFORNIA

REGISTERED PROFESSIONAL ENGINEER — Frank J. Rice — No. S5392 — Exp. 09/30/23 — STRUCTURAL — STATE OF CALIFORNIA

Consulta
Miyamoto International, Inc.
The Ruzika Company, Inc.
MDC Consulting Engineers
Pocock Design Solutions
Newson Brown Acoustics, LLC
VCA Engineers, Inc.
HJSA Consulting

Sheet Title

FOUNDATION PLAN

Sheet

S2.11

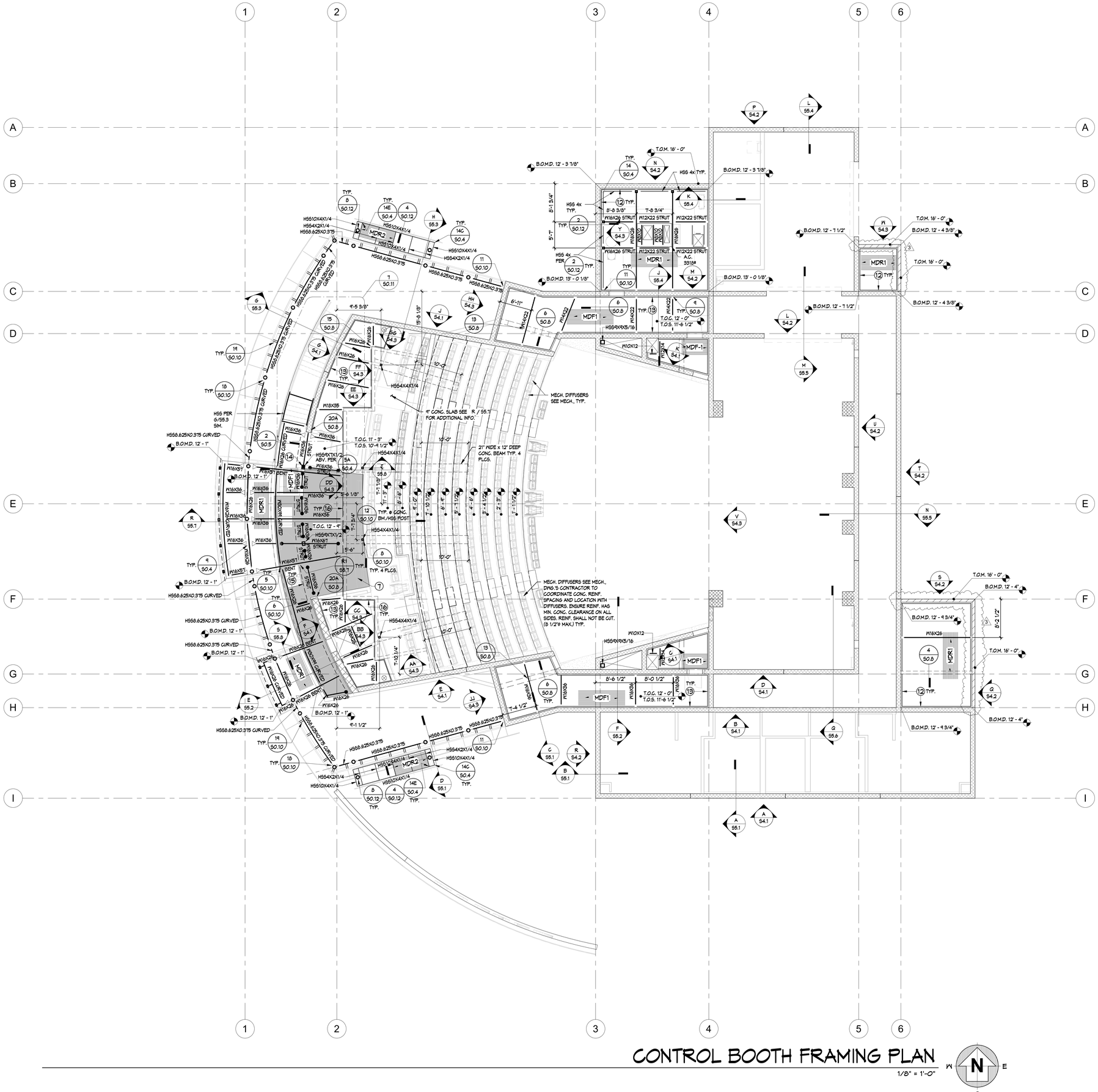

CONTROL BOOTH FRAMING PLAN

1/8" = 1'-0"

CONC. OVER METAL DECK FLOOR PLAN NOTES

FLOOR TYPES:

1. MDF1 - 3 1/2" TOTAL THICKNESS: 2 1/2" LT. WT. CONCRETE SLAB W/ #4 @ 16" O.C. EA. WAY CENTERED IN SLAB OVER 3" x 18 GA. WG FORMLOK (GALVANIZED) DECK (VENTED) BY VERCO MANUFACTURING CO., (IAPMO ER-2018) SEE 4/50.5 DECK SHALL BE CONTINUOUS OVER 2 OR MORE SUPPORTS.
2. SEE GENERAL NOTES AND ABBREVIATIONS ON SHEET 50.1
3. VERIFY ALL DIMENSIONS & ELEVATIONS WITH ARCHITECTURAL DRAWINGS.
4. DECK SHALL BE ATTACHED WITH HEADED STUD ANCHORS AND 3/4"Ø (VISIBLE, 1/2"Ø EFFECTIVE) PUDDLE WELDS. SPACE H.S.A. AS SPECIFIED ON PLANS AND DETAIL MAXIMUM SPACING OF HSA SHALL BE 12" O.C. (TYP. ALL BMS. AND GIRDERS U.N.O.) H.S.A. MAY BE USED AS DIRECT REPLACEMENT FOR PUDDLE WELDS. BUTTON PUNCH SEAMS @ 36" O.C. MAX.
5. ALL FLOOR BEAMS SHALL RECEIVE HEADED STUD ANCHORS PER 10/50.5
6. TYPICAL PIPE OR DUCT THROUGH FLOOR PER 15/50.5
7. INDICATES 4" THICK CONCRETE SLAB OVER 14" THICK STYROFOAM OVER CONCRETE FILLED METAL DECK W/ #4 @ 18" O.C. EA. WAY AT MID-SLAB HT. SEE 1/55.1 FOR MORE INFORMATION.
8. DENOTES NON-SEISMIC MOMENT CONNECTION PER 9/50.4
9. DENOTES DRAG CONNECTION PER 1/50.4
10. PROVIDE 3/4"Ø (VISIBLE, 1/2"Ø EFFECTIVE) PUDDLE WELD @ 8" O.C. MAX. TO ALL MEMBERS NOTED AS STRUT.
13. LEDGER ANGLE L3"x3"x1/4" CONT. PER 7/50.8
14. AT BEAM SUPPORTING HSS POST FROM ABOVE, PROVIDE TWO ROWS OF BOLTS AT END OF BEAM CONNECTION PER 20/50.4
15. HSS CURVED HEADER PER SECTIONS
16. LEDGER ANGLE L6x3 1/2x3/8 CONT. PER 6/50.8

ROOF PLAN NOTES

ROOF TYPES:

1. MDR1 - 1 1/2" x 18 GA. GALVANIZED VERCO TYPE FLB-36 DECK (IAPMO ER #2018) w/ 3/4" Ø (VISIBLE, 1/2"Ø EFFECTIVE) PUDDLE WELD @ 12" O.C. AT ALL SUPPORTS PARALLEL TO CORRUGATIONS AND 3/4" Ø (VISIBLE, 1/2"Ø EFFECTIVE) PUDDLE WELD AT EACH LOW CORRUGATION PERPENDICULAR TO SUPPORTS. ATTACH SEAMS w/ PUNCHLOCK (V.S.C. I) @ 24" O.C. THRU OUT U.N.O., DECK SHALL BE CONTINUOUS OVER 2 OR MORE SPANS. SEE ARCH. DRAWINGS FOR ADDITIONAL INSULATING REQUIREMENTS. FOR PROFILE SEE 5/50.5

   MDR2 - 1 1/2" x 18 GA. GALVANIZED HSB-56-36 ROOF DECK BY VERCO MANUFACTURING CO. (IAPMO ER #217) W/ NO. 12-24 1/8" LG. TEKS 4 HEX WASHER HEAD WITH NEOPRENE WASHERS @ 6" O.C. EA. BEARING, STAGGER BOTH SIDES OF BEAM. ATTACH SIDE LAPS WITH NO. 21-24 x E/ 4" LG. TEKS 1 HEX WASHER HEAD WITH NEOPRENE WASHERS @ 24" O.C. (ICC-ES ESR-3056) FOR PROFILE SEE 3/50.5
2. SEE GENERAL NOTES AND ABBREVIATIONS ON SHEET 50.1
3. VERIFY ALL DIMENSIONS & ELEVATIONS WITH ARCHITECTURAL DRAWINGS.
4. CONTRACTOR AND MECHANICAL CONTRACTOR SHALL PROVIDE ALL DIMENSIONS FOR THE MECHANICAL EQUIPMENT SUPPORT MEMBERS AND PENETRATIONS TO THE STRUCTURAL STEEL FABRICATOR PRIOR TO THE SHOP DRAWING PHASE. VERIFY ANY DIMENSIONS SHOWN IN THE DRAWINGS.
5. FOR MECHANICAL UNIT FRAMING (# DENOTES MECH'L UNIT WEIGHT) SEE DETAILS A.C. 1/50.1, E.F. 2/50.1, C.U. 11/50.1
6. ALL PENETRATIONS THRU ROOF DECK 24" AND SMALLER SHALL BE FRAMED PER 18/50.8 U.N.O. ON PLANS.
7. DENOTES NON-SEISMIC MOMENT CONNECTION PER 9/50.4
8. DENOTES DRAG CONNECTION PER 1/50.4
9. PROVIDE 3/4" Ø (VISIBLE, 1/2"Ø EFFECTIVE) PUDDLE WELD @ 8" O.C. MAX. TO ALL MEMBERS NOTED AS STRUT.
12. LEDGER ANGLE L5"x3"x1/4" CONT. OR LEDGER BENT PLT. 5"x4"x1/4" CONT. PER 3/50.8
14. ROOF HATCH PER 17/50.8
15. HATCHED AREA INDICATES EXTENT OF METAL DECK ROOF (MDR#) TYPE AS INDICATED ON PLAN
16. LEDGER C6x11.5 CONT. PER 3/50.8
17. W14x22 CURVED STRUT LOW & W16x26 CURVED STRUT HIGH

APPL No. A03-122864

DSA

Archite

RACHLIN PARTNERS
8640 National Boulevard
Culver City, CA 90232
310.204.3400

Disclaim

THESE DRAWINGS ARE THE PROPERTY OF THE ARCHITECT. THE DESIGNS SHOWN AND DESCRIBED HEREIN INCLUDING ALL TECHNICAL DRAWINGS ARE PROPRIETARY AND CANNOT BE COPIED, DUPLICATED OR COMMERCIALLY EXPLOITED EITHER IN WHOLE OR IN PART. THESE DRAWINGS AND SPECIFICATIONS SHALL NOT BE USED BY THE OWNER ON OTHER PROJECTS, FOR ADDITIONS TO THIS PROJECT, OR FOR COMPLETION OF THIS PROJECT BY OTHERS. THE OWNER AGREES TO HOLD HARMLESS, INDEMNIFY AND DEFEND THE ARCHITECT AGAINST ALL DAMAGES, CLAIMS AND LOSSES, INCLUDING DEFENSE COSTS, ARISING OUT OF ANY REUSE OF PLANS AND SPECIFICATIONS WITHOUT THE WRITTEN AUTHORIZATION OF THE ARCHITECT OF RECORD.

Copyright © 2022 Rachlin Partners, All Rights Reserved.

Performing Arts Center

Hacienda La Puente Unified School District
635 North California Avenue
La Puente, CA 91744

Re	Dat	Issu
1	7.22.22	50%
2	10.21.22	50%
3	12.09.22	100% CD DSA
2.	10.31.23	ADDENDUM NO. 2
3.	12.11.23	ADDENDUM NO. 3

Date: 07/18/22
Scale: As indicated
Drawn By: Author
Checked By: Checker

Architect / Engineer

LICENSED ARCHITECT — NO. C-28229 — REN. 8-31-23 — STATE OF CALIFORNIA
REGISTERED PROFESSIONAL ENGINEER — Frank J. Rice — No. S3392 — Exp. 09-30-23 — CIVIL STRUCTURAL — STATE OF CALIFORNIA

Consulta

Miyamoto International, Inc.
The Ruzika Company, Inc.
MDC Consulting Engineers
Pocock Design Solutions
Newson Brown Acoustics, LLC
VCA Engineers, Inc.
HJSA Consulting

Sheet Title

CONTROL BOOTH FRAMING PLAN

Sheet

S2.12

C:\Users\dstozier\Documents\689-502-R22_Central_Struct_dstozierWYNL4.rvt

CONC. OVER METAL DECK FLOOR PLAN NOTES

FLOOR TYPES:

1. MDF1 - 5 1/2" TOTAL THICKNESS:
   2 1/2" LT. WT. CONCRETE SLAB W/ #4 @ 18" O.C. EA. WAY CENTERED IN SLAB OVER 3" x 18 GA. WB FORMLOK (GALVANIZED) DECK (VENTED) BY VERCO MANUFACTURING CO., (IAPMO ER-2018) SEE (4/50.5) DECK SHALL BE CONTINUOUS OVER 2 OR MORE SUPPORTS.
2. SEE GENERAL NOTES AND ABBREVIATIONS ON SHEET S0.1
3. VERIFY ALL DIMENSIONS & ELEVATIONS WITH ARCHITECTURAL DRAWINGS.
4. DECK SHALL BE ATTACHED WITH HEADED STUD ANCHORS AND 3/4"Ø (VISIBLE, 1/2"Ø EFFECTIVE) PUDDLE WELDS. SPACE H.S.A. AS SPECIFIED ON PLANS AND DETAIL MAXIMUM SPACING OF HSA SHALL BE 12" O.C. (TYP. ALL BMS. AND GIRDERS U.N.O.) H.S.A. MAY BE USED AS DIRECT REPLACEMENT FOR PUDDLE WELDS. BUTTON PUNCH SEAMS @ 36" O.C. MAX.
5. ALL FLOOR BEAMS SHALL RECEIVE HEADED STUD ANCHORS PER (10/50.5)
6. TYPICAL PIPE OR DUCT THROUGH FLOOR PER (15/50.5)
7. INDICATES 4" THICK CONCRETE SLAB OVER 14" THICK STYROFOAM OVER CONCRETE FILLED METAL DECK W/ #4 @ 18" O.C. EA. WAY AT MID-SLAB HT. SEE 1/S5.1 FOR MORE INFORMATION.
8. DENOTES NON-SEISMIC MOMENT CONNECTION PER (9/50.4)
9. DENOTES DRAG CONNECTION PER (1/50.4)
10. PROVIDE 3/4"Ø (VISIBLE, 1/2"Ø EFFECTIVE) PUDDLE WELD @ 8" O.C. MAX. TO ALL MEMBERS NOTED AS STRUT.
13. LEDGER ANGLE L3"x3"x1/4" CONT. PER (7/50.8)
14. AT BEAM SUPPORTING HSS POST FROM ABOVE, PROVIDE TWO ROWS OF BOLTS AT END OF BEAM CONNECTION PER (20/50.4)
15. HSS CURVED HEADER PER SECTIONS
16. LEDGER ANGLE L6x3 1/2x3/8 CONT. PER (6/50.8)

ROOF PLAN NOTES

ROOF TYPES:

1. MDR1 - 1 1/2" x 18 GA. GALVANIZED VERCO TYPE PLB-36 DECK (IAPMO ER #2018) w/ 3/4" Ø (VISIBLE, 1/2"Ø EFFECTIVE) PUDDLE WELD @ 12" O.C. AT ALL SUPPORTS PARALLEL TO CORRUGATIONS AND 3/4" Ø (VISIBLE, 1/2"Ø EFFECTIVE) PUDDLE WELD AT EACH LOW CORRUGATION PERPENDICULAR TO SUPPORTS. ATTACH SEAMS W/ PUNCHLOCK (V.S.C. II) @ 24" o.c. THRU OUT U.N.O., DECK SHALL BE CONTINUOUS OVER 2 OR MORE SPANS. SEE ARCH. DRAWINGS FOR ADDITIONAL INSULATING REQUIREMENTS. FOR PROFILE SEE 3/S0.5

   MDR2 - 1 1/2" x 18 GA. GALVANIZED HSB-55-36 ROOF DECK BY VERCO MANUFACTURING CO. (IAPMO ER #211) W/ NO. 12-24 7/8" LG. TEKS 4 HEX WASHER HEAD WITH NEOPRENE WASHERS @ 6" O.C. EA. BEARING, STAGGER BOTH SIDES OF BEAM. ATTACH SIDE LAPS WITH NO. 21-24 x E/ 4" LG. TEKS 1 HEX WASHER HEAD WITH NEOPRENE WASHERS @ 24" O.C. (ICC-ES ESR-3056) FOR PROFILE SEE 3/S0.5

2. SEE GENERAL NOTES AND ABBREVIATIONS ON SHEET S0.1
3. VERIFY ALL DIMENSIONS & ELEVATIONS WITH ARCHITECTURAL DRAWINGS.
4. CONTRACTOR AND MECHANICAL CONTRACTOR SHALL PROVIDE ALL DIMENSIONS FOR THE MECHANICAL EQUIPMENT SUPPORT MEMBERS AND PENETRATIONS TO THE STRUCTURAL STEEL FABRICATOR PRIOR TO THE SHOP DRAWING PHASE. VERIFY ANY DIMENSIONS SHOWN IN THE DRAWINGS.
5. FOR MECHANICAL UNIT FRAMING (# DENOTES MECH'L UNIT WEIGHT) SEE DETAILS A.C. (1/50.1), E.F. (2/50.1), C.U. (11/50.1)
6. ALL PENETRATIONS THRU ROOF DECK 24" AND SMALLER SHALL BE FRAMED PER 18/S0.8 U.N.O. ON PLANS.
7. DENOTES NON-SEISMIC MOMENT CONNECTION PER (9/50.4)
8. DENOTES DRAG CONNECTION PER (1/50.4)
9. PROVIDE 3/4" Ø (VISIBLE, 1/2"Ø EFFECTIVE) PUDDLE WELD @ 8" O.C. MAX. TO ALL MEMBERS NOTED AS STRUT.
12. LEDGER ANGLE L8"x8"x1/4" CONT. OR LEDGER BENT PLT. 5"x4"x1/4" CONT. PER (3/50.8)
14. ROOF HATCH PER (17/50.8)
15. HATCHED AREA INDICATES EXTENT OF METAL DECK ROOF (MDR1) TYPE AS INDICATED ON PLAN
16. LEDGER C8x11.5 CONT. PER (3/50.9)
17. W14x22 CURVED STRUT LOW & W16x26 CURVED STRUT HIGH

LOW ROOF FRAMING/CATWALK FRAMING PLAN

1/8" = 1'-0"

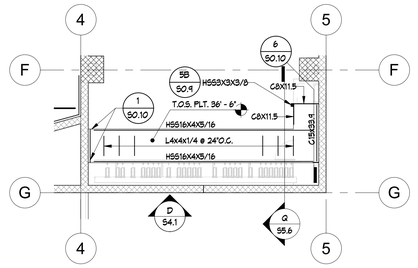

LOADING GALLERY CATWALK FRAMING PLAN (A)

1/8" = 1'-0"

APPL No. A03-122864

DSA

Archite

RACHLIN PARTNERS
8640 National Boulevard
Culver City, CA 90232
310.204.3400

Disclaim

THESE DRAWINGS ARE THE PROPERTY OF THE ARCHITECT. THE DESIGNS SHOWN AND DESCRIBED HEREIN INCLUDING ALL TECHNICAL DRAWINGS ARE PROPRIETARY AND CANNOT BE COPIED, DUPLICATED OR COMMERCIALLY EXPLOITED EXCEPT WITH THE WRITTEN PERMISSION OF THE ARCHITECT AND SHALL NOT BE USED BY THE OWNER ON OTHER PROJECTS, FOR ADDITIONS TO THIS PROJECT, OR FOR COMPLETION OF THIS PROJECT BY OTHERS. THE OWNER AGREES TO HOLD HARMLESS, INDEMNIFY AND DEFEND THE ARCHITECT AGAINST ALL DAMAGES, CLAIMS AND LOSSES, INCLUDING DEFENSE COSTS, ARISING OUT OF ANY REUSE OF PLANS AND SPECIFICATIONS WITHOUT THE WRITTEN AUTHORIZATION OF THE ARCHITECT OF RECORD.

Copyright © 2022 Rachlin Partners, All Rights Reserved.

Performing Arts Center

Hacienda La Puente Unified School District
635 North California Avenue
La Puente, CA 91744

Re	Dat	Issu
1	7.22.22	50%
2	10.21.22	50%
3	12.09.22	100% CD DSA
2	10.31.23	ADDENDUM NO. 2
3	12.11.23	ADDENDUM NO. 3

Date: 07/18/22
Scale: As indicated
Drawn By: Author
Checked By: Checker

Architect / Engineer

LICENSED ARCHITECT — Frank J. Rice — NO. C-26229 — REN. 8-31-23 — STATE OF CALIFORNIA

REGISTERED PROFESSIONAL ENGINEER — Frank J. Rice — No. S5372 — Exp. 09/30/23 — STRUCTURAL — STATE OF CALIFORNIA

Consulta
Miyamoto International, Inc.
The Ruzika Company, Inc.
MDC Consulting Engineers
Pocock Design Solutions
Newson Brown Acoustics, LLC
VCA Engineers, Inc.
HJSA Consulting

Sheet Title

LOW ROOF FRAMING & CATWALK FRAMING PLAN

Sheet

S2.13

C:\Users\sdozier\Documents\89-S62-R22_Central_Strud_sdozierWYNL4.rvt

ROOF FRAMING PLAN

1/8" = 1'-0"

® ROOF PLAN NOTES

ROOF TYPES:

1. MDR1 - 1 1/2" x 18 GA. GALVANIZED VERCO TYPE PLB-36 DECK (IAPMO ER #211) w/ 5/8" Ø PUDDLE WELD @ 12" O.C. AT ALL SUPPORTS PARALLEL TO CORRUGATIONS AND 5/8" Ø PUDDLE WELD AT EACH LON CORRUGATION PERPENDICULAR TO SUPPORTS. ATTACH SEAMS w/ PUNCHLOCK (V.S.C. II) @ 24" o.c. THRU OUT U.N.O., DECK SHALL BE CONTINUOUS OVER 2 OR MORE SPANS. SEE ARCH. DRAWINGS FOR ADDITIONAL INSULATING REQUIREMENTS. FOR PROFILE SEE 3/50.5

1. MDR2 - 1 1/2" x 18 GA. GALVANIZED VERCO TYPE PLB-36 DECK (IAPMO ER #211) w/ 5/8" Ø PUDDLE WELD @ 12" O.C. AT ALL SUPPORTS PARALLEL TO CORRUGATIONS AND 5/8" Ø PUDDLE WELD AT EACH LON CORRUGATION PERPENDICULAR TO SUPPORTS. ATTACH SEAMS w/ PUNCHLOCK (V.S.C. II) @ 6" o.c. THRU OUT U.N.O., DECK SHALL BE CONTINUOUS OVER 2 OR MORE SPANS. SEE ARCH. DRAWINGS FOR ADDITIONAL INSULATING REQUIREMENTS. FOR PROFILE SEE 3/50.5

1. MDR3 - 1 1/2" x 18 GA. GALVANIZED VERCO TYPE PLB-36 DECK (IAPMO ER #211) w/ 5/8" Ø PUDDLE WELD @ 12" O.C. AT ALL SUPPORTS PARALLEL TO CORRUGATIONS AND 5/8" Ø PUDDLE WELD AT EACH LON CORRUGATION PERPENDICULAR TO SUPPORTS. ATTACH SEAMS w/ PUNCHLOCK (V.S.C. II) @ 6" o.c. THRU OUT U.N.O., DECK SHALL BE CONTINUOUS OVER 2 OR MORE SPANS. SEE ARCH. DRAWINGS FOR ADDITIONAL INSULATING REQUIREMENTS. FOR PROFILE SEE 3/50.5

2. SEE GENERAL NOTES AND ABBREVIATIONS ON SHEET S0.1
3. VERIFY ALL DIMENSIONS & ELEVATIONS WITH ARCHITECTURAL DRAWINGS.
4. CONTRACTOR AND MECHANICAL CONTRACTOR SHALL PROVIDE ALL DIMENSIONS FOR THE MECHANICAL EQUIPMENT SUPPORT MEMBERS AND PENETRATIONS TO THE STRUCTURAL STEEL FABRICATOR PRIOR TO THE SHOP DRAWING PHASE. VERIFY ANY DIMENSIONS SHOWN IN THE DRAWINGS.
5. FOR MECHANICAL UNIT FRAMING (# DENOTES MECH'L UNIT WEIGHT) SEE DETAILS M.U. 1/50.7, E.F. 2/50.7, C.U. 11/50.7
6. ALL PENETRATIONS THRU ROOF DECK 24" AND SMALLER SHALL BE FRAMED PER 12/50.5 U.N.O. ON PLANS.
7. DENOTES NON-SEISMIC MOMENT CONNECTION PER 4/50.4
8. DENOTES DRAG CONNECTION PER 1/50.4
9. PROVIDE 5/8"Ø PUDDLE WELD @ 8" O.C. MIN. TO ALL MEMBERS NOTED AS STRUT.
12. LEDGER ANGLE L5"x3"x1/4" CONT. OR LEDGER BENT PLT. 5"x4"x1/4" CONT. PER 3/50.8
14. ROOF HATCH PER 17/50.8
15. HATCHED AREA INDICATES EXTENT OF METAL DECK ROOF (MDR#) TYPE AS INDICATED ON PLAN

APPL No. A03-122864

IDENTIFICATION STAMP
DIV. OF THE STATE ARCHITECT
APP: 03-122864 INC:
REVIEWED FOR
SS ☑ FLS ☑ ACS ☑
DATE: 10/03/2023

DSA

Archite

RACHLIN
PARTNERS
8640 National Boulevard
Culver City, CA 90232
310.204.3400

Disclaim

THESE DRAWINGS ARE THE PROPERTY OF THE ARCHITECT. THE DESIGNS SHOWN AND DESCRIBED HEREIN INCLUDING ALL TECHNICAL DRAWINGS ARE PROPRIETARY AND CANNOT BE COPIED, DUPLICATED OR COMMERCIALLY EXPLOITED EXCEPT BY WRITTEN AGREEMENT. THESE DRAWINGS AND DESIGNS SHALL NOT BE USED BY THE OWNER ON OTHER PROJECTS, FOR ADDITIONS TO THIS PROJECT, OR FOR COMPLETION OF THIS PROJECT BY OTHERS. THE OWNER AGREES TO HOLD HARMLESS, INDEMNIFY AND DEFEND THE ARCHITECT AGAINST ALL DAMAGES, CLAIMS AND LOSSES, INCLUDING DEFENSE COSTS, ARISING OUT OF ANY REUSE OF PLANS AND SPECIFICATIONS WITHOUT THE WRITTEN AUTHORIZATION OF THE ARCHITECT OF RECORD.

Copyright © 2022 Rachlin Partners, All Rights Reserved.

Performing Arts Center

Hacienda La Puente Unified School District
635 North California Avenue
La Puente, CA 91744

Re	Dat	Issu
1	7.22.22	50%
2	10.21.22	50%
3	12.09.22	100% CD DSA
4	6.19.23	100% CD DSA RESUBMITTAL
5	9.20.23	DSA BACK CHECK

Date: 9.20.2023
Scale: As indicated
Drawn By: Author
Checked By: Checker

Architect / Engineer

LICENSED ARCHITECT — I CONSENT TO THE USE OF MY SIGNATURE — NO. C-26229 — REN. 8-31-25 — STATE OF CALIFORNIA

REGISTERED PROFESSIONAL ENGINEER — Frank J. Rice — No. SE3197 — Exp. 09-30-23 — STRUCTURAL — STATE OF CALIFORNIA

Consulta

Miyamoto International, Inc.
The Ruzika Company, Inc.
MDC Consulting Engineers
Pocock Design Solutions
Newson Brown Acoustics, LLC
VCA Engineers, Inc.
HJSA Consulting

Sheet Title

ROOF
FRAMING PLAN

Sheet

S2.14

C:\Users\sdozier\Documents\69-S02-R22_Central_Struct_sdozierWYNL4.rvt

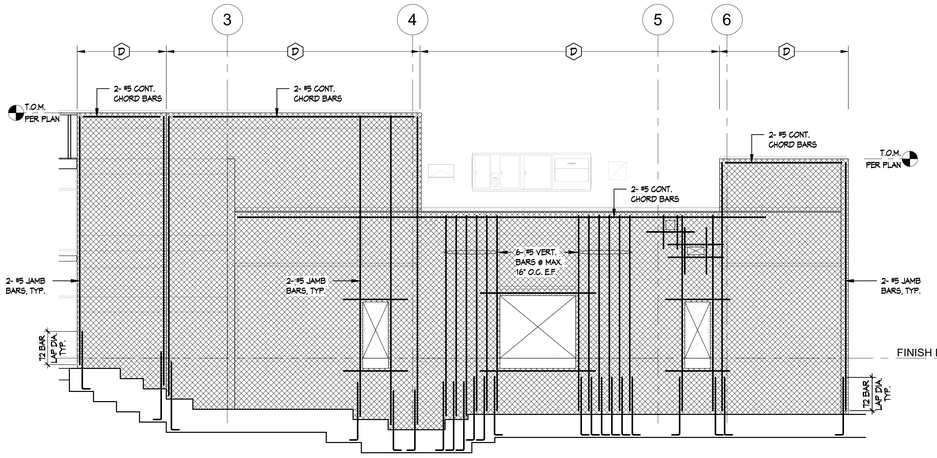

WALL ELEVATION B
1/8" = 1'-0"

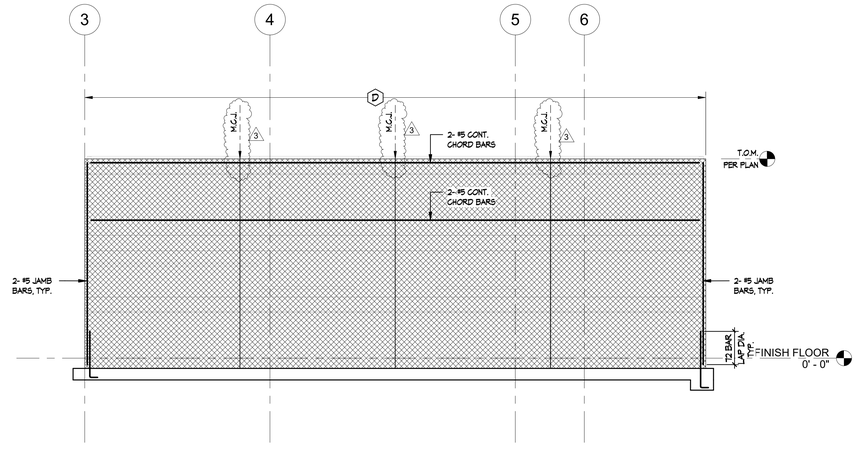

WALL ELEVATION A
1/8" = 1'-0"

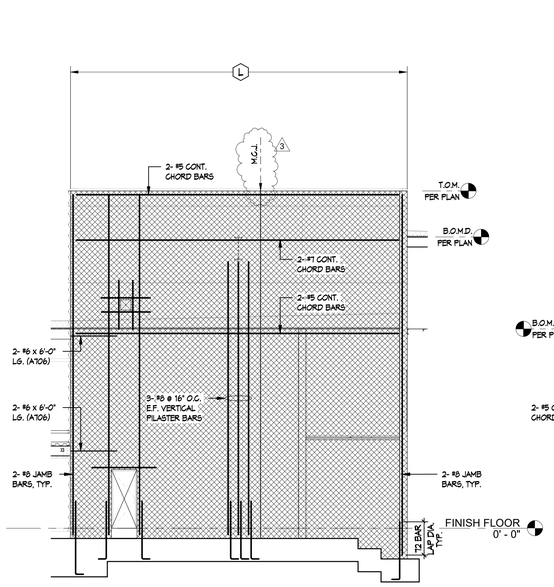

WALL ELEVATION E
1/8" = 1'-0"

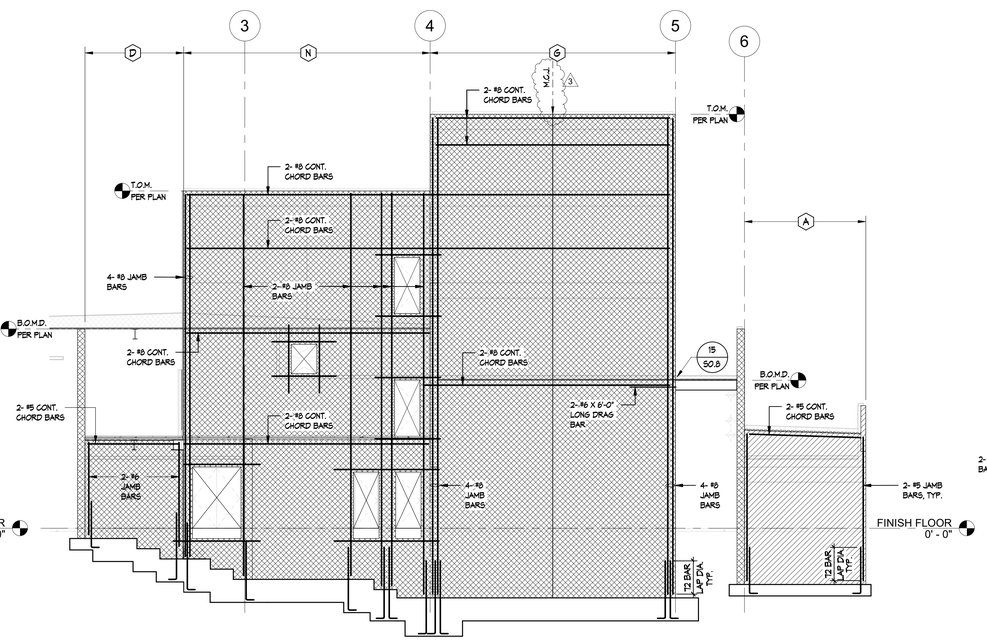

WALL ELEVATION D
1/8" = 1'-0"

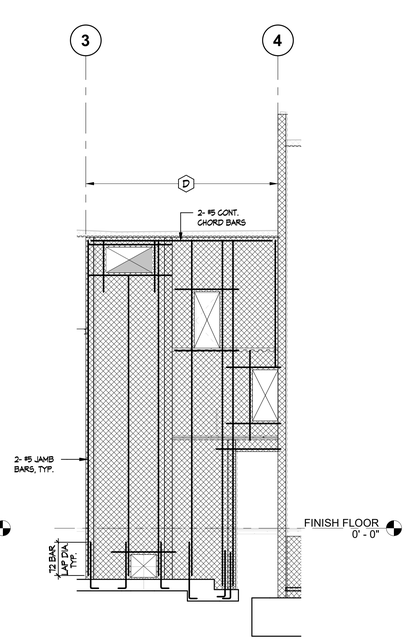

WALL ELEVATION C
1/8" = 1'-0"

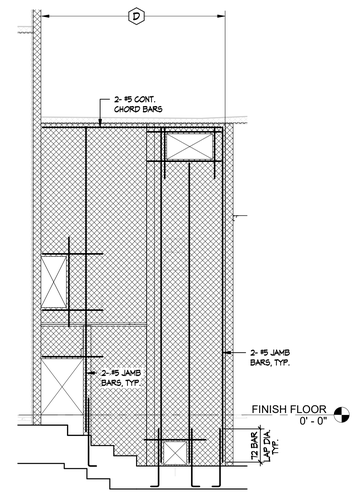

WALL ELEVATION K
1/8" = 1'-0"

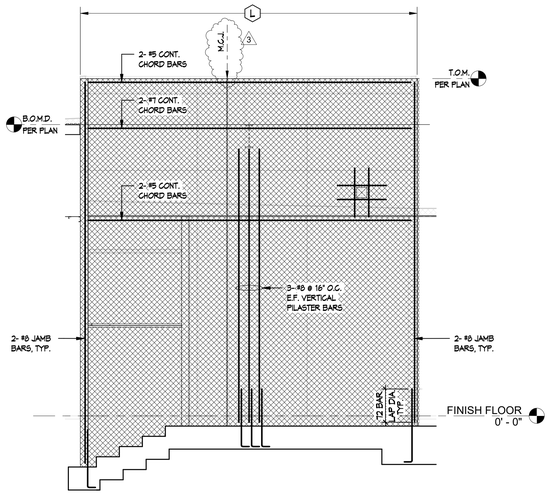

WALL ELEVATION J
1/8" = 1'-0"

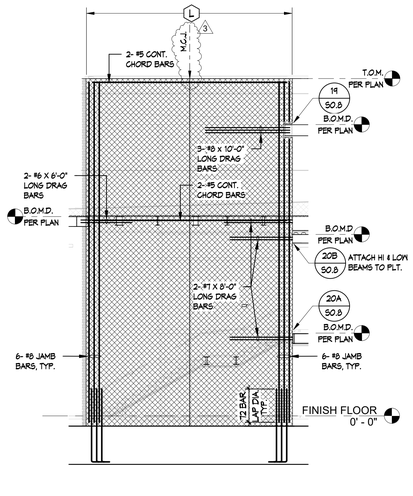

WALL ELEVATION G
1/8" = 1'-0"

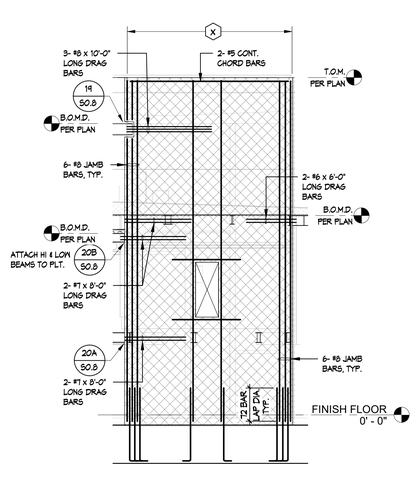

WALL ELEVATION F
1/8" = 1'-0"

WALL ELEVATION NOTES

1. SEE MASONRY NOTES ON SHEET S0.1
2. SEE TYPICAL MASONRY WALL REINFORCING DETAIL 2/S0.3
3. SEE TYPICAL OPENING REINFORCEMENT DETAIL FOR ALL DOORS, WINDOWS AND DUCT OPENINGS IN MASONRY WALLS 4/S0.3
4. GENERAL CONTRACTOR SHALL COORDINATE ALL MECHANICAL DUCT PENETRATION SIZE AND LOCATIONS IN MASONRY WALLS WITH THE MECHANICAL ENGINEER AND ARCHITECT. ANY DEVIATION OF DUCT SIZE AND LOCATION FROM THE STRUCTURAL DRAWINGS FOR OPENINGS SHOWN SHALL BE BROUGHT TO THE ATTENTION OF THE S.E.O.R. FOR EVALUATION PRIOR TO COMMENCING. FOR DUCT PENETRATIONS NOT SHOWN ON ELEVATION, DET. 4/S0.3 SHALL BE FOLLOWED. NO CHORD REINFORCING, DRAG REINFORCING, OR JAMB REINFORCING SHOWN ON ELEVATIONS SHALL BE INTERRUPTED BY A DUCT PENETRATION. NO DUCT PENETRATIONS SHALL BE LOCATED WITHIN 2'-0" OF A BEAM POCKET OR BEARING CONDITION.
5. AT ALL JAMB BARS, LAP DOWELS FROM FOOTING 12 BAR DIA. LAP MIN.
6. EXTERIOR LIGHT FIXTURE W/ RECESSED ELECTRICAL BOX IN MASONRY, SHALL BE LOCATED IN A UNREINFORCED HORIZONTAL & VERTICAL MASONRY CELL. CONDUIT SHALL RUN VERTICAL IN A UNREINFORCED CELL ONLY PER 2/S0.3
7. GROUT ALL 8", 12" AND 16" MASONRY WALLS SOLID.
8. INDICATES 8" CONC. BLOCK WALL
9. INDICATES 12" CONC. BLOCK WALL
10. INDICATES 16" CONC. BLOCK WALL

MASONRY WALL REINFORCING SCHEDULE

TYPE	WALL SIZE	REINFORCING
A	8" CMU	#5 @ 24" O.C. VERT. AT C OF WALL #5 @ 24" O.C. HORIZ. AT C OF WALL
B	8" CMU	#5 @ 16" O.C. VERT. AT C OF WALL #5 @ 16" O.C. HORIZ. AT C OF WALL
C	8" CMU	#5 @ 16" O.C. VERT. AT C OF WALL #5 @ 24" O.C. HORIZ. E.F.
D	12" CMU	#5 @ 24" O.C. VERT. E.F. #5 @ 24" O.C. HORIZ. E.F.
E	12" CMU	#6 @ 16" O.C. VERT. E.F. #6 @ 16" O.C. HORIZ. E.F.
F	12" CMU	#5 @ 16" O.C. VERT. E.F. #5 @ 24" O.C. HORIZ. E.F.
G	12" CMU	#5 @ 24" O.C. VERT. E.F. #8 @ 16" O.C. HORIZ. E.F.
H	12" CMU	#5 @ 24" O.C. VERT. E.F. #5 @ 16" O.C. HORIZ. E.F.
J	12" CMU	#5 @ 16" O.C. VERT. E.F. #6 @ 16" O.C. HORIZ. E.F.
K	12" CMU	#6 @ 16" O.C. VERT. E.F. #5 @ 16" O.C. HORIZ. E.F.
L	12" CMU	#8 @ 16" O.C. VERT. E.F. #5 @ 24" O.C. HORIZ. E.F.
M	12" CMU	#7 @ 16" O.C. VERT. E.F. #5 @ 24" O.C. HORIZ. E.F.
N	12" CMU	#8 @ 16" O.C. VERT. E.F. #8 @ 16" O.C. HORIZ. E.F.
P	12" CMU	#6 @ 16" O.C. VERT. E.F. #8 @ 16" O.C. HORIZ. E.F.
U	12" CMU	#8 @ 16" O.C. VERT. E.F. #6 @ 16" O.C. HORIZ. E.F.
V	12" CMU	#5 @ 16" O.C. VERT. E.F. #5 @ 16" O.C. HORIZ. E.F.
W	12" CMU	#5 @ 16" O.C. VERT. E.F. #7 @ 16" O.C. HORIZ. E.F.
X	16" CMU	#5 @ 16" O.C. VERT. E.F. #5 @ 24" O.C. HORIZ. E.F.

APPL No. A03-122864

DSA

Archite

RACHLIN
PARTNERS
8640 National Boulevard
Culver City, CA 90232
310.204.3400

Disclaim

THESE DRAWINGS ARE THE PROPERTY OF THE ARCHITECT. THE DESIGNS SHOWN AND DESCRIBED HEREIN INCLUDING ALL TECHNICAL DRAWINGS ARE PROPRIETARY AND CANNOT BE COPIED, DUPLICATED OR COMMERCIALLY EXPLOITED EXCEPT WITH THE WRITTEN PERMISSION OF THE ARCHITECT AND SHALL NOT BE USED BY THE OWNER ON OTHER PROJECTS, FOR ADDITIONS TO THIS PROJECT, OR FOR COMPLETION OF THIS PROJECT BY OTHERS. THE OWNER AGREES TO HOLD HARMLESS, INDEMNIFY AND DEFEND THE ARCHITECT AGAINST ALL DAMAGES, CLAIMS AND LOSSES, INCLUDING DEFENSE COSTS, ARISING OUT OF ANY REUSE OF PLANS AND SPECIFICATIONS WITHOUT THE WRITTEN AUTHORIZATION OF THE ARCHITECT OF RECORD.

Copyright © 2022 Rachlin Partners, All Rights Reserved.

Performing Arts Center

Hacienda La Puente Unified School District
635 North California Avenue
La Puente, CA 91744

Re	Dat	Issu
1	7.22.22	50%
2	10.21.22	50%
3	12.09.22	100% CD DSA
2.	10.31.23	ADDENDUM NO. 2
3.	12.11.23	ADDENDUM NO. 3

Date: 08/24/22
Scale: As indicated
Drawn By: Author
Checked By: Checker

Architect / Engineer

LICENSED ARCHITECT — Frank J. Rice — NO. C-26229 — REN. 8-31-23 — STATE OF CALIFORNIA
REGISTERED PROFESSIONAL ENGINEER — Frank J. Rice — No. S5397 — Exp. 09-30-23 — STRUCTURAL — STATE OF CALIFORNIA

Consulta

Miyamoto International, Inc.
The Ruzika Company, Inc.
MDC Consulting Engineers
Pocock Design Solutions
Newson Brown Acoustics, LLC
VCA Engineers, Inc.
HJSA Consulting

Sheet Title

WALL ELEVATIONS

Sheet

S4.1

C:\Users\ddozier\Documents\989-562-R22_Central_Struct_ddozierWYNL4.rvt

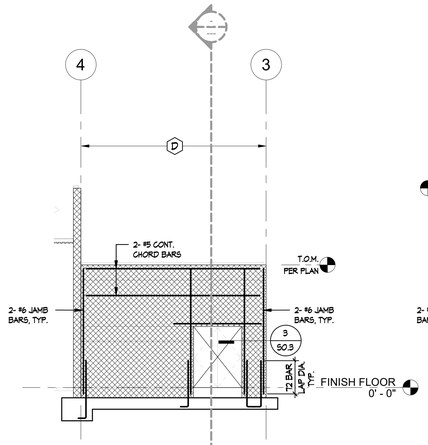

WALL ELEVATION N
1/8" = 1'-0"

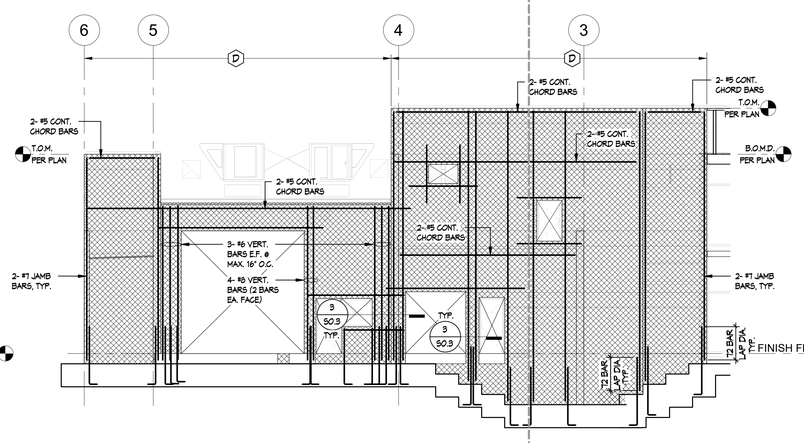

WALL ELEVATION M
1/8" = 1'-0"

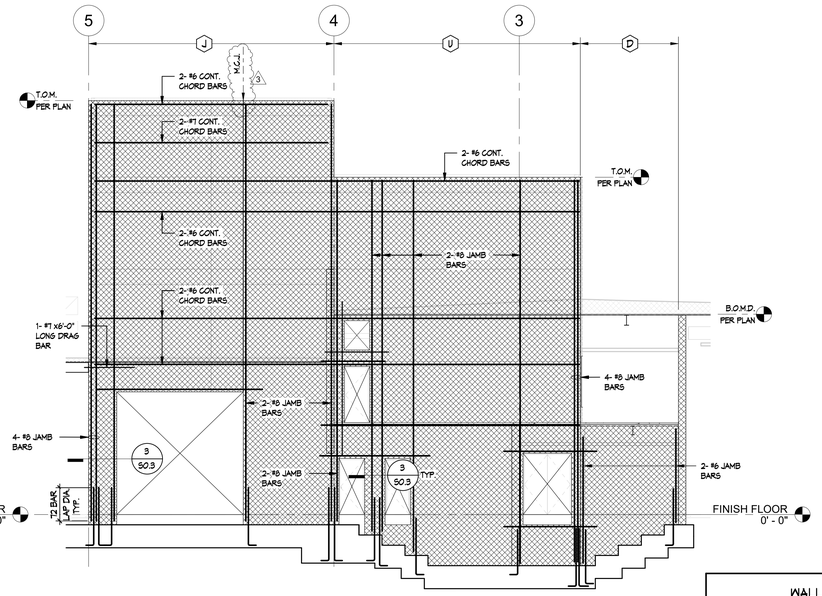

WALL ELEVATION L
1/8" = 1'-0"

WALL ELEVATION NOTES

1. SEE MASONRY NOTES ON SHEET S0.1
2. SEE TYPICAL MASONRY WALL REINFORCING DETAIL 2 / S0.3
3. SEE TYPICAL OPENING REINFORCEMENT DETAIL FOR ALL DOORS, WINDOWS AND DUCT OPENINGS IN MASONRY WALLS 4 / S0.3
4. GENERAL CONTRACTOR SHALL COORDINATE ALL MECHANICAL DUCT PENETRATION SIZE AND LOCATIONS IN MASONRY WALLS WITH THE MECHANICAL ENGINEER AND ARCHITECT. ANY DEVIATION OF DUCT SIZE AND LOCATION FROM THE STRUCTURAL DRAWINGS FOR OPENINGS SHOWN SHALL BE BROUGHT TO THE ATTENTION OF THE S.E.O.R. FOR EVALUATION PRIOR TO COMMENCING. FOR DUCT PENETRATIONS NOT SHOWN ON ELEVATION, DET. 4/S0.3 SHALL BE FOLLOWED. NO CHORD REINFORCING, DRAG REINFORCING, OR JAMB REINFORCING SHOWN ON ELEVATIONS SHALL BE INTERRUPTED BY A DUCT PENETRATION. NO DUCT PENETRATIONS SHALL BE LOCATED WITHIN 2'-0" OF A BEAM POCKET OR BEARING CONDITION.
5. AT ALL JAMB BARS, LAP DOWELS FROM FOOTING 12 BAR DIA. LAP MIN.
6. EXTERIOR LIGHT FIXTURE W/ RECESSED ELECTRICAL BOX IN MASONRY, SHALL BE LOCATED IN A UNREINFORCED HORIZONTAL & VERTICAL MASONRY CELL. CONDUIT SHALL RUN VERTICAL IN A UNREINFORCED CELL ONLY PER 2 / S0.3
7. GROUT ALL 8", 12" AND 16" MASONRY WALLS SOLID.
8. INDICATES 8" CONC. BLOCK WALL
9. INDICATES 12" CONC. BLOCK WALL
10. INDICATES 16" CONC. BLOCK WALL

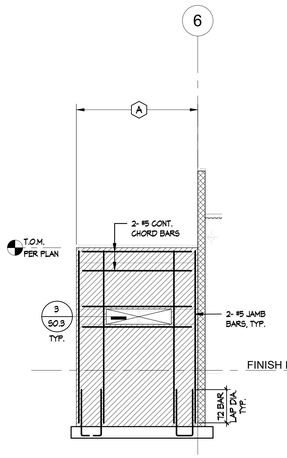

WALL ELEVATION S
1/8" = 1'-0"

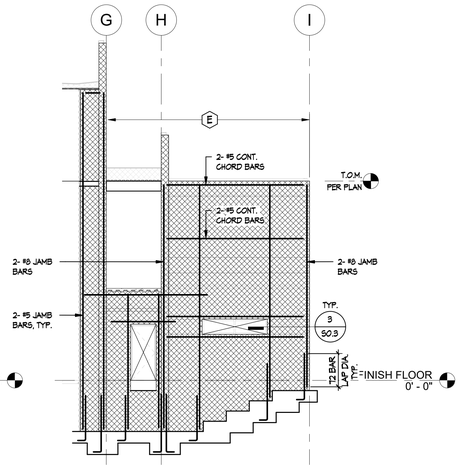

WALL ELEVATION R
1/8" = 1'-0"

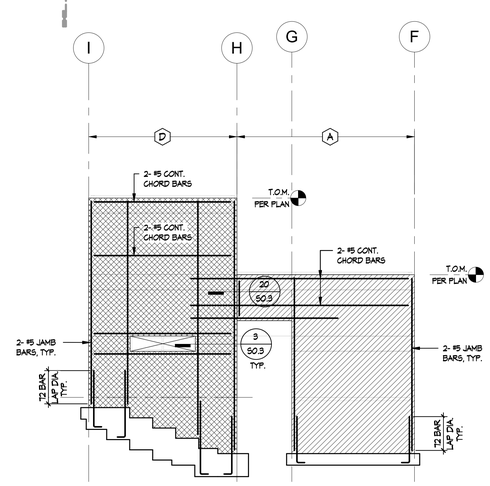

WALL ELEVATION Q
1/8" = 1'-0"

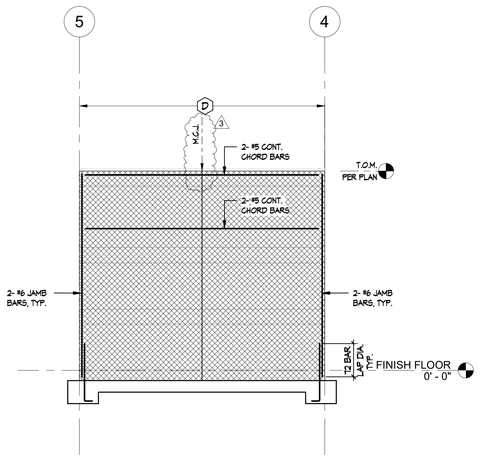

WALL ELEVATION P
1/8" = 1'-0"

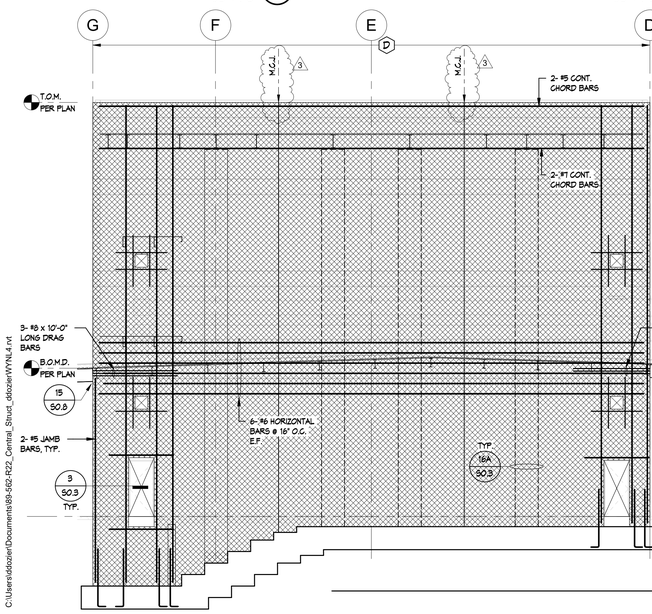

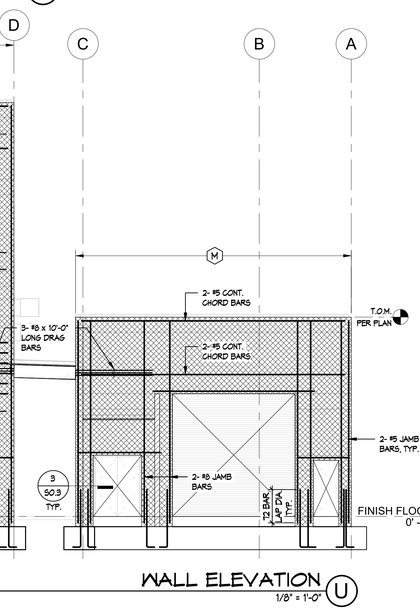

WALL ELEVATION U
1/8" = 1'-0"

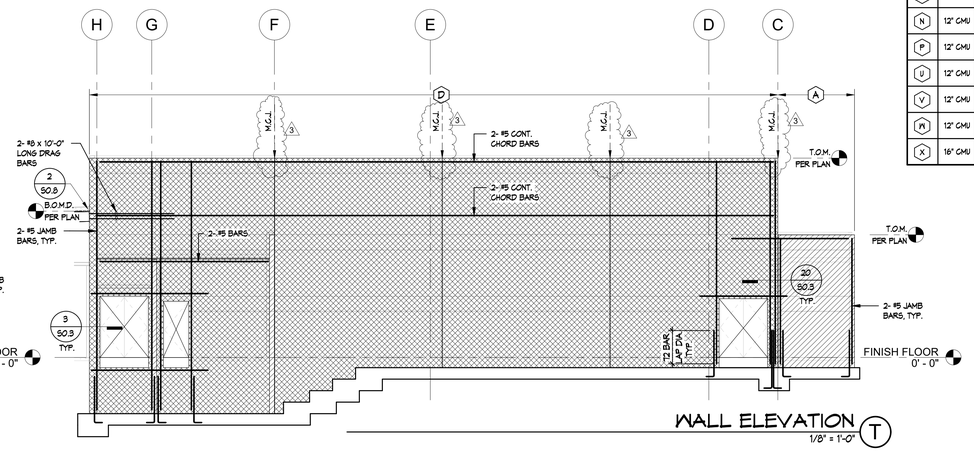

WALL ELEVATION T
1/8" = 1'-0"

C:\Users\ddozier\Documents\68-562-R22_Central_Stud_ddozierVWNL4.rvt

APPL No. A03-122864

DSA

Archite

RACHLIN PARTNERS
8640 National Boulevard
Culver City, CA 90232
310.204.3400

Disclaim

THESE DRAWINGS ARE THE PROPERTY OF THE ARCHITECT. THE DESIGNS SHOWN AND DESCRIBED HEREIN INCLUDING ALL TECHNICAL DRAWINGS ARE PROPRIETARY AND CANNOT BE COPIED, DUPLICATED OR COMMERCIALLY EXPLOITED EITHER IN WHOLE OR IN PART. THESE DRAWINGS AND DESIGNS SHALL NOT BE USED BY THE OWNER ON OTHER PROJECTS, FOR ADDITIONS TO THIS PROJECT, OR FOR COMPLETION OF THIS PROJECT BY OTHERS. THE OWNER AGREES TO HOLD HARMLESS, INDEMNIFY AND DEFEND THE ARCHITECT AGAINST ALL DAMAGES, CLAIMS AND LOSSES, INCLUDING DEFENSE COSTS, ARISING OUT OF ANY REUSE OF PLANS AND SPECIFICATIONS WITHOUT THE WRITTEN AUTHORIZATION OF THE ARCHITECT OF RECORD.

Copyright © 2022 Rachlin Partners, All Rights Reserved.

MASONRY WALL REINFORCING SCHEDULE

TYPE	WALL SIZE	REINFORCING
A	8" CMU	#5 @ 24" O.C. VERT. AT C.OF WALL #5 @ 24" O.C. HORIZ. AT C.OF WALL
B	8" CMU	#5 @ 16" O.C. VERT. AT C.OF WALL #5 @ 16" O.C. HORIZ. AT C.OF WALL
C	8" CMU	#5 @ 16" O.C. VERT. AT C.OF WALL #5 @ 24" O.C. HORIZ. E.F.
D	12" CMU	#5 @ 24" O.C. VERT. E.F. #5 @ 24" O.C. HORIZ. E.F.
E	12" CMU	#6 @ 16" O.C. VERT. E.F. #6 @ 16" O.C. HORIZ. E.F.
F	12" CMU	#5 @ 16" O.C. VERT. E.F. #5 @ 24" O.C. HORIZ. E.F.
G	12" CMU	#5 @ 24" O.C. VERT. E.F. #5 @ 16" O.C. HORIZ. E.F.
H	12" CMU	#5 @ 24" O.C. VERT. E.F. #5 @ 16" O.C. HORIZ. E.F.
J	12" CMU	#5 @ 16" O.C. VERT. E.F. #6 @ 16" O.C. HORIZ. E.F.
K	12" CMU	#6 @ 16" O.C. VERT. E.F. #5 @ 16" O.C. HORIZ. E.F.
L	12" CMU	#8 @ 16" O.C. VERT. E.F. #5 @ 24" O.C. HORIZ. E.F.
M	12" CMU	#7 @ 16" O.C. VERT. E.F. #5 @ 24" O.C. HORIZ. E.F.
N	12" CMU	#8 @ 16" O.C. VERT. E.F. #8 @ 16" O.C. HORIZ. E.F.
P	12" CMU	#6 @ 16" O.C. VERT. E.F. #8 @ 16" O.C. HORIZ. E.F.
U	12" CMU	#8 @ 16" O.C. VERT. E.F. #6 @ 16" O.C. HORIZ. E.F.
V	12" CMU	#5 @ 16" O.C. VERT. E.F. #5 @ 16" O.C. HORIZ. E.F.
R	12" CMU	#5 @ 16" O.C. VERT. E.F. #7 @ 16" O.C. HORIZ. E.F.
X	16" CMU	#8 @ 16" O.C. VERT. E.F. #5 @ 24" O.C. HORIZ. E.F.

Performing Arts Center

Hacienda La Puente Unified School District
635 North California Avenue
La Puente, CA 91744

Re	Dat	Issu
1	7.22.22	50%
2	10.21.22	50%
3	12.09.22	100% CD DSA
2	10.31.23	ADDENDUM NO. 2
3	12.11.23	ADDENDUM NO. 3

Date: 08/24/22
Scale: As indicated
Drawn By: Author
Checked By: Checker

Architect / Engineer

LICENSED ARCHITECT RICHARD INGRAM NO. C-20225 REN. 8-31-25 STATE OF CALIFORNIA

REGISTERED PROFESSIONAL ENGINEER Frank J. Rice No. S5397 Exp. 09/30/23 STRUCTURAL STATE OF CALIFORNIA

Consulta

Miyamoto International, Inc.
The Ruzika Company, Inc.
MDC Consulting Engineers
Pocock Design Solutions
Newson Brown Acoustics, LLC
VCA Engineers, Inc.
HJSA Consulting

Sheet Title

WALL ELEVATIONS

Sheet

S4.2

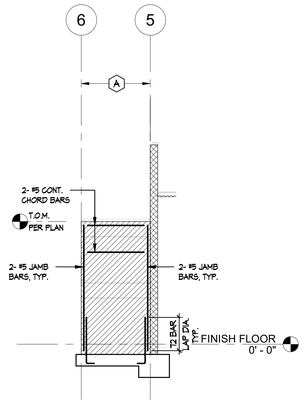

WALL ELEVATION W
1/8" = 1'-0"

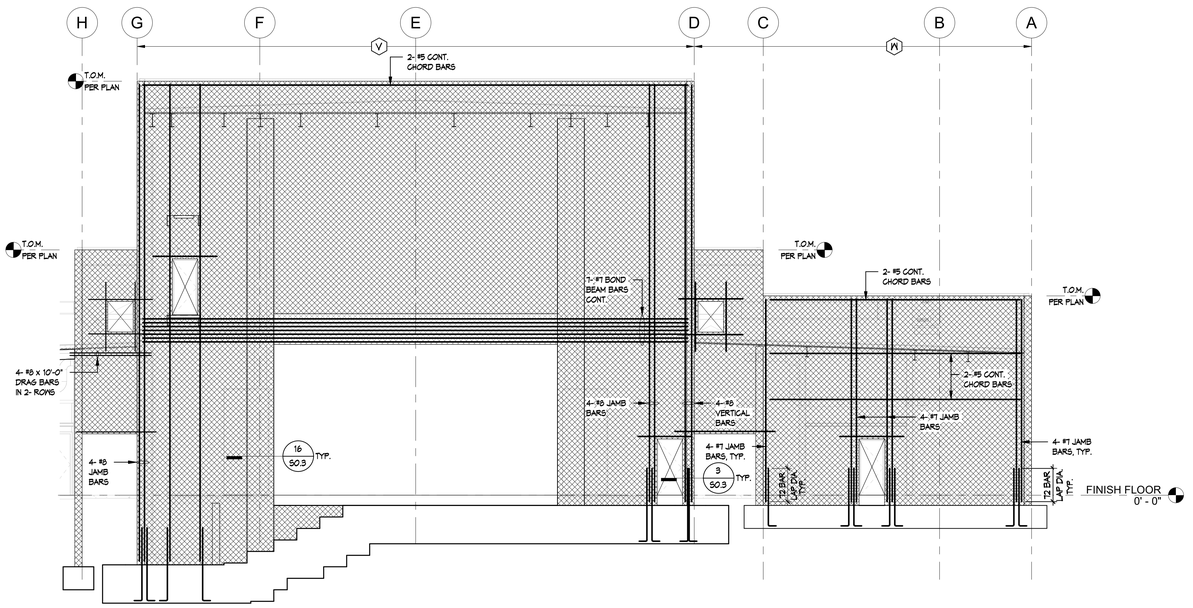

WALL ELEVATION V
1/8" = 1'-0"

WALL ELEVATION NOTES

1. SEE MASONRY NOTES ON SHEET S0.1
2. SEE TYPICAL MASONRY WALL REINFORCING DETAIL 2 / S0.3
3. SEE TYPICAL OPENING REINFORCEMENT DETAIL FOR ALL DOORS, WINDOWS AND DUCT OPENINGS IN MASONRY WALLS 4 / S0.3
4. GENERAL CONTRACTOR SHALL COORDINATE ALL MECHANICAL DUCT PENETRATION SIZE AND LOCATIONS IN MASONRY WALLS WITH THE MECHANICAL ENGINEER AND ARCHITECT. ANY DEVIATION OF DUCT SIZE AND LOCATION FROM THE STRUCTURAL DRAWINGS FOR OPENINGS SHOWN SHALL BE BROUGHT TO THE ATTENTION OF THE S.E.O.R. FOR EVALUATION PRIOR TO COMMENCING. FOR DUCT PENETRATIONS NOT SHOWN ON ELEVATION, DET. 4/S0.3 SHALL BE FOLLOWED. NO CHORD REINFORCING, DRAG REINFORCING, OR JAMB REINFORCING SHOWN ON ELEVATIONS SHALL BE INTERRUPTED BY A DUCT PENETRATION. NO DUCT PENETRATIONS SHALL BE LOCATED WITHIN 2'-0" OF A BEAM POCKET OR BEARING CONDITION.
5. AT ALL JAMB BARS, LAP DOWELS FROM FOOTING 72 BAR DIA. LAP MIN.
6. EXTERIOR LIGHT FIXTURE W/ RECESSED ELECTRICAL BOX IN MASONRY, SHALL BE LOCATED IN A UNREINFORCED HORIZONTAL & VERTICAL MASONRY CELL. CONDUIT SHALL RUN VERTICAL IN A UNREINFORCED CELL ONLY PER 2 / S0.3
7. GROUT ALL 8", 12" AND 16" MASONRY WALLS SOLID.
8. INDICATES 8" CONC. BLOCK WALL
9. INDICATES 12" CONC. BLOCK WALL
10. INDICATES 16" CONC. BLOCK WALL

MASONRY WALL REINFORCING SCHEDULE

TYPE	WALL SIZE	REINFORCING
A	8" CMU	#5 @ 24" O.C. VERT. AT C OF WALL #5 @ 24" O.C. HORIZ. AT C OF WALL
B	8" CMU	#5 @ 16" O.C. VERT. AT C OF WALL #5 @ 16" O.C. HORIZ. AT C OF WALL
C	8" CMU	#5 @ 16" O.C. VERT. AT C OF WALL #5 @ 24" O.C. HORIZ. E.F.
D	12" CMU	#5 @ 24" O.C. VERT. E.F. #5 @ 24" O.C. HORIZ. E.F.
E	12" CMU	#5 @ 16" O.C. VERT. E.F. #5 @ 16" O.C. HORIZ. E.F.
F	12" CMU	#5 @ 16" O.C. VERT. E.F. #5 @ 24" O.C. HORIZ. E.F.
G	12" CMU	#5 @ 24" O.C. VERT. E.F. #5 @ 16" O.C. HORIZ. E.F.
H	12" CMU	#5 @ 24" O.C. VERT. E.F. #5 @ 16" O.C. HORIZ. E.F.
J	12" CMU	#5 @ 16" O.C. VERT. E.F. #5 @ 16" O.C. HORIZ. E.F.
K	12" CMU	#5 @ 16" O.C. VERT. E.F. #5 @ 16" O.C. HORIZ. E.F.
L	12" CMU	#5 @ 16" O.C. VERT. E.F. #5 @ 24" O.C. HORIZ. E.F.
M	12" CMU	#7 @ 16" O.C. VERT. E.F. #5 @ 24" O.C. HORIZ. E.F.
N	12" CMU	#5 @ 16" O.C. VERT. E.F. #5 @ 16" O.C. HORIZ. E.F.
P	12" CMU	#5 @ 16" O.C. VERT. E.F. #5 @ 16" O.C. HORIZ. E.F.
U	12" CMU	#5 @ 16" O.C. VERT. E.F. #5 @ 16" O.C. HORIZ. E.F.
V	12" CMU	#5 @ 16" O.C. VERT. E.F. #5 @ 16" O.C. HORIZ. E.F.
R	12" CMU	#5 @ 16" O.C. VERT. E.F. #7 @ 16" O.C. HORIZ. E.F.
X	16" CMU	#5 @ 16" O.C. VERT. E.F. #5 @ 24" O.C. HORIZ. E.F.

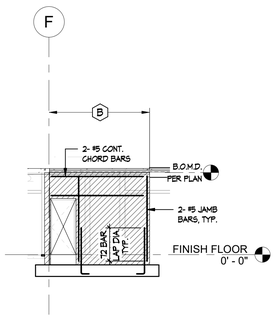

WALL ELEVATION BB
1/8" = 1'-0"

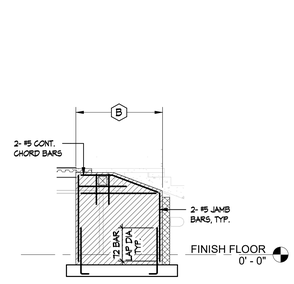

WALL ELEVATION AA
1/8" = 1'-0"

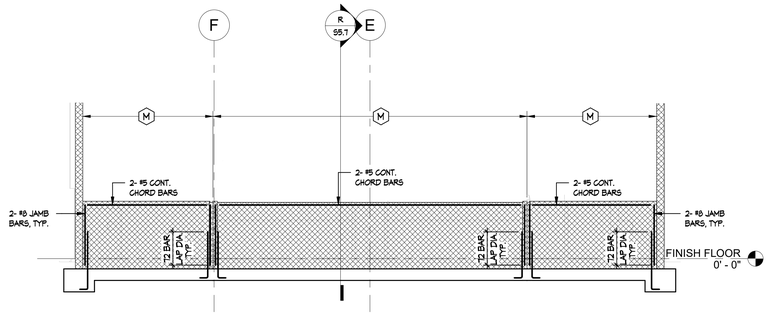

WALL ELEVATION Z
1/8" = 1'-0"

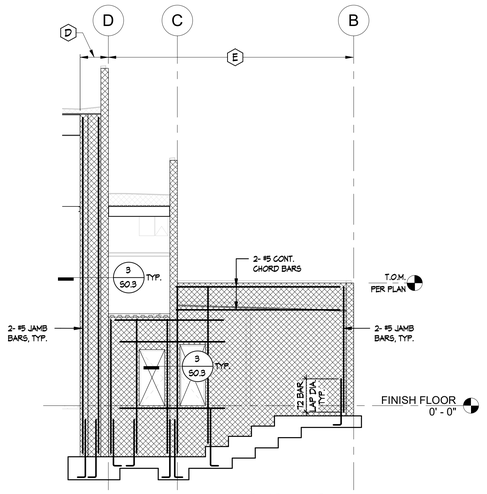

WALL ELEVATION Y
1/8" = 1'-0"

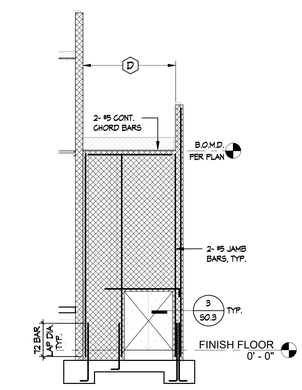

WALL ELEVATION JJ
1/8" = 1'-0"

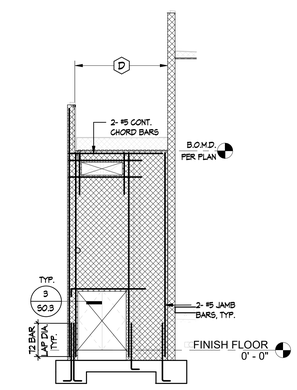

WALL ELEVATION HH
1/8" = 1'-0"

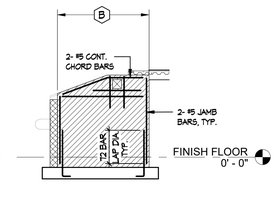

WALL ELEVATION GG
1/8" = 1'-0"

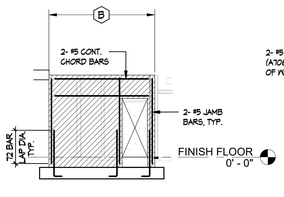

WALL ELEVATION FF
1/8" = 1'-0"

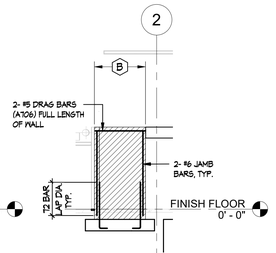

WALL ELEVATION EE
1/8" = 1'-0"

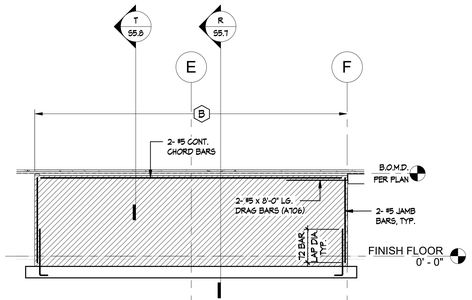

WALL ELEVATION DD
1/8" = 1'-0"

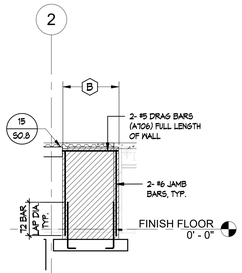

WALL ELEVATION CC
1/8" = 1'-0"

C:\Users\ddozier\Documents\89-662-R22_Central_Stud_ddozierWYNL4.rvt

APPL No. A03-122864

IDENTIFICATION STAMP
DIV. OF THE STATE ARCHITECT
APP: 03-122864 INC:
REVIEWED FOR
SS ☑ FLS ☑ ACS ☑
DATE: 10/03/2023

DSA

Archite

RACHLIN
PARTNERS
8640 National Boulevard
Culver City, CA 90232
310.204.3400

Disclaim

THESE DRAWINGS ARE THE PROPERTY OF THE ARCHITECT. THE DESIGNS SHOWN AND DESCRIBED HEREIN INCLUDING ALL TECHNICAL DRAWINGS ARE PROPRIETARY AND CANNOT BE COPIED, DUPLICATED OR COMMERCIALLY EXPLOITED EXCEPT BY WRITTEN AGREEMENT. THESE DRAWINGS AND DESIGNS SHALL NOT BE USED BY THE OWNER ON OTHER PROJECTS, FOR ADDITIONS TO THIS PROJECT, OR FOR COMPLETION OF THIS PROJECT BY OTHERS. THE OWNER AGREES TO HOLD HARMLESS, INDEMNIFY AND DEFEND THE ARCHITECT AGAINST ALL DAMAGES, CLAIMS AND LOSSES, INCLUDING DEFENSE COSTS, ARISING OUT OF ANY REUSE OF PLANS AND SPECIFICATIONS WITHOUT THE WRITTEN AUTHORIZATION OF THE ARCHITECT OF RECORD.

Copyright © 2022 Rachlin Partners, All Rights Reserved.

Performing Arts Center

Hacienda La Puente Unified School District
635 North California Avenue
La Puente, CA 91744

Re	Dat	Issu
1	7.22.22	50%
2	10.21.22	50%
3	12.09.22	100% CD DSA
4	6.19.23	100% CD DSA RESUBMITTAL
5	9.20.23	DSA BACK CHECK

Date: 9.20.2023
Scale: As indicated
Drawn By: Author
Checked By: Checker

Architect / Engineer

LICENSED ARCHITECT — RICHARD W. RACHLIN — NO. C-26029 — REN. 8-31-25 — STATE OF CALIFORNIA
REGISTERED PROFESSIONAL ENGINEER — Frank J. Rice — No. S5370 — Exp. 09/30/23 — STRUCTURAL — STATE OF CALIFORNIA

Consulta

Miyamoto International, Inc.
The Ruzika Company, Inc.
MDC Consulting Engineers
Pocock Design Solutions
Newson Brown Acoustics, LLC
VCA Engineers, Inc.
HJSA Consulting

Sheet Title

WALL ELEVATIONS

Sheet

S4.3

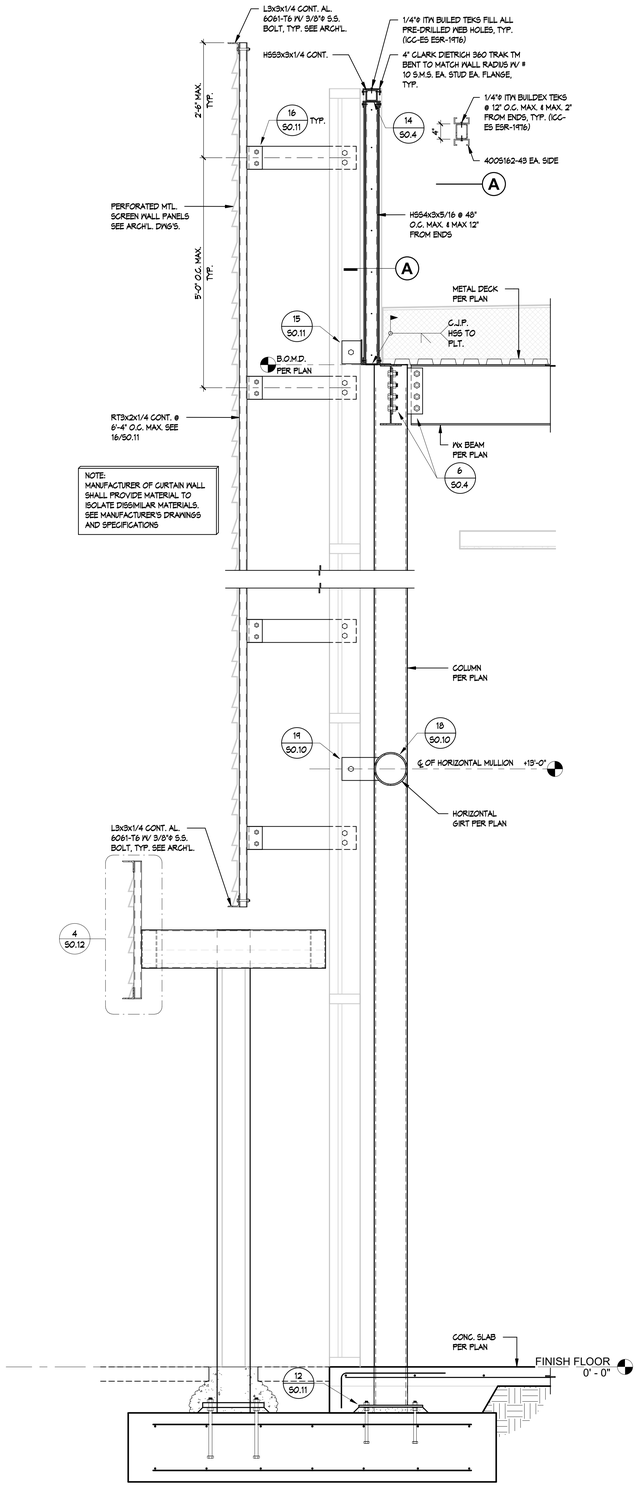

SECTION D
3/4" = 1'-0"

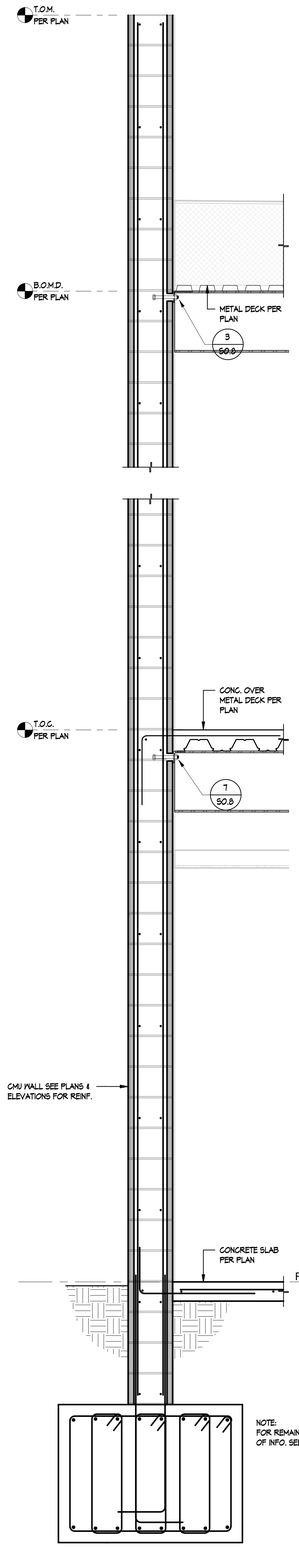

SECTION C
3/4" = 1'-0"

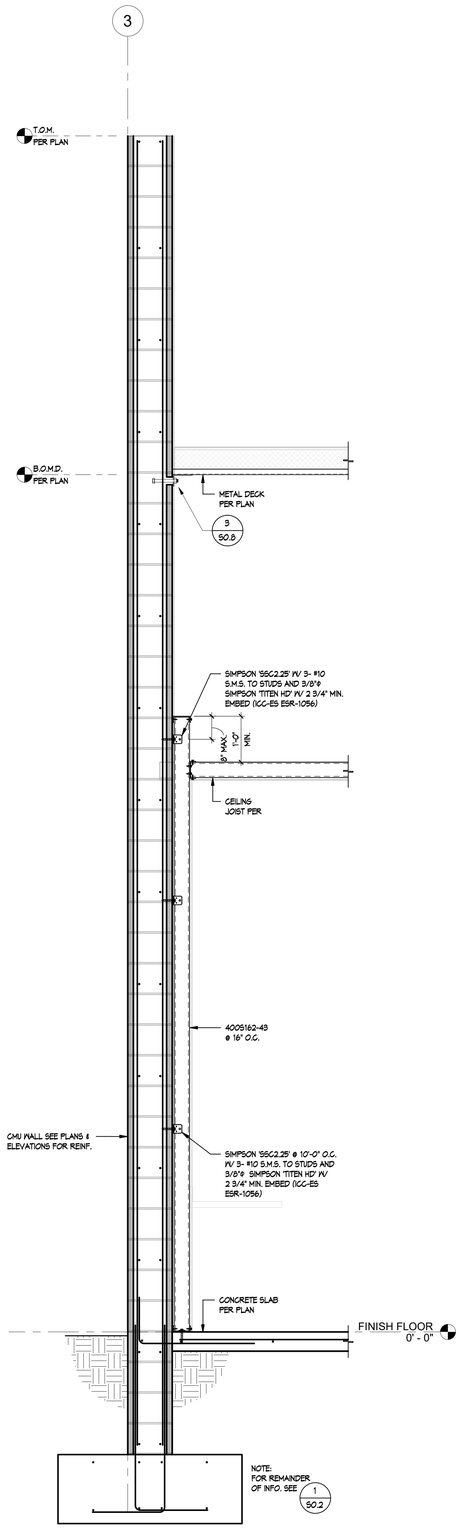

SECTION B
3/4" = 1'-0"

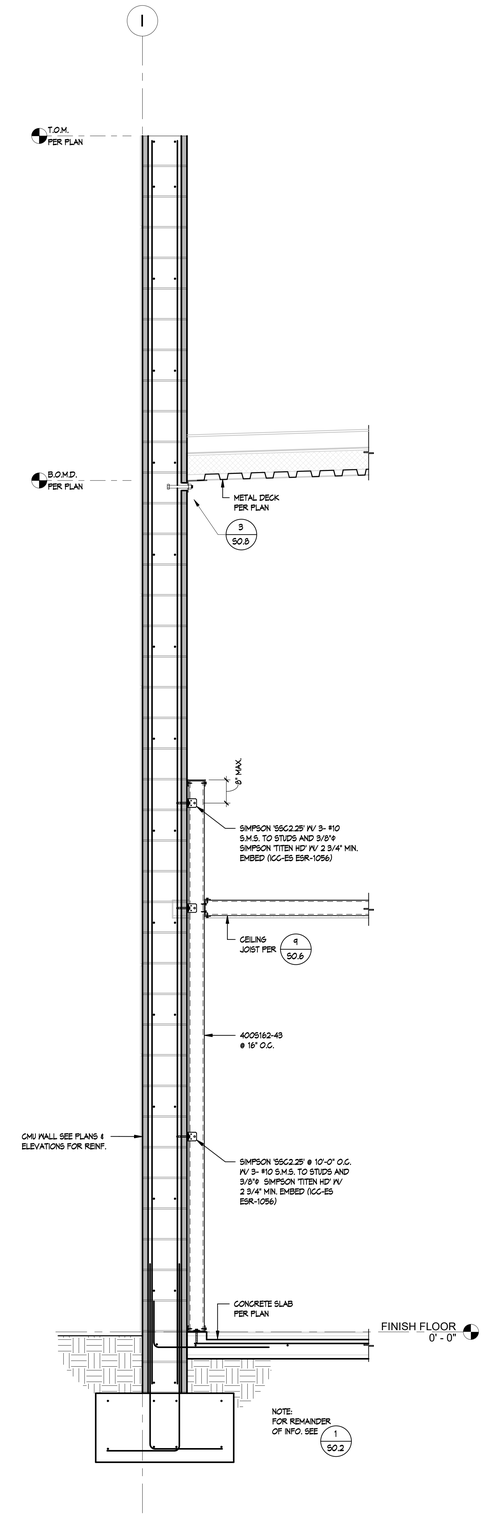

SECTION A
3/4" = 1'-0"

C:\Users\ddozier\Documents\989-SGC-R22_Central_Struct_ddozierWYNL4.rvt

APPL No. A03-122864

IDENTIFICATION STAMP
DIV. OF THE STATE ARCHITECT
APP: 03-122864 INC:
REVIEWED FOR
SS ☑ FLS ☑ ACS ☑
DATE: 10/03/2023

DSA

Archite

RACHLIN
PARTNERS
8640 National Boulevard
Culver City, CA 90232
310.204.3400

Disclaim

THESE DRAWINGS ARE THE PROPERTY OF THE ARCHITECT. THE DESIGNS SHOWN AND DESCRIBED HEREIN INCLUDING ALL TECHNICAL DRAWINGS ARE PROPRIETARY AND CANNOT BE COPIED, DUPLICATED OR COMMERCIALLY EXPLOITED EITHER IN WHOLE OR IN PART. THESE DRAWINGS AND SPECIFICATIONS SHALL NOT BE USED BY THE OWNER ON OTHER PROJECTS, FOR ADDITIONS TO THIS PROJECT, OR FOR COMPLETION OF THIS PROJECT BY OTHERS. THE OWNER AGREES TO HOLD HARMLESS, INDEMNIFY AND DEFEND THE ARCHITECT AGAINST ALL DAMAGES, CLAIMS AND LOSSES, INCLUDING DEFENSE COSTS, ARISING OUT OF ANY REUSE OF PLANS AND SPECIFICATIONS WITHOUT THE WRITTEN AUTHORIZATION OF THE ARCHITECT OF RECORD.

Copyright © 2022 Rachlin Partners, All Rights Reserved.

Performing Arts Center

Hacienda La Puente Unified School District
635 North California Avenue
La Puente, CA 91744

Re	Dat	Issu
1	7.22.22	50%
2	10.21.22	50%
3	12.09.22	100% CD DSA
4	6.19.23	100% CD DSA RESUBMITTAL
5	9.20.23	DSA BACK CHECK

Date: 9.20.2023
Scale: 3/4" = 1'-0"
Drawn By: Author
Checked By: Checker

Architect / Engineer

LICENSED ARCHITECT — Edward Rachlin — NO. C-26229 — REN. 8-31-25 — STATE OF CALIFORNIA
REGISTERED PROFESSIONAL ENGINEER — Frank J. Rice — No. S5312 — Exp. 09-30-23 — STRUCTURAL — STATE OF CALIFORNIA

Consulta

Miyamoto International, Inc.
The Ruzika Company, Inc.
MDC Consulting Engineers
Pocock Design Solutions
Newson Brown Acoustics, LLC
VCA Engineers, Inc.
HJSA Consulting

Sheet Title

SECTIONS

Sheet

S5.1

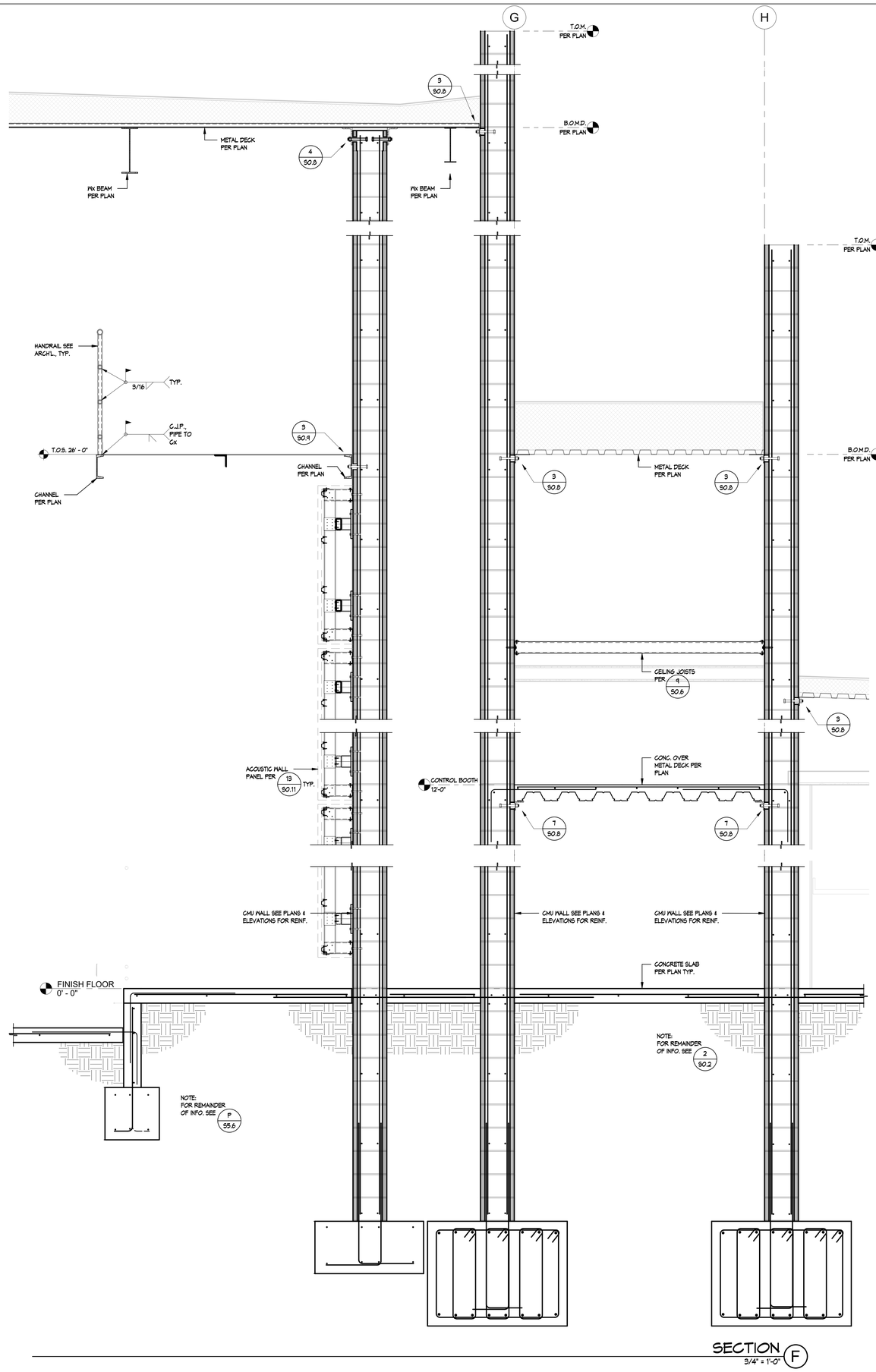

SECTION F
3/4" = 1'-0"

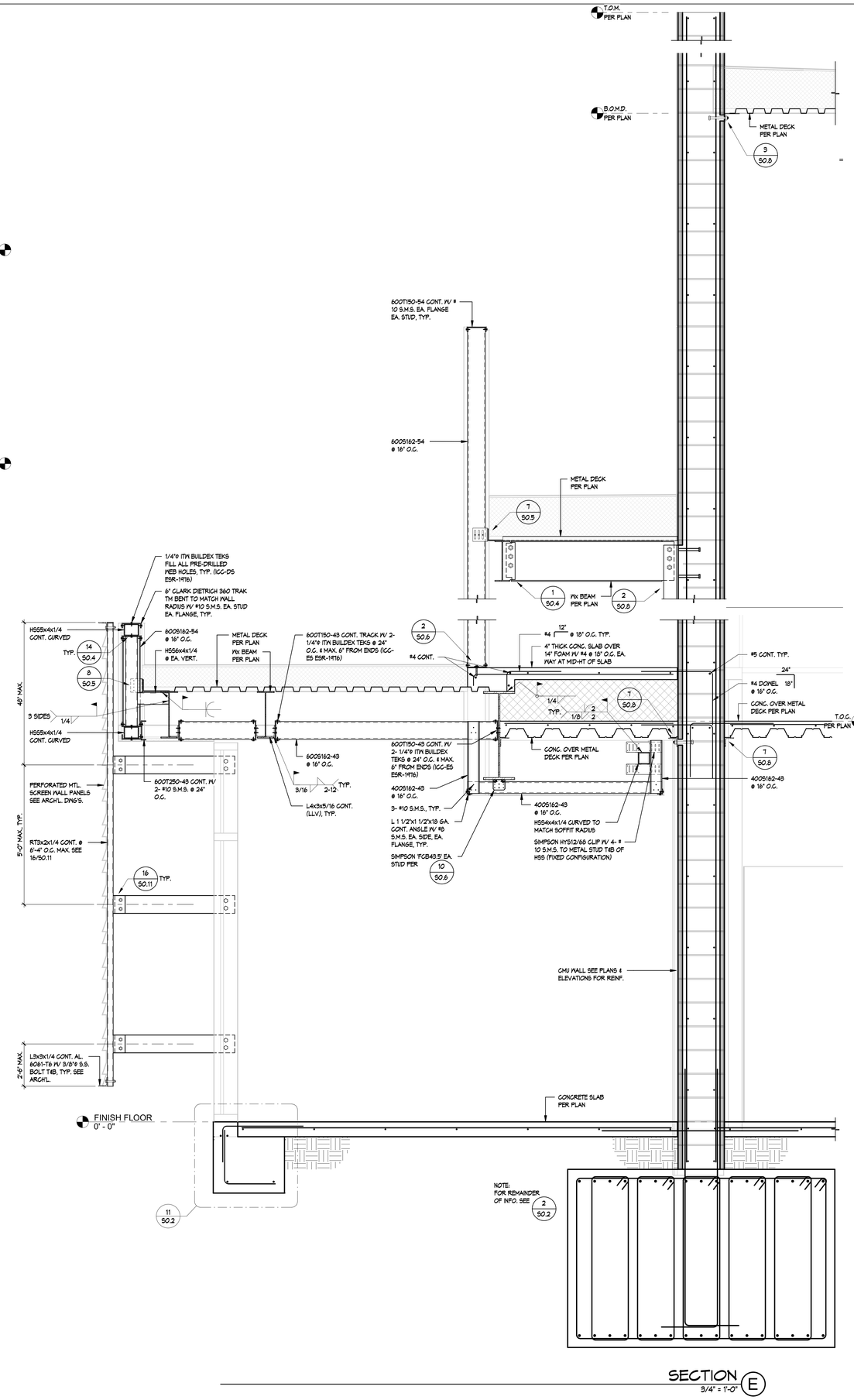

SECTION E
3/4" = 1'-0"

C:\Users\ddozier\Documents\689-582-R22_Central_Stud_ddozierWYNL4.rvt

APPL No. A03-122864

IDENTIFICATION STAMP
DIV. OF THE STATE ARCHITECT
APP: 03-122864 INC:
REVIEWED FOR
SS ☑ FLS ☑ ACS ☑
DATE: 10/03/2023

DSA

Archite

RACHLIN
PARTNERS
8640 National Boulevard
Culver City, CA 90232
310.204.3400

Disclaim

THESE DRAWINGS ARE THE PROPERTY OF THE ARCHITECT. THE DESIGNS SHOWN AND DESCRIBED HEREIN INCLUDING ALL TECHNICAL DRAWINGS ARE PROPRIETARY AND CANNOT BE COPIED, DUPLICATED OR COMMERCIALLY EXPLOITED EXCEPT WITH THE WRITTEN PERMISSION OF THE ARCHITECT AND SHALL NOT BE USED BY THE OWNER ON OTHER PROJECTS, FOR ADDITIONS TO THIS PROJECT, OR FOR COMPLETION OF THIS PROJECT BY OTHERS. THE OWNER AGREES TO HOLD HARMLESS, INDEMNIFY AND DEFEND THE ARCHITECT AGAINST ALL DAMAGES, CLAIMS AND LOSSES, INCLUDING DEFENSE COSTS, ARISING OUT OF ANY REUSE OF PLANS AND SPECIFICATIONS WITHOUT THE WRITTEN AUTHORIZATION OF THE ARCHITECT OF RECORD.

Copyright © 2022 Rachlin Partners, All Rights Reserved.

Performing Arts Center

Hacienda La Puente Unified School District
635 North California Avenue
La Puente, CA 91744

Re	Dat	Issu
1	7.22.22	50%
2	10.21.22	50%
3	12.09.22	100% CD DSA
4	6.19.23	100% CD DSA RESUBMITTAL
5	9.20.23	DSA BACK CHECK

Date: 9.20.2023
Scale: 3/4" = 1'-0"
Drawn By: Author
Checked By: Checker

Architect / Engineer

LICENSED ARCHITECT RICHARD INGRAM NO. C-26229 REN. 8-31-25 STATE OF CALIFORNIA

REGISTERED PROFESSIONAL ENGINEER Frank J. Rice No. S5397 Exp. 09/30/23 STRUCTURAL STATE OF CALIFORNIA

Consulta
Miyamoto International, Inc.
The Ruzika Company, Inc.
MDC Consulting Engineers
Pocock Design Solutions
Newson Brown Acoustics, LLC
VCA Engineers, Inc.
HJSA Consulting

Sheet Title

SECTIONS

Sheet

S5.2

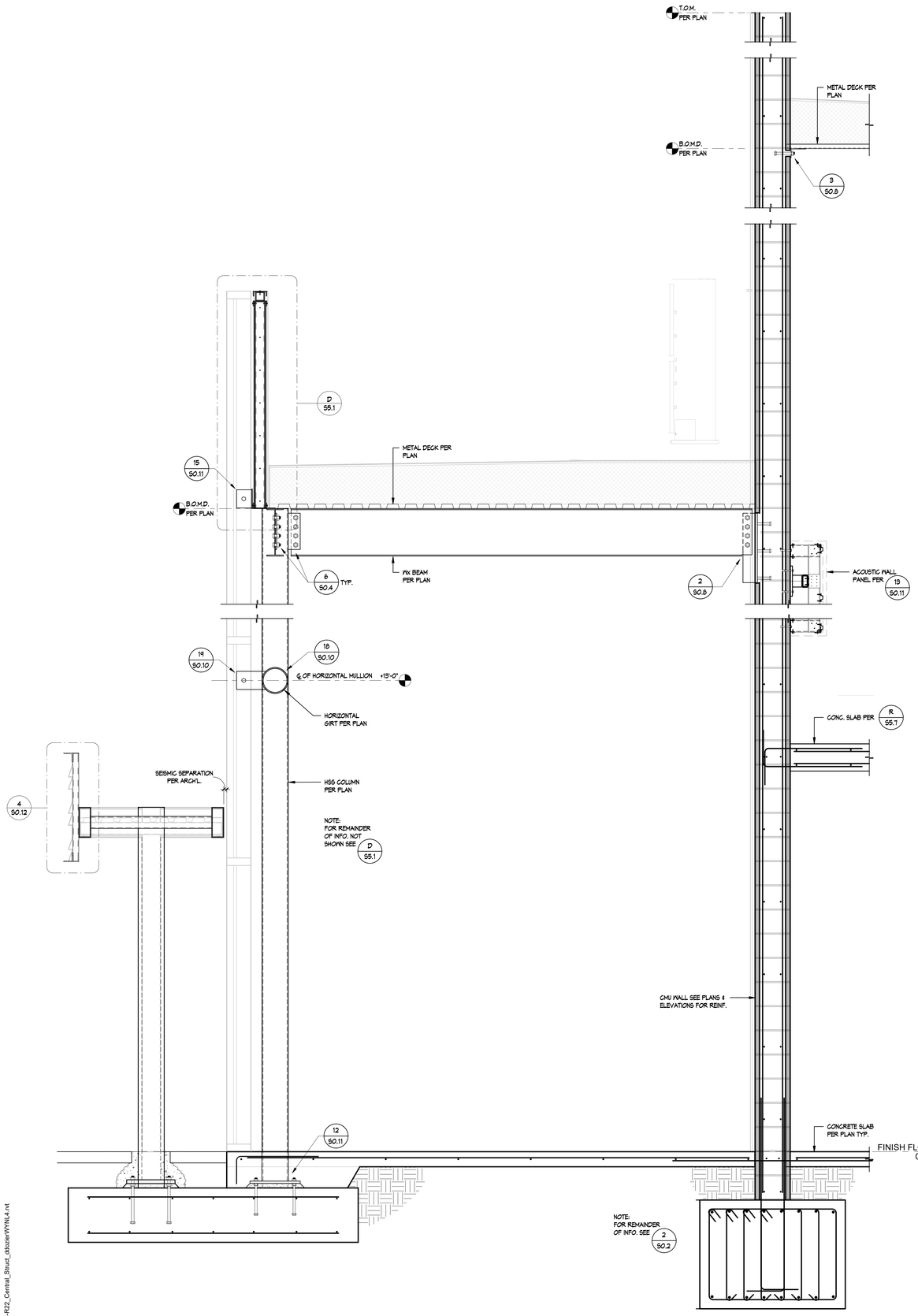

SECTION H
3/4" = 1'-0"

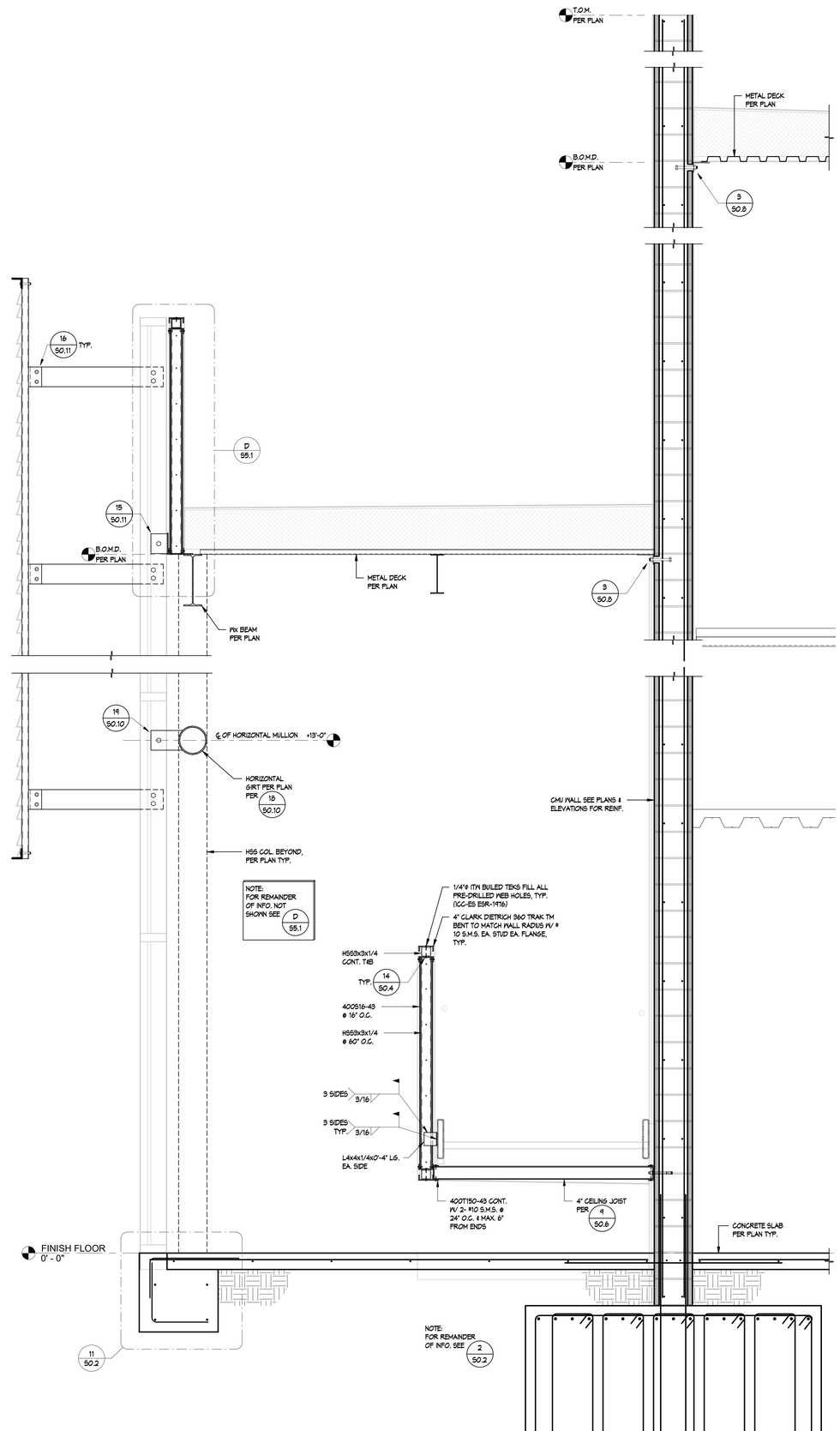

SECTION G
3/4" = 1'-0"

C:\Users\dstozier\Documents\69-S02-R22_Central_Struct_dstozierWYNIL4.rvt

APPL No. A03-122864

IDENTIFICATION STAMP
DIV. OF THE STATE ARCHITECT
APP: 03-122864 INC:
REVIEWED FOR
SS ☑ FLS ☑ ACS ☑
DATE: 10/03/2023

DSA

Archite

RACHLIN
PARTNERS
8640 National Boulevard
Culver City, CA 90232
310.204.3400

Disclaim

THESE DRAWINGS ARE THE PROPERTY OF THE ARCHITECT. THE DESIGNS SHOWN AND DESCRIBED HEREIN INCLUDING ALL TECHNICAL DRAWINGS ARE PROPRIETARY AND CANNOT BE COPIED, DUPLICATED OR COMMERCIALLY EXPLOITED EITHER IN WHOLE OR IN PART. THESE DRAWINGS AND SPECIFICATIONS SHALL NOT BE USED BY THE OWNER ON OTHER PROJECTS, FOR ADDITIONS TO THIS PROJECT, OR FOR COMPLETION OF THIS PROJECT BY OTHERS. THE OWNER AGREES TO HOLD HARMLESS, INDEMNIFY AND DEFEND THE ARCHITECT AGAINST ALL DAMAGES, CLAIMS AND LOSSES, INCLUDING DEFENSE COSTS, ARISING OUT OF ANY REUSE OF PLANS AND SPECIFICATIONS WITHOUT THE WRITTEN AUTHORIZATION OF THE ARCHITECT OF RECORD.

Copyright © 2022 Rachlin Partners, All Rights Reserved.

Performing Arts Center

Hacienda La Puente Unified School District
635 North California Avenue
La Puente, CA 91744

Re	Dat	Issu
1	7.22.22	50%
2	10.21.22	50%
3	12.09.22	100% CD DSA
4	6.19.23	100% CD DSA RESUBMITTAL
5	9.20.23	DSA BACK CHECK

Date: 9.20.2023
Scale: 3/4" = 1'-0"
Drawn By: Author
Checked By: Checker

Architect / Engineer

LICENSED ARCHITECT Edward Rachlin NO. C-20229 REN. 8-31-25 STATE OF CALIFORNIA

REGISTERED PROFESSIONAL ENGINEER Frank J. Rice No. S53972 Exp. 09-30-23 STRUCTURAL STATE OF CALIFORNIA

Consulta

Miyamoto International, Inc.
The Ruzika Company, Inc.
MDC Consulting Engineers
Pocock Design Solutions
Newson Brown Acoustics, LLC
VCA Engineers, Inc.
HJSA Consulting

Sheet Title

SECTIONS

Sheet

S5.3

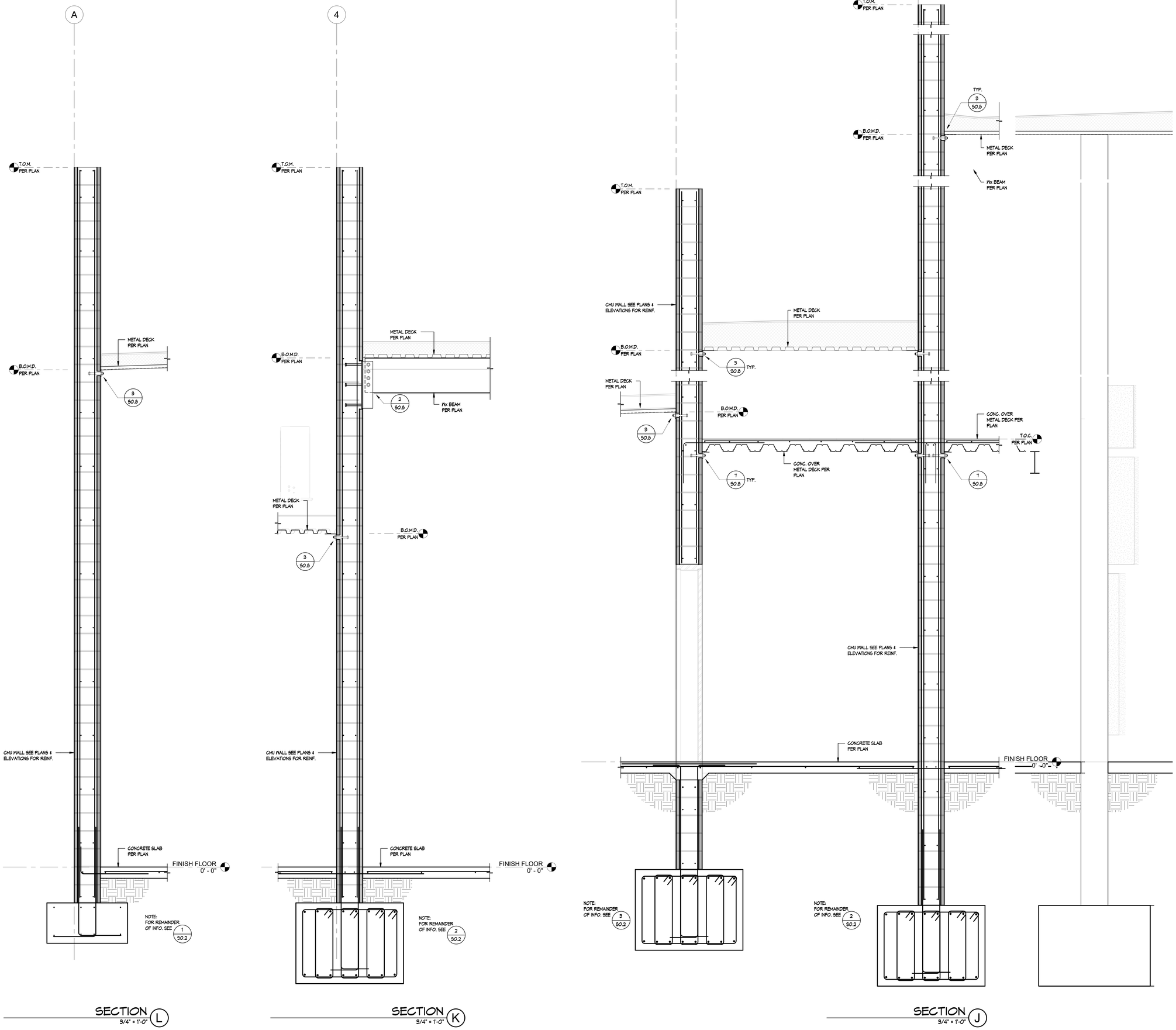

C:\Users\sbtozer\Documents\699-S502-R22_Central_Struct_sbtozerWYNL4.rvt

APPL No. A03-122864

IDENTIFICATION STAMP
DIV. OF THE STATE ARCHITECT
APP: 03-122864 INC:
REVIEWED FOR
SS ☑ FLS ☑ ACS ☑
DATE: 10/03/2023

DSA

Archite

RACHLIN
PARTNERS
8640 National Boulevard
Culver City, CA 90232
310.204.3400

Disclaim

THESE DRAWINGS ARE THE PROPERTY OF THE ARCHITECT. THE DESIGNS SHOWN AND DESCRIBED HEREIN INCLUDING ALL TECHNICAL DRAWINGS ARE PROPRIETARY AND CANNOT BE COPIED, DUPLICATED OR COMMERCIALLY EXPLOITED EXCEPT WITH THE WRITTEN PERMISSION OF THE ARCHITECT AND SHALL NOT BE USED BY THE OWNER ON OTHER PROJECTS, FOR ADDITIONS TO THIS PROJECT, OR FOR COMPLETION OF THIS PROJECT BY OTHERS. THE OWNER AGREES TO HOLD HARMLESS, INDEMNIFY AND DEFEND THE ARCHITECT AGAINST ALL DAMAGES, CLAIMS AND LOSSES, INCLUDING DEFENSE COSTS, ARISING OUT OF ANY REUSE OF PLANS AND SPECIFICATIONS WITHOUT THE WRITTEN AUTHORIZATION OF THE ARCHITECT OF RECORD.

Copyright © 2022 Rachlin Partners, All Rights Reserved.

Performing Arts Center

Hacienda La Puente Unified School District
635 North California Avenue
La Puente, CA 91744

Re	Dat	Issu
1	7.22.22	50%
2	10.21.22	50%
3	12.09.22	100% CD DSA
4	6.19.23	100% CD DSA RESUBMITTAL
5	9.20.23	DSA BACK CHECK

Date: 9.20.2023
Scale: 3/4" = 1'-0"
Drawn By: Author
Checked By: Checker

Architect / Engineer

LICENSED ARCHITECT — LOWARD INGRASSIA — NO. C-26229 REN. 8-31-25 — STATE OF CALIFORNIA
REGISTERED PROFESSIONAL ENGINEER — Frank J. Rice — No. S5397 — Exp. 09-30-23 — STRUCTURAL — STATE OF CALIFORNIA

Consulta

Miyamoto International, Inc.
The Ruzika Company, Inc.
MDC Consulting Engineers
Pocock Design Solutions
Newson Brown Acoustics, LLC
VCA Engineers, Inc.
HJSA Consulting

Sheet Title

SECTIONS

Sheet

S5.4

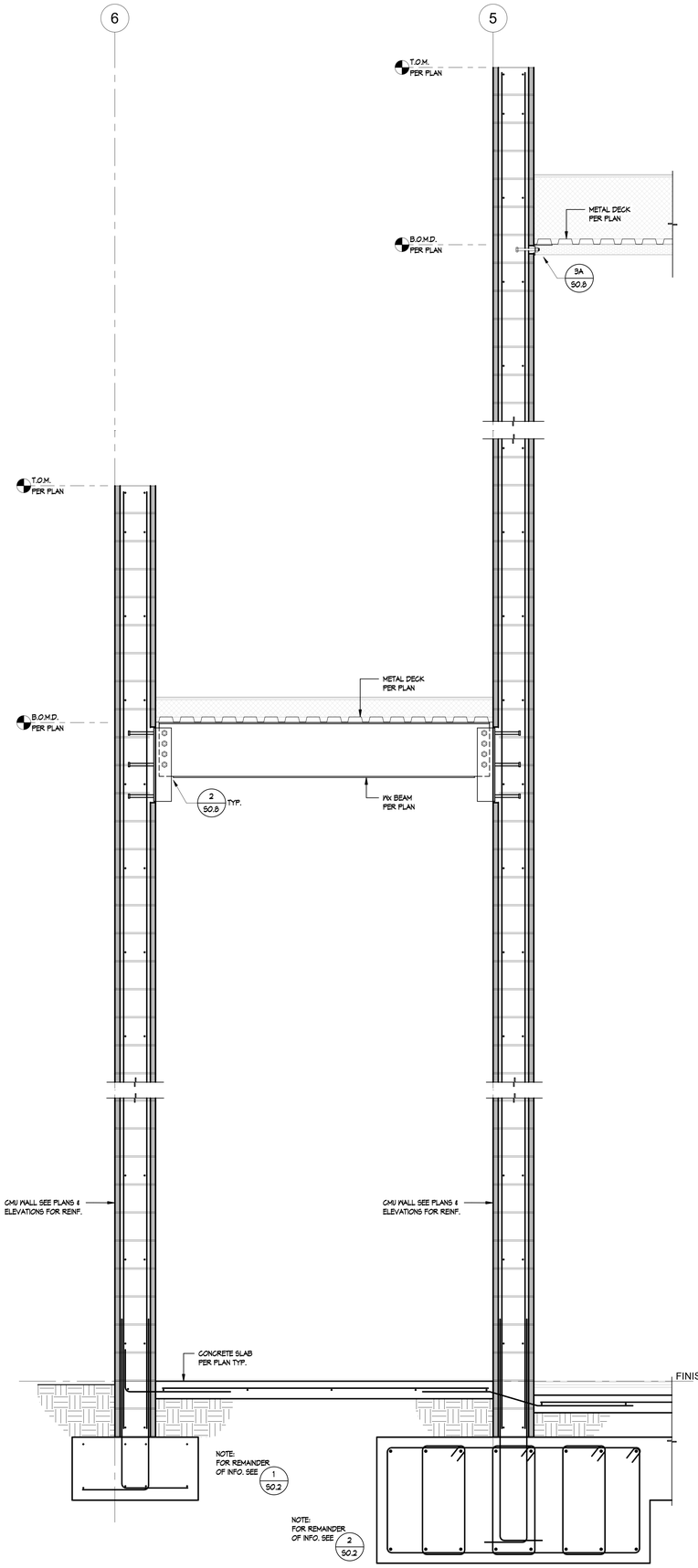

SECTION N
3/4" = 1'-0"

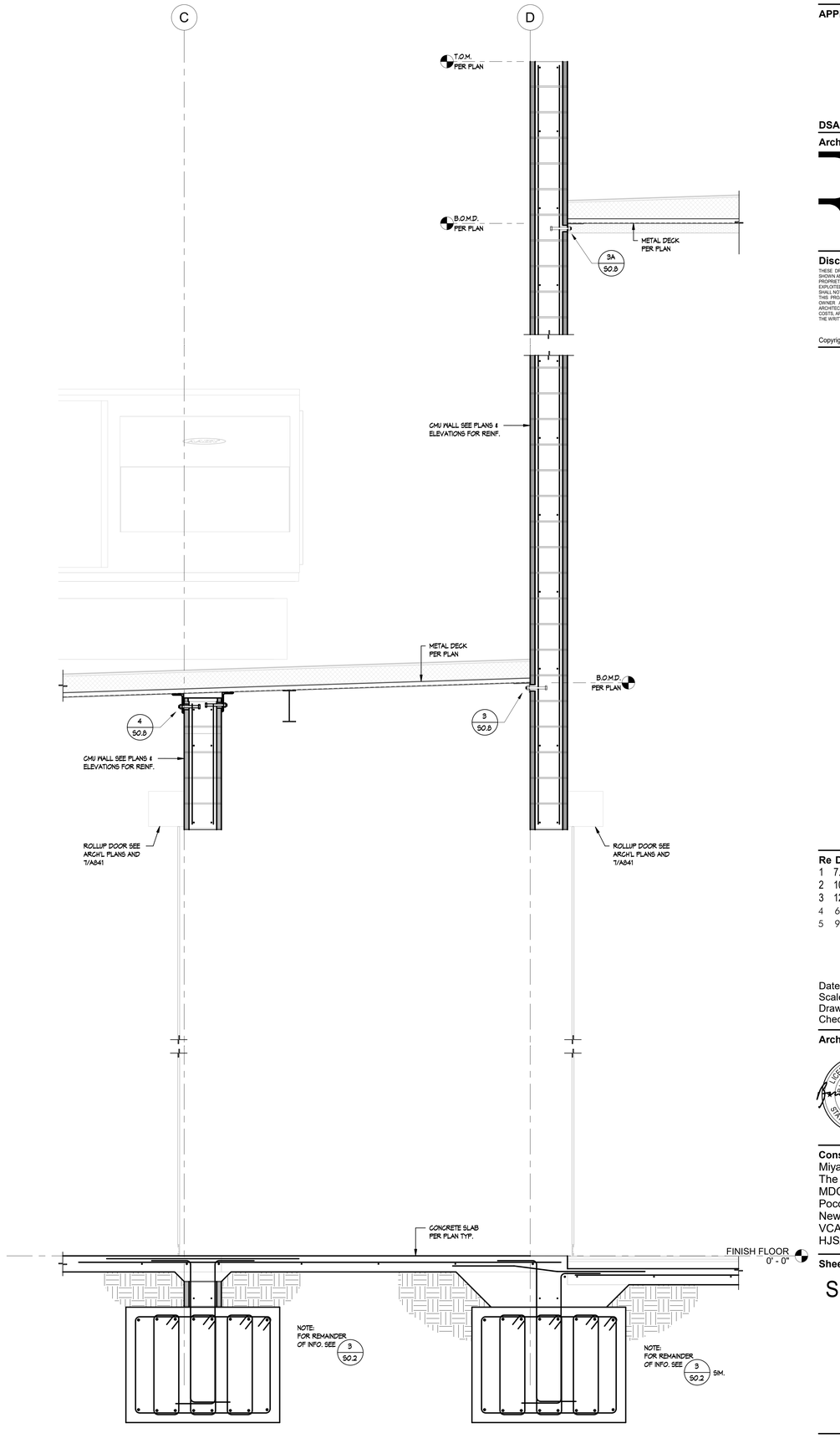

SECTION M
3/4" = 1'-0"

C:\Users\ddozier\Documents\93-562-R22_Central_Struct_ddozierWYNL4.rvt

APPL No. A03-122864

IDENTIFICATION STAMP
DIV. OF THE STATE ARCHITECT
APP: 03-122864 INC:
REVIEWED FOR
SS ☑ FLS ☑ ACS ☑
DATE: 10/03/2023

DSA

Archite

RACHLIN
PARTNERS
8640 National Boulevard
Culver City, CA 90232
310.204.3400

Disclaim

THESE DRAWINGS ARE THE PROPERTY OF THE ARCHITECT. THE DESIGNS SHOWN AND DESCRIBED HEREIN INCLUDING ALL TECHNICAL DRAWINGS ARE PROPRIETARY AND CANNOT BE COPIED, DUPLICATED OR COMMERCIALLY EXPLOITED EXCEPT BY WRITTEN AGREEMENT. THESE DRAWINGS AND SPECIFICATIONS SHALL NOT BE USED BY THE OWNER ON OTHER PROJECTS, FOR ADDITIONS TO THIS PROJECT, OR FOR COMPLETION OF THIS PROJECT BY OTHERS. THE OWNER AGREES TO HOLD HARMLESS, INDEMNIFY AND DEFEND THE ARCHITECT AGAINST ALL DAMAGES, CLAIMS AND LOSSES, INCLUDING DEFENSE COSTS, ARISING OUT OF ANY REUSE OF PLANS AND SPECIFICATIONS WITHOUT THE WRITTEN AUTHORIZATION OF THE ARCHITECT OF RECORD.

Copyright © 2022 Rachlin Partners, All Rights Reserved.

Performing Arts Center

Hacienda La Puente Unified School District
635 North California Avenue
La Puente, CA 91744

Re	Dat	Issu
1	7.22.22	50%
2	10.21.22	50%
3	12.09.22	100% CD DSA
4	6.19.23	100% CD DSA RESUBMITTAL
5	9.20.23	DSA BACK CHECK

Date: 9.20.2023
Scale: 3/4" = 1'-0"
Drawn By: Author
Checked By: Checker

Architect / Engineer

LICENSED ARCHITECT
LICENSE NO. C-26229
REN: 8-31-25
STATE OF CALIFORNIA

REGISTERED PROFESSIONAL ENGINEER
Frank J. Rice
No. S5397
Exp: 09-30-23
STRUCTURAL
STATE OF CALIFORNIA

Consulta

Miyamoto International, Inc.
The Ruzika Company, Inc.
MDC Consulting Engineers
Pocock Design Solutions
Newson Brown Acoustics, LLC
VCA Engineers, Inc.
HJSA Consulting

Sheet Title

SECTIONS

Sheet

S5.5

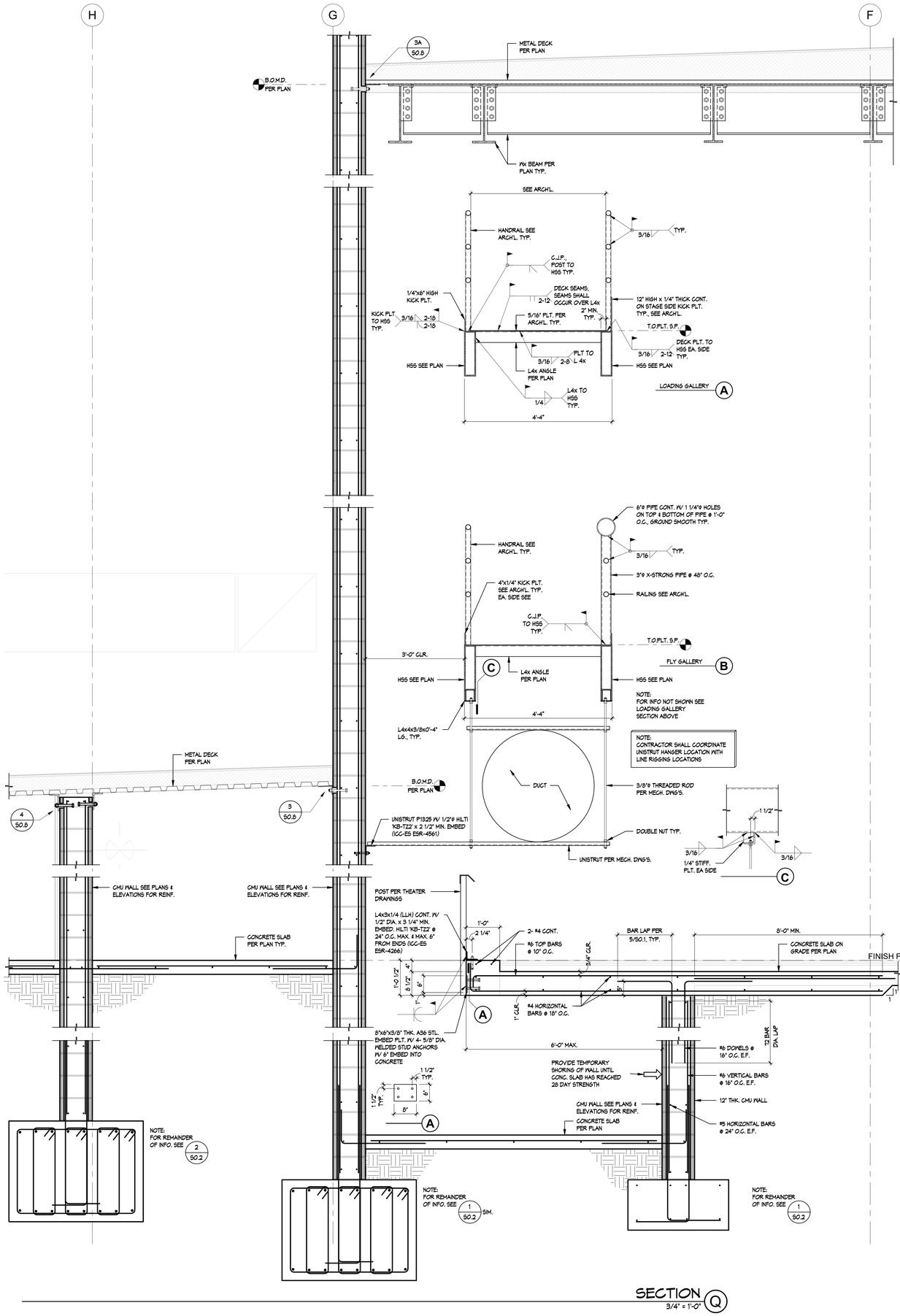

C:\Users\dstozier\Documents\69-5502-R22_Central_Struct_dstozierWYNL4.rvt

APPL No. A03-122864

IDENTIFICATION STAMP
DIV. OF THE STATE ARCHITECT
APP: 03-122864 INC:
REVIEWED FOR
SS ☑ FLS ☑ ACS ☑
DATE: 10/03/2023

DSA

Archite

RACHLIN
PARTNERS
8640 National Boulevard
Culver City, CA 90232
310.204.3400

Disclaim

THESE DRAWINGS ARE THE PROPERTY OF THE ARCHITECT. THE DESIGNS SHOWN AND DESCRIBED HEREIN INCLUDING ALL TECHNICAL DRAWINGS ARE PROPRIETARY AND CANNOT BE COPIED, DUPLICATED OR COMMERCIALLY EXPLOITED EXCEPT BY WRITTEN AGREEMENT. THESE DRAWINGS AND DESIGNS SHALL NOT BE USED BY THE OWNER ON OTHER PROJECTS, FOR ADDITIONS TO THIS PROJECT, OR FOR COMPLETION OF THIS PROJECT BY OTHERS. THE OWNER AGREES TO HOLD HARMLESS, INDEMNIFY AND DEFEND THE ARCHITECT AGAINST ALL DAMAGES, CLAIMS AND LOSSES, INCLUDING DEFENSE COSTS, ARISING OUT OF ANY REUSE OF PLANS AND SPECIFICATIONS WITHOUT THE WRITTEN AUTHORIZATION OF THE ARCHITECT OF RECORD.

Copyright © 2022 Rachlin Partners, All Rights Reserved.

Performing Arts Center

Hacienda La Puente Unified School District
635 North California Avenue
La Puente, CA 91744

Re	Dat	Issu
1	7.22.22	50%
2	10.21.22	50%
3	12.09.22	100% CD DSA
4	6.19.23	100% CD DSA RESUBMITTAL
5	9.20.23	DSA BACK CHECK

Date: 9.20.2023
Scale: 3/4" = 1'-0"
Drawn By: Author
Checked By: Checker

Architect / Engineer

LICENSED ARCHITECT EDWARD INCE JASKI NO. C-26229 REN. 8-31-25 STATE OF CALIFORNIA
REGISTERED PROFESSIONAL ENGINEER Frank J. Rice No. SE3197 Exp. 09-30-23 STRUCTURAL STATE OF CALIFORNIA

Consulta

Miyamoto International, Inc.
The Ruzika Company, Inc.
MDC Consulting Engineers
Pocock Design Solutions
Newson Brown Acoustics, LLC
VCA Engineers, Inc.
HJSA Consulting

Sheet Title

SECTIONS

Sheet

S5.6

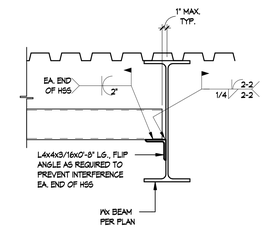

HSS TO Wx CONN. R1
1" = 1'-0"

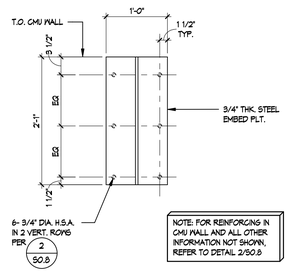

EMBED PLT. @ CMU WALL R2
1" = 1'-0"

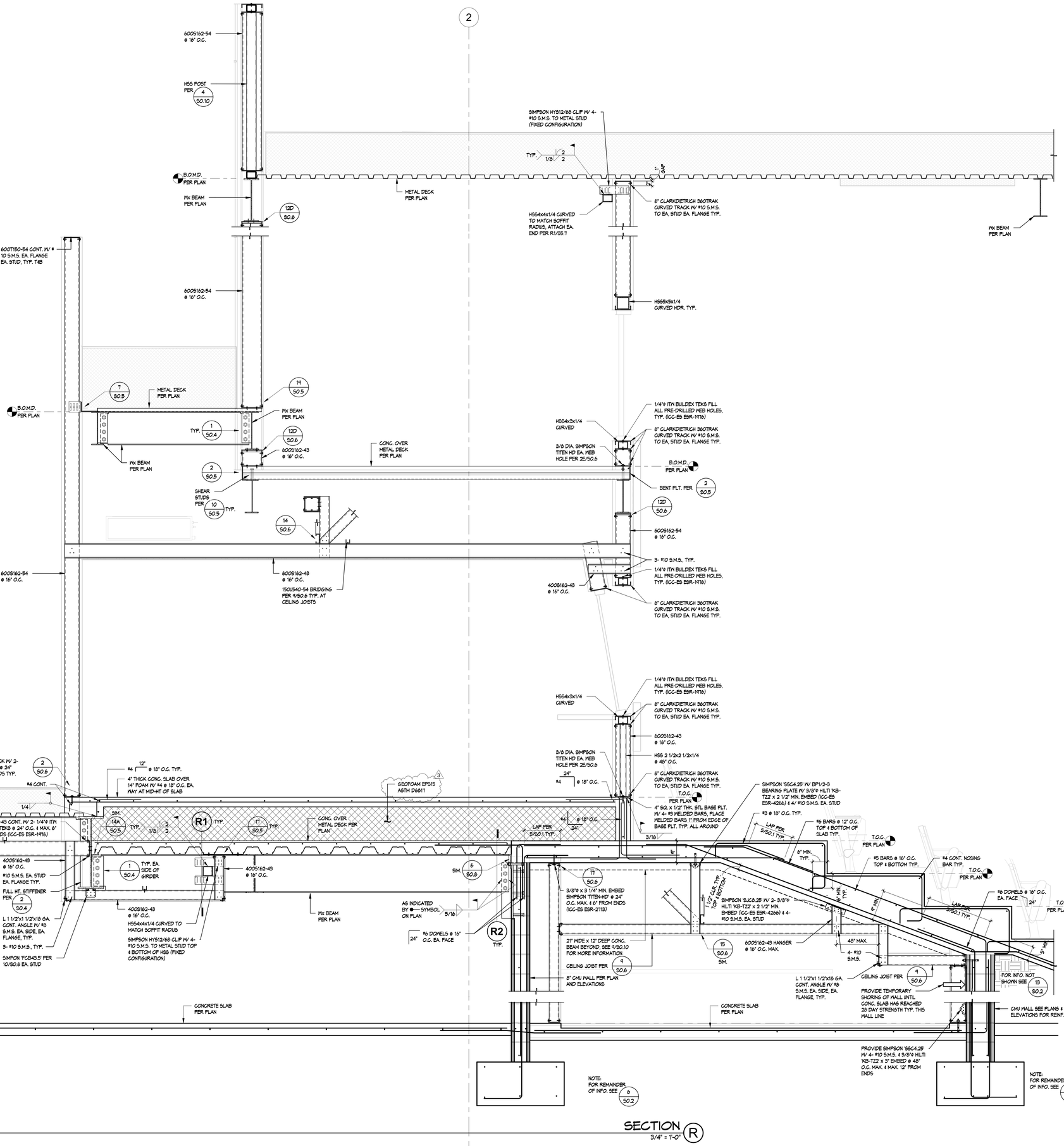

C:\Users\ddozier\Documents\89-S62-R22_Central_Struct_ddozierWYN14.rvt

APPL No. A03-122864

DSA

Archite

RACHLIN PARTNERS
8640 National Boulevard
Culver City, CA 90232
310.204.3400

Disclaim

THESE DRAWINGS ARE THE PROPERTY OF THE ARCHITECT. THE DESIGNS SHOWN AND DESCRIBED HEREIN INCLUDING ALL TECHNICAL DRAWINGS ARE PROPRIETARY AND CANNOT BE COPIED, DUPLICATED OR COMMERCIALLY EXPLOITED EXCEPT WITH THE WRITTEN PERMISSION OF THE ARCHITECT AND SHALL NOT BE USED BY THE OWNER ON OTHER PROJECTS, FOR ADDITIONS TO THIS PROJECT, OR FOR COMPLETION OF THIS PROJECT BY OTHERS. THE OWNER AGREES TO HOLD HARMLESS, INDEMNIFY AND DEFEND THE ARCHITECT AGAINST ALL DAMAGES, CLAIMS AND LOSSES, INCLUDING DEFENSE COSTS, ARISING OUT OF ANY REUSE OF PLANS AND SPECIFICATIONS WITHOUT THE WRITTEN AUTHORIZATION OF THE ARCHITECT OF RECORD.

Copyright © 2022 Rachlin Partners, All Rights Reserved.

Performing Arts Center

Hacienda La Puente Unified School District
635 North California Avenue
La Puente, CA 91744

Re	Dat	Issu
1	7.22.22	50%
2	10.21.22	50%
3	12.09.22	100% CD DSA
2.	10.31.23	ADDENDUM NO. 2
3.	12.11.23	ADDENDUM NO. 3

Date: 09/28/22
Scale: As indicated
Drawn By: Author
Checked By: Checker

Architect / Engineer

LICENSED ARCHITECT — Edward Rachlin — NO. C-26229 — REN. 8-31-23 — STATE OF CALIFORNIA

REGISTERED PROFESSIONAL ENGINEER — Frank J. Rice — No. S5372 — Exp. 09/30/23 — STRUCTURAL — STATE OF CALIFORNIA

Consulta

Miyamoto International, Inc.
The Ruzika Company, Inc.
MDC Consulting Engineers
Pocock Design Solutions
Newson Brown Acoustics, LLC
VCA Engineers, Inc.
HJSA Consulting

Sheet Title

SECTIONS

Sheet

S5.7

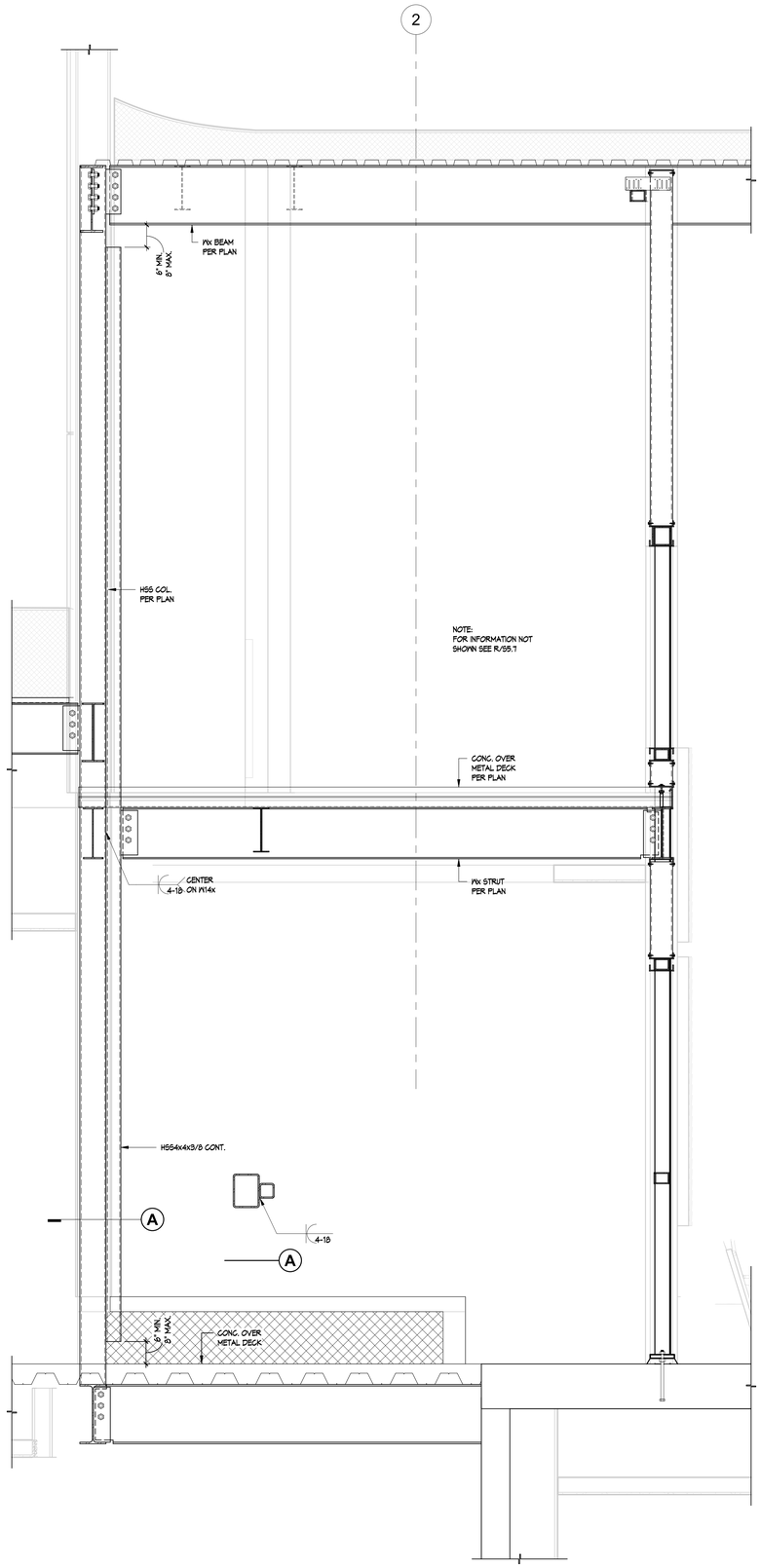

Section T
3/4" = 1'-0" (T)

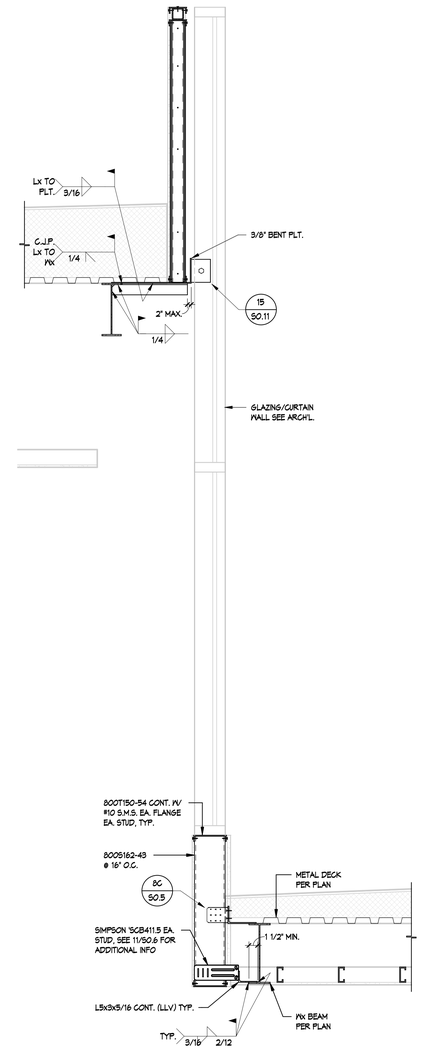

Section S
3/4" = 1'-0" (S)

C:\Users\ddozier\Documents\989-562-R22_Central_Struct_ddozierWYNL4.rvt

APPL No. A03-122864

IDENTIFICATION STAMP
DIV. OF THE STATE ARCHITECT
APP: 03-122864 INC:
REVIEWED FOR
SS ☑ FLS ☑ ACS ☑
DATE: 10/03/2023

DSA

Archite

RACHLIN
PARTNERS
8640 National Boulevard
Culver City, CA 90232
310.204.3400

Disclaim

THESE DRAWINGS ARE THE PROPERTY OF THE ARCHITECT. THE DESIGNS SHOWN AND DESCRIBED HEREIN INCLUDING ALL TECHNICAL DRAWINGS ARE PROPRIETARY AND CANNOT BE COPIED, DUPLICATED OR COMMERCIALLY EXPLOITED EXCEPT BY WRITTEN AGREEMENT. THESE DRAWINGS AND DESIGNS SHALL NOT BE USED BY THE OWNER ON OTHER PROJECTS, FOR ADDITIONS TO THIS PROJECT, OR FOR COMPLETION OF THIS PROJECT BY OTHERS. THE OWNER AGREES TO HOLD HARMLESS, INDEMNIFY AND DEFEND THE ARCHITECT AGAINST ALL DAMAGES, CLAIMS AND LOSSES, INCLUDING DEFENSE COSTS, ARISING OUT OF ANY REUSE OF PLANS AND SPECIFICATIONS WITHOUT THE WRITTEN AUTHORIZATION OF THE ARCHITECT OF RECORD.

Copyright © 2022 Rachlin Partners, All Rights Reserved.

Performing Arts Center

Hacienda La Puente Unified School District
635 North California Avenue
La Puente, CA 91744

Re	Dat	Issu
1	7.22.22	50%
2	10.21.22	50%
3	12.09.22	100% CD DSA
4	6.19.23	100% CD DSA RESUBMITTAL
5	9.20.23	DSA BACK CHECK

Date: 9.20.2023
Scale: 3/4" = 1'-0"
Drawn By: Author
Checked By: Checker

Architect / Engineer

LICENSED ARCHITECT — Frank J. Rice — NO. C-28229 — REN. 8-31-25 — STATE OF CALIFORNIA
REGISTERED PROFESSIONAL ENGINEER — Frank J. Rice — No. S5317 — Exp. 09.30.23 — STRUCTURAL — STATE OF CALIFORNIA

Consulta
Miyamoto International, Inc.
The Ruzika Company, Inc.
MDC Consulting Engineers
Pocock Design Solutions
Newson Brown Acoustics, LLC
VCA Engineers, Inc.
HJSA Consulting

Sheet Title

SECTIONS

Sheet

S5.8

GEOPIER DESIGN NOTES:

1. GEOPIER FOUNDATION SUPPORT IS AS DESIGNED BY GEOPIER FOUNDATION COMPANY, DAVIDSON, NORTH CAROLINA (DESIGNER).
2. THESE DESIGN DRAWINGS ARE PREPARED BY THE DESIGNER FOR USE IN GEOPIER CONSTRUCTION. THE GEOPIER SYSTEM SHALL BE INSTALLED BY APPROVED INSTALLERS LICENSED BY GEOPIER FOUNDATION COMPANY. UNAUTHORIZED USE OF THESE DRAWINGS IS PROHIBITED.
3. THE GEOPIER FOUNDATION DESIGN IS BASED ON THE GEOTECHNICAL INFORMATION PROVIDED IN THE SUBSURFACE EXPLORATION BY GEOTECHNICAL PROFESSIONALS, INC. IN THE REPORT DATED 09/25/23 GEOPIER FOUNDATION COMPANY HAS RELIED ON THIS INFORMATION AND WE HAVE NO REASON TO SUSPECT ANY OF THE INFORMATION IN THE REPORT IS IN ERROR. GEOPIER FOUNDATION COMPANY IS NOT RESPONSIBLE FOR ERRORS OR OMISSIONS IN THE REPORT THAT MAY AFFECT THE PARAMETER VALUES IN OUR DESIGN. IF THE SUBSURFACE OR SITE CONDITIONS DIFFER FROM THOSE UTILIZED IN THE DESIGN THE DESIGNER SHALL BE NOTIFIED IMMEDIATELY.
4. THE ALLOWABLE BEARING PRESSURE FOR FOUNDATIONS SUPPORTED BY GEOPIER ELEMENTS IS AS REFERENCED IN DETAIL 1/GP0.1. THE GEOPIER LAYOUT IS DESIGNED TO PROVIDE SETTLEMENT CONTROL BASED ON SERVICE LOADS PROVIDED BY MIYAMOTO INTERNATIONAL, INC. IN THE EVENT THE STRUCTURAL LOADS VARY, THE DESIGNER SHALL BE NOTIFIED IMMEDIATELY.
5. FOOTING ELEVATIONS ARE THE RESPONSIBILITY OF THE GENERAL CONTRACTOR AND SHALL BE REPORTED IN WRITING TO THE INSTALLER'S QC REPRESENTATIVE PRIOR TO INSTALLING GEOPIER ELEMENTS.

GEOPIER LAYOUT NOTES:

1. GEOPIER ELEMENTS SHALL BE INSTALLED IN THE FIELD WITHIN 6 INCHES OF LOCATIONS SHOWN ON THESE PLANS.
2. GEOPIER ELEMENTS ARE LOCATED RELATIVE TO THE INTERSECTION OF REFERENCE GRID LINES OR AT THE CENTERLINE OF STRIP FOOTINGS, UNLESS DIMENSIONED OTHERWISE. PLEASE REFER TO THE "FOOTING DETAILS" ON THIS SHEET FOR SPECIFIC PIER LOCATIONS AND DIMENSIONS RELATIVE TO THE FOOTING.
3. THE "GEOPIER LOCATION PLAN" AND "FOOTING DETAILS" PROVIDE GEOPIER ELEMENT NUMBER, LOCATION, AND LAYOUT ONLY. FOOTING LOCATIONS, SIZES, AND ORIENTATION SHOWN ON THESE PLANS ARE FOR INFORMATION ONLY. PLEASE REFER TO THE STRUCTURAL PLANS FOR SPECIFIC FOUNDATION DIMENSIONS AND LOCATIONS. WE HAVE COORDINATED THE GEOPIER LOCATIONS BASED ON SHEET S2.11 DATED 12/09/22. THE DESIGNER SHALL BE NOTIFIED IMMEDIATELY IF INFORMATION ON THESE PLANS CONFLICTS WITH STRUCTURAL OR ARCHITECTURAL DRAWINGS.

UTILTIES/OBSTRUCTION NOTES:

1. UTILITY LOCATIONS ARE THE RESPONSIBILITY OF THE GENERAL CONTRACTOR. THE DESIGNER SHALL BE NOTIFIED OF ANY CONFLICTS WITH GEOPIER LOCATIONS SHOWN ON THE PLANS. NEW TEMPORARY UTILITY EXCAVATIONS SHALL BE LIMITED TO THE ZONE DEPICTED ON DETAIL 2 OF THIS SHEET. IF EXCAVATIONS ARE PLANNED WITHIN THE GEOPIER "NO DIG" ZONE, THE DESIGNER SHALL BE NOTIFIED IMMEDIATELY TO DISCUSS EXCAVATION OPTIONS.
2. IF OBSTRUCTIONS ARE ENCOUNTERED DURING GEOPIER INSTALLATION THAT CANNOT BE REMOVED WITH CONVENTIONAL GEOPIER INSTALLATION EQUIPMENT, THE GENERAL CONTRACTOR SHALL BE RESPONSIBLE FOR REMOVING THE OBSTRUCTIONS. IF THE GENERAL CONTRACTOR DOES NOT DO SO IN A TIMELY MANNER THAT DOES NOT INTERRUPT GEOPIER PRODUCTION, THE INSTALLER MAY REMOVE OBSTRUCTION(S) AND SHALL BE REIMBURSED FOR COSTS INCURRED, INCLUDING LABOR, EQUIPMENT, AND MATERIALS. IN THE EVENT OBSTRUCTIONS ARE ENCOUNTERED BELOW THE DESIGNED BOTTOM OF FOOTING ELEVATION THE OBSTRUCTION SHALL BE REMOVED AS OUTLINED ABOVE. THE RESULTING EXCAVATION SHALL THEN BE BACKFILLED AND COMPACTED IN ACCORDANCE WITH THE PROJECT SPECIFICATIONS FOR STRUCTURAL FILL. THE AREA SHALL BE TESTED BY THE OWNER'S TESTING AGENCY AND THE COMPACTION TEST RESULTS SHALL BE SUBMITTED TO THE INSTALLER AND THE DESIGNER.

CONSTRUCTION NOTES FOR CONCRETE FOUNDATIONS SUPPORTED BY GEOPIER® ELEMENTS:

1. ALL EXCAVATIONS FOR FOUNDATIONS SUPPORTED BY GEOPIER ELEMENTS SHALL BE PREPARED IN THE FOLLOWING MANNER BY THE GENERAL CONTRACTOR: OVEREXCAVATION BELOW THE BOTTOM OF FOUNDATION SHALL BE LIMITED TO THREE INCHES. THIS INCLUDES LIMITING THE TEETH OF EXCAVATORS FROM OVEREXCAVATION BEYOND THREE INCHES BELOW THE FOUNDATION ELEVATION.
2. FOUNDATION CONCRETE SHALL BE PLACED IMMEDIATELY FOLLOWING FOUNDATION EXCAVATION AND APPROVAL, PREFERABLY THE SAME DAY AS THE EXACAVATION. FOUNDATION CONCRETE SHALL BE PLACED ON THE SAME DAY IF THE FOUNDATION IS BEARING ON MOISTURE-SENSITIVE SOILS. IF SAME DAY PLACEMENT OF FOUNDATION CONCRETE IS NOT POSSIBLE, OPEN EXCAVATIONS SHALL BE PROTECTED FROM SURFACE WATER ACCUMULATION. A LEAN CONCRETE MUD-MAT MAY BE USED TO ACCOMPLISH THIS. GENERAL CONTRACTOR IS RESPONSIBLE FOR PROTECTION OF THE FINAL FOOTING SUBGRADE AND GEOPIER ELEMENTS FROM SURFACE WATER ACCUMULATION.
3. PRIOR TO CONCRETE OR MUD MAT PLACEMENT, THE TOP OF THE EXCAVATED SOIL AND GEOPIER ELEMENTS SHALL BE COMPACTED WITH A STANDARD, HAND-OPERATED IMPACT COMPACTOR (I.E. JUMPING JACK COMPACTOR). COMPACTION SHALL BE PERFORMED OVER THE ENTIRE FOUNDATION SUBGRADE TO COMPACT ANY LOOSE SURFACE SOIL AND LOOSE SURFACE GEOPIER AGGREGATE.
4. WATER SHALL NOT BE ALLOWED TO ACCUMULATE IN THE FOUNDATION EXCAVATIONS PRIOR TO CONCRETE PLACEMENT OR ALLOWED TO ACCUMULATE OVER THE POURED FOUNDATION.
5. EXCAVATION AND SURFACE COMPACTION OF ALL FOUNDATION SUBGRADES SHALL BE THE RESPONSIBILITY OF THE GENERAL CONTRACTOR.
6. THE TESTING AGENCY SHALL INSPECT EACH FOUNDATION AND APPROVE IT IN WRITING ON THE SAME DAY THAT THE CONCRETE OR MUD MAT IS PLACED IN THE FOUNDATION EXCAVATION. THE APPROVAL SHALL STATE THAT ALL FOUNDATION SUBGRADE, INCLUDING MATRIX SOILS AND GEOPIER TOPS, HAVE NOT BEEN OVEREXCAVATED MORE THAN THREE-INCHES BELOW THE BOTTOM OF THE FOUNDATION, HAVE BEEN KEPT FREE OF WATER ACCUMULATION, AND HAVE BEEN REASONABLY COMPACTED WITH A HAND-HELD MECHANICAL IMPACT COMPACTOR ON THE SAME DAY THAT THE CONCRETE WAS PLACED.
7. IN THE EVENT THAT FOUNDATION BOTTOM PREPARATIONS, AS DESCRIBED ABOVE, ARE NOT PERFORMED OR DOCUMENTED IN ACCORDANCE WITH THIS SECTION, ANY WRITTEN OR IMPLIED WARRANTY WITH RESPECT TO GEOPIER FOUNDATION PERFORMANCE CAN BY CONSIDERED VOID.

GEOPIER TESTING NOTES:

1. A QUALIFIED, FULL-TIME QUALITY CONTROL (QC) REPRESENTATIVE PROVIDED BY THE GEOPIER INSTALLER (INSTALLER) SHALL BE RESPONSIBLE FOR INSTALLATION OF THE GEOPIER ELEMENTS IN ACCORDANCE WITH THE DESIGN AND SHALL REPORT ALL GEOPIER FOUNDATION CONSTRUCTION ACTIVITIES TO THE DESIGNER. IF AUTHORIZED BY THE OWNER, THE QC REPRESENTATIVE SHALL COORDINATE QC ACTIVITIES WITH THE TESTING AGENCY HIRED BY THE OWNER. UNDER NO CIRCUMSTANCES SHALL THE TESTING AGENCY DIRECT GEOPIER INSTALLATION PROCEDURES.
2. GEOPIER ELEMENT DESIGN SHALL BE CONFIRMED BY A MODULUS TEST PERFORMED AT THE SITE. PLEASE REFER TO THE DESIGN SUBMITTAL FOR TEST LOCATION AND SPECIFICATIONS.
3. GEOPIER ELEMENTS SHALL BE BASED ON THE FOLLOWING CRITERIA UNLESS OTHERWISE APPROVED IN WRITING BY THE DESIGNER:
   A. INSTALLATION DEPTHS SHALL BE WITHIN 3 INCHES OR DEEPER THAN THE DEPTHS SHOWN ON THE PLANS.
   B. THE AVERAGE COMPACTED LIFT THICKNESS DURING EACH DAY'S PRODUCTION SHALL BE APPROXIMATELY 12 TO 24 INCHES.
   C. CROWD STABILIZATION TEST (CST) SHALL BE PERFORMED ON THE FIRST FIVE (5) INSTALLED PIERS (INCLUDING PRE-PRODUCTION PIERS) TO ESTABLISH ACCEPTANCE CRITERIA FOR THE MAXIMUM ALLOWABLE DEFLECTION OF THE MANDREL UNDER THE FULL-STATIC CROWD PRESSURE OF THE CLOSED-ENDED MANDREL. CST SHALL BE PERFORMED BY SHUTTING THE HAMMER ENERGY OFF AT THE TOP OF A COMPACTED LIFT IN THE BOTTOM ONE-HALF OF THE PIER. ONCE THE HAMMER ENERGY IS OFF AND THE MANDREL IS RESTING ON TOP OF THE LAST COMPACTED LIFT, STATIC CROWD PRESSURE SHALL BE APPLIED TO THE PIER FOR A PERIOD OF TEN SECONDS. THE CORRESPONDING DEFLECTION OF THE MANDREL IS THEN NOTED AND RECORDED. RESULTS OF THE INITIAL CSTS SHALL BE PROVIDED TO THE DESIGNER FOR REVIEW AND ESTABLISHMENT OF ACCEPTANCE CRITERIA AND FREQUENCY OF CSTS. THE FREQUENCY OF CSTS MAY VARY DEPENDING ON THE SOIL CONDITIONS; HOWEVER, CSTS SHALL BE PERFORMED ON NO LESS THAN 10% OF THE PRODUCTION PIERS OR AS APPROVED BY THE DESIGNER.
   D. GEOPIER ELEMENT AGGREGATE RELATIVE DENSITY SHALL BE RECORDED PERIODICALLY THROUGHOUT THE DAY. THE AVERAGE BLOW COUNTS OBTAINED UTILIZING A DYNAMIC CONE PENETROMETER (DCP) IN ACCORDANCE WITH ASTM STP-399, SHALL BE GREATER THAN 15 BLOWS FOR 1.75 INCHES OF PENETRATION (BPI). NO MORE THAN 10% OF DCP TESTS CONDUCTED ON EACH DAY SHALL BE BELOW 15 BPI. NOTE: USE OF DCP TESTS ARE NOT APPROPRIATE FOR OPEN GRADED AGGREGATE SUCH AS #57 STONE OR SAND.
   E. GEOPIER ELEMENT AGGREGATE SHALL BE APPROVED BY THE DESIGNER AND SHALL BE THE SAME AS USED IN A SUCCESSFUL MODULUS TEST, UNLESS OTHERWISE APPROVED IN WRITING BY THE DESIGNER.
   F. IF CAVE-INS OCCUR ON TOP OF A LIFT OF AGGREGATE SUCH THAT THE VOLUME OF CAVED SOIL IS GREATER THAN APPROXIMATELY 10% OF THE VOLUME OF THE AGGREGATE IN THE LIFT, THEN THE AGGREGATE SHALL BE CONSIDERED CONTAMINATED, AND SHALL BE REMOVED AND REPLACED WITH UNCONTAMINATED AGGREGATE.
4. GEOPIER ELEMENTS NOT MEETING DESIGN REQUIREMENTS SHALL BE REINSTALLED UNLESS OTHERWISE APPROVED IN WRITING BY THE DESIGNER.
5. GEOPIER SYSTEMS SHALL BE SUBJECT TO QUALITY ASSURANCE AND PERFORMANCE VERIFICATION TESTING AS REQUIRED BY THE GEOTECHNICAL ENGINEER OF RECORD AND ACCEPTED BY CGS, INCLUDING THE FOLLOWING MINIMUM REQUIREMENTS.
   A. AT LEAST ONE PRECONSTRUCTION FULL GEOPIER LOAD TEST IN EACH AREA OF UNIFORM SUBSOIL CONDITIONS. THE INSTALLATION PROCEDURE OF TEST GEOPIER SHALL BE THE SAME AS THE PRODUCTION GEOPIER.
   B. BOTTOM STABILIZATION VERIFICATION TESTS SHALL BE PERFORMED ON THE FIRST 5 INSTALLED ELEMENTS EACH DAY AND THEN AT A RATE OF 1 IN 5 ELEMENTS THEREAFTER.
   C. DYNAMIC CONE PENETROMETER TESTS SHALL BE PERFORMED ON THE FIRST 5 INSTALLED ELEMENTS EACH DAY AND THEN AT A RATE OF 1 IN 5 ELEMENTS THEREAFTER.
6. GEOPIER SYSTEMS SHALL BE SUBJECT TO SPECIAL INSPECTION PERFORMED BY THE PROJECT GEOTECHNICAL ENGINEER LISTED ON THE FORM DSA 1 (OR ASSUMING FULL RESPONSIBILITY THROUGH FORM DSA 109). THIS GEOTECHNICAL ENGINEER SHALL NOT BE EMPLOYED THE CONTRACTOR OF GROUND IMPROVEMENT SUB-CONTRACTOR PER CAC 4-335(F). THE PROJECT GEOTECHNICAL ENGINEER WILL SUBMIT A FINAL VERIFIED REPORT (FORM DSA 293) COVERING ALL GEOTECHNICAL ASPECTS OF THE PROJECT SUBJECT TO SPECIAL INSPECTION, INCLUSIVE OF THE RAP SYSTEM. QUALITY CONTROL SITE OBSERVATION PERFORMED BY A REPRESENTATIVE OF THE GEOPIER INSTALLER IS NOT SUITABLE FOR SPECIAL INSPECTION B THE PROJECT GEOTECHNICAL ENGINEER. SPECIAL INSPECTION OF THE RAP SYSTEMS INCLUDE THE TASKS REQUIRED BT ICC ESR-1685 SECTION 4.3.
7. THE DESIGNER AS LISTED ON FORM DSA 1-DEL SHALL SUBMIT A FINAL VERIFIED REPORT FORM DSA 6-AE. BECAUSE THE FORM DSA 6-AE DOES NOT CONTAIN A LINE FOR CIVIL OF GEOTECHNICAL ENGINEER, THE DESIGNER SHOULD MODIFY ONE OF THE EXISTING CATEGORIES TO FIT THEIR DESIGNATION.

CONSTRUCTION NOTES FOR SLABS SUPPORTED BY GEOPIER ELEMENTS:

1. ALL EXCAVATION FOR SLABS SUPPORTED BY GEOPIER ELEMENTS SHALL BE PREPARED IN THE FOLLOWING MANNER BY THE GENERAL CONTRACTOR: OVEREXCAVATION BELOW THE BOTTOM OF SLAB SUBGRADE, INCLUDING THE TEETH OF EXCAVATORS, SHALL BE LIMITED TO THREE INCHES.
2. THE TOP OF THE EXCAVATED SOIL AND GEOPIER ELEMENTS SHALL BE COMPACTED PER THE GEOTECHNICAL ENGINEER'S RECOMMENDATIONS. COMPACTION SHALL BE PERFORMED OVER THE ENTIRE SLAB SUBGRADE TO COMPACT ANY LOOSE SURFACE SOIL AND LOOSE SURFACE PIER AGGREGATE.
3. WATER SHALL NOT BE ALLOWED TO ACCUMULATE ON THE SLAB SUBGRADE PRIOR TO CONCRETE PLACEMENT OR ALLOWED TO ACCUMULATE OVER THE POURED SLAB.
4. EXCAVATION AND SURFACE COMPACTION OF ALL SLAB SUBGRADES SHALL BE THE RESPONSIBILITY OF THE GENERAL CONTRACTOR.
5. THE TESTING AGENCY SHALL INSPECT THE SLAB SUBGRADE AND APPROVE IT IN WRITING ON THE SAME DAY THAT THE SLAB CONCRETE IS PLACED. THE APPROVAL SHALL STATE THAT ALL SLAB SUBGRADE, INCLUDING MATRIX SOILS AND GEOPIER ELEMENTS, HAVE NOT BEEN OVEREXCAVATED MORE THAN THREE INCHES BELOW THE BOTTOM OF THE SLAB SUBGRADE, HAVE BEEN KEPT FREE OF WATER ACCUMULATION, AND HAVE BEEN REASONABLY COMPACTED ON THE SAME DAY THAT THE CONCRETE WAS PLACED.
6. IN THE EVENT THAT SLAB SUBGRADE PREPARATIONS, AS DESCRIBED ABOVE, ARE NOT PERFORMED OR DOCUMENTED IN ACCORDANCE WITH THIS SECTION, ANY WRITTEN OR IMPLIED WARRANTY WITH RESPECT TO GEOPIER FOUNDATION PERFORMANCE CAN BE CONSIDERED VOID.

Design Parameter	Value
Allowable bearing pressure (ksf)	6
Geopier stiffness modulus (pci)	250
Soil stiffness modulus (pci)	27.8

Type / Mark	Maximum Load, (kips, klf)	Width, (ft)	Length, (ft)	Thickness, (in)	Geopier Diameter, (in)	Number of Geopier Elements per Footing	Maximum Geopier spacing, (ft)	Minimum Design Shaft Length, (ft) (1)	Anticipated Settlement, (in) (2)	Notes
F4	15	4.0	4.0	12	24	1	-	20.0	1/4	
F6	100	6.0	6.0	14	24	2	-	20.0	1/4	
F8	30	4.0	8.0	12	24	2	-	20.0	1/4	
CF 1.5	1	1.5	-	12	24	-	7.00	20.0	1/4	
CF 2.0	3	2.0	-	18	24	-	7.00	20.0	1/4	
CF 3.0	6	3.0	-	18	24	-	7.00	20.0	1/4	
GB 4.0	9	4.0	-	36	24	-	7.00	20.0	1/4	
GB 6.0	9	6.0	-	60	24	-	4.50	20.0	1/2	
GB 7.5	9	7.5	-	60	24	-	3.50	20.0	1/2	
SLAB	-	-	-	5	24	-	7.00	20.0	-	

NOTES: *(1) Shaft length is measured from the bottom of footing.*
(2) Anticipated settlement is estimated to the nearest 1/4 inch.
(3) 1/3 increase for short term transient loads.

1 GEOPIER® DESIGN PARAMETERS AND ESTIMATED SETTLEMENT

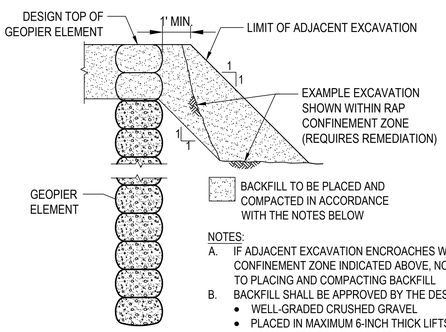

NOTES:
A. IF ADJACENT EXCAVATION ENCROACHES WITHIN THE RAP CONFINEMENT ZONE INDICATED ABOVE, NOTIFY DESIGNER PRIOR TO PLACING AND COMPACTING BACKFILL
B. BACKFILL SHALL BE APPROVED BY THE DESIGNER AND CONSIST OF:
   - WELL-GRADED CRUSHED GRAVEL
   - PLACED IN MAXIMUM 6-INCH THICK LIFTS
   - COMPACTED TO 95% OF ASTM D-1557 OR 100% OF ASTM D-698
C. ALTERNATIVE BACKFILL MATERIALS MAY BE USED WITH WRITTEN APPROVAL OF THE DESIGNER

3 REQUIREMENTS FOR REMEDIATION OF INFRINGEMENT ON EXCAVATION LIMITS
NOT TO SCALE

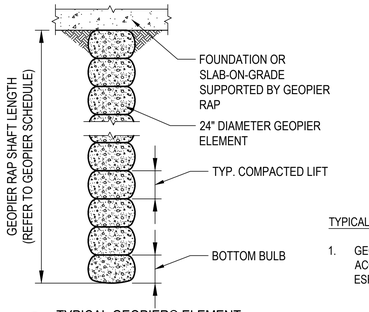

TYPICAL GEOPIER ELEMENT NOTES:

1. GEOPIER SYSTEM SHALL BE INSTALLED IN GENERAL ACCORDANCE WITH EVALUATION REPORT ICC ESR-1685.

4 TYPICAL GEOPIER® ELEMENT
NOT TO SCALE

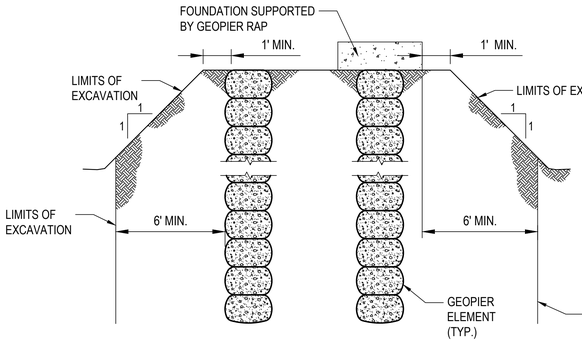

ADJACENT TEMPORARY UTILITY EXCAVATION NOTES:

1. ADJACENT TEMPORARY UTILITY EXCAVATIONS MUST BE OUTSIDE THIS ZONE AND IN ACCORDANCE WITH PROJECT GEOTECHNICAL ENGINEER RECOMMENDATIONS. IF THIS IS NOT THE CASE, THE DESIGNER SHALL BE NOTIFIED IMMEDIATELY.
2. THIS DETAIL DOES NOT APPLY TO MASS EXCAVATION OR SITE GRADING.
3. THE PROJECT GEOTECHNICAL ENGINEER'S RECOMMENDATIONS SHALL BE FOLLOWED FOR TEMPORARY OR PERMANANT SLOPES.

2 ADJACENT TEMPORARY UTILITY EXCAVATION LIMITS
NOT TO SCALE

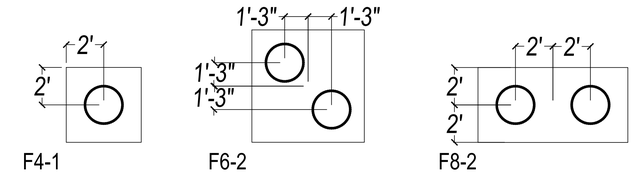

5 FOOTING DETAILS
NOT TO SCALE

"Geopier®" and Rammed Aggregate Pier®" are registered trademarks of Geopier Foundation Company. This drawing contains information proprietary to The Geopier Foundation Company and its licensees. The information contained herein is not to be transmitted to any other organization unless specifically authorized in writing by Geopier Foundation Company.

Geopier® is the property of Geopier Foundation Company and is protected under U.S. Patent No. 6,425,713; 6,688,815; 6,988,855, 5,249,892; 7,226,246; 6,354,766; 7,004,684; 6,354,768; 7,326,004 and other patents pending.

Plot Date: 9/19/2023 10:38:13 PM Last Save By: rbula Login: Ryan Bulatao C:\Users\rbula\Documents\Projects\Working Folder\ - DSA\DSA - Hacienda LaPuente\PAC\Design\MASTER Design_DSA - Hacienda La Puente PAC_rev3_DSA 2nd Backcheck.dwg

APPL. No. A 03-122864
IDENTIFICATION STAMP
DIV. OF THE STATE ARCHITECT
APP: 03-122864 INC:
REVIEWED FOR
SS ☑ FLS ☑ ACS ☑
DATE: 10/03/2023
DSA Stamp

Architect
RACHLIN PARTNERS
8540 National Boulevard
Culver City, CA 90232
310.204.3400

Disclaimer:
THESE DRAWINGS ARE THE PROPERTY OF THE ARCHITECT. THE DESIGNS SHOWN AND DESCRIBED HEREIN INCLUDING ALL TECHNICAL DRAWINGS ARE PROPRIETARY AND CANNOT BE COPIED, DUPLICATED OR COMMERCIALLY EXPLOITED, IN WHOLE OR IN PART. THE DRAWINGS AND SPECIFICATIONS SHALL NOT BE USED BY THE OWNER ON OTHER PROJECTS, FOR ADDITIONS TO THIS PROJECT, OR FOR COMPLETION OF THIS PROJECT BY OTHERS. THE OWNER AGREES TO HOLD HARMLESS, INDEMNIFY AND DEFEND THE ARCHITECT AGAINST ALL DAMAGES, CLAIMS AND LOSSES, INCLUDING DEFENSE COSTS, ARISING OUT OF ANY REUSE OF PLANS AND SPECIFICATIONS WITHOUT THE WRITTEN AUTHORIZATION OF THE ARCHITECT OF RECORD.
Copyright© 2022 Rachlin Partners. All Rights Reserved.

Performing Arts Center
Hacienda La Puente Unified
School District

Rev	Date	Issue
1	06/14/23	DSA RESUBMITTAL
2	09/20/23	DSA BACKCHECK

Date: 9.20.2023
Scale: As Shown
Drawn By: RB
Checked By: KH

Architect / Engineer Stamp

LICENSED ARCHITECT — RYAN PAUL BULATAO — NO. C-32229 REN. 8-31-25 — STATE OF CALIFORNIA
REGISTERED PROFESSIONAL ENGINEER — RYAN PAUL BULATAO — GE 3021 — GEOTECHNICAL — STATE OF CALIFORNIA

Consultants
Western Ground Improvement

Sheet Title
GEOPIER® NOTES AND DETAILS

Sheet Number
GP0.1

***GEOPIER®* Foundation Company**

GEOPIER®

Project Name: DSA - Hacienda La Puente PAC
Project Location: La Puente, Ca
Project Number: GLA-189 / NLA-48

GEOPIER® SCHEDULE

Column Line	Geopier® Number(s)	Type / Mark	Top of Footing Elevation (ft) (1)	Width (ft) (3)	Length (ft) (3)	Thickness (in) (3)	Geopier Shaft Length, (ft)	Finish Floor Elevation, (ft) (2)	Top of Geopier® Elevation, (ft)	Notes
2.5-B.9	1	F4	-1.83	4.0	4.0	12	20	0.00	-2.83	
2.3-B.7	2	F4	-1.83	4.0	4.0	12	20	0.00	-2.83	
2.1-B.5	3	F4	-1.83	4.0	4.0	12	20	0.00	-2.83	
2-B.5	4	F4	-1.83	4.0	4.0	12	20	0.00	-2.83	
1.9-B.6	5	F4	-1.83	4.0	4.0	12	20	0.00	-2.83	
1.5-C.4	6	F4	-1.83	4.0	4.0	12	20	0.00	-2.83	
1.2-D.3	7	F4	-1.83	4.0	4.0	12	20	0.00	-2.83	
1-D.6	8 - 9	F8	-1.83	4.0	8.0	12	20	0.00	-2.83	
1-E.1	10	F4	-1.83	4.0	4.0	12	20	0.00	-2.83	
1-E.8	11 - 12	F8	-1.83	4.0	8.0	12	20	0.00	-2.83	
1.3-F.5	13 - 14	F8	-1.83	4.0	8.0	12	20	0.00	-2.83	
1.5-G.7	15 - 16	F8	-1.83	4.0	8.0	12	20	0.00	-2.83	
2-H.6	17 - 18	F8	-1.83	4.0	8.0	12	20	0.00	-2.83	
2.3-H.5	19	F4	-1.83	4.0	4.0	12	20	0.00	-2.83	
2.5-H.3	20	F4	-1.83	4.0	4.0	12	20	0.00	-2.83	
3-G	21 - 22	F6	-4.16	6.0	6.0	14	20	0.00	-5.33	
5-F	23 - 24	F6	-6.75	6.0	6.0	14	20	0.00	-7.92	
5-E.2	25 - 26	F6	-0.50	6.0	6.0	14	20	0.00	-2.83	
5-D.8	27 - 28	F6	-0.50	6.0	6.0	14	20	0.00	-2.83	
5-D.5	29 - 30	F6	-0.50	6.0	6.0	14	20	0.00	-2.83	
3-D	31 - 32	F6	-0.50	6.0	6.0	14	20	0.00	-2.83	
	33 - 49	NOT USED								
A	50 - 53	CF 3.0	-1.33	3.0	-	18	20	0.00	-2.83	
5	54 - 58	GB 4.0	-0.50	4.0	-	36	20	0.00	-4.33	
4	59 - 63	GB 4.0	-0.50	4.0	-	36	20	0.00	-4.33	
B	64 - 69	CF 3.0	-0.50	3.0	-	18	20	0.00	-2.83	
C	70 - 82	GB 4.0	-0.50	4.0	-	36	20	0.00	-4.33	
2.7-C.5	83	CF 3.0	-0.50	3.0	-	18	20	0.00	-2.83	
D	84 - 95	GB 4.0	-0.50	4.0	-	36	20	0.00	-4.33	
3-C.5	96	CF 3.0	-0.50	3.0	-	18	20	0.00	-2.83	
D	97 - 98	CF 3.0	-0.50	3.0	-	18	20	0.00	-2.83	
D	99 - 102	GB 4.0	-0.50	4.0	-	36	20	0.00	-4.33	
5	103 - 105	CF 3.0	-0.17	3.0	-	18	20	0.00	-1.67	
5	106	CF 3.0	-3.08	3.0	-	18	20	0.00	-4.58	
5	107 - 111	CF 3.0	-9.08	3.0	-	18	20	0.00	-10.58	
5.5	112 - 113	CF 2.0	-1.33	2.0	-	18	20	0.00	-2.83	
6	114 - 120	CF 3.0	-1.33	3.0	-	18	20	0.00	-2.83	
6	121	CF 3.0	-2.83	3.0	-	18	20	0.00	-4.33	
6	122	CF 3.0	-5.83	3.0	-	18	20	0.00	-7.33	
6	123 - 125	CF 3.0	-5.83	3.0	-	18	20	0.00	-7.33	
G	126 - 131	CF 2.0	-7.33	2.0	-	18	20	0.00	-8.83	
4	132 - 145	GB 7.5	-1.33	7.5	-	60	20	0.00	-6.33	
4	146 - 147	GB 7.5	-2.83	7.5	-	60	20	0.00	-7.83	
4	148 - 149	GB 7.5	-5.83	7.5	-	60	20	0.00	-10.83	
4	150 - 155	GB 7.5	-8.83	7.5	-	60	20	0.00	-13.83	
G	156 - 160	GB 4.0	-9.08	4.0	-	36	20	0.00	-12.08	
H	161	GB 4.0	-7.33	4.0	-	36	20	0.00	-10.33	
>6	162	CF 3.0	-4.00	3.0	-	18	20	0.00	-5.50	
I	163 - 177	CF 3.0	-1.33	3.0	-	18	20	0.00	-2.83	
H	178 - 180	GB 4.0	-1.33	4.0	-	36	20	0.00	-4.33	
H	181	GB 4.0	-4.00	4.0	-	36	20	0.00	-7.00	
H	182	GB 4.0	-6.67	4.0	-	36	20	0.00	-9.67	
H	183 - 184	GB 4.0	-9.08	4.0	-	36	20	0.00	-12.08	
H	185 - 191	GB 4.0	-7.33	4.0	-	36	20	0.00	-10.33	
G	192	GB 4.0	-8.00	4.0	-	36	20	0.00	-11.00	
G	193	GB 4.0	-5.33	4.0	-	36	20	0.00	-8.33	
G	194 - 201	GB 4.0	-1.33	4.0	-	36	20	0.00	-4.33	
2-H.1/D.5	202 - 214	GB 6.0	-1.33	6.0	-	60	20	0.00	-6.33	
D	215 - 238	CF 3.0	-1.33	3.0	-	18	20	0.00	-2.83	
3-4	239 - 246	CF 1.5	-5.33	1.5	-	12	20	0.00	-6.33	
4	247	CF 1.5	-8.33	1.5	-	12	20	0.00	-9.33	
4	248	CF 1.5	-11.33	1.5	-	12	20	0.00	-12.33	
4	249	CF 1.5	-8.67	1.5	-	12	20	0.00	-9.67	
4-3	250 - 251	CF 1.5	-6.00	1.5	-	12	20	0.00	-7.00	
3-4	252	CF 3.0	-8.17	3.0	-	18	20	0.00	-9.67	
3-4	253	CF 3.0	-5.50	3.0	-	18	20	0.00	-7.00	
2.6-G.5	254	CF 3.0	-1.33	3.0	-	18	20	0.00	-2.83	
2.6-H.1	255	CF 2.0	-1.33	2.0	-	18	20	0.00	-2.83	
1/2-H.2	256 - 271	CF 2.0	-0.50	2.0	-	18	20	0.00	-2.00	
2-D.5/C.	272 - 279	GB 6.0	-1.33	6.0	-	60	20	0.00	-6.33	
NOT USED	280 - 299	NOT USED								
	300 - 388		-	-	-	-	20	0.00	-1.00	BUILDING PERIMETER
NOT USED	389 - 399	NOT USED								
	400 - 613	SLAB	0.00	-	-	5	20	0.00	-0.42	

NOTES:
(1) Top of footing elevation shall be confirmed prior to Geopier element installation.
(2) Structure FFE = 0.00 ft is equivalent to Site Civil Elevation 317.5 ft.
(3) Footing dimensions shall be confirmed prior to Geopier element installation.

1 GEOPIER SCHEDULE

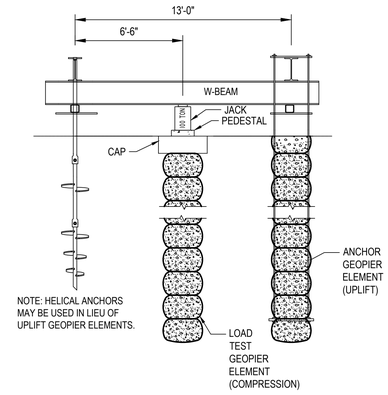

2 GEOPIER MODULUS TEST SETUP
NOT TO SCALE

***GEOPIER®* Foundation Company**

GEOPIER®

Project Name: DSA - Hacienda La Puente PAC
Project Location: La Puente, Ca
Project Number: GLA-189 / NLA-48

Geopier® Modulus Test Schedule

Geopier Design Stress: 12,688 psf
Geopier Element Design Diameter: 24 in.
Geopier Design Modulus: 250 pci

Modulus Test Location: GRID INT. E/1 and GRID INT. H.5/4
Test Geopier Element Shaft Length: 20 ft
Concrete Cap Thickness: 2 ft
Total Geopier Element Depth: 22 ft

Load No.	Ram Load, (kips)	Percent of Design Stress	Minimum Duration	Maximum Duration	Remarks
	1.99	5.0%	N/A	N/A	seating load
1	9.97	25.0%	15 min	60 min	
2	19.93	50.0%	15 min	60 min	
3	29.90	75.0%	15 min	60 min	
4	39.86	100.0%	15 min	60 min	
5	49.83	125.0%	60 min	240 min	
6	59.79	150.0%	15 min	60 min	
7	69.76	175.0%	15 min	60 min	
8	79.72	200.0%	15 min	60 min	
9	59.79	150.0%	N/A	N/A	rebound, unload
10	39.86	100.0%	N/A	N/A	rebound, unload
11	19.93	50.0%	N/A	N/A	rebound, unload
12	9.97	25.0%	N/A	N/A	rebound, unload
13	0.00	0.0%	N/A	N/A	rebound, unload

Notes:
1 - The Geopier element to be used in the modulus load testing should be installed in a manner similar to production, at least 4 days prior to testing, so that pore-pressures have adequate time to dissipate.
2 - The modulus load tests shall be performed to a stress not less than 200% of the design maximum top-of-pier stress indicated in the Geopier Design Calculations.
3 - The modulus load test Geopier elements shall be installed to a depth of 22 feet below the ground surface with a 2-foot thick unreinforced concrete leveling pad. Minimum shaft length required.
4 - A telltale shall be installed in the bottom one-third of the tested Geopier element. Telltale deflections shall be monitored concurrent with top of Geopier deflections during the modulus load test.
5 - The modulus load test setup shall be as shown on Geopier Construction Drawing GP0.2. Helical anchors should be installed in accordance with manufacturers specifications.
6 - A representative of the owner's geotechnical consultant should be present to witness the load test.

3 GEOPIER MODULUS TEST SCHEDULE

"Geopier®" and Rammed Aggregate Pier® are registered trademarks of Geopier Foundation Company. This drawing contains information proprietary to The Geopier Foundation Company and its licensees. The information contained herein is not to be transmitted to any other organization unless specifically authorized in writing by Geopier Foundation Company.

Geopier® is the property of Geopier Foundation Company and is protected under U.S. Patent No. 6,425,713; 6,688,815; 6,988,855; 5,249,892; 7,226,246; 6,354,766; 7,004,684; 6,354,768; 7,326,004 and other patents pending.

Plot Date: 9/19/2023 10:51:00 PM Last Save By: rbula Login: Ryan Bulatao C:\Users\rbula\Documents\Projects\Working Folder\1 - DSA\DSA - Hacienda LaPuente PAC\Design\MASTER Design_DSA - Hacienda La Puente PAC_rev3_DSA 2nd Backcheck.dwg

APPL. No. A 03-122864
IDENTIFICATION STAMP
DIV. OF THE STATE ARCHITECT
APP: 03-122864 INC:
REVIEWED FOR
SS ☑ FLS ☑ ACS ☑
DATE: 10/03/2023

DSA Stamp

Architect

RACHLIN PARTNERS
8540 National Boulevard
Culver City, CA 90232
310.204.3400

Disclaimer:
THESE DRAWINGS ARE THE PROPERTY OF THE ARCHITECT. THE DESIGNS SHOWN AND DESCRIBED HEREIN INCLUDING ALL TECHNICAL DRAWINGS ARE PROPRIETARY AND CANNOT BE COPIED, DUPLICATED OR COMMERCIALLY EXPLOITED, IN WHOLE OR IN PART. THE DRAWINGS AND SPECIFICATIONS SHALL NOT BE USED BY THE OWNER ON OTHER PROJECTS, FOR ADDITIONS TO THIS PROJECT, OR FOR COMPLETION OF THIS PROJECT BY OTHERS. THE OWNER AGREES TO HOLD HARMLESS, INDEMNIFY AND DEFEND THE ARCHITECT AGAINST ALL DAMAGES, CLAIMS AND LOSSES, INCLUDING DEFENSE COSTS, ARISING OUT OF ANY REUSE OF PLANS AND SPECIFICATIONS WITHOUT THE WRITTEN AUTHORIZATION OF THE ARCHITECT OF RECORD.
Copyright© 2022 Rachlin Partners, All Rights Reserved.

Performing Arts Center
Hacienda La Puente
School District

Rev	Date	Issue
1	06/14/23	DSA RESUBMITTAL
2	09/20/23	DSA BACKCHECK

Date: 9.20.2023
Scale: As Shown
Drawn By: RB
Checked By: KH

Architect / Engineer Stamp

LICENSED ARCHITECT RYAN PAUL BULATAO NO. C-26229 REN. 8-31-25 STATE OF CALIFORNIA

REGISTERED PROFESSIONAL ENGINEER RYAN PAUL BULATAO GE 3021 GEOTECHNICAL STATE OF CALIFORNIA

Consultants
Western Ground Improvement

Sheet Title
GEOPIER® SCHEDULES

Sheet Number
GP0.2

APPL. No. A 03-122864

DSA Stamp

Architect

RACHLIN PARTNERS
8540 National Boulevard
Culver City, CA 90232
310.204.3400

Disclaimer:
THESE DRAWINGS ARE THE PROPERTY OF THE ARCHITECT. THE DESIGNS SHOWN AND DESCRIBED HEREIN INCLUDING ALL TECHNICAL DRAWINGS ARE PROPRIETARY AND CANNOT BE COPIED, DUPLICATED OR COMMERCIALLY EXPLOITED, IN WHOLE OR IN PART. THE DRAWINGS AND SPECIFICATIONS SHALL NOT BE USED BY THE OWNER ON OTHER PROJECTS, FOR ADDITIONS TO THIS PROJECT, OR FOR COMPLETION OF THIS PROJECT BY OTHERS. THE OWNER AGREES TO HOLD HARMLESS, INDEMNIFY AND DEFEND THE ARCHITECT AGAINST ALL DAMAGES, CLAIMS AND LOSSES, INCLUDING DEFENSE COSTS, ARISING OUT OF ANY REUSE OF PLANS AND SPECIFICATIONS WITHOUT THE WRITTEN AUTHORIZATION OF THE ARCHITECT OF RECORD.
Copyright© 2022 Rachlin Partners, All Rights Reserved.

Performing Arts Center
Hacienda La Puente Unified School District

Rev	Date	Issue
1	06/14/23	DSA RESUBMITTAL
2	09/20/23	DSA BACKCHECK
3	12/15/23	ADDENDUM NO. 3

Date: 12/06/22
Scale: As Shown
Drawn By: RB
Checked By: KH

Architect / Engineer Stamp

REGISTERED PROFESSIONAL ENGINEER
RYAN PAUL BULATAO
GE 3021
GEOTECHNICAL
STATE OF CALIFORNIA

Consultants

Western Ground Improvement

Sheet Title

GEOPIER® LOCATION PLAN

Sheet Number

GP1.1

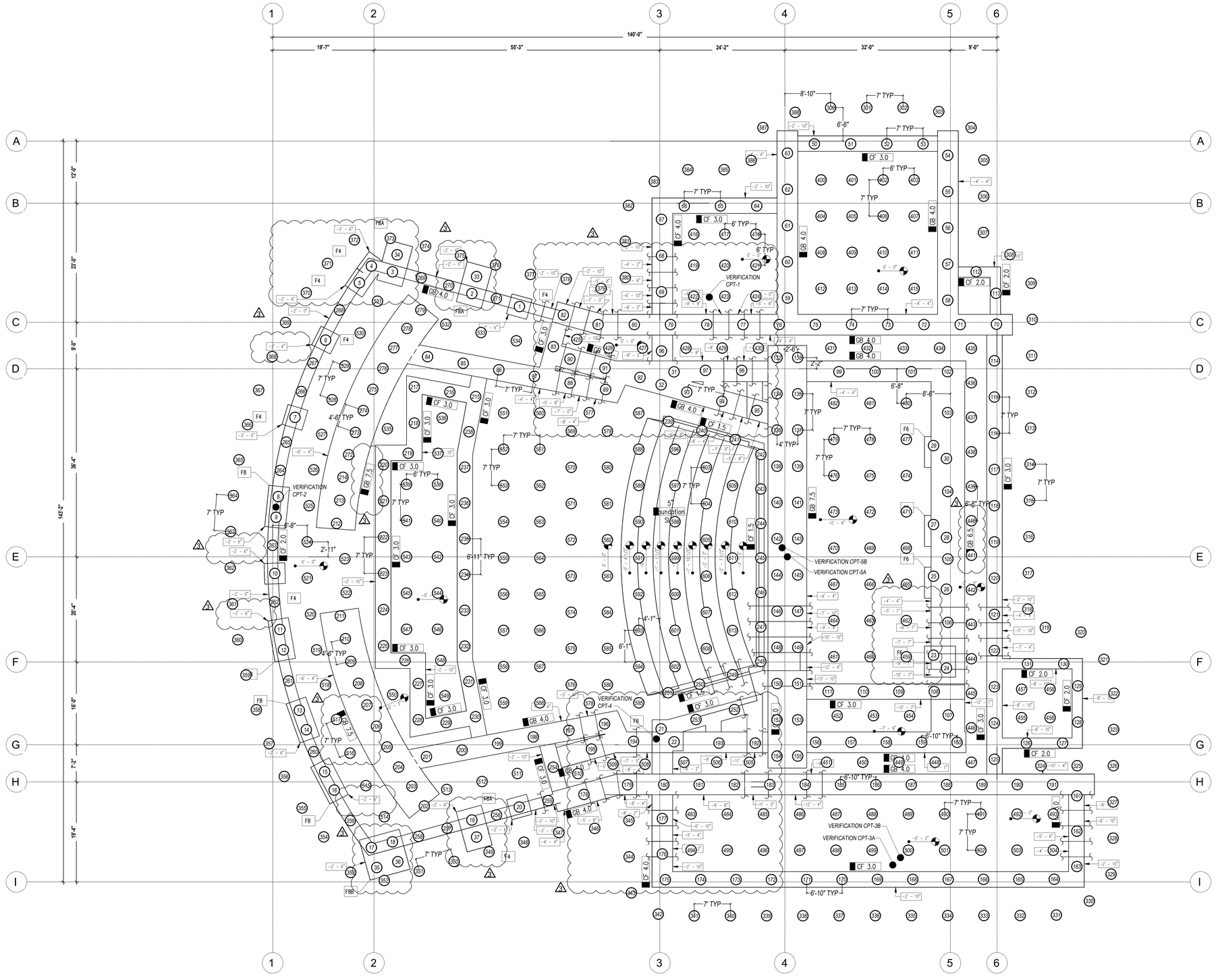

NORTH

1 GEOPIER® LOCATION PLAN
1/8" = 1'-0"

LEGEND

TYP. 24" GEOPIER ELEMENT

1 TYP. GEOPIER ELEMENT NUMBER

0' - 0" INDICATES BOTTOM OF FOOTING ELEVATION FROM REFERENCE ELEVATION 0'-0"

GEOPIER LOCATION PLAN NOTES:

1. FOOTING CONCRETE SHALL BE PLACED DIRECTLY ON TOP OF EXPOSED GEOPIER ELEMENTS.
2. ALL EXISTING AND PROPOSED UTILITIES WITHIN AND ADJACENT TO THE PROPOSED BUILDING FOOTPRINT SHALL BE FIELD VERIFIED BY THE GENERAL CONTRACTOR AND COORDINATED WITH THE GEOPIER INSTALLER BEFORE GEOPIER ELEMENT INSTALLATION SHALL PROCEED.
3. THESE DRAWINGS ARE FOR GEOPIER LOCATION ONLY, AND ARE BASED ON THE STRUCTURAL DRAWINGS PROVIDED BY MIYAMOTO INTERNATIONAL, INC. ON SHEET S2.11 DATED 9/20/23. REFER TO MIYAMOTO INTERNATIONAL, INC. DRAWINGS FOR FOOTING LAYOUT AND ORIENTATION.
4. GEOPIER ELEMENTS SHALL BE LOCATED IN THE FIELD AS SHOWN, DIMENSIONED FROM CONTROL POINTS ESTABLISHED FROM STRUCTURAL AND/OR ARCHITECTURAL PLANS.

"Geopier®" and Rammed Aggregate Pier®" are registered trademarks of Geopier Foundation Company. This drawing contains information proprietary to The Geopier Foundation Company and its licensees. The information contained herein is not to be transmitted to any other organization unless specifically authorized in writing by Geopier Foundation Company.

Geopier® is the property of Geopier Foundation Company and is protected under U.S. Patent No. 6,425,713; 6,688,815; 6,988,855, 5,249,892; 7,226,246; 6,354,766; 7,004,684; 6,354,768; 7,326,004 and other patents pending.

Plot Date: 12/14/2023 11:55:32 PM Last Save By: rbula Login: Ryan Bulatao C:\Users\rbula\Documents\Projects\Working Folder\1 - DSA\DSA - Hacienda LaPuente PAC\Design\Addendum 3\MASTER Design_DSA - Hacienda La Puente PAC_rev4_Addn 3.dwg

MEP COMPONENT ANCHORAGE NOTE

ALL MECHANICAL, PLUMBING, AND ELECTRICAL COMPONENTS SHALL BE ANCHORED AND INSTALLED PER THE DETAILS ON THE DSA APPROVED CONSTRUCTION DOCUMENTS. THE FOLLOWING COMPONENTS SHALL BE ANCHORED OR BRACED TO MEET THE FORCE AND DISPLACEMENT REQUIREMENTS PRESCRIBED IN THE 2019 CBC SECTIONS 1617A.1.18 THROUGH 1617A.1.26 AND ASCE 7-16 CHAPTERS 13, 26, AND 30.

1. ALL PERMANENT EQUIPMENT AND COMPONENTS.
2. TEMPORARY OR MOVABLE EQUIPMENT THAT IS PERMANENTLY ATTACHED (E.G. HARD WIRED) TO THE BUILDING UTILITY SERVICES SUCH AS ELECTRICITY, GAS OR WATER. "PERMANENTLY ATTACHED" SHALL INCLUDE ALL ELECTRICAL CONNECTIONS EXCEPT PLUGS FOR 110/220 VOLT RECEPTACLES HAVING A FLEXIBLE CABLE.
3. TEMPORARY, MOVABLE OR MOBILE EQUIPMENT WHICH IS HEAVIER THAN 400 POUNDS OR HAS A CENTER OF MASS LOCATED 4 FEET OR MORE ABOVE THE ADJACENT FLOOR OR ROOF LEVEL THAT DIRECTLY SUPPORT THE COMPONENT IS REQUIRED TO BE RETRAINED IN A MANNER APPROVED BY DSA.

THE FOLLOWING MECHANICAL AND ELECTRICAL COMPONENTS SHALL BE POSITIVELY ATTACHED TO THE STRUCTURE BUT NEED NOT DEMONSTRATE DESIGN COMPLIANCE WITH THE REFERENCE NOTED ABOVE. THESE COMPONENTS SHALL HAVE FLEXIBLE CONNECTIONS PROVIDED BETWEEN THE COMPONENT AND ASSOCIATED DUCTWORK, PIPING, AND CONDUIT. FLEXIBLE CONNECTIONS MUST ALLOW MOVEMENT IN BOTH TRANSVERSE AND LONGITUDINAL DIRECTIONS:

A. COMPONENTS WEIGHING LESS THAN 400 POUNDS AND HAVING A CENTER OF MASS LOCATED 4 FEET OR LESS ABOVE THE ADJACENT FLOOR OR ROOF LEVEL THAT DIRECTLY SUPPORT THE COMPONENT.
B. COMPONENTS WEIGHING LESS THAN 20 POUNDS, OR IN THE CASE OF DISTRIBUTED SYSTEMS, LESS THAN 5 POUNDS PER FOOT, WHICH ARE SUSPENDED FROM A ROOF OR FLOOR OR HUNG FROM A WALL.

THE ANCHORAGE OF ALL MECHANICAL, ELECTRICAL AND PLUMBING COMPONENTS SHALL BE SUBJECT TO THE APPROVAL OF THE DESIGN PROFESSIONAL IN GENERAL RESPONSIBLE CHARGE OR STRUCTURAL ENGINEER DELEGATED RESPONSIBILITY AND ACCEPTANCE BY DSA. THE PROJECT INSPECTOR WILL VERIFY THAT ALL COMPONENTS AND EQUIPMENT HAVE BEEN ANCHORED IN ACCORDANCE WITH THE ABOVE REQUIREMENTS.

PIPING, DUCTWORK, AND ELECTRICAL DISTRIBUTION SYSTEM BRACING NOTE

PIPING, DUCTWORK, AND ELECTRICAL DISTRIBUTION SYSTEMS SHALL BE BRACED TO COMPLY WITH THE FORCES AND DISPLACEMENTS PRESCRIBED IN ASCE 7-16 SECTION 13.3 AS DEFINED IN ASCE 7-16 SECTION 13.6.5, 13.6.6, 13.6.7, 13.6.8; AND 2019 CBC SECTIONS 1617A.1.24, 1617A.1.25, AND 1617A.1.26.

THE METHOD OF SHOWING BRACING AND ATTACHMENTS TO THE STRUCTURE FOR THE IDENTIFIED DISTRIBUTION SYSTEMS ARE AS NOTED BELOW. WHEN BRACING AND ATTACHMENTS ARE BASED ON A PREAPPROVED INSTALLATION GUIDE (E.G., OSHPD OPM FOR 2013 CBC OR LATER), COPIES OF THE BRACING SYSTEM INSTALLATION GUIDE OR MANUAL SHALL BE AVAILABLE ON THE JOBSITE PRIOR TO THE START OF AND DURING THE HANGING AND BRACING OF THE DISTRIBUTION SYSTEMS.

THE STRUCTURAL ENGINEER OF RECORD SHALL VERIFY THE ADEQUACY OF THE STRUCTURE TO SUPPORT THE HANGER AND BRACE LOADS.

MECHANICAL PIPING (MP), MECHANICAL DUCTS (MD), PLUMBING PIPING (PP), ELECTRICAL SYSTEMS (E):

MP (X) MD (X) PP _ E_ - OPTION 1: DETAILED ON THE APPROVED DRAWINGS WITH PROJECT SPECIFIC NOTES AND DETAILS.

MP_ MD_ PP_ E_ - OPTION 2: SHALL COMPLY WITH APPLICABLE OSHPD PRE-APPROVAL (OPM #) #_____.

CA GREEN BUILDING STANDARDS NOTES

ENTIRE INSTALLATION SHALL COMPLY WITH THE 2019 CALIFORNIA GREEN BUILDING STANDARDS (CALGREEN) CODE INCLUDING THE FOLLOWING APPLICABLE MANDATORY MEASURES:

1. 5.504.1.3 - PERMANENT HVAC SYSTEM SHALL ONLY BE USED DURING CONSTRUCTION IF NECESSARY TO CONDITION THE BUILDING WITHIN THE REQUIRED TEMPERATURE RANGE FOR MATERIAL AND EQUIPMENT INSTALLATION. IF THE HVAC SYSTEM IS USED DURING CONSTRUCTION, CONTRACTOR SHALL USE MERV 13 MINIMUM RETURN AIR FILTERS. REPLACE ALL FILTERS IMMEDIATELY PRIOR TO OCCUPANCY.
2. 5.504.3 - CONTRACTOR SHALL COVER ALL DUCT AND OTHER RELATED AIR DISTRIBUTION COMPONENT OPENINGS WITH TAPE, PLASTIC, SHEET METAL OR OTHER METHODS ACCEPTABLE TO THE ENFORCING AGENCY DURING STORAGE AND CONSTRUCTION AND UNTIL FINAL STARTUP.
3. 5.504.5.3 - MERV 13 FILTERS ARE REQUIRED FOR HVAC SYSTEMS SERVING REGULARLY OCCUPIED AREAS AND AS INDICATED IN THESE PLANS.
4. 5.504.7 - OUTDOOR SMOKING AREAS SHALL BE MINIMUM 25'-0" FROM ALL BUILDING ENTRIES, OUTDOOR AIR INTAKES, AND OPERABLE WINDOWS.
5. 5.505.1 - INSTALLATION SHALL COMPLY WITH CBC SECTION 1203 AND CHAPTER 14 FOR INDOOR MOISTURE CONTROL.
6. 5.506.2 - DEMAND CONTROL VENTILATION REQUIRED FOR ALL DENSELY OCCUPIED SPACES PER 2019 CALIFORNIA ENERGY CODE REQUIREMENTS.
7. 5.508.1 - HVAC, REFRIGERATION, AND FIRE SUPPRESSION EQUIPMENT SHALL NOT CONTAIN CFCS OR HALONS.

LEGEND

SYMBOL	ABBR.	DESCRIPTION
	-	SUPPLY AIR RISER
	-	RETURN AIR RISER
	-	EXHAUST AIR RISER
	SAG	SUPPLY AIR GRILLE
	RAG	RETURN AIR GRILLE
	EAG	EXHAUST AIR GRILLE
	SWR	SIDEWALL REGISTER
	(L)	LINED DUCTWORK
	-	FLEXIBLE CONNECTION
	FC	FLEXIBLE CONNECTION
	-	NEW DUCT (SEE PLAN)
	-	EXISTING DUCT (SEE PLAN)
	-	DEMO DUCT (SEE PLAN)
	MVD	MANUAL VOLUME DAMPER
	BDD	BACKDRAFT DAMPER
S/F	SFD	SMOKE / FIRE DAMPER
F	FD	FIRE DAMPER
	DL	DOOR LOUVER
U.C.	UC	UNDERCUT DOOR 3/4"
RS	RS	REFRIGERANT SUCTION LINE
RL	RL	REFRIGERANT LIQUID LINE
CD	CD	CONDENSATE DRAIN
	S.D.	SMOKE DETECTOR
	P.O.C.	POINT OF CONNECTION
T	T-STAT	THERMOSTAT MOUNTED MAX 48" A.F.F. TO TOP OF BOX (11B-308.1.1)
H	H	HUMIDISTAT
TS	TS	TEMPERATURE SENSOR
OS	OS	OVERRIDE SWITCH
PD	PD	PRESSURE DIFFERENTIAL SWITCH
S	S	SWITCH
CO_2	CO_2	CO_2SENSOR
	O.C.	ON CENTER
	HWR	HOT-WATER RETURN
	HWS	HOT-WATER SUPPLY
	I.D.	INSIDE DIAMETER
	O.D.	OUTSIDE DIAMETER
	W/	WITH
	S/M	SHEET METAL
	S/S	STAINLESS STEEL
	G.C.	GENERAL CONTRACTOR
	VTR	VENT THRU ROOF
	EMS	ENERGY MANAGEMENT SYSTEM
	OBD	OPPOSED BLADE DAMPER
	FSC	FAN SPEED CONTROL

GENERAL NOTES

----- GENERAL NOTES -----

1. ENTIRE INSTALLATION SHALL CONFORM TO THE REQUIREMENTS OF THE 2019 CALIFORNIA MECHANICAL CODE, 2019 CALIFORNIA BUILDING CODE, AND ALL OTHER APPLICABLE CODES AND REGULATIONS, INCLUDING 2019 CALIFORNIA ENERGY CONSERVATION STANDARDS DIVISION T-24.
2. COORDINATE ENTIRE INSTALLATION OF THE HVAC SYSTEM WITH THE WORK OF ALL OTHER TRADES PRIOR TO ANY FABRICATION OR INSTALLATION. PROVIDE ALL FITTINGS, OFFSETS, AND TRANSITIONS AS REQUIRED FOR A COMPLETE WORKABLE INSTALLATION. THE MECHANICAL CONTRACTOR SHALL BE RESPONSIBLE TO COORDINATE ITEMS TO BE PROVIDED BY OTHER TRADES WHERE MENTIONED IN THE CONTRACT DOCUMENTS PRIOR TO BID - NO EXCEPTIONS.
3. COORDINATE THE LOCATIONS OF ALL CEILING DIFFUSERS, REGISTERS, AND GRILLES WITH THE ARCHITECTURAL REFLECTIVE CEILING PLAN, ELECTRICAL LIGHTING LAYOUT AND ARCHITECTURAL ROOM ELEVATIONS. THE ARCHITECT SHALL BE IMMEDIATELY NOTIFIED OF ANY CONFLICTS PRIOR TO FABRICATION AND INSTALLATION.
4. NOT USED.
5. ALL EQUIPMENT, DUCTS, PIPING, AND OTHER DEVICES AND MATERIALS INSTALLED OUTSIDE OF THE BUILDING OR OTHERWISE EXPOSED TO THE WEATHER SHALL BE COMPLETELY WEATHER-PROOFED AND PAINTED TO MATCH, COORDINATE WITH ARCHITECT PRIOR TO PAINTING.
6. ALL DIMENSIONS SHOWN ON THESE PLANS ARE APPROXIMATE AND MUST BE CONFIRMED ON SITE.
7. PRIOR TO OCCUPANCY, THE ENTIRE H.V.A.C. SYSTEMS SHALL BE BALANCED IN ACCORDANCE WITH (AABC) ASSOCIATED AIR BALANCE COUNCIL STANDARDS BY AN INDEPENDANT AIR BALANCE CONTRACTOR. CERTIFICATION SHALL BE PROVIDED BY THE CONTRACTOR FOR AIR AND HYDRONIC AS APPLICABLE. SYSTEMS SHALL BE BALANCED AS INDICATED ON PLANS INCLUDING FRESH AIR VENTILATION. WHERE THERE IS A CONFLICT WITH THE MECHANICAL PLANS, THE AIR BALANCE CONTRACTOR SHALL NOTIFY THE ARCHITECT PRIOR TO BALANCING OF SYSTEM. IF NOT THE AIR BALANCE CONTRACTOR SHALL BEAR ALL COSTS INCURRED FOR WORK THAT MUST BE RE-BALANCED DUE TO CONFLICTS ON CONTRACT DOCUMENTS. CONTRACTOR SHALL PROVIDE THREE COPIES OF THE AIR BALANCE REPORT TO THE ARCHITECT FOR REVIEW AND APPROVAL.
8. FOR INACCESSIBLE AREAS THE CONTRACTOR SHALL PROVIDE ACCESS PANELS FOR ALL DAMPERS, EQUIPMENT, SMOKE DETECTORS, AND CONTROL DEVICES. THESE PANELS SHALL MATCH THE RATING OF THE WALL AND/OR CEILING THAT THEY ARE LOCATED IN. MINIMUM ACCESS PANEL SIZES SHALL BE AS FOLLOWS:

   1) HAND ACCESS: 12"x12"

   2) BODY ACCESS: 30"x30" MIN. WHERE A LARGER ACCESS SIZE IS REQUIRED DUE TO INSTALLATION CONSTRAINTS, THE CONTRACTOR SHALL DO SO AT NO ADDITIONAL COST AND SHALL NOTIFY THE ARCHITECT OF DEVIATIONS PRIOR TO INSTALLATION.
9. ALL EQUIPMENT, ACCESSORIES, AND RELATED PIPING SHALL BE INSTALLED IN STRICT ACCORDANCE WITH THE EQUIPMENT MANUFACTURER'S RECOMMENDATIONS. PROVIDE ALL FITTINGS, TRANSITIONS, DAMPERS, VALVES, AND OTHER DEVICES REQUIRED FOR A COMPLETE WORKABLE INSTALLATION.
10. MAINTENANCE LABEL SHALL BE AFFIXED TO ALL MECHANICAL EQUIPMENT AND A MAINTENANCE MANUAL SHALL BE PROVIDED FOR THE ARCHITECT'S USE.
11. ALL EQUIPMENT WITH MOVING PARTS SHALL BE PROVIDED WITH FLEXIBLE DUCT AND PIPE CONNECTIONS.
12. ALL HVAC EQUIPMENT SHALL BE CERTIFIED BY THE CALIFORNIA ENERGY COMMISSION TO COMPLY WITH LATEST EFFICIENCY STANDARDS.
13. ALL FRESH AIR INTAKES SHALL MEET CODE REQUIRED CLEARANCES FROM EXHAUST, FLUE, FUEL BURNING APPLIANCE AND PLUMBING VENT OUTLETS. FOR GAS/ELECTRIC AIR CONDITIONING UNITS WHERE THE CODE REQUIRED CLEARANCES ARE NOT MET, A FACTORY FLUE GAS DEFLECTOR AND EXTENSION SHALL BE USED TO MINIMIZE THESE CLEARANCES. CONTRACTOR SHALL DETERMINE LOCATIONS WHERE REQUIRED PRIOR TO BID. THIS SHALL BE PROVIDED AT NO ADDITIONAL COST.
14. CONTRACTOR SHALL VERIFY ALL CLEARANCES AND AVAILIABLE SPACE FOR DUCTWORK PRIOR TO ORDERING AND/OR FABRICATING MATERIAL.
15. CONTRACTOR TO SUBMIT ALL EQUIPMENT, DUCTWORK, AIR DISTRIBUTION DEVICES, AND OTHER ACCESSORIES TO THE ENGINEER FOR APPROVAL PRIOR TO ANY ORDERING OF SUCH ITEMS.
16. CONTRACTOR SHALL PROVIDE SHOP DRAWINGS WITHIN 35 DAYS OF AWARD OF CONTRACT. IF SHOP DRAWINGS ARE NOT PROVIDED TO THE ARCHITECT FOR APPROVAL, AND ANY CONFLICTS OCCUR BETWEEN TRADES, DURING CONSTRUCTION, & ETC. THEN THE CONTRACTOR SHALL BE RESPONSIBLE AND BEAR ALL COST INCURRED FOR ANY REVISIONS AT NO ADDITIONAL COST TO THE ARCHITECT. THE ARCHITECT SHALL BE NOTIFIED IMMEDIATELY PRIOR TO FABRICATION AND INSTALLATION OF ANY CONFLICTS BETWEEN TRADES, DURING CONSTRUCTION, & ETC.
17. CONTRACTOR SHALL BE RESPONSIBLE FOR COMMISSIONING OF EQUIPMENT.
18. UNLESS SPECIFICALLY SHOWN ON THESE PLANS NO STRUCTURAL MEMBERS SHALL BE CUT, DRILLED NOR NOTCHED WITHOUT PRIOR WRITTEN AUTHORIZATION FROM THE STRUCTURAL ENGINEER AND THE DISTRICT STRUCTURAL ENGINEER FROM THE DIVISION OF THE STATE ARCHITECT.

----- CONTROLS -----

19. CONTROL SCHEMATICS ARE FOR SEQUENCE ONLY. REFER TO ELECTRICAL DRAWINGS AND SPECIFICATIONS FOR ALL ELECTRICAL DEVICES REQUIRED.
20. ALL LINE VOLTAGE WIRING SHALL BE INSTALLED IN CONDUIT. ALL LINE VOLTAGE CONDUIT AND WIRING, INCLUDING FINAL CONNECTIONS, SHALL BE FURNISHED AND INSTALLED BY THE ELECTRICAL CONTRACTOR AS INDICATED ON THE ELECTRICAL DRAWINGS OR SPECIFIED IN THE ELECTRICAL SECTION OF THE SPECIFICATIONS. ALL ELECTRICAL WORK SHALL BE INSTALLED IN ACCORDANCE WITH ALL APPLICABLE CODES AND REGULATIONS OF ALL GOVERNING BODIES HAVING JURISDICTION THEREOF.
21. ALL LOW VOLTAGE CONDUIT AND WIRING AS APPLICABLE, INCLUDING FINAL CONNECTIONS, SHALL BE FURNISHED AND INSTALLED BY THE MECHANICAL CONTRACTOR AS INDICATED ON THE MECHANICAL DRAWINGS OR SPECIFIED IN THE MECHANICAL SECTION OF THE SPECIFICATIONS.

    A1) ALL LOW VOLTAGE WIRING SHALL BE INSTALLED IN CONDUIT IN INACCESSIBLE AREAS.

    A2) ALL LOW VOLTAGE WIRING SHALL BE PLENUM - RATED ABOVE ACCESSIBLE CEILINGS.

    B) WHERE THE CONTROLS CONTRACTOR IS RETAINED BY THE OWNER, THEY SHALL BE RESPONSIBLE FOR THE FOLLOWING:

    1) FURNISH AND INSTALL ALL DEVICES, WIRING, AND TERMINATIONS REQUIRED FOR A COMPLETE AND FUNCTIONAL INSTALLATION.

    2) COORDINATE ALL WORK AND REQUIREMENTS WITH OTHER TRADES INCLUDING GENERAL, MECHANICAL, AND ELECTRICAL CONTRACTORS.

    3) CONTRACTOR SHALL FOLLOW ALL SUBMITTAL REQUIREMENTS PER DRAWINGS AND SPECIFICATIONS.
22. ALL THERMOSTATS SHALL BE OF THE ELECTRONIC, PROGRAMMABLE, AUTOMATIC CHANGEOVER TYPE TO SEQUENCE HEATING OR COOLING. SET POINT RANGE SHALL BE 10 DEGREES F. BETWEEN FULL HEATING AND COOLING. THEY SHALL HAVE CAPABILITY OF TERMINATING ALL HEATING AT A TEMPERATURE NO MORE THAN 70 DEGREES F., AND COOLING AT A TEMPERATURE NOT LESS THAN 78 DEGREES F. ADJUSTABLE TEMPERATURE DIFFERENTIAL SHALL BE 1- 1/2 DEGREES F. CONTROL LIMITS SHALL BE FROM 55 DEGREES F. TO 85 DEGREES F. MOUNT AT 48 INCHES ABOVE FLOOR PER DETAIL 1/M4.1 AND SECTION 11B-308, 2019 CBC.

    NOTES: 1) THERMOSTATS THAT ARE PART OF AN ENERGY MANAGEMENT SYSTEM SHALL FOLLOW CONTROL SPECIFICATIONS AND DRAWING REQUIREMENTS.

    2) SHOULD THE LOCATION OF THE THERMOSTAT NOT MEET THE ADA HEIGHT REQUIREMENTS DUE TO OBSTRUCTIONS, THEN AN ALTERNATE LOCATION SHALL BE PROPOSED OR REQUESTED BY THE CONTRACTOR THAT SHALL BE APPROVED BY THE ARCHITECT.
23. CONTROLS CONTRACTOR AND AIR BALANCE CONTRACTOR SHALL COORDINATE WORK AND PERFORM NECESSARY TASKS AS REQUIRED TO OBTAIN AIR AND WATER FLOW QUANTITIES FOR SYSTEMS SHOWN HEREIN.
24. CONTROLS SHALL BE PROVIDED TO PROVIDE THE MINIMUM RATE OF OUTDOOR AIR REQUIRED BY THE STATE ENERGY REGULATIONS.

----- AIR DISTRIBUTION -----

25. ALL DUCTWORK SHALL BE SHEET METAL CONSTRUCTED OR SPIRAL, ERECTED, AND TESTED IN ACCORDANCE WITH THE MOST RESTRICTIVE OF LOCAL REGULATIONS, PROCEDURES DETAILED IN THE ASHRAE HANDBOOK OF FUNDAMENTALS, CHAPTER 6 OF THE MECHANICAL CODE, OR THE APPLICABLE STANDARDS ADOPTED BY THE SHEET METAL AND AIR CONDITIONING CONTRACTORS NATIONAL ASSOCIATION.
26. ALL FLEXIBLE DUCTWORK SHALL NOT EXCEED FIVE FEET IN LENGTH TO RESPECTIVE DIFFUSERS, GRILLES, AND REGISTERS, OR OTHER AIR DEVICES.
27. ALL DUCT TURNS IN RECTANGULAR SUPPLY, RETURN, AND EXHAUST DUCTS SHALL HAVE TURNING VANES UNLESS OTHERWISE NOTED.
28. DUCTWORK HANDLING CONDITIONED AIR SHALL BE INSULATED OR LINED AS INDICATED ON DRAWINGS. SUPPLY AND RETURN DUCT INSULATION SHALL BE MIN. 1.5" THICK, 3/4 LB./CUBIC FT. DENSITY AND HAVE A MIN. VALUE OF R-8 WHERE LOCATED IN ONE OR MORE OF THE FOLLOWING SPACES:

    A) OUTDOORS, OR

    B) IN A SPACE BETWEEN THE ROOF AND AN INSULATED CEILING, OR

    C) IN A SPACE DIRECTLY UNDER A ROOF WITH FIXED VENTS OR OPENINGS TO THE OUTSIDE OR UNCONDITIONED SPACES, OR

    D) IN AN UNCONDITIONED CRAWLSPACE; OR

    E) IN OTHER UNCONDITIONED SPACES

    PER 2019 CEC, OTHERWISE PROVIDE R-4.2 WHEN LOCATED IN CONDITIONED ATTIC SPACES ABOVE CEILINGS , ALL DUCTWORK EXPOSED ON ROOF SHALL BE INTERNALLY LINED WITH 1.5" THICK, 1.5LB./CUBIC FT. DENSITY DUCT LINER UNLESS OTHERWISE INDICATED OR SPECIFIED. ALL DUCT SIZES ARE SHEET METAL SIZES. ALL DUCT JOINTS SHALL BE SEALED PER CHAPTER 6 MECHANICAL CODE REQUIREMENTS. PROVIDE PIPING AND DUCT INSULATION IN ACCORDANCE WITH THE LATEST STANDARDS OF THE CALIFORNIA ENERGY COMMISSION.
29. ALL INSULATION SHALL HAVE A FLAME SPREAD OF NOT MORE THAN 25 AND A SMOKE DENSITY NOT EXCEEDING 50.
30. MANUAL VOLUME DAMPERS SHALL BE PROVIDED IN ALL DUCT BRANCHES TO INDIVIDUAL DIFFUSERS, GRILLES, AND REGISTERS, AS WELL AS FRESH AIR INTAKE DUCTS. DAMPERS SHALL BE LOCATED AT THE BRANCH DUCT LOCATIONS. THE MECHANICAL CONTRACTOR SHALL COORDINATE LOCATIONS OF DAMPERS WITH THE AIR BALANCE CONTRACTOR, SO THEY ARE ACCESSIBLE PRIOR TO INSTALLATION. IN LOCATIONS WHERE THESE DAMPERS ARE INACCESSIBLE, CABLE OPERATED ADJUSTMENT CONTROLS SHALL BE PROVIDED AT NO ADDITIONAL COST. OPPOSED BLADE DAMPERS SHALL NOT BE PERMITTED UNLESS NOTED OTHERWISE.
31. AUTOMATIC FIRE DAMPER REQUIREMENTS ARE AS FOLLOWS:

    A) PROVIDE AUTOMATIC FIRE DAMPERS AT ALL PENETRATIONS OF FIRE-RATED CEILINGS AND WALLS THROUGHOUT. CONTRACTOR SHALL COORDINATE FIRE-RATED AREAS WITH THE ARCHITECTURAL DRAWINGS AND OTHER TRADES PRIOR TO INSTALL AND SHALL NOTIFY PERTINENT PARTIES PRIOR TO ANY WORK PERFORMED IN THESE AREAS. IN ADDITION, CONTRACTOR SHALL BE RESPONSIBLE TO PROVIDE PROPER ACCESS FOR DAMPERS INSTALLED. THE DAMPER FIRE RATING SHALL BE COMPATIBLE WITH THE CEILING/WALL RATING.

    B) LOCATION OF FIRE-RATED CEILINGS AND WALLS ARE AS INDICATED ON THE ARCHITECTURAL DRAWINGS.

    C) FIRE AND/OR SMOKE DAMPER(S) SHALL BE PROVIDED AS REQUIRED BY THE LATEST CALIFORNIA BUILDING CODE.

    D) CONTRACTOR SHALL FURNISH FLUSH MOUNTED FIRE AND/OR SMOKE DAMPERS, SO THAT DAMPER DO NOT EXTEND PASS WALLS, FOR AREAS WITHOUT CEILINGS FOR QUALITY WORKMENSHIP.
32. CONTRACTOR SHALL PERFORM MAINTENANCE ON ALL EXISTING FIRE AND SMOKE/FIRE DAMPERS PER MANUFACTURER'S PROVISIONS. ANY FAILURES OR NON-OPERATING DAMPERS SHALL BE REPLACED AND SHALL CONFORM TO CURRENT CODE REGULATIONS.
33. ALL DUCTWORK PASSING THROUGH FIRE RATED CORRIDORS AND LOBBIES SHALL BE MIN. 26 GAGE SHEET METAL CONSTRUCTION.
34. ALL DUCTWORK, PIPING, CONDUIT, & ETC. PENETRATING FIRE RATED CONSTRUCTION SHALL HAVE APPROVED FIRE STOPPING.

C:\Users\tfim\Documents\K22_HUSD-PAC_Mechanical Central_tedl@pocockdesignsolutions.com.rvt

APPL No. A03-122864

IDENTIFICATION STAMP
DIV. OF THE STATE ARCHITECT
APP: 03-122864 INC:
REVIEWED FOR
SS ☑ FLS ☑ ACS ☑
DATE: 10/03/2023

DSA Stamp

Architect

RACHLIN PARTNERS
8640 National Boulevard
Culver City, CA 90232
310.204.3400

Disclaimer:
THESE DRAWINGS ARE THE PROPERTY OF THE ARCHITECT. THE DESIGNS SHOWN AND DESCRIBED HEREIN INCLUDING ALL TECHNICAL DRAWINGS ARE PROPRIETARY AND CANNOT BE USED, DUPLICATED OR COMMERCIALLY EXPLOITED IN ANY MANNER WITHOUT PRIOR WRITTEN CONSENT. DRAWINGS SHALL NOT BE USED BY THE OWNER ON OTHER PROJECTS, FOR ADDITIONS TO THIS PROJECT, OR FOR COMPLETION OF THIS PROJECT BY OTHERS. THE OWNER AGREES TO HOLD HARMLESS, INDEMNIFY AND DEFEND THE ARCHITECT AGAINST ALL DAMAGES, CLAIMS AND LOSSES, INCLUDING DEFENSE COSTS, ARISING OUT OF ANY REUSE OF PLANS AND SPECIFICATIONS WITHOUT THE WRITTEN AUTHORIZATION OF THE ARCHITECT OF RECORD.

Copyright © 2022 Rachlin Partners, All Rights Reserved.

PDS
Pocock Design Solutions Inc.

Performing Arts Center
Hacienda La Puente Unified School District
635 North California Avenue
La Puente, CA 91744

Rev	Date	Issue
1	7.22.22	50% DD
2	10.21.22	50% CD
3	12.09.22	100% CD DSA SUBMITTAL
4	6.19.23	100% CD DSA RESUBMITTAL
5	9.20.23	DSA BACK CHECK

Date: 06/30/22
Scale:
Drawn By: Author
Checked By: Checker

Architect / Engineer Stamp

LICENSED ARCHITECT — LEONARD PASSY — NO. C-26229 — REN: 8-31-25 — STATE OF CALIFORNIA

REGISTERED PROFESSIONAL ENGINEER — MEHDI R. GOUDARZI — No. M30839 — Exp. 3/31/24 — MECHANICAL — STATE OF CALIFORNIA

Consultants
Miyamoto International, Inc.
The Ruzika Company, Inc.
MDC Consulting Engineers
Pocock Design Solutions
Newson Brown Acoustics, LLC
VCA Engineers, Inc.
HJSA Consulting

Sheet Title

Mechanical Legend and General Notes

Sheet Number

M001

AIR DISTRIBUTION SCHEDULE

SYM.	MANUF & MODEL	NECK SIZE	FACE SIZE	CFM RANGE	MAX. NECK VELOCITY	MAX. N.C.	T. P. DROP	TYPE	DAMPER	REMARKS
- / SD-1	PRICE SMCD	6"x6" 8"x8" 10"x10" 12"x12" 14"x14" 16"x16" 18"x18" 20"x20"	12"x12" 14"x14" 16"x16" 18"x18" 20"x20" 22"x22" 24"x24" 26"x26"	0 - 125 130 - 220 225 - 350 355 - 500 505 - 680 685 - 880 885 - 1125 1130 - 1400	500	25	.057	MODULAR CORE	MVD	BORDER TYPE 1 FOR GYP. BOARD CEILING PROVIDE SQUARE TO ROUND ADAPTER FOR ALL
- / RG-1	PRICE 530L	6"x6" 8"x8" 10"x10" 12"x12" 14"x14" 16"x16" 18"x18" 22"x20"	8"x8" 10"x10" 12"x12" 14"x14" 16"x16" 18"x18" 20"x20" 24"x22"	0 - 90 95 - 195 200 - 300 305 - 450 455 - 590 595 - 800 805 - 1040 1045 - 1400	500	25	.067	LOUVERED	MVD	BORDER TYPE N FOR GYP. BOARD CEILING
- / SR-1	PRICE SDGE	12"x6" 20"x12"	14"x8" 22"x14"	240 - 260 490 - 510	400	25	0.075	LOUVERED	AIR SCOOP (AS)	FINISH TO BE SELECTED BY ARCHITECT
- / RG-2	PRICE SDGER	16"x8" 20"x12" 24"x12"	18"x10" 22"x14" 26"x14"	390 - 410 490 - 510 490 - 510	400	25	0.075	LOUVERED	AIR SCOOP (AS)	FINISH TO BE SELECTED BY ARCHITECT
- / SD-3	PRICE SMCD	12"x12"	18"x18"	280 - 300	400	25	.057	MODULAR CORE	MVD	BORDER TYPE 1 FOR GYP. BOARD CEILING PROVIDE SQUARE TO ROUND ADAPTER FOR ALL
- / RG-3	PRICE 530L	12"x12"	14"x14"	280 - 290	400	25	.067	LOUVERED	MVD	BORDER TYPE N FOR GYP. BOARD CEILING
- / RSD-1	PRICE RCDA	12"Ø 14"Ø	27"Ø 32"Ø	390 - 410 490 - 510	VARIES	25	VARIES	ROUND ADJ.	MVD	PROVIDE PLASTER RING FOR SURFACE MOUNT. PROVIDE SAFETY CHAIN FOR 14"Ø NECK AND LARGER
- / UFD-1	PRICE MFD-DP	8"Ø	9"Ø	40 - 70	200	25	VARIES	ROUND UNDERFLOOR	MVD	PROVIDE STYLE DB BASKET W/ DAMPER FINISH TO BE SELECTED BY ARCHITECT
- / LFD-1	PRICE SDS100	10"Ø (2) 10"Ø	48"x6" 96"x6"	240 - 260 490 - 510	500	25	0.016	3 SLOT	MVD	BORDER TYPE 1B FOR GYP. BOARD CEILING 1" SLOT WIDTH WITH SDA PLENUM
- / RG-4	PRICE 530L	72"x40"	74"x42"	5900 - 6100	400	25	.067	LOUVERED ADJUSTABLE	MVD	BORDER TYPE N FOR SIDEWALL MOUNT
- / EG-1	PRICE 530L	6"x6" 8"x8" 10"x10" 12"x12" 14"x14" 16"x16" 18"x18" 22"x20"	8"x8" 10"x10" 12"x12" 14"x14" 16"x16" 18"x18" 20"x20" 24"x22"	0 - 90 95 - 195 200 - 300 305 - 450 455 - 590 595 - 800 805 - 1040 1045 - 1400	500	25	.067	LOUVERED	MVD	BORDER TYPE N FOR SURFACE MOUNT
- / EG-2	PRICE SDGER	18"x8"	20"x10"	440 - 460	500	25	0.075	LOUVERED	AIR SCOOP (AS)	FINISH TO BE SELECTED BY ARCHITECT
- / TG-1	PRICE 530L	6"x6" 8"x8" 10"x10" 12"x12" 14"x14" 16"x16" 18"x18" 22"x20"	8"x8" 10"x10" 12"x12" 14"x14" 16"x16" 18"x18" 20"x20" 24"x22"	0 - 90 95 - 195 200 - 300 305 - 450 455 - 590 595 - 800 805 - 1040 1045 - 1400	500	25	.067	LOUVERED	MVD	BORDER TYPE N FOR SIDEWALL MOUNT

LEGEND

CFM / - / - AIR DISTRIBUTION DEVICE

SD	SUPPLY DIFFUSER
SR	SUPPLY REGISTER
RG	RETURN GRILLE
EG	EXHAUST GRILLE
TG	TRANSFER GRILLE

NOTES:
1. NOT ALL DIFFUSER/GRILLE TYPES OR SIZES MAY BE USED ON THIS PROJECT.

SOUND TRAP SCHEDULE

SYM.	MFR & MODEL #	AREA SERVED	LOCATION	MAXIMUM CFM	MAX PD (IN WC)	NOISE REDUCTION 63HZ	125HZ	250HZ	500HZ	1KHZ	2KHZ	4KHZ	8KHZ	MAX FV (FPM)	WxHxL (IN)	UNIT WT. (LBS)	REMARKS	ANCHORAGE DETAILS
ST 1	VIBRO ACOUSTIC RD-MV-F4	AC-1 SUPPLY	ABOVE CEILING	5,000	0.25	10	13	23	40	42	31	19	13	1,250	24X30X84	220	SEE NOTES	15 M402
ST 2	VIBRO ACOUSTIC RD-MV-F4	AC-1 RETURN	ABOVE CEILING	5,000	0.25	12	16	26	43	41	27	16	11	1,250	24X30X84	220	SEE NOTES	15 M402
ST 3	VIBRO ACOUSTIC RD-MV-F4	AC-2 SUPPLY	ABOVE CEILING	6,000	0.25	10	13	23	40	42	31	19	13	1,250	46X20X84	285	SEE NOTES	15 M402
ST 4	VIBRO ACOUSTIC RD-MV-F4	AC-2 RETURN	ABOVE CEILING	6,000	0.25	12	16	26	43	41	27	16	11	1,250	46X20X84	285	SEE NOTES	15 M402
ST 5	VIBRO ACOUSTIC RD-MV-F4	AC-3 SUPPLY	ABOVE CEILING	6,000	0.25	10	13	23	40	42	31	19	13	1,250	46X20X84	285	SEE NOTES	15 M402
ST 6	VIBRO ACOUSTIC RD-MV-F4	AC-3 RETURN	ABOVE CEILING	6,000	0.25	12	16	26	43	41	27	16	11	1,250	46X20X84	285	SEE NOTES	15 M402
ST 7	VIBRO ACOUSTIC RD-MV-F4	AC-5 SUPPLY	STAGE/ ROOF	2,500	0.33	8	15	26	32	33	25	27	17	625	24X24X72	150	SEE NOTES	15 M402
ST 8	VIBRO ACOUSTIC RD-MV-F4	AC-5 RETURN	ROOF	2,500	0.33	9	15	25	31	37	28	29	21	625	24X24X72	150	SEE NOTES	15 M402
ST 9	VIBRO ACOUSTIC RD-MV-F4	AC-5 SUPPLY	STAGE/ CORRIDOR	2,500	0.33	5	7	9	15	20	13	10	13	625	24X24X72	150	SEE NOTES	15 M402
ST 10	VIBRO ACOUSTIC RD-MV-F4	AC-5 RETURN	ROOF	2,500	0.33	6	7	10	13	21	13	9	13	625	24X24X72	150	SEE NOTES	15 M402
ST 11	VIBRO ACOUSTIC RD-MV-F4	AC-5 SUPPLY	ABOVE CEILING	2,400	0.25	4	7	12	18	18	14	10	8	1,250	24X14X36	45	SEE NOTES	15 M402
ST 12	VIBRO ACOUSTIC RD-MV-F4	AC-5 RETURN	ABOVE CEILING	2,400	0.25	4	7	12	18	18	14	10	8	1,250	24X14X36	45	SEE NOTES	15 M402

NOTES: 1. TO BE INSTALLED PER MANUFACTURER RECOMMENDATION.

PACKAGED GAS/ELECTRIC A/C UNIT SCHEDULE

SYM	MFR & MODEL #	AREA SERVICED	NOMINAL TONS	COOLING CAPACITY TOTAL	COOLING CAPACITY SENSIBLE	EER/ IEER	HEATING CAPACITY INPUT	HEATING CAPACITY OUTPUT	SUPPLY FAN DATA CFM	ESP INCH	RPM	QTY	HP	RETURN/EXHAUST FAN DATA CFM	ESP INCH	RPM	QTY	HP	MIN. OA CFM	DCV CFM	A/C ELECTRICAL V	PH	MCA	MOCP	WEIGHTS (LBS) UNIT	CURB	TOTAL	REMARKS	CONTROL DETAIL	WIRING DETAIL	ANCHORAGE DETAIL
AC 1	AAON RN-013-8-0-EB09-3FB	LOBBY 101	12.5	151,560	133,040	12.1/ 14.4	195,000	156,000	5,000	2.7	1,713	1	5	5,000	0.82	1,073	1	3	500	-	208	3	91	110	2,118	1,200	3,318	1, 2, 3, 6, 7, 8, 9	1 M501	7 M402	8 M401
AC 2	AAON RNA-018-C-0-8-DAB0A-DB2L0	PARTERRE 121 ORCHESTRA 120	15	215,800	210,500	12.4/ 14.3	405,000	328,100	6,000	2.39	1,265	1	5	6,000	0.80	1,697	1	2	3810	-	208	3	100	125	3,749	1,550	5,299	1, 2, 3, 5, 6, 7, 8	1 M501	7 M402	8 M401
AC 3	AAON RNA-018-C-0-8-DAB0A-DB2L0	PARTERRE 121 ORCHESTRA 120	15	215,800	210,500	12.4/ 14.3	405,000	328,100	6,000	2.39	1,265	1	5	6,000	0.80	1,697	1	2	3810	-	208	3	100	125	3,749	1,550	5,299	1, 2, 3, 5, 6, 7, 8	1 M501	7 M402	8 M401
AC 4	AAON RQ-005-8-V-EB09-35B	110, 129, 131	5	66,520	66,060	12.7/ -	140,000	113,400	1,900	2.49	1,706	1	2	1,800	0.50	1,713	1	1	1,200	-	208	3	38	50	1,027	320	1,347	1, 2, 3, 4, 6, 7, 8	1 M501	7 M402	8 M401
AC 5	AAON RNA-013-C-0-8-DAB0A-DB1L0	STAGE 119	12.5	152,100	133,500	12.1/ 14.4	270,000	218,700	5,000	2.27	1,433	1	5	5,000	0.59	1,433	1	2	500	-	208	3	87	100	3,453	1,550	5,003	1, 2, 3, 5, 6, 7, 8	1 M501	7 M402	8 M401
AC 6	AAON RN-007-8-0-EB09-3KB	110, 111, 112, 113, 114, 115, 118	6	73,330	69,990	12.3/ 14.8	150,000	120,000	2,400	2.09	1,745	1	2	2,300	0.50	1,022	1	2	720	-	208	3	43	60	1,307	320	1,627	1, 2, 3, 4, 6, 7, 8	1 M501	7 M402	8 M401

1. 2" DEFLECTION ISO-CURB.
2. SUPPLY FANS W/ VFD'S.
3. RETURN/EXHAUST FANS W/ VFD'S.
4. VERTICAL DISCHARGE.
5. HORIZONTAL DISCHARGE.
6. CONTROL MODULE TO SHUT DOWN UNIT UPON DETECTION OF SMOKE AND SEND SIGNAL TO BUILDING FIRE ALARM PANEL. CONTROL MODULE AND WIRING TERMINATIONS FROM MODULE TO ALARM PANEL BY ELECTRICAL. WIRING TERMINATIONS FROM MODULE TO UNIT BY MECHANICAL. RELAYS USED FOR SHUT DOWN MUST BE CALIFORNIA STATE FIRE MARSHALL LISTED FOR RELEASING SERVICE.
7. CO2 SENSOR AND DCV CONTROLS.
8. 2" MERV 13 FILTERS.
9. VERTICAL DISCHARGE W/ SIDE DISCHARGE CURB.

NOTES:
A. SPACE PRESSURE TUBING (SPT) FURNISHED AND INSTALLED BY CONTRACTOR. CONTRACTOR SHALL ROUTE SPT INSIDE SPACE AWAY FROM DOORS, OPERABLE WINDOWS, AND MINIMUM 3 FT. AWAY FROM SUPPLY AND RETURN AIR GRILLES. CONNECT SPT TO KELE RPS-W ROOM STATIC PRESSURE SENSOR AND LOCATE IN CEILING. PAINT SENSOR PLATE TO PATCH CEILING COLOR.

VRF HEAT PUMP UNIT SCHEDULE

SYM	MFR & MODEL #	COOLING CAPACITY (BTU/HR)	SEER/ EER	HEATING CAPACITY (BTU/HR)	HSPF	ELECTRICAL V	PH	HZ	MCA	MOCP	UNIT WT (LB)	INTERLOCK WITH	REMARKS	CONTROL DETAIL	WIRING DETAIL	ANCHORAGE DETAIL
HP 1	LG ARUN048GSS4	48,000	17.0/ 10.5	54,000	9.50	208	3	60	30	50	210	FC 1, FC 2, FC 3, FC 4	1, 2	4 M501	9 M402	11 M401

1. NEOPRENE PADS.
2. VRF CENTRAL CONTROLLER. PROVIDE 120V POWER.

FAN COIL SCHEDULE

SYM	MFR & MODEL #	AREA SERVICED	TYPE	MAX. CFM	ELECTRICAL V	PH	HZ	MCA	MOCP	UNIT WT (LB)	INTERLOCK WITH	REMARKS	CONTROL DETAIL	WIRING DETAIL	ANCHORAGE DETAIL
FC 1	LG ARNU123SJA4	FOLLOW SPOT 301	WALL	300	208	1	60	0.31	15	20	HP 1	1, 3	4 M501	9 M402	9 M401
FC 2	LG ARNU123M1A4	AV CONTROL BOOTH 203	DUCTED	290	208	1	60	1.6	15	60	HP 1	1, 2, 4	4 M501	9 M402	10 M401
FC 3	LG ARNU123M1A4	LIGHTING CONTROL / RACK ROOM 204	DUCTED	290	208	1	60	1.6	15	60	HP 1	1, 2, 4	4 M501	9 M402	10 M401
FC 4	LG ARNU123SJA4	FOLLOW SPOT 301	WALL	300	208	1	60	0.31	15	20	HP 1	1, 3	4 M501	9 M402	9 M401

1. WALL MOUNTED PROGRAMMABLE THERMOSTAT.
2. INTEGRAL CONDENSATE PUMP.
3. CONDENSATE PUMP, LITTLE GIANT VCMX-20ULST OR EQUAL. PROVIDE 120V POWER.
4. LG ZFBXM101A MERV 13 FILTER BOX.

GRAVITY VENTILATOR SCHEDULE

SYM	MFR & MODEL #	AREA SERVICED	CFM	PD (IN. WG)	THROAT SIZE (IN)	THROAT AREA (SQ IN)	THROAT VEL. (FPM)	HOOD SIZE (IN)	MAX. OPER. WEIGHT (LBS)	REMARKS	ANCHORAGE DETAIL
GV 1	GREENHECK GRSR-12	ELECTRICAL 127	660	0.08	12	118.08	805	20.5	30	1, 2	3 M402
GV 2	GREENHECK GRSR-8	CUSTODIAL 125	150	0.03	8	53.28	405	29.0	25	1, 2	3 M402

1. BACKDRAFT DAMPER.
2. ROOF CURB.

EXHAUST FAN SCHEDULE

SYM	MFR & MODEL #	SERVICE	FAN TYPE	CFM	ESP (IN. WG)	FAN RPM	HP	MOTOR RPM	MOTOR TYPE	ELECTRICAL V	PH	WEIGHT (LBS)	REMARKS	CONTROL DETAIL	WIRING DETAIL	ANCHORAGE DETAIL
EF 1	GREENHECK USF-08	MEN'S RR 103	UTILITY	500	0.4	1,193	1/4	1,770	DIRECT	115	1	95	2, 3, 4	2 M501	10 M402	1 M402
EF 2	GREENHECK USF-08	WOMEN'S RR 105	UTILITY	500	0.4	1,193	1/4	1,770	DIRECT	115	1	95	2, 3, 4	2 M501	10 M402	1 M402
EF 3	GREENHECK SQ-95-VG	ELECTRICAL 127	CENTRIFUGAL	660	0.3	1,529	1/6	1,725	DIRECT	115	1	50	3, 5, 6, 7	3 M501	11 M402	13 M401
EF 4	GREENHECK SQ-70-VG	CUSTODIAL 125	CENTRIFUGAL	150	0.3	1,537	1/15	1,725	DIRECT	115	1	35	3, 4, 6, 7	2 M501	10 M402	13 M401
EF 5	GREENHECK G-090-VG	SHOP 131	CENTRIFUGAL	900	0.3	1,647	1/6	1,725	DIRECT	115	1	50	1, 3, 4	2 M501	10 M402	12 M401
EF 6	GREENHECK G-090-VG	112, 113, 114	CENTRIFUGAL	580	0.3	1,511	1/10	1,725	DIRECT	115	1	45	1, 3, 4	2 M501	10 M402	12 M401

1. ROOF CURB.
2. ROOF MOUNTED PAD.
3. BACKDRAFT DAMPER.
4. CONTROLLED BY EMS.
5. CONTROLLED BY LINE VOLTAGE THERMOSTAT
6. UP TO GRAVITY VENTILATOR ON ROOF.
7. MANUFACTURER HANGER BRACKET.

FAN COIL SCHEDULE (FOR PROCESS COOLING ONLY)

SYM	MFR & MODEL #	AREA SERVED	CFM	FAN POWER	ELECTRICAL V	PH	FLA	WT (LBS)	REMARKS	WIRING DETAIL	ANCHORAGE DETAIL
SFC 1	LG LSN243HLV3	MDF 128	813	-	POWERED BY OUTDOOR			40	1, 2	8 M402	9 M401

NOTES: 1. FACTORY THERMOSTAT.
2. CONDENSATE PUMP, LITTLE GIANT VCMX-20ULST OR EQUAL. PROVIDE 120V POWER.

HEAT PUMP UNIT SCHEDULE (FOR PROCESS COOLING ONLY)

SYM	MFR & MODEL #	AREA SERVED	COOLING CAPACITY	SEER/ EER	ELECTRICAL V	PH	HZ	MCA	MOCP	WT (LBS)	REMARKS	WIRING DETAIL	ANCHORAGE DETAIL
SHP 1	LG LS243HLV3	MDF 128	22,000	21.5 / 13	208	1	60	19	30	140	1	8 M402	11 M401

NOTES: 1. NEOPRENE PADS

VVT ZONE AND BYPASS DAMPER SCHEDULE

SYM	MFR & MODEL #	AREA SERVICED	A/C UNIT	INLET SIZE (IN.)	CFM MIN.	CFM MAX.	ELECTRICAL V	PH	WEIGHT (LBS)	REMARKS	CONTROL DETAIL	WIRING DETAIL	ANCHORAGE DETAIL
VVT 1	TITUS DECV-8	CORRIDOR 110	AC 6	8	120	500	120	1	25	1	5 M501	12 M402	2 M402
VVT 2	TITUS DECV-6	GREEN ROOM/ FLEX SPACE 118	AC 6	6	35	400	120	1	20	1	5 M501	12 M402	2 M402
VVT 3	TITUS DECV-8	111, 112, 113	AC 6	12	355	700	120	1	25	1	5 M501	12 M402	2 M402
VVT 4	TITUS DECV-8	114, 115	AC 6	12	255	800	120	1	25	1	5 M501	12 M402	2 M402
BD 1	TITUS DECV-8	-	AC 6	8	0	720	120	1	25	1	5 M501	12 M402	2 M402

1. PROVIDE 120V/24V TRANSFORMER.

APPL No. A03-122864

DSA Stamp

Architect

RACHLIN PARTNERS
8640 National Boulevard
Culver City, CA 90232
310.204.3400

Disclaimer:

THESE DRAWINGS ARE THE PROPERTY OF THE ARCHITECT. THE DESIGNS SHOWN AND DESCRIBED HEREIN INCLUDING ALL TECHNICAL DRAWINGS ARE PROPRIETARY AND CANNOT BE COPIED, DUPLICATED OR COMMERCIALLY EXPLOITED EXCEPT WITH THE WRITTEN PERMISSION. THESE DRAWINGS SHALL NOT BE USED BY THE OWNER ON OTHER PROJECTS FOR ADDITIONS TO THIS PROJECT, OR FOR COMPLETION OF THIS PROJECT BY OTHERS. THE OWNER AGREES TO HOLD HARMLESS, INDEMNIFY AND DEFEND THE ARCHITECT AGAINST ALL DAMAGES, CLAIMS AND LOSSES, INCLUDING DEFENSE COSTS, ARISING OUT OF ANY REUSE OF PLANS AND SPECIFICATIONS WITHOUT THE WRITTEN AUTHORIZATION OF THE ARCHITECT OF RECORD.

Copyright © 2022 Rachlin Partners, All Rights Reserved.

PDS Pocock Design Solutions Inc.

Performing Arts Center
Hacienda La Puente Unified School District
635 North California Avenue
La Puente, CA 91744

Rev	Date	Issue
1	7.22.22	50% DD
2	10.21.22	50% CD
3	12.09.22	100% CD DSA SUBMITTAL
4	6.19.23	100% CD DSA RESUBMITTAL
5	9.20.23	DSA BACKCHECK
6	11.01.23	ADDENDUM NO. 1
7	11.01.23	ADDENDUM NO. 2

Date: 11.01.2023
Scale:
Drawn By: Author
Checked By: Checker

Architect / Engineer Stamp

LICENSED ARCHITECT — NO. C-26229 — REN. 8-31-23 — STATE OF CALIFORNIA
REGISTERED PROFESSIONAL ENGINEER — ANDREW R. GORMAN — No. M30569 — Exp. 3/31/24 — MECHANICAL — STATE OF CALIFORNIA

Consultants
Miyamoto International, Inc.
The Ruzika Company, Inc.
MDC Consulting Engineers
Pocock Design Solutions
Newson Brown Acoustics, LLC
VCA Engineers, Inc.
HJSA Consulting

Sheet Title

Mechanical Schedules

Sheet Number

M002

C:\Users\tim\Documents\R22_HUDSD-PAC_Mechanical Central_tw@pocockdesignsolutions.com.rvt

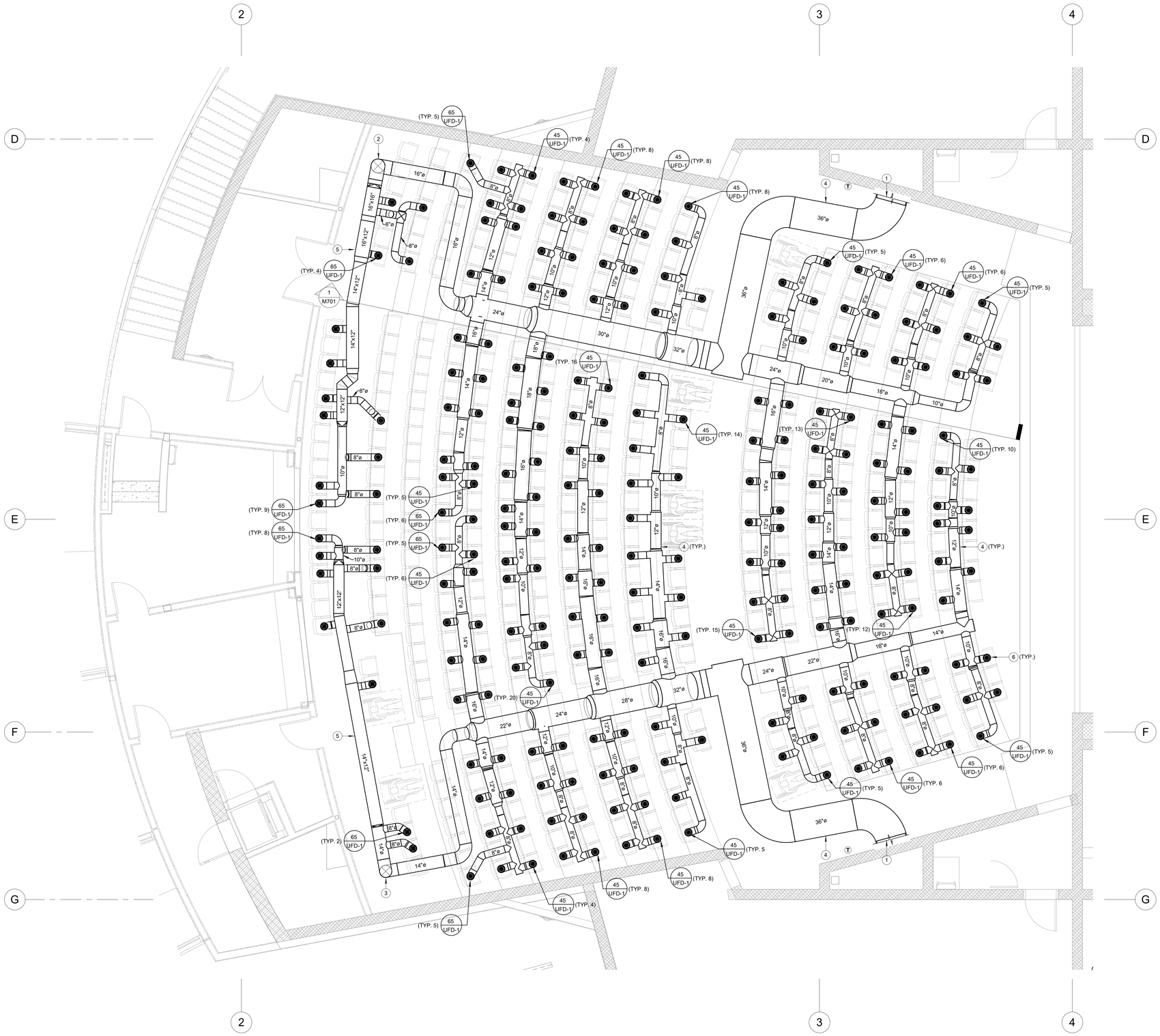

NORTH

MECHANICAL SEATING LEVEL FLOOR PLAN — SCALE 1/4" = 1'-0" — 1

C:\Users\tim\Documents\K22_HUPUSD-PAC_Mechanical Central_tw8@pocockdesignsolutions.com.rvt

CONSTRUCTION NOTES

1. MANUAL VOLUME DAMPERS SHALL BE PROVIDED IN ALL DUCT BRANCHES TO INDIVIDUAL DIFFUSERS. DAMPERS SHALL BE LOCATED AS CLOSE TO THE MAIN DUCT AS POSSIBLE.
2. PROVIDE MAXIMUM OF 5'-0" OF ACOUSTICAL FLEX DUCT TO EACH DIFFUSER LOCATED IN T-BAR CEILINGS. FLEXIBLE DUCT SHALL NOT BE USED TO REPLACE ANY OFFSETS OR ELBOWS PER 2019 CMC REQUIREMENTS. ALL DIFFUSERS LOCATED IN HARD-LID CEILINGS SHALL HAVE RIGID CONNECTIONS.
3. PROVIDE REMOTE CABLE OPERATED CONTROLS FOR ALL VOLUME DAMPERS LOCATED ABOVE HARD-LID CEILINGS.
4. COORDINATE ENTIRE INSTALLATION OF THE HVAC SYSTEM WITH THE WORK OF ALL OTHER TRADES PRIOR TO ANY FABRICATION OR INSTALLATION. PROVIDE ALL FITTINGS, OFFSETS, AND TRANSITIONS AS REQUIRED FOR A COMPLETE WORKABLE INSTALLATION.
5. COORDINATE LAYOUT WITH APPROVED SEATING SUBMITTAL SHOP DRAWINGS TO CONFIRM SEAT SPACING PRIOR TO CORING FLOOR OPENINGS.
6. COORDINATE THE LOCATIONS OF ALL CEILING DIFFUSERS, REGISTERS, AND GRILLES WITH THE ARCHITECTURAL REFLECTIVE CEILING PLAN, ELECTRICAL LIGHTING LAYOUT, AND ARCHITECTURAL ROOM ELEVATIONS. COORDINATE AND PAINT ALL DIFFUSERS PER ARCHITECTURAL REQUIREMENTS.
7. AT THE TIME OF ROUGH INSTALLATION, OR DURING STORAGE ON THE CONSTRUCTION SITE, AND UNTIL FINAL STARTUP OF THE HEATING, COOLING, AND VENTILATION EQUIPMENT, ALL DUCT AND OTHER RELATED AIR DISTRIBUTION COMPONENT OPENINGS SHALL BE COVERED WITH TAPE, PLASTIC, SHEET METAL, OR OTHER ACCEPTABLE METHODS TO REDUCE THE AMOUNT OF DUST, WATER, AND DEBRIS WHICH MAY ENTER THE SYSTEM.

CONSTRUCTION KEYNOTES

1. 36"Ø SUPPLY DUCT. SEE M201 FOR CONTINUATION.
2. 16"Ø SUPPLY DUCT UP TO ABOVE RESTROOM CEILING.
3. 14"Ø SUPPLY DUCT UP TO ABOVE RESTROOM CEILING.
4. UNDERGROUND DUCTWORK. INSTALL PER SPECIFICATION 233116.
5. DUCT ABOVE RESTROOM CEILING.
6. PENETRATION FOR DUCT UP THRU FLOOR PER 3/M702.

APPL No. A03-122864

IDENTIFICATION STAMP
DIV. OF THE STATE ARCHITECT
APP: 03-122864 INC:
REVIEWED FOR
SS ☑ FLS ☑ ACS ☑
DATE: 10/03/2023

DSA Stamp

Architect

RACHLIN PARTNERS
8640 National Boulevard
Culver City, CA 90232
310.204.3400

Disclaimer:

THESE DRAWINGS ARE THE PROPERTY OF THE ARCHITECT. THE DESIGNS SHOWN AND DESCRIBED HEREIN INCLUDING ALL TECHNICAL DRAWINGS ARE PROPRIETARY AND CANNOT BE COPIED, DUPLICATED OR COMMERCIALLY EXPLOITED EXCEPT BY WRITTEN AGREEMENT. THESE DRAWINGS AND DESIGNS SHALL NOT BE USED BY THE OWNER ON OTHER PROJECTS, FOR ADDITIONS TO THIS PROJECT, OR FOR COMPLETION OF THIS PROJECT BY OTHERS. THE OWNER AGREES TO HOLD HARMLESS, INDEMNIFY AND DEFEND THE ARCHITECT AGAINST ALL DAMAGES, CLAIMS AND LOSSES, INCLUDING DEFENSE COSTS, ARISING OUT OF ANY REUSE OF PLANS AND SPECIFICATIONS WITHOUT THE WRITTEN AUTHORIZATION OF THE ARCHITECT OF RECORD.

Copyright © 2022 Rachlin Partners, All Rights Reserved.

PDS Pocock Design Solutions Inc.

Performing Arts Center

Hacienda La Puente Unified School District
635 North California Avenue
La Puente, CA 91744

Rev	Date	Issue
1	7.22.22	50% DD
2	10.21.22	50% CD
3	12.09.22	100% CD DSA SUBMITTAL
4	6.19.23	100% CD DSA RESUBMITTAL
5	9.20.23	DSA BACK CHECK

Date: 10/18/22
Scale: 1/4" = 1'-0"
Drawn By: Author
Checked By: Checker

Architect / Engineer Stamp

LICENSED ARCHITECT — TIMOTHY M. WONG — NO. C-26229 — REN. 8-31-25 — STATE OF CALIFORNIA
REGISTERED PROFESSIONAL ENGINEER — ANDREW R. GORMAN — No. M39569 — Re: 37/24 — MECHANICAL — STATE OF CALIFORNIA

Consultants
Miyamoto International, Inc.
The Ruzika Company, Inc.
MDC Consulting Engineers
Pocock Design Solutions
Newson Brown Acoustics, LLC
VCA Engineers, Inc.
HJSA Consulting

Sheet Title

Mechanical
Seating Level
Floorplan

Sheet Number

M200

APPL No. A03-122864

DSA Stamp

Architect

RACHLIN PARTNERS
8640 National Boulevard
Culver City, CA 90232
310.204.3400

Disclaimer:
THESE DRAWINGS ARE THE PROPERTY OF THE ARCHITECT. THE DESIGNS SHOWN AND DESCRIBED HEREIN INCLUDING ALL TECHNICAL DRAWINGS ARE PROPRIETARY AND CANNOT BE COPIED, DUPLICATED OR COMMERCIALLY EXPLOITED EITHER IN WHOLE OR IN PART. THESE DRAWINGS AND SPECIFICATIONS SHALL NOT BE USED BY THE OWNER ON OTHER PROJECTS, FOR ADDITIONS TO THIS PROJECT, OR FOR COMPLETION OF THIS PROJECT BY OTHERS. THE OWNER AGREES TO HOLD HARMLESS, INDEMNIFY AND DEFEND THE ARCHITECT AGAINST ALL DAMAGES, CLAIMS AND LOSSES, INCLUDING DEFENSE COSTS, ARISING OUT OF ANY REUSE OF PLANS AND SPECIFICATIONS WITHOUT THE WRITTEN AUTHORIZATION OF THE ARCHITECT OF RECORD.

Copyright © 2022 Rachlin Partners, All Rights Reserved.

PDS
Pocock Design Solutions Inc.

CONSTRUCTION NOTES

1. MANUAL VOLUME DAMPERS SHALL BE PROVIDED IN ALL DUCT BRANCHES TO INDIVIDUAL DIFFUSERS. DAMPERS SHALL BE LOCATED AS CLOSE TO THE MAIN DUCT AS POSSIBLE.
2. PROVIDE MAXIMUM OF 5'-0" OF ACOUSTICAL FLEX DUCT TO EACH DIFFUSER LOCATED IN T-BAR CEILINGS. FLEXIBLE DUCT SHALL NOT BE USED TO REPLACE ANY OFFSETS OR ELBOWS PER 2019 CMC REQUIREMENTS. ALL DIFFUSERS LOCATED IN HARD-LID CEILINGS SHALL HAVE RIGID CONNECTIONS.
3. PROVIDE REMOTE CABLE OPERATED CONTROLS FOR ALL VOLUME DAMPERS LOCATED ABOVE HARD-LID CEILINGS.
4. COORDINATE ENTIRE INSTALLATION OF THE HVAC SYSTEM WITH THE WORK OF ALL OTHER TRADES PRIOR TO ANY FABRICATION OR INSTALLATION. PROVIDE ALL FITTINGS, OFFSETS, AND TRANSITIONS AS REQUIRED FOR A COMPLETE WORKABLE INSTALLATION.
5. COORDINATE THE LOCATIONS OF ALL CEILING DIFFUSERS, REGISTERS, AND GRILLES WITH THE ARCHITECTURAL REFLECTIVE CEILING PLAN, ELECTRICAL LIGHTING LAYOUT, AND ARCHITECTURAL ROOM ELEVATIONS. COORDINATE AND PAINT ALL DIFFUSERS PER ARCHITECTURAL REQUIREMENTS.
6. AT THE TIME OF ROUGH INSTALLATION, OR DURING STORAGE ON THE CONSTRUCTION SITE, AND UNTIL FINAL STARTUP OF THE HEATING, COOLING, AND VENTILATION EQUIPMENT, ALL DUCT AND OTHER RELATED AIR DISTRIBUTION COMPONENT OPENINGS SHALL BE COVERED WITH TAPE, PLASTIC, SHEET METAL, OR OTHER ACCEPTABLE METHODS TO REDUCE THE AMOUNT OF DUST, WATER, AND DEBRIS WHICH MAY ENTER THE SYSTEM.

CONSTRUCTION KEYNOTES

1. 36"Ø UNDERFLOOR SUPPLY DUCT. SEE M200 FOR CONTINUATION.
2. 36"Ø DUCT UP THRU SHAFT ABOVE. SEE M202 FOR CONTINUATION.
3. 24"X24" SUPPLY DUCT UP THRU ROOF. SEE M301 FOR CONTINUATION.
4. SOUND TRAP W/ 24"X24" SUPPLY DUCT THRU WALL. SEE M202 FOR CONTINUATION AND 5/M701 FOR SECTION VIEW.
5. 18"X24" SUPPLY DUCT AND 10"X34" RETURN DUCT UP THRU ROOF. SEE M301 FOR CONTINUATION.
6. 24"X36" SUPPLY DUCT AND 14"X44" RETURN DUCT UP THRU ROOF. SEE M301 FOR CONTINUATION.
7. 12"X12" EXHAUST DUCT UP THRU ROOF. SEE M301 FOR CONTINUATION.
8. 8"X8" EXHAUST DUCT UP THRU ROOF. SEE M301 FOR CONTINUATION.
9. REFRIGERANT PIPING UP THRU ROOF. SEE M301 FOR CONTINUATION.
10. 12"Ø EXHAUST DUCT UP THRU ROOF. SEE M201 FOR CONTINUATION.
11. 12"Ø EXHAUST DUCT UP THRU SHAFT. SEE M202 FOR CONTINUATION.
12. LINE-VOLTAGE THERMOSTAT. PROVIDE 120V POWER.
13. VRF CENTRAL CONTROLLER. PROVIDE 120V POWER.
14. 10"X10" DUCT THRU WALL W/ WIRE MESH SCREEN.
15. SOUND TRAP ON DUCT DOWN THRU ROOF.

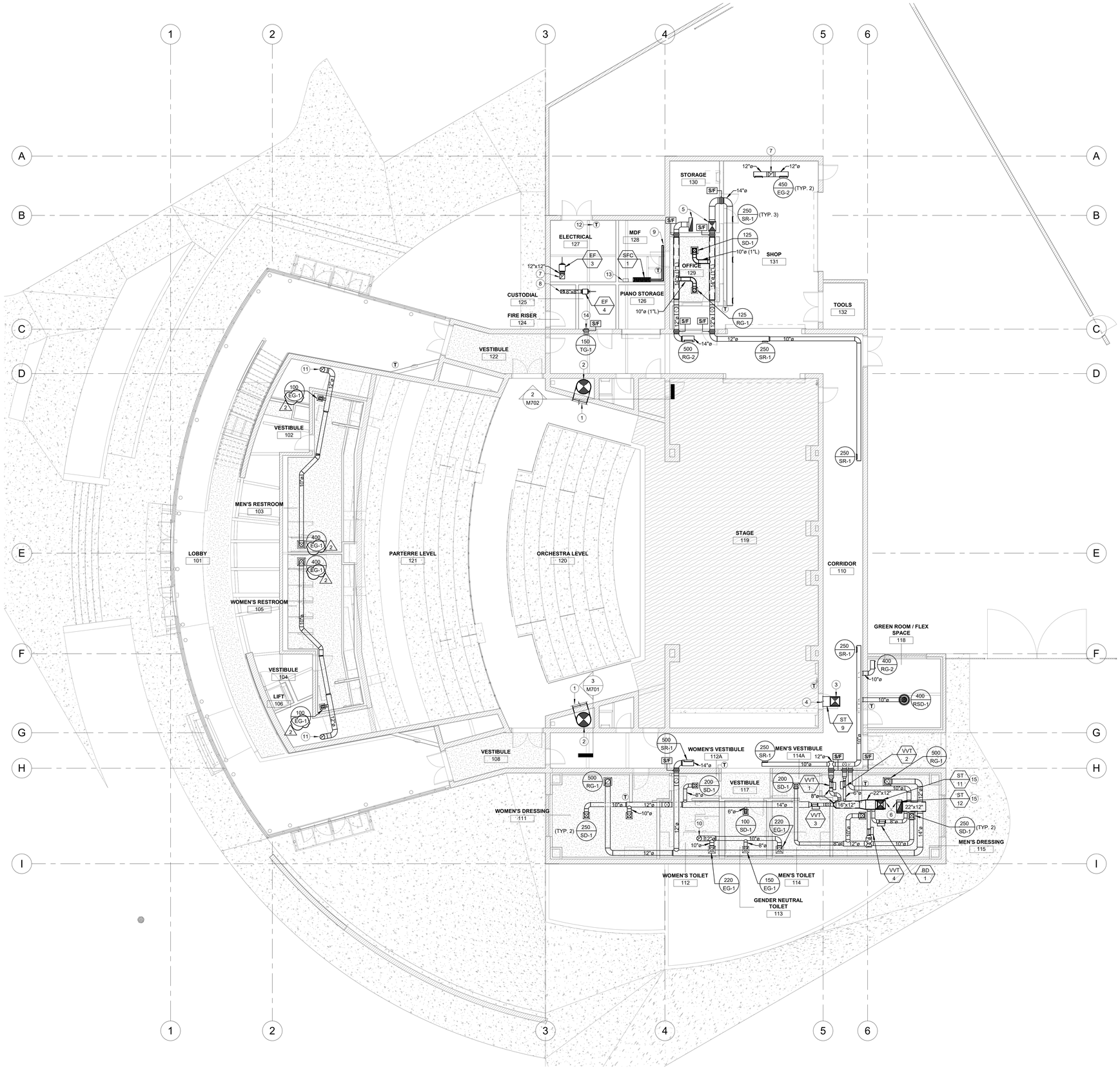

NORTH

MECHANICAL ORCHESTRA/PARTERRE LEVEL FLOOR PLAN — SCALE 1/8" = 1'-0" — 1

C:\Users\tfim\Documents\R22_HJHJSD-PAC_Mechanical Central_tedl@pocockdesignsolutions.com.rvt

Performing Arts Center

Hacienda La Puente Unified School District
635 North California Avenue
La Puente, CA 91744

Rev	Date	Issue
1	7.22.22	50% DD
2	10.21.22	50% CD
3	12.09.22	100% CD DSA SUBMITTAL
4	6.19.23	100% CD DSA RESUBMITTAL
5	9.20.23	DSA BACKCHECK
6	11.01.23	ADDENDUM NO. 1
7	11.01.23	ADDENDUM NO. 2

Date: 11.01.2023
Scale: As indicated
Drawn By: Author
Checked By: Checker

Architect / Engineer Stamp

LICENSED ARCHITECT — JAMES C. HOWARD — NO. C-28229 — REN. 8-31-23 — STATE OF CALIFORNIA

REGISTERED PROFESSIONAL ENGINEER — ANDREW R. GORMAN — No. M39839 — Exp. 3/31/24 — MECHANICAL — STATE OF CALIFORNIA

Consultants
Miyamoto International, Inc.
The Ruzika Company, Inc.
MDC Consulting Engineers
Pocock Design Solutions
Newson Brown Acoustics, LLC
VCA Engineers, Inc.
HJSA Consulting

Sheet Title

Mechanical Orchestra Level Plan

Sheet Number

M201

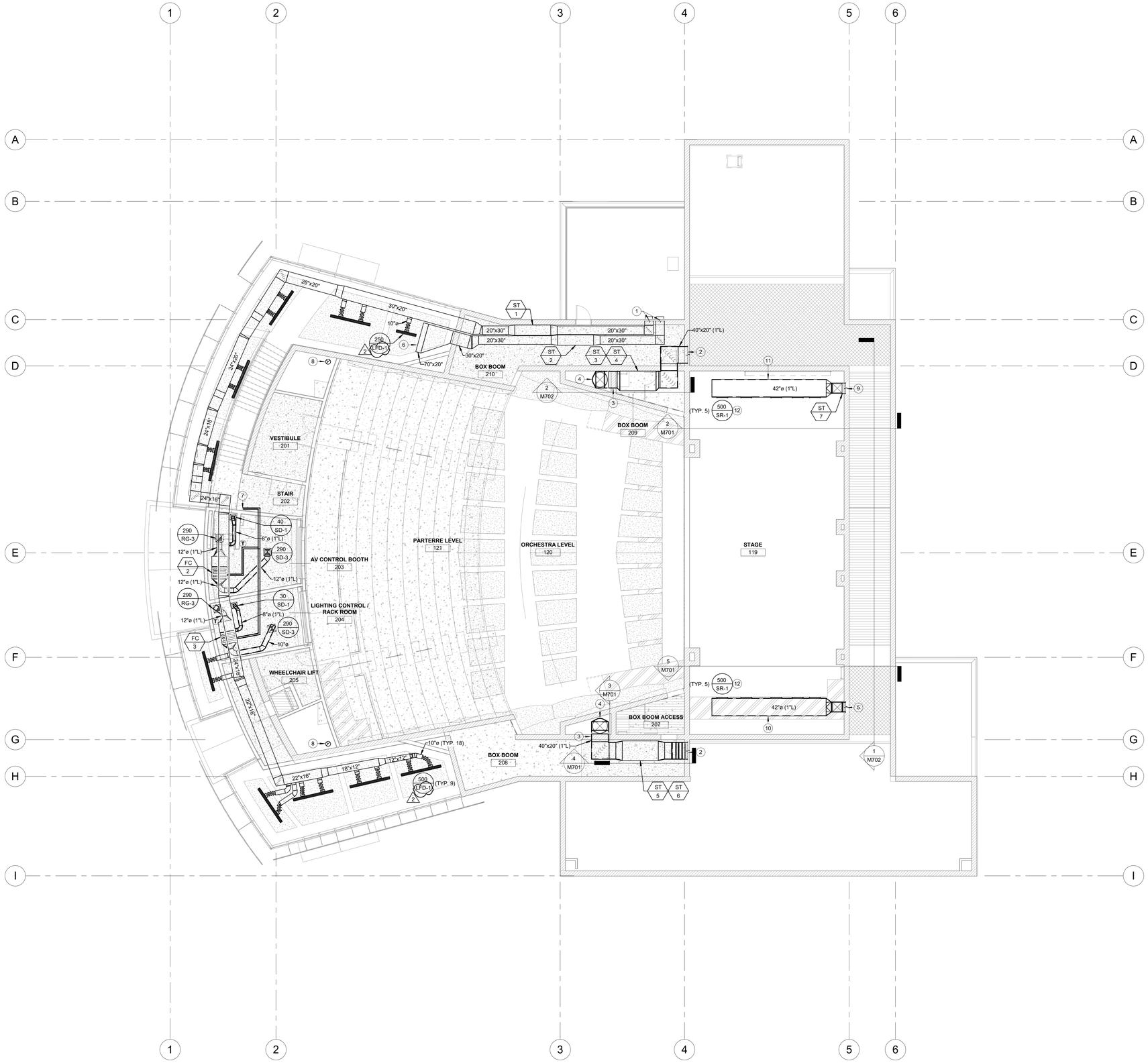

NORTH

MECHANICAL CONTROL BOOTH LEVEL FLOOR PLAN — SCALE 1/8" = 1'-0" — 1

CONSTRUCTION NOTES

1. MANUAL VOLUME DAMPERS SHALL BE PROVIDED IN ALL DUCT BRANCHES TO INDIVIDUAL DIFFUSERS. DAMPERS SHALL BE LOCATED AS CLOSE TO THE MAIN DUCT AS POSSIBLE.
2. PROVIDE MAXIMUM OF 5'-0" OF ACOUSTICAL FLEX DUCT TO EACH DIFFUSER LOCATED IN T-BAR CEILINGS. FLEXIBLE DUCT SHALL NOT BE USED TO REPLACE ANY OFFSETS OR ELBOWS PER 2019 CMC REQUIREMENTS. ALL DIFFUSERS LOCATED IN HARD-LID CEILINGS SHALL HAVE RIGID CONNECTIONS.
3. PROVIDE REMOTE CABLE OPERATED CONTROLS FOR ALL VOLUME DAMPERS LOCATED ABOVE HARD-LID CEILINGS.
4. COORDINATE ENTIRE INSTALLATION OF THE HVAC SYSTEM WITH THE WORK OF ALL OTHER TRADES PRIOR TO ANY FABRICATION OR INSTALLATION. PROVIDE ALL FITTINGS, OFFSETS, AND TRANSITIONS AS REQUIRED FOR A COMPLETE WORKABLE INSTALLATION.
5. COORDINATE THE LOCATIONS OF ALL CEILING DIFFUSERS, REGISTERS, AND GRILLES WITH THE ARCHITECTURAL REFLECTIVE CEILING PLAN, ELECTRICAL LIGHTING LAYOUT, AND ARCHITECTURAL ROOM ELEVATIONS. COORDINATE AND PAINT ALL DIFFUSERS PER ARCHITECTURAL REQUIREMENTS.
6. AT THE TIME OF ROUGH INSTALLATION, OR DURING STORAGE ON THE CONSTRUCTION SITE, AND UNTIL FINAL STARTUP OF THE HEATING, COOLING, AND VENTILATION EQUIPMENT, ALL DUCT AND OTHER RELATED AIR DISTRIBUTION COMPONENT OPENINGS SHALL BE COVERED WITH TAPE, PLASTIC, SHEET METAL, OR OTHER ACCEPTABLE METHODS TO REDUCE THE AMOUNT OF DUST, WATER, AND DEBRIS WHICH MAY ENTER THE SYSTEM.

CONSTRUCTION KEYNOTES

1. 20"X20" SUPPLY AND 20"X20" RETURN DUCT THRU WALL. SEE M301 FOR CONTINUATION.
2. 40"X20" SUPPLY DUCT BELOW AND 40"X20" RETURN DUCT ABOVE THRU WALL. SEE M301 FOR CONTINUATION.
3. 40"X20" RETURN DUCT THRU WALL TO CHASE. CHASE TO BE USED AS PLENUM.
4. 40"X20" SUPPLY DUCT DOWN TO FLOOR BELOW. SEE M201 FOR CONTINUATION. INCREASE 40"x20" SUPPLY TO 36"Ø AND TRANSITION AS REQUIRED.
5. 24"X24" SUPPLY DUCT THRU WALL INTO CORRIDOR. SEE M201 FOR CONTINUATION.
6. RETURN DUCT ABOVE CLOUD W/ WIRE MESH SCREEN.
7. REFRIGERANT PIPING UP TO FLOOR ABOVE. SEE M203 FOR CONTINUATION.
8. 12"Ø EXHAUST DUCT UP AND DOWN TO FLOOR ABOVE AND BELOW. SEE M201 AND M203 FOR CONTINUATION.
9. SOUND TRAP W/ 24"X24" SUPPLY DUCT THRU WALL TO ROOF. SEE M301 FOR CONTINUATION AND 2/M701 FOR SECTION VIEW.
10. DUCT TO BE ATTACHED TO WALL PER 13/M402.
11. DUCT TO BE ATTACHED TO UNDERSIDE OF CATWALK PER 14/M402.
12. DIFFUSERS TO BE CENTERED BETWEEN STAGE CURTAINS. LOCATION SHALL BE COORDINATED WITH THEATER RIGGING.

C:\Users\tim\Documents\K22_HJPUSD-PAC_Mechanical Central_tedl@pocockdesignsolutions.com.rvt

APPL No. A03-122864

DSA Stamp

Architect

RACHLIN PARTNERS
8640 National Boulevard
Culver City, CA 90232
310.204.3400

Disclaimer:

THESE DRAWINGS ARE THE PROPERTY OF THE ARCHITECT. THE DESIGNS SHOWN AND DESCRIBED HEREIN INCLUDING ALL TECHNICAL DRAWINGS ARE PROPRIETARY AND CANNOT BE COPIED, DUPLICATED OR COMMERCIALLY EXPLOITED EXCEPT BY WRITTEN AGREEMENT. THESE DRAWINGS AND DESIGNS SHALL NOT BE USED BY THE OWNER ON OTHER PROJECTS, FOR ADDITIONS TO THIS PROJECT, OR FOR COMPLETION OF THIS PROJECT BY OTHERS. THE OWNER AGREES TO HOLD HARMLESS, INDEMNIFY AND DEFEND THE ARCHITECT AGAINST ALL DAMAGES, CLAIMS AND LOSSES, INCLUDING DEFENSE COSTS, ARISING OUT OF ANY REUSE OF PLANS AND SPECIFICATIONS WITHOUT THE WRITTEN AUTHORIZATION OF THE ARCHITECT OF RECORD.

Copyright © 2022 Rachlin Partners, All Rights Reserved.

PDS
Pocock Design Solutions Inc.

Performing Arts Center

Hacienda La Puente Unified School District
635 North California Avenue
La Puente, CA 91744

Rev	Date	Issue
1	7.22.22	50% DD
2	10.21.22	50% CD
3	12.09.22	100% CD DSA SUBMITTAL
4	6.19.23	100% CD DSA RESUBMITTAL
5	9.20.23	DSA BACKCHECK
6	11.01.23	ADDENDUM NO. 1
7	11.01.23	ADDENDUM NO. 2

Date: 11.01.2023
Scale: As indicated
Drawn By: Author
Checked By: Checker

Architect / Engineer Stamp

LICENSED ARCHITECT — TIMOTHY J. HOGAN — NO. C-26229 REN. 8-31-25 — STATE OF CALIFORNIA

REGISTERED PROFESSIONAL ENGINEER — ANDREW R. GOODMAN — No. M38888 Exp. 3/31/24 — MECHANICAL — STATE OF CALIFORNIA

Consultants
Miyamoto International, Inc.
The Ruzika Company, Inc.
MDC Consulting Engineers
Pocock Design Solutions
Newson Brown Acoustics, LLC
VCA Engineers, Inc.
HJSA Consulting

Sheet Title

Mechanical
Control Booth
Level Plan

Sheet Number

M202

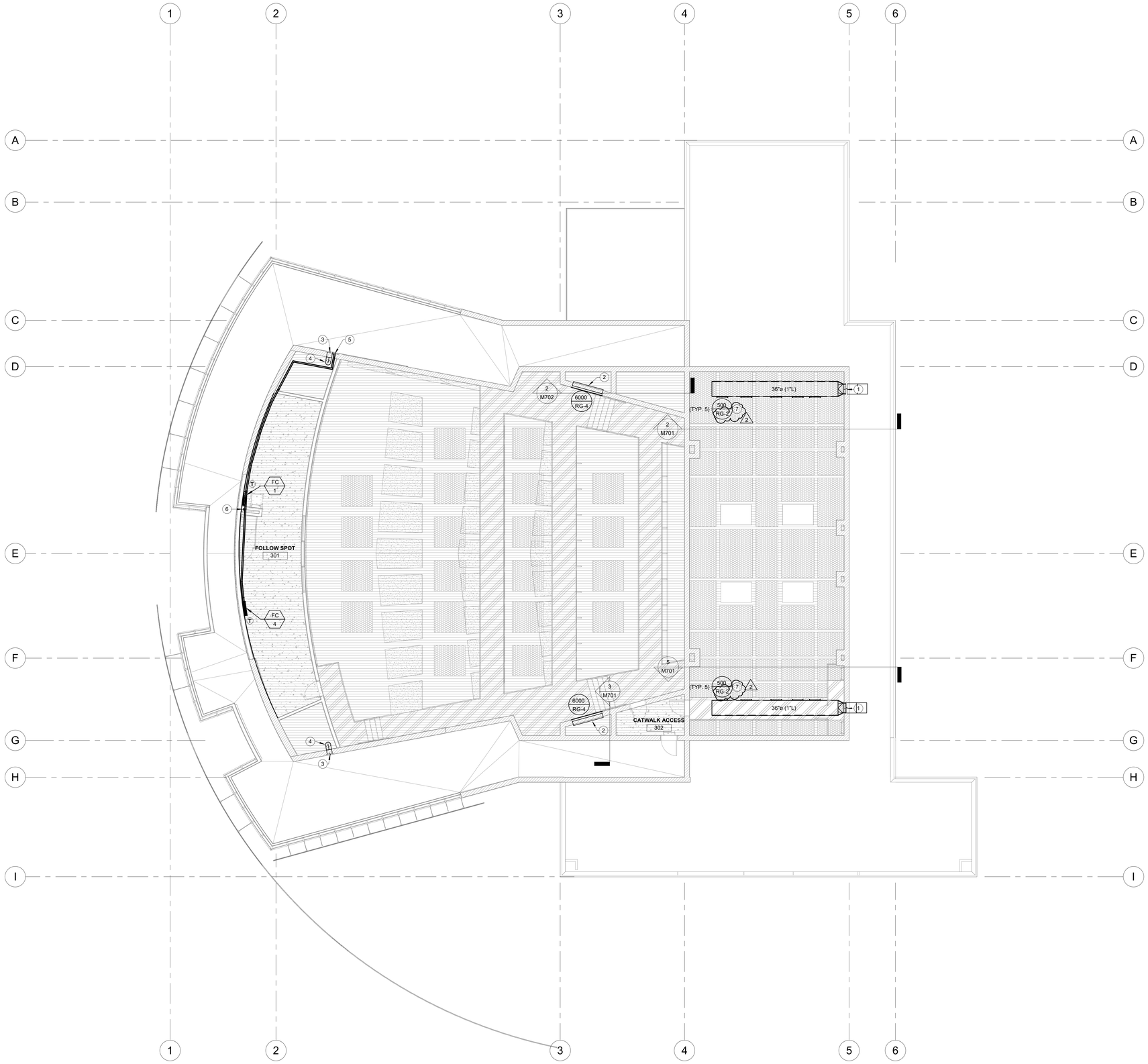

NORTH

MECHANICAL FOLLOW SPOT LEVEL FLOOR PLAN — SCALE 1/8" = 1'-0" — 1

CONSTRUCTION NOTES

1. MANUAL VOLUME DAMPERS SHALL BE PROVIDED IN ALL DUCT BRANCHES TO INDIVIDUAL DIFFUSERS. DAMPERS SHALL BE LOCATED AS CLOSE TO THE MAIN DUCT AS POSSIBLE.
2. PROVIDE MAXIMUM OF 5'-0" OF ACOUSTICAL FLEX DUCT TO EACH DIFFUSER LOCATED IN T-BAR CEILINGS. FLEXIBLE DUCT SHALL NOT BE USED TO REPLACE ANY OFFSETS OR ELBOWS PER 2019 CMC REQUIREMENTS. ALL DIFFUSERS LOCATED IN HARD-LID CEILINGS SHALL HAVE RIGID CONNECTIONS.
3. PROVIDE REMOTE CABLE OPERATED CONTROLS FOR ALL VOLUME DAMPERS LOCATED ABOVE HARD-LID CEILINGS.
4. COORDINATE ENTIRE INSTALLATION OF THE HVAC SYSTEM WITH THE WORK OF ALL OTHER TRADES PRIOR TO ANY FABRICATION OR INSTALLATION. PROVIDE ALL FITTINGS, OFFSETS, AND TRANSITIONS AS REQUIRED FOR A COMPLETE WORKABLE INSTALLATION.
5. COORDINATE THE LOCATIONS OF ALL CEILING DIFFUSERS, REGISTERS, AND GRILLES WITH THE ARCHITECTURAL REFLECTIVE CEILING PLAN, ELECTRICAL LIGHTING LAYOUT, AND ARCHITECTURAL ROOM ELEVATIONS. COORDINATE AND PAINT ALL DIFFUSERS PER ARCHITECTURAL REQUIREMENTS.
6. AT THE TIME OF ROUGH INSTALLATION, OR DURING STORAGE ON THE CONSTRUCTION SITE, AND UNTIL FINAL STARTUP OF THE HEATING, COOLING, AND VENTILATION EQUIPMENT, ALL DUCT AND OTHER RELATED AIR DISTRIBUTION COMPONENT OPENINGS SHALL BE COVERED WITH TAPE, PLASTIC, SHEET METAL, OR OTHER ACCEPTABLE METHODS TO REDUCE THE AMOUNT OF DUST, WATER, AND DEBRIS WHICH MAY ENTER THE SYSTEM.

CONSTRUCTION KEYNOTES

1. 20"X20" RETURN DUCT THRU WALL TO SOUND TRAP. SEE M301 FOR CONTINUATION.
2. RETURN GRILLE W/ DUCT TO CHASE. CHASE TO BE USED AS PLENUM.
3. 12"Ø EXHAUST DUCT THRU WALL. SEE M301 FOR CONTINUATION.
4. 12"Ø EXHAUST DUCT DOWN THRU SHAFT. SEE M202 FOR CONTINUATION.
5. REFRIGERANT PIPING THRU WALL. SEE M301 FOR CONTINUATION.
6. REFRIGERANT PIPING DOWN TO FLOOR BELOW. SEE M202 FOR CONTINUATION.
7. PROVIDE 24"x12" NECK SIZE GRILLE.

APPL No. A03-122864

DSA Stamp

Architect

RACHLIN PARTNERS
8640 National Boulevard
Culver City, CA 90232
310.204.3400

Disclaimer:

THESE DRAWINGS ARE THE PROPERTY OF THE ARCHITECT. THE DESIGNS SHOWN AND DESCRIBED HEREIN INCLUDING ALL TECHNICAL DRAWINGS ARE PROPRIETARY AND CANNOT BE COPIED, DUPLICATED OR COMMERCIALLY EXPLOITED EXCEPT BY WRITTEN AGREEMENT. THESE DRAWINGS AND DESIGNS SHALL NOT BE USED BY THE OWNER ON OTHER PROJECTS, FOR ADDITIONS TO THIS PROJECT, OR FOR COMPLETION OF THIS PROJECT BY OTHERS. THE OWNER AGREES TO HOLD HARMLESS, INDEMNIFY AND DEFEND THE ARCHITECT AGAINST ALL DAMAGES, CLAIMS AND LOSSES, INCLUDING DEFENSE COSTS, ARISING OUT OF ANY REUSE OF PLANS AND SPECIFICATIONS WITHOUT THE WRITTEN AUTHORIZATION OF THE ARCHITECT OF RECORD.

Copyright © 2022 Rachlin Partners, All Rights Reserved.

PDS Pocock Design Solutions Inc.

Performing Arts Center

Hacienda La Puente Unified School District
635 North California Avenue
La Puente, CA 91744

Rev	Date	Issue
1	7.22.22	50% DD
2	10.21.22	50% CD
3	12.09.22	100% CD DSA SUBMITTAL
4	6.19.23	100% CD DSA RESUBMITTAL
5	9.20.23	DSA BACKCHECK
6	11.01.23	ADDENDUM NO. 1
7	11.01.23	ADDENDUM NO. 2

Date: 11.01.2023
Scale: As indicated
Drawn By: Author
Checked By: Checker

Architect / Engineer Stamp

LICENSED ARCHITECT — DONALD INGRASSIA — NO. C-26229 — REN. 8-31-25 — STATE OF CALIFORNIA

REGISTERED PROFESSIONAL ENGINEER — ANDREW R. GORMAN — No. M3569 — Exp. 3/31/24 — MECHANICAL — STATE OF CALIFORNIA

Consultants
Miyamoto International, Inc.
The Ruzika Company, Inc.
MDC Consulting Engineers
Pocock Design Solutions
Newson Brown Acoustics, LLC
VCA Engineers, Inc.
HJSA Consulting

Sheet Title

Mechanical Follow Spot Level Plan

Sheet Number

M203

C:\Users\tim\Documents\R22_HJPUSD-PAC_Mechanical Central_tw8@pocockdesignsolutions.com.rvt

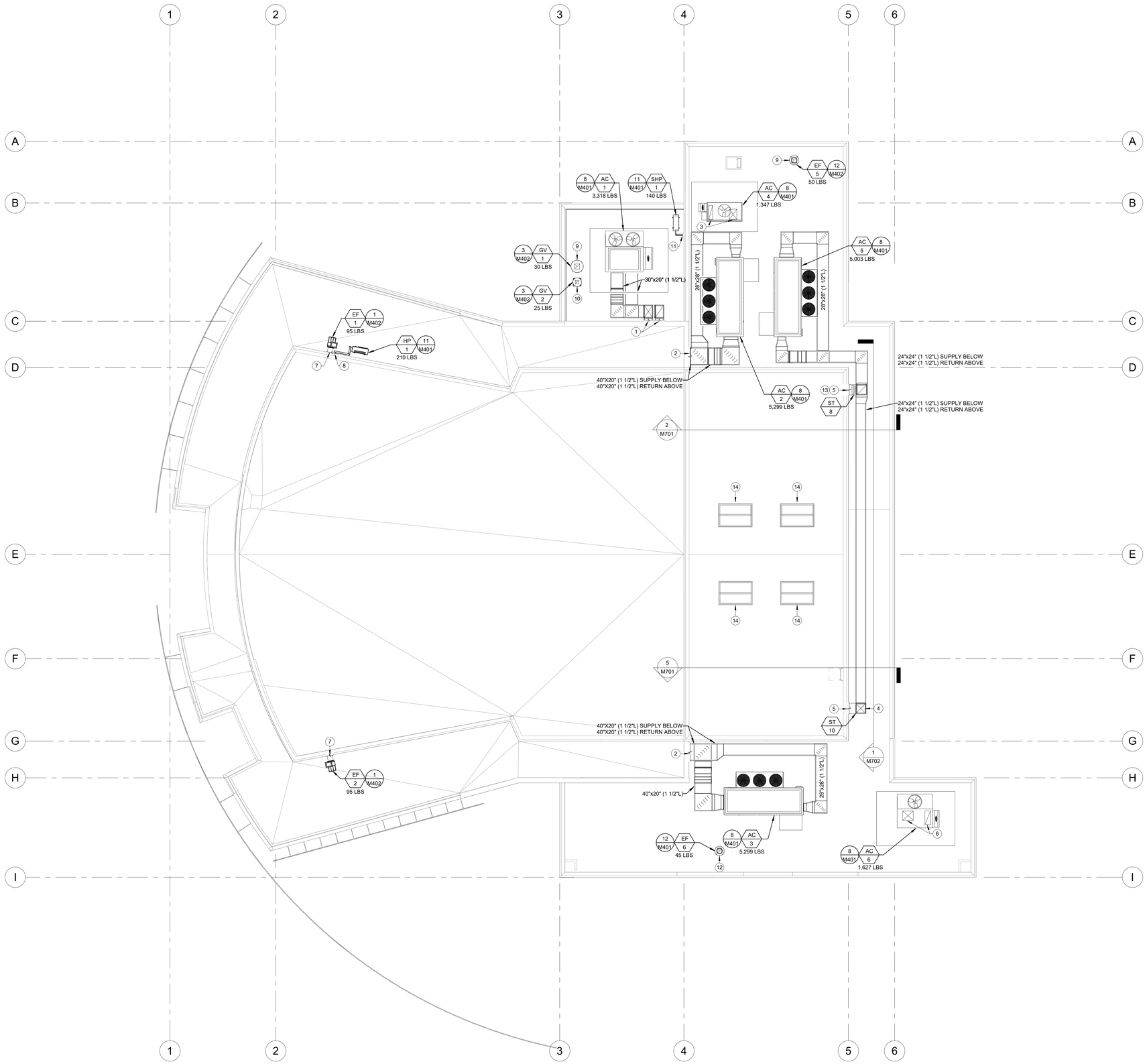

NORTH

MECHANICAL ROOF PLAN — SCALE 1/8" = 1'-0" — 1

C:\Users\tim\Documents\R22_HUPUSD-PAC_Mechanical Central_tw@pocockdesignsolutions.com.rvt

CONSTRUCTION NOTES

1. ALL EQUIPMENT, DUCTS, PIPING, AND OTHER DEVICES AND MATERIALS INSTALLED OUTSIDE OF BUILDING OR OTHERWISE EXPOSED TO THE WEATHER SHALL BE COMPLETELY WEATHER-PROOFED.
2. COORDINATE THE LOCATION OF ALL ROOF OPENINGS AND THE LOCATION OF ALL ROOF MOUNTED EQUIPMENT WITH THE STRUCTURAL AND ARCHITECTURAL PLANS PRIOR TO ANY INSTALLATION.
3. ALL FRESH AIR INTAKES SHALL MEET CODE REQUIRED CLEARANCES FROM EXHAUST, FLUE, FUEL BURNING APPLIANCE, AND PLUMBING VENT OUTLETS. FOR GAS/ELECTRIC AIR CONDITIONING UNITS WHERE THE CODE REQUIRED CLEARANCES ARE NOT MET, A FACTORY FLUE GAS DEFLECTOR AND EXTENSION SHALL BE USED TO MINIMIZE THESE CLEARANCES. CONTRACTOR SHALL DETERMINE LOCATIONS WHERE REQUIRED PRIOR TO BID. THIS SHALL BE PROVIDED AT NO ADDITIONAL COST.
4. BEFORE COMMENCEMENT OF WORK, THE MECHANICAL CONTRACTOR SHALL VERIFY THE EXACT LOCATIONS AND DIMENSIONS OF ALL EXISTING EQUIPMENT AND ELECTRICAL SERVICES IN THE AREA OF CONSTRUCTION AND NOTIFY THE DISTRICT OF ANY DISCREPANCIES.
5. MAINTAIN MANUFACTURER MIN. CLEARANCES ON ALL ROOFTOP MECHANICAL EQUIPMENT.

CONSTRUCTION KEYNOTES

1. 20"X30" SUPPLY AND 20"X30" RETURN DUCT THRU WALL. SEE M202 FOR CONTINUATION.
2. 40"X20" SUPPLY BELOW AND 40"X20" RETURN DUCT ABOVE THRU WALL. SEE M202 FOR CONTINUATION.
3. 18"X24" SUPPLY AND 10"X34" RETURN DUCT DOWN THRU ROOF. SEE M201 FOR CONTINUATION.
4. 24"X24" SUPPLY DUCT DOWN THRU ROOF. SEE M201 FOR CONTINUATION.
5. SOUND TRAP W/ 24"X24" RETURN DUCT THRU WALL. SEE M203 FOR CONTINUATION.
6. 24"X36" SUPPLY DUCT AND 14"X44" RETURN DUCT THRU ROOF. SEE M201 FOR CONTINUATION.
7. 12"Ø EXHAUST DUCT THRU WALL. SEE M203 FOR CONTINUATION.
8. REFRIGERANT PIPING THRU WALL. SEE M203 FOR CONTINUATION. INSULATE AND PROVIDE ALUMINUM JACKETING ON ALL EXPOSED REFRIGERANT PIPING.
9. 12"X12" EXHAUST DUCT DOWN THRU ROOF. SEE M201 FOR CONTINUATION.
10. 8"X8" EXHAUST DUCT DOWN THRU ROOF. SEE M201 FOR CONTINUATION.
11. REFRIGERANT PIPING DOWN THRU ROOF. SEE M201 FOR CONTINUATION. INSULATE AND PROVIDE ALUMINUM JACKETING ON ALL EXPOSED REFRIGERANT PIPING.
12. 12"Ø EXHAUST DUCT DOWN THRU ROOF. SEE M201 FOR CONTINUATION.
13. 24"X24" SUPPLY DUCT THRU WALL. SEE M202 FOR CONTINUATION.
14. SMOKE VENT PER ARCHITECTURAL DETAIL 5, 9, AND 12/A832.

APPL No. A03-122864

IDENTIFICATION STAMP
DIV. OF THE STATE ARCHITECT
APP: 03-122864 INC:
REVIEWED FOR
SS ☑ FLS ☑ ACS ☑
DATE: 10/03/2023

DSA Stamp

Architect

RACHLIN PARTNERS
8640 National Boulevard
Culver City, CA 90232
310.204.3400

Disclaimer:

THESE DRAWINGS ARE THE PROPERTY OF THE ARCHITECT. THE DESIGNS SHOWN AND DESCRIBED HEREIN INCLUDING ALL TECHNICAL DRAWINGS ARE PROPRIETARY AND CANNOT BE COPIED, DUPLICATED OR COMMERCIALLY EXPLOITED EXCEPT WITH THE WRITTEN PERMISSION OF THE ARCHITECT AND SHALL NOT BE USED BY THE OWNER ON OTHER PROJECTS FOR ADDITIONS TO THIS PROJECT, OR FOR COMPLETION OF THIS PROJECT BY OTHERS. THE OWNER AGREES TO HOLD HARMLESS, INDEMNIFY AND DEFEND THE ARCHITECT AGAINST ALL DAMAGES, CLAIMS AND LOSSES, INCLUDING DEFENSE COSTS, ARISING OUT OF ANY REUSE OF PLANS AND SPECIFICATIONS WITHOUT THE WRITTEN AUTHORIZATION OF THE ARCHITECT OF RECORD.

Copyright © 2022 Rachlin Partners, All Rights Reserved.

PDS
Pocock Design Solutions Inc.

Performing Arts Center

Hacienda La Puente Unified School District
635 North California Avenue
La Puente, CA 91744

Rev	Date	Issue
1	7.22.22	50% DD
2	10.21.22	50% CD
3	12.09.22	100% CD DSA SUBMITTAL
4	6.19.23	100% CD DSA RESUBMITTAL
5	9.20.23	DSA BACK CHECK

Date: 06/21/22
Scale: As indicated
Drawn By: Author
Checked By: Checker

Architect / Engineer Stamp

LICENSED ARCHITECT — TIMOTHY W. WILLIAMS — NO. C-26229 — REN. 8-31-23 — STATE OF CALIFORNIA

REGISTERED PROFESSIONAL ENGINEER — ANDREW R. GORMAN — No. M39569 — Exp. 3/31/24 — MECHANICAL — STATE OF CALIFORNIA

Consultants
Miyamoto International, Inc.
The Ruzika Company, Inc.
MDC Consulting Engineers
Pocock Design Solutions
Newson Brown Acoustics, LLC
VCA Engineers, Inc.
HJSA Consulting

Sheet Title

Mechanical Roof Plan

Sheet Number

M301

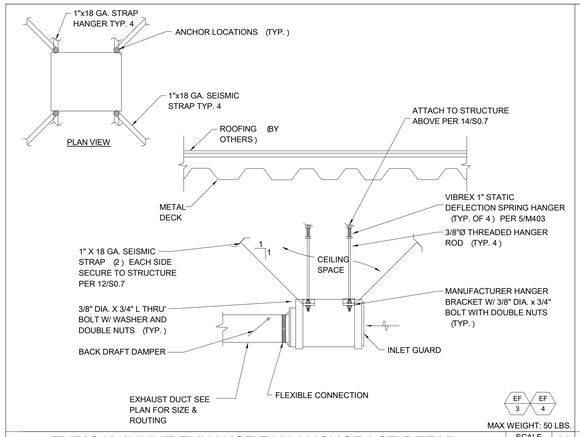

MAX WEIGHT: 50 LBS.

TYPICAL INLINE EXHAUST FAN ANCHORAGE DETAIL

SCALE: NONE | 13

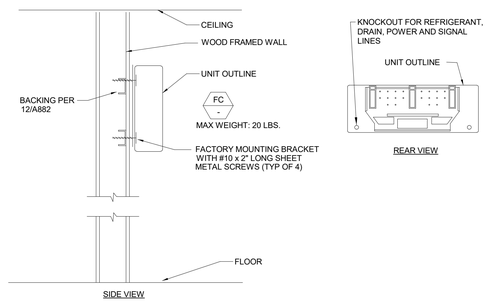

NOTES:

1. MAINTAIN MFR. RECOMMENDED MIN. CLEARANCES.
2. REFRIGERANT IS METERED BY CAPILLARY TUBES IN THE OUTDOOR UNIT. INSULATE BOTH REFRIGERANT LINES.
3. REFRIGERANT, DRAIN, AND POWER CONNECTIONS MAY BE MADE IN UNIT REAR, BOTTOM, LEFT SIDE OR RIGHT SIDE.
4. INSTALLATION SHALL COMPLY WITH MFR. GUIDELINES.

FC 1 | FC 4 | SFC 1

MAX WEIGHT: 40 LBS.

TYPICAL DUCTLESS HIGH WALL FAN COIL UNIT DETAIL

SCALE: NONE | 9

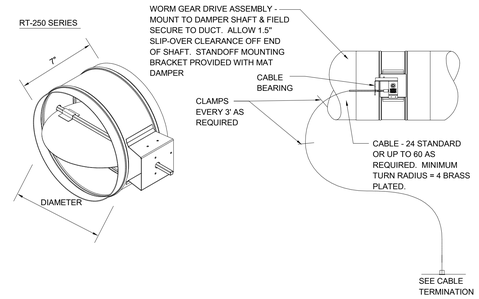

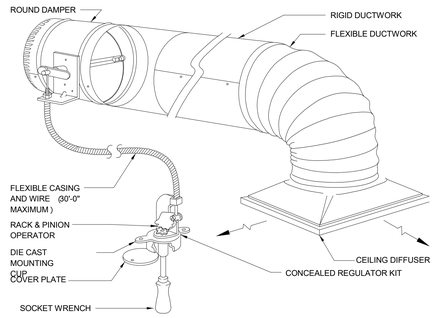

PROVIDE IN ALL AREAS WITH GYP./HARD CEILING.

NOTES:

1. COORDINATE EXACT LOCATION OF CEILING MOUNTED CONCEALED REGULATOR WITH ARCHITECT PRIOR TO INSTALLATION.

STANDARD DAMPER CONSTRUCTION:

1. GALVANIZED STEEL WITH ROLLED BEAD STIFFENERS - 22 TO 18 GA.
2. REINFORCED BLADE, SELF LUBRICATING BEARINGS
3. WORM GEAR MOUNTING PLATE
4. 3/8 SQUARE (FLAT/FLAT) AXLES ASSURES NON SLIP CONNECTION
5. OPERATING TEMPERATURE = -40° - 200° F.
6. MAX VELOCITY = 1500 FPM.
7. FURNISHED 1/8 UNDERSIZED FOR MALE SLIP-IN

CABLE TERMINATION:

1. RT-CCM ROUND MINIATURE CEILING CUP
2. RT-MB MOUNTING BRACKET US PATENT #5,702,298 CANADIAN PATENT #2,185,311

TYPICAL REMOTE CABLE CONTROL SYSTEM DETAIL

SCALE: NONE | 6

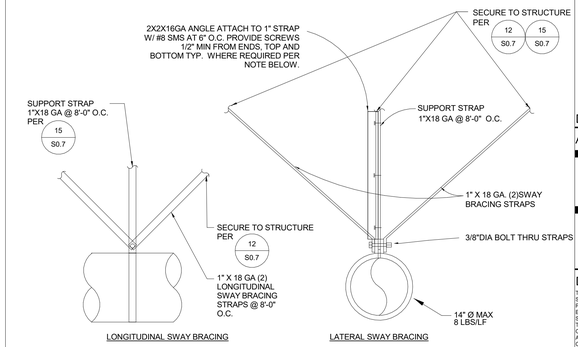

NOTE:

1. MAXIMUM DUCTWORK WEIGHT SHALL BE 8 LB/FT
2. THE VERTICAL ANGLE IS TO BE ADDED WHEREVER REQUIRED TO AVOID IMPACT TO ADJACENT COMPONENTS WHICH WOULD CREATE A HAZARD (FALLING, GAS BREAKAGE, ETC.) OR OTHERWISE DAMAGE ESSENTIAL LIFE-SAFETY SYSTEM PER CBC 2022 SECTION 1617.1.25 REQUIREMENTS.

TYPICAL ROUND DUCT ANCHORAGE DETAIL

SCALE: NONE | 3

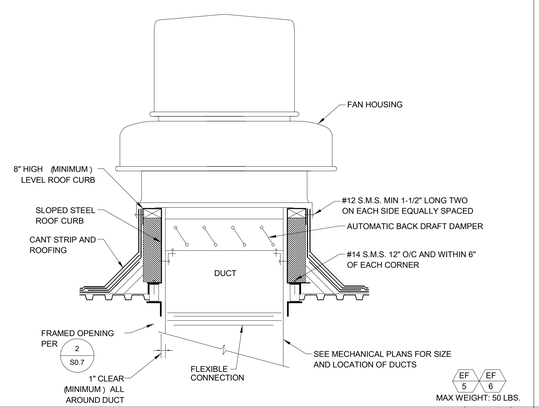

EF 5 | EF 6

MAX WEIGHT: 50 LBS.

TYPICAL ROOF EXHAUST FAN ANCHORAGE DETAIL

SCALE: NONE | 12

NOTES:
TOP OF CURB SHALL BE MINIMUM 12" ABOVE FINISHED ROOF.

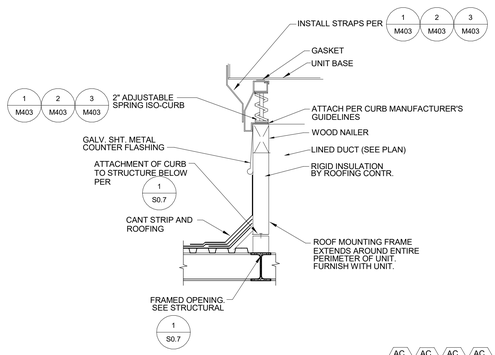

AC 1 | AC 2 | AC 3 | AC 4 | AC 5 | AC 6

MAX WEIGHT: 5,299 LBS.

TYPICAL ROOFTOP A/C UNIT ANCHORAGE DETAIL

SCALE: NONE | 8

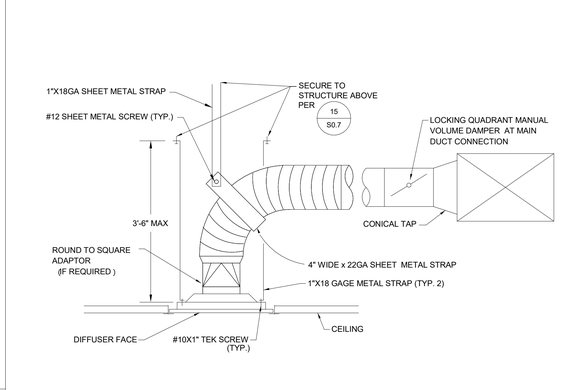

TYPICAL CEILING DIFFUSER INSTALLATION DETAIL

SCALE: NONE | 2

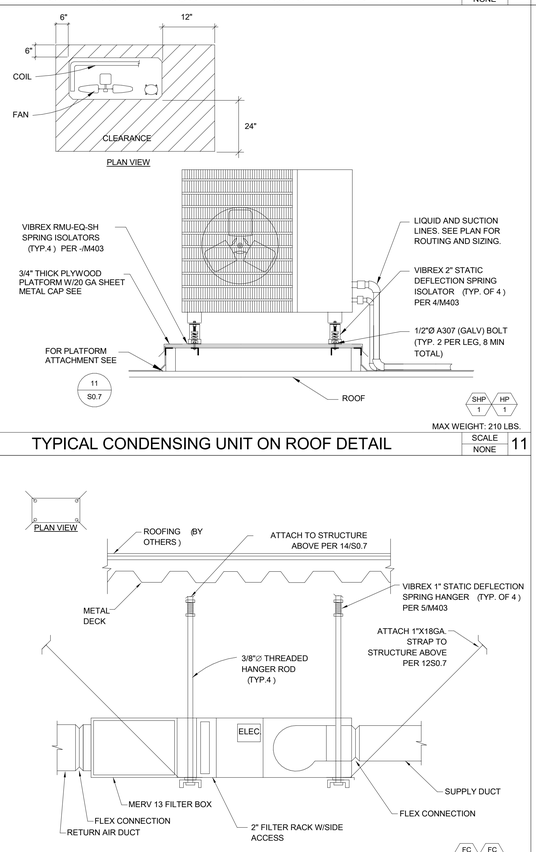

SHP 1 | HP 1

MAX WEIGHT: 210 LBS.

TYPICAL CONDENSING UNIT ON ROOF DETAIL

SCALE: NONE | 11

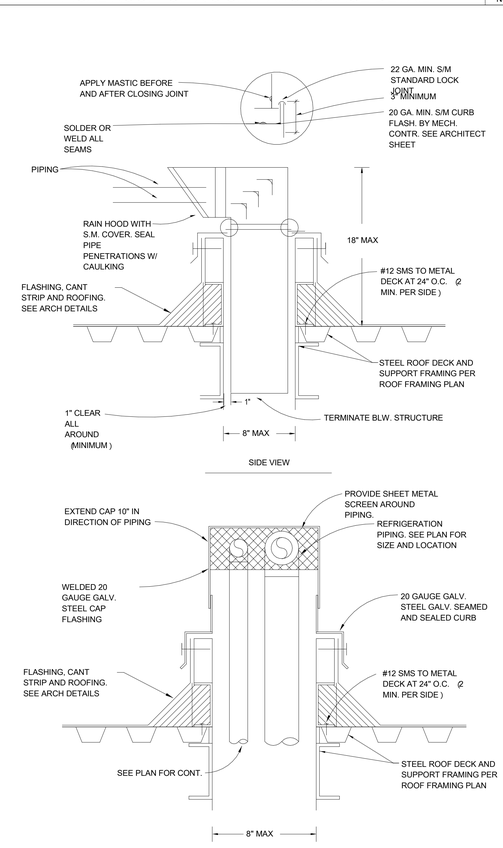

TYPICAL REFRIGERANT PIPE PENETRATION DETAIL

SCALE: NONE | 7

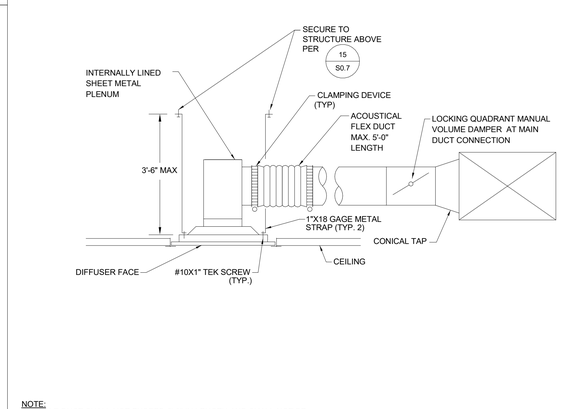

TYPICAL CONTROL DEVICE MOUNTING DETAIL

SCALE: NONE | 1

FC 2 | FC 3

MAX WEIGHT: 60 LBS.

TYPICAL DUCTED FAN COIL UNIT DETAIL

SCALE: NONE | 10

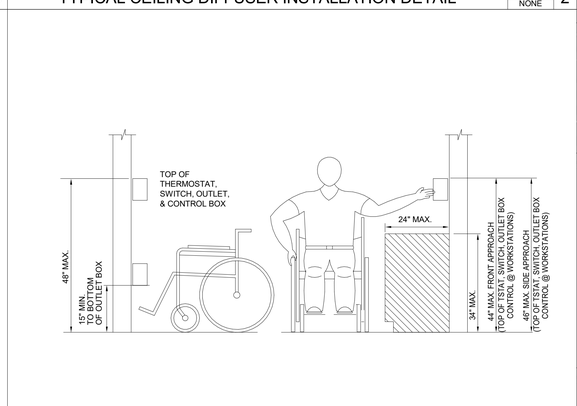

NOTE:
MAXIMUM DUCTWORK WEIGHT SHALL BE 15 LB/FT

TYPICAL RECT. DUCT ANCHORAGE DETAIL

SCALE: NONE | 4

NOTE:
FLEXIBLE DUCT SHALL NOT EXCEED 5'-0" IN LENGTH AND SHALL NOT BE USED IN LIEU OF A RIGID ELBOW OR TRANSITION PER CMC REQUIREMENTS.

DUCT TRANSITION REQUIREMENTS

SCALE: NONE | 5

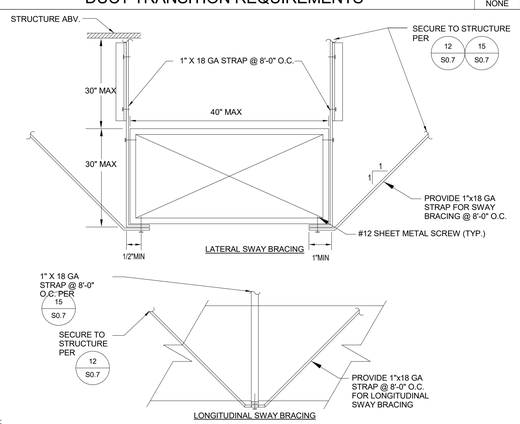

NOTE:
MAXIMUM DUCTWORK WEIGHT SHALL BE 15 LB/FT

TYPICAL RECT. DUCT ANCHORAGE DETAIL

SCALE: NONE | 4

TYPICAL CONTROL DEVICE MOUNTING DETAIL

SCALE: NONE | 1

APPL No. A03-122864

IDENTIFICATION STAMP
DIV. OF THE STATE ARCHITECT
APP: 03-122864 INC:
REVIEWED FOR
SS ☑ FLS ☑ ACS ☑
DATE: 10/03/2023

DSA Stamp

Architect

RACHLIN PARTNERS
8640 National Boulevard
Culver City, CA 90232
310.204.3400

Disclaimer:
THESE DRAWINGS ARE THE PROPERTY OF THE ARCHITECT. THE DESIGNS SHOWN AND DESCRIBED HEREIN INCLUDING ALL TECHNICAL DRAWINGS ARE PROPRIETARY AND CANNOT BE COPIED, DUPLICATED OR COMMERCIALLY EXPLOITED IN WHOLE OR IN PART. THESE DRAWINGS AND SPECIFICATIONS SHALL NOT BE USED BY THE OWNER ON OTHER PROJECTS, FOR ADDITIONS TO THIS PROJECT, OR FOR COMPLETION OF THIS PROJECT BY OTHERS. THE OWNER AGREES TO HOLD HARMLESS, INDEMNIFY AND DEFEND THE ARCHITECT AGAINST ALL DAMAGES, CLAIMS AND LOSSES, INCLUDING DEFENSE COSTS, ARISING OUT OF ANY REUSE OF PLANS AND SPECIFICATIONS WITHOUT THE WRITTEN AUTHORIZATION OF THE ARCHITECT OF RECORD.

Copyright © 2022 Rachlin Partners, All Rights Reserved.

PDS Pocock Design Solutions Inc.

Performing Arts Center
Hacienda La Puente Unified School District
635 North California Avenue
La Puente, CA 91744

Rev	Date	Issue
1	7.22.22	50% DD
2	10.21.22	50% CD
3	12.09.22	100% CD DSA SUBMITTAL
4	6.19.23	100% CD DSA RESUBMITTAL
5	9.20.23	DSA BACK CHECK

Date: 08/16/22
Scale:
Drawn By: Author
Checked By: Checker

Architect / Engineer Stamp

LICENSED ARCHITECT RICHARD M. RACHLIN NO. C-26229 REN. 8-31-25 STATE OF CALIFORNIA

REGISTERED PROFESSIONAL ENGINEER ANDREW R. GOODMAN No. M39808 Exp. 3/31/24 MECHANICAL STATE OF CALIFORNIA

Consultants
Miyamoto International, Inc.
The Ruzika Company, Inc.
MDC Consulting Engineers
Pocock Design Solutions
Newson Brown Acoustics, LLC
VCA Engineers, Inc.
HJSA Consulting

Sheet Title
Mechanical Details

Sheet Number
M401

C:\Users\tim\Documents\R22_HLP\3D-PAC_Mechanical Central_tedl@pocockdesignsolutions.com.rvt

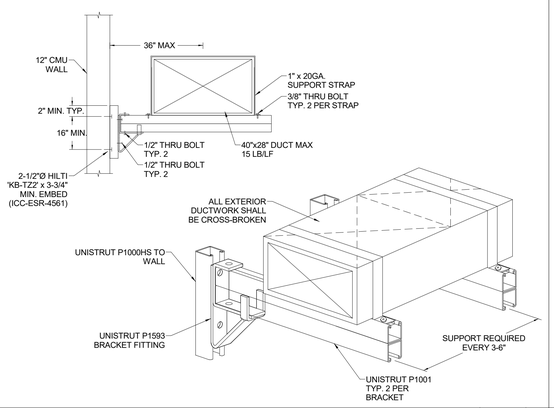

TYPICAL RECTANGULAR WALL-MOUNT ANCHORAGE DETAIL | SCALE NONE | 16

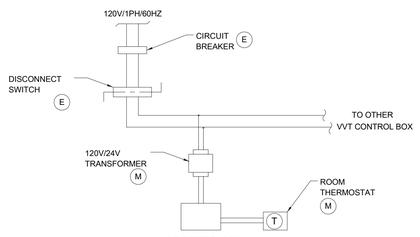

LEGEND:
(E) PROVIDED BY ELEC.
(M) PROVIDED BY MECH.

TYP. VVT BOX WIRING DETAIL | SCALE NONE | 12

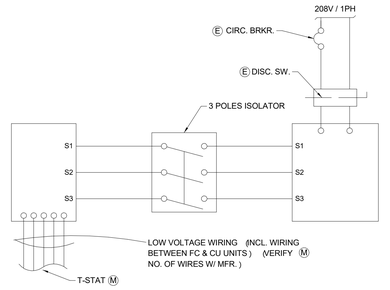

NOTE: INSTALL PER MANUFACTURER'S GUIDELINES.

LEGEND:
(E) PROVIDED BY ELEC.
(M) PROVIDED BY MECH.

TYPICAL SPLIT SYSTEM WIRING DETAIL | SCALE NONE | 8

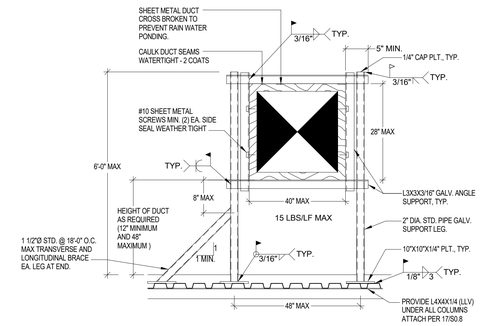

NOTES:
1. STEEL PLATE AND SCREWS EXPOSED TO WEATHER SHALL BE GALVANIZED.
2. DUCT SUPPORTS SHALL BE SPACED AT 6'-0" O.C. AND EVERY CHANGE IN DIRECTION.
3. VERIFY OVERALL DUCT DIMENSIONS PRIOR TO FABRICATION. DIMENSIONS INDICATED ON PLANS ARE NET CLEAR INTERNAL DIMENSIONS. ACCOMMODATE FOR INTERNAL DUCT LINING AND DOUBLE WALL CONSTRUCTION AS REQUIRED.

ROOFTOP DUCT ANCHORAGE DETAIL | SCALE NONE | 4

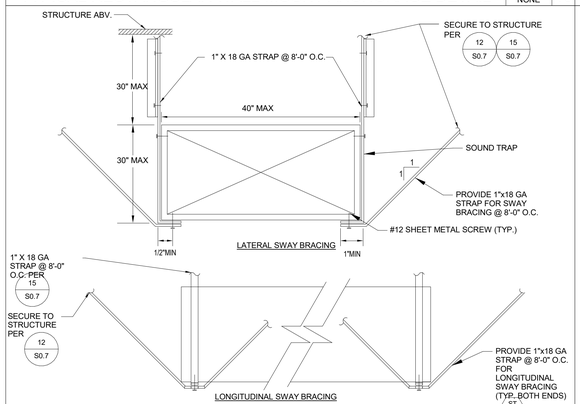

TYPICAL SOUND TRAP ANCHORAGE DETAIL | SCALE NONE | 15

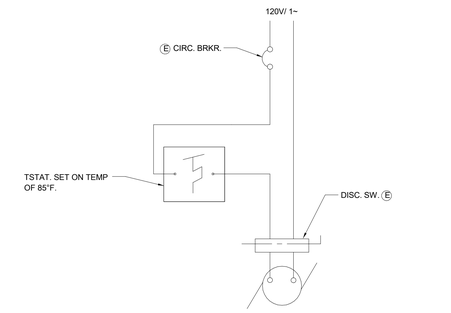

LEGEND:
(E) PROVIDED BY ELEC.
(M) PROVIDED BY MECH.

TYP. TEMP. CONTROLLED EXHAUST FAN WIRING DETAIL | SCALE NONE | 11

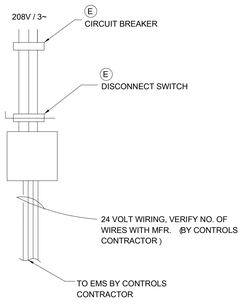

LEGEND:
(E) PROVIDED BY ELEC.
(M) PROVIDED BY MECH.

TYPICAL AC UNIT WIRING DETAIL | SCALE NONE | 7

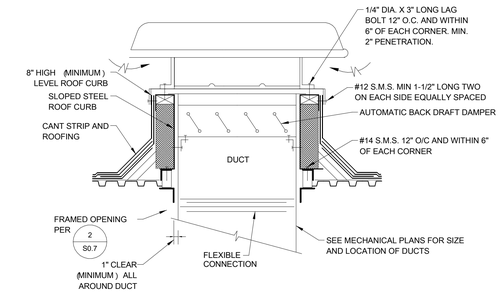

TYPICAL GRAVITY VENTILATOR ANCHORAGE DETAIL | SCALE NONE | 3

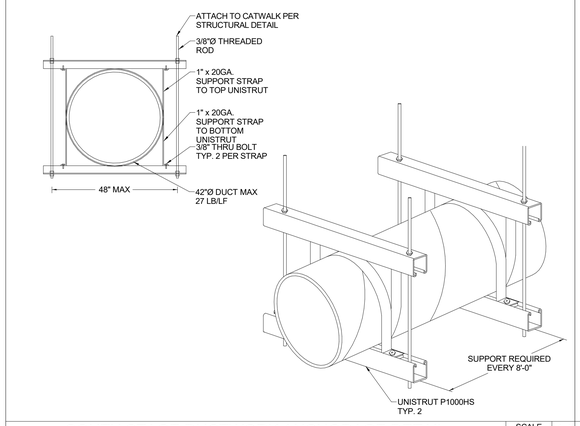

SOUTH STAGE DUCTWORK ANCHORAGE DETAIL | SCALE NONE | 14

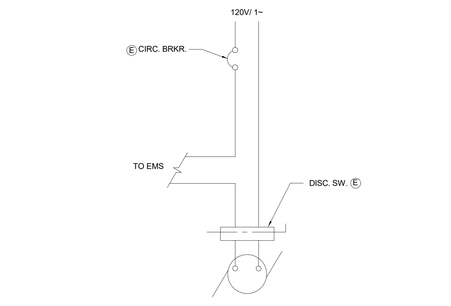

LEGEND:
(E) PROVIDED BY ELEC.
(M) PROVIDED BY MECH.

TYPICAL EMS EXHAUST FAN WIRING DETAIL | SCALE NONE | 10

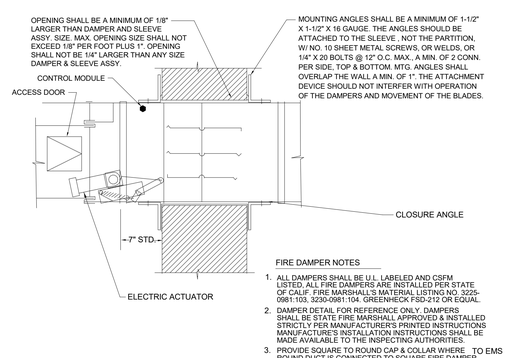

FIRE DAMPER NOTES
1. ALL DAMPERS SHALL BE U.L. LABELED AND CSFM LISTED. ALL FIRE DAMPERS ARE INSTALLED PER STATE OF CALIF. FIRE MARSHALL'S MATERIAL LISTING NO. 3225-0981:103, 3230-0981:104. GREENHECK FSD-212 OR EQUAL.
2. DAMPER DETAIL FOR REFERENCE ONLY. DAMPERS SHALL BE STATE FIRE MARSHALL APPROVED & INSTALLED STRICTLY PER MANUFACTURER'S PRINTED INSTRUCTIONS MANUFACTURE'S INSTALLATION INSTRUCTIONS SHALL BE MADE AVAILABLE TO THE INSPECTING AUTHORITIES.
3. PROVIDE SQUARE TO ROUND CAP & COLLAR WHERE TO EMS ROUND DUCT IS CONNECTED TO SQUARE FIRE DAMPER.

TYPICAL COMBINATION SMOKE/FIRE DAMPER DETAIL | SCALE NONE | 6

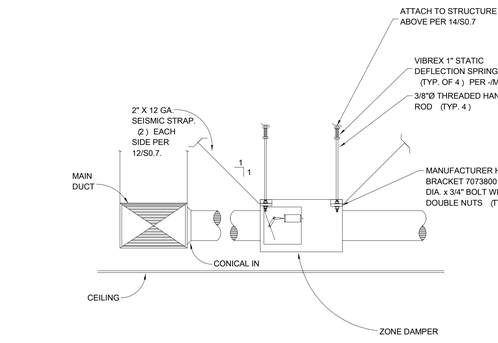

TYPICAL VVT BOX ANCHORAGE DETAIL | SCALE NONE | 2

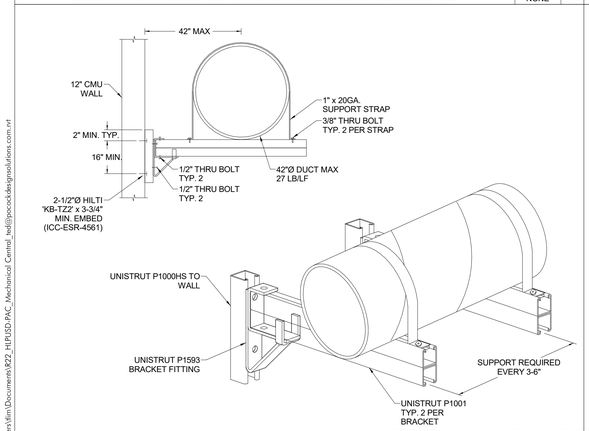

NORTH STAGE DUCTWORK ANCHORAGE DETAIL | SCALE NONE | 13

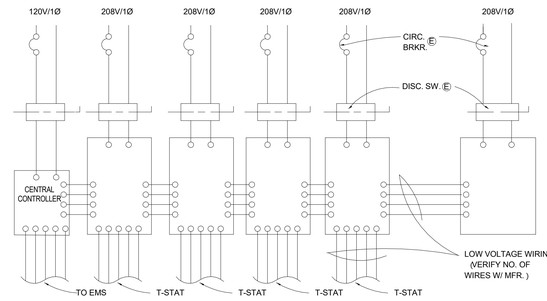

LEGEND:
(E) PROVIDED BY ELEC.
(M) PROVIDED BY MECH.

TYPICAL VRF HP/FC WIRING DETAIL | SCALE NONE | 9

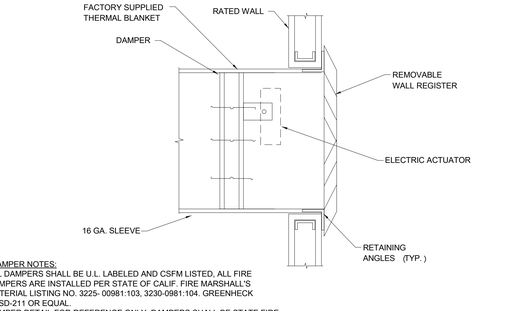

FIRE DAMPER NOTES:
1. ALL DAMPERS SHALL BE U.L. LABELED AND CSFM LISTED. ALL FIRE DAMPERS ARE INSTALLED PER STATE OF CALIF. FIRE MARSHALL'S MATERIAL LISTING NO. 3225- 0981:103, 3230-0981:104. GREENHECK OFSD-211 OR EQUAL.
2. DAMPER DETAIL FOR REFERENCE ONLY. DAMPERS SHALL BE STATE FIRE MARSHALL APPROVED & INSTALLED STRICTLY PER MANUFACTURER'S PRINTED INSTRUCTIONS MANUFACTURE'S INSTALLATION INSTRUCTIONS SHALL BE MADE AVAILABLE TO THE INSPECTING AUTHORITIES.
3. PROVIDE SQUARE TO ROUND CAP & COLLAR WHERE ROUND DUCT IS CONNECTED TO SQUARE FIRE DAMPER.

TYP. THRU-WALL COMBINATION SMOKE/FIRE DAMPER DETAIL | SCALE NONE | 5

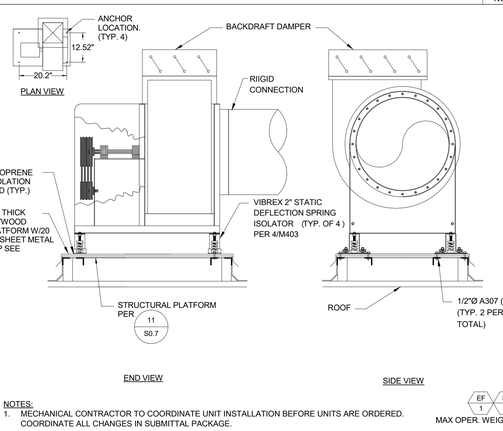

NOTES:
1. MECHANICAL CONTRACTOR TO COORDINATE UNIT INSTALLATION BEFORE UNITS ARE ORDERED. COORDINATE ALL CHANGES IN SUBMITTAL PACKAGE.

TYPICAL UTILITY FAN ANCHORAGE DETAIL | SCALE NONE | 1

C:\Users\tim\Documents\R22_HLP\3D-PAC_Mechanical Central_tedl@pocockdesignsolutions.com.rvt

APPL No. A03-122864

IDENTIFICATION STAMP
DIV. OF THE STATE ARCHITECT
APP: 03-122864 INC:
REVIEWED FOR
SS ☑ FLS ☑ ACS ☑
DATE: 10/03/2023

DSA Stamp

Architect

RACHLIN PARTNERS
8640 National Boulevard
Culver City, CA 90232
310.204.3400

Disclaimer:

THESE DRAWINGS ARE THE PROPERTY OF THE ARCHITECT. THE DESIGNS SHOWN AND DESCRIBED HEREIN INCLUDING ALL TECHNICAL DRAWINGS ARE PROPRIETARY AND CANNOT BE COPIED, DUPLICATED OR COMMERCIALLY EXPLOITED EXCEPT BY WRITTEN AGREEMENT. THESE DRAWINGS AND SPECIFICATIONS SHALL NOT BE USED BY THE OWNER ON OTHER PROJECTS, FOR ADDITIONS TO THIS PROJECT, OR FOR COMPLETION OF THIS PROJECT BY OTHERS. THE OWNER AGREES TO HOLD HARMLESS, INDEMNIFY AND DEFEND THE ARCHITECT AGAINST ALL DAMAGES, CLAIMS AND LOSSES, INCLUDING DEFENSE COSTS, ARISING OUT OF ANY REUSE OF PLANS AND SPECIFICATIONS WITHOUT THE WRITTEN AUTHORIZATION OF THE ARCHITECT OF RECORD.

Copyright © 2022 Rachlin Partners, All Rights Reserved.

PDS Pocock Design Solutions Inc.

Performing Arts Center
Hacienda La Puente Unified School District
635 North California Avenue
La Puente, CA 91744

Rev	Date	Issue
1	7.22.22	50% DD
2	10.21.22	50% CD
3	12.09.22	100% CD DSA SUBMITTAL
4	6.19.23	100% CD DSA RESUBMITTAL
5	9.20.23	DSA BACK CHECK

Date: 12/04/22
Scale:
Drawn By: Author
Checked By: Checker

Architect / Engineer Stamp

LICENSED ARCHITECT RICHARD IRA RACHLIN NO. C-26229 REN. 8-31-25 STATE OF CALIFORNIA

REGISTERED PROFESSIONAL ENGINEER ANDREW R. GOODMAN No. M39638 Exp. 3/31/24 MECHANICAL STATE OF CALIFORNIA

Consultants
Miyamoto International, Inc.
The Ruzika Company, Inc.
MDC Consulting Engineers
Pocock Design Solutions
Newson Brown Acoustics, LLC
VCA Engineers, Inc.
HJSA Consulting

Sheet Title
Mechanical Details

Sheet Number
M402

MARK	MAKE	MODEL
FC-2, 3	LG	ARNU-123
EF-3	GREENHECK	SQ-70
EF-4	GREENHECK	SQ-70

NOTE: 1 MAX. 12" DIA. ROD AND HARDWARE BY OTHERS.

SPRING	COLOR	OD	DEFL	LOAD @ DEFL
2228	YELLOW	2"	1"	20 LBS
2258	RED	2"	1"	50 LBS
2275	GREEN	2"	1"	75 LBS
21338	PINK	2"	1"	100 LBS
22150	WHITE	2"	1"	150 LBS
22225	ORANGE	2"	1"	225 LBS

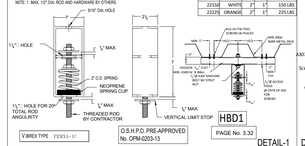

DETAIL-1

V-IBREX TYPE PRMA-1C

O.S.H.P.D. PRE-APPROVED No. OPM-0203-13

PAGE No. 3.32

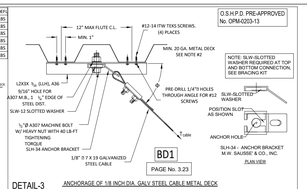

PAGE No. 3.23

DETAIL-3 ANCHORAGE OF 1/8 INCH DIA. GALV STEEL CABLE METAL DECK

DETAIL-2

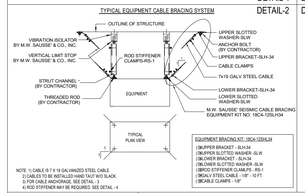

NOTE: 1) CABLE IS 7 X 19 GALVANIZED STEEL CABLE.
2) CABLES TO BE INSTALLED WITH TAUT W/O SLACK.
3) CABLE CLAMPS TO BE 1/8" DIA.
4) ROD STIFFENER MAY BE REQUIRED. SEE DETAIL - 4

DETAIL-4

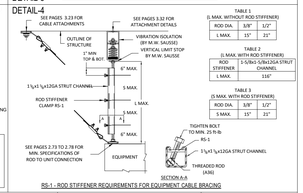

TABLE 1
(L MAX. WITHOUT ROD STIFFENER)

ROD DIA.	3/8"	1/2"
L MAX.	15"	23"

TABLE 2
(L MAX. WITH ROD STIFFENER)

ROD STIFFENER	1½"x1½"x12GA STRUT CHANNEL
L MAX.	116"

TABLE 3
(S MAX. WITH ROD STIFFENER)

ROD DIA.	3/8"	1/2"
S MAX.	15"	21"

RS-1 ROD STIFFENER REQUIREMENTS FOR EQUIPMENT CABLE BRACING

M. W. SAUSSE & CO., INC.	JOB NAME: HACIENDA LA PUENTE PERFORM ARTS CTR	REVISIONS:	DRN: JO
26774 Withers poon Pkwy. Valencia, CA 91355	CUST.:	A:	DATE: 5/31/23
Phone: (661) 257-3311 Fax: (661) 257-7673	CUST. P.O.:	B:	DRAWING NO.:
V-IBREX TYPE PRMA-1C & CBK	MECH. ENGR.: PDG	C:	-5
	MARK: FC-2, 3, EF-3, EF-4	D:	

FC-2, 3, EF-3, EF-4 ISOLATOR DETAIL

SCALE NONE | 5

MARK	MAKE	MODEL
HP-1	LG	ARUN-048
SHP-1	LG	LS-243
EF-1, 2	GREENHECK	USF-08

MTS	SPRING O.D.	DEFL.
1-4	2.5"	2"

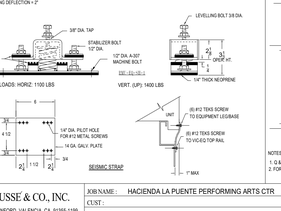

LAYOUT

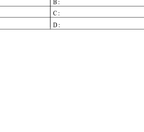

MAX. ALLOW. LOADS: HORIZ: 1100 LBS VERT. (UP): 1400 LBS

M.W. SAUSSE & CO., INC.	JOB NAME: HACIENDA LA PUENTE PERFORM ARTS CTR	REVISIONS:	DRN: JO
VALENCIA, CALIFORNIA 91355	CUST.:	A:	DATE: 5/31/23
V-IBREX TYPE VMC-EQ-SH-1	CUST. P.O.:	B:	SHEET NO.:
	MECH. ENGR.: PDS	C:	-4
	MARK: HP-1, SHP-1, EF-1, 2	D:	

HP-1, SHP-1, EF-1,2 ISOLATOR DETAIL

SCALE NONE | 4

NOTES:
1. FOR ANCHOR REQUIREMENTS AND DETAILS OF ISOLATORS AND SEISMIC STRAPS, SEE DETAIL 2, 3.
2. SUBMITTED ROOF CURBS ARE LEVEL. PITCHED ROOF CURBS ARE AVAILABLE UPON REQUEST TO MATCH ROOF SLOPE.
3. NOT FOR CONSTRUCTION. ALL DIMENSIONS REQUIRE FINAL REVIEW AT COMMENCEMENT OF PROJECT

DETAIL - 1

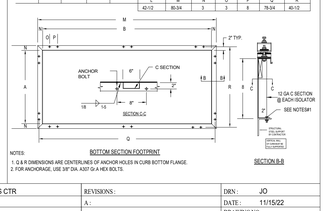

DETAIL - 3

MARK	MAKE	TYPE	SIZE	WEIGHT	VIC-EQ WT.
AC-4	AAON	RN	07	1230	320 #
AC-6	AAON	RN	07	1310	

DETAIL - 2

A	B	C	D	E	F	G	H	I	J	K
36-1/2	74-3/4	39-1/4	77-1/2	45	63-1/4	8-1/2	26	26	14-1/4	25-3/8
					L	M	N	O	P	Q	R
					42-1/2	80-3/4	3	3	8	78-3/4	40-1/2

M. W. SAUSSE & CO., INC.	JOB NAME: HACIENDA LA PUENTE PERFORMING ARTS CTR	REVISIONS:	DRN: JO
25590 AVENUE STANFORD, VALENCIA, CA 91355-1199	CUST.:	A:	DATE: 11/15/22
PHONE: (661) 257-3311 FAX: (661) 257-7673	CUST. P.O.:	B:	DRAWING NO.:
V-IBREX TYPE VIC-EQ	MECH. ENGR.: PDS	C:	-3
	MARK: AC-4, 6 (SEE WEIGHTS ON CHART ABOVE)	D:	

AC-4, AC-6 CURB DETAIL

SCALE NONE | 3

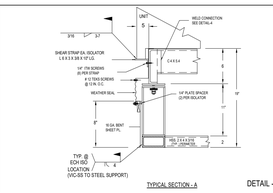

DETAIL - 1

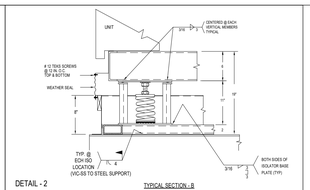

DETAIL - 2

DETAIL - 3

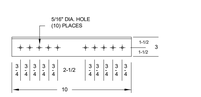

DETAIL - 4

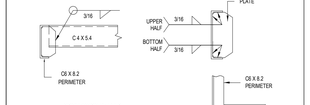

M.W. SAUSSE & CO., INC.	JOB NAME: HACIENDA LA PUENTE PERFORMING ARTS CTR	REVISIONS	DRWN: JO
VALENCIA, CALIFORNIA 91355	CUSTOMER:	A: WELD/STEEL REMOVED(5/31/23)	DATE: 11/15/22
V-IBREX TYPE VIC-EQ-SS	CUST. PO:	B: WELDING CONNECTIONS (9-8-23)	SHEET NO.:
	MECH. ENGR.: PDS	C:	-2B.1
	MARK: AC-2, 3(WEIGHT: 3750 LBS), 5(WEIGHT:3455 LBS)	D:	

NOTES:
1. FOR ANCHOR REQUIREMENTS AND DETAILS OF ISOLATORS, SEE DETAIL 2, 3.
2. ROOF SLOPE TO BE VERIFIED BY CONTRACTOR BEFORE FABRICATION & ROOF CURB HEIGHT ARE APPROXIMATE. NOT FOR CONSTRUCTION. ALL DIMENSIONS REQUIRE FINAL REVIEW AT COMMENCEMENT OF PROJECT.
4. SHEET METAL CURB PROVIDES FOR WEATHERSEAL AND ATTACHMENT OF ROOFING MATERIAL.
5. FACTORY-WELDED DUCT SUPPORTS PROVIDED AS REQUIRED.

DETAIL - 1

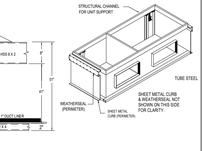

DETAIL - 2

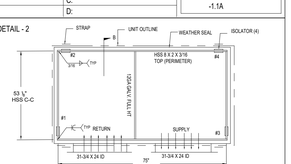

NOTES:
1. FOR SECTION - A & B, SEE ATTACHED DRAWING
2. FOR ANCHORAGE OF CURB TO STRUCTURE, SEE DETAIL - 4.
3. APPROXIMATE ROOF CURB WEIGHT = 1,551 LBS.

MOUNT#	SPRING	O.D.	LOAD	DEFL.
1-6	---	4"	--	2"

DETAIL - 3

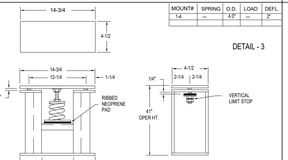

VIBREX RMLS-EQ VIBRATION ISOLATOR

DETAIL - 4

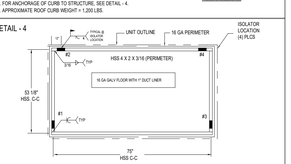

NOTES:
1. FOR ANCHORAGE, SEE WELDING SIZE/LOCATIONS, SEE ATTACHED DWG -2B.1
2. ADEQUACY OF STEEL SUPPORT TO BE VERIFIED BY OTHERS.

AAON RN-013, 018

M.W. SAUSSE & CO., INC.	JOB NAME: HACIENDA LA PUENTE PERFORMING ARTS CTR	REVISIONS	DRWN: JO
26774 Withers poon Pkwy. Valencia, CA 91355	CUSTOMER:	A: ANCHORAGE BY SEOR(5/31/23)	DATE: 11/15/22
Phone: (661) 257-3311 Fax: (661) 257-7673	CUST. PO:	B: WELD CONN (9-8-23)	SHEET NO.:
V-IBREX TYPE VIC-EQ	MECH. ENGR.: PDS	C:	-2B
	MARK: AC-2, 3(WEIGHT: 3750 LBS), 5(WEIGHT:3455 LBS)	D:	

AC-2, AC-3, AC-5 CURB DETAIL

SCALE NONE | 2

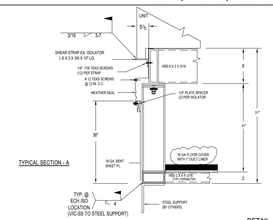

DETAIL - 1

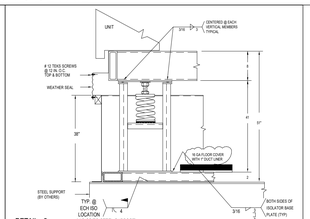

DETAIL - 2

DETAIL - 3

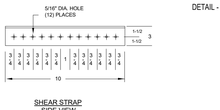

DETAIL - 4

LEFT BLANK

M.W. SAUSSE & CO., INC.	JOB NAME: HACIENDA LA PUENTE PERFORMING ARTS CTR	REVISIONS	DRWN: JO
VALENCIA, CALIFORNIA 91355	CUSTOMER:	A:	DATE: 11/15/22
V-IBREX TYPE VIC-EQ-SS	CUST. PO:	B:	SHEET NO.:
	MECH. ENGR.: PDS	C:	-1.1A
	MARK: AC-1 (UNIT WEIGHT: 2120 LBS)	D:	

NOTES:
1) SHEET METAL CURB PROVIDES FOR WEATHERSEAL AND ATTACHMENT OF ROOFING MATERIAL.
2) FACTORY-WELDED DUCT SUPPORTS PROVIDED AS REQUIRED.

DETAIL - 1

DETAIL - 2

NOTES:
1. FOR SECTION - A & B, SEE ATTACHED DWG -1.1
2. FOR ANCHORAGE OF CURB TO STRUCTURE, SEE DETAIL - 4.
3. APPROXIMATE ROOF CURB WEIGHT = 1,201 LBS.

MOUNT#	SPRING	O.D.	LOAD	DEFL.
1-4	---	4.9"	--	2"

DETAIL - 3

VIBREX RMLS-EQ VIBRATION ISOLATOR

DETAIL - 4

NOTES:
1. FOR ANCHORAGE, SEE WELDING SIZE/LOCATIONS, SEE ATTACHED DWG -1.1A
2. ADEQUACY OF STEEL SUPPORT TO BE VERIFIED BY OTHERS.

AAON RN-13

M.W. SAUSSE & CO., INC.	JOB NAME: HACIENDA LA PUENTE PERFORMING ARTS CTR	REVISIONS	DRWN: JO
VALENCIA, CALIFORNIA 91355	CUSTOMER:	A: ADDED WELD CONN (9-8-23)	DATE: 11/15/22
V-IBREX TYPE VIC-EQ-SS	CUST. PO:	B:	SHEET NO.:
	MECH. ENGR.: PDS	C:	-1A
	MARK: AC-1 (UNIT WEIGHT: 2120 LBS)	D:	

AC-1 CURB DETAIL

SCALE NONE | 1

APPL No. A03-122864

IDENTIFICATION STAMP
DIV. OF THE STATE ARCHITECT
APP: 03-122864 INC:
REVIEWED FOR
SS ☑ FLS ☑ ACS ☑
DATE: 10/03/2023

DSA Stamp

Architect

RACHLIN PARTNERS
8640 National Boulevard
Culver City, CA 90232
310.204.3400

Disclaimer:
THESE DRAWINGS ARE THE PROPERTY OF THE ARCHITECT. THE DESIGNS SHOWN AND DESCRIBED HEREIN INCLUDING ALL TECHNICAL DRAWINGS ARE PROPRIETARY AND CANNOT BE COPIED, DUPLICATED OR COMMERCIALLY EXPLOITED EXCEPT WITH THE WRITTEN PERMISSION OF THE ARCHITECT AND SHALL NOT BE USED BY THE OWNER ON OTHER PROJECTS, FOR ADDITIONS TO THIS PROJECT, OR FOR COMPLETION OF THIS PROJECT BY OTHERS. THE OWNER AGREES TO HOLD HARMLESS, INDEMNIFY AND DEFEND THE ARCHITECT AGAINST ALL DAMAGES, CLAIMS AND LOSSES, INCLUDING DEFENSE COSTS, ARISING OUT OF ANY REUSE OF PLANS AND SPECIFICATIONS WITHOUT THE WRITTEN AUTHORIZATION OF THE ARCHITECT OF RECORD.

Copyright © 2022 Rachlin Partners, All Rights Reserved.

PDS
Pocock Design Solutions Inc.

Performing Arts Center

Hacienda La Puente Unified School District
635 North California Avenue
La Puente, CA 91744

Rev	Date	Issue
1	7.22.22	50% DD
2	10.21.22	50% CD
3	12.09.22	100% CD DSA SUBMITTAL
4	6.19.23	100% CD DSA RESUBMITTAL
5	9.20.23	DSA BACK CHECK

Date: 12/04/22
Scale:
Drawn By: Author
Checked By: Checker

Architect / Engineer Stamp

LICENSED ARCHITECT I CONSENT TO USE OF DIGITAL SIGNATURE NO. C-26229 REN. 8-31-25 STATE OF CALIFORNIA

REGISTERED PROFESSIONAL ENGINEER ANDOR R. GOSMAN No. 923600 Exp. 3/31/24 CIVIL STRUCTURAL MECHANICAL STATE OF CALIFORNIA

Consultants
Miyamoto International, Inc.
The Ruzika Company, Inc.
MDC Consulting Engineers
Pocock Design Solutions
Newson Brown Acoustics, LLC
VCA Engineers, Inc.
HJSA Consulting

Sheet Title
Mechanical Details

Sheet Number
M403

C:\Users\tim\Documents\KPZ_HLPUSD-PAC_Mechanical Central_ted@pocockdesignsolutions.com.rvt

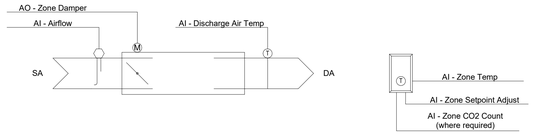

VVT BOX CONTROL DIAGRAM | SCALE NONE | 5

EXHAUST FAN (EF-3) CONTROL DIAGRAM | SCALE NONE | 3

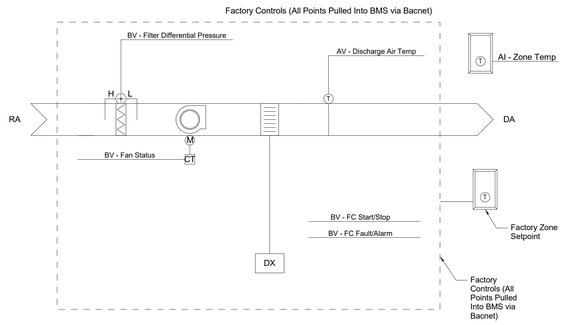

SPLIT SYSTEM CONTROL DIAGRAM | SCALE NONE | 4

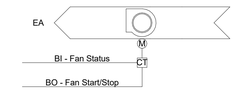

EXHAUST FAN (EF-1, 2, 4, 5, 6) CONTROL DIAGRAM | SCALE NONE | 2

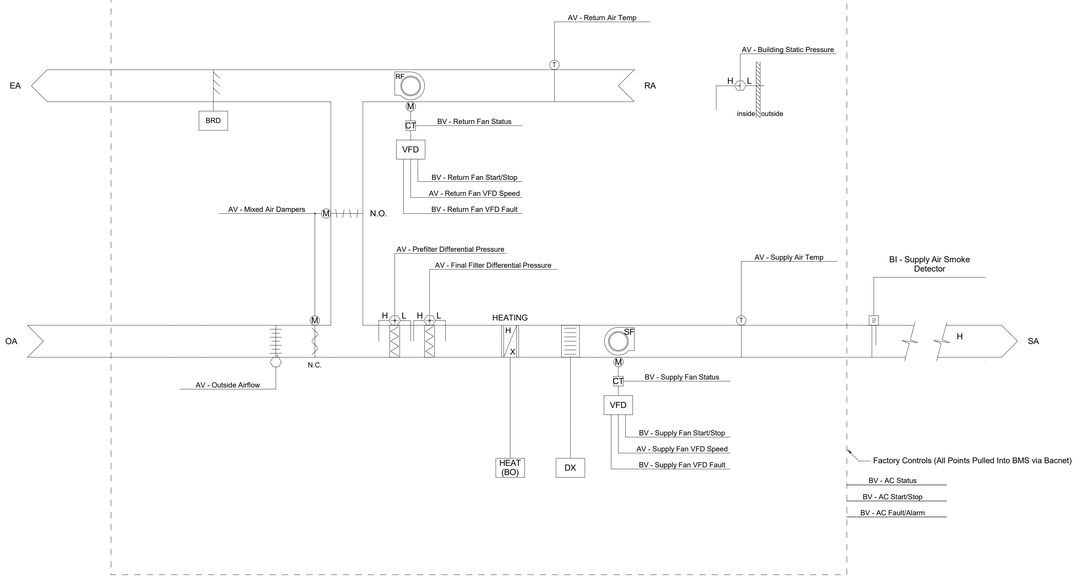

AC UNIT CONTROL DIAGRAM | SCALE NONE | 1

APPL No. A03-122864

IDENTIFICATION STAMP
DIV. OF THE STATE ARCHITECT
APP: 03-122864 INC:
REVIEWED FOR
SS ☑ FLS ☑ ACS ☑
DATE: 10/03/2023

DSA Stamp

Architect

RACHLIN PARTNERS
8640 National Boulevard
Culver City, CA 90232
310.204.3400

Disclaimer:

THESE DRAWINGS ARE THE PROPERTY OF THE ARCHITECT. THE DESIGNS SHOWN AND DESCRIBED HEREIN INCLUDING ALL TECHNICAL DRAWINGS ARE PROPRIETARY AND CANNOT BE COPIED, DUPLICATED OR COMMERCIALLY EXPLOITED IN ANY FORM OR BY ANY MEANS WHATSOEVER AND SHALL NOT BE USED BY THE OWNER ON OTHER PROJECTS FOR ADDITIONS TO THIS PROJECT, OR FOR COMPLETION OF THIS PROJECT BY OTHERS. THE OWNER AGREES TO HOLD HARMLESS, INDEMNIFY AND DEFEND THE ARCHITECT AGAINST ALL DAMAGES, CLAIMS AND LOSSES, INCLUDING DEFENSE COSTS, ARISING OUT OF ANY REUSE OF PLANS AND SPECIFICATIONS WITHOUT THE WRITTEN AUTHORIZATION OF THE ARCHITECT OF RECORD.

Copyright © 2022 Rachlin Partners, All Rights Reserved.

PDS
Pocock Design Solutions Inc.

Performing Arts Center

Hacienda La Puente Unified School District
635 North California Avenue
La Puente, CA 91744

Rev	Date	Issue
1	7.22.22	50% DD
2	10.21.22	50% CD
3	12.09.22	100% CD DSA SUBMITTAL
4	6.19.23	100% CD DSA RESUBMITTAL
5	9.20.23	DSA BACK CHECK

Date: 12/04/22
Scale:
Drawn By: Author
Checked By: Checker

Architect / Engineer Stamp

LICENSED ARCHITECT — NO. C-26229 — REN. 8-31-25 — STATE OF CALIFORNIA
REGISTERED PROFESSIONAL ENGINEER — ANDREW R. GORMAN — No. M3569 — Exp. 3/31/24 — MECHANICAL — STATE OF CALIFORNIA

Consultants
Miyamoto International, Inc.
The Ruzika Company, Inc.
MDC Consulting Engineers
Pocock Design Solutions
Newson Brown Acoustics, LLC
VCA Engineers, Inc.
HJSA Consulting

Sheet Title

Control Details

Sheet Number

M501

C:\Users\tim\Documents\P22_HLPUSD-PAC_Mechanical Central_tedl@pocockdesignsolutions.com.rvt

Project Name:	HLPUSD - Performing Arts Center	NRCC-PRF-01-E	Page 4 of 12
Project Address:	635 North California Avenue La Puente 91744	Calculation Date/Time:	11:13, Mon, Dec 05, 2022
Input File Name:	HLPUSD - PAC - Heat Load Calcs.cibd19x		

G1. ENVELOPE GENERAL INFORMATION (conditioned spaces only)

1	2	3	4
Opaque Surfaces & Orientation	**Total Gross Surface Area (ft²)**	**Total Fenestration Area (ft²)**	**Window to Wall Ratio (%)**
North-Facing[1]	3,537 ft²	835 ft²	23.6%
East-Facing[2]	4,263 ft²	0 ft²	00.0%
South-Facing[3]	2,662 ft²	835 ft²	31.4%
West-Facing[4]	3,596 ft²	3,135 ft²	87.2%
Total	**14,057 ft²**	**4,805 ft²**	**34.2%**
Roof	12,908 ft²	0 ft²	00.0%

Notes:
[1] North-Facing is oriented to within 45 degrees of true north, including 45°00'00" east of north (NE), but excluding 45°00'00" west of north (NW).
[2] East-Facing is oriented to within 45 degrees of true east, including 45°00'00" south of east (SE), but excluding 45°00'00" north of east (NE).
[3] South-Facing is oriented to within 45 degrees of true south, including 45°00'00" west of south (SW), but excluding 45°00'00" east of south (SE).
[4] West-Facing is oriented to within 45 degrees of true west, including 45°00'00" north of due west (NW), but excluding 45°00'00" south of west (SW).

G3. OPAQUE SURFACE ASSEMBLY SUMMARY

1	2	3	4	5	6	7	8	9	10
Surface Name	**Surface Type**	**Area (ft²)**	**Framing Type**	**Cavity R-Value**	**Continuous R-Value**	**Units**	**Value**	**Description of Assembly Layers**	**Status[1]**
Slab On Grade6	UndergroundFloor	13201	NA	0	NA	F-Factor	0.73	Slab Type = UnheatedSlabOnGrade Insulation Orientation = None Insulation R-Value = R0	N
R-30 Roof No Attic8	Roof	12908	Wood	30	NA	U-Factor	0.034	Asphalt shingles - 1/4 in. Vapor permeable felt - 1/8 in. Plywood - 1/2 in. Air - Cavity - Wall Roof Ceiling - 4 in. or more Wood framed roof, 16in. OC, 11.25in., R-30 Gypsum Board - 1/2 in.	N

Project Name:	HLPUSD - Performing Arts Center	NRCC-PRF-01-E	Page 3 of 12
Project Address:	635 North California Avenue La Puente 91744	Calculation Date/Time:	11:13, Mon, Dec 05, 2022
Input File Name:	HLPUSD - PAC - Heat Load Calcs.cibd19x		

C3. ENERGY USE SUMMARY

Energy Component	Standard Design Site (MWh)	Proposed Design Site (MWh)	Margin (MWh)	Standard Design Site (MBtu)	Proposed Design Site (MBtu)	Margin (MBtu)
Space Heating	--	0.0	--	5.9	24.4	-18.5
Space Cooling	42.2	36.5	5.7	--	--	--
Indoor Fans	50.0	33.1	16.9	--	--	--
Heat Rejection	--	--	--	--	--	--
Pumps & Misc.	--	--	--	--	--	--
Domestic Hot Water	3.2	3.2	0.0	10.4	10.4	0.0
Indoor Lighting	31.3	31.3	0.0	--	--	--
Compliance Total	**126.7**	**104.1**	**22.6**	**16.3**	**34.8**	**-18.5**
Receptacle	37.3	37.3	0.0	--	--	--
Process	--	--	--	--	--	--
Other Ltg	--	--	--	--	--	--
Process Motors	--	--	--	--	--	--
TOTAL	**164.0**	**141.4**	**22.6**	**16.3**	**34.8**	**-18.5**

D. EXCEPTIONAL CONDITIONS

This project includes partial performance compliance scope options. The building must show compliance with all other applicable compliance scope options (performance or prescriptively) before occupying.

The building does not include service water heating. Verify that service water heating is not required and is not included in the design.

This project uses the Simplified Geometry Performance Modeling Approach which is not capable of modeling daylighting controls and assumes the prescriptive Secondary Daylit Control requirements are met. PRESCRIPTIVE COMPLIANCE documentation (form NRCC-LTI-02-E) for the requirements of section 140.6(d) Automatic Daylighting Controls in Secondary Daylit Zones is required.

E. HERS VERIFICATION

This Section Does Not Apply

Project Name:	HLPUSD - Performing Arts Center	NRCC-PRF-01-E	Page 2 of 12
Project Address:	635 North California Avenue La Puente 91744	Calculation Date/Time:	11:13, Mon, Dec 05, 2022
Input File Name:	HLPUSD - PAC - Heat Load Calcs.cibd19x		

C1. COMPLIANCE RESULTS FOR PERFORMANCE COMPONENTS (Annual TDV Energy Use, kBtu/ft ²-yr)

COMPLIES

Energy Component	Standard Design (TDV)	Proposed Design (TDV)	Compliance Margin (TDV)[1]
Space Heating	0.94	3.84	-2.90
Space Cooling	132.32	121.57	10.75
Indoor Fans	131.00	89.75	41.25
Heat Rejection	--	--	--
Pumps & Misc.	--	--	--
Domestic Hot Water	7.90	7.89	0.01
Indoor Lighting	70.77	70.77	--
ENERGY STANDARDS COMPLIANCE TOTAL	**342.93**	**293.82**	**49.11 (14.3%)**

[1] Notes: The number in parenthesis following the Compliance Margin in column 4. represents the Percent Better than Standard.

C2. RESULTS FOR 'ABOVE CODE' QUALIFICATIONS[1]

☐ This project is pursuing CalGreen Tier 1 ☐ This project is pursuing CalGreen Tier 2

Miscellaneous Energy Component	Standard Design (TDV)	Proposed Design (TDV)	Compliance Margin (TDV)[2]
Receptacle	84.43	84.43	--
Process	--	--	--
Other Ltg	--	--	--
Process Motors	--	--	--
COMPLIANCE TOTAL PLUS MISCELLANEOUS COMPONENTS	**427.36**	**378.25**	**49.1 (11.5%)**

[1] Notes: This table is used to document compliance with programs OTHER THAN Title 24 Part 6, if applicable.

Project Name:	HLPUSD - Performing Arts Center	NRCC-PRF-01-E	Page 1 of 12
Project Address:	635 North California Avenue La Puente 91744	Calculation Date/Time:	11:13, Mon, Dec 05, 2022
Input File Name:	HLPUSD - PAC - Heat Load Calcs.cibd19x		

A. GENERAL INFORMATION

1	Project Location (city)	La Puente	8	Standards Version	Compliance2019
2	CA Zip Code	91744	9	Compliance Software (version)	EnergyPro 8.3
3	Climate Zone	9	10	Weather File	LOS-ANGELES-DOWNTOWN_722874_CZ2010.epw
4	Total Conditioned Floor Area in Scope	13,201 ft²	11	Building Orientation (deg)	(N) 0 deg
5	Total Unconditioned Floor Area	0 ft²	12	Permitted Scope of Work	NewEnvelopeAndMechanical
6	Total # of Stories (Habitable Above Grade)	1	13	Building Type(s)	Nonresidential
7	Total # of dwelling units	0	14	Gas Type	NaturalGas

B. PROJECT SUMMARY

Table Instructions: Table B shows which building components are included in the performance calculation. If indicated as not included, the project must show compliance prescriptively if within permit application.

	Building Components Complying via Performance			Building Components Complying Prescriptively	
Envelope (see Table G)	☒ Performance	Covered Process: Commercial Kitchens	☐ Performance	*The following Building components are ONLY eligible for prescriptive compliance and should be documented on the NRCC form listed if within the scope of the permit application (i.e. compliance will not be shown on the NRCC-PRF-E).*	
	☐ Not Included		☒ Not Included		
Mechanical (see Table H)	☒ Performance	Covered Process: Computer Rooms	☐ Performance	Indoor Lighting (Unconditioned)§140.6	*NRCC-LTI-E*
	☐ Not Included		☒ Not Included	Outdoor Lighting §140.7	*NRCC-LTO-E*
Domestic Hot Water (see Table I)	☐ Performance	Covered Process: Laboratory Exhaust	☐ Performance	Sign Lighting §140.8	*NRCC-LTS-E*
	☒ Not Included		☒ Not Included	Mandatory Measures	
Lighting (Indoor Conditioned, see Table K)	☐ Performance			*Electrical power systems, commissioning, solar ready, elevator and escalator requirements are mandatory and should on the NRCC form listed if applicable (i.e. compliance will not be shown on the NRCC-PRF-E.)*	
	☒ Not Included			Electrical Power Distribution §110.11	*NRCC-ELC-E*
Solar Thermal Water Heating (see Table I)	☐ Performance			Commissioning §120.8	*NRCC-CXR-E*
	☒ Not Included			Solar Ready §110.10	*NRCC-SRA-E*

Project Name:	HLPUSD - Performing Arts Center	NRCC-PRF-01-E	Page 8 of 12
Project Address:	635 North California Avenue La Puente 91744	Calculation Date/Time:	11:13, Mon, Dec 05, 2022
Input File Name:	HLPUSD - PAC - Heat Load Calcs.cibd19x		

H6. SYSTEM SPECIAL FEATURES

1	2	3	4
System Name	**Equipment Type**	**Window Interlocks per §140.4(e)**	**Other Special Features and Controls**
AC-1	SZVAVAC	NA	Zones With CO2Sensor Vent. Control Differential DryBulb Economizer
AC-2/AC-3	SZVAVAC	NA	DDC Controls Zones With CO2Sensor Vent. Control Differential DryBulb Economizer Optimum Start
AC-4	SZVAVAC	NA	Zones With CO2Sensor Vent. Control Differential DryBulb Economizer
AC-5	SZVAVAC	NA	Zones With CO2Sensor Vent. Control Differential DryBulb Economizer
AC-6	SZVAVAC	NA	Zones With CO2Sensor Vent. Control Differential DryBulb Economizer
CU-1	VRF	NA	Heat Recovery

Notes: This table includes controls related to the performance path only. For projects using the prescriptive path, mandatory and prescriptive controls requirements are documented on the NRCC-MCH-E.

H7. NONRESIDENTIAL VENTILATION

1	2	3	4	5	6	7
Zone Name	**Mechanical Ventilation**					**DCV or Occupant Sensor Controls, or Both**
	Ventilation Function	**# of people**	**Supply OA CFM**	**Exhaust CFM**	**Conditioned Area (sf)**	
1-Lobby	Assembly - Lobbies	84.10	1261	0	2523	DCV
2-Auditorium	Assembly - Auditorium seating area	508.00	4152	0	3880	DCV
3-Shop	Misc - All others Office - Office space General - Corridors	21.11	389	0	1615	DCV
4-Stage	Sports/Entertainment - Stages, studios	165.07	1155	0	2311	DCV
5-Dressing Room	Office - Office space General - Corridors	8.68	260	0	1736	NA
6-Control	Misc - All others	1.27	38	0	255	NA
7-Lighting	Misc - All others	0.99	30	0	198	NA
8-Follow Spot N	General - Unoccupied	1.71	0	0	342	NA
9-Follow Spot S	General - Unoccupied	1.71	0	0	342	NA

Project Name:	HLPUSD - Performing Arts Center	NRCC-PRF-01-E	Page 7 of 12
Project Address:	635 North California Avenue La Puente 91744	Calculation Date/Time:	11:13, Mon, Dec 05, 2022
Input File Name:	HLPUSD - PAC - Heat Load Calcs.cibd19x		

H2. FAN SYSTEMS SUMMARY

1	2	3	4	5	6	7	8	9	10	11	12	13	14
		Design OA	**Supply Fan**					**Return Fan**					
Name or Item Tag	**Qty**	**CFM**	**CFM**	**Modeling Method**	**Power**	**Power Units**	**Control**	**CFM**	**Modeling Method**	**Power**	**Power Units**	**Control**	**Status[1]**
AC-1	1	1261	5000	BrakeHorsePower	3.420	bhp	VariableSpeedDrive	NA	NA	NA	NA	NA	N
AC-2/AC-3	2	2076	6000	BrakeHorsePower	3.580	bhp	VariableSpeedDrive	NA	NA	NA	NA	NA	N
AC-4	1	389	1900	BrakeHorsePower	1.410	bhp	VariableSpeedDrive	NA	NA	NA	NA	NA	N
AC-5	1	1155	5000	BrakeHorsePower	2.920	bhp	VariableSpeedDrive	NA	NA	NA	NA	NA	N
AC-6	1	260	2400	BrakeHorsePower	1.370	bhp	VariableSpeedDrive	NA	NA	NA	NA	NA	N
7-Control-VRF	1	38	290	BrakeHorsePower	0.218	bhp	ConstantVolume	NA	NA	NA	NA	NA	N
8-Lighting-VRF	1	30	290	BrakeHorsePower	0.218	bhp	ConstantVolume	NA	NA	NA	NA	NA	N
9-Follow Spot N-VRF	1	0	300	BrakeHorsePower	0.034	bhp	ConstantVolume	NA	NA	NA	NA	NA	N
10-Follow Spot S-VRF	1	0	300	BrakeHorsePower	0.034	bhp	ConstantVolume	NA	NA	NA	NA	NA	N

Status: N - New, A – Altered, E – Existing

H3. EXHAUST FAN SUMMARY

This Section Does Not Apply

H4. Wet System Equipment(boilers,chillers,cooling towers,etc.)

This Section Does Not Apply

H5. PUMPS

This Section Does Not Apply

Project Name:	HLPUSD - Performing Arts Center	NRCC-PRF-01-E	Page 6 of 12
Project Address:	635 North California Avenue La Puente 91744	Calculation Date/Time:	11:13, Mon, Dec 05, 2022
Input File Name:	HLPUSD - PAC - Heat Load Calcs.cibd19x		

G5. FENESTRATION ASSEMBLY SUMMARY

1	2	3	4	5	6	7	8	9
Fenestration Assembly Name / Tag or I.D.	**Fenestration Type / Product Type / Frame Type**	**Certification Method[1]**	**Assembly Method**	**Area ft²**	**Overall U-factor**	**Overall SHGC**	**Overall VT**	**Status[2]**
PPG SOLARBAN 90 XL Clear	VerticalFenestration CurtainWall N/A	NFRC Rated	SiteBuilt	4805	0.29	0.23	0.51	N

[1] Newly installed fenestration shall have a certified NFRC Label Certificate or use the CEC default tables found in Table 110.6-A and Table 110.6-B. Center of Glass (COG) values are for the glass only, determined by the manufacturer, and are shown for ease of verification. Site-built fenestration values are calculated per Nonresidential Appendix NA6 and are used in the analysis.
[2] Status: N - New, A – Altered, E – Existing

H1. DRY SYSTEM EQUIPMENT (furnaces, air handling units, heat pumps, VRF, economizers etc.)

1	2	3	4	5	6	7	8	9	10	11	12
			Heating				**Cooling**				
Equipment Name	**Equipment Type**	**Qty**	**Total Heating Output (kBtu/h)**	**Supp Heat Output (kBtu/h)**	**Efficiency Unit**	**Efficiency**	**Total Cooling Output (kBtu/h)**	**Efficiency Unit**	**Efficiency**	**Economizer Type (if present)**	**Status[1]**
AC-1	SZVAVAC (Packaged3Phase)	1	156	0	AFUE	81.0	146	EER	12.1	DifferentialDryBulb	N
AC-2/AC-3	SZVAVAC (Packaged3Phase)	2	328	0	ThrmlEff	81.0	206	EER	12.4	DifferentialDryBulb	N
AC-4	SZVAVAC (Packaged3Phase)	1	113	0	AFUE	81.0	64	SEER/EER	14.80/12.70	DifferentialDryBulb	N
AC-5	SZVAVAC (Packaged3Phase)	1	219	0	ThrmlEff	81.0	142	EER	12.1	DifferentialDryBulb	N
AC-6	SZVAVAC (Packaged3Phase)	1	120	0	AFUE	80.0	70	EER	12.3	DifferentialDryBulb	N
CU-1	VRF	1	54	NA	COP	9.50	48	EER	10.50	NA	N

Status: N - New, A – Altered, E – Existing

Project Name:	HLPUSD - Performing Arts Center	NRCC-PRF-01-E	Page 5 of 12
Project Address:	635 North California Avenue La Puente 91744	Calculation Date/Time:	11:13, Mon, Dec 05, 2022
Input File Name:	HLPUSD - PAC - Heat Load Calcs.cibd19x		

G3. OPAQUE SURFACE ASSEMBLY SUMMARY

1	2	3	4	5	6	7	8	9	10
Surface Name	**Surface Type**	**Area (ft²)**	**Framing Type**	**Cavity R-Value**	**Continuous R-Value**	**Units**	**Value**	**Description of Assembly Layers**	**Status[1]**
R-21 Wall Metal Stud10	ExteriorWall	6585	Metal	22	NA	U-Factor	0.149	Stucco - 7/8 in. Vapor permeable felt - 1/8 in. Metal framed wall, 24in. OC, 7.25in., R-22 Gypsum Board - 1/2 in.	N
12 CMU Wall39	ExteriorWall	6048	NA	0	NA	U-Factor	0.444	Concrete - Solid Grout - 105 lb/ft3 - 12 in.	N
R-21 Wall41	ExteriorWall	906	Wood	21	NA	U-Factor	0.069	Stucco - 7/8 in. Vapor permeable felt - 1/8 in. Wood framed wall, 16in. OC, 5.5in., R-21 Gypsum Board - 1/2 in.	N
R-21 Wall411	InteriorWall	30	Wood	21	NA	U-Factor	0.066	Vapor permeable felt - 1/8 in. Wood framed wall, 16in. OC, 5.5in., R-21 Gypsum Board - 1/2 in.	N
8 CMU Wall72	ExteriorWall	518	NA	0	NA	U-Factor	0.379	Concrete - Part Grouted and Empty - 125 lb/ft3 - 8 in.	N

[1] Status: N - New, A – Altered, E – Existing

G4. OPAQUE DOOR SUMMARY

1	2	3
Assembly Name	**Overall U-factor**	**Status[1]**
Metal Door13	0.700	N
Roll-Up Door43	1.450	N

Project Name:	HLPUSD - Performing Arts Center	NRCC-PRF-01-E	Page 12 of 12
Project Address:	635 North California Avenue La Puente 91744	Calculation Date/Time:	11:13, Mon, Dec 05, 2022
Input File Name:	HLPUSD - PAC - Heat Load Calcs.cibd19x		

DOCUMENTATION AUTHOR'S DECLARATION STATEMENT

I certify that this Certificate of Compliance documentation is accurate and complete.

Documentation Author Name: Ted Lim	
Company: Pocock Design Solutions, Inc.	Signature: Ted Lim
Address: 14451 Chambers Rd. Ste 210	Signature Date: 2022-12-05
City/State/Zip: Tustin CA 92780	CEA/ HERS Certification Identification (if applicable):
Phone: 949-417-3903	

RESPONSIBLE PERSON'S DECLARATION STATEMENT

I certify the following under penalty of perjury, under the laws of the State of California:
1. The information provided on this Certificate of Compliance is true and correct.
2. I am eligible under Division 3 of the Business and Professions Code to accept responsibility for the building design or system design identified on this Certificate of Compliance (responsible designer)
3. The energy features and performance specifications, materials, components, and manufactured devices for the building design or system design identified on this Certificate of Compliance conform to the requirements of Title 24, Part 1 and Part 6 of the California Code of Regulations.
4. The building design features or system design features identified on this Certificate of Compliance are consistent with the information provided on other applicable compliance documents, worksheets, calculations, plans and specifications submitted to the enforcement agency for approval with this building permit application.
5. I will ensure that a completed signed copy of this Certificate of Compliance shall be made available with the building permit(s) issued for the building, and made available to the enforcement agency for all applicable inspections. I understand that a completed signed copy of this Certificate of Compliance is required to be included with the documentation the builder provides to the building owner at occupancy.

Responsible Envelope Designer Name: Richard Ingrassia	Signature:	
Company: Rachlin Partners	Date Signed:	
Address: 8640 National Boulevard		
City/State/Zip: Culver City CA 90232		
Phone: 3102043400	Title:	License #: C-26229
Responsible Lighting Designer Name:	Signature: NOT IN SCOPE	
Company:	Date Signed:	
Address:		
City/State/Zip:		
Phone:	Title:	License #:
Responsible Mechanical Designer Name: Andrew Gossman	Signature: Andrew Gossman	
Company: Pocock Design Solutions, Inc.	Date Signed: 2022-12-05	
Address: 14451 Chambers Rd. Ste 210		
City/State/Zip: Tustin CA 92780		
Phone: 949-417-3903	Title:	License #: M35839

Project Name:	HLPUSD - Performing Arts Center	NRCC-PRF-01-E	Page 11 of 12
Project Address:	635 North California Avenue La Puente 91744	Calculation Date/Time:	11:13, Mon, Dec 05, 2022
Input File Name:	HLPUSD - PAC - Heat Load Calcs.cibd19x		

M. DECLARATION OF REQUIRED CERTIFICATES OF ACCEPTANCE

Table Instructions: Selections shall be made by Documentation Author to indicate which Certificates of Acceptance must be submitted for the features to be recognized for compliance. These documents must be provided to the building inspector during construction and must be completed through an Acceptance Test Technician Certification Provider (ATTCP). For more information visit:https://www.energy.ca.gov/title24/2019standards/2019_compliance_documents/Nonresidential_Documents/NRCA/

Building Component	Form/Title
Envelope	NRCA-ENV-02-F - NRFC label verification for fenestration
Mechanical	NRCA-MCH-02-A Outdoor Air must be submitted for all newly installed HVAC units. Note: MCH02-A can be performed in conjunction with MCH-07-A Supply Fan VFD Acceptance (if applicable) since testing activities overlap
	NRCA-MCH-05-A Air Economizer Controls
	NRCA-MCH-06-A Demand Control Ventilation Systems Acceptance must be submitted for all systems required to employ demand controlled ventilation (refer to §120.1(c)3) can vary outside ventilation flow rates based on maintaining interior carbon dioxide (CO2) concentration setpoints
	NRCA-MCH-07-A Supply Fan Variable Flow Controls
	NRCA-MCH-11-A Automatic Demand Shed Controls
	NRCA-MCH-12-A FDD for Packaged Direct Expansion Units
	NRCA-MCH-13-A Automatic FDD for Air Handling Units and Zone Terminal Units Acceptance
	NRCA-MCH-16-A Supply Air Temperature Reset Controls

Project Name:	HLPUSD - Performing Arts Center	NRCC-PRF-01-E	Page 10 of 12
Project Address:	635 North California Avenue La Puente 91744	Calculation Date/Time:	11:13, Mon, Dec 05, 2022
Input File Name:	HLPUSD - PAC - Heat Load Calcs.cibd19x		

I. DECLARATION OF REQUIRED CERTIFICATES OF INSTALLATION

Table Instructions: Selections shall be made by Documentation Author to indicate which Certificates of Installation must be submitted for the features to be recognized for compliance. These documents bust be retained and provided to the building inspector during construction and can be found online at: https://www.energy.ca.gov/title24/2019standards/2019_compliance_documents/Nonresidential_Documents/NRCI/

Building Component	Form/Title
Envelope	NRCI-ENV-01-E - Must be submitted for all buildings
Mechanical	NRCI-MCH-01-E - Must be submitted for all buildings

Project Name:	HLPUSD - Performing Arts Center	NRCC-PRF-01-E	Page 9 of 12
Project Address:	635 North California Avenue La Puente 91744	Calculation Date/Time:	11:13, Mon, Dec 05, 2022
Input File Name:	HLPUSD - PAC - Heat Load Calcs.cibd19x		

H8. HIGH-RISE RESIDENTIAL DWELLING UNIT AND HOTEL/MOTEL VENTILATION

This Section Does Not Apply

H9. ZONAL SYSTEM AND TERMINAL UNIT SUMMARY

1	2	3	4	5	6	7	8	9	10	11	12	13
				Rated Capacity (kBtuh)		**Airflow (cfm)**			**Fan**			
System ID	**Zone Name**	**System Type**	**Qty**	**Heating**	**Cooling**	**Design**	**Min.**	**Min. Ratio**	**Power**	**Power Units**	**Cycles**	**VSD**
7-Control-VRF	6-Control	VRF	1	14.00	12.00	290	NA	NA	0.218	bhp	☐	☐
8-Lighting-VRF	7-Lighting	VRF	1	14.00	12.00	290	NA	NA	0.218	bhp	☐	☐
9-Follow Spot N-VRF	8-Follow Spot N	VRF	1	14.00	12.00	300	NA	NA	0.034	bhp	☐	☐
10-Follow Spot S-VRF	9-Follow Spot S	VRF	1	14.00	12.00	300	NA	NA	0.034	bhp	☐	☐
1-Lobby-Trm	1-Lobby	VAVNoReheatBox	1	NA	NA	5000	1500	0.30	3.420	bhp	NA	☐
2-Auditorium-Trm	2-Auditorium	VAVNoReheatBox	2	NA	NA	12000	3600	0.30	3.580	bhp	NA	☐
3-Shop-Trm	3-Shop	VAVNoReheatBox	1	NA	NA	1900	570	0.30	1.410	bhp	NA	☐
4-Stage-Trm	4-Stage	VAVNoReheatBox	1	NA	NA	5000	1500	0.30	2.920	bhp	NA	☐
5-Dressing Room-Trm	5-Dressing Room	VAVNoReheatBox	1	NA	NA	2400	720	0.30	1.370	bhp	NA	☐

H10. EVAPORATIVE COOLER SUMMARY

This Section Does Not Apply

H11. HEAT RECOVERY SUMMARY

This Section Does Not Apply

C:\Users\tim\Documents\#22_HLPUSD\PAC_Mechanical Central_ted@pocockdesignsolutions.com.rvt

APPL No. A03-122864

IDENTIFICATION STAMP
DIV. OF THE STATE ARCHITECT
APP: 03-122864 INC:
REVIEWED FOR
SS ☑ FLS ☑ ACS ☑
DATE: 10/03/2023

DSA Stamp

Architect

RACHLIN
PARTNERS
8640 National Boulevard
Culver City, CA 90232
310.204.3400

Disclaimer:

THESE DRAWINGS ARE THE PROPERTY OF THE ARCHITECT. THE DESIGNS SHOWN AND DESCRIBED HEREIN INCLUDING ALL TECHNICAL DRAWINGS ARE PROPRIETARY AND CANNOT BE COPIED, DUPLICATED OR COMMERCIALLY EXPLOITED IN WHOLE OR IN PART. THESE DRAWINGS AND SPECIFICATIONS SHALL NOT BE USED BY THE OWNER ON OTHER PROJECTS, FOR ADDITIONS TO THIS PROJECT, OR FOR COMPLETION OF THIS PROJECT BY OTHERS. THE OWNER AGREES TO HOLD HARMLESS, INDEMNIFY AND DEFEND THE ARCHITECT AGAINST ALL DAMAGES, CLAIMS AND LOSSES, INCLUDING DEFENSE COSTS, ARISING OUT OF ANY REUSE OF PLANS AND SPECIFICATIONS WITHOUT THE WRITTEN AUTHORIZATION OF THE ARCHITECT OF RECORD.

Copyright © 2022 Rachlin Partners, All Rights Reserved.

PDS
Pocock Design Solutions Inc.

Performing Arts Center

Hacienda La Puente Unified School District
635 North California Avenue
La Puente, CA 91744

Rev	Date	Issue
1	7.22.22	50% DD
2	10.21.22	50% CD
3	12.09.22	100% CD DSA SUBMITTAL
4	6.19.23	100% CD DSA RESUBMITTAL
5	9.20.23	DSA BACK CHECK

Date: 12/04/22
Scale:
Drawn By: Author
Checked By: Checker

Architect / Engineer Stamp

LICENSED ARCHITECT — No. C-26229 — REN: 8-31-25 — STATE OF CALIFORNIA
REGISTERED PROFESSIONAL ENGINEER — ANDREW R. GOSSMAN — No. M35839 — Exp. 12-31-24 — MECHANICAL — STATE OF CALIFORNIA

Consultants
Miyamoto International, Inc.
The Ruzika Company, Inc.
MDC Consulting Engineers
Pocock Design Solutions
Newson Brown Acoustics, LLC
VCA Engineers, Inc.
HJSA Consulting

Sheet Title

Title 24

Sheet Number

M601

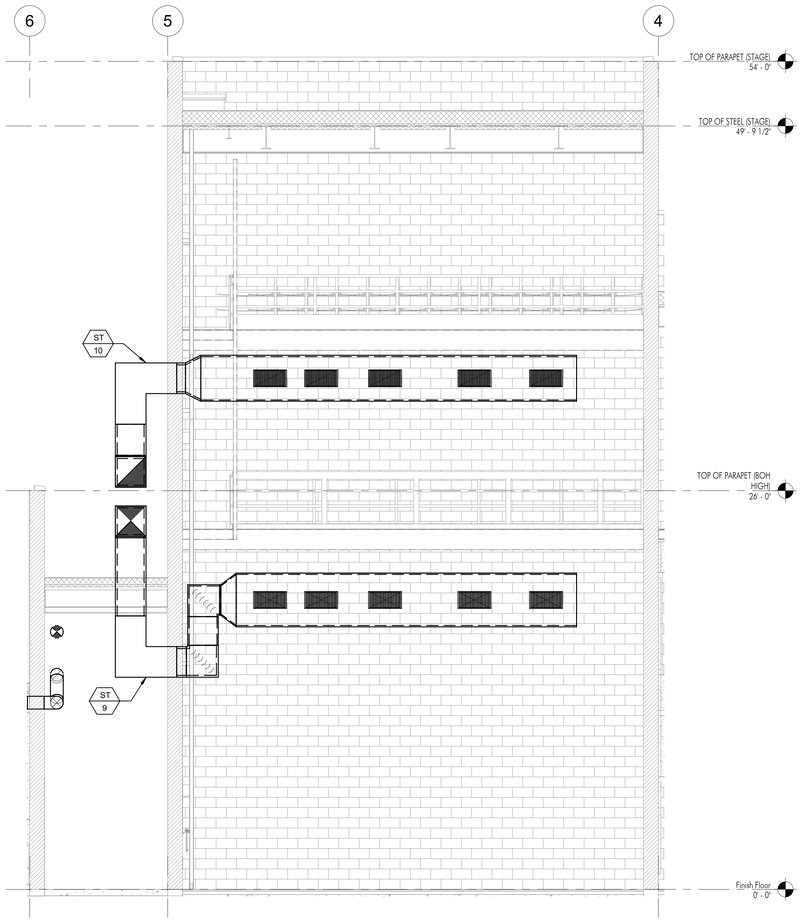

STAGE DUCTWORK SOUTH SECTION

SCALE 1/4" = 1'-0" | 5

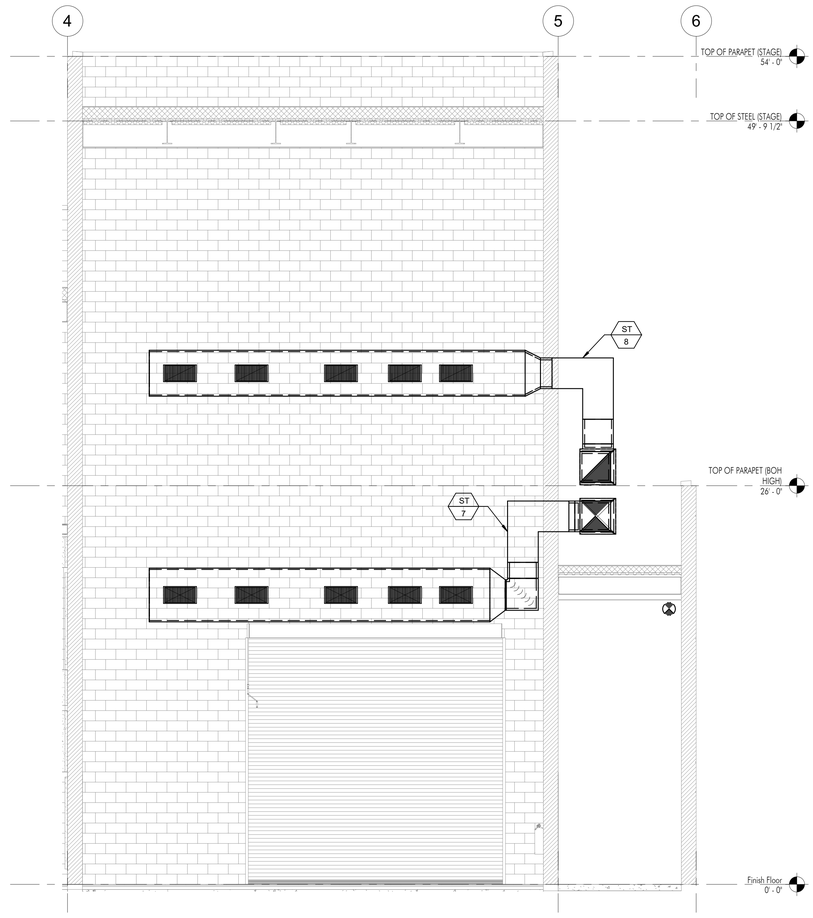

STAGE DUCTWORK NORTH SECTION

SCALE 1/4" = 1'-0" | 2

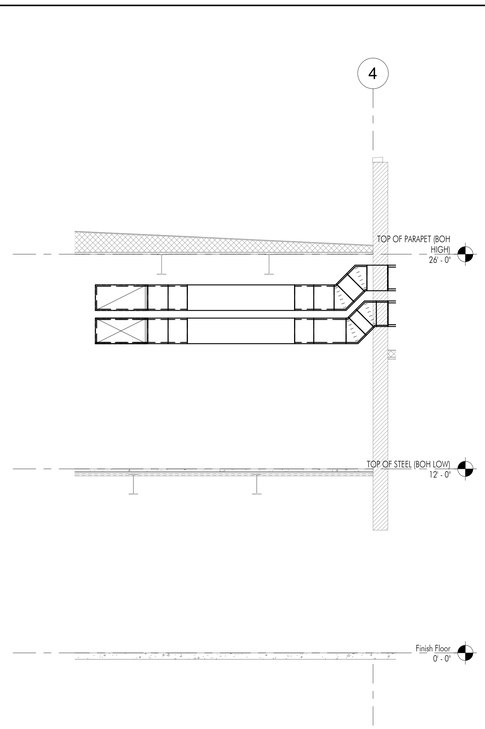

MECH DUCTWORK ABOVE BOX BOOM SOUTH SECTION

SCALE 1/4" = 1'-0" | 4

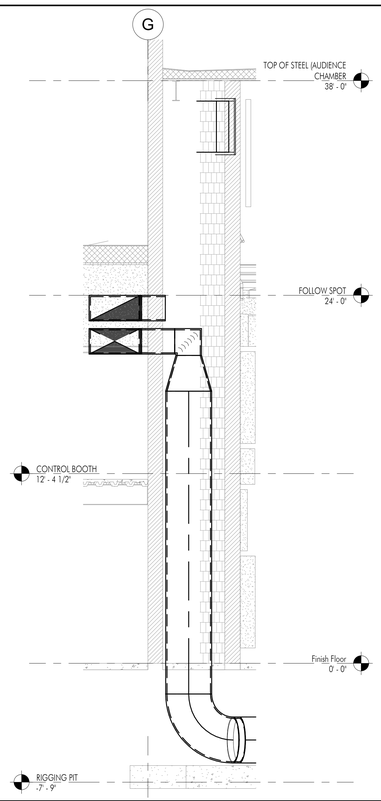

MECHANICAL SHAFT SOUTH SECTION

SCALE 1/4" = 1'-0" | 3

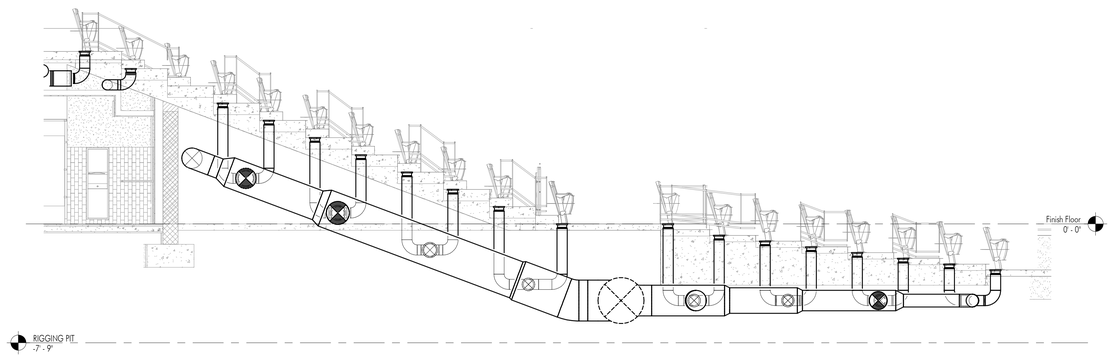

SEATING LEVEL DUCTWORK SECTION

SCALE 1/4" = 1'-0" | 1

C:\Users\tim\Documents\R22_HJPUSD-PAC_Mechanical Central_tedl@pocockdesignsolutions.com.rvt

APPL No. A03-122864

IDENTIFICATION STAMP
DIV. OF THE STATE ARCHITECT
APP: 03-122864 INC:
REVIEWED FOR
SS ☑ FLS ☑ ACS ☑
DATE: 10/03/2023

DSA Stamp

Architect

RACHLIN
PARTNERS
8640 National Boulevard
Culver City, CA 90232
310.204.3400

Disclaimer:

THESE DRAWINGS ARE THE PROPERTY OF THE ARCHITECT. THE DESIGNS SHOWN AND DESCRIBED HEREIN INCLUDING ALL TECHNICAL DRAWINGS ARE PROPRIETARY AND CANNOT BE COPIED, DUPLICATED OR COMMERCIALLY EXPLOITED EXCEPT BY WRITTEN AGREEMENT. THESE DRAWINGS AND DESIGNS SHALL NOT BE USED BY THE OWNER ON OTHER PROJECTS, FOR ADDITIONS TO THIS PROJECT, OR FOR COMPLETION OF THIS PROJECT BY OTHERS. THE OWNER AGREES TO HOLD HARMLESS, INDEMNIFY AND DEFEND THE ARCHITECT AGAINST ALL DAMAGES, CLAIMS AND LOSSES, INCLUDING DEFENSE COSTS, ARISING OUT OF ANY REUSE OF PLANS AND SPECIFICATIONS WITHOUT THE WRITTEN AUTHORIZATION OF THE ARCHITECT OF RECORD.

Copyright © 2022 Rachlin Partners, All Rights Reserved.

PDS
Pocock Design Solutions Inc.

Performing Arts Center

Hacienda La Puente Unified School District
635 North California Avenue
La Puente, CA 91744

Rev	Date	Issue
1	7.22.22	50% DD
2	10.21.22	50% CD
3	12.09.22	100% CD DSA SUBMITTAL
4	6.19.23	100% CD DSA RESUBMITTAL
5	9.20.23	DSA BACK CHECK

Date: 06/02/23
Scale: 1/4" = 1'-0"
Drawn By: Author
Checked By: Checker

Architect / Engineer Stamp

LICENSED ARCHITECT
NO. C-26229
REN. 8-31-25
STATE OF CALIFORNIA

REGISTERED PROFESSIONAL ENGINEER
ANDREW R. GORMAN
No. M39569
Exp. 3/31/24
MECHANICAL
STATE OF CALIFORNIA

Consultants
Miyamoto International, Inc.
The Ruzika Company, Inc.
MDC Consulting Engineers
Pocock Design Solutions
Newson Brown Acoustics, LLC
VCA Engineers, Inc.
HJSA Consulting

Sheet Title

Mechanical Sections

Sheet Number

M701

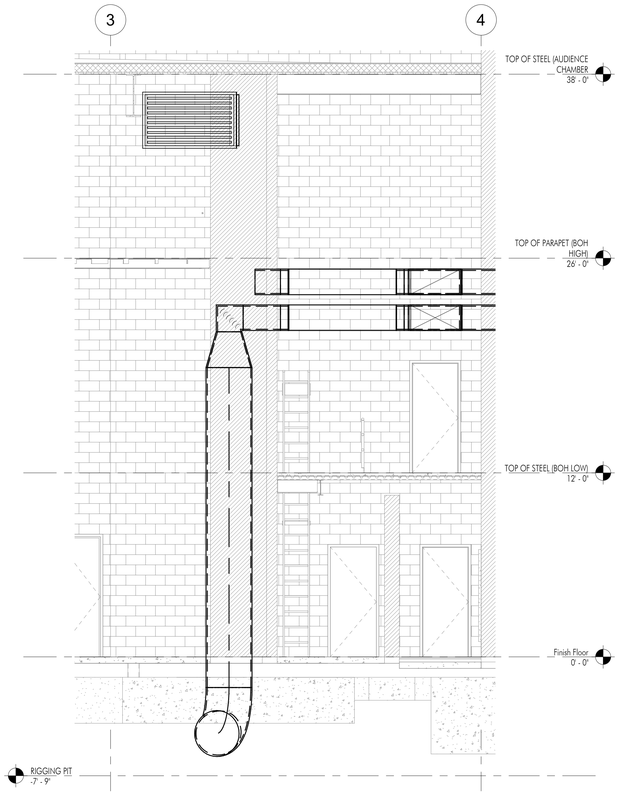

MECHANICAL SHAFT NORTH SECTION — SCALE 1/4" = 1'-0" — 2

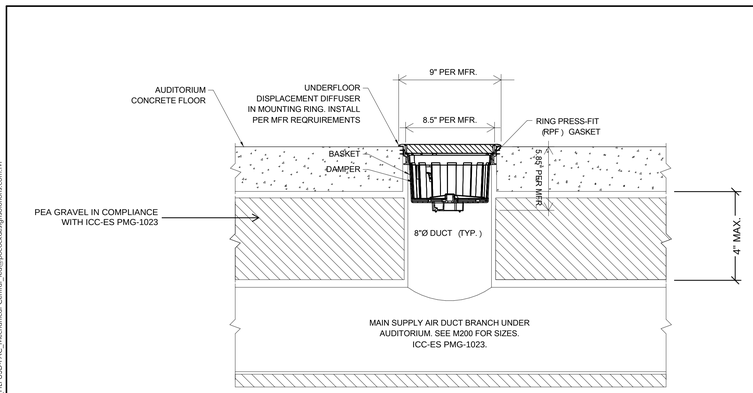

UNDERFLOOR DIFFUSER DETAIL — SCALE NONE — 3

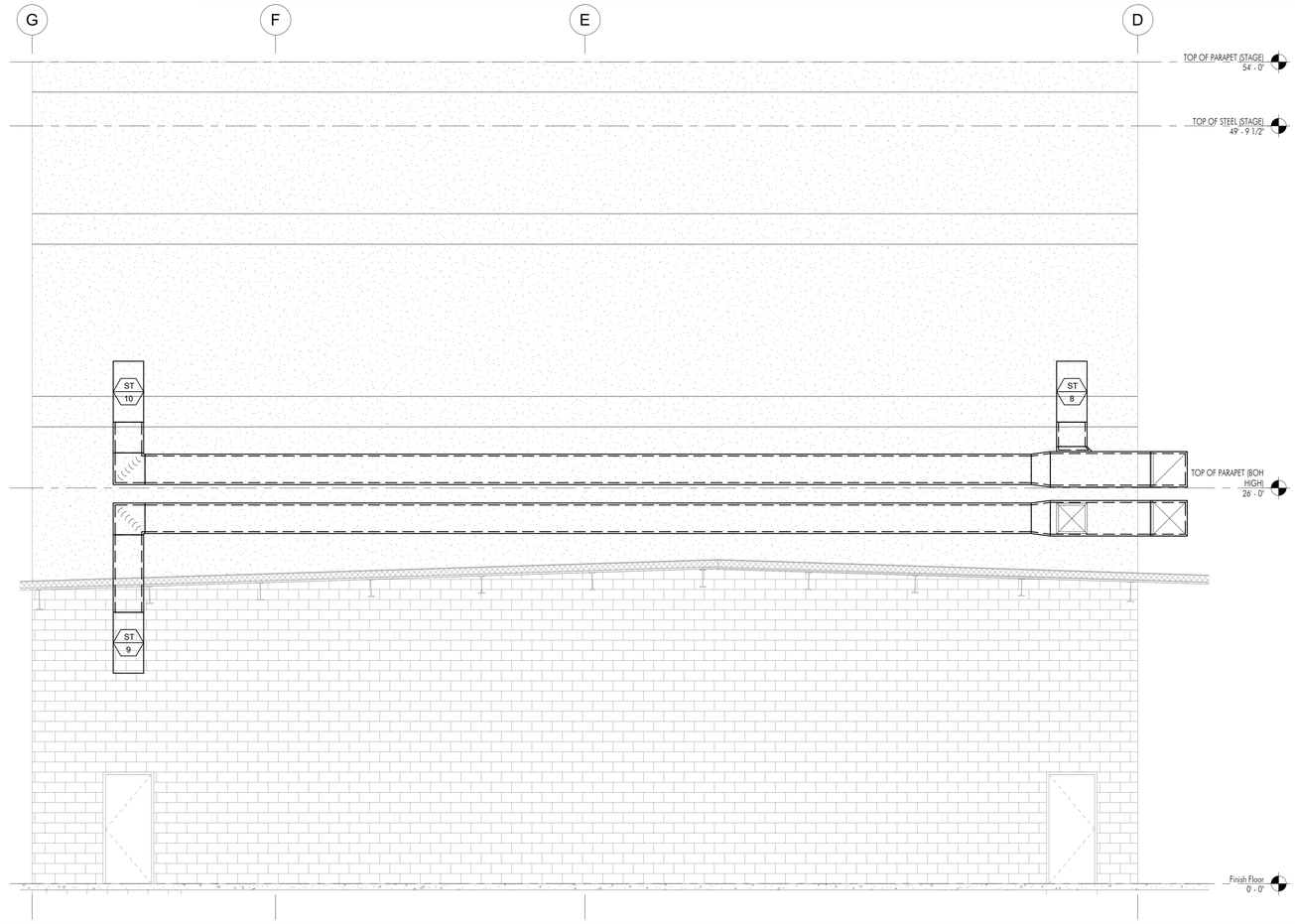

STAGE DUCTWORK ROOFTOP DUCTWORK SECTION — SCALE 1/4" = 1'-0" — 1

C:\Users\tim\Documents\R22_HPUSD-PAC_Mechanical Central_tedl@pocockdesignsolutions.com.rvt

APPL No. A03-122864

IDENTIFICATION STAMP
DIV. OF THE STATE ARCHITECT
APP: 03-122864 INC:
REVIEWED FOR
SS ☑ FLS ☑ ACS ☑
DATE: 10/03/2023

DSA Stamp

Architect

RACHLIN PARTNERS
8640 National Boulevard
Culver City, CA 90232
310.204.3400

Disclaimer:

THESE DRAWINGS ARE THE PROPERTY OF THE ARCHITECT. THE DESIGNS SHOWN AND DESCRIBED HEREIN INCLUDING ALL TECHNICAL DRAWINGS ARE PROPRIETARY AND CANNOT BE COPIED, DUPLICATED OR COMMERCIALLY EXPLOITED EXCEPT WITH THE WRITTEN PERMISSION OF THE ARCHITECT AND SHALL NOT BE USED BY THE OWNER ON OTHER PROJECTS, FOR ADDITIONS TO THIS PROJECT, OR FOR COMPLETION OF THIS PROJECT BY OTHERS. THE OWNER AGREES TO HOLD HARMLESS, INDEMNIFY AND DEFEND THE ARCHITECT AGAINST ALL DAMAGES, CLAIMS AND LOSSES, INCLUDING DEFENSE COSTS, ARISING OUT OF ANY REUSE OF PLANS AND SPECIFICATIONS WITHOUT THE WRITTEN AUTHORIZATION OF THE ARCHITECT OF RECORD.

Copyright © 2022 Rachlin Partners, All Rights Reserved.

PDS
Pocock Design Solutions Inc.

Performing Arts Center

Hacienda La Puente Unified School District
635 North California Avenue
La Puente, CA 91744

Rev	Date	Issue
1	7.22.22	50% DD
2	10.21.22	50% CD
3	12.09.22	100% CD DSA SUBMITTAL
4	6.19.23	100% CD DSA RESUBMITTAL
5	9.20.23	DSA BACK CHECK

Date: 06/10/23
Scale: 1/4" = 1'-0"
Drawn By: Author
Checked By: Checker

Architect / Engineer Stamp

LICENSED ARCHITECT — NO. C-28229 REN: 8-31-25 — STATE OF CALIFORNIA
REGISTERED PROFESSIONAL ENGINEER — ANDREW R. GORMAN — No. M39838 Exp. 3/31/24 — MECHANICAL — STATE OF CALIFORNIA

Consultants
Miyamoto International, Inc.
The Ruzika Company, Inc.
MDC Consulting Engineers
Pocock Design Solutions
Newson Brown Acoustics, LLC
VCA Engineers, Inc.
HJSA Consulting

Sheet Title

Mechanical Sections

Sheet Number

M702

ELECTRICAL NOTES

NOTE: THIS DOCUMENT FORMS A PART OF THE SPECIFICATIONS AND SHALL BE CONSIDERED THE SAME AS IF ATTACHED THERETO.

1. IT IS THE INTENT OF THESE PLANS AND SPECIFICATIONS THAT A COMPLETE AND WORKABLE ELECTRICAL INSTALLATION BE PROVIDED FOR THE EQUIPMENT DESCRIBED OR SHOWN AS BEING IN THIS CONTRACT.FURNISH LABOR AND TOOLS NECESSARY AND INSTALL APPARATUS, MATERIALS, AND EQUIPMENT IN A FASHION COMPLYING WITH ALL APPLICABLE CODES, INCLUDING ITEMS REQUIRED BUT NOT NECESSARILY SHOWN, SUCH AS COUPLINGS, HANGERS, BRACKETS, CLAMPS, BOXES, CONNECTORS, AND HARDWARE.

2. BEFORE SUBMITTING THE BID PROPOSAL, VISIT THE JOB SITE AND FULLY ACQUAINT WITH THE EXISTING JOB CONDITIONS, VERIFY EXISTING AND NEW REQUIREMENT, INCLUDING NECESSARY PULL BOXES, SIZE AND NUMBER OF CONDUITS AND CONDUCTORS, PANELS, RISS AND/OR SWITCHES CABLES, TIME CLOCKS ETC., WHETHER SHOWN ON DRAWINGS OR NOT, BUT REQUIRED FOR PROVIDING A COMPLETE AND OPERABLE FIRE ALARM SYSTEM, WITHOUT ADDITIONAL COST TO THE DISTRICT.

3. EXAMINE ALL CONTRACT DOCUMENTS AND VERIFY ALL DIMENSIONS AND CONDITIONS, EXISTING AND NEW CEILINGS AND BRING ANY DISCREPANCIES TO THE ATTENTION OF THE ARCHITECT PRIOR TO COMMENCING ANY WORK. DEVICES, CONTROLS, SHALL BE INSTALLED SO AS TO BE READILY ACCESSIBLE FOR OPERATING, SERVICING, MAINTAINING AND REPAIRING.

4. THE ELECTRICAL DRAWINGS ARE DIAGRAMMATIC IN NATURE AND INDICATE THE LOCATION OF FIRE ALARM DEVICES AND EQUIPMENT AND THE CIRCUIT ARRANGEMENT OF THE REQUIRED WIRING, AND THOUGH NOT NECESSARILY INDICATING THE ACTUAL ROUTES OF CONDUITS, THE DRAWINGS SHALL BE FOLLOWED AS CLOSELY AS PROPER COORDINATION WITH THE EXISTING FIELD CONDITIONS AND SPACE WILL PERMIT.SIMPLIFY INSTALLATION WHEREVER POSSIBLE BUT SUBJECT TO APPROVAL OF THE DISTRICT FOR VISUAL AND STRUCTURAL REASONS,THE DRAWINGS DO NOT SHOW NECESSARY OFFSETS, BENDS, PULL BOXES AND OBSTRUCTIONS,THE DRAWINGS ARE NOT INTENDED TO BE SCALED AND THE CONTRACTOR SHALL REFER TO THE GENERAL CONSTRUCTION DRAWINGS FOR DIMENSIONS, FIELD COORDINATE WITH EXISTING CONDITIONS.

5. PROCURE PERMITS FROM LEGALLY CONSTITUTED AUTHORITIES, ARRANGE FOR INSPECTION WITH IOR AND TESTS IN CONNECTION THEREWITH, COMPLY WITH CODES,BEFORE THE WORK IS ACCEPTED, PRESENT TO THE DISTRICT SIGNED CERTIFICATE OF FINAL INSPECTION.

6. THE ELECTRICAL WORK SHALL BE INSTALLED IN STRICT COMPLIANCE WITH THE PREVAILING LATEST ADOPTED CALIFORNIA ELECTRICAL CODE, T-24 PART 3 2019 REGULATION AND ORDINANCES, AND AUTHORITIES HAVING JURISDICTION.

7. ERECT AND MAINTAIN SUITABLE BARRIERS, PROTECTIVE DEVICES, LIGHTS AND WARNING SIGNS WHERE REQUIRED FOR THE PROTECTION OF THE PUBLIC AND EMPLOYEES,

8. UNLESS OTHERWISE SHOWN OR SPECIFIED, CONDUIT SHALL BE CONCEALED IN WALLS OR ABOVE FINISHED CEILING.
   A. CONCEALED CONDUIT SHALL BE RUN IN AS DIRECT A LINE AS POSSIBLE,BENDS SHALL BE OF LONG SWEEP TYPE.
   B. EXPOSED CONDUIT SHALL BE RUN PARALLEL TO, OR AT RIGHT ANGLES WITH THE LINES OF THE BUILDING,BEND SHALL BE FREE FROM DENTS OR FLATTENING,CONDUIT SHALL BE SUPPORTED AND SECURELY FASTENED.
   C. CONDUIT SHALL BE INSTALLED AS A COMPLETE SYSTEM BEFORE WIRE OR CONDUCTORS ARE PULLED IN.
   D. CONDUIT SHALL BE INSTALLED ENTIRELY FREE FROM OTHER PIPING, VALVES OR OTHER MECHANICAL EQUIPMENT, AND SHALL NOT BE INSTALLED WITHIN 6 INCHES OF HOT WATER OR HEATING FLUES.
   E. POCKETS OR TRAPS IN ALL CONDUIT RUNS WHERE MOISTURE MAY COLLECT SHALL BE AVOIDED,WHERE DIPS ARE UNAVOIDABLE, A PULL BOX SHALL BE LOCATED AT EACH LOW POINT IN ORDER TO PROVIDE A MEANS OF DRAINAGE.
   F. THE CONDUIT SYSTEM AND CONDUCTING WIRE ENCLOSURES SHALL BE SECURELY BONDED TOGETHER SO THAT FOR EVERY CONDUCTING COMPONENT IS PROVIDED WITH A LOW RESISTANCE PATH TO GROUND.
   G. DOUBLE LOCKNUTS SHALL BE USED FOR SECURING CONDUIT AT A BOX OR CABINET UNLESS A THREADED HUB IS PROVIDED AS PART OF THE BOX OR CABINET.
   H. RUNNING THREADS SHALL NOT BE USED ON CONDUIT FOR CONNECTION AT COUPLINGS,WHERE 2 LENGTHS OF CONDUIT MUST BE COUPLED TOGETHER, AND IT IS IMPOSSIBLE TO SCREW BOTH LENGTHS INTO AN ORDINARY COUPLING, THEN THE "ERICKSON" TYPE OF COUPLING MUST BE USED IN ORDER TO PROVIDE A RIGID JOINT THAT WILL BE BOTH MECHANICALLY AND ELECTRICALLY EFFECTIVE.
   I. COUPLING AND CONNECTORS USED ON ELECTRIC METALLIC TUBING SHALL BE, COMPRESSION TYPE,
   J. CONDUIT SHALL BE TERMINATED WITH SUITABLE BUSHINGS OR EQUIVALENT DEVICES WHICH SHALL PROTECT THE ENCLOSED WIRES FROM ABRASION AT THE ENDS,
   K. ALL BUILDING INTERIOR CONDUIT SIZES SHALL BE MINIMUM OF 3/4" AND 1" MINIMUM FOR ALL UNDERGROUND CONDUITS IN ACCORDANCE WITH THE MINIMUM REQUIREMENTS OF THE "CEC".
   L. PROVIDE SLEEVES, NIPPLES, AND COUPLINGS REQUIRED FOR THE INSTALLATION OF CONDUIT, SLEEVES SHALL PROJECT 2" ABOVE FLOOR.
   M. FLEXIBLE CONDUIT SHALL BE PROVIDED TO CONNECT MOTORS ON SLIDING BASES, TO CONTROLS, AND TO VIBRATING EQUIPMENT,
   N. PROTECT CONDUIT FROM DAMAGE AND THE ENTRANCE OF WATER AND FOREIGN MATTER DURING THE CONSTRUCTION PERIOD,WATERTIGHT STOPPERS OR CAPS SHALL BE INSTALLED IMMEDIATELY AFTER THE CONDUIT IS INSTALLED, REMOVED ONLY WHEN WIRE IS TO BE INSTALLED.
   O. THOROUGHLY CLEAN THE INSIDE OF CONDUITS TO ASCERTAIN FOREIGN MATERIALS ARE REMOVED BEFORE PULLING WIRE OR CABLE.

9. PROVIDE AND INSTALL HANGERS, SUPPORTS AND FASTENERS AS REQUIRED.
   A. INSTALLATION OF HANGERS AND SUPPORTS SHALL BE MADE TO THE BUILDING STRUCTURE,
   B. FASTENERS FOR SUPPORTS AND HANGERS SHALL BE MADE WITH BEAM CLAMPS, U-BOLTS, OR OTHER APPROVED DEVISES.
   C. INSTALLATION SHALL BE SUCH SO AS TO SUPPORT CONDUIT WITHOUT SAGGING AND SHALL BE CLEAR OF THE WORK OF OTHER TRADES, PROVISION FOR EXPANSION AND CONTRACTION SHALL BE MADE.
   D. SPACING OF SUPPORTS FOR EXPOSED HORIZONTAL CONDUIT RUNS SHALL BE AS FOLLOWS.

SIZE OF CONDUIT (INCHES)	NUMBER OF CONDUITS IN RUN	LOCATION	MAXIMUM SUPPORT SPACING (FEET)
3/4	1 OR 2	ON A FLAT CEILING OR WALL	5
3/4	1 OR 2	WHERE IT IS DIFFICULT TO PROVIDE SUPPORTS EXCEPT AT INTERVALS FIXED BY BUILDING CONSTRUCTION	7
3/4	3 OR MORE	ANY LOCATION	7
1 & 2	1 OR 2	ON A FLAT CEILING OR WALL	6
1 & 2	1 OR 2	WHERE IT IS DIFFICULT TO PROVIDE SUPPORTS EXCEPT AT INTERVALS FIXED BY BUILDING CONSTRUCTION	10
1 & 2	3 OR MORE	ANY LOCATION	10

   E. SPACING OF SUPPORTS FOR EXPOSED VERTICAL CONDUIT RUNS SHALL BE AS FOLLOWS.

SIZE OF CONDUIT (INCHES)	MAXIMUM SUPPORT SPACING (FEET)
3/4	7
1 AND 1¼	8
1½ AND 2	10

   F. ELECTRICAL ENCLOSURES SHALL BE WEATHERPROOF WHEN EXPOSED TO OUTDOORS OR WET AREAS,

10. EXACT LOCATION OF EQUIPMENT AND LIGHTING FOXTURES SHALL BE VERIFIED IN FIELD, COORDINATE INSTALLATION OF ELECTRICAL SYSTEM WITH EXISTING BUILDING STRUCTURES, PRIOR TO COMPLETION OF AFFECTED WORK, CONTRACTOR SHALL INSTRUCT THE DISTRICT ON THE USE AND MAINTENANCE OF THE INSTALLED SYSTEM.

11. SIZE OUTLET BOXES IN CONFORMITY WITH CODE FOR NUMBER AND GAUGE OF CONDUCTORS THEREIN, EXCEPT WHERE NOTED TO BE LARGER. MINIMUM BOX SIZE SHALL BE 4" SQUARE BY 2 1/8" DEEP, JUNCTION BOXES SHALL BE LABELED WITH RESPECTIVE CIRCUIT NUMBERS.

12. OUTLET BOXES SHALL BE FLUSH WITH THE FINISHED SURFACE OF WALLS AND CEILINGS OF COMBUSTIBLE MATERIALS.

13. OPENINGS IN BOXES, CONDUIT BODIES AND FITTINGS SHALL BE ADEQUATELY CLOSED.

14. SURFACE MOUNTED BOXES AND CABINETS MOUNTED IN WET AND DAMP LOCATIONS SHALL BE WEATHERPROOF AND SHALL HAVE AT LEAST 1/4 INCH AIR SPACE BETWEEN THE BOX AND MOUNTING SURFACE.

15. ENTRANCE TO ROOMS AND OTHER GUARDED LOCATIONS THAT CONTAIN LIVE PARTS SHALL BE MARKED WITH A CONSPICUOUS WARNING SIGN FORBIDDING UNQUALIFIED PERSONS TO ENTER,

16. FOR INSTALLATION OF ELECTRICAL WORK, APPROVED PENETRATION THROUGH CONCRETE WALLS OR CEILINGS SHALL BE PROVIDED BY MEANS OF SLEEVES. CONDUITS SHALL NOT PENETRATE STRUCTURAL SLAB AND WALL. ALL WORK SHALL BE PATCHED AND REPAIRED AS DIRECTED BY ARCHITECT,

17. AFTER AWARD OF THE CONTRACT, THE CONTRACTOR SHALL SUBMIT TO THE ENGINEER FOR APPROVAL, SIX (6) PRINTS OF ALL REQUIRED SHOP DRAWINGS, BROCHURES AND OTHER SATISFACTORY DESCRIPTIONS INDICATING MANUFACTURER, CATALOG NUMBER, DIMENSIONS AND PERFORMANCE OF THE EQUIPMENT,

18. USE "THWN/THWN" COPPER WIRES OR EQUAL FOR ALL BRANCH CIRCUIT WIRING WITH A SEPARATE GREEN GROUNDING CONDUCTOR, SIZE PER C.E.C 250-122.

19. EQUIPMENT SHALL BE LISTED BY A RECOGNIZED TESTING LABORATORY.

20. THE NON-CURRENT CARRYING METALLIC PARTS OF ALL ELECTRICAL/FIRE ALARM EQUIPMENT AND ENCLOSURES, INCLUDING CONDUITS, SUPPORTS, CABINETS, AND ASSOCIATED EQUIPMENT, WHICH ARE INSTALLED OR CONNECTED UNDER THIS CONTRACT, SHALL BE PROPERLY GROUNDED BY CONNECTION TO THE GROUNDING SYSTEM, REGARDLESS OF WHETHER OR NOT THESE CONNECTIONS ARE SHOWN ON THE DRAWINGS.
   A. THE GROUNDING INSTALLATION SHALL HAVE PROVISIONS FOR BOTH SYSTEM AND EQUIPMENT GROUNDS AS DEFINED BY THE "C.E.C." THESE GROUNDING SYSTEMS ARE TO BE EFFECTIVELY INSULATED FROM EACH OTHER EXCEPT AT THE SERVICE CONNECTION.
   B. GROUNDING SHALL BE DONE IN ACCORDANCE WITH THE PROVISIONS OF "C.E.C" AND THE "NESC", LOCAL REQUIREMENTS OF THE INSPECTION AUTHORITY HAVING JURISDICTION SHALL GOVERN IN ALL MATTERS OF INTERPRETATION,
   C. IF WATER SERVICE IS USED FOR GROUNDING POINT, IT SHALL BE ASCERTAINED THAT THE WATER PIPING IS ELECTRICALLY CONTINUOUS AT JOINTS AND IS OF CONDUCTING MATERIAL, WATER PIPING WITH SWEATED JOINTS IN ELECTRICAL PATH SHALL HAVE SUCH JOINTS BONDED,
   D. WHERE GROUND CABLES ENTER AND LEAVE FERROUS CONDUITS, THEY SHALL BE MECHANICALLY CONNECTED TO THE END OF THE RACEWAY, WHERE GROUND CABLE PASSES THROUGH FERROUS FLOORING OR FRAMING, CONNECTION SHALL BE MADE TO SUCH METAL.

21. THE CONTRACTOR SHALL KEEP ALL PARTS OF THE BUILDING AND SITE FREE FROM ANY ACCUMULATIONS OF RUBBISH OR WASTE MATERIALS CAUSED BY HIS WORKMEN, AND SHALL REMOVE SUCH ACCUMULATIONS FROM THE BUILDING, SITE AND PROPERTY. JOB SITE SHALL BE CLEANED AT THE END OF EACH WORKING DAY,

22. THOROUGHLY CLEAN ALL PARTS OF THE EQUIPMENT AND MATERIAL INSTALLED UNDER THIS DIVISION. SURFACES OF EXPOSED CONDUIT SHALL BE CLEANED OF CEMENT, PLASTER, DIRT, RUST, GREASE, AND OTHER FOREIGN MATTER, AND BE LEFT IN CONDITION SUITABLE TO THE CONTRACTOR AND ACCEPTABLE FOR PAINTING.
   A. EQUIPMENT FURNISHED WITHOUT SHOP APPLIED FINISH SHALL BE FIELD PAINTED,
   B. CONCEALED SURFACES OF METAL RACKS, FRAMES, AND BOXES SHALL BE PAINTED BEFORE MOUNTING,
   C. AFTER TESTS HAVE BEEN COMPLETED, CLEAN ALL EQUIPMENT WITH SOAP AND WATER, LEAVING EVERYTHING IN WORKING ORDER AT THE COMPLETION OF THE WORK.

23. A) WIRING AND CONNECTIONS SHALL BE TESTED FOR CONTINUITY, GROUNDS, SHORT CIRCUITS, AND OTHER DEFECTS BEFORE ANY EQUIPMENT OR FIXTURES ARE CONNECTED THERETO, CABLES SHALL BE CHECKED FOR CONTINUITY, SHORTS, INSULATION RESISTANCE, AND PROPER PHASING,
   B) CONTRACTOR SHALL TERMINATE ALL CABLES & WIRES WITH TERMINAL LUGS (SUPPLIED BY CONTRACTOR)

24. INSULATION SHALL BE TESTED BEFORE AND AFTER INSTALLATION, AND BEFORE ENERGIZING,
   A. RUBBER INSULATION SHALL BE TESTED FOR ACCEPTANCE BY APPLYING DIRECT CURRENT POTENTIAL NOT OVER 3 TIMES THE RATIO OF DIRECT CURRENT TO 60% OF EQUIVALENT "RMS" ALTERNATING CURRENT FACTORY TEST VOLTAGE FOR 5 MINUTES,
   B. VARNISHED CAMBRIC, PAPER, AND OTHER INSULATION SHALL BE TESTED IN THE MANNER DIRECTED BY AND UP TO THE LIMITS RECOMMENDED BY THE MANUFACTURER,
   C. INSULATION RESISTANCE SHALL BE TESTED BY MEGGER OF NOT LESS THAN 600 VOLTS OUTPUT FOR CIRCUITS 480 VOLTS AND LESS, ANY CIRCUIT SHOWING AN INSULATION RESISTANCE OF LESS THAN 1 MO SHALL BE INVESTIGATED AND THE WEEK POINT CORRECTED. CORRECT OR REPLACE ANY CIRCUIT DEFECTIVE OR GROUNDED AND MAKE WIRE-BY-WIRE TEST,

25. THE ENTIRE SYSTEM SHALL BE PLACED IN PROPER OPERATING CONDITION,
   A. ALL CHANGES SHALL BE MADE THAT ARE NECESSARY FOR ADJUSTING, SETTING AND BALANCING,
   B. GROUND TESTS SHALL BE MADE WITH THE 3 ELECTRODE "AC" OR "DC" VOLTAGE DROP METHOD TO ESTABLISH INITIAL READINGS FOR RECORDS, AND TO ASCERTAIN THAT THEY MEET DESIGN AND CODE REQUIREMENTS,
   C. CONTROL CIRCUITS SHALL BE CHECKED OUT FOR PROPER

26. MEP COMPONENT ANCHORAGE NOTE:
   ALL MECHANICAL, PLUMBING, AND ELECTRICAL COMPONENTS SHALL BE ANCHORED AND INSTALLED PER THE DETAILS ON THE OSA-APPROVED CONSTRUCTION DOCUMENTS, THE FOLLOWING COMPONENTS SHALL BE ANCHORED OR BRACED TO MEET THE FORCE AND DISPLACEMENT REQUIREMENTS PRESCRIBED IN THE 2019 CBC SECTIONS 1617A.1.18 THROUGH 1617A.1.26 AND ASCE 7-16 CHAPTERS 13, 26, AND 30:

   1. ALL PERMANENT EQUIPMENT AND COMPONENTS,
   2. TEMPORARY, MOVABLE OR MOBILE EQUIPMENT THAT IS PERMANENTLY ATTACHED (E.G. HARD WIRED) TO THE BUILDING UTILITY SERVICES SUCH AS ELECTRICITY, GAS OR WATER. "PERMANENTLY ATTACHED" SHALL INCLUDE ALL ELECTRICAL CONNECTIONS EXCEPT PLUGS FOR 110/220 VOLT RECEPTACLES HAVING A FLEXIBLE CABLE,
   3. TEMPORARY, MOVABLE OR MOBILE EQUIPMENT WHICH IS HEAVIER THAN 400 POUNDS OR HAS A CENTER OF MASS LOCATED 4 FEET OR MORE ABOVE THE ADJACENT FLOOR OR ROOF LEVEL THAT DIRECTLY SUPPORT THE COMPONENT IS REQUIRED TO BE RESTRAINED IN A MANNER APPROVED BY DSA,

   THE FOLLOWING MECHANICAL AND ELECTRICAL COMPONENTS SHALL BE POSITIVELY ATTACHED TO THE STRUCTURE BUT NEED NOT DEMONSTRATE DESIGN COMPLIANCE WITH THE REFERENCES NOTED ABOVE. THESE COMPONENTS SHALL HAVE FLEXIBLE CONNECTIONS PROVIDED BETWEEN THE COMPONENT AND ASSOCIATED DUCTWORK, PIPING, AND CONDUIT. FLEXIBLE CONNECTIONS MUST ALLOW MOVEMENT IN BOTH TRANSVERSE AND LONGITUDINAL DIRECTIONS.

   A. COMPONENT WEIGHING LESS THAN 400 POUNDS AND HAVING A CENTER OF MASS LOCATED 4 FEET OR LESS ABOVE THE ADJACENT FLOOR OR ROOF LEVEL THAT DIRECTLY SUPPORT THE COMPONENT.
   B. COMPONENT WEIGHING LESS THAN 20 POUNDS, OR IN THE CASE OF DISTRIBUTED SYSTEMS, LESS THAN 5 POUNDS PER FOOT, WHICH ARE SUSPENDED FROM A ROOF OR FLOOR OR HUNG FROM A WALL.

THE ANCHORAGE OF ALL MECHANICAL, ELECTRICAL AND PLUMBING COMPONENTS SHALL BE SUBJECT TO THE APPROVAL OF THE DESIGN PROFESSIONAL IN GENERAL RESPONSIBLE CHARGE OR STRUCTURAL ENGINEER DELEGATED RESPONSIBILITY AND ACCEPTANCE BY DSA. THE PROJECT INSPECTOR WILL VERIFY THAT ALL COMPONENTS AND EQUIPMENT HAVE BEEN ANCHORED IN ACCORDANCE WITH THE ABOVE REQUIREMENTS.

ELECTRICAL DISTRIBUTION SYSTEM BRACING NOTE

ELECTRICAL DISTRIBUTION SYSTEMS SHALL BE BRACED TO COMPLY WITH THE FORCES AND DISPLACEMENTS PRESCRIBED IN ASCE 7-16 SECTION 13.3 AS DEFINED IN ASCE 7-16 SECTIONS 13.6.5, 13.6.6, 13.6.7, 13.6.8, AND 2019 CBC, SECTIONS 1617A.1.24, 1617A.1.25 AND 1617A.1.26.

THE METHOD OF SHOWING BRACING AND ATTACHMENTS TO THE STRUCTURE FOR THE IDENTIFIED DISTRIBUTION SYSTEM ARE AS NOTED BELOW, WHEN BRACING AND ATTACHMENTS ARE BASED ON A PRE-APPROVED INSTALLATION GUIDE (E.G., OSHPD OPM FOR 2013 CBC OR LATER), COPIES OF THE BRACING SYSTEM INSTALLATION GUIDE OR MANUAL SHALL BE AVAILABLE ON THE JOBSITE PRIOR TO THE START OF AND DURING THE HANGING AND BRACING OF THE DISTRIBUTION SYSTEMS. THE STRUCTURAL ENGINEER OF RECORD SHALL VERIFY THE ADEQUACY OF THE STRUCTURE TO SUPPORT THE HANGER AND BRACE LOADS.

ELECTRICAL DISTRIBUTION SYSTEM (E):

☒ OPTION 1: DETAILED ON THE APPROVED DRAWINGS WITH PROJECT SPECIFIC NOTES AND DETAILS.
☐ OPTION 2: SHALL COMPLY WITH THE APPLICABLE OSHPD PRE-APPROVALS (OPM #).

DO NOT MIX SEISMIC BRACING DETAILS FROM DIFFERENT OPM'S UNLESS SPECIFICALLY SHOWN ON DRAWINGS AND APPROVED BY DSA.

27. ALL WORK SHALL CONFORM TO 2019 EDITION TITLE 24. CALIFORNIA CODE REGULATION (C.C.R),

28. CHANGES TO THE APPROVED DRAWINGS AND SPECIFICATIONS SHALL BE MADE BY ADDENDA OR CONSTRUCTION CHANGE APPROVED BY DSA, AS REQUIRED BY SEC 4-338, PART 1, TITLE 24, C.C.R.

29. A DSA CERTIFIED PROJECT INSPECTOR EMPLOYED BY THE DISTRICT (OWNER) AND APPROVED BY THE DIVISION OF THE STATE ARCHITECT SHALL PROVIDE CONTINUOUS INSPECTION OF THE WORK, THE DUTIES OF THE INSPECTOR ARE DEFINED IN SECTION 4-342, CALIFORNIA BUILDING STANDARDS ADMINISTRATIVE CODE (PART1, TITLE 24, C.C.R).

30. A DSA INSPECTOR WITH MINIMUM CLASS 1 CERTIFICATION OR AS SHOWN ON ON ARCHITECTURAL DRAWINGS IS REQUIRED FOR THIS PROJECT. SEE ARCHITECTURAL DRAWINGS.

31. A DSA ACCEPTED TESTING LAB DIRECTLY EMPLOYED BY THE SCHOOL DISTRICT SHALL CONDUCT ALL THE REQUIRED TESTS AND INSPECTIONS FOR THIS PROJECT.

32. ALL NEW ROOF/ CANOPY CONDUITS SHALL BE SUPPORTED USING COOPER B-LINE DURA-BLOCK ROOFTOP SUPPORT SYSTEM.

GENERAL NOTES

1. INSTALLATION OF THE SYSTEMS SHALL NOT BE STARTED UNTIL DETAILED DESIGN DOCUMENTS AND SPECIFICATION, INCLUDING STATE FIRE MARSHALL LISTING NUMBERS FOR EACH COMPONENT OF THE SYSTEM HAS BEEN APPROVED BY DSA.
2. A STAMPED SET OF APPROVED FIRE ALARM DESIGN DOCUMENTS SHALL BE ON THE JOB SITE AND USED FOR INSTALLATION.
3. THE FOLLOWING GENERAL NOTES ARE APPLICABLE AS STATED BELOW, EXCEPT WHERE SPECIFICALLY INDICATED AND NOTED OTHERWISE ON THE DRAWINGS OR IN THE SPECIFICATIONS, REFERENCE SPECIFICATIONS FOR ADDITIONAL INFORMATION REQUIREMENTS AND SCOPE OF WORK.
4. DEVICE LOCATIONS, ELEVATIONS, RISER DIAGRAMS, SCHEMATICS AND DETAILS SHOWN ON PLANS ARE CONCEPTUAL AND ILLUSTRATE ONLY THE FUNCTIONAL RELATIONSHIPS BETWEEN COMPONENTS OF THE SYSTEM AND THE DESIGN INTENT OF THE PROJECT. CONTRACTOR SHALL INSTALL DEVICES AS SITE CONDITIONS REQUIRE AND AS DIRECTED BY THE ENGINEER.
5. PROVIDE ADDITIONAL BOXES AND ADAPTER PLATES AS REQUIRED FOR ALL SURFACE MOUNTED DEVICES, USE SURFACE MOUNTED WIREMOLD IN AREA WHERE NO ACCESSIBLE CEILING SPACE IS AVAILABLE,
6. ALLOW FOR RELOCATION OF DEVICES WITHIN THE SAME ROOM WHERE OBSTRUCTION ARE ENCOUNTERED (PROJECTOR SCRENES/EDUCATIONAL MATERIALS) THAT WILL PREVENT INSTALLING FIRE ALARM AND MASS NOTIFICATION DEVICES (STROBE, SPEAKER/STROBE) IN THE LOCATIONS SHOWN ON PLANS, SUBJECT TO REQUIRED DEVICE COVERAGE. DOOR DETAILS ILLUSTRATE FUNCTIONAL RELATIONSHIPS, ACTUAL ARCHITECTURAL CONDITIONS (DIRECTION OF SWING, HAND OF DOOR) MAY VARY AND SHALL BE FIELD VERIFIED.
7. DOOR DETAILS ILLUSTRATE FUNCTIONAL RELATIONSHIPS, ACTUAL ARCHITECTURAL CONDITIONS (DIRECTION OF SWING, HAND OF DOOR) MAY VARY AND SHALL BE FIELD VERIFIED.
8. ANY FIELD CONDITION MISREPRESENTED IN THESE DRAWINGS SHALL BE BROUGHT TO THE ATTENTION OF DSA AND THE ENGINEER OF THE PROJECT.
9. ANY DEVIATION FROM THESE PLANS NECESSARY DUE TO FIELD CONDITIONS MUST BE APPROVED BY DSA AND THE ENGINEER OF THE PROJECT, DETAILED AND RECORDED ON FIELD "AS-BUILT" DRAWINGS.
10. ALL DEVICES IN THE FIRE ALARM SYSTEM SHALL BE COMPATIBLE AND INSTALLED TO MANUFACTURER'S SPECIFICATION, AND SHALL ALSO BE INSTALLED IN COMPLIANCE WITH THE APPLICABLE REQUIREMENTS OF CURRENT TITLE 24, PART 9, CFC CHAPTER 9, CEC ARTICLE 760, AND NFPA 72, 2019 EDITION WITH CALIFORNIA AMENDMENT.
11. WORKMANSHIP AND MATERIALS SHALL CONFORM TO MOST CURRENT CALIFORNIA BUILDING CODE (CBC) STANDARDS. SPECIFICATIONS AND DETAILS FOR CONSTRUCTION AS FURNISHED BY THE CONTRACT DRAWINGS, WORKMANSHIP AND MATERIALS NOT IN CONFORMANCE WITH THE CONTRACT DRAWINGS AND SPECIFICATIONS ARE SUBJECT TO REMOVAL AND/OR REPLACEMENT AT CONTRACTOR'S EXPENSE.
12. CONTRACTOR TO PROVIDE ALL NECESSARY COMPONENTS WHETHER SHOWN OR NOT ON THE DRAWINGS OR SPECIFIED ON THE CONTRACT TO MAKE THE FIRE ALARM SYSTEM FUNCTIONALLY OPERATIVE AND ACCEPTABLE TO ALL CONCERNED AUTHORITIES.
13. PROVIDE ALL PATCHING, PAINTING AND FINISHES, INCLUDING BUT NOT LIMITED TO CEILING/WALL TILE REPLACEMENT, GYP BOARD ETC., FOR ALL DEVICES LOCATED IN EXISTING AREAS TO RESTORE TO ORIGINAL CONDITIONS AND MUST BE APPROVED AND COORDINATED WITH THE DISTRICT, EXISTING CONDITIONS SHALL BE DOCUMENTED WITH DIGITAL PHOTOGRAPHY PRIOR TO START OF WORK AND DELIVERED TO DISTRICT.
14. THE CONTRACTOR SHALL ADJUST/INSTALL ALL DEVICES TO MAXIMIZE PERFORMANCE AND TO MINIMIZE FALSE ALARMS.
15. UPON COMPLETION OF THE INSTALLATION OF THE FIRE ALARM SYSTEM, INSTALLING CONTRACTOR SHALL SUBMIT STATEMENT OF COMPLIANCE AND REQUEST FINAL INSPECTION. PER CFC 901.2.1, A SATISFACTORY TEST OF THE ENTIRE SYSTEM SHALL BE MADE IN THE PRESENCE OF A DSA PROJECT INSPECTOR AND DISTRICT PERSONNEL.
16. DSA, I.O.R., ENGINEER AND OWNER (SCHOOL DISTRICT) SHALL BE NOTIFIED A MINIMUM OF 48 HR, PRIOR TO THE FINAL INSPECTION AND/OR TESTING.
17. THE INSTALLING CONTRACTOR SHALL PROVIDE A RECORD OF COMPLETION, TESTING ALL DEVICES AND APPLIANCES PER NFPA 72, FIGURE 10,18,2,1,1. AND SYSTEM PROGRAMING FOR SUPERVISORY MONITORING PER CBC, SECTION 901,6,2. PROVIDE A COPY OF THE COMPLETED RECORD OF COMPLETION TO DSA, ENGINEER, OWNER, AND LOCAL FIRE AUTHORITY VIA THE PROJECT INSPECTOR.
18. OWNER SHALL BE RESPONSIBLE FOR ESTABLISHING A FIRE ALARM SYSTEM MONITORING CONTRACT OR PROVISIONS.
19. PROVIDE CORING, SLEEVES, FIRE STOPPING AND CAULKING TO MAINTAIN INTEGRITY OF THE EXISTING RATING.
20. CHANGES TO THE APPROVED DRAWINGS AND SPECIFICATIONS SHALL BE MADE BY ADDENDA OR CONSTRUCTION CHANGE DOCUMENT (CCD) APPROVED BY THE DIVISION OF THE STATE ARCHITECT, AS REQUIRED BY SECTION 4-338, PART 1, TITLE 24, CCR.
21. A "DSA CERTIFIED" PROJECT INSPECTOR EMPLOYED BY THE DISTRICT (OWNER) AND APPROVED BY THE DIVISION OF THE STATE ARCHITECT SHALL PROVIDE CONTINUOUS INSPECTION OF THE WORK, THE DUTIES OF THE INSPECTOR ARE DEFINED IN SECTION 4-342, CALIFORNIA BUILDING STANDARDS ADMINISTRATIVE CODE (PART 1, TITLE 24, C.C.R).
22. A "DSA CERTIFIED" INSPECTOR WITH CERTIFICATION IS REQUIRED FOR THIS PROJECT. REFER TO ARCHITECTURAL DRAWINGS,
23. AN INSPECTOR WHO IS SPECIALLY QUALIFIED IN MECHANICAL AND ELECTRICAL WORK WILL BE REQUIRED FOR THIS PROJECT, OR INDICATE NAME OF MECHANICAL AND ELECTRICAL ENGINEERS ON LINE 25b AND 25c OF PROJECT APPLICATION (DSA-1),

LIST OF CALIFORNIA CODE OF REGULATIONS (C.C.R.)

APPLICABLE CODES AS OF JANUARY 1, 2020

TITLE 24 C.C.R., PART1	2019 CALIFORNIA ADMINISTRATIVE CODE,	
TITLE 24 C.C.R., PART2	2019 CALIFORNIA BUILDING CODE (CBC)	
(2018 INTERNATIONAL BUILDING CODE OF THE INTERNATIONAL CODE COUNCIL, WITH CALIFORNIA AMENDMENTS)		
TITLE 24 C.C.R., PART3	2019 CALIFORNIA ELECTRICAL CODE (CEC)	
(2017 NATIONAL ELECTRICAL CODE OF THE NATIONAL FIRE PROTECTION ASSOCIATION, NFPA)		
TITLE 24 C.C.R., PART4	2019 CALIFORNIA MECHANICAL CODE (CMC)	
(2018 UNIFORM MECHANICAL CODE OF THE INTERNATIONAL ASSOCIATION OF PLUMBING AND MECHANICAL OFFICIALS, IAPMO)		
TITLE 24 C.C.R., PART5	2019 CALIFORNIA PLUMBING CODE (CPC)	
(2018 UNIFORM PLUMBING CODE OF THE INTERNATIONAL ASSOCIATION OF PLUMBING AND MECHANICAL OFFICIALS, IAPMO)		
TITLE 24 C.C.R., PART6	2019 CALIFORNIA ENERGY CODE	
TITLE 24 C.C.R., PART7	(NO LONGER PUBLISHED IN TITLE 24. SEE TITLE 8, CCR)	
TITLE 24 C.C.R., PART8	2019 CALIFORNIA HISTORICAL BUILDING CODE	
TITLE 24 C.C.R., PART9	2019 CALIFORNIA FIRE CODE (CFC)	
(2018 INTERNATIONAL FIRE CODE OF THE INTERNATIONAL CODE COUNCIL)		
TITLE 24 C.C.R., PART10	2019 CALIFORNIA EXISTING BUILDING CODE	
(2018 INTERNATIONAL EXISTING BUILDING CODE OF THE INTERNATIONAL CODE COUNCIL, WITH AMENDMENTS)		
TITLE 24 C.C.R., PART11	2019 CALIFORNIA GREEN BUILDING STANDARDS CODE (CALGREEN CODE)	
TITLE 24 C.C.R., PART12	2019 CALIFORNIA REFERENCED STANDARDS CODE	
TITLE 19 C.C.R.,	PUBLIC SAFETY, STATE FIRE MARSHAL REGULATIONS.	

FIRE ALARM NOTES

1. ALL WIRING SHALL BE IN CONDUIT, SURFACE RACEWAY OR OPEN RUN ABOVE CEILINGS, UNDER FLOORS AND IN WALLS IN A NEAT AND PROTECTED MINOR AS DEDICATED ON DESIGN DOCUMENTS. EXPOSED CIRCUITS ARE ONLY PERMITTED WHEN NOTED AS EXPOSED ON DESIGN DOCUMENTS. CONDUIT FILL SHALL BE PER TABLE 3B OF ELECTRICAL CODE. PROVIDE PVC SCHEDULE 40 FOR CONDUITS UNDERGROUND, EMT CONDUIT FOR INTERIOR EXPOSED AREAS, AND GALVANIZED RIGID STEEL FOR EXPOSED EXTERIOR AREAS, UNDERGROUND AND EXTERIOR CONDUITS TO HAVE WATERTIGHT FITTINGS AND WIRE APPROVED FOR WET LOCATIONS.
2. MINIMUM CONDUIT SIZE SHALL BE 3/4" UON CONTRACTOR TO ADJUST SIZE FOR FIELD CONDITIONS (I.E. NO. OF BENDS, ETC.) BUT SHALL NOT BE SMALLER THAN 3/4". MAXIMUM CONDUIT SIZE SHAL

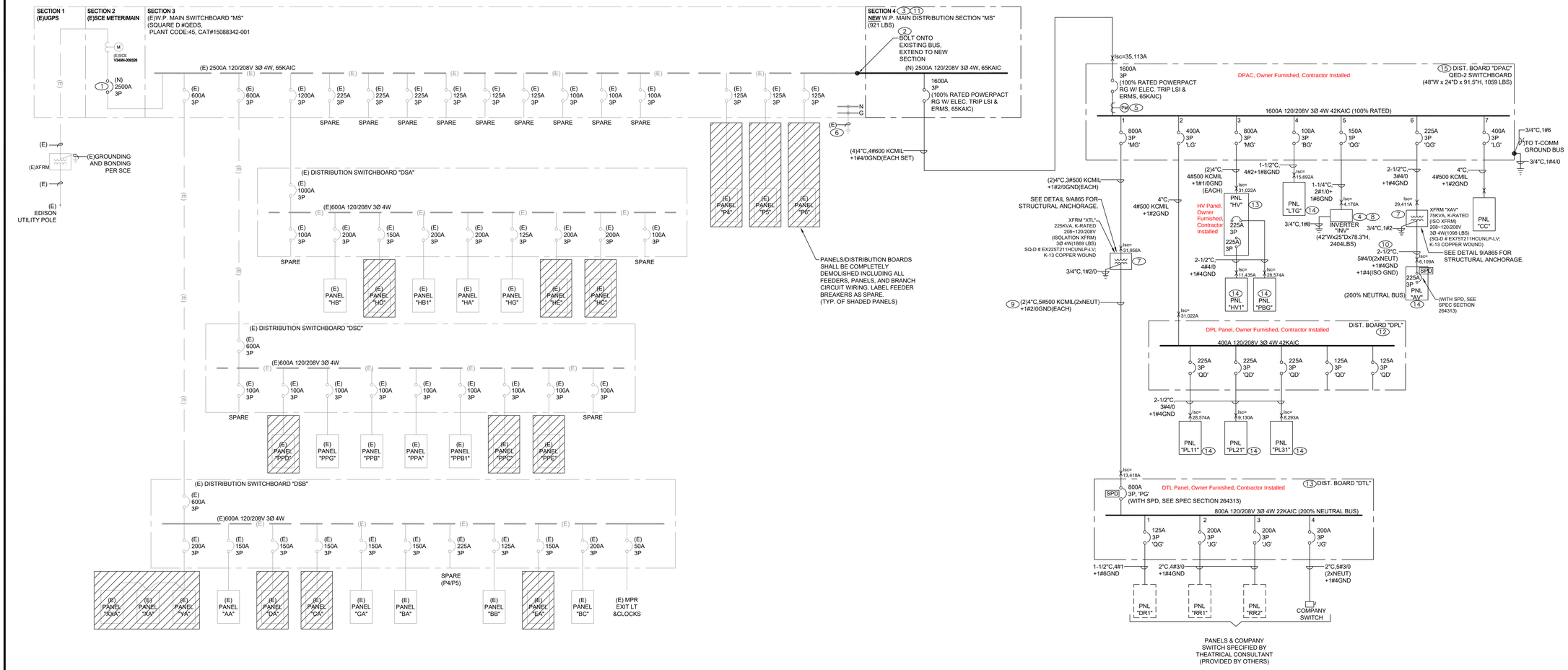

SINGLE LINE DIAGRAM | SCALE NTS | 1

REFERENCE NOTES

1. SCHNEIDER ELECTRIC USA INC.(SEUSA) SERVICES SHALL REMOVE (1) EXISTING 2500 AF MAIN C.B. AND RETROFIT WITH NEW (1) MASTERPACT NW C.B. RATED FOR 100KA WITH MICROLOGIC TRIP UNIT, A/P TRIP UNIT KIT INCLUDING POWER SUPPLY, CPT, FUSE BLOCK WITH FUSES, ERMS SWITCH PER CEC/NEC 240.87 SEUSA SERVICES SHALL PROVIDE ALL REQUIRED COMPONENTS TO CONNECT NEW BREAKER TO EXISTING MAIN SWITCHBOARD INCLUDING BUT NOT LIMITED TO COPPER BUSSING, FRONT DOOR, BUS SUPPORTS AND BREAKER MOUNTING PLATE. SEUSA SHALL PROVIDE UL FIELD EVALUATION & REFER TO DETAILED QUOTE AND BILL OF MATERIALS PROVIDED BY SEUSA
   REFERENCE QUOTE NAME: SR # 2022-101455 2500A NW RETROFIT. QUOTE NUMBER: Q -3550985. CONTACT KEVIN KEBLER @ 714-831-7068.

   QUOTE INCLUDES THE FOLLOWING:

   ITEM # 1: 2500 A NW RETROFIT; 1 -SRVLVMMPT -LOW VOLTAGE RETROFIT & CUSTOM SOLUTIONS.
   ITEM # 2: ERMS SWITCH; 1- SRVLMMPT - LOW VOLTAGE RETROFIT & CUSTOM SOLUTIONS.
   ITEM # 3: REMOTE SITE VISIT; 1 -SRVODSOTHLVMLABOR
   ITEM # 4: INVENTORY PARTS; 1-SRVODSOTHLMLABOR
   ITEM # 5: INSTALL; 1-SRVODSOTHLVMLABOR
   ITEM # 6: STUDY; 1-SRVINAARC - SYSTEM STUDIES- IBS WHICH INCLUDES ON SITE DATA COLLECTIONS, SINGLE LINE DIAGRAM, SHORT CIRCUIT ANALYSIS, OVERCURRENT PROTECTIVE DEVICE COORDINATION ANALYSIS & ARC FLASH STUDIES.
   ITEM # 7: UL - 1- SRVODSMVCOR - REACTIVE MAINTENANCE ON MV ASSEMBLED PRODUCTS.

   DISTRICT AND CONTRACTOR SHALL BE RESPONSIBLE TO SEUSA ALL OF THE CUSTOMER RESPONSIBILITIES LISTED IN THE SEUSA QUOTE.
   REFER TO SEUSA QUOTE ATTACHED TO SPECIFICATION DIVISION 26 "APPENDIX A".
2. PROVIDE 2500-AMP BUS EXTENSION FROM EXISTING MAIN SWITCHBOARD FOR ADDITION OF NEW 1600-AMP SECTION WITH MAIN FEEDER BREAKER. REFER TO RECORD SQ-D DRAWINGS FROM ORIGINAL INSTALLATION DATE MAY,30, 2001, DIVISION 26 "APPENDIX B"
3. PROVIDE NEW NEMA 3 R SQUARE D DISTRIBUTION SECTION WITH 2500 AMPS HORIZONTAL BUS CONNECTED TO NEW BUS EXTENSION AND 1600-AMP 3P 100 % RATED ELECTRONIC BREAKER, TYPE RK WITH MICROLOGIC POWER TRIP UNIT LSI, 65 KAIC RATED DISTRIBUTION FEEDER BREAKER FOR NEW PAC. THE NEW DISTRIBUTION SECTION SHALL MATCH EXITING SWITCHGEAR LINE UP.
4. MYERS INVERTER ILLUMINATOR SUPERNOVA # 1-1 -10 - S -S B -A - 20 - 24 -C -C - F -M -Z -BIP - 2YWT
5. PROVIDE SQUARE-DPOWER LOGIC METER, #PM 5563RD, WITH CTs, PM 5563 WITH DISPLAY
6. PROVIDE TESTING AND CERTIFICATION PER NETA AND CEC ARTICLE 250
7. TRANSFORMER TO BE PROVIDED WITH VIBRATION ISOLATION. SEE STRUCTURAL/ARCHITECTURAL DETAIL 9/A865 FOR STRUCTURAL ANCHORAGE.
8. INVERTER TO BE PROVIDED WITH VIBRATION ISOLATION. SEE STRUCTURAL/ARCHITECTURAL DETAIL 10/A865 FOR STRUCTURAL ANCHORAGE.
9. PROVIDE FLEX CONDUIT CONNECTION FROM TRANSFORMER TO DIST. PANEL "DTL"
10. PROVIDE VIBRATION ISOLATION ON SUPPORT HANGARS FOR FEEDER FROM TRANSFORMER TO PANEL "AV"
11. REFER TO DETAIL 13/A811 FOR STRUCTURAL ANCHORAGE, MAX. WEIGHT 921LBS.
12. REFER TO DETAIL 1/A865 FOR STRUCTURAL ANCHORAGE, MAX. WEIGHT 185LBS.
13. REFER TO DETAIL 2/A865 FOR STRUCTURAL ANCHORAGE, MAX. WEIGHT 447LBS.
14. REFER TO DETAIL 3/A865 FOR STRUCTURAL ANCHORAGE, MAX. WEIGHT 125LBS.
15. REFER TO DETAIL 8/A865 FOR STRUCTURAL ANCHORAGE, MAX. WEIGHT 1059LBS.

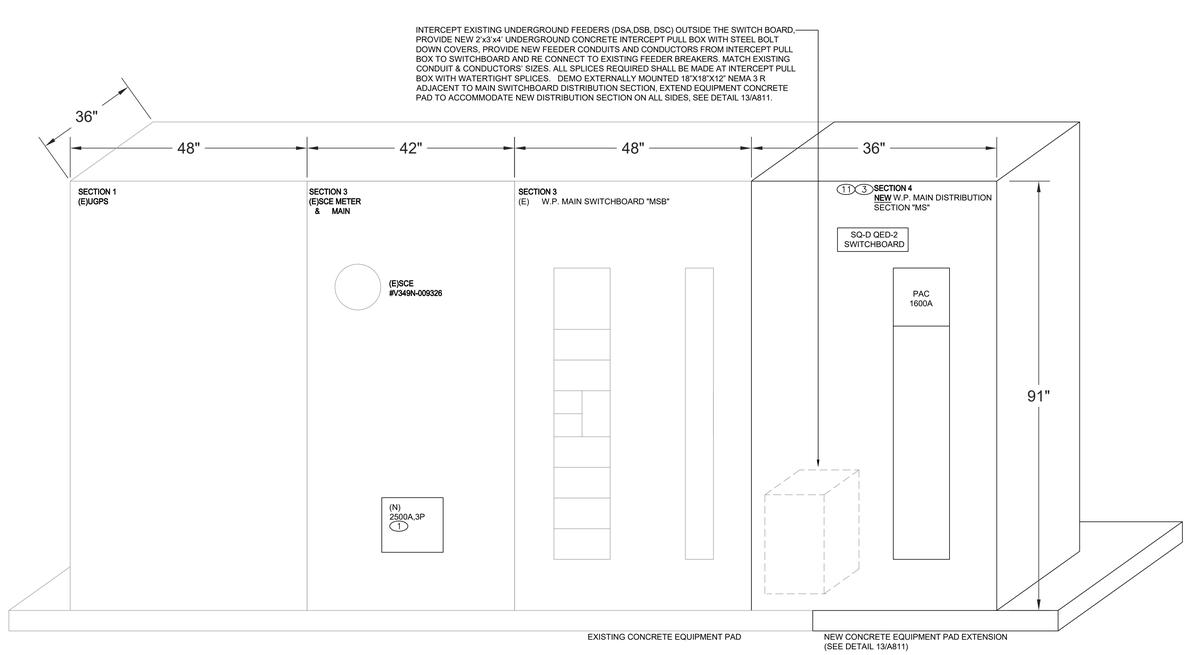

MS ELEVATION | SCALE NTS | 2

APPL. No. A 03-122864

IDENTIFICATION STAMP
DIV. OF THE STATE ARCHITECT
APP: 03-122864 INC:
REVIEWED FOR
SS ☑ FLS ☑ ACS ☑
DATE: 10/03/2023

DSA Stamp

Architect

RACHLIN PARTNERS
8840 National Boulevard
Culver City, CA 90232
310.204.3400

Disclaimer:
THESE DRAWINGS ARE THE PROPERTY OF THE ARCHITECT. THE DESIGNS SHOWN AND DESCRIBED HEREIN INCLUDING ALL TECHNICAL DRAWINGS ARE PROPRIETARY AND CANNOT BE COPIED, DUPLICATED OR COMMERCIALLY EXPLOITED, IN WHOLE OR IN PART. THE DRAWINGS AND SPECIFICATIONS SHALL NOT BE USED BY THE OWNER ON OTHER PROJECTS, FOR ADDITIONS TO THIS PROJECT, OR FOR COMPLETION OF THIS PROJECT BY OTHERS. THE OWNER AGREES TO HOLD HARMLESS, INDEMNIFY AND DEFEND THE ARCHITECT AGAINST ALL DAMAGES, CLAIMS AND LOSSES, INCLUDING DEFENSE COSTS, ARISING OUT OF ANY REUSE OF PLANS AND SPECIFICATIONS WITHOUT THE WRITTEN AUTHORIZATION OF THE ARCHITECT OF RECORD.

Copyright 2022 Rachlin Partners, All Rights Reserved.

Performing Arts Center
Hacienda La Puente Unified School District

635 North California Avenue
La Puente, CA 91744

Rev	Date	Issue
1	7.22.22	50% DD
2	10.21.22	50% CD
3	12.09.22	100% DSA Submittal
4	06.19.23	100% DSA Resubmittal
5	09.20.23	DSA Back Check

Date: 09/20/23
Scale: As Shown
Drawn By: --
Checked By: --

Architect / Engineer Stamp

LICENSED ARCHITECT RICHARD D. RACHLIN NO. C-25229 REN. 3-28-25 STATE OF CALIFORNIA
REGISTERED PROFESSIONAL ENGINEER MARK S. YU No.E 17233 Exp.6/30/2024 ELECTRICAL STATE OF CALIFORNIA

Consultants
Miyamoto International, Inc.
The Ruzika Company, Inc,
MDC Consulting Engineers
Pocock Design Solutions
Newson Brown Acoustics, LLC
VCA Engineers, Inc.
HJSA Consulting
L.A. Design Associates, Inc.

Sheet Title
Electrical Single Line Diagram

Sheet Number
E002

Plot Date: 9/20/2023 9:35:56 AM Last Save By: Tom Law Login: Tom Law J:\Project Files 2022\2022-019 Hacienda La Puente PAC\Electrical Drawings\E\E002 - Single Line Diagram.dwg
C:\Users\Tom Law\Documents\22_R[PLUS]PAC_Central_tom.law.rvt

DATE: 20-Sep-23 | **PANEL VOLTAGE:** 208/120V | **CIRCUIT CODE:** 1=(CONTINUOUS)
LOCATION | **PHASE & WIRE:** 3PH, 4W | 2=(NON-CONTINUOUS)
PANEL: DTL | **COPPER BUS:** 800A | 3=(RECEPTACLES)
AIC RATING: 22KAIC | **MAINS CB:** MLO | I -LINE DISTRIBUTION; 200% NEUTRAL,SPD

CKT NO.	CKT CODE	CB TRIP	CB POLE	LOAD DESIGNATION	MISC	REC	LITE	LOAD VA	PHASES A	PHASES B	PHASES C	LOAD VA	LOAD DESIGNATION	MISC	REC	LITE	CB POLE	CB TRIP	CKT CODE	CKT NO.
1	2	125	3	DR1	1				0											2
3	2	-	-	-						0										4
5	2	-	-	-							0									6
7	1	200	3	RR1	1				0											8
9	1	-	-	-						0										10
11	1	-	-	-							0									12
13	2	200	3	RR2	1				0											14
15	2	-	-	-						0										16
17	2	-	-	-							0									18
19	2	200	3	COMPANY SWITCH	2				0											20
21	2	-	-	-						0			-				-	-		22
23	2	-	-	-							0		-				-	-		24
25									0											26
27										0										28
29											0									30
31									0											32
33										0										34
35											0									36
37									0											38
39										0										40
41											0									42
				TOTAL				0	0	0	0									

DTL Panel, Owner Furnished, Contractor Installed

CONNECTED KVA	0.0
CONN.KVA (CODE 1)	0.0
CONN.KVA (CODE 2)	0.0
CONN.KVA (CODE 3)	0.0
FEEDER DEMAND KVA	0.0
FEEDER DEMAND AMPS	0.0

SQ-D TYPE #HCPSU (86"Hx26"Wx9.5"D)
FEED FROM XXX

DATE: 20-Sep-23 | **PANEL VOLTAGE:** 208/120V | **CIRCUIT CODE:** 1=(CONTINUOUS)
LOCATION | **PHASE & WIRE:** 3PH, 4W | 2=(NON-CONTINUOUS)
PANEL: PL21 | **COPPER BUS:** 225A | 3=(RECEPTACLES)
AIC RATING: 10KAIC | **MAINS CB:** MLO

CKT NO.	CKT CODE	CB TRIP	CB POLE	LOAD DESIGNATION	MISC	REC	LITE	LOAD VA	PHASES A	PHASES B	PHASES C	LOAD VA	LOAD DESIGNATION	MISC	REC	LITE	CB POLE	CB TRIP	CKT CODE	CKT NO.
1		20	1	SPARE					360			360	2				1ST FL LOBBY RECEPTS	1	20	3	2
3	3	20	1	BOX.BOOK THTR RECEPT		2		360		360							SPARE	1	20		4
5	3	20	1	BOX.BOOK THTR RECEPT		2		360			360						SPARE	1	20		6
7	3	20	1	REAR THTR/VEST/ CONV REC		3		540	540								SPARE	1	20		8
9	3	20	1	REAR THTR/VEST/ CONV REC		3		540		540							SPARE	1	20		10
11	2	20	1	AV CONTROL BOOTH		2		360			360						SPARE	1	20		12
13	2	20	1	AV CONTROL BOOTH		2		360	360								SPARE	1	20		14
15	2	20	1	AV CONTROL BOOTH		2		360		360							SPARE	1	20		16
17		20	1	SPARE							0						SPARE	1	20		18
19		20	1	SPARE					0								SPARE	1	20		20
21		20	1	SPARE						0							SPARE	1	20		22
23		20	1	SPARE							0						SPARE	1	20		24
25		20	1	SPARE					0								SPARE	1	20		26
27		20	1	SPARE						0							SPARE	1	20		28
29		20	1	SPARE							0						SPARE	1	20		30
31		20	1	SPARE					0								SPARE	1	20		32
33		20	1	SPARE						0							SPARE	1	20		34
35		20	1	SPARE							0						SPARE	1	20		36
37		20	1	SPARE					0								SPARE	1	20		38
39		20	1	SPARE						0							SPARE	1	20		40
41		20	1	SPARE							0						SPARE	1	20		42
				TOTAL				1260	1260	720										

CONNECTED KVA	3.2
CONN.KVA (CODE 1)	0.0
CONN.KVA (CODE 2)	1.1
CONN.KVA (CODE 3)	2.2
FEEDER DEMAND KVA	3.2
FEEDER DEMAND AMPS	9.0

SQ-D TYPE #NQ
FEED FROM DIST. BOARD "DPL"

DATE: 20-Sep-23 | **PANEL VOLTAGE:** 208/120V | **CIRCUIT CODE:** 1=(CONTINUOUS)
LOCATION | **PHASE & WIRE:** 3PH, 4W | 2=(NON-CONTINUOUS)
PANEL: HV | **COPPER BUS:** 800A | 3=(RECEPTACLES)
AIC RATING: 42KAIC | **MAINS CB:** MLO | I -LINE DISTRIBUTION

CKT NO.	CKT CODE	CB TRIP	CB POLE	LOAD DESIGNATION	MISC	REC	LITE	LOAD VA	PHASES A	PHASES B	PHASES C	LOAD VA	LOAD DESIGNATION	MISC	REC	LITE	CB POLE	CB TRIP	CKT CODE	CKT NO.
1	2	100	3	AC-1	1			10920	15480			4560		1			AC-4	3	50	2	2
3	2	-	-	-				10920		15480		4560					-	-	-	2	4
5	2	-	-	-				10920			15480	4560					-	-	-	2	6
7	1	125	3	AC-2	1			12000	24000			12000		1			AC-3	3	125	2	8
9	1	-	-	-				12000		24000		12000					-	-	-	2	10
11	1	-	-	-				12000			24000	12000					-	-	-	2	12
13	2	100	3	AC-5	1			10440	15600			5160		1			AC-6	3	60	2	14
15	2	-	-	-				10440		15600		5160					-	-	-	2	16
17	2	-	-	-				10440			15600	5160					-	-	-	2	18
19	2	20	1	EF-3&4	2			600	4534			3934					PANEL HV1	3	225	2	20
21	2	30	2	SHP-1				1976		5845		3869					-	-	-	2	22
23	2	-	-	-				1976			4969	2993					-	-	-	2	24
25	2	20	1	HVAC AUTOMATIC SHUT OFF	6			300	16460			16160					PANEL PBG	3	225	2	26
27										14540		14540					-	-	-	2	28
29											15300	15300					-	-	-	2	30
31									0												32
33										0											34
35											0										36
37									0												38
39										0											40
41											0										42
				TOTAL				76074	75465	75349											

HV Panel, Owner Furnished, Contractor Installed

CONNECTED KVA	226.9
CONN.KVA (CODE 1)	36.0
CONN.KVA (CODE 2)	190.9
CONN.KVA (CODE 3)	0.0
FEEDER DEMAND KVA	235.9
FEEDER DEMAND AMPS	654.8

SQ-D TYPE #HCPSU (86"Hx26"Wx9.5"D)
FEED FROM XXX

DATE: 20-Sep-23 | **PANEL VOLTAGE:** 208/120V | **CIRCUIT CODE:** 1=(CONTINUOUS)
LOCATION | **PHASE & WIRE:** 3PH, 4W | 2=(NON-CONTINUOUS)
PANEL: LTG | **COPPER BUS:** 100A | 3=(RECEPTACLES)
AIC RATING: 22KAIC | **MAINS CB:** MLO

CKT NO.	CKT CODE	CB TRIP	CB POLE	LOAD DESIGNATION	MISC	REC	LITE	LOAD VA	PHASES A	PHASES B	PHASES C	LOAD VA	LOAD DESIGNATION	MISC	REC	LITE	CB POLE	CB TRIP	CKT CODE	CKT NO.
1	1	20	1	EXTERIOR POLE LIGHTING			4	816	1176			360	23				LOBBY RESTROOM LTG	1	20	1	2
3	1	20	1	EXTERIOR TREE UPLIGHT			30	240		1345		1105	20				DRESSING & GREEN RM LTG	1	20	1	4
5	2	20	1	EXTERIOR POLE LIGHTING			3	612			1571	959	19				SHOP/STOR/ELEC/MDF LTG	1	20	1	6
7	2	20	1	EXT LANDSCAPE AREA			41	814	1323			509	21				CONTROL BOOTH LTG	1	20	1	8
9	1	20	1	EXTERIOR SIGNAGE			30	120		414		294	7				FOLLOW SPOT LTG	1	20	1	10
11		20	1	SPARE							40	40	8				EXIT SIGN	1	20	1	12
13		20	1	SPARE					0								SPARE	1	20		14
15		20	1	SPARE						0							SPARE	1	20		16
17		20	1	SPARE							0						SPARE	1	20		18
19		20	1	SPARE					0								SPARE	1	20		20
21		20	1	SPARE						0							SPARE	1	20		22
23		20	1	SPARE							0						SPARE	1	20		24
25		20	1	SPARE					0								SPARE	1	20		26
27		20	1	SPARE						0							SPARE	1	20		28
29		20	1	SPARE							0						SPARE	1	20		30
31		20	1	SPARE					0								SPARE	1	20		32
33		20	1	SPARE						0							SPARE	1	20		34
35		20	1	SPARE							0						SPARE	1	20		36
37		20	1	SPARE					0								SPARE	1	20		38
39		20	1	SPARE						0							SPARE	1	20		40
41		20	1	SPARE							0						SPARE	1	20		42
				TOTAL				2499	1759	1611											

CONNECTED KVA	5.9
CONN.KVA (CODE 1)	4.4
CONN.KVA (CODE 2)	1.4
CONN.KVA (CODE 3)	0.0
FEEDER DEMAND KVA	7.0
FEEDER DEMAND AMPS	19.4

FEED FROM XXX

DATE: 20-Sep-23 | **PANEL VOLTAGE:** 208/120V | **CIRCUIT CODE:** 1=(CONTINUOUS)
LOCATION | **PHASE & WIRE:** 3PH, 4W | 2=(NON-CONTINUOUS)
PANEL: DPL | **COPPER BUS:** 400A | 3=(RECEPTACLES)
AIC RATING: 42KAIC | **MAINS CB:** MLO | I -LINE DISTRIBUTION; 200% NEUTRAL,SPD

CKT NO.	CKT CODE	CB TRIP	CB POLE	LOAD DESIGNATION	MISC	REC	LITE	LOAD VA	PHASES A	PHASES B	PHASES C	LOAD VA	LOAD DESIGNATION	MISC	REC	LITE	CB POLE	CB TRIP	CKT CODE	CKT NO.
1	2	225	3	PL11				10118	10118											
3	2	-	-	-				9720		9720										
5	2	-	-	-				8840			8840									
7	1	225	3	PL21				1260	1260											
9	1	-	-	-				1260		1260										
11	1	-	-	-				720			720									
13	2	225	3	PL31				1800	1800											
15	2	-	-	-				2160		2160										
17	2	-	-	-				1080			1080									
19	2	125	3	SPARE					0											
21	2	-	-	-						0			-				-	-		
23	2	-	-	-							0		-				-	-		
25	2	125		SPARE					0											
27	2	-	-	-						0										
29	2	-	-	-							0									
31									0											
33										0										
35											0									
37									0											
39										0										
41											0									
				TOTAL				13178	13140	10640										

DPL Panel, Owner Furnished, Contractor Installed

CONNECTED KVA	37.0
CONN.KVA (CODE 1)	3.2
CONN.KVA (CODE 2)	33.7
CONN.KVA (CODE 3)	0.0
FEEDER DEMAND KVA	37.8
FEEDER DEMAND AMPS	104.8

SQ-D TYPE #HCPSU (86"Hx26"Wx9.5"D)
FEED FROM XXX

DATE: 20-Sep-23 | **PANEL VOLTAGE:** 208/120V | **CIRCUIT CODE:** 1=(CONTINUOUS)
LOCATION | **PHASE & WIRE:** 3PH, 4W | 2=(NON-CONTINUOUS)
PANEL: PL31 | **COPPER BUS:** 125 A | 3=(RECEPTACLES)
AIC RATING: 10KAIC | **MAINS CB:** MLO

CKT NO.	CKT CODE	CB TRIP	CB POLE	LOAD DESIGNATION	MISC	REC	LITE	LOAD VA	PHASES A	PHASES B	PHASES C	LOAD VA	LOAD DESIGNATION	MISC	REC	LITE	CB POLE	CB TRIP	CKT CODE	CKT NO.
1	3	20	1	CATWALK PBS		8		1440	1440				1				GRIDRON J-BOX #1	1	20		2
3	3	20	1	CATWALK PBS		8		1440		1440			1				GRIDRON J-BOX #2	1	20		4
5	3	20	1	STAGE PB-31		1		180			180		1				GRIDRON J-BOX #3	1	20		6
7	3	20	1	FOLLOWSPOT PB-1		1		180	180				1				GRIDRON J-BOX #4	1	20		8
9	3	20	1	FOLLOWSPOT RECEPT		4		720		720			1				CER-1	1	20		10
11	2	20	1	FOLLOWSPOT RECEPT		5		900			900						SPARE	1	20		12
13	3	20	1	STAGE PB-36		1		180	180								SPARE	1	20		14
15		20	1	SPARE							0						SPARE	1	20		16
17		20	1	SPARE								0					SPARE	1	20		18
19		20	1	SPARE					0								SPARE	1	20		20
21		20	1	SPARE						0							SPARE	1	20		22
23		20	1	SPARE							0						SPARE	1	20		24
25		20	1	SPARE					0								SPARE	1	20		26
27		20	1	SPARE						0							SPARE	1	20		28
29		20	1	SPARE							0						SPARE	1	20		30
31		20	1	SPARE					0								SPARE	1	20		32
33		20	1	SPARE						0							SPARE	1	20		34
35		20	1	SPARE							0						SPARE	1	20		36
37		20	1	SPARE					0								SPARE	1	20		38
39		20	1	SPARE						0							SPARE	1	20		40
41		20	1	SPARE							0						SPARE	1	20		42
				TOTAL				1800	2160	1080											

CONNECTED KVA	5.0
CONN.KVA (CODE 1)	0.0
CONN.KVA (CODE 2)	0.9
CONN.KVA (CODE 3)	4.1
FEEDER DEMAND KVA	5.0
FEEDER DEMAND AMPS	14.0

SQ-D TYPE #NQ
FEED FROM DIST. BOARD "DPL"

DATE: 20-Sep-23 | **PANEL VOLTAGE:** 208/120V | **CIRCUIT CODE:** 1=(CONTINUOUS)
LOCATION | **PHASE & WIRE:** 3PH, 4W | 2=(NON-CONTINUOUS)
PANEL: HV1 | **COPPER BUS:** 225A | 3=(RECEPTACLES)
AIC RATING: 22KAIC | **MAINS CB:** MLO

CKT NO.	CKT CODE	CB TRIP	CB POLE	LOAD DESIGNATION	MISC	REC	LITE	LOAD VA	PHASES A	PHASES B	PHASES C	LOAD VA	LOAD DESIGNATION	MISC	REC	LITE	CB POLE	CB TRIP	CKT CODE	CKT NO.
1	1	40	3	HP-1	1			2928	2993			65			2		FC-1&4	2	15	2	2
3	1	-	-	-				2928		2993		65					-	-	-	2	4
5	1	-	-	-				2928			2993	65			4		FC-2&3	2	15	2	6
7		20	1	SPARE					65			65					-	-	-	2	8
9		20	1	SPARE						0					1		SPARE	2	30	2	10
11		20	1	SPARE							0							-	-	2	12
13		20	1	SPARE					876			876	1	1			EF-1 & ROOF RECEPT	1	20	2	14
15		20	1	SPARE						876		876	1	1			EF-2 & ROOF RECEPT	1	20	2	16
17		20	1	SPARE							0						SPARE	1	20		18
19		20	1	SPARE					0								SPARE	1	20		20
21		20	1	SPARE						0							SPARE	1	20		22
23		20	1	SPARE							0						SPARE	1	20		24
25		20	1	SPARE					0								SPARE	1	20		26
27		20	1	SPARE						0							SPARE	1	20		28
29		20	1	SPARE							0						SPARE	1	20		30
31		20	1	SPARE					0								SPARE	1	20		32
33		20	1	SPARE						0							SPARE	1	20		34
35		20	1	SPARE							0						SPARE	1	20		36
37		20	1	SPARE					0								SPARE	1	20		38
39		20	1	SPARE						0							SPARE	1	20		40
41		20	1	SPARE							0						SPARE	1	20		42
				TOTAL				2928	3934	3869	2993										

CONNECTED KVA	10.8
CONN.KVA (CODE 1)	8.8
CONN.KVA (CODE 2)	2.0
CONN.KVA (CODE 3)	0.0
FEEDER DEMAND KVA	13.0
FEEDER DEMAND AMPS	36.1

SQ-D TYPE #NQ
FEED FROM XXX

DATE: 20-Sep-23 | **PANEL VOLTAGE:** 208/120V | **CIRCUIT CODE:** 1=(CONTINUOUS)
LOCATION | **PHASE & WIRE:** 3PH, 4W | 2=(NON-CONTINUOUS)
PANEL: CC | **COPPER BUS:** 400A | 3=(RECEPTACLES)
AIC RATING: 42KAIC | **MAINS CB:** MLO

CKT NO.	CKT CODE	CB TRIP	CB POLE	LOAD DESIGNATION	MISC	REC	LITE	LOAD VA	PHASES A	PHASES B	PHASES C	LOAD VA	LOAD DESIGNATION	MISC	REC	LITE	CB POLE	CB TRIP	CKT CODE	CKT NO.
1	2	50	2	FUTURE CAR CHARGER				4160	8320			4160					FUTURE CAR CHARGER	2	50	2	2
3	2	-	-	-				4160		8320		4160					-	-	-	2	4
5	2	50	2	FUTURE CAR CHARGER				4160			8320	4160					FUTURE CAR CHARGER	2	50	2	6
7	2	-	-	-				4160	8320			4160					-	-	-	2	8
9	2	50	2	FUTURE CAR CHARGER				4160		8320		4160					FUTURE CAR CHARGER	2	50	2	10
11	2	-	-	-				4160			8320	4160					-	-	-	2	12
13	2	50	2	FUTURE CAR CHARGER				4160	8320			4160					FUTURE CAR CHARGER	2	50	2	14
15	2	-	-	-				4160		8320		4160					-	-	-	2	16
17	2	50	2	FUTURE CAR CHARGER				4160			8320	4160					FUTURE CAR CHARGER	2	50	2	18
19	2	-	-	-				4160	8320			4160					-	-	-	2	20
21	2	50	2	FUTURE CAR CHARGER				4160		8320		4160					FUTURE CAR CHARGER	2	50	2	22
23	2	-	-	-				4160			8320	4160					-	-	-	2	24
25	2	50	2	FUTURE CAR CHARGER				4160	8320			4160					FUTURE CAR CHARGER	2	50	2	26
27	2	-	-	-				4160		8320		4160					-	-	-	2	28
29	2	50	2	FUTURE CAR CHARGER				4160			8320	4160					SPACE				30
31	2	-	-	-				4160	4160								SPACE				32
33	2	50	2	FUTURE CAR CHARGER				4160		4160							SPACE				34
35	2	-	-	-				4160			4160						SPACE				36
37				SPACE					0								SPACE				38
39				SPACE						0							SPACE				40
41				SPACE							0						SPACE				42
				TOTAL				45760	45760	41600											

CONNECTED KVA	133.1
CONN.KVA (CODE 1)	0.0
CONN.KVA (CODE 2)	133.1
CONN.KVA (CODE 3)	0.0
FEEDER DEMAND KVA	133.1
FEEDER DEMAND AMPS	369.5

FEED FROM XXX

SPLIT BUS

DATE: 20-Sep-23 | **PANEL VOLTAGE:** 208/120V | **CIRCUIT CODE:** 1=(CONTINUOUS)
LOCATION | **PHASE & WIRE:** 3PH, 4W | 2=(NON-CONTINUOUS)
PANEL: PL11 | **COPPER BUS:** 225A | 3=(RECEPTACLES)
AIC RATING: 42KAIC | **MAINS CB:** MLO

CKT NO.	CKT CODE	CB TRIP	CB POLE	LOAD DESIGNATION	MISC	REC	LITE	LOAD VA	PHASES A	PHASES B	PHASES C	LOAD VA	LOAD DESIGNATION	MISC	REC	LITE	CB POLE	CB TRIP	CKT CODE	CKT NO.
1	3	20	1	THTR BOX.CONV PWR		2		360	1440			1080					CORR/ORCH LVL CONV. REC.	1	20	3	2
3	3	20	1	THTR BOX.CONV PWR		2		360		1440		1080					CORR/ORCH LVL CONV. REC.	1	20	3	4
5	3	20	1	THTR BOX.CONV PWR		1		180			1080	900					CORR/ORCH LVL CONV. REC.	1	20	3	6
7	3	20	1	THTR BOX.CONV PWR		1		180	900			720					TOOLS/SHOP/STOR REC	1	20	3	8
9	3	20	1	SPARE						540		540					TOOLS/SHOP/STOR REC	1	20	3	10
11	3	20	1	MENS DRESSING		2		500			1040	540					TOOLS/SHOP/STOR REC	1	20	3	12
13	3	20	1	MENS DRESSING		2		500	1220			720					OFFICE 129 RECEPTS	1	20	3	14
15	3	20	1	MENS DRESSING		2		500		860		360					OFFICE 129 RECEPTS	1	20	3	16
17	3	20	1	MENS DRESSING		2		500			1220	720					ORCH/PART THTR RECEPTS	1	20	2	18
19	3	20	1	MENS DRESSING		2		500	1220			720					ORCH/PART THTR RECEPTS	1	20	2	20
21	3	20	1	MENS DRESSING		2		500		1220		720					LOBBY RECEPTS	1	20	2	22
23	3	20	1	MENS DRESSING		2		500			1040	540					ROOF RECEPTS	1	20	3	24
25	3	20	1	MENS DRESSING		2		500	1028			528				1	EF-5	1	20	2	26
27	3	20	1	WOMENS DRESSING		2		500		900		400			1	1	EF-6 & ROOF RECEPT	1	20	2	28
29	3	20	1	WOMENS DRESSING		2		500			1300	800			1		STAGE EQUIP RACKK CER-1	1	20	2	30
31	3	20	1	WOMENS DRESSING		2		500	1000			500				1	CRS-4 FLOOR BOX	1	20	2	32
33	3	20	1	WOMENS DRESSING		2		500		1300		800			1		EQUIP RACK CER-2	1	20	2	34
35	3	20	1	WOMENS DRESSING		2		500			1300	800			1		ORCH FLOOR BOX.CRS-4	1	20	2	36
37	3	20	1	WOMENS DRESSING		2		500	1500			1000			2		MDF ROOM RECEPT	1	20	2	38
39	3	20	1	WOMENS DRESSING		2		500		1500		1000			2		MDF ROOM RECEPT	1	20	2	40
41	3	20	1	WOMENS DRESSING		2		500			1500	1000			2		MDF ROOM RECEPT	1	20	2	42
43	2	20	1	SMOK

APPL. No. A 03-122864

EMERGENCY LIGHTING TRANSFER SWITCH SCHEDULE

ZONE	NORMAL CIRCUIT	ZONE LOCATION	POWER SOURCE	EMERGENCY TRANSFER SWITCH	EMER CIRCUIT
23	DR1 23	AUDITORIUM AISLE STEPS	NORMAL	N/A	N/A
24	DR1 24	AUDITORIUM CROSS AISLE	NORMAL	N/A	N/A
25	DR1 25	S/L VEST LOW	NORMAL	N/A	N/A
26	DR1 26	UPPER S/L VEST LOW	NORMAL	N/A	N/A
27	DR1 27	STAGE APRON LOW LEVEL	NORMAL	N/A	N/A
28	DR1 28	AUDITORIUM WALL LOW-LEVEL	NORMAL	N/A	N/A
29	DR1 29	AUDITORIUM SIDE WALKWAY LOW-LEVEL	NORMAL	N/A	N/A
30	DR1 30	AUDITORIUM SIDE WALLS	NORMAL	N/A	N/A
31	DR1 31	LOBBY PENDANTS	EMER	TS#2	INV-6
32	DR1 32	LOBBY W ENTRY	NORMAL	N/A	N/A
33	DR1 33	LOBBY STAIR RAILING	NORMAL	N/A	N/A
115	RR2 19	FLY GALLERY	EMER	TS#1	INV-5
116	RR2 20	LOADING GALLERY	EMER	TS#21	INV-5
117NORM	RR2 21	AUDITORIUM HIGH CLNG (NORMAL)	NORMAL	N/A	N/A
117EMER	RR2 22	AUDITORIUM HIGH CLNG(EMER)	EMER	TS#3	INV-8
119	RR2 23	S/L LOCK VESTIBULE UPPER	EMER	TS#4	INV-6
120	RR2 24	STAGE APRON ALCOVES	EMER	TS#5	INV-6
121	RR2 25	S/L LOCK VESTIBULE HR	EMER	TS#6	INV-6
122	RR2 26	S/L LOCK VESTIBULES HL	EMER	TS#7	INV-6
123	RR2 27	ARBOR WELL	NORMAL	N/A	N/A
124	RR2 28	BACKSTAGE CORRIDOR	EMER	TS#8	INV-6
125	RR2 29	BACKSTAGE CORRIDOR AT SHOP	EMER	TS#9	INV-6
126	RR2 30	BACKSTAGE CORRIDOR	EMER	TS#10	INV-6
128	RR2 32	STAGE	EMER	TS#11	INV-7
129	RR2 33	BOX BOOMS SL	EMER	TS#18	INV-5
130	RR2 34	BOX BOOMS SR	EMER	TS#19	INV-5
131	RR2 35	FOH CATWALKS	EMER	TS#20	INV-5
133	RR2 37	LOBBY UPPER ALCOVE	EMER	TS#12	INV-5
134	RR2 38	LOBBY HIGH CEILING	EMER	TS#13	INV-5
135	RR2 39	LOBBY LOW CEILING	EMER	TS#14	INV-5
136	RR2 40	LOBBY RESTROOM ALCOVES	EMER	TS#15	INV-5
137	RR2 41	LOBBY FEATURE WALL	NORMAL	N/A	N/A
138	RR2 42	LOBBY NORTH	EMER	TS#16	INV-5
139	RR2 43	LOBBY SOUTH	EMER	TS#17	INV-5
141	RR2 45	LOBBY NORTH	NORMAL	N/A	N/A
143	RR2 47	LOBBY SOUTH	NORMAL	N/A	N/A

PANEL: INV
INPUT VOLT 208,1P

KVA SIZE: 10KVA

CKT NO.	CB TRIP	CB P	CB VOLT	LOAD DESIGNATION DESCRIPTION	MISC	REC	LITE	LOAD VA
1	20	1	120	RESTROOM LTG			8	64
2	20	1	120	DRESSING RM LTG			5	141
3	20	1	120	ELEC ROOM LTG			2	84
4	20	1	120	EXT EXIT LTG			17	272
5	20	1	120	THEATRICAL LTG EMER			*	1373
6	20	1	120	THEATRICAL LTG EMER			*	1462
7	20	1	120	THEATRICAL LTG EMER			*	990
8	20	1	120	THEATRICAL LTG EMER			*	495
9	20	1	120	EXT SIGNS			8	40
10	20	1	120	SPARE				
11	20	1	120	SPARE				
12	20	1	120	SPARE				
13	20	1	120	SPARE				
14	20	1	120	SPARE				
15	20	1	120	SPARE				
16	20	1	120	SPARE				
17	20	1	120	SPARE				
18	20	1	120	SPARE				
19	20	1	120	SPARE				
20	20	1	120	SPARE				
21	20	1	120	SPARE				
22	20	1	120	SPARE				
23	20	1	120	SPARE				
24	20	1	120	SPARE				
							TOTAL(VA)	4921

*SEE EMERGENCY LIGHTING TRANSFER SCHEDULE SCHEDULE

HACIENDA LA PUENTE PAC LIGHTING FIXTURE SCHEDULE

FIXTURE TYPE	MANUFACTURER	MODEL	DESCRIPTION	MOUNTING	LAMP TYPE	WATT	VOLTAGE
D1F	GOTHAM (OR EQUAL BY INTENSE, PORTFOLIO)	EVO4-27/05-<FINISH>-LSS-MWD-120-EZ8-NLT-90CRI, SCA4-XD (OR APPROVED EQUAL BY INTENSE, PORTFOLIO)	RECESSED LED DOWNLIGHT WITH 4" APERTURE, 2700K, 500 LUMEN OUTPUT, 0-10V DRIVER, AND MEDIUM-WIDE OPTICS, AND SLOPE CEILING ADAPTER	RECESSED	2700K LED	7.2	120
D1Wa	GOTHAM (OR EQUAL BY INTENSE, PORTFOLIO)	EVO4-27/05-<FINISH>-LSS-MWD-120-EZ1-90CRI OR APPROVED EQUAL BY INTENSE, PORTFOLIO	RECESSED LED DOWNLIGHT WITH 4" APERTURE, 2700K, 500 LUMEN OUTPUT, 0-10V DRIVER, AND MEDIUM-WIDE OPTICS	RECESSED	2700K LED	7.2	120
D1Wb	GOTHAM (OR EQUAL BY INTENSE, PORTFOLIO)	EVO4-30/05-<FINISH>-LSS-MWD-120-EZ1-90CRI OR APPROVED EQUAL BY INTENSE, PORTFOLIO	RECESSED LED DOWNLIGHT WITH 4" APERTURE, 3000K, 500 LUMEN OUTPUT, 0-10V DRIVER, AND MEDIUM-WIDE OPTICS	RECESSED	3000K LED	7.2	120
D2	GOTHAM (OR EQUAL BY INTENSE, PORTFOLIO)	EVO4-27/15-<FINISH>-LSS-MWD-120-EZ1-90CRI OR APPROVED EQUAL BY INTENSE, PORTFOLIO	RECESSED LED DOWNLIGHT WITH 4" APERTURE, 2700K, 500 LUMEN OUTPUT, 0-10V DRIVER, AND WIDE OPTICS	RECESSED	2700K LED	15.1	120
D3	GOTHAM (OR EQUAL BY INTENSE, PORTFOLIO)	EVO4LW-27/05-<FINISH>-LSS-120-EZ10-90CRI OR APPROVED EQUAL BY INTENSE, PORTFOLIO	RECESSED LED LENSED WALLWASHER WITH 4" APERTURE, 2700K, 500 LUMEN OUTPUT, 0-10V DRIVER,	RECESSED	2700K LED	6.9	120
D4	GOTHAM	ICO-27/20-4AR-LD-40D-120-EZ10	RECESSED LED WALLWASHER WITH 4" APERTURE, 2700K, 2000 LUMEN OUTPUT, 0-10V DRIVER, AND 40DEG OPTICS	RECESSED	2700K LED	21.5	120
D5	GOTHAM	EVO4LW-27/10-<FINISH>-LSS-120-EZ10-90CRI OR APPROVED EQUAL BY INTENSE, PORTFOLIO	LED DOWNLIGHT WITH 4" APERTURE, LENSED WALLWASH OPTIC, AND 0-10V DRIVER	RECESSED	2700K LED	8.8	120
F1	LITHONIA (OR EQUAL BY METALUX, WILLIAMS)	ZL1D-L48-5000LM-FST-MVOLT-35K-80CRI	48" LED UTILITY STRIPLIGHT WITH 3500K, 5000 LUMEN OUTPUT AND DROP LENS.	SURFACE		42	120
F1A	LITHONIA (OR EQUAL BY METALUX, WILLIAMS)	ZL1-L96-10000LM-FST-MVOLT-35K-80CRI	96" LED UTILITY STRIPLIGHT WITH 3500K, 5000 LUMEN OUTPUT AND DROP LENS.			84	120
F2	MARK LIGHTING	SL1L-LOP-4FT-<CLNG>-90CRI-30K-80LMF-MIN1-QCBFB-MVOLT-<CLNG>/BLKT-NLIGHT	RECESSED 48" LED LINEAR WITH SHIELDING BAFFLES, 3000K, AND DRIVER COMPATIBLE WITH NLIGHT CONTROL SYSTEM, BLACK	RECESSED		29	120
F3	LITHONIA	VTL4-30L-ADP-MVOLT-EZ1-LP930-N100	RECESSED 1X4 LED TROFFER WITH 0-10V DIMMING	RECESSED		17.6	120
F4	LITHONIA	2VTL4-33L-ADP-MVOLT-EZ1-LP930-N100	RECESSED 2X2 LED TROFFER WITH 0-10V DIMMING	RECESSED		26.3	120
F5	MARK LIGHTING	SL4L-LOP-<LENGTH PER PLAN>FLP-<CEILING>-90CRI-27K-400LMF-MIN10-120-NLIGHT	RECESSED CONTINUOUS-ROW LED LUMINAIRE WITH 0-10V DIMMING COMPATIBLE WITH NLIGHT CONTROL SYSTEM	RECESSED		14.1	120
F5E	MARK LIGHTING	SL4L-LOP-<LENGTH PER PLAN>FLP-<CEILING>-90CRI-27K-400LMF-MIN10-120-NLIGHT	RECESSED CONTINUOUS-ROW LED LUMINAIRE ON EMERGENCY CIRCUIT WITH 0-10V DIMMING COMPATIBLE WITH NLIGHT CONTROL SYSTEM	RECESSED		14.1	120
L1	ALUZ	A1-ZAKY-SOP-SF-3W-DMX-27K-DRY-WH-<CONTINUOUS PER ELEVATIONS> (OR EQUAL BY LUMINII, ACCLAIM)	LINEAR LED COVELIGHT WITH 2700K, 324 LUMEN PER FOOT OUTPUT, SEMI-FROSTED LENS, DMX DIMMABLE REMOTE TRANSFORMER, AND MOUNTING EXTRUSION	SURFACE		3	120
P1F	GOTHAM	ICO CYL-27/50-6AR-LD-45D-120-EDXB-PM-DBL-CYSX	6" ROUND APERTURE PENDANT MOUNTED LED CYLINDER DOWNLIGHT WITH FLOOD OPTIC, <X"> STEM WITH SDEG HANG STRAIGHT SWIVEL AND DMX DRIVER IN REMOTE ENCLOSURE	PENDANT (1)		61	
P1W	GOTHAM	ICO CYL-27/45-6AR-LD-50D-120-EDXB-PM-DBL-CYSX	6" ROUND APERTURE PENDANT MOUNTED LED CYLINDER DOWNLIGHT WITH WIDE FLOOD OPTIC, <X"> STEM WITH SDEG HANG STRAIGHT SWIVEL AND DMX DRIVER	PENDANT (1)		52	
P1W-R	GOTHAM	ICO CYL-27/45-6AR-LD-50D-120-EDXB-PM-DBL-CYSX	6" ROUND APERTURE PENDANT MOUNTED LED CYLINDER DOWNLIGHT WITH WIDE FLOOD OPTIC, <X"> STEM WITH SDEG HANG STRAIGHT SWIVEL AND DMX DRIVER IN REMOTE ENCLOSURE	PENDANT (1)		52	
P1VW-R	GOTHAM	ICO CYL-27/45-6AR-LD-65D-120-EDXB-PM-DBL-CYSX	6" ROUND APERTURE PENDANT MOUNTED LED CYLINDER DOWNLIGHT WITH VERY-WIDE FLOOD OPTIC, <X"> STEM WITH SDEG HANG STRAIGHT SWIVEL AND DMX DRIVER IN REMOTE ENCLOSURE	PENDANT (1)		52	
P2F	GOTHAM	EVO4PC-30/05-<FINISH>-MWD-LSS-MVOLT-EZ10-IBXCC-PCAN-S<LENGTH>-90CRI-<FINISH>	4" ROUND APERTURE PENDANT MOUNTED LED CYLINDER DOWNLIGHT WITH FLOOD OPTIC, <X"> STEM WITH SDEG HANG STRAIGHT SWIVEL AND 0-10V DRIVER	PENDANT (1)		6.9	
P3	A-LIGHT	G3-4'-LS-35-U-HE-S-W-D-MRL2 LED DOWNLIGHT MODULES: E-4-U-30-48-D	PENDANT-MOUNTED LINEAR DIRECT FIXTURE WITH ADJUSTABLE LED DOWNLIGHT MODULE ON SEPARATE 0-10V DIMMABLE CIRCUIT EACH END	PENDANT (1)		19	
P4	MARK LIGHTING	S1LD-LCB-4FT-MSL4-90CRI-30K-800LMF-MIN1-QCBFB-MVOLT-BLKT-NLIGHT-F2/72A-SQCY-BLKCY-BCRD	PENDANT-MOUNTED 48" LED LINEAR WITH SHIELDING BAFFLES, 3000K 0-10V DIMMING COMPATIBLE WITH NLIGHT CONTROL SYSTEM, BLACK	PENDANT (1)		32	
P4E	MARK LIGHTING	S1LD-LCB-4FT-MSL4-90CRI-30K-800LMF-MIN1-QCBFB-MVOLT-BLKT-NLIGHT-F2/72A-SQCY-BLKCY-BCRD	PENDANT-MOUNTED 48" LED LINEAR WITH SHIELDING BAFFLES ON EMERGECNY CIRCUIT, 3000K 0-10V DIMMING COMPATIBLE WITH NLIGHT CONTROL SYSTEM, BLACK	PENDANT (1)		32	
P5	LITHONIA	JCBL-9000LM-ACCR-ACRFGL-MVOLT-GZ10-30K-90CRI-PM-NPP16D, DNAXD	PENDANT-MOUNTED LED HIGH-BAY WITH CLEAR ACRYLIC REFLECTOR AND FLAT PRISMATIC LENS	PENDANT (1)		63	
P6A	EUREKA	QUADRANT 4232-23-LED-27-90-120-DV-C-<CABLE LENGTH>-<CANOPY>-WHE-WH-BYF	DECORATIVE PENDANT WITH 23" FELT SHADE	PENDANT (1)		9.8	
P6B	EUREKA	QUADRANT 4232-47-LED-27-90-120-DV-C-<CABLE LENGTH>-<CANOPY>-WHE-WH-BYF	DECORATIVE PENDANT WITH 47" FELT SHADE	PENDANT (1)		14.1	
P7	GOTHAM	EVO4PC1W-27/10-<FINISH>-LD-MVOLT-EZ10-JBX-PCAN-<STEM>-<FINISH>	4" ROUND APERTURE PENDANT MOUNTED LED CYLINDER DOWNLIGHT WITH WALLWASH OPTIC, <X> STEM WITH SDEG HANG STRAIGHT SWIVEL AND 0-10V DRIVER	PENDANT (1)		8.4	
S1F	GOTHAM	EVO4SC-27/10/FINISH-MD-LSS-MVOLT-EDXB-IBXCC-90CRI-<FINISH>	4" ROUND APERTURE SURFACE MOUNTED LED CYLINDER DOWNLIGHT WITH MEDIUM OPTIC AND DMX/RDM DRIVER	SURFACE		8.8	
S2	EUREKA	MIKA 3230-12-LED-27-90-120-DV-WH	SURFACE-MOUNTED DECORATIVE GLOBE	SURFACE		9.8	
SL1	MP LIGHTING	L740-L48-3-W27S-VOLTS-<FINISH> DRIVER: LED18W350IZ-01(DC)	ROUND RECESSED LINE VOLTAGE LED LOUVERED STEP LIGHT WITH REMOTE ELV DC DIMMABLE DRIVER	RECESSED		4	
SL2	TIVOLI	ST-27-27-S-S-<FEED>-T-<LENGTH>POWER SUPPLY INF-J-XX-X-S-12 PROVIDE WITH ALL NECESSARY ACCESSORIES FOR A COMPLETE, FUNCTIONAL INSTALLATION OR APPROVED EQUAL BY TEMPO.	LINEAR LED AT STEP EDGE WITH 2700K, XXX LUMEN PER FOOT OUTPUT, 0-10V DIMMABLE REMOTE TRANSFORMER, AND BULLNOSE MOUNTING EXTRUSION	SURFACE		0.22	
SL3	TEMPO LLC	VLP-16-27-BK PROVIDE WITH REMOTE TRANSFORMER AND FLOOR-EDGE WIREWAY SURGE SURPRESSOR SSD-120	FULLY-SHIELD LED AISLE LIGHT IN RISER-MOUNTED POST, WITH 2700K LEDS AND REMOTE TRANSFORMER	SURFACE		0.5	
T1	TIMESQUARE	BCR-9-92-27-B-120-40-NI-BD3-TE-ELV ACCESSORIES: BARN DOORS	TRACK-MOUNTED CLOSED-BACK LED ACCENT LIGHT WITH BARNDOOR ACCESSORY	TRACK		6.4	
TR1	TIMESQUARE	E-SERIES SG8-B CURRENT LIMITER: TSC-U-E-B-1 PROVIDE ALL REQUIRED LIVE END FEEDS AND MOUNTING HARDWARE FOR COMPLETE INSTALLATION	EIGHT FOOT SINGLE-CIRCUIT LINE-VOLTAGE TRACK WITH INTEGRAL 1A CURRENT LIMITER, BLACK FINISH	SURFACE			
W1	H.E. WILLIAMS	96-4-LB1-830-HIAFR-WMB-UNV	SURFACE-MOUNTED HIGH-ABUSE LED WALL BRACKET WITH 45° MOUNTING BRACKET AND ACRYLIC LENS	SURFACE		65	
W2	A-LIGHT	G3-4'-LS-35-U-KS-M-W-D-MRL2 LED DOWNLIGHT MODULES: E-4-U-30-48-D	WALL-MOUNTED LINEAR DIRECT FIXTURE WITH ASSYMETRIC LENS, ADJUSTABLE LED DOWNLIGHT MODULE ON SEPARATE 0-10V DIMMABLE CIRCUIT EACH END	SURFACE		19	
W3	CANLET	03-20W-L-W-x-OG-29	SURFACE MOUNTED LED JELLY JAR	SURFACE		20	
W4	CELESTIAL	AQR-<LAMP>-12-<FINISH>-RLG	SURFACE-MOUNTED LED CHANNEL LIGHT WITH SOCKETS 12" ON CENTER, WITH LAMP GUARDS AND 450 LUMEN, 90+ CRI FROSTED 2700K LED LAMP	SURFACE		8.8	
X1	VISUAL LIGHTING TECNOLOGY	FIBER: GALAXY SERIES PMMA STARFIELD FIBER, 2 FIBERS PSF ILLUMINATOR: UFONOVA DMX W/ ALTERNATING TWINKLE WHEEL. CONTRACTOR TO INSTALL FIBER ENDS IN CEILING PANELS PER ARCH LAYOUT	FIBER-OPTIC SYSTEM WITH DMX-CONTROLLED RGBW ILLUMINATORS			46W	
AA1	ECOSENSE	TROV L50-E-12"-04-30-90-MULT-25X75 LOCKING FINE ADJUSTMENT BRACKET: MNT-L-LFAB PROVIDE WITH ALL NECESSARY ACCESSORIES FOR A COMPLETE, FUNCTIONAL INSTALLATION (OR EQUAL BY PUREEDGE)	SURFACE-MOUNTED ADJUSTABLE LINEAR ACCENT LIGHT WITH ASYMMETRIC OPTICS	SURFACE		4	
DD1	BEGA	24 829 K3-<FINISH>	RECESSED DAMP LISTED LED LENSED DOWNLIGHT	RECESSED		8.3	
WW1	LITHONIA	WPX1 LED P2-30K-MVOLT-<FINISH>	WALL-MOUNTED WET-LOCATION FULL-CUTOFF LED LUMINAIRE	SURFACE		24	
WW2	BEGA	33059 K3-<FINISH>	WALL-MOUNTED WET-LOCATION FULL-CUTOFF LED	SURFACE		16.4	
EX	LITHONIA	EDG-1/2-GW-X2(120V) (ACCESSORIES AS REQUIRED)	EXIT SIGN, 2-CIRCUIT (NORMAL/EMER) WITH MOUNTING ACCESSORIES AS REQUIRED			5	
L7	LITHONIA	(2)DSX1LED - P3 - 40K - 80CRI-T4M - MVOLT - SPA - PIR - DDBXD POLE LITHONIA # SSS - 20 SG - DM28AS - DDBXD	DUAL HEAD (@180DEG) LED PARKING LOT POLE(20') AND FIXTURE SEE DETAIL 1/THIS SHEET	POLE		204	

PROVIDE ALL REQUIRED HARDWARE, CABLES, ETC., FOR A FULLY FUNCTIONAL INSTALLATION
REFER TO ARCHITECTURAL & LIGHTING PLANS AND SPECIFICATIONS FOR EXACT REQUIREMENTS, LOCATION & INSTALLATION

REFERENCE NOTES

(1) REFER TO DETAIL 5/A871 FOR PENDANT LIGHTING FIXTURE MOUNTING

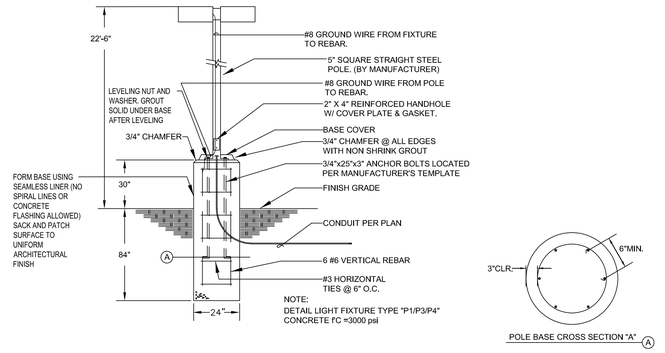

1 LIGHTING POLE BASE DETAIL-TYPE L7

SCALE: NTS

DSA Stamp

Architect

RACHLIN PARTNERS
8640 National Boulevard
Culver City, CA 90232
310.204.3400

Disclaimer:
THESE DRAWINGS ARE THE PROPERTY OF THE ARCHITECT. THE DESIGNS SHOWN AND DESCRIBED HEREIN INCLUDING ALL TECHNICAL DRAWINGS ARE PROPRIETARY AND CANNOT BE COPIED, DUPLICATED OR COMMERCIALLY EXPLOITED, IN WHOLE OR IN PART. THE DRAWINGS AND SPECIFICATIONS SHALL NOT BE USED BY THE OWNER ON OTHER PROJECTS, FOR ADDITIONS TO THIS PROJECT, OR FOR COMPLETION OF THIS PROJECT BY OTHERS. THE OWNER AGREES TO HOLD HARMLESS, INDEMNIFY AND DEFEND THE ARCHITECT AGAINST ALL DAMAGES, CLAIMS AND LOSSES, INCLUDING DEFENSE COSTS, ARISING OUT OF ANY REUSE OF PLANS AND SPECIFICATIONS WITHOUT THE WRITTEN AUTHORIZATION OF THE ARCHITECT OF RECORD.
Copyright 2022 Rachlin Partners, All Rights Reserved.

Performing Arts Center
Hacienda La Puente Unified School District
635 North California Avenue
La Puente, CA 91744

Rev	Date	Issue
1	7.22.22	50% DD
2	10.21.22	50% CD
3	12.09.22	100% DSA Submittal
4	06.19.23	100% DSA Resubmittal
5	09.20.23	DSA Back Check
1	11.01.23	Addendum #2
2	12.15.23	Addendum #3

Date: 09/20/23
Scale: As Shown
Drawn By: --
Checked By: --

Architect / Engineer Stamp

Consultants
Miyamoto International, Inc.
The Ruzika Company, Inc,
MDC Consulting Engineers
Pocock Design Solutions
Newson Brown Acoustics, LLC
VCA Engineers, Inc.
HJSA Consulting
L.A. Design Associates, Inc.

Sheet Title
Electrical Lighting Fixture Schedule

Sheet Number
E004

Plot Date: 3/18/2024 9:38:31 AM Last Save By: Tom Low Login: Tom Low J:\Project Files 2022\2022-019 Hacienda La Puente PAC\Electrical Drawings\E\E004 - Lighting Fixture Schedule.dwg

STATE OF CALIFORNIA
Indoor Lighting
NRCC-LTI-E — CALIFORNIA ENERGY COMMISSION

CERTIFICATE OF COMPLIANCE			NRCC-LTI-E
Project Name:	HLP Performing Arts Center	Report Page:	(Page 1 of 9)
Project Address:	635 N California Ave	Date Prepared:	11/30/2022

This document is used to demonstrate compliance with requirements in §110.9, §110.12(c), §130.0, §130.1, §140.6 and §141.0(b)2 for indoor lighting scopes using the prescriptive path.

A. GENERAL INFORMATION

01	Project Location (city)	La Puente	04	Total Conditioned Floor Area (ft²)	5,566
02	Climate Zone	9	05	Total Unconditioned Floor Area (ft²)	0
03	Occupancy Types Within Project (select all that apply):		06	# of Stories (Habitable Above Grade)	1

● Commercial Industrial ● Support Areas ● : See Table I

B. PROJECT SCOPE

This table includes any lighting systems that are within the scope of the permit application and are demonstrating compliance using the prescriptive path outlined in §140.6 or §141.0(b)2 for alterations.

Scope of Work	Conditioned Spaces		Unconditioned Spaces	
01	02	03	04	05
My Project Consists of (check all that apply):	Calculation Method	Area (ft²)	Calculation Method	Area (ft²)
☒ New Lighting System	Area Category Method	5566	Area Category Method	0
☐ New Lighting System - Parking Garage				
Total Area of Work (ft²)	5566		0	

C. COMPLIANCE RESULTS

If any cell on this table says "DOES NOT COMPLY" or "COMPLIES with Exceptional Conditions" refer to Table D, for guidance.

Lighting in conditioned and unconditioned spaces must not be combined for compliance per §140.6(b)1	Allowed Lighting Power per §140.6(b) (Watts)						Adjusted Lighting Power per §140.6(a) (Watts)				Compliance Results
	01	02	03	04		05	06	07		08	09
	Complete Building §140.6(c)1	Area Category §140.6(c)2	Area Category Additional §140.6(c)2G (+)	Tailored §140.6(c)3 (+)	=	**Total Allowed** (Watts)	Total Designed (Watts)	Adjustments PAF Lighting Control Credits §140.6(a)2 (-)	=	**Total Adjusted** (Watts) *Includes Adjustments	**05 must be >= 08 §140.6**
	(See Table I)	(See Table I)	(See Table J)	(See Table K)			(See Table F)	(See Table P)			
Conditioned		4,202.2	0		=	4,202	3,663	576	=	3087	COMPLIES
Unconditioned					=				=		

Registration Number: — Registration Date/Time: — Registration Provider: Energysoft

CA Building Energy Efficiency Standards - 2019 Nonresidential Compliance — Report Version: 2019.1.003, Schema Version: rev 20200601 — Report Generated: 2022-11-30 13:57:32

C. COMPLIANCE RESULTS

Controls Compliance (See Table H for Details)	COMPLIES
Rated Power Reduction Compliance (See Table Q for Details)	

D. EXCEPTIONAL CONDITIONS

This table is auto-filled with uneditable comments because of selections made or data entered in tables throughout the form.

E. ADDITIONAL REMARKS

This table includes remarks made by the permit applicant to the Authority Having Jurisdiction.

F. INDOOR LIGHTING FIXTURE SCHEDULE

This table includes all permanent designed lighting and all portable lighting in offices.

Designed Wattage: Conditioned Spaces

01	02	03	04	05	06	07	08	09	10	
Name or Item Tag	Complete Luminaire Description	Modular (Track) Fixture	Small Aperture & Color Change[1]	Watts per luminaire[2]	How is Wattage determined	Total Number of Luminaires	Excluded per §140.6(a)3	Design Watts	Field Inspector	
									Pass	Fail
D1F	D1F	No	No	7.2	Mfr. Spec	8	No	57.6	☐	☐
F1	F1	No	No	42	Mfr. Spec	20	No	840	☐	☐
F1A	F1A	No	No	84	Mfr. Spec	1	No	84	☐	☐
F2	F2	No	No	29	Mfr. Spec	5	No	145	☐	☐
F3	F3	No	No	18	Mfr. Spec	4	No	72	☐	☐
F4	F4	No	No	26.3	Mfr. Spec	8	No	210.4	☐	☐
F5	F5	No	No	4	Mfr. Spec	134	No	536	☐	☐
P4	P4	No	No	32	Mfr. Spec	4	No	128	☐	☐
P5	P5	No	No	63	Mfr. Spec	6	No	378	☐	☐
TRI-8	T1	No	No	120	Mfr. Spec	3	No	360	☐	☐
W3	W3	No	No	20	Mfr. Spec	3	No	60	☐	☐

Registration Number: — Registration Date/Time: — Registration Provider: Energysoft

CA Building Energy Efficiency Standards - 2019 Nonresidential Compliance — Report Version: 2019.1.003, Schema Version: rev 20200601 — Report Generated: 2022-11-30 13:57:32

F. INDOOR LIGHTING FIXTURE SCHEDULE

W4	W4	No	No	66	Mfr. Spec	12	No	792	☐	☐
							Total Designed Watts: CONDITIONED SPACES	3,663		

[1] *FOOTNOTE: Design Watts for small aperture and color changing luminaires which qualify per §140.6(a)4B is adjusted to be 75% of their rated wattage. Table F automatically makes this adjustment, the permit applicant should enter full rated wattage in column 05.*

[2] *Authority Having Jurisdiction may ask for Luminaire cut sheets to confirm wattage used for compliance per §130.0(c) Wattage used must be the maximum rated for the luminaire, not the lamp.*

G. MODULAR LIGHTING SYSTEMS

This section does not apply to this project.

H. INDOOR LIGHTING CONTROLS (Not including PAFs)

*This table includes lighting controls for conditioned and unconditioned spaces. When a control having a * is shown, the notes section of this table provides more detail on how compliance is achieved. The lighting controls section of the Compliance Summary Table on the first page will show "DOES NOT COMPLY" if the notes are left blank.*

Building Level Controls

01	02	03	
		Field Inspector	
		Pass	Fail
Mandatory Demand Response §110.12(c)	Shut-off controls §130.1(c)	☐	☐
Required > 10,000 SF	Whole Building Auto Time Switch	☐	☐

Area Level Controls

04	05	06	07	08	09	10	11	12	
Area Description	Complete Building or Area Category Primary Function Area	Area Controls §130.1(a)	Multi-Level Controls §130.1(b)	Shut-Off Controls §130.1(c)	Primary/Sky lit Daylighting §130.1(d)	Secondary Daylighting §140.6(d)	Interlocked Systems §140.6(a)1	Field Inspector	
								Pass	Fail
*NOTES: Controls with a * require a note in the space below explaining how compliance is achieved. EX: Conference 1: Primary/Skylight Daylighting: Exempt because less than 120 watts of general lighting; EXCEPTION 1 to §130.1(d)2*								13	
								Plan Sheet Showing Daylit Zones:	

Registration Number: — Registration Date/Time: — Registration Provider: Energysoft

CA Building Energy Efficiency Standards - 2019 Nonresidential Compliance — Report Version: 2019.1.003, Schema Version: rev 20200601 — Report Generated: 2022-11-30 13:57:32

I. LIGHTING POWER ALLOWANCE: COMPLETE BUILDING OR AREA CATEGORY METHODS

Each area complying using the Complete Building or Area Category Methods per §140.6(b) are included in this table. Column 06 indicates if additional lighting power allowances per §140.6(c) or adjustments per §140.6(a) are being used .

Conditioned Spaces

01	02	03	04	05	06	
Area Description	Complete Building or Area Category Primary Function Area	Allowed Density (W/ft²)	Area (ft²)	Allowed Wattage (Watts)	Additional Allowance / Adjustment	
					Area Category	PAF
Restrooms	Restrooms	0.65	1,462	950.3	No	Yes
Dressing Room	Theater Area Performance	1	870	870	No	Yes
Lounge	Lounge Breakroom or Waiting Area	0.65	260	169	No	Yes
Shop	General Commercial Industrial Work Area High Bay	0.65	870	565.5	No	Yes
Storage	All Other Space Types	0.4	335	134	No	Yes
Elec/Mech/IDF	Electrical Mechancial Telephone Room	0.4	326	130.4	No	Yes
Corridor	Corridor Area	0.6	150	90	No	Yes
Theater control room	Theater Area Performance	1	1,293	1,293	No	Yes
		TOTALS:	5,566	4,202.2	See Tables J, or P for detail	

J. ADDITIONAL ALLOWANCE: AREA CATEGORY METHOD QUALIFYING LIGHTING SYSTEM

This section does not apply to this project.

K. TAILORED METHOD GENERAL LIGHTING POWER ALLOWANCE

This section does not apply to this project.

L. ADDITIONAL LIGHTING ALLOWANCE: TAILORED WALL DISPLAY

This section does not apply to this project.

M. ADDITIONAL LIGHTING ALLOWANCE: TAILORED FLOOR AND TASK LIGHTING

This section does not apply to this project.

Registration Number: — Registration Date/Time: — Registration Provider: Energysoft

CA Building Energy Efficiency Standards - 2019 Nonresidential Compliance — Report Version: 2019.1.003, Schema Version: rev 20200601 — Report Generated: 2022-11-30 13:57:32

N. ADDITIONAL LIGHTING ALLOWANCE: TAILORED ORNAMENTAL/SPECIAL EFFECTS

This section does not apply to this project.

O. ADDITIONAL LIGHTING ALLOWANCE: TAILORED VERY VALUABLE MERCHANDISE

This section does not apply to this project.

Registration Number: — Registration Date/Time: — Registration Provider: Energysoft

CA Building Energy Efficiency Standards - 2019 Nonresidential Compliance — Report Version: 2019.1.003, Schema Version: rev 20200601 — Report Generated: 2022-11-30 13:57:32

P. POWER ADJUSTMENT: LIGHTING CONTROL CREDIT (POWER ADJUSTMENT FACTOR (PAF))

This table includes all areas indicated in Table I or Table K as using a PAF credit described in §140.6(a)2.

Conditioned Spaces

01	02								03	04	05	06	07
Area Description	PAF per §140.6(a)2 [1]								Luminaires Controlled for PAF Credit				
	1	2A	2B	2C	3A	3B	4	5	6	7	Luminaire Name or Item Tag	Luminaire Design Watts	Number of Luminaires	Lighting Controlled (Watts)	Control Credit Power Adjustments (Watts)
	Pick up to one				Pick up to one			Pick up to one							
Restrooms	☐	☐	☐	☒	☐	☐	☐	☐	☐	☐	D1F	7.2	4	28.8	5.76
Restrooms	☐	☐	☐	☒	☐	☐	☐	☐	☐	☐	D1F	7.2	4	28.8	5.76
Restrooms	☐	☐	☒	☐	☐	☐	☐	☐	☐	☐	F5	4	22	88	26.4
Restrooms	☐	☐	☒	☐	☐	☐	☐	☐	☐	☐	F5	4	22	88	26.4
Restrooms	☐	☐	☒	☐	☐	☐	☐	☐	☐	☐	F3	18	1	18	5.4
Dressing Room	☐	☐	☐	☒	☐	☐	☐	☐	☐	☐	F4	26.3	4	105.2	21.04
Dressing Room	☐	☐	☐	☒	☐	☐	☐	☐	☐	☐	W4	66	6	396	79.2
Dressing Room	☐	☐	☐	☒	☐	☐	☐	☐	☐	☐	F4	26.3	4	105.2	21.04
Dressing Room	☐	☐	☐	☒	☐	☐	☐	☐	☐	☐	W4	66	6	396	79.2
Lounge	☐	☐	☐	☒	☐	☐	☐	☐	☐	☐	F3	18	3	54	10.8
Shop	☐	☒	☐	☐	☐	☐	☐	☐	☐	☐	F1	42	2	84	33.6
Storage	☐	☐	☒	☐	☐	☐	☐	☐	☐	☐	F1	42	2	84	25.2
Storage	☐	☐	☒	☐	☐	☐	☐	☐	☐	☐	F1	42	2	84	25.2
Storage	☐	☐	☒	☐	☐	☐	☐	☐	☐	☐	F1	42	2	84	25.2
Elec/Mech/IDF	☐	☐	☒	☐	☐	☐	☐	☐	☐	☐	F1A	84	1	84	25.2
Elec/Mech/IDF	☐	☐	☒	☐	☐	☐	☐	☐	☐	☐	F1	42	2	84	25.2
Corridor	☐	☐	☒	☐	☐	☐	☐	☐	☐	☐	W3	20	3	60	18.0
Theater control room	☐	☐	☒	☐	☐	☐	☐	☐	☐	☐	F2	29	3	87	26.1
Theater control room	☐	☐	☒	☐	☐	☐	☐	☐	☐	☐	P4	32	2	64	19.2
Theater control room	☐	☐	☐	☒	☐	☐	☐	☐	☐	☐	TRI-8	120	1	120	24.0
Theater control room	☐	☐	☐	☒	☐	☐	☐	☐	☐	☐	F2	29	2	58	11.6

Registration Number: — Registration Date/Time: — Registration Provider: Energysoft

CA Building Energy Efficiency Standards - 2019 Nonresidential Compliance — Report Version: 2019.1.003, Schema Version: rev 20200601 — Report Generated: 2022-11-30 13:57:32

P. POWER ADJUSTMENT: LIGHTING CONTROL CREDIT (POWER ADJUSTMENT FACTOR (PAF))

Theater control room	☐	☐	☐	☒	☐	☐	☐	☐	☐	☐	P4	32	2	64	12.8
Theater control room	☐	☐	☐	☒	☐	☐	☐	☐	☐	☐	TRI-8	120	1	120	24.0
08									09				
☐	All spaces applying PAF 5, 6 or 7 include a daylight design meeting requirements in §140.3(d). See Table 5.								**Total Power Adjustment (Watts) CONDITIONED SPACES:**				576.30

[1] *FOOTNOTES: PAFs outlined in Table 140.6-A include 1) Daylight dimming plus OFF; 2A) Occupant sensors in offices [dite/] 125 ft²; 2B) Occupant sensors in offices 126 - 250 ft²; 2C) Occupant sensors in offices 251 - 500 ft²; 3A) Institutional tuning, non-daylit areas and 3B) Institutional tuning, daylit areas; 4) Demand response; 5) Clerestory fenestration; 6) Horizontal slats; 7) Light shelves.*

Q. RATED POWER REDUCTION COMPLIANCE FOR ALTERATIONS

This section does not apply to this project.

R. 80% LIGHTING POWER FOR ALL ALTERATIONS - CONTROLS EXCEPTIONS

This section does not apply to this project.

Registration Number: — Registration Date/Time: — Registration Provider: Energysoft

CA Building Energy Efficiency Standards - 2019 Nonresidential Compliance — Report Version: 2019.1.003, Schema Version: rev 20200601 — Report Generated: 2022-11-30 13:57:32

S. DAYLIGHT DESIGN POWER ADJUSTMENT FACTOR (PAF)

This table documents clerestories, horizontal slats or light shelves meet the requirements in §140.3(d) If a Power Adjustment Factor was claimed on Table P. These features must be documented on the architectural plans or where appropriate within the construction documents. This PAF also must be verified in the field with an acceptance test per Table U.

01	Compliance Strategy

T. DECLARATION OF REQUIRED CERTIFICATES OF INSTALLATION

Selections have been made based on information provided in this document. If any selection have been changed by permit applicant, an explanation should be included in Table E. Additional Remarks. These documents must be provided to the building inspector during construction and can be found online at https://www.energy.ca.gov/title24/2019standards/2019_compliance_documents/Nonresidential_Documents/NRCI/

Form/Title	Field Inspector	
	Pass	Fail
NRCI-LTI-01-E - Must be submitted for all buildings	☐	☐
NRCI-LTI-05-E- Must be submitted for a Power Adjustment Factor (PAF) to be recognized for compliance.	☐	☐

U. DECLARATION OF REQUIRED CERTIFICATES OF ACCEPTANCE

Selections have been made based on information provided in this document. If any selection have been changed by the permit applicant, an explanation should be included in Table E. Additional Remarks. These documents must be provided to the building inspector during construction and any with "-A" in the form name must be completed through an Acceptance Test Technician Certification Provider (ATTCP). For more information visit: http://www.energy.ca.gov/title24/attcp/providers.html

Form/Title	Systems/Spaces To Be Field Verified		Field Inspector	
			Pass	Fail
NRCA-LTI-02-A - Must be submitted for occupancy sensors and automatic time switch controls.	☐	☐		
NRCA-LTI-04-A - Must be submitted for demand responsive lighting controls.	☐	☐		

Registration Number: — Registration Date/Time: — Registration Provider: Energysoft

CA Building Energy Efficiency Standards - 2019 Nonresidential Compliance — Report Version: 2019.1.003, Schema Version: rev 20200601 — Report Generated: 2022-11-30 13:57:32

DOCUMENTATION AUTHOR'S DECLARATION STATEMENT

I certify that this Certificate of Compliance documentation is accurate and complete.

Documentation Author Name: Thomas Law	Documentation Author Signature:
Company: MDC Engineers Inc	Signature Date: 2022-11-30
Address: 5101 E La Palma	CEA/ HERS Certification Identification (if applicable): 9D9B-EADA-020B-B9EA-06C0-8435-B0B6-6552-38C3-8630-C087-8B62-B6A4-9DD0-280C-2548
City/State/Zip: Anaheim CA 92807	Phone: 213-746-2844

RESPONSIBLE PERSON'S DECLARATION STATEMENT

I certify the following under penalty of perjury, under the laws of the State of California:

1. The information provided on this Certificate of Compliance is true and correct.
2. I am eligible under Division 3 of the Business and Professions Code to accept responsibility for the building design or system design identified on this Certificate of Compliance (responsible designer)
3. The energy features and performance specifications, materials, components, and manufactured devices for the building design or system design identified on this Certificate of Compliance conform to the requirements of Title 24, Part 1 and Part 6 of the California Code of Regulations.
4. The building design features or system design features identified on this Certificate of Compliance are consistent with the information provided on other applicable compliance documents, worksheets, calculations, plans and specifications submitted to the enforcement agency for approval with this building permit application.
5. I will ensure that a completed signed copy of this Certificate of Compliance shall be made available with the building permit(s) issued for the building, and made available to the enforcement agency for all applicable inspections. I understand that a completed signed copy of this Certificate of Compliance is required to be included with the documentation the builder provides to the building owner at occupancy.

Responsible Designer Name: Tom Law	Responsible Designer Signature:
Company: MDC Engineers	Date Signed: 2022-11-30
Address: 5101 E La Palma Ave	License: E17235
City/State/Zip: Anaheim CA 92807	Phone: 213-746-2844

Registration Number: — Registration Date/Time: — Registration Provider: Energysoft

CA Building Energy Efficiency Standards - 2019 Nonresidential Compliance — Report Version: 2019.1.003, Schema Version: rev 20200601 — Report Generated: 2022-11-30 13:57:32

APPL. No. A 03-122864

IDENTIFICATION STAMP
DIV. OF THE STATE ARCHITECT
APP: 03-122864 INC:
REVIEWED FOR
SS ☑ FLS ☑ ACS ☑
DATE: 10/03/2023

DSA Stamp

Architect

RACHLIN PARTNERS
8640 National Boulevard
Culver City, CA 90232
310.204.3400

Disclaimer:

THESE DRAWINGS ARE THE PROPERTY OF THE ARCHITECT. THE DESIGNS SHOWN AND DESCRIBED HEREIN INCLUDING ALL TECHNICAL DRAWINGS ARE PROPRIETARY AND CANNOT BE COPIED, DUPLICATED OR COMMERCIALLY EXPLOITED, IN WHOLE OR IN PART. THE DRAWINGS AND SPECIFICATIONS SHALL NOT BE USED BY THE OWNER ON OTHER PROJECTS, FOR ADDITIONS TO THIS PROJECT, OR FOR COMPLETION OF THIS PROJECT BY OTHERS. THE OWNER AGREES TO HOLD HARMLESS, INDEMNIFY AND DEFEND THE ARCHITECT AGAINST ALL DAMAGES, CLAIMS AND LOSSES, INCLUDING DEFENSE COSTS, ARISING OUT OF ANY REUSE OF PLANS AND SPECIFICATIONS WITHOUT THE WRITTEN AUTHORIZATION OF THE ARCHITECT OF RECORD.

Copyright 2022 Rachlin Partners, All Rights Reserved.

Performing Arts Center
Hacienda La Puente Unified School District

635 North California Avenue
La Puente, CA 91744

Rev	Date	Issue
1	7.22.22	50% DD
2	10.21.22	50% CD
3	12.09.22	100% DSA Submittal
4	06.19.23	100% DSA Resubmittal
5	09.20.23	DSA Back Check

Date: 09/20/23
Scale: As Shown
Drawn By: --
Checked By: --

Architect / Engineer Stamp

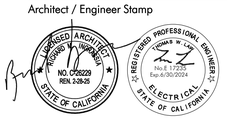

Consultants
Miyamoto International, Inc.
The Ruzika Company, Inc,
MDC Consulting Engineers
Pocock Design Solutions
Newson Brown Acoustics, LLC
VCA Engineers, Inc.
HJSA Consulting
L.A. Design Associates, Inc.

Sheet Title
Interior Lighting Title 24 Calculations

Sheet Number
E010

Plot Date: 9/20/2023 9:36:36 AM Last Save By: Tom Law Login: Tom Law J:\Project Files 2022\2022-019 Hacienda La Puente PAC\Electrical Drawings\E\E010 - Interior Lighting Title 24 Calculations.dwg

STATE OF CALIFORNIA
Outdoor Lighting
NRCC-LTO-E — CALIFORNIA ENERGY COMMISSION

CERTIFICATE OF COMPLIANCE			NRCC-LTO-E
Project Name:	HLP Performing Arts Center	**Report Page:**	**(Page 1 of 6)**
Project Address:	635 N California Ave	**Date Prepared:**	12/1/2022

A. GENERAL INFORMATION

01	Project Location (city)	La Puente	04	Total Illuminated Hardscape Area (ft²)	64500
02	Climate Zone	9			
03	Outdoor Lighting Zone per Title 24 Part 1 §10.114 or as designated by Authority Having Jurisdiction (AHJ):				
☐	LZ0: Very Low - Undeveloped Parkland	☐ LZ2: Moderate - Rural Areas	☐	LZ4: High - Must be reviewed by CA Energy Commission for Approval	
☐	LZ1: Low - Developed Parkland	☒ LZ3: Moderately High - Urban Areas			

B. PROJECT SCOPE

This table includes outdoor lighting systems that are within the scope of the permit application and are demonstrating compliance using the prescriptive path outlined in §140.7 or §141.0(b)2L for alterations.

My Project Consists of:

01	02
☒ New Lighting System	Must Comply with Allowances from §140.7
☐ Altered Lighting System	Is your alteration increasing the connected lighting load (Watts)? ○ Yes ○ No

03	04	05
% of Existing Luminaires Being Altered[1]	Sum Total of Luminaires Being Added or Altered	Calculation Method
☐ < 10% ☐ >= 10% and < 50% ☐ >= 50%		

Please proceed to Table F. Outdoor Lighting Fixture Schedule to define the project's luminaires.

[1] *FOOTNOTES: % of Existing Luminaires Being Altered = (Sum Total of Luminaires Being Added or Altered / Existing Luminaires within the Scope of the Permit Application) x 100.*

STATE OF CALIFORNIA
Outdoor Lighting
NRCC-LTO-E — CALIFORNIA ENERGY COMMISSION

CERTIFICATE OF COMPLIANCE			NRCC-LTO-E
Project Name:	HLP Performing Arts Center	**Report Page:**	**(Page 2 of 6)**
Project Address:	635 N California Ave	**Date Prepared:**	12/1/2022

C. COMPLIANCE RESULTS

Results in this table are automatically calculated from data input and calculations in Tables F through I. Note: if any cell on this table says "COMPLIES with Exceptional Conditions" refer to Table D. Exceptional Conditions for guidance or see applicable Table referenced below.

Calculations of Total Allowed Lighting Power (Watts) §140.7 or §141.0(b)2L											Compliance Results		
01	+	02	+	03	+	04	+	05	OR	06	=	07	≥	08	09
General Hardscape Allowance §140.7(d)1 (See Table I)		Per Application §140.7(d)2 (See Table J)		Sales Frontage §140.7(d)2 (See Table K)		Ornamental §140.7(d)2 (See Table L)		Per Specific Area §140.7(d)2 (See Table M)		Existing Power Allowance §141.0(b)2L (See Table N)		**Total Allowed** (Watts)		**Total Actual** (Watts)	**07 must be >= 08**
2,287.5	+	---	+	---	+	---	+	---	OR	---	=	2,287.5	≥	1,694.7	COMPLIES
Cutoff Compliance (See Table G for Details)															N/A
Controls Compliance (See Table H for Details)															COMPLIES

D. EXCEPTIONAL CONDITIONS

This table is auto-filled with uneditable comments because of selections made or data entered in tables throughout the form.

E. ADDITIONAL REMARKS

This table includes remarks made by the permit applicant to the Authority Having Jurisdiction.

Registration Number: — Registration Date/Time: — Registration Provider: Energysoft
CA Building Energy Efficiency Standards - 2019 Nonresidential Compliance — Report Version: 2019.1.003 Schema Version: rev 20200601 — Report Generated: 2022-12-01 11:02:28

STATE OF CALIFORNIA
Outdoor Lighting
NRCC-LTO-E — CALIFORNIA ENERGY COMMISSION

CERTIFICATE OF COMPLIANCE			NRCC-LTO-E
Project Name:	HLP Performing Arts Center	**Report Page:**	**(Page 3 of 6)**
Project Address:	635 N California Ave	**Date Prepared:**	12/1/2022

F. OUTDOOR LIGHTING FIXTURE SCHEDULE

For new or altered lighting systems demonstrating compliance with §140.7 all new luminaires being installed and any existing luminaires remaining or being moved within the spaces covered by the permit application are included in the Table below. For altered lighting systems using the Existing Power method per §141.0(b)2L only new luminaires being installed and replacement luminaires being installed as part of the project scope are included (ie, existing luminaires remaining or existing luminaires being moved are not included).

Designed Wattage:

01	02		03	04	05	06	07	08	09	10	
Name or Item Tag	Complete Luminaire Description		Watts per luminaire[1,2]	How is Wattage determined	Total number luminaires[2]	Luminaire Status[3]	Excluded per §140.7(a)	Design Watts	Cutoff Req. > 6,200 initial lumen output §130.2(b)[4]	Field Inspector	
										Pass	Fail
DD1	DD1	☐ Linear	8.3	Mfr. Spec	9	New	☐	74.7	NA: < 6200 lumens	☐	☐
L7	L7	☐ Linear	204	Mfr. Spec	7	New	☐	1,428	NA: < 6200 lumens	☐	☐
WW1	WW1	☐ Linear	24	Mfr. Spec	8	New	☐	192	NA: < 6200 lumens	☐	☐
						Total Design Watts:		1694.7			

* NOTES: Selections with a * require a note in the space below explaining how compliance is achieved.
EX: Luminaire is lighting a statue; EXCEPTION 2 to §130.2(b)

[1] *FOOTNOTES: Authority Having Jurisdiction may ask for Luminaire cut sheets to confirm wattage used for compliance per §130.0(c)*
[2] *For linear luminaires, wattage should be indicated as W/lf instead of Watts/luminaire. Total linear feet should be indicated in column 05 instead of number of luminaires.*
[3] *Select "New" for new luminaires in a new outdoor lighting project, or for added luminaires in an alteration. Select "Altered" for replacement luminaires in an alteration. Select "Existing to Remain" for existing luminaires within the project scope that are not being altered and are remaining. Select "Existing Reinstalled" for existing luminaires which are being removed and reinstalled as part of the project scope.*
[4] *Compliance with mandatory cutoff requirements is required for luminaires with initial lumen output >= 6,200 unless exempted by §130.2(b)*

G. CUTOFF REQUIREMENTS (BUG)

This section does not apply to this project.

Registration Number: — Registration Date/Time: — Registration Provider: Energysoft
CA Building Energy Efficiency Standards - 2019 Nonresidential Compliance — Report Version: 2019.1.003 Schema Version: rev 20200601 — Report Generated: 2022-12-01 11:02:28

STATE OF CALIFORNIA
Outdoor Lighting
NRCC-LTO-E — CALIFORNIA ENERGY COMMISSION

CERTIFICATE OF COMPLIANCE			NRCC-LTO-E
Project Name:	HLP Performing Arts Center	**Report Page:**	**(Page 4 of 6)**
Project Address:	635 N California Ave	**Date Prepared:**	12/1/2022

H. OUTDOOR LIGHTING CONTROLS

This table demonstrates compliance with controls requirements for all new or altered luminaires installed as part of the permit application. For alteration projects, luminaires which are existing to remain (ie untouched) and luminaires which are removed and reinstalled (wiring only) do not need to be included in this table even if they are within the spaces covered by the permit application.
*When an option having a * is selected, the notes section of this table must be completed. The lighting controls section of the Compliance Summary Table on the first page will show "DOES NOT COMPLY" if the notes are left blank.*

Mandatory Controls

01	02	03	04	05	
Area Description	Shut-Off §130.2(c)1	Auto-Schedule §130.2(c)2	Motion Sensor §130.2(c)3	Field Inspector	
				Pass	Fail

** NOTES: Controls with a * require a note in the space below explaining how compliance is achieved.*
EX: Not permitted by health & safety to be turned off; EXCEPTION 1 to §130.2(c)

I. LIGHTING POWER ALLOWANCE (per §140.7)

This table includes areas using allowance calculations per §140.7. General Hardscape Allowance is per Table 140.7-A while "Use it or lose it" Allowances are per Table 140.7-B. Indicate which allowances are being used to expand sections for user input. Luminaires that qualify for one of the "Use it or lose it" allowances shall not qualify for another "Use it or lose it" allowance.

	01				
	☒ General Hardscape Allowance Table I (below)	"Use it or lose it" Allowance (select all that apply) (select all that apply)			
		☐ Per Application Table J	☐ Sales Frontage Table K	☐ Ornamental Table L	☐ Per Specific Area Table M
Calculated General Hardscape Lighting Power Allowance per Table 140.7-A (LZ 0, 1 & 4)					
Calculated General Hardscape Lighting Power Allowance per Table 140.7-A (LZ 2 & 3)					

02	03	04	05	06	07	08	9	10
Area Description	Surface Type	Area Wattage Allowance (AWA)			Area Wattage Allowance (AWA)			Total General AWA + LWA (Watts)
		Illuminated Area (ft²)	Allowed Density (W/ft²)	Area Allowance (Watts)	Perimeter Length (lf)	Allowed Density (W/lf)	Linear Allowance (Watts)	
Undefined Ext Task	Asphalt	64500	0.025	1612.5	1300	0.2	325	1938
							Initial Wattage Allowance for Entire Site (Watts):	350
							Total General Hardscape Allowance (Watts):	2288

Registration Number: — Registration Date/Time: — Registration Provider: Energysoft
CA Building Energy Efficiency Standards - 2019 Nonresidential Compliance — Report Version: 2019.1.003 Schema Version: rev 20200601 — Report Generated: 2022-12-01 11:02:28

STATE OF CALIFORNIA
Outdoor Lighting
NRCC-LTO-E — CALIFORNIA ENERGY COMMISSION

CERTIFICATE OF COMPLIANCE			NRCC-LTO-E
Project Name:	HLP Performing Arts Center	**Report Page:**	**(Page 5 of 6)**
Project Address:	635 N California Ave	**Date Prepared:**	12/1/2022

J. LIGHTING ALLOWANCE: PER APPLICATION

This section does not apply to this project.

K. LIGHTING ALLOWANCE: SALES FRONTAGE

This section does not apply to this project.

L. LIGHTING ALLOWANCE: ORNAMENTAL

This section does not apply to this project.

M. LIGHTING ALLOWANCE: PER SPECIFIC AREA

This section does not apply to this project.

N. EXISTING CONDITIONS POWER ALLOWANCE (alterations only)

This section does not apply to this project.

O. DECLARATION OF REQUIRED CERTIFICATES OF INSTALLATION

Selections have been made based on information provided in this document. If any selection have been changed by permit applicant, an explanation should be included in Table E. Additional Remarks. These documents must be provided to the building inspector during construction and can be found online at https://www.energy.ca.gov/title24/2019standards/2019_compliance_documents/Nonresidential_Documents/NRCI/

Form/Title	Field Inspector	
	Pass	Fail
NRCI-LTO-01-E - Must be submitted for all buildings	☐	☐

P. DECLARATION OF REQUIRED CERTIFICATES OF ACCEPTANCE

There are no NRCA forms required for this project.

Registration Number: — Registration Date/Time: — Registration Provider: Energysoft
CA Building Energy Efficiency Standards - 2019 Nonresidential Compliance — Report Version: 2019.1.003 Schema Version: rev 20200601 — Report Generated: 2022-12-01 11:02:28

STATE OF CALIFORNIA
Outdoor Lighting
NRCC-LTO-E — CALIFORNIA ENERGY COMMISSION

CERTIFICATE OF COMPLIANCE			NRCC-LTO-E
Project Name:	HLP Performing Arts Center	**Report Page:**	**(Page 6 of 6)**
Project Address:	635 N California Ave	**Date Prepared:**	12/1/2022

DOCUMENTATION AUTHOR'S DECLARATION STATEMENT

I certify that this Certificate of Compliance documentation is accurate and complete.

Documentation Author Name: Thomas Law	Documentation Author Signature: TL
Company: MDC Engineers Inc	Signature Date: 2022-12-01
Address: 5101 E La Palma	CEA/ HERS Certification Identification (if applicable): 9D9B-EADA-020B-B9EA-06C0-8435-B0B6-6552-38C3-8630-C087-8B62-B6A4-9DDO-280C-2548
City/State/Zip: Anaheim CA 92807	Phone: 213-746-2844

RESPONSIBLE PERSON'S DECLARATION STATEMENT

I certify the following under penalty of perjury, under the laws of the State of California:

1. The information provided on this Certificate of Compliance is true and correct.
2. I am eligible under Division 3 of the Business and Professions Code to accept responsibility for the building design or system design identified on this Certificate of Compliance (responsible designer)
3. The energy features and performance specifications, materials, components, and manufactured devices for the building design or system design identified on this Certificate of Compliance conform to the requirements of Title 24, Part 1 and Part 6 of the California Code of Regulations.
4. The building design features or system design features identified on this Certificate of Compliance are consistent with the information provided on other applicable compliance documents, worksheets, calculations, plans and specifications submitted to the enforcement agency for approval with this building permit application.
5. I will ensure that a completed signed copy of this Certificate of Compliance shall be made available with the building permit(s) issued for the building, and made available to the enforcement agency for all applicable inspections. I understand that a completed signed copy of this Certificate of Compliance is required to be included with the documentation the builder provides to the building owner at occupancy.

Responsible Designer Name: Tom Law	Responsible Designer Signature: TL
Company: MDC Engineers	Date Signed: 2022-12-01
Address: 5101 E La Palma Ave	License: E17235
City/State/Zip: Anaheim CA 92807	Phone: 213-746-2844

Registration Number: — Registration Date/Time: — Registration Provider: Energysoft
CA Building Energy Efficiency Standards - 2019 Nonresidential Compliance — Report Version: 2019.1.003 Schema Version: rev 20200601 — Report Generated: 2022-12-01 11:02:28

Plot Date: 9/20/2023 9:36:44 AM Last Save By: Tom Law Login: Tom Law J:\Project Files 2022\2022.019 Hacienda La Puente PAC\Electrical Drawings\EE011 - Exterior Lighting Title 24 Calculations.dwg

APPL. No. A 03-122864

IDENTIFICATION STAMP
DIV. OF THE STATE ARCHITECT
APP: 03-122864 INC:
REVIEWED FOR
SS ☑ FLS ☑ ACS ☑
DATE: 10/03/2023

DSA Stamp

Architect

RACHLIN PARTNERS
8840 National Boulevard
Culver City, CA 90232
310.204.3400

Disclaimer:

THESE DRAWINGS ARE THE PROPERTY OF THE ARCHITECT. THE DESIGNS SHOWN AND DESCRIBED HEREIN INCLUDING ALL TECHNICAL DRAWINGS ARE PROPRIETARY AND CANNOT BE COPIED, DUPLICATED OR COMMERCIALLY EXPLOITED, IN WHOLE OR IN PART. THE DRAWINGS AND SPECIFICATIONS SHALL NOT BE USED BY THE OWNER ON OTHER PROJECTS, FOR ADDITIONS TO THIS PROJECT, OR FOR COMPLETION OF THIS PROJECT BY OTHERS. THE OWNER AGREES TO HOLD HARMLESS, INDEMNIFY AND DEFEND THE ARCHITECT AGAINST ALL DAMAGES, CLAIMS AND LOSSES, INCLUDING DEFENSE COSTS, ARISING OUT OF ANY REUSE OF PLANS AND SPECIFICATIONS WITHOUT THE WRITTEN AUTHORIZATION OF THE ARCHITECT OF RECORD.

Copyright 2022 Rachlin Partners, All Rights Reserved.

Performing Arts Center
Hacienda La Puente Unified School District

635 North California Avenue
La Puente, CA 91744

Rev	Date	Issue
1	7.22.22	50% DD
2	10.21.22	50% CD
3	12.09.22	100% DSA Submittal
4	06.19.23	100% DSA Resubmittal
5	09.20.23	DSA Back Check

Date: 09/20/23
Scale: As Shown
Drawn By: --
Checked By: --

Architect / Engineer Stamp

LICENSED ARCHITECT — NO. C-36229 REN: 2-26-25 — STATE OF CALIFORNIA
REGISTERED PROFESSIONAL ENGINEER — No.E 17235 Exp.6/30/2024 — ELECTRICAL — STATE OF CALIFORNIA

Consultants
Miyamoto International, Inc.
The Ruzika Company, Inc,
MDC Consulting Engineers
Pocock Design Solutions
Newson Brown Acoustics, LLC
VCA Engineers, Inc.
HJSA Consulting
L.A. Design Associates, Inc.

Sheet Title

Exterior Lighting Title 24 Calculations

Sheet Number

E011

STATE OF CALIFORNIA
Electrical Power Distribution
NRCC-ELC-E
CALIFORNIA ENERGY COMMISSION

CERTIFICATE OF COMPLIANCE			NRCC-ELC-E
Project Name:	HLP Performing Arts Center	Report Page:	(Page 1 of 5)
Project Address:	635 N California Ave	Date Prepared:	12/5/2022

This document is used to demonstrate compliance with mandatory requirements in §130.5, for electrical systems in newly constructed nonresidential, high-rise residential and hotel/motel occupancies. Additions and alterations to electrical service systems in these occupancies will also use this document to demonstrate compliance per §141.0(a) or §141.0(b)2P for alterations..

A. GENERAL INFORMATION

01	Project Location (city)	La Puente
02	Occupancy Types Within Project:	

● Commercial Industrial ● Support Areas ● : See Table I

B. PROJECT SCOPE

This table includes electrical systems that are within the scope of the permit application.

01		02	03	04	05
Electrical Service Designation/Description		Scope of Work[1]	Rating (kVA)	Utility Provided Metering System Exception to §130.5(a) [2]	System subject to CA Elec Code Article 517 Exception to §130.5(a)and (b)
		New electrical service equipment and meter	50	☐	☐
06	Demand Response Controls	Where required, demand response controls must be specified which are capable of receiving and automatically responding to at least one standards based messaging protocol which enables demand response after receiving a demand response signal. Sections §120.2, §130.1 and §130.3 and compliance documents NRCC-MCH, NRCC-LTI and NRCC-LTS will indicate when demand response controls are required.			

[1] *FOOTNOTES: Adding only new feeders and branch circuits triggers Voltage Drop 130.5(c), no other requirements from 130.5 are required.*
[2] *Applicable if the utility company is providing a metering system that indicates instantaneous kW demand and kWh for a utility-defined period.*

C. COMPLIANCE RESULTS

Results in this table are automatically calculated from data input and calculations in Tables F through I. Note: If any cell on this table says "COMPLIES with Exceptional Conditions" refer to Table D. Exceptional Conditions for guidance or see applicable Table referenced below.

01		02		03		04	05
Service Electrical Metering §130.5(a) (See Table F)	AND	Separation for Monitoring §130.5(b) (See Table G)	AND	Voltage Drop §130.5(c) (See Table H)	AND	Controlled Receptacles §130.5(d) (See Table I)	
Yes	AND	Yes	AND	Yes	AND	Yes	COMPLIES

Registration Number:
CA Building Energy Efficiency Standards - 2019 Nonresidential Compliance
Registration Date/Time:
Report Version: 2019.1.003
Schema Version: rev 20200601
Registration Provider: Energysoft
Report Generated: 2022-12-05 10:07:03

STATE OF CALIFORNIA
Electrical Power Distribution
NRCC-ELC-E
CALIFORNIA ENERGY COMMISSION

CERTIFICATE OF COMPLIANCE			NRCC-ELC-E
Project Name:	HLP Performing Arts Center	Report Page:	(Page 2 of 5)
Project Address:	635 N California Ave	Date Prepared:	12/5/2022

D. EXCEPTIONAL CONDITIONS

This table is auto-filled with uneditable comments because of selections made or data entered in tables throughout the form.

E. ADDITIONAL REMARKS

This table is includes remarks made by the permit applicant to the Authority Having Jurisdiction.

F. SERVICE ELECTRICAL METERING

This table includes new or replacement electrical service systems OR equipment to demonstrate compliance with §130.5(a)

01	02	03				04	05	
Electrical Service Designation/Description	Rating (kVA)	Required Metering Capabilities per Table 130.5-A				Location of Requirements in Construction Documents	Field Inspector	
		Instantaneous Demand (kW)	Historical Peak Demand (kW)	Tracking kWh for user-defined period	kWh per rate period		Pass	Fail
	50	☐	☒	☒	☐		☐	☐

G. SEPARATION OF ELECTRICAL CIRCUITS FOR ENERGY MONITORING

This table includes entirely new or complete replacement electrical power distribution systems to demonstrate compliance with §130.5(b). Any load types that are not included in the service do not need to be shown.

01	02	03	04	05	
Load Type per Table 130.5-B[1]	Minimum Required Separation of Load per Table 130.5-B	Compliance Method[2]	Location of Requirements in Construction Documents	Field Inspector	
				Pass	Fail

** NOTES: If "Other*" is selected under Compliance Method above, please indicate how compliance has been achieved in the space provided below.*

[1] *FOOTNOTES: For each separate load type, up to 10% of the connected load may be of any type.*
[2] *Method 1: Switchboards/ motor control centers/ panelboard loads disaggregated for each load type.*
Method 2: Switchboards/ motor control centers/ panelboard supply other distribution equipment with loads disaggregated for each load type.
Method 3: Branch circuits serve load types individually and provisions for adding future branch circuit monitoring.
Method 4: Complete metering system measures and reports loads by type.
See Chapter 8 of the Nonresidential Compliance Manual for more detail on Compliance Methods.

Registration Number:
CA Building Energy Efficiency Standards - 2019 Nonresidential Compliance
Registration Date/Time:
Report Version: 2019.1.003
Schema Version: rev 20200601
Registration Provider: Energysoft
Report Generated: 2022-12-05 10:07:03

STATE OF CALIFORNIA
Electrical Power Distribution
NRCC-ELC-E
CALIFORNIA ENERGY COMMISSION

CERTIFICATE OF COMPLIANCE			NRCC-ELC-E
Project Name:	HLP Performing Arts Center	Report Page:	(Page 3 of 5)
Project Address:	635 N California Ave	Date Prepared:	12/5/2022

H. VOLTAGE DROP

This table includes entirely new or complete replacement electrical power distribution systems, or alterations that add, modify or replace both feeders and branch circuits to demonstrate compliance with §130.5(c). For alterations, only the altered circuits must demonstrate compliance per §141.0(b)2Piii

01	02			03	04	05	
Electrical Service Designation/Description	Combined Voltage Drop on Installed Feeder/Branch Circuit Conductors Compliance Method			Location of Voltage Drop Calculations[1]	Sheet Number for Voltage Drop Calculations in Construction Documents	Field Inspector	
						Pass	Fail
	☒ Voltage drop less than 5%	☐	Permitted by CA Elec Code (Exception to 130.5(c))*	Attached		☐	☐

** NOTES: If "Permitted by CA Elec Code *" is selected under Compliance Method above, please indicate where the exception applies in the space provided below.*

[1] *FOOTNOTES: Voltage drop calculations may be attached to the permit application outside the construction documents if allowed by the Authority Having Jurisdiction. Select "attached" if applicable. If calculations will be the responsibility of the installing contractor, select "Contractor Responsible".*

I.CIRCUIT CONTROLS FOR 120-VOLT RECEPTACLES AND CONTROLLED RECEPTACLES

This table includes entirely new or complete replacement electrical power distribution systems to demonstrate compliance with §130.5(d). Both controlled and uncontrolled receptacles must be provided in office areas, lobbies, conference rooms, kitchen areas in office spaces, copy rooms and hotel/motel guest rooms.

01	02	03	04	05	06	
Room name or Description	Location/ Type of Controlled Receptacles	Shut-Off Controls	Permanent Durable Marking Will be Used	Location of Requirements in Construction Documents	Field Inspector	
					Pass	Fail

** NOTES: If "Other*" is selected under Shut-Off Controls above, please indicate how compliance has been achieved in the space provided below.*

J. DECLARATION of REQUIRED CERTIFICATES OF INSTALLATION

Selections have been made based on information provided in this document. If any selection have been changed by permit applicant, an explanation should be included in Table E. Additional Remarks. These documents must be provided to the building inspector during construction and can be found online at https://www.energy.ca.gov/title24/2019standards/2019_compliance_documents/Nonresidential_Documents/NRCI/

Form/Title	Field Inspector	
	Pass	Fail
NRCI-ELC-01-E - Must be submitted for all buildings	☐	☐

Registration Number:
CA Building Energy Efficiency Standards - 2019 Nonresidential Compliance
Registration Date/Time:
Report Version: 2019.1.003
Schema Version: rev 20200601
Registration Provider: Energysoft
Report Generated: 2022-12-05 10:07:03

STATE OF CALIFORNIA
Electrical Power Distribution
NRCC-ELC-E
CALIFORNIA ENERGY COMMISSION

CERTIFICATE OF COMPLIANCE			NRCC-ELC-E
Project Name:	HLP Performing Arts Center	Report Page:	(Page 4 of 5)
Project Address:	635 N California Ave	Date Prepared:	12/5/2022

K. DECLARATION OF REQUIRED CERTIFICATES OF ACCEPTANCE

There are no Certificates of Acceptance applicable to electrical power distribution requirements.

Registration Number:
CA Building Energy Efficiency Standards - 2019 Nonresidential Compliance
Registration Date/Time:
Report Version: 2019.1.003
Schema Version: rev 20200601
Registration Provider: Energysoft
Report Generated: 2022-12-05 10:07:03

STATE OF CALIFORNIA
Electrical Power Distribution
NRCC-ELC-E
CALIFORNIA ENERGY COMMISSION

CERTIFICATE OF COMPLIANCE			NRCC-ELC-E
Project Name:	HLP Performing Arts Center	Report Page:	(Page 5 of 5)
Project Address:	635 N California Ave	Date Prepared:	12/5/2022

DOCUMENTATION AUTHOR'S DECLARATION STATEMENT

I certify that this Certificate of Compliance documentation is accurate and complete.

Documentation Author Name: Thomas Law	Documentation Author Signature: TL
Company: MDC Engineers Inc	Signature Date: 12-5-22
Address: 5101 E La Palma	CEA/ HERS Certification Identification (if applicable): 9D98-EADA-020B-B9EA-06C0-8435-B0B6-6552-38C3-8630-C087-8B62-B6A4-9DD0-280C-254B
City/State/Zip: Anaheim CA 92807	Phone: 213-746-2844

RESPONSIBLE PERSON'S DECLARATION STATEMENT

I certify the following under penalty of perjury, under the laws of the State of California:

1. The information provided on this Certificate of Compliance is true and correct.
2. I am eligible under Division 3 of the Business and Professions Code to accept responsibility for the building design or system design identified on this Certificate of Compliance (responsible designer)
3. The energy features and performance specifications, materials, components, and manufactured devices for the building design or system design identified on this Certificate of Compliance conform to the requirements of Title 24, Part 1 and Part 6 of the California Code of Regulations.
4. The building design features or system design features identified on this Certificate of Compliance are consistent with the information provided on other applicable compliance documents, worksheets, calculations, plans and specifications submitted to the enforcement agency for approval with this building permit application.
5. I will ensure that a completed signed copy of this Certificate of Compliance shall be made available with the building permit(s) issued for the building, and made available to the enforcement agency for all applicable inspections. I understand that a completed signed copy of this Certificate of Compliance is required to be included with the documentation the builder provides to the building owner at occupancy.

Responsible Designer Name: Tom Law	Responsible Designer Signature: TL
Company: MDC Engineers	Date Signed: 2022-12-05
Address: 5101 E La Palma Ave	License: E17235
City/State/Zip: Anaheim CA 92807	Phone: 213-746-2844

Registration Number:
CA Building Energy Efficiency Standards - 2019 Nonresidential Compliance
Registration Date/Time:
Report Version: 2019.1.003
Schema Version: rev 20200601
Registration Provider: Energysoft
Report Generated: 2022-12-05 10:07:03

Plot Date: 9/20/2023 9:36:51 AM Last Save By: Tom Law Login: Tom Law J:\Project Files 2022\2022-019 Hacienda La Puente PAC\Electrical Drawings\E\E012 - Electrical Distribution Title 24 Calculations.dwg

APPL. No. A 03-122864

IDENTIFICATION STAMP
DIV. OF THE STATE ARCHITECT
APP: 03-122864 INC:
REVIEWED FOR
SS ☑ FLS ☑ ACS ☑
DATE: 10/03/2023

DSA Stamp

Architect

RACHLIN
PARTNERS
8840 National Boulevard
Culver City, CA 90232
310.204.3400

Disclaimer:
THESE DRAWINGS ARE THE PROPERTY OF THE ARCHITECT. THE DESIGNS SHOWN AND DESCRIBED HEREIN INCLUDING ALL TECHNICAL DRAWINGS ARE PROPRIETARY AND CANNOT BE COPIED, DUPLICATED OR COMMERCIALLY EXPLOITED, IN WHOLE OR IN PART. THE DRAWINGS AND SPECIFICATIONS SHALL NOT BE USED BY THE OWNER ON OTHER PROJECTS, FOR ADDITIONS TO THIS PROJECT, OR FOR COMPLETION OF THIS PROJECT BY OTHERS. THE OWNER AGREES TO HOLD HARMLESS, INDEMNIFY AND DEFEND THE ARCHITECT AGAINST ALL DAMAGES, CLAIMS AND LOSSES, INCLUDING DEFENSE COSTS, ARISING OUT OF ANY REUSE OF PLANS AND SPECIFICATIONS WITHOUT THE WRITTEN AUTHORIZATION OF THE ARCHITECT OF RECORD.

Copyright 2022 Rachlin Partners, All Rights Reserved.

Performing Arts Center
Hacienda La Puente Unified School District
635 North California Avenue
La Puente, CA 91744

Rev	Date	Issue
1	7.22.22	50% DD
2	10.21.22	50% CD
3	12.09.22	100% DSA Submittal
4	06.19.23	100% DSA Resubmittal
5	09.20.23	DSA Back Check

Date: 09/20/23
Scale: As Shown
Drawn By: --
Checked By: --

Architect / Engineer Stamp

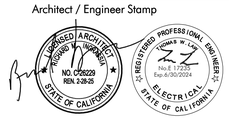

Consultants
Miyamoto International, Inc.
The Ruzika Company, Inc,
MDC Consulting Engineers
Pocock Design Solutions
Newson Brown Acoustics, LLC
VCA Engineers, Inc.
HJSA Consulting
L.A. Design Associates, Inc.

Sheet Title
Electrical
Disribution
Title 24
Calculations

Sheet Number
E012

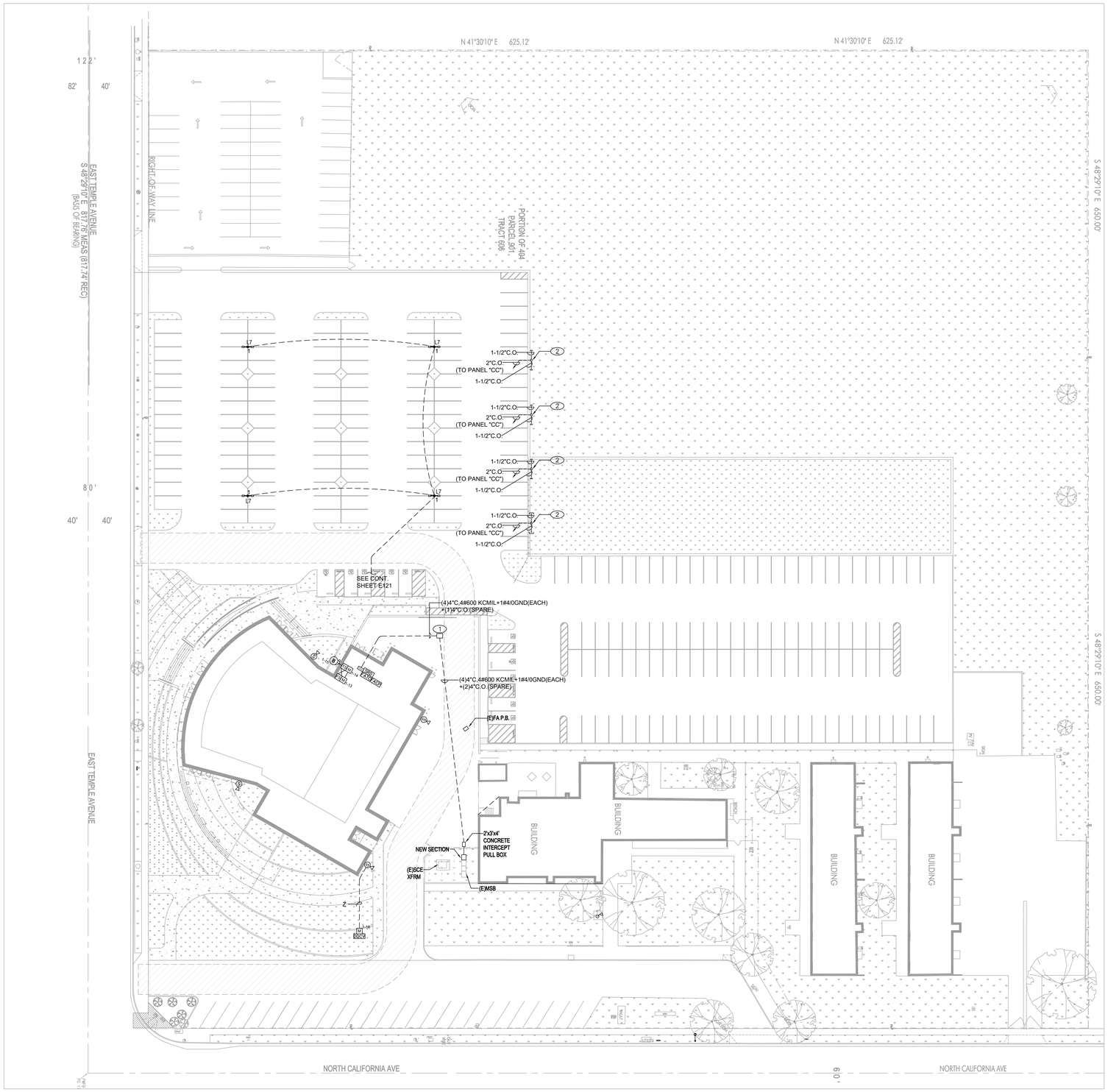

1 ELECTRICAL SITE PLAN

SCALE: 1" = 30'-0"

0' 15' 30' 60' 90'

NORTH

GENERAL NOTES

REFERENCE NOTES

1. PROVIDE 3'x5'x50" CONCRETE PULL BOX, MARKED 'POWER'. JENSEN PRECAST K3660-DP50-11"
2. PROVIDE 12"x22" CONCRETE PULL BOX FOR FUTURE CAR CHARGING. PROVIDE CONDUIT STUB OUTS AS SHOWN, AND HOME RUN TO PANEL "CC", LOCATED IN MAIN ELECTRICAL ROOM.

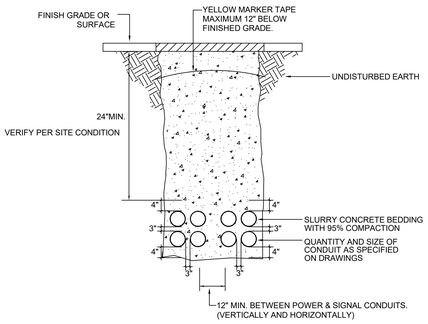

(UNDER PAVED AREAS)

SAW CUT AND PATCH (E)CONCRETE/ASPHALT TO MATCH ADJACENT SURFACES. SEE ARCHITECTURAL DRAWINGS FOR (E)SURFACES.

ALL UNDER GROUND CONDUITS SHALL BE PVC SCH40 WITH GRC RISER.
COMPLY WITH CEC. 300-5 FOR MINIMUM COVER REQUIREMENTS & CONCRETE/SLURRY PER DETAIL.

2 UNDERGROUND CONDUIT DUCT BANK DETAIL

SCALE: NTS

APPL. No. A 03-122864

IDENTIFICATION STAMP
DIV. OF THE STATE ARCHITECT
APP: 03-122864 INC:
REVIEWED FOR
SS ☑ FLS ☑ ACS ☑
DATE: 10/03/2023

DSA Stamp

Architect

RACHLIN
PARTNERS
8640 National Boulevard
Culver City, CA 90232
310.204.3400

Disclaimer:

THESE DRAWINGS ARE THE PROPERTY OF THE ARCHITECT. THE DESIGNS SHOWN AND DESCRIBED HEREIN INCLUDING ALL TECHNICAL DRAWINGS ARE PROPRIETARY AND CANNOT BE COPIED, DUPLICATED OR COMMERCIALLY EXPLOITED, IN WHOLE OR IN PART. THE DRAWINGS AND SPECIFICATIONS SHALL NOT BE USED BY THE OWNER ON OTHER PROJECTS, FOR ADDITIONS TO THIS PROJECT, OR FOR COMPLETION OF THIS PROJECT BY OTHERS. THE OWNER AGREES TO HOLD HARMLESS, INDEMNIFY AND DEFEND THE ARCHITECT AGAINST ALL DAMAGES, CLAIMS AND LOSSES, INCLUDING DEFENSE COSTS, ARISING OUT OF ANY REUSE OF PLANS AND SPECIFICATIONS WITHOUT THE WRITTEN AUTHORIZATION OF THE ARCHITECT OF RECORD.

Copyright 2022 Rachlin Partners, All Rights Reserved.

Performing Arts Center
Hacienda La Puente Unified School District

635 North California Avenue
La Puente, CA 91744

Rev	Date	Issue
1	7.22.22	50% DD
2	10.21.22	50% CD
3	12.09.22	100% DSA Submittal
4	06.19.23	100% DSA Resubmittal
5	09.20.23	DSA Back Check

Date: 09/20/23
Scale: As Shown
Drawn By: --
Checked By: --

Architect / Engineer Stamp

REGISTERED ARCHITECT — NO. C26229 REN. 2-28-25 — STATE OF CALIFORNIA
REGISTERED PROFESSIONAL ENGINEER — THOMAS W. LEE — No. E 17235 Exp.6/30/2024 — ELECTRICAL — STATE OF CALIFORNIA

Consultants
Miyamoto International, Inc.
The Ruzika Company, Inc,
MDC Consulting Engineers
Pocock Design Solutions
Newson Brown Acoustics, LLC
VCA Engineers, Inc.
HJSA Consulting
L.A. Design Associates, Inc.

Sheet Title
Electrical Site Plan

Sheet Number
E111

Plot Date: 9/20/2023 8:37:02 AM
Last Save By: Tom Low Login: Tom Low J:\Project Files 2022\2022-019 Hacienda La Puente PAC\Electrical Drawings\E\E111 - Electrical Site Plan.dwg
Plot Scale: 1.0000 '= 1"
Plot Style Table: PAC_Central_Sketched.ctb

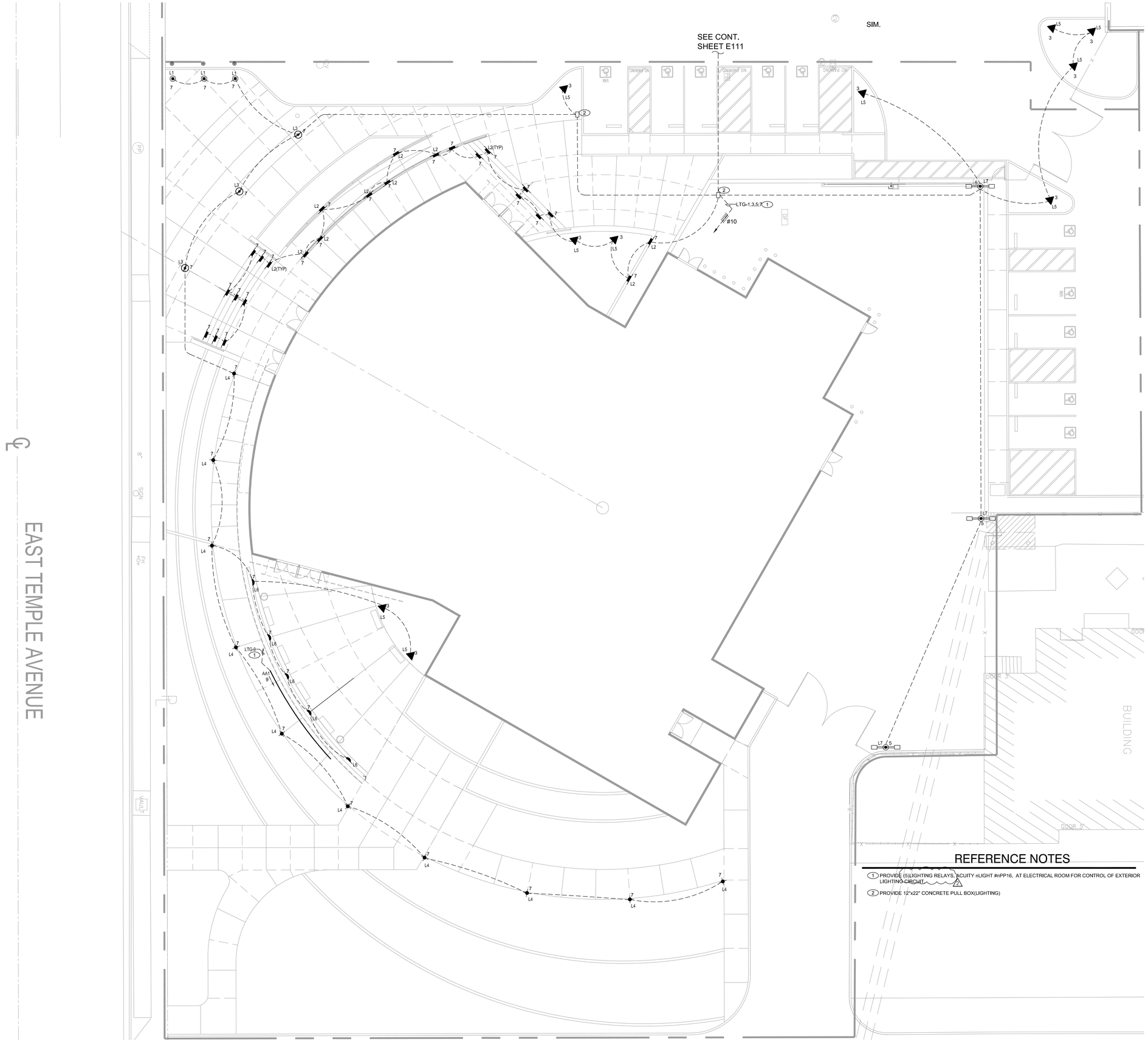

REFERENCE NOTES

1. PROVIDE (5)LIGHTING RELAYS, ACUITY nLIGHT #nPP16, AT ELECTRICAL ROOM FOR CONTROL OF EXTERIOR LIGHTING CIRCUIT. /2
2. PROVIDE 12"x22" CONCRETE PULL BOX(LIGHTING)

1 ELECTRICAL ENLARGED LIGHTING SITE PLAN

SCALE: 1" = 10'-0"

0' 5' 10' 20' 30'

NORTH

APPL. No. A 03-122864

DSA Stamp

Architect

RACHLIN PARTNERS
8840 National Boulevard
Culver City, CA 90232
310.204.3400

Disclaimer:

THESE DRAWINGS ARE THE PROPERTY OF THE ARCHITECT. THE DESIGNS SHOWN AND DESCRIBED HEREIN INCLUDING ALL TECHNICAL DRAWINGS ARE PROPRIETARY AND CANNOT BE COPIED, DUPLICATED OR COMMERCIALLY EXPLOITED, IN WHOLE OR IN PART. THE DRAWINGS AND SPECIFICATIONS SHALL NOT BE USED BY THE OWNER ON OTHER PROJECTS, FOR ADDITIONS TO THIS PROJECT, OR FOR COMPLETION OF THIS PROJECT BY OTHERS. THE OWNER AGREES TO HOLD HARMLESS, INDEMNIFY AND DEFEND THE ARCHITECT AGAINST ALL DAMAGES, CLAIMS AND LOSSES, INCLUDING DEFENSE COSTS, ARISING OUT OF ANY REUSE OF PLANS AND SPECIFICATIONS WITHOUT THE WRITTEN AUTHORIZATION OF THE ARCHITECT OF RECORD.

Copyright 2022 Rachlin Partners, All Rights Reserved.

Performing Arts Center
Hacienda La Puente Unified School District

635 North California Avenue
La Puente, CA 91744

Rev	Date	Issue
1	7.22.22	50% DD
2	10.21.22	50% CD
3	12.09.22	100% DSA Submittal
4	06.19.23	100% DSA Resubmittal
5	09.20.23	DSA Back Check
2	11.01.23	Addendum #2

Date: 09/20/23
Scale: As Shown
Drawn By: --
Checked By: --

Architect / Engineer Stamp

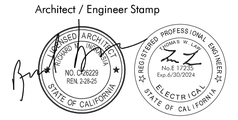

Consultants
Miyamoto International, Inc.
The Ruzika Company, Inc,
MDC Consulting Engineers
Pocock Design Solutions
Newson Brown Acoustics, LLC
VCA Engineers, Inc.
HJSA Consulting
L.A. Design Associates, Inc.

Sheet Title
Electrical
Enlarged Lighting
Site Plan

Sheet Number
E121

Plot Date: 10/31/2023 7:32:26 AM Last Save By: Tom Law Login: Tom Law J:\Project Files 2022\2022-019 Hacienda La Puente PAC\Electrical Drawings\E\E121 - Electrical Enlarged Site Plan.dwg

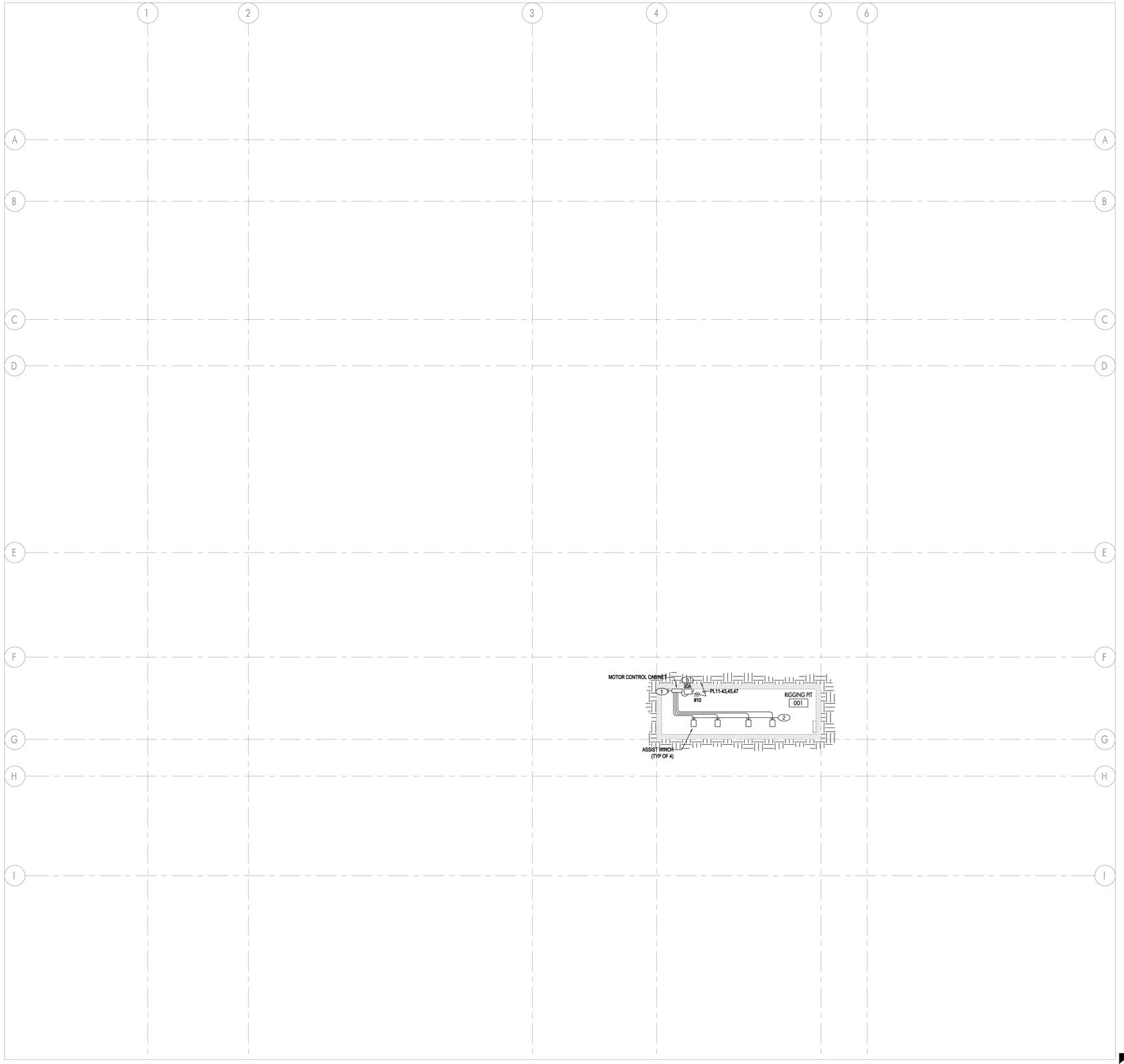

0' 4' 8' 16' 24'

NORTH

ELECTRICAL RIGGING PIT LEVEL FLOOR PLAN | SCALE 1/8" = 1'-0" | 1

GENERAL NOTES

1. CONDUIT ROUTING IS DIAGRAMMATIC REPRESENTATION ONLY, ROUTE CONDUITS TO SUIT FIELD CONDITIONS. TYPICAL FOR ENTIRE PROJECT.
2. REFER TO HVAC DRAWINGS FOR CONTROL WIRING DIAGRAMS AND PROVIDE CONDUIT, WIRING AND DEVICES TO BE PROVIDED BY DIVISION 26-ELECTRICAL SCOPE. TYPICAL FOR ENTIRE PROJECT.
3. REFER TO STAGE RIGGING DRAWINGS, SERIES TR* SHEETS, FOR ADDITIONAL ELECTRICAL REQUIREMENTS.

REFERENCE NOTES

(1) PROVIDE 3/4"C, WITH CABLING AS SHOWN IN DETAIL 1/TR911, TO CORRESPONDING MOTOR CONTROL STATION SHOWN ON SHEET E210.

(2) PROVIDE 3/4"C(POWER) AND 3/4"C(SIGNAL), WITH CABLING AS SHOWN IN DETAIL 1/TR911, TO ASSIST WINCH MOTOR FROM MOTOR CONTROL CABINET.

(3) PROVIDE 30A NON-FUSED DISCONNECT FOR CONNECTION TO MOTOR CONTROL CABINET.

APPL. No. A 03-122864

IDENTIFICATION STAMP
DIV. OF THE STATE ARCHITECT
APP: 03-122864 INC:
REVIEWED FOR
SS ☑ FLS ☑ ACS ☑
DATE: 10/03/2023

DSA Stamp

Architect

RACHLIN PARTNERS
8840 National Boulevard
Culver City, CA 90232
310.204.3400

Disclaimer:
THESE DRAWINGS ARE THE PROPERTY OF THE ARCHITECT. THE DESIGNS SHOWN AND DESCRIBED HEREIN INCLUDING ALL TECHNICAL DRAWINGS ARE PROPRIETARY AND CANNOT BE COPIED, DUPLICATED OR COMMERCIALLY EXPLOITED, IN WHOLE OR IN PART. THE DRAWINGS AND SPECIFICATIONS SHALL NOT BE USED BY THE OWNER ON OTHER PROJECTS, FOR ADDITIONS TO THIS PROJECT, OR FOR COMPLETION OF THIS PROJECT BY OTHERS. THE OWNER AGREES TO HOLD HARMLESS, INDEMNIFY AND DEFEND THE ARCHITECT AGAINST ALL DAMAGES, CLAIMS AND LOSSES, INCLUDING DEFENSE COSTS, ARISING OUT OF ANY REUSE OF PLANS AND SPECIFICATIONS WITHOUT THE WRITTEN AUTHORIZATION OF THE ARCHITECT OF RECORD.

Copyright 2022 Rachlin Partners, All Rights Reserved.

Performing Arts Center
Hacienda La Puente Unified School District

635 North California Avenue
La Puente, CA 91744

Rev	Date	Issue
1	7.22.22	50% DD
2	10.21.22	50% CD
3	12.09.22	100% DSA Submittal
4	06.19.23	100% DSA Resubmittal
5	09.20.23	DSA Back Check

Date: 09/20/23
Scale: As Shown
Drawn By: --
Checked By: --

Architect / Engineer Stamp

LICENSED ARCHITECT — EDWARD M. RACHLIN — NO. C-26229 — REN. 2-28-25 — STATE OF CALIFORNIA

REGISTERED PROFESSIONAL ENGINEER — THOMAS W. LEE — No.E-17225 — Exp.6/30/2024 — ELECTRICAL — STATE OF CALIFORNIA

Consultants
Miyamoto International, Inc.
The Ruzika Company, Inc,
MDC Consulting Engineers
Pocock Design Solutions
Newson Brown Acoustics, LLC
VCA Engineers, Inc.
HJSA Consulting
L.A. Design Associates, Inc.

Sheet Title
Electrical
Rigging Pit
Floor Plan

Sheet Number
E210

Plot Date: 9/20/2023 9:37:11 AM
Last Save By: Rooney Login: Tom Law L:\Project Files 2022\2022-019 Hacienda La Puente PAC\Electrical Drawings\E\E210 - Electrical Rigging Pit Plan.dwg
PAC_Cabinet sketched.rvt

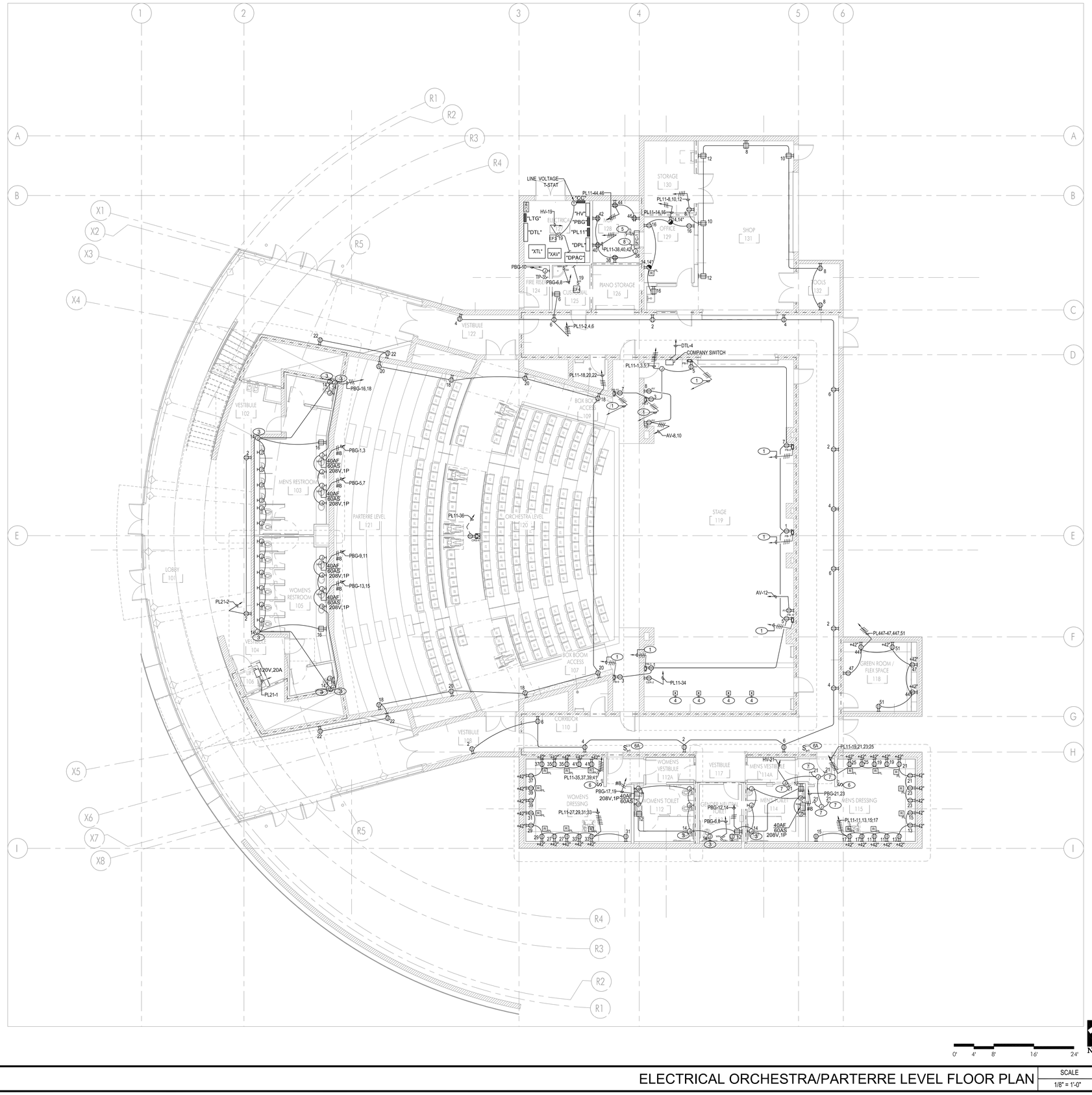

ELECTRICAL ORCHESTRA/PARTERRE LEVEL FLOOR PLAN | SCALE 1/8" = 1'-0" | 1

GENERAL NOTES

1. CONDUIT ROUTING IS DIAGRAMMATIC REPRESENTATION ONLY, ROUTE CONDUITS TO SUIT FIELD CONDITIONS, TYPICAL FOR ENTIRE PROJECT.
2. REFER TO HVAC DRAWINGS FOR CONTROL WIRING DIAGRAMS AND PROVIDE CONDUIT, WIRING AND DEVICES TO BE PROVIDED BY DIVISION 26-ELECTRICAL SCOPE, TYPICAL FOR ENTIRE PROJECT.
3. REFER TO MECHANICAL DRAWINGS FOR THERMOSTAT LOCATIONS, PROVIDE BACKBOX AND 3/4" CONDUIT TO CORRESPONDING UNIT.
4. REFER TO THEATRICAL DRAWINGS (RIGGING AND LIGHTING) FOR CONTROL STATION, CONDUIT, WIRING REQUIREMENTS.
5. REFER TO AV DRAWINGS FOR CONDUIT, DEVICE BOX, AND WIRING REQUIREMENTS.

REFERENCE NOTES

1. PROVIDE 3/4"C, 4#12 TO DIMMER AND RELAY BANK AT FOLLOWSPOT BOOTH. REFER TO TL SERIES DRAWINGS FOR PANEL/RACK/CIRCUIT ADDRESSES.
2. NOT USED.
3. PROVIDE 120V CONNECTION TO TRANSFORMER POWER SUPPLY (WATER CLOSETS/URINALS/LAVATORIES) BEHIND PLUMBING ACCESS PANEL, AND PROVIDE LOW VOLTAGE WIRING TO FIXTURES. SEE PLUMBING DRAWINGS FOR EXACT LOCATIONS AND REQUIREMENTS
4. MOTOR CONTROL STATION. PROVIDE 3/4"C WITH CABLING AS SHOWN IN DETAIL 1/TR911 TO MOTOR CONTROL CABINET IN ARBOR WELL.
5. INDOOR UNIT POWERED FROM CORRESPONDING ROOFTOP UNIT. PROVIDE 3/4"C,2#12+1#12GND BETWEEN UNITS.
6. 2-POLE SWITCH, WITH INDICATOR LAMPS,(1)SWITCH CONTROLLING ALL OUTLETS AT DRESSING STATIONS (VIA PLUG LOAD RELAYS) ABOVE DRESSING ROOM COUNTER, AND (1)SWITCH CONTROLLING STATION LIGHTING (TYPE "M"), PER NEC 520.73&74
6A. SAME AS REF. NOTE (6), WITH ONLY INDICATOR LAMPS (LOCKED OUT SWITCH CONTROLS), PER NEC 520.73&74
7. PROVIDE CONNECTION TO BD/VVT.
8. PROVIDE 120V CONNECTION TO CONDENSATE PUMP AT SFC-1.

APPL. No. A 03-122864

DSA Stamp

Architect

RACHLIN PARTNERS
8840 National Boulevard
Culver City, CA 90232
310.204.3400

Disclaimer:

THESE DRAWINGS ARE THE PROPERTY OF THE ARCHITECT. THE DESIGNS SHOWN AND DESCRIBED HEREIN INCLUDING ALL TECHNICAL DRAWINGS ARE PROPRIETARY AND CANNOT BE COPIED, DUPLICATED OR COMMERCIALLY EXPLOITED, IN WHOLE OR IN PART. THE DRAWINGS AND SPECIFICATIONS SHALL NOT BE USED BY THE OWNER ON OTHER PROJECTS, FOR ADDITIONS TO THIS PROJECT, OR FOR COMPLETION OF THIS PROJECT BY OTHERS. THE OWNER AGREES TO HOLD HARMLESS, INDEMNIFY AND DEFEND THE ARCHITECT AGAINST ALL DAMAGES, CLAIMS AND LOSSES, INCLUDING DEFENSE COSTS, ARISING OUT OF ANY REUSE OF PLANS AND SPECIFICATIONS WITHOUT THE WRITTEN AUTHORIZATION OF THE ARCHITECT OF RECORD.

Copyright 2022 Rachlin Partners, All Rights Reserved.

Performing Arts Center
Hacienda La Puente Unified School District

635 North California Avenue
La Puente, CA 91744

Rev	Date	Issue
1	7.22.22	50% DD
2	10.21.22	50% CD
3	12.09.22	100% DSA Submittal
4	06.19.23	100% DSA Resubmittal
5	09.20.23	DSA Back Check
1	11.01.23	Addendum #2

Date: 09/20/23
Scale: As Shown
Drawn By: --
Checked By: --

Architect / Engineer Stamp

LICENSED ARCHITECT — NO. C26229 — REN. 2-28-25 — STATE OF CALIFORNIA
REGISTERED PROFESSIONAL ENGINEER — No. E 17209 — Exp. 6/30/2024 — ELECTRICAL — STATE OF CALIFORNIA

Consultants
Miyamoto International, Inc.
The Ruzika Company, Inc,
MDC Consulting Engineers
Pocock Design Solutions
Newson Brown Acoustics, LLC
VCA Engineers, Inc.
HJSA Consulting
L.A. Design Associates, Inc.

Sheet Title
Electrical
Orchestra Level
Power Plan

Sheet Number
E211

Plot Date: 10/31/2023 7:34:49 AM
I:\Project Files 2022\2022-019 Hacienda La Puente PAC\Electrical Drawings\E\E211 - Orchestra Level Plan.dwg
Login: Tom Law
Last Save By: Tom Law
E22-1EP000-PAC Central detached.rvt

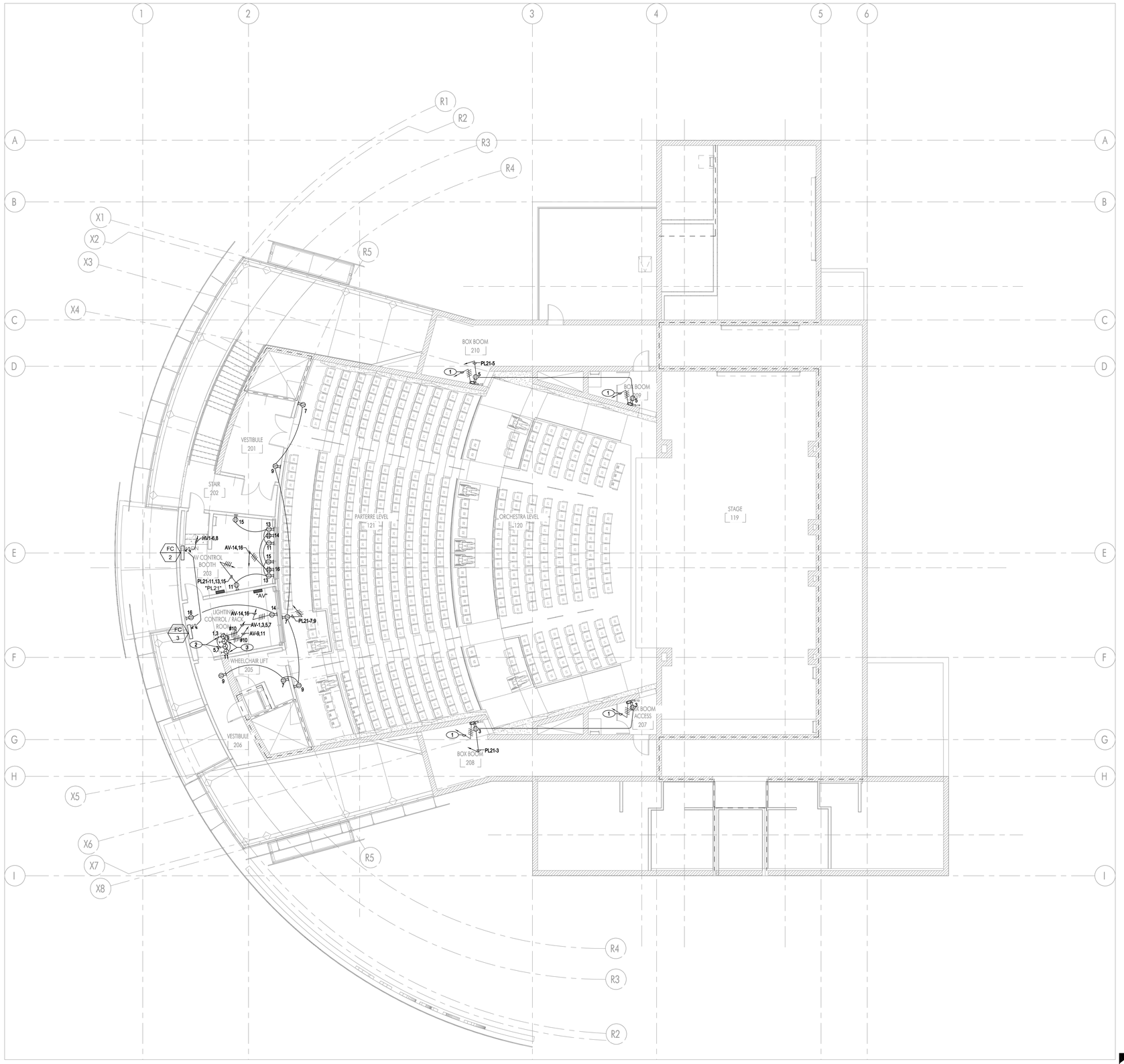

ELECTRICAL CONTROL BOOTH LEVEL FLOOR PLAN | SCALE 1/8" = 1'-0" | 1

GENERAL NOTES

1. CONDUIT ROUTING IS DIAGRAMMATIC REPRESENTATION ONLY. ROUTE CONDUITS TO SUIT FIELD CONDITIONS. TYPICAL FOR ENTIRE PROJECT.
2. REFER TO HVAC DRAWINGS FOR CONTROL WIRING DIAGRAMS AND PROVIDE CONDUIT, WIRING AND DEVICES TO BE PROVIDED BY DIVISION 26-ELECTRICAL SCOPE. TYPICAL FOR ENTIRE PROJECT.
3. REFER TO MECHANICAL DRAWINGS FOR THERMOSTAT LOCATIONS. PROVIDE BACKBOX AND 3/4" CONDUIT TO CORRESPONDING UNIT.
4. REFER TO THEATRICAL DRAWINGS (RIGGING AND LIGHTING) FOR CONTROL STATION, CONDUIT, WIRING REQUIREMENTS.
5. REFER TO AV DRAWINGS FOR CONDUIT, DEVICE BOX, AND WIRING REQUIREMENTS.

REFERENCE NOTES

(1) PROVIDE 3/4"C, 4#12 TO DIMMER AND RELAY BANK AT FOLLOWSPOT BOOTH. REFER TO TL SERIES DRAWINGS FOR PANEL/RACK CIRCUIT ADDRESSES.

(2) PROVIDE 208V, 1P, 30A, NEMA 6-30 OUTLET AT AV EQUIP. RACK. CONFIRM WITH AV DRAWINGS PRIOR TO ROUGH-IN.

(3) PROVIDE 120V, 1P, 30A, NEMA 5-30 OUTLET AT AV EQUIP. RACK. CONFIRM WITH AV DRAWINGS PRIOR TO ROUGH-IN.

APPL. No. A 03-122864

IDENTIFICATION STAMP
DIV. OF THE STATE ARCHITECT
APP: 03-122864 INC:
REVIEWED FOR
SS ☑ FLS ☑ ACS ☑
DATE: 10/03/2023

DSA Stamp

Architect

RACHLIN
PARTNERS
8840 National Boulevard
Culver City, CA 90232
310.204.3400

Disclaimer:

THESE DRAWINGS ARE THE PROPERTY OF THE ARCHITECT. THE DESIGNS SHOWN AND DESCRIBED HEREIN INCLUDING ALL TECHNICAL DRAWINGS ARE PROPRIETARY AND CANNOT BE COPIED, DUPLICATED OR COMMERCIALLY EXPLOITED, IN WHOLE OR IN PART. THE DRAWINGS AND SPECIFICATIONS SHALL NOT BE USED BY THE OWNER ON OTHER PROJECTS, FOR ADDITIONS TO THIS PROJECT, OR FOR COMPLETION OF THIS PROJECT BY OTHERS. THE OWNER AGREES TO HOLD HARMLESS, INDEMNIFY AND DEFEND THE ARCHITECT AGAINST ALL DAMAGES, CLAIMS AND LOSSES, INCLUDING DEFENSE COSTS, ARISING OUT OF ANY REUSE OF PLANS AND SPECIFICATIONS WITHOUT THE WRITTEN AUTHORIZATION OF THE ARCHITECT OF RECORD.

Copyright 2022 Rachlin Partners, All Rights Reserved.

Performing Arts Center
Hacienda La Puente Unified School District

635 North California Avenue
La Puente, CA 91744

Rev	Date	Issue
1	7.22.22	50% DD
2	10.21.22	50% CD
3	12.09.22	100% DSA Submittal
4	06.19.23	100% DSA Resubmittal
5	09.20.23	DSA Back Check

Date: 09/20/23
Scale: As Shown
Drawn By: --
Checked By: --

Architect / Engineer Stamp

LICENSED ARCHITECT
RICHARD M. RACHLIN
NO. C26229
REN. 2-28-25
STATE OF CALIFORNIA

REGISTERED PROFESSIONAL ENGINEER
Neil E. Ferlin
Exp.6/30/2024
ELECTRICAL
STATE OF CALIFORNIA

Consultants
Miyamoto International, Inc.
The Ruzika Company, Inc,
MDC Consulting Engineers
Pocock Design Solutions
Newson Brown Acoustics, LLC
VCA Engineers, Inc.
HJSA Consulting
L.A. Design Associates, Inc.

Sheet Title
Electrical
Control Booth
Level
Power Plan

Sheet Number
E212

Plot Date: 9/20/2023 9:37:22 AM
I:*** Save By: Tom Law Login: Tom Law J:\Project Files 2022\2022-019 Hacienda La Puente PAC\Electrical Drawings\E\E212 - Control Booth Level Plan.dwg
R22 HLPUSD PAC_Central detached.rvt

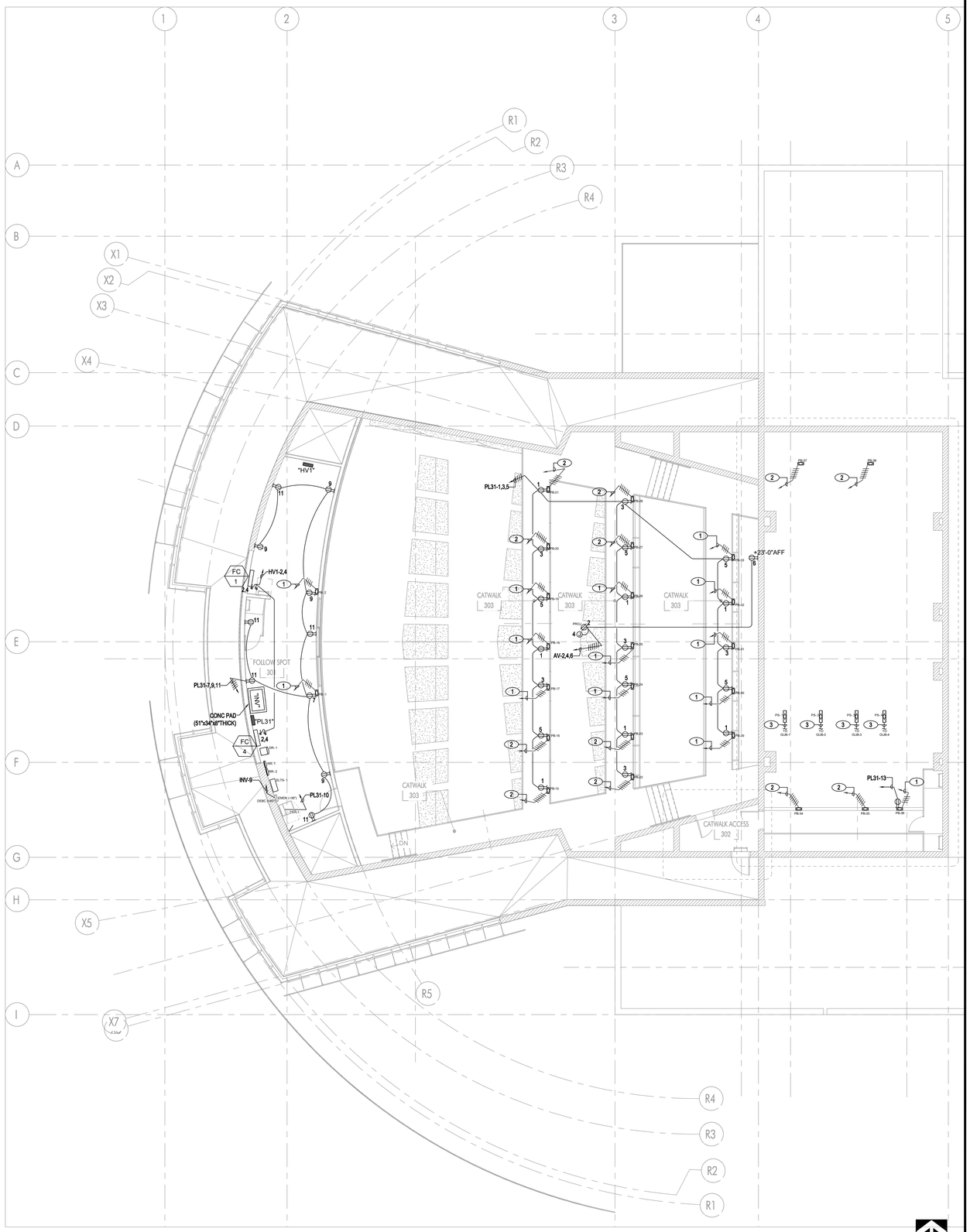

ELECTRICAL FOLLOW SPOT LEVEL FLOOR PLAN | SCALE 1/8" = 1'-0" | 1

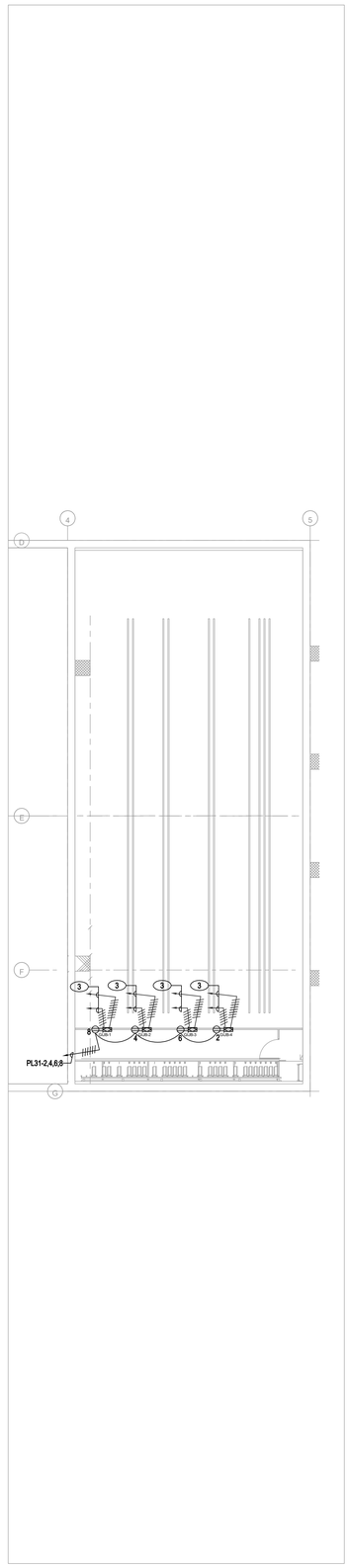

LOADING GALLERY PLAN | SCALE 1/8" = 1'-0" | 1

GENERAL NOTES

1. CONDUIT ROUTING IS DIAGRAMMATIC REPRESENTATION ONLY, ROUTE CONDUITS TO SUIT FIELD CONDITIONS. TYPICAL FOR ENTIRE PROJECT.
2. REFER TO HVAC DRAWINGS FOR CONTROL WIRING DIAGRAMS AND PROVIDE CONDUIT, WIRING AND DEVICES TO BE PROVIDED BY DIVISION 26-ELECTRICAL SCOPE. TYPICAL FOR ENTIRE PROJECT.
3. REFER TO MECHANICAL DRAWINGS FOR THERMOSTAT LOCATIONS. PROVIDE BACKBOX AND 3/4" CONDUIT TO CORRESPONDING UNIT.
4. REFER TO THEATRICAL DRAWINGS (RIGGING AND LIGHTING) FOR CONTROL STATION, CONDUIT, WIRING REQUIREMENTS.
5. REFER TO AV DRAWINGS FOR CONDUIT, DEVICE BOX, AND WIRING REQUIREMENTS.

REFERENCE NOTES

(1) PROVIDE 3/4"C, 4#12 TO DIMMER AND RELAY BANK AT FOLLOWSPOT BOOTH. REFER TO TL SERIES DRAWINGS FOR PANEL/RACK CIRCUIT ADDRESSES.

(2) PROVIDE 3/4"C, 6#12 TO DIMMER AND RELAY BANK AT FOLLOWSPOT BOOTH. REFER TO TL SERIES DRAWINGS FOR PANEL/RACK CIRCUIT ADDRESSES.

(3) PROVIDE 3/4"C, 6#10 & 3/4"C, 8#10 FROM "GUB" TO DIMMER AND RELAY BANK AT FOLLOWSPOT BOOTH, AND TO CORRESPONDING "PS". REFER TO TL SERIES DRAWINGS FOR PANEL/RACK CIRCUIT ADDRESSES.

APPL. No. A 03-122864

IDENTIFICATION STAMP
DIV. OF THE STATE ARCHITECT
APP: 03-122864 INC:
REVIEWED FOR
SS ☑ FLS ☑ ACS ☑
DATE: 10/03/2023

DSA Stamp

Architect

RACHLIN
PARTNERS
8840 National Boulevard
Culver City, CA 90232
310.204.3400

Disclaimer:

THESE DRAWINGS ARE THE PROPERTY OF THE ARCHITECT. THE DESIGNS SHOWN AND DESCRIBED HEREIN INCLUDING ALL TECHNICAL DRAWINGS ARE PROPRIETARY AND CANNOT BE COPIED, DUPLICATED OR COMMERCIALLY EXPLOITED, IN WHOLE OR IN PART. THE DRAWINGS AND SPECIFICATIONS SHALL NOT BE USED BY THE OWNER ON OTHER PROJECTS, FOR ADDITIONS TO THIS PROJECT, OR FOR COMPLETION OF THIS PROJECT BY OTHERS. THE OWNER AGREES TO HOLD HARMLESS, INDEMNIFY AND DEFEND THE ARCHITECT AGAINST ALL DAMAGES, CLAIMS AND LOSSES, INCLUDING DEFENSE COSTS, ARISING OUT OF ANY REUSE OF PLANS AND SPECIFICATIONS WITHOUT THE WRITTEN AUTHORIZATION OF THE ARCHITECT OF RECORD.

Copyright 2022 Rachlin Partners, All Rights Reserved.

Performing Arts Center
Hacienda La Puente Unified School District

635 North California Avenue
La Puente, CA 91744

Rev	Date	Issue
1	7.22.22	50% DD
2	10.21.22	50% CD
3	12.09.22	100% DSA Submittal
4	06.19.23	100% DSA Resubmittal
5	09.20.23	DSA Back Check

Date: 09/20/23
Scale: As Shown
Drawn By: --
Checked By: --

Architect / Engineer Stamp

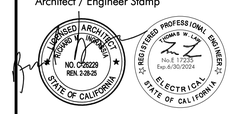

Consultants
Miyamoto International, Inc.
The Ruzika Company, Inc,
MDC Consulting Engineers
Pocock Design Solutions
Newson Brown Acoustics, LLC
VCA Engineers, Inc.
HJSA Consulting
L.A. Design Associates, Inc.

Sheet Title
Electrical
Follow Spot Level
Power Plan

Sheet Number
E213

Plot Date: 9/20/2023 9:37:27 AM
Plot By: HUGO PAC Control sketched.ctb
Last Save By: Tom Law Login: Tom Law J:\Project Files\2022\2022-019 Hacienda La Puente PAC\Electrical Drawings\E\E213 - Follow Spot Level Plan.dwg

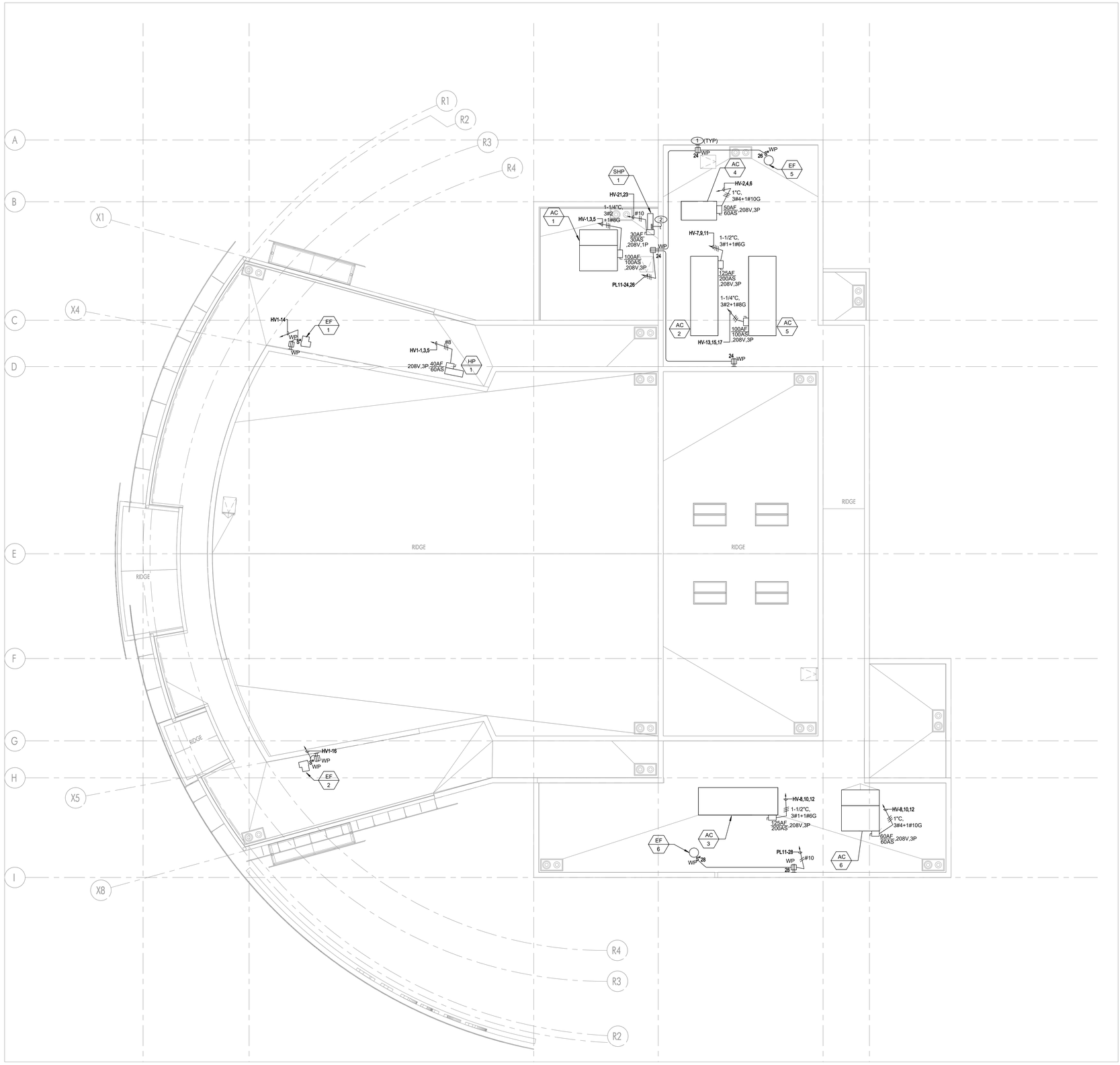

0' 4' 8' 16' 24'

NORTH

ELECTRICAL ROOF PLAN | SCALE 1/8" = 1'-0" | 1

GENERAL NOTES

1. CONDUIT ROUTING IS DIAGRAMMATIC REPRESENTATION ONLY. ROUTE CONDUITS TO SUIT FIELD CONDITIONS. TYPICAL FOR ENTIRE PROJECT. ROUTE CONDUITS AT UNDERSIDE OF ROOF FOR ROOFTOP EQUIPMENT, AND PENETRATE ROOF AT EQUIPMENT LOCATION. COORDINATE LOCATIONS.
2. REFER TO HVAC DRAWINGS FOR CONTROL WIRING DIAGRAMS AND PROVIDE CONDUIT, WIRING AND DEVICES TO BE PROVIDED BY DIVISION 26-ELECTRICAL SCOPE. TYPICAL FOR ENTIRE PROJECT.
3. ALL EXTERIOR EQUIPMENT TO BE NEMA-3R RATED.
4. COORDINATE LOCATION FOR EQUIPMENT POINTS OF CONNECTION/DISCONNECT SWITCHES. MAINTAIN ALL CODE REQUIRED CLEARANCES. NO GAS OR CONDENSATE LINE SHALL BE RUN IN EQUIPMENT SPACE IN FRONT OF DISCONNECTS SWITCHES. COORDINATE LOCATION WITH MECHANICAL AND PLUMBING PIPING DRAWINGS.
5. REFER TO MECHANICAL DRAWINGS AND CONTROL WIRING DIAGRAMS AND PROVIDE ALL REQUIRED POWER, STARTERS, RELAYS, AND CONTROL DEVICES.
6. FINAL EQUIPMENT CONNECTIONS TO ALL ROOFTOP EQUIPMENT SHALL BE MADE WITH SEAL TIGHT FLEX CONDUIT.

REFERENCE NOTES

(1) PROVIDE WEATHER RESISTANT, GFI PROTECTED RECEPTACLE, IN WEATHERPROOF ENCLOSURE, LISTED/IDENTIFIED AS "EXTRA DUTY" COVER.

(2) INDOOR UNIT POWERED FROM CORRESPONDING ROOFTOP UNIT. PROVIDE 3/4"C,2#12+1#12GND BETWEEN UNITS.

APPL. No. A 03-122864

IDENTIFICATION STAMP
DIV. OF THE STATE ARCHITECT
APP: 03-122864 INC:
REVIEWED FOR
SS ☑ FLS ☑ ACS ☑
DATE: 10/03/2023

DSA Stamp

Architect

RACHLIN
PARTNERS
8840 National Boulevard
Culver City, CA 90232
310.204.3400

Disclaimer:

THESE DRAWINGS ARE THE PROPERTY OF THE ARCHITECT. THE DESIGNS SHOWN AND DESCRIBED HEREIN INCLUDING ALL TECHNICAL DRAWINGS ARE PROPRIETARY AND CANNOT BE COPIED, DUPLICATED OR COMMERCIALLY EXPLOITED, IN WHOLE OR IN PART. THE DRAWINGS AND SPECIFICATIONS SHALL NOT BE USED BY THE OWNER ON OTHER PROJECTS, FOR ADDITIONS TO THIS PROJECT, OR FOR COMPLETION OF THIS PROJECT BY OTHERS. THE OWNER AGREES TO HOLD HARMLESS, INDEMNIFY AND DEFEND THE ARCHITECT AGAINST ALL DAMAGES, CLAIMS AND LOSSES, INCLUDING DEFENSE COSTS, ARISING OUT OF ANY REUSE OF PLANS AND SPECIFICATIONS WITHOUT THE WRITTEN AUTHORIZATION OF THE ARCHITECT OF RECORD.

Copyright 2022 Rachlin Partners, All Rights Reserved.

Performing Arts Center
Hacienda La Puente Unified School District

635 North California Avenue
La Puente, CA 91744

Rev	Date	Issue
1	7.22.22	50% DD
2	10.21.22	50% CD
3	12.09.22	100% DSA Submittal
4	06.19.23	100% DSA Resubmittal
5	09.20.23	DSA Back Check

Date: 09/20/23
Scale: As Shown
Drawn By: --
Checked By: --

Architect / Engineer Stamp

Consultants
Miyamoto International, Inc.
The Ruzika Company, Inc,
MDC Consulting Engineers
Pocock Design Solutions
Newson Brown Acoustics, LLC
VCA Engineers, Inc.
HJSA Consulting
L.A. Design Associates, Inc.

Sheet Title
Electrical
Roof Plan

Sheet Number
E214

Plot Date: 9/20/2023 9:37:32 AM
Last Save By: Tom Law Login: Tom Law J:\Project Files 2022\2022-019 Hacienda La Puente PAC\Electrical Drawings\E\E214 - Roof Plan.dwg
R22 1EFE33-PAC Central detached.rvt

GENERAL NOTES

1. REFER TO THEATRICAL LIGHTING PLANS AND RISER DIAGRAMS (TL SERIES) FOR CONTROL STATIONS (CRS, HCS, WCS), PULL BOX, CONDUIT, AND WIRING REQUIREMENTS.

REFERENCE NOTES

1. PROVIDE (5)LIGHTING RELAYS, ACUITY nLIGHT #nPP16, AT ELECTRICAL ROOM FOR CONTROL OF EXTERIOR LIGHTING CIRCUIT. SEE SHEET E121 FOR CIRCUITS.
2. LOCATE REMOTE TRANSFORMER IN ACCESSIBLE LOCATION.

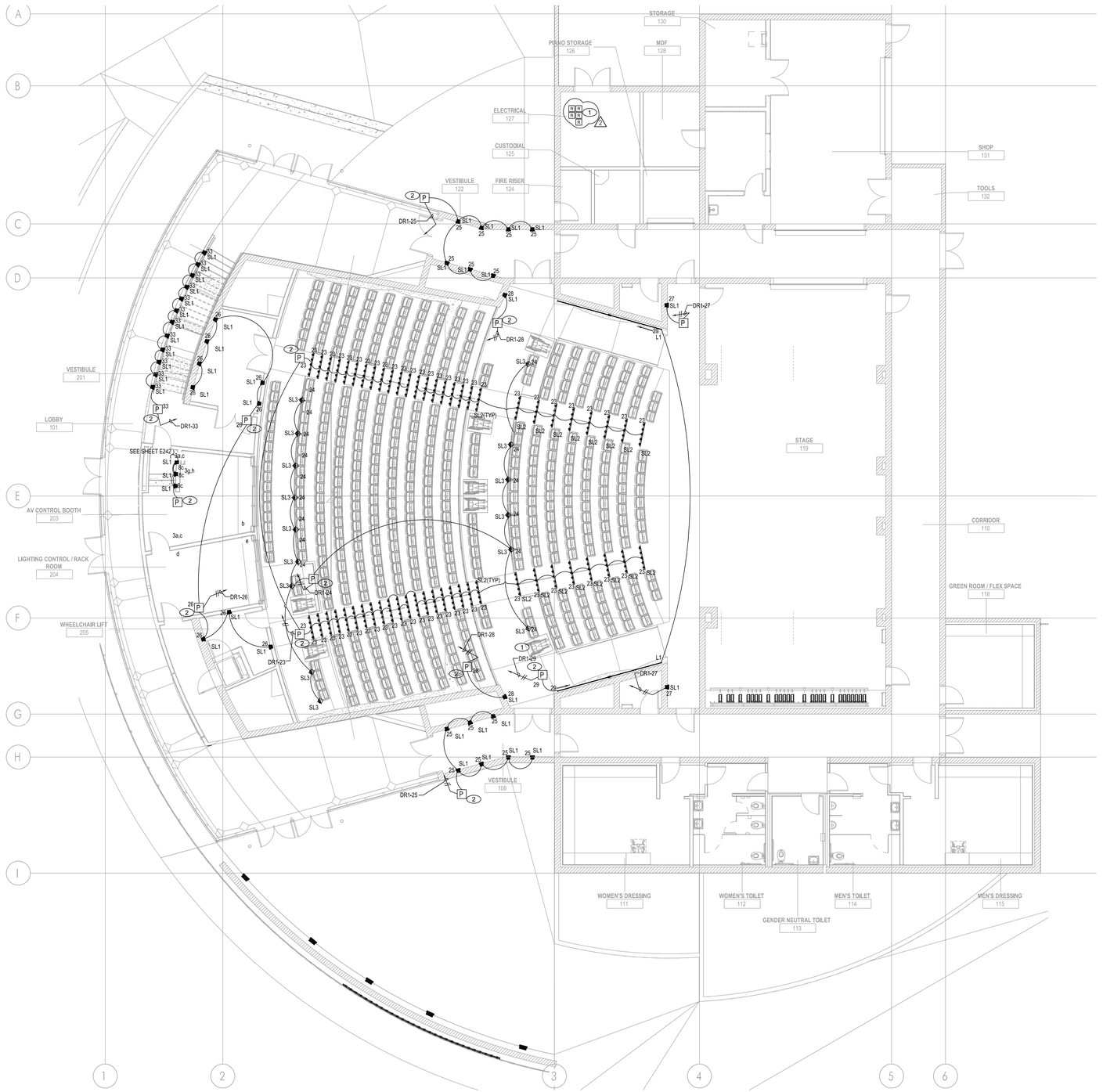

1 LOW LEVEL LIGHTING PLAN

SCALE: 1/8" = 1'-0"

Plot Date: 10/31/2023 7:37:03 AM Last Save By: Tom Lavy Login: Tom Lavy J:\Project Files 2022\2022-019 Hacienda La Puente PAC\Electrical Drawings\E\E240 - Orchestra Level - Low Lighting Plan.dwg

APPL. No. A 03-122864

DSA Stamp

Architect

RACHLIN PARTNERS
8840 National Boulevard
Culver City, CA 90232
310.204.3400

Disclaimer:

THESE DRAWINGS ARE THE PROPERTY OF THE ARCHITECT. THE DESIGNS SHOWN AND DESCRIBED HEREIN INCLUDING ALL TECHNICAL DRAWINGS ARE PROPRIETARY AND CANNOT BE COPIED, DUPLICATED OR COMMERCIALLY EXPLOITED, IN WHOLE OR IN PART. THE DRAWINGS AND SPECIFICATIONS SHALL NOT BE USED BY THE OWNER ON OTHER PROJECTS, FOR ADDITIONS TO THIS PROJECT, OR FOR COMPLETION OF THIS PROJECT BY OTHERS. THE OWNER AGREES TO HOLD HARMLESS, INDEMNIFY AND DEFEND THE ARCHITECT AGAINST ALL DAMAGES, CLAIMS AND LOSSES, INCLUDING DEFENSE COSTS, ARISING OUT OF ANY REUSE OF PLANS AND SPECIFICATIONS WITHOUT THE WRITTEN AUTHORIZATION OF THE ARCHITECT OF RECORD.

Copyright 2022 Rachlin Partners, All Rights Reserved.

Performing Arts Center
Hacienda La Puente Unified School District

635 North California Avenue
La Puente, CA 91744

Rev	Date	Issue
1	7.22.22	50% DD
2	10.21.22	50% CD
3	12.09.22	100% DSA Submittal
4	06.19.23	100% DSA Resubmittal
5	09.20.23	DSA Back Check
2	11.01.23	Addendum #2

Date: 09/20/23
Scale: As Shown
Drawn By: --
Checked By: --

Architect / Engineer Stamp

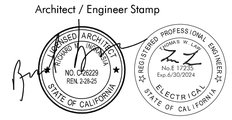

Consultants

Miyamoto International, Inc.
The Ruzika Company, Inc,
MDC Consulting Engineers
Pocock Design Solutions
Newson Brown Acoustics, LLC
VCA Engineers, Inc.
HJSA Consulting
L.A. Design Associates, Inc.

Sheet Title

Electrical Low Level Lighting Plan

Sheet Number

E240

GENERAL NOTES

1. REFER TO THEATRICAL LIGHTING PLANS AND RISER DIAGRAMS (TL SERIES) FOR CONTROL STATIONS (CRS, HCS, WCS), PULL BOX, CONDUIT, AND WIRING REQUIREMENTS.

REFERENCE NOTES

(1) CIRCUIT TO DIMMING RELAY PANEL TO BE RUN VIA EMERGENCY LIGHTING TRANSFER SYSTEM "ELTS" AT FOLLOW SPOT LEVEL. SEE EMERGENCY TRANSFER SWITCH SCHEDULE ON SHEET E004, FOR EMERGENCY CIRCUITS FOR INTERFACE.

(2) LOCATE REMOTE TRANSFORMER IN ACCESSIBLE LOCATION.

(3) PROVIDE NORMAL CIRCUIT, LTG-12, AND EMERGENCY CIRCUIT, INV- 9 FOR CONNECTION TO ALL EXIT SIGNS.

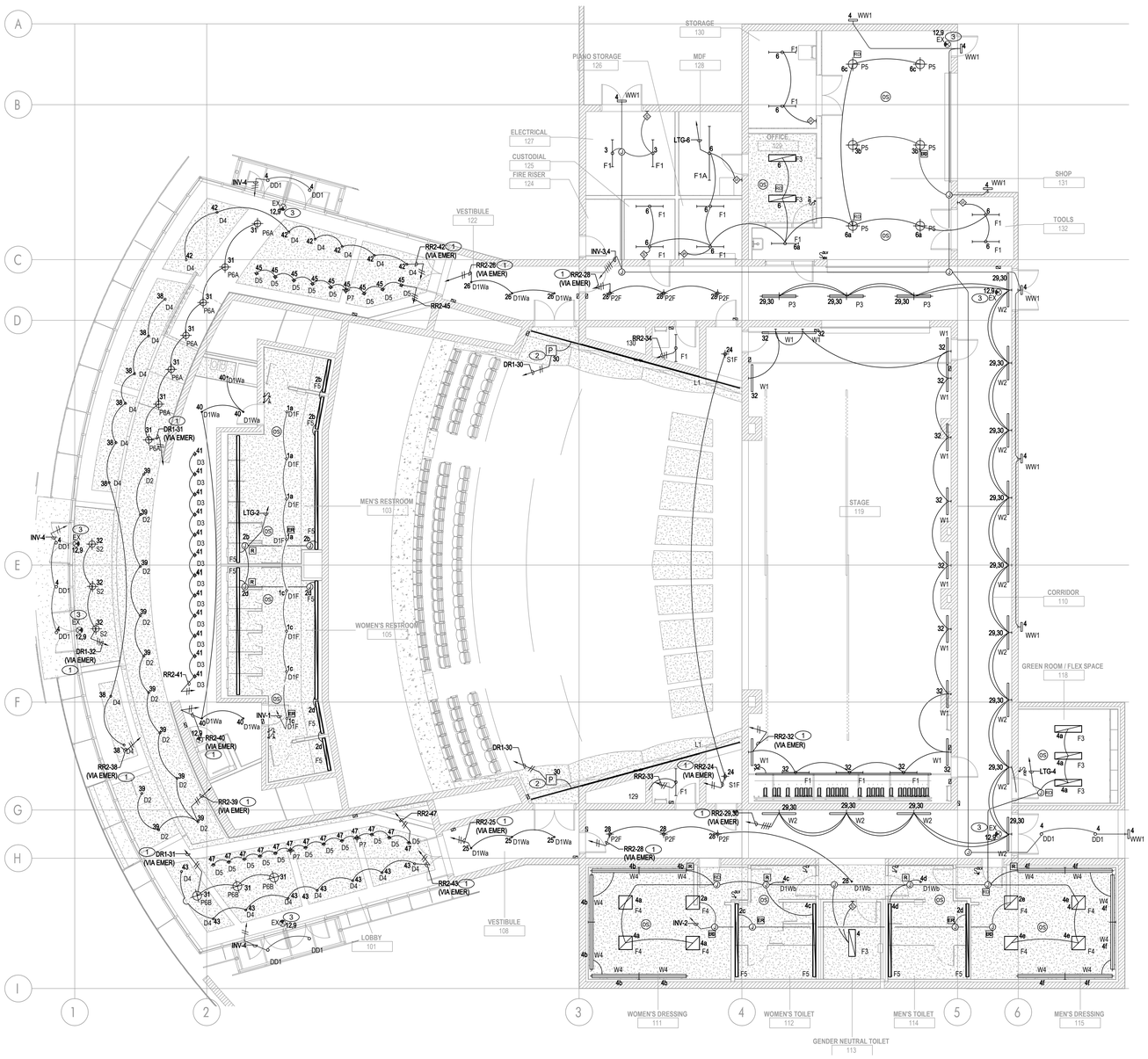

1 MAIN LEVEL LIGHTING PLAN

SCALE: 1/8" = 1'-0"

0' 4' 8' 16' 24'

NORTH

APPL. No. A 03-122864

IDENTIFICATION STAMP
DIV. OF THE STATE ARCHITECT
APP: 03-122864 INC:
REVIEWED FOR
SS ☑ FLS ☑ ACS ☑
DATE: 10/03/2023

DSA Stamp

Architect

RACHLIN
PARTNERS
8840 National Boulevard
Culver City, CA 90232
310.204.3400

Disclaimer:

THESE DRAWINGS ARE THE PROPERTY OF THE ARCHITECT. THE DESIGNS SHOWN AND DESCRIBED HEREIN INCLUDING ALL TECHNICAL DRAWINGS ARE PROPRIETARY AND CANNOT BE COPIED, DUPLICATED OR COMMERCIALLY EXPLOITED, IN WHOLE OR IN PART. THE DRAWINGS AND SPECIFICATIONS SHALL NOT BE USED BY THE OWNER ON OTHER PROJECTS, FOR ADDITIONS TO THIS PROJECT, OR FOR COMPLETION OF THIS PROJECT BY OTHERS. THE OWNER AGREES TO HOLD HARMLESS, INDEMNIFY AND DEFEND THE ARCHITECT AGAINST ALL DAMAGES, CLAIMS AND LOSSES, INCLUDING DEFENSE COSTS, ARISING OUT OF ANY REUSE OF PLANS AND SPECIFICATIONS WITHOUT THE WRITTEN AUTHORIZATION OF THE ARCHITECT OF RECORD.

Copyright 2022 Rachlin Partners, All Rights Reserved.

Performing Arts Center
Hacienda La Puente Unified School District

635 North California Avenue
La Puente, CA 91744

Rev	Date	Issue
1	7.22.22	50% DD
2	10.21.22	50% CD
3	12.09.22	100% DSA Submittal
4	06.19.23	100% DSA Resubmittal
5	09.20.23	DSA Back Check

Date: 09/20/23
Scale: As Shown
Drawn By: --
Checked By: --

Architect / Engineer Stamp

LICENSED ARCHITECT — NO. C026229 — REN. 2-28-25 — STATE OF CALIFORNIA

REGISTERED PROFESSIONAL ENGINEER — Neil E. Hill — Exp.6/30/2024 — ELECTRICAL — STATE OF CALIFORNIA

Consultants
Miyamoto International, Inc.
The Ruzika Company, Inc,
MDC Consulting Engineers
Pocock Design Solutions
Newson Brown Acoustics, LLC
VCA Engineers, Inc.
HJSA Consulting
L.A. Design Associates, Inc.

Sheet Title
Electrical
Main Level
Lighting Plan

Sheet Number
E241

Plot Date: 9/20/2023 9:37:47 AM Last Save By: Tom Law Login: Tom Law J:\Project Files 2022\2022-019 Hacienda La Puente PAC\Electrical Drawings\E\E241 - Main Level - Lighting Plan.dwg

Statistics						
Description	Symbol	Avg	Max	Min	Max/Min	Avg/Min
Back stage corridor	+	8.6 fc	11.5 fc	5.6 fc	2.1:1	1.5:1
Main Lobby	+	16.7 fc	40.9 fc	3.1 fc	13.2:1	5.4:1
Main Stage	+	20.8 fc	53.3 fc	2.8 fc	19.0:1	7.4:1
Mens Dressing	+	5.5 fc	12.1 fc	1.6 fc	7.6:1	3.4:1
Men's Restroom	+	5.5 fc	10.1 fc	0.5 fc	20.2:1	11.0:1
Men's Toilet	+	6.1 fc	10.7 fc	1.2 fc	8.9:1	5.1:1
Vestibule #1	+	8.8 fc	11.3 fc	6.5 fc	1.7:1	1.4:1
Vestibule South	+	9.8 fc	11.6 fc	8.7 fc	1.3:1	1.1:1
Women's Drewssing	+	6.0 fc	12.1 fc	2.0 fc	6.1:1	3.0:1
Women's Restroom	+	5.4 fc	11.1 fc	1.0 fc	11.1:1	5.4:1
Women's toilet	+	12.5 fc	20.6 fc	2.2 fc	9.4:1	5.7:1

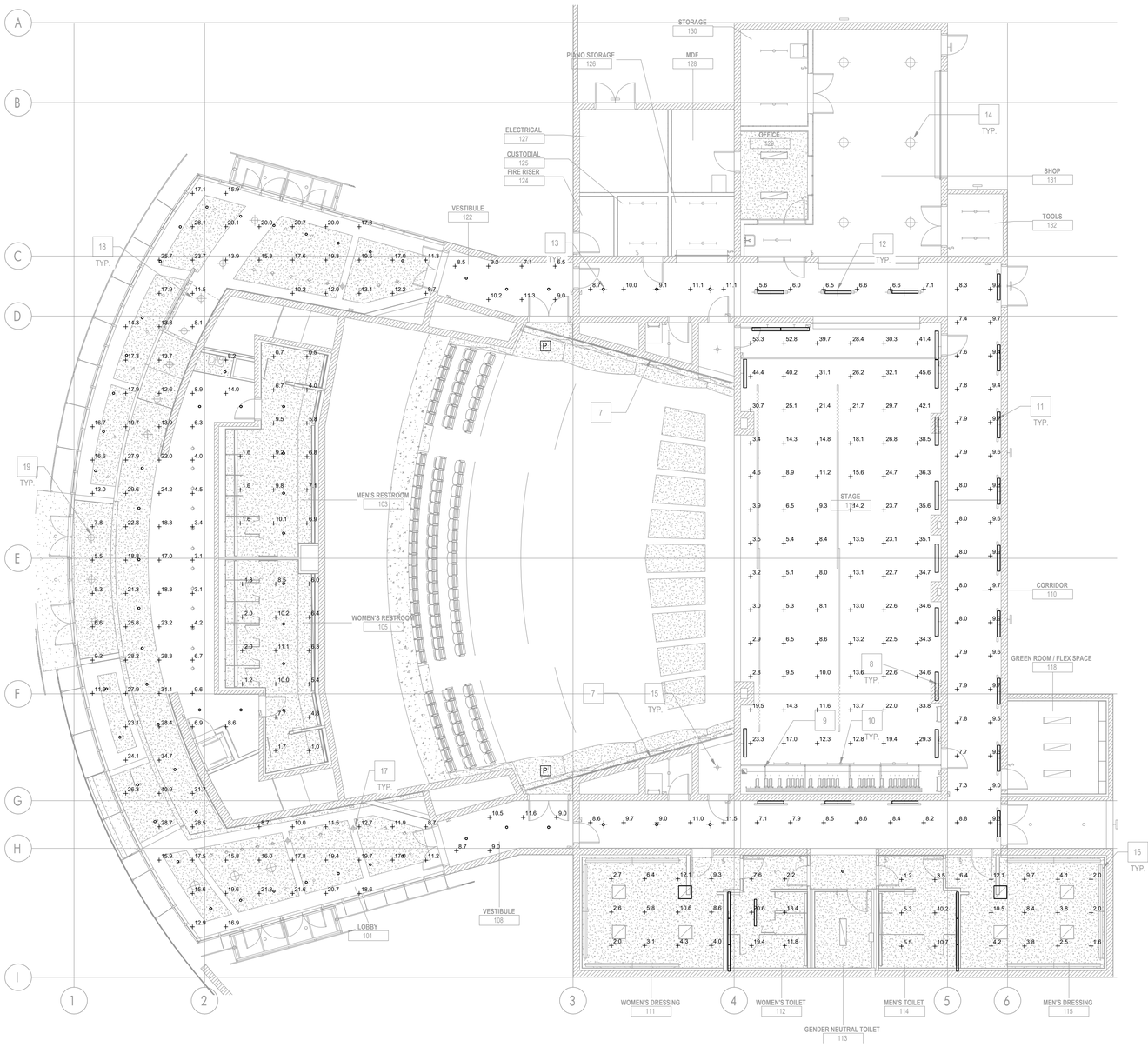

1 MAIN LEVEL-EMERGENCY PHOTOMETRIC

SCALE: 1/8" = 1'-0"

0' 4' 8' 16' 24'

NORTH

Plot Date: 9/20/2023 9:37:53 AM Last Save By: Tom Law Login: Tom Law J:\Project Files 2022\2022-019 Hacienda La Puente PAC\Electrical Drawings\E\E241A - Main Level - Emergency Photometric.dwg

APPL. No. A 03-122864

IDENTIFICATION STAMP
DIV. OF THE STATE ARCHITECT
APP: 03-122864 INC:
REVIEWED FOR
SS ☑ FLS ☑ ACS ☑
DATE: 10/03/2023

DSA Stamp

Architect

RACHLIN
PARTNERS
8840 National Boulevard
Culver City, CA 90232
310.204.3400

Disclaimer:
THESE DRAWINGS ARE THE PROPERTY OF THE ARCHITECT. THE DESIGNS SHOWN AND DESCRIBED HEREIN INCLUDING ALL TECHNICAL DRAWINGS ARE PROPRIETARY AND CANNOT BE COPIED, DUPLICATED OR COMMERCIALLY EXPLOITED, IN WHOLE OR IN PART. THE DRAWINGS AND SPECIFICATIONS SHALL NOT BE USED BY THE OWNER ON OTHER PROJECTS, FOR ADDITIONS TO THIS PROJECT, OR FOR COMPLETION OF THIS PROJECT BY OTHERS. THE OWNER AGREES TO HOLD HARMLESS, INDEMNIFY AND DEFEND THE ARCHITECT AGAINST ALL DAMAGES, CLAIMS AND LOSSES, INCLUDING DEFENSE COSTS, ARISING OUT OF ANY REUSE OF PLANS AND SPECIFICATIONS WITHOUT THE WRITTEN AUTHORIZATION OF THE ARCHITECT OF RECORD.
Copyright 2022 Rachlin Partners, All Rights Reserved.

Performing Arts Center
Hacienda La Puente Unified School District

635 North California Avenue
La Puente, CA 91744

Rev	Date	Issue
1	7.22.22	50% DD
2	10.21.22	50% CD
3	12.09.22	100% DSA Submittal
4	06.19.23	100% DSA Resubmittal
5	09.20.23	DSA Back Check

Date: 09/20/23
Scale: As Shown
Drawn By: --
Checked By: --

Architect / Engineer Stamp

LICENSED ARCHITECT NO. C26229 REN. 2-28-25 STATE OF CALIFORNIA
REGISTERED PROFESSIONAL ENGINEER THOMAS W. LAW No.E 17235 Exp.6/30/2024 ELECTRICAL STATE OF CALIFORNIA

Consultants
Miyamoto International, Inc.
The Ruzika Company, Inc,
MDC Consulting Engineers
Pocock Design Solutions
Newson Brown Acoustics, LLC
VCA Engineers, Inc.
HJSA Consulting
L.A. Design Associates, Inc.

Sheet Title
Electrical
Main Level
Emergency
Photometric

Sheet Number
E241A

GENERAL NOTES

1. REFER TO THEATRICAL LIGHTING PLANS AND RISER DIAGRAMS (TL SERIES) FOR CONTROL STATIONS (CRS, HCS, WCS), PULL BOX, CONDUIT, AND WIRING REQUIREMENTS.

REFERENCE NOTES

1. CIRCUIT TO DIMMING RELAY PANEL TO BE RUN VIA EMERGENCY LIGHTING TRANSFER SYSTEM "ELTS" AT FOLLOW SPOT LEVEL. SEE EMERGENCY TRANSFER SWITCH SCHEDULE ON SHEET E004, FOR EMERGENCY CIRCUITS FOR INTERFACE.
2. LOCATE REMOTE TRANSFORMER IN ACCESSIBLE LOCATION.
3. LOCATE REMOTE DMX DRIVER IN ACCESSIBLE LOCATION. TYPICAL OF FIXTURE TYPES P1W-R & P1VW-R.
4. PROVIDE NORMAL CIRCUIT, LTG-12, AND EMERGENCY CIRCUIT, INV- 9 FOR CONNECTION TO ALL EXIT SIGNS.

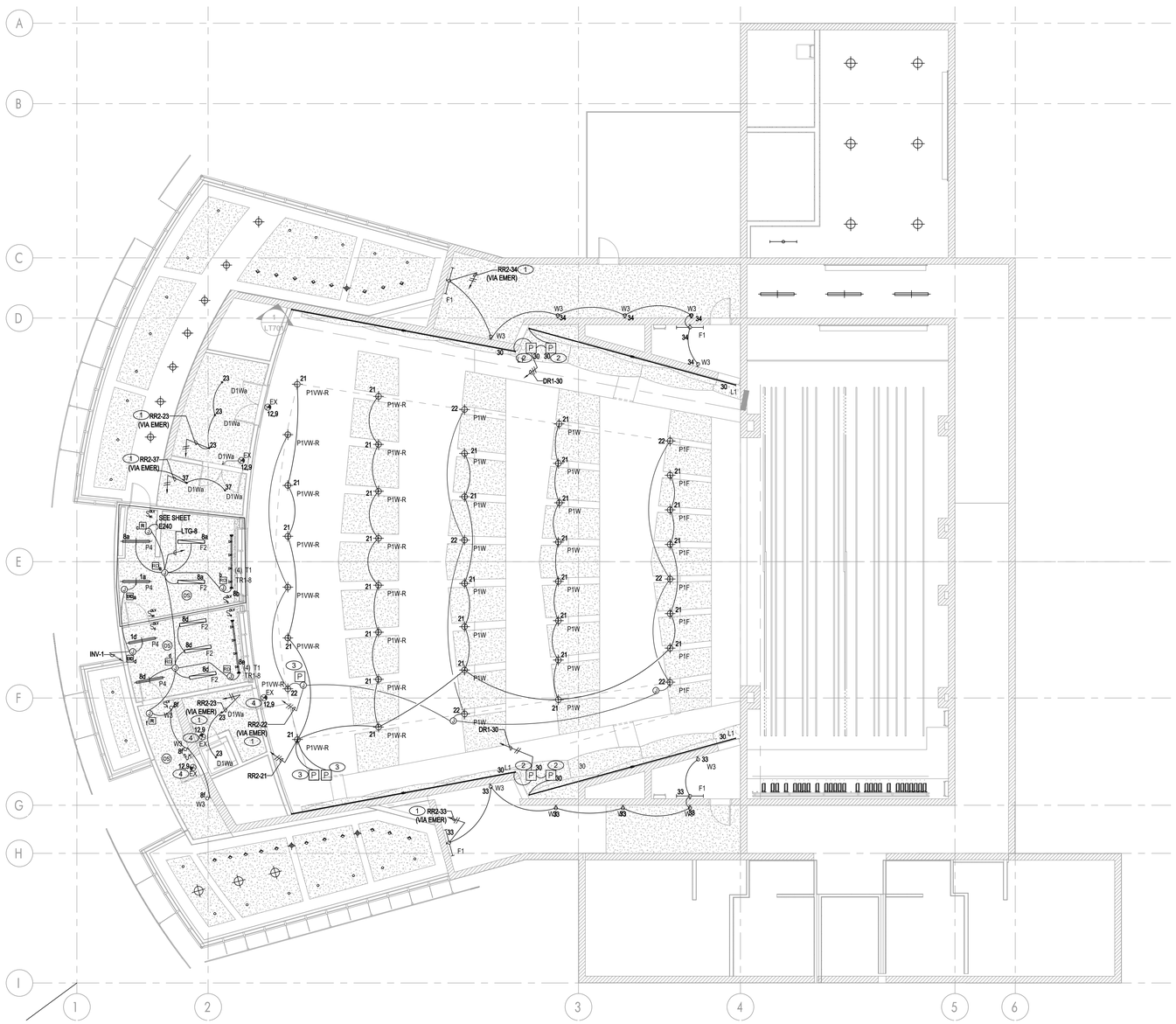

1 CONTROL BOOTH LEVEL LIGHTING PLAN

SCALE: 1/8" = 1'-0"

0' 4' 8' 16' 24'

NORTH

APPL. No. A 03-122864

IDENTIFICATION STAMP
DIV. OF THE STATE ARCHITECT
APP: 03-122864 INC:
REVIEWED FOR
SS ☑ FLS ☑ ACS ☑
DATE: 10/03/2023

DSA Stamp

Architect

RACHLIN PARTNERS
8840 National Boulevard
Culver City, CA 90232
310.204.3400

Disclaimer:

THESE DRAWINGS ARE THE PROPERTY OF THE ARCHITECT. THE DESIGNS SHOWN AND DESCRIBED HEREIN INCLUDING ALL TECHNICAL DRAWINGS ARE PROPRIETARY AND CANNOT BE COPIED, DUPLICATED OR COMMERCIALLY EXPLOITED, IN WHOLE OR IN PART. THE DRAWINGS AND SPECIFICATIONS SHALL NOT BE USED BY THE OWNER ON OTHER PROJECTS, FOR ADDITIONS TO THIS PROJECT, OR FOR COMPLETION OF THIS PROJECT BY OTHERS. THE OWNER AGREES TO HOLD HARMLESS, INDEMNIFY AND DEFEND THE ARCHITECT AGAINST ALL DAMAGES, CLAIMS AND LOSSES, INCLUDING DEFENSE COSTS, ARISING OUT OF ANY REUSE OF PLANS AND SPECIFICATIONS WITHOUT THE WRITTEN AUTHORIZATION OF THE ARCHITECT OF RECORD.

Copyright 2022 Rachlin Partners, All Rights Reserved.

Performing Arts Center
Hacienda La Puente Unified School District

635 North California Avenue
La Puente, CA 91744

Rev	Date	Issue
1	7.22.22	50% DD
2	10.21.22	50% CD
3	12.09.22	100% DSA Submittal
4	06.19.23	100% DSA Resubmittal
5	09.20.23	DSA Back Check

Date: 09/20/23
Scale: As Shown
Drawn By: --
Checked By: --

Architect / Engineer Stamp

REGISTERED PROFESSIONAL ENGINEER
THOMAS W. LOW
No.E 17201
Exp.6/30/2024
ELECTRICAL
STATE OF CALIFORNIA

LICENSED ARCHITECT
REGISTERED PROFESSIONAL
NO. C26229
REN. 2-28-25
STATE OF CALIFORNIA

Consultants
Miyamoto International, Inc.
The Ruzika Company, Inc,
MDC Consulting Engineers
Pocock Design Solutions
Newson Brown Acoustics, LLC
VCA Engineers, Inc.
HJSA Consulting
L.A. Design Associates, Inc.

Sheet Title
Electrical
Control Booth
Lighting Plan

Sheet Number
E242

Plot Date: 9/20/2023 9:37:58 AM Last Save By: Tom Low Login: Tom Low J:\Project Files 2022\2022-019 Hacienda La Puente PAC\Electrical Drawings\E\E242 - Control Booth Level - Lighting Plan.dwg

Statistics						
Description	Symbol	Avg	Max	Min	Max/Min	Avg/Min
Control Room	+	3.6 fc	8.0 fc	0.8 fc	10.0:1	4.5:1
Lift Vestibule	+	7.6 fc	9.5 fc	6.4 fc	1.5:1	1.2:1
Main Theater	+	11.0 fc	17.6 fc	4.4 fc	4.0:1	2.5:1
Rack Room	+	3.8 fc	8.9 fc	1.5 fc	5.9:1	2.5:1
Rear Vestibule	+	8.2 fc	13.2 fc	3.1 fc	4.3:1	2.6:1
Rear Vestibule Egress	+	7.4 fc	9.9 fc	4.3 fc	2.3:1	1.7:1

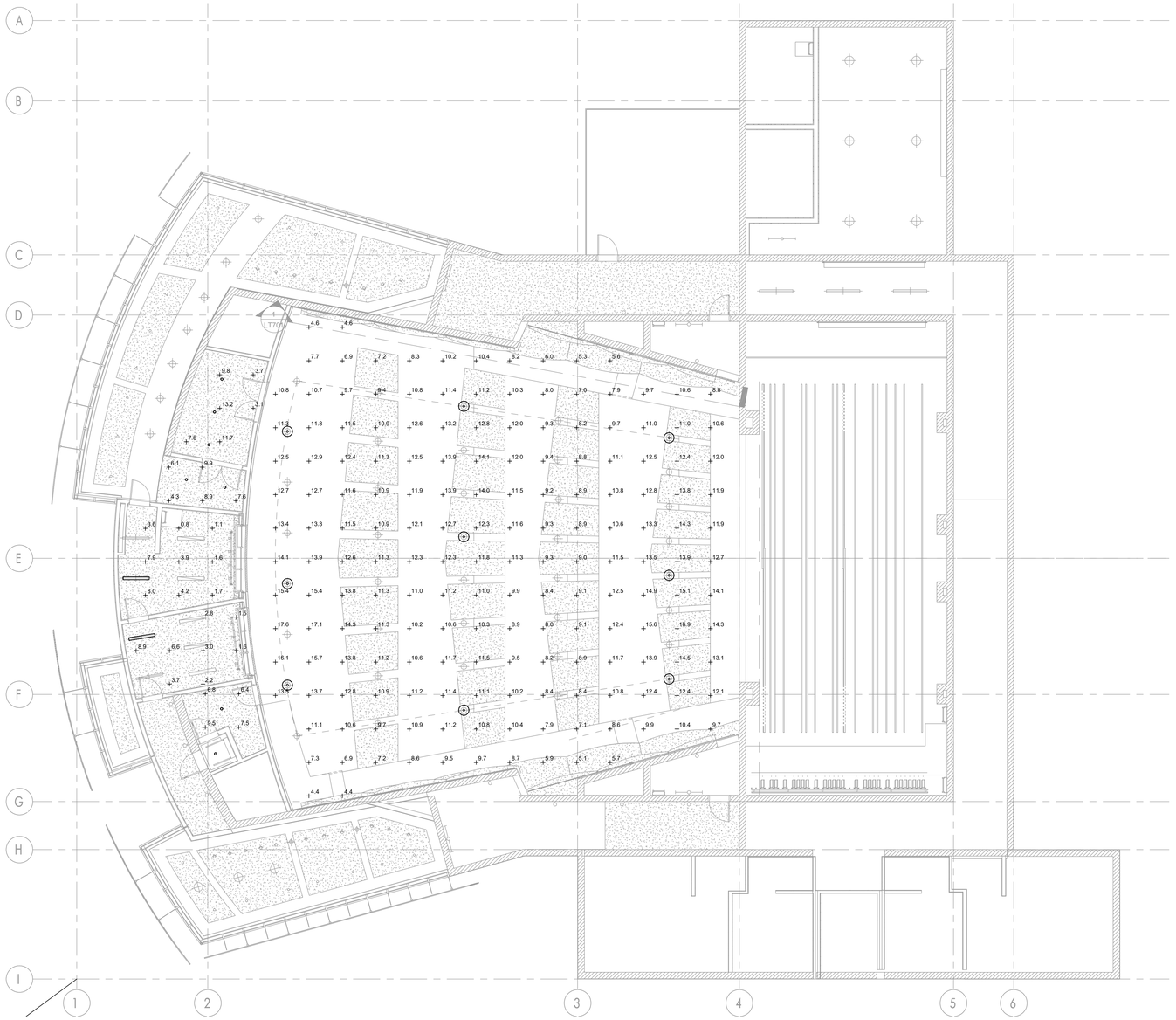

1 CONTROL BOOTH LEVEL EMERGENCY PHOTOMETRIC

SCALE: 1/8" = 1'-0"

0' 4' 8' 16' 24'

NORTH

APPL. No. A 03-122864

IDENTIFICATION STAMP
DIV. OF THE STATE ARCHITECT
APP: 03-122864 INC:
REVIEWED FOR
SS ☑ FLS ☑ ACS ☑
DATE: 10/03/2023

DSA Stamp

Architect

RACHLIN PARTNERS
8840 National Boulevard
Culver City, CA 90232
310.204.3400

Disclaimer:

THESE DRAWINGS ARE THE PROPERTY OF THE ARCHITECT. THE DESIGNS SHOWN AND DESCRIBED HEREIN INCLUDING ALL TECHNICAL DRAWINGS ARE PROPRIETARY AND CANNOT BE COPIED, DUPLICATED OR COMMERCIALLY EXPLOITED, IN WHOLE OR IN PART. THE DRAWINGS AND SPECIFICATIONS SHALL NOT BE USED BY THE OWNER ON OTHER PROJECTS, FOR ADDITIONS TO THIS PROJECT, OR FOR COMPLETION OF THIS PROJECT BY OTHERS. THE OWNER AGREES TO HOLD HARMLESS, INDEMNIFY AND DEFEND THE ARCHITECT AGAINST ALL DAMAGES, CLAIMS AND LOSSES, INCLUDING DEFENSE COSTS, ARISING OUT OF ANY REUSE OF PLANS AND SPECIFICATIONS WITHOUT THE WRITTEN AUTHORIZATION OF THE ARCHITECT OF RECORD.

Copyright 2022 Rachlin Partners, All Rights Reserved.

Performing Arts Center
Hacienda La Puente Unified School District

635 North California Avenue
La Puente, CA 91744

Rev	Date	Issue
1	7.22.22	50% DD
2	10.21.22	50% CD
3	12.09.22	100% DSA Submittal
4	06.19.23	100% DSA Resubmittal
5	09.20.23	DSA Back Check

Date: 09/20/23
Scale: As Shown
Drawn By: --
Checked By: --

Architect / Engineer Stamp

Consultants
Miyamoto International, Inc.
The Ruzika Company, Inc,
MDC Consulting Engineers
Pocock Design Solutions
Newson Brown Acoustics, LLC
VCA Engineers, Inc.
HJSA Consulting
L.A. Design Associates, Inc.

Sheet Title
Electrical
Control Booth
Emergency
Photometric Calc

Sheet Number
E242A

Plot Date: 9/20/2023 9:38:02 AM Last Save By: Tom Law Login: Tom Law J:\Project Files 2022\2022-019 Hacienda La Puente PAC\Electrical Drawings\E-E242A - Control Booth Level - Emergency Photometric.dwg

GENERAL NOTES

1. REFER TO THEATRICAL LIGHTING PLANS AND RISER DIAGRAMS (TL SERIES) FOR CONTROL STATIONS (CRS, HCS, WCS), PULL BOX, CONDUIT, AND WIRING REQUIREMENTS.

REFERENCE NOTES

1. PROVIDE EMERGENCY RELAY DIMMER FOR EXTERIOR EMERGENCY BUILDING LIGHTING, CIRCUIT INV-4.
2. PROVIDE EMERGENCY CIRCUITS FROM INVERTER, "INV", TO EMERGENCY LIGHTING TRANSFER SYSTEM FOR THEATRICAL LIGHTING. SEE SCHEDULE ON SHEET E004 FOR TRANSFER SWITCH POWER INTERFACES.
3. CIRCUIT TO DIMMING RELAY PANEL TO BE RUN VIA EMERGENCY LIGHTING TRANSFER SYSTEM "ELTS" AT FOLLOW SPOT LEVEL. SEE EMERGENCY TRANSFER SWITCH SCHEDULE ON SHEET E004, FOR EMERGENCY CIRCUITS FOR INTERFACE.

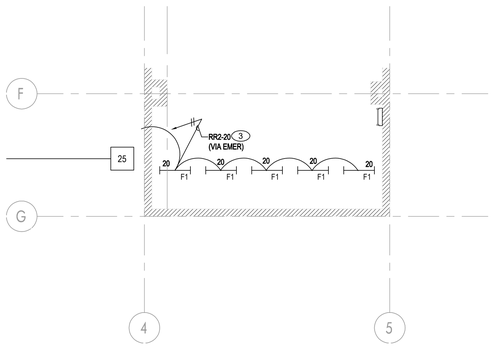

2 LOADING GALLERY LIGHTING PLAN

SCALE: 1/8" = 1'-0"

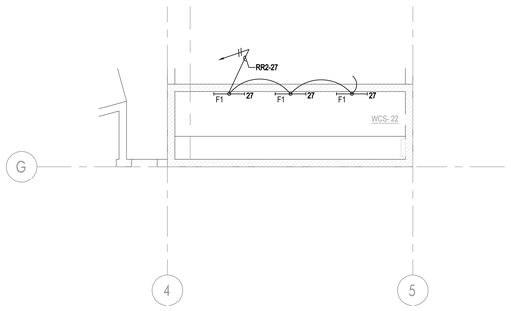

3 ARBOR WELL LIGHTING PLAN

SCALE: 1/8" = 1'-0"

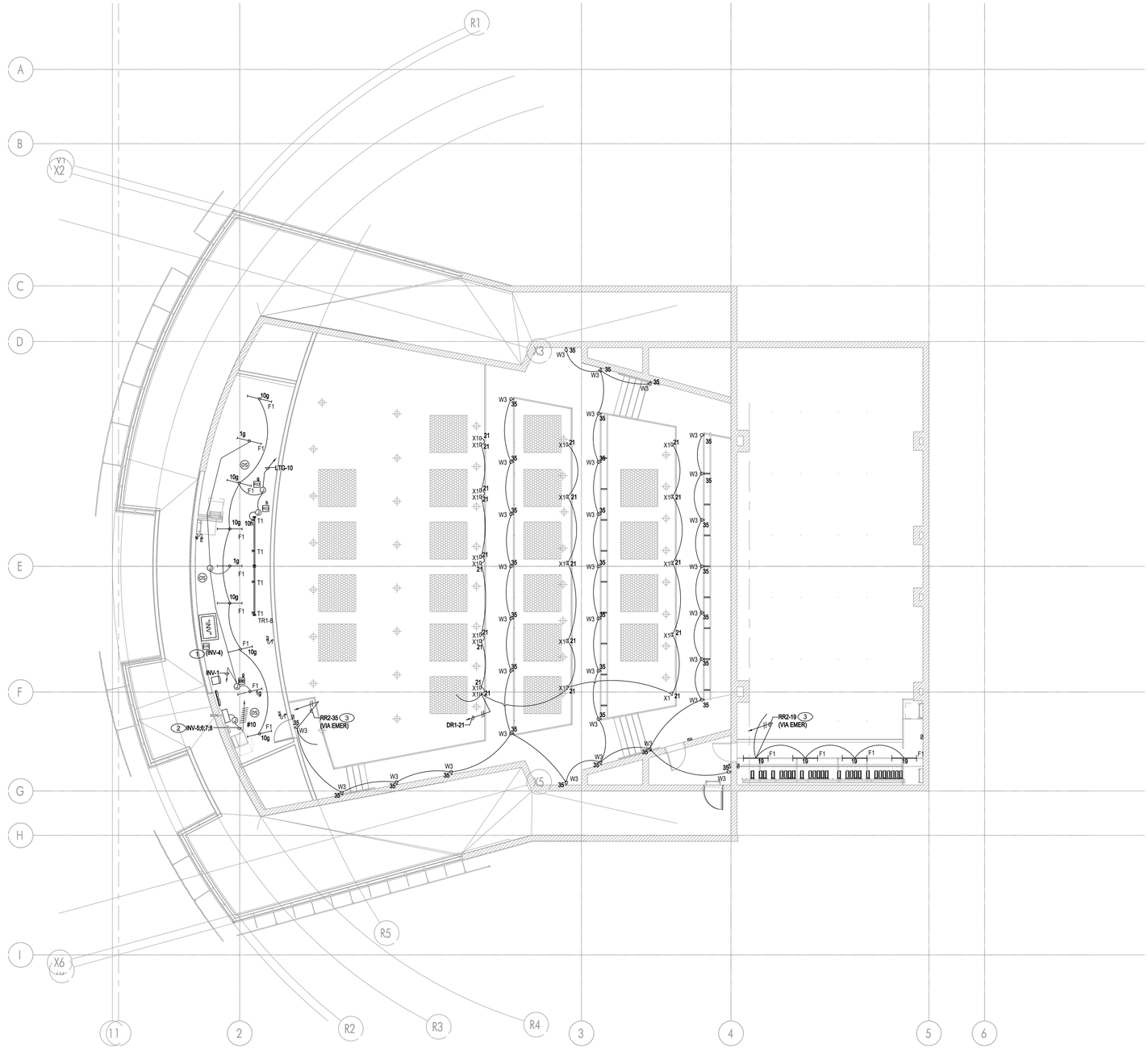

1 CATWALK LEVEL LIGHTING PLAN

SCALE: 1/8" = 1'-0"

APPL. No. A 03-122864

IDENTIFICATION STAMP
DIV. OF THE STATE ARCHITECT
APP: 03-122864 INC:
REVIEWED FOR
SS ☑ FLS ☑ ACS ☑
DATE: 10/03/2023

DSA Stamp

Architect

RACHLIN
PARTNERS
8640 National Boulevard
Culver City, CA 90232
310.204.3400

Disclaimer:

THESE DRAWINGS ARE THE PROPERTY OF THE ARCHITECT. THE DESIGNS SHOWN AND DESCRIBED HEREIN INCLUDING ALL TECHNICAL DRAWINGS ARE PROPRIETARY AND CANNOT BE COPIED, DUPLICATED OR COMMERCIALLY EXPLOITED, IN WHOLE OR IN PART. THE DRAWINGS AND SPECIFICATIONS SHALL NOT BE USED BY THE OWNER ON OTHER PROJECTS, FOR ADDITIONS TO THIS PROJECT, OR FOR COMPLETION OF THIS PROJECT BY OTHERS. THE OWNER AGREES TO HOLD HARMLESS, INDEMNIFY AND DEFEND THE ARCHITECT AGAINST ALL DAMAGES, CLAIMS AND LOSSES, INCLUDING DEFENSE COSTS, ARISING OUT OF ANY REUSE OF PLANS AND SPECIFICATIONS WITHOUT THE WRITTEN AUTHORIZATION OF THE ARCHITECT OF RECORD.

Copyright 2022 Rachlin Partners, All Rights Reserved.

Performing Arts Center
Hacienda La Puente Unified School District

635 North California Avenue
La Puente, CA 91744

Rev	Date	Issue
1	7.22.22	50% DD
2	10.21.22	50% CD
3	12.09.22	100% DSA Submittal
4	06.19.23	100% DSA Resubmittal
5	09.20.23	DSA Back Check

Date: 09/20/23
Scale: As Shown
Drawn By: --
Checked By: --

Architect / Engineer Stamp

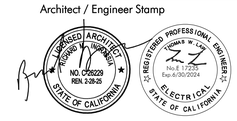

Consultants
Miyamoto International, Inc.
The Ruzika Company, Inc,
MDC Consulting Engineers
Pocock Design Solutions
Newson Brown Acoustics, LLC
VCA Engineers, Inc.
HJSA Consulting
L.A. Design Associates, Inc.

Sheet Title
Electrical
Catwalk Levels
Lighting Plan

Sheet Number
E243

Plot Date: 9/20/2023 9:38:07 AM Last Save By: Tom Law Login: Tom Law J:\Project Files 2022\2022-019 Hacienda La Puente PAC\Electrical Drawings\E\E243 - Catwalk Levels - Lighting Plan.dwg

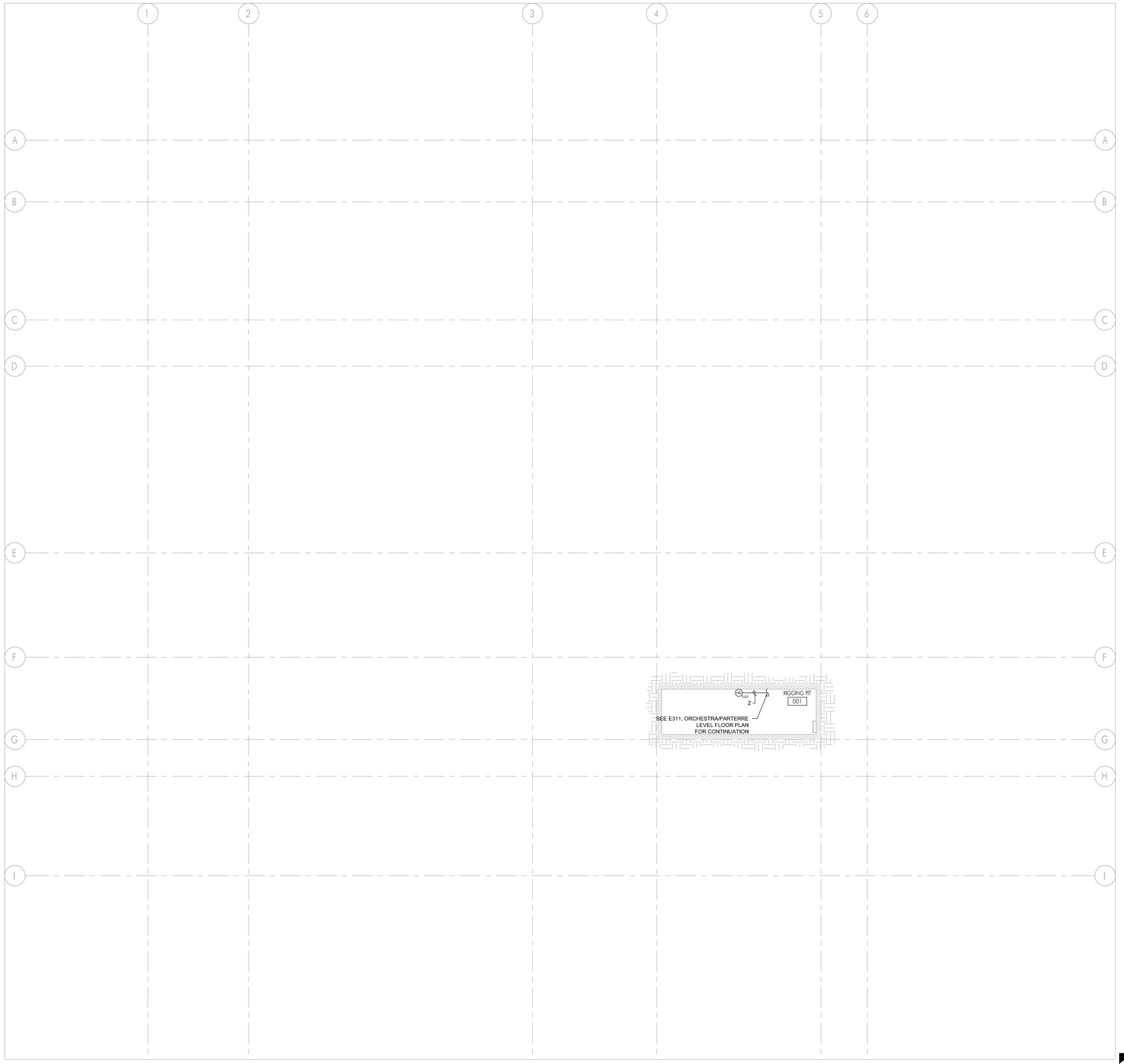

GENERAL NOTES

1. AUTOMATIC SHUTOFF IS NOT REQUIRED WHEN:
   A. AIR-MOVING SYSTEMS SUPPLYING AIR LESS THAN 2000 CFM TO ENCLOSED SPACES WITHIN BUILDING, (CMC 608.1)
   B. ALL OCCUPIED ROOMS SERVED BY THE AIR-HANDLING EQUIPMENT HAVE DIRECT EXIT TO THE EXTERIOR AND THE TRAVEL DISTANCE DOES NOT EXCEED 100 FEET. (CMC 608.1 EXCEPTION#2).
2. SEE ARCHITECTURAL REFLECTED CEILING PLAN AND ELEVATIONS FOR EXACT LOCATIONS OF FIRE ALARM DEVICES.

REFERENCE NOTES

FIRE ALARM RIGGING PIT LEVEL FLOOR PLAN | SCALE 1/8" = 1'-0" | 1

APPL. No. A 03-122864

DSA Stamp

Architect

RACHLIN
PARTNERS
8840 National Boulevard
Culver City, CA 90232
310.204.3400

Disclaimer:
THESE DRAWINGS ARE THE PROPERTY OF THE ARCHITECT. THE DESIGNS SHOWN AND DESCRIBED HEREIN INCLUDING ALL TECHNICAL DRAWINGS ARE PROPRIETARY AND CANNOT BE COPIED, DUPLICATED OR COMMERCIALLY EXPLOITED. IN WHOLE OR IN PART. THE DRAWINGS AND SPECIFICATIONS SHALL NOT BE USED BY THE OWNER ON OTHER PROJECTS, FOR ADDITIONS TO THIS PROJECT, OR FOR COMPLETION OF THIS PROJECT BY OTHERS. THE OWNER AGREES TO HOLD HARMLESS, INDEMNIFY AND DEFEND THE ARCHITECT AGAINST ALL DAMAGES, CLAIMS AND LOSSES, INCLUDING DEFENSE COSTS, ARISING OUT OF ANY REUSE OF PLANS AND SPECIFICATIONS WITHOUT THE WRITTEN AUTHORIZATION OF THE ARCHITECT OF RECORD.
Copyright 2022 Rachlin Partners, All Rights Reserved.

Performing Arts Center
Hacienda La Puente Unified School District

635 North California Avenue
La Puente, CA 91744

Rev	Date	Issue
1	7.22.22	50% DD
2	10.21.22	50% CD
3	12.09.22	100% DSA Submittal
4	06.19.23	100% DSA Resubmittal
5	09.20.23	DSA Back Check
2	11.01.23	Addendum #2

Date: 09/20/23
Scale: As Shown
Drawn By: --
Checked By: --

Architect / Engineer Stamp

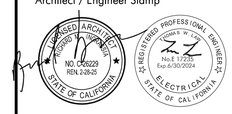

Consultants
Miyamoto International, Inc.
The Ruzika Company, Inc,
MDC Consulting Engineers
Pocock Design Solutions
Newson Brown Acoustics, LLC
VCA Engineers, Inc.
HJSA Consulting
L.A. Design Associates, Inc.

Sheet Title
Fire Alarm
Rigging Pit
Floor Plan

Sheet Number
E310

Plot Date: 10/31/2023 7:38:42 AM
Plot By: Thomas Law AC - Central - sketched.ctb
Last Save By: Tom Law Login: Tom Law J:\Project Files 2022\2022-019 Hacienda La Puente PAC\Electrical Drawings\E\E310 - FA Rigging Pit Plan.dwg

GENERAL NOTES

1. AUTOMATIC SHUTOFF IS NOT REQUIRED WHEN:
   A. AIR-MOVING SYSTEMS SUPPLYING AIR LESS THAN 2000 CFM TO ENCLOSED SPACES WITHIN BUILDING. (CMC 608.1)
   B. ALL OCCUPIED ROOMS SERVED BY THE AIR-HANDLING EQUIPMENT HAVE DIRECT EXIT TO THE EXTERIOR AND THE TRAVEL DISTANCE DOES NOT EXCEED 100 FEET. (CMC 608.1 EXCEPTION#2).
2. SEE ARCHITECTURAL REFLECTED CEILING PLAN AND ELEVATIONS FOR EXACT LOCATIONS OF FIRE ALARM DEVICES.

REFERENCE NOTES

1. PROVIDE NEW (1)20A 1P CIRCUIT BREAKER TO EXISTING PANEL SPACE, AS INDICATED. CIRCUIT BREAKER SHALL MATCH BY TYPE/STYLE/AIC RATING. PROVIDE LOCK ON DEVICE TO CIRCUIT BREAKER HANDLE, WITH RED MARKING. ACCESSIBLE ONLY TO AUTHORIZED PERSONNEL, IDENTIFIED AS "FIRE ALARM CIRCUIT", AND LOCATION OF CIRCUIT BREAKER PERMANENTLY IDENTIFIED AT FIRE ALARM CONTROL UNIT IN COMPLIANCE WITH 2019 CFC/CBC 907, NFPA 72 10.6.5.2 AND 2019 CEC 760.
2. PROVIDE (2) CAT6 TO MDF/IDF WITHIN THE BUILDING FOR REMOTE STATION MONITORING.
3. PROVIDE A SIGNAGE "FIRE ALARM CONTROL PANEL INSIDE" AT THE DOOR TO FACP. SEE DETAIL ON E401. PATCH/PAINT/REPAIR TO MATCH ADJACENT SURFACES
4. CONNECT CONTROL RELAY MODULE (IDP-RELAY) AND 120V RELAY MODULES (RIBUIC) TO EACH FIRE SMOKE DAMPER CIRCUIT SERVED BY EACH 120 VOLT CIRCUIT SERVING FIRE SMOKE DAMPERS, SEE WIRING DIAGRAM ON SHEET E402. CONNECT 120V POWER CIRCUIT TO 120V RELAY MODULES AS INDICATED. PROVIDE LOCK ON DEVICE TO CIRCUIT BREAKER HANDLE, WITH RED MARKING.
5. PROVIDE NEW ACCESS PANEL. SEE DETAIL 3/A872.

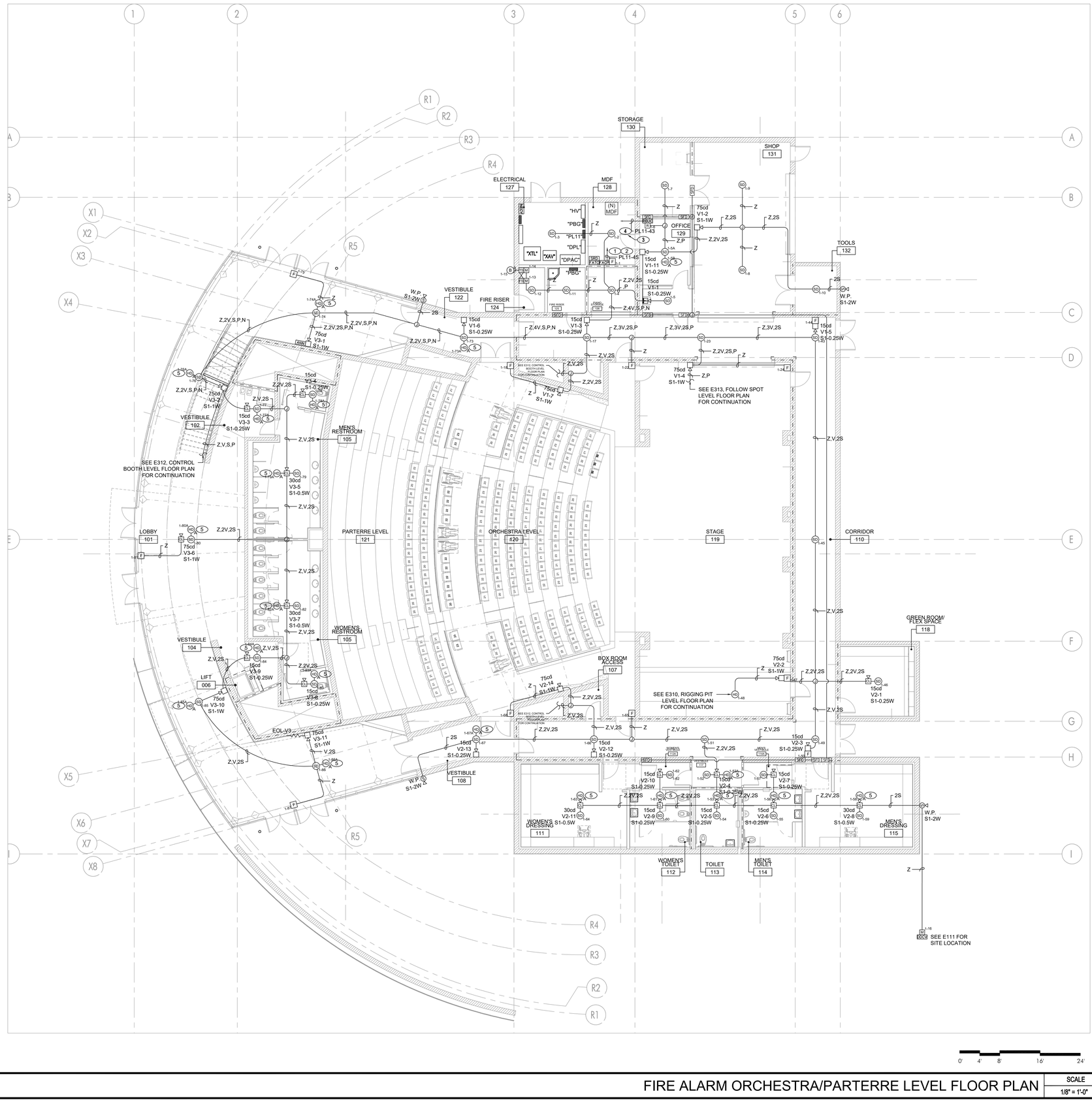

FIRE ALARM ORCHESTRA/PARTERRE LEVEL FLOOR PLAN | SCALE 1/8" = 1'-0" | 1

APPL. No. A 03-122864

IDENTIFICATION STAMP
DIV. OF THE STATE ARCHITECT
APP: 03-122864 INC:
REVIEWED FOR
SS ☑ FLS ☑ ACS ☑
DATE: 10/03/2023

DSA Stamp

Architect

RACHLIN PARTNERS
8640 National Boulevard
Culver City, CA 90232
310.204.3400

Disclaimer:
THESE DRAWINGS ARE THE PROPERTY OF THE ARCHITECT. THE DESIGNS SHOWN AND DESCRIBED HEREIN INCLUDING ALL TECHNICAL DRAWINGS ARE PROPRIETARY AND CANNOT BE COPIED, DUPLICATED OR COMMERCIALLY EXPLOITED, IN WHOLE OR IN PART. THE DRAWINGS AND SPECIFICATIONS SHALL NOT BE USED BY THE OWNER ON OTHER PROJECTS, FOR ADDITIONS TO THIS PROJECT, OR FOR COMPLETION OF THIS PROJECT BY OTHERS. THE OWNER AGREES TO HOLD HARMLESS, INDEMNIFY AND DEFEND THE ARCHITECT AGAINST ALL DAMAGES, CLAIMS AND LOSSES, INCLUDING DEFENSE COSTS, ARISING OUT OF ANY REUSE OF PLANS AND SPECIFICATIONS WITHOUT THE WRITTEN AUTHORIZATION OF THE ARCHITECT OF RECORD.

Copyright 2022 Rachlin Partners, All Rights Reserved.

Performing Arts Center
Hacienda La Puente Unified School District

635 North California Avenue
La Puente, CA 91744

Rev	Date	Issue
1	7.22.22	50% DD
2	10.21.22	50% CD
3	12.09.22	100% DSA Submittal
4	06.19.23	100% DSA Resubmittal
5	09.20.23	DSA Back Check

Date: 09/20/23
Scale: As Shown
Drawn By: --
Checked By: --

Architect / Engineer Stamp

LICENSED ARCHITECT — NO. C-36228 — REN: 2-26-25 — STATE OF CALIFORNIA
REGISTERED PROFESSIONAL ENGINEER — No.E 17233 — Exp.6/30/2024 — ELECTRICAL — STATE OF CALIFORNIA

Consultants
Miyamoto International, Inc.
The Ruzika Company, Inc,
MDC Consulting Engineers
Pocock Design Solutions
Newson Brown Acoustics, LLC
VCA Engineers, Inc.
HJSA Consulting
L.A. Design Associates, Inc.

Sheet Title
Fire Alarm
Orchestra Level
Floor Plan

Sheet Number
E311

Plot Date: 9/20/2023 9:38:17 AM
Last Save By: Tom Law Login: Tom Law J:\Project Files 2022\2022.019 Hacienda La Puente PAC\Electrical Drawings\E\E311 - FA Orchestra Level Plan.dwg
R22 - REVISED PAC Control sketched.rvt

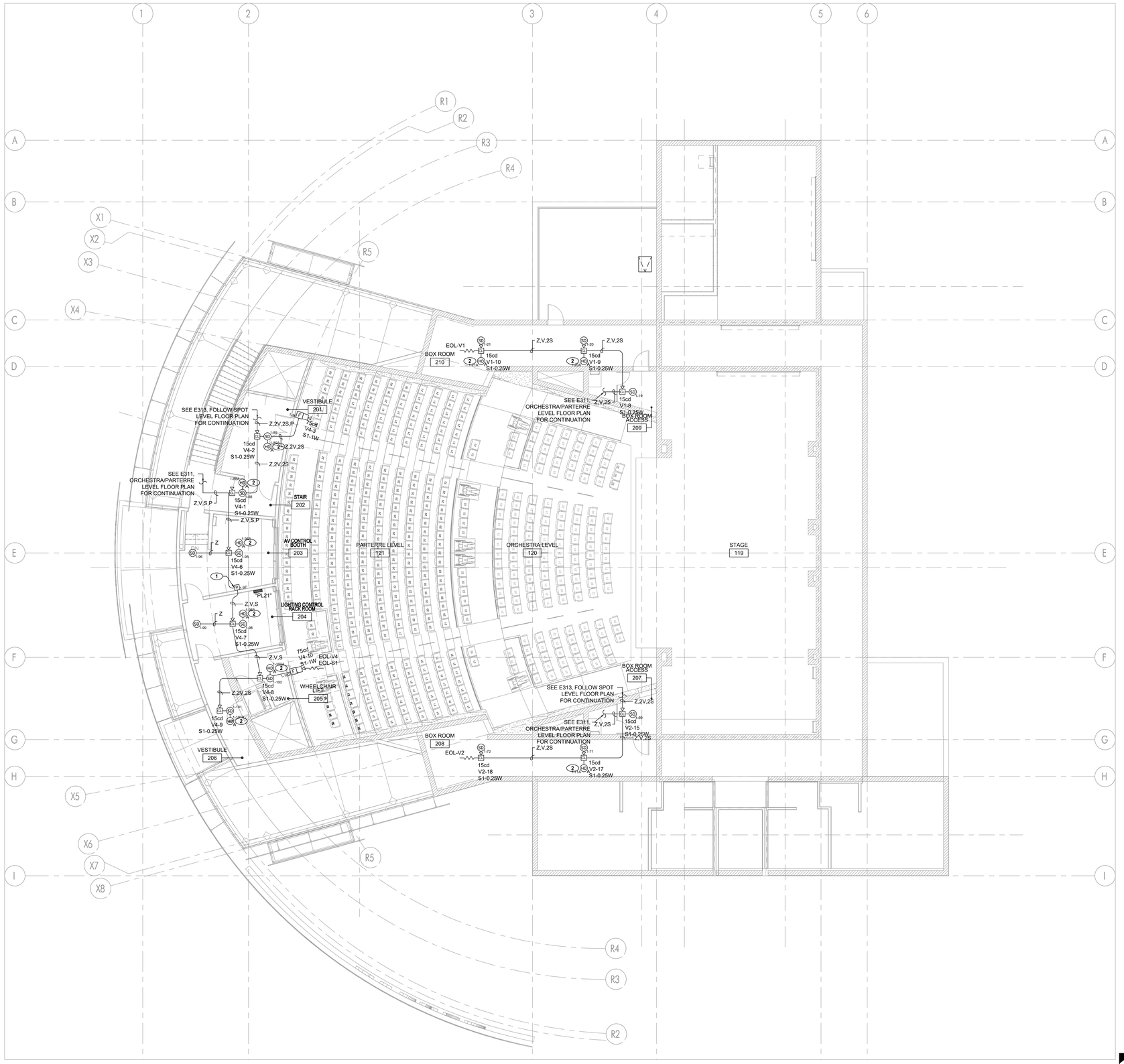

GENERAL NOTES

1. AUTOMATIC SHUTOFF IS NOT REQUIRED WHEN:
   A. AIR-MOVING SYSTEMS SUPPLYING AIR LESS THAN 2000 CFM TO ENCLOSED SPACES WITHIN BUILDING. (CMC 608.1)
   B. ALL OCCUPIED ROOMS SERVED BY THE AIR-HANDLING EQUIPMENT HAVE DIRECT EXIT TO THE EXTERIOR AND THE TRAVEL DISTANCE DOES NOT EXCEED 100 FEET. (CMC 608.1 EXCEMPTIONS2).
2. SEE ARCHITECTURAL REFLECTED CEILING PLAN AND ELEVATIONS FOR EXACT LOCATIONS OF FIRE ALARM DEVICES.

REFERENCE NOTES

(1) PROVIDE CONTROL RELAY MODULE (IDP-RELAY) FOR PA SYSTEM. FIELD VERIFY LOCATION. WHEN THE FIRE ALARM SYSTEM/VOICE EVACUATION MESSAGE IS ACTIVATED, THE PA SYSTEM WILL BE EXTINGUISHED.

(2) PROVIDE NEW ACCESS PANEL. SEE DETAIL 3/A872.

FIRE ALARM CONTROL BOOTH LEVEL FLOOR PLAN | SCALE 1/8" = 1'-0" | 1

APPL. No. A 03-122864

IDENTIFICATION STAMP
DIV. OF THE STATE ARCHITECT
APP: 03-122864 INC:
REVIEWED FOR
SS ☑ FLS ☑ ACS ☑
DATE: 10/03/2023

DSA Stamp

Architect

RACHLIN PARTNERS
8840 National Boulevard
Culver City, CA 90232
310.204.3400

Disclaimer:

THESE DRAWINGS ARE THE PROPERTY OF THE ARCHITECT. THE DESIGNS SHOWN AND DESCRIBED HEREIN INCLUDING ALL TECHNICAL DRAWINGS ARE PROPRIETARY AND CANNOT BE COPIED, DUPLICATED OR COMMERCIALLY EXPLOITED, IN WHOLE OR IN PART. THE DRAWINGS AND SPECIFICATIONS SHALL NOT BE USED BY THE OWNER ON OTHER PROJECTS, FOR ADDITIONS TO THIS PROJECT, OR FOR COMPLETION OF THIS PROJECT BY OTHERS. THE OWNER AGREES TO HOLD HARMLESS, INDEMNIFY AND DEFEND THE ARCHITECT AGAINST ALL DAMAGES, CLAIMS AND LOSSES, INCLUDING DEFENSE COSTS, ARISING OUT OF ANY REUSE OF PLANS AND SPECIFICATIONS WITHOUT THE WRITTEN AUTHORIZATION OF THE ARCHITECT OF RECORD.

Copyright 2022 Rachlin Partners, All Rights Reserved.

Performing Arts Center
Hacienda La Puente Unified School District

635 North California Avenue
La Puente, CA 91744

Rev	Date	Issue
1	7.22.22	50% DD
2	10.21.22	50% CD
3	12.09.22	100% DSA Submittal
4	06.19.23	100% DSA Resubmittal
5	09.20.23	DSA Back Check

Date: 09/20/23
Scale: As Shown
Drawn By: --
Checked By: --

Architect / Engineer Stamp

LICENSED ARCHITECT — REGISTERED PROFESSIONAL — NO. C26229 — REN. 2-28-25 — STATE OF CALIFORNIA
REGISTERED PROFESSIONAL ENGINEER — THOMAS W. LOW — No. E 17235 — Exp. 6/30/2024 — ELECTRICAL — STATE OF CALIFORNIA

Consultants
Miyamoto International, Inc.
The Ruzika Company, Inc,
MDC Consulting Engineers
Pocock Design Solutions
Newson Brown Acoustics, LLC
VCA Engineers, Inc.
HJSA Consulting
L.A. Design Associates, Inc.

Sheet Title
Fire Alarm
Control Booth
Level
Floor Plan

Sheet Number
E312

Plot Date: 9/20/2023 9:38:22 AM
E22_HERSID_PAC_Control_detached.rvt
Level Save By: Tom Low
Login: Tom Low J:\Project Files 2022\2022-019 Hacienda La Puente PAC\Electrical Drawings\E\E312 - FA Control Booth Level Plan.dwg

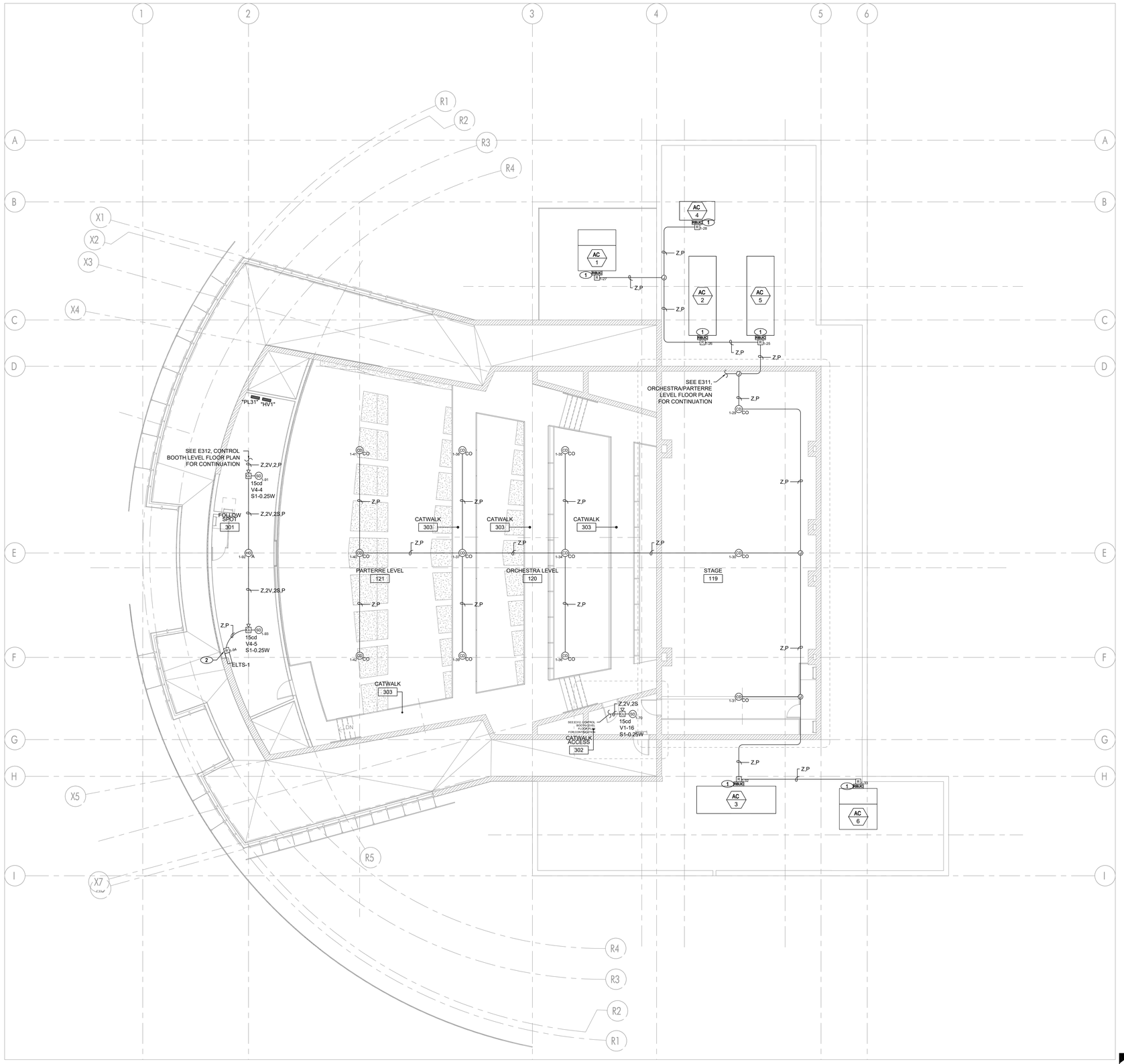

FIRE ALARM FOLLOW SPOT LEVEL FLOOR PLAN | SCALE 1/8" = 1'-0" | 1

GENERAL NOTES

1. AUTOMATIC SHUTOFF IS NOT REQUIRED WHEN:
   A. AIR-MOVING SYSTEMS SUPPLYING AIR LESS THAN 2000 CFM TO ENCLOSED SPACES WITHIN BUILDING. (CMC 608.1)
   B. ALL OCCUPIED ROOMS SERVED BY THE AIR-HANDLING EQUIPMENT HAVE DIRECT EXIT TO THE EXTERIOR AND THE TRAVEL DISTANCE DOES NOT EXCEED 100 FEET. (CMC 608.1 EXCEMPTIONS2).
2. SEE ARCHITECTURAL REFLECTED CEILING PLAN AND ELEVATIONS FOR EXACT LOCATIONS OF FIRE ALARM DEVICES.

REFERENCE NOTES

(1) HVAC UNIT (REFER TO MECHANICAL DRAWING.). PROVIDE AUTOMATIC SHUT OFF PER CMC 608. WITH CONTROL RELAY MODULE (IDP-RELAY) AND 120V RELAY MODULES (RIBUIC) (LOCATE ABOVE ACCESSIBLE CEILING SPACE BELOW HVAC UNIT), SEE WIRING DIAGRAM ON SHEET E402. CONNECT 120V POWER CIRCUIT FROM NEAREST PANEL TO RIBUIC RELAY. PROVIDE LOCK ON DEVICE TO CIRCUIT BREAKER HANDLE, WITH RED MARKING.

(2) PROVIDE CONTROL RELAY MODULE (IDP-RELAY) FOR GENERAL LIGHTING OVERRIDE. FIELD VERIFY LOCATION. UPON FIRE ALARM ACTIVATION, GENERAL THEATER LIGHTING TO BE RESTORED.

APPL. No. A 03-122864

IDENTIFICATION STAMP
DIV. OF THE STATE ARCHITECT
APP: 03-122864 INC:
REVIEWED FOR
SS ☑ FLS ☑ ACS ☑
DATE: 10/03/2023

DSA Stamp

Architect

RACHLIN PARTNERS
8840 National Boulevard
Culver City, CA 90232
310.204.3400

Disclaimer:

THESE DRAWINGS ARE THE PROPERTY OF THE ARCHITECT. THE DESIGNS SHOWN AND DESCRIBED HEREIN INCLUDING ALL TECHNICAL DRAWINGS ARE PROPRIETARY AND CANNOT BE COPIED, DUPLICATED OR COMMERCIALLY EXPLOITED, IN WHOLE OR IN PART. THE DRAWINGS AND SPECIFICATIONS SHALL NOT BE USED BY THE OWNER ON OTHER PROJECTS, FOR ADDITIONS TO THIS PROJECT, OR FOR COMPLETION OF THIS PROJECT BY OTHERS. THE OWNER AGREES TO HOLD HARMLESS, INDEMNIFY AND DEFEND THE ARCHITECT AGAINST ALL DAMAGES, CLAIMS AND LOSSES, INCLUDING DEFENSE COSTS, ARISING OUT OF ANY REUSE OF PLANS AND SPECIFICATIONS WITHOUT THE WRITTEN AUTHORIZATION OF THE ARCHITECT OF RECORD.

Copyright 2022 Rachlin Partners, All Rights Reserved.

Performing Arts Center
Hacienda La Puente Unified School District

635 North California Avenue
La Puente, CA 91744

Rev	Date	Issue
1	7.22.22	50% DD
2	10.21.22	50% CD
3	12.09.22	100% DSA Submittal
4	06.19.23	100% DSA Resubmittal
5	09.20.23	DSA Back Check

Date: 09/20/23
Scale: As Shown
Drawn By: --
Checked By: --

Architect / Engineer Stamp

LICENSED ARCHITECT RICHARD D. RACHLIN STATE OF CALIFORNIA NO. C-75029 RENEWAL 2-28-25

REGISTERED PROFESSIONAL ENGINEER MARK R. TAM Exp.6/30/2024 ELECTRICAL STATE OF CALIFORNIA

Consultants
Miyamoto International, Inc.
The Ruzika Company, Inc,
MDC Consulting Engineers
Pocock Design Solutions
Newson Brown Acoustics, LLC
VCA Engineers, Inc.
HJSA Consulting
L.A. Design Associates, Inc.

Sheet Title
Fire Alarm
Follow Spot Level
Floor Plan

Sheet Number
E313

Plot Date: 9/20/2023 9:38:27 AM
I:** Save By: Tom Law Login: Tom Law J:\Project Files 2022\2022-019 Hacienda La Puente PAC\Electrical Drawings\E\E313 - FA Follow Spot Level Plan.dwg
R22_HLPUSD-PAC_Control sketches1.rvt

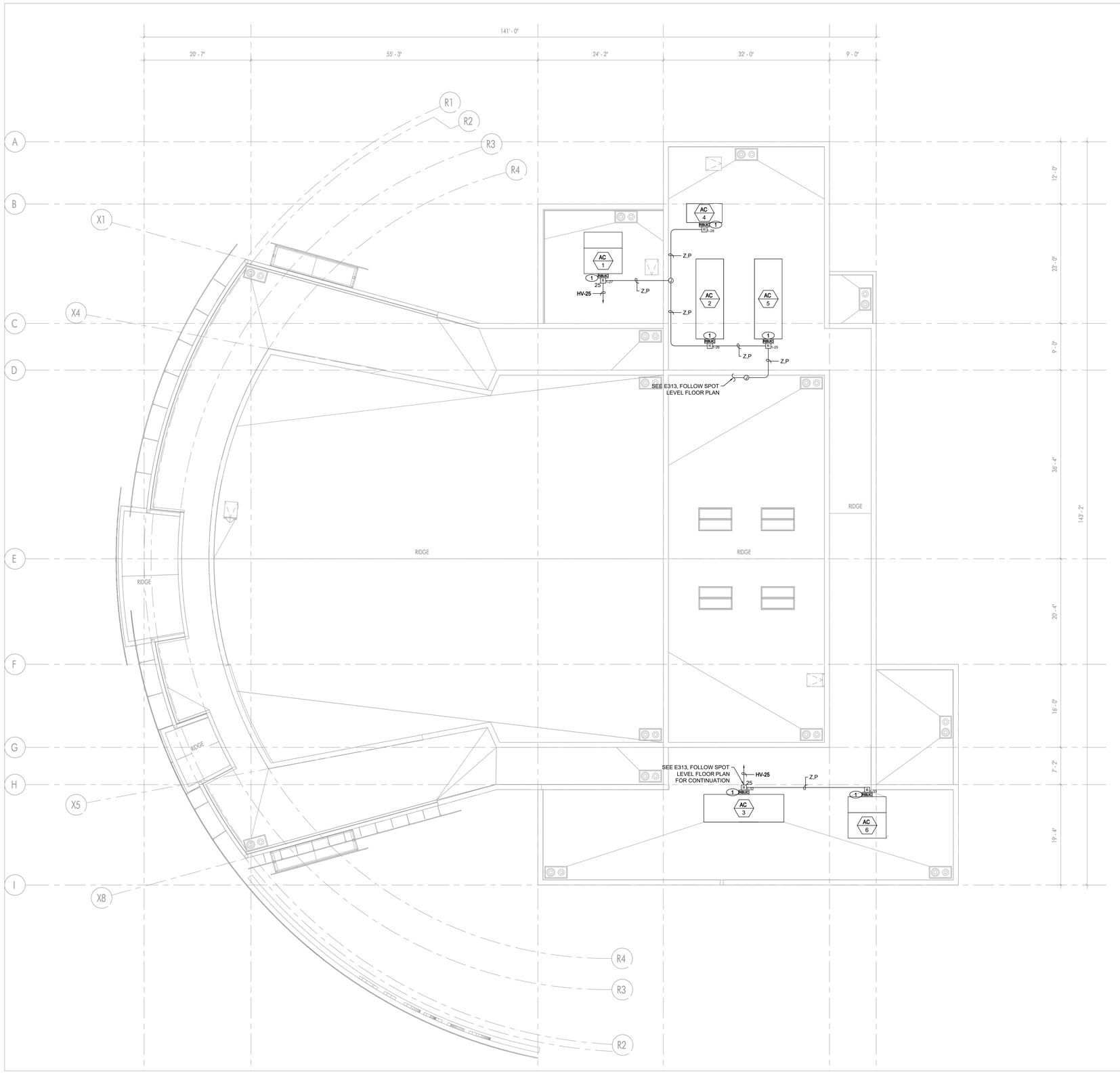

FIRE ALARM ROOF PLAN | SCALE 1/8" = 1'-0" | 1

GENERAL NOTES

1. AUTOMATIC SHUTOFF IS NOT REQUIRED WHEN:
   A. AIR-MOVING SYSTEMS SUPPLYING AIR LESS THAN 2000 CFM TO ENCLOSED SPACES WITHIN BUILDING. (CMC 608.1)
   B. ALL OCCUPIED ROOMS SERVED BY THE AIR-HANDLING EQUIPMENT HAVE DIRECT EXIT TO THE EXTERIOR AND THE TRAVEL DISTANCE DOES NOT EXCEED 100 FEET. (CMC 608.1 EXCEMPTIONS2).
2. SEE ARCHITECTURAL REFLECTED CEILING PLAN AND ELEVATIONS FOR EXACT LOCATIONS OF FIRE ALARM DEVICES.

REFERENCE NOTES

(1) HVAC UNIT (REFER TO MECHANICAL DRAWING.). PROVIDE AUTOMATIC SHUT OFF PER CMC 608. WITH CONTROL RELAY MODULE (IDP-RELAY) AND 120V RELAY MODULES (RIBUIC) (LOCATE ABOVE ACCESSIBLE CEILING SPACE BELOW HVAC UNIT), SEE WIRING DIAGRAM ON SHEET E402. CONNECT 120V POWER CIRCUIT FROM NEAREST PANEL TO RIBUIC RELAY. PROVIDE LOCK ON DEVICE TO CIRCUIT BREAKER HANDLE, WITH RED MARKING.

APPL. No. A03-122864

IDENTIFICATION STAMP
DIV. OF THE STATE ARCHITECT
APP: 03-122864 INC:
REVIEWED FOR
SS ☑ FLS ☑ ACS ☑
DATE: 10/03/2023

DSA Stamp

Architect

RACHLIN PARTNERS
8840 National Boulevard
Culver City, CA 90232
310.204.3400

Disclaimer:
THESE DRAWINGS ARE THE PROPERTY OF THE ARCHITECT. THE DESIGNS SHOWN AND DESCRIBED HEREIN INCLUDING ALL TECHNICAL DRAWINGS ARE PROPRIETARY AND CANNOT BE COPIED, DUPLICATED OR COMMERCIALLY EXPLOITED, IN WHOLE OR IN PART. THE DRAWINGS AND SPECIFICATIONS SHALL NOT BE USED BY THE OWNER ON OTHER PROJECTS, FOR ADDITIONS TO THIS PROJECT, OR FOR COMPLETION OF THIS PROJECT BY OTHERS. THE OWNER AGREES TO HOLD HARMLESS, INDEMNIFY AND DEFEND THE ARCHITECT AGAINST ALL DAMAGES, CLAIMS AND LOSSES, INCLUDING DEFENSE COSTS, ARISING OUT OF ANY REUSE OF PLANS AND SPECIFICATIONS WITHOUT THE WRITTEN AUTHORIZATION OF THE ARCHITECT OF RECORD.

Copyright 2022 Rachlin Partners, All Rights Reserved.

Performing Arts Center
Hacienda La Puente Unified School District

635 North California Avenue
La Puente, CA 91744

Rev	Date	Issue
1	7.22.22	50% DD
2	10.21.22	50% CD
3	12.09.22	100% DSA Submittal
4	06.19.23	100% DSA Resubmittal
5	09.20.23	DSA Back Check

Date: 09/20/23
Scale: As Shown
Drawn By: --
Checked By: --

Architect / Engineer Stamp

LICENSED ARCHITECT REGISTERED IN VIRGINIA NO. 0402029 RDN. 2-28-25 STATE OF CALIFORNIA

REGISTERED PROFESSIONAL ENGINEER Mark R. Lee No.E 17223 Exp.6/30/2024 ELECTRICAL STATE OF CALIFORNIA

Consultants
Miyamoto International, Inc.
The Ruzika Company, Inc,
MDC Consulting Engineers
Pocock Design Solutions
Newson Brown Acoustics, LLC
VCA Engineers, Inc.
HJSA Consulting
L.A. Design Associates, Inc.

Sheet Title
Fire Alarm
Roof Plan

Sheet Number
E314

Plot Date: 9/20/2023 9:38:31 AM
Plot By: HUGO PAC_Central detached.ctb
Last Save By: Tom Law Login: Tom Law J:\Project Files\2022\2022-019 Hacienda La Puente PAC\Electrical Drawings\E\E314 - FA Roof Plan.dwg

REFERENCE NOTES

1. PROVIDE NEW (1)20A 1P CIRCUIT BREAKER TO EXISTING PANEL SPACE, AS INDICATED. CIRCUIT BREAKER SHALL MATCH BY TYPE/STYLE/AIC RATING. PROVIDE LOCK ON DEVICE TO CIRCUIT BREAKER HANDLE, WITH RED MARKING. ACCESSIBLE ONLY TO AUTHORIZED PERSONNEL, IDENTIFIED AS "FIRE ALARM CIRCUIT", AND LOCATION OF CIRCUIT BREAKER PERMANENTLY IDENTIFIED AT FIRE ALARM CONTROL UNIT IN COMPLIANCE WITH 2019 CFC/CBC 907, NFPA 72 10.6.5.2 AND 2019 CEC 760.
2. PROVIDE (2) CAT6 TO MDF/IDF WITHIN THE BUILDING FOR REMOTE STATION MONITORING.
3. HVAC UNIT (REFER TO MECHANICAL DRAWING.). PROVIDE AUTOMATIC SHUT OFF PER CMC 608. WITH CONTROL RELAY MODULE (IDP-RELAY) AND 120V RELAY MODULES (RIBUIC) (LOCATE ABOVE ACCESSIBLE CEILING SPACE BELOW HVAC UNIT), SEE WIRING DIAGRAM ON SHEET E402. CONNECT 120V POWER CIRCUIT FROM NEAREST PANEL TO RIBUIC RELAY. PROVIDE LOCK ON DEVICE TO CIRCUIT BREAKER HANDLE, WITH RED MARKING.
4. PROVIDE CONTROL RELAY MODULE (IDP-RELAY) FOR PA SYSTEM. FIELD VERIFY LOCATION. WHEN THE FIRE ALARM SYSTEM/VOICE EVACUATION MESSAGE IS ACTIVATED, THE PA SYSTEM WILL BE EXTINGUISHED.
5. PROVIDE CONTROL RELAY MODULE (IDP-RELAY) FOR GENERAL LIGHTING OVERRIDE. FIELD VERIFY LOCATION. UPON FIRE ALARM ACTIVATION, GENERAL THEATER LIGHTING TO BE RESTORED.
6. CONNECT CONTROL RELAY MODULE (IDP-RELAY) AND 120V RELAY MODULES (RIBUIC) TO EACH FIRE SMOKE DAMPER CIRCUIT SERVED BY EACH 120 VOLT CIRCUIT SERVING FIRE SMOKE DAMPERS, SEE WIRING DIAGRAM ON SHEET E402. CONNECT 120V POWER CIRCUIT TO 120V RELAY MODULES AS INDICATED. PROVIDE LOCK ON DEVICE TO CIRCUIT BREAKER HANDLE, WITH RED MARKING.

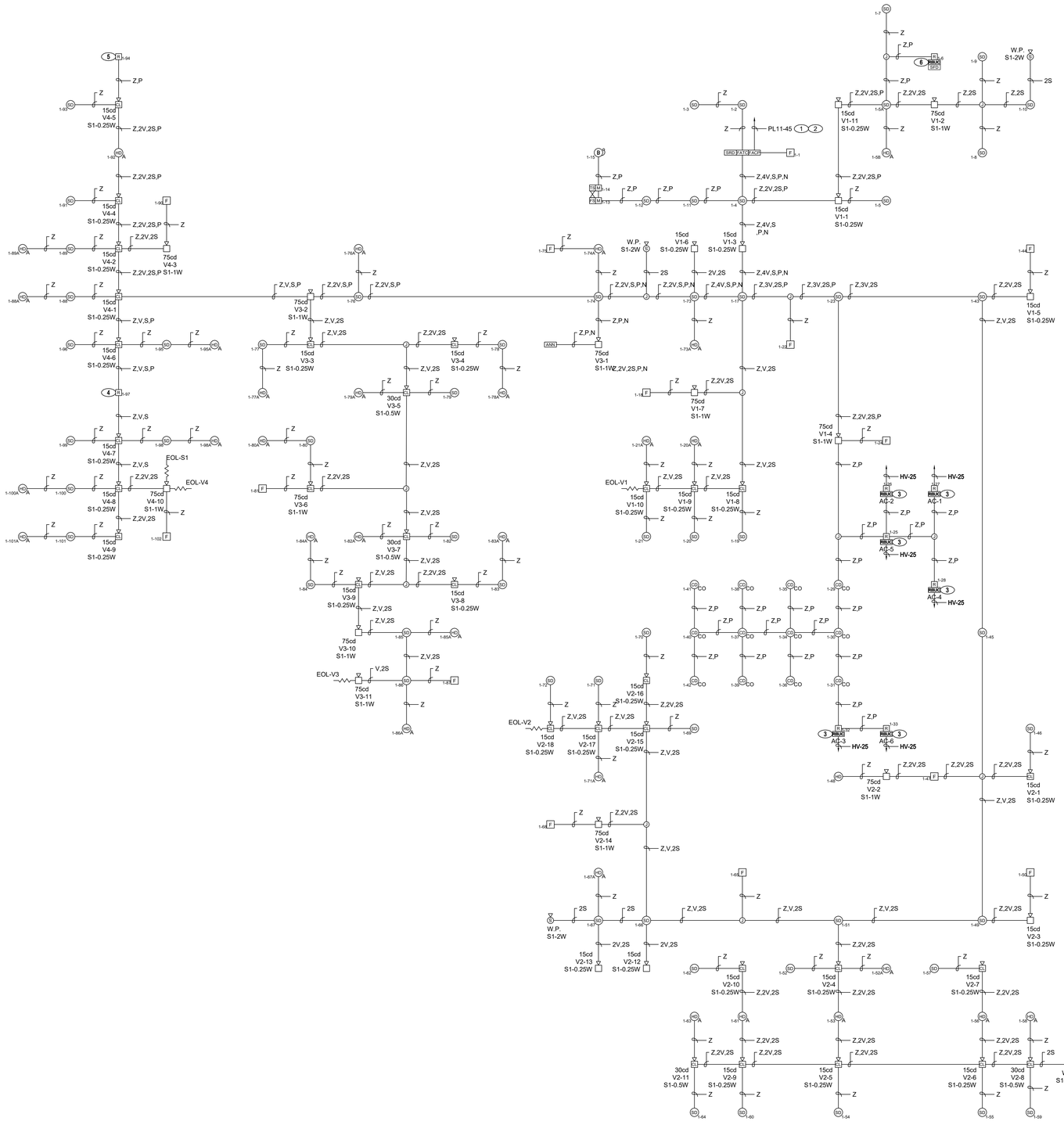

FIRE ALARM RISER DIAGRAM | SCALE N.T.S. | 1

APPL. No. A 03-122864

IDENTIFICATION STAMP
DIV. OF THE STATE ARCHITECT
APP: 03-122864 INC:
REVIEWED FOR
SS ☑ FLS ☑ ACS ☑
DATE: 10/03/2023

DSA Stamp

Architect

RACHLIN PARTNERS
8840 National Boulevard
Culver City, CA 90232
310.204.3400

Disclaimer:
THESE DRAWINGS ARE THE PROPERTY OF THE ARCHITECT. THE DESIGNS SHOWN AND DESCRIBED HEREIN INCLUDING ALL TECHNICAL DRAWINGS ARE PROPRIETARY AND CANNOT BE COPIED, DUPLICATED OR COMMERCIALLY EXPLOITED, IN WHOLE OR IN PART. THE DRAWINGS AND SPECIFICATIONS SHALL NOT BE USED BY THE OWNER ON OTHER PROJECTS, FOR ADDITIONS TO THIS PROJECT, OR FOR COMPLETION OF THIS PROJECT BY OTHERS. THE OWNER AGREES TO HOLD HARMLESS, INDEMNIFY AND DEFEND THE ARCHITECT AGAINST ALL DAMAGES, CLAIMS AND LOSSES, INCLUDING DEFENSE COSTS, ARISING OUT OF ANY REUSE OF PLANS AND SPECIFICATIONS WITHOUT THE WRITTEN AUTHORIZATION OF THE ARCHITECT OF RECORD.
Copyright 2022 Rachlin Partners, All Rights Reserved.

Performing Arts Center
Hacienda La Puente Unified School District

635 North California Avenue
La Puente, CA 91744

Rev	Date	Issue
1	7.22.22	50% DD
2	10.21.22	50% CD
3	12.09.22	100% DSA Submittal
4	06.19.23	100% DSA Resubmittal
5	09.20.23	DSA Back Check

Date: 09/20/23
Scale: As Shown
Drawn By: --
Checked By: --

Architect / Engineer Stamp

LICENSED ARCHITECT — NO. C36229 — REN. 2-28-25 — STATE OF CALIFORNIA
REGISTERED PROFESSIONAL ENGINEER — No.E 17225 — Exp.6/30/2024 — ELECTRICAL — STATE OF CALIFORNIA

Consultants
Miyamoto International, Inc.
The Ruzika Company, Inc,
MDC Consulting Engineers
Pocock Design Solutions
Newson Brown Acoustics, LLC
VCA Engineers, Inc.
HJSA Consulting
L.A. Design Associates, Inc.

Sheet Title
Fire Alarm
Riser Diagram

Sheet Number
E321

Plot Date: 9/20/2023 9:38:35 AM Last Save By: Rooney Login: Tom Law J:\Project Files 2022\2022.019 Haciendo La Puente PAC\Electrical Drawings\E\E321 - FA Riser Digram.dwg

CIRCUIT	DISTANCE (FT)	NUMBER OF DEVICES										INDIVIDUAL CURRENT										TOTAL CURRENT	WIRE SIZE	VOLTAGE DROP %	MAX. DISTANCE (FT)
		15cd	15cd	30cd	75cd	110cd	15cd	15cd	30cd	75cd	95cd	15cd 0.043	15cd 0.043	30cd 0.063	75cd 0.107	110cd 0.148	15cd 0.041	15cd 0.041	30cd 0.063	75cd 0.111	95cd 0.134				
V1	300	0	5	0	3	0	0	3	0	0	0	0.000	0.215	0.000	0.321	0.000	0.000	0.123	0.000	0.000	0.000	0.659	12	3.84	1686
V2	500	0	3	0	2	0	0	11	2	0	0	0.000	0.129	0.000	0.214	0.000	0.000	0.451	0.126	0.000	0.000	0.920	12	8.93	1208
V3	300	0	0	0	4	0	0	4	2	1	0	0.000	0.000	0.000	0.428	0.000	0.000	0.164	0.126	0.111	0.000	0.829	12	4.83	1340
V4	375	0	0	0	2	0	0	8	0	0	0	0.000	0.000	0.000	0.214	0.000	0.000	0.328	0.000	0.000	0.000	0.542	12	3.95	2050

VOLTAGE DROP PERCENTAGE FORMULA

Vterminal = 20.4 VOLTS
Iload = TOTAL CURRENT DRAW IN AMPERES OF THE CONNECTED APPLIANCES
L = MAX. DISTANCE FROM THE CONTROL UNIT TO THE LAST APPLICATION (IN FEET)
FROM TABLE 8 OF CHAPTER 9 IN CEC 2019 EDITION.
STRANDED, UNCOATED COPPER CONDUSTORS AT 75°C
THE RESISTANCE PER FOOT (R) FOR 12 AWG IS 0.00198 Ohm/ft
THE RESISTANCE PER FOOT (R) FOR 14 AWG IS 0.00314 Ohm/ft
VOLTAGE DROP PERCENTAGE = $\frac{2 \times L \times Iload \times R \times 100}{20.4}$ %

MAX. DISTANCE FROM THE CONTROL UNIT TO THE LAST APPLICATION FORMULA

Vload = 16 VOLTS MINIMUM OPERATING VOLTAGE OF APPLIANCE
Vterminal = 20.4 VOLTS
Iload = TOTAL CURRENT DRAW IN AMPERES OF THE CONNECTED APPLIANCES
L = MAX. DISTANCE FROM THE CONTROL UNIT TO THE LAST APPLICATION (IN FEET)
FROM TABLE 8 OF CHAPTER 9 IN CEC 2019 EDITION.
STRANDED, UNCOATED COPPER CONDUSTORS AT 75°C
THE RESISTANCE PER FOOT (R) FOR 12 AWG IS 0.00198 Ohm/ft
THE RESISTANCE PER FOOT (R) FOR 14 AWG IS 0.00314 Ohm/ft
L = $\frac{Vterminal - Vload}{2 \times R \times Iload}$ FT

FIRE ALARM EQUIPMENT SCHEDULE

SYMBOL	QTY	MODEL	MANUFACTURER	DESCRIPTION	CSFM #	INSTALLATION/MOUNTING
FACP	1	IFP-2100ECS	Silent Knight	Intelligent Network Transponder	7165-0559:0505	Wall mounted
	0	6815	Silent Knight	Signaling Line Circuit Expander	7165-0559:0505	Mount in Cabinet
	1	ECS-INT50W	Silent Knight	Intelligent 50 Watt Internal Amplifier	7165-0559:0505	Mount in Cabinet
	2	BAT-12260	Silent Knight	(2) 12V 26Ah Sealed Lead-Acid Battery	7165-0559:0505	Mount in Battery Cabinet
	1	RBB	Silent Knight	Battery Cabinet, Red	7165-0559:0505	Wall mounted
ANN	1	RA-2000	Silent Knight	Remote Annunciator	7165-0559:0505	Wall mounted
	1	ECS-RPU	Silent Knight	Remote Paging Unit	7300-0559:0175	Wall mounted
F	14	IDP-Pull-DA	Silent Knight	Dual Action Pull Station	7150-0559:0140	Surface/Semi-Flush Wall Mounted
SD	57	IDP-PHOTO-W	Silent Knight	White, low-profile intelligent photoelectric sensor	7272-0559:0149	Mount to Plug-in sensor base
	57	B300-6	Silent Knight	White, standard flanged low-profile mounting base	7272-0559:0149	Single gang box
HD	1	IDP-HEAT-ROR-W	Silent Knight	White, low-profile intelligent rate-of- rise thermal sensor	7270-0559:0147	Mount to Plug-in sensor base
	1	B300-6	Silent Knight	White, standard flanged low-profile mounting base	7270-0559:0147	Single gang box
HDA	30	IDP-HEAT-HT-W	Silent Knight	White, low-profile intelligent 190°F fixed thermal sensor	7270-0559:0147	Mount to Plug-in sensor base
	30	B300-6	Silent Knight	White, standard flanged low-profile mounting base	7270-0559:0147	Single gang box
CODCO	12	IDP-FIRE-CO-W	Silent Knight	Advanced multi-criteria fire/CO detector, white color	7272-0559:0517	Mount to Plug-in sensor base
	12	B200S-WH	Silent Knight	Intelligent addressable sounder base, white	7272-0559:0517	Single gang box
	0	SWL-P	System Sensor	Plain Wall Strobes Standard cd, White, Clear Lens	7125-1653:0504	Wall Mounted
	0	SCWL-P	System Sensor	Plain Ceiling Strobes Standard cd, White, Clear Lens	7125-1653:0504	Ceiling Mounted
	19	SPSWL-P	System Sensor	Plain Wall Speaker Strobes Standard cd, White, Clear Lens	7320-1653:0505	Wall Mounted
	31	SPSCWL-P	System Sensor	Plain Ceiling Speaker Strobes Standard cd, White, Clear Lens	7320-1653:0505	Ceiling Mounted
S	4	SPRK-P	System Sensor	Plain Outdoor Speaker, Red, Includes Plastic Weatherproof Back Box	7320-1653:0201	Wall-Mount with Plastic Weatherproof Back Box
M	3	IDP-MONITOR	Silent Knight	Input Monitor Module	7300-0559:0155	Single gang box
R	9	IDP-RELAY	Silent Knight	Addressable Relay Module	7300-0559:0155	Single gang box
RIBU	7	RIBU1C	Functional Devices, Inc.	Relay 10 Amp SPDT with 10-30 Vac/Dc/120 Vac Coil	7300-1555:0100	Single gang box
B	1	SSM24-10	System Sensor	10" 24V Fire Alarm Bell, Red	7135-1653:0217	Wall Mounted with weatherproof backbox
SRD	1	ACE-11	Space Age Electronics	System Record Documents (SRD)	N/A	Wall mounted

Fire Alarm Battery Calculations: FACP

DEVICE	MODEL#	QUANTITY	SUPERVISORY CURRENT		ALARM CURRENT	
			EACH UNIT	SUBTOTAL	EACH UNIT	SUBTOTAL
Intelligent Network Transponder	IFP-2100ECS	1	0.230000	0.230000	0.415000	0.415000
Signaling Line Circuit Expander	6815	0	0.078000	0.000000	0.078000	0.000000
Intelligent 50 Watt Internal Amplifier	ECS-INT50W	1	0.052000	0.052000	0.310000	0.310000
Remote Annunciator	RA-2000	1	0.025000	0.025000	0.050000	0.050000
Remote Paging Unit	ECS-RPU	1	0.070000	0.070000	0.100000	0.100000
Dual Action Pull Station	IDP-Pull-DA	14	0.000350	0.004900	0.000350	0.004900
White, low-profile intelligent photoelectric sensor	IDP-PHOTO-W	57	0.000200	0.011400	0.000200	0.011400
White, low-profile intelligent rate-of- rise thermal sensor	IDP-HEAT-ROR-W	1	0.000200	0.000200	0.002000	0.002000
White, low-profile intelligent 190°F fixed thermal sensor	IDP-HEAT-HT-W	30	0.000200	0.006000	0.002000	0.060000
Advanced multi-criteria fire/CO detector, white color	IDP-FIRE-CO-W	12	0.000200	0.002400	0.002000	0.024000
Intelligent addressable sounder base, white	B200S-WH	12	0.000500	0.006000	0.035000	0.420000
15 cd Wall Strobe	SWL-P	0	0.000000	0.000000	0.043000	0.000000
15 cd Wall Speaker-Strobe	SWL-P	8	0.000000	0.000000	0.043000	0.344000
30 cd Wall Speaker-Strobe	SWL-P	0	0.000000	0.000000	0.063000	0.000000
75 cd Wall Speaker-Strobe	SWL-P	11	0.000000	0.000000	0.107000	1.177000
110 cd Wall Speaker-Strobe	SWL-P	0	0.000000	0.000000	0.148000	0.000000
15 cd Ceiling Strobe	SPSWL-P	0	0.000000	0.000000	0.041000	0.000000
15 cd Ceiling Speaker-Strobe	SPSCWL-P	26	0.000000	0.000000	0.041000	1.066000
30 cd Ceiling Speaker-Strobe	SPSCWL-P	4	0.000000	0.000000	0.063000	0.252000
75 cd Ceiling Speaker-Strobe	SPSCWL-P	1	0.000000	0.000000	0.111000	0.111000
95 cd Ceiling Speaker-Strobe	SPSCWL-P	0	0.000000	0.000000	0.134000	0.000000
Total Speaker Current		1	0.000000	0.000000	0.371287	0.371287
Input Monitor Module	IDP-MONITOR	3	0.000350	0.001050	0.000450	0.001350
Addressable Relay Module	IDP-RELAY	9	0.000300	0.002700	0.005500	0.049500
Relay 10 Amp SPDT with 10-30 Vac/Dc/120 Vac Coil	RIBU1C	7	0.018000	0.126000	0.018000	0.126000
10" 24V Fire Alarm Bell, Red	SSM24-10	1	0.000000	0.000000	0.031000	0.031000
				SUB TOTAL		4.986550
				0.537650		

* CURRENT DRAW INCLUDED WITH DEVICE ADDRESSES USED

STANDBY TIME = 24 HRS X SUPERVISORY CURRENT	12.904 Ah
ALARM TIME = 15 MINUTES (0.25HRS)	1.247 Ah
ADDITIONAL SPARE CAPACITY @ 25% OF TOTAL CURRENT	3.538 Ah
TOTAL BATTERY REQURED(Ah)	17.688 Ah
BATTERIES SUPPLIED 26 Ah	

Sequence of Operation / Initiating Device / System Response	MANUAL PULL STATION	AREA SMOKE DETECTOR	AREA HEAT DETECTOR	CO DETECTOR	SPRINKLER WATER FLOW SWITCH	SPRINKLER VALVE TAMPER SWITCH	DOUBLE DETECTOR CHECK VALVE (DDCV)	ACTIVATION OF VOICE EVACUATION MESSAGE	SHORT CIRCUIT	BATTERY FAILURE	GROUND FAULT	120VAC POWER FAILURE
ANNUNCIATE AT FACP / ANN (ALARM)	YES	YES	YES	YES	YES	YES	YES	YES	NO	NO	NO	NO
ANNUNCIATE AT FACP / ANN (TROUBLE)	NO	NO	NO	NO	NO	NO	NO	NO	YES	YES	YES	YES
ACTIVATE RELAY FOR MONITORING (ALARM OR TROUBLE)	YES	YES	YES	YES	YES	YES	YES	NO	YES	YES	YES	YES
ACTIVATE VISUAL ALARM THROUGHOUT BUILDING	YES	YES	YES	YES	YES	NO	NO	YES	NO	NO	NO	NO
ACTIVATE AUDIBLE ALARM (3-pulse, temporal pattern) THROUGHOUT BUILDING	YES	YES	YES	NO	YES	NO	NO	YES	NO	NO	NO	NO
ACTIVATE AUDIBLE ALARM AT DETECTOR SOUNDER BASE (4-pulse, temporal pattern) THROUGHOUT BUILDING	NO	NO	NO	YES	NO	NO	NO	NO	NO	NO	NO	NO
VOICE EVACUATION AUDIBLES /STROBES	NO	NO	NO	NO	NO	NO	NO	YES	NO	NO	NO	NO
SILENCE FIRE ALARM AUDIBLE SIGNAL	NO	NO	NO	YES	NO	NO	NO	YES	NO	NO	NO	NO
SILENCE ALL PA SYSTEM	YES	YES	YES	YES	YES	NO	NO	YES	NO	NO	NO	NO
GENERAL THEATER LIGHTING OVERRIDE TO BE RESTORED	YES	YES	YES	YES	YES	NO	NO	YES	NO	NO	NO	NO
SOUND SPRINKLER BELL	NO	NO	NO	NO	YES	NO	NO	NO	NO	NO	NO	NO
SHUT DOWN ALL AIR HANDLING (HVAC) THROUGHOUT BUILDING	NO	YES	NO	YES	YES	NO	NO	NO	NO	NO	NO	NO
CLOSE ALL COMBINATION SMOKE FIRE DAMPERS	NO	YES	NO	YES	YES	NO	NO	NO	NO	NO	NO	YES
OFF-SITE REPORTING	YES	YES	YES	YES	YES	YES	YES	YES	YES	YES	YES	YES

THE FIRE ALARM SIGNALS WILL OPERATE ACCORDING TO NFPA 72 REQUIREMENTS. IF THE FIRE ALARM SYSTEM IS ACTIVATED AND VOICE EVACUATION MESSAGE IS SIMULTANEOUSLY ACTIVATED, THE FIRE ALARM SIGNAL WILL BE EXTINGUISHED, AND VOICE EVACUATION MESSAGE WILL BE ACTIVATED. THE FIRE ALARM SIGNALS WILL BE REINSTATED ONCE THE VOICE EVACUATION MESSAGE ARE COMPLETED.

Table C1. Maximum Number of Conductors in Electrical Metallic Tubing (EMT)
(Based on 2019 CEC Table 1, Chapter 9)

Conductor Size AWG	3/4" Conduit		1" Conduit	
	Maximum Number of Conductors	Maximum Weight (lbs/ft)	Maximum Number of Conductors	Maximum Weight (lbs/ft)
14 and smaller	22	0.802	35	1.210
12	16	0.834	26	1.274

Note: This table is for concentric THHN stranded conductors only. For cables with compact conductors, the dimensions in table 5A shall be used.

CABLE INSTALLED IN CONDUIT

Symbol	Circuit Type	Pathway Class	Pathway Style	Cable Description: Indoor	Cable Description: Outdoor	Color
Z	Signature Addressable Loop Circuit	B	Y	2#16 Solid Unshielded FPLR-CI DuraLite CTU16A0102	2#16 Unshielded AquaSeal West Penn AQ225	
V	Notification Appliance Circuit (NAC) 24Vdc	B	Y	2#12 Stranded Unshielded FPLR-CI DuraLite CTU12A0702	2#12 THHN/THWN Cerrowire 112-36	Blue + Yellow -
S	Speaker Circuit	B	Y	2#18 Solid Unshielded FPLR-CI DuraLite CTS18A0102	2#18 Shielded AquaSeal West Penn AQ293	
P	24V DC Power Distribution	2		2#12 Stranded Unshielded FPLR-CI DuraLite CTU12A0702	2#12 THHN/THWN Cerrowire 112-36	Red + Black -
D	24V DC Door Holder	D		2#12 Stranded Unshielded FPLR-CI DuraLite CTU12A0702	2#12 THHN/THWN Cerrowire 112-36	Red + Black -
N	Network Cable RS-485 (SBUS)	N		4#12 Stranded Unshielded FPLR-CI DuraLite CTU12A0702	4#12 THHN/THWN Cerrowire 112-36	
F	Network Cable (2-VBUS + 4-SBUS)	N		6#12 Stranded Unshielded FPLR-CI DuraLite CTU12A0702	6#12 THHN/THWN Cerrowire 112-36	Red + Black -

Note: All Fire Alarm cables installed in conduits. Outdoor and Underground Fire Alarm cables shall be West Penn "Aqua Seal" (AQC) rated or equal. Transition from AQC rated cables to Non-AQC rated cables within building interiors shall be terminated at Fire Alarm Terminal Cabinets (FATC). Where no existing FATC is shown on drawings, provide new FATC 12"x12"x4" NEMA 1 screw cover box with terminal strips for termination. Locate FATC within building at the point of entry to building or as directed by district.
All pathways shall comply with CEC (2019 edition).
No wiring splices are permitted, all cables shall be terminated at devices terminal or at FATC.
Provide conduit duct sealant water block Foam-Based duct sealing system at all conduit openings (both ends) at each underground pull boxes (existing/new)

FIRE ALARM CALCULATIONS | SCALE N.T.S. | 1

Plot Date: 9/20/2023 9:38:48 AM Last Save By: Rooney Login: Tom Law J:\Project Files 2022\2022-019 Hacienda La Puente PAC\Electrical Drawings\E331 - FA Calculations.dwg

APPL. No. A 03-122864

IDENTIFICATION STAMP
DIV. OF THE STATE ARCHITECT
APP: 03-122864 INC:
REVIEWED FOR
SS ☑ FLS ☑ ACS ☑
DATE: 10/03/2023

DSA Stamp

Architect

RACHLIN PARTNERS
8840 National Boulevard
Culver City, CA 90232
310.204.3400

Disclaimer:
THESE DRAWINGS ARE THE PROPERTY OF THE ARCHITECT. THE DESIGNS SHOWN AND DESCRIBED HEREIN INCLUDING ALL TECHNICAL DRAWINGS ARE PROPRIETARY AND CANNOT BE COPIED, DUPLICATED OR COMMERCIALLY EXPLOITED, IN WHOLE OR IN PART. THE DRAWINGS AND SPECIFICATIONS SHALL NOT BE USED BY THE OWNER ON OTHER PROJECTS, FOR ADDITIONS TO THIS PROJECT, OR FOR COMPLETION OF THIS PROJECT BY OTHERS. THE OWNER AGREES TO HOLD HARMLESS, INDEMNIFY AND DEFEND THE ARCHITECT AGAINST ALL DAMAGES, CLAIMS AND LOSSES, INCLUDING DEFENSE COSTS, ARISING OUT OF ANY REUSE OF PLANS AND SPECIFICATIONS WITHOUT THE WRITTEN AUTHORIZATION OF THE ARCHITECT OF RECORD.
Copyright 2022 Rachlin Partners, All Rights Reserved.

Performing Arts Center
Hacienda La Puente Unified School District
635 North California Avenue
La Puente, CA 91744

Rev	Date	Issue
1	7.22.22	50% DD
2	10.21.22	50% CD
3	12.09.22	100% DSA Submittal
4	06.19.23	100% DSA Resubmittal
5	09.20.23	DSA Back Check

Date: 09/20/23
Scale: As Shown
Drawn By: --
Checked By: --

Architect / Engineer Stamp

LICENSED ARCHITECT — REGISTERED PROFESSIONAL — NO. C26229 REN. 2-28-25 — STATE OF CALIFORNIA
REGISTERED PROFESSIONAL ENGINEER — THOMAS W. LAW — No. E 17235 Exp. 6/30/2024 — ELECTRICAL — STATE OF CALIFORNIA

Consultants
Miyamoto International, Inc.
The Ruzika Company, Inc,
MDC Consulting Engineers
Pocock Design Solutions
Newson Brown Acoustics, LLC
VCA Engineers, Inc.
HJSA Consulting
L.A. Design Associates, Inc.

Sheet Title
Fire Alarm Calculations

Sheet Number
E331

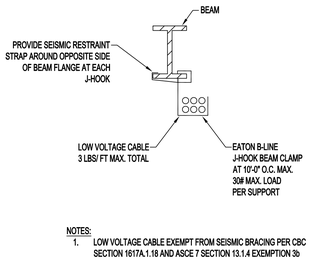

NOTES:
1. LOW VOLTAGE CABLE EXEMPT FROM SEISMIC BRACING PER CBC SECTION 1617A.1.18 AND ASCE 7 SECTION 13.1.4 EXEMPTION 3b

LOW VOLTAGE CABLE SUPPORT DETAIL

SCALE N.T.S. | 3

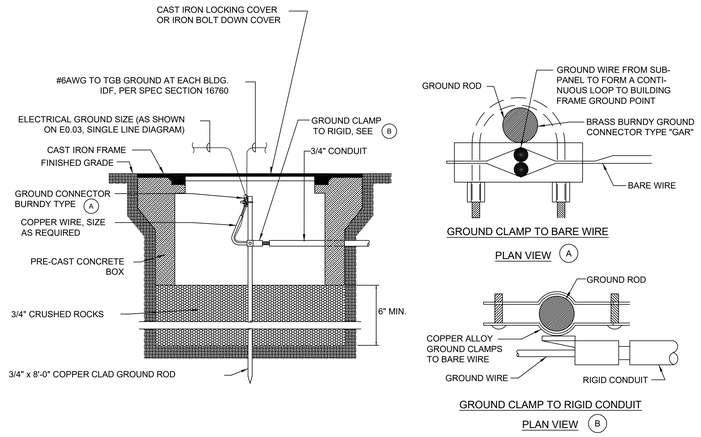

GROUND ROD AND CONCRETE BOX DETAIL

SCALE NTS | 1

SYSTEM NO W-L-1497

F RATINGS - 1 AND 2 HR (SEE ITEMS 1)
T RATINGS - 1/4 HR
L RATING AT AMBIENT - LESS THAN 5 CFM/SQ FT
L RATING AT 400 F - LESS THAN 2 CFM/SQ FT

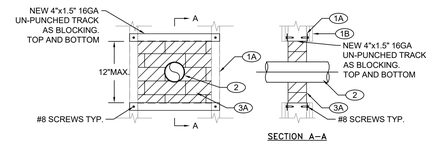

1. WALL ASSEMBLY - THE 1 OR 2 HR FIRE-RATED GYPSUM BOARD/STUD WALL ASSEMBLY SHALL BE CONSTRUCTED OF THE MATERIALS AND IN THE MANNER SPECIFIED IN THE INDIVIDUAL U300, U400, V400 OR W400 SERIES WALL AND PARTITION DESIGNS IN THE FIRE RESISTANCE DIRECTORY AND SHALL INCLUDE THE FOLLOWING CONSTRUCTION FEATURES
   A. STUDS - WALL FRAMING SHALL CONSIST OF CHANNEL SHAPED STEEL STUDS. STEEL STUDS TO BE MIN 3-5/8 IN. (92 MM) WIDE, SPACED MAX 16 IN. (400 MM) OC.
   B. GYPSUM BOARD* - NOM 5/8 IN. (16 MM) THICK, 4 FT. (1219 CM) WIDE WITH SQUARE OR TAPERED EDGES. THE GYPSUM BOARD TYPE, THICKNESS, NUMBER OF LAYERS, FASTENER TYPE AND SHEET ORIENTATION SHALL BE AS SPECIFIED IN THE INDIVIDUAL WALL OR PARTITION DESIGN IN THE UL FIRE RESISTANCE DIRECTORY. MAX AREA OF OPENING IS 144IN2 (929 CM2) WITH MAX DIMENSION OF 12 IN. (305 MM). THE HOURLY F RATING OF THE FIRE-STOP SYSTEM IS EQUAL TO THE HOURLY FIRE RATING OF THE WALL ASSEMBLY IN WHICH IT IS INSTALLED.
2. EMT TUBE - NOM 2 IN. DIAM (OR SMALLER) 0.125 IN. THICK (OR HEAVIER) EMT TUBE FOR USE IN CLOSED (PROCESS OR SUPPLY) PIPING SYSTEMS. ONE TUBE TO BE INSTALLED EITHER CONCENTRICALLY OR ECCENTRICALLY WITHIN THE FIRE-STOP SYSTEM. THE ANNULAR SPACE SHALL BE MIN 2 IN. TUBING TO BE RIGIDLY SUPPORTED ON BOTH SIDES OF WALL ASSEMBLY. DI-ELECTRIC SEPARATION REQUIRED BETWEEN ALUMINUM AND STEEL.
3. FIRE-STOP SYSTEM - THE FIRE-STOP SYSTEM SHALL CONSIST OF THE FOLLOWING:
   A. FILL, VOID OR CAVITY MATERIAL* - FIRE BLOCKS INSTALLED WITH MIN. 2 IN. DIMENSION PASSING THROUGH AND CENTERED WITHIN THE OPENING. BLOCKS TO BE FIRMLY PACKED AND COMPLETELY FILL THE ENTIRE OPENING AROUND THE PENETRANT. HILTI CONSTRUCTION CHEMICALS, DIV OF HILTI INC - CFS-BL FIRE-STOP BLOCK
   B. FILL, VOID OR CAVITY MATERIAL* - FILL MATERIAL TO BE FORCED INTO ANY VOIDS/OPENINGS BETWEEN BLOCKS, AROUND PENETRANTS, AND BETWEEN BLOCKS AND PERIPHERY OF OPENING TO THE MAXIMUM EXTENT POSSIBLE ON BOTH SURFACES OF WALL. HILTI CONSTRUCTION CHEMICALS, DIV OF HILTI INC - FS-ONE SEALANT, CP618 FIRE-STOP PUTTY STICK OR CP 620 FIRE FOAM (NOTE: L RATINGSAPPLYONLYWHENFS-ONESEALANTISUSED.)
4. SUBMIT PLANS OR WALL ELEVATIONS WITH CORES FOR STRUCTURE ENGINEER REVIEW AND DSA APPROVAL SHOWING THE LOCATION OF EXISTING FLOOR/WALL OPENING AND ANY REQUIREMENT/NON-STRUCTURE COMPONENT ATTACHED EACH SIDE. FLOOR/WALL STRENGTHENING AROUND OPENING MAY BE REQUIRED SUBJECT TO STRUCTURE ENGINEER REVIEW AND DSA APPROVAL.

*BEARING THE UL CLASSIFICATION MARK

ALL WALL AND FLOOR PENETRATIONS MADE UNDER THIS PROJECT SHALL BE SEALED PER THE APPLICABLE DETAIL WETHER THE WALL OR FLOOR IS KNOWN TO BE FIRE RATED OR NOT

GYPSUM WALL PENNETRATION DETAIL

SCALE N.T.S. | 2

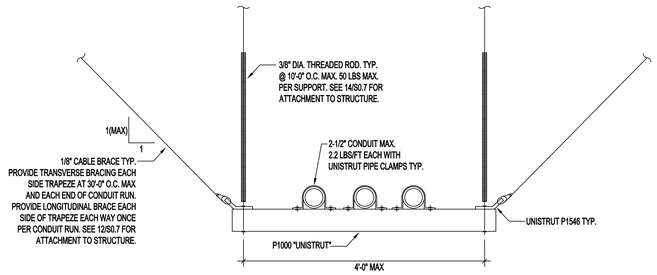

ELECTRICAL CONDUIT TRAPEZE SUPPORT DETAIL

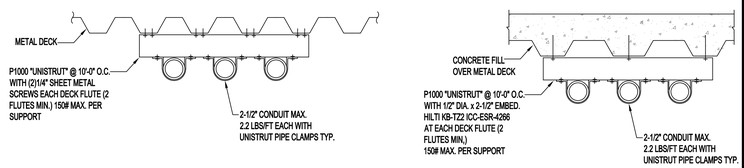

ELECTRICAL CONDUIT SUPPORT DETAILS

SCALE N.T.S. | 4

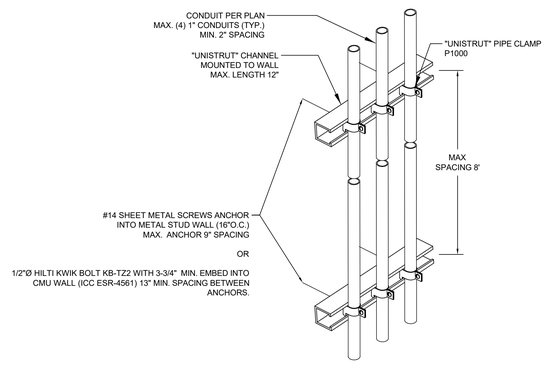

USE TABLE 358.30, 2022 NEC FOR EMT CONDUIT SECURING AND SUPPORTING

NOTES:
1. PROVIDE MINIMUM (2) UNISTRUT SUPPORT AT BETWEEN FLOOR TO CEILING.
2. CONDUIT SHALL BE SECURELY FASTENED IN PLACE AT LEAST EVERY 8 FEET, AND 3 FEET OF EACH TERMINATION POINTS (PULL BOX, J-BOX, ETC.).
3. PROVIDE 12" SEPARATION FROM EXISTING ANCHOR(S), IF ANY.

VERTICAL CONDUIT RISER SUPPORT DETAIL

SCALE N.T.S. | 5

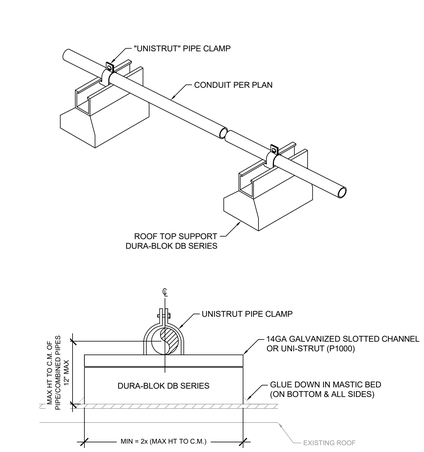

DB Series
Base with Galv. Channel - 1" high
Dimensions - 5" High x 6" Wide x Length (overall length)

Ultimate Load Capacity - (uniform load) *
DB5 = 200 lbs. (overall length 4.8")

NOTE:
1. MAXIMUM SPACING: 8'-0" ON CENTER

CONDUIT/PIPE SUPPORT ON ROOF

SCALE N.T.S. | 6

FIRE ALARM PANEL INSIDE

NOTE: SIGNAGE SHALL BE PLACE ON OR ADJACENT TO THE DOOR LEADING INTO FIRE ALARM PANEL LOCATION. MINIMUM 1 INCH LETTER, WITH CONTRASTING BACKGROUND OR OTHER APPROVED.

FIRE ALARM CONTROL PANEL INSIDE SIGNAGE

SCALE N.T.S. | 7

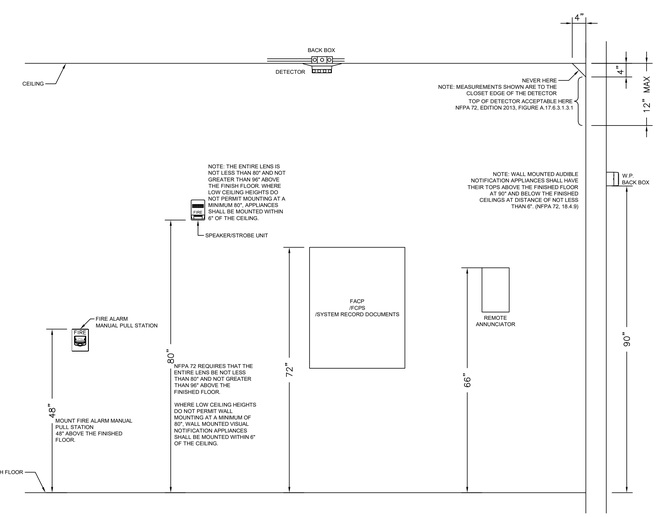

DEVICE ELEVATIONS

SCALE N.T.S. | 8

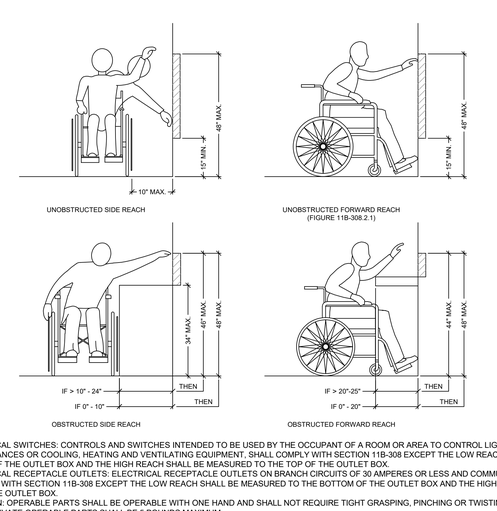

NOTE:
1. CBC2022, 11B-308.1.1 ELECTRICAL SWITCHES: CONTROLS AND SWITCHES INTENDED TO BE USED BY THE OCCUPANT OF A ROOM OR AREA TO CONTROL LIGHTING AND RECEPTACLE OUTLETS, APPLIANCES OR COOLING, HEATING AND VENTILATING EQUIPMENT, SHALL COMPLY WITH SECTION 11B-308 EXCEPT THE LOW REACH SHALL BE MEASURED TO THE BOTTOM OF THE OUTLET BOX AND THE HIGH REACH SHALL BE MEASURED TO THE TOP OF THE OUTLET BOX.
2. CBC2022, 11B-308.1.2 ELECTRICAL RECEPTACLE OUTLETS: ELECTRICAL RECEPTACLE OUTLETS ON BRANCH CIRCUITS OF 30 AMPERES OR LESS AND COMMUNICATION SYSTEM RECEPTACLES SHALL COMPLY WITH SECTION 11B-308 EXCEPT THE LOW REACH SHALL BE MEASURED TO THE BOTTOM OF THE OUTLET BOX AND THE HIGH REACH SHALL BE MEASURED TO THE TOP OF THE OUTLET BOX.
3. CBC2022, 11B-309.4 OPERATION: OPERABLE PARTS SHALL BE OPERABLE WITH ONE HAND AND SHALL NOT REQUIRE TIGHT GRASPING, PINCHING OR TWISTING OF THE WRIST. THE FORCE REQUIRED TO ACTIVATE OPERABLE PARTS SHALL BE 5 POUNDS MAXIMUM.
4. OPERABLE PARTS CANNOT BE LOCATED WHERE A PERSON USING A WHEELCHAIR WOULD BE FORCED TO REACH OVER AN OBSTRUCTION.
5. FIRE ALARM INITIATING DEVICE MUST BE LOCATED ON PATH OF TRAVEL.
6. PROVIDE FRONT AND PARALLEL APPROACH AT NEWLY INSTALLED FIRE ALARM INITIATING DEVICE.

MOUNTING HEIGHT OVER OBSTRUCTION

SCALE N.T.S. | 9

APPL. No. A 03-122864

IDENTIFICATION STAMP
DIV. OF THE STATE ARCHITECT
APP: 03-122864 INC:
REVIEWED FOR
SS ☑ FLS ☑ ACS ☑
DATE: 10/03/2023

DSA Stamp

Architect

RACHLIN PARTNERS
8840 National Boulevard
Culver City, CA 90232
310.204.3400

Disclaimer:
THESE DRAWINGS ARE THE PROPERTY OF THE ARCHITECT. THE DESIGNS SHOWN AND DESCRIBED HEREIN INCLUDING ALL TECHNICAL DRAWINGS ARE PROPRIETARY AND CANNOT BE COPIED, DUPLICATED OR COMMERCIALLY EXPLOITED, IN WHOLE OR IN PART. THE DRAWINGS AND SPECIFICATIONS SHALL NOT BE USED BY THE OWNER ON OTHER PROJECTS, FOR ADDITIONS TO THIS PROJECT, OR FOR COMPLETION OF THIS PROJECT BY OTHERS. THE OWNER AGREES TO HOLD HARMLESS, INDEMNIFY AND DEFEND THE ARCHITECT AGAINST ALL DAMAGES, CLAIMS AND LOSSES, INCLUDING DEFENSE COSTS, ARISING OUT OF ANY REUSE OF PLANS AND SPECIFICATIONS WITHOUT THE WRITTEN AUTHORIZATION OF THE ARCHITECT OF RECORD.

Copyright 2022 Rachlin Partners, All Rights Reserved.

Performing Arts Center
Hacienda La Puente Unified School District

635 North California Avenue
La Puente, CA 91744

Rev	Date	Issue
1	7.22.22	50% DD
2	10.21.22	50% CD
3	12.09.22	100% DSA Submittal
4	06.19.23	100% DSA Resubmittal
5	09.20.23	DSA Back Check

Date: 09/20/23
Scale: As Shown
Drawn By: --
Checked By: --

Architect / Engineer Stamp

Consultants
Miyamoto International, Inc.
The Ruzika Company, Inc,
MDC Consulting Engineers
Pocock Design Solutions
Newson Brown Acoustics, LLC
VCA Engineers, Inc.
HJSA Consulting
L.A. Design Associates, Inc.

Sheet Title
Electrical Details

Sheet Number
E401

Plot Date: 9/20/2023 9:38:55 AM Last Save By: Tom Low Login: Tom Low J:\Project Files 2022\2022.019 Hacienda La Puente PAC\Electrical Drawings\E\E401-402 - Details.dwg

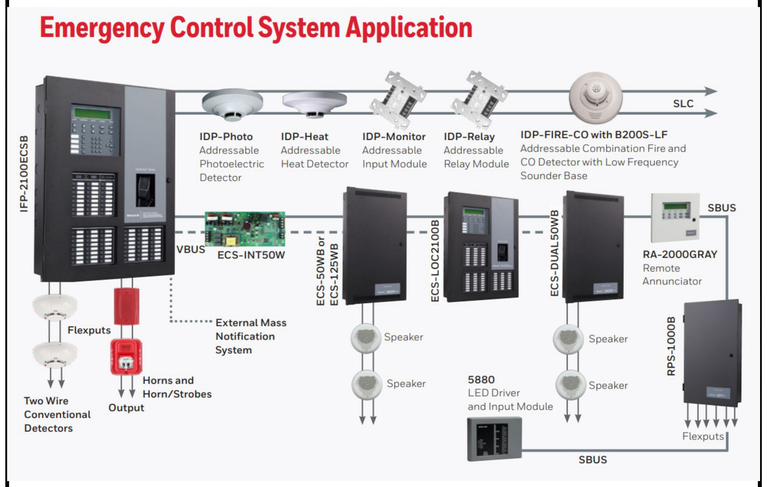

FIRE ALARM SYSTEM DIAGRAM

SCALE N.T.S. | 1

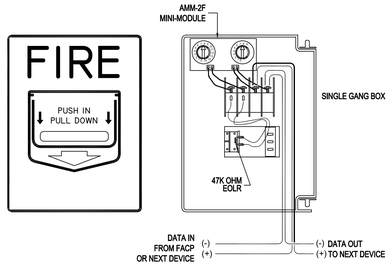

MANUAL PULL STATION WIRING DETAIL

SCALE N.T.S. | 2

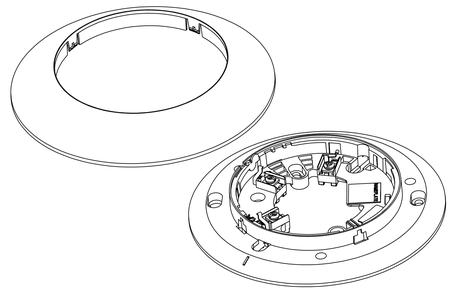

B300-6 MOUNTING BASE ASSEMBLY

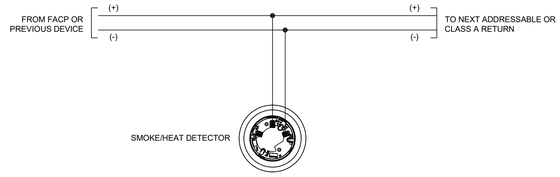

SMOKE/HEAT DETECTOR DETAIL

SCALE N.T.S. | 3

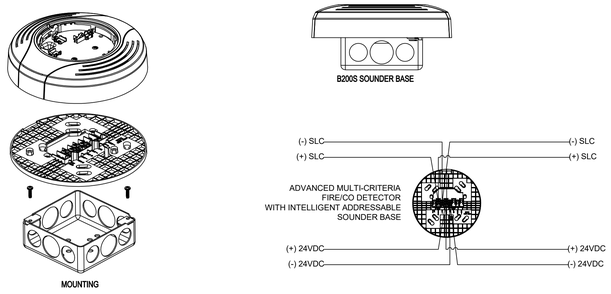

ADVANCED MULTI-CRITERIA FIRE/CO DETECTOR DETAIL

SCALE N.T.S. | 4

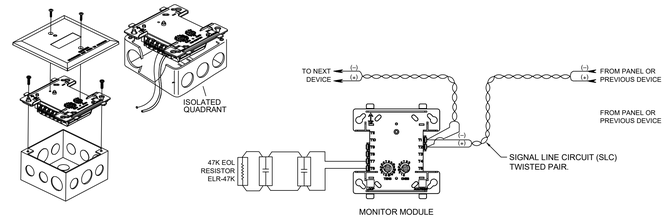

MONITOR MODULE WIRING DIAGRAM

SCALE N.T.S. | 5

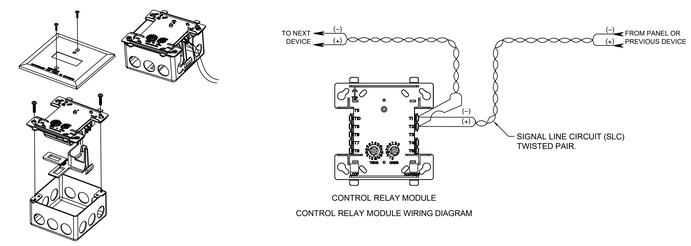

MONITOR MODULE WIRING DIAGRAM

SCALE N.T.S. | 6

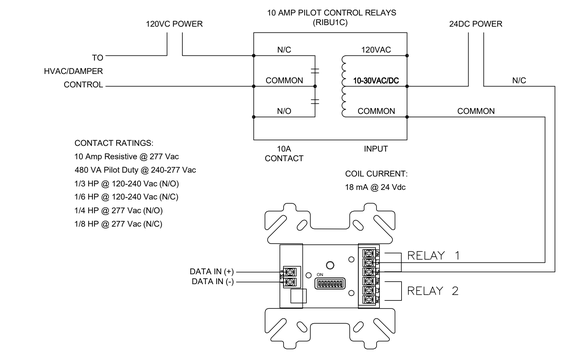

CONTROL RELAY WITH SPDT RELAY WIRING DIAGRAM

SCALE N.T.S. | 7

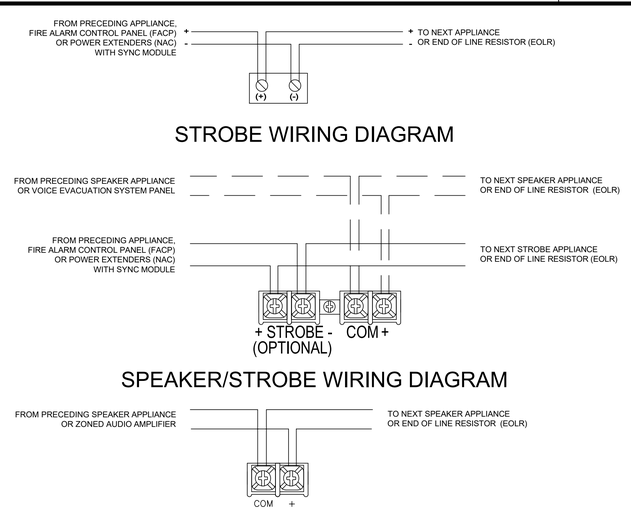

SPEAKER/STROBE WIRING DIAGRAM

SCALE N.T.S. | 8

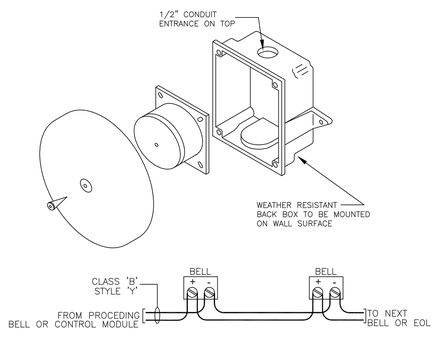

SPRINKLER BELL MOUNTING DETAIL

SCALE N.T.S. | 9

APPL. No. A 03-122864

IDENTIFICATION STAMP
DIV. OF THE STATE ARCHITECT
APP: 03-122864 INC:
REVIEWED FOR
SS ☑ FLS ☑ ACS ☑
DATE: 10/03/2023

DSA Stamp

Architect

RACHLIN PARTNERS
8840 National Boulevard
Culver City, CA 90232
310.204.3400

Disclaimer:
THESE DRAWINGS ARE THE PROPERTY OF THE ARCHITECT. THE DESIGNS SHOWN AND DESCRIBED HEREIN INCLUDING ALL TECHNICAL DRAWINGS ARE PROPRIETARY AND CANNOT BE COPIED, DUPLICATED OR COMMERCIALLY EXPLOITED, IN WHOLE OR IN PART. THE DRAWINGS AND SPECIFICATIONS SHALL NOT BE USED BY THE OWNER ON OTHER PROJECTS, FOR ADDITIONS TO THIS PROJECT, OR FOR COMPLETION OF THIS PROJECT BY OTHERS. THE OWNER AGREES TO HOLD HARMLESS, INDEMNIFY AND DEFEND THE ARCHITECT AGAINST ALL DAMAGES, CLAIMS AND LOSSES, INCLUDING DEFENSE COSTS, ARISING OUT OF ANY REUSE OF PLANS AND SPECIFICATIONS WITHOUT THE WRITTEN AUTHORIZATION OF THE ARCHITECT OF RECORD.
Copyright 2022 Rachlin Partners, All Rights Reserved.

Performing Arts Center
Hacienda La Puente Unified School District
635 North California Avenue
La Puente, CA 91744

Rev	Date	Issue
1	7.22.22	50% DD
2	10.21.22	50% CD
3	12.09.22	100% DSA Submittal
4	06.19.23	100% DSA Resubmittal
5	09.20.23	DSA Back Check

Date: 09/20/23
Scale: As Shown
Drawn By: --
Checked By: --

Architect / Engineer Stamp

LICENSED ARCHITECT
RICHARD M. RACHLIN
NO. C26229
REN: 2-28-25
STATE OF CALIFORNIA
REGISTERED PROFESSIONAL ENGINEER
Neil E. Hill
No. E 17251
Exp.6/30/2024
ELECTRICAL
STATE OF CALIFORNIA

Consultants
Miyamoto International, Inc.
The Ruzika Company, Inc,
MDC Consulting Engineers
Pocock Design Solutions
Newson Brown Acoustics, LLC
VCA Engineers, Inc.
HJSA Consulting
L.A. Design Associates, Inc.

Sheet Title
Electrical
Details

Sheet Number
E402

Plot Date: 9/20/2023 9:38:58 AM Last Save By: Tom Low Login: Tom Low J:\Project Files 2022\2022.019 Hacienda La Puente PAC\Electrical Drawings\E-E401-402 - Details.dwg

FIXTURE SCHEDULE

ITEM	FIXTURE	ROUGH-IN CONNECTIONS						DESCRIPTION
		TRAP	WASTE	VENT	HOT WATER	COLD WATER	GAS	
WC 1	WATER CLOSET (I/R SENSOR)	INT	4"	2"	--	1"	--	AMERICAN STANDARD (A/S) NO. 3451.001 "MADERA FLOWISE 15" HIGH ELONGATED FLUSHOMETER TOILET", SIPHON JET, FLOOR MOUNTED, ELONGATED BOWL, 15" HIGH. COMPLETE WITH SLOAN ECOS NO. 111-1.28 HW POWERED SENSOR OPERATED FLUSH VALVE, OLSONITE NO. 95SSCT SEAT AND A/S BOLT CAPS., NO. EL-154 TRANSFORMER 24 VOLT, (1) TRANSFORMER PER (10) UNITS AND LOW VOLTAGE WIRING INSTALLED BY ELECTRICAL CONTRACTOR.
WC 2	WATER CLOSET (ACCESSIBLE, I/R SENSOR)	INT	4"	2"	--	1"	--	AMERICAN STANDARD (A/S) NO. 3461.001 "MADERA FLOWISE 16-1/2" HEIGHT ELONGATED FLUSHOMETER TOILET", SIPHON JET, FLOOR MOUNTED, ELONGATED BOWL, 16-1/2" HIGH. COMPLETE WITH SLOAN ECOS NO. 111-1.28 HW POWERED SENSOR OPERATED FLUSH VALVE, OLSONITE NO. 95SSCT SEAT AND A/S BOLT CAPS., NO. EL-154 TRANSFORMER 24 VOLT, (1) TRANSFORMER PER (10) UNITS AND LOW VOLTAGE WIRING INSTALLED BY ELECTRICAL CONTRACTOR.
UR 1	URINAL (I/R SENSOR)	INT	2"	1-1/2"	--	3/4"	--	AMERICAN STANDARD (A/S) NO. 6002.001 "PINTBROOK URINAL", WALL HUNG, SIPHON JET. COMPLETE WITH SLOAN ROYAL NO. 186-0.125-ES-S POWERED SENSOR OPERATED FLUSH VALVE, NO. EL-154 TRANSFORMER 24 VOLT, (1) TRANSFORMER PER (10) UNITS AND LOW VOLTAGE WIRING INSTALLED BY ELECTRICAL CONTRACTOR. AND ZURN NO. Z-1222 WALL HANGER.
UR 2	URINAL (ACCESSIBLE, I/R SENSOR)	INT	2"	1-1/2"	--	3/4"	--	AMERICAN STANDARD (A/S) NO. 6002.001 "PINTBROOK URINAL", WALL HUNG, SIPHON JET. COMPLETE WITH SLOAN ROYAL NO. 186-0.125-ES-S POWERED SENSOR OPERATED FLUSH VALVE, NO. EL-154 TRANSFORMER 24 VOLT, (1) TRANSFORMER PER (10) UNITS AND LOW VOLTAGE WIRING INSTALLED BY ELECTRICAL CONTRACTOR. AND ZURN NO. Z-1222 WALL HANGER. MOUNT AT ADA ACCESSIBLE HEIGHT.
L 1	LAVATORY (TW ONLY, I/R SENSOR)	1-1/4"	2"	1-1/2"	1/2"TW	--	--	AMERICAN STANDARD (A/S) NO. 0496.221 "OVALYN II UNDERCOUNTER LAVATORY", 20" X 17", UNDERCOUNTER MOUNTED, VITREOUS CHINA. COMPLETE WITH CHICAGO NO. 116.101.AB.4 ELECTRONIC FAUCET 0.35 GPM NON-AERATING SPRAY, 240.627.21.1 COVER PLATE. NO. 243.260.00.1 TRANSFORMER 12 VOLT, (1) TRANSFORMER PER (8) UNITS AND LOW VOLTAGE WIRING INSTALLED BY ELECTRICAL CONTRACTOR. McGUIRE NO. 155A 1-1/4" OUTLET "OPEN GRID P.O. PLUG", McGUIRE NO. PW8090NC0 1-1/4" L.A. PATTERN P-TRAP WITH TRAP AND SUPPLY COVERS, GALVANIZED NIPPLE AND CHROMIUM PLATED BRASS CASING, CHICAGO NO. 1017-ABCP LOOSE KEY STOP WITH RIGID SUPPLY, AND ZURN NO. Z-1231-EZR-WL ADJUSTABLE CONCEALED ARM CARRIER W/ SLEEVE FOR WASTE. MOUNT IN ACCORDANCE WITH ADA REQUIREMENTS.
L 2	LAVATORY (TW ONLY, I/R SENSOR)	1-1/4"	2"	1-1/2"	1/2"TW	--	--	AMERICAN STANDARD (A/S) NO. 0355.012 "LUCERNE WALL HUNG LAVATORY", 20" X 18", WALL HUNG. COMPLETE WITH CHICAGO NO. 116.101.AB.4 ELECTRONIC FAUCET 0.35 GPM NON-AERATING SPRAY, 240.627.21.1 COVER PLATE. NO. 243.260.00.1 TRANSFORMER 12 VOLT, (1) TRANSFORMER PER (8) UNITS AND LOW VOLTAGE WIRING INSTALLED BY ELECTRICAL CONTRACTOR. McGUIRE NO. 155A 1-1/4" OUTLET "OPEN GRID P.O. PLUG", McGUIRE NO. PW8090NC0 1-1/4" L.A. PATTERN P-TRAP WITH TRAP AND SUPPLY COVERS, GALVANIZED NIPPLE AND CHROMIUM PLATED BRASS CASING, CHICAGO NO. 1017-ABCP LOOSE KEY STOP WITH RIGID SUPPLY, AND ZURN NO. Z-1231-EZR-WL ADJUSTABLE CONCEALED ARM CARRIER W/ SLEEVE FOR WASTE. MOUNT IN ACCORDANCE WITH ADA REQUIREMENTS.
S 1	SINK	3"	3"	2"	3/4"	3/4"	--	ELKAY NO. RSNF81182 "SINGLE COMPARTMENT SCULLERY SINK", 16 GAUGE TYPE 304 STAINLESS STEEL, SELF-RIMMING, 27" X 29-3/4" X 12-3/4" DEEP & 6-1/4" BACK SPLASH WITH SINGLE HOLE PUNCH. COMPLETE WITH CHICAGO NO. 445-PVB-CP FAUCET, McGUIRE NO. 152 1-1/2" OUTLET "WIDE TOP SINK STRAINER", ZURN NO. Z-1184 BOTTOM ACCESS SOLIDS INTERCEPTOR WITH 1-1/2" INLET AND OUTLET, McGUIRE NO. PW8090NC0 1-1/4" L.A. PATTERN P-TRAP WITH TRAP AND SUPPLY COVER, GALVANIZED NIPPLE AND CHROMIUM PLATED BRASS CASING, AND CHICAGO NO. 1017-ABCP LOOSE KEY STOP WITH RIGID SUPPLY. PROVIDE WITH 11" BUCKET REMOVAL CLEARANCE BELOW INTERCEPTOR.
SS 1	SERVICE SINK	3"	3"	2"	3/4"	3/4"	--	CECO NO. 871 "CORNER SERVICE SINK", ENAMELED CAST IRON, CORNER FLOOR MOUNTED, COMPLETE WITH CHICAGO NO. 445-PVB-CP FAUCET, CECO NO. B71-3" 3" DIAMETER DRAIN WITH FLAT CHROME STRAINER, CECO NO. B-872 COATED WIRE RIM GUARD AND HOSE.
TP 1	TRAP PRIMER (SINGLE DRAIN)	--	--	--	--	1/2"	--	MIFAB NO. MR-500 TRAP PRIMER VALVE, BRASS BODY, ADJUSTABLE, COMPLETE WITH 1/2" COPPER TYPE "L" PIPE TO RECEPTOR. INSTALL PER MANUFACTURER'S RECOMMENDATIONS, COMPLETE BEHIND ACCESS PANEL WITH SHUT-OFF VALVE.
TP 2	TRAP PRIMER (ELECTRONIC)	--	--	--	--	1/2"	--	PPP NO. MP-500-115V MINI-PRIME ELECTRONIC TRAP SEAL PRIMER SYSTEM WITH BALL VALVE, VACUUM BREAKER AND SOLENOID VALVE (120 VOLT, 1 PHASE). COMPLETE WITH SHUT-OFF VALVE AND 1/2" COPPER TYPE "L" PIPE TO RECEPTOR.

ITEM	FIXTURE	ROUGH-IN CONNECTIONS						DESCRIPTION
		TRAP	WASTE	VENT	HOT WATER	COLD WATER	GAS	
WHA 1	WATER HAMMER ARRESTOR	--	--	--	--	--	--	ZURN NO. Z-1700 SERIES "SHOKTROL" WATER HAMMER ARRESTOR COMPLETE BEHIND ACCESS PANEL. INSTALL PER MANUFACTURER'S RECOMMENDATIONS.
FD 1	FLOOR DRAIN	2"	2"	1-1/2"	--	--	--	ZURN NO. ZN-415-BZ1-P, CAST IRON BODY, COMPLETE WITH ROUND NICKEL-BRONZE TOP, CLAMPING COLLAR, 1/2" TRAP PRIMER CONNECTION AND P-TRAP.
RD 1	ROOF DRAIN	SEE PLAN FOR SIZES						ZURN NO. ZC100-DP-84, 15" CAST IRON BODY, COMPLETE WITH ADJUSTABLE EXTENSION SLEEVE, FLASHING COLLAR, STAINLESS STEEL GRAVEL STOP, CAST IRON DOME STRAINER, SUMP RECEIVER, AND UNDERDECK CLAMP.
OD 1	OVERFLOW DRAIN	SEE PLAN FOR SIZES						ZURN NO. ZC100-DP-84-89, 15" CAST IRON BODY, COMPLETE WITH CAST IRON DOME STRAINER, UNDERDECK CLAMP, AND 2" HIGH WATER DAM.
DF 1	DRINKING FOUNTAIN W/BOTTLE FILLER (ACCESSIBLE)	1-1/2"	2"	1-1/2"	--	3/4"	--	HAWS NO. 1119.14 WITH 1920 BOTTLE FILLER, WALL MOUNTED, 14-GAUGE STAINLESS STEEL W/ INTEGRAL 1/4" STAINLESS STEEL MOUNTING PLATE, ADA APPROVED. COMPLETE WITH VANDAL PROOF BOTTOM PLATES, NO. 6800 SUPPORT CARRIER, NO. 6700-4 MOUNTING PLATE, B32 BACK PANEL, AND CHICAGO NO. 45LKABCP ANGLE STOP WITH 1/2" FEMALE INLET & OUTLET, AND NO. 6469 DRIP TRAY. MOUNT AT ADA ACCESSIBLE HEIGHT.
ET 1	EXPANSION TANK	--	--	--	--	--	--	WILKINS NO. WXT-8, 2 GALLON, DIAPHRAGM TYPE, PRE-PRESSURIZED, WELDED EXTERIOR, BUTYL DIAPHRAGM AND EPOXY COATED EXTERIOR W/ MAPA MXC-8 EXPANSION TANK CAGE.
HB 1	HOSE BIBB (WALL)	--	--	--	--	3/4"	--	ACORN NO. 8121-CP "BENT NOSE WITH FLANGE" HOSE BIBB, WALL MOUNTED, CHROME-PLATED POLISHED, WITH INTEGRAL VACUUM BREAKER, LOOSE KEY OPERATION.
HB 2	HOSE BIBB (FREE STANDING, ROOF)	--	--	--	--	3/4"	--	ACORN NO. 8126-CR "BENT NOSE" HOSE BIBB, FREE STANDING, CHROME-PLATED ROUGH, WITH INTEGRAL VACUUM BREAKER, LOOSE KEY OPERATION. SUPPLY PIPING SHALL BE SECURELY FASTENED TO ROOF DECKING WITH 3/4" NIBCO NO. 724-5-A "HY-SET HANGER COUPLING".
RHB 1	RECESSED HOSE BIBB	--	--	--	--	3/4"	--	ACORN NO. 8104, RECESSED WALL MOUNTED, STAINLESS STEEL BOX, WITH INTEGRAL VACUUM BREAKER AND LOCKING DOOR.
SGV 1	SEISMIC GAS VALVE	ITEM SHALL BE SIZED TO MATCH FULL LINE SIZE OF PIPING SERVED. SEE PLAN FOR SIZES.						KOSO/CALIFORNIA EARTHQUAKE SENSITIVE SHUT-OFF VALVE, 60 PSI WORKING PRESSURE, U.L. LISTED, THREADED CONNECTIONS FOR SIZES 2" AND LESS, FLANGED CONNECTIONS FOR SIZES GREATER THAN 2". PRESSURE DROP SHALL NOT EXCEED 13' EQUIVALENT PIPING LENGTH.
DN 1	DOWNSPOUT NOZZLE	SEE PLAN FOR SIZES						ZURN NO. 1775, STAINLESS STEEL FRAME WITH FABRICATED SECURED PERFORATED STAINLESS STEEL HINGED STRAINER, THREADED INLET AND DECORATIVE FACE OF WALL FLANGE AND OUTLET NOZZLE.
GPR 1	GAS PRESSURE REGULATOR	--	--	--	--	--	--	FISHER CONTROLS NO.FSS302-KHB, 3/4" X 1-1/2" SIZE CONNECTION, 1/2" ORIFICE, 3/4" VENT WITH 6" TO 8" WATER COLUMN @ 5.0 PSI INLET PRESSURE AND A FLOW UP TO 555 CFH. CAST IRON CONSTRUCTION.
GPR 2	GAS PRESSURE REGULATOR	--	--	--	--	--	--	FISHER CONTROLS NO.FSS302-SMB, 3/4" X 2" SIZE CONNECTION, 3/4" ORIFICE, 3/4" VENT WITH 6" TO 8" WATER COLUMN @ 5.0 PSI INLET PRESSURE AND A FLOW UP TO 1010 CFH. CAST IRON CONSTRUCTION.
GPR 3	GAS PRESSURE REGULATOR	--	--	--	--	--	--	FISHER CONTROLS NO.FSS302-SMB, 2" X 6" SIZE CONNECTION, 3/4" ORIFICE, 3/4" VENT WITH 6" TO 8" WATER COLUMN @ 5.0 PSI INLET PRESSURE AND A FLOW UP TO 2531 CFH. CAST IRON CONSTRUCTION.

WATER HEATER SCHEDULE

ITEM	MANUFACTURER	MODEL NO.	SERVICE	LOCATION	STORAGE	ELECTRICAL DEMANDS				RECOVERY CAPACITY @ 60°F	INLET TEMP °F	OUTLET TEMPER °F	OPER. WT. LBS.	REMARKS
						VOLT	PHASE	KW/AMP	CYCLE					
WH 1	CHRONOMITE MICRO	INSTANT-TEMP CMI-20L	DOMESTIC HOT WATER	SEE PLANS	INSTANT-FLOW	208	1	20 A	60	INSTANT	60	104	8 LBS.	MUST HAVE ASHRAE STICKER OR OTHERWISE COMPLY WITH TITLE 24 REQUIREMENT FOR SERVICE WATER HEATERS. SEE DETAIL 1 ON SHEET P501 FOR WATER HEATER 3
WH 2	CHRONOMITE MICRO	INSTANT-TEMP CMI-30L	DOMESTIC HOT WATER	SEE PLANS	INSTANT-FLOW	208	1	40 A	60	INSTANT	60	110	8 LBS.	
WH 3	AO SMITH	DEL-20	DOMESTIC HOT WATER	SEE PLANS	20 GALLONS	208	1	3.0	60	20 GPH	60	120	240 LBS.	

GENERAL NOTES

1. BEFORE COMMENCEMENT OF WORK, THE CONTRACTOR SHALL VERIFY THE EXACT LOCATIONS, ELEVATIONS AND CHARACTERISTICS OF ALL UTILITIES AND PIPING, AND SHALL IMMEDIATELY NOTIFY THE ARCHITECT OF ANY DISCREPANCIES.
2. ALL ACCESSIBLE WATER CLOSETS SHALL HAVE FLUSH VALVE WITH HANDLE ON OPEN SIDE.
3. ALL VALVES, UNIONS, ETC. TO BE SAME SIZE AS PIPE UNLESS OTHERWISE INDICATED ON DRAWINGS.
4. ALL PLUMBING FIXTURE VENTS TO TERMINATE A MINIMUM OF 12 INCHES FROM ANY VERTICAL SURFACE AND 10 FEET FROM ANY OUTSIDE AIR INTAKES.
5. EXACT LOCATIONS AND MOUNTING HEIGHTS OF PLUMBING FIXTURES SHALL BE OBTAINED FROM THE ARCHITECTURAL DRAWINGS.
6. CONNECTION BETWEEN INCOMPATIBLE MATERIALS ABOVE GRADE AND INSIDE BUILDING SHALL BE MADE WITH TWO (2) DIELECTRIC UNIONS SEPARATED BY A TWELVE INCH (12") SECTION OF RED BRASS PIPE.
7. ALL CLEANOUTS SHALL BE INSTALLED WHERE READILY ACCESSIBLE. ALL URINALS SHALL HAVE CLEANOUTS ABOVE FIXTURE, CPC 707.4. THE CONTRACTOR SHALL COORDINATE ALL CLEANOUT LOCATIONS WITH EQUIPMENT, CABINETS, ETC., AND THE ARCHITECT PRIOR TO ANY INSTALLATION.
8. SEE ARCHITECTURAL DRAWINGS FOR ACCESSIBLE FIXTURE LOCATIONS AND MOUNTING HEIGHTS. INSULATE ALL EXPOSED HOT WATER AND DRAIN PIPING BELOW ACCESSIBLE LAVATORIES AND SINKS.
9. ALL PLUMBING WORK SHALL BE INSTALLED SO AS TO AVOID INTERFERENCE WITH ELECTRICAL AND MECHANICAL EQUIPMENT AND STRUCTURAL FRAMING.
10. ALL WORK AND MATERIAL SHALL BE PERFORMED AND INSTALLED IN COMPLIANCE WITH CALIFORNIA PLUMBING CODE 2019.
11. INSULATION (SEE SPECIFICATION FOR TYPE REQUIRED) AND COVERING ON PIPE AND TUBING SHALL HAVE A FLAME SPREAD RATING NOT TO EXCEED 25 AND A SMOKE DENSITY NOT TO EXCEED 450 WHEN TESTED IN ACCORDANCE WITH 2019 C.B.C. SECTION 720.3.
12. MATERIALS EXPOSED WITHIN DUCTS OR PLENUMS SHALL HAVE A FLAME-SPREAD INDEX OF NOT MORE THAN 25 AND A SMOKE-DEVELOPED INDEX OF NOT MORE THAN 50 WHERE TESTED IN ACCORDANCE WITH ASTM E84 OR UL 723. CMC 2019, CHAPTERS 7, 9 ,& 11.
13. ANY ALTERATIONS TO A STRUCTURAL MEMBER, SUCH AS CUTTING, BORING, BRAZING, DRILLING, WELDING, ETC. SHALL HAVE PRIOR WRITTEN APPROVAL OF ARCHITECT, STRUCTURAL ENGINEER AND DSA.
14. M.E.P. COMPONENT ANCHORAGE NOTE:
    ALL MECHANICAL, PLUMBING, AND ELECTRICAL COMPONENTS SHALL BE ANCHORED AND INSTALLED PER THE DETAILS ON THE DSA APPROVED CONSTRUCTION DOCUMENTS.THE FOLLOWING COMPONENTS SHALL BE ANCHORED OR BRACED TO MEET THE FORCE AND DISPLACEMENT REQUIREMENTS PRESCRIBED IN THE 2019 CBC, SECTIONS 1617A.1.18 THROUGH 1617A.1.26 AND ASCE 7-16 CHAPTERS 13, 26 AND 30.

    1. ALL PERMANENT EQUIPMENT AND COMPONENTS.
    2. TEMPORARY, MOVABLE OR MOBILE EQUIPMENT THAT IS PERMANENTLY ATTACHED (E.G. HARD WIRE) TO THE BUILDING UTILITY SERVICES SUCH AS ELECTRICITY, GAS OR WATER. "PERMANENTLY ATTACHED" SHALL INCLUDE ALL ELECTRICAL CONNECTIONS EXCEPT PLUGS FOR 110/220 VOLT RECEPTACLES HAVING A FLEXIBLE CABLE.
    3. TEMPORARY, MOVABLE, OR MOBILE EQUIPMENT WHICH IS HEAVIER THAN 400 POUNDS OR HAS A CENTER MASS LOCATED 4 FEET OR MORE ABOVE THE ADJACENT FLOOR OR ROOF LEVEL THAT DIRECTLY SUPPORT THE COMPONENT IS REQUIRED TO BE RESTRAINED IN A MANNER APPROVED BY DSA.
14. FOR CONT.

    THE FOLLOWING MECHANICAL AND ELECTRICAL COMPONENTS SHALL BE POSITIVELY ATTACHED TO THE STRUCTURE, BUT NEED NOT DEMONSTRATE DESIGN COMPLIANCE WITH THE REVERENCES NOTED ABOVE. THESE COMPONENTS SHALL HAVE FLEXIBLE CONNECTIONS PROVIDED BETWEEN THE COMPONENT AND ASSOCIATED DUCTWORK, PIPING, AND CONDUIT. FLEXIBLE CONNECTIONS MUST ALLOW MOVEMENTS IN BOTH TRANSVERSE AND LONGITUDINAL DIRECTIONS:

    A. COMPONENTS WEIGHING LESS THAN 400 POUNDS AND HAVE A CENTER OF MASS LOCATED 4 FEET OR LESS ABOVE THE ADJACENT FLOOR OR ROOF LEVEL THAT DIRECTLY SUPPORT THE COMPONENT.
    B. COMPONENTS WEIGHING LESS THAN 20 POUNDS, OR IN THE CASE OF DISTRIBUTED SYSTEMS, LESS THAN 5 POUNDS PER FOOT, WHICH ARE SUSPENDED FROM A ROOF OR FLOOR OR HUNG FROM A WALL

    THE ANCHORAGE OF ALL MECHANICAL, ELECTRICAL, AND PLUMBING COMPONENTS SHALL BE THE SUBJECT TO THE APPROVAL OF THE DESIGN PROFESSIONAL IN GENERAL RESPONSIBLE CHARGE OR STRUCTURAL ENGINEER DELEGATED RESPONSIBILITY AND ACCEPTANCE THE DSA. THE PROJECT INSPECTOR WILL VERIFY THAT ALL COMPONENTS AND EQUIPMENT HAVE BEEN ANCHORED IN ACCORDANCE WITH ABOVE REQUIREMENTS.
15. PIPING, DUCTWORK, AND ELECTRICAL DISTRIBUTION SYSTEM BRACING NOTE:

    PIPING, DUCTWORK, AND ELECTRICAL DISTRIBUTION SYSTEMS SHALL BE BRACED TO COMPLY WITH THE FORCE AND DISPLACEMENTS PRESCRIBED IN ASCE 7-16 SECTION 13.3, AS DEFINED IN ASCE 7-16 SECTION 13.6.5, 13.6.6, 13.6.7, 13.6.8, AND 2019 CBC SECTIONS 1617A.1.24, 1617A.1.25, AND 1617A.1.26.

    THE METHOD OF SHOWING BRACING AND ATTACHMENTS TO THE STRUCTURE FOR THE IDENTIFIED DISTRIBUTION SYSTEM ARE AS NOTED BELOW. WHEN BRACING AND ATTACHMENTS ARE BASED ON A PREAPPROVED INSTALLATION GUIDE (E.G. OSHPD OPM FOR 2013 CBC OR LATER), COPIES OF THE BRACING SYSTEM INSTALLATION GUIDE OR MANUAL SHALL BE AVAILABLE ON THE JOBSITE PRIOR TO THE START OF AND DURING THE HANGING AND BRACING OF THE DISTRIBUTION SYSTEMS. THE STRUCTURAL ENGINEER OF RECORD SHALL VERIFY THE ADEQUACY OF THE STRUCTURE TO SUPPORT THE HANGER AND BRACE LOADS.

    MECHANICAL PIPING (MP), MECHANICAL DUCTS (MD), PLUMBING PIPING (PP), ELECTRICAL DISTRIBUTION SYSTEMS (E):

    MP [ ] MD [ ] PP [X] E [ ] - OPTION 1: DETAILED ON THE APPROVED DRAWINGS WITH PROJECT SPECIFIC NOTES AND DETAILS.

    MP [ ] MD [ ] PP [ ] E [ ] - OPTION 2: SHALL COMPLY WITH THE APPLICABLE OSHPD PRE-APPROVAL #0043-13.

LEGEND

SYMBOL	ABBREVIATION	DESCRIPTION
	S OR W	SOIL OR WASTE ABOVE FLOOR
	S OR W	SOIL OR WASTE BELOW FLOOR OR GRADE
SD	SD	STORM DRAIN ABOVE FLOOR
SD	SD	STORM DRAIN BELOW FLOOR OR GRADE
OD	OD	OVERFLOW DRAIN ABOVE FLOOR
	V	SANITARY VENT
	CW	COLD WATER
	HW	HOT WATER
	HWR	HOT WATER RETURN
CD	CD	CONDENSATE DRAIN
TP	TP	TRAP PRIMER
G	G	GAS LINE
MPG	MPG	MEDIUM PRESSURE GAS
EG	EG	EXISTING GAS LINE
		DIRECTION OF FLOW
	SOV	SHUT-OFF VALVE
	SOV/GC	SHUT-OFF VALVE OR GAS COCK IN YARD BOX
	FCO	FLOOR CLEANOUT
	WCO	WALL CLEANOUT
		RISER UP
		RISER DOWN
	ABV	ABOVE
	AP	ACCESS PANEL
	BEL	BELOW
	CLG	CEILING
	CONT	CONTINUATION
	COTG	CLEANOUT TO GRADE
	DN	DOWN
	EXIST	EXISTING
	FLR	FLOOR
	POC	POINT OF CONNECTION
	VTR	VENT THRU ROOF
	YB	YARD BOX

APPL No. A03-000000

IDENTIFICATION STAMP
DIV. OF THE STATE ARCHITECT
APP: 03-122864 INC:
REVIEWED FOR
SS ☑ FLS ☑ ACS ☑
DATE: 10/03/2023

DSA Stamp

Architect

RACHLIN PARTNERS
8640 National Boulevard
Culver City, CA 90232
310.204.3400

Disclaimer:

THESE DRAWINGS ARE THE PROPERTY OF THE ARCHITECT. THE DESIGNS SHOWN AND DESCRIBED HEREIN INCLUDING ALL TECHNICAL DRAWINGS ARE PROPRIETARY AND CANNOT BE COPIED, DUPLICATED OR COMMERCIALLY EXPLOITED EXCEPT BY WRITTEN AGREEMENT WITH THE ARCHITECT. DRAWINGS SHALL NOT BE USED BY THE OWNER ON OTHER PROJECTS, FOR ADDITIONS TO THIS PROJECT, OR FOR COMPLETION OF THIS PROJECT BY OTHERS. THE OWNER AGREES TO HOLD HARMLESS, INDEMNIFY AND DEFEND THE ARCHITECT AGAINST ALL DAMAGES, CLAIMS AND LOSSES, INCLUDING DEFENSE COSTS, ARISING OUT OF ANY REUSE OF PLANS AND SPECIFICATIONS WITHOUT THE WRITTEN AUTHORIZATION OF THE ARCHITECT OF RECORD.

Copyright © 2022 Rachlin Partners, All Rights Reserved.

PDS Pocock Design Solutions Inc.

Performing Arts Center
Hacienda La Puente Unified School District
635 North California Avenue
La Puente, CA 91744

Rev	Date	Issue
1	7.22.22	50% DD
2	10.21.22	50% CD
3	12.09.22	100% CD DSA SUBMITTAL
4	6.19.23	100% CD DSA RESUBMITTAL
5	9.20.23	DSA BACK CHECK

Date: 06/30/22
Scale:
Drawn By: Author
Checked By: Checker

Architect / Engineer Stamp

LICENSED ARCHITECT RICHARD D. RACHLIN NO. C-26029 REN. 8-31-25 STATE OF CALIFORNIA

REGISTERED PROFESSIONAL ENGINEER ANDREW R. GOODMAN No. M39081 Exp. 3/31/24 MECHANICAL STATE OF CALIFORNIA

Consultants
Miyamoto International, Inc.
The Ruzika Company, Inc.
MDC Consulting Engineers
Pocock Design Solutions
Newson Brown Acoustics, LLC
VCA Engineers, Inc.
HJSA Consulting

Sheet Title

Plumbing Legend and General Notes

Sheet Number

P001

C:\Users\EMartinez\OneDrive - Pocock Design Solutions\Documents\22_HJFUSD\PAC_Plumbing Central_Esperanza\43UZ.rvt

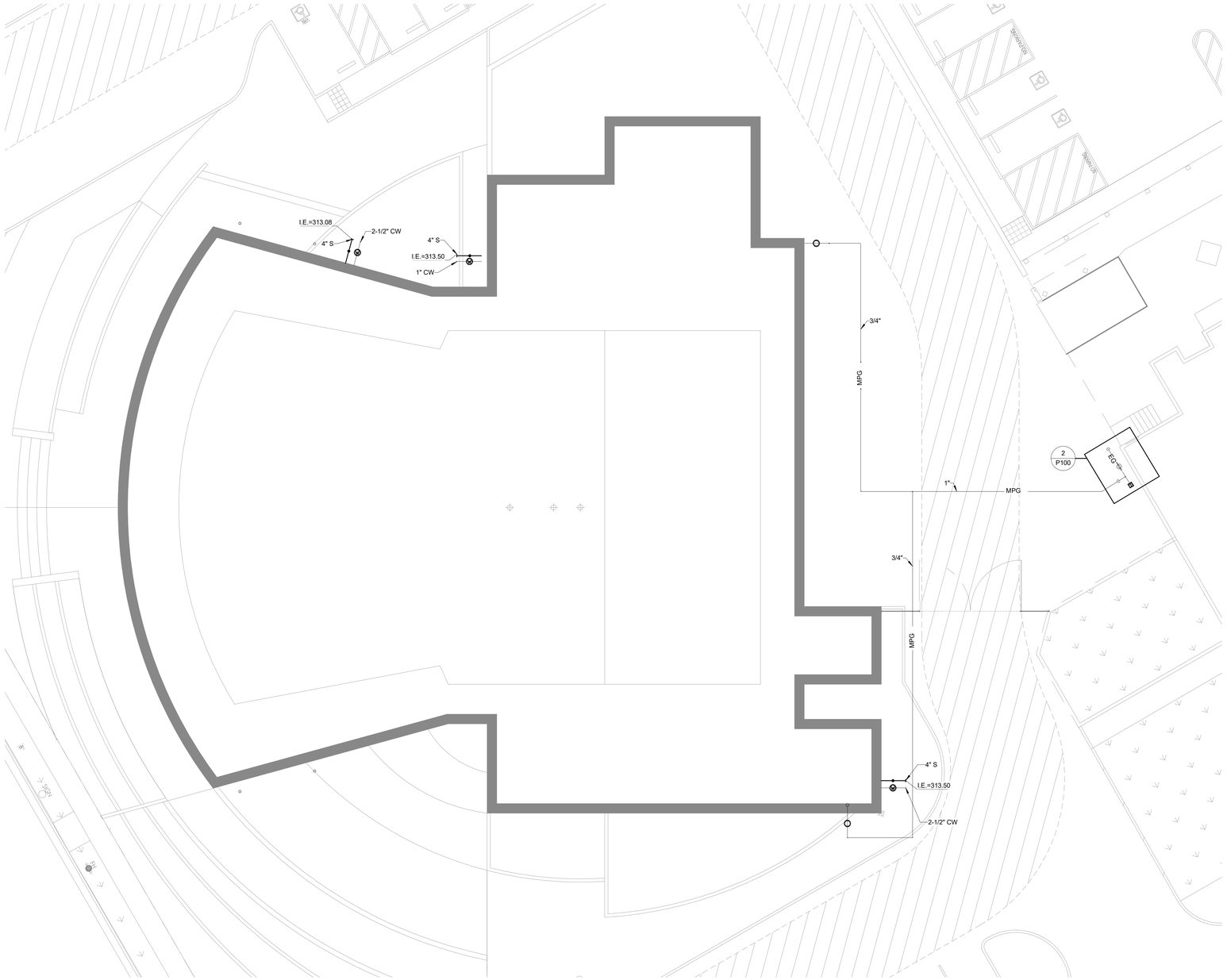

CONSTRUCTION NOTES

1. FOR CONTINUATION OF ALL UTILITIES SEE CIVIL ENINEERING DRAWINGS.

NORTH

PLUMBING SITE PLAN | SCALE 1" = 10'-0" | 1

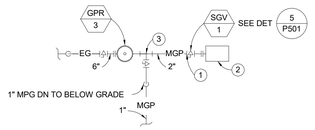

CONSTRUCTION KEY NOTES:

1. CONTRACTOR SHALL CHANGE EXISTING MPG LINE ONE SIZE LARGER THAN EXISTING LINE FOR THE NEW GAS DEMAND.
2. CONTRACTOR SHALL VERIFY WITH SO. CALIF. GAS CO. IF EXISTING GAS METER IS ADEQUATE FOR NEW GAS DEMAND.
3. P.O.C. NEW 1" MPG LINE TO EXISTING MPG LINE ABOVE FINISH GRADE. FIELD VERIFY EXACT LOCATION PRIOR TO INSTALLATION OF ANY PIPING.

EXISTING GAS METER ENLARGED PLAN | SCALE 1/4"=1'-0" | 2

C:\Users\EMartinez\OneDrive - Pocock Design Solutions\Documents\K22_HUSD-PAC_Plumbing Central_Esperanza45kVZ.rvt

APPL No. A03-000000

IDENTIFICATION STAMP
DIV. OF THE STATE ARCHITECT
APP: 03-122864 INC:
REVIEWED FOR
SS ☑ FLS ☑ ACS ☑
DATE: 10/03/2023

DSA Stamp

Architect

RACHLIN
PARTNERS
8640 National Boulevard
Culver City, CA 90232
310.204.3400

Disclaimer:

THESE DRAWINGS ARE THE PROPERTY OF THE ARCHITECT. THE DESIGNS SHOWN AND DESCRIBED HEREIN INCLUDING ALL TECHNICAL DRAWINGS ARE PROPRIETARY AND CANNOT BE COPIED, DUPLICATED OR COMMERCIALLY EXPLOITED EXCEPT BY WRITTEN AGREEMENT. THESE DRAWINGS AND DESIGNS SHALL NOT BE USED BY THE OWNER ON OTHER PROJECTS, FOR ADDITIONS TO THIS PROJECT, OR FOR COMPLETION OF THIS PROJECT BY OTHERS. THE OWNER AGREES TO HOLD HARMLESS, INDEMNIFY AND DEFEND THE ARCHITECT AGAINST ALL DAMAGES, CLAIMS AND LOSSES, INCLUDING DEFENSE COSTS, ARISING OUT OF ANY REUSE OF PLANS AND SPECIFICATIONS WITHOUT THE WRITTEN AUTHORIZATION OF THE ARCHITECT OF RECORD.

Copyright © 2022 Rachlin Partners, All Rights Reserved.

PDS
Pocock Design Solutions Inc.

Performing Arts Center

Hacienda La Puente Unified School District
635 North California Avenue
La Puente, CA 91744

Rev	Date	Issue
1	7.22.22	50% DD
2	10.21.22	50% CD
3	12.09.22	100% CD DSA SUBMITTAL
4	6.19.23	100% CD DSA RESUBMITTAL
5	9.20.23	DSA BACK CHECK

Date: 10/17/22
Scale: As indicated
Drawn By: Author
Checked By: Checker

Architect / Engineer Stamp

Consultants
Miyamoto International, Inc.
The Ruzika Company, Inc.
MDC Consulting Engineers
Pocock Design Solutions
Newson Brown Acoustics, LLC
VCA Engineers, Inc.
HJSA Consulting

Sheet Title

PLUMBING SITE PLAN

Sheet Number

P100

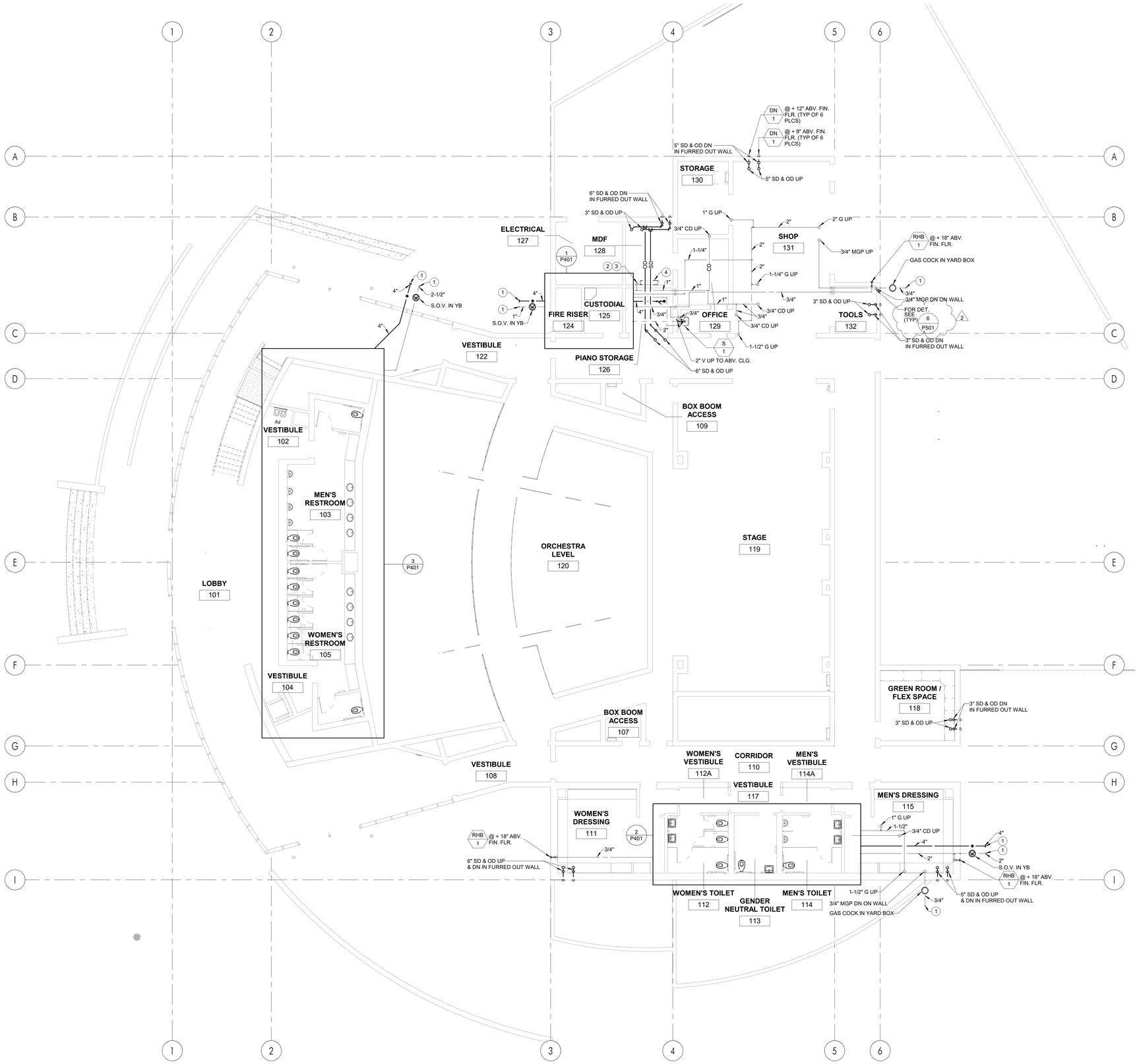

ORCHESTRA/PARTERRE LEVEL FLOOR PLAN

SCALE 1/8" = 1'-0"

1

CONSTRUCTION NOTES

1. ALL HORIZONTAL STORM DRAIN PIPING SHALL SLOPE AT 1% UNLESS OTHERWISE NOTED.
2. ALL CONDENSATE DRAIN PIPING ABOVE CEILING SHALL SLOPE AT 1% UNLESS OTHERWISE NOTED.
3. ALL GAS PIPING SIZES INSIDE THE BUILDING ARE BASED ON CALIFORNIA PLUMBING CODE 2019 TABLE 12515.2(1) (LOW PRESSURE) AT TOTAL DEVELOPED LENGTH 100 FEET AND 90 FEET & 1010 CFH AND 555 CFH.
4. ALL GAS PIPING SIZES INSIDE AND OUTSIDE THE BUILDING ARE BASED ON CALIFORNIA PLUMBING CODE 2019 TABLE 1215.2(6) (MEDIUM PRESSURE) AT TOTAL DEVELOPED LENGTH 200 FEET & 1565 CFH.

CONSTRUCTION KEY NOTES

(1) FOR CONTINUATION OF ALL UTILITES SEE SHEET P100.
(2) P.O.C. 3/4" CONDENSATE TO CONDENSATE PUMP ON WALL.
(3) CONDENSATE PUMP PROVIDED BY MECHANICAL CONTRACTOR.
(4) FAN COIL ON WALL, SEE MECHANICAL DRAWINGS FOR EXACT LOCATION.

C:\Users\BMartinez\OneDrive - Pocock Design Solutions\Documents\K22_HJPUSD-PAC_Plumbing Central_Espanola4SKUZ.rvt

APPL No. A03-000000

DSA Stamp

Architect

RACHLIN PARTNERS
8640 National Boulevard
Culver City, CA 90232
310.204.3400

Disclaimer:

THESE DRAWINGS ARE THE PROPERTY OF THE ARCHITECT. THE DESIGNS SHOWN AND DESCRIBED HEREIN INCLUDING ALL TECHNICAL DRAWINGS ARE PROPRIETARY AND CANNOT BE COPIED, DUPLICATED OR COMMERCIALLY EXPLOITED EXCEPT BY WRITTEN AGREEMENT. THESE DRAWINGS AND DESIGNS SHALL NOT BE USED BY THE OWNER ON OTHER PROJECTS, FOR ADDITIONS TO THIS PROJECT, OR FOR COMPLETION OF THIS PROJECT BY OTHERS. THE OWNER AGREES TO HOLD HARMLESS, INDEMNIFY AND DEFEND THE ARCHITECT AGAINST ALL DAMAGES, CLAIMS AND LOSSES, INCLUDING DEFENSE COSTS, ARISING OUT OF ANY REUSE OF PLANS AND SPECIFICATIONS WITHOUT THE WRITTEN AUTHORIZATION OF THE ARCHITECT OF RECORD.

Copyright © 2022 Rachlin Partners, All Rights Reserved.

PDS
Pocock Design Solutions Inc.

Performing Arts Center

Hacienda La Puente Unified School District
635 North California Avenue
La Puente, CA 91744

Rev	Date	Issue
1	7.22.22	50% DD
2	10.21.22	50% CD
3	12.09.22	100% CD DSA SUBMITTAL
4	6.19.23	100% CD DSA RESUBMITTAL
5	9.20.23	DSA BACKCHECK
6	11.01.23	ADDENDUM NO. 1
7	11.01.23	ADDENDUM NO. 2

Date: 11.01.2023
Scale: As indicated
Drawn By: Author
Checked By: Checker

Architect / Engineer Stamp

LICENSED ARCHITECT — NO. C-26229 — REN. 8-31-25 — STATE OF CALIFORNIA
REGISTERED PROFESSIONAL ENGINEER — ANDREW R. GOSHMAN — No. M38688 — Exp. 3/31/24 — STATE OF CALIFORNIA

Consultants
Miyamoto International, Inc.
The Ruzika Company, Inc.
MDC Consulting Engineers
Pocock Design Solutions
Newson Brown Acoustics, LLC
VCA Engineers, Inc.
HJSA Consulting

Sheet Title

PLUMBING ORCHESTRA LEVEL PLAN

Sheet Number

P201

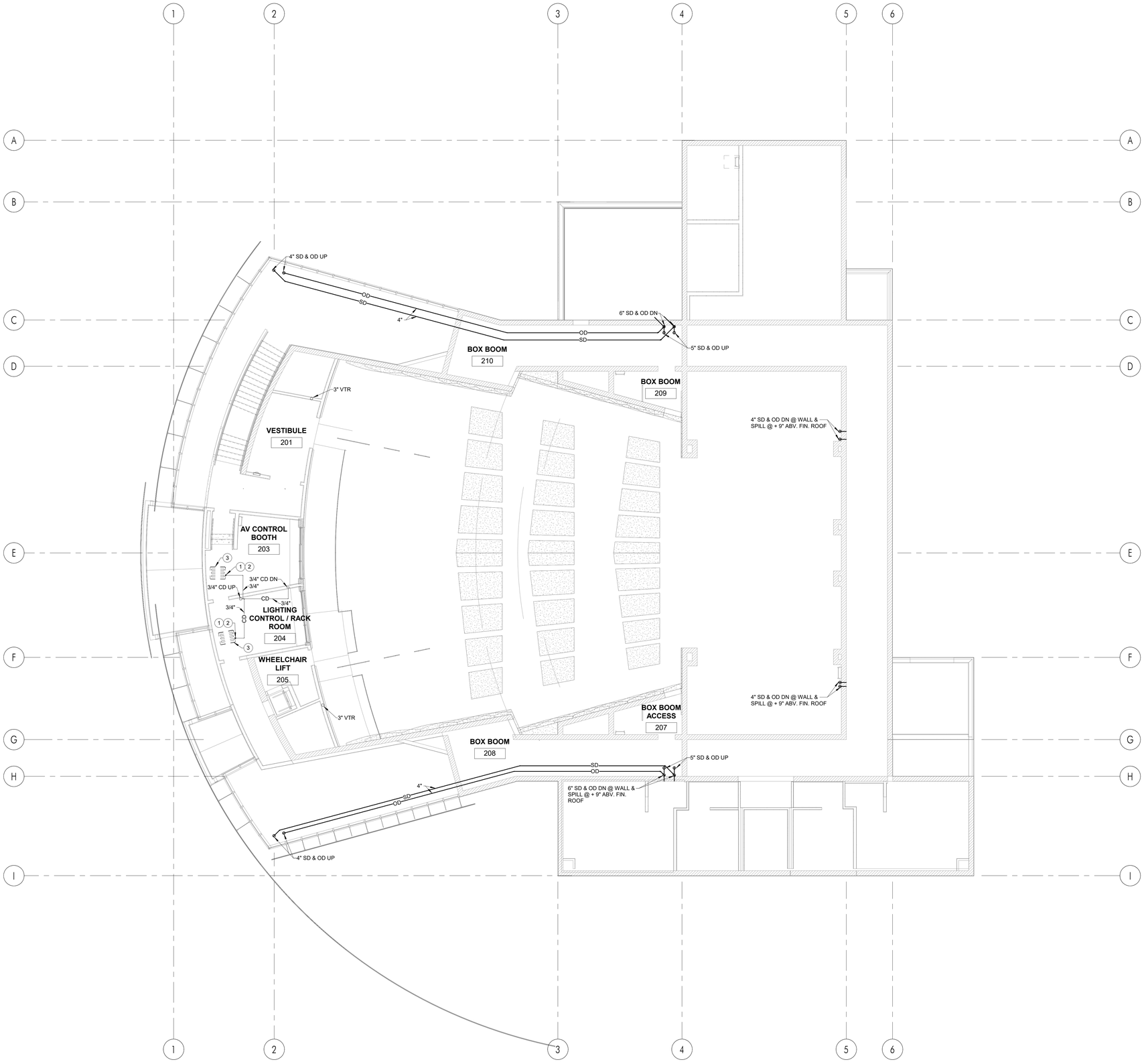

CONTROL BOOTH LEVEL FLOOR PLAN

SCALE 1/8" = 1'-0"

1

C:\Users\EMartinez\OneDrive - Pocock Design Solutions\Documents\P22_HUSD-PAC_Plumbing Central_Esperanza4SNJZ.rvt

CONSTRUCTION NOTES

1. ALL HORIZONTAL STORM DRAIN PIPING SHALL SLOPE AT 1% UNLESS OTHERWISE NOTED.
2. ALL CONDENSATE DRAIN PIPING ABOVE CEILING SHALL SLOPE AT 1% UNLESS OTHERWISE NOTED.

CONSTRUCTION KEY NOTES

(1) P.O.C. 3/4" CONDENSATE TO CONDENSATE PUMP ABOVE CEILING.

(2) CONDENSATE PUMP PROVIDED BY MECHANICAL CONTRACTOR.

(3) FAN COIL ABOVE CEILING, SEE MECHANICAL DRAWINGS FOR EXACT LOCATION.

APPL No. A03-000000

IDENTIFICATION STAMP
DIV. OF THE STATE ARCHITECT
APP: 03-122864 INC:
REVIEWED FOR
SS ☑ FLS ☑ ACS ☑
DATE: 10/03/2023

DSA Stamp

Architect

RACHLIN PARTNERS
8640 National Boulevard
Culver City, CA 90232
310.204.3400

Disclaimer:

THESE DRAWINGS ARE THE PROPERTY OF THE ARCHITECT. THE DESIGNS SHOWN AND DESCRIBED HEREIN INCLUDING ALL TECHNICAL DRAWINGS ARE PROPRIETARY AND CANNOT BE COPIED, DUPLICATED OR COMMERCIALLY EXPLOITED EXCEPT BY WRITTEN AGREEMENT. THESE DRAWINGS AND DESIGNS SHALL NOT BE USED BY THE OWNER ON OTHER PROJECTS, FOR ADDITIONS TO THIS PROJECT, OR FOR COMPLETION OF THIS PROJECT BY OTHERS. THE OWNER AGREES TO HOLD HARMLESS, INDEMNIFY AND DEFEND THE ARCHITECT AGAINST ALL DAMAGES, CLAIMS AND LOSSES, INCLUDING DEFENSE COSTS, ARISING OUT OF ANY REUSE OF PLANS AND SPECIFICATIONS WITHOUT THE WRITTEN AUTHORIZATION OF THE ARCHITECT OF RECORD.

Copyright © 2022 Rachlin Partners, All Rights Reserved.

PDS
Pocock Design Solutions Inc.

Performing Arts Center

Hacienda La Puente Unified School District
635 North California Avenue
La Puente, CA 91744

Rev	Date	Issue
1	7.22.22	50% DD
2	10.21.22	50% CD
3	12.09.22	100% CD DSA SUBMITTAL
4	6.19.23	100% CD DSA RESUBMITTAL
5	9.20.23	DSA BACK CHECK

Date: 06/21/22
Scale: As indicated
Drawn By: Author
Checked By: Checker

Architect / Engineer Stamp

LICENSED ARCHITECT LEONARD PAUL PASSARO NO. C-26229 REN. 8-31-23 STATE OF CALIFORNIA

REGISTERED PROFESSIONAL ENGINEER ANDREW R. GOSSMAN No. M39839 Exp. 3/31/24 MECHANICAL STATE OF CALIFORNIA

Consultants
Miyamoto International, Inc.
The Ruzika Company, Inc.
MDC Consulting Engineers
Pocock Design Solutions
Newson Brown Acoustics, LLC
VCA Engineers, Inc.
HJSA Consulting

Sheet Title

Plumbing Control Booth Level Plan

Sheet Number

P202

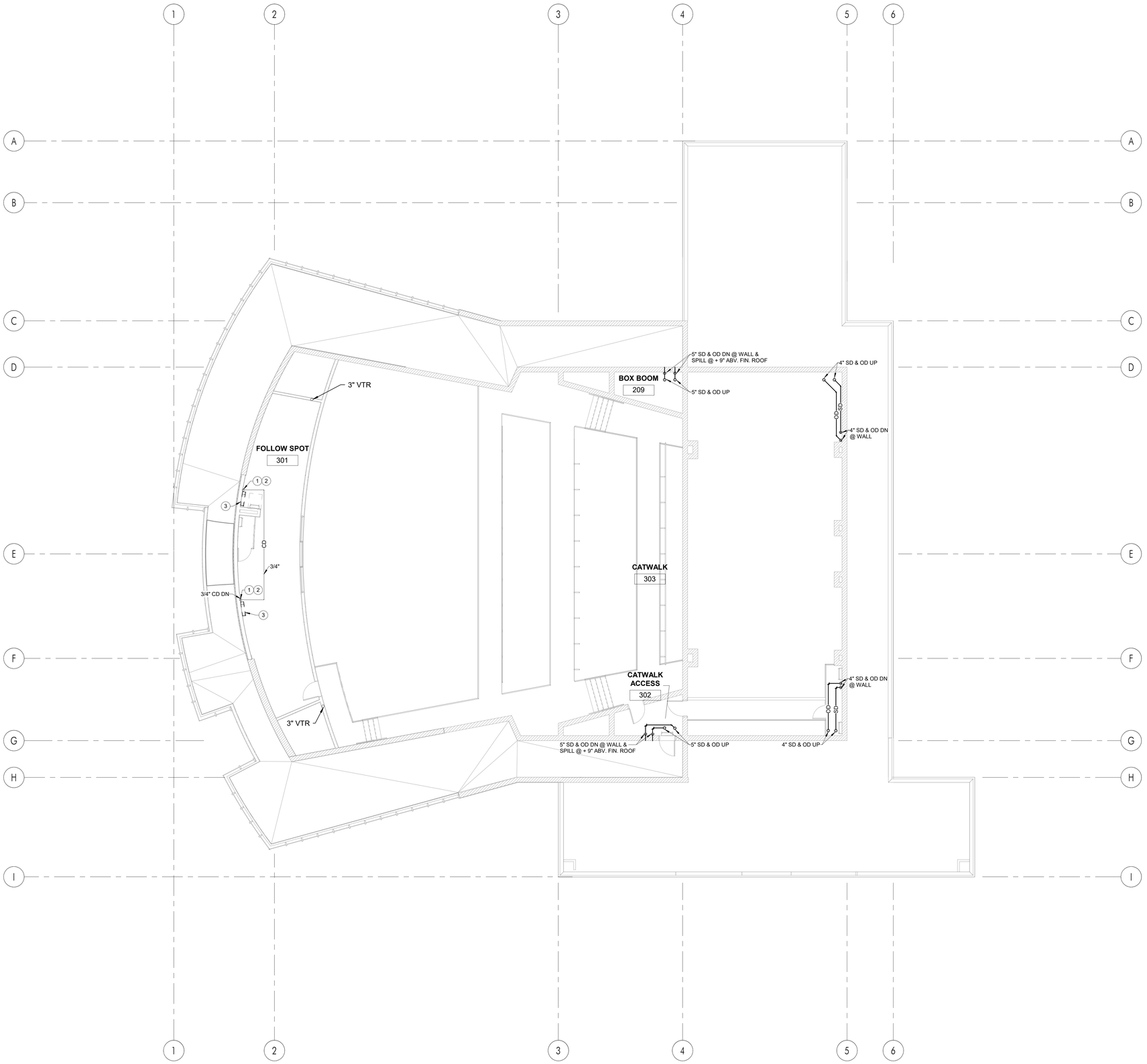

NORTH

FOLLOW SPOT LEVEL FLOOR PLAN

SCALE 1/8" = 1'-0"

1

C:\Users\EMartinez\OneDrive - Pocock Design Solutions\Documents\#22_HPUSD-PAC_Plumbing Central_Esperanza4SKUZ.rvt

APPL No. A03-000000

IDENTIFICATION STAMP
DIV. OF THE STATE ARCHITECT
APP: 03-122864 INC:
REVIEWED FOR
SS ☑ FLS ☑ ACS ☑
DATE: 10/03/2023

DSA Stamp

Architect

RACHLIN
PARTNERS
8640 National Boulevard
Culver City, CA 90232
310.204.3400

Disclaimer:

THESE DRAWINGS ARE THE PROPERTY OF THE ARCHITECT. THE DESIGNS SHOWN AND DESCRIBED HEREIN INCLUDING ALL TECHNICAL DRAWINGS ARE PROPRIETARY AND CANNOT BE COPIED, DUPLICATED OR COMMERCIALLY EXPLOITED EXCEPT BY WRITTEN AGREEMENT. THESE DRAWINGS AND DESIGNS SHALL NOT BE USED BY THE OWNER ON OTHER PROJECTS, FOR ADDITIONS TO THIS PROJECT, OR FOR COMPLETION OF THIS PROJECT BY OTHERS. THE OWNER AGREES TO HOLD HARMLESS, INDEMNIFY AND DEFEND THE ARCHITECT AGAINST ALL DAMAGES, CLAIMS AND LOSSES, INCLUDING DEFENSE COSTS, ARISING OUT OF ANY REUSE OF PLANS AND SPECIFICATIONS WITHOUT THE WRITTEN AUTHORIZATION OF THE ARCHITECT OF RECORD.

Copyright © 2022 Rachlin Partners, All Rights Reserved.

PDS
Pocock Design Solutions Inc.

Performing Arts Center

Hacienda La Puente Unified School District
635 North California Avenue
La Puente, CA 91744

Rev	Date	Issue
1	7.22.22	50% DD
2	10.21.22	50% CD
3	12.09.22	100% CD DSA SUBMITTAL
4	6.19.23	100% CD DSA RESUBMITTAL
5	9.20.23	DSA BACK CHECK

Date: 06/21/22
Scale: As indicated
Drawn By: Author
Checked By: Checker

Architect / Engineer Stamp

LICENSED ARCHITECT — EDWARD MARTINEZ — NO. C-28229 — REN. 8-31-25 — STATE OF CALIFORNIA

REGISTERED PROFESSIONAL ENGINEER — ANDREW R. GUSMAN — No. M39838 — Exp. 3/31/24 — MECHANICAL — STATE OF CALIFORNIA

Consultants
Miyamoto International, Inc.
The Ruzika Company, Inc.
MDC Consulting Engineers
Pocock Design Solutions
Newson Brown Acoustics, LLC
VCA Engineers, Inc.
HJSA Consulting

Sheet Title

Plumbing Follow Spot Level Plan

CONSTRUCTION NOTES

1. ALL HORIZONTAL STORM DRAIN PIPING SHALL SLOPE AT 1% UNLESS OTHERWISE NOTED.
2. ALL CONDENSATE DRAIN PIPING ABOVE CEILING SHALL SLOPE AT 1% UNLESS OTHERWISE NOTED.

CONSTRUCTION KEY NOTES

(1) P.O.C. 3/4" CONDENSATE TO CONDENSATE PUMP ON WALL.
(2) CONDENSATE PUMP PROVIDED BY MECHANICAL CONTRACTOR.
(3) FAN COIL ON WALL, SEE MECHANICAL DRAWINGS FOR EXACT LOCATION.

Sheet Number

P203

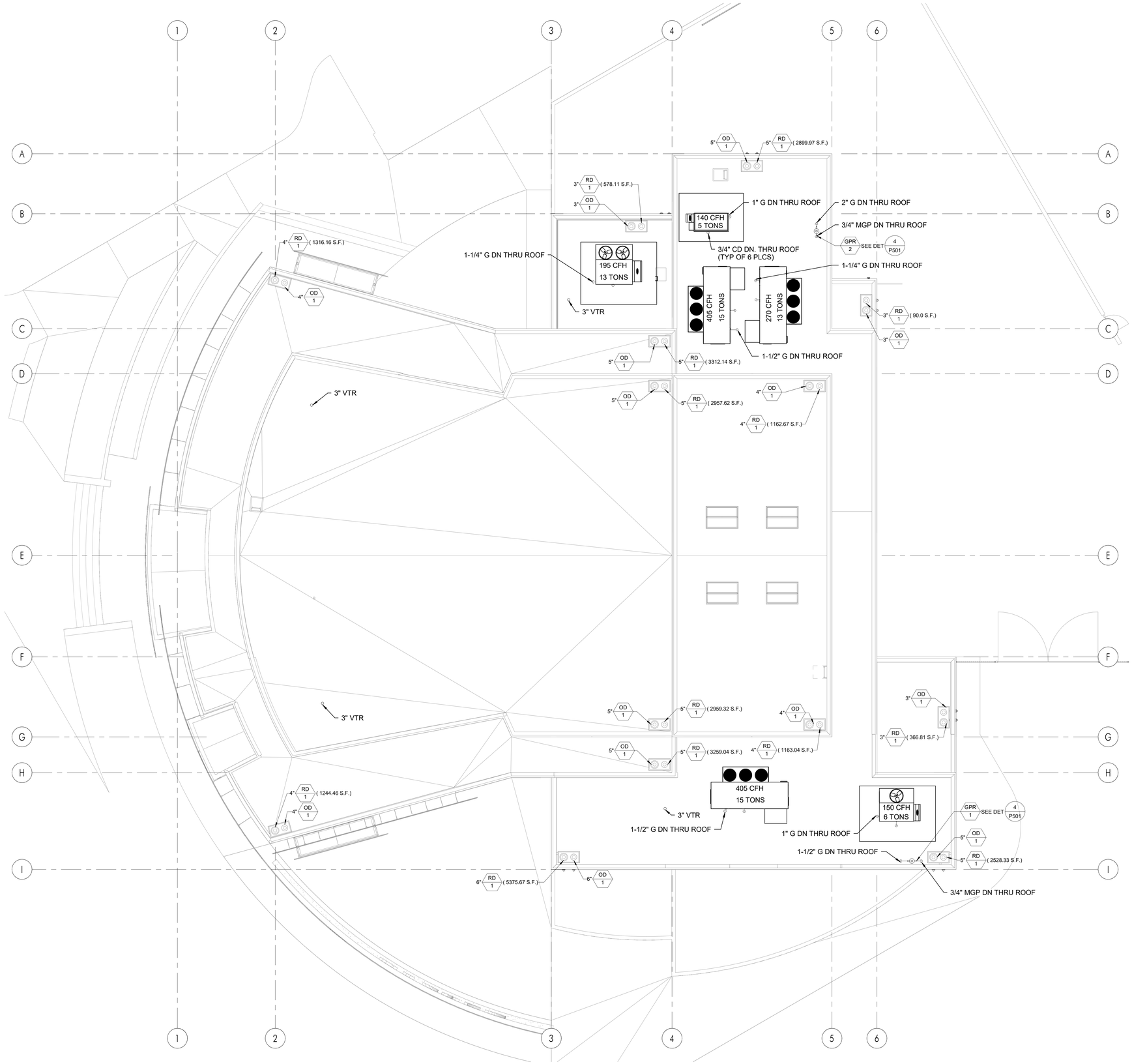

NORTH

ROOF PLAN

SCALE 1/8" = 1'-0"

1

CONSTRUCTION NOTES

1. ALL STORM DRAIN PIPE SIZES ARE BASED ON CALIFORNIA PLUMBING CODE 2019 TABLE 1103.1 & 1103.2 AT 3 " RAINFALL PER HOUR.

C:\Users\EMartinez\Onedrive - Pocock Design Solutions\Documents\KF22_HJPUSD-PAC_Plumbing Central_Esperanza4SKIZ.rvt

APPL No. A03-000000

IDENTIFICATION STAMP
DIV. OF THE STATE ARCHITECT
APP: 03-122864 INC:
REVIEWED FOR
SS ☑ FLS ☑ ACS ☑
DATE: 10/03/2023

DSA Stamp

Architect

RACHLIN
PARTNERS
8640 National Boulevard
Culver City, CA 90232
310.204.3400

Disclaimer:

THESE DRAWINGS ARE THE PROPERTY OF THE ARCHITECT. THE DESIGNS SHOWN AND DESCRIBED HEREIN INCLUDING ALL TECHNICAL DRAWINGS ARE PROPRIETARY AND CANNOT BE COPIED, DUPLICATED OR COMMERCIALLY EXPLOITED EITHER IN WHOLE OR IN PART. THESE DRAWINGS AND SPECIFICATIONS SHALL NOT BE USED BY THE OWNER ON OTHER PROJECTS, FOR ADDITIONS TO THIS PROJECT, OR FOR COMPLETION OF THIS PROJECT BY OTHERS. THE OWNER AGREES TO HOLD HARMLESS, INDEMNIFY AND DEFEND THE ARCHITECT AGAINST ALL DAMAGES, CLAIMS AND LOSSES, INCLUDING DEFENSE COSTS, ARISING OUT OF ANY REUSE OF PLANS AND SPECIFICATIONS WITHOUT THE WRITTEN AUTHORIZATION OF THE ARCHITECT OF RECORD.

Copyright © 2022 Rachlin Partners, All Rights Reserved.

PDS
Pocock Design Solutions Inc.

Performing Arts Center

Hacienda La Puente Unified School District
635 North California Avenue
La Puente, CA 91744

Rev	Date	Issue
1	7.22.22	50% DD
2	10.21.22	50% CD
3	12.09.22	100% CD DSA SUBMITTAL
4	6.19.23	100% CD DSA RESUBMITTAL
5	9.20.23	DSA BACK CHECK

Date: 06/21/22
Scale: As indicated
Drawn By: Author
Checked By: Checker

Architect / Engineer Stamp

LICENSED ARCHITECT — I CONSENT TO USE IN ELECTRONIC FORMAT — NO. C-26229 REN. 8-31-23 — STATE OF CALIFORNIA

REGISTERED PROFESSIONAL ENGINEER — ANDREW R. GORMAN — No. M39569 Exp. 3/31/24 — MECHANICAL — STATE OF CALIFORNIA

Consultants
Miyamoto International, Inc.
The Ruzika Company, Inc.
MDC Consulting Engineers
Pocock Design Solutions
Newson Brown Acoustics, LLC
VCA Engineers, Inc.
HJSA Consulting

Sheet Title

Plumbing Roof Plan

Sheet Number

P301

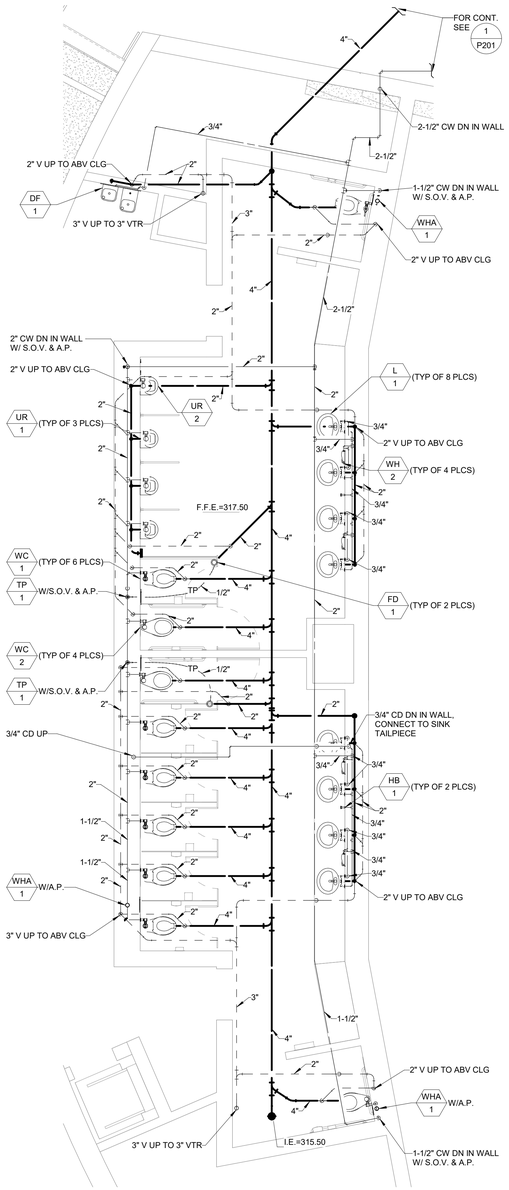

PLUMBING ENLARGED FLOOR PLAN — SCALE 1/4" = 1'-0" — 3

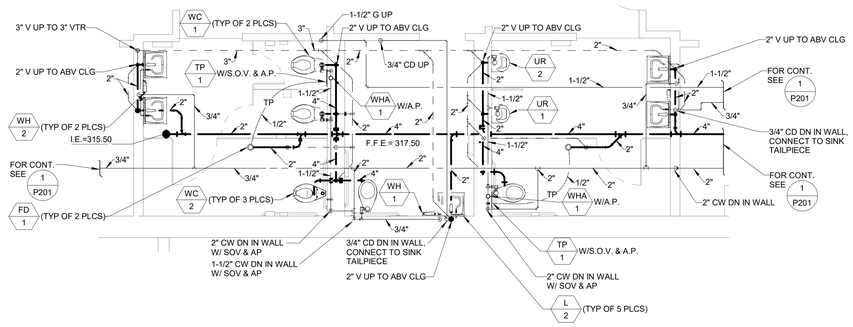

PLUMBING ENLARGED FLOOR PLAN — SCALE 1/4" = 1'-0" — 2

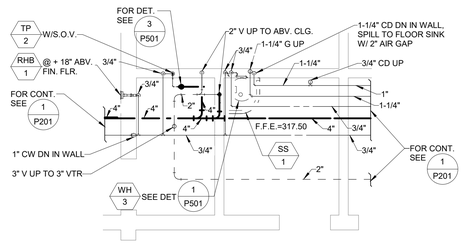

PLUMBING ENLARGED FLOOR PLAN — SCALE 1/4" = 1'-0" — 1

APPL No. A03-000000

IDENTIFICATION STAMP
DIV. OF THE STATE ARCHITECT
APP: 03-122864 INC:
REVIEWED FOR
SS ☑ FLS ☑ ACS ☑
DATE: 10/03/2023

DSA Stamp

Architect

RACHLIN PARTNERS
8640 National Boulevard
Culver City, CA 90232
310.204.3400

Disclaimer:

THESE DRAWINGS ARE THE PROPERTY OF THE ARCHITECT. THE DESIGNS SHOWN AND DESCRIBED HEREIN INCLUDING ALL TECHNICAL DRAWINGS ARE PROPRIETARY AND CANNOT BE COPIED, DUPLICATED OR COMMERCIALLY EXPLOITED EITHER IN WHOLE OR IN PART. THESE DRAWINGS AND DESIGNS SHALL NOT BE USED BY THE OWNER ON OTHER PROJECTS, FOR ADDITIONS TO THIS PROJECT, OR FOR COMPLETION OF THIS PROJECT BY OTHERS. THE OWNER AGREES TO HOLD HARMLESS, INDEMNIFY AND DEFEND THE ARCHITECT AGAINST ALL DAMAGES, CLAIMS AND LOSSES, INCLUDING DEFENSE COSTS, ARISING OUT OF ANY REUSE OF PLANS AND SPECIFICATIONS WITHOUT THE WRITTEN AUTHORIZATION OF THE ARCHITECT OF RECORD.

Copyright © 2022 Rachlin Partners, All Rights Reserved.

PDS
Pocock Design Solutions Inc.

Performing Arts Center

Hacienda La Puente Unified School District
635 North California Avenue
La Puente, CA 91744

Rev	Date	Issue
1	7.22.22	50% DD
2	10.21.22	50% CD
3	12.09.22	100% CD DSA SUBMITTAL
4	6.19.23	100% CD DSA RESUBMITTAL
5	9.20.23	DSA BACK CHECK

Date: 07/13/22
Scale: 1/4" = 1'-0"
Drawn By: Author
Checked By: Checker

Architect / Engineer Stamp

LICENSED ARCHITECT RICHARD W. RACHLIN NO. C-20229 REN. 8-31-25 STATE OF CALIFORNIA

REGISTERED PROFESSIONAL ENGINEER ANDREW R. GOUGHIAN No. M39308 Exp. 3/31/24 MECHANICAL STATE OF CALIFORNIA

Consultants
Miyamoto International, Inc.
The Ruzika Company, Inc.
MDC Consulting Engineers
Pocock Design Solutions
Newson Brown Acoustics, LLC
VCA Engineers, Inc.
HJSA Consulting

Sheet Title

PLUMBING
ENLARGED PLANS

Sheet Number

P401

C:\Users\DMartinez\OneDrive - Pocock Design Solutions\Documents\K22_HJP\3D PAC_Plumbing Central_Esperanza45KUZ.rvt

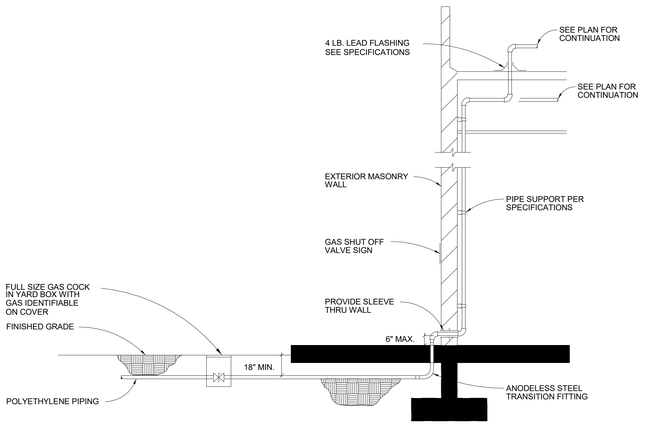

EXISTING BUILDING GAS SUPPLY DETAIL

SCALE	
NONE	6

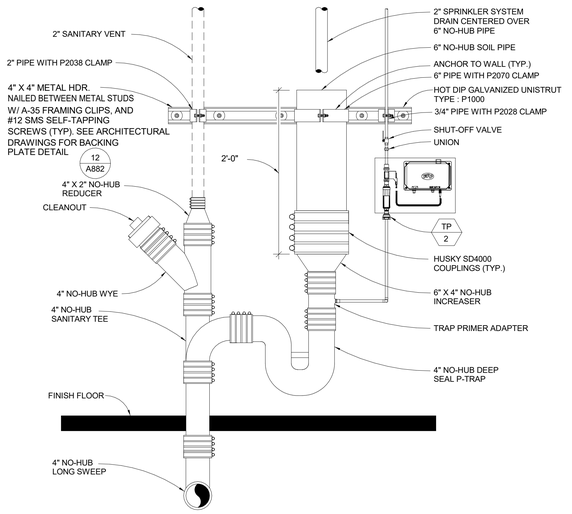

STANDPIPE DRAIN DETAIL (ELECTRONIC TP)

SCALE	
NONE	3

PLAN VIEW A

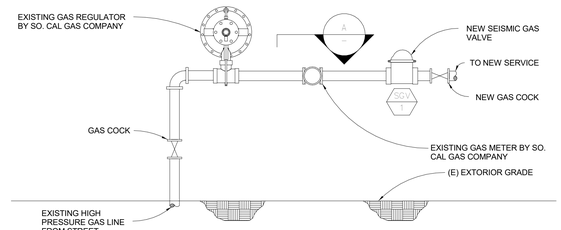

SEISMIC GAS VALVE DETAIL

SCALE	
NONE	5

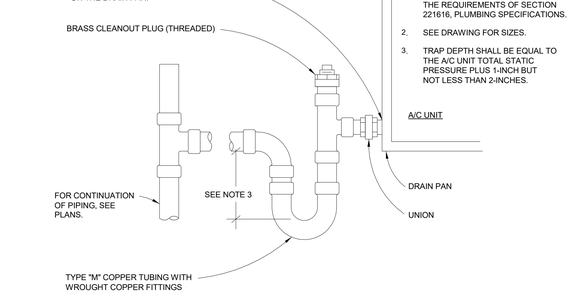

CONDENSATE TRAP DETAIL

SCALE	
NONE	2

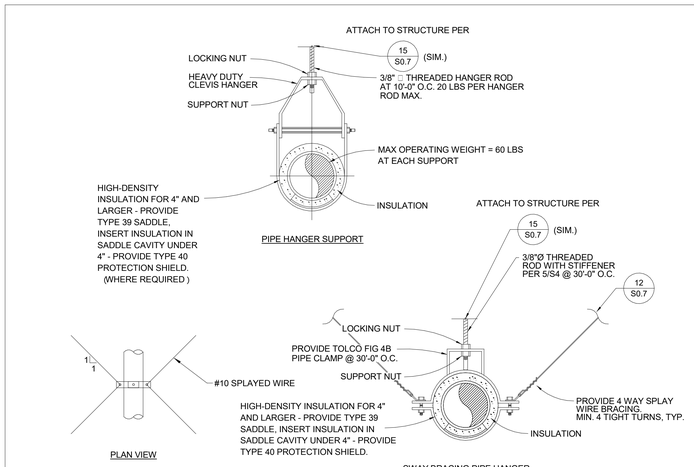

NOTE: PROVIDE SUPPORT AT 5'-0" MAX FROM ENDS AND ANY CHANGE OF DIRECTION.

SUSPENDED PIPE SUPPORT

SCALE	
NONE	7

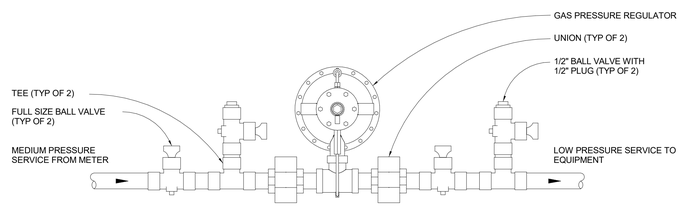

GAS PRESSURE REGULATOR DETAIL

SCALE	
NONE	4

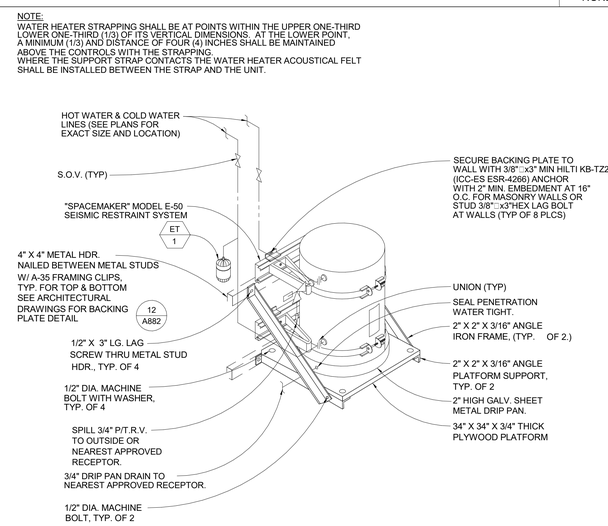

WATER HEATER DETAIL

SCALE	
NONE	1

APPL No. A03-000000

IDENTIFICATION STAMP
DIV. OF THE STATE ARCHITECT
APP: 03-122864 INC:
REVIEWED FOR
SS ☑ FLS ☑ ACS ☑
DATE: 10/03/2023

DSA Stamp

Architect

RACHLIN
PARTNERS
8640 National Boulevard
Culver City, CA 90232
310.204.3400

Disclaimer:

THESE DRAWINGS ARE THE PROPERTY OF THE ARCHITECT. THE DESIGNS SHOWN AND DESCRIBED HEREIN INCLUDING ALL TECHNICAL DRAWINGS ARE PROPRIETARY AND CANNOT BE COPIED, DUPLICATED OR COMMERCIALLY EXPLOITED EXCEPT BY WRITTEN AGREEMENT. THESE DRAWINGS AND DESIGNS SHALL NOT BE USED BY THE OWNER ON OTHER PROJECTS FOR ADDITIONS TO THIS PROJECT, OR FOR COMPLETION OF THIS PROJECT BY OTHERS. THE OWNER AGREES TO HOLD HARMLESS, INDEMNIFY AND DEFEND THE ARCHITECT AGAINST ALL DAMAGES, CLAIMS AND LOSSES, INCLUDING DEFENSE COSTS, ARISING OUT OF ANY REUSE OF PLANS AND SPECIFICATIONS WITHOUT THE WRITTEN AUTHORIZATION OF THE ARCHITECT OF RECORD.

Copyright © 2022 Rachlin Partners, All Rights Reserved.

PDS
Pocock Design Solutions Inc.

Performing Arts Center

Hacienda La Puente Unified School District
635 North California Avenue
La Puente, CA 91744

Rev	Date	Issue
1	7.22.22	50% DD
2	10.21.22	50% CD
3	12.09.22	100% CD DSA SUBMITTAL
4	6.19.23	100% CD DSA RESUBMITTAL
5	9.20.23	DSA BACK CHECK

Date: 07/13/22
Scale:
Drawn By: Author
Checked By: Checker

Architect / Engineer Stamp

LICENSED ARCHITECT
JAMES M. POCOCK
NO. C-28229
REN. 8-31-25
STATE OF CALIFORNIA

REGISTERED PROFESSIONAL ENGINEER
ANDREW R. GUSMAN
No. M39938
Exp. 3/31/24
MECHANICAL
STATE OF CALIFORNIA

Consultants
Miyamoto International, Inc.
The Ruzika Company, Inc.
MDC Consulting Engineers
Pocock Design Solutions
Newson Brown Acoustics, LLC
VCA Engineers, Inc.
HJSA Consulting

Sheet Title

PLUMBING
DETAILS

Sheet Number

P501

C:\Users\EMartinez\OneDrive - Pocock Design Solutions\Documents\#22_HPUSD\PAC_Plumbing Central_Esperanza\HJUZ.rvt

PLUMBING NOISE & VIBRATION CONTROL

PART 1 - GENERAL

1.1 RELATED DOCUMENTS

General Provisions, General Conditions and General Requirements of the Contract apply to this Section. SECTION: PLUMBING, GENERAL applies to this Section.

1.2 DESCRIPTION

A. Work Included: Isolation of domestic hot, cold, and waste water lines

1.3 GENERAL REQUIREMENTS

A. Codes and Standards

1. Comply with all applicable codes

B. Submittals

1. See: PLUMBING, GENERAL

C. Vibration Isolation for Domestic Hot, Cold, and Waste Water Plumbing Lines.

1. Riser Support: 0.06 inch deflection Type A neoprene pads with load- distribution pads under riser clamps.
2. Horizontal Piping: Minimum 3/8 inch felt between pipe and clevis hanger.
3. Miscellaneous Attachments: Trisolators, Type P.
4. Seismic Restraints: Suspended piping - cables as required by code.

D. Vibration Isolation of Roof Drain Lines Close to Auditorium and Stage

1. Riser Support: 0.06 inch Type A deflection neoprene pads with load-distribution pads under riser clamps.
2. Horizontal piping: minimum 3/8-inch felt between pipe and clevis hanger.
3. Seismic restraints: suspended piping – cables as required by Code.

E. Vibration Isolation for Water Heaters

1. 0.06 inch deflection Type A neoprene Pads
2. Seismic restraint as required by code. Seismic restraint shall incorporate resilient elements as necessary to avoid reducing isolation efficiency of vibration isolators.

F. Water Hammer Arrestors

1. Incorporate a water hammer arrestor on connections to equipment using a quick closing valve.

G. Provide suitable flexible piping at connections to vibration isolated equipment such that vibration isolator efficiency is not reduced.

H. Use resilient elements at all support points where permitted. Where permitted, make no rigid connections between equipment, piping, and the building structure which would degrade the noise and vibration isolation system.

I. Where plumbing lines run through double-stud partitions, mount lines only on service-side row of studs.

PART 2 - PRODUCTS

2.1 VIBRATION ISOLATORS

A. Type A: Neoprene pad. Waffle, ribbed, or other forms. Typically 1/4 to 5/16 inch thick. Durometers of 40 to 65. Static deflections from 0.01 to 0.07 inches. Nominal design 40 durometer for 0.05 inches static deflection. Provide steel load distribution plates. Size of pad to be specified by isolator supplier based on load per pot. Mason W and WM, Vibrex R, or equivalent.

B. Type P: Trisolators. Sheet metal sleeve with felt insert to be installed at attachment points of hangers or piping. Semco, Elcen, Elmdor/Stoneman or equivalent shop- fabricated device.

PART 3 - EXECUTION

3.1 INSTALLATION

A. Vibration Isolation: According to manufacturer's directions.

B. Seismic Restraint: According to all relevant codes.

Appendix A Plumbing Equipment Vibration Isolation Requirements

Table 1 - Equipment Isolation Requirements

Equipment Type	Isolator Type	Minimum Static Deflection (inches)	Notes
Water Heater	A	0.06	3
Domestic Hot, Cold, and Waste Water Lines – Riser Support	A	0.06	1, 3
Domestic Hot, Cold, and Waste Water Lines – Horizontal Lines	P	N/A	2, 3

Notes:
1. Refer to Detail 21.
2. Min. 3/8-inch thick felt between pipe and clevis hanger as an alternative.
3. Provide adequate seismic restraint.

Table 2 - Isolator Type Information

Isolator Type	Detail	Isolator Description
A	1	Neoprene pad. Waffle, ribbed, or other forms. Typically 1/4 to 5/16 inch thick. Durometers of 40 to 65. Static deflections from 0.01 to 0.07 inches. Nominal design 40 durometer for 0.05 inches static deflection. Provide steel load distribution plates. Size of pad to be specified by isolator supplier based on load per pot. Mason W and WM, Vibrex R, or equivalent.
P	38	Trisolators. Sheet metal sleeve with felt insert to be installed at attachment points of hangers or piping. Semco, Elcen, Elmdor/Stoneman or equivalent shop- fabricated device.

Additional Notes:
1. Isolate plumbing lines in the vicinity of equipment to which the lines are connected. Plumbing line isolators shall have a static deflection equal to that of the connected equipment isolation.
2. Incorporate a water hammer arrestor on connections to equipment using a quick closing valve.
3. Provide flexible conduits at connections to motors and other vibrating equipment.
4. Provide flexible piping at connections to vibration isolated equipment such that vibration isolator efficiency is not reduced.
5. Use resilient elements at all support points where permitted. Where permitted, make no rigid connections between equipment, piping, and the building structure which would degrade the noise and vibration isolation system.
6. Where plumbing lines run through double-stud partitions, mount lines only on service-side row of studs.

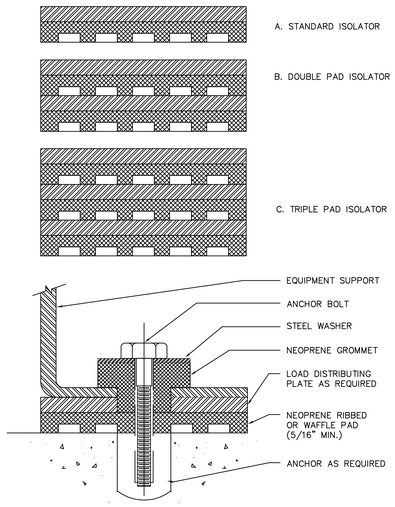

ISOLATOR–TYPE A, NEOPRENE PAD

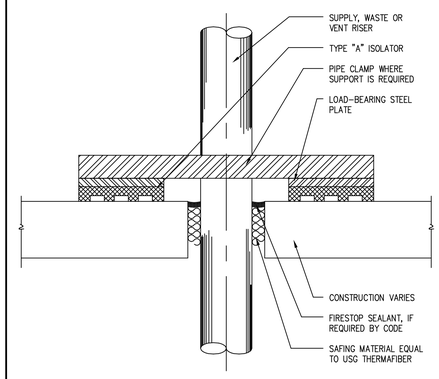

ISOLATION OF RISERS

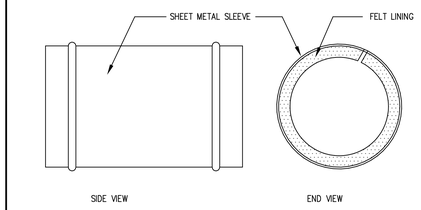

TYPE P, ISOLATOR

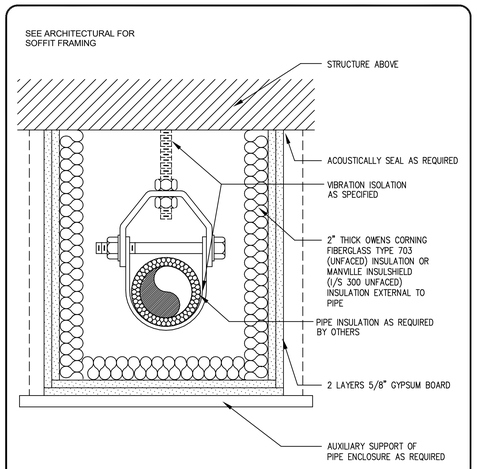

PIPE ENCLOSURE

APPL No. A03-000000

IDENTIFICATION STAMP
DIV. OF THE STATE ARCHITECT
APP: 03-122864 INC:
REVIEWED FOR
SS ☑ FLS ☑ ACS ☑
DATE: 10/03/2023

DSA Stamp

Architect

RACHLIN PARTNERS
8640 National Boulevard
Culver City, CA 90232
310.204.3400

Disclaimer:

THESE DRAWINGS ARE THE PROPERTY OF THE ARCHITECT. THE DESIGNS SHOWN AND DESCRIBED HEREIN INCLUDING ALL TECHNICAL DRAWINGS ARE PROPRIETARY AND CANNOT BE COPIED, DUPLICATED OR COMMERCIALLY EXPLOITED IN ANY WAY. THEY ARE NOT TO BE CHANGED OR ALTERED AND SHALL NOT BE USED BY THE OWNER ON OTHER PROJECTS, FOR ADDITIONS TO THIS PROJECT, OR FOR COMPLETION OF THIS PROJECT BY OTHERS. THE OWNER AGREES TO HOLD HARMLESS, INDEMNIFY AND DEFEND THE ARCHITECT AGAINST ALL DAMAGES, CLAIMS AND LOSSES, INCLUDING DEFENSE COSTS, ARISING OUT OF ANY REUSE OF PLANS AND SPECIFICATIONS WITHOUT THE WRITTEN AUTHORIZATION OF THE ARCHITECT OF RECORD.

Copyright © 2022 Rachlin Partners, All Rights Reserved.

PDS
Pocock Design Solutions Inc.

Performing Arts Center
Hacienda La Puente Unified School District
635 North California Avenue
La Puente, CA 91744

Rev	Date	Issue
1	7.22.22	50% DD
2	10.21.22	50% CD
3	12.09.22	100% CD DSA SUBMITTAL
4	6.19.23	100% CD DSA RESUBMITTAL
5	9.20.23	DSA BACK CHECK

Date: 06/09/23
Scale:
Drawn By: Author
Checked By: Checker

Architect / Engineer Stamp

LICENSED ARCHITECT — JAMES M. RACHLIN — NO. C-26229 REN: 8-31-25 — STATE OF CALIFORNIA
REGISTERED PROFESSIONAL ENGINEER — ANDREW R. GORDMAN — No. M39539 Exp. 3/23/24 — MECHANICAL — STATE OF CALIFORNIA

Consultants
Miyamoto International, Inc.
The Ruzika Company, Inc.
MDC Consulting Engineers
Pocock Design Solutions
Newson Brown Acoustics, LLC
VCA Engineers, Inc.
HJSA Consulting

Sheet Title

PLUMBING DETAILS

Sheet Number

P502

C:\Users\EMartinez\OneDrive - Pocock Design Solutions\Documents\#22_HPUSD-PAC_Plumbing Central_Esperanza\HSUZ.rvt

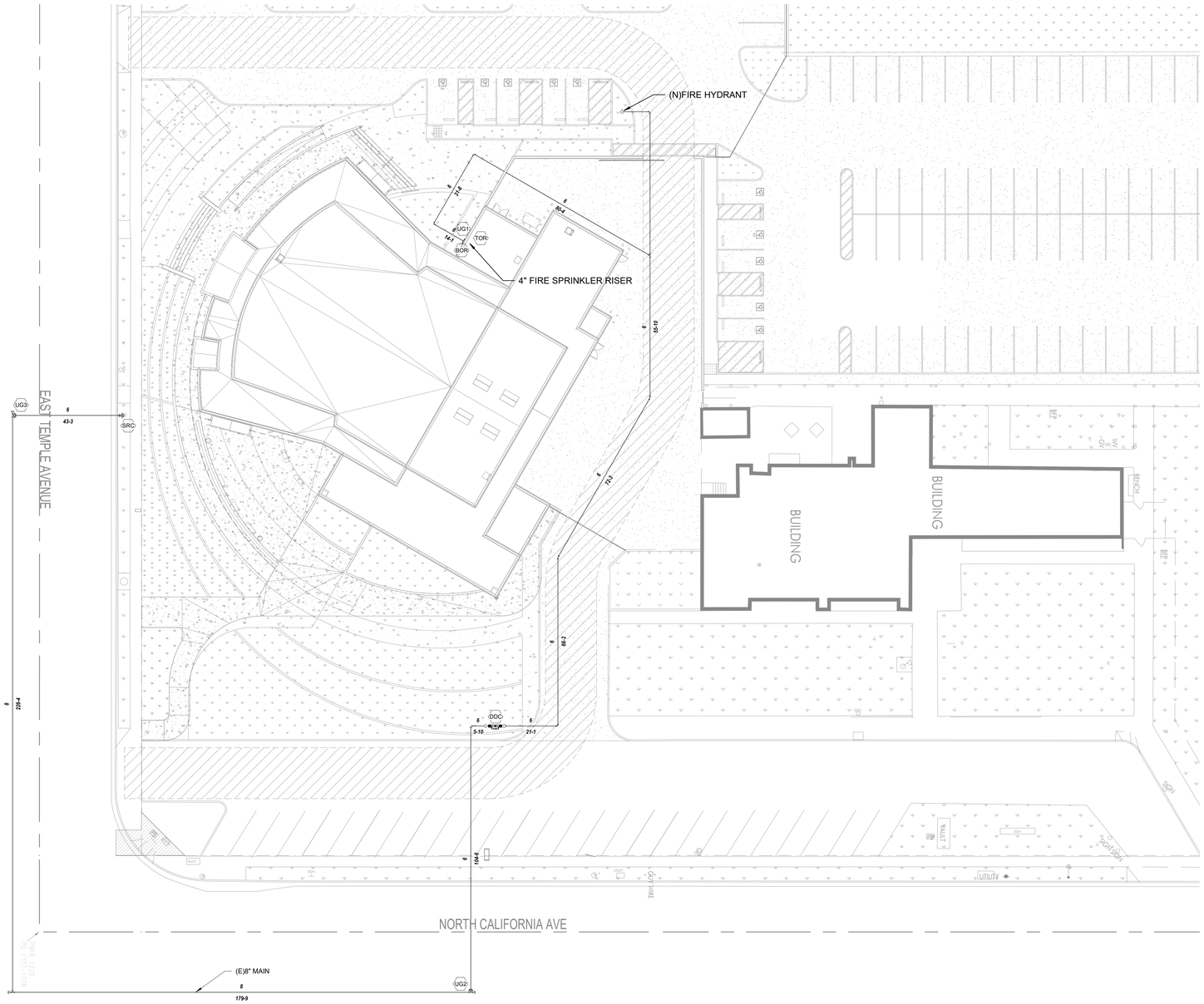

FIRE SPRINKLER SITE PLAN — SCALE 1" = 20'-0" — 1

GENERAL NOTES

DEVIATIONS FROM APPROVED PLANS SHALL REQUIRE PERMISSION OF THE DIVISION OF STATE ARCHITECT (NFPA 23.1.2).

MATERIALS:
SCH 40 1"Ø to 2"Ø - THREADED - CI SCR FITTINGS
SCH 10 2½"Ø to 4"Ø - GROOVED WELDED OUTLET AND GROOVED FITTING

INSTALLATION NOTES:
1. DESIGN, FABRICATE AND INSTALL SYSTEM ACCORDING TO NFPA 13 2016 EDITION AND DSA REQUIREMENTS.
2. ALL MATERIAL SHALL BE UL LISTED OR FM APPROVED.

APPLICABLE STANDARDS
TITLE 19, STATE FIRE MARSHAL - PUBLIC SAFETY
TITLE 24, CALIFORNIA BUILDING AND FIRE CODE (PARTS 1-9 INCLUSIVE)
NFPA 13, STANDARD FOR THE INSTALLATION OF FIRE SPRINKLERS, 2016 EDITION
SEE CBC CHAPTER 35 FOR REFERENCED STANDARDS AND AMENDMENTS
NFPA 24, STANDARD FOR THE INSTALLATION OF PRIVATE FIRE SERVICE MAINS
NFPA 20, INSTALLATION STATIONARY FIRE PUMPS FOR FIRE PROTECTION
NFPA 25, INSPECTION TESTING AND MAINTENANCE OF WATER-BASED FIRE PROTECTION SYSTEMS 2017 CA Ed.

OVERHEAD FIRE SPRINKLER SYSTEM GENERAL NOTES
1. UNDERGROUND PIPING SIZE IS NOT THE RESPONSIBILITY OF DSA AND THE DESIGNERS TAKE FULL RESPONSIBILITY FOR UNDERSIZED PIPING.
2. THE DESIGNER SHALL INDICATE ON THE PLANS ANY INTERIOR OR EXTERIOR PIPING SUBJECT TO FREEZING (WHERE WATER TEMPERATURE CANNOT BE MAINTAINED ABOVE 40 D FAHRENHEIT) AND PROVIDE PROTECTION PER NFPA 13,8.16.4.1
3. 2016 NFPA 13 SEE 10.10.2.1.1. UNDERGROUND PIPING, FROM WATER SUPPLY TO THE SYSTEM RISERS SHALL BE COMPLETELY FLUSHED BEFORE CONNECTION IS MADE TO DOWNSTREAM FIRE PROTECTION SYSTEM PIPING. (WITNESSED BY P.I. OR IOR).
4. PROVIDE FLOW TEST DATA AND INDICATE THE LOCATIONS AND HEIGHT ELEVATIONS OF THE TEST AND RESIDUAL FLOW HYDRANTS. DATA MUST BE NO MORE THAN 6 MONTHS OLD AND PROVIDE INFORMATION ABOUT AVAILABLE WATER AT THE SITE. INFORMATION MAY COME FROM LOCAL WATER PURVEYOR, UTILITIES COMPANY OR LOCAL FIRE DEPARTMENT. THIS INFORMATION SHALL BE ACCOMPANIED WITH A WET SIGNATURE AND A SIGNED DATE OF TEST.
5. ARCHITECT OF RECORD AND MECHANICAL ENGINEER SHALL AFFIX THEIR SEAL AND STAMP & SIGN AND SUBMIT ALL DRAWINGS, OR PROVIDE DOCUMENTATION PER DSA IR-A-18.
6. 2016 NFPA 13 FIG. 10.10.1: A COPY OF THE COMPLETED AND SIGNED "CONTRACTOR'S MATERIAL AND TEST CERTIFICATE FOR UNDERGROUND PIPING" SHALL BE INCLUDED IN THE SUBMITTAL.
7. 2016 NFPA 13 SECTION 10.10.2.2. ALL PIPING AND ATTACHED APPURTENANCES SUBJECTED TO SYSTEM WORKING PRESSURE SHALL BE HYDROSTATICALLY TESTED AT 200 PSI, OR 50 PSI IN EXCESS OF THE SYSTEM WORKING PRESSURE, WHICHEVER IS GREATER, AND SHALL MAINTAIN THAT PRESSURE WITHOUT LOSS FOR 2 HOURS. IOR SHALL WITNESS AND CONFIRM.
8. 2016 NFPA 13 SEE SECTION 6.2.9: PROVIDE SPARE SPRINKLER HEAD CABINET, SPRINKLER WRENCH, AND NO FEWER THAN 6 SPARE SPRINKLERS. (12 SPARE SPRINKLER HEADS FOR SYSTEMS 100 TO 1,000 SPRINKLERS).
9. 2016 NFPA 13 SECTION 9.3.6.3: THE END OF THE SPRINKLER SHALL BE RESTRAINED FROM EXCESSIVE VERTICAL AND LATERAL MOVEMENT.
10. 2019 CBC 903.4.2 AND 2016 NFPA 13 8.17.4.2.1-8.17.4.2.4. THE INSPECTORS TEST VALVE LOCATION SHALL BE INSTALLED ANYWHERE DOWNSTREAM OF THE WATER FLOW ALARM WITH A PIPE SIZE NO LESS THAN 1", WITH A SMOOTH BORE, CORROSION-RESISTANT ORIFICE, GIVING FLOW TO THE EQUIVALENT TO ONE SPRINKLER OF A TYPE HAVING THE SMALLEST ORIFICE INSTALLED WITHIN THE SYSTEM. THE DISCHARGE SHALL BE TO THE MAIN DRAIN.
11. 2017 NFPA 25, SECTION 5.3.3.6: THE SPRINKLER FLOW SWITCH SHALL BE TESTED TO CONFIRM THAT WHEN THE INSPECTOR'S TEST VALVE IS ACTIVATED AN ALARM WILL SOUND NO MORE THAN 90 SECONDS AFTER INITIAL FLOW. IOR SHALL WITNESS AND CONFIRM COMPLIANCE.
12. 2019 CBC 903.4.1: CONNECTIONS TO PROTECTED PREMISES AND SUPERVISING STATION FIRE ALARM SYSTEMS SHALL BE TESTED TO VERIFY PROPER IDENTIFICATION AND TRANSMISSION OF ALARMS FROM AUTOMATIC FIRE EXTINGUISHING SYSTEMS.
13. 2016 NFPA 13 SECTION 7.7.1.5: SIGNAGE SHALL BE PROVIDED AS REQUIRED.
14. 2019 CBC SECTION 903.4.1.: ALL VALVES CONTROLLING WATER SUPPLY FOR AUTOMATIC SPRINKLER SYSTEMS, PUMPS, TANKS, WATER LEVELS AND TEMPERATURES, CRITICAL AIR PRESSURES AND WATER FLOW SWITCHES ON ALL SPRINKLER SYSTEMS SHALL BE SUPERVISED.
15. 2016 NFPA 13 SECTION 25.5* A REPLACEMENT OF THE HYDRAULIC DESIGN PLACARD SHALL BE ATTACHED TO EACH RISER. REFERENCE RISER DETAIL TO SEE TYPE OF CALCULATION PLATE.
16. 2016 NFPA 13 SECTION 6.9 AND 2019 CBC 903.4.2: FLOW SWITCH SHALL BE CONNECTED TO A 10" OUTSIDE ALARM BELL AT EACH RISER. APPROVED IDENTIFICATION SIGNS SHALL BE PROVIDED TO OUTSIDE ALARM BELL "SPRINKLER FIRE ALARM - WHEN BELL RINGS CALL 911 / FIRE DEPARTMENT."
17. TITLE 19 ARTICLE 906(A): A LABEL OF SELF-ADHESIVE TYPE SHALL BE PLACED ON THE FIRE DEPARTMENT CONNECTION OR ON THE RISER FOR FIRE SPRINKLER SYSTEM WITH THE DATE OF SERVICE AND/OR DATE OF INSTALLATION WAS PERFORMED AND LICENSE NUMBER OF PERSON PERFORMING WORK.
18. 2016 NFPA 13 FIGURE 25.1: SPRINKLER CONTRACTOR SHALL COMPLETE AND SIGN CONTRACTOR'S MATERIAL TEST CERTIFICATE FOR THE ABOVEGROUND PIPING. THIS FORM SHALL BE GIVEN TO THE IOR WHO WILL FORWARD TO DSA FOR FILING IN PROJECT RECORDS.
19. CFC 901.2.1 - REQUEST FOR FINAL APPROVAL OF INSTALLATION SHALL INCLUDE WRITTEN STATEMENT OF COMPLIANCE FROM INSTALLING CONTRACTOR.
20. CFC 901.5.1 - OCCUPANCY IS PROHIBITED UNTIL FIRE SPRINKLER SYSTEM HAS BEEN TESTED AND APPROVED.
21. CFC 905.6.2 - RECORD (AS-BUILT) DRAWINGS SHALL BE MAINTAINED ON THE PREMISES FOR A MINIMUM OF THREE YEARS. (TITLE 19 SECTION 904.1(B) INSPECTION; 904.1(C) TESTING AND MAINTENANCE FIVE YEARS). THE FOLLOWING SPRINKLER SYSTEM DESIGN PROVISIONS TO BE REFERENCED ON DRAWINGS AND SPECIFICATIONS: ORDINARY I DENSITY SHALL APPLY TO: STORAGE, JANITOR, ELECTRICAL, DATA, TELEPHONE, KITCHEN, AND LIBRARY. ORDINARY II DENSITY SHALL APPLY TO: SCIENCE LABORATORIES, STAGES, MECHANICAL VOCATIONAL SHOPS.

FIRE FLOW

PART II-A **INFORMATION ON FIRE FLOW AVAILABILITY**
(To be completed by Water Purveyor)

Location NORTH SIDE OF TEMPLE AVE / 130 FT WEST OF CALIFORNIA AVE
Hydrant Number 7426
Distance from Nearest Property Line IN FRONT OF P/L Size of Hydrant 6 Size of Water main 12 AC
Static PSI 93 Residual PSI 82 Orifice size 4 Pitot 35
Fire Flow at 20 PSI 5000 Duration 5 HRs Flow Test Date / Time 01/31/2023 @9:12 AM

Location _____
Hydrant Number _____
Distance from Nearest Property Line _____ Size of Hydrant _____ Size of Water main _____
Static PSI _____ Residual PSI _____ Orifice size _____ Pitot _____
Fire Flow at 20 PSI _____ Duration _____ Flow Test Date / Time _____

Location _____
Hydrant Number _____
Distance from Nearest Property Line _____ Size of Hydrant _____ Size of Water main _____
Static PSI _____ Residual PSI _____ Orifice size _____ Pitot _____
Fire Flow at 20 PSI _____ Duration _____ Flow Test Date / Time _____

PART II-B **SPRINKLERED BUILDINGS/PRIVATE FIRE HYDRANTS ONLY**

Detector Location (check one) ☐ Above Grade ☐ Below Grade ☐ Either
Backflow Protection Required (Fire Sprinklers/Private Hydrant) (check one) ☐ Yes ☐ No
Minimum Type of Protection Required (check one) ☐ Single Check Detector Assembly
☐ Double Check Detector Assembly ☐ Reduced Pressure Principle Detector Assembly

Suburban Water Systems — Water Purveyor
Signature
February 01, 2023 — Date
Vice President, Engineering — Title

This Information is Considered Valid for Twelve Months

Fire Department approval of building plans shall be required prior to the issuance of a Building Permit by the jurisdictional Building Department. Any deficiencies in water systems will need to be resolved by the Fire Prevention Division only prior to this department's approval of building plans.

APPL No. A03-122864

IDENTIFICATION STAMP
DIV. OF THE STATE ARCHITECT
APP: 03-122864 INC:
REVIEWED FOR
SS ☑ FLS ☑ ACS ☑
DATE: 10/03/2023

DSA Stamp

Architect

RACHLIN PARTNERS
8640 National Boulevard
Culver City, CA 90232
310.204.3400

Disclaimer:
THESE DRAWINGS ARE THE PROPERTY OF THE ARCHITECT. THE DESIGNS SHOWN AND DESCRIBED HEREIN INCLUDING ALL TECHNICAL DRAWINGS ARE PROPRIETARY AND CANNOT BE COPIED, DUPLICATED OR COMMERCIALLY EXPLOITED EXCEPT BY WRITTEN AGREEMENT. THESE DRAWINGS AND DESIGNS SHALL NOT BE USED BY THE OWNER ON OTHER PROJECTS, FOR ADDITIONS TO THIS PROJECT, OR FOR COMPLETION OF THIS PROJECT BY OTHERS. THE OWNER AGREES TO HOLD HARMLESS, INDEMNIFY AND DEFEND THE ARCHITECT AGAINST ALL DAMAGES, CLAIMS AND LOSSES, INCLUDING DEFENSE COSTS, ARISING OUT OF ANY REUSE OF PLANS AND SPECIFICATIONS WITHOUT THE WRITTEN AUTHORIZATION OF THE ARCHITECT OF RECORD.

Copyright © 2022 Rachlin Partners, All Rights Reserved.

PDS
Pocock Design Solutions Inc.

Performing Arts Center

Hacienda La Puente Unified School District
635 North California Avenue
La Puente, CA 91744

Rev	Date	Issue
1	7.22.22	50% DD
2	10.21.22	50% CD
3	12.09.22	100% CD DSA SUBMITTAL
4	6.19.23	100% CD DSA RESUBMITTAL
5	9.20.23	DSA BACK CHECK

Date: 12/09/22
Scale: 1" = 20'-0"
Drawn By: PDS
Checked By: AG

Architect / Engineer Stamp

LICENSED ARCHITECT — ANDREW GOSSMAN — NO. C-28229 — REN. 8-31-25 — STATE OF CALIFORNIA
REGISTERED PROFESSIONAL ENGINEER — ANDREW R. GOSSMAN — No. M39838 Exp. 3/23/24 — MECHANICAL — STATE OF CALIFORNIA

Consultants
Miyamoto International, Inc.
The Ruzika Company, Inc.
MDC Consulting Engineers
Pocock Design Solutions
Newson Brown Acoustics, LLC
VCA Engineers, Inc.
HJSA Consulting

Sheet Title
Fire Sprinkler Site Plan and General Notes

Sheet Number
FS001

C:\Users\agossman\Documents\KF22_HLPUSD_PAC_Fire Central_andrewgossman.rvt

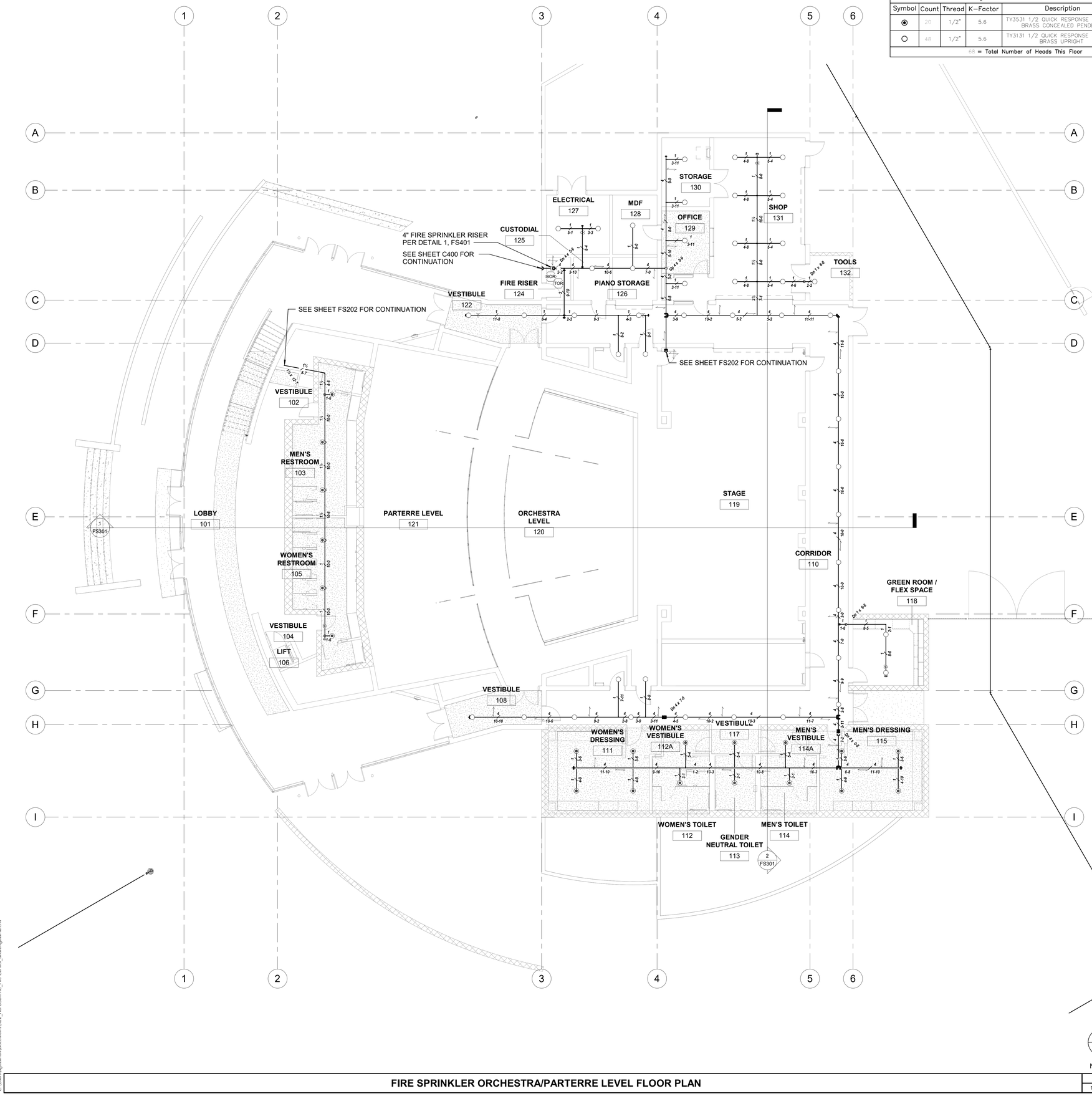

FIRE SPRINKLER ORCHESTRA/PARTERRE LEVEL FLOOR PLAN — SCALE 1/8" = 1'-0" — 1

C:\Users\kgassman\Documents\R22_HLFUSD PAC_Fire Central_andrewgassman.rvt

Sprinkler Head Schedule

Symbol	Count	Thread	K–Factor	Description	Coverage
◉	20	1/2"	5.6	TY3531 1/2 QUICK RESPONSE 200 DEG. BRASS CONCEALED PENDENT	225 SF.
○	48	1/2"	5.6	TY3131 1/2 QUICK RESPONSE 200 DEG. BRASS UPRIGHT	225 SF.
68 = Total Number of Heads This Floor					

MAXIMUM DISTANCE BETWEEN HANGERS

NOMINAL PIPE SIZE (in.)	1"–1–1/4"	1–1/2" – 6"
STEEL PIPE EXCEPT THREADED LIGHTWALL	12'–0" MAX.	15'–0" MAX.

SYMBOLS

- RISER NIPPLE TO TEE
- RISER NIPPLE TO 90
- 1" DN. TO ARM OVER TO DROP
- 1" DN. TO ARM OVER TO DROP
- WET PIPE RISER
- FIRE HYDRANT
- PIV
- T TAMPER SWITCH
- FS FLOW SWITCH
- PIPE BRACE
- 1" PIPE DIAMETER
- PIPE LENGTH
- RISER NIPPLE TO 90 SIDE OUTLET @ MAIN
- 1" DN. TO ARM OVER TO DROP
- 1" DN. TO ARM OVER TO DROP
- 1" PIPE DIAMETER
- END OF LINE RESTRAINT
- HANGER
- 01 HYDRAULIC NODE
- 1" PLUG OR DRAIN

CONSTRUCTION NOTES:

1. NEW DUCTWORK SHALL NOT OBSTRUCT THE FUNCTION AND SPRAY PATTERN OF THE FIRE SPRINKLER SYSTEM. CONTRACTOR SHALL MAINTAIN CLEARANCE REQUIREMENTS AS DEFINED IN 2016 NFPA 13, CHAPTER 8. OBSTRUCTED CONDITIONS SHALL BE CORRECTED VIA A DSA CCD APPROVAL PROCESS.
2. INSTALLATION OF THE SPRINKLER SYSTEM SHALL NOT BE STARTED UNTIL DRAWINGS, SPECIFICATIONS, CALCULATIONS, ETC. HAVE BEEN APPROVED BY DSA.
3. EDUCATIONAL OCCUPANCY AFSS DESIGN CRITERIA:

   LIGHT HAZARD: CLASSROOMS, OFFICES, *AUDITORIUMS, LIBRARY READING AREAS WITHOUT HIGH STACKS

   ORDINARY HAZARD GROUP 1: KITCHENS, MULTI-PURPOSE ROOMS, LARGE STORAGE AREAS, STAGES (AS DEFINED IN 2016 CBC 410.2)

   ORDINARY HAZARD GROUP 2: SCIENCE LABS, VOCATIONAL SHOPS, STAGES 1,000 FT² IN AREA OR >50 FT IN HEIGHT, LIBRARY READING AREAS WITH HIGH STACKS

   NFPA 13, A5.1, A5.3.1, A5.3.2 *IF ALSO FUNCTIONS AS MULTI-PURPOSE ROOM, USE ORDINARY HAZARD GROUP I.
4. FIRE SPRINKLER COVERAGE NOT REQUIRED ABOVE NON-COMBUSTIBLE CEILING SPACES PER 2016 NFPA 13 8.15.1.2.1.
5. FIRE SPRINKLER COVERAGE NOT REQUIRED FOR EXTERIOR NON-COMBUSTIBLE CANOPIES PER 2016 NFPA 13 8.15.7.2. THE AREA BENEATH THE EXTERIOR CANOPIES SHALL NOT BE USED FOR STORAGE AND SHALL BE STRICTLY PEDESTRIAN USE.

APPL No. A03-122864

IDENTIFICATION STAMP
DIV. OF THE STATE ARCHITECT
APP: 03-122864 INC:
REVIEWED FOR
SS ☑ FLS ☑ ACS ☑
DATE: 10/03/2023

DSA Stamp

Architect

RACHLIN PARTNERS
8640 National Boulevard
Culver City, CA 90232
310.204.3400

Disclaimer:

THESE DRAWINGS ARE THE PROPERTY OF THE ARCHITECT. THE DESIGNS SHOWN AND DESCRIBED HEREIN INCLUDING ALL TECHNICAL DRAWINGS ARE PROPRIETARY AND CANNOT BE REPRODUCED OR COMMERCIALLY EXPLOITED IN ANY FORM WHATSOEVER. THE DRAWINGS AND SPECIFICATIONS SHALL NOT BE USED BY THE OWNER ON OTHER PROJECTS, FOR ADDITIONS TO THIS PROJECT, OR FOR COMPLETION OF THIS PROJECT BY OTHERS. THE OWNER AGREES TO HOLD HARMLESS, INDEMNIFY AND DEFEND THE ARCHITECT AGAINST ALL DAMAGES, CLAIMS AND LOSSES, INCLUDING DEFENSE COSTS, ARISING OUT OF ANY REUSE OF PLANS AND SPECIFICATIONS WITHOUT THE WRITTEN AUTHORIZATION OF THE ARCHITECT OF RECORD.

Copyright © 2022 Rachlin Partners, All Rights Reserved.

PDS
Pocock Design Solutions Inc.

Performing Arts Center

Hacienda La Puente Unified School District
635 North California Avenue
La Puente, CA 91744

Rev	Date	Issue
1	7.22.22	50% DD
2	10.21.22	50% CD
3	12.09.22	100% CD DSA SUBMITTAL
4	6.19.23	100% CD DSA RESUBMITTAL
5	9.20.23	DSA BACK CHECK

Date: 12/09/22
Scale: 1/8" = 1'-0"
Drawn By: PDS
Checked By: AG

Architect / Engineer Stamp

LICENSED ARCHITECT — RONALD W. ROTHSTEIN — NO. C-26229 — REN. 8-31-23 — STATE OF CALIFORNIA

REGISTERED PROFESSIONAL ENGINEER — ANDREW R. GASSMAN — No. M39569 — Exp. 3/31/24 — MECHANICAL — STATE OF CALIFORNIA

Consultants
Miyamoto International, Inc.
The Ruzika Company, Inc.
MDC Consulting Engineers
Pocock Design Solutions
Newson Brown Acoustics, LLC
VCA Engineers, Inc.
HJSA Consulting

Sheet Title

Fire Sprinkler Orchestra Level Plan

Sheet Number

FS201

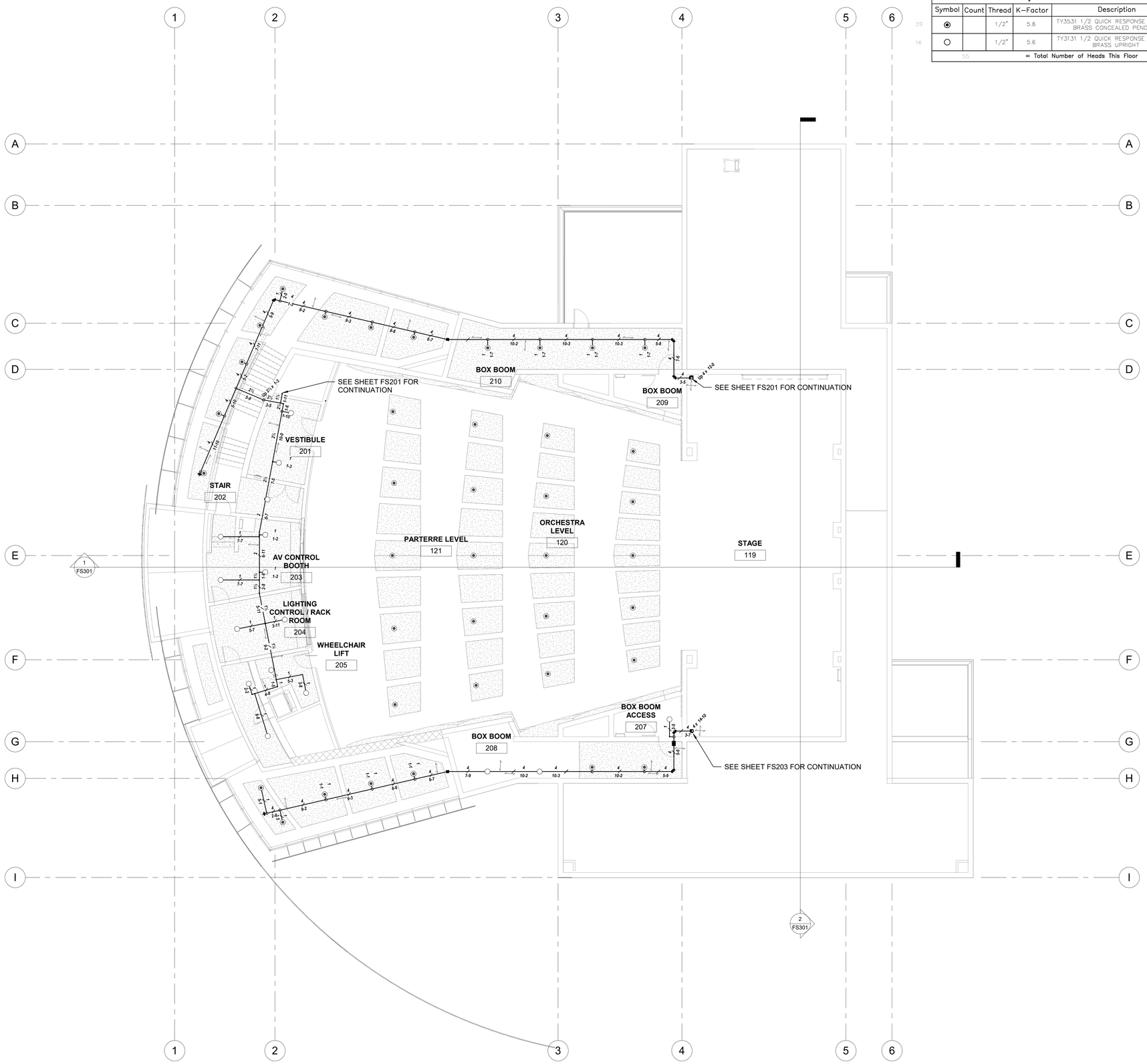

Sprinkler Head Schedule					
Symbol	Count	Thread	K-Factor	Description	Coverage
◉		1/2"	5.6	TY3531 1/2 QUICK RESPONSE 200 DEG. BRASS CONCEALED PENDENT	130 SF.
○		1/2"	5.6	TY3131 1/2 QUICK RESPONSE 200 DEG. BRASS UPRIGHT	130 SF.
	55			= Total Number of Heads This Floor	

MAXIMUM DISTANCE BETWEEN HANGERS		
NOMINAL PIPE SIZE (in.)	1"–1–1/4"	1–1/2" – 6"
STEEL PIPE EXCEPT THREADED LIGHTWALL	12'–0" MAX.	15'–0" MAX.

SYMBOLS

RISER NIPPLE TO TEE
RISER NIPPLE TO 90
1" DN. TO ARM OVER TO DROP
1" DN. TO ARM OVER TO DROP
WET PIPE RISER
FIRE HYDRANT
PIV
TAMPER SWITCH
FLOW SWITCH
PIPE BRACE
PIPE DIAMETER
PIPE LENGTH
RISER NIPPLE TO 90 SIDE OUTLET @ MAIN
1" DN. TO ARM OVER TO DROP
1" DN. TO ARM OVER TO DROP
PIPE DIAMETER
END OF LINE RESTRAINT
HANGER
HYDRAULIC NODE
1" PLUG OR DRAIN

CONSTRUCTION NOTES:

1. NEW DUCTWORK SHALL NOT OBSTRUCT THE FUNCTION AND SPRAY PATTERN OF THE FIRE SPRINKLER SYSTEM. CONTRACTOR SHALL MAINTAIN CLEARANCE REQUIREMENTS AS DEFINED IN 2016 NFPA 13, CHAPTER 8. OBSTRUCTED CONDITIONS SHALL BE CORRECTED VIA A DSA CCD APPROVAL PROCESS.
2. INSTALLATION OF THE SPRINKLER SYSTEM SHALL NOT BE STARTED UNTIL DRAWINGS, SPECIFICATIONS, CALCULATIONS, ETC. HAVE BEEN APPROVED BY DSA.
3. EDUCATIONAL OCCUPANCY AFSS DESIGN CRITERIA:

   LIGHT HAZARD: CLASSROOMS, OFFICES, *AUDITORIUMS, LIBRARY READING AREAS WITHOUT HIGH STACKS

   ORDINARY HAZARD GROUP 1: KITCHENS, MULTI-PURPOSE ROOMS, LARGE STORAGE AREAS, STAGES (AS DEFINED IN 2016 CBC 410.2)

   ORDINARY HAZARD GROUP 2: SCIENCE LABS, VOCATIONAL SHOPS, STAGES 1,000 FT² IN AREA OR >50 FT IN HEIGHT, LIBRARY READING AREAS WITH HIGH STACKS

   NFPA 13, A5.1, A5.3.1, A5.3.2 *IF ALSO FUNCTIONS AS MULTI-PURPOSE ROOM, USE ORDINARY HAZARD GROUP I.
4. FIRE SPRINKLER COVERAGE NOT REQUIRED ABOVE NON-COMBUSTIBLE CEILING SPACES PER 2016 NFPA 13 8.15.1.2.1.
5. FIRE SPRINKLER COVERAGE NOT REQUIRED FOR EXTERIOR NON-COMBUSTIBLE CANOPIES PER 2016 NFPA 13 8.15.7.2. THE AREA BENEATH THE EXTERIOR CANOPIES SHALL NOT BE USED FOR STORAGE AND SHALL BE STRICTLY PEDESTRIAN USE.

NORTH

FIRE SPRINKLER CONTROL BOOTH LEVEL FLOOR PLAN

SCALE 1/8" = 1'-0" | 1

C:\Users\kgoossman\Documents\R22_HUFUSD-PAC_Fire Central_sndkwgoossman.rvt

APPL No. A03-122864

IDENTIFICATION STAMP
DIV. OF THE STATE ARCHITECT
APP: 03-122864 INC:
REVIEWED FOR
SS ☑ FLS ☑ ACS ☑
DATE: 10/03/2023

DSA Stamp

Architect

RACHLIN PARTNERS
8640 National Boulevard
Culver City, CA 90232
310.204.3400

Disclaimer:

THESE DRAWINGS ARE THE PROPERTY OF THE ARCHITECT. THE DESIGNS SHOWN AND DESCRIBED HEREIN INCLUDING ALL TECHNICAL DRAWINGS ARE PROPRIETARY AND CANNOT BE COPIED, DUPLICATED OR COMMERCIALLY EXPLOITED EXCEPT WITH WRITTEN PERMISSION. THEY ARE NOT TO BE CHANGED OR SHALL NOT BE USED BY THE OWNER ON OTHER PROJECTS FOR ADDITIONS TO THIS PROJECT, OR FOR COMPLETION OF THIS PROJECT BY OTHERS. THE OWNER AGREES TO HOLD HARMLESS, INDEMNIFY AND DEFEND THE ARCHITECT AGAINST ALL DAMAGES, CLAIMS AND LOSSES, INCLUDING DEFENSE COSTS, ARISING OUT OF ANY REUSE OF PLANS AND SPECIFICATIONS WITHOUT THE WRITTEN AUTHORIZATION OF THE ARCHITECT OF RECORD.

Copyright © 2022 Rachlin Partners, All Rights Reserved.

PDS
Pocock Design Solutions Inc.

Performing Arts Center
Hacienda La Puente Unified School District
635 North California Avenue
La Puente, CA 91744

Rev	Date	Issue
1	7.22.22	50% DD
2	10.21.22	50% CD
3	12.09.22	100% CD DSA SUBMITTAL
4	6.19.23	100% CD DSA RESUBMITTAL
5	9.20.23	DSA BACK CHECK

Date: 12/09/22
Scale: 1/8" = 1'-0"
Drawn By: PDS
Checked By: AG

Architect / Engineer Stamp

LICENSED ARCHITECT — RICHARD D. RACHLIN — NO. C-26225 REN. 8-31-25 — STATE OF CALIFORNIA
REGISTERED PROFESSIONAL ENGINEER — ANDREW R. GOSSMAN — No. M39308 Exp. 3/31/24 — MECHANICAL — STATE OF CALIFORNIA

Consultants
Miyamoto International, Inc.
The Ruzika Company, Inc.
MDC Consulting Engineers
Pocock Design Solutions
Newson Brown Acoustics, LLC
VCA Engineers, Inc.
HJSA Consulting

Sheet Title

Fire Sprinkler Control Booth Level Plan

Sheet Number

FS202

Sprinkler Head Schedule					
Symbol	Count	Thread	K-Factor	Description	Coverage
○	5.6			TY3131 1/2 QUICK RESPONSE 200 DEG. BRASS UPRIGHT	130 SF
70	70 = Total Number of Heads This Floor				

MAXIMUM DISTANCE BETWEEN HANGERS		
NOMINAL PIPE SIZE (in.)	1"–1–1/4"	1–1/2" – 6"
STEEL PIPE EXCEPT THREADED LIGHTWALL	12'–0" MAX.	15'–0" MAX.

SYMBOLS

- RISER NIPPLE TO TEE
- PIPE DIAMETER / PIPE LENGTH
- RISER NIPPLE TO 90
- RISER NIPPLE TO 90 SIDE OUTLET @ MAIN
- 1" DN. TO ARM OVER TO DROP
- 1" DN. TO ARM OVER TO DROP
- 1" DN. TO ARM OVER TO DROP
- 1" DN. TO ARM OVER TO DROP
- WET PIPE RISER
- PIPE DIAMETER
- FIRE HYDRANT
- END OF LINE RESTRAINT
- PIV
- HANGER
- T TAMPER SWITCH
- 01 HYDRAULIC NODE
- FS FLOW SWITCH
- 1" PLUG OR DRAIN
- PIPE BRACE

LATERAL BRACE ZONE OF INFLUENCE

LONGITDUNAL BRACE ZONE OF INFLUENCE

SEE SHEET FS202 FOR CONTINUATION

FIRE SPRINKLER CONTRACTOR SHALL CAREFULLY COORDINATE WITH THEATRICAL RIGGING CONTRACTOR PRIOR TO FABRICATION AND INSTALLATION.

REMOTE AREA:
STAGE 119
1,500 FT²
ORDINARY HAZARD II

FOLLOW SPOT
301

CATWALK ACCESS
302

SEE SHEET FS202 FOR CONTINUATION

1 FS301

2 FS301

NORTH

HYDRAULIC SYSTEM

THIS BUILDING IS PROTECTED BY A HYDRAULICALLY DESIGNED AUTOMATIC SPRINKLER SYSTEM

LOCATION	STAGE 119
SPRINKLER INFORMATION	
NUMBER OF FLOWING HEADS	15
MANUFACTURE	TYCO
MODEL	3131
1/2"	5.6 K-FACTOR
155 DEGREE	130 SF COVERAGE
BASE OF DESIGN	
STANDARD	NFPA 13 2016 ED.
HAZARD GROUP	ORDINARY HAZARD II
DENSITY	0.2
DESIGNED AREA OF DISCHARGE	1,500
SYSTEM DEMAND	
GPM DEMAND AT THE BASE OF THE RISER	391.915 GPM
REQUIRED PRESSURE	63.25 PSI
GPM DEMAND AT THE WATER SUPPLY SOURCE	641.915 GPM
AVAILABLE PRESSURE	82.23 PSI
HOSE STREAM ALLOWANCE	250 GPM
REMOTE SPRINKLER FLOW	26.0 GPM @ 21.56 PSI

CONSTRUCTION NOTES:

1. NEW DUCTWORK SHALL NOT OBSTRUCT THE FUNCTION AND SPRAY PATTERN OF THE FIRE SPRINKLER SYSTEM. CONTRACTOR SHALL MAINTAIN CLEARANCE REQUIREMENTS AS DEFINED IN 2016 NFPA 13, CHAPTER 8. OBSTRUCTED CONDITIONS SHALL BE CORRECTED VIA A DSA CCD APPROVAL PROCESS.
2. INSTALLATION OF THE SPRINKLER SYSTEM SHALL NOT BE STARTED UNTIL DRAWINGS, SPECIFICATIONS, CALCULATIONS, ETC. HAVE BEEN APPROVED BY DSA.
3. EDUCATIONAL OCCUPANCY AFSS DESIGN CRITERIA:

   LIGHT HAZARD: CLASSROOMS, OFFICES, *AUDITORIUMS, LIBRARY READING AREAS WITHOUT HIGH STACKS

   ORDINARY HAZARD GROUP 1: KITCHENS, MULTI-PURPOSE ROOMS, LARGE STORAGE AREAS, STAGES (AS DEFINED IN 2016 CBC 410.2)

   ORDINARY HAZARD GROUP 2: SCIENCE LABS, VOCATIONAL SHOPS, STAGES 1,000 FT² IN AREA OR >50 FT IN HEIGHT, LIBRARY READING AREAS WITH HIGH STACKS

   NFPA 13, A5.1, A5.3.1, A5.3.2 *IF ALSO FUNCTIONS AS MULTI-PURPOSE ROOM, USE ORDINARY HAZARD GROUP I.
4. FIRE SPRINKLER COVERAGE NOT REQUIRED ABOVE NON-COMBUSTIBLE CEILING SPACES PER 2016 NFPA 13 8.15.1.2.1.
5. FIRE SPRINKLER COVERAGE NOT REQUIRED FOR EXTERIOR NON-COMBUSTIBLE CANOPIES PER 2016 NFPA 13 8.15.7.2. THE AREA BENEATH THE EXTERIOR CANOPIES SHALL NOT BE USED FOR STORAGE AND SHALL BE STRICTLY PEDESTRIAN USE.

FIRE SPRINKLER FOLLOW SPOT LEVEL FLOOR PLAN — SCALE 1/8" = 1'-0" — 1

C:\Users\kgossman\Documents\R22_HLPJSD-PAC_Fire Central_cnd4rvgossman.rvt

APPL No. A03-122864

IDENTIFICATION STAMP
DIV. OF THE STATE ARCHITECT
APP: 03-122864 INC:
REVIEWED FOR
SS ☑ FLS ☑ ACS ☑
DATE: 10/03/2023

DSA Stamp

Architect

RACHLIN PARTNERS
8640 National Boulevard
Culver City, CA 90232
310.204.3400

Disclaimer:

THESE DRAWINGS ARE THE PROPERTY OF THE ARCHITECT. THE DESIGNS SHOWN AND DESCRIBED HEREIN INCLUDING ALL TECHNICAL DRAWINGS ARE PROPRIETARY AND CANNOT BE COPIED, DUPLICATED OR COMMERCIALLY EXPLOITED EXCEPT WITH WRITTEN PERMISSION. THE DRAWINGS AND DESIGNS SHALL NOT BE USED BY THE OWNER ON OTHER PROJECTS, FOR ADDITIONS TO THIS PROJECT, OR FOR COMPLETION OF THIS PROJECT BY OTHERS. THE OWNER AGREES TO HOLD HARMLESS, INDEMNIFY AND DEFEND THE ARCHITECT AGAINST ALL DAMAGES, CLAIMS AND LOSSES, INCLUDING DEFENSE COSTS, ARISING OUT OF ANY REUSE OF PLANS AND SPECIFICATIONS WITHOUT THE WRITTEN AUTHORIZATION OF THE ARCHITECT OF RECORD.

Copyright © 2022 Rachlin Partners, All Rights Reserved.

PDS Pocock Design Solutions Inc.

Performing Arts Center
Hacienda La Puente Unified School District
635 North California Avenue
La Puente, CA 91744

Rev	Date	Issue
1	7.22.22	50% DD
2	10.21.22	50% CD
3	12.09.22	100% CD DSA SUBMITTAL
4	6.19.23	100% CD DSA RESUBMITTAL
5	9.20.23	DSA BACK CHECK

Date: 12/09/22
Scale: 1/8" = 1'-0"
Drawn By: PDF
Checked By: AG

Architect / Engineer Stamp

LICENSED ARCHITECT — LEONARD PAUL PASSARO — NO. C-26229 — REN: 8-31-25 — STATE OF CALIFORNIA

REGISTERED PROFESSIONAL ENGINEER — ANDREW R. GOSSMAN — No. M30839 — Exp. 3/31/24 — MECHANICAL — STATE OF CALIFORNIA

Consultants
Miyamoto International, Inc.
The Ruzika Company, Inc.
MDC Consulting Engineers
Pocock Design Solutions
Newson Brown Acoustics, LLC
VCA Engineers, Inc.
HJSA Consulting

Sheet Title

Fire Sprinkler Follow Spot Level Plan

Sheet Number

FS203

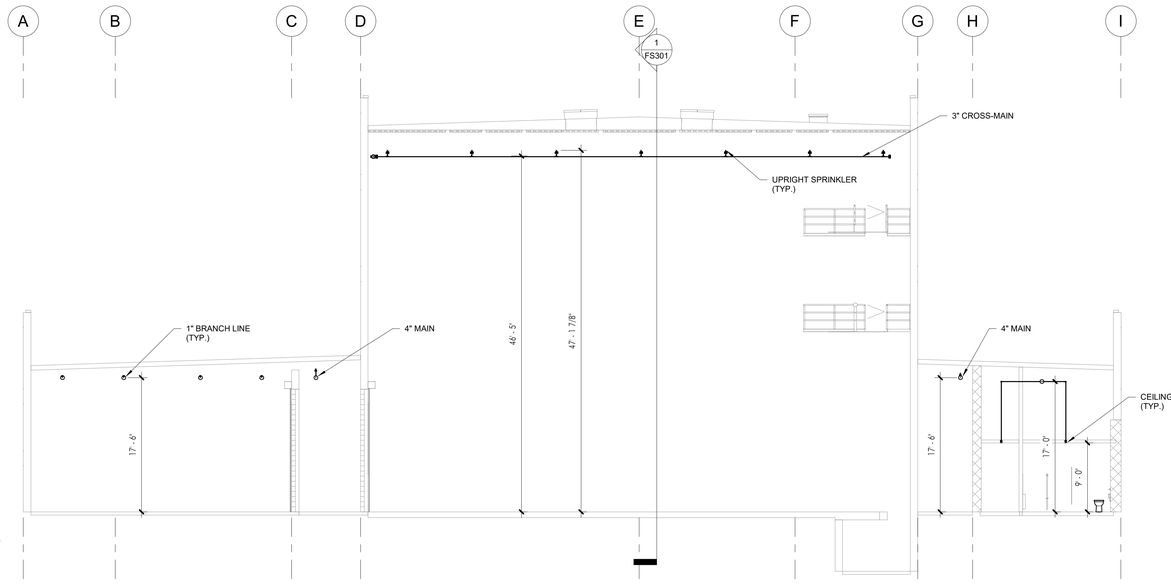

FIRE SPRINKLER SECTION 2

SCALE 1/8" = 1'-0" | 2

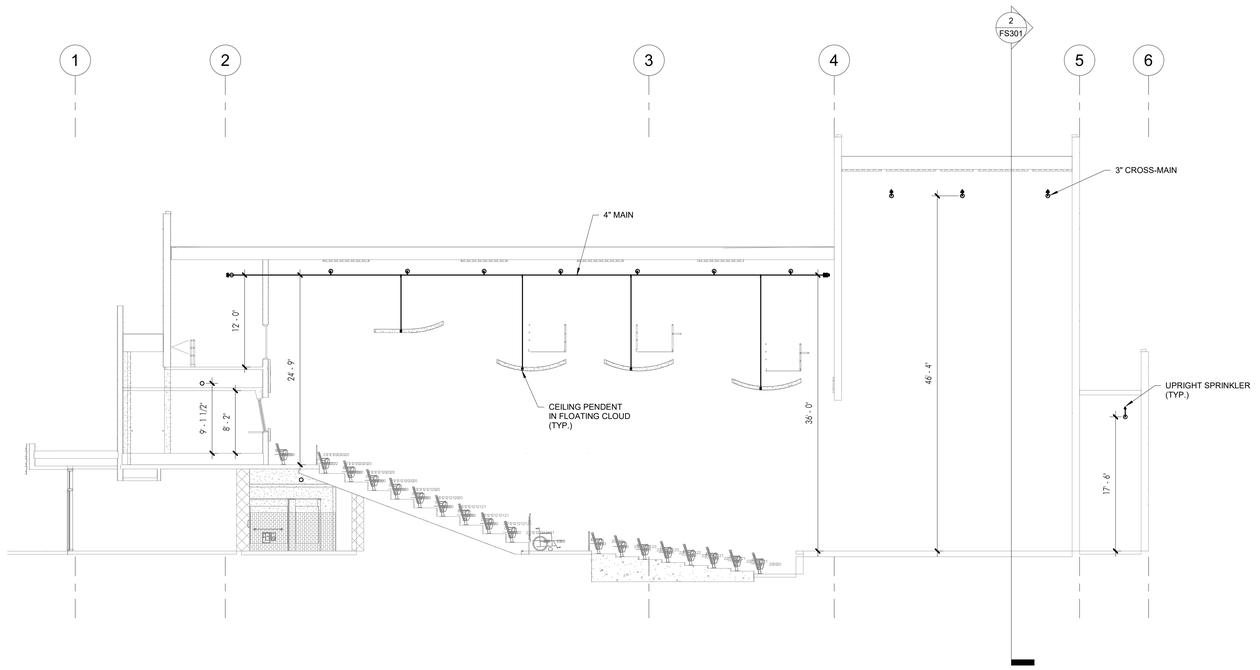

FIRE SPRINKLER SECTION 1

SCALE 1/8" = 1'-0" | 1

C:\Users\agoosman\Documents\KP22_HUHSSD-PAC_Fire Central_andrewgoosman.rvt

APPL No. A03-122864

IDENTIFICATION STAMP
DIV. OF THE STATE ARCHITECT
APP: 03-122864 INC:
REVIEWED FOR
SS ☑ FLS ☑ ACS ☑
DATE: 10/03/2023

DSA Stamp

Architect

RACHLIN
PARTNERS
8640 National Boulevard
Culver City, CA 90232
310.204.3400

Disclaimer:

THESE DRAWINGS ARE THE PROPERTY OF THE ARCHITECT. THE DESIGNS SHOWN AND DESCRIBED HEREIN INCLUDING ALL TECHNICAL DRAWINGS ARE PROPRIETARY AND CANNOT BE COPIED, DUPLICATED OR COMMERCIALLY EXPLOITED EXCEPT BY WRITTEN AGREEMENT. THESE DRAWINGS AND DESIGNS SHALL NOT BE USED BY THE OWNER ON OTHER PROJECTS, FOR ADDITIONS TO THIS PROJECT, OR FOR COMPLETION OF THIS PROJECT BY OTHERS. THE OWNER AGREES TO HOLD HARMLESS, INDEMNIFY AND DEFEND THE ARCHITECT AGAINST ALL DAMAGES, CLAIMS AND LOSSES, INCLUDING DEFENSE COSTS, ARISING OUT OF ANY REUSE OF PLANS AND SPECIFICATIONS WITHOUT THE WRITTEN AUTHORIZATION OF THE ARCHITECT OF RECORD.

Copyright © 2022 Rachlin Partners, All Rights Reserved.

PDS
Pocock Design Solutions Inc.

Performing Arts Center

Hacienda La Puente Unified School District
635 North California Avenue
La Puente, CA 91744

Rev	Date	Issue
1	7.22.22	50% DD
2	10.21.22	50% CD
3	12.09.22	100% CD DSA SUBMITTAL
4	6.19.23	100% CD DSA RESUBMITTAL
5	9.20.23	DSA BACK CHECK

Date: 12/09/22
Scale: 1/8" = 1'-0"
Drawn By: PDS
Checked By: AG

Architect / Engineer Stamp

LICENSED ARCHITECT
NO. C-26229
REN. 8-31-23
STATE OF CALIFORNIA

REGISTERED PROFESSIONAL ENGINEER
ANDREW R. GOSMAN
No. M30808
Exp. 3/31/24
MECHANICAL
STATE OF CALIFORNIA

Consultants
Miyamoto International, Inc.
The Ruzika Company, Inc.
MDC Consulting Engineers
Pocock Design Solutions
Newson Brown Acoustics, LLC
VCA Engineers, Inc.
HJSA Consulting

Sheet Title

Fire Sprinkler Sections

Sheet Number

FS301

TOLBrace™ Seismic Calculations

HLPUSD Performing Arts Center — Job # -

635 N California Ave

Brace Identification	Lateral
Brace Type (Per NFPA#13)	NFPA Type E
Braced Pipe (ft)	4" Sch. 10 Steel Pipe
Spacing of Brace	30' 0" (9.14 m)
Orientation of Brace	Lateral
Bracing Material	1" Sch.40
Maximum Brace Length	7' 0" (2.13 m)
Slenderness Ratio used for Load Calculation	200
True Angle of Brace for Calculation	45°
Type of Fastener	1/2in. Unfinished Steel Bolt
Length of Fastener	N/A

Summary of Pipe within Zone of Influence

4" Sch.10 Steel Pipe (101.6 mm)	30 ft (9.1 m)
1.25" Sch.40 Steel Pipe (31.75 mm)	36 ft (11 m)
1" Sch.40 Steel Pipe (25.4 mm)	150 ft (45.7 m)

G-Factor Used 0.803

Allowance for Heads and Fittings	15%
Conclusions	
Total Adjusted Load of Pipe in Zone of Influence	708 lbs (321 kg)
Material Capacity	1310 lbs (594 kg)
Fastener Capacity	2050 lbs (930 kg)
Fig. 1001 Clamp	1414 lbs (641 kg)
Fig.980 - 1/2" Universal Swivel	1485 lbs (674 kg)
Structural Member	Steel I Beam

Calculations prepared by Pocock Design Solutions, Inc.

* The description of the Structural Member is for informational purposes only.
TOLBrace™ software calculates the brace assembly only, not the structure it is attached to.
Calculated with TOLBrace™ 8
Visit us at www.tolco.com

TOLBrace™ Seismic Bracing Calculations

V8.8.124

Project Address: HLPUSD Performing Arts Center; 635 N California Ave; La Puente, CA; Job # -

Contractor: Pocock Design Solutions, Inc.
Address: 14451 Chambers Rd. Suite 210, Tustin, CA 92780
Phone: 949-417-3903
Licence: M35839

Calculations based on 2016 NFPA Pamphlet #13

Brace Information

Maximum Brace Length	7' 0" (2.134 m)
Diameter of Brace	1"
Type of Brace	Sch.40
Angle of Brace	45° Min.
Least Rad. of Gyration	0.42" (11 mm)
L/R Value	200
Max Horizontal Load	1310 lbs (594 kg)

TOLCO™ Brace Components

TOLCO™ Component	Listed Load	Adjusted Load
Fig. 1001 Clamp	2000 lbs (907 kg)	1414 lbs (641 kg)
Fig.980 - 1/2" Universal Swivel	2100 lbs (953 kg)	1485 lbs (674 kg)

See Fastener Information

*Calculation Based on CONCENTRIC Loading
*Please Note: These calculations are for TOLCO™ components only. Use of any other components voids these calculations and the listing of the assembly.

Fastener Information

Orientation to Connecting Surface: NFPA Type E

Fastener

Type	1/2in. Unfinished Steel Bolt
Diameter	1/2in.
Length	N/A
Maximum Load	2050 lbs (930 kg)
Prying Factor	N/A

Seismic Brace Assembly Detail

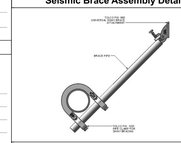

Brace Identification on Plans Lateral

Brace Type Lateral [X] Longitudinal [ ] 4-Way [ ]

Sprinkler System Load Calculation (Fpw = CpWp)

Cp = 0.803

Diameter	Type	Length	Total Length	Weight Per Unit Length	Total Weight
4" (100 mm)	Sch. 10	30 ft (9.1 m)	30 ft (9.1 m)	11.78 lb/ft (17.53 kg/m)	353 lbs (160 kg)
1.25" (32 mm)	Sch. 40	36 ft (11 m)	36 ft (11 m)	2.93 lb/ft (4.36 kg/m)	105 lbs (48 kg)
1" (25 mm)	Sch. 40	150 ft (45.7 m)	150 ft (45.7 m)	2.05 lb/ft (3.05 kg/m)	308 lbs (140 kg)

Subtotal Weight	766 lbs (347 kg)
Wp (incl. 15%)	881 lbs (400 kg)
Total (Fpw)	707 lbs (321 kg)
Maximum Fpw per 9.3.5.5.2 (if applicable)	1071 lb (485 kg)

Main Size	Type/Sch.	Spacing (ft)
4"	Sch. 10	30

(TOLBrace™ Version 8) Use of TOLBrace™ is subject to terms and conditions per the end user license agreement

TOLBrace™ Seismic Calculation

HLPUSD Performing Arts Center — Job # -

635 N California Ave

Brace Identification	Longitudinal
Brace Type (Per NFPA#13)	NFPA Type E
Braced Pipe (ft)	4" Sch.10 Steel Pipe
Spacing of Brace	60' 0" (18.29 m)
Orientation of Brace	Longitudinal
Bracing Material	1" Sch.40
Maximum Brace Length	7' 0" (2.13 m)
Slenderness Ratio used for Load Calculation	200
True Angle of Brace for Calculation	45°
Type of Fastener	1/2in. Unfinished Steel Bolt
Length of Fastener	N/A

Summary of Pipe within Zone of Influence

4" Sch.10 Steel Pipe (101.6 mm)	60 ft (18.3 m)

G-Factor Used 0.803

Allowance for Heads and Fittings	15%
Conclusions	
Total Adjusted Load of Pipe in Zone of Influence	653 lbs (296 kg)
Material Capacity	1310 lbs (594 kg)
Fastener Capacity	2050 lbs (930 kg)
Fig. 4L Clamp	1414 lbs (641 kg)
Fig.980 - 1/2" Universal Swivel	1485 lbs (674 kg)
Structural Member	Steel I Beam

Calculations prepared by Pocock Design Solut

* The description of the Structural Member is for informational purposes only.
TOLBrace™ software calculates the brace assembly only, not the structure it is attached to.
Calculated with TOLBrace™ 8
Visit us at www.tolco.com

TOLBrace™ Seismic Bracing Calculations

V8.8.124

Project Address: HLPUSD Performing Arts Center; 635 N California Ave; La Puente, CA; Job # -

Contractor: Pocock Design Solutions, Inc.
Address: 14451 Chambers Rd. Suite 210, Tustin, CA 92780
Phone: 949-417-3903
Licence: M35839

Calculations based on 2016 NFPA Pamphlet #13

Brace Information

Maximum Brace Length	7' 0" (2.134 m)
Diameter of Brace	1"
Type of Brace	Sch.40
Angle of Brace	45° Min.
Least Rad. of Gyration	0.42" (11 mm)
L/R Value	200
Max Horizontal Load	1310 lbs (594 kg)

TOLCO™ Brace Components

TOLCO™ Component	Listed Load	Adjusted Load
Fig. 4L Clamp	2000 lbs (907 kg)	1414 lbs (641 kg)
Fig.980 - 1/2" Universal Swivel	2100 lbs (953 kg)	1485 lbs (674 kg)

See Fastener Information

*Calculation Based on CONCENTRIC Loading
*Please Note: These calculations are for TOLCO™ components only. Use of any other components voids these calculations and the listing of the assembly.

Fastener Information

Orientation to Connecting Surface: NFPA Type E

Fastener

Type	1/2in. Unfinished Steel Bolt
Diameter	1/2in.
Length	N/A
Maximum Load	2050 lbs (930 kg)
Prying Factor	N/A

Seismic Brace Assembly Detail

Brace Identification on Plans Longitudinal

Brace Type Lateral [ ] Longitudinal [X] 4-Way [ ]

Sprinkler System Load Calculation (Fpw = CpWp)

Cp = 0.803

Diameter	Type	Length	Total Length	Weight Per Unit Length	Total Weight
4" (100 mm)	Sch. 10	60 ft (18.3 m)	60 ft (18.3 m)	11.78 lb/ft (17.53 kg/m)	707 lbs (321 kg)

Subtotal Weight	707 lbs (321 kg)
Wp (incl. 15%)	813 lbs (369 kg)
Total (Fpw)	653 lbs (296 kg)
Maximum Fpw per 9.3.5.5.2 (if applicable)	N/A

Main Size	Type/Sch.	Spacing (ft)
4"	Sch. 10	60

(TOLBrace™ Version 8) Use of TOLBrace™ is subject to terms and conditions per the end user license agreement

TOLBrace™ Seismic Calculation

HLPUSD Performing Arts Center — Job # -

635 N California Ave

Brace Identification	Riser
Brace Type (Per NFPA#13)	NFPA Type B
Braced Pipe (ft)	4" Sch.10 Steel Pipe
Spacing of Brace	15' 0" (4.57 m)
Orientation of Brace	Riser
Bracing Material	1" Sch.40
Maximum Brace Length	7' 0" (2.13 m)
Slenderness Ratio used for Load Calculation	200
True Angle of Brace for Calculation	45°
Type of Fastener	Wedge Anchor 1/2in. x 3 3/4in. (3,000 PSI Normal Weight Cracked Cor
Length of Fastener	3 3/4in.

Summary of Pipe within Zone of Influence

4" Sch.10 Steel Pipe (101.6 mm)	15 ft (4.6 m)

G-Factor Used 0.803

Allowance for Heads and Fittings	15%
Conclusions	
Total Adjusted Load of Pipe in Zone of Influence	163 lbs (74 kg)
Material Capacity	1310 lbs (594 kg)
Fastener Capacity	650 lbs (295 kg)
Fig. 4L Clamp	707 lbs (321 kg)
Fig.980 - 1/2" Universal Swivel	1485 lbs (674 kg)
Structural Member	12" Masonry Wall

Calculations prepared by Pocock Design Solut

* The description of the Structural Member is for informational purposes only.
TOLBrace™ software calculates the brace assembly only, not the structure it is attached to.
Calculated with TOLBrace™ 8
Visit us at www.tolco.com

TOLBrace™ Seismic Bracing Calculations

V8.8.124

Project Address: HLPUSD Performing Arts Center; 635 N California Ave; La Puente, CA; Job # -

Contractor: Pocock Design Solutions, Inc
Address: 14451 Chambers Rd. Suite 210, Tustin, CA 92780
Phone: 949-417-3903
Licence: M35839

Calculations based on 2016 NFPA Pamphlet #13

Brace Information

Maximum Brace Length	7' 0" (2.134 m)
Diameter of Brace	1"
Type of Brace	Sch.40
Angle of Brace	45° Min.
Least Rad. of Gyration	0.42" (11 mm)
L/R Value	200
Max Horizontal Load	1310 lbs (594 kg)

TOLCO™ Brace Components

TOLCO™ Component	Listed Load	Adjusted Load
Fig. 4L Clamp	1000 lbs (454 kg)	707 lbs (321 kg)
Fig.980 - 1/2" Universal Swivel	2100 lbs (953 kg)	1485 lbs (674 kg)

See Fastener Information

*Calculation Based on CONCENTRIC Loading
*Please Note: These calculations are for TOLCO™ components only. Use of any other components voids these calculations and the listing of the assembly.

Fastener Information

Orientation to Connecting Surface: NFPA Type B

Fastener

Type	Wedge Anchor 1/2in. x 3 3/4in.
Diameter	1/2in.
Length	3 3/4in.
Maximum Load	295 lbs (134 kg)
Prying Factor	1.29

Seismic Brace Assembly Detail

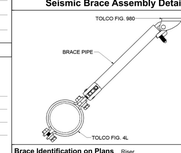

Brace Identification on Plans Riser

Brace Type Lateral [ ] Longitudinal [ ] 4-Way [X]

Sprinkler System Load Calculation (Fpw = CpWp)

Cp = 0.803

Diameter	Type	Length	Total Length	Weight Per Unit Length	Total Weight
4" (100 mm)	Sch. 10	15 ft (4.6 m)	15 ft (4.6 m)	11.78 lb/ft (17.53 kg/m)	177 lbs (80 kg)

Subtotal Weight	177 lbs (80 kg)
Wp (incl. 15%)	204 lbs (92 kg)
Total (Fpw)	163 lbs (74 kg)
Maximum Fpw per 9.3.5.5.2 (if applicable)	N/A

Main Size	Type/Sch.	Spacing (ft)
4"	Sch. 10	15

(TOLBrace™ Version 8) Use of TOLBrace™ is subject to terms and conditions per the end user license agreement

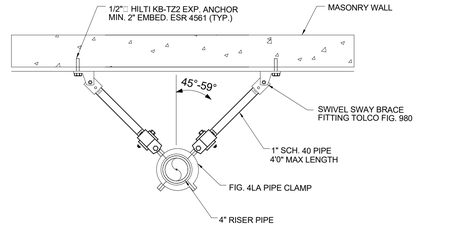

SYMBOL =

TYP. RISER BRACING DETAIL

SCALE NONE — 7

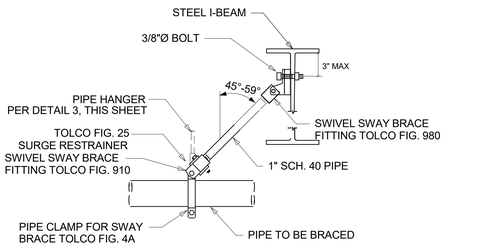

SYMBOL =

TYP. LONGITUDINAL BRACE ATTACHMENT TO STEEL

SCALE NONE — 6

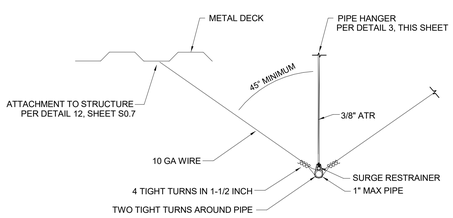

NOTES:
1. LINE RESTRAINT IS NOT REQUIRED WHERE THE DISTANCE FROM THE TOP OF PIPE TO ATTACHMENT TO THE STRUCTURE DOES NOT EXCEED 6" PER NFPA 13 18.6.5.

SYMBOL =

TYP. BRANCHLINE RESTRAINT DETAIL

SCALE NONE — 5

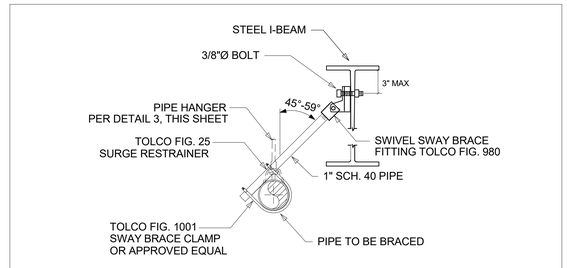

SYMBOL =

TYP. LATERAL BRACE ATTACHMENT TO STEEL

SCALE NONE — 4

HANGER ROD SIZES	
PIPE SIZE	DIAMETER OF ROD
UP TO INCLUDING 4"	3/8"

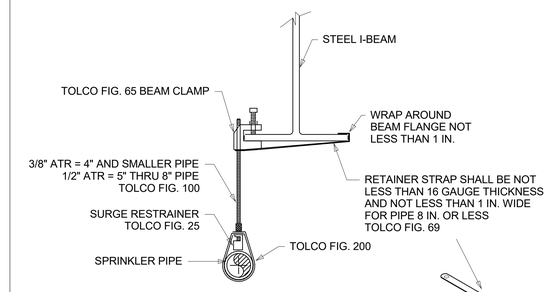

NOTE:
HANG TO TOP OR BOTTOM FLANGE OF BEAM
USE SURGE RESTRAINER AT END OF LINE

SYMBOL =

TYPICAL PIPE SUPPORT DETAIL - STEEL

SCALE NONE — 3

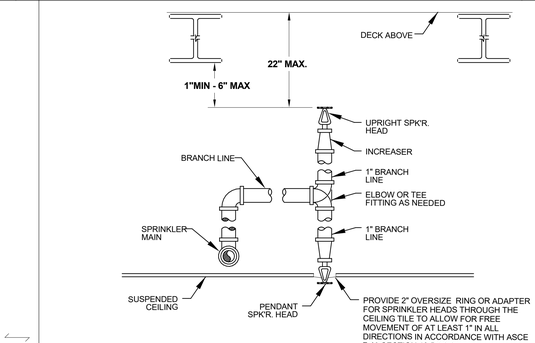

TYPICAL SPRINKLER HEAD DETAIL

SCALE NONE — 2

1. 2" MAIN DRAIN - DRAIN TO HUB DRAIN, SEE PLUMBING DRAWINGS.
2. FINISHED FLOOR
3. 2" ANNULAR CLEARANCE
4. FLEXIBLE COUPLING
5. SPARE HEAD BOX
6. HYDRAULIC CALC PLATE AND GENERAL INFORMATION SIGN
7. 10" ELECTRIC BELL - MOUNTED ON EXTERIOR WALL
8. SUPPLY TO OVERHEAD FIRE SPRINKLER SYSTEM
9. FROM UNDERGROUND FIRE LINE - 6" CLASS 52 DUCTILE IRON PIPE TO 5'-0" OUTSIDE BUILDING FACE.
10. FLANGE 8" ABOVE FINISHED FLOOR
11. AGF TEST anDRAIN - INSPECTOR'S TEST AND DRAIN ASSEMBLY
12. 300# SYSTEM PRESSURE GAGE
13. FLOW SWITCH - WIRED TO FIRE ALARM CONTROL PANEL
14. RISER CHECK VALVE
15. GROOVED 90° ELL
16. 4" FIRE SPRINKLER RISER
17. 4-WAY BRACING TO WALL STRUCTURE, SEE DETAIL 7, THIS SHEET
18. RETAINER GLAND
19. POLYETHYLENE ENCASEMENT
20. 6" SS AMES IN BUILDING RISER 90° ELL
21. THRUST BLOCK - SEE CIVIL PLANS FOR THRUST BLOCK DETAIL.
22. PRESSURE RELIEF VALVE
23. ROUTE MAIN DRAIN TO HUB DRAIN (BY PLUMBING)
24. 6" HUB DRAIN. BY PLUMBING, SEE DETAIL 3, SHEET P501.
25. 300# SUPPLY PRESSURE GAGE

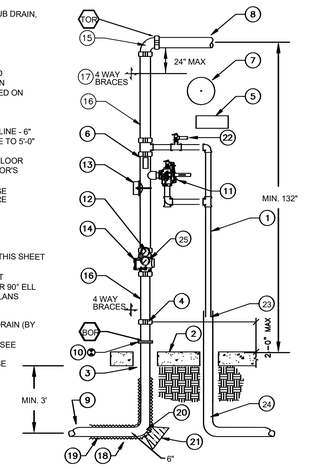

TYPICAL 4" RISER DETAIL

SCALE NONE — 1

TYPICAL BRACING DETAILS

SCALE NONE — 7

C:\Users\sgossman\Documents\KF2_HLPUSD_PAC_Fire Central_andrewgossman.rvt

APPL No. A03-122864

IDENTIFICATION STAMP
DIV. OF THE STATE ARCHITECT
APP: 03-122864 INC:
REVIEWED FOR
SS ☑ FLS ☑ ACS ☑
DATE: 10/03/2023

DSA Stamp

Architect

RACHLIN PARTNERS
8640 National Boulevard
Culver City, CA 90232
310.204.3400

Disclaimer:

THESE DRAWINGS ARE THE PROPERTY OF THE ARCHITECT. THE DESIGNS SHOWN AND DESCRIBED HEREIN INCLUDING ALL TECHNICAL DRAWINGS ARE PROPRIETARY AND CANNOT BE COPIED, DUPLICATED OR COMMERCIALLY EXPLOITED IN ANY WAY. THEY ARE NOT TO BE CHANGED OR ASSIGNED AND SHALL NOT BE USED BY THE OWNER ON OTHER PROJECTS, FOR ADDITIONS TO THIS PROJECT, OR FOR COMPLETION OF THIS PROJECT BY OTHERS. THE OWNER AGREES TO HOLD HARMLESS, INDEMNIFY AND DEFEND THE ARCHITECT AGAINST ALL DAMAGES, CLAIMS AND LOSSES, INCLUDING DEFENSE COSTS, ARISING OUT OF ANY REUSE OF PLANS AND SPECIFICATIONS WITHOUT THE WRITTEN AUTHORIZATION OF THE ARCHITECT OF RECORD.

Copyright © 2022 Rachlin Partners, All Rights Reserved.

PDS
Pocock Design Solutions Inc.

Performing Arts Center

Hacienda La Puente Unified School District
635 North California Avenue
La Puente, CA 91744

Rev	Date	Issue
1	7.22.22	50% DD
2	10.21.22	50% CD
3	12.09.22	100% CD DSA SUBMITTAL
4	6.19.23	100% CD DSA RESUBMITTAL
5	9.20.23	DSA BACK CHECK

Date: 12/09/22
Scale:
Drawn By: PDS
Checked By: AG

Architect / Engineer Stamp

LICENSED ARCHITECT — NO. C-26229 — REN. 8-31-25 — STATE OF CALIFORNIA

REGISTERED PROFESSIONAL ENGINEER — ANDREW R. GOSSMAN — No. M39539 — Exp. 3/31/26 — MECHANICAL — STATE OF CALIFORNIA

Consultants
Miyamoto International, Inc.
The Ruzika Company, Inc.
MDC Consulting Engineers
Pocock Design Solutions
Newson Brown Acoustics, LLC
VCA Engineers, Inc.
HJSA Consulting

Sheet Title

Fire Sprinkler Details

Sheet Number

FS401

GENERAL INTERIOR LIGHTING REQUIREMENTS

1. NOTHING IN THESE SPECIFICATIONS OR IN THE ACCOMPANYING DRAWINGS SHALL BE CONSTRUED AS AUTHORITY OR PERMISSION TO PERFORM WORK CONTRARY TO THE CURRENT PROVISIONS OF THE CODES OR REGULATIONS GOVERNING THE WORK OR TO OTHERWISE VIOLATE LEGAL REQUIREMENTS. THE CONTRACTOR SHALL IMMEDIATELY DRAW ANY SUCH CONFLICTS TO THE ATTENTION OF THE ARCHITECT. REQUIREMENTS SHOWN IN THE DRAWINGS OR SPECIFICATIONS SHALL GOVERN WHERE THEY EXCEED THOSE OF THE CODES OR REGULATIONS.
2. RESPONSIBILITY FOR EMERGENCY LIGHTING, ENERGY CODE COMPLIANCE, AND CIRCUITING TO MEET CODE CONFORMANCE REMAINS WITH THE ARCHITECT AND ELECTRICAL ENGINEER AS REQUIRED BY LAW.
3. LIGHTING FIXTURES:
   A. LUMINAIRES SHALL BE PROVIDED AS DESCRIBED IN THE LIGHTING FIXTURE SCHEDULE. THE MANUFACTURER'S CATALOG NUMBERS OR DESCRIPTIONS INDICATE FIXTURE QUALITY, TYPE AND STYLE, BUT MAY NOT CONVEY ALL REQUIREMENTS. PROVIDE FIXTURES WITH ANY DETAILS NOTED IN FIXTURE DESCRIPTIONS OR ELSEWHERE ON PROJECT DRAWINGS. WHERE A SCHEDULED PART NUMBER APPEARS TO CONFLICT WITH THOSE NOTES, SUBMIT AN RFI TO RESOLVE THE CONFLICT.

B. PRIOR TO ORDERING FIXTURES, THE CONTRACTOR SHALL VERIFY VOLTAGES AND ALL MOUNTING CONDITIONS INCLUDING RECESS DEPTH AND CEILING TYPE AND INFORM THE ARCHITECT AND LIGHTING DESIGN CONSULTANT OF ANY CONFLICTS.

C. THE CONTRACTOR SHALL PROVIDE LIGHTING FIXTURES AND TRACK COMPLETE WITH ALL FITTINGS, HARDWARE, HANGERS, BRACKETS, TRANSFORMERS, CONNECTORS, TRIMS, FLANGES, CLAMPS OR OTHER MISCELLANEOUS COMPONENTS NECESSARY FOR A COMPLETE AND WORKMANLIKE INSTALLATION COMPLIANT WITH THE APPLICABLE CODES.

D. ANY LIGHTING FIXTURES IN FIRE-RATED CEILINGS OR WALLS SHALL BE PROVIDED IN APPROVED FIRE-RATED ENCLOSURES. ALL FIXTURES IN CONDITIONS REQUIRING IC, AIRTIGHT, OR CHICAGO PLENUM HOUSINGS SHALL BE SUPPLIED WITH SUCH HOUSINGS.

E. PENDANT-MOUNTED LUMINAIRES SHALL BE PROVIDED WITH ANY SWIVELS AND RESTRAINTS NECESSARY TO MEET SEISMIC REQUIREMENTS OR TO ACCOMMODATE SLOPED CEILING CONDITIONS. FIXTURES SHALL BE WEIGHTED AS NECESSARY TO HANG IN A LEVEL, BALANCED STATE.

F. IN ORDER TO MAINTAIN PROJECT ENERGY CODE, LEED, OR SIMILAR COMPLIANCE, WHERE THE FIXTURE SCHEDULE INDICATES 'DERATED HOUSING' OR "WATTAGE RESTRICTION LABEL', THAT FIXTURE TYPE SHALL BE PROVIDED WITH A FACTORY-INSTALLED, PRE-PRINTED LABEL INDICATING THAT MAXIMUM WATTAGE AND WITH ANY OTHER PROVISIONS REQUIRED BY THE APPLICABLE JURISDICTION.

G. ALL FIXTURES SHALL HAVE APPROPRIATE UL LABEL AND CONFORM TO TITLE 24, IF REQUIRED, FOR PERFORMANCE, SWITCHING, AND WIRING.

4. LAMPS:
   A. UNLESS OTHERWISE NOTED, PROVIDE LAMPS MANUFACTURED BY SYLVANIA, PHILIPS OR GENERAL ELECTRIC. PROVIDE LED RETROFIT LAMPS MANUFACTURED BY SORAA, USHIO, PHILIPS, OR LSG. WHERE LAMPS BY ANOTHER MANUFACTURER ARE PROPOSED AS SUBSTITUTES, THE CONTRACTOR SHALL LIST UNIT PRICES FOR THE SCHEDULED LAMP AND FOR THE PROPOSED SUBSTITUTE.

B. FURNISH 5% SPARES FOR ALL SCHEDULED LAMP TYPES. SPARE LAMPS SHALL BE AVAILABLE AND ON-SITE AT THE TIME OF SCHEDULED FOCUS AIMING AND ADJUSTMENT SESSIONS, AND SHALL BE TURNED OVER TO THE OWNER'S OPERATIONS STAFF AS MAINTENANCE STOCK AT SUBSTANTIAL COMPLETION.

C. PRIOR TO FOCUS AIMING AND ADJUSTMENT, INCANDESCENT OR HALOGEN LAMPS SHALL NOT BE OPERATED AS CONSTRUCTION WORK LIGHT AND SHALL ONLY BE OPERATED AS NECESSARY FOR TESTING OR PUNCH LIST INSPECTIONS.

5. OPTICAL ACCESSORIES:
   A. THE CONTRACTOR SHALL PROVIDE ALL SCHEDULED ACCESSORIES PROPERLY SIZED FOR THE LUMINAIRE AND SECURELY ATTACHED. UNLESS OTHERWISE NOTED, ACCESSORIES SHALL BE INSTALLED PRIOR TO THE FOCUS AIMING AND ADJUSTMENT SESSIONS.

B. BEAM-SHAPING LENSES SHALL MEET THE BASIS-OF-DESIGN SPECIFICATIONS LISTED BELOW OR SHALL BE AN APPROVED LENS BY THE LUMINAIRE MANUFACTURER.
   1) FROSTED: 1/8" OR 3/16", SANDBLASTED ONE SIDE TO 70% TRANSMISSION.
   2) UNIFORMITY: 1/8" WITH STIPPLED PATTERN, EQUIVALENT TO "SOLITE" AS MANUFACTURED BY ABRISA.
   3) LINEAR SPREAD: 5/32" WITH PRISMATIC RIDGES ONE SIDE, EQUIVALENT TO "SKYTEX" AS MANUFACTURED BY ABRISA.
   4) OVERALL SPREAD: 5/32" OR 3/16" WITH UNIFORM PRISMS ONE SIDE, EQUIVALENT TO "INDUSTREX" AS MANUFACTURED BY ABRISA.

C. HEX-CELL OR CUBE-CELL LOUVERS: MATTE-BLACK EXPANDED ALUMINUM MESH INSERT DESIGNED TO REDUCE GLARE CAUSED BY DIRECT VIEW OF THE LIGHT SOURCE. 1/8" DEEP WITH 1/8" OPENINGS FOR MR16, PAR20 OR SMALLER LAMPS; 3/8" DEEP WITH 3/8" OPENINGS FOR PAR30, PAR38 OR LUMINAIRES WITH SIMILAR LENS SIZE; OTHER SIZES ACCORDING TO APPLICATION.

D. FILTERS SHALL MEET THE BASIS-OF-DESIGN SPECIFICATIONS LISTED BELOW OR SHALL BE THE PRODUCT SCHEDULED ON THE PROJECT DRAWINGS.
   1) DICHROIC COLOR FILTERS: MINIMUM 3MM BOROFLOAT GLASS WITH VACUUM-DEPOSITED METAL FILMS ON ONE SIDE, SUITABLE FOR OPERATING TEMPERATURES UP TO 400°F. THE RANGE OF AVAILABLE HUES SHALL BE EQUIVALENT TO THE DICHROIC FILTER OFFERING OF LEE FILTERS, ROSCO LABORATORIES OR APOLLO DESIGN TECHNOLOGY.

6. DIMMING, BALLASTS, DRIVERS AND TRANSFORMERS:
   A. UNLESS NOTED OTHERWISE, DIMMING BALLASTS SHALL BE PROVIDED IN TWO-WIRE, 5% MINIMUM CONFIGURATIONS COMPATIBLE WITH PHASE SENSITIVE DIMMERS, STANDARD SCR DIMMERS, LUTRON TU-WIRE, ADVANCE MARK X OR APPROVED EQUAL.
   B. THE ELECTRICAL CONTRACTOR AND LIGHTING SYSTEMS INTEGRATOR SHALL REVIEW THE ELECTRICAL COMPONENTS FOR ALL LUMINAIRES SHOWN CONNECTED TO DIMMERS AND PROVIDE ANY NECESSARY DIMMING MODULES, COMPONENTS AND/OR EXTRA CONDUCTORS NECESSARY FOR PROPER DIMMING OPERATION.

C. WHERE BALLASTS, DRIVERS OR TRANSFORMERS ARE MOUNTED REMOTE FROM THE FIXTURE HOUSING, PROVIDE A SUITABLE ENCLOSURE WITHIN THE RECOMMENDED DISTANCE, WITH NEOPRENE PADS TO ISOLATE VIBRATION NOISE FOR MAGNETIC TRANSFORMERS OR BALLASTS.

7. SUBMITTALS
   A. CONTRACTOR TO PROVIDE A COMPLETE PACKAGE OF FIXTURE SUBMITTALS OF ALL LIGHTING PRODUCTS INTENDED TO BE FURNISHED FOR APPROVAL BY LIGHTING DESIGN CONSULTANT AND OWNER. SUBMITTALS ARE TO BE PROVIDED PRIOR TO ORDERING OR PURCHASE OF FIXTURES. SHOULD THE CONTRACTOR ANTICIPATE THAT THE DELIVERY SCHEDULE OF ANY SPECIFIED PRODUCT MIGHT ADVERSELY IMPACT THE CONSTRUCTION SCHEDULE, IT SHALL BE BROUGHT TO THE ATTENTION OF THE OWNER AT THIS TIME.
   B. SHOP DRAWINGS
      1) FOR LUMINAIRES THAT ARE NOT STANDARD CATALOG ITEMS WITH DATASHEETS PROVIDING SIMILAR DETAILS, SUBMIT MANUFACTURER'S SHOP DRAWINGS INDICATING OVERALL DIMENSIONS, DETAIL AND APERTURE DIMENSIONS, FINISHES, MATERIALS AND THICKNESSES, LENS OR DIFFUSER TYPES AND THICKNESSES, LAMP HOLDERS, LOCKING MECHANISMS FOR ADJUSTABLE LUMINAIRES, SHIELDING, TRIM, REFLECTOR AND GASKET DETAILS, METHOD OF RE-LAMPING ACCESS, MECHANICAL AND ELECTRICAL CONNECTIONS, AND ALL OTHER INFORMATION REQUIRED TO EVALUATE THE LUMINAIRE.
   C. ALTERNATE PRODUCTS OTHER THAN THOSE SPECIFIED BY NAME AND MODEL NUMBER WILL NOT BE CONSIDERED WITHOUT PRIOR WRITTEN CONSENT FROM THE LIGHTING DESIGN CONSULTANT.
   D. SAMPLES
      1) WHERE SUBSTITUTION IS PROPOSED FOR A FAMILY OF FIXTURES SHARING A COMMON PLATFORM AND WHERE MULTIPLE FIXTURE TYPES CAN BE ACCURATELY REPRESENTED BY SWAPPING TRIMS, LAMPS OR ACCESSORIES WITHOUT THE USE OF TOOLS, A SINGLE FIXTURE SAMPLE MAY BE SUBMITTED ALONG WITH ALL OF THE RELEVANT TRIMS, LAMPS AND ACCESSORIES, CLEARLY LABELED, WITH ANY NECESSARY ASSEMBLY INSTRUCTIONS AND WITH A TABLE INDICATING WHICH ACCESSORIES ARE TO BE USED FOR EACH FIXTURE TYPE.
      2) FIXTURES INSTALLED AS PART OF THE WORK SHALL BE IDENTICAL TO THE APPROVED SAMPLE. THE SAMPLES THEMSELVES SHALL NOT BE INSTALLED ON THE PROJECT.
      3) IN THE EVENT THAT THE SUBMITTED SAMPLES ARE DISAPPROVED, THE FIXTURES WILL BE RETURNED TO THE CONTRACTOR TO IMMEDIATELY MAKE A NEW SUBMITTAL OF A FIXTURE OR FIXTURE MEETING THE REQUIREMENTS.
      4) ALL SHIPPING CHARGES (ROUND-TRIP) ARE TO BE PRE-PAID BY THE CONTRACTOR.

8. MOCKUPS
   A. THE CONTRACTOR SHALL PREPARE MOCKUPS ACCORDING TO THE DIRECTION OF THE ARCHITECT, INTERIOR DESIGNER AND LIGHTING DESIGN CONSULTANT FOR THE FOLLOWING APPLICATIONS:
      1) INTERNALLY LIT OR BACKLIT FEATURES.
      2) LIGHTING OF ART OR MEMORABILIA.
      3) SPECIAL EFFECTS LIGHTING.
      4) UNIQUE COVE LIGHTING CONDITIONS, BOTH HORIZONTAL AND VERTICAL CONFIGURATIONS.
      5) EXTERIOR FACADE LIGHTING OF UNIQUE ARCHITECTURAL DETAILS. MOCKUPS ARE TO BE PRESERVED AND PROTECTED UNTIL SUBSTANTIAL COMPLETION, UNLESS OTHERWISE DIRECTED IN WRITING BY THE ARCHITECT.

9. LIGHTING FIXTURE PRICING AND SUBSTITUTIONS
   A. THE CONTRACTOR SHALL BASE LIGHTING FIXTURE BIDS ON THE MANUFACTURERS LISTED IN THE FIXTURE SCHEDULE.
   B. ANY SUBMITTALS FOR COST-REDUCTION OR VALUE-ENGINEERING ALTERNATES SHALL INCLUDE A TABLE LISTING FIXTURE TYPE, SCHEDULED MANUFACTURER AND PART NUMBER, UNIT PRICE FOR THE SCHEDULED PRODUCT, PROPOSED ALTERNATE PRODUCT, AND UNIT PRICING FOR THE PROPOSED ALTERNATE.
   C. ALL REQUIRED UNIT PRICING SHALL BE CONTRACTOR NET, AND SHALL LIST EQUIPMENT PRICES SEPARATE FROM THOSE FOR INSTALLATION OR MISCELLANEOUS ELECTRICAL COSTS.
   D. THE CONTRACTOR SHALL SUBMIT OPERABLE FIXTURE SAMPLES FOR FIXTURE TYPES FOR WHICH A SUBSTITUTE IS PROPOSED, CONCURRENT WITH THE INITIAL SUBMITTAL OF FIXTURE DATA OR SHOP DRAWINGS. THE CONTRACTOR MAY, IN ADVANCE, SUBMIT A LIST OF THOSE PROPOSED ALTERNATES TO THE ARCHITECT AND LIGHTING DESIGN CONSULTANT TO DETERMINE IF THE SAMPLE REQUIREMENT MAY BE WAIVED FOR ANY OF THOSE FIXTURE TYPES.

10. INSTALLATION
   A. FIELD-VERIFY THAT ANY FIXTURES NOTED AS 'CONCEALED' ARE SHIELDED FROM VIEW FOLLOWING INSTALLATION OF THE FIRST ARTICLE. CONTACT THE ARCHITECT AND LIGHTING DESIGN CONSULTANT IF CONCEALMENT IS DISCOVERED TO BE IMPOSSIBLE AS DETAILED.
   B. VERIFY MOUNTING LOCATIONS AND HEIGHTS OF ALL DECORATIVE FIXTURES WITH THE ARCHITECT OR INTERIOR DESIGNER PRIOR TO INSTALLATION.

11. PUNCH LISTS
   A. PRIOR TO INITIAL PUNCH LIST VISIT BY THE LIGHTING DESIGN CONSULTANT THE CONTRACTOR SHALL VERIFY THAT THE FOLLOWING ITEMS ARE COMPLETED.
      1) ALL FIXTURES AND TRIMS HAVE BEEN CLEANED PER MANUFACTURER'S RECOMMENDATIONS TO REMOVE DUST, DIRT, PAINT, FINGERPRINTS, ETC.
      2) THE PROPER LAMPS, LENSES, AND ACCESSORIES HAVE BEEN INSTALLED PER THE FIXTURE SCHEDULE AND APPROVED SUBMITTALS.
      3) ALL TRIMS HAVE BEEN INSTALLED.
      4) ALL FIXTURES ARE FULLY OPERABLE AND THE FIXTURES HAVE BEEN ENERGIZED.
      5) ALL PORTIONS OF THE CONTROL, SWITCHING, AND DIMMING SYSTEMS ARE FULLY OPERABLE AND HAVE BEEN CONFIGURED FOR BASIC CHANNEL ASSIGNMENTS.

12. FOCUS AIMING AND ADJUSTMENTS
   A. THE CONTRACTOR SHALL PROVIDE ALL NECESSARY LABOR, LIFTS, LADDERS AND OTHER MATERIALS REQUIRED TO AIM AND ADJUST LIGHTING FIXTURES ACCORDING TO THE LIGHTING DESIGN CONSULTANT'S INTENT AND UNDER THE CONSULTANT'S OBSERVATION. CREWS PROVIDED TO WORK WITH THE CONSULTANT SHOULD BE ABLE TO COMMUNICATE EFFECTIVELY IN ENGLISH.
   B. AT MINIMUM, ALLOW 3 TO 5 MINUTES TIME TO AIM EACH ADJUSTABLE LIGHTING FIXTURE, PLUS ADDITIONAL TIME AS REQUIRED TO RELOCATE LADDERS. ALLOW ADDITIONAL TIME WHERE HIGH-REACH LIFTS ARE REQUIRED, OR WHERE OBSTRUCTIONS INTERFERE WITH ACCESS.
   C. PRIOR TO AIMING AND ADJUSTMENT, THE CONTRACTOR SHALL VERIFY THAT:
      1) ALL FIXTURES ARE INSTALLED AND OPERABLE.
      2) THE SCHEDULED LAMP HAS BEEN INSTALLED IN EACH FIXTURE, INCLUDING WATTAGE, BEAM SPREAD AND COLOR TEMPERATURE.
      3) ANY SCHEDULED ACCESSORIES INCLUDING LENSES, LOUVERS AND COLOR FILTERS HAVE BEEN INSTALLED.
      4) SPARES ARE AVAILABLE ON-SITE FOR EACH LAMP TYPE.
      5) THE CREW IS EQUIPPED WITH ANY NECESSARY TOOLS NECESSARY TO ACCESS, ADJUST AND SECURE ALL FIXTURE TYPES.
      6) ANY PERSONNEL LIFTS TO BE USED ARE OPERABLE AND, IF BATTERY-OPERATED, FULLY CHARGED.
      7) ANY NECESSARY PROTECTIVE MATERIALS ARE IN PLACE AT FLOORS WHERE LADDERS OR LIFTS ARE TO BE USED.
   D. THE CONTRACTOR SHALL CONTACT THE ARCHITECT AND LIGHTING DESIGN CONSULTANT AT LEAST TWO WEEKS IN ADVANCE TO COORDINATE AND SCHEDULE FOCUS AIMING AND ADJUSTMENT SESSIONS. WORK AT EXTERIORS OR AT INTERIOR LOCATIONS RECEIVING SIGNIFICANT AMOUNTS OF DAYLIGHT SHALL BE SCHEDULED TO OCCUR AFTER DUSK. THE GENERAL WORK OF THE PROJECT SHALL BE COORDINATED SO THAT INCOMPATIBLE WORK IS NOT SCHEDULED DURING THE SESSIONS, AND SO THAT ALL NECESSARY AREAS OF THE PROJECT ARE ACCESSIBLE DURING THE SESSIONS.

13. PAINTING
   A. IN ORDER TO PREVENT DAMAGE TO TRIMS AND ADJACENT FINISHES DURING MAINTENANCE OR ADJUSTMENT, DOWNLIGHT TRIMS AND SIMILAR COMPONENTS SHALL NOT BE INSTALLED UNTIL PAINT, PLASTER, STUCCO OR OTHER TREATMENT AT THE FINISH SURFACE HAS BEEN APPLIED AND ALLOWED TO DRY THOROUGHLY, OR TRIMS SHALL BE TEMPORARILY REMOVED AND SET ASIDE WHILE SUCH TREATMENT IS APPLIED AND ALLOWED TO DRY THOROUGHLY.
   B. WHERE THE DRAWINGS OR SCHEDULE NOTES THAT A TRIM IS TO BE PAINTED TO MATCH THE ADJACENT FINISH, THE EXPOSED SURFACE OF THE TRIM RING, PINHOLE APERTURE, OR SLOT APERTURE TRIM PARALLEL TO THE PLANE OF THE INSTALLATION SURFACE AND INCLUDING THE RETURN TO THE SURFACE AT ITS OUTER EDGE SHALL BE CLEANED, PRIMED, PAINTED AND ALLOWED TO DRY PRIOR TO ITS INSTALLATION. WHERE THAT NOTE IS APPLIED TO SELF-FLANGED REFLECTOR TRIMS, THE CONE SHALL BE MASKED AND PROTECTED FROM THE POINT WHERE IT MEETS THE INSIDE CIRCUMFERENCE OF THE FLANGE.
   C. ANY SCREWS, FASTENERS OR OTHER HARDWARE, WHICH MUST BE MANIPULATED FOR FIXTURE ADJUSTMENT OR MAINTENANCE, SHALL BE PROTECTED FROM BEING FIXED IN PLACE BY PAINT.

14. PRIOR TO SUBSTANTIAL COMPLETION, ALL EXPOSED COMPONENTS SHALL BE CLEANED ACCORDING TO THE MANUFACTURER'S INSTRUCTIONS TO REMOVE ALL DUST, PAINT, FINGERPRINTS OR OTHER DEBRIS OR RESIDUE FROM ADJACENT WORK.

CONTROL DEVICE LEGEND

ZONE / X / XXXX	CONTROL ZONE TAG POWER CONTROL METHOD (DIMMER/RELAY/CONSTANT) CONTROL LEGS REQUIRED (DMX/0-10V/3-WIRE)
$	LOCAL SWITCH
	CONTROL STATION
	CONTROL RECEPTACLE STATION
DEVICE ID / TYPE	CONTROL DEVICE TAG
DC DIM / TRANS	LED DIMMING CONTROLLER TO TRANSFORMER/POWER SUPPLY. REQUIRES 0-10V CONTROL SIGNAL.
CLD / WATTAGE LIMIT	TRACK CURRENT LIMITER
xx	KEYNOTE
1	REVISION

LIGHTING SYMBOL LEGEND

RECESSED DOWNLIGHT
RECESSED ADJUSTABLE DOWNLIGHT
RECESSED WALLWASHER (OPEN SIDE LIT)
RECESSED SHOWER LIGHT
PENDANT OR CLOSE-CEILING MOUNTED FIXTURE
SURFACE-MOUNTED ACCENT LIGHT
TRACK-MOUNTED ACCENT LIGHT
WALL-MOUNTED FIXTURE
RECESSED FLUORESCENT 2X2, 2X4, ETC.
SURFACE-MOUNTED FLUORESCENT 2X2, 2X4, ETC.
PENDANT-MOUNTED LINEAR FLUORESCENT
FLUORESCENT STRIPLIGHT
STEPLIGHT
INGRADE UPLIGHT
FLOODLIGHT
BOLLARD
POLE LIGHT
LOW-VOLTAGE STRIPLIGHT
COLD-CATHODE STRIPLIGHT
NEON LAMP
LINEAR FIBER-OPTIC SYSTEM
LINEAR LED SYSTEM
MULTI-HEAD RECESSED TROUGH FIXTURE

FIXTURE NAMING LEGEND

D 1 N A

A-ADJUSTABLE
D- DOWNLIGHT
F- FLUORESCENT
L- LINEAR LED
P- PENDANT
S- SURFACE
T- TRACK
U- IN-GRADE UPLIGHT
V- LOW VOLTAGE STRIP
W- SCONCE
X- FIBER
Z- MISC/SPECIALTY
DP- DECORATIVE PENDANT
DW- DECORATIVE WALL MOUNT
SL- STEP LIGHTS
TH- THEATRICAL FIXTURES
AA- EXTERIOR ACCENT LIGHT
BB- EXTERIOR BOLLARD
PP- POLE
UU- EXTERIOR IN-GRADE UPLIGHT

F- FLOOD 36DEG-59DEG
N- NARROW SPOT 20DEG - 35DEG
S- SPOT 10DEG-19DEG
W- WIDE FLOOD 60DEG-120DEG
V- VERY NARROW SPOT 2DEG-9DEG

A-D DIFFERENT FINISH- ETC

THE LT SERIES OF DRAWINGS ARE FOR DESIGN INTENT ONLY. REFER TO ELECTRICAL DRAWINGS FOR CONDUIT AND WIRING REQUIREMENTS.

ALL WORK SHALL BE IN CONFORMANCE WITH TITLE 24, 2019 CALIFORNIA CODE OF REGULATIONS (CCR), 2019 CALIFORNIA BUILDING CODE, PART 2, TITLE 24 CCR, 2019 CALIFORNIA ELECTRICAL CODE, PART 3, TITLE 24 CCR. CUTTING, BORING, SAWCUTTING OR DRILLING THROUGH NEW OR EXISTING STRUCTURAL ELEMENTS TO BE DONE ONLY WHEN SO DETAILED IN THE DRAWINGS OR ACCEPTED BY THE ARCHITECT OR DSA REPRESENTATIVE.

MEP COMPONENT ANCHORAGE.

ALL MECHANICAL, PLUMBING AND ELECTRICAL COMPONENTS SHLL BE ANCHORED AND INSTALLED PER THE DETAILS ON THE DSA APPROVED CONSTRUCTION DOCUMENTS.

THE FOLLOWING COMPONENTS SHALL BE ANCHORED OR BRACED TO MEET THE FORCE AND DISPLACEMENT REQUIREMENTS PRESCRIBED IN THE 2019 CBC SECTIONS 1617A.1.18 THROUGH 1617A.1.26 AND ASCE 7-16 CHAPTERS 13, 26 AND 30:

1. ALL PERMANENT EQUIPMENT AND COMPONENTS.

2. TEMPORARY, MOVABLE OR MOBILE EQUIPMENT THAT IS PERMANENTLY ATTACHED (E.G. HARD WIRED) TO THE BUILDING UTILITY SERVICES SUCH AS ELECTRICITY, GAS OR WATER. "PERMANENTLY ATTACHED" SHALL INCLUDE ALL ELECTRICAL CONNECTIONS EXCEPT PLUGS FOR 110/220 VOLT RECEPTACLES HAVING A FLEXIBLE CABLE.

3. TEMPORARY, MOVABLE, OR MOBILE EQUIPMENT WHICH IS HEAVIER THAN 400 LBS OR HAS A CENTER OF MASS LOCATED 4 FEET OR MORE ABOVE THE ADJACENT FLOOR OR ROOF LEVEL THAT DIRECTLY SUPPORTS THE COMPONENT IS REQUIRED TO BE RESTRAINED IN A MANNER APPROVED BY DSA.

THE FOLLOWING MECHANICAL AND ELECTRICAL COMPONENTS SHALL BE POSITIVELY ATTACHED TO THE STRUCTURE BUT NEED NOT DEMONSTRATE DESIGN COMPLIANCE WITH THE REFERENCES NOTED ABOVE. THESE COMPONENTS SHALL HAVE FLEXIBLE CONNECTIONS PROVIDED BETWEEN THE COMPONENT AND ASSOCIATED DUCTWORK, PIPING AND CONDUIT. FLEXIBLE CONNECTIONS MUST ALLOW MOVEMENT IN BOTH TRANSVERSE AND LONGITUDINAL DIRECTIONS.

A. COMPONENTS WEIGHING LESS THAN 400 LBS AND HAVING A CENTER OF MASS LOCATED 4 FEET OR LESS ABOVE THE ADJACENT FLOOR OR ROOF LEVEL THAT DIRECTLY SUPPORTS THE COMPONENT.

B. COMPONENTS WEIGHING LESS THAN 20 LBS, OR IN CASE OF DISTRIBUTED SYSTEMS, LESS THAN 5 POUNDS PER FOOR, WHICH ARE SUSPENDED FROM A ROOF OR FLOOR OR HUNG FROM A WALL.

THE ANCHORAGE OF ALL MECHANICAL, ELECTRICAL AND PLUMBING COMPONENTS SHALL BE SUBJECT TO THE APPROVAL OF THE DESIGN PROFESSIONAL IN GENERAL RESPONSIBLE CHARGE OR THE STRUCTURAL ENGINEER DELEGATED RESPONSIBILITY AND ACCEPTANCE BY DSA. THE PROJECT INSPECTOR WILL VERIFY THAT ALL COMPONENTS AND EQUIPMENT HAVE BEEN ANCHORED IN ACCORDANCE WITH THE ABOVE REQUIREMENTS.

PIPING, DUCTWORK AND ELECTRICAL DISTRIBUTION SYSTEM BRACING

PIPEING, DUCTWORK, AND ELECTRICAL DISTRIBUTION SYSTEMS SHALL BE BRACED TO COMPLY WITH THE FORCES AND DISPLACEMENTS PRESCRIBED IN ASCE 7-16 SECTION 13.3 AS DEFINED IN ASCE SECTIONS 13.6.5, 13.6.6, 13.6.7, 13.6.8, AND 2019 CBC SECTIONS 1617A.1.24, 1617A.1.25 AND 1617A.1.26.

THE METHOD OF SHOWING BRACING AND ATTACHMENTS TO THE STRUCTURE FOR THE IDENTIFIED DISTRIBUTION SYSTEM ARE AS NOTED ON SHEET E001. WHEN BRACING AND ATTACHMENTS ARE BASED ON A PREAPPROVED INSTALLATION GUIDE (E.G. OSHPD OPM FOR 2013 CBC OR LATER), COPIES OF THE BRACING SYSTEM INSTALLATION GUIDE OR MANUAL SHALL BE AVAILABLE ON THE JOBSITE PRIOR TO THE START OF AND DURING THE HANGING AND BRACING OF THE DISTRIBUTION SYSTEMS. THE STRUCTURAL ENGINEER OF RECORD SHALL VERIFY THE ADEQUACY OF THE STRUCTURE TO SUPPORT THE HANGER AND BRACE LOADS.

DRAWING INDEX

SHEET NUMBER	SHEET TITLE
LIGHTING	
LT000	LIGHTING COVER SHEET
LT011	LIGHTING FIXTURE SCHEDULE
LT012	LIGHTING FIXTURE SCHEDULE
LT031	LIGHTING CONTROL ZONE SCHEDULE
LT210	LIGHTING PLAN - LOW LEVEL
LT211	LIGHTING PLAN - MAIN LEVEL RCP
LT212	LIGHTING PLAN - MEZZANINE LEVEL RCP
LT213	LIGHTING PLAN - CATWALK LEVELS
LT701	LIGHTING ELEVATIONS

APPL No. A03-122864

IDENTIFICATION STAMP
DIV. OF THE STATE ARCHITECT
APP: 03-122864 INC:
REVIEWED FOR
SS ☑ FLS ☑ ACS ☑
DATE: 10/03/2023

DSA Stamp

Architect

RACHLIN PARTNERS
8640 National Boulevard
Culver City, CA 90232
310.204.3400

Disclaimer:

THESE DRAWINGS ARE THE PROPERTY OF THE ARCHITECT. THE DESIGNS SHOWN AND DESCRIBED HEREIN INCLUDING ALL TECHNICAL DRAWINGS ARE PROPRIETARY AND CANNOT BE USED, DUPLICATED OR COMMERCIALLY EXPLOITED IN ANY MANNER WHATSOEVER WITHOUT PRIOR WRITTEN CONSENT. SHALL NOT BE USED BY THE OWNER ON OTHER PROJECTS, FOR ADDITIONS TO THIS PROJECT, OR FOR COMPLETION OF THIS PROJECT BY OTHERS. THE OWNER AGREES TO HOLD HARMLESS, INDEMNIFY AND DEFEND THE ARCHITECT AGAINST ALL DAMAGES, CLAIMS AND LOSSES, INCLUDING DEFENSE COSTS, ARISING OUT OF ANY REUSE OF PLANS AND SPECIFICATIONS WITHOUT THE WRITTEN AUTHORIZATION OF THE ARCHITECT OF RECORD.

Copyright © 2019 Rachlin Partners, All Rights Reserved.

THE RUZIKA COMPANY
2 Executive Circle, Suite 290
Irvine, California 92614
Ph (949) 253-3479 Fax (949) 253-0181
www.ruzika.com
LIGHTING DESIGNERS + THEATRE CONSULTANTS

HACIENDA PERFORMING ARTS CENTER
Hacienda La Puente Unified School District
635 North California Avenue
La Puente, CA 91744

Rev	Date	Issue
1	7.22.22	50% DD
2	10.21.22	50% CD
3	12.09.22	100% CD DSA SUBMITTAL
4	6.19.23	100% CD DSA RESUBMITTAL
5	9.20.23	DSA BACK CHECK

Date: 9.20.2023
Scale:
Drawn By: TRC
Checked By: Checker

Architect / Engineer Stamp

LICENSED ARCHITECT — RICHARD RACHLIN — NO. C-20229 — REN. 8-31-25 — STATE OF CALIFORNIA

Consultants

VCA Engineers, Inc.
R.M. Byrd and Associates, Inc.
ALM Consulting Engineers, Inc.
MDC Consulting Engineers
Protection Design and Consulting
The Ruzika Company

Sheet Title

LIGHTING COVER SHEET

Sheet Number

LT000

C:\Users\shawn.ruzika\Documents\Hacienda Theatrical_R22_sfdlar.rvt

LIGHTING FIXTURE SCHEDULE

FIXTURE TYPE	DESCRIPTION	FINISH	MOUNTING	MANUFACTURER PRODUCT CODE	LIGHT SOURCE	POWER SUPPLY	FIXT. WATTS (EACH OR PER FOOT)	INPUT WATTS (EACH OR PER FOOT)	FIXTURE VOLTAGE	CONTROL METHOD	DESIGNED REQUIRED MINIMUM DIMMING RANGE	LOCATION	FIXTURE NOTES
D1F	RECESSED LED DOWNLIGHT WITH 4" APERTURE, 2700K, 500 LUMEN OUTPUT, DRIVER FOR USE WITH NLIGHT WIRED CONTROL SYSTEM, MEDIUM OPTICS, AND SLOPE CEILING ADAPTER	CLEAR	RECESSED	GOTHAM LIGHTING EVO4-27/05-AR-LSS-MD-120-EZB-NLT-90CRI, SCA4-xd OR APPROVED EQUAL BY INTENSE, PORTFOLIO VERIFY CONTROL INTERFACE REQUIREMENTS	INTEGRAL LED BEAM: 50° CCT: 2700K CRI: 90 LUMENS: 500	INTEGRAL	7.2	7.2	120/277V	NLIGHT	10%	FOH RESTROOM	HOUSING SIZE: 9.75"X9.125"x6.625"H FIXTURE WEIGHT: 12 LBS
D1Wa	RECESSED LED DOWNLIGHT WITH 4" APERTURE, 2700K, 500 LUMEN OUTPUT, 0-10V DRIVER, AND MEDIUM-WIDE OPTICS	CLEAR	RECESSED	GOTHAM LIGHTING EVO4-27/05-AR-LSS-MWD-120-EZ1-90CRI OR APPROVED EQUAL BY INTENSE, PORTFOLIO	INTEGRAL LED BEAM: 50° CCT: 2700K CRI: 90 LUMENS: 500	INTEGRAL	7.2	7.2	120/277V	0-10V	1%	SOUND/LIGHT LOCKS	HOUSING SIZE: 9.75"X9.125"x6.625"H FIXTURE WEIGHT: 12 LBS
D1Wb	RECESSED LED DOWNLIGHT WITH 4" APERTURE, 3000K, 500 LUMEN OUTPUT, 0-10V DRIVER, AND MEDIUM-WIDE OPTICS	CLEAR	RECESSED	GOTHAM LIGHTING EVO4-30/05-AR-LSS-MWD-120-EZ1-90CRI OR APPROVED EQUAL BY INTENSE, PORTFOLIO	INTEGRAL LED BEAM: 65° CCT: 3000K CRI: 90 LUMENS: 500	INTEGRAL	7.2	7.2	120/277V	0-10V	1%	BOH SOFFIT	HOUSING SIZE: 9.75"X9.125"x6.625"H FIXTURE WEIGHT: 12 LBS
D2	RECESSED LED DOWNLIGHT WITH 4" APERTURE, 2700K, 1500 LUMEN OUTPUT, 0-10V DRIVER, AND WIDE OPTICS	CLEAR	RECESSED	GOTHAM LIGHTING EVO4-27/15-AR-LSS-MWD-120-EZ1-90CRI OR APPROVED EQUAL BY INTENSE, PORTFOLIO	INTEGRAL LED BEAM: 65° CCT: 2700K CRI: 90 LUMENS: 1500	INTEGRAL	15.1	15.1	120/277V	0-10V	10%	LOBBY SOFFIT	HOUSING SIZE: 9.75"X9.125"x6.625"H FIXTURE WEIGHT: 12 LBS
D3	RECESSED LED WALLWASHER WITH 4" APERTURE, 2700K, 500 LUMEN OUTPUT, 0-10V DRIVER	CLEAR	RECESSED	GOTHAM LIGHTING EVO4LW-27/05-AR-LSS-120-EZ10-90CRI OR APPROVED EQUAL BY INTENSE, PORTFOLIO	INTEGRAL LED CCT: 2700K CRI: 90 LUMENS: 500	INTEGRAL	6.9	6.9	120/277V	0-10V	10%	LOBBY FEATURE WALL	HOUSING SIZE: 9.75"X9.125"x6.625"H FIXTURE WEIGHT: 12 LBS
D4	RECESSED LED DOWNLIGHT WITH 4" APERTURE, 2700K, 2000 LUMEN OUTPUT, 0-10V DRIVER, AND 40° OPTICS	CLEAR	RECESSED	GOTHAM ICO 27/20-4AR-LSS-40D-120-EZ10	INTEGRAL LED BEAM: 40° CCT: 2700K CRI: 92 LUMENS: 2000	INTEGRAL	21.5	21.5	120/277V	0-10V	10%	LOBBY	HOUSING SIZE: 11.5"X6.5"X 7"H FIXTURE WEIGHT: 15 LBS
D5	LED DOWNLIGHT WITH 4" APERTURE, LENSED WALLWASH OPTIC, AND 0-10V DRIVER	CLEAR	RECESSED	GOTHAM LIGHTING EVO4LW-27/10-AR-LSS-120-EZ10-90CRI OR APPROVED EQUAL BY INTENSE, PORTFOLIO	INTEGRAL LED BEAM: 40° CCT: 2700K CRI: 92 LUMENS: 1000	INTEGRAL	8.8	8.8	120/277V	0-10V	10%	LOBBY	HOUSING SIZE: 9.75"X9.125"x6.625"H FIXTURE WEIGHT: 12 LBS
F1	48" LED UTILITY STRIPLIGHT WITH 3500K, 5000 LUMEN OUTPUT AND DROP LENS.		SURFACE	LITHONIA ZL1D-L48-5000LM-FST-MVOLT-35K-80CRI OR EQUAL BY METALUX, WILLIAMS	INTEGRAL LED CCT: 3500K CRI: 82 LUMENS: 5000	INTEGRAL	42	42	120/277V	RELAY (NON-DIM)		CATWALKS	FIXTURE WEIGHT 13 LBS
F2	RECESSED 48" LED LINEAR WITH SHIELDING BAFFLES, 3000K, AND DRIVER COMPATIBLE WITH NLIGHT CONTROL SYSTEM, BLACK	BLACK	RECESSED	MARK LIGHTING SL1L-LOP-4FT-<CLNG>-90CRI-30K-80LMF-MIN1-QCBFB-MVOLT-<CLNG>/BLKT-NLIGHT VERIFY CONTROL INTERFACE REQUIREMENTS	INTEGRAL LED CCT: 3000K CRI: 90 LUMENS: 800LMF	INTEGRAL	29	29	120/277V	NLIGHT	1%	CONTROL BOOTHS	FIXTURE WEIGHT 7 LBS
F3	SURFACE-MOUNTED 1X4 LED TROFFER WITH 0-10V DIMMING COMPATIBLE WITH NLIGHT CONTROL SYSTEM		RECESSED	LITHONIA BLTX4-20L-ADP-MVOLT-EZ1-LP930-N100 VERIFY CONTROL INTERFACE REQUIREMENTS	INTEGRAL LED CCT: 3000K CRI: 90 LUMENS: 2000	INTEGRAL	19	19	120/277V	NLIGHT	10%	BOH	FIXTURE WEIGHT: 8 LBS
F4	RECESSED 2X2 LED TROFFER WITH 0-10V DIMMING COMPATIBLE WITH NLIGHT CONTROL SYSTEM		RECESSED	LITHONIA 2VTL4-33L-ADP-MVOLT-EZ1-LP930-N100 VERIFY CONTROL INTERFACE REQUIREMENTS	INTEGRAL LED CCT: 3000K CRI: 90 LUMENS: 3300	INTEGRAL	26.3	26.3	120/277V	NLIGHT	10%	BOH	FIXTURE WEIGHT: 20 LBS
F5	RECESSED CONTINUOUS-ROW LED LUMINAIRE WITH 0-10V DIMMING COMPATIBLE WITH NLIGHT CONTROL SYSTEM	WHITE		MARK LIGHTING SL4L-LOP-<LENGTH PER PLAN>FLP-<CEILING>-90CRI-27K--400LMF-MIN10-120-NLIGHT	INTEGRAL LED BEAM: WALLWASH CCT: 2700K CRI: 90 LUMENS: 400/FT	INTEGRAL	4/LF	4/LF	120/277V	0-10V	10%	RESTROOMS	FIXTURE WEIGHT: 5.75 LBS/LF
L1	LINEAR LED COVELIGHT WITH 2700K, 324 LUMEN PER FOOT OUTPUT, SEMI-FROSTED LENS, DMX DIMMABLE REMOTE TRANSFORMER, AND MOUNTING EXTRUSION	SATIN	SURFACE	ALUZ LIGHTING A1-ZAKY-SOP-SF-3W-DMX-27K-DRY-WH-<CONTINUOUS PER ELEVATIONS> OR EQUAL BY LUMINII, ACCLAIM	INTEGRAL LED BEAM: 120° CCT: 2700K CRI: >85 LUMENS: 270 LPF	REMOTE	3	3	120V PRIMARY/ 24V SECONDARY	DMX	FULL RANGE 0%	SIDEWALL COVES	FIXTURE WEIGHT: <1 LB/LF
P1F	6" ROUND APERTURE PENDANT MOUNTED LED CYLINDER DOWNLIGHT WITH FLOOD OPTIC, <X"> STEM WITH 5DEG HANG STRAIGHT SWIVEL AND DMX DRIVER	BLACK CYLINDER / LD TRIM	PENDANT REF. 5/A871	GOTHAM ICO CYL-27/50-6AR-LD-45D-120-EDXB-PM-DBL-CYSX	INTEGRAL LED BEAM: 45° CCT: 2700K CRI: 92 LUMENS: 5000	REMOTE	61	61	120V	DMX	FULL RANGE '0%	AUDITORIUM	HOUSING SIZE: 10.5"Ø'x16.125"H FIXTURE WEIGHT: 12 LBS
P1W	6" ROUND APERTURE PENDANT MOUNTED LED CYLINDER DOWNLIGHT WITH WIDE FLOOD OPTIC, <X"> STEM WITH 5DEG HANG STRAIGHT SWIVEL AND DMX DRIVER	BLACK CYLINDER / LD TRIM	PENDANT REF. 5/A871	GOTHAM ICO CYL-27/45-6AR-LD-50D-120-EDXB-PM-DBL-CYSX	INTEGRAL LED BEAM: 50° CCT: 2700K CRI: 92 LUMENS: 4500	REMOTE	52	52	120V	DMX	FULL RANGE '0%	AUDITORIUM REAR	HOUSING SIZE: 10.5"Ø'x16.125"H FIXTURE WEIGHT: 12 LBS
P1W-R	6" ROUND APERTURE PENDANT MOUNTED LED CYLINDER DOWNLIGHT WITH WIDE FLOOD OPTIC, <X"> STEM WITH 5DEG HANG STRAIGHT SWIVEL AND DMX DRIVER IN REMOTE ENCLOSURE	BLACK CYLINDER / LD TRIM	PENDANT REF. 5/A871	GOTHAM INCITO FIXTURE: ICO CYL-27/45-6AR-LD-50D-120-EDXB-PM-DBL-CYSX	INTEGRAL LED BEAM: 50° CCT: 2700K CRI: 92 LUMENS: 4500	REMOTE	52	52	120V	DMX	FULL RANGE '0%	AUDITORIUM REAR	HOUSING SIZE: 10.5"Ø'x16.125"H FIXTURE WEIGHT: 12 LBS
P1VW-R	6" ROUND APERTURE PENDANT MOUNTED LED CYLINDER DOWNLIGHT WITH VERY-WIDE FLOOD OPTIC, <X"> STEM WITH 5DEG HANG STRAIGHT SWIVEL AND DMX DRIVER IN REMOTE ENCLOSURE	BLACK CYLINDER / LD TRIM	PENDANT REF. 5/A871	GOTHAM ICO CYL-27/45-6AR-LD-65D-120-EDXB-PM-DBL-CYSX	INTEGRAL LED BEAM: 65° CCT: 2700K CRI: 92 LUMENS: 4500	REMOTE	52	52	120V	DMX	FULL RANGE '0%	AUDITORIUM	HOUSING SIZE: 10.5"Ø'x16.125"H FIXTURE WEIGHT: 12 LBS
P2F	4" ROUND APERTURE PENDANT MOUNTED LED CYLINDER DOWNLIGHT WITH FLOOD OPTIC, <X"> STEM WITH 5DEG HANG STRAIGHT SWIVEL AND 0-10V DRIVER	BLACK CYLINDER / LD TRIM	PENDANT REF. 5/A871	GOTHAM EVO4PC-30/05-<FINISH>-MWD-LSS-MVOLT-EZ10-JBXCC-PCAN-S<LENGTH>-90CRI-<FINISH>	INTEGRAL LED BEAM: N/A° CCT: 3000K CRI: 92 LUMENS:500	INTEGRAL	6.9	6.9	120/277V	0-10V	10%	BACKSTAGE CORRIDOR	HOUSING SIZE: 7.25"Ø'x11.625"H FIXTURE WEIGHT: 10 LBS
P3	PENDANT-MOUNTED LINEAR DIRECT FIXTURE WITH ADJUSTABLE LED DOWNLIGHT MODULE ON SEPARATE 0-10V DIMMABLE CIRCUIT EACH END	WHITE	PENDANT REF. 5/A871	A-LIGHT G3-4'-LS-30-U-HE-S-W-D-MRL2 LED DOWNLIGHT MODULES: E-4-U-30-48-D	INTEGRAL LED CCT: 3000K CRI: 80+ LUMENS: 1500	INTEGRAL	19	19	120/277V	0-10V	1%	BACKSTAGE CORRIDOR AT SHOP DOORS	FIXTURE WEIGHT 20 LBS
P4	PENDANT-MOUNTED 48" LED LINEAR WITH SHIELDING BAFFLES, 3000K 0-10V DIMMING COMPATIBLE WITH NLIGHT CONTROL SYSTEM, BLACK	BLACK CYLINDER / LD TRIM	PENDANT REF. 5/A871	MARK LIGHTING S1LD-LCB-4FT- MSL4-90CRI-30K-800LMF-MIN1-QCBFB-MVOLT-BLKT-NLIGHT-F2/72A-SQCY-BLKCY-BCRD VERIFY CONTROL INTERFACE REQUIREMENTS	INTEGRAL LED CCT: 3000K CRI: 90 LUMENS: 800LMF	INTEGRAL	31.9	31.9	120/277V	NLIGHT	5%	FOLLOWSPOT BOOTH	FIXTURE WEIGHT 7 LBS
P5	PENDANT-MOUNTED LED HIGH-BAY WITH CLEAR ACRYLIC REFLECTOR AND FLAT PRISMATIC LENS, COMPATIBLE WITH NLIGHT CONTROL SYSTEM	ALUMINUM	PENDANT REF. 5/A871	LITHONIA JCBL-9000LM-ACCR-ACRFGL-MVOLT-GZ10-30K-90CRI-PM-NPP16D, DNAXD VERIFY CONTROL INTERFACE REQUIREMENTS	INTEGRAL LED CCT: 3000K CRI: 90+ LUMENS: 9000	INTEGRAL	63	63	120/277V	NLIGHT	10%	SCENE SHOP	FIXTURE WEIGHT 16 LBS
P6A	DECORATIVE PENDANT WITH 23" FELT SHADE	YELLOW	PENDANT REF. 5/A871	EUREKA QUADRANT 4232-23-LED-27-90-120-DV-C-<CABLE LENGTH>-<CANOPY>-WHE-WH-BYF	INTEGRAL LED CCT: 2700K CRI: 90+ LUMENS:1366	INTEGRAL	9.8	9.8	120V	0-10V	10%	LOBBY	FIXTURE WEIGHT 3.5 LBS
P6B	DECORATIVE PENDANT WITH 47" FELT SHADE	YELLOW	PENDANT REF. 5/A871	EUREKA QUADRANT 4232-47-LED-27-90-120-DV-C-<CABLE LENGTH>-<CANOPY>-WHE-WH-BYF	INTEGRAL LED CCT: 2700K CRI: 90+ LUMENS:1366	INTEGRAL	14.1	14.1	120V	0-10V	10%	LOBBY	FIXTURE WEIGHT 8.6 LBS
P7	4" ROUND APERTURE PENDANT MOUNTED LED CYLINDER DOWNLIGHT WITH WALLWASH OPTIC, <X"> STEM WITH 5DEG HANG STRAIGHT SWIVEL AND 0-10V DRIVER	CYLINDER BLACK / LSS TRIM	PENDANT REF. 5/A872	GOTHAM FIXTURE: EVO4PCLW-27/10-AR-LSS-MVOLT-EZ10-JBX-PCAN-<STEM>-DBL	INTEGRAL LED CCT: 2700K CRI: 92 LUMENS: 1000	INTEGRAL	8.4	8.4	120/277V	0-10V	10%	LOBBY	HOUSING SIZE: 7.25"Ø'x11.625"H FIXTURE WEIGHT: 10 LBS

C:\Users\shawn.rudick\Documents\Hacienda Theatrical_R22_sdlier.rvt

APPL No. A03-122864

IDENTIFICATION STAMP
DIV. OF THE STATE ARCHITECT
APP: 03-122864 INC:
REVIEWED FOR
SS ☑ FLS ☑ ACS ☑
DATE: 10/03/2023

DSA Stamp

Architect

RACHLIN PARTNERS
8640 National Boulevard
Culver City, CA 90232
310.204.3400

Disclaimer:

THESE DRAWINGS ARE THE PROPERTY OF THE ARCHITECT. THE DESIGNS SHOWN AND DESCRIBED HEREIN INCLUDING ALL TECHNICAL DRAWINGS ARE PROPRIETARY AND CANNOT BE COPIED, DUPLICATED OR COMMERCIALLY EXPLOITED EXCEPT BY WRITTEN AGREEMENT. THESE DRAWINGS AND DESIGNS SHALL NOT BE USED BY THE OWNER ON OTHER PROJECTS FOR ADDITIONS TO THIS PROJECT, OR FOR COMPLETION OF THIS PROJECT BY OTHERS. THE OWNER AGREES TO HOLD HARMLESS, INDEMNIFY AND DEFEND THE ARCHITECT AGAINST ALL DAMAGES, CLAIMS AND LOSSES, INCLUDING DEFENSE COSTS, ARISING OUT OF ANY REUSE OF PLANS AND SPECIFICATIONS WITHOUT THE WRITTEN AUTHORIZATION OF THE ARCHITECT OF RECORD.

Copyright © 2019 Rachlin Partners, All Rights Reserved.

THE RUZIKA COMPANY
2 Executive Circle, Suite 290
Irvine, California 92614
Ph (949) 253-3479 Fax (949) 253-0181
www.ruzika.com
LIGHTING DESIGNERS + THEATRE CONSULTANTS

HACIENDA PERFORMING ARTS CENTER
Hacienda La Puente Unified School District
635 North California Avenue
La Puente, CA 91744

Rev	Date	Issue
1	7.22.22	50% DD
2	10.21.22	50% CD
3	12.09.22	100% CD DSA SUBMITTAL
4	6.19.23	100% CD DSA RESUBMITTAL
5	9.20.23	DSA BACK CHECK

Date: 9.20.2023
Scale:
Drawn By: TRC
Checked By: Checker

Architect / Engineer Stamp

LICENSED ARCHITECT
RICHARD BYRD
NO. C-20229
REN. 8-31-25
STATE OF CALIFORNIA

Consultants

VCA Engineers, Inc.
R.M. Byrd and Associates, Inc.
ALM Consulting Engineers, Inc.
MDC Consulting Engineers
Protection Design and Consulting
The Ruzika Company

Sheet Title

LIGHTING FIXTURE SCHEDULE

Sheet Number

LT011

LIGHTING FIXTURE SCHEDULE

FIXTURE TYPE	DESCRIPTION	FINISH	MOUNTING	MANUFACTURER PRODUCT CODE	LIGHT SOURCE	POWER SUPPLY	FIXT. WATTS (EACH OR PER FOOT)	INPUT WATTS (EACH OR PER FOOT)	FIXTURE VOLTAGE	CONTROL METHOD	DESIGNED REQUIRED MINIMUM DIMMING RANGE	LOCATION	FIXTURE NOTES
S1F	4" ROUND APERTURE SURFACE MOUNTED LED CYLINDER DOWNLIGHT WITH MEDIUM OPTIC AND DMX/RDM DRIVER	CYLINDER BLACK / LD TRIM	SURFACE	GOTHAM EVO4SC-27/10/FINISH-MD-LD-MVOLT-EDXB-JBXCC-90CRI-DBL	INTEGRAL LED BEAM: N/A° CCT: 2700K CRI: 92 LUMENS:1000	INTEGRAL	8.8	8.8	120/277V	DMX	FULL RANGE '0%	STAGE APRON	HOUSING SIZE: 7.25"Ø x11.625"H FIXTURE WEIGHT: 10 LBS
S2	SURFACE-MOUNTED DECORATIVE GLOBE	WHITE	SURFACE	EUREKA MIKA 3230-12-LED-27-90-120-DV-WH	INTEGRAL LED CCT: 2700K CRI: 92 LUMENS:1062	INTEGRAL	9.8	9.8	120V	0-10V	10%	MAIN LOBBY ENTRY	FIXTURE WEIGHT 2.3 LBS
SL1	ROUND RECESSED LINE VOLTAGE LED LOUVERED STEP LIGHT WITH 0-10V DIMMABLE DRIVER	TBD	RECESSED	MP LIGHTING L740-L48-3-W27S-VOLTS-<FINISH> DRIVER: LED18W350IZ-01(DC)	INTEGRAL LED BEAM: N/A° CCT: 2700K CRI: 80 LUMENS: 35	REMOTE	4	4	120V	0-10V	10%	AUDITORIUM, S/L LOCKS, STAGE APRON, CONTROL BOOTH	FIXTURE WEIGHT 1.5 LBS
SL2	FULLY-SHIELDED LED AISLE LIGHT ON FLOOR-MOUNTED POST, WITH 2700K LEDS AND REMOTE TRANSFORMER	BLACK	SURFACE	TEMPO LLC VL1-27-BK PROVIDE WITH REMOTE TRANSFORMER AND FLOOR-EDGE WIREWAY SURGE SURPRESSOR SSD-120	INTEGRAL LED CCT: 2700K CRI: >80 LUMENS:	REMOTE	0.5	0.5	120V PRIMARY/ 12V SECONDARY	MAGNETIC LOW VOLTAGE/ FORWARD PHASE	10%	AUDITORIUM CROSS-AISLE	FIXTURE WEIGHT < LBS
SL3	FULLY-SHIELDED LED AISLE LIGHT ON FLOOR-MOUNTED POST, WITH 2700K LEDS AND REMOTE TRANSFORMER	BLACK	SURFACE	TEMPO LLC VLP-16-27-BK PROVIDE WITH REMOTE TRANSFORMER AND FLOOR-EDGE WIREWAY SURGE SURPRESSOR SSD-120	INTEGRAL LED CCT: 2700K CRI: >80 LUMENS:	REMOTE	0.5	0.5	120V PRIMARY/ 12V SECONDARY	MAGNETIC LOW VOLTAGE/ FORWARD PHASE	10%	AUDITORIUM CROSS-AISLE	FIXTURE WEIGHT 2 LBS
SL4	SEAT-END MOUNTED AISLE WITH REMOTE TRANSFORMER, BY FIXED SEAT MANUFACTURER			BY FIXED SEATING MFR. REF SECTION 12 6100									
T1	TRACK-MOUNTED CLOSED-BACK LED ACCENT LIGHT WITH BARNDOOR ACCESSORY	BLACK	TRACK	TIMESQUARE LIGHTING BCR-9-92-27-B-120-40-NI-BD3-TE-ELV ACCESSORIES: BARN DOORS	INTEGRAL LED BEAM: 40 CCT: 2700K CRI: 90 LUMENS: 900	INTEGRAL	6.4	6.4	120V	ELECTRONIC LOW VOLTAGE/ REVERSE PHASE	1%	CONTROL BOOTH TASK LIGHTING	FIXTURE WEIGHT 3 LBS
TR1	EIGHT FOOT SINGLE-CIRCUIT LINE-VOLTAGE TRACK WITH INTEGRAL 1A CURRENT LIMITER, BLACK FINISH	BLACK	SURFACE	TIMESQUARE LIGHTING E-SERIES SG8-B CURRENT LIMITER: TSC-U-E-B-1 PROVIDE ALL REQUIRED LIVE END FEEDS AND MOUNTING HARDWARE FOR COMPLETE INSTALLATION.					120V			CONTROL BOOTH TASK LIGHTING	FIXTURE WEIGHT 1 LB/LF
W1	SURFACE-MOUNTED HIGH-ABUSE LED WALL BRACKET WITH 45° MOUNTING BRACKET AND ACRYLIC LENS		SURFACE	H.E. WILLIAMS 96-4-L81-830-HIAFR-WMB-UNV	INTEGRAL LED CCT: 3000K CRI: 82 LUMENS: 8100	INTEGRAL	65	65	120/277V		NON-DIM	STAGE PERIMETER	FIXTURE WEIGHT 14 LBS
W2	WALL-MOUNTED LINEAR DIRECT FIXTURE WITH ASSYMETRIC LENS, ADJUSTABLE LED DOWNLIGHT MODULE ON SEPARATE 0-10V DIMMABLE CIRCUIT EACH END	WHITE	SURFACE	A-LIGHT G3-4'-LS-30-U-KS-M-W-D-MRL2 LED DOWNLIGHT MODULES: E-4-U-30-48-D	INTEGRAL LED CCT: 3000K CRI: 80+ LUMENS: 1500	INTEGRAL	19	19	120/277V	0-10V	1%	BACKSTAGE CORRIDOR	FIXTURE WEIGHT 20 LBS
W3	SURFACE MOUNTED LED JELLY JAR	BLACK	SURFACE	CANLET 03-20W-L-W-x-OG-29	INTEGRAL LED CCT: 4000K CRI: 82 LUMENS: 1832	INTEGRAL	20	20	120/277V		NON-DIM	CATWALK	FIXTURE WEIGHT 3.5 LBS
W4	SURFACE-MOUNTED LED CHANNEL LIGHT WITH SOCKETS 12" ON CENTER, WITH LAMP GUARDS AND 450 LUMEN, 90+ CRI FROSTED 2700K LED LAMP	STANDARD	SURFACE	CELESTIAL LIGHTING AQR-<LAMP>-12-<FINISH>-RLG	GREEN CREATIVE 5FA19DIM/927/FR/R CCT: 2700K CRI: 92 LUMENS: 450	INTEGRAL	8.8	8.8	120V		NON-DIM	DRESSING ROOM	
AA1	SURFACE-MOUNTED ADJUSTABLE LINEAR ACCENT LIGHT WITH ASYMMETRIC OPTICS	STANDARD	SURFACE	ECOSENSE TROV L50-E-12"-04-30-90-MULT-25X75 LOCKING FINE ADJUSTMENT BRACKET: MNT-L-LFAB PROVIDE WITH ALL NECESSARY ACCESSORIES FOR A COMPLETE, FUNCTIONAL INSTALLATION OR EQUAL BY PUREEDGE	INTEGRAL LED BEAM: 25°x75° CCT: 3000 CRI: >90 LUMENS: 300 LM/LF	INTEGRAL	4	4	120/277V	RELAY (NON-DIM)	NON-DIM	EXTERIOR LETTER FEATURE	FIXTURE WEIGHT: 1.5 LBS/LF
DD1	RECESSED DAMP LISTED LED LENSED DOWNLIGHT	STANDARD	RECESSED	BEGA 24 829 K3-<FINISH>	INTEGRAL LED CCT: 3000 CRI: >90 LUMENS: 1150	INTEGRAL	8.3	8.3	120/277V	0-10V	NON-DIM	EXTERIOR CANOPY	FIXTURE WEIGHT: 2.2 LBS
WW1	WALL-MOUNTED WET-LOCATION FULL-CUTOFF LED AREA LIGHT	STANDARD	SURFACE	LITHONIA WPX1 LED P2-30K-MVOLT-<FINISH>	INTEGRAL LED CCT: 3000 CRI: >70 LUMENS: 2900	INTEGRAL	24	24	120/277V	RELAY (NON-DIM)	NON-DIM	EXTERIOR	FIXTURE WEIGHT: 6.1 LBS
WW2	WALL-MOUNTED, LOW LEVEL WET-LOCATION LED LUMINAIRE	STANDARD	RECESSED	BEGA 33059 K3-<FINISH>	INTEGRAL LED CCT: 3000 CRI: >80 LUMENS: 1485	INTEGRAL	16.4	16.4	120/277V	RELAY (NON-DIM)	NON-DIM	EXTERIOR - LOBBY SOUTH COURTYARD	FIXTURE WEIGHT: 5.3 LBS

APPL No. A03-122864

IDENTIFICATION STAMP
DIV. OF THE STATE ARCHITECT
APP: 03-122864 INC:
REVIEWED FOR
SS ☑ FLS ☑ ACS ☑
DATE: 10/03/2023

DSA Stamp

Architect

RACHLIN PARTNERS
8640 National Boulevard
Culver City, CA 90232
310.204.3400

Disclaimer:

THESE DRAWINGS ARE THE PROPERTY OF THE ARCHITECT. THE DESIGNS SHOWN AND DESCRIBED HEREIN INCLUDING ALL TECHNICAL DRAWINGS ARE PROPRIETARY AND CANNOT BE COPIED, DUPLICATED OR COMMERCIALLY EXPLOITED EXCEPT BY WRITTEN AGREEMENT. THESE DRAWINGS AND DESIGNS SHALL NOT BE USED BY THE OWNER ON OTHER PROJECTS, FOR ADDITIONS TO THIS PROJECT, OR FOR COMPLETION OF THIS PROJECT BY OTHERS. THE OWNER AGREES TO HOLD HARMLESS, INDEMNIFY AND DEFEND THE ARCHITECT AGAINST ALL DAMAGES, CLAIMS AND LOSSES, INCLUDING DEFENSE COSTS, ARISING OUT OF ANY REUSE OF PLANS AND SPECIFICATIONS WITHOUT THE WRITTEN AUTHORIZATION OF THE ARCHITECT OF RECORD.

Copyright © 2019 Rachlin Partners, All Rights Reserved.

THE RUZIKA COMPANY
2 Executive Circle, Suite 290
Irvine, California 92614
Ph (949) 253-3479 Fax (949) 253-0181
www.ruzika.com
LIGHTING DESIGNERS + THEATRE CONSULTANTS

HACIENDA PERFORMING ARTS CENTER

Hacienda La Puente Unified School District
635 North California Avenue
La Puente, CA 91744

Rev	Date	Issue
1	7.22.22	50% DD
2	10.21.22	50% CD
3	12.09.22	100% CD DSA SUBMITTAL
4	6.19.23	100% CD DSA RESUBMITTAL
5	9.20.23	DSA BACK CHECK

Date: 9.20.2023
Scale:
Drawn By: TRC
Checked By: Checker

Architect / Engineer Stamp

LICENSED ARCHITECT
RICHARD M. BYRD
NO. C-20229
REN. 8-31-25
STATE OF CALIFORNIA

Consultants

VCA Engineers, Inc.
R.M. Byrd and Associates, Inc.
ALM Consulting Engineers, Inc.
MDC Consulting Engineers
Protection Design and Consulting
The Ruzika Company

Sheet Title

LIGHTING FIXTURE SCHEDULE

Sheet Number

LT012

C:\Users\shawn.ruzika\Documents\Hacienda Theatrical_R22_sfdlar.rvt

LIGHTING CONTROL ZONE SCHEDULE

ZONE #	PANEL	CIRC	ZONE LOCATION	PURPOSE	CONTROL PROGRAM ZONE LABEL	FIXTURE TYPE	FIXTURE QTY	INPUT WATTS (EACH OR PER FOOT)	ZONE LOAD	SOURCE TYPE	FIXTURE VOLTAGE	POWER METHOD	CONTROL METHOD	ZONE NOTES
22	DR1	22	SEAT-END AISLE LIGHTS	LOW LEVEL	SEATS	SL4	0	0.5	0	LED		RELAY	0-10V	
22							0		0					
23	DR1	23	AUDITORIUM AISLE RAIILS	LOW LEVEL	RAILINGS	SL2	20	0.5	10	INTEGRAL LED	120V PRIMARY/ 12V SECONDARY	DIMMER	MAGNETIC LOW VOLTAGE/ FORWARD PHASE	
23							20		10					
24	DR1	24	AUDITORIUM CROSS AISLE	LOW LEVEL	CROSSAISLES	SL3	14	0.5	7	INTEGRAL LED	120V PRIMARY/ 12V SECONDARY	DIMMER	MAGNETIC LOW VOLTAGE/ FORWARD PHASE	
24							14		7					
25	DR1	25	S/L VEST LOW	LOW LEVEL	S/L VEST LOW	SL1	14	4	56	INTEGRAL LED	120V	RELAY	0-10V	
25							14		56					
26	DR1	26	UPPER S/L VEST LOW	LOW LEVEL	S/L VEST LOW	SL1	9	4	36	INTEGRAL LED	120V	RELAY	0-10V	
26							9		36					
27	DR1	27	STAGE APRON LOW LEVEL	RUNNING	APRON LOW	SL1	2	4	8	INTEGRAL LED	120V	RELAY	0-10V	
27							2		8					
28	DR1	28	AUDITORIUM WALL LOW-LEVEL	LOW LEVEL	LOW LEVEL	SL1	2	4	8	INTEGRAL LED	120V	RELAY	0-10V	
28							2		8					
29	DR1	29	AUDITORIUM SIDE WALKWAY LOW-LEVEL	LOW LEVEL	SIDE WLKWAYS	L1	2	54	108	INTEGRAL LED	120V PRIMARY/ 24V SECONDARY	RELAY	DMX	
29							2		108					
30	DR1	30	AUDITORIUM SIDE WALLS	ORNAMENTAL	WALL STRIPS	L1	12	<varies>	1092	INTEGRAL LED	120V PRIMARY/ 24V SECONDARY	RELAY	DMX	
30							12		1092					
31	DR1	31	LOBBY PENDANTS	ORNAMENTAL	STAIR PNDTS	P6A	7	9.8	68.6	INTEGRAL LED	120V	RELAY	0-10V	
31	DR1	31	LOBBY PENDANTS	ORNAMENTAL	STAIR PNDTS	P6B	3	14.1	42.3	INTEGRAL LED	120V	RELAY	0-10V	
31							10		110.9					
32	DR1	32	LOBBY W ENTRY	ORNAMENTAL	ENTRY	S2	3	9.8	29.4	INTEGRAL LED	120V	RELAY	0-10V	
32							3		29.4					
33	DR1	33	LOBBY STAIR	LOW LEVEL	LOBBY STAIR	SL1	12	4	48	INTEGRAL LED	120V	RELAY	0-10V	
33							12		48					
115	RR2	19	FLY GALLERY	WORKLIGHTS	FLY GLRY	F1	4	30	120	INTEGRAL LED	120/277V	RELAY	RELAY (NON-DIM)	
115							4		120					
116	RR2	20	LOADING GALLERY	WORKLIGHTS	LOAD GLRY	F1	5	30	150	INTEGRAL LED	120/277V	RELAY	RELAY (NON-DIM)	
116							5		150					
117A	RR2	21	AUDITORIUM HIGH CLNG	HOUSELIGHTS	FRONT	P1F	8	61	488	INTEGRAL LED	120V	RELAY	DMX	EM FIXTURES CIRCUIT RR1-22 VIA ELTS
117A							8		488					
117B	RR2	21	AUDITORIUM HIGH CLNG	HOUSELIGHTS	MID	P1W	16	52	832	INTEGRAL LED	120V	RELAY	DMX	EM FIXTURES CIRCUIT RR1-22 VIA ELTS
117B							16		832					
117C	RR2	21	AUDITORIUM HIGH CLNG	HOUSELIGHTS	REAR	P1VW-R	8	52	416	INTEGRAL LED	120V	RELAY	DMX	EM FIXTURES CIRCUIT RR1-22 VIA ELTS
117C	RR2	21	AUDITORIUM HIGH CLNG	HOUSELIGHTS	REAR	P1W-R	8	52	416	INTEGRAL LED	120V	RELAY	DMX	EM FIXTURES CIRCUIT RR1-22 VIA ELTS
117C							16		832					
119	RR2	23	S/L LOCK VESTIBULE UPPER	DOWNS	S/L VEST	D1Wa	5	7.2	36	INTEGRAL LED	120/277V	RELAY	0-10V	
119							5		36					
120	RR2	24	STAGE APRON ALCOVES	DOWNS	APRON	S1F	2	18	36	INTEGRAL LED	120/277V	RELAY	DMX	
120							2		36					
121	RR2	25	S/L LOCK VESTIBULE HR	DOWNS	S/L VEST	D1Wa	3	7.2	21.6	INTEGRAL LED	120/277V	RELAY	0-10V	
121							3		21.6					
122	RR2	26	S/L LOCK VESTIBULES HL	DOWNS	S/L VEST	D1Wa	3	7.2	21.6	INTEGRAL LED	120/277V	RELAY	0-10V	
122							3		21.6					
123	RR2	27	ARBOR WELL	WORKLIGHTS	ARBOR WELL	F1	3	42	126	INTEGRAL LED	120/277V	RELAY	RELAY (NON-DIM)	
123							3		126					
124	RR2	28	BACKSTAGE CORRIDOR	DOWNS	CORR DOWNS	D1Wb	1	7.2	7.2	INTEGRAL LED	120/277V	RELAY	0-10V	
124	RR2	28	BACKSTAGE CORRIDOR	DOWNS	CORR DOWNS	P2F	6	6.9	41.4	INTEGRAL LED	120V	RELAY	0-10V	
124							7		48.6					
125	RR2	29	BACKSTAGE CORRIDOR AT SHOP	GENERAL LIGHTING	CORRIDOR	P3	3	19	57	INTEGRAL LED	120/277V	RELAY	0-10V	
125	RR2	29	BACKSTAGE CORRIDOR	GENERAL LIGHTING	CORRIDOR	W2	12	27	324	INTEGRAL LED	120/277V	RELAY	0-10V	
125							15		381					
126	RR2	30	BACKSTAGE CORRIDOR	RUNNING	BCKSTG RUN	W2 CIRC 2	12	4	48	INTEGRAL LED	120/277V			
126							12		48					
128	RR2	32	STAGE	WORKLIGHTS	STAGE WALLS	F1	5	42	210	INTEGRAL LED	120/277V	RELAY	RELAY (NON-DIM)	
128	RR2	32	STAGE	WORKLIGHTS	STAGE WALLS	W1	12	65	780	INTEGRAL LED	120/277V	RELAY	RELAY (NON-DIM)	
128							17		990					
129	RR2	33	BOX BOOMS SL	WORKLIGHTS	BOX BOOM SL	F1	1	42	42	INTEGRAL LED	120/277V	RELAY	RELAY (NON-DIM)	
129	RR2	33	BOX BOOMS SL	WORKLIGHTS	BOX BOOM SL	W3	5	30	150	INTEGRAL LED	120/277V	RELAY	RELAY (NON-DIM)	
129							6		192					
130	RR2	34	BOX BOOMS SR	WORKLIGHTS	BOX BOOM SR	F1	3	42	126	INTEGRAL LED	120/277V	RELAY	RELAY (NON-DIM)	
130	RR2	34	BOX BOOMS SR	WORKLIGHTS	BOX BOOM SR	W3	5	30	150	INTEGRAL LED	120/277V	RELAY	RELAY (NON-DIM)	
130							8		276					
131	RR2	35	FOH CATWALKS	WORKLIGHTS	FOH CATW	W3	32	30	960	INTEGRAL LED	120/277V	RELAY	RELAY (NON-DIM)	
131							32		960					
133	RR2	37	LOBBY UPPER ALCOVE	DOWNS	UPPER ALCOVE	D1Wa	2	7.2	14.4	INTEGRAL LED	120/277V	RELAY	0-10V	
133							2		14.4					
134	RR2	38	LOBBY HIGH CEILING	DOWNS	HIGH CEILING	D4	7	21.5	150.5	INTEGRAL LED	120/277V	RELAY	0-10V	
134							7		150.5					
135	RR2	39	LOBBY LOW CEILING	DOWNS	LOW CLNG	D2	11	15.1	166.1	INTEGRAL LED	120/277V	RELAY	0-10V	
135							11		166.1					
136	RR2	40	LOBBY RESTROOM ALCOVES	DOWNS	RR ALCOVES	D1Wa	5	7.2	36	INTEGRAL LED	120/277V	RELAY	0-10V	
136							5		36					
137	RR2	41	LOBBY FEATURE WALL	WALLWASH	FEATURE WALL	D3	12	6.9	82.8	INTEGRAL LED	120/277V	RELAY	0-10V	
137							12		82.8					
138	RR2	42	LOBBY NORTH	DOWNS	NORTH DOWNS	D4	8	21.5	172	INTEGRAL LED	120/277V	RELAY	0-10V	
138							8		172					
139	RR2	43	LOBBY SOUTH	DOWNS	SOUTH DOWNS	D4	8	21.5	172	INTEGRAL LED	120/277V	RELAY	0-10V	
139							8		172					
141	RR2	45	LOBBY NORTH	WALLWASH	NORTH WW	D5	8	8.4	67.2	INTEGRAL LED	120/277V	RELAY	0-10V	
141	RR2	45	LOBBY NORTH	WALLWASH	NORTH WW	P7	1	8.4	8.4	INTEGRAL LED	120V	RELAY	0-10V	
141							9		75.6					
143	RR2	47	LOBBY SOUTH	WALLWASH	SOUTH WW	D5	11	8.4	92.4	INTEGRAL LED	120/277V	RELAY	0-10V	
143	RR2	47	LOBBY SOUTH	WALLWASH	SOUTH WW	P7	2	8.4	16.8	INTEGRAL LED	120V	RELAY	0-10V	
143							13		109.2					

APPL No. A03-122864

IDENTIFICATION STAMP
DIV. OF THE STATE ARCHITECT
APP: 03-122864 INC:
REVIEWED FOR
SS ☑ FLS ☑ ACS ☑
DATE: 10/03/2023

DSA Stamp

Architect

RACHLIN
PARTNERS
8640 National Boulevard
Culver City, CA 90232
310.204.3400

Disclaimer:

THESE DRAWINGS ARE THE PROPERTY OF THE ARCHITECT. THE DESIGNS SHOWN AND DESCRIBED HEREIN INCLUDING ALL TECHNICAL DRAWINGS ARE PROPRIETARY AND CANNOT BE COPIED, DUPLICATED OR COMMERCIALLY EXPLOITED EXCEPT WITH THE WRITTEN PERMISSION OF THE ARCHITECT AND SHALL NOT BE USED BY THE OWNER ON OTHER PROJECTS, FOR ADDITIONS TO THIS PROJECT, OR FOR COMPLETION OF THIS PROJECT BY OTHERS. THE OWNER AGREES TO HOLD HARMLESS, INDEMNIFY AND DEFEND THE ARCHITECT AGAINST ALL DAMAGES, CLAIMS AND LOSSES, INCLUDING DEFENSE COSTS, ARISING OUT OF ANY REUSE OF PLANS AND SPECIFICATIONS WITHOUT THE WRITTEN AUTHORIZATION OF THE ARCHITECT OF RECORD.

Copyright © 2019 Rachlin Partners, All Rights Reserved.

THE RUZIKA COMPANY
2 Executive Circle, Suite 290
Irvine, California 92614
Ph (949) 253-3479 Fax (949) 253-0181
www.ruzika.com
LIGHTING DESIGNERS + THEATRE CONSULTANTS

HACIENDA PERFORMING ARTS CENTER

Hacienda La Puente Unified School District
635 North California Avenue
La Puente, CA 91744

Rev	Date	Issue
1	7.22.22	50% DD
2	10.21.22	50% CD
3	12.09.22	100% CD DSA SUBMITTAL
4	6.19.23	100% CD DSA RESUBMITTAL
5	9.20.23	DSA BACK CHECK

Date: 9.20.2023
Scale:
Drawn By: TRC
Checked By: Checker

Architect / Engineer Stamp

LICENSED ARCHITECT
RICHARD RACHLIN
NO. C-20229
REN. 8-31-25
STATE OF CALIFORNIA

Consultants

VCA Engineers, Inc.
R.M. Byrd and Associates, Inc.
ALM Consulting Engineers, Inc.
MDC Consulting Engineers
Protection Design and Consulting
The Ruzika Company

Sheet Title

LIGHTING CONTROL ZONE SCHEDULE

Sheet Number

LT031

C:\Users\ktown.ruzika\Documents\Hacienda Theatrical_R22_kdiller.rvt

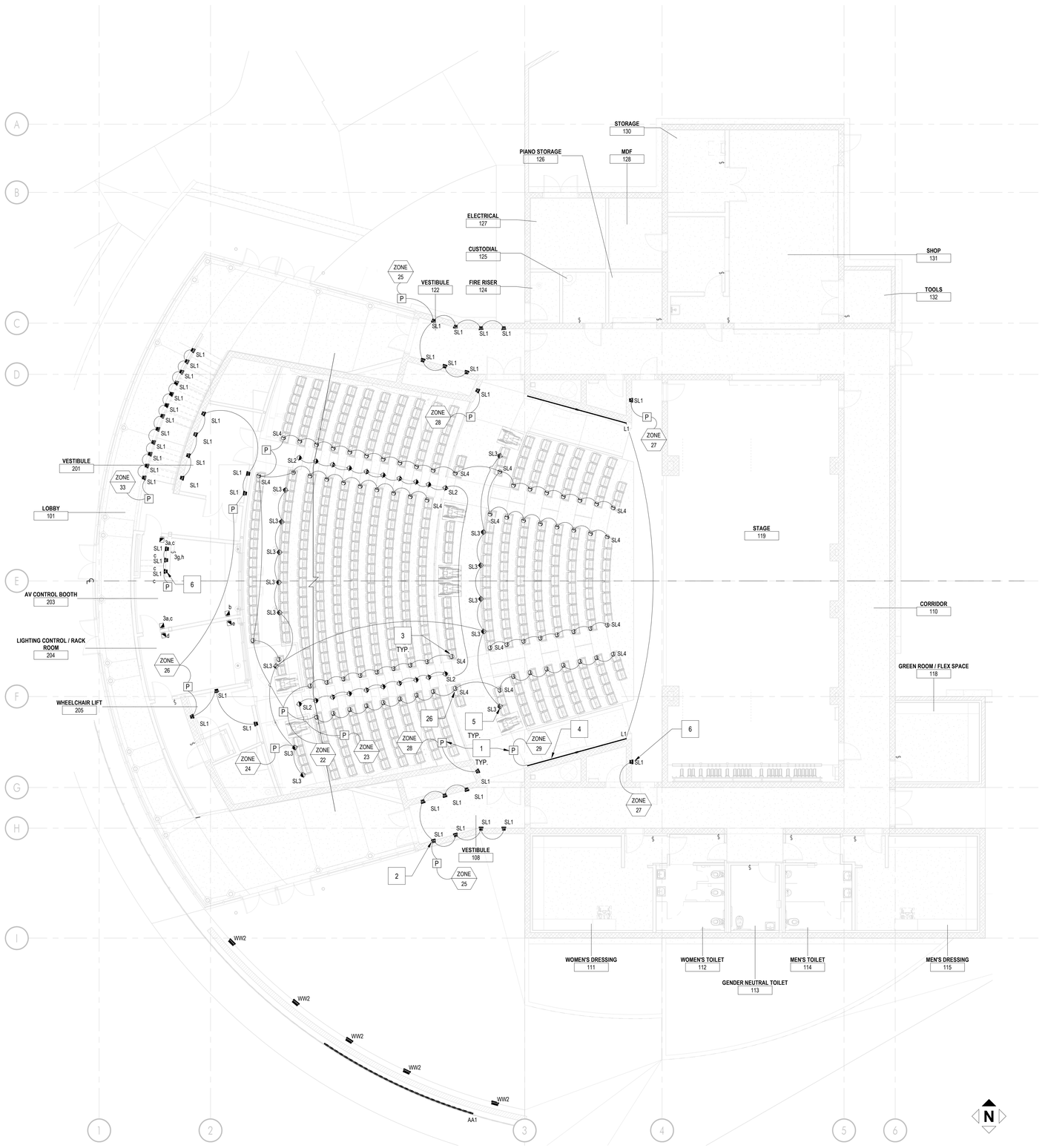

LIGHTING FLOOR PLAN - AUDITORIUM LOW-LEVEL

1/8" = 1'-0"

1

GENERAL SHEET NOTES

1.	VERIFY MOUNTING LOCATIONS AND HEIGHTS OF ALL DEVICES WITH ARCHITECT PRIOR TO INSTALLATION.
2.	LOOPING INDICATES CONTROL ZONE DESIGN INTENT ONLY. REFER TO ELECTRICAL DRAWINGS FOR DIMMING, SWITCHING AND CIRCUITRY INFORMATION.
3.	THE CONTRACTOR IS RESPONSIBLE FOR PROVIDING ATHE CONTRACTOR IS RESPONSIBLE FOR PROVIDING ALL LABOR AND EQUIPMENT THAT IS NECESSARY FOR THE FOCUS AIMING OF ADJUSTABLE LIGHTING FIXTURES AND THE PROGRAMMING OF LIGHTING PRESETS OR EFFECTS PER THE DIRECTION OF THE LIGHTING DESIGN CONSULTANT LL LABOR AND EQUIPMENT THAT IS NECESSARY FOR THE FOCUS AIMING OF ADJUSTABLE LIGHTING FIXTURES AND THE PROGRAMMING OF LIGHTING PRESETS OR EFFECTS PER THE DIRECTION OF THE LIGHTING DESIGN CONSULTANT.
4.	ELECTRICAL CONTRACTOR, FIXTURE SUPPLIER, AND LAMP SUPPLIER MUST VERIFY THAT ALL LED LAMPS ARE COMPATIBLE WITH FIXTURE TRIM HOUSINGS, LAMP SOCKETS, LOW VOLTAGE TRANSFORMERS, AND ELECTRICAL DIMMING SYSTEMS PRIOR TO PLACING ANY LIGHTING EQUIPMENT ORDERS AFTER FIXTURE SHOP DRAWING SUBMITTALS ARE APPROVED. LAMPS SHOULD BE OPERABLE AT FULL OR DIMMED INTENSITY WITH NO VISUALLY PERCEIVED FLICKERING WHEN ALL LAMPS ON THE CIRCUIT ARE ENERGIZED.
5.	WHERE MEASUREMENTS ARE GIVEN, THEY ARE FOR PRICING ESTIMATES ONLY. THE CONTRACTOR SHALL VERIFY LENGTHS WITH FIELD MEASUREMENTS PRIOR TO PURCHASING.
6.	HCS-X AND WCS-X DEVICES ARE LOW-VOLTAGE LIGHTING CONTROL STATIONS CONNECTED TO THEATRICAL LIGHTING CONTROL SYSTEM. REFER TO TL DRAWINGS.

KEY NOTES

NOTE: NOT ALL KEYNOTES WILL BE USED ON EVERY PAGE

1	MOUNT LOW VOLTAGE REMOTE POWER SUPPLY IN A CONCEALED, DRY, WELL VENTILATED LOCATION WITHIN MANUFACTURER RECOMMENDED DISTANCES AND WITHIN CODE REQUIRED NEMA RATED ENCLOSURE (AS NECESSARY). CONTRACTOR TO ENSURE PROPER WIRE GAUGE AND DISTANCE USED TO SUPPLY 12V OR 24V AT EACH FIXTURE (REFER TO FIXTURE SCHEDULE FOR VOLTAGE REQUIREMENTS FOR EACH FIXTURE).
2	FLUSH-MOUNT TYPE 'SL1' LOW-VOLTAGE STEP LIGHT AT +18" AFF AND CONNECT TO REMOTE DRIVER.
3	TYPE 'SL2' LOW-VOLTAGE LED STEP LIGHTS AT +16" AFF ON RAILING POSTS AT AUDITORIUM STEPPED AISLES. CONNECT TO REMOTE, DIMMABLE TRANSFORMER IN CONCEALED, MAINTENANCE-ACCESSIBLE LOCATION.
4	TYPE 'L1' LOW VOLTAGE LINEAR LED LIGHT, TO BE CONCEALED AT TOEKICK BELOW BOTTOM WALL PANELS AND ORIENTED FACING DOWN. REFER TO ARCHITECTURAL SET FOR MOUNTING DETAILS.
5	TYPE 'SL3' LOW-VOLTAGE POST-MOUNTED STEP LIGHT MOUNTED TO FACE OF SEATING RISER WITH LENS AT +18" AFF. COORDINATE WITH SEATING VENDOR AND ALIGN POST WITH CENTERLINE OF ARMREST TO PREVENT CONFLICTS. WIRE BACK TO REMOTE TRANSFORMER
6	FLUSH-MOUNT TYPE 'SL4' LINE VOLTAGE STEP LIGHT AT +18" AFF.
7	TYPE 'L1' LOW VOLTAGE LINEAR LED LIGHT, TO BE CONCEALED IN HORIZONTAL SLOT BETWEEN WALL PANELS AND ORIENTED UP. REFER TO ARCHITECTURAL SET FOR MOUNTING DETAILS.
8	TYPE 'W1' ANGLED-FACE/LINE VOLTAGE LED WALL BRACKET TO BE MOUNTED AT +12'-6"
9	STAGE RIGGING INDEX LIGHT PROVIDED BY STAGE RIGGING CONTRACTOR. WIRE TO WALLBOX DIMMER FURNISHED BY RIGGING CONTRACTOR ON 120V CIRCUIT.
10	MOUNT TYPE 'F1' LINE VOLTAGE UTILITY STRIPLIGHT ON OUTRIGGER BRACKET PROVIDED BY STAGE RIGGING CONTRACTOR.
11	TYPE 'W2' LINE VOLTAGE LED WALL BRACKET IN CORRIDOR MOUNTED AT +12'-0". FIXTURE REQUIRES SEPARATE CIRCUITS AND 0-10V CONTROL WIRING FOR LINEAR GENERAL LIGHTING SOURCE AND ADJUSTABLE DOWNLIGHT MODULES. TILT DOWNLIGHT MODULES TOWARDS CENTER OF CORRIDOR.
12	TYPE 'P3' LINE VOLTAGE LED LINEAR IN PENDANT IN CORRIDOR, MOUNTED WITH BOTTOM OF FIXTURE 12" ABOVE HEADER OF ADJACENT ROLL-UP DOOR. FIXTURE REQUIRES SEPARATE CIRCUITS AND 0-10V CONTROL WIRING FOR LINEAR GENERAL LIGHTING SOURCE AND ADJUSTABLE DOWNLIGHT MODULES. TILT DOWNLIGHT MODULES TOWARDS CENTER OF CORRIDOR.
13	TYPE 'P3' PENDANT-MOUNT DOWNLIGHT CYLINDER IN CORRIDOR. VERIFY MOUNTING HEIGHT WITH ARCHITECT.
14	TYPE 'P5' LED HIGH-BAY IN SHOP. PENDANT-MOUNT WITH BOTTOM OF FIXTURE 12" ABOVE HEADER OF ROLL-UP DOOR TO STAGE.
15	TYPE 'S1F' SURFACE-MOUNT DOWNLIGHT CYLINDER IN ALCOVE AT STAGE APRON
16	TYPE W4 LINE-VOLTAGE LED MAKEUP LIGHT MOUNTED TO WALL ABOVE DRESSING ROOM MIRRORS. VERIFY HEIGHT AND LENGTHS WITH INTERIOR ELEVATIONS.
17	TYPE 'P7' LINE-VOLTAGE WALLWASH CYLINDER PENDANT-MOUNTED WITH BOTTOM OF FIXTURE ALIGNED TO BOTTOM OF ADJACENT CEILING CLOUD.
18	TYPE 'P6' LINE VOLTAGE LOBBY DECORATIVE FIXTURE PENDANT-MOUNTED AT HEIGHTS DETERMINED BY ARCHITECT. ABOVE STAIRS, PENDANT LENGTHS VARY TO MAINTAIN CONSISTENT AFF HEIGHT ABOVE STAIR TREADS.
19	TYPE SZ LINE VOLTAGE DECORATIVE FIXTURES SURFACE-MOUNTED AT LOBBY ENTRY SOFFIT
20	TYPE 'P1x' DOWNLIGHT CYLINDERS AT AUDITORIUM HIGH CEILING PENDANT-MOUNTED WITH BOTTOM OF FIXTURE ALIGNED TO ADJACENT CEILING PANEL.
21	INSTALL REAR-MOST ROW OF AUDITORIUM DOWNLIGHTS WITH BOTTOM OF FIXTURE AT +30'-3"
22	FOR TYPE 'P1W-R' AND 'P1VW-R' AUDITORIUM DOWNLIGHT CYLINDERS NOT ADJACENT TO A CATWALK, PROVIDE DRIVERS IN A REMOTE ENCLOSURE AT SIDE CATWALK. PROVIDE SEPARATE ENCLOSURES FOR FIXTURES ON NORMAL AND EMERGENCY POWER.
23	TYPE 'W3' JELLY JARS AND 'F1' LINE VOLTAGE UTILITY STRIPS WALL-MOUNT AT BOX BOOM MEZZANINES AT +8'-0"
24	TYPE 'W3' LINE VOLTAGE LED JELLY JAR WORKLIGHTS MOUNT ON FACE OF ON CATWALK HANGERS AT +8'-0" AFF. MAKE CONDUIT RUNS OVERHEAD, AND DROP DIRECTLY TO FIXTURE BACKBOXES.
25	PENDANT-MOUNT TYPE 'F1' UTILITY STRIP LIGHT BELOW HORIZONTAL PATH OF STAGE RIGGING WIRE ROPES, AT +8'-6" ABOVE LOADING GALLERY CATWALK DECK. COORDINATE EXACT PLACEMENT OF FIXTURES WITH RIGGING CONTRACTOR TO PREVENT OBSTRUCTIONS.
26	TYPE 'SL4' LOW-VOLTAGE LED AISLE LIGHT ON SEAT END PANEL, PROVIDED BY SEAT MANUFACTURER. CONNECT WHIP TO FLOOR BOX WIRED BACK TO REMOTE, DIMMABLE TRANSFORMER IN CONCEALED, MAINTENANCE-ACCESSIBLE LOCATION.

APPL No. A03-122864

IDENTIFICATION STAMP
DIV. OF THE STATE ARCHITECT
APP: 03-122864 INC:
REVIEWED FOR
SS ☑ FLS ☑ ACS ☑
DATE: 10/03/2023

DSA Stamp

Architect

RACHLIN PARTNERS
8640 National Boulevard
Culver City, CA 90232
310.204.3400

Disclaimer:

THESE DRAWINGS ARE THE PROPERTY OF THE ARCHITECT. THE DESIGNS SHOWN AND DESCRIBED HEREIN INCLUDING ALL TECHNICAL DRAWINGS ARE PROPRIETARY AND CANNOT BE COPIED, DUPLICATED OR COMMERCIALLY EXPLOITED EXCEPT WITH THE WRITTEN PERMISSION OF THE ARCHITECT AND SHALL NOT BE USED BY THE OWNER ON OTHER PROJECTS FOR ADDITIONS TO THIS PROJECT, OR FOR COMPLETION OF THIS PROJECT BY OTHERS. THE OWNER AGREES TO HOLD HARMLESS, INDEMNIFY AND DEFEND THE ARCHITECT AGAINST ALL DAMAGES, CLAIMS AND LOSSES, INCLUDING DEFENSE COSTS, ARISING OUT OF ANY REUSE OF PLANS AND SPECIFICATIONS WITHOUT THE WRITTEN AUTHORIZATION OF THE ARCHITECT OF RECORD.

Copyright © 2019 Rachlin Partners, All Rights Reserved.

THE RUZIKA COMPANY
2 Executive Circle, Suite 290
Irvine, California 92614
Ph (949) 253-3479 Fax (949) 253-0181
www.ruzika.com
LIGHTING DESIGNERS + THEATRE CONSULTANTS

HACIENDA PERFORMING ARTS CENTER

Hacienda La Puente Unified School District
635 North California Avenue
La Puente, CA 91744

Rev	Date	Issue
1	7.22.22	50% DD
2	10.21.22	50% CD
3	12.09.22	100% CD DSA SUBMITTAL
4	6.19.23	100% CD DSA RESUBMITTAL
5	9.20.23	DSA BACK CHECK

Date: 9.20.2023
Scale: 1/8" = 1'-0"
Drawn By: TRC
Checked By: Checker

Architect / Engineer Stamp

LICENSED ARCHITECT
RICHARD M. BYRD
NO. C-20229
REN. 8-31-25
STATE OF CALIFORNIA

Consultants

VCA Engineers, Inc.
R.M. Byrd and Associates, Inc.
ALM Consulting Engineers, Inc.
MDC Consulting Engineers
Protection Design and Consulting
The Ruzika Company

Sheet Title

LIGHTING PLAN - LOW LEVEL

Sheet Number

LT210

C:\Users\Shawn.ruzika\Documents\Hacienda Theatrical_R22_sfdlar.rvt

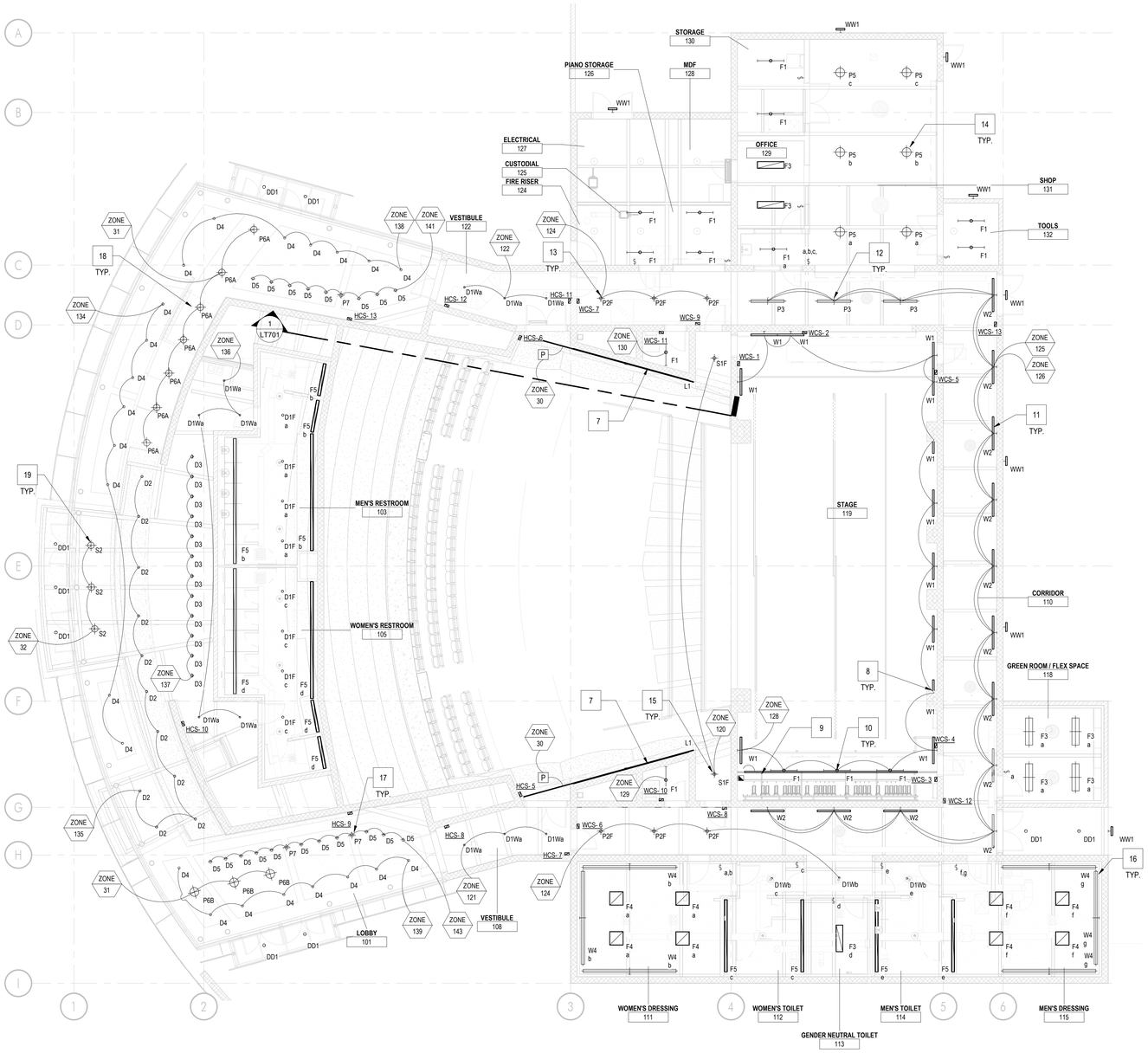

GENERAL SHEET NOTES

1. VERIFY MOUNTING LOCATIONS AND HEIGHTS OF ALL DEVICES WITH ARCHITECT PRIOR TO INSTALLATION.
2. LOOPING INDICATES CONTROL ZONE DESIGN INTENT ONLY. REFER TO ELECTRICAL DRAWINGS FOR DIMMING, SWITCHING AND CIRCUITRY INFORMATION.
3. THE CONTRACTOR IS RESPONSIBLE FOR PROVIDING ATHE CONTRACTOR IS RESPONSIBLE FOR PROVIDING ALL LABOR AND EQUIPMENT THAT IS NECESSARY FOR THE FOCUS AIMING OF ADJUSTABLE LIGHTING FIXTURES AND THE PROGRAMMING OF LIGHTING PRESETS OR EFFECTS PER THE DIRECTION OF THE LIGHTING DESIGN CONSULTANT LL LABOR AND EQUIPMENT THAT IS NECESSARY FOR THE FOCUS AIMING OF ADJUSTABLE LIGHTING FIXTURES AND THE PROGRAMMING OF LIGHTING PRESETS OR EFFECTS PER THE DIRECTION OF THE LIGHTING DESIGN CONSULTANT.
4. ELECTRICAL CONTRACTOR, FIXTURE SUPPLIER, AND LAMP SUPPLIER MUST VERIFY THAT ALL LED LAMPS ARE COMPATIBLE WITH FIXTURE TRIM HOUSINGS, LAMP SOCKETS, LOW VOLTAGE TRANSFORMERS, AND ELECTRICAL DIMMING SYSTEMS PRIOR TO PLACING ANY LIGHTING EQUIPMENT ORDERS AFTER FIXTURE SHOP DRAWING SUBMITTALS ARE APPROVED. LAMPS SHOULD BE OPERABLE AT FULL OR DIMMED INTENSITY WITH NO VISUALLY PERCEIVED FLICKERING WHEN ALL LAMPS ON THE CIRCUIT ARE ENERGIZED.
5. WHERE MEASUREMENTS ARE GIVEN, THEY ARE FOR PRICING ESTIMATES ONLY. THE CONTRACTOR SHALL VERIFY LENGTHS WITH FIELD MEASUREMENTS PRIOR TO PURCHASING.
6. HCS-X AND WCS-X DEVICES ARE LOW-VOLTAGE LIGHTING CONTROL STATIONS CONNECTED TO THEATRICAL LIGHTING CONTROL SYSTEM. REFER TO TL DRAWINGS.

KEY NOTES

xx

NOTE: NOT ALL KEYNOTES WILL BE USED ON EVERY PAGE

1. MOUNT LOW VOLTAGE REMOTE POWER SUPPLY IN A CONCEALED, DRY, WELL VENTILATED LOCATION WITHIN MANUFACTURER RECOMMENDED DISTANCES AND WITHIN CODE REQUIRED NEMA RATED ENCLOSURE (AS NECESSARY). CONTRACTOR TO ENSURE PROPER WIRE GAUGE AND DISTANCE USED TO SUPPLY 12V OR 24V AT EACH FIXTURE (REFER TO FIXTURE SCHEDULE FOR VOLTAGE REQUIREMENTS FOR EACH FIXTURE).
2. FLUSH-MOUNT TYPE 'SL1' LOW-VOLTAGE STEP LIGHT AT +18" AFF AND CONNECT TO REMOTE DRIVER.
3. TYPE 'SL2' LOW-VOLTAGE LED STEP LIGHTS AT +16" AFF ON RAILING POSTS AT AUDITORIUM STEPPED AISLES. CONNECT TO REMOTE, DIMMABLE TRANSFORMER IN CONCEALED, MAINTENANCE-ACCESSIBLE LOCATION.
4. TYPE 'L1' LOW VOLTAGE LINEAR LED LIGHT, TO BE CONCEALED AT TOEKICK BELOW BOTTOM WALL PANELS AND ORIENTED FACING DOWN. REFER TO ARCHITECTURAL SET FOR MOUNTING DETAILS.
5. TYPE 'SL3' LOW-VOLTAGE POST-MOUNTED STEP LIGHT MOUNTED TO FACE OF SEATING RISER WITH LENS AT +18" AFF. COORDINATE WITH SEATING VENDOR AND ALIGN POST WITH CENTERLINE OF ARMREST TO PREVENT CONFLICTS. WIRE BACK TO REMOTE TRANSFORMER
6. FLUSH-MOUNT TYPE 'SL4' LINE VOLTAGE STEP LIGHT AT +18" AFF.
7. TYPE 'L1' LOW VOLTAGE LINEAR LED LIGHT, TO BE CONCEALED IN HORIZONTAL SLOT BETWEEN WALL PANELS AND ORIENTED UP. REFER TO ARCHITECTURAL SET FOR MOUNTING DETAILS.
8. TYPE 'W1' ANGLED-FACELINE VOLTAGE LED WALL BRACKET TO BE MOUNTED AT +12'-6"
9. STAGE RIGGING INDEX LIGHT PROVIDED BY STAGE RIGGING CONTRACTOR. WIRE TO WALLBOX DIMMER FURNISHED BY RIGGING CONTRACTOR ON 120V CIRCUIT.
10. MOUNT TYPE 'F1' LINE VOLTAGE UTILITY STRIPLIGHT ON OUTRIGGER BRACKET PROVIDED BY STAGE RIGGING CONTRACTOR.
11. TYPE 'W2' LINE VOLTAGE LED WALL BRACKET IN CORRIDOR MOUNTED AT +12'-0". FIXTURE REQUIRES SEPARATE CIRCUITS AND 0-10V CONTROL WIRING FOR LINEAR GENERAL LIGHTING SOURCE AND ADJUSTABLE DOWNLIGHT MODULES. TILT DOWNLIGHT MODULES TOWARDS CENTER OF CORRIDOR.
12. TYPE 'P3' LINE VOLTAGE LED LINEAR IN PENDANT IN CORRIDOR, MOUNTED WITH BOTTOM OF FIXTURE 12" ABOVE HEADER OF ADJACENT ROLL-UP DOOR. FIXTURE REQUIRES SEPARATE CIRCUITS AND 0-10V CONTROL WIRING FOR LINEAR GENERAL LIGHTING SOURCE AND ADJUSTABLE DOWNLIGHT MODULES. TILT DOWNLIGHT MODULES TOWARDS CENTER OF CORRIDOR.
13. TYPE 'P3' PENDANT-MOUNT DOWNLIGHT CYLINDER IN CORRIDOR. VERIFY MOUNTING HEIGHT WITH ARCHITECT.
14. TYPE 'P5' LED HIGH-BAY IN SHOP. PENDANT-MOUNT WITH BOTTOM OF FIXTURE 12" ABOVE HEADER OF ROLL-UP DOOR TO STAGE.
15. TYPE 'S1F' SURFACE-MOUNT DOWNLIGHT CYLINDER IN ALCOVE AT STAGE APRON
16. TYPE 'W4 LINE-VOLTAGE LED MAKEUP LIGHT MOUNTED TO WALL ABOVE DRESSING ROOM MIRRORS. VERIFY HEIGHT AND LENGTHS WITH INTERIOR ELEVATIONS.
17. TYPE 'P7' LINE-VOLTAGE WALLWASH CYLINDER PENDANT-MOUNTED WITH BOTTOM OF FIXTURE ALIGNED TO BOTTOM OF ADJACENT CEILING CLOUD.
18. TYPE 'P6' LINE VOLTAGE LOBBY DECORATIVE FIXTURE PENDANT-MOUNTED AT HEIGHTS DETERMINED BY ARCHITECT. ABOVE STAIRS, PENDANT LENGTHS VARY TO MAINTAIN CONSISTENT AFF HEIGHT ABOVE STAIR TREADS.
19. TYPE 'S2' LINE VOLTAGE DECORATIVE FIXTURES SURFACE-MOUNTED AT LOBBY ENTRY SOFFIT
20. TYPE 'P1x' DOWNLIGHT CYLINDERS AT AUDITORIUM HIGH CEILING PENDANT-MOUNTED WITH BOTTOM OF FIXTURE ALIGNED TO ADJACENT CEILING PANEL.
21. INSTALL REAR-MOST ROW OF AUDITORIUM DOWNLIGHTS WITH BOTTOM OF FIXTURE AT +30'-3"
22. FOR TYPE 'P1W-R' AND 'P1VW-R' AUDITORIUM DOWNLIGHT CYLINDERS NOT ADJACENT TO A CATWALK, PROVIDE DRIVERS IN A REMOTE ENCLOSURE AT SIDE CATWALK. PROVIDE SEPARATE ENCLOSURES FOR FIXTURES ON NORMAL AND EMERGENCY POWER.
23. TYPE 'W3' JELLY JARS AND 'F1' LINE VOLTAGE UTILITY STRIPS WALL-MOUNT AT BOX BOOM MEZZANINES AT +8'-0"
24. TYPE 'W3' LINE VOLTAGE LED JELLY JAR WORKLIGHTS MOUNT ON FACE OF ON CATWALK HANGERS AT +8'-0" AFF. MAKE CONDUIT RUNS OVERHEAD, AND DROP DIRECTLY TO FIXTURE BACKBOXES.
25. PENDANT-MOUNT TYPE 'F1' UTILITY STRIP LIGHT BELOW HORIZONTAL PATH OF STAGE RIGGING WIRE ROPES, AT +8'-6" ABOVE LOADING GALLERY CATWALK DECK. COORDINATE EXACT PLACEMENT OF FIXTURES WITH RIGGING CONTRACTOR TO PREVENT OBSTRUCTIONS.
26. TYPE 'SL4' LOW-VOLTAGE LED AISLE LIGHT ON SEAT END PANEL, PROVIDED BY SEAT MANUFACTURER. CONNECT WHIP TO FLOOR BOX WIRED BACK TO REMOTE, DIMMABLE TRANSFORMER IN CONCEALED, MAINTENANCE-ACCESSIBLE LOCATION.

LIGHTING RCP - MAIN LEVEL | 1/8" = 1'-0" | 1

APPL No. A03-122864

IDENTIFICATION STAMP
DIV. OF THE STATE ARCHITECT
APP: 03-122864 INC:
REVIEWED FOR
SS ☑ FLS ☑ ACS ☑
DATE: 10/03/2023

DSA Stamp

Architect

RACHLIN PARTNERS
8640 National Boulevard
Culver City, CA 90232
310.204.3400

Disclaimer:

THESE DRAWINGS ARE THE PROPERTY OF THE ARCHITECT. THE DESIGNS SHOWN AND DESCRIBED HEREIN INCLUDING ALL TECHNICAL DRAWINGS ARE PROPRIETARY AND CANNOT BE COPIED, DUPLICATED OR COMMERCIALLY EXPLOITED EXCEPT WITH THE WRITTEN PERMISSION OF THE ARCHITECT AND SHALL NOT BE USED BY THE OWNER ON OTHER PROJECTS FOR ADDITIONS TO THIS PROJECT, OR FOR COMPLETION OF THIS PROJECT BY OTHERS. THE OWNER AGREES TO HOLD HARMLESS, INDEMNIFY AND DEFEND THE ARCHITECT AGAINST ALL DAMAGES, CLAIMS AND LOSSES, INCLUDING DEFENSE COSTS, ARISING OUT OF ANY REUSE OF PLANS AND SPECIFICATIONS WITHOUT THE WRITTEN AUTHORIZATION OF THE ARCHITECT OF RECORD.

Copyright © 2019 Rachlin Partners, All Rights Reserved.

THE RUZIKA COMPANY
2 Executive Circle, Suite 290
Irvine, California 92614
Ph (949) 253-3479 Fax (949) 250-0181
www.ruzika.com
LIGHTING DESIGNERS + THEATRE CONSULTANTS

HACIENDA PERFORMING ARTS CENTER

Hacienda La Puente Unified School District
635 North California Avenue
La Puente, CA 91744

Rev	Date	Issue
1	7.22.22	50% DD
2	10.21.22	50% CD
3	12.09.22	100% CD DSA SUBMITTAL
4	6.19.23	100% CD DSA RESUBMITTAL
5	9.20.23	DSA BACK CHECK

Date: 9.20.2023
Scale: 1/8" = 1'-0"
Drawn By: TRC
Checked By: Checker

Architect / Engineer Stamp

LICENSED ARCHITECT
RICHARD BYRD
NO. C-20229
REN. 8-31-25
STATE OF CALIFORNIA

Consultants

VCA Engineers, Inc.
R.M. Byrd and Associates, Inc.
ALM Consulting Engineers, Inc.
MDC Consulting Engineers
Protection Design and Consulting
The Ruzika Company

Sheet Title

LIGHTING PLAN - MAIN LEVEL RCP

Sheet Number

LT211

C:\Users\shawn.ruzika\Documents\Hacienda Theatrical_R22_sdlev.rvt

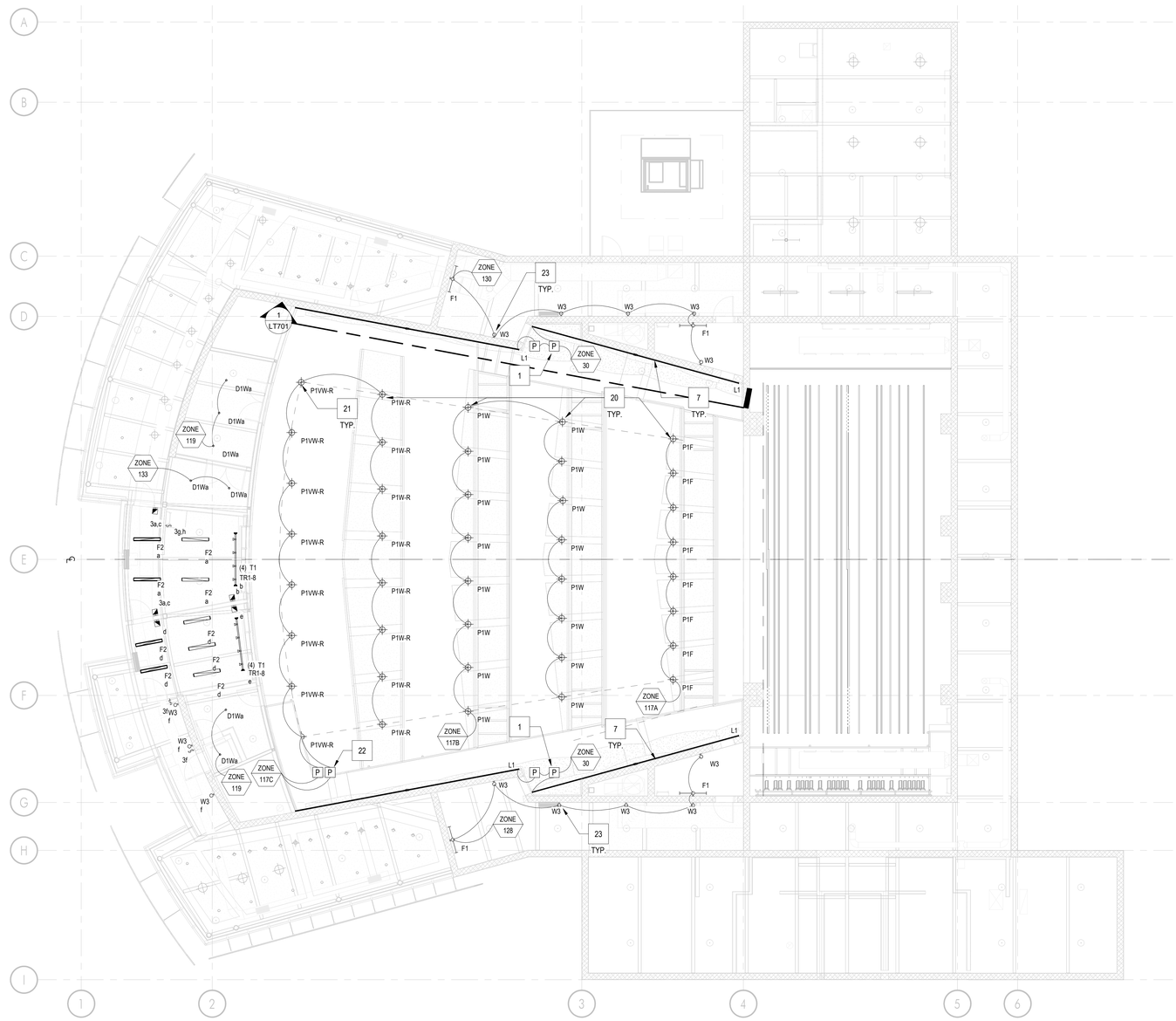

LIGHTING RCP - MEZZANINE LEVEL

1/8" = 1'-0"

1

GENERAL SHEET NOTES

1.	VERIFY MOUNTING LOCATIONS AND HEIGHTS OF ALL DEVICES WITH ARCHITECT PRIOR TO INSTALLATION.
2.	LOOPING INDICATES CONTROL ZONE DESIGN INTENT ONLY. REFER TO ELECTRICAL DRAWINGS FOR DIMMING, SWITCHING AND CIRCUITRY INFORMATION.
3.	THE CONTRACTOR IS RESPONSIBLE FOR PROVIDING ATHE CONTRACTOR IS RESPONSIBLE FOR PROVIDING ALL LABOR AND EQUIPMENT THAT IS NECESSARY FOR THE FOCUS AIMING OF ADJUSTABLE LIGHTING FIXTURES AND THE PROGRAMMING OF LIGHTING PRESETS OR EFFECTS PER THE DIRECTION OF THE LIGHTING DESIGN CONSULTANT LL LABOR AND EQUIPMENT THAT IS NECESSARY FOR THE FOCUS AIMING OF ADJUSTABLE LIGHTING FIXTURES AND THE PROGRAMMING OF LIGHTING PRESETS OR EFFECTS PER THE DIRECTION OF THE LIGHTING DESIGN CONSULTANT.
4.	ELECTRICAL CONTRACTOR, FIXTURE SUPPLIER, AND LAMP SUPPLIER MUST VERIFY THAT ALL LED LAMPS ARE COMPATIBLE WITH FIXTURE TRIM HOUSINGS, LAMP SOCKETS, LOW VOLTAGE TRANSFORMERS, AND ELECTRICAL DIMMING SYSTEMS PRIOR TO PLACING ANY LIGHTING EQUIPMENT ORDERS AFTER FIXTURE SHOP DRAWING SUBMITTALS ARE APPROVED. LAMPS SHOULD BE OPERABLE AT FULL OR DIMMED INTENSITY WITH NO VISUALLY PERCEIVED FLICKERING WHEN ALL LAMPS ON THE CIRCUIT ARE ENERGIZED.
5.	WHERE MEASUREMENTS ARE GIVEN, THEY ARE FOR PRICING ESTIMATES ONLY. THE CONTRACTOR SHALL VERIFY LENGTHS WITH FIELD MEASUREMENTS PRIOR TO PURCHASING.
6.	HCS-X AND WCS-X DEVICES ARE LOW-VOLTAGE LIGHTING CONTROL STATIONS CONNECTED TO THEATRICAL LIGHTING CONTROL SYSTEM. REFER TO TL DRAWINGS.

KEY NOTES

xx

NOTE: NOT ALL KEYNOTES WILL BE USED ON EVERY PAGE

1	MOUNT LOW VOLTAGE REMOTE POWER SUPPLY IN A CONCEALED, DRY, WELL VENTILATED LOCATION WITHIN MANUFACTURER RECOMMENDED DISTANCES AND WITHIN CODE REQUIRED NEMA RATED ENCLOSURE (AS NECESSARY). CONTRACTOR TO ENSURE PROPER WIRE GAUGE AND DISTANCE USED TO SUPPLY 12V OR 24V AT EACH FIXTURE (REFER TO FIXTURE SCHEDULE FOR VOLTAGE REQUIREMENTS FOR EACH FIXTURE).
2	FLUSH-MOUNT TYPE 'SL1' LOW-VOLTAGE STEP LIGHT AT +18" AFF AND CONNECT TO REMOTE DRIVER.
3	TYPE 'SL2' LOW-VOLTAGE LED STEP LIGHTS AT +16" AFF ON RAILING POSTS AT AUDITORIUM STEPPED AISLES. CONNECT TO REMOTE, DIMMABLE TRANSFORMER IN CONCEALED, MAINTENANCE-ACCESSIBLE LOCATION.
4	TYPE 'L1' LOW VOLTAGE LINEAR LED LIGHT, TO BE CONCEALED AT TOEKICK BELOW BOTTOM WALL PANELS AND ORIENTED FACING DOWN. REFER TO ARCHITECTURAL SET FOR MOUNTING DETAILS.
5	TYPE 'SL3' LOW-VOLTAGE POST-MOUNTED STEP LIGHT MOUNTED TO FACE OF SEATING RISER WITH LENS AT +18" AFF. COORDINATE WITH SEATING VENDOR AND ALIGN POST WITH CENTERLINE OF ARMREST TO PREVENT CONFLICTS. WIRE BACK TO REMOTE TRANSFORMER
6	FLUSH-MOUNT TYPE 'SL4' LINE VOLTAGE STEP LIGHT AT +18" AFF.
7	TYPE 'L1' LOW VOLTAGE LINEAR LED LIGHT, TO BE CONCEALED IN HORIZONTAL SLOT BETWEEN WALL PANELS AND ORIENTED UP. REFER TO ARCHITECTURAL SET FOR MOUNTING DETAILS.
8	TYPE 'W1' ANGLED-FACELINE VOLTAGE LED WALL BRACKET TO BE MOUNTED AT +12'-6"
9	STAGE RIGGING INDEX LIGHT PROVIDED BY STAGE RIGGING CONTRACTOR. WIRE TO WALLBOX DIMMER FURNISHED BY RIGGING CONTRACTOR ON 120V CIRCUIT.
10	MOUNT TYPE 'F1' LINE VOLTAGE UTILITY STRIPLIGHT ON OUTRIGGER BRACKET PROVIDED BY STAGE RIGGING CONTRACTOR.
11	TYPE 'W2' LINE VOLTAGE LED WALL BRACKET IN CORRIDOR MOUNTED AT +12'-0". FIXTURE REQUIRES SEPARATE CIRCUITS AND 0-10V CONTROL WIRING FOR LINEAR GENERAL LIGHTING SOURCE AND ADJUSTABLE DOWNLIGHT MODULES. TILT DOWNLIGHT MODULES TOWARDS CENTER OF CORRIDOR.
12	TYPE 'P3' LINE VOLTAGE LED LINEAR IN PENDANT IN CORRIDOR, MOUNTED WITH BOTTOM OF FIXTURE 12" ABOVE HEADER OF ADJACENT ROLL-UP DOOR. FIXTURE REQUIRES SEPARATE CIRCUITS AND 0-10V CONTROL WIRING FOR LINEAR GENERAL LIGHTING SOURCE AND ADJUSTABLE DOWNLIGHT MODULES. TILT DOWNLIGHT MODULES TOWARDS CENTER OF CORRIDOR.
13	TYPE 'P3' PENDANT-MOUNT DOWNLIGHT CYLINDER IN CORRIDOR. VERIFY MOUNTING HEIGHT WITH ARCHITECT.
14	TYPE 'P5' LED HIGH-BAY IN SHOP. PENDANT-MOUNT WITH BOTTOM OF FIXTURE 12" ABOVE HEADER OF ROLL-UP DOOR TO STAGE.
15	TYPE 'S1F' SURFACE-MOUNT DOWNLIGHT CYLINDER IN ALCOVE AT STAGE APRON
16	TYPE W4 LINE-VOLTAGE LED MAKEUP LIGHT MOUNTED TO WALL ABOVE DRESSING ROOM MIRRORS. VERIFY HEIGHT AND LENGTHS WITH INTERIOR ELEVATIONS.
17	TYPE 'P7' LINE-VOLTAGE WALLWASH CYLINDER PENDANT-MOUNTED WITH BOTTOM OF FIXTURE ALIGNED TO BOTTOM OF ADJACENT CEILING CLOUD.
18	TYPE 'P6' LINE VOLTAGE LOBBY DECORATIVE FIXTURE PENDANT-MOUNTED AT HEIGHTS DETERMINED BY ARCHITECT. ABOVE STAIRS, PENDANT LENGTHS VARY TO MAINTAIN CONSISTENT AFF HEIGHT ABOVE STAIR TREADS.
19	TYPE 'S2' LINE VOLTAGE DECORATIVE FIXTURES SURFACE-MOUNTED AT LOBBY ENTRY SOFFIT
20	TYPE 'P1x' DOWNLIGHT CYLINDERS AT AUDITORIUM HIGH CEILING PENDANT-MOUNTED WITH BOTTOM OF FIXTURE ALIGNED TO ADJACENT CEILING PANEL.
21	INSTALL REAR-MOST ROW OF AUDITORIUM DOWNLIGHTS WITH BOTTOM OF FIXTURE AT +30'-3"
22	FOR TYPE 'P1W-R' AND 'P1VW-R' AUDITORIUM DOWNLIGHT CYLINDERS NOT ADJACENT TO A CATWALK, PROVIDE DRIVERS IN A REMOTE ENCLOSURE AT SIDE CATWALK. PROVIDE SEPARATE ENCLOSURES FOR FIXTURES ON NORMAL AND EMERGENCY POWER.
23	TYPE 'W3' JELLY JARS AND 'F1' LINE VOLTAGE UTILITY STRIPS WALL-MOUNT AT BOX BOOM MEZZANINES AT +8'-0"
24	TYPE 'W5' LINE VOLTAGE LED JELLY JAR WORKLIGHTS MOUNT ON FACE OF ON CATWALK HANGERS AT +8'-0" AFF. MAKE CONDUIT RUNS OVERHEAD, AND DROP DIRECTLY TO FIXTURE BACKBOXES.
25	PENDANT-MOUNT TYPE 'F1' UTILITY STRIP LIGHT BELOW HORIZONTAL PATH OF STAGE RIGGING WIRE ROPES, AT +8'-6" ABOVE LOADING GALLERY CATWALK DECK. COORDINATE EXACT PLACEMENT OF FIXTURES WITH RIGGING CONTRACTOR TO PREVENT OBSTRUCTIONS.
26	TYPE 'SL4' LOW-VOLTAGE LED AISLE LIGHT ON SEAT END PANEL, PROVIDED BY SEAT MANUFACTURER. CONNECT WHIP TO FLOOR BOX WIRED BACK TO REMOTE, DIMMABLE TRANSFORMER IN CONCEALED, MAINTENANCE-ACCESSIBLE LOCATION.

APPL No. A03-122864

IDENTIFICATION STAMP
DIV. OF THE STATE ARCHITECT
APP: 03-122864 INC:
REVIEWED FOR
SS ☑ FLS ☑ ACS ☑
DATE: 10/03/2023

DSA Stamp

Architect

RACHLIN
PARTNERS
8640 National Boulevard
Culver City, CA 90232
310.204.3400

Disclaimer:

THESE DRAWINGS ARE THE PROPERTY OF THE ARCHITECT. THE DESIGNS SHOWN AND DESCRIBED HEREIN INCLUDING ALL TECHNICAL DRAWINGS ARE PROPRIETARY AND CANNOT BE COPIED, DUPLICATED OR COMMERCIALLY EXPLOITED EXCEPT WITH THE WRITTEN PERMISSION OF THE ARCHITECT AND SHALL NOT BE USED BY THE OWNER ON OTHER PROJECTS, FOR ADDITIONS TO THIS PROJECT, OR FOR COMPLETION OF THIS PROJECT BY OTHERS. THE OWNER AGREES TO HOLD HARMLESS, INDEMNIFY AND DEFEND THE ARCHITECT AGAINST ALL DAMAGES, CLAIMS AND LOSSES, INCLUDING DEFENSE COSTS, ARISING OUT OF ANY REUSE OF PLANS AND SPECIFICATIONS WITHOUT THE WRITTEN AUTHORIZATION OF THE ARCHITECT OF RECORD.

Copyright © 2019 Rachlin Partners, All Rights Reserved.

THE RUZIKA COMPANY
2 Executive Circle, Suite 290
Irvine, California 92614
Ph (949) 253-3479 Fax (949) 253-0181
www.ruzika.com
LIGHTING DESIGNERS + THEATRE CONSULTANTS

HACIENDA PERFORMING ARTS CENTER

Hacienda La Puente Unified School District
635 North California Avenue
La Puente, CA 91744

Rev	Date	Issue
1	7.22.22	50% DD
2	10.21.22	50% CD
3	12.09.22	100% CD DSA SUBMITTAL
4	6.19.23	100% CD DSA RESUBMITTAL
5	9.20.23	DSA BACK CHECK

Date: 9.20.2023
Scale: 1/8" = 1'-0"
Drawn By: TRC
Checked By: Checker

Architect / Engineer Stamp

LICENSED ARCHITECT
RICHARD RACHLIN
NO. C-20229
REN. 8-31-25
STATE OF CALIFORNIA

Consultants

VCA Engineers, Inc.
R.M. Byrd and Associates, Inc.
ALM Consulting Engineers, Inc.
MDC Consulting Engineers
Protection Design and Consulting
The Ruzika Company

Sheet Title

LIGHTING PLAN - MEZZANINE LEVEL RCP

Sheet Number

LT212

C:\Users\Admin.rustica\Documents\Hacienda Theatrical_R22_Editor.rvt

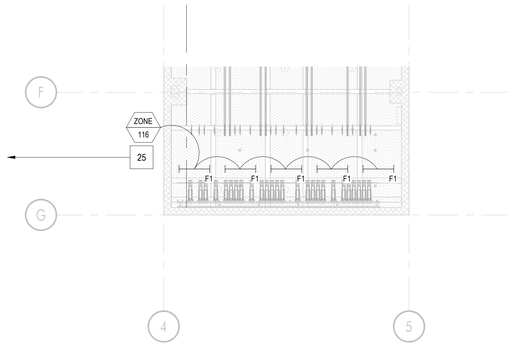

LOADING GALLERY (+36'-6") | 1/8" = 1'-0" | 2

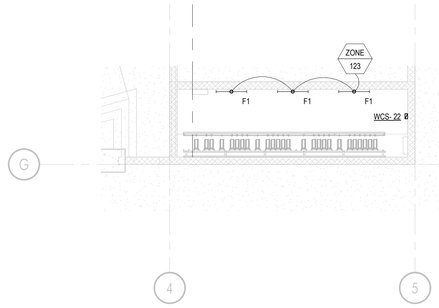

ARBOR WELL (-7'-6") | 1/8" = 1'-0" | 3

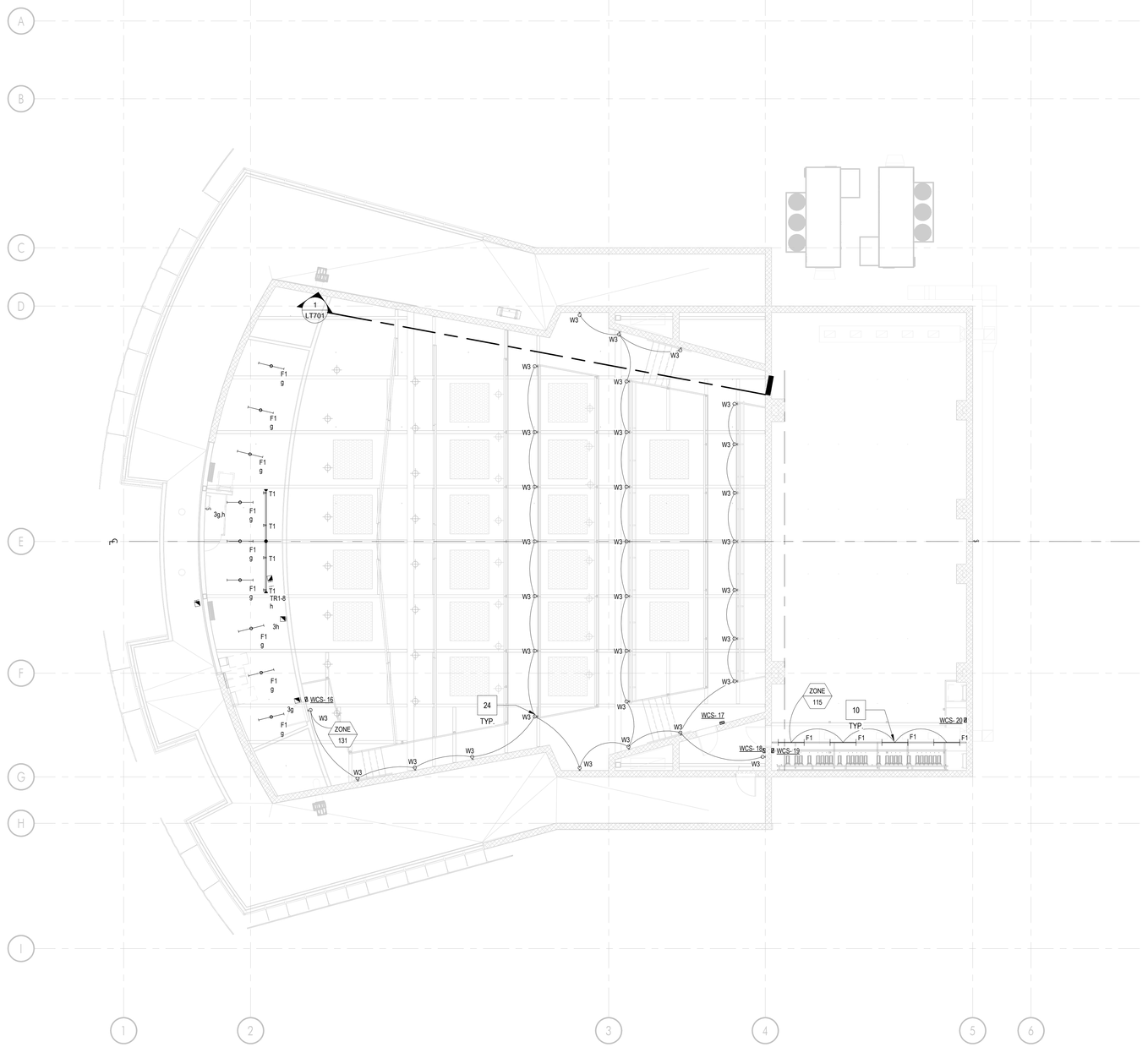

LIGHTING RCP - CATWALK LEVEL | 1/8" = 1'-0" | 1

GENERAL SHEET NOTES

1. VERIFY MOUNTING LOCATIONS AND HEIGHTS OF ALL DEVICES WITH ARCHITECT PRIOR TO INSTALLATION.
2. LOOPING INDICATES CONTROL ZONE DESIGN INTENT ONLY. REFER TO ELECTRICAL DRAWINGS FOR DIMMING, SWITCHING AND CIRCUITRY INFORMATION.
3. THE CONTRACTOR IS RESPONSIBLE FOR PROVIDING ATHE CONTRACTOR IS RESPONSIBLE FOR PROVIDING ALL LABOR AND EQUIPMENT THAT IS NECESSARY FOR THE FOCUS AIMING OF ADJUSTABLE LIGHTING FIXTURES AND THE PROGRAMMING OF LIGHTING PRESETS OR EFFECTS PER THE DIRECTION OF THE LIGHTING DESIGN CONSULTANT LL LABOR AND EQUIPMENT THAT IS NECESSARY FOR THE FOCUS AIMING OF ADJUSTABLE LIGHTING FIXTURES AND THE PROGRAMMING OF LIGHTING PRESETS OR EFFECTS PER THE DIRECTION OF THE LIGHTING DESIGN CONSULTANT.
4. ELECTRICAL CONTRACTOR, FIXTURE SUPPLIER, AND LAMP SUPPLIER MUST VERIFY THAT ALL LED LAMPS ARE COMPATIBLE WITH FIXTURE TRIM HOUSINGS, LAMP SOCKETS, LOW VOLTAGE TRANSFORMERS, AND ELECTRICAL DIMMING SYSTEMS PRIOR TO PLACING ANY LIGHTING EQUIPMENT ORDERS AFTER FIXTURE SHOP DRAWING SUBMITTALS ARE APPROVED. LAMPS SHOULD BE OPERABLE AT FULL OR DIMMED INTENSITY WITH NO VISUALLY PERCEIVED FLICKERING WHEN ALL LAMPS ON THE CIRCUIT ARE ENERGIZED.
5. WHERE MEASUREMENTS ARE GIVEN, THEY ARE FOR PRICING ESTIMATES ONLY. THE CONTRACTOR SHALL VERIFY LENGTHS WITH FIELD MEASUREMENTS PRIOR TO PURCHASING.
6. HCS-X AND WCS-X DEVICES ARE LOW-VOLTAGE LIGHTING CONTROL STATIONS CONNECTED TO THEATRICAL LIGHTING CONTROL SYSTEM. REFER TO TL DRAWINGS.

KEY NOTES

xx

NOTE: NOT ALL KEYNOTES WILL BE USED ON EVERY PAGE

1. MOUNT LOW VOLTAGE REMOTE POWER SUPPLY IN A CONCEALED, DRY, WELL VENTILATED LOCATION WITHIN MANUFACTURER RECOMMENDED DISTANCES AND WITHIN CODE REQUIRED NEMA RATED ENCLOSURE (AS NECESSARY). CONTRACTOR TO ENSURE PROPER WIRE GAUGE AND DISTANCE USED TO SUPPLY 12V OR 24V AT EACH FIXTURE (REFER TO FIXTURE SCHEDULE FOR VOLTAGE REQUIREMENTS FOR EACH FIXTURE).
2. FLUSH-MOUNT TYPE 'SL1' LOW-VOLTAGE STEP LIGHT AT +18" AFF AND CONNECT TO REMOTE DRIVER.
3. TYPE 'SL2' LOW-VOLTAGE LED STEP LIGHTS AT +16" AFF ON RAILING POSTS AT AUDITORIUM STEPPED AISLES. CONNECT TO REMOTE, DIMMABLE TRANSFORMER IN CONCEALED, MAINTENANCE-ACCESSIBLE LOCATION.
4. TYPE 'L1' LOW VOLTAGE LINEAR LED LIGHT, TO BE CONCEALED AT TOEKICK BELOW BOTTOM WALL PANELS AND ORIENTED FACING DOWN. REFER TO ARCHITECTURAL SET FOR MOUNTING DETAILS.
5. TYPE 'SL3' LOW-VOLTAGE POST-MOUNTED STEP LIGHT MOUNTED TO FACE OF SEATING RISER WITH LENS AT +18" AFF. COORDINATE WITH SEATING VENDOR AND ALIGN POST WITH CENTERLINE OF ARMREST TO PREVENT CONFLICTS. WIRE BACK TO REMOTE TRANSFORMER
6. FLUSH-MOUNT TYPE 'SL4' LINE VOLTAGE STEP LIGHT AT +18" AFF.
7. TYPE 'L1' LOW VOLTAGE LINEAR LED LIGHT, TO BE CONCEALED IN HORIZONTAL SLOT BETWEEN WALL PANELS AND ORIENTED UP. REFER TO ARCHITECTURAL SET FOR MOUNTING DETAILS.
8. TYPE 'W1' ANGLED-FACELINE VOLTAGE LED WALL BRACKET TO BE MOUNTED AT +12'-6"
9. STAGE RIGGING INDEX LIGHT PROVIDED BY STAGE RIGGING CONTRACTOR. WIRE TO WALLBOX DIMMER FURNISHED BY RIGGING CONTRACTOR ON 120V CIRCUIT.
10. MOUNT TYPE 'F1' LINE VOLTAGE UTILITY STRIPLIGHT ON OUTRIGGER BRACKET PROVIDED BY STAGE RIGGING CONTRACTOR.
11. TYPE 'W2' LINE VOLTAGE LED WALL BRACKET IN CORRIDOR MOUNTED AT +12'-0". FIXTURE REQUIRES SEPARATE CIRCUITS AND 0-10V CONTROL WIRING FOR LINEAR GENERAL LIGHTING SOURCE AND ADJUSTABLE DOWNLIGHT MODULES. TILT DOWNLIGHT MODULES TOWARDS CENTER OF CORRIDOR.
12. TYPE 'P3' LINE VOLTAGE LED LINEAR IN PENDANT IN CORRIDOR, MOUNTED WITH BOTTOM OF FIXTURE 12" ABOVE HEADER OF ADJACENT ROLL-UP DOOR. FIXTURE REQUIRES SEPARATE CIRCUITS AND 0-10V CONTROL WIRING FOR LINEAR GENERAL LIGHTING SOURCE AND ADJUSTABLE DOWNLIGHT MODULES. TILT DOWNLIGHT MODULES TOWARDS CENTER OF CORRIDOR.
13. TYPE 'P3' PENDANT-MOUNT DOWNLIGHT CYLINDER IN CORRIDOR. VERIFY MOUNTING HEIGHT WITH ARCHITECT.
14. TYPE 'P5' LED HIGH-BAY IN SHOP. PENDANT-MOUNT WITH BOTTOM OF FIXTURE 12' ABOVE HEADER OF ROLL-UP DOOR TO STAGE.
15. TYPE 'S1F' SURFACE-MOUNT DOWNLIGHT CYLINDER IN ALCOVE AT STAGE APRON
16. TYPE W4 LINE-VOLTAGE LED MAKEUP LIGHT MOUNTED TO WALL ABOVE DRESSING ROOM MIRRORS. VERIFY HEIGHT AND LENGTHS WITH INTERIOR ELEVATIONS.
17. TYPE 'P7' LINE-VOLTAGE WALLWASH CYLINDER PENDANT-MOUNTED WITH BOTTOM OF FIXTURE ALIGNED TO BOTTOM OF ADJACENT CEILING CLOUD.
18. TYPE 'P6' LINE VOLTAGE LOBBY DECORATIVE FIXTURE PENDANT-MOUNTED AT HEIGHTS DETERMINED BY ARCHITECT. ABOVE STAIRS, PENDANT LENGTHS VARY TO MAINTAIN CONSISTENT AFF HEIGHT ABOVE STAIR TREADS.
19. TYPE 'S2' LINE VOLTAGE DECORATIVE FIXTURES SURFACE-MOUNTED AT LOBBY ENTRY SOFFIT
20. TYPE 'P1x' DOWNLIGHT CYLINDERS AT AUDITORIUM HIGH CEILING PENDANT-MOUNTED WITH BOTTOM OF FIXTURE ALIGNED TO ADJACENT CEILING PANEL.
21. INSTALL REAR-MOST ROW OF AUDITORIUM DOWNLIGHTS WITH BOTTOM OF FIXTURE AT +30'-3"
22. FOR TYPE 'P1W-R' AND 'P1W-R' AUDITORIUM DOWNLIGHT CYLINDERS NOT ADJACENT TO A CATWALK, PROVIDE DRIVERS IN A REMOTE ENCLOSURE AT SIDE CATWALK. PROVIDE SEPARATE ENCLOSURES FOR FIXTURES ON NORMAL AND EMERGENCY POWER.
23. TYPE 'W3' JELLY JARS AND 'F1' LINE VOLTAGE UTILITY STRIPS WALL-MOUNT AT BOX BOOM MEZZANINES AT +8'-0"
24. TYPE 'W3' LINE VOLTAGE LED JELLY JAR WORKLIGHTS MOUNT ON FACE OF ON CATWALK HANGERS AT +8'-0" AFF. MAKE CONDUIT RUNS OVERHEAD, AND DROP DIRECTLY TO FIXTURE BACKBOXES.
25. PENDANT-MOUNT TYPE 'F1' UTILITY STRIP LIGHT BELOW HORIZONTAL PATH OF STAGE RIGGING WIRE ROPES, AT +8'-6" ABOVE LOADING GALLERY CATWALK DECK. COORDINATE EXACT PLACEMENT OF FIXTURES WITH RIGGING CONTRACTOR TO PREVENT OBSTRUCTIONS.
26. TYPE 'SL4' LOW-VOLTAGE LED AISLE LIGHT ON SEAT END PANEL, PROVIDED BY SEAT MANUFACTURER. CONNECT WHIP TO FLOOR BOX WIRED BACK TO REMOTE. DIMMABLE TRANSFORMER IN CONCEALED, MAINTENANCE-ACCESSIBLE LOCATION.

APPL No. A03-122864

IDENTIFICATION STAMP
DIV. OF THE STATE ARCHITECT
APP: 03-122864 INC:
REVIEWED FOR
SS ☑ FLS ☑ ACS ☑
DATE: 10/03/2023

DSA Stamp

Architect

RACHLIN PARTNERS
8640 National Boulevard
Culver City, CA 90232
310.204.3400

Disclaimer:

THESE DRAWINGS ARE THE PROPERTY OF THE ARCHITECT. THE DESIGNS SHOWN AND DESCRIBED HEREIN INCLUDING ALL TECHNICAL DRAWINGS ARE PROPRIETARY AND CANNOT BE COPIED, DUPLICATED OR COMMERCIALLY EXPLOITED EXCEPT WITH THE WRITTEN PERMISSION OF THE ARCHITECT AND SHALL NOT BE USED BY THE OWNER ON OTHER PROJECTS, FOR ADDITIONS TO THIS PROJECT, OR FOR COMPLETION OF THIS PROJECT BY OTHERS. THE OWNER AGREES TO HOLD HARMLESS, INDEMNIFY AND DEFEND THE ARCHITECT AGAINST ALL DAMAGES, CLAIMS AND LOSSES, INCLUDING DEFENSE COSTS, ARISING OUT OF ANY REUSE OF PLANS AND SPECIFICATIONS WITHOUT THE WRITTEN AUTHORIZATION OF THE ARCHITECT OF RECORD.

Copyright © 2019 Rachlin Partners, All Rights Reserved.

THE RUZIKA COMPANY
2 Executive Circle, Suite 290
Irvine, California 92614
Ph (949) 253-3479 Fax (949) 253-0181
www.ruzika.com
LIGHTING DESIGNERS + THEATRE CONSULTANTS

HACIENDA PERFORMING ARTS CENTER

Hacienda La Puente Unified School District
635 North California Avenue
La Puente, CA 91744

Rev	Date	Issue
1	7.22.22	50% DD
2	10.21.22	50% CD
3	12.09.22	100% CD DSA SUBMITTAL
4	6.19.23	100% CD DSA RESUBMITTAL
5	9.20.23	DSA BACK CHECK

Date: 9.20.2023
Scale: 1/8" = 1'-0"
Drawn By: TRC
Checked By: Checker

Architect / Engineer Stamp

LICENSED ARCHITECT
RICHARD M. RACHLIN
NO. C-26229
REN. 8-31-25
STATE OF CALIFORNIA

Consultants

VCA Engineers, Inc.
R.M. Byrd and Associates, Inc.
ALM Consulting Engineers, Inc.
MDC Consulting Engineers
Protection Design and Consulting
The Ruzika Company

Sheet Title

LIGHTING PLAN - CATWALK LEVELS

Sheet Number

LT213

C:\Users\shawn.ruzika\Documents\Hacienda Theatrical_R22_sfdlar.rvt

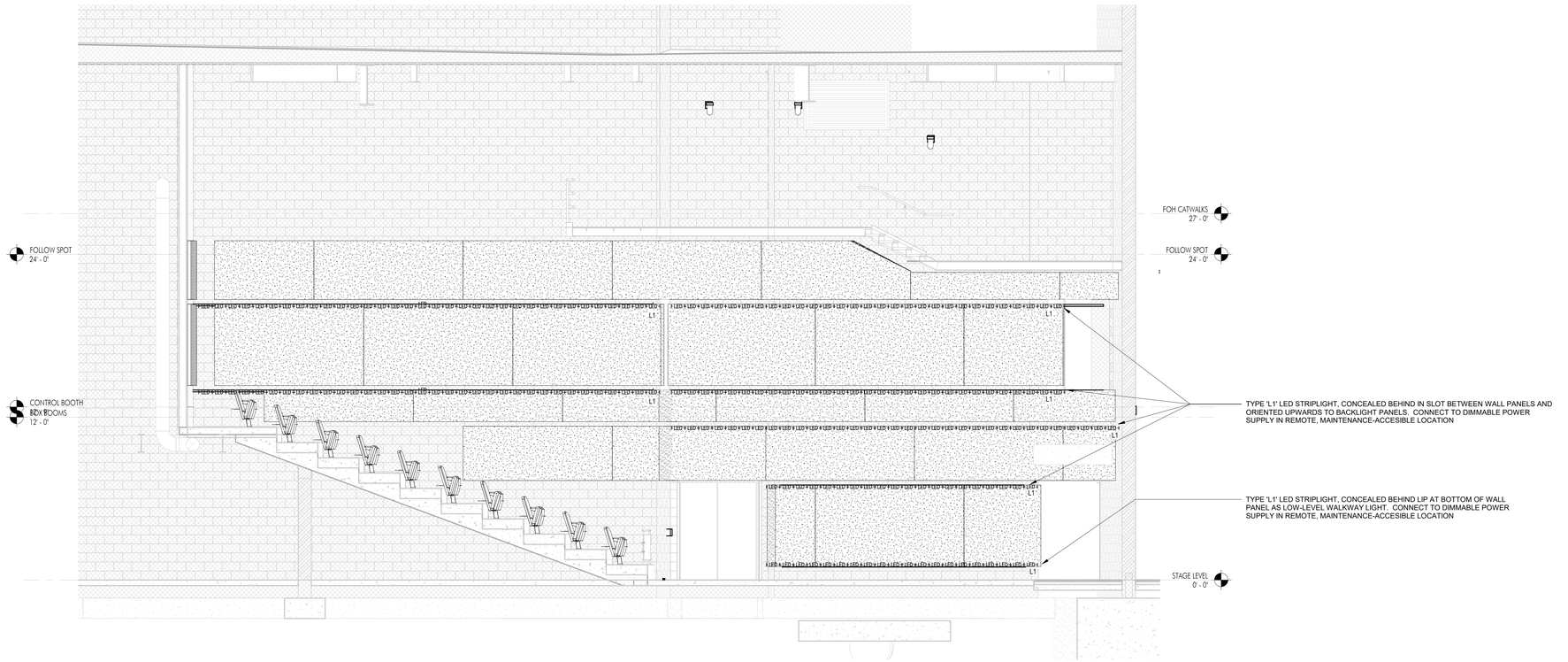

LTG ELEVATION - HOUSE LEFT AUDITORIUM WALL | 1/4" = 1'-0" | 1

APPL No. A03-122864

IDENTIFICATION STAMP
DIV. OF THE STATE ARCHITECT
APP: 03-122864 INC:
REVIEWED FOR
SS ☑ FLS ☑ ACS ☑
DATE: 10/03/2023

DSA Stamp

Architect

RACHLIN PARTNERS
8640 National Boulevard
Culver City, CA 90232
310.204.3400

Disclaimer:

THESE DRAWINGS ARE THE PROPERTY OF THE ARCHITECT. THE DESIGNS SHOWN AND DESCRIBED HEREIN INCLUDING ALL TECHNICAL DRAWINGS ARE PROPRIETARY AND CANNOT BE COPIED, DUPLICATED OR COMMERCIALLY EXPLOITED EXCEPT BY WRITTEN AGREEMENT. THESE DRAWINGS AND DESIGNS SHALL NOT BE USED BY THE OWNER ON OTHER PROJECTS, FOR ADDITIONS TO THIS PROJECT, OR FOR COMPLETION OF THIS PROJECT BY OTHERS. THE OWNER AGREES TO HOLD HARMLESS, INDEMNIFY AND DEFEND THE ARCHITECT AGAINST ALL DAMAGES, CLAIMS AND LOSSES, INCLUDING DEFENSE COSTS, ARISING OUT OF ANY REUSE OF PLANS AND SPECIFICATIONS WITHOUT THE WRITTEN AUTHORIZATION OF THE ARCHITECT OF RECORD.

Copyright © 2019 Rachlin Partners, All Rights Reserved.

THE RUZIKA COMPANY
2 Executive Circle, Suite 290
Irvine, California 92614
Ph (949) 253-3479 Fax (949) 253-0181
www.ruzika.com
LIGHTING DESIGNERS + THEATRE CONSULTANTS

HACIENDA PERFORMING ARTS CENTER
Hacienda La Puente Unified School District
635 North California Avenue
La Puente, CA 91744

Rev	Date	Issue
1	7.22.22	50% DD
2	10.21.22	50% CD
3	12.09.22	100% CD DSA SUBMITTAL
4	6.19.23	100% CD DSA RESUBMITTAL
5	9.20.23	DSA BACK CHECK

Date: 9.20.2023
Scale: 1/4" = 1'-0"
Drawn By: TRC
Checked By: Checker

Architect / Engineer Stamp

LICENSED ARCHITECT
RICHARD INGERSOLL
NO. C-20229
REN. 8-31-25
STATE OF CALIFORNIA

Consultants

VCA Engineers, Inc.
R.M. Byrd and Associates, Inc.
ALM Consulting Engineers, Inc.
MDC Consulting Engineers
Protection Design and Consulting
The Ruzika Company

Sheet Title

LIGHTING ELEVATIONS

Sheet Number

LT701

C:\Users\tbown.ruzika\Documents\Hacienda Theatrical_R22_tbiller.rvt

ABBREVIATION KEY

2P&G	2 PIN & GROUND	FSPOT	FOLLOWSPOT	PS	PLUG STRIP
ADJ	ADJUSTABLE	GUB	GRIDIRON JUNCTION BOX	RECP.	RECEPTACLE
AFF	ABOVE FINISH FLOOR	GPC	GROUNDED PIN CONNECTOR (2P&G)	REF.	REFERENCE
APPROX.	APPROXIMATE	GTL	GROUNDED TWISTLOCK CONNECTOR	REQ'D	REQUIRED
B.O.	BOTTOM OF	HCS	HOUSELIGHT CONTROL STATION	RFU	REMOTE FOCUS UNIT
B.O.S.	BOTTOM OF STEEL	HL	HOUSE LEFT	RL	REHEARSAL LIGHT
BALC	BALCONY	HR	HOUSE RIGHT	R&R	REVERSE & REPEAT
BOH	BACK-OF-HOUSE	I.D.	INNER DIAMETER	RU	RACK UNIT SPACE
CAT.	CATWALK	INT.	INTERIOR	SCH.	SCHEDULE
CC	CONTROL CONSOLE	LPC	LIGHTING PLAYBACK CONTROLLER	SF	SQUARE FOOT (FEET)
CER	CONTROL EQUIPMENT RACK	LTG.	LIGHTING	SHT.	SHEET
CFL	COMPACT FLUORESCENT	MAX.	MAXIMUM	SL	STAGE LEFT
CIRC	CIRCUIT	M.H.	METAL HALIDE	SMP	STAGE MANAGERS PANEL
CL	CENTERLINE	MH	MOUNTING HEIGHT	SQ.	SQUARE
CONN.	CONNECTOR	MEZZ.	MEZZANINE	SQ. YD.	SQUARE YARDS
CONTR.	CONNTRACTOR	MFR.	MANUFACTURER	SR	STAGE RIGHT
CRS	CONTROL RECEPTACLE STATION	MIN.	MINIMUM	STA.	STATION
CTRL	CONTROL	MS	MIDSTAGE	T&B	TOP AND BOTTOM
D	DIMMER	MSL	MIDSTAGE LEFT	T.O.C.	TOP OF CONCRETE
DDR	DATA DISTRIBUTION RACK	MSR	MIDSTAGE RIGHT	T.O.S.	TOP OF STEEL
DMX	DMX512 (A LTG. CTRL. PROTOCOL)	MTG.	MOUNTING	TYP.	TYPICAL
DR	DIMMER RACK	(N)	NEW	UL	UNDERWRITERS LABORATORIES
DSC	DOWNSTAGE CENTER	N.I.C.	NOT IN CONTRACT	USC	UPSTAGE CENTER
DSL	DOWNSTAGE LEFT	N.T.S.	NOT TO SCALE	USL	UPSTAGE LEFT
DSR	DOWNSTAGE RIGHT	O.C.	ON CENTER	USR	UPSTAGE RIGHT
(E)	EXISTING	O.D.	OUTER DIAMETER	W/	WITH
EA.	EACH	ORCH.	ORCHESTRA	W/O	WITHOUT
E.C.	ELECTRICAL CONTRACTOR	PB	PLUG BOX	WCS	WORKLIGHT CONTROL STATION
ELEC.	ELECTRIC / LIGHTING BATTEN	PCS	PORTABLE CONTROL STATION	WL	WORKLIGHT
EXT.	EXTERIOR	PoE	POWER OVER ETHERNET	WRFU	WIRELESS REMOTE FOCUS UNIT
FLUOR	FLUORESCENT	PL	PLASTERLINE	WT.	WEIGHT
FOH	FRONT-OF-HOUSE	QTY.	QUANTITY		

ELECTRICAL AND STAGE RIGGING COORDINATION ITEMS

COORDINATION ITEM	ELECTRICAL CONTRACTOR	RIGGING CONTRACTOR
FURNISH FLEXIBLE DIMMER CIRCUIT & CONTROL CABLES BETWEEN GRIDIRON JUNCTION BOXES AND FLYING ELECTRIC LINESETS	●	
TRIAL-FIT CABLES BETWEEN GRIDIRON JUNCTION BOXES AND FLYING ELECTRIC LINESETS TO ENSURE PROPER LENGTH AND TRAVEL	●	●
INSTALL FLEXIBLE DIMMER CIRCUIT & CONTROL CABLES BETWEEN GRIDIRON JUNCTION BOXES AND FLYING ELECTRIC LINESETS		●
TERMINATE DIMMER CIRCUIT & CONTROL CABLES AT GRIDIRON JUNCTION BOXES AND AT CONNECTOR STRIPS	●	
FURNISH AND INSTALL CABLE CRADLES FOR FLEXIBLE MULTI-CONDUCTOR CABLES		●
FURNISH CONNECTOR STRIPS AND MOUNTING BRACKETS (FLYING ELECTRIC LINESETS)	●	
INSTALL CONNECTOR STRIPS AND MOUNTING BRACKETS (FLYING ELECTRIC LINESETS)	●	
INSTALL UPPER AND LOWER PIPE BATTENS (FLYING ELECTRIC LINESETS)		●
FURNISH UPPER AND LOWER PIPE BATTENS (FLYING ELECTRIC LINESETS)		●
FURNISH PLUG BOXES (STAGE WALLS, CATWALKS, BOX BOOMS AND OTHER AREAS)	●	
INSTALL PLUG BOXES (STAGE WALLS, CATWALKS, BOX BOOMS AND OTHER AREAS)	●	
FURNISH FIXTURE MOUNTING PIPES AND PORTABLE CROSS-BATTEN CLAMPS AT BOX BOOMS		●
PROVIDE STAGE LIGHTING FIXTURES, PLUG BOXES AND CONTROL RECEPTACLES AT BOX BOOMS IN AUDITORIUM.	●	
PROVIDE RIGGING MOTORS AND CONTROL EQUIPMENT		●
PROVIDE CONDUIT, WIRING AND NECESSARY DISCONNECTS FOR RIGGING MOTORS	●	
FURNISH AND INSTALL STAGE RIGGING INDEX RAIL LIGHT STRIP INCLUDING LAMPS		●
TERMINATE INDEX RAIL LIGHT STRIP TO LOCAL WALLBOX DIMMER.	●	
PROVIDE ALL WIRING, CONDUIT, JUNCTION BOXES AND ELECTRICAL FITTINGS UNLESS OTHERWISE NOTED	●	
TERMINATE ALL LINE VOLTAGE AND CONTROL CIRCUIT WIRING	●	

STAGE LIGHTING SYMBOL LEGEND

CIRCUIT DEVICES
(REF. TO TL81x SHEETS FOR MORE INFO)

- PB-# — PLUG BOX
- PB-# — PLUG BOX (IN FLOOR POCKET)
- PS-# — CONNECTOR STRIP
- GUB-# — GRIDIRON JUNCTION BOX
- # AMPS — COMPANY SWITCH

CONTROL DEVICES
(REF. TO TL82X SHEETS FOR MORE INFO)

- CRS-# — CONTROL RECEPTACLE STATION
- WCS-# — WORKLIGHT CONTROL STATION
- HCS-# — HOUSELIGHT CONTROL STATION
- SMP-# — STAGE MANAGER'S PANEL
- CD-# — MISCELLANEOUS CONTROL DEVICE
- CER-# — CONTROL EQUIPMENT RACK (MAINTAIN 3'-0" CLEAR ZONE IN FRONT)
- RR-# — RELAY PANEL (MAINTAIN 3'-0" CLEAR ZONE IN FRONT)
- DR-# — DIMMER RACK (MAINTAIN 3'-0" CLEAR ZONE IN FRONT)

SHEET INDEX

SHEET NUMBER	SHEET TITLE
LIGHTING	
LT000	LIGHTING COVER SHEET
LT011	LIGHTING FIXTURE SCHEDULE
LT012	LIGHTING FIXTURE SCHEDULE
LT031	LIGHTING CONTROL ZONE SCHEDULE
LT210	LIGHTING PLAN - LOW LEVEL
LT211	LIGHTING PLAN - MAIN LEVEL RCP
LT212	LIGHTING PLAN - MEZZANINE LEVEL RCP
LT213	LIGHTING PLAN - CATWALK LEVELS
LT701	LIGHTING ELEVATIONS
STAGE RIGGING	
TR000	SHEET INDEX AND PROJECT NOTES
TR211	STAGE RIGGING PLANS
TR611	STAGE RIGGING SECTION
TR711	STAGE RIGGING ELEVATIONS
TR712	STAGE RIGGING ELEVATIONS
TR713	STAGE RIGGING ELEVATIONS
TR714	STAGE RIGGING ELEVATIONS
TR811	STAGE RIGGING DETAILS
TR812	STAGE RIGGING DETAILS
TR911	STAGE RIGGING SCHEDULES AND RISERS
STAGE LIGHTING	
TL000	SHEET INDEX AND PROJECT NOTES
TL211	STAGE LIGHTING PLAN - STAGE LEVEL
TL212	STAGE LIGHTING PLAN - MEZZANINE LEVEL
TL213	STAGE LIGHTING PLAN - CATWALK LEVEL
TL214	STAGE LIGHTING PLAN - LOADING GALLERY AND ARBOR WELL
TL711	STAGE LIGHTING ELEVATIONS
TL712	STAGE LIGHTING ELEVATIONS
TL713	STAGE LIGHTING MOUNTING DETAILS
TL811	STAGE LIGHTING DETAILS - CIRCUIT DEVICES
TL812	STAGE LIGHTING DETAILS - CIRCUIT DEVICES
TL821	STAGE LIGHTING DETAILS - CONTROL DEVICES
TL822	STAGE LIGHTING DETAILS - CONTROL DEVICES
TL823	STAGE LIGHTING DETAILS - CONTROL DEVICES
TL911	STAGE LIGHTING CONTROL RISER
TL912	STAGE LIGHTING RISERS
TL921	STAGE LIGHTING SCHEDULES
TL931	STAGE LIGHTING PLOT

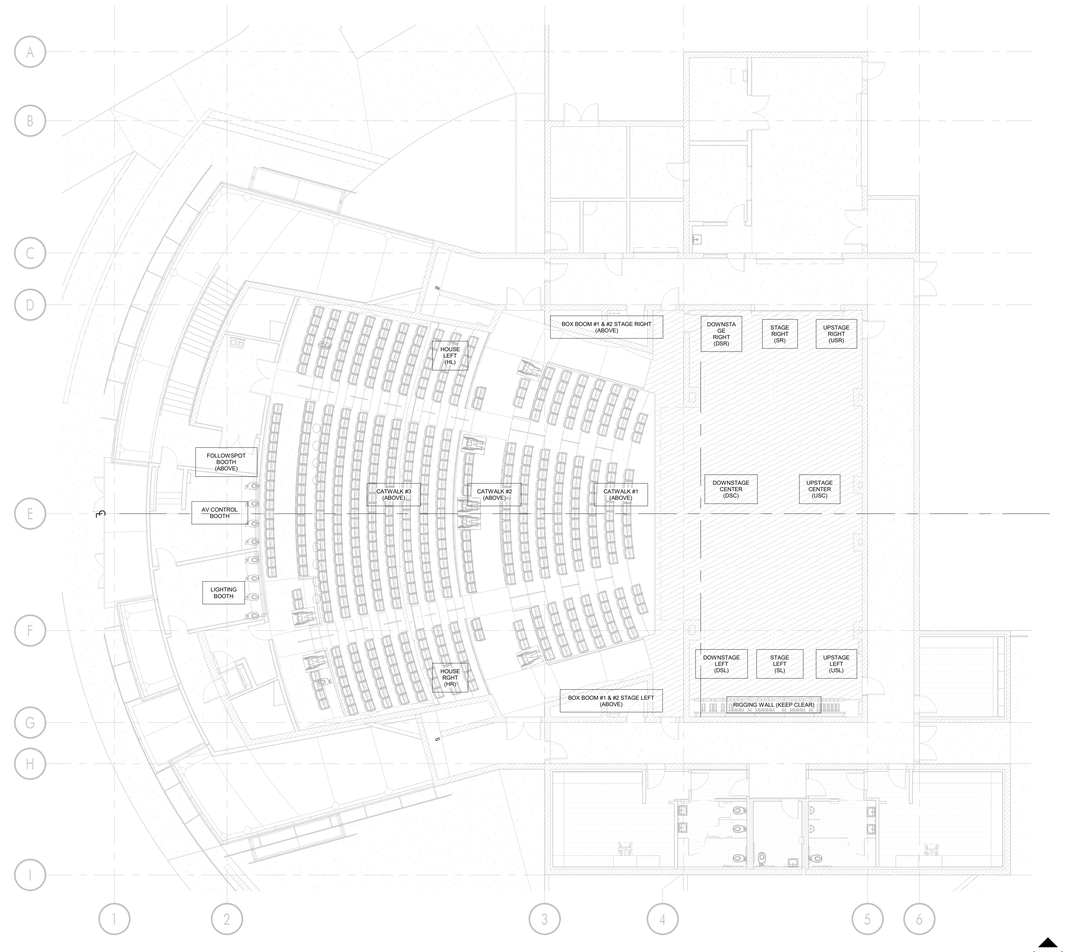

STAGE LIGHTING ORIENTATION PLAN | 3/32" = 1'-0" | 1

APPL No. A03-122864

IDENTIFICATION STAMP
DIV. OF THE STATE ARCHITECT
APP: 03-122864 INC:
REVIEWED FOR
SS ☑ FLS ☑ ACS ☑
DATE: 10/03/2023

DSA Stamp

Architect

RACHLIN PARTNERS
8640 National Boulevard
Culver City, CA 90232
310.204.3400

Disclaimer:

THESE DRAWINGS ARE THE PROPERTY OF THE ARCHITECT. THE DESIGNS SHOWN AND DESCRIBED HEREIN INCLUDING ALL TECHNICAL DRAWINGS ARE PROPRIETARY AND CANNOT BE COPIED, DUPLICATED OR COMMERCIALLY EXPLOITED EITHER IN WHOLE OR IN PART WITHOUT WRITTEN PERMISSION. SHALL NOT BE USED BY THE OWNER ON OTHER PROJECTS FOR ADDITIONS TO THIS PROJECT, OR FOR COMPLETION OF THIS PROJECT BY OTHERS. THE OWNER AGREES TO HOLD HARMLESS, INDEMNIFY AND DEFEND THE ARCHITECT AGAINST ALL DAMAGES, CLAIMS AND LOSSES, INCLUDING DEFENSE COSTS, ARISING OUT OF ANY REUSE OF PLANS AND SPECIFICATIONS WITHOUT THE WRITTEN AUTHORIZATION OF THE ARCHITECT OF RECORD.

Copyright © 2019 Rachlin Partners, All Rights Reserved.

THE RUZIKA COMPANY
2 Executive Circle, Suite 290
Irvine, California 92614
Ph (949) 253-3479 Fax (949) 253-0181
www.ruzika.com
LIGHTING DESIGNERS + THEATRE CONSULTANTS

HACIENDA PERFORMING ARTS CENTER

Hacienda La Puente Unified School District
635 North California Avenue
La Puente, CA 91744

Rev	Date	Issue
1	7.22.22	50% DD
2	10.21.22	50% CD
3	12.09.22	100% CD DSA SUBMITTAL
4	6.19.23	100% CD DSA RESUBMITTAL
5	9.20.23	DSA BACK CHECK

Date: 9.20.2023
Scale: As indicated
Drawn By: TRC
Checked By: Checker

Architect / Engineer Stamp

LICENSED ARCHITECT
RICHARD BYRD
NO. C-20229
REN. 8-31-25
STATE OF CALIFORNIA

Consultants

VCA Engineers, Inc.
R.M. Byrd and Associates, Inc.
ALM Consulting Engineers, Inc.
MDC Consulting Engineers
Protection Design and Consulting
The Ruzika Company

Sheet Title

SHEET INDEX AND PROJECT NOTES

Sheet Number

TL000

C:\Users\shawn.ruzika\Documents\Hacienda Theatrical_R22_sfdlkr.rvt

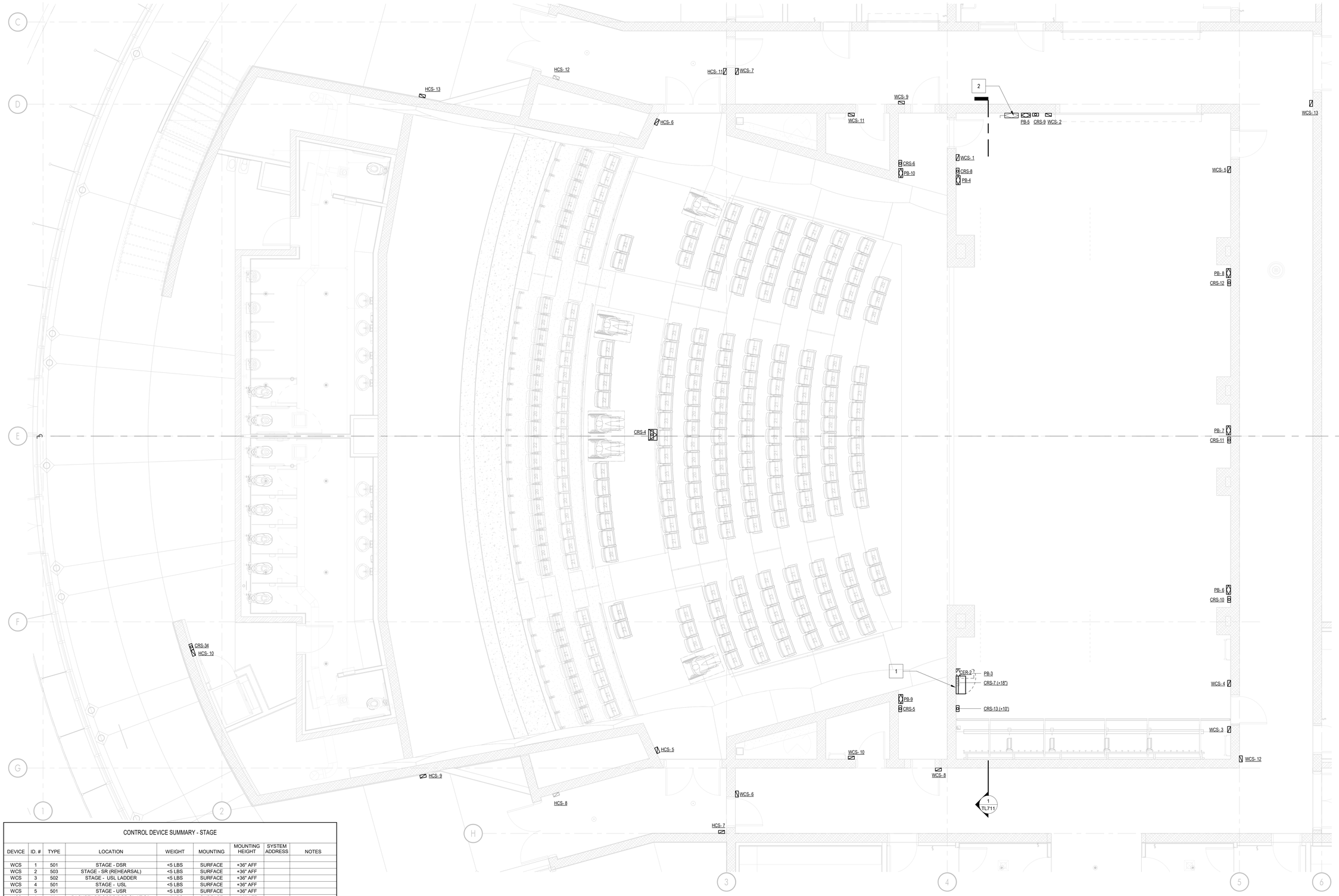

CONTROL DEVICE SUMMARY - STAGE

DEVICE	ID. #	TYPE	LOCATION	WEIGHT	MOUNTING	MOUNTING HEIGHT	SYSTEM ADDRESS	NOTES
WCS	1	501	STAGE - DSR	<5 LBS	SURFACE	+36" AFF		
WCS	2	503	STAGE - SR (REHEARSAL)	<5 LBS	SURFACE	+36" AFF		
WCS	3	502	STAGE - USL LADDER	<5 LBS	SURFACE	+36" AFF		
WCS	4	501	STAGE - USL	<5 LBS	SURFACE	+36" AFF		
WCS	5	501	STAGE - USR	<5 LBS	SURFACE	+36" AFF		
WCS	6	501	BACKSTAGE CORRIDOR SL AT S/L LOCK	<5 LBS	SURFACE	+36" AFF		
WCS	7	501	BACKSTAGE CORRIDOR SR AT S/L LOCK	<5 LBS	SURFACE	+36" AFF		
WCS	8	501	BACKSTAGE CORRIDOR DSL	<5 LBS	SURFACE	+36" AFF		
WCS	9	501	BACKSTAGE CORRIDOR DSR	<5 LBS	SURFACE	+36" AFF		
WCS	10	501	LADDER ROOM SL	<5 LBS	SURFACE	+36" AFF		
WCS	11	501	LADDER ROOM SR	<5 LBS	SURFACE	+36" AFF		
WCS	12	501	BACKSTAGE CORRIDOR USL	<5 LBS	SURFACE	+36" AFF		
WCS	13	501	BACKSTAGE CORRIDOR USR	<5 LBS	SURFACE	+36" AFF		
HCS	5	601	HOUSE RIGHT ENTRY	<5 LBS	FLUSH	+42" AFF		
HCS	6	601	HOUSE LEFT ENTRY	<5 LBS	FLUSH	+42" AFF		
HCS	7	602	S/L LOCK HR AT BOH	<5 LBS	FLUSH	+42" AFF		
HCS	8	602	S/L LOCK HR	<5 LBS	FLUSH	+42" AFF		
HCS	9	603	LOBBY HR	<5 LBS	FLUSH	+42" AFF		
HCS	10	601	LOBBY AT WC LIFT	<5 LBS	FLUSH	+42" AFF		
HCS	11	602	S/L LOCK HL AT BOH	<5 LBS	FLUSH	+42" AFF		
HCS	12	602	S/L LOCK HL	<5 LBS	FLUSH	+42" AFF		
HCS	13	603	LOBBY HL	<5 LBS	FLUSH	+42" AFF		

CONTROL DEVICE SUMMARY - STAGE

DEVICE	ID. #	TYPE	LOCATION	WEIGHT	MOUNTING	MOUNTING HEIGHT	SYSTEM ADDRESS	NOTES
MAIN THEATRE								
CER	2		STAGE - DSL	<150 LBS	SURFACE	REF. 5/TL713		PL11-34 PER EE
CRS	4	406	AUDITORIUM CENTER	<5 LBS	FLOOR			PL11-36 PER EE
CRS	5	405	STAGE APRON - SL	<5 LBS	FLUSH	+18" AFF		
CRS	6	405	STAGE APRON - SR	<5 LBS	FLUSH	+18" AFF		
CRS	7	402	STAGE - DSL	<5 LBS	SURFACE	+18" AFF		
CRS	8	408	STAGE - DSR	<5 LBS	SURFACE	+18" AFF		
CRS	9	405	STAGE - SR	<5 LBS	SURFACE	+18" AFF		
CRS	10	405	STAGE - USL	<5 LBS	SURFACE	+18" AFF		
CRS	11	405	STAGE - USC	<5 LBS	SURFACE	+18" AFF		
CRS	12	405	STAGE - USR	<5 LBS	SURFACE	+18" AFF		
CRS	13	403	STAGE -DSL (WAP)	<5 LBS	SURFACE	+18" AFF		
CRS	34	403	LOBBY AT WC LIFT	<5 LBS	FLUSH	+18" AFF		

CIRCUIT DEVICE SUMMARY - STAGE

DEVICE	ID. #	TYPE	LOCATION	WEIGHT	MOUNTING	MOUNTING HEIGHT	20A CIR. COUNT	SYSTEM ADDRESS	NOTES
MAIN THEATRE									
PB	3	206	STAGE - DSL	<10 LBS	SURFACE	+18" AFF	3	1, 2, PL11-1 PER EE	
PB	4	206	STAGE - DSR	<10 LBS	SURFACE	+18" AFF	3	3, 4, PL11-3 PER EE	
PB	5	206	STAGE - MSR	<10 LBS	SURFACE	+18" AFF	3	5, 6, PL11-5 PER EE	
PB	6	206	STAGE - USL	<10 LBS	SURFACE	+18" AFF	3	7, 8, PL11-5 PER EE	
PB	7	206	STAGE - USC	<10 LBS	SURFACE	+18" AFF	3	9, 10, PL11-1 PER EE	
PB	8	206	STAGE - USR	<10 LBS	SURFACE	+18" AFF	3	11, 12, PL11-7 PER EE	
PB	9	206	STAGE APRON -SL	<10 LBS	FLUSH	+18" AFF	3	13, 14, PL11-3 PER EE	
PB	10	206	STAGE APRON -SR	<10 LBS	FLUSH	+18" AFF	3	15,16, PL11-7 PER EE	

*NOTE: SEE RELAY PANEL SCHEDULE FOR RACK CIRCUIT ADDRESSES. ADDRESSES 1-48 ORIGINATE AT DIMMER RACK DR-1; 48-96 ORIGINATE AT RELAY PANEL RR-1; 97-144 ORIGINATE AT RELAY PANEL RR-2.

SHEET KEYNOTES

ID	NOTE
1	CONTROL EQUIPMENT RACK 'CER-2', WITH STAGE MANAGER'S PANEL. MAX GROSS WEIGHT 150 LBS. REFER TO 5/TL713.
2	COMPANY SWITCH. 200A 120/208V WITH DOUBLE NEUTRAL. 100 LBS. REF 6/TL713

ACCESSIBILITY CLEARANCES

EQUIPMENT WHICH PROJECTS MORE THAN 4" FROM THE FACE OF WALL SHALL NOT BE INSTALLED IN ANY REQUIRED CLEAR AREAS AT DOORS.

N

STAGE LIGHTING PLAN - STAGE LEVEL | 1/4" = 1'-0" | 1

APPL No. A03-122864

IDENTIFICATION STAMP
DIV. OF THE STATE ARCHITECT
APP: 03-122864 INC:
REVIEWED FOR
SS ☑ FLS ☑ ACS ☑
DATE: 10/03/2023

DSA Stamp

Architect

RACHLIN PARTNERS
8640 National Boulevard
Culver City, CA 90232
310.204.3400

Disclaimer:

THESE DRAWINGS ARE THE PROPERTY OF THE ARCHITECT. THE DESIGNS SHOWN AND DESCRIBED HEREIN INCLUDING ALL TECHNICAL DRAWINGS ARE PROPRIETARY AND CANNOT BE COPIED, DUPLICATED OR COMMERCIALLY EXPLOITED EXCEPT BY WRITTEN AGREEMENT. THESE DRAWINGS AND DESIGNS SHALL NOT BE USED BY THE OWNER ON OTHER PROJECTS, FOR ADDITIONS TO THIS PROJECT, OR FOR COMPLETION OF THIS PROJECT BY OTHERS. THE OWNER AGREES TO HOLD HARMLESS, INDEMNIFY AND DEFEND THE ARCHITECT AGAINST ALL DAMAGES, CLAIMS AND LOSSES, INCLUDING DEFENSE COSTS, ARISING OUT OF ANY REUSE OF PLANS AND SPECIFICATIONS WITHOUT THE WRITTEN AUTHORIZATION OF THE ARCHITECT OF RECORD.

Copyright © 2019 Rachlin Partners, All Rights Reserved.

THE RUZIKA COMPANY
2 Executive Circle, Suite 290
Irvine, California 92614
Ph (949) 253-3479 Fax (949) 250-0181
www.ruzika.com
LIGHTING DESIGNERS + THEATRE CONSULTANTS

HACIENDA PERFORMING ARTS CENTER

Hacienda La Puente Unified School District
635 North California Avenue
La Puente, CA 91744

Rev	Date	Issue
1	7.22.22	50% DD
2	10.21.22	50% CD
3	12.09.22	100% CD DSA SUBMITTAL
4	6.19.23	100% CD DSA RESUBMITTAL
5	9.20.23	DSA BACK CHECK

Date: 9.20.2023
Scale: 1/4" = 1'-0"
Drawn By: TRC
Checked By: Checker

Architect / Engineer Stamp

LICENSED ARCHITECT
RICHARD RACHLIN
NO. C-20229
REN. 8-31-25
STATE OF CALIFORNIA

Consultants

VCA Engineers, Inc.
R.M. Byrd and Associates, Inc.
ALM Consulting Engineers, Inc.
MDC Consulting Engineers
Protection Design and Consulting
The Ruzika Company

Sheet Title

STAGE LIGHTING PLAN - STAGE LEVEL

Sheet Number

TL211

C:\Users\shawn.ruzika\Documents\Hacienda Theatre_R22_Editor.rvt

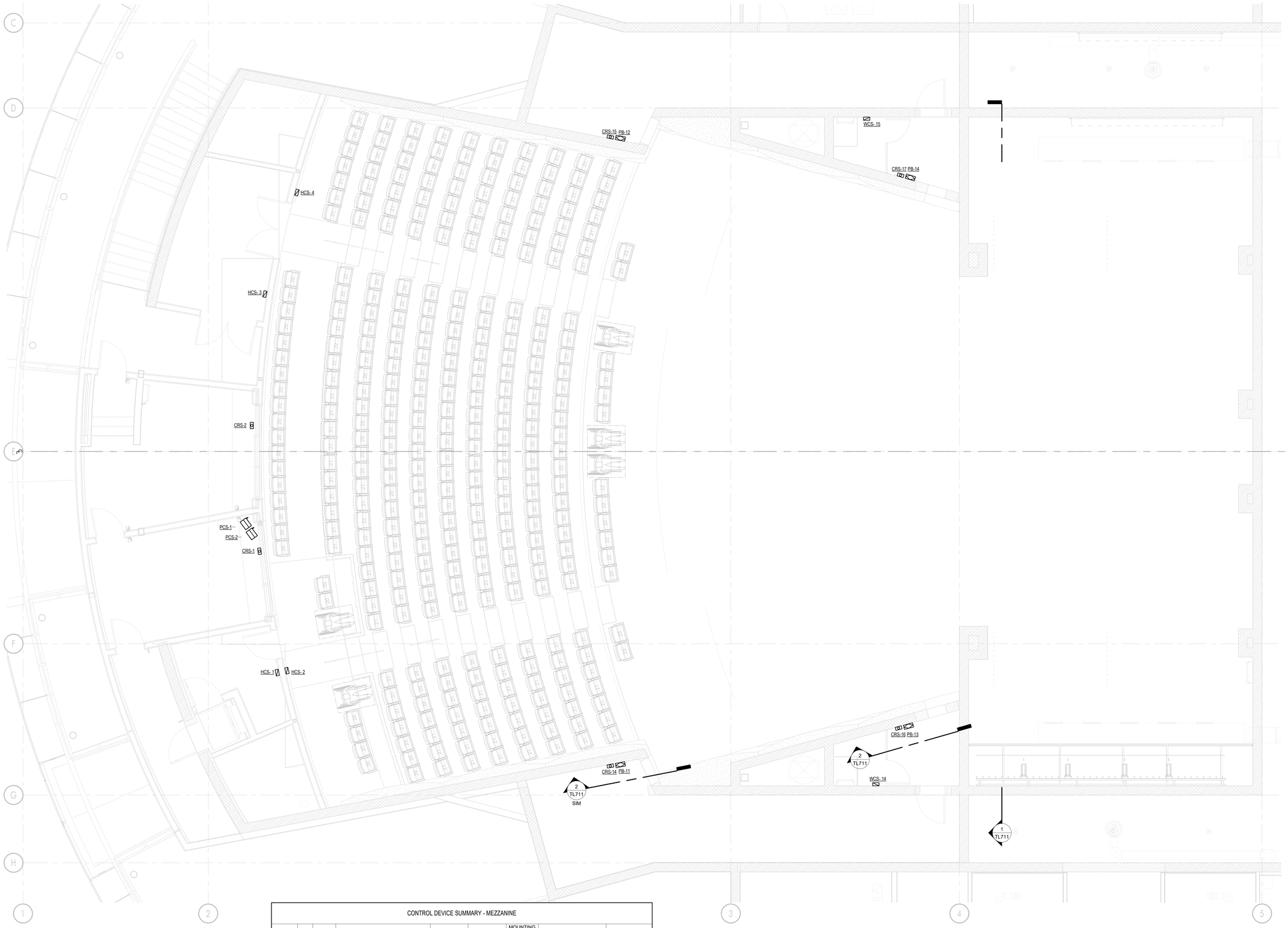

CONTROL DEVICE SUMMARY - MEZZANINE

DEVICE	ID. #	TYPE	LOCATION	WEIGHT	MOUNTING	MOUNTING HEIGHT	SYSTEM ADDRESS	NOTES
MAIN THEATRE								
CRS	1	401	LIGHTING BOOTH	<5 LBS	FLUSH	+18" AFF		
CRS	2	409	AV BOOTH	<5 LBS	FLUSH	+18" AFF		
CRS	14	405	BOX BOOM #2 SL	<5 LBS	FLUSH	+18" AFF		
CRS	15	405	BOX BOOM #2 SR	<5 LBS	FLUSH	+18" AFF		
CRS	16	405	BOX BOOM #1 SL	<5 LBS	FLUSH	+18" AFF		
CRS	17	405	BOX BOOM #1 SR	<5 LBS	FLUSH	+18" AFF		
WCS	14	501	BOX BOOMS SL	<5 LBS	SURFACE	+42" AFF		
WCS	15	501	BOX BOOMS SR	<5 LBS	SURFACE	+42" AFF		
HCS	1	602	S/L LOCK HR REAR	<5 LBS	FLUSH	+42" AFF		
HCS	2	601	HR REAR ENTRY	<5 LBS	FLUSH	+42" AFF		
HCS	3	602	S/L LOCK HL REAR	<5 LBS	FLUSH	+42" AFF		
HCS	4	601	HL REAR	<5 LBS	FLUSH	+42" AFF		
PCS	1	801	CONTROL BOOTH	<5 LBS	PORTABLE			
PCS	2	802	CONTROL BOOTH	<5 LBS	PORTABLE			

CIRCUIT DEVICE SUMMARY - MEZZANINE

DEVICE	ID. #	TYPE	LOCATION	WEIGHT	MOUNTING	MOUNTING HEIGHT	20A CIR. COUNT	SYSTEM ADDRESS	NOTES
MAIN THEATRE									
PB	11	202	BOX BOOM #2 SL	<20 LBS	SURFACE	+60" AFF	3	R69-R70, PL21-3 PER EE	
PB	12	202	BOX BOOM #2 SR	<20 LBS	SURFACE	+60" AFF	3	R71-R72, PL21-5 PER EE	
PB	13	202	BOX BOOM #1 SL	<20 LBS	SURFACE	+60" AFF	3	R73-R74, PL21-3 PER EE	
PB	14	202	BOX BOOM #1 SR	<20 LBS	SURFACE	+60" AFF	3	R75-R76, PL21-5 PER EE	

*NOTE: SEE RELAY PANEL SCHEDULE FOR RACK CIRCUIT ADDRESSES. ADDRESSES 1-48 ORIGINATE AT DIMMER RACK DR-1; 49-96 ORIGINATE AT RELAY PANEL RR-1; 97-144 ORIGINATE AT RELAY PANEL RR-2.

ACCESSIBILITY CLEARANCES

EQUIPMENT WHICH PROJECTS MORE THAN 4" FROM THE FACE OF WALL SHALL NOT BE INSTALLED IN ANY REQUIRED CLEAR AREAS AT DOORS.

STAGE LIGHTING PLAN - MEZZANINE LEVEL | 1/4" = 1'-0" | 1

APPL No. A03-122864

IDENTIFICATION STAMP
DIV. OF THE STATE ARCHITECT
APP: 03-122864 INC:
REVIEWED FOR
SS ☑ FLS ☑ ACS ☑
DATE: 10/03/2023

DSA Stamp

Architect

RACHLIN PARTNERS
8640 National Boulevard
Culver City, CA 90232
310.204.3400

Disclaimer:

THESE DRAWINGS ARE THE PROPERTY OF THE ARCHITECT. THE DESIGNS SHOWN AND DESCRIBED HEREIN INCLUDING ALL TECHNICAL DRAWINGS ARE PROPRIETARY AND CANNOT BE COPIED, DUPLICATED OR COMMERCIALLY EXPLOITED EXCEPT BY WRITTEN AGREEMENT. THESE DRAWINGS AND DESIGNS SHALL NOT BE USED BY THE OWNER ON OTHER PROJECTS FOR ADDITIONS TO THIS PROJECT, OR FOR COMPLETION OF THIS PROJECT BY OTHERS. THE OWNER AGREES TO HOLD HARMLESS, INDEMNIFY AND DEFEND THE ARCHITECT AGAINST ALL DAMAGES, CLAIMS AND LOSSES, INCLUDING DEFENSE COSTS, ARISING OUT OF ANY REUSE OF PLANS AND SPECIFICATIONS WITHOUT THE WRITTEN AUTHORIZATION OF THE ARCHITECT OF RECORD.

Copyright © 2019 Rachlin Partners, All Rights Reserved.

THE RUZIKA COMPANY
2 Executive Circle, Suite 290
Irvine, California 92614
Ph (949) 253-3479 Fax (949) 253-0181
www.ruzika.com
LIGHTING DESIGNERS + THEATRE CONSULTANTS

HACIENDA PERFORMING ARTS CENTER

Hacienda La Puente Unified School District
635 North California Avenue
La Puente, CA 91744

Rev	Date	Issue
1	7.22.22	50% DD
2	10.21.22	50% CD
3	12.09.22	100% CD DSA SUBMITTAL
4	6.19.23	100% CD DSA RESUBMITTAL
5	9.20.23	DSA BACK CHECK

Date: 9.20.2023
Scale: 1/4" = 1'-0"
Drawn By: TRC
Checked By: Checker

Architect / Engineer Stamp

LICENSED ARCHITECT
RICHARD M. RACHLIN
NO. C-26229
REN. 8-31-25
STATE OF CALIFORNIA

Consultants

VCA Engineers, Inc.
R.M. Byrd and Associates, Inc.
ALM Consulting Engineers, Inc.
MDC Consulting Engineers
Protection Design and Consulting
The Ruzika Company

Sheet Title

STAGE LIGHTING PLAN - MEZZANINE LEVEL

Sheet Number

TL212

C:\Users\Shawn.ruzika\Documents\Hacienda Theatre_R22_sfiller.rvt

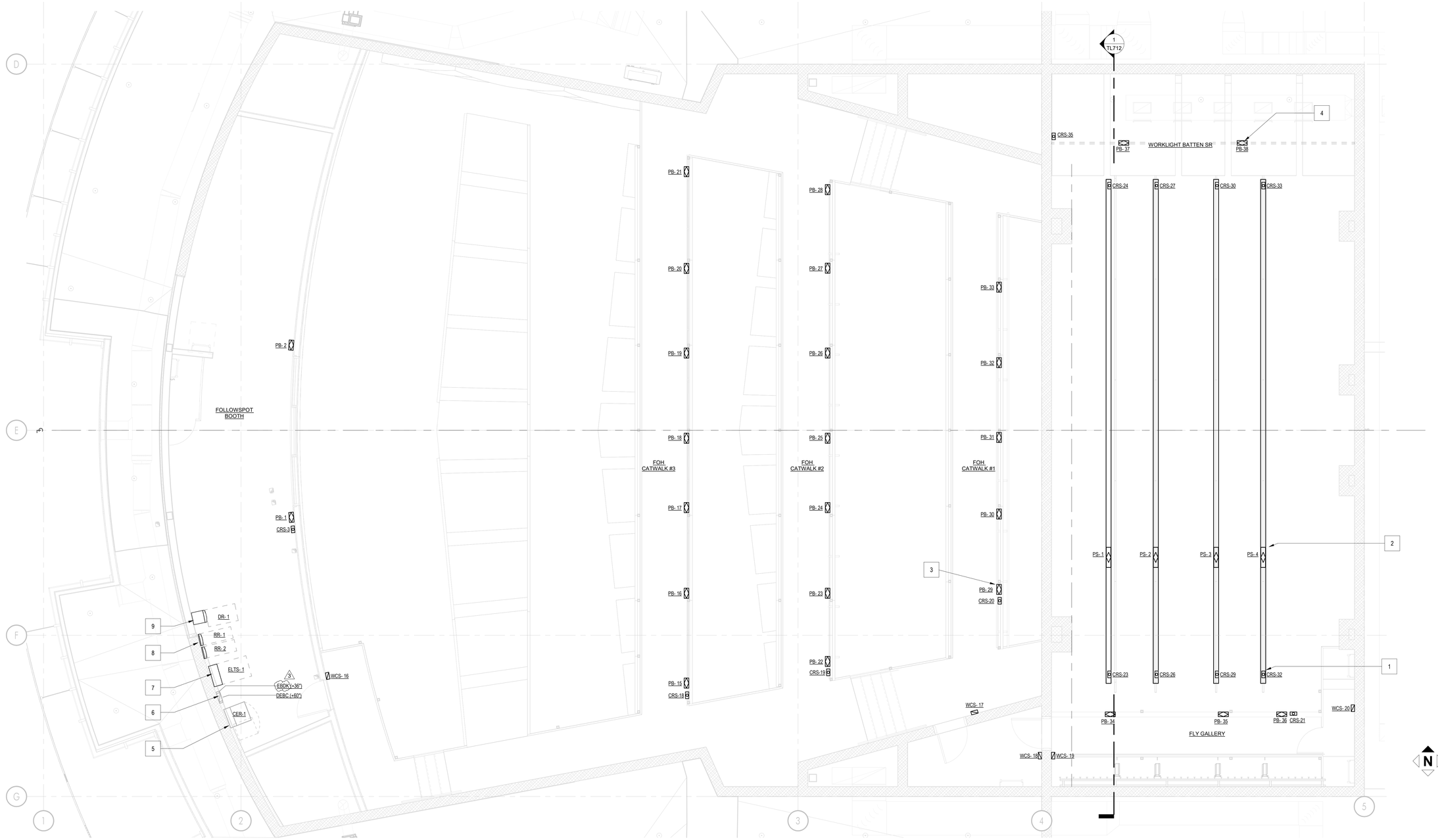

CONTROL DEVICE SUMMARY - CATWALK

DEVICE	ID. #	TYPE	LOCATION	WEIGHT	MOUNTING	MOUNTING HEIGHT	NOTES
MAIN THEATRE							
CER	1		FOLLOWSPOT BOOTH	<435 LBS	WALL	REF. 4/TL713	
CRS	3	408	FOLLOWSPOT BOOTH	<5 LBS	SURFACE	+18" AFF	
CRS	18	405	FOH CATWALK #3	<5 LBS	PIPE, BRACKET 'A'	REF. 3/TL711	
CRS	19	405	FOH CATWALK #2	<5 LBS	PIPE, BRACKET 'A'	REF. 3/TL711	
CRS	20	405	FOH CATWALK #1	<10 LBS	PIPE, BRACKET 'A'	REF. 3/TL711	
CRS	21	410	FLY GALLERY (CYC. ELEC.)	<5 LBS	PIPE, BRACKET 'B' 3	REF. 4/TL711	
CRS	23	403	ELECTRIC #1 - SL	N/A	INTEGRAL		
CRS	24	404	ELECTRIC #1 - SR	N/A	INTEGRAL		
CRS	26	403	ELECTRIC #2 - SL	N/A	INTEGRAL		
CRS	27	404	ELECTRIC #2 - SR	N/A	INTEGRAL		
CRS	29	403	ELECTRIC #3 - SL	N/A	INTEGRAL		
CRS	30	404	ELECTRIC #3 - SR	N/A	INTEGRAL		
CRS	32	403	ELECTRIC #4 - SL	N/A	INTEGRAL		
CRS	33	404	ELECTRIC #4 - SR	N/A	INTEGRAL		
CRS	35	404	DSR WALL AT WL BATTEN 3	<10 LBS	SURFACE	REF. 2/TL712	
WCS	16	501	FOH CATWALK REAR ENTRY	<10 LBS	SURFACE	+42" AFF	
WCS	17	501	FOH CATWALK DSL	<10 LBS	SURFACE	+42" AFF	
WCS	18	501	FOH CATWALK AT STAGE	<10 LBS	SURFACE	+42" AFF	
WCS	19	501	FLY GALLERY DS	<10 LBS	SURFACE	+42" AFF	
WCS	20	502	FLY GALLERY US	<10 LBS	SURFACE	+42" AFF	

CIRCUIT DEVICE SUMMARY - CATWALK

DEVICE	ID. #	TYPE	LOCATION	WEIGHT	MOUNTING	MOUNTING HEIGHT	20A CIR. COUNT	SYSTEM ADDRESS	NOTES
MAIN THEATRE									
PS	1	101	ELECTRIC #1	275 LBS	PIPE	REF. 1/TL712	8	R77-R82, W107, PL31-8 PER EE	CIRCUITS FED VIA 'GJUB-1'
PS	2	101	ELECTRIC #2	275 LBS	PIPE	REF. 1/TL712	8	R83-R88, W108, PL31-4 PER EE	CIRCUITS FED VIA 'GJUB-2'
PS	3	101	ELECTRIC #3	275 LBS	PIPE	REF. 1/TL712	8	R89-R94, W109, PL31-6 PER EE	CIRCUITS FED VIA 'GJUB-3'
PS	4	101	ELECTRIC #4	275 LBS	PIPE	REF. 1/TL712	8	R95-R100, W110, PL31-2 PER EE	CIRCUITS FED VIA 'GJUB-4'
PB	1	205	FOLLOWSPOT BOOTH	<20 LBS	SURFACE	+18" AFF	3	R49, R50, PL31-7 PER EE	
PB	2	205	FOLLOWSPOT BOOTH	<20 LBS	SURFACE	+18" AFF	3	R49, R50, PL31-9 PER EE	
PB	15	201	FOH CATWALK #3	<20 LBS	PIPE	REF. 3/TL711	4	R51-R52, W105, PL31-1 PER EE	
PB	16	201	FOH CATWALK #3	<20 LBS	PIPE	REF. 3/TL711	4	R51-R52, W105, PL31-5 PER EE	
PB	17	202	FOH CATWALK #3	<20 LBS	PIPE	REF. 3/TL711	3	R53-R54, PL31-3 PER EE	
PB	18	202	FOH CATWALK #3	<20 LBS	PIPE	REF. 3/TL711	3	R53-R54, PL31-1 PER EE	
PB	19	202	FOH CATWALK #3	<20 LBS	PIPE	REF. 3/TL711	3	R53-R54, PL31-5 PER EE	
PB	20	201	FOH CATWALK #3	<20 LBS	PIPE	REF. 3/TL711	4	R55-R56, W105, PL31-3 PER EE	
PB	21	201	FOH CATWALK #3	<20 LBS	PIPE	REF. 3/TL711	4	R55-R56, W105, PL31-1 PER EE	
PB	22	201	FOH CATWALK #2	<20 LBS	PIPE	REF. 3/TL711	4	R57-R58, W106, PL31-3 PER EE	
PB	23	201	FOH CATWALK #2	<20 LBS	PIPE	REF. 3/TL711	4	R57-R58, W106, PL31-1 PER EE	
PB	24	202	FOH CATWALK #2	<20 LBS	PIPE	REF. 3/TL711	3	R59-R60, PL31-5 PER EE	
PB	25	202	FOH CATWALK #2	<20 LBS	PIPE	REF. 3/TL711	3	R59-R60, PL31-3 PER EE	
PB	26	202	FOH CATWALK #2	<20 LBS	PIPE	REF. 3/TL711	3	R59-R60, PL31-1 PER EE	

*NOTE: SEE RELAY PANEL SCHEDULE FOR RACK CIRCUIT ADDRESSES. ADDRESSES 1-48 ORIGINATE AT DIMMER RACK DR-1; 48-96 ORIGINATE AT RELAY PANEL RR-1; 97-144 ORIGINATE AT RELAY PANEL RR-2.

CIRCUIT DEVICE SUMMARY - CATWALK

DEVICE	ID. #	TYPE	LOCATION	WEIGHT	MOUNTING	MOUNTING HEIGHT	20A CIR. COUNT	SYSTEM ADDRESS	NOTES
PB	27	201	FOH CATWALK #2	<20 LBS	PIPE	REF. 3/TL711	4	R61-R62, W106, PL31-5 PER EE	
PB	28	201	FOH CATWALK #2	<20 LBS	PIPE	REF. 3/TL711	4	R61-R62, W106, PL31-3 PER EE	
PB	29	202	FOH CATWALK #1	<20 LBS	PIPE	REF. 3/TL711	3	R63-R64, PL31-1 PER EE	
PB	30	202	FOH CATWALK #1	<20 LBS	PIPE	REF. 3/TL711	3	R65-R66, PL31-5 PER EE	
PB	31	202	FOH CATWALK #1	<20 LBS	PIPE	REF. 3/TL711	3	R65-R66, PL31-3 PER EE	
PB	32	202	FOH CATWALK #1	<20 LBS	PIPE	REF. 3/TL711	3	R65-R66, PL31-1 PER EE	
PB	33	202	FOH CATWALK #1	<20 LBS	PIPE	REF. 3/TL711	3	R67-R68, PL31-5 PER EE	
PB	34	203	FLY GALLERY	<20 LBS	PIPE	REF. 4/TL711	3	W111, W113, RUN-17	
PB	35	203	FLY GALLERY	<20 LBS	PIPE	REF. 4/TL711	3	W111, W113, RUN-17	
PB	36	204	FLY GALLERY (CYC ELEC)	<20 LBS	PIPE	REF. 4/TL711	3	R101-R102, PL31-13 PER EE	
PB	37	203	WORKLIGHT BATTEN SR	<20 LBS	PIPE	REF. 2/TL712	3	W112, W113, RUN-18	
PB	38	203	WORKLIGHT BATTEN SR	<20 LBS	PIPE	REF. 2/TL712	3	W112, W113, RUN-18	

SHEET KEYNOTES

ID	NOTE
1	CONTROL RECEPTACLE STATIONS AT ELECTRICS. RECEPTACLES INTEGRATED INTO CONNECTOR STRIPS AT OPERABLE RIGGING PIPES. CONNECT VIA FLEXIBLE CABLE TO RECEPTACLES AT GRIDIRON JUNCTION BOXES LOCATED AT THE LOADING GALLERY. TYPICAL OF 8.
2	ELECTRICS #1-4. PIPE-MOUNTED CONNECTOR STRIPS MOUNTED TO OPERABLE RIGGING PIPES. CIRCUITS FED VIA FLEXIBLE 'SO' CABLE FROM GRIDIRON JUNCTION BOXES AT LOADING GALLERY. REFER TO RIGGING DRAWINGS FOR FURTHER INFORMATION. TYPICAL OF 4.
3	PIPE-MOUNT BOX ABOVE TOP MOUNTING PIPE, ADJACENT TO CATWALK HANGERS. MAKE CONDUIT RUNS OVERHEAD, DROPPING ALONG HANGERS, KEEPING PIPES AND GAPS BETWEEN PIPES CLEAR OF OBSTRUCTIONS. REFER TO 3/TL711
4	RUN CONDUIT TO FLEXIBLE CONNECTION AT JUNCTION BOX AT DOWNSTAGE WALL. USE BRACKETS TO MAINTAIN 3" CLEARANCE BETWEEN CONDUIT AND PIPE.
5	WALL-MOUNTED CONTROL EQUIPMENT RACK FOR STAGE LIGHTING CONTROL EQUIPMENT DEVICES. HINGES OPEN FOR REAR WIRING ACCESS. MAX GROSS WEIGHT 435 LBS. REF. 4/TL713
6	WALL-MOUNTED EMERGENCY BYPASS DETECTION KIT AND DMX EMERGENCY BYPASS CONROLLER. 15 LBS EACH.
7	EMERGENCY LIGHTING TRANSFER SWITCH FOR TRANSFER OF LOADS FROM RELAY/DIMMER SYSTEM TO EMERGENCY POWER SOURCE. 100 LBS. REF. 3/TL713
8	WALL-MOUNTED 48-CIRCUIT STAGE LIGHTING MAINS-FED RELAY PANEL (TYP. OF 2) 150 LBS. REF 2/TL713
9	WALL-MOUNTED 24-MODULE STAGE LIGHTING DIMMER RACK. 265 LBS. REF 1/TL713

ACCESSIBILITY CLEARANCES

EQUIPMENT WHICH PROJECTS MORE THAN 4" FROM THE FACE OF WALL SHALL NOT BE INSTALLED IN ANY REQUIRED CLEAR AREAS AT DOORS.

STAGE LIGHTING PLAN - CATWALK LEVEL | 1/4" = 1'-0" | 1

C:\Users\tonia\Documents\Hacienda Theatrical_R23_tlschonck.rvt

APPL No. A03-122864

DSA Stamp

Architect

RACHLIN PARTNERS
8640 National Boulevard
Culver City, CA 90232
310.204.3400

Disclaimer:

THESE DRAWINGS ARE THE PROPERTY OF THE ARCHITECT. THE DESIGNS SHOWN AND DESCRIBED HEREIN INCLUDING ALL TECHNICAL DRAWINGS ARE PROPRIETARY AND CANNOT BE COPIED, DUPLICATED OR COMMERCIALLY EXPLOITED EXCEPT BY WRITTEN AGREEMENT. THESE DRAWINGS AND DESIGNS SHALL NOT BE USED BY THE OWNER ON OTHER PROJECTS, FOR ADDITIONS TO THIS PROJECT, OR FOR COMPLETION OF THIS PROJECT BY OTHERS. THE OWNER AGREES TO HOLD HARMLESS, INDEMNIFY AND DEFEND THE ARCHITECT AGAINST ALL DAMAGES, CLAIMS AND LOSSES, INCLUDING DEFENSE COSTS, ARISING OUT OF ANY REUSE OF PLANS AND SPECIFICATIONS WITHOUT THE WRITTEN AUTHORIZATION OF THE ARCHITECT OF RECORD.

Copyright © 2019 Rachlin Partners, All Rights Reserved.

THE RUZIKA COMPANY
2 Executive Circle, Suite 290
Irvine, California 92614
Ph (949) 253-3479 Fax (949) 250-0181
www.ruzika.com
LIGHTING DESIGNERS + THEATRE CONSULTANTS

HACIENDA PERFORMING ARTS CENTER

Hacienda La Puente Unified School District
635 North California Avenue
La Puente, CA 91744

Rev	Date	Issue
2	11/1/2023	Addendum No. 2
3	12/15/2023	Addendum No. 3

Date: 09/08/2023
Scale: 1/4" = 1'-0"
Drawn By: TRC
Checked By: Checker

Architect / Engineer Stamp

Consultants

VCA Engineers, Inc.
R.M. Byrd and Associates, Inc.
ALM Consulting Engineers, Inc.
MDC Consulting Engineers
Protection Design and Consulting
The Ruzika Company

Sheet Title

STAGE LIGHTING PLAN - CATWALK LEVEL

Sheet Number

TL213

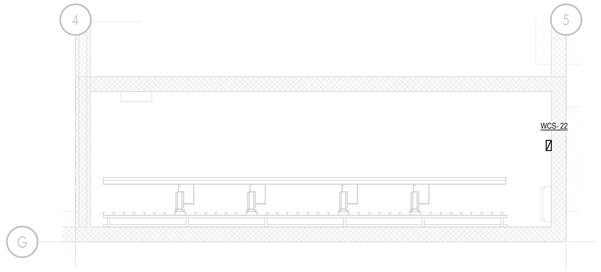

CONTROL DEVICE SUMMARY - ARBOR WELL							
DEVICE	ID. #	TYPE	LOCATION	WEIGHT	MOUNTING	MOUNTING HEIGHT	NOTES
MAIN THEATRE							
WCS	22	501	ARBOR WELL	<5 LBS	SURFACE	+42" AFF	

N

STAGE LIGHTING PLAN - ARBOR WELL LEVEL | 1/4" = 1'-0" | 2

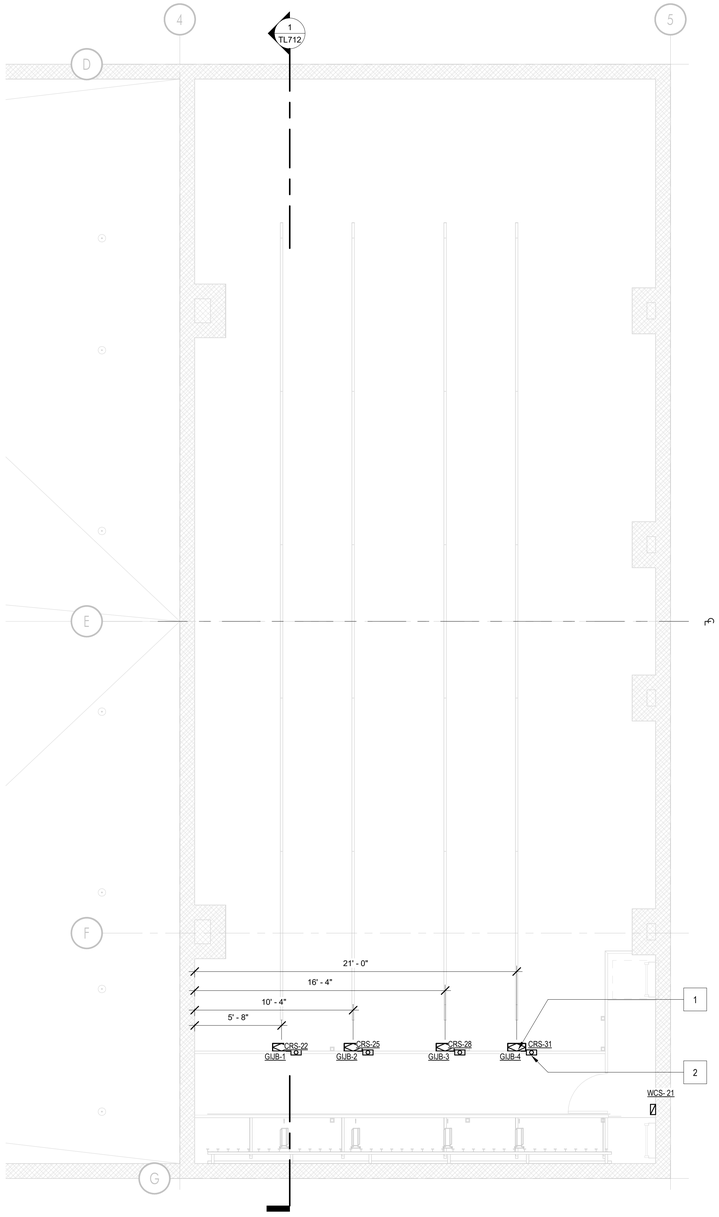

CIRCUIT DEVICE SUMMARY - LOADING GALLERY									
DEVICE	ID. #	TYPE	LOCATION	WEIGHT	MOUNTING	MOUNTING HEIGHT	20A CIR COUNT	SYSTEM ADDRESS	NOTES
MAIN THEATRE									
GJB	1	207	LOADING GALLERY AT ELEC. #1	15 LBS	SURFACE	REF. 3/TL712	8	R77-R82, W107, PL31-8 PER EE	
GJB	2	207	LOADING GALLERY AT ELEC. #2	15 LBS	SURFACE	REF. 3/TL712	8	R83-R88, W108, PL31-4 PER EE	
GJB	3	207	LOADING GALLERY AT ELEC. #3	15 LBS	SURFACE	REF. 3/TL712	8	R89-R94, W109, PL31-6 PER EE	
GJB	4	207	LOADING GALLERY AT ELEC. #4	15 LBS	SURFACE	REF. 3/TL712	8	R95-R100, W110, PL31-2 PER EE	

*NOTE: SEE RELAY PANEL SCHEDULE FOR RACK CIRCUIT ADDRESSES. ADDRESSES 1-48 ORIGINATE AT DIMMER RACK DR-1; 48-96 ORIGINATE AT RELAY PANEL RR-1; 97-144 ORIGINATE AT RELAY PANEL RR-2.

CONTROL DEVICE SUMMARY - LOADING GALLERY						
DEVICE	ID. #	TYPE	LOCATION	WEIGHT	MOUNTING	MOUNTING HEIGHT	NOTES
MAIN THEATRE							
CRS	22	407	GJB AT ELEC. #1	<5 LBS	PIPE	REF. 3/TL712	
CRS	25	407	GJB AT ELEC. #2	<5 LBS	PIPE	REF. 3/TL712	
CRS	28	407	GJB AT ELEC. #3	<5 LBS	PIPE	REF. 3/TL712	
CRS	31	407	GJB AT ELEC. #4	<5 LBS	PIPE	REF. 3/TL712	
WCS	21	502	LOADING GALLERY	<5 LBS	SURFACE	+42" AFF	

SHEET KEYNOTES	
ID	NOTE
1	UNISTRUT-MOUNTED TERMINAL BOXES FOR CONNECTION OF FLEXIBLE TYPE 'SO' CABLES TO CONNECTOR STRIPS ON MOTORIZED PIPES BELOW. COORDINATE EXACT PLACEMENT WITH RIGGING CONTRACTOR. TYPICAL OF 4. REF. 3/TL712
2	SURFACE-MOUNTED STATIONS ADJACENT TO EACH GRIDIRON JUNCTION BOX FOR CONNECTION OF CONNECTORIZED FLEXIBLE LOW-VOLTAGE DATA CABLES TO CONNECTOR STRIPS BELOW. TYPICAL OF 4.

ACCESSIBILITY CLEARANCES
EQUIPMENT WHICH PROJECTS MORE THAN 4" FROM THE FACE OF WALL SHALL NOT BE INSTALLED IN ANY REQUIRED CLEAR AREAS AT DOORS.

N

STAGE LIGHTING PLAN - LOADING GALLERY LEVEL | 1/4" = 1'-0" | 1

APPL No. A03-122864

IDENTIFICATION STAMP
DIV. OF THE STATE ARCHITECT
APP: 03-122864 INC:
REVIEWED FOR
SS ☑ FLS ☑ ACS ☑
DATE: 10/03/2023

DSA Stamp

Architect

RACHLIN PARTNERS
8640 National Boulevard
Culver City, CA 90232
310.204.3400

Disclaimer:

THESE DRAWINGS ARE THE PROPERTY OF THE ARCHITECT. THE DESIGNS SHOWN AND DESCRIBED HEREIN INCLUDING ALL TECHNICAL DRAWINGS ARE PROPRIETARY AND CANNOT BE COPIED, DUPLICATED OR COMMERCIALLY EXPLOITED EXCEPT BY WRITTEN AGREEMENT. THESE DRAWINGS AND SPECIFICATIONS SHALL NOT BE USED BY THE OWNER ON OTHER PROJECTS, FOR ADDITIONS TO THIS PROJECT, OR FOR COMPLETION OF THIS PROJECT BY OTHERS. THE OWNER AGREES TO HOLD HARMLESS, INDEMNIFY AND DEFEND THE ARCHITECT AGAINST ALL DAMAGES, CLAIMS AND LOSSES, INCLUDING DEFENSE COSTS, ARISING OUT OF ANY REUSE OF PLANS AND SPECIFICATIONS WITHOUT THE WRITTEN AUTHORIZATION OF THE ARCHITECT OF RECORD.

Copyright © 2019 Rachlin Partners, All Rights Reserved.

THE RUZIKA COMPANY
2 Executive Circle, Suite 290
Irvine, California 92614
Ph (949) 253-3479 Fax (949) 250-0181
www.ruzika.com
LIGHTING DESIGNERS + THEATRE CONSULTANTS

HACIENDA PERFORMING ARTS CENTER

Hacienda La Puente Unified School District
635 North California Avenue
La Puente, CA 91744

Rev	Date	Issue
1	7.22.22	50% DD
2	10.21.22	50% CD
3	12.09.22	100% CD DSA SUBMITTAL
4	6.19.23	100% CD DSA RESUBMITTAL
5	9.20.23	DSA BACK CHECK

Date: 9.20.2023
Scale: 1/4" = 1'-0"
Drawn By: TRC
Checked By: Checker

Architect / Engineer Stamp

LICENSED ARCHITECT
RICHARD INGRASSIA
NO. C-20229
REN. 8-31-25
STATE OF CALIFORNIA

Consultants

VCA Engineers, Inc.
R.M. Byrd and Associates, Inc.
ALM Consulting Engineers, Inc.
MDC Consulting Engineers
Protection Design and Consulting
The Ruzika Company

Sheet Title

STAGE LIGHTING PLAN - LOADING GALLERY AND ARBOR WELL

Sheet Number

TL214

C:\Users\tbown.ruzika\Documents\Hacienda Theatrical_R22_tbBer.rvt

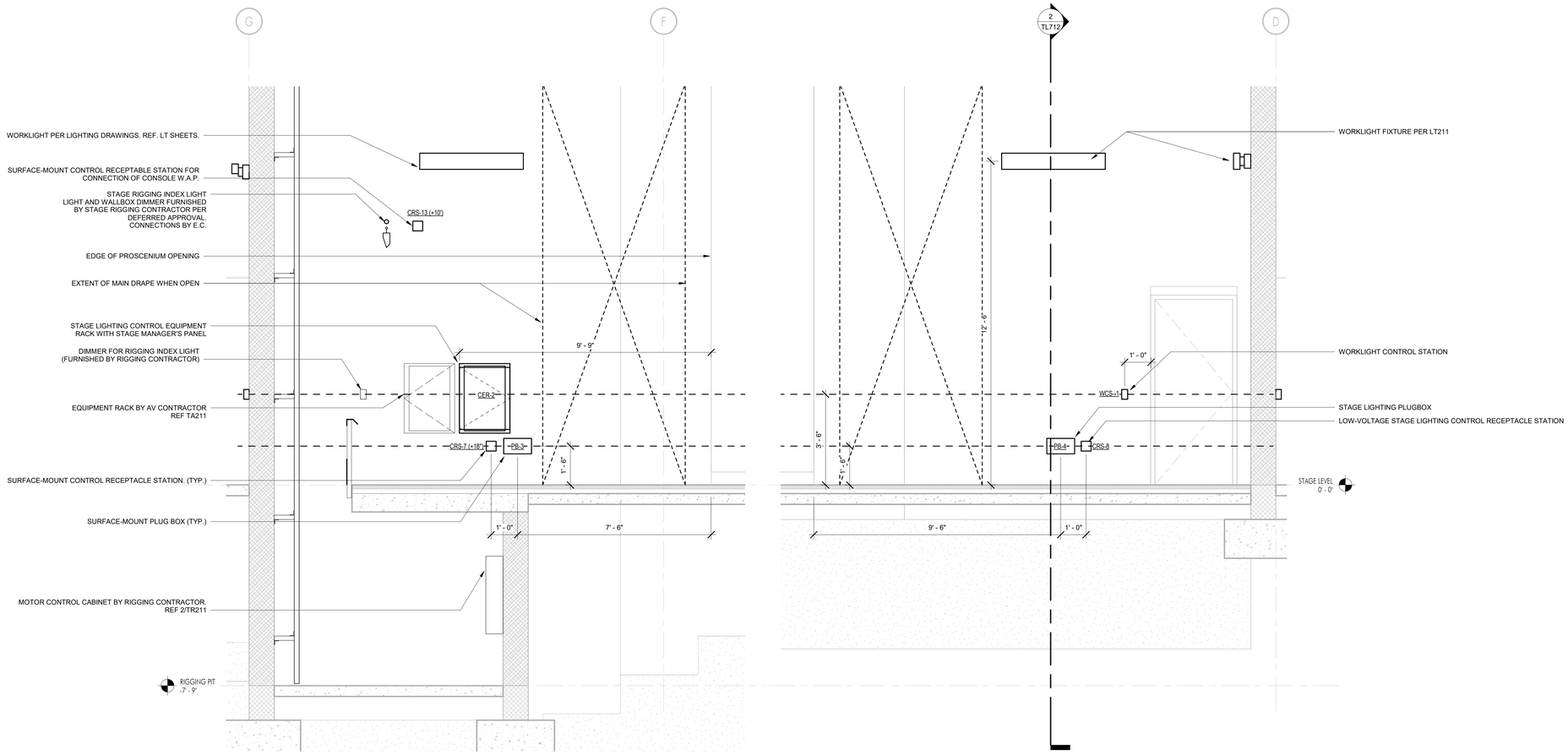

STAGE LIGHTING - PROSCENIUM ELEVATION | 1/2" = 1'-0" | 1

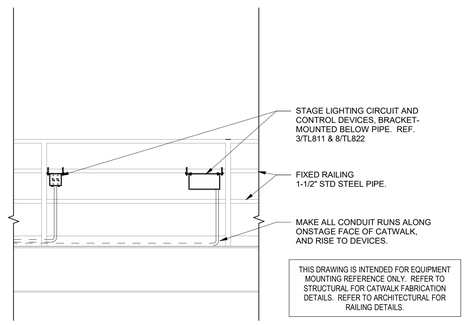

EQUIPMENT AT FLY GALLERY | 1/2" = 1'-0" | 4

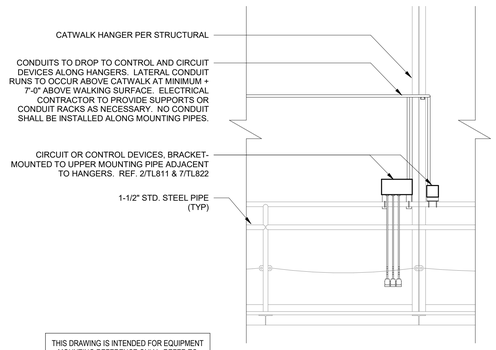

STAGE LIGHTING CATWALKS | 1/2" = 1'-0" | 3

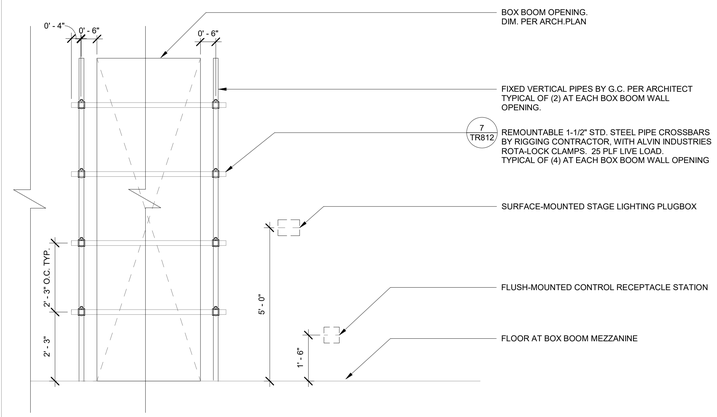

EQUIPMENT AT BOX BOOM | 1/2" = 1'-0" | 2

APPL No. A03-122864

IDENTIFICATION STAMP
DIV. OF THE STATE ARCHITECT
APP: 03-122864 INC:
REVIEWED FOR
SS ☑ FLS ☑ ACS ☑
DATE: 10/03/2023

DSA Stamp

Architect

RACHLIN PARTNERS
8640 National Boulevard
Culver City, CA 90232
310.204.3400

Disclaimer:

THESE DRAWINGS ARE THE PROPERTY OF THE ARCHITECT. THE DESIGNS SHOWN AND DESCRIBED HEREIN INCLUDING ALL TECHNICAL DRAWINGS ARE PROPRIETARY AND CANNOT BE COPIED, DUPLICATED OR COMMERCIALLY EXPLOITED EXCEPT WITH THE WRITTEN PERMISSION OF THE ARCHITECT AND SHALL NOT BE USED BY THE OWNER ON OTHER PROJECTS, FOR ADDITIONS TO THIS PROJECT, OR FOR COMPLETION OF THIS PROJECT BY OTHERS. THE OWNER AGREES TO HOLD HARMLESS, INDEMNIFY AND DEFEND THE ARCHITECT AGAINST ALL DAMAGES, CLAIMS AND LOSSES, INCLUDING DEFENSE COSTS, ARISING OUT OF ANY REUSE OF PLANS AND SPECIFICATIONS WITHOUT THE WRITTEN AUTHORIZATION OF THE ARCHITECT OF RECORD.

Copyright © 2019 Rachlin Partners, All Rights Reserved.

THE RUZIKA COMPANY
2 Executive Circle, Suite 290
Irvine, California 92614
Ph (949) 253-3479 Fax (949) 253-3181
www.ruzika.com
LIGHTING DESIGNERS + THEATRE CONSULTANTS

HACIENDA PERFORMING ARTS CENTER

Hacienda La Puente Unified School District
635 North California Avenue
La Puente, CA 91744

Rev	Date	Issue
1	7.22.22	50% DD
2	10.21.22	50% CD
3	12.09.22	100% CD DSA SUBMITTAL
4	6.19.23	100% CD DSA RESUBMITTAL
5	9.20.23	DSA BACK CHECK

Date: 9.20.2023
Scale: 1/2" = 1'-0"
Drawn By: TRC
Checked By: Checker

Architect / Engineer Stamp

Consultants

VCA Engineers, Inc.
R.M. Byrd and Associates, Inc.
ALM Consulting Engineers, Inc.
MDC Consulting Engineers
Protection Design and Consulting
The Ruzika Company

Sheet Title

STAGE LIGHTING ELEVATIONS

Sheet Number

TL711

C:\Users\shawn.ruzika\Documents\Hacienda Theatrical_R22_sfuller.rvt

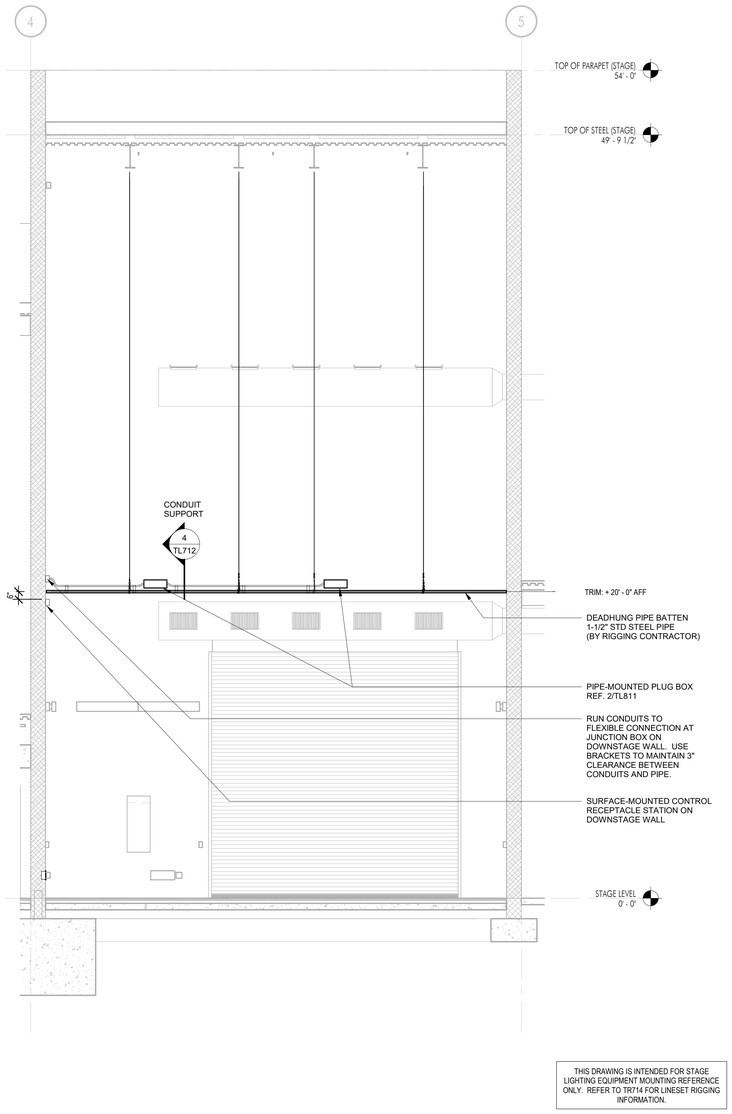

THIS DRAWING IS INTENDED FOR STAGE LIGHTING EQUIPMENT MOUNTING REFERENCE ONLY. REFER TO TR714 FOR LINESET RIGGING INFORMATION.

STAGE LTG. ELEV. - SR WORKLIGHT BATTEN | 1/4" = 1'-0" | 2

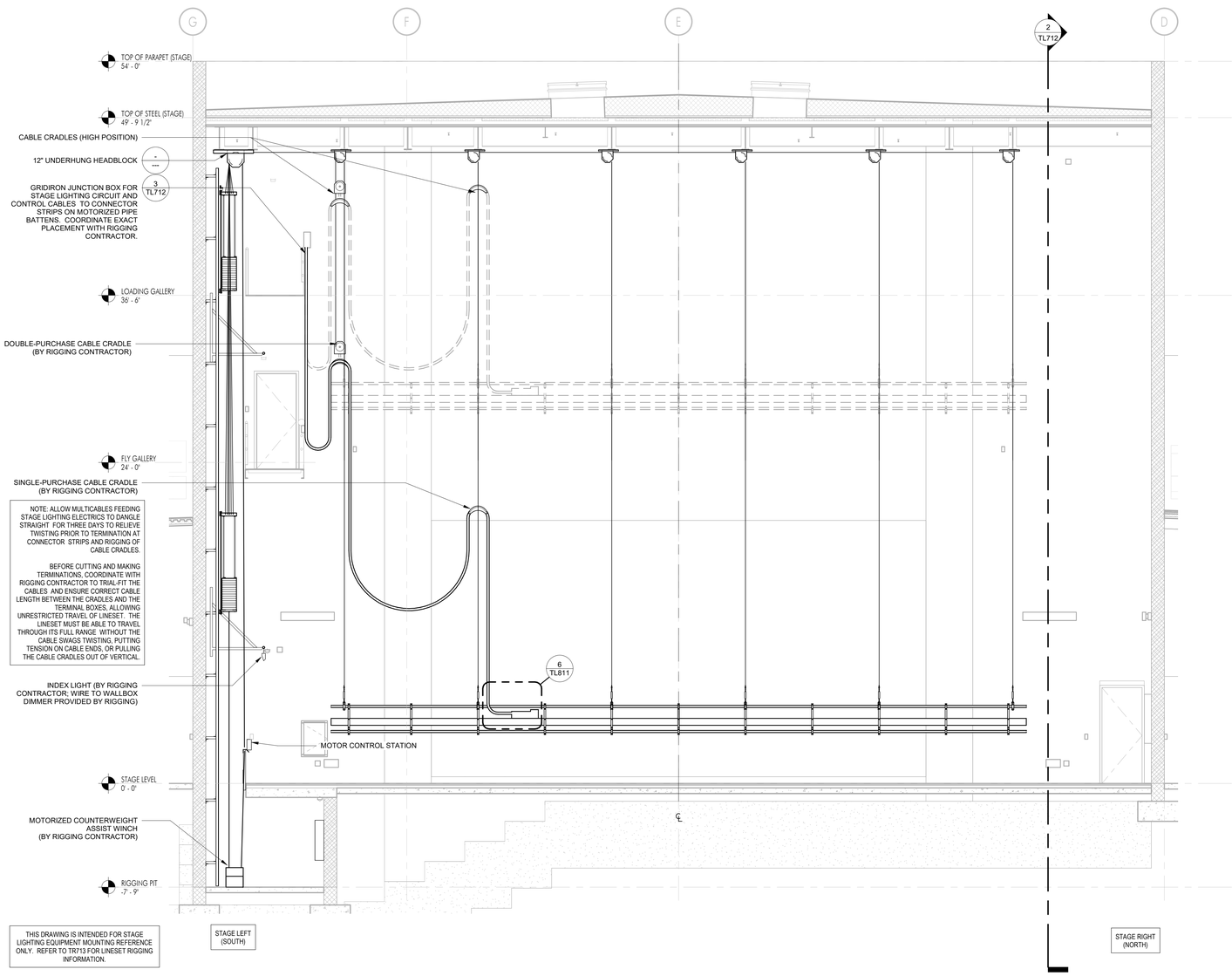

THIS DRAWING IS INTENDED FOR STAGE LIGHTING EQUIPMENT MOUNTING REFERENCE ONLY. REFER TO TR713 FOR LINESET RIGGING INFORMATION.

STAGE LIGHTING ELEVATION - ELECTRICS | 1/4" = 1'-0" | 1

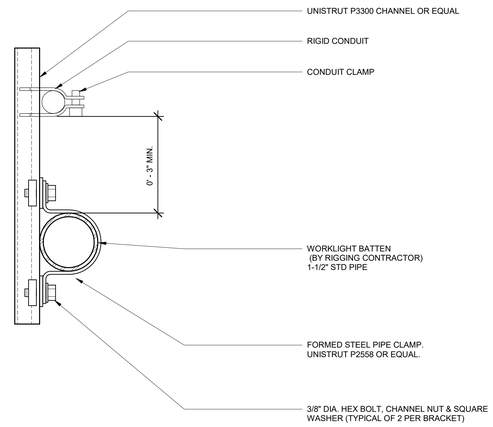

CONDUIT AT WORKLIGHT BATTEN | 6" = 1'-0" | 4

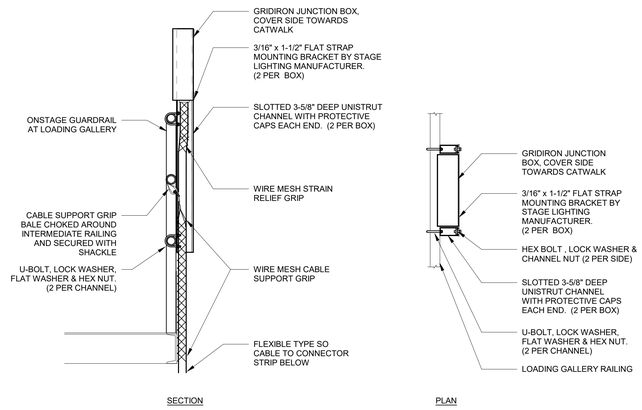

CABLE SUPPORT AT LOADING GALLERY GIJB | 1" = 1'-0" | 3

C:\Users\Shawn.ruska\Documents\Hacienda Theatre3_R22_sk8ar.rvt

APPL No. A03-122864

IDENTIFICATION STAMP
DIV. OF THE STATE ARCHITECT
APP: 03-122864 INC:
REVIEWED FOR
SS ☑ FLS ☑ ACS ☑
DATE: 10/03/2023

DSA Stamp

Architect

RACHLIN PARTNERS
8640 National Boulevard
Culver City, CA 90232
310.204.3400

Disclaimer:

THESE DRAWINGS ARE THE PROPERTY OF THE ARCHITECT. THE DESIGNS SHOWN AND DESCRIBED HEREIN INCLUDING ALL TECHNICAL DRAWINGS ARE PROPRIETARY AND CANNOT BE COPIED, DUPLICATED OR COMMERCIALLY EXPLOITED EXCEPT BY WRITTEN AGREEMENT. THESE DRAWINGS AND DESIGNS SHALL NOT BE USED BY THE OWNER ON OTHER PROJECTS FOR ADDITIONS TO THIS PROJECT, OR FOR COMPLETION OF THIS PROJECT BY OTHERS. THE OWNER AGREES TO HOLD HARMLESS, INDEMNIFY AND DEFEND THE ARCHITECT AGAINST ALL DAMAGES, CLAIMS AND LOSSES, INCLUDING DEFENSE COSTS, ARISING OUT OF ANY REUSE OF PLANS AND SPECIFICATIONS WITHOUT THE WRITTEN AUTHORIZATION OF THE ARCHITECT OF RECORD.

Copyright © 2019 Rachlin Partners, All Rights Reserved.

THE RUZIKA COMPANY
2 Executive Circle, Suite 290
Irvine, California 92614
Ph (949) 253-3479 Fax (949) 253-0181
www.ruzika.com
LIGHTING DESIGNERS + THEATRE CONSULTANTS

HACIENDA PERFORMING ARTS CENTER

Hacienda La Puente Unified School District
635 North California Avenue
La Puente, CA 91744

Rev	Date	Issue
1	7.22.22	50% DD
2	10.21.22	50% CD
3	12.09.22	100% CD DSA SUBMITTAL
4	6.19.23	100% CD DSA RESUBMITTAL
5	9.20.23	DSA BACK CHECK

Date: 9.20.2023
Scale: As indicated
Drawn By: TRC
Checked By: Checker

Architect / Engineer Stamp

LICENSED ARCHITECT
I. CHANG IHM-BYRD
NO. C-28229
REN. 8-31-25
STATE OF CALIFORNIA

Consultants

VCA Engineers, Inc.
R.M. Byrd and Associates, Inc.
ALM Consulting Engineers, Inc.
MDC Consulting Engineers
Protection Design and Consulting
The Ruzika Company

Sheet Title

STAGE LIGHTING ELEVATIONS

Sheet Number

TL712

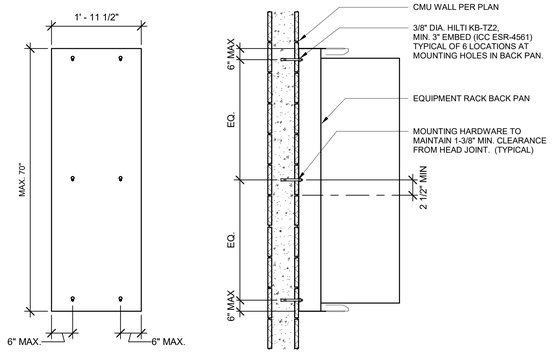

MAX LOAD 435 LBS

CER-1 EQUIP. RACK MTG. AT CMU WALL | 3/4" = 1'-0" | 4

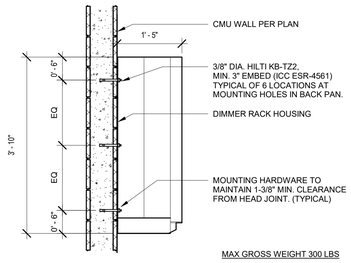

MAX GROSS WEIGHT 300 LBS

DIMMER RACK MTG. AT CMU | 3/4" = 1'-0" | 1

MAX GROSS WT 150 LBS

CER-2 EQUIPMENT RACK MTG. AT CMU WALL | 1 1/2" = 1'-0" | 5

MAX LOAD 150 LBS

RELAY RACK AT CMU WALL | 3/4" = 1'-0" | 2

MAX GROSS WT 100 LBS

COMPANY SWITCH MOUNTING AT CMU WALL | 1 1/2" = 1'-0" | 6

MAX LOAD 100 LBS

EM. LTG. TRANSFER SWITCH AT CMU WALL | 3/4" = 1'-0" | 3

APPL No. A03-122864

IDENTIFICATION STAMP
DIV. OF THE STATE ARCHITECT
APP: 03-122864 INC:
REVIEWED FOR
SS ☑ FLS ☑ ACS ☑
DATE: 10/03/2023

DSA Stamp

Architect

RACHLIN PARTNERS
8640 National Boulevard
Culver City, CA 90232
310.204.3400

Disclaimer:

THESE DRAWINGS ARE THE PROPERTY OF THE ARCHITECT. THE DESIGNS SHOWN AND DESCRIBED HEREIN INCLUDING ALL TECHNICAL DRAWINGS ARE PROPRIETARY AND CANNOT BE COPIED, DUPLICATED OR COMMERCIALLY EXPLOITED EXCEPT BY WRITTEN AGREEMENT. THESE DRAWINGS AND DESIGNS SHALL NOT BE USED BY THE OWNER ON OTHER PROJECTS FOR ADDITIONS TO THIS PROJECT, OR FOR COMPLETION OF THIS PROJECT BY OTHERS. THE OWNER AGREES TO HOLD HARMLESS, INDEMNIFY AND DEFEND THE ARCHITECT AGAINST ALL DAMAGES, CLAIMS AND LOSSES, INCLUDING DEFENSE COSTS, ARISING OUT OF ANY REUSE OF PLANS AND SPECIFICATIONS WITHOUT THE WRITTEN AUTHORIZATION OF THE ARCHITECT OF RECORD.

Copyright © 2019 Rachlin Partners, All Rights Reserved.

THE RUZIKA COMPANY
2 Executive Circle, Suite 290
Irvine, California 92614
Ph (949) 253-3479 Fax (949) 253-0181
www.ruzika.com
LIGHTING DESIGNERS + THEATRE CONSULTANTS

HACIENDA PERFORMING ARTS CENTER

Hacienda La Puente Unified School District
635 North California Avenue
La Puente, CA 91744

Rev	Date	Issue
1	7.22.22	50% DD
2	10.21.22	50% CD
3	12.09.22	100% CD DSA SUBMITTAL
4	6.19.23	100% CD DSA RESUBMITTAL
5	9.20.23	DSA BACK CHECK

Date: 9.20.2023
Scale: As indicated
Drawn By: TRC
Checked By: Checker

Architect / Engineer Stamp

LICENSED ARCHITECT
RICHARD INGERSOLL
NO. C-20229
REN 8-31-25
STATE OF CALIFORNIA

Consultants

VCA Engineers, Inc.
R.M. Byrd and Associates, Inc.
ALM Consulting Engineers, Inc.
MDC Consulting Engineers
Protection Design and Consulting
The Ruzika Company

Sheet Title

STAGE LIGHTING MOUNTING DETAILS

Sheet Number

TL713

C:\Users\dawn.ruzika\Documents\Hacienda Theatrical_R22_dallas.rvt

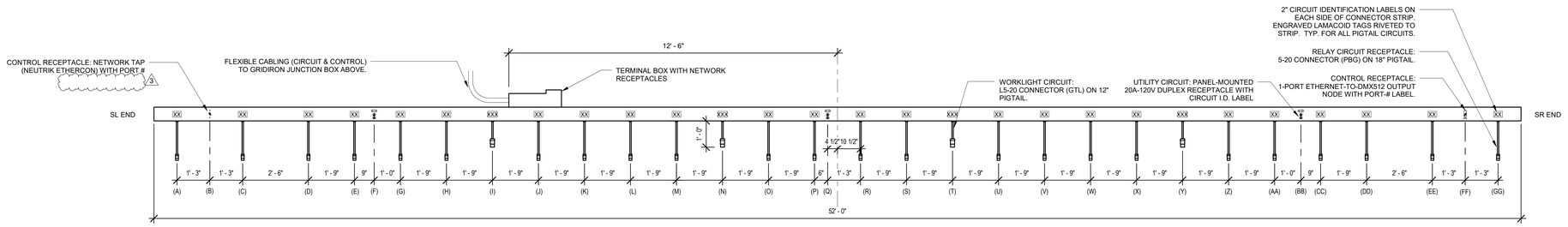

COVER VIEW

STA.	ID	LOCATION	20A CIR. QTY.	MOUNTING	BRACKET TYPE	NOTES	(A)	(B)	(C)	(D)	(E)	(F)	(G)	(H)	(I)	(J)	(K)	(L)	(M)	(N)	(O)	(P)	(Q)	(R)	(S)	(T)	(U)	(V)	(W)	(X)	(Y)	(Z)	(AA)	(BB)	(CC)	(DD)	(EE)	(FF)	(GG)
MAIN THEATRE																																								
PS	1	ELECTRIC #1	8	PIPE	C	ESTIMATED MULTICABLE LENGTH 85'	77	CRS-23	78	79	80	PL31-8 PER EE	81	82	W107	77	78	79	80	W107	81	82	PL31-8 PER EE	77	78	W107	79	80	81	82	W107	77	78	PL31-8 PER EE	79	80	81	CRS-24	82
PS	2	ELECTRIC #2	8	PIPE	C	ESTIMATED MULTICABLE LENGTH 85'	83	CRS-26	84	85	86	PL31-4 PER EE	87	88	W108	83	84	85	86	W108	87	88	PL31-4 PER EE	83	84	W108	85	86	87	88	W108	83	84	PL31-4 PER EE	85	86	87	CRS-27	88
PS	3	ELECTRIC #3	8	PIPE	C	ESTIMATED MULTICABLE LENGTH 85'	89	CRS-29	90	91	92	PL31-6 PER EE	93	94	W109	89	90	91	92	W109	93	94	PL31-6 PER EE	89	90	W109	91	92	93	94	W109	89	90	PL31-6 PER EE	91	92	93	CRS-30	94
PS	4	ELECTRIC #4	8	PIPE	C	ESTIMATED MULTICABLE LENGTH 85'	95	CRS-32	96	97	98	PL31-2 PER EE	99	100	W110	95	96	97	98	W110	99	100	PL31-2 PER EE	95	96	W110	97	98	99	100	W110	95	96	PL31-2 PER EE	97	98	99	CRS-33	100

3 3 3

CONNECTOR STRIP - TYPE 101 | 1/2" = 1'-0" | 1

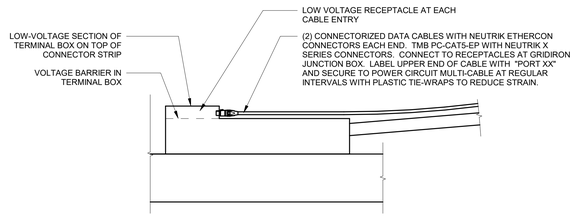

NETWORK CABLE CONNECTION AT ELECTRICS | 1 1/2" = 1'-0" | 6

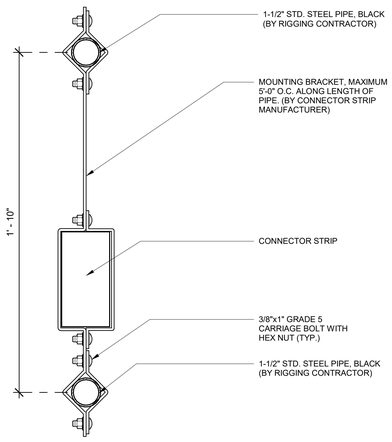

MOUNTING BRACKET TYPE 'C' | 3" = 1'-0" | 4

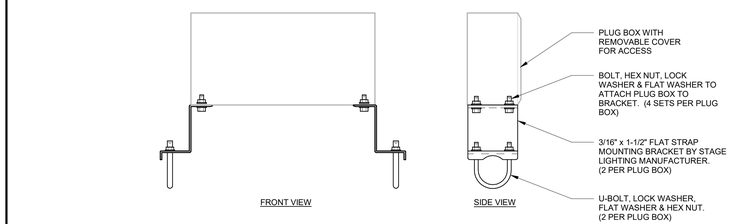

MOUNTING BRACKET TYPE 'A' | 3" = 1'-0" | 2

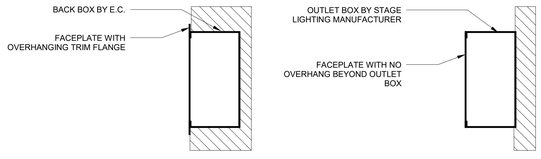

TYPICAL FACEPLATE OVERHANG | 3" = 1'-0" | 5

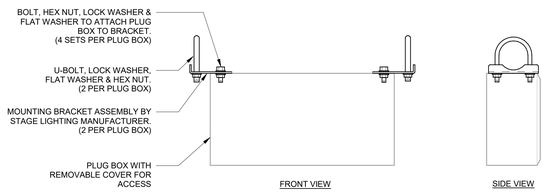

MOUNTING BRACKET TYPE 'B' | 3" = 1'-0" | 3

APPL No. A03-122864

DSA Stamp

Architect

RACHLIN PARTNERS
8640 National Boulevard
Culver City, CA 90232
310.204.3400

Disclaimer:

THESE DRAWINGS ARE THE PROPERTY OF THE ARCHITECT. THE DESIGNS SHOWN AND DESCRIBED HEREIN INCLUDING ALL TECHNICAL DRAWINGS ARE PROPRIETARY AND CANNOT BE COPIED, DUPLICATED OR COMMERCIALLY EXPLOITED EXCEPT WITH THE WRITTEN PERMISSION. THESE DRAWINGS SHALL NOT BE USED BY THE OWNER ON OTHER PROJECTS FOR ADDITIONS TO THIS PROJECT, OR FOR COMPLETION OF THIS PROJECT BY OTHERS. THE OWNER AGREES TO HOLD HARMLESS, INDEMNIFY AND DEFEND THE ARCHITECT AGAINST ALL DAMAGES, CLAIMS AND LOSSES, INCLUDING DEFENSE COSTS, ARISING OUT OF ANY REUSE OF PLANS AND SPECIFICATIONS WITHOUT THE WRITTEN AUTHORIZATION OF THE ARCHITECT OF RECORD.

Copyright © 2019 Rachlin Partners, All Rights Reserved.

THE RUZIKA COMPANY
2 Executive Circle, Suite 290
Irvine, California 92614
Ph (949) 253-3479 Fax (949) 253-0181
www.ruzika.com
LIGHTING DESIGNERS + THEATRE CONSULTANTS

HACIENDA PERFORMING ARTS CENTER
Hacienda La Puente Unified School District
635 North California Avenue
La Puente, CA 91744

Rev	Date	Issue
2	11/1/2023	Addendum No. 2
3	12/15/2023	Addendum No. 3

Date: 09/08/2023
Scale: As indicated
Drawn By: TRC
Checked By: Checker

Architect / Engineer Stamp

Consultants

VCA Engineers, Inc.
R.M. Byrd and Associates, Inc.
ALM Consulting Engineers, Inc.
MDC Consulting Engineers
Protection Design and Consulting
The Ruzika Company

Sheet Title

STAGE LIGHTING DETAILS - CIRCUIT DEVICES

Sheet Number

TL811

C:\Users\tjoan\Documents\Hacienda Theatrical_R22_tjoan.rvt

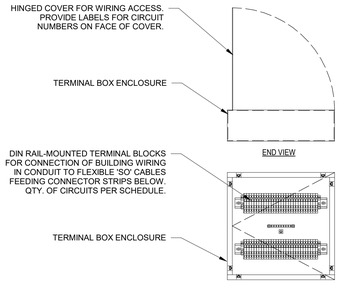

STA.	ID	LOCATION	20A CIR. QTY.	MOUNTING	NOTES	SYSTEM ADDRESSES
MAIN THEATRE						
GJB	1	LOADING GALLERY AT ELEC. #1	8	SURFACE		R77-R82, W107, PL31-8 PER EE
GJB	2	LOADING GALLERY AT ELEC. #2	8	SURFACE		R83-R88, W108, PL31-4 PER EE
GJB	3	LOADING GALLERY AT ELEC. #3	8	SURFACE		R89-R94, W109, PL31-6 PER EE
GJB	4	LOADING GALLERY AT ELEC. #4	8	SURFACE		R95-R100, W110, PL31-2 PER EE

3

STAGE LTG GRIDIRON JUNCTION BOX - TYPE 207 | 1 1/2" = 1'-0" | 7

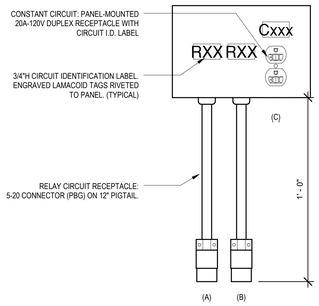

STA.	ID	LOCATION	20A CIR. QTY.	MOUNTING	BRACKET TYPE	NOTES	(A)	(B)	(C)
MAIN THEATRE									
PB	36	FLY GALLERY (CYC ELEC)	3	PIPE	B		101	102	PL31-13 PER EE 3

STAGE LIGHTING PLUG BOX - TYPE 204 | 3" = 1'-0" | 4

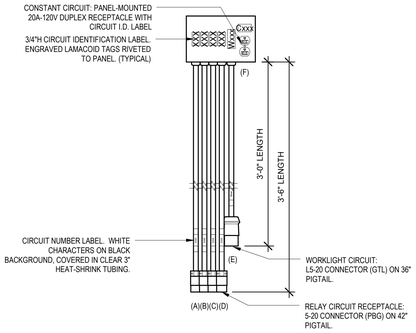

STA.	ID	LOCATION	20A CIR. QTY.	MOUNTING	BRACKET TYPE	NOTES	(A)	(B)	(C)	(D)	(E)	(F)
MAIN THEATRE												
PB	15	FOH CATWALK #3	4	PIPE	A		51	51	52	52	W105	PL31-1 PER EE 3
PB	16	FOH CATWALK #3	4	PIPE	A		51	51	52	52	W105	PL31-5 PER EE
PB	20	FOH CATWALK #3	4	PIPE	A 3		55	55	56	56	W105	PL31-3 PER EE
PB	21	FOH CATWALK #3	4	PIPE	A		55	55	56	56	W105	PL31-1 PER EE
PB	22	FOH CATWALK #2	4	PIPE	A		57	57	58	58	W106	PL31-3 PER EE
PB	23	FOH CATWALK #2	4	PIPE	A		57	57	58	58	W106	PL31-1 PER EE
PB	27	FOH CATWALK #2	4	PIPE	A		61	61	62	62	W106	PL31-5 PER EE
PB	28	FOH CATWALK #2	4	PIPE	A		61	61	62	62	W106	PL31-3 PER EE

STAGE LIGHTING PLUG BOX - TYPE 201 | 1 1/2" = 1'-0" | 1

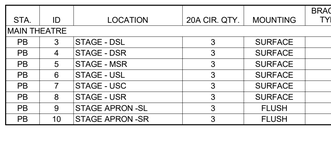

STA.	ID	LOCATION	20A CIR. QTY.	MOUNTING	BRACKET TYPE	NOTES	(A)	(B)	(C)
MAIN THEATRE									
PB	1	FOLLOWSPOT BOOTH	3	SURFACE			49	50	PL31-7 PER EE 3
PB	2	FOLLOWSPOT BOOTH	3	SURFACE			49	50	PL31-9 PER EE

STAGE LIGHTING PLUG BOX - TYPE 205 | 3" = 1'-0" | 5

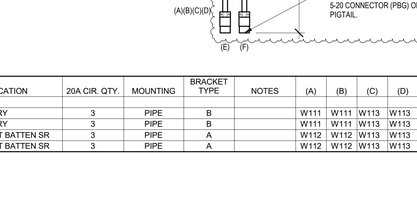

STA.	ID	LOCATION	20A CIR. QTY.	MOUNTING	BRACKET TYPE	NOTES	(A)	(B)	(C)	(D)	(E)
MAIN THEATRE											
PB	11	BOX BOOM #2 SL	3	SURFACE			69	69	70	70	PL21-3 PER EE
PB	12	BOX BOOM #2 SR	3	SURFACE			71	71	72	72	PL21-5 PER EE
PB	13	BOX BOOM #1 SL	3	SURFACE			73	73	74	74	PL21-3 PER EE
PB	14	BOX BOOM #1 SR	3	SURFACE			75	75	76	76	PL21-5 PER EE
PB	17	FOH CATWALK #3	3	PIPE	A		53	53	54	54	PL31-3 PER EE
PB	18	FOH CATWALK #3	3	PIPE	A		53	53	54	54	PL31-1 PER EE
PB	19	FOH CATWALK #3	3	PIPE	A		53	53	54	54	PL31-5 PER EE 3
PB	24	FOH CATWALK #2	3	PIPE	A		59	59	60	60	PL31-5 PER EE
PB	25	FOH CATWALK #2	3	PIPE	A		59	59	60	60	PL31-3 PER EE
PB	26	FOH CATWALK #2	3	PIPE	A		59	59	60	60	PL31-1 PER EE
PB	29	FOH CATWALK #1	3	PIPE	A		63	63	64	64	PL31-1 PER EE
PB	30	FOH CATWALK #1	3	PIPE	A		65	65	66	66	PL31-5 PER EE
PB	31	FOH CATWALK #1	3	PIPE	A		65	65	66	66	PL31-3 PER EE
PB	32	FOH CATWALK #1	3	PIPE	A		65	65	66	66	PL31-1 PER EE
PB	33	FOH CATWALK #1	3	PIPE	A		67	67	68	68	PL31-5 PER EE

STAGE LIGHTING PLUG BOX - TYPE 202 | 1 1/2" = 1'-0" | 2

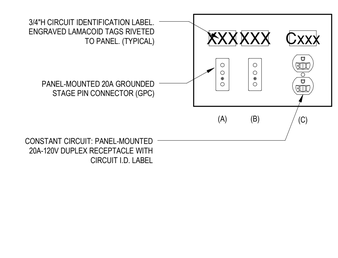

STA.	ID	LOCATION	20A CIR. QTY.	MOUNTING	BRACKET TYPE	NOTES	(A)	(B)	(C)
MAIN THEATRE									
PB	3	STAGE - DSL	3	SURFACE			1	2	PL11-1 PER EE 3
PB	4	STAGE - DSR	3	SURFACE			3	4	PL11-3 PER EE
PB	5	STAGE - MSR	3	SURFACE			5	6	PL11-5 PER EE
PB	6	STAGE - USL	3	SURFACE			7	8	PL11-5 PER EE
PB	7	STAGE - USC	3	SURFACE			9	10	PL11-1 PER EE
PB	8	STAGE - USR	3	SURFACE			11	12	PL11-7 PER EE
PB	9	STAGE APRON -SL	3	FLUSH			13	14	PL11-3 PER EE
PB	10	STAGE APRON -SR	3	FLUSH			15	16	PL11-7 PER EE

STAGE LIGHTING PLUG BOX - TYPE 206 | 3" = 1'-0" | 6

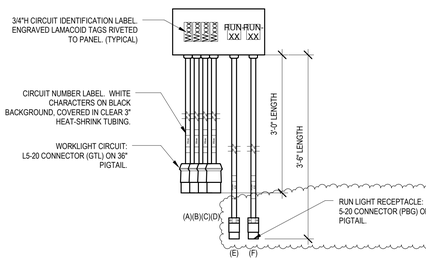

STA.	ID	LOCATION	20A CIR. QTY.	MOUNTING	BRACKET TYPE	NOTES	(A)	(B)	(C)	(D)	(E)	(F)
MAIN THEATRE												
PB	34	FLY GALLERY	3	PIPE	B		W111	W111	W113	W113	RUN-17	RUN-17
PB	35	FLY GALLERY	3	PIPE	B		W111	W111	W113	W113	RUN-17	RUN-17
PB	37	WORKLIGHT BATTEN SR	3	PIPE	A		W112	W112	W113	W113	RUN-18	RUN-18
PB	38	WORKLIGHT BATTEN SR	3	PIPE	A		W112	W112	W113	W113	RUN-18	RUN-18

STAGE LIGHTING PLUG BOX - TYPE 203 | 1 1/2" = 1'-0" | 3

APPL No. A03-122864

DSA Stamp

Architect

RACHLIN PARTNERS
8640 National Boulevard
Culver City, CA 90232
310.204.3400

Disclaimer:

THESE DRAWINGS ARE THE PROPERTY OF THE ARCHITECT. THE DESIGNS SHOWN AND DESCRIBED HEREIN INCLUDING ALL TECHNICAL DRAWINGS ARE PROPRIETARY AND CANNOT BE COPIED, DUPLICATED OR COMMERCIALLY EXPLOITED EXCEPT BY WRITTEN AGREEMENT. THESE DRAWINGS AND DESIGNS SHALL NOT BE USED BY THE OWNER ON OTHER PROJECTS OR FOR ADDITIONS TO THIS PROJECT, OR FOR COMPLETION OF THIS PROJECT BY OTHERS. THE OWNER AGREES TO HOLD HARMLESS, INDEMNIFY AND DEFEND THE ARCHITECT AGAINST ALL DAMAGES, CLAIMS AND LOSSES, INCLUDING DEFENSE COSTS, ARISING OUT OF ANY REUSE OF PLANS AND SPECIFICATIONS WITHOUT THE WRITTEN AUTHORIZATION OF THE ARCHITECT OF RECORD.

Copyright © 2019 Rachlin Partners, All Rights Reserved.

THE RUZIKA COMPANY
2 Executive Circle, Suite 290
Irvine, California 92614
Ph (949) 253-3479 Fax (949) 250-0181
www.ruzika.com
LIGHTING DESIGNERS + THEATRE CONSULTANTS

HACIENDA PERFORMING ARTS CENTER

Hacienda La Puente Unified School District
635 North California Avenue
La Puente, CA 91744

Rev	Date	Issue
2	11/1/2023	Addendum No. 2
3	12/15/2023	Addendum No. 3

Date: 09/08/2023
Scale: As indicated
Drawn By: TRC
Checked By: Checker

Architect / Engineer Stamp

Consultants

VCA Engineers, Inc.
R.M. Byrd and Associates, Inc.
ALM Consulting Engineers, Inc.
MDC Consulting Engineers
Protection Design and Consulting
The Ruzika Company

Sheet Title

STAGE LIGHTING DETAILS - CIRCUIT DEVICES

Sheet Number

TL812

C:\Users\tcruz\Documents\Hacienda Theatrical_R22_tlcruz.rvt

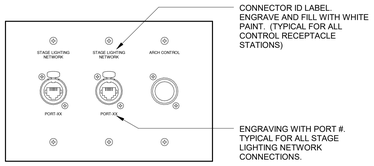

STA.	ID	LOCATION	MOUNTING	BOX SIZE	FINISH	NETWORK PORT #	NOTES
MAIN THEATRE							
CRS	2	AV BOOTH	FLUSH	3G DEEP BY E.C.	BLACK	15,16	

CTRL. RECEPT. STN. - TYPE 409 | 6" = 1'-0" | 9

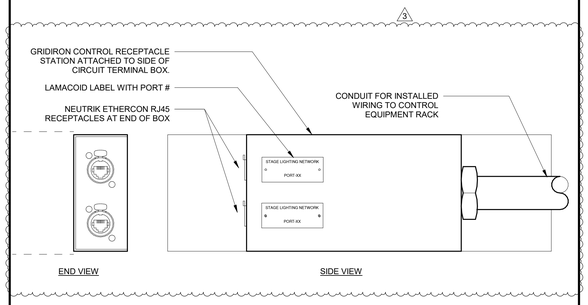

STA.	ID	LOCATION	MOUNTING	BOX SIZE	FINISH	NETWORK PORT #	NOTES
MAIN THEATRE							
CRS	22	LOADING GALLERY AT ELEC. #1	SURFACE	SPECIAL BY MFR.	BLACK	37,38	
CRS	25	LOADING GALLERY AT ELEC. #2	SURFACE	SPECIAL BY MFR.	BLACK	39,40	
CRS	28	LOADING GALLERY AT ELEC. #3	SURFACE	SPECIAL BY MFR.	BLACK	41,42	
CRS	31	LOADING GALLERY AT ELEC. #4	SURFACE	SPECIAL BY MFR.	BLACK	43,44	

CTRL. RECEPT. STN. -TYPE 407 | 6" = 1'-0" | 7

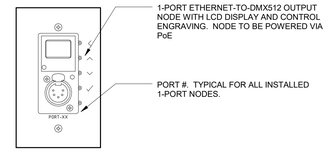

STA.	ID	LOCATION	MOUNTING	BOX SIZE	FINISH	NETWORK PORT #	NOTES
MAIN THEATRE							
CRS	24	ELECTRIC #1 - SR	INTEGRAL	N/A	BLACK	38	
CRS	27	ELECTRIC #2 - SR	INTEGRAL	N/A	BLACK	40	
CRS	30	ELECTRIC #3 - SR	INTEGRAL	N/A	BLACK	42	
CRS	33	ELECTRIC #4 - SR	INTEGRAL	N/A	BLACK	44	
CRS	35	OSR WALL AT WL BATTEN	SURFACE	2G BY LTG. MFR.	BLACK	53	

CTRL. RECEPT. STN. -TYPE 404 | 6" = 1'-0" | 4

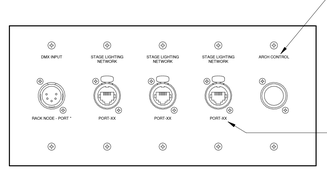

STA.	ID	LOCATION	MOUNTING	BOX SIZE	FINISH	NETWORK PORT #	NOTES
MAIN THEATRE							
CRS	1	LIGHTING BOOTH	FLUSH	5G DEEP BY E.C.	BLACK	10,11,12	RACK NODE 1 - PORT 1

CTRL. RECEPT. STN. - TYPE 401 | 6" = 1'-0" | 1

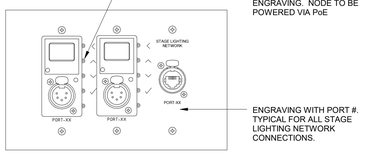

STA.	ID	LOCATION	MOUNTING	BOX SIZE	FINISH	NETWORK PORT #	NOTES
MAIN THEATRE							
CRS	21	FLY GALLERY (CYC. ELEC.)	PIPE, BRACKET 'B'	3G BY LTG. MFR.	BLACK	49,50,51	

CTRL. RECEPT. STN. -TYPE 410 | 6" = 1'-0" | 10

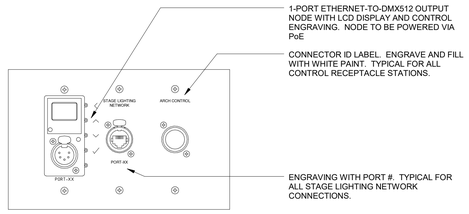

STA.	ID	LOCATION	MOUNTING	BOX SIZE	FINISH	NETWORK PORT #	NOTES
MAIN THEATRE							
CRS	3	FOLLOWSPOT BOOTH	SURFACE	3G BY LTG. MFR.	BLACK	13,14	
CRS	8	STAGE - DSR	SURFACE	3G BY LTG. MFR.	BLACK	27,28	

CTRL. RECEPT. STN. -TYPE 408 | 6" = 1'-0" | 8

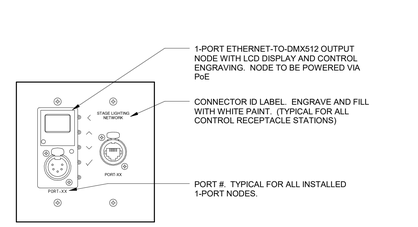

STA.	ID	LOCATION	MOUNTING	BOX SIZE	FINISH	NETWORK PORT #	NOTES
MAIN THEATRE							
CRS	5	STAGE APRON - SL	FLUSH	2G DEEP BY E.C.	BLACK	19,20	
CRS	6	STAGE APRON - SR	FLUSH	2G DEEP BY E.C.	BLACK	21,22	
CRS	9	STAGE - SR	SURFACE	2G BY LTG. MFR.	BLACK	29,30	
CRS	10	STAGE - USL	SURFACE	2G BY LTG. MFR.	BLACK	31,32	
CRS	11	STAGE - USC	SURFACE	2G BY LTG. MFR.	BLACK	33,34	
CRS	12	STAGE - USR	SURFACE	2G BY LTG. MFR.	BLACK	35,36	
CRS	14	BOX BOOM #2 SL	FLUSH	2G DEEP BY E.C.	BLACK	61,62	
CRS	15	BOX BOOM #2 SR	FLUSH	2G DEEP BY E.C.	BLACK	63,64	
CRS	16	BOX BOOM #1 SL	FLUSH	2G DEEP BY E.C.	BLACK	65,66	
CRS	17	BOX BOOM #1 SR	FLUSH	2G DEEP BY E.C.	BLACK	67,68	
CRS	18	FOH CATWALK #3	PIPE, BRACKET 'A'	2G BY LTG. MFR.	BLACK	55,56	
CRS	19	FOH CATWALK #2	PIPE, BRACKET 'A'	2G BY LTG. MFR.	BLACK	57,58	
CRS	20	FOH CATWALK #1	PIPE, BRACKET 'A'	2G BY LTG. MFR.	BLACK	59,60	

CTRL. RECEPT. STN. -TYPE 405 | 6" = 1'-0" | 5

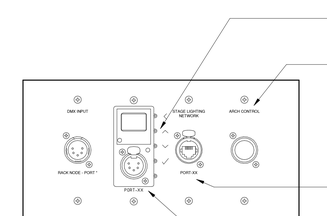

STA.	ID	LOCATION	MOUNTING	BOX SIZE	FINISH	NETWORK PORT #	NOTES
MAIN THEATRE							
CRS	7	STAGE - DSL	SURFACE	4G BY LTG. MFR.	BLACK	25,26	RACK NODE 1 - PORT 3

CTRL. RECEPT. STN. -TYPE 402 | 6" = 1'-0" | 2

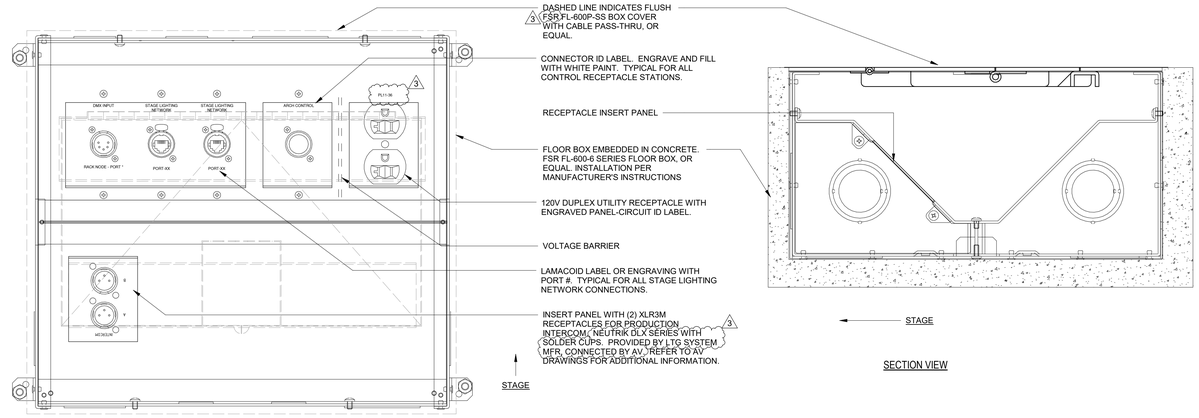

STA.	ID	LOCATION	MOUNTING	BOX SIZE	FINISH	NETWORK PORT #	NOTES
MAIN THEATRE							
CRS	4	AUDITORIUM CENTER	FLOOR	FSR FL-600	BLACK	17,18	RACK NODE 1 - PORT 2, UTILITY CIRC. PL11-36 PER EE

CTRL. RECEPT. STN. - TYPE 406 | 6" = 1'-0" | 6

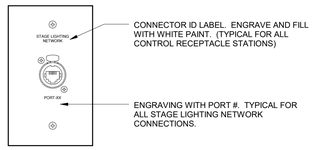

STA.	ID	LOCATION	MOUNTING	BOX SIZE	FINISH	NETWORK PORT #	NOTES
MAIN THEATRE							
CRS	13	STAGE -DSL (WAP)	SURFACE	1G BY LTG. MFR.	BLACK	9	
CRS	23	ELECTRIC #1 - SL	INTEGRAL	N/A	BLACK	37	
CRS	26	ELECTRIC #2 - SL	INTEGRAL	N/A	BLACK	39	
CRS	29	ELECTRIC #3 - SL	INTEGRAL	N/A	BLACK	41	
CRS	32	ELECTRIC #4 - SL	INTEGRAL	N/A	BLACK	43	
CRS	34	LOBBY AT WC LIFT	FLUSH	1G DEEP BY E.C.	CREAM	70	

CTRL. RECEPT. STN. - TYPE 403 | 6" = 1'-0" | 3

APPL No. A03-122864

DSA Stamp

Architect

RACHLIN PARTNERS
8640 National Boulevard
Culver City, CA 90232
310.204.3400

Disclaimer:

THESE DRAWINGS ARE THE PROPERTY OF THE ARCHITECT. THE DESIGNS SHOWN AND DESCRIBED HEREIN INCLUDING ALL TECHNICAL DRAWINGS ARE PROPRIETARY AND CANNOT BE COPIED, DUPLICATED OR COMMERCIALLY EXPLOITED EXCEPT BY WRITTEN AGREEMENT. THESE DRAWINGS AND DESIGNS SHALL NOT BE USED BY THE OWNER ON OTHER PROJECTS FOR ADDITIONS TO THIS PROJECT, OR FOR COMPLETION OF THIS PROJECT BY OTHERS. THE OWNER AGREES TO HOLD HARMLESS, INDEMNIFY AND DEFEND THE ARCHITECT AGAINST ALL DAMAGES, CLAIMS AND LOSSES, INCLUDING DEFENSE COSTS, ARISING OUT OF ANY REUSE OF PLANS AND SPECIFICATIONS WITHOUT THE WRITTEN AUTHORIZATION OF THE ARCHITECT OF RECORD.

Copyright © 2019 Rachlin Partners, All Rights Reserved.

THE RUZIKA COMPANY
2 Executive Circle, Suite 290
Irvine, California 92614
Ph (949) 253-3479 Fax (949) 253-0181
www.ruzika.com
LIGHTING DESIGNERS + THEATRE CONSULTANTS

HACIENDA PERFORMING ARTS CENTER

Hacienda La Puente Unified School District
635 North California Avenue
La Puente, CA 91744

Rev	Date	Issue
2	11/1/2023	Addendum No. 2
3	12/15/2023	Addendum No. 3

Date: 09/08/2023
Scale: 6" = 1'-0"
Drawn By: TRC
Checked By: Checker

Architect / Engineer Stamp

Consultants

VCA Engineers, Inc.
R.M. Byrd and Associates, Inc.
ALM Consulting Engineers, Inc.
MDC Consulting Engineers
Protection Design and Consulting
The Ruzika Company

Sheet Title

STAGE LIGHTING DETAILS - CONTROL DEVICES

Sheet Number

TL821

C:\Users\tross\Documents\Hacienda Theatrical_R22_tkobrosk.rvt

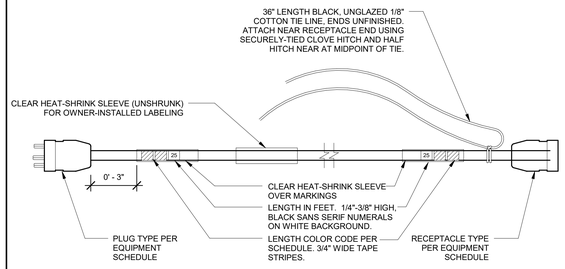

POWER EXTENSION CABLE

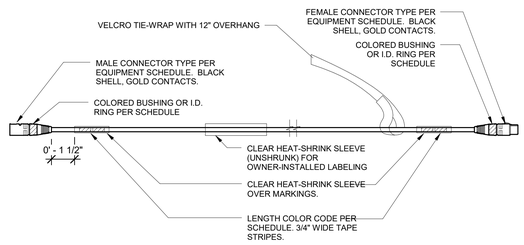

CONTROL EXTENSION CABLE

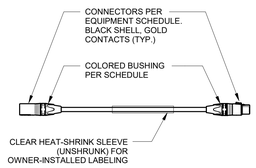

CONTROL ADAPTER CABLE

CABLE LENGTH COLOR CODE

LENGTH	STRIPES
6'	YELLOW
10'	RED
15'	(1) YELLOW, (1) RED
25'	ORANGE
50'	BROWN

CONTROL CABLE BUSHING COLORS

DESCRIPTION	BUSHING COLOR
DMX 512 WITH XLR5 CONNECTORS (XX)	VIOLET
NETWORK CABLE - ETHERCON (X ONLY)	BLUE
PORTABLE CONTROL STATION	N/A
DMX TURNAROUND - XLR5 TO XLR5 (XX)	VIOLET

NOTES:
1. DO NOT APPLY ADDITIONAL LABELING TO CABLES WITH MANUFACTURER NAME OR PART #'S.
2. UTILIZE NEUTRIK XX-SERIES CONNECTORS FOR ALL XLR 3, 4, 5, & 6 PIN CABLES. UTILIZE NEUTRIK X-SERIES CONNECTORS FOR ALL ETHERCON CABLES. UTILIZE CONNECTORS WITH BLACK SHELLS AND GOLD PLATED CONTACTS FOR ALL DATA CABLES.
3. DMX512 CABLES TO BE CONSTRUCTED WITH TMB PC224P CABLE. NETWORK CABLES TO BE CONSTRUCTED FROM TMB PCCAT5EP CABLE. OTHER CABLES ONLY WITH PRE-APPROVAL.
4. IN ORDER TO MAINTAIN CONSISTENCY BETWEEN VENDORS, ALL TAPE STRIPES SHALL BE 1/A 3/4" WIDE SCOTCH #35 COLOR CODING ELECTRICAL TAPE. WHERE 2 STRIPES ARE USED, LEAVE ¼" GAP BETWEEN STRIPS.

PORTABLE CABLE DETAILS | 3" = 1'-0" | 9

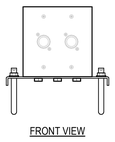
FRONT VIEW

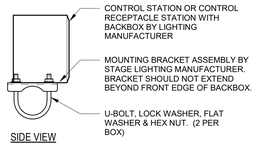

SIDE VIEW

CRS PIPE MTG BRACKET 'A' | 3" = 1'-0" | 7

FRONT VIEW

SIDE VIEW

CRS PIPE MTG BRACKET 'B' | 3" = 1'-0" | 8

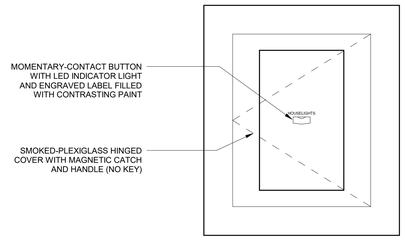

STA.	ID	LOCATION	MOUNTING	BACKBOX	FINISH	LABEL-1	NOTES
MAIN THEATRE							
HCS	2	HR REAR ENTRY	FLUSH	SPECIAL BY LTG. MFR.	CREAM W/ CREAM COVER	ON/OFF	
HCS	4	HL REAR	FLUSH	SPECIAL BY LTG. MFR.	CREAM W/ CREAM COVER	ON/OFF	
HCS	5	HOUSE RIGHT ENTRY	FLUSH	SPECIAL BY LTG. MFR.	CREAM W/ CREAM COVER	ON/OFF	
HCS	6	HOUSE LEFT ENTRY	FLUSH	SPECIAL BY LTG. MFR.	CREAM W/ CREAM COVER	ON/OFF	
HCS	10	LOBBY AT WC LIFT	FLUSH	SPECIAL BY LTG. MFR.	CREAM W/ CREAM COVER	WC LANDING	

HOUSELT CTRL STN - TYPE 601 | 6" = 1'-0" | 4

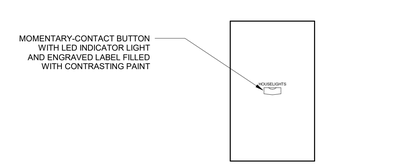

STA.	ID	LOCATION	MOUNTING	BACKBOX	FINISH	LABEL-1	LABEL-2	LABEL-3	NOTES
MAIN THEATRE									
HCS	1	S/L LOCK HR REAR	FLUSH	1G DEEP BY E.C.	CREAM	ON/OFF			
HCS	3	S/L LOCK HL REAR	FLUSH	1G DEEP BY E.C.	CREAM	ON/OFF			
HCS	7	S/L LOCK HR AT BOH	FLUSH	1G DEEP BY E.C.	CREAM	ON/OFF			
HCS	8	S/L LOCK HR	FLUSH	1G DEEP BY E.C.	CREAM	ON/OFF			
HCS	11	S/L LOCK HL AT BOH	FLUSH	1G DEEP BY E.C.	CREAM	ON/OFF			
HCS	12	S/L LOCK HL	FLUSH	1G DEEP BY E.C.	CREAM	ON/OFF			

HOUSELT CTRL STN - TYPE 602 | 6" = 1'-0" | 5

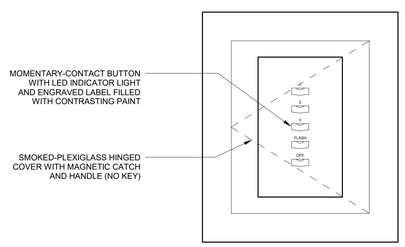

STA.	ID	LOCATION	MOUNTING	BACKBOX	FINISH	NOTES
MAIN THEATRE						
HCS	9	LOBBY HR	FLUSH	SPECIAL BY LTG. MFR.	CREAM W/ CREAM COVER	
HCS	13	LOBBY HL	FLUSH	SPECIAL BY LTG. MFR.	CREAM W/ CREAM COVER	

HOUSELT CTRL STN - TYPE 603 | 6" = 1'-0" | 6

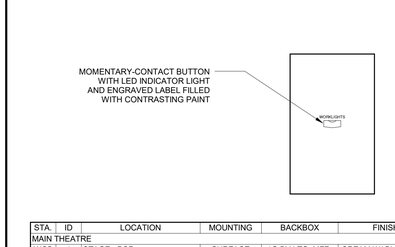

STA.	ID	LOCATION	MOUNTING	BACKBOX	FINISH	LABEL-1	NOTES
MAIN THEATRE							
WCS	1	STAGE - DSR	SURFACE	1G BY LTG. MFR.	CREAM W/ BLACK BOX	WORKLIGHTS	
WCS	4	STAGE - USL	SURFACE	1G BY LTG. MFR.	CREAM W/ BLACK BOX	WORKLIGHTS	
WCS	5	STAGE - USR	SURFACE	1G BY LTG. MFR.	CREAM W/ BLACK BOX	WORKLIGHTS	
WCS	6	BACKSTAGE CORRIDOR SL AT S/L LOCK	SURFACE	1G BY LTG. MFR.	CREAM W/ BLACK BOX	WORKLIGHTS	
WCS	7	BACKSTAGE CORRIDOR SR AT S/L LOCK	SURFACE	1G BY LTG. MFR.	CREAM W/ BLACK BOX	WORKLIGHTS	
WCS	8	BACKSTAGE CORRIDOR DSL	SURFACE	1G BY LTG. MFR.	CREAM W/ BLACK BOX	WORKLIGHTS	
WCS	9	BACKSTAGE CORRIDOR DSR	SURFACE	1G BY LTG. MFR.	CREAM W/ BLACK BOX	WORKLIGHTS	
WCS	10	LADDER ROOM SL	SURFACE	1G BY LTG. MFR.	CREAM W/ BLACK BOX	WORKLIGHTS	
WCS	11	LADDER ROOM SR	SURFACE	1G BY LTG. MFR.	CREAM W/ BLACK BOX	WORKLIGHTS	
WCS	12	BACKSTAGE CORRIDOR USL	SURFACE	1G BY LTG. MFR.	CREAM W/ BLACK BOX	WORKLIGHTS	
WCS	13	BACKSTAGE CORRIDOR USR	SURFACE	1G BY LTG. MFR.	CREAM W/ BLACK BOX	WORKLIGHTS	
WCS	14	BOX BOOMS SL	SURFACE	1G BY LTG. MFR.	CREAM W/ BLACK BOX	WORKLIGHTS	
WCS	15	BOX BOOMS SR	SURFACE	1G BY LTG. MFR.	CREAM W/ BLACK BOX	WORKLIGHTS	
WCS	16	FOH CATWALK REAR ENTRY	SURFACE	1G BY LTG. MFR.	CREAM W/ BLACK BOX	WORKLIGHTS	
WCS	17	FOH CATWALK DSL	SURFACE	1G BY LTG. MFR.	CREAM W/ BLACK BOX	WORKLIGHTS	
WCS	18	FOH CATWALK AT STAGE	SURFACE	1G BY LTG. MFR.	CREAM W/ BLACK BOX	WORKLIGHTS	
WCS	19	FLY GALLERY DS	SURFACE	1G BY LTG. MFR.	CREAM W/ BLACK BOX	WORKLIGHTS	
WCS	22	ARBOR WELL	SURFACE	1G BY LTG. MFR.	CREAM W/ BLACK BOX	WORKLIGHTS	

WORKLT CTRL STN - TYPE 501 | 6" = 1'-0" | 1

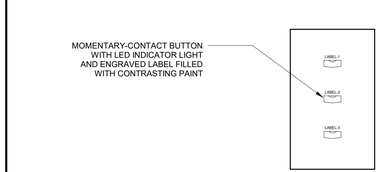

STA.	ID	LOCATION	MOUNTING	BACKBOX	FINISH	LABEL-1	LABEL-2	LABEL-3	NOTES
MAIN THEATRE									
WCS	3	STAGE - USL LADDER	SURFACE	1G BY LTG. MFR.	CREAM W/ BLACK BOX	STAGE WALLS	FLY GALLERY	LOAD GLRY	
WCS	20	FLY GALLERY US	SURFACE	1G BY LTG. MFR.	CREAM W/ BLACK BOX	FLY GALLERY	LOAD GLRY	STAGE WALLS	
WCS	21	LOADING GALLERY	SURFACE	1G BY LTG. MFR.	CREAM W/ BLACK BOX	LOAD GLRY	FLY GALLERY	STAGE WALLS	

WORKLT CTRL STN - TYPE 502 | 6" = 1'-0" | 2

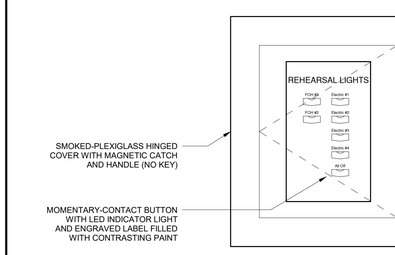

STA.	ID	LOCATION	MOUNTING	BACKBOX	FINISH	NOTES
MAIN THEATRE						
WCS	2	STAGE - SR (REHEARSAL)	SURFACE	SPECIAL BY LTG. MFR.	CREAM W/ CREAM COVER AND BLACK BOX	

WORKLT CTRL STN - TYPE 503 | 6" = 1'-0" | 3

APPL No. A03-122864

IDENTIFICATION STAMP
DIV. OF THE STATE ARCHITECT
APP: 03-122864 INC:
REVIEWED FOR
SS ☑ FLS ☑ ACS ☑
DATE: 10/03/2023

DSA Stamp

Architect

RACHLIN PARTNERS
8640 National Boulevard
Culver City, CA 90232
310.204.3400

Disclaimer:

THESE DRAWINGS ARE THE PROPERTY OF THE ARCHITECT. THE DESIGNS SHOWN AND DESCRIBED HEREIN INCLUDING ALL TECHNICAL DRAWINGS ARE PROPRIETARY AND CANNOT BE COPIED, DUPLICATED OR COMMERCIALLY EXPLOITED EXCEPT WITH THE WRITTEN PERMISSION OF THE ARCHITECT AND SHALL NOT BE USED BY THE OWNER ON OTHER PROJECTS, FOR ADDITIONS TO THIS PROJECT, OR FOR COMPLETION OF THIS PROJECT BY OTHERS. THE OWNER AGREES TO HOLD HARMLESS, INDEMNIFY AND DEFEND THE ARCHITECT AGAINST ALL DAMAGES, CLAIMS AND LOSSES, INCLUDING DEFENSE COSTS, ARISING OUT OF ANY REUSE OF PLANS AND SPECIFICATIONS WITHOUT THE WRITTEN AUTHORIZATION OF THE ARCHITECT OF RECORD.

Copyright © 2019 Rachlin Partners, All Rights Reserved.

THE RUZIKA COMPANY
2 Executive Circle, Suite 290
Irvine, California 92614
Ph (949) 253-3479 Fax (949) 253-0181
www.ruzika.com
LIGHTING DESIGNERS + THEATRE CONSULTANTS

HACIENDA PERFORMING ARTS CENTER

Hacienda La Puente Unified School District
635 North California Avenue
La Puente, CA 91744

Rev	Date	Issue
1	7.22.22	50% DD
2	10.21.22	50% CD
3	12.09.22	100% CD DSA SUBMITTAL
4	6.19.23	100% CD DSA RESUBMITTAL
5	9.20.23	DSA BACK CHECK

Date: 9.20.2023
Scale: As indicated
Drawn By: TRC
Checked By: Checker

Architect / Engineer Stamp

Consultants

VCA Engineers, Inc.
R.M. Byrd and Associates, Inc.
ALM Consulting Engineers, Inc.
MDC Consulting Engineers
Protection Design and Consulting
The Ruzika Company

Sheet Title

STAGE LIGHTING DETAILS - CONTROL DEVICES

Sheet Number

TL822

C:\Users\dawn.ruzika\Documents\Hacienda Theatre_R22_dallas_rvt

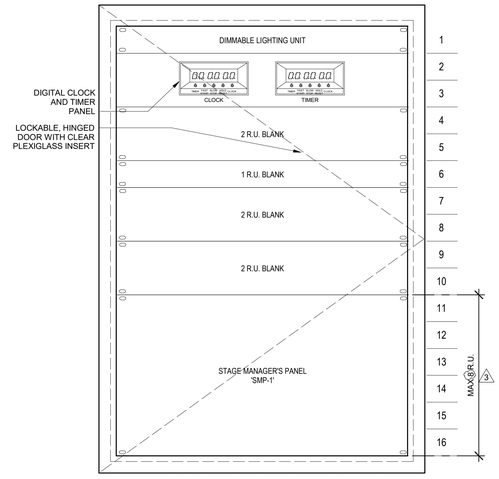

EQUIPMENT RACK TO BE MIDDLE ATLANTIC # SWR-16-12 WITH ZERO-CLEARANCE LATCH, OR APPROVED EQUAL. REF 5/TL713 FOR MOUNTING. MAX. GROSS WEIGHT 150 LBS.

STA.	ID	LOCATION	MOUNTING	BOX SIZE
MAIN THEATRE				
CER	2	STAGE - DSL	SURFACE	-

CONTROL EQUIPMENT RACK - CER-2 | 3" = 1'-0" | 5

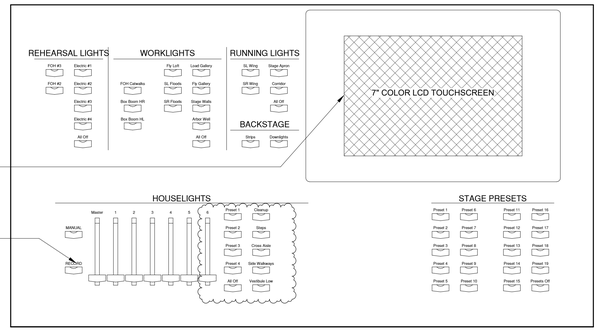

STAGE MANAGER'S PANEL | 6" = 1'-0" | 6

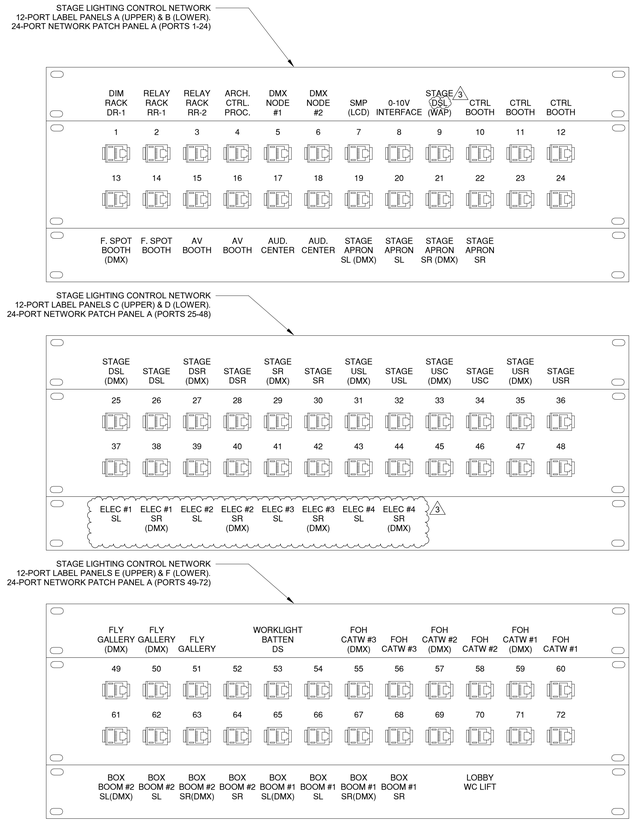

NOTES:
1. REFER TO 1/TL8.23 FOR PLACEMENT OF PATCH AND LABEL PANELS IN CONTROL EQUIPMENT RACK 'CER-1'.
2. SUPPLY RED PATCH CABLES FOR PERMANENTLY-CONNECTED DEVICES (PORTS 1-8). ALL OTHER PATCH CABLES ARE TO BE BLUE, OR ANOTHER CONTRASTING COLOR.

NETWORK PATCH PANEL LAYOUTS | 6" = 1'-0" | 3

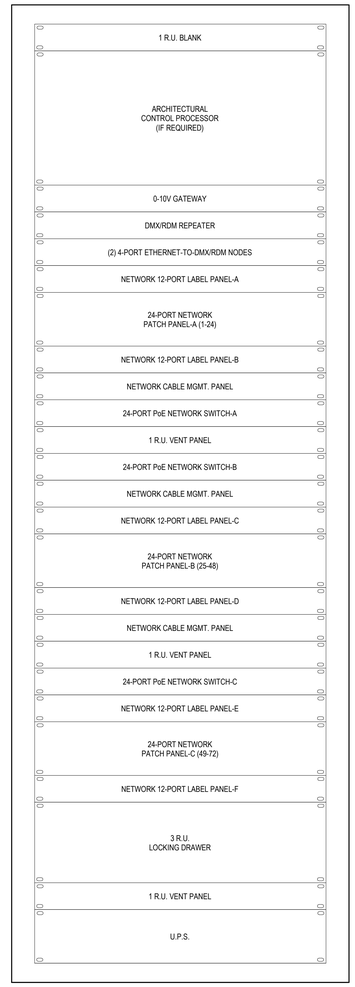

EQUIPMENT RACK TO BE MIDDLE ATLANTIC # DWR-35-26 OR APPROVED EQUAL REF4/TL713 FOR MOUNTING

MAX GROSS WEIGHT: 435 LBS

STA.	ID	LOCATION	MOUNTING	BOX SIZE
MAIN THEATRE				
CER	1	FOLLOWSPOT BOOTH	WALL	-

CONTROL EQUIPMENT RACK - CER-1 | 3" = 1'-0" | 1

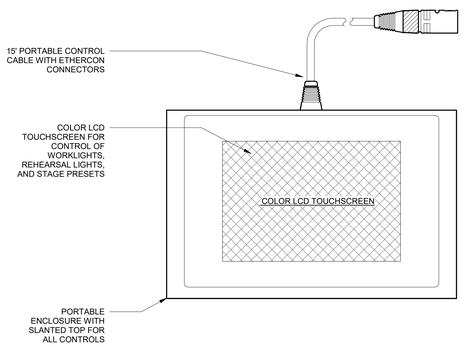

STA.	ID	LOCATION	MOUNTING	FINISH
PCS	2	CONTROL BOOTH	PORTABLE	

PORTABLE CTRL STATION - PCS-1-TYPE 802 | 6" = 1'-0" | 7

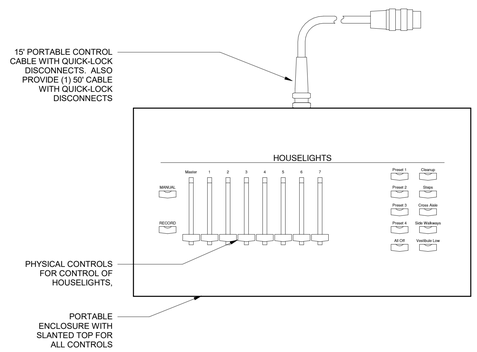

STA.	ID	LOCATION	MOUNTING	FINISH
PCS	1	CONTROL BOOTH	PORTABLE	

PORTABLE CTRL STATION - PCS-1-TYPE 801 | 6" = 1'-0" | 4

PROJECT NAME
STAGE LIGHTING NETWORK PORT LOCATIONS

LOCATION	PORTS	INSTALLED CABLE LENGTH	MAX PORTABLE CABLE LENGTH
CONTROL BOOTH	10, 11, 12	XX'	XX'
XXXXXXXXXXX	XX, XX	XX'	XX'
XXXXXXXXXXX	XX, XX	XX'	XX'
XXXXXXXXXXX	XX, XX	XX'	XX'
		XX'	XX'

PROVIDE PRINTED SCHEDULE WITH NETWORK RECEPTACLE LOCATIONS AND CABLE LENGTHS ON PLASTIC, FOR INSTALLATION ADJACENT TO EACH CONTROL EQUIPMENT RACK WITH PATCH PANEL.

NETWORK CABLE LENGTH CHART | 12" = 1'-0" | 2

APPL No. A03-122864

DSA Stamp

Architect

RACHLIN PARTNERS
8640 National Boulevard
Culver City, CA 90232
310.204.3400

Disclaimer:

THESE DRAWINGS ARE THE PROPERTY OF THE ARCHITECT. THE DESIGNS SHOWN AND DESCRIBED HEREIN INCLUDING ALL TECHNICAL DRAWINGS ARE PROPRIETARY AND CANNOT BE COPIED, DUPLICATED OR COMMERCIALLY EXPLOITED EXCEPT BY WRITTEN AGREEMENT. THESE DRAWINGS AND DESIGNS SHALL NOT BE USED BY THE OWNER ON OTHER PROJECTS FOR ADDITIONS TO THIS PROJECT, OR FOR COMPLETION OF THIS PROJECT BY OTHERS. THE OWNER AGREES TO HOLD HARMLESS, INDEMNIFY AND DEFEND THE ARCHITECT AGAINST ALL DAMAGES, CLAIMS AND LOSSES, INCLUDING DEFENSE COSTS, ARISING OUT OF ANY REUSE OF PLANS AND SPECIFICATIONS WITHOUT THE WRITTEN AUTHORIZATION OF THE ARCHITECT OF RECORD.

Copyright © 2019 Rachlin Partners, All Rights Reserved.

THE RUZIKA COMPANY
2 Executive Circle, Suite 290
Irvine, California 92614
Ph (949) 253-3479 Fax (949) 250-0181
www.ruzika.com
LIGHTING DESIGNERS + THEATRE CONSULTANTS

HACIENDA PERFORMING ARTS CENTER

Hacienda La Puente Unified School District
635 North California Avenue
La Puente, CA 91744

Rev	Date	Issue
2	11/1/2023	Addendum No. 2
3	12/15/2023	Addendum No. 3

Date: 09/08/2023
Scale: As indicated
Drawn By: TRC
Checked By: Checker

Architect / Engineer Stamp

Consultants

VCA Engineers, Inc.
R.M. Byrd and Associates, Inc.
ALM Consulting Engineers, Inc.
MDC Consulting Engineers
Protection Design and Consulting
The Ruzika Company

Sheet Title

STAGE LIGHTING DETAILS - CONTROL DEVICES

Sheet Number

TL823

C:\Users\tonia\Documents\Hacienda Theatrical_R22_tlschonek.rvt

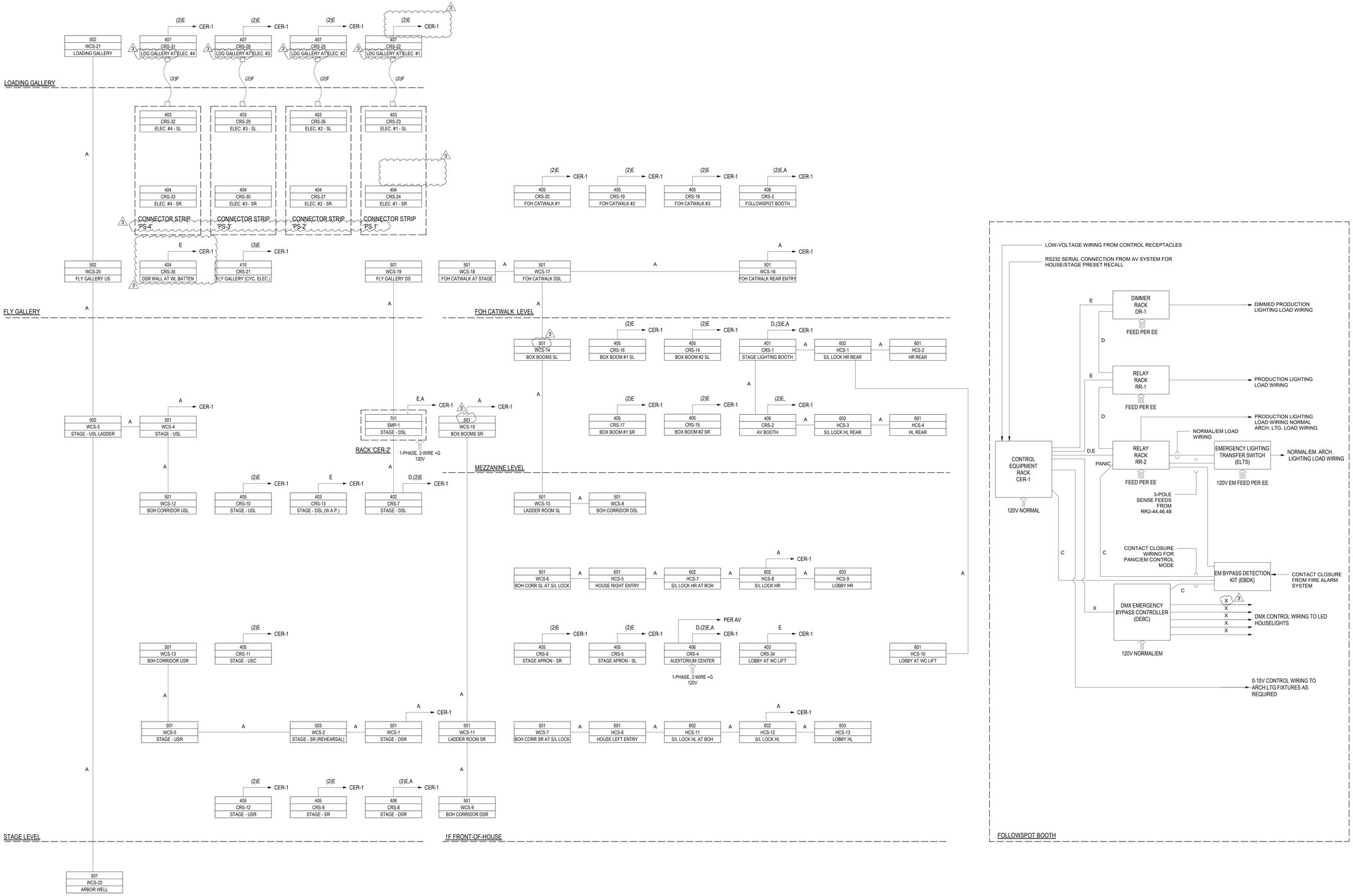

KEY TO SYMBOLS

WIRES → DESTINATION

FACEPLATE TYPE
STATION#
LOCATION

KEY TO WIRE TYPES

TYPE	DESCRIPTION	CABLE SPEC	NOTES
A	ARCHITECTURAL CONTROL SYSTEM	VARIES BY MANUFACTURER	WIRE CAN BE DAISY-CHAINED BETWEEN DEVICES. VERIFY W/ STAGE LIGHTING MANUFACTURER
C	CONTACT CLOSURE	(2) #16 AWG	FOR PANIC/EMERGENCY TRIGGER
D	DMX-512 INPUT	BELDEN 9729	
E	CAT5 ETHERNET	BELDEN 1583A	NETWORK, HOME RUN TO CER-1
F	CAT5 (FLEXIBLE)	BY RIGGING, DATA CONDUCTORS IN FALT MULTICIRCUIT RIBBON CABLES	FOR CONNECTION BETWEEN CEILING AND VERTICALLY-OPERABLE STAGE LIGHTING BATTENS
X	DMX-512 OUTPUT	BELDEN 9729	
P	PORTABLE DMX512	TMB PROPLEX	

*(X) = QUANTITY WHEN GREATER THAN ONE

STAGE LIGHTING CONTROL RISER

12" = 1'-0" | 1

APPL No. A03-122864

DSA Stamp

Architect

RACHLIN PARTNERS
8640 National Boulevard
Culver City, CA 90232
310.204.3400

Disclaimer:

THESE DRAWINGS ARE THE PROPERTY OF THE ARCHITECT. THE DESIGNS SHOWN AND DESCRIBED HEREIN INCLUDING ALL TECHNICAL DRAWINGS ARE PROPRIETARY AND CANNOT BE COPIED, DUPLICATED OR COMMERCIALLY EXPLOITED EXCEPT WITH THE WRITTEN PERMISSION OF THE ARCHITECT AND SHALL NOT BE USED BY THE OWNER ON OTHER PROJECTS FOR ADDITIONS TO THIS PROJECT, OR FOR COMPLETION OF THIS PROJECT BY OTHERS. THE OWNER AGREES TO HOLD HARMLESS, INDEMNIFY AND DEFEND THE ARCHITECT AGAINST ALL DAMAGES, CLAIMS AND LOSSES, INCLUDING DEFENSE COSTS, ARISING OUT OF ANY REUSE OF PLANS AND SPECIFICATIONS WITHOUT THE WRITTEN AUTHORIZATION OF THE ARCHITECT OF RECORD.

Copyright © 2019 Rachlin Partners, All Rights Reserved.

THE RUZIKA COMPANY
2 Executive Circle, Suite 290
Irvine, California 92614
Ph (949) 253-3479 Fax (949) 253-0181
www.ruzika.com
LIGHTING DESIGNERS + THEATRE CONSULTANTS

HACIENDA PERFORMING ARTS CENTER

Hacienda La Puente Unified School District
635 North California Avenue
La Puente, CA 91744

Rev	Date	Issue
2	11/1/2023	Addendum No. 2
3	12/15/2023	Addendum No. 3

Date: 09/08/2023
Scale: 12" = 1'-0"
Drawn By: TRC
Checked By: Checker

Architect / Engineer Stamp

Consultants

VCA Engineers, Inc.
R.M. Byrd and Associates, Inc.
ALM Consulting Engineers, Inc.
MDC Consulting Engineers
Protection Design and Consulting
The Ruzika Company

Sheet Title

STAGE LIGHTING CONTROL RISER

Sheet Number

TL911

C:\Users\tonas\Documents\Hacienda Theatrical_R22_tbolonak.rvt

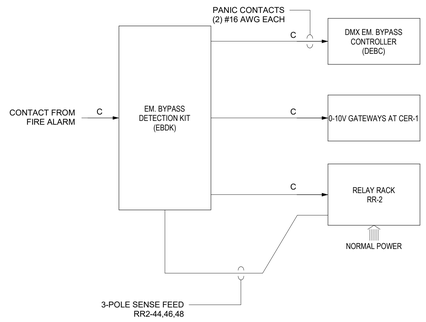

PANIC RISER | 12" = 1'-0" | 3

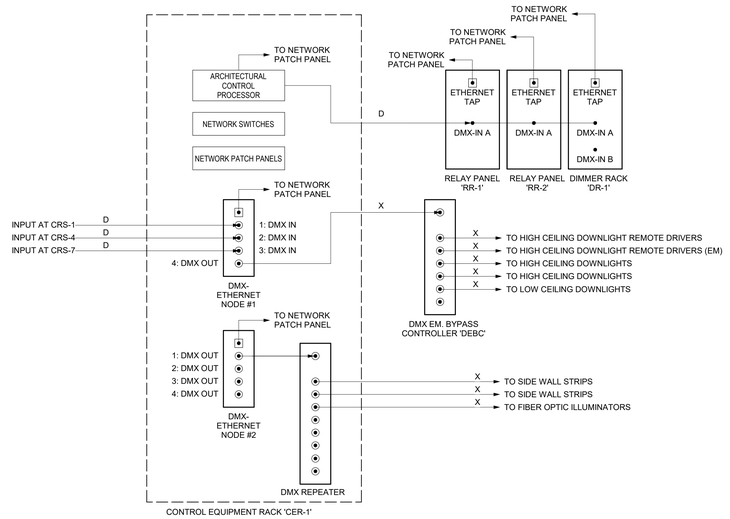

DMX SIGNAL FLOW DIAGRAM | 12" = 1'-0" | 1

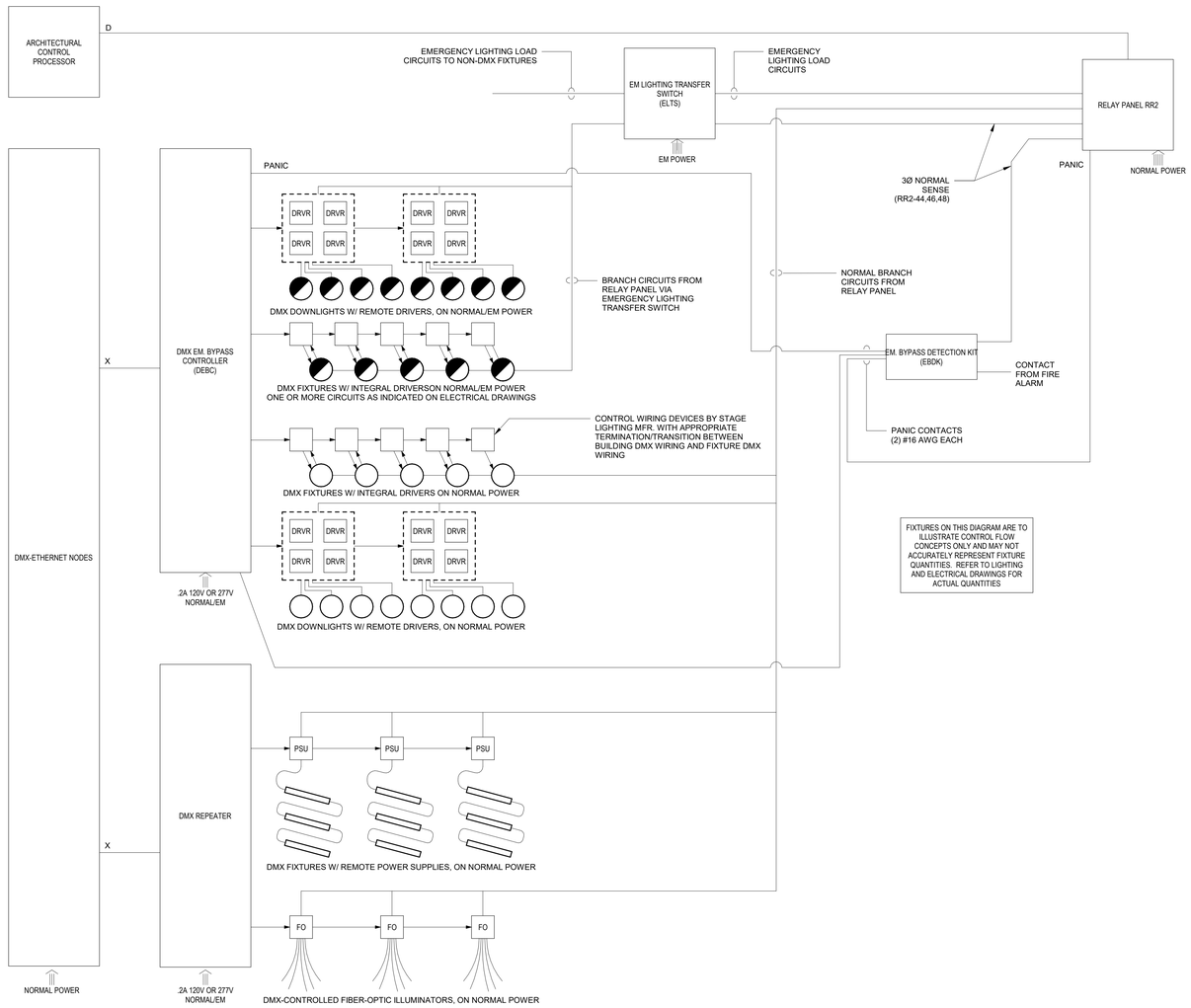

HOUSELIGHT CONTROL FLOW | 12" = 1'-0" | 2

C:\Users\Karen.ruzika\Documents\Hacienda Theatrical_R22_sfdlar.rvt

APPL No. A03-122864

IDENTIFICATION STAMP
DIV. OF THE STATE ARCHITECT
APP: 03-122864 INC:
REVIEWED FOR
SS ☑ FLS ☑ ACS ☑
DATE: 10/03/2023

DSA Stamp

Architect

RACHLIN PARTNERS
8640 National Boulevard
Culver City, CA 90232
310.204.3400

Disclaimer:

THESE DRAWINGS ARE THE PROPERTY OF THE ARCHITECT. THE DESIGNS SHOWN AND DESCRIBED HEREIN INCLUDING ALL TECHNICAL DRAWINGS ARE PROPRIETARY AND CANNOT BE COPIED, DUPLICATED OR COMMERCIALLY EXPLOITED EXCEPT BY WRITTEN AGREEMENT. THESE DRAWINGS AND DESIGNS SHALL NOT BE USED BY THE OWNER ON OTHER PROJECTS FOR ADDITIONS TO THIS PROJECT, OR FOR COMPLETION OF THIS PROJECT BY OTHERS. THE OWNER AGREES TO HOLD HARMLESS, INDEMNIFY AND DEFEND THE ARCHITECT AGAINST ALL DAMAGES, CLAIMS AND LOSSES, INCLUDING DEFENSE COSTS, ARISING OUT OF ANY REUSE OF PLANS AND SPECIFICATIONS WITHOUT THE WRITTEN AUTHORIZATION OF THE ARCHITECT OF RECORD.

Copyright © 2019 Rachlin Partners, All Rights Reserved.

THE RUZIKA COMPANY
2 Executive Circle, Suite 290
Irvine, California 92614
Ph (949) 253-3479 Fax (949) 253-0181
www.ruzika.com
LIGHTING DESIGNERS + THEATRE CONSULTANTS

HACIENDA PERFORMING ARTS CENTER

Hacienda La Puente Unified School District
635 North California Avenue
La Puente, CA 91744

Rev	Date	Issue
1	7.22.22	50% DD
2	10.21.22	50% CD
3	12.09.22	100% CD DSA SUBMITTAL
4	6.19.23	100% CD DSA RESUBMITTAL
5	9.20.23	DSA BACK CHECK

Date: 9.20.2023
Scale: 12" = 1'-0"
Drawn By: TRC
Checked By: Checker

Architect / Engineer Stamp

LICENSED ARCHITECT
RICHARD M. BYRD
NO. C-20229
REN. 8-31-25
STATE OF CALIFORNIA

Consultants

VCA Engineers, Inc.
R.M. Byrd and Associates, Inc.
ALM Consulting Engineers, Inc.
MDC Consulting Engineers
Protection Design and Consulting
The Ruzika Company

Sheet Title

STAGE LIGHTING RISERS

Sheet Number

TL912

SCHEDULE OF EQUIPMENT QUANTITIES

QTY.	THEATRE STAGE LIGHTING DIMMING / CONTROL TYPE
1	STAGE LIGHTING CONTROL CONSOLE (CC-1) WITH U.P.S. + ACCESSORIES
2	TOUCHSCREEN VIDEO DISPLAYS FOR CC-1 CONTROL CONSOLE
1	PORTABLE VIDEO NODE (VN-1)
1	TOUCHSCREEN VIDEO DISPLAY FOR VIDEO NODE
1	PORTABLE CONTROL STATION (PCS-1) FOR HOUSELIGHTS
1	PORTABLE CONTROL STATION (PCS-2) FOR AUXILIARY LIGHTING SYSTEMS
2	P.O.E. WIRELESS ACCESS POINT FOR STAGE LIGHTING NETWORK
1	HANDHELD WIRELESS REMOTE FOCUS DEVICE (WRFU-1)
1	CONTROL EQUIPMENT RACK 'CER-1' AT DIMMER ROOM; CONTENTS PER ELEVATION
1	CONTROL EQUIPMENT RACK 'CER-2' AT STAGE; CONTENTS PER ELEVATION
2	PORTABLE 2-PORT ETHERNET/DMX512 OUTPUT NODE. (PoE, WITH C-CLAMP, 2x DMX512 OUTPUTS)
1	200A 3-PHASE COMPANY SWITCH w/ CAM-STYLE SINGLE POLE FEEDER CONNECTORS & CHAMBER FOR BARE LUG CONNECTIONS.
1	EMERGENCY LIGHTING TRANSFER SWITCH, MIN 16 CIRCUIT. VERIFY FEED TYPE AND CIRCUIT COUNT WITH ELECTRICAL
1	EMERGENCY BYPASS DETECTION KIT (EBDK)
1	DMX EMERGENCY BYPASS CONTROLLER (DEBC)
1	24 MODULE DIMMER CABINET
18	2.4kw DUAL THRU-POWER MODULES W/ 500 MICRO-SECOND RISE TIME DIMMER, 20A RELAY, CONSTANT POWER (INCLUDES 3 SPARE MODULES)
2	1.2kw DUAL PHASE-ADAPTIVE LED DIMMER MODULES (2 SPARE MODULES)
7	AIRFLOW FILLER MIODULES
2	48-CIRCUIT MAINS-FED RELAY PANEL
4	PORTABLE DIMMER MODULES WITH SINGLE 750W OUTPUT VIA GPC RECEPTACLE, C-CLAMP, 120V INPUT POWER CORD WITH 5-15P CONNECTOR INSTALLED.
LOT	CONTROL RECEPTACLE STATIONS PER CONTROL DEVICE SUMMARY AND PLANS
LOT	HOUSELIGHT/WORKLIGHT CONTROL STATIONS PER CONTROL DEVICE SUMMARY AND PLANS
LOT	CIRCUIT DISTRIBUTION PLUG BOXES AND CONNECTOR STRIPS PER CIRCUIT DEVICE SUMMARY AND PLANS
LOT	POWER AND DATA CABLE REELS PER CIRCUIT AND CONTROL DEVICE SUMMARIES AND PLANS
QTY.	STAGE LIGHTING FIXTURE TYPE
5	14° COLOR-CHANGING LED PROFILE SPOTLIGHT W/ C-CLAMP, SAFETY CABLE, POWER CORD WITH GROUNDED 5-15P CONNECTOR INSTALLED
15	19° COLOR-CHANGING LED PROFILE SPOTLIGHT W/ C-CLAMP, SAFETY CABLE, POWER CORD WITH GROUNDED 5-15P CONNECTOR INSTALLED
45	26° COLOR-CHANGING LED PROFILE SPOTLIGHT W/ C-CLAMP, SAFETY CABLE, POWER CORD WITH GROUNDED 5-15P CONNECTOR INSTALLED
12	36° COLOR-CHANGING LED PROFILE SPOTLIGHT W/ C-CLAMP, SAFETY CABLE, POWER CORD WITH GROUNDED 5-15P CONNECTOR INSTALLED
4	50° COLOR-CHANGING LED PROFILE SPOTLIGHT W/ C-CLAMP, SAFETY CABLE, POWER CORD WITH GROUNDED 5-15P CONNECTOR INSTALLED
6	15° - 30° ZOOM COLOR-CHANGING LED PROFILE , C-CLAMP, SAFETY CABLE, POWER CORD WITH GROUNDED 5-15P CONNECTOR INSTALLED.
21	COLOR-CHANGING LED WASHLIGHT W/ 25°-50° VARIABLE BEAM SPREAD, C-CLAMP, SAFETY CABLE, POWER CORD WITH GROUNDED 5-15P CONNECTOR INSTALLED
7	LED CYCLORAMA WASH LIGHT W/ ASYMMETRICAL OPTICS, HANGER BRACKETS AND C-CLAMPS, SAFETY CABLE, POWER CORD WITH GROUNDED 5-15P CONNECTORS INSTALLED. ALTMAN SPECTRA-CYC OR APPROVED EQUAL, 200W
8	8" LED FRESNEL SPOTLIGHT W/ C-CLAMP, SAFETY CABLE, L5-20 TWISTLOCK CONNECTOR INSTALLED (FOH REHEARSAL LIGHT)
28	WIDE FLOOD LED WORKLIGHT W/ C-CLAMP, SAFETY CABLE, L5-20 TWISTLOCK CONNECTOR INSTALLED (STAGE OVERHEAD REHEARSAL LIGHT FLOODS)
6	LED RUNNING LIGHT W/ BARN DOORS, MEDIUM OBLONG LENS, LAMP, C-CLAMP, SAFETY CABLE, POWER LEAD WITH 5-15P CONNECTOR INSTALLED.
1	GHOSTLIGHT WITH LAMP, 5-15P CONNECTOR INSTALLED
2	FOLLOWSPOT w/ 6-COLOR BOOMERANG, FLOOR STAND, REMOTE BALLAST WITH 5-15P INPUT POWER CONNECTOR INSTALLED.
QTY.	STAGE LIGHTING ACCESSORY TYPE
	NOTE: MIXTURE OF POWERCON AND TRUE1 CONNECTORS WILL BE COORDINATED WITH PORTABLE FIXTURE SUBMITTALS
LOT	CAT-5e ETHERNET DATA EXTENSION CABLES (PROPLEX CABLE, ETHERCON CONNECTORS), WITH LABELING, TIE LINE. 5 @ 15' / 2 @ 25'
LOT	PORTABLE DMX512 CONTROL EXTENSION CABLES WITH 5-PIN XLR CONNECTORS, LABELING, TIE LINE. (TMB PRO-PLEX CABLE OR EQUAL) 50 @ 6' / 70 @ 10' / 16 @ 15' / 6 @ 25' / 1 @ 50'
LOT	12/3 TYPE SO PORTABLE STAGE EXTENSION CABLES WITH MALE AND FEMALE GROUNDED STAGE PIN CONNECTORS LABELING, TIE LINE. 4 @ 15' / 4 @ 15'
LOT	12/3 TYPE SO PORTABLE STAGE EXTENSION CABLES WITH MALE AND FEMALE 5-15 CONNECTORS, LABELING, TIE LINE. 10 @ 6' / 8 @ 10' / 8 @ 15' / 4 @ 25' / 1 @ 50'
LOT	12/3 TYPE SO PORTABLE STAGE EXTENSION CABLES WITH MALE AND FEMALE L5-20 CONNECTORS, LABELING, TIE LINE. 8 @ 6' / 4 @ 10'
LOT	PORTABLE POWERCON TO POWERCON OR TRUE1 TO TRUE 1 JUMPER CABLE 15 @ 6' / 10 @ 10'
4	POWERCON COUPLER
4	MOLDED-RUBBER CABLE TWOFERS WITH 20A EDISON CONNECTORS
4	12/3 SO PORTABLE MALE GROUNDED STAGE PIN TO FEMALE GROUNDED EDISON ADAPTORS - 1'-0" LONG
10	PORTABLE DMX512 TERMINATING PLUG (XLR5-M w/ 120 OHM RESISTOR)
2	ROLLING ROAD CASE FOR STORAGE OF ACCESSORIES
10	4-PANE STAGE LIGHTING BARNDOORS FOR LED WASHLIGHTS, W/ PERMANENTLY ATTACHED SAFETY CABLE
8	4-PANE STAGE LIGHTING BARNDOORS FOR PAR-STYLE HALOGEN RUNNING LIGHTS, W/ PERMANENTLY ATTACHED SAFETY CABLE
18	STAGE LIGHTING TOPHATS FOR 19°/26°/36° LED PROFILE SPOTLIGHTS, W/ PERMANENTLY ATTACHED SAFETY CABLE
4	STAGE LIGHTING TOPHATS FOR 50° LED PROFILE SPOTLIGHTS, W/ PERMANENTLY ATTACHED SAFETY CABLE
16	STAGE LIGHTING TEMPLATE HOLDER (A SIZE) FOR LED PROFILE SPOTLIGHTS
1	BLACK 1/8" UNGLAZED TIELINE, 3000' ROLL

CONTROL DEVICE SUMMARY

DEVICE	ID. #	TYPE	LOCATION
MAIN THEATRE			
CER	1		FOLLOWSPOT BOOTH
CER	2		STAGE - DSL
CRS	1	401	LIGHTING BOOTH
CRS	2	409	AV BOOTH
CRS	3	408	FOLLOWSPOT BOOTH
CRS	4	406	AUDITORIUM CENTER
CRS	5	405	STAGE APRON - SL
CRS	6	405	STAGE APRON - SR
CRS	7	402	STAGE - DSL
CRS	8	408	STAGE - DSR
CRS	9	405	STAGE - SR
CRS	10	405	STAGE - USL
CRS	11	405	STAGE - USC
CRS	12	405	STAGE - USR
CRS	13	403	STAGE -DSL (WAP)
CRS	14	405	BOX BOOM #2 SL
CRS	15	405	BOX BOOM #2 SR
CRS	16	405	BOX BOOM #1 SL
CRS	17	405	BOX BOOM #1 SR
CRS	18	405	FOH CATWALK #3
CRS	19	405	FOH CATWALK #2
CRS	20	405	FOH CATWALK #1
CRS	21	410	FLY GALLERY (CYC. ELEC.)
CRS	22	407	LOADING GALLERY AT ELEC. #1
CRS	23	403	ELECTRIC #1 - SL
CRS	24	404	ELECTRIC #1 - SR
CRS	25	407	LOADING GALLERY AT ELEC. #2
CRS	26	403	ELECTRIC #2 - SL
CRS	27	404	ELECTRIC #2 - SR
CRS	28	407	LOADING GALLERY AT ELEC. #3
CRS	29	403	ELECTRIC #3 - SL
CRS	30	404	ELECTRIC #3 - SR
CRS	31	407	LOADING GALLERY AT ELEC. #4
CRS	32	403	ELECTRIC #4 - SL
CRS	33	404	ELECTRIC #4 - SR
CRS	34	403	LOBBY AT WC LIFT
CRS	35	404	DSR WALL AT WL BATTEN
WCS	1	501	STAGE - DSR
WCS	2	503	STAGE - SR (REHEARSAL)
WCS	3	502	STAGE - USL LADDER
WCS	4	501	STAGE - USL
WCS	5	501	STAGE - USR
WCS	6	501	BACKSTAGE CORRIDOR SL AT S/L LOCK
WCS	7	501	BACKSTAGE CORRIDOR SR AT S/L LOCK
WCS	8	501	BACKSTAGE CORRIDOR DSL
WCS	9	501	BACKSTAGE CORRIDOR DSR
WCS	10	501	LADDER ROOM SL
WCS	11	501	LADDER ROOM SR
WCS	12	501	BACKSTAGE CORRIDOR USL
WCS	13	501	BACKSTAGE CORRIDOR USR
WCS	14	501	BOX BOOMS SL
WCS	15	501	BOX BOOMS SR
WCS	16	501	FOH CATWALK REAR ENTRY
WCS	17	501	FOH CATWALK DSL
WCS	18	501	FOH CATWALK AT STAGE
WCS	19	501	FLY GALLERY DS
WCS	20	502	FLY GALLERY US
WCS	21	502	LOADING GALLERY
WCS	22	501	ARBOR WELL
HCS	1	602	S/L LOCK HR REAR
HCS	2	601	HR REAR ENTRY
HCS	3	602	S/L LOCK HL REAR
HCS	4	601	HL REAR
HCS	5	601	HOUSE RIGHT ENTRY
HCS	6	601	HOUSE LEFT ENTRY
HCS	7	602	S/L LOCK HR AT BOH
HCS	8	602	S/L LOCK HR
HCS	9	603	LOBBY HR
HCS	10	601	LOBBY AT WC LIFT
HCS	11	602	S/L LOCK HL AT BOH
HCS	12	602	S/L LOCK HL
HCS	13	603	LOBBY HL
PCS	1	801	CONTROL BOOTH
PCS	2	802	CONTROL BOOTH

CIRCUIT DEVICE SUMMARY

DEVICE	ID. #	TYPE	LOCATION
MAIN THEATRE			
PS	1	101	ELECTRIC #1
PS	2	101	ELECTRIC #2
PS	3	101	ELECTRIC #3
PS	4	101	ELECTRIC #4
PB	1	205	FOLLOWSPOT BOOTH
PB	2	205	FOLLOWSPOT BOOTH
PB	3	206	STAGE - DSL
PB	4	206	STAGE - DSR
PB	5	206	STAGE - MSR
PB	6	206	STAGE - USL
PB	7	206	STAGE - USC
PB	8	206	STAGE - USR
PB	9	206	STAGE APRON -SL
PB	10	206	STAGE APRON -SR
PB	11	202	BOX BOOM #2 SL
PB	12	202	BOX BOOM #2 SR
PB	13	202	BOX BOOM #1 SL
PB	14	202	BOX BOOM #1 SR
PB	15	201	FOH CATWALK #3
PB	16	201	FOH CATWALK #3
PB	17	202	FOH CATWALK #3
PB	18	202	FOH CATWALK #3
PB	19	202	FOH CATWALK #3
PB	20	201	FOH CATWALK #3
PB	21	201	FOH CATWALK #3
PB	22	201	FOH CATWALK #2
PB	23	201	FOH CATWALK #2
PB	24	202	FOH CATWALK #2
PB	25	202	FOH CATWALK #2
PB	26	202	FOH CATWALK #2
PB	27	201	FOH CATWALK #2
PB	28	201	FOH CATWALK #2
PB	29	202	FOH CATWALK #1
PB	30	202	FOH CATWALK #1
PB	31	202	FOH CATWALK #1
PB	32	202	FOH CATWALK #1
PB	33	202	FOH CATWALK #1
PB	34	203	FLY GALLERY
PB	35	203	FLY GALLERY
PB	36	204	FLY GALLERY (CYC ELEC)
PB	37	203	WORKLIGHT BATTEN SR
PB	38	203	WORKLIGHT BATTEN SR
GUB	1	207	LOADING GALLERY AT ELEC. #1
GUB	2	207	LOADING GALLERY AT ELEC. #2
GUB	3	207	LOADING GALLERY AT ELEC. #3
GUB	4	207	LOADING GALLERY AT ELEC. #4

RELAY AND DIMMER RACK SCHEDULES

DIMMER RACK DR-1

MODULE TYPE	SYSTEM ADDRESS	LOCATION	FUNCTION
DIMMER/ RELAY/ CONSTANT	1	STAGE - DSL	
	2	STAGE - DSL	
DIMMER/ RELAY/ CONSTANT	3	STAGE - DSR	
	4	STAGE - DSR	
DIMMER/ RELAY/ CONSTANT	5	STAGE - MSR	
	6	STAGE - MSR	
DIMMER/ RELAY/ CONSTANT	7	STAGE - USL	
	8	STAGE - USL	
DIMMER/ RELAY/ CONSTANT	9	STAGE - USC	
	10	STAGE - USC	
DIMMER/ RELAY/ CONSTANT	11	STAGE - USR	
	12	STAGE - USR	
DIMMER/ RELAY/ CONSTANT	13	STAGE APRON - SL	
	14	STAGE APRON - SL	
DIMMER/ RELAY/ CONSTANT	15	STAGE APRON - SR	
	16	STAGE APRON - SR	
DIMMER/ RELAY/ CONSTANT	17	SPARE	
	18	SPARE	
DIMMER/ RELAY/ CONSTANT	21	SPARE	
	22	AUDITORIUM SEAT END AISLE LTS	HOUSE LT FIXTS
DIMMER/ RELAY/ CONSTANT	23	AUDITORIUM STEPS	HOUSE LT FIXTS
	24	AUDITORIUM CROSS-AISLE & REAR AISLE	HOUSE LT FIXTS
PHASE ADAPTIVE	25	SOUND/LIGHT LOCK LOW-LEVEL	HOUSE LT FIXTS
	26	SOUND/LIGHT LOCK LOW-LEVEL	HOUSE LT FIXTS
PHASE ADAPTIVE	27	STAGE APRON LOW-LEVEL	RUN LT FIXTS
	28	AUDITORIUM WALL LOW-LEVEL	HOUSE LT FIXTS
DIMMER/ RELAY/ CONSTANT	29	AUDITORIUM SIDE WALKWAYS	HOUSE LT FIXTS
	30	AUDITORIUM WALL STRIPS	HOUSE LT FIXTS
DIMMER/ RELAY/ CONSTANT	31	LOBBY ORNAMENTAL	LOBBY FIXTS
	32	LOBBY ORNAMENTAL	LOBBY FIXTS
DIMMER/ RELAY/ CONSTANT	33	LOBBY STAIRS	LOBBY FIXTS
	34	SPARE	
DIMMER/ RELAY/ CONSTANT	35	SPARE	
	36	SPARE	
AIRFLOW FILLER	37	SPARE	
	38	SPARE	
AIRFLOW FILLER	39	SPARE	
	40	SPARE	
AIRFLOW FILLER	41	SPARE	
	42	SPARE	
AIRFLOW FILLER	43	SPARE	
	44	SPARE	
AIRFLOW FILLER	45	SPARE	
	46	SPARE	
AIRFLOW FILLER	47	SPARE	
	48	SPARE	

RELAY RACK RR-1

LOCATION	FUNCTION	TYPE	RACK CIRCUIT	SYSTEM ADDRESS	SYSTEM ADDRESS	RACK CIRCUIT	TYPE	LOCATION	FUNCTION
FOLLOWSPOT BOOTH		1P 20A RELAY	1	49	50	2	1P 20A RELAY	FOLLOWSPOT BOOTH	
FOH CATWALK #3		1P 20A RELAY	3	51	52	4	1P 20A RELAY	FOH CATWALK #3	
FOH CATWALK #3		1P 20A RELAY	5	53	54	6	1P 20A RELAY	FOH CATWALK #3	
FOH CATWALK #3		1P 20A RELAY	7	55	56	8	1P 20A RELAY	FOH CATWALK #3	
FOH CATWALK #2		1P 20A RELAY	9	57	58	10	1P 20A RELAY	FOH CATWALK #2	
FOH CATWALK #2		1P 20A RELAY	11	59	60	12	1P 20A RELAY	FOH CATWALK #2	
FOH CATWALK #2		1P 20A RELAY	13	61	62	14	1P 20A RELAY	FOH CATWALK #2	
FOH CATWALK #1		1P 20A RELAY	15	63	64	16	1P 20A RELAY	FOH CATWALK #1	
FOH CATWALK #1		1P 20A RELAY	17	65	66	18	1P 20A RELAY	FOH CATWALK #1	
FOH CATWALK #1		1P 20A RELAY	19	67	68	20	1P 20A RELAY	FOH CATWALK #1	
BOX BOOM #2 SL		1P 20A RELAY	21	69	70	22	1P 20A RELAY	BOX BOOM #2 SL	
BOX BOOM #2 SR		1P 20A RELAY	23	71	72	24	1P 20A RELAY	BOX BOOM #2 SR	
BOX BOOM #1 SL		1P 20A RELAY	25	73	74	26	1P 20A RELAY	BOX BOOM #1 SL	
BOX BOOM #1 SR		1P 20A RELAY	27	75	76	28	1P 20A RELAY	BOX BOOM #1 SR	
ELECTRIC #1		1P 20A RELAY	29	77	78	30	1P 20A RELAY	ELECTRIC #1	
ELECTRIC #1		1P 20A RELAY	31	79	80	32	1P 20A RELAY	ELECTRIC #1	
ELECTRIC #1		1P 20A RELAY	33	81	82	34	1P 20A RELAY	ELECTRIC #1	
ELECTRIC #2		1P 20A RELAY	35	83	84	36	1P 20A RELAY	ELECTRIC #2	
ELECTRIC #2		1P 20A RELAY	37	85	86	38	1P 20A RELAY	ELECTRIC #2	
ELECTRIC #2		1P 20A RELAY	39	87	88	40	1P 20A RELAY	ELECTRIC #2	
ELECTRIC #3		1P 20A RELAY	41	89	90	42	1P 20A RELAY	ELECTRIC #3	
ELECTRIC #3		1P 20A RELAY	43	91	92	44	1P 20A RELAY	ELECTRIC #3	
ELECTRIC #3		1P 20A RELAY	45	93	94	46	1P 20A RELAY	ELECTRIC #3	
ELECTRIC #4		1P 20A RELAY	47	95	96	48	1P 20A RELAY	ELECTRIC #4	

RELAY RACK RR-2

LOCATION	FUNCTION	TYPE	RACK CIRCUIT	SYSTEM ADDRESS	SYSTEM ADDRESS	RACK CIRCUIT	TYPE	LOCATION	FUNCTION
ELECTRIC #4		1P 20A RELAY	1	97	98	2	1P 20A RELAY	ELECTRIC #4	
ELECTRIC #4		1P 20A RELAY	3	99	100	4	1P 20A RELAY	ELECTRIC #4	
FLY GALLERY (CYC ELEC)		1P 20A RELAY	5	101	102	6	1P 20A RELAY	FLY GALLERY (CYC ELEC)	
SPARE		1P 20A RELAY	7	103	104	8	1P 20A RELAY	SPARE	
FOH CATWALK #3	REHEARSAL	1P 20A RELAY	9	105	106	10	1P 20A RELAY	FOH CATWALK #2	REHEARSAL
ELECTRIC #1	REHEARSAL	1P 20A RELAY	11	107	108	12	1P 20A RELAY	ELECTRIC #2	REHEARSAL
ELECTRIC #3	REHEARSAL	1P 20A RELAY	13	109	110	14	1P 20A RELAY	ELECTRIC #4	REHEARSAL
FLY GALLERY SL	WORKLIGHT	1P 20A RELAY	15	111	112	16	1P 20A RELAY	WORKLT PIPE SR	RUN LTS
FLY GALLERY SL & WORKLT PIPE SR	WORKLIGHT	1P 20A RELAY	17	113	114	18	1P 20A RELAY	SPARE	
FLY GALLERY	WORKLIGHT FIXTURES	1P 20A RELAY	19	115	116	20	1P 20A RELAY	LOADING GALLERY	WORKLIGHT FIXTURES
HOUSELIGHTS	HOUSELIGHT FIXTURES	1P 20A RELAY	21	117	118	22	1P 20A RELAY	HOUSELIGHTS	HOUSELIGHT FIXTURES
S/L LOCKS UPPER	HOUSELIGHT FIXTURES	1P 20A RELAY	23	119	120	24	1P 20A RELAY	STAGE APRON ALCOVES	HOUSELIGHT FIXTURES
S/L LOCK HR	HOUSELIGHT FIXTURES	1P 20A RELAY	25	121	122	26	1P 20A RELAY	S/L LOCK HL	HOUSELIGHT FIXTURES
RIGGING ARBOR WELL	WORKLIGHT FIXTURES	1P 20A RELAY	27	123	124	28	1P 20A RELAY	BACKSTAGE LOW CEILING SR	WORKLIGHT FIXTURES
BACKSTAGE CORRIDOR	WORKLIGHT FIXTURES	1P 20A RELAY	29	125	126	30	1P 20A RELAY	BACKSTAGE CORRIDOR RUNNING	RUN LT FIXTURES
SPARE		1P 20A RELAY	31	127	128	32	1P 20A RELAY	STAGE WALLS	WORKLIGHT FIXTURES
BOX BOOMS SL	WORKLIGHT FIXTURES	1P 20A RELAY	33	129	130	34	1P 20A RELAY	BOX BOOMS SR	WORKLIGHT FIXTURES
FOH CATWALKS	WORKLIGHT FIXTURES	1P 20A RELAY	35	131	132	36	1P 20A RELAY	SPARE	
UPPER ALCOVE	LOBBY FIXTURES	1P 20A RELAY	37	133	134	38	1P 20A RELAY	HIGH CEILING DOWNS	LOBBY FIXTURES
LOW CELING DOWNS	LOBBY FIXTURES	1P 20A RELAY	39	135	136	40	1P 20A RELAY	RESTROOM ALCOVES	LOBBY FIXTURES
FEATURE WALL	LOBBY FIXTURES	1P 20A RELAY	41	137	138	42	1P 20A RELAY	LOBBY NORTH	LOBBY FIXTURES
LOBBY SOUTH	LOBBY FIXTURES	1P 20A RELAY	43	139	140	44	3P 15A BRKR	NORMAL SENSE	
LOBBY NORTH WALLWASH	LOBBY FIXTURES	1P 20A RELAY	45	141	142	46			
LOBBY SOUTH WALLWASH	LOBBY FIXTURES	1P 20A RELAY	47	143	144	48			

APPL No. A03-122864

DSA Stamp

Architect

RACHLIN PARTNERS
8640 National Boulevard
Culver City, CA 90232
310.204.3400

Disclaimer:

THESE DRAWINGS ARE THE PROPERTY OF THE ARCHITECT. THE DESIGNS SHOWN AND DESCRIBED HEREIN INCLUDING ALL TECHNICAL DRAWINGS ARE PROPRIETARY AND CANNOT BE COPIED, DUPLICATED OR COMMERCIALLY EXPLOITED EXCEPT BY WRITTEN AGREEMENT. THESE DRAWINGS AND DESIGNS SHALL NOT BE USED BY THE OWNER ON OTHER PROJECTS FOR ADDITIONS TO THIS PROJECT, OR FOR COMPLETION OF THIS PROJECT BY OTHERS. THE OWNER AGREES TO HOLD HARMLESS, INDEMNIFY AND DEFEND THE ARCHITECT AGAINST ALL DAMAGES, CLAIMS AND LOSSES, INCLUDING DEFENSE COSTS, ARISING OUT OF ANY REUSE OF PLANS AND SPECIFICATIONS WITHOUT THE WRITTEN AUTHORIZATION OF THE ARCHITECT OF RECORD.

Copyright © 2019 Rachlin Partners, All Rights Reserved.

THE RUZIKA COMPANY
2 Executive Circle, Suite 290
Irvine, California 92614
Ph (949) 253-3479 Fax (949) 253-0181
www.ruzika.com
LIGHTING DESIGNERS + THEATRE CONSULTANTS

HACIENDA PERFORMING ARTS CENTER

Hacienda La Puente Unified School District
635 North California Avenue
La Puente, CA 91744

Rev	Date	Issue
2	11/1/2023	Addendum No. 2
3	12/15/2023	Addendum No. 3

Date: 09/08/2023
Scale:
Drawn By: TRC
Checked By: Checker

Architect / Engineer Stamp

Consultants

VCA Engineers, Inc.
R.M. Byrd and Associates, Inc.
ALM Consulting Engineers, Inc.
MDC Consulting Engineers
Protection Design and Consulting
The Ruzika Company

Sheet Title

STAGE LIGHTING SCHEDULES

Sheet Number

TL921

C:\Users\tonas\Documents\Hacienda Theatrical_R22_tkobrosk.rvt

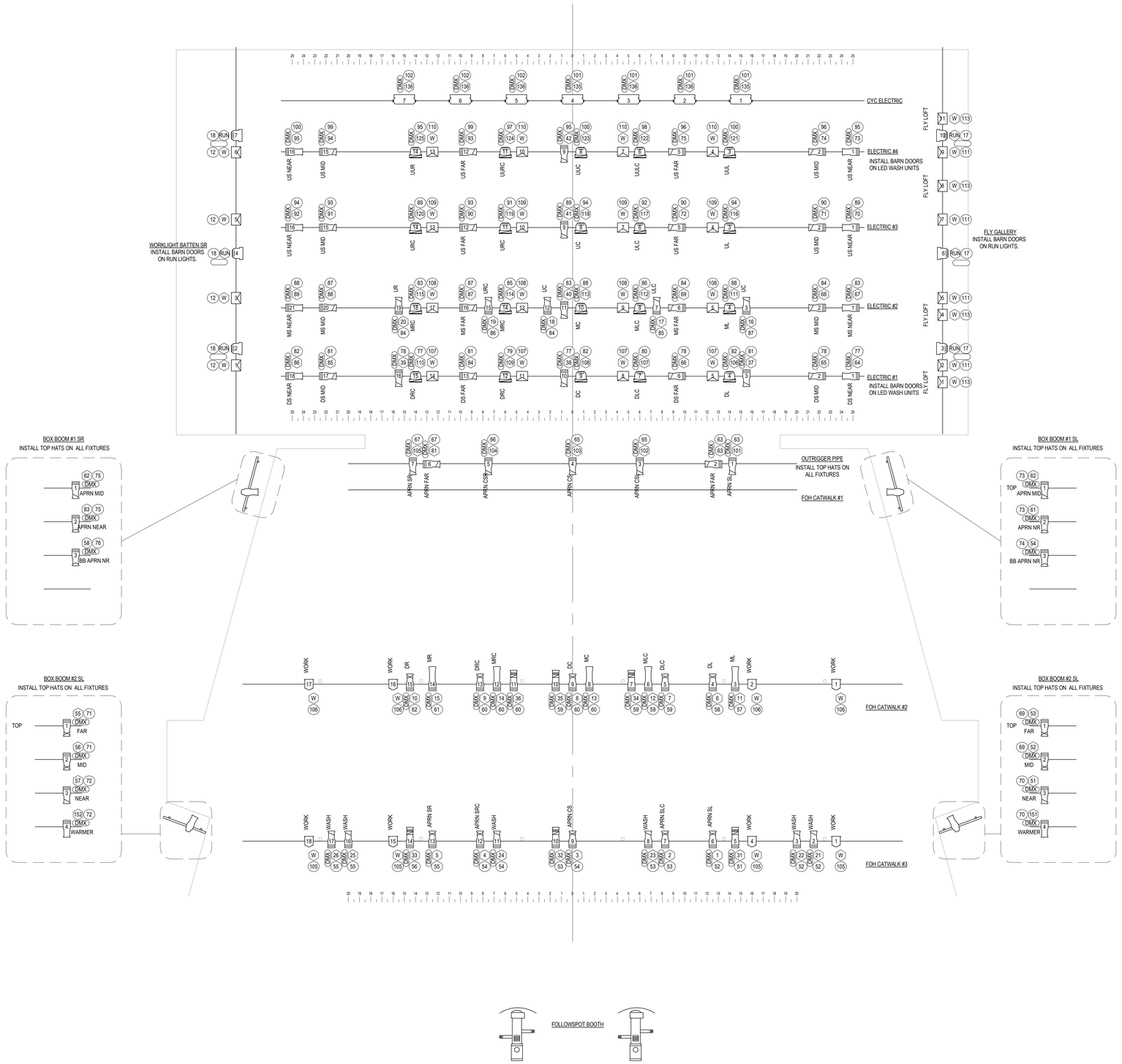

GENERAL NOTES

1. PER SPECIFICATION, STAGE LIGHTING SYSTEMS INTEGRATOR IS TO PROVIDE TRAINED AND QUALIFIED THEATRICAL STAGE TECHNICIANS TO HANG AND AIM THEATRICAL LIGHTING FIXTURES AS INDICATED ON THIS DRAWING.
2. INSTALLATION WORK SHALL INCLUDE BUT NOT BE LIMITED TO THE FOLLOWING:
   A.) UNPACK FIXTURE, ASSEMBLE ALL COMPONENTS PACKED SEPARATELY INCLUDING CLAMPS, LAMPS, LENSES, OR OTHER ITEMS. DISPOSE OF PACKING MATERIALS.
   B.) HANG FIXTURES AT MOUNTING POSITIONS AS INDICATED ON HANG PLOT AND CONNECT TO POWER CIRCUITS AS NOTED. INSTALL DATA CABLING AS REQUIRED FOR INTELLIGENT FIXTURES.
   C.) INSTALL SAFETY CABLE FOR EACH FIXTURE BETWEEN MOUNTING PIPE AND YOKE OR OTHER ATTACHMENT POINT DESIGNED FOR SAFETY CABLES.
   D.) VERIFY THAT FRAMING SHUTTERS ARE PULLED OUT, BARNDOORS ARE OPENED, AND TOPHATS ARE INSTALLED IF NOTED.
   E.) TIE ANY LOOSE CABLING TO MOUNTING PIPE OR ADJACENT STRUCTURES TO KEEP CABLES FROM INTERFERING WITH FIXTURE FUNCTION AND TO MAINTAIN A CLEAN INSTALLATION. CUT 36" LENGTHS OF BLACK TRICK LINE FROM 3,000 SPOOL AS REQUIRED FOR TIE-LINES.
   F.) UNPACK AND FULLY ASSEMBLE FOLLOWSPOTS AT BOOTHS
   G.) IF PORTABLE EXTENSION CABLES OR TWO-FERS ARE REQUIRED THEY SHOULD BE PULLED FROM THE STOCK OF CABLE & ACCESSORIES TO BE PROVIDED AND AN INVENTORY SHOULD BE MAINTAINED OF LOOSE EQUIPMENT USED. VERIFY THAT LOOSE EQUIPMENT TO BE SUPPLIED BY ELECTRICAL CONTRACTOR IS ON-SITE AND AVAILABLE FOR USE AT TIME OF LIGHT HANG.
   H.) NOTE ANY CIRCUITING OR INSTALLATION DEVIATIONS FROM THIS DRAWING AND PROVIDE TO THE THEATRE CONSULTANT PRIOR TO SYSTEM CHECKOUT.
3. ONCE ENTIRE LIGHT PLOT HAS BEEN HUNG, TEST ENTIRE SYSTEM IN CONJUNCTION WITH ELECTRICAL CONTRACTOR RESPONSIBLE FOR DIMMING AND CONTROL SYSTEM TO VERIFY THAT ALL FIXTURES PERFORM AS DESIGNED AND THAT ALL INTELLIGENT FIXTURE PARAMETERS RESPOND CORRECTLY VIA THE MAIN CONTROL CONSOLE. SETUP MAIN CONTROL CONSOLE PATCH FOR INTELLIGENT FIXTURES IN ORDER TO DEMONSTRATE ALL PARAMETERS AT TIME OF EQUIPMENT CHECKOUT.
4. IF THEATRICAL LIGHTING FIXTURES ARE TO BE INSTALLED BEFORE FACILITY IS DUST-FREE, LIGHTING FIXTURES SHALL BE COVERED WITH PLASTIC BAGS TO PREVENT ACCUMULATION OF DUST ON LENSES AND OPTICAL COMPONENTS. TURN OFF DIMMER CIRCUIT BREAKERS OR UNPLUG COVERED FIXTURES TO PREVENT INADVERTENT ACTIVATION WHILE COVERED.
5. SEE ADDITIONAL SETUP INSTRUCTIONS FOR INTELLIGENT FIXTURES.

LEGEND

	14° COLOR-CHANGING LED PROFILE SPOTLIGHT
	19° COLOR-CHANGING LED PROFILE SPOTLIGHT
	26° COLOR-CHANGING LED PROFILE SPOTLIGHT
	36° COLOR-CHANGING LED PROFILE SPOTLIGHT
	50° COLOR-CHANGING LED PROFILE SPOTLIGHT
	15°-30° ZOOM COLOR-CHANGING LED PROFILE SPOTLIGHT
	COLOR-CHANGING LED WASHLIGHT W/ 25°-50° VARIABLE BEAM SPREAD
	LED CYCLORAMA WASH LIGHT (2 CELL)
	WIDE FLOOD LED WASH LIGHT (STAGE REHEARSAL LIGHT)
	LED SPOTLIGHT (FOH REHEARSAL LIGHT)
	LED WASH LIGHT WITH MEDIUM-OBLONG LENS (RUNNING LIGHT)

KEY

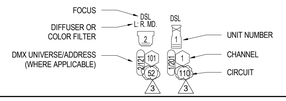

STAGE LIGHTING INSTRUMENT USAGE SUMMARY

	14° LED PROFILE SPOTLIGHT	19° LED PROFILE SPOTLIGHT	26° LED PROFILE SPOTLIGHT	36° LED PROFILE SPOTLIGHT	50° LED PROFILE SPOTLIGHT	15°-30° ZOOM LED PROFILE SPOTLIGHT	LED WASHLIGHT W/ 25°-50° VARIABLE BEAM SPREAD	LED CYC LIGHT	LED WASH LIGHT W/ MED-OBLONG LENS (RUN LTS)	LED SPOTLIGHT (REHEARSAL LIGHT)	WIDE FLOOD WORKLIGHT	TOTAL
FOH CATWALK #3		5	6			3				4		18
FOH CATWALK #2 (3)	5	5				3				4		17
FOH CATWALK #1			7									7
BOX BOOM #2 SL		2	1	1								4
BOX BOOM #2 SR		2	1	1								4
BOX BOOM #1 SL			1		2							3
BOX BOOM #1 SR			1		2							3
ELECTRIC #1			7	2			5				4	18
ELECTRIC #2			10	2			5				4	21
ELECTRIC #3			5	2			5				4	16
ELECTRIC #4			5	2			5				4	16
CYC ELECTRIC								7				7
FLY GALLERY									3		8	11
WORKLIGHTS SR									3		4	7
SPARE		1	1	2			1					5
TOTAL	5	15	45	12	4	6	21	7	6	8	28	157

APPL No. A03-122864

DSA Stamp

Architect

RACHLIN PARTNERS
8640 National Boulevard
Culver City, CA 90232
310.204.3400

Disclaimer:

THESE DRAWINGS ARE THE PROPERTY OF THE ARCHITECT. THE DESIGNS SHOWN AND DESCRIBED HEREIN INCLUDING ALL TECHNICAL DRAWINGS ARE PROPRIETARY AND CANNOT BE COPIED, DUPLICATED OR COMMERCIALLY EXPLOITED EXCEPT WITH THE WRITTEN PERMISSION OF THE ARCHITECT AND SHALL NOT BE USED BY THE OWNER ON OTHER PROJECTS FOR ADDITIONS TO THIS PROJECT, OR FOR COMPLETION OF THIS PROJECT BY OTHERS. THE OWNER AGREES TO HOLD HARMLESS, INDEMNIFY AND DEFEND THE ARCHITECT AGAINST ALL DAMAGES, CLAIMS AND LOSSES, INCLUDING DEFENSE COSTS, ARISING OUT OF ANY REUSE OF PLANS AND SPECIFICATIONS WITHOUT THE WRITTEN AUTHORIZATION OF THE ARCHITECT OF RECORD.

Copyright © 2019 Rachlin Partners, All Rights Reserved.

THE RUZIKA COMPANY
2 Executive Circle, Suite 290
Irvine, California 92614
Ph (949) 253-3479 Fax (949) 253-0181
www.ruzika.com
LIGHTING DESIGNERS + THEATRE CONSULTANTS

HACIENDA PERFORMING ARTS CENTER

Hacienda La Puente Unified School District
635 North California Avenue
La Puente, CA 91744

Rev	Date	Issue
2	11/1/2023	Addendum No. 2
3	12/15/2023	Addendum No. 3

Date: 09/08/2023
Scale: 1/4" = 1'-0"
Drawn By: TRC
Checked By: Checker

Architect / Engineer Stamp

Consultants

VCA Engineers, Inc.
R.M. Byrd and Associates, Inc.
ALM Consulting Engineers, Inc.
MDC Consulting Engineers
Protection Design and Consulting
The Ruzika Company

Sheet Title

STAGE LIGHTING PLOT

Sheet Number

TL931

C:\Users\tonyt\Documents\Haciendа Theatrical #22_tlsch.vwx

ABBREVIATION KEY

2P&G	2 PIN & GROUND	FSPOT	FOLLOWSPOT	PS	PLUG STRIP
ADJ	ADJUSTABLE	GJB	GRIDIRON JUNCTION BOX	RECP.	RECEPTACLE
AFF	ABOVE FINISH FLOOR	GPC	GROUNDED PIN CONNECTOR (2P&G)	REF.	REFERENCE
APPROX.	APPROXIMATE	GTL	GROUNDED TWISTLOCK CONNECTOR	REQ'D	REQUIRED
B.O.	BOTTOM OF	HCS	HOUSELIGHT CONTROL STATION	RFU	REMOTE FOCUS UNIT
B.O.S.	BOTTOM OF STEEL	HL	HOUSE LEFT	RL	REHEARSAL LIGHT
BALC	BALCONY	HR	HOUSE RIGHT	R&R	REVERSE & REPEAT
BOH	BACK-OF-HOUSE	I.D.	INNER DIAMETER	RU	RACK UNIT SPACE
CAT.	CATWALK	INT.	INTERIOR	SCH.	SCHEDULE
CC	CONTROL CONSOLE	LPC	LIGHTING PLAYBACK CONTROLLER	SF	SQUARE FOOT (FEET)
CER	CONTROL EQUIPMENT RACK	LTG.	LIGHTING	SHT.	SHEET
CFL	COMPACT FLUORESCENT	MAX.	MAXIMUM	SL	STAGE LEFT
CIRC	CIRCUIT	M.H.	METAL HALIDE	SMP	STAGE MANAGERS PANEL
CL	CENTERLINE	MH	MOUNTING HEIGHT	SQ.	SQUARE
CONN.	CONNECTOR	MEZZ.	MEZZANINE	SQ. YD.	SQUARE YARDS
CONTR.	CONNTRACTOR	MFR.	MANUFACTURER	SR	STAGE RIGHT
CRS	CONTROL RECEPTACLE STATION	MIN.	MINIMUM	STA.	STATION
CTRL	CONTROL	MS	MIDSTAGE	T&B	TOP AND BOTTOM
D	DIMMER	MSL	MIDSTAGE LEFT	T.O.C.	TOP OF CONCRETE
DDR	DATA DISTRIBUTION RACK	MSR	MIDSTAGE RIGHT	T.O.S.	TOP OF STEEL
DMX	DMX512 (A LTG. CTRL. PROTOCOL)	MTG.	MOUNTING	TYP.	TYPICAL
DR	DIMMER RACK	(N)	NEW	UL	UNDERWRITERS LABORATORIES
DSC	DOWNSTAGE CENTER	N.I.C.	NOT IN CONTRACT	USC	UPSTAGE CENTER
DSL	DOWNSTAGE LEFT	N.T.S.	NOT TO SCALE	USL	UPSTAGE LEFT
DSR	DOWNSTAGE RIGHT	O.C.	ON CENTER	USR	UPSTAGE RIGHT
(E)	EXISTING	O.D.	OUTER DIAMETER	W/	WITH
EA.	EACH	ORCH.	ORCHESTRA	W/O	WITHOUT
E.C.	ELECTRICAL CONTRACTOR	PB	PLUG BOX	WCS	WORKLIGHT CONTROL STATION
ELEC.	ELECTRIC / LIGHTING BATTEN	PCS	PORTABLE CONTROL STATION	WL	WORKLIGHT
EXT.	EXTERIOR	PoE	POWER OVER ETHERNET	WRFU	WIRELESS REMOTE FOCUS UNIT
FLUOR	FLUORESCENT	PL	PLASTERLINE	WT.	WEIGHT
FOH	FRONT-OF-HOUSE	QTY.	QUANTITY		

ELECTRICAL AND STAGE RIGGING COORDINATION ITEMS

COORDINATION ITEM	ELECTRICAL CONTRACTOR	RIGGING CONTRACTOR
FURNISH FLEXIBLE DIMMER CIRCUIT & CONTROL CABLES BETWEEN GRIDIRON JUNCTION BOXES AND FLYING ELECTRIC LINESETS	●	
TRIAL-FIT CABLES BETWEEN GRIDIRON JUNCTION BOXES AND FLYING ELECTRIC LINESETS TO ENSURE PROPER LENGTH AND TRAVEL	●	●
INSTALL FLEXIBLE DIMMER CIRCUIT & CONTROL CABLES BETWEEN GRIDIRON JUNCTION BOXES AND FLYING ELECTRIC LINESETS		●
TERMINATE DIMMER CIRCUIT & CONTROL CABLES AT GRIDIRON JUNCTION BOXES AND AT CONNECTOR STRIPS	●	
FURNISH AND INSTALL CABLE CRADLES FOR FLEXIBLE MULTI-CONDUCTOR CABLES		●
FURNISH CONNECTOR STRIPS AND MOUNTING BRACKETS (FLYING ELECTRIC LINESETS)	●	
INSTALL CONNECTOR STRIPS AND MOUNTING BRACKETS (FLYING ELECTRIC LINESETS)	●	
INSTALL UPPER AND LOWER PIPE BATTENS (FLYING ELECTRIC LINESETS)		●
FURNISH UPPER AND LOWER PIPE BATTENS (FLYING ELECTRIC LINESETS)		●
FURNISH PLUG BOXES (STAGE WALLS, CATWALKS, BOX BOOMS AND OTHER AREAS)	●	
INSTALL PLUG BOXES (STAGE WALLS, CATWALKS, BOX BOOMS AND OTHER AREAS)	●	
FURNISH FIXTURE MOUNTING PIPES AND PORTABLE CROSS-BATTEN CLAMPS AT BOX BOOMS		●
PROVIDE STAGE LIGHTING FIXTURES, PLUG BOXES AND CONTROL RECEPTACLES AT BOX BOOMS IN AUDITORIUM.	●	
PROVIDE RIGGING MOTORS AND CONTROL EQUIPMENT		●
PROVIDE CONDUIT, WIRING AND NECESSARY DISCONNECTS FOR RIGGING MOTORS	●	
FURNISH AND INSTALL STAGE RIGGING INDEX RAIL LIGHT STRIP INCLUDING LAMPS		●
TERMINATE INDEX RAIL LIGHT STRIP TO LOCAL WALLBOX DIMMER.	●	
PROVIDE ALL WIRING, CONDUIT, JUNCTION BOXES AND ELECTRICAL FITTINGS UNLESS OTHERWISE NOTED	●	
TERMINATE ALL LINE VOLTAGE AND CONTROL CIRCUIT WIRING	●	

SHEET INDEX

SHEET NUMBER	SHEET TITLE
LIGHTING	
LT000	LIGHTING COVER SHEET
LT011	LIGHTING FIXTURE SCHEDULE
LT012	LIGHTING FIXTURE SCHEDULE
LT031	LIGHTING CONTROL ZONE SCHEDULE
LT210	LIGHTING PLAN - LOW LEVEL
LT211	LIGHTING PLAN - MAIN LEVEL RCP
LT212	LIGHTING PLAN - MEZZANINE LEVEL RCP
LT213	LIGHTING PLAN - CATWALK LEVELS
LT701	LIGHTING ELEVATIONS
STAGE RIGGING	
TR000	SHEET INDEX AND PROJECT NOTES
TR211	STAGE RIGGING PLANS
TR611	STAGE RIGGING SECTION
TR711	STAGE RIGGING ELEVATIONS
TR712	STAGE RIGGING ELEVATIONS
TR713	STAGE RIGGING ELEVATIONS
TR714	STAGE RIGGING ELEVATIONS
TR811	STAGE RIGGING DETAILS
TR812	STAGE RIGGING DETAILS
TR911	STAGE RIGGING SCHEDULES AND RISERS
STAGE LIGHTING	
TL000	SHEET INDEX AND PROJECT NOTES
TL211	STAGE LIGHTING PLAN - STAGE LEVEL
TL212	STAGE LIGHTING PLAN - MEZZANINE LEVEL
TL213	STAGE LIGHTING PLAN - CATWALK LEVEL
TL214	STAGE LIGHTING PLAN - LOADING GALLERY AND ARBOR WELL
TL711	STAGE LIGHTING ELEVATIONS
TL712	STAGE LIGHTING ELEVATIONS
TL713	STAGE LIGHTING MOUNTING DETAILS
TL811	STAGE LIGHTING DETAILS - CIRCUIT DEVICES
TL812	STAGE LIGHTING DETAILS - CIRCUIT DEVICES
TL821	STAGE LIGHTING DETAILS - CONTROL DEVICES
TL822	STAGE LIGHTING DETAILS - CONTROL DEVICES
TL823	STAGE LIGHTING DETAILS - CONTROL DEVICES
TL911	STAGE LIGHTING CONTROL RISER
TL912	STAGE LIGHTING RISERS
TL921	STAGE LIGHTING SCHEDULES
TL931	STAGE LIGHTING PLOT

DRAPERY NOTE

ALL DRAPES SHALL BE INHERENTLY FLAME RETARDANT (IFR), OR SHALL BE PERMANENTLY FLAMEPROOFED USING THE IMMERSION PROCESS. DRAPERIES SHALL MEET THE STANDARDS OF NFPA 701 AND CFC SECTION 806 AS WELL AS ANY OTHERS WHICH MAY BE REQUIRED BY AUTHORITIES HAVING JURISDICTION. ALL DRAPERIES SHALL MEET THE FLAME PROPAGATION PERFORMANCE CRITERIA AND LABELING REQUIREMENTS OF CA. CODE OF REGULATIONS, TITLE 19, DIVISION 1, & CBC 410.3.6. REFER TO SPECIFICATIONS

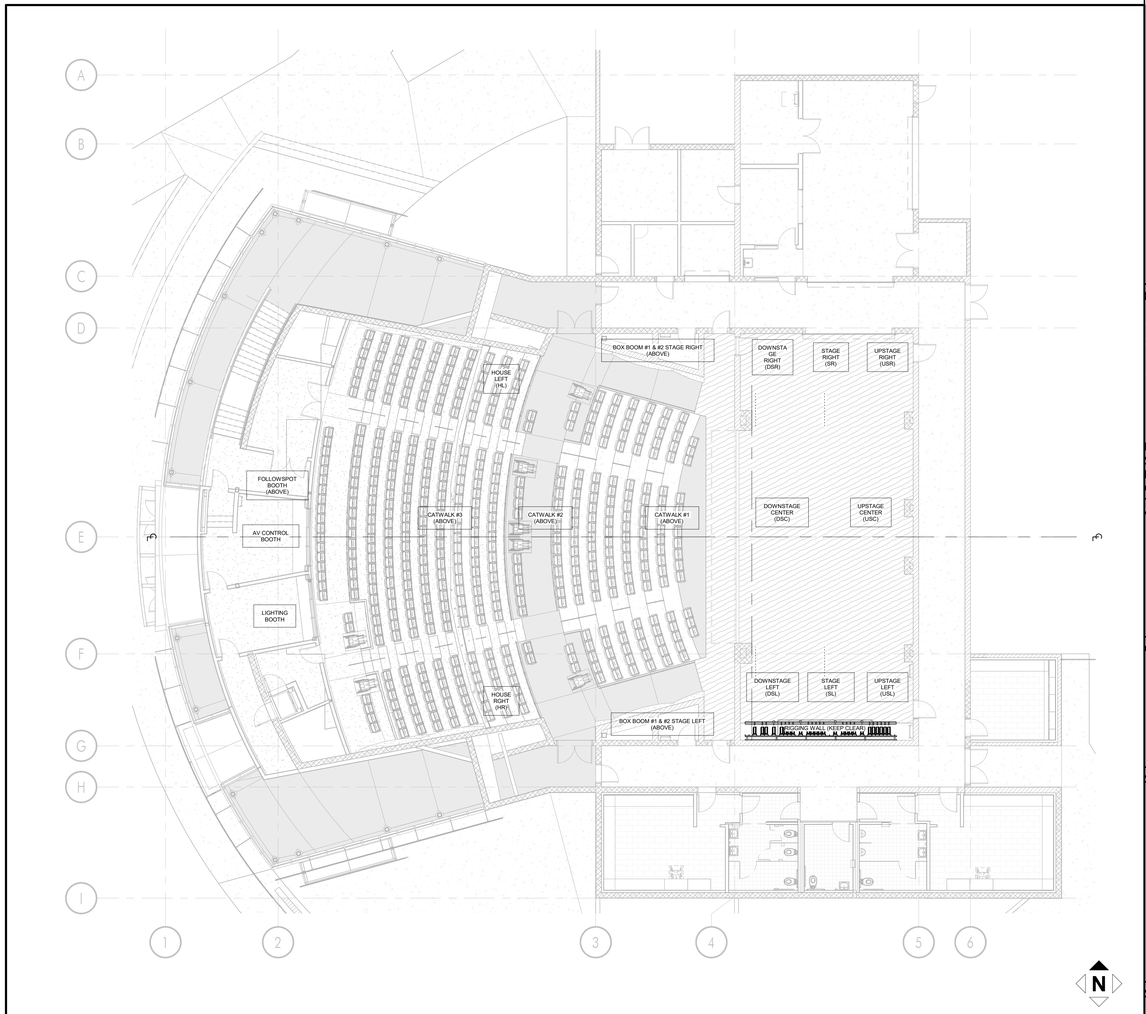

THEATRICAL RIGGING ORIENTATION PLAN

3/32" = 1'-0" | 1

APPL No. A03-122864

IDENTIFICATION STAMP
DIV. OF THE STATE ARCHITECT
APP: 03-122864 INC:
REVIEWED FOR
SS ☑ FLS ☑ ACS ☑
DATE: 10/03/2023

DSA Stamp

Architect

RACHLIN PARTNERS
8640 National Boulevard
Culver City, CA 90232
310.204.3400

Disclaimer:

THESE DRAWINGS ARE THE PROPERTY OF THE ARCHITECT. THE DESIGNS SHOWN AND DESCRIBED HEREIN INCLUDING ALL TECHNICAL DRAWINGS ARE PROPRIETARY AND CANNOT BE COPIED, DUPLICATED OR COMMERCIALLY EXPLOITED EITHER IN WHOLE OR IN PART. THESE DRAWINGS AND DESIGNS SHALL NOT BE USED BY THE OWNER ON OTHER PROJECTS, FOR ADDITIONS TO THIS PROJECT, OR FOR COMPLETION OF THIS PROJECT BY OTHERS. THE OWNER AGREES TO HOLD HARMLESS, INDEMNIFY AND DEFEND THE ARCHITECT AGAINST ALL DAMAGES, CLAIMS AND LOSSES, INCLUDING DEFENSE COSTS, ARISING OUT OF ANY REUSE OF PLANS AND SPECIFICATIONS WITHOUT THE WRITTEN AUTHORIZATION OF THE ARCHITECT OF RECORD.

Copyright © 2019 Rachlin Partners, All Rights Reserved.

THE RUZIKA COMPANY
2 Executive Circle, Suite 290
Irvine, California 92614
Ph (949) 253-3479 Fax (949) 253-0181
www.ruzika.com
LIGHTING DESIGNERS + THEATRE CONSULTANTS

HACIENDA PERFORMING ARTS CENTER

Hacienda La Puente Unified School District
635 North California Avenue
La Puente, CA 91744

Rev	Date	Issue
1	7.22.22	50% DD
2	10.21.22	50% CD
3	12.09.22	100% CD DSA SUBMITTAL
4	6.19.23	100% CD DSA RESUBMITTAL
5	9.20.23	DSA BACK CHECK

Date: 9.20.2023
Scale: As indicated
Drawn By: TRC
Checked By: Checker

Architect / Engineer Stamp

LICENSED ARCHITECT
RICHARD RACHLIN
NO. C-30229
REN. 8-31-25
STATE OF CALIFORNIA

Consultants

VCA Engineers, Inc.
R.M. Byrd and Associates, Inc.
ALM Consulting Engineers, Inc.
MDC Consulting Engineers
Protection Design and Consulting
The Ruzika Company

Sheet Title

SHEET INDEX AND PROJECT NOTES

Sheet Number

TR000

C:\Users\shawn.ruzika\Documents\Hacienda Theatrical_R22_dSBar.rvt

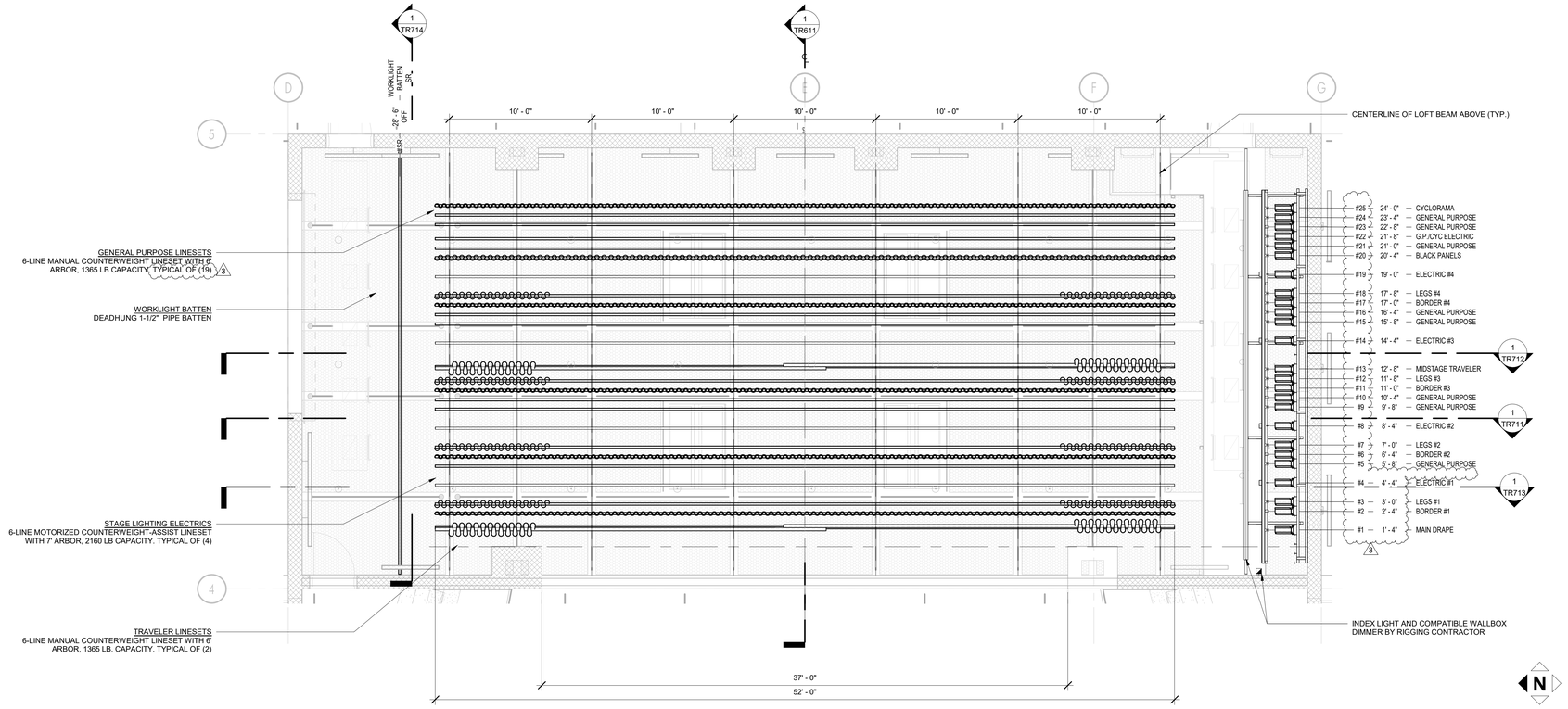

STAGE RIGGING PLAN | 1/4" = 1'-0" | 1

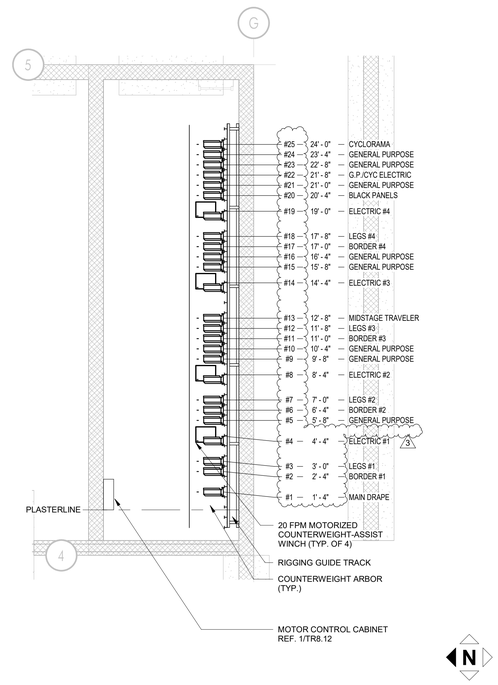

RIGGING PLAN - ARBOR WELL | 1/4" = 1'-0" | 2

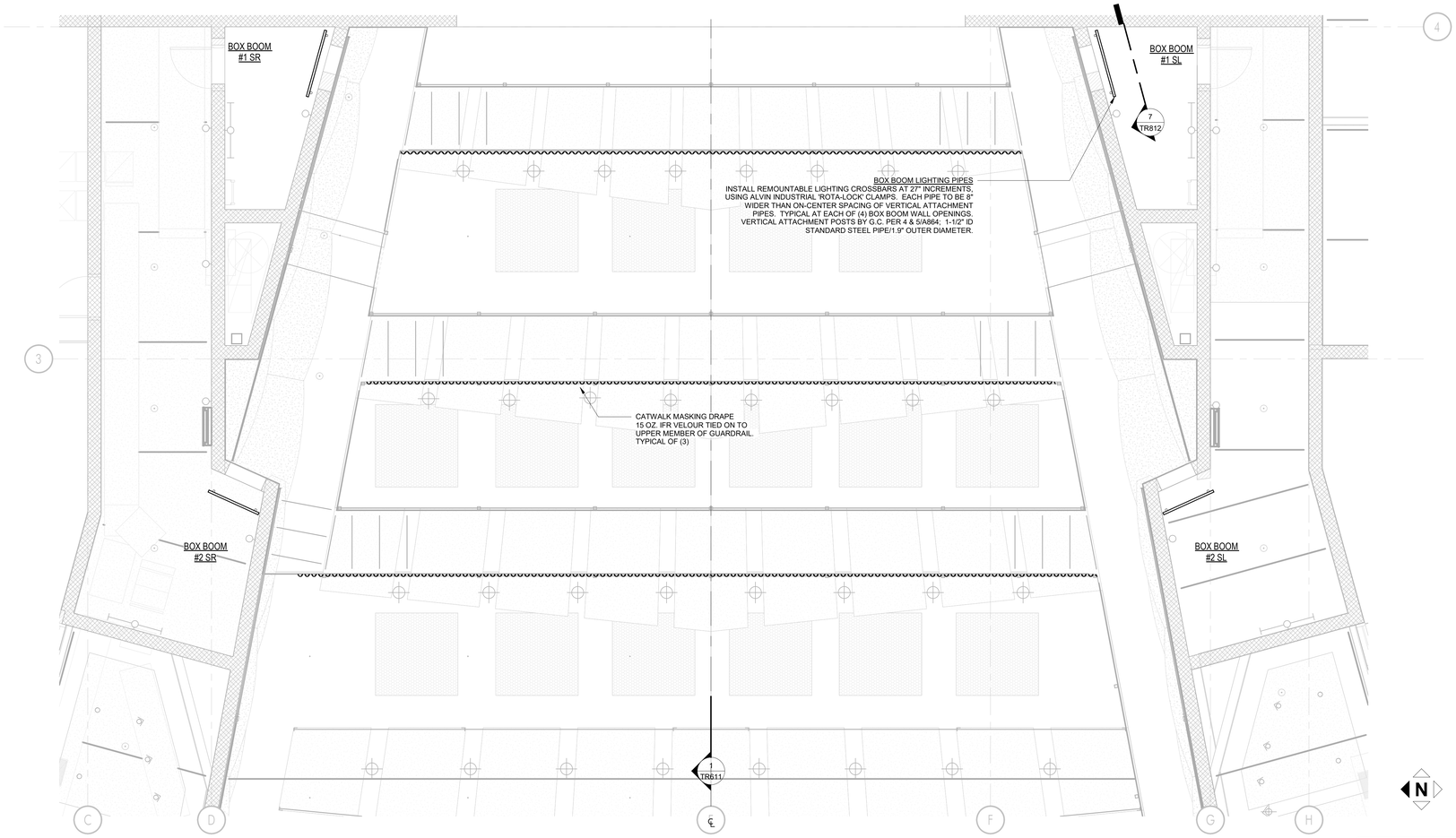

FRONT-OF-HOUSE RIGGING PLAN | 1/4" = 1'-0" | 3

APPL No. A03-122864

DSA Stamp

Architect

RACHLIN PARTNERS
8640 National Boulevard
Culver City, CA 90232
310.204.3400

Disclaimer:

THESE DRAWINGS ARE THE PROPERTY OF THE ARCHITECT. THE DESIGNS SHOWN AND DESCRIBED HEREIN INCLUDING ALL TECHNICAL DRAWINGS ARE PROPRIETARY AND CANNOT BE COPIED, DUPLICATED OR COMMERCIALLY EXPLOITED EXCEPT WITH THE WRITTEN PERMISSION OF THE ARCHITECT AND SHALL NOT BE USED BY THE OWNER ON OTHER PROJECTS FOR ADDITIONS TO THIS PROJECT, OR FOR COMPLETION OF THIS PROJECT BY OTHERS. THE OWNER AGREES TO HOLD HARMLESS, INDEMNIFY AND DEFEND THE ARCHITECT AGAINST ALL DAMAGES, CLAIMS AND LOSSES, INCLUDING DEFENSE COSTS, ARISING OUT OF ANY REUSE OF PLANS AND SPECIFICATIONS WITHOUT THE WRITTEN AUTHORIZATION OF THE ARCHITECT OF RECORD.

Copyright © 2019 Rachlin Partners, All Rights Reserved.

THE RUZIKA COMPANY
2 Executive Circle, Suite 290
Irvine, California 92614
Ph (949) 253-3479 Fax (949) 253-0181
www.ruzika.com
LIGHTING DESIGNERS + THEATRE CONSULTANTS

HACIENDA PERFORMING ARTS CENTER

Hacienda La Puente Unified School District
635 North California Avenue
La Puente, CA 91744

Rev	Date	Issue
2	11/1/2023	Addendum No. 2
3	12/15/2023	Addendum No. 3

Date: 09/08/2023
Scale: 1/4" = 1'-0"
Drawn By: TRC
Checked By: Checker

Architect / Engineer Stamp

Consultants

VCA Engineers, Inc.
R.M. Byrd and Associates, Inc.
ALM Consulting Engineers, Inc.
MDC Consulting Engineers
Protection Design and Consulting
The Ruzika Company

Sheet Title

STAGE RIGGING PLANS

Sheet Number

TR211

C:\Users\tonra\Documents\Hacienda Theatrical_R22_tbolonak.rvt

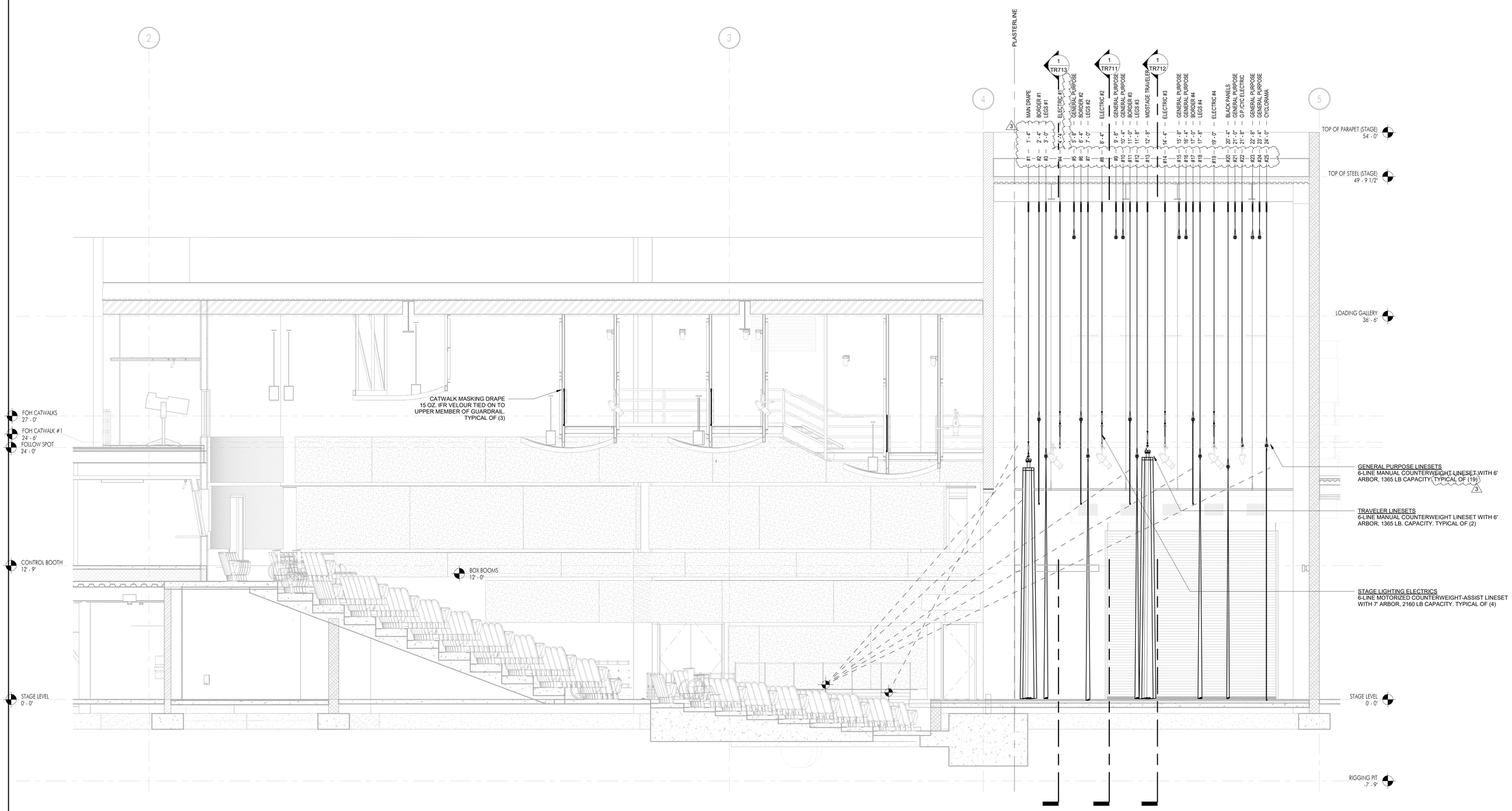

STAGE RIGGING CENTERLINE SECTION | 1/4" = 1'-0" | 1

C:\Users\tbrian\Documents\Hacienda Theatrical R22_tbohonak.rvt

APPL No. A03-122864

DSA Stamp

Architect

RACHLIN PARTNERS
8640 National Boulevard
Culver City, CA 90232
310.204.3400

Disclaimer:

THESE DRAWINGS ARE THE PROPERTY OF THE ARCHITECT. THE DESIGNS SHOWN AND DESCRIBED HEREIN INCLUDING ALL TECHNICAL DRAWINGS ARE PROPRIETARY AND CANNOT BE COPIED, DUPLICATED OR COMMERCIALLY EXPLOITED EXCEPT BY WRITTEN AGREEMENT. THESE DRAWINGS AND DESIGNS SHALL NOT BE USED BY THE OWNER ON OTHER PROJECTS FOR ADDITIONS TO THIS PROJECT, OR FOR COMPLETION OF THIS PROJECT BY OTHERS. THE OWNER AGREES TO HOLD HARMLESS, INDEMNIFY AND DEFEND THE ARCHITECT AGAINST ALL DAMAGES, CLAIMS AND LOSSES, INCLUDING DEFENSE COSTS, ARISING OUT OF ANY REUSE OF PLANS AND SPECIFICATIONS WITHOUT THE WRITTEN AUTHORIZATION OF THE ARCHITECT OF RECORD.

Copyright © 2019 Rachlin Partners, All Rights Reserved.

THE RUZIKA COMPANY
2 Executive Circle, Suite 290
Irvine, California 92614
Ph (949) 253-3479 Fax (949) 250-0181
www.ruzika.com
LIGHTING DESIGNERS + THEATRE CONSULTANTS

HACIENDA PERFORMING ARTS CENTER

Hacienda La Puente Unified School District
635 North California Avenue
La Puente, CA 91744

Rev	Date	Issue
2	11/1/2023	Addendum No. 2
3	12/15/2023	Addendum No. 3

Date: 09/08/2023
Scale: 1/4" = 1'-0"
Drawn By: TRC
Checked By: Checker

Architect / Engineer Stamp

Consultants

VCA Engineers, Inc.
R.M. Byrd and Associates, Inc.
ALM Consulting Engineers, Inc.
MDC Consulting Engineers
Protection Design and Consulting
The Ruzika Company

Sheet Title

STAGE RIGGING SECTION

Sheet Number

TR611

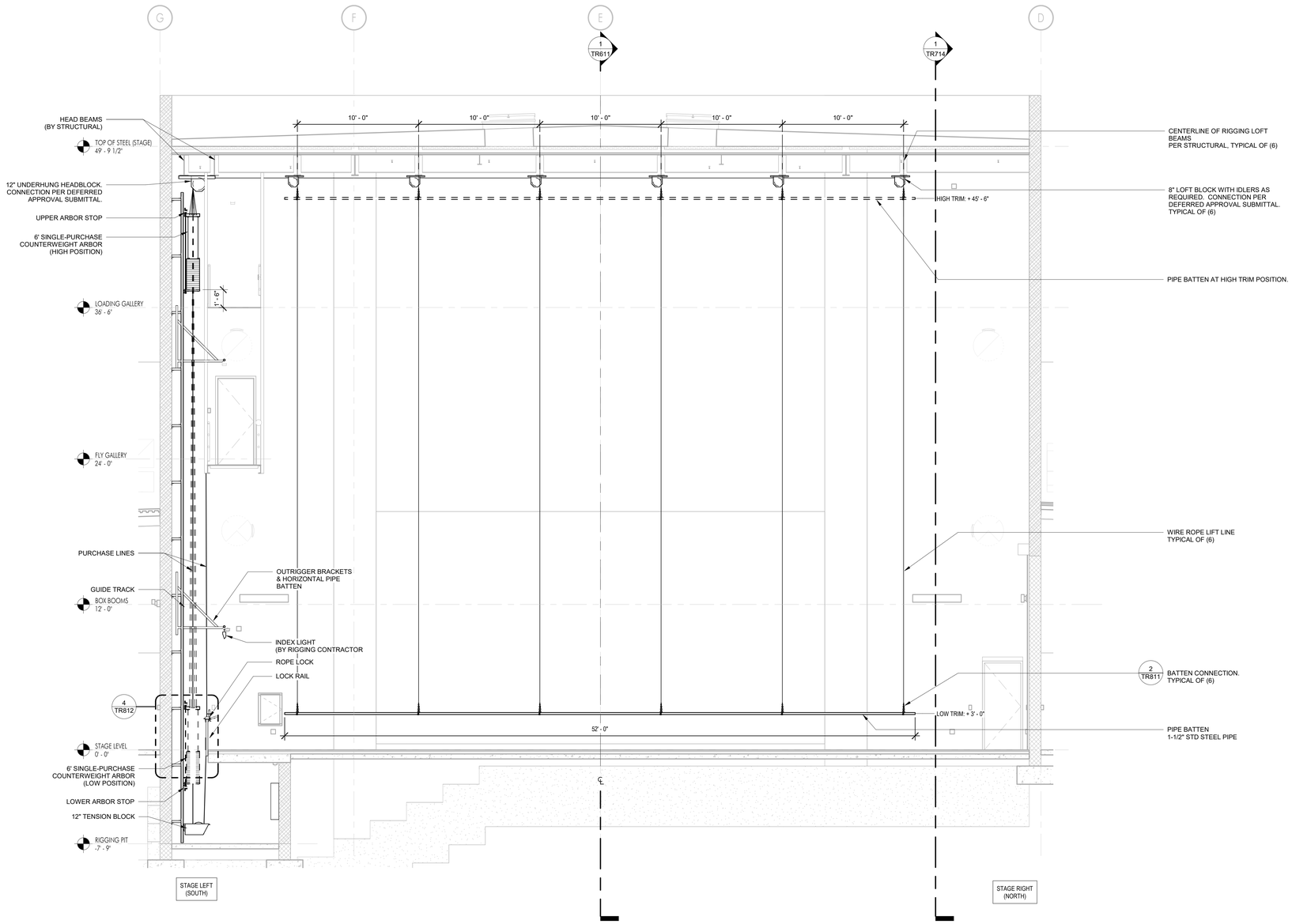

STAGE RIGGING ELEVATION - GENERAL PURPOSE LINESET

1/4" = 1'-0" | 1

APPL No. A03-122864

IDENTIFICATION STAMP
DIV. OF THE STATE ARCHITECT
APP: 03-122864 INC:
REVIEWED FOR
SS ☑ FLS ☑ ACS ☑
DATE: 10/03/2023

DSA Stamp

Architect

RACHLIN PARTNERS
8640 National Boulevard
Culver City, CA 90232
310.204.3400

Disclaimer:

THESE DRAWINGS ARE THE PROPERTY OF THE ARCHITECT. THE DESIGNS SHOWN AND DESCRIBED HEREIN INCLUDING ALL TECHNICAL DRAWINGS ARE PROPRIETARY AND CANNOT BE COPIED, DUPLICATED OR COMMERCIALLY EXPLOITED EXCEPT WITH THE WRITTEN PERMISSION OF THE ARCHITECT AND SHALL NOT BE USED BY THE OWNER ON OTHER PROJECTS FOR ADDITIONS TO THIS PROJECT, OR FOR COMPLETION OF THIS PROJECT BY OTHERS. THE OWNER AGREES TO HOLD HARMLESS, INDEMNIFY AND DEFEND THE ARCHITECT AGAINST ALL DAMAGES, CLAIMS AND LOSSES, INCLUDING DEFENSE COSTS, ARISING OUT OF ANY REUSE OF PLANS AND SPECIFICATIONS WITHOUT THE WRITTEN AUTHORIZATION OF THE ARCHITECT OF RECORD.

Copyright © 2019 Rachlin Partners, All Rights Reserved.

THE RUZIKA COMPANY
2 Executive Circle, Suite 290
Irvine, California 92614
Ph (949) 253-3479 Fax (949) 253-0181
www.ruzika.com
LIGHTING DESIGNERS + THEATRE CONSULTANTS

HACIENDA PERFORMING ARTS CENTER

Hacienda La Puente Unified School District
635 North California Avenue
La Puente, CA 91744

Rev	Date	Issue
1	7.22.22	50% DD
2	10.21.22	50% CD
3	12.09.22	100% CD DSA SUBMITTAL
4	6.19.23	100% CD DSA RESUBMITTAL
5	9.20.23	DSA BACK CHECK

Date: 9.20.2023
Scale: 1/4" = 1'-0"
Drawn By: TRC
Checked By: Checker

Architect / Engineer Stamp

LICENSED ARCHITECT
RICHARD INGRASSIA
NO. C-20229
REN. 8-31-25
STATE OF CALIFORNIA

Consultants

VCA Engineers, Inc.
R.M. Byrd and Associates, Inc.
ALM Consulting Engineers, Inc.
MDC Consulting Engineers
Protection Design and Consulting
The Ruzika Company

Sheet Title

STAGE RIGGING ELEVATIONS

Sheet Number

TR711

C:\Users\shawn.ruzika\Documents\Hacienda Theatrical_R22_sfdler.rvt

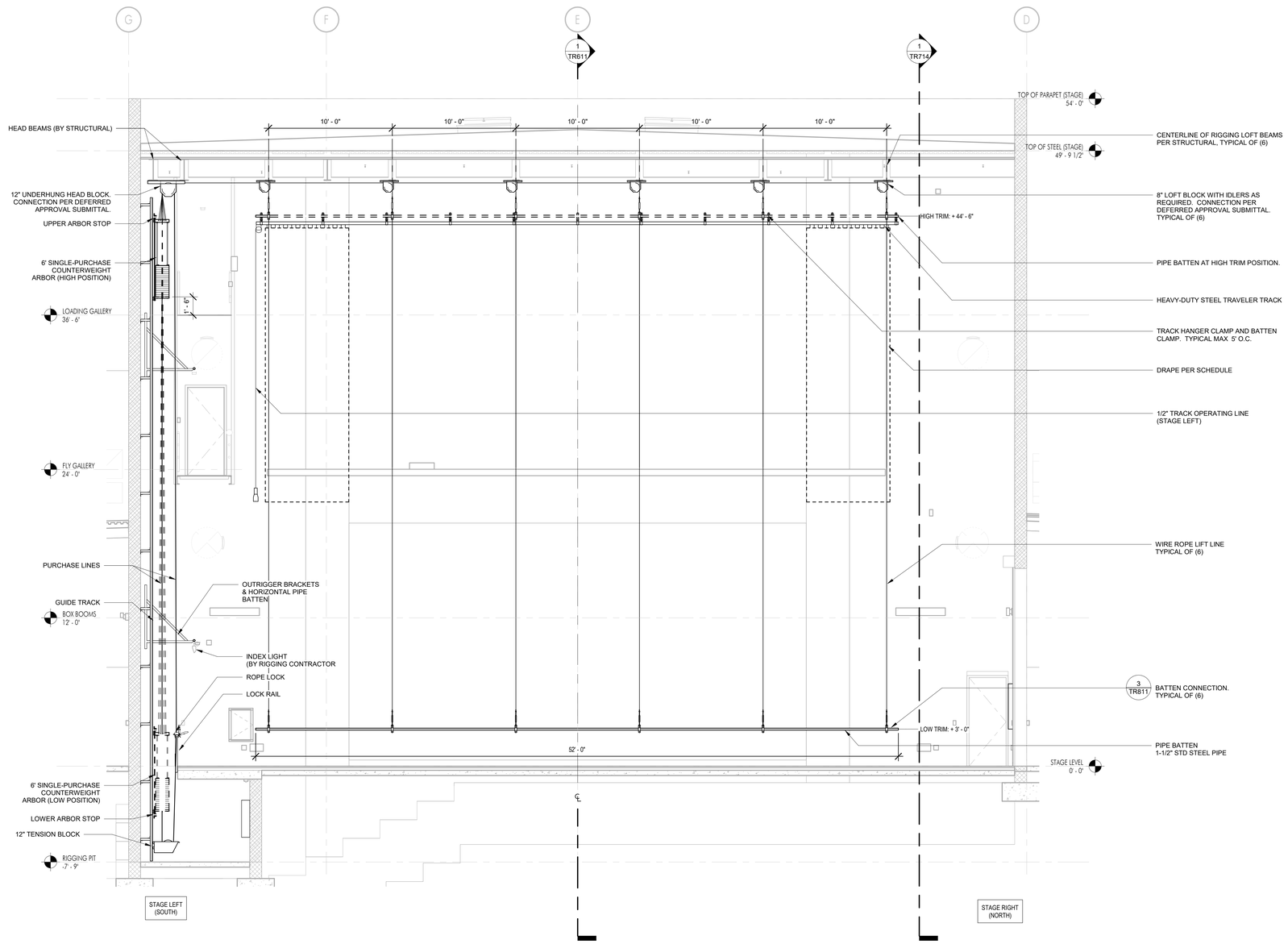

STAGE RIGGING ELEVATION - TRAVELERS

1/4" = 1'-0" | 1

APPL No. A03-122864

IDENTIFICATION STAMP
DIV. OF THE STATE ARCHITECT
APP: 03-122864 INC:
REVIEWED FOR
SS ☑ FLS ☑ ACS ☑
DATE: 10/03/2023

DSA Stamp

Architect

RACHLIN PARTNERS
8640 National Boulevard
Culver City, CA 90232
310.204.3400

Disclaimer:

THESE DRAWINGS ARE THE PROPERTY OF THE ARCHITECT. THE DESIGNS SHOWN AND DESCRIBED HEREIN INCLUDING ALL TECHNICAL DRAWINGS ARE PROPRIETARY AND CANNOT BE COPIED, DUPLICATED OR COMMERCIALLY EXPLOITED EXCEPT BY WRITTEN AGREEMENT. THESE DRAWINGS AND DESIGNS SHALL NOT BE USED BY THE OWNER ON OTHER PROJECTS FOR ADDITIONS TO THIS PROJECT, OR FOR COMPLETION OF THIS PROJECT BY OTHERS. THE OWNER AGREES TO HOLD HARMLESS, INDEMNIFY AND DEFEND THE ARCHITECT AGAINST ALL DAMAGES, CLAIMS AND LOSSES, INCLUDING DEFENSE COSTS, ARISING OUT OF ANY REUSE OF PLANS AND SPECIFICATIONS WITHOUT THE WRITTEN AUTHORIZATION OF THE ARCHITECT OF RECORD.

Copyright © 2019 Rachlin Partners, All Rights Reserved.

THE RUZIKA COMPANY
2 Executive Circle, Suite 290
Irvine, California 92614
Ph (949) 253-3479 Fax (949) 253-0181
www.ruzika.com
LIGHTING DESIGNERS + THEATRE CONSULTANTS

HACIENDA PERFORMING ARTS CENTER

Hacienda La Puente Unified School District
635 North California Avenue
La Puente, CA 91744

Rev	Date	Issue
1	7.22.22	50% DD
2	10.21.22	50% CD
3	12.09.22	100% CD DSA SUBMITTAL
4	6.19.23	100% CD DSA RESUBMITTAL
5	9.20.23	DSA BACK CHECK

Date: 9.20.2023
Scale: 1/4" = 1'-0"
Drawn By: TRC
Checked By: Checker

Architect / Engineer Stamp

LICENSED ARCHITECT
CHRISTOPHER PARKER
NO. C-26229
REN. 8-31-25
STATE OF CALIFORNIA

Consultants

VCA Engineers, Inc.
R.M. Byrd and Associates, Inc.
ALM Consulting Engineers, Inc.
MDC Consulting Engineers
Protection Design and Consulting
The Ruzika Company

Sheet Title

STAGE RIGGING ELEVATIONS

Sheet Number

TR712

C:\Users\shawn.roelke\Documents\Haciendo Theatrical_R22_sfdlkr.rvt

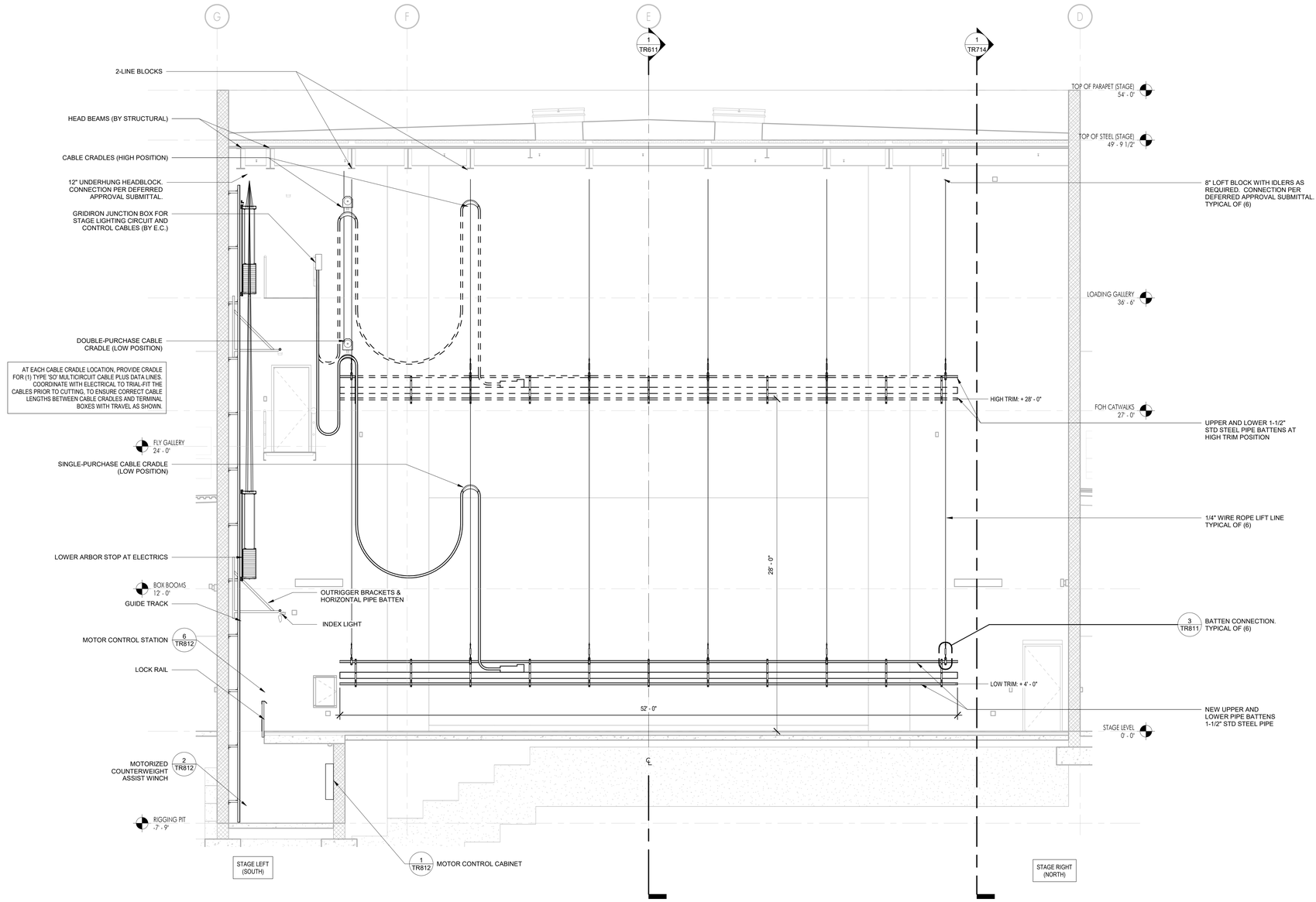

STAGE RIGGING ELEVATION - ELECTRICS

1/4" = 1'-0" | 1

APPL No. A03-122864

IDENTIFICATION STAMP
DIV. OF THE STATE ARCHITECT
APP: 03-122864 INC:
REVIEWED FOR
SS ☑ FLS ☑ ACS ☑
DATE: 10/03/2023

DSA Stamp

Architect

RACHLIN PARTNERS
8640 National Boulevard
Culver City, CA 90232
310.204.3400

Disclaimer:

THESE DRAWINGS ARE THE PROPERTY OF THE ARCHITECT. THE DESIGNS SHOWN AND DESCRIBED HEREIN INCLUDING ALL TECHNICAL DRAWINGS ARE PROPRIETARY AND CANNOT BE COPIED, DUPLICATED OR COMMERCIALLY EXPLOITED EXCEPT WITH THE WRITTEN PERMISSION OF THE ARCHITECT AND SHALL NOT BE USED BY THE OWNER ON OTHER PROJECTS, FOR ADDITIONS TO THIS PROJECT, OR FOR COMPLETION OF THIS PROJECT BY OTHERS. THE OWNER AGREES TO HOLD HARMLESS, INDEMNIFY AND DEFEND THE ARCHITECT AGAINST ALL DAMAGES, CLAIMS AND LOSSES, INCLUDING DEFENSE COSTS, ARISING OUT OF ANY REUSE OF PLANS AND SPECIFICATIONS WITHOUT THE WRITTEN AUTHORIZATION OF THE ARCHITECT OF RECORD.

Copyright © 2019 Rachlin Partners, All Rights Reserved.

THE RUZIKA COMPANY
2 Executive Circle, Suite 290
Irvine, California 92614
Ph (949) 253-3479 Fax (949) 250-0181
www.ruzika.com
LIGHTING DESIGNERS + THEATRE CONSULTANTS

HACIENDA PERFORMING ARTS CENTER

Hacienda La Puente Unified School District
635 North California Avenue
La Puente, CA 91744

Rev	Date	Issue
1	7.22.22	50% DD
2	10.21.22	50% CD
3	12.09.22	100% CD DSA SUBMITTAL
4	6.19.23	100% CD DSA RESUBMITTAL
5	9.20.23	DSA BACK CHECK

Date: 9.20.2023
Scale: 1/4" = 1'-0"
Drawn By: TRC
Checked By: Checker

Architect / Engineer Stamp

LICENSED ARCHITECT
RICHARD INGRASSIA
NO. C-20229
REN. 8-31-25
STATE OF CALIFORNIA

Consultants

VCA Engineers, Inc.
R.M. Byrd and Associates, Inc.
ALM Consulting Engineers, Inc.
MDC Consulting Engineers
Protection Design and Consulting
The Ruzika Company

Sheet Title

STAGE RIGGING ELEVATIONS

Sheet Number

TR713

C:\Users\ktown.ruzika\Documents\Hacienda Theatrical_R22_kdtlr.rvt

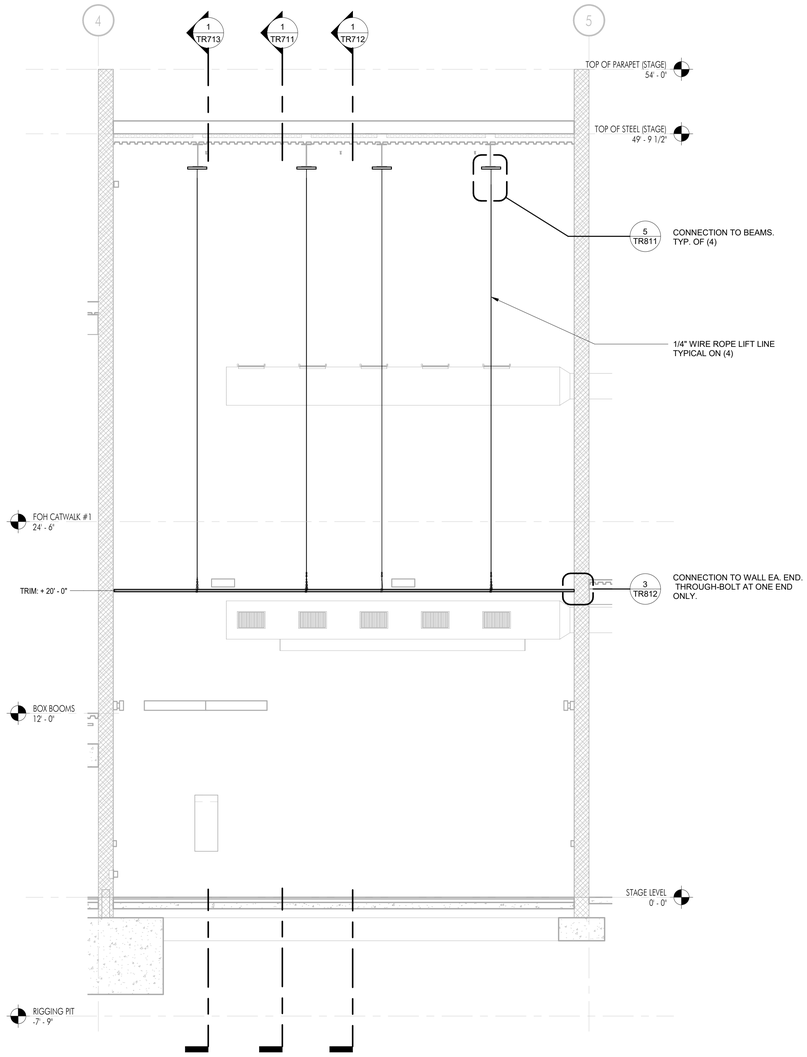

STAGE RIGGING ELEVATION - SR WORKLIGHT BATTEN

1/4" = 1'-0" | 1

APPL No. A03-122864

IDENTIFICATION STAMP
DIV. OF THE STATE ARCHITECT
APP: 03-122864 INC:
REVIEWED FOR
SS ☑ FLS ☑ ACS ☑
DATE: 10/03/2023

DSA Stamp

Architect

RACHLIN
PARTNERS
8640 National Boulevard
Culver City, CA 90232
310.204.3400

Disclaimer:

THESE DRAWINGS ARE THE PROPERTY OF THE ARCHITECT. THE DESIGNS SHOWN AND DESCRIBED HEREIN INCLUDING ALL TECHNICAL DRAWINGS ARE PROPRIETARY AND CANNOT BE COPIED, DUPLICATED OR COMMERCIALLY EXPLOITED EXCEPT WITH THE WRITTEN PERMISSION OF THE ARCHITECT AND SHALL NOT BE USED BY THE OWNER ON OTHER PROJECTS, FOR ADDITIONS TO THIS PROJECT, OR FOR COMPLETION OF THIS PROJECT BY OTHERS. THE OWNER AGREES TO HOLD HARMLESS, INDEMNIFY AND DEFEND THE ARCHITECT AGAINST ALL DAMAGES, CLAIMS AND LOSSES, INCLUDING DEFENSE COSTS, ARISING OUT OF ANY REUSE OF PLANS AND SPECIFICATIONS WITHOUT THE WRITTEN AUTHORIZATION OF THE ARCHITECT OF RECORD.

Copyright © 2019 Rachlin Partners, All Rights Reserved.

THE RUZIKA COMPANY
2 Executive Circle, Suite 290
Irvine, California 92614
Ph (949) 253-3479 Fax (949) 253-0181
www.ruzika.com
LIGHTING DESIGNERS + THEATRE CONSULTANTS

HACIENDA PERFORMING ARTS CENTER
Hacienda La Puente Unified School District
635 North California Avenue
La Puente, CA 91744

Rev	Date	Issue
1	7.22.22	50% DD
2	10.21.22	50% CD
3	12.09.22	100% CD DSA SUBMITTAL
4	6.19.23	100% CD DSA RESUBMITTAL
5	9.20.23	DSA BACK CHECK

Date: 9.20.2023
Scale: 1/4" = 1'-0"
Drawn By: TRC
Checked By: Checker

Architect / Engineer Stamp

LICENSED ARCHITECT
RICHARD RACHLIN
NO. C-20229
REN. 8-31-25
STATE OF CALIFORNIA

Consultants

VCA Engineers, Inc.
R.M. Byrd and Associates, Inc.
ALM Consulting Engineers, Inc.
MDC Consulting Engineers
Protection Design and Consulting
The Ruzika Company

Sheet Title

STAGE RIGGING ELEVATIONS

Sheet Number

TR714

C:\Users\shawn.ruzika\Documents\Hacienda Theatrical_R22_sfdler.rvt

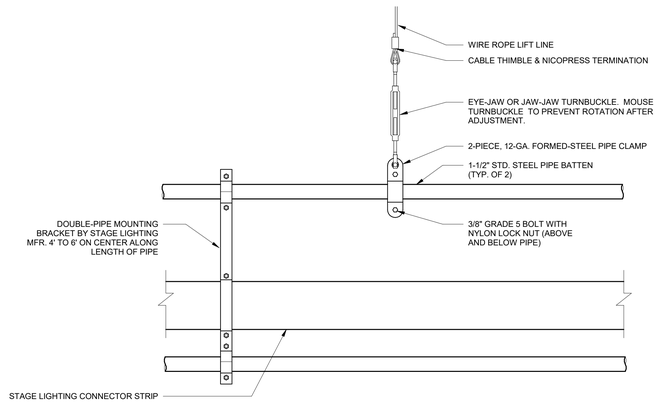

ELEVATION AT STAGE LIGHTING ELECTRIC | 1 1/2" = 1'-0" | 4

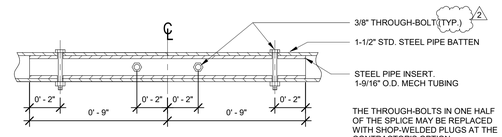

TYPICAL BATTEN SPLICE | 3" = 1'-0" | 1

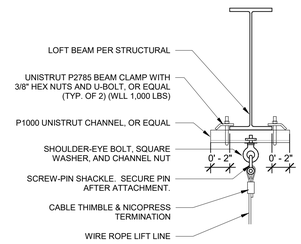

DEADHUNG CONNECTION | 1 1/2" = 1'-0" | 5

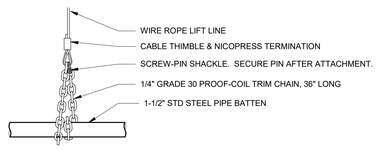

GENERAL PURPOSE BATTEN CONNECTION | 1 1/2" = 1'-0" | 2

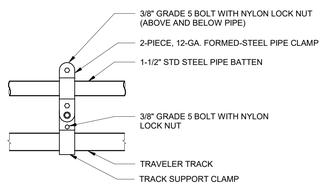

TYPICAL TRACK CONNECTION | 1 1/2" = 1'-0" | 6

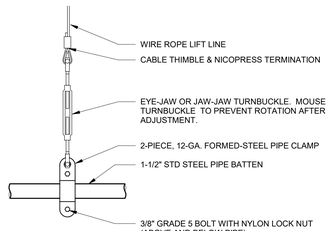

TURNBUCKLE BATTEN CONNECTION | 1 1/2" = 1'-0" | 3

APPL No. A03-122864

DSA Stamp

Architect

RACHLIN PARTNERS
8640 National Boulevard
Culver City, CA 90232
310.204.3400

Disclaimer:

THESE DRAWINGS ARE THE PROPERTY OF THE ARCHITECT. THE DESIGNS SHOWN AND DESCRIBED HEREIN INCLUDING ALL TECHNICAL DRAWINGS ARE PROPRIETARY AND CANNOT BE COPIED, DUPLICATED OR COMMERCIALLY EXPLOITED EXCEPT BY WRITTEN AGREEMENT. THESE DRAWINGS AND DESIGNS SHALL NOT BE USED BY THE OWNER ON OTHER PROJECTS, FOR ADDITIONS TO THIS PROJECT, OR FOR COMPLETION OF THIS PROJECT BY OTHERS. THE OWNER AGREES TO HOLD HARMLESS, INDEMNIFY AND DEFEND THE ARCHITECT AGAINST ALL DAMAGES, CLAIMS AND LOSSES, INCLUDING DEFENSE COSTS, ARISING OUT OF ANY REUSE OF PLANS AND SPECIFICATIONS WITHOUT THE WRITTEN AUTHORIZATION OF THE ARCHITECT OF RECORD.

Copyright © 2019 Rachlin Partners, All Rights Reserved.

THE RUZIKA COMPANY
2 Executive Circle, Suite 290
Irvine, California 92614
Ph (949) 253-3479 Fax (949) 250-0181
www.ruzika.com
LIGHTING DESIGNERS + THEATRE CONSULTANTS

HACIENDA PERFORMING ARTS CENTER

Hacienda La Puente Unified School District
635 North California Avenue
La Puente, CA 91744

Rev	Date	Issue
2	11/1/2023	Addendum No. 2

Date: 09/08/2023
Scale: As indicated
Drawn By: TRC
Checked By: Checker

Architect / Engineer Stamp

Consultants

VCA Engineers, Inc.
R.M. Byrd and Associates, Inc.
ALM Consulting Engineers, Inc.
MDC Consulting Engineers
Protection Design and Consulting
The Ruzika Company

Sheet Title

STAGE RIGGING DETAILS

Sheet Number

TR811

C:\Users\bbonn.ruzika\Documents\Hacienda Theatrical_R22_sk8er.rvt

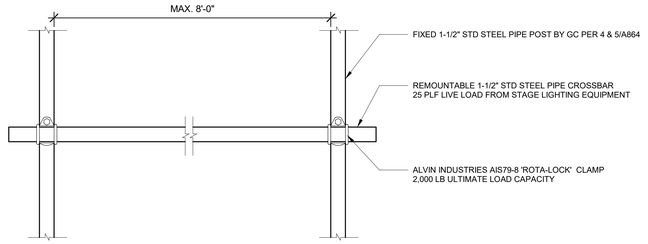

BOX BOOM CROSSBAR | 1 1/2" = 1'-0" | 7

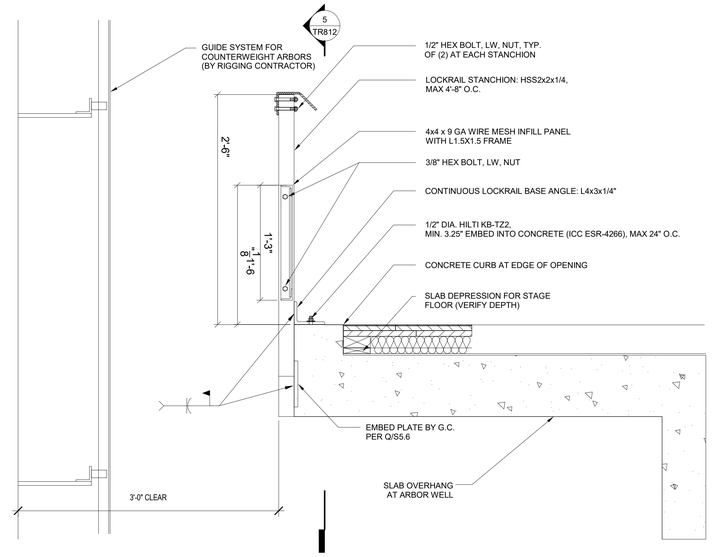

LOCKRAIL ANCHORAGE | 1 1/2" = 1'-0" | 4

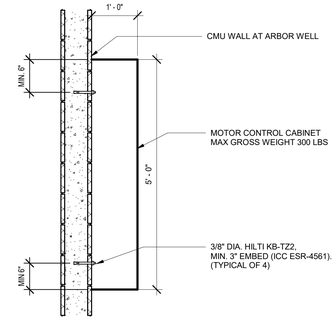

MOTOR CONTROL CABINET MOUNTING | 3/4" = 1'-0" | 1

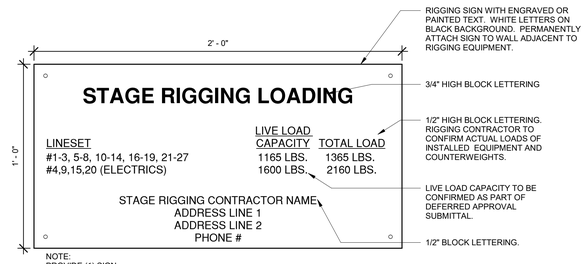

STAGE-LEVEL CAPACITY SIGN | 3" = 1'-0" | 8

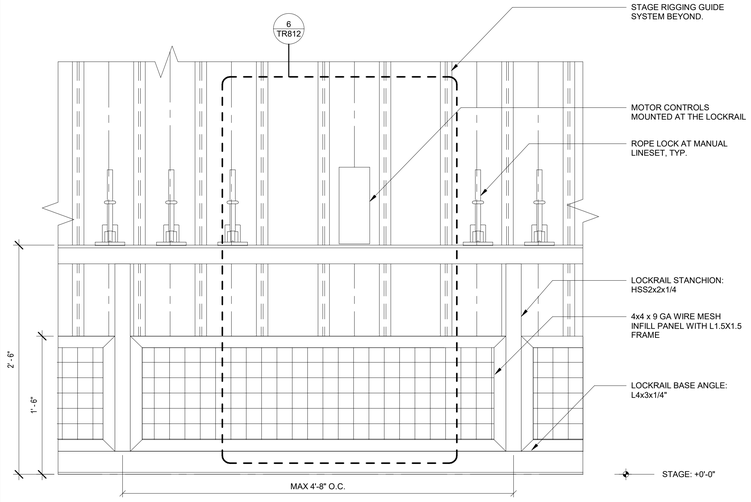

LOCKRAIL ELEVATION DETAIL | 1 1/2" = 1'-0" | 5

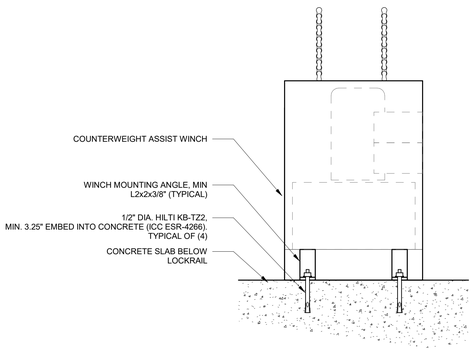

COUNTERWEIGHT ASSIST WINCH CONNECTION | 1 1/2" = 1'-0" | 2

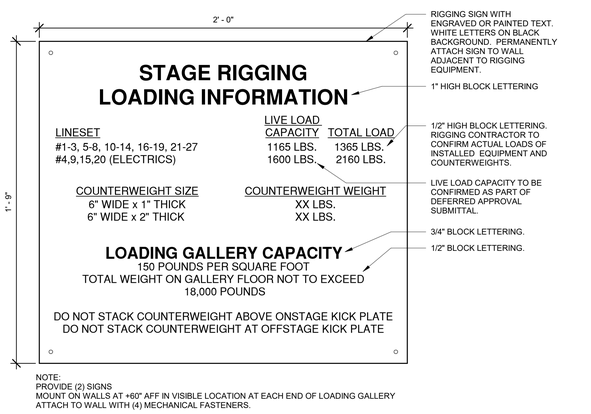

LOADING GALLERY CAPACITY SIGN | 3" = 1'-0" | 9

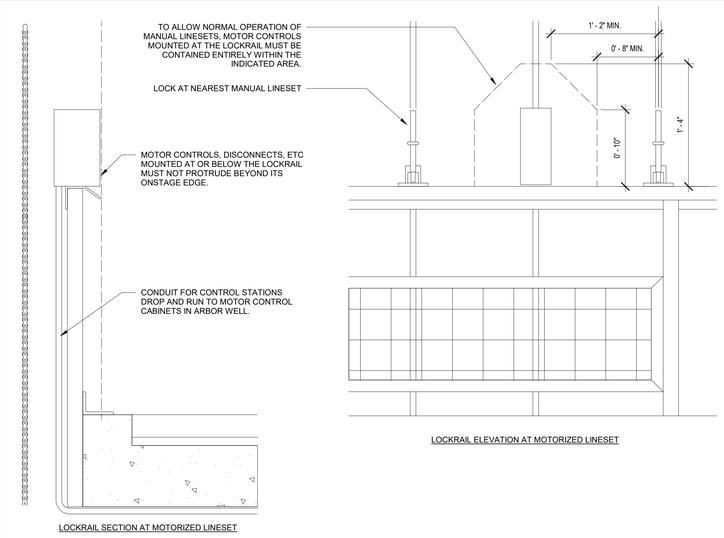

MOTOR CONTROL AT LOCKRAIL | 1 1/2" = 1'-0" | 6

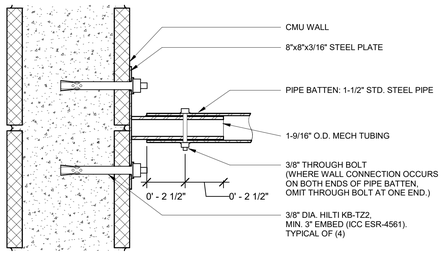

PIPE TO WALL CONNECTION | 3" = 1'-0" | 3

APPL No. A03-122864

IDENTIFICATION STAMP
DIV. OF THE STATE ARCHITECT
APP: 03-122864 INC:
REVIEWED FOR
SS ☑ FLS ☑ ACS ☑
DATE: 10/03/2023

DSA Stamp

Architect

RACHLIN PARTNERS
8640 National Boulevard
Culver City, CA 90232
310.204.3400

Disclaimer:

THESE DRAWINGS ARE THE PROPERTY OF THE ARCHITECT. THE DESIGNS SHOWN AND DESCRIBED HEREIN INCLUDING ALL TECHNICAL DRAWINGS ARE PROPRIETARY AND CANNOT BE COPIED, DUPLICATED OR COMMERCIALLY EXPLOITED EXCEPT WITH THE WRITTEN PERMISSION OF THE ARCHITECT AND SHALL NOT BE USED BY THE OWNER ON OTHER PROJECTS FOR ADDITIONS TO THIS PROJECT, OR FOR COMPLETION OF THIS PROJECT BY OTHERS. THE OWNER AGREES TO HOLD HARMLESS, INDEMNIFY AND DEFEND THE ARCHITECT AGAINST ALL DAMAGES, CLAIMS AND LOSSES, INCLUDING DEFENSE COSTS, ARISING OUT OF ANY REUSE OF PLANS AND SPECIFICATIONS WITHOUT THE WRITTEN AUTHORIZATION OF THE ARCHITECT OF RECORD.

Copyright © 2019 Rachlin Partners, All Rights Reserved.

THE RUZIKA COMPANY
2 Executive Circle, Suite 290
Irvine, California 92614
Ph (949) 253-3479 Fax (949) 253-0181
www.ruzika.com
LIGHTING DESIGNERS + THEATRE CONSULTANTS

HACIENDA PERFORMING ARTS CENTER

Hacienda La Puente Unified School District
635 North California Avenue
La Puente, CA 91744

Rev	Date	Issue
1	7.22.22	50% DD
2	10.21.22	50% CD
3	12.09.22	100% CD DSA SUBMITTAL
4	6.19.23	100% CD DSA RESUBMITTAL
5	9.20.23	DSA BACK CHECK

Date: 9.20.2023
Scale: As indicated
Drawn By: TRC
Checked By: Checker

Architect / Engineer Stamp

LICENSED ARCHITECT
RICHARD D. RACHLIN
NO. C-20229
REN 8-31-25
STATE OF CALIFORNIA

Consultants

VCA Engineers, Inc.
R.M. Byrd and Associates, Inc.
ALM Consulting Engineers, Inc.
MDC Consulting Engineers
Protection Design and Consulting
The Ruzika Company

Sheet Title

STAGE RIGGING DETAILS

Sheet Number

TR812

C:\Users\shown.rudd\Documents\Haciendа Theatrical_R22_sfdlkr.rvt

RIGGING AND DRAPERY SCHEDULE

LINESET #	DESCRIPTION	PIPE BATTEN DISTANCE FROM PL	HEAD BLOCK FROM PL	BATTEN LENGTH	TRACK LENGTH	HIGH TRIM	LOW TRIM	LINESET CAPACITY	DESIGN LOAD	ARBOR SIZE	DRAWING REFERENCE	RIGGING REMARKS	LINESET #	DESCRIPTION	FABRIC	COLOR	LINED	SIZE W x H	FULLNESS	ATTACHMENT	DRAPERY REMARKS
1	MAIN DRAPE	1' - 4"	1' - 2"	52' - 0"	52'-0" OVERALL	44' - 6"	3' - 0"	1365	700	6' S.P.	TR712	REVERSE IDLERS; BI-PARTING TRAVELER W/ OPERATING LINE SL	1	MAIN DRAPE	25 OZ. IFR VELOUR 'PRESTIGE'	PER ARCH	X	50'-0"W x 22'-0"H OVERALL	75%	SNAP HOOK	PROVIDE BOTTOM CHAIN
2	BORDER #1	2' - 4"	2' - 6"	52' - 0"		45' - 6"	3' - 0"	1365	275	6' S.P.	TR711		2	BORDER #1	22 OZ. IFR VELOUR 'ENCORE'	BLACK		52'-0"W x 8'-0"H	0%	TIE-ON	PROVIDE BOTTOM PIPE
3	LEGS #1	3' - 0"	3' - 2"	52' - 0"		45' - 6"	3' - 0"	1365	250	6' S.P.	TR711		3	LEGS #1	22 OZ. IFR VELOUR 'ENCORE'	BLACK		(2) @ 9'-0"W x 23'-0"H	50%	TIE-ON	PROVIDE BOTTOM CHAIN
4	ELECTRIC #1	4' - 4"	4' - 6"	52' - 0"		28' - 0"	4' - 0"	2160	1850	7' S.P.	TR713	MOTORIZED COUNTERWEIGHT-ASSIST WINCH	4	ELECTRIC #1							
5	GENERAL PURPOSE	5' - 8"	5' - 10"	52' - 0"		45' - 6"	3' - 0"	1365	650	6' S.P.	TR711		5	GENERAL PURPOSE							
6	BORDER #2	6' - 4"	6' - 6"	52' - 0"		45' - 6"	3' - 0"	1365	275	6' S.P.	TR711		6	BORDER #2	22 OZ. IFR VELOUR 'ENCORE'	BLACK		52'-0"W x 8'-0"H	0%	TIE-ON	PROVIDE BOTTOM PIPE
7	LEGS #2	7' - 0"	7' - 2"	52' - 0"		45' - 6"	3' - 0"	1365	250	6' S.P.	TR711		7	LEGS #2	22 OZ. IFR VELOUR 'ENCORE'	BLACK		(2) @ 9'-0"W x 23'-0"H	50%	TIE-ON	PROVIDE BOTTOM CHAIN
8	ELECTRIC #2	8' - 4"	8' - 6"	52' - 0"		28' - 0"	4' - 0"	2160	1850	7' S.P.	TR713	MOTORIZED COUNTERWEIGHT-ASSIST WINCH	8	ELECTRIC #2							
9	GENERAL PURPOSE	9' - 8"	9' - 10"	52' - 0"		45' - 6"	3' - 0"	1365	650	6' S.P.	TR711		9	GENERAL PURPOSE							
10	GENERAL PURPOSE	10' - 4"	10' - 6"	52' - 0"		45' - 6"	3' - 0"	1365	650	6' S.P.	TR711		10	GENERAL PURPOSE							
11	BORDER #3	11' - 0"	11' - 2"	52' - 0"		45' - 6"	3' - 0"	1365	275	6' S.P.	TR711		11	BORDER #3	22 OZ. IFR VELOUR 'ENCORE'	BLACK		52'-0"W x 8'-0"H	0%	TIE-ON	PROVIDE BOTTOM PIPE
12	LEGS #3	11' - 8"	11' - 10"	52' - 0"		45' - 6"	3' - 0"	1365	250	6' S.P.	TR711		12	LEGS #3	22 OZ. IFR VELOUR 'ENCORE'	BLACK		(2) @ 9'-0"W x 23'-0"H	50%	TIE-ON	PROVIDE BOTTOM CHAIN
13	MIDSTAGE TRAVELER	12' - 8"	12' - 6"	52' - 0"	52'-0" OVERALL	44' - 6"	3' - 0"	1365	575	6' S.P.	TR712	REVERSE IDLERS; BI-PARTING TRAVELER W/ OPERATING LINE SL	13	MIDSTAGE TRAVELER	22 OZ. IFR VELOUR 'ENCORE'	BLACK		52'-0"W x 23'-0"H OVERALL	50%	SNAP HOOK	PROVIDE BOTTOM CHAIN
14	ELECTRIC #3	14' - 4"	14' - 6"	52' - 0"		28' - 0"	4' - 0"	2160	1850	7' S.P.	TR713	MOTORIZED COUNTERWEIGHT-ASSIST WINCH	14	ELECTRIC #3							
15	GENERAL PURPOSE	15' - 8"	15' - 10"	52' - 0"		45' - 6"	3' - 0"	1365	650	6' S.P.	TR711		15	GENERAL PURPOSE							
16	GENERAL PURPOSE	16' - 4"	16' - 6"	52' - 0"		45' - 6"	3' - 0"	1365	650	6' S.P.	TR711		16	GENERAL PURPOSE							
17	BORDER #4	17' - 0"	17' - 2"	52' - 0"		45' - 6"	3' - 0"	1365	275	6' S.P.	TR711		17	BORDER #4	22 OZ. IFR VELOUR 'ENCORE'	BLACK		52'-0"W x 8'-0"H	0%	TIE-ON	PROVIDE BOTTOM PIPE
18	LEGS #4	17' - 8"	17' - 10"	52' - 0"		45' - 6"	3' - 0"	1365	250	6' S.P.	TR711		18	LEGS #4	22 OZ. IFR VELOUR 'ENCORE'	BLACK		(2) @ 9'-0"W x 23'-0"H	50%	TIE-ON	PROVIDE BOTTOM CHAIN
19	ELECTRIC #4	19' - 0"	19' - 2"	52' - 0"		28' - 0"	4' - 0"	2160	650	7' S.P.	TR713	MOTORIZED COUNTERWEIGHT-ASSIST WINCH	19	ELECTRIC #4							
20	BLACK PANELS	20' - 4"	20' - 6"	52' - 0"		45' - 6"	3' - 0"	1365	275	6' S.P.	TR711		20	BLACK PANELS	22 OZ. IFR VELOUR 'ENCORE'	BLACK		(9) @ 10'-0"W x 22'-0"H	0%	TIE-ON	PROVIDE BOTTOM CHAIN; PROVIDE SEPARATE BOTTOM PIPE POCKET
21	GENERAL PURPOSE	21' - 0"	21' - 2"	52' - 0"		45' - 6"	3' - 0"	1365	650	6' S.P.	TR711		21	GENERAL PURPOSE							
3 22	G.P./CYC ELECTRIC	21' - 8"	21' - 10"	52' - 0"		45' - 6"	3' - 0"	1365	500	6' S.P.	TR711	REVERSE IDLERS	22	G.P./CYC ELECTRIC							
23	GENERAL PURPOSE	22' - 8"	22' - 6"	52' - 0"		45' - 6"	3' - 0"	1365	650	6' S.P.	TR711	REVERSE IDLERS	23	GENERAL PURPOSE							
24	GENERAL PURPOSE	23' - 4"	23' - 2"	52' - 0"		45' - 6"	3' - 0"	1365	650	6' S.P.	TR711	REVERSE IDLERS	24	GENERAL PURPOSE							
25	CYCLORAMA	24' - 0"	23' - 10"	52' - 0"		45' - 6"	3' - 0"	1365	300	6' S.P.	TR711	REVERSE IDLERS	25	CYCLORAMA	UNBLEACHED MUSLIN	NATURAL		52'-0"W X 24'-0"H	0%	TIE-ON	PROVIDE BOTTOM PIPE
SR	WORKLIGHT BATTEN SR			30' - 0"		20' - 0"		500	500		TR714	DEADHUNG BATTEN	SR	WORKLIGHT BATTEN SR							

FOH TRACK AND DRAPERY SCHEDULE

DESCRIPTION	TRACK	FABRIC	COLOR	SIZE W x H	FULLNESS	ATTACHMENT	DRAPERY REMARKS
FOH CATWALK #1 MASKING		15 OZ. IFR VELOUR 'ENCORE'	BLACK	(5) @ 9'-0"W x 3'-6"H	0%	TIE-ON	
FOH CATWALK #2 MASKING		15 OZ. IFR VELOUR 'ENCORE'	BLACK	(5) @ 10'-0"W x 3'-6"H	0%	TIE-ON	
FOH CATWALK #3 MASKING		15 OZ. IFR VELOUR 'ENCORE'	BLACK	(6) @ 10'-0"W x 3'-6"H	0%	TIE-ON	

PORTABLE EQUIPMENT

MAIN THEATRE	
8	REMOUNTABLE BOX BOOM #1 LIGHTING PIPE - 5'-0" BLACK 1-1/2" STD STEEL PIPE
8	REMOUNTABLE BOX BOOM #2 LIGHTING PIPE - 4'-0" BLACK 1-1/2" STD STEEL PIPE
34	ROTA-LOCK PIPE CLAMPS FOR BOX BOOMS - INCLUDES 2 SPARE
1	600' SPOOL 5/8" NEW ENGLAND ROPES STA-SET, BLACK

COUNTERWEIGHT

MAIN THEATRE	
18,000 LBS	6" WIDE, COUNTERWEIGHT (INCLUDES PERMANENT LOADS) ALL WEIGHT OTHER THAN PERMANENT LOADS TO BE PROVIDED IN 1" THICK BRICKS

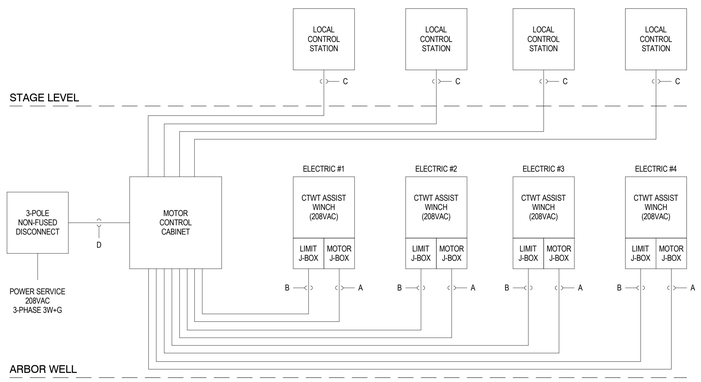

KEY TO WIRE TYPES			
TYPE	DESCRIPTION		NOTES
A	CTWT ASSIST WINCH MOTOR+BRAKE POWER	(5) #12AWG CU STRANDED + (1) #12AWG (GND)	
B	4-ELEMENT LIMIT SWITCH + ENCODER SIGNAL	(6) #14AWG CU STRANDED (LIMITS) + (1) #14AWG CU STRAND (GND) + BELDEN #9328 (ENCODER)	VERIFY WIRE SPEC. WITH RIGGING CONTRACTOR
C	LOCAL CONTROL STATION	(12) #14AWG CU STRANDED (CTRL) + (1) #14 AWG CU STRANDED (GND)	VERIFY WIRE SPEC. WITH RIGGING CONTRACTOR
D	POWER SERVICE 208VAC	3W+G PER EE	
* (X) = QUANTITY WHEN GREATER THAN ONE*			

NOTES:
1. ALL WIRING DEVICES (EXCEPT NON-FUSED DISCONNECT) INDICATED ON RISER ARE PROVIDED BY STAGE RIGGING CONTRACTOR. POWER SERVICE, CONDUIT, AND ALL POWER & CONTROL WIRING INDICATED ON RISER ARE TO BE PROVIDED & INSTALLED BY ELECTRICAL CONTRACTOR.
2. ALL DEVICES EXCEPT CONTROL STATIONS ARE LOCATED AT STAGE LEFT (SOUTH) SIDE OF STAGE IN ARBOR WELL.
3. RISER DIAGRAM INDICATES FOUR INSTANCES OF MOTORIZED WINCHES CORRESPONDING TO COUNTERWEIGHT-ASSIST HOISTS AT ELECTRICS . SEE PROJECT DRAWINGS TR000 & TR211 AND STAGE RIGGING CONTRACTOR SHOP DRAWINGS FOR FURTHER INFORMATION AND LOCATIONS.

MOTOR CONTROL RISER | 12" = 1'-0" | 1

APPL No. A03-122864

DSA Stamp

Architect

RACHLIN PARTNERS
8640 National Boulevard
Culver City, CA 90232
310.204.3400

Disclaimer:

THESE DRAWINGS ARE THE PROPERTY OF THE ARCHITECT. THE DESIGNS SHOWN AND DESCRIBED HEREIN INCLUDING ALL TECHNICAL DRAWINGS ARE PROPRIETARY AND CANNOT BE COPIED, DUPLICATED OR COMMERCIALLY EXPLOITED EXCEPT BY WRITTEN AGREEMENT WITH THE ARCHITECT. THEY SHALL NOT BE USED BY THE OWNER ON OTHER PROJECTS, FOR ADDITIONS TO THIS PROJECT, OR FOR COMPLETION OF THIS PROJECT BY OTHERS. THE OWNER AGREES TO HOLD HARMLESS, INDEMNIFY AND DEFEND THE ARCHITECT AGAINST ALL DAMAGES, CLAIMS AND LOSSES, INCLUDING DEFENSE COSTS, ARISING OUT OF ANY REUSE OF PLANS AND SPECIFICATIONS WITHOUT THE WRITTEN AUTHORIZATION OF THE ARCHITECT OF RECORD.

Copyright © 2019 Rachlin Partners, All Rights Reserved.

THE RUZIKA COMPANY
2 Executive Circle, Suite 290
Irvine, California 92614
Ph (949) 253-3479 Fax (949) 253-0181
www.ruzika.com
LIGHTING DESIGNERS + THEATRE CONSULTANTS

HACIENDA PERFORMING ARTS CENTER
Hacienda La Puente Unified School District
635 North California Avenue
La Puente, CA 91744

Rev	Date	Issue
2	11/1/2023	Addendum No. 2
3	12/15/2023	Addendum No. 3

Date: 09/08/2023
Scale: 12" = 1'-0"
Drawn By: TRC
Checked By: Checker

Architect / Engineer Stamp

Consultants

VCA Engineers, Inc.
R.M. Byrd and Associates, Inc.
ALM Consulting Engineers, Inc.
MDC Consulting Engineers
Protection Design and Consulting
The Ruzika Company

Sheet Title

STAGE RIGGING SCHEDULES AND RISERS

Sheet Number

TR911

C:\Users\tonas\Documents\Hacienda Theatrical_R22_tkobrosk.rvt

SYMBOLS LEGEND

DATA/TELEPHONE DEVICES

- DATA (WALL)
- DATA/TELEPHONE COMBINATION (WALL)
- WALL PHONE - ANALOG/TDM
- WALL PHONE - VOIP
- DATA (FLOOR)
- DATA (CEILING)
- WIRELESS ACCESS POINT (CEILING)
- TELEVISION OUTLET (WALL)
- CELLULAR BOOSTER ANTENNA, U.O.N.
- DATA DROP AND TELEVISION OUTLET AT SAME LOCATION

POWER DEVICES

- DUPLEX AC OUTLET
- QUAD AC OUTLET
- 208v AC OUTLET
- J-BOX (WALL)
- J-BOX (FLOOR)
- J-BOX (CEILING)

SECURITY DEVICES

- CCTV CAMERA
- DOME CAMERA
- PTZ CAMERA
- ACP — ACCESS CONTROL PANEL
- CC — CONTROL CONSOLE
- CB — CRASH BAR
- CR — CARD READER
- DA — DOOR ALARM
- DR — DOOR RELEASE
- DPS — DOOR POSITION SWITCH
- EL — ELECTRIC LOCK
- ES — ELECTRIC STRIKE
- IAP — INTRUSION ALARM PANEL
- GB — GLASS BREAK
- HS — HORN STROBE
- IC — INTERCOM STATION
- ICM — INTERCOM MASTER STATION
- KP — KEYPAD
- MAG — MAGNETIC LOCK
- MD — MOTION DETECTOR
- MON — MONITOR
- P — PANIC
- PB — PUSH BUTTON
- PS — POWER SUPPLY
- REX — REQUEST TO EXIT
- SR — SIREN
- WR — WIRELESS RECEIVER
- WS — WORKSTATION

AUDIOVISUAL DEVICES

- C-X — WALL MOUNTED CAMERA
- CB-X — COLLECTION BOX
- FB-X — FLOOR BOX
- FP-X — FLAT PANEL CONNECTION BOX
- KP-X — KEY PAD
- PU-X — TABLE POP-UP
- TP-X — TOUCH PANEL
- TV-X — TELEVISION
- VC-X — VOLUME CONTROL
- VS-X — VOLUME CONTROL/SOURCE SELECTION
- WA-X — WIRELESS ANTENNA
- WP-X — WALL PLATE
- J — CEILING MOUNTED J-BOX
- J — FLOOR MOUNTED J-BOX
- PT — POKE THROUGH
- MX — MICROPHONE
- SX — CEILING MOUNTED SPEAKER
- S — WALL MOUNTED SPEAKER
- S — UNDER-FLOOR SOUND MASKING SPEAKER
- CX — CEILING MOUNTED CAMERA
- PROJECTOR
- PROJECTOR W/LIFT

ABBREVIATIONS

AC	ABOVE COUNTER
AFF	ABOVE FINISHED FLOOR
ARF	ABOVE RAISED FLOOR
AVC	AUDIOVISUAL CONTRACTOR
BLDG	BUILDING
CCTV	CLOSED CIRCUIT TELEVISION
CLG	CEILING
COMM	COMMUNICATION
CONT	CONTINUATION
DN	DOWN
DWG	DRAWING
EA	EACH
EC	ELECTRICAL CONTRACTOR
EF	ENTRANCE FACILITY
EM	EMERGENCY
EQUIP	EQUIPMENT
ER	EQUIPMENT ROOM
E	EXISTING
FBO	FURNISHED BY OTHERS
FT	FEET OR FOOT
HC	HORIZONTAL CROSS-CONNECT
HH	HAND HOLE
IC	INTERMEDIATE CROSS-CONNECT
IDF	INTERMEDIATE DISTRIBUTION FRAME
LOMMF	LASER OPTIMIZED MULTIMODE FIBER
MAX	MAXIMUM
MC	MAIN CROSS-CONNECT
MDF	MAIN DISTRIBUTION FRAME
MH	MAINTENANCE HOLE
MIN	MINIMUM
MM	MULTIMODE FIBER
MTD	MOUNTED
MTG	MOUNTING
NIC	NOT IN CONTRACT
NTS	NOT TO SCALE
OC	ON CENTER
OD	OUTSIDE DIAMETER
OFE	OWNER FURNISHED EQUIPMENT
PB	PULL BOX
PP	POWER POLE
PTZ	PAN TILT ZOOM (CAMERA TYPE)
REQ	REQUIRED
SC	SECURITY CONTRACTOR
SCC	STRUCTURED CABLING CONTRACTOR
SM	SINGLEMODE FIBER
SPEC	SPECIFICATION
SPKR	SPEAKER
TBD	TO BE DETERMINED
TC	TELECOMMUNICATIONS CONTRACTOR
TO	TELECOMMUNICATIONS OUTLET
TR	TELECOMMUNICATIONS ROOM
TV	TELEVISION
TYP	TYPICAL
UON	UNLESS OTHERWISE NOTED
UTP	UNSHIELDED TWISTED PAIR
XC	CROSS CONNECT WIRE

CB-1	AV BOOTH	COLLECTION BOX, 6" X 6" RACEWAY 36" LONG, SURFACE MOUNT WITH SCREW ON COVER, 18" AFF WITH (4) 1-1/4" CONDUITS TO CB-2
CAM-1	CENTER ON AUDIENCE SIDE OF FRONT WALL OF SOUND BOOTH	WALL-MOUNT CAMERA CONNECTION POINT LOCATED ON STRUCTURE IN AUDITORIUM, CENTER IN FRONT OF BOOTH WINDOW, SINGLE GANG BOX WITH (1) 1" CONDUIT TO TO STUB IN ABOVE CEILING IN SOUND BOOTH.
PROJ-1	AUDI CEILING	PROJECTOR CONNECTION, 2-GANG BOX MOUNT ON CEILING WITH (1) 1-1/4" CONDUIT TO CB-2 AND (1) 1" CONDUIT TO SCR-1
WP-1	BACK WALL ST L	WALL PLATE, TX-1, SINGLE GANG DEEP BOX WITH (1) 1" CONDUIT TO CB-2.
WP-2	STAGE MNGR	MULTI-PURPOSE WALL PLATE, WITH TX-B, 16" X 6" x 4" NEMA TYPE 1 WITH SCREW ON COVER FLUSH MOUNT AT 18" AFF WITH (3) 1" CONDUITS TO CB-3 AND (1) 1" CONDUIT TO CB-7
WP-3	BACK WALL ST R	WALL PLATE, TX-3, SINGLE GANG DEEP BOX WITH (1) 1" CONDUIT TO CB-2.
WP-4	BACK WALL ST L	WALL PLATE, VIDEO OUT, SINGLE GANG DEEP BOX WITH (1) 1" CONDUIT TO CB-3.
WP-5	BACK WALL ST R	WALL PLATE, VIDEO OUT, SINGLE GANG DEEP BOX WITH (1) 1" CONDUIT TO CB-3.
WP-6	FRONT WALL ST L	WALL PLATE, TX-3, 3-GANG DEEP BOX WITH (1) 1" CONDUIT TO CB-2 AND (1) 1" CONDUIT TO CB-3.
CB-2	LIGHTING CONSOL AND RACK ROOM	COLLECTION BOX, 6" X 6" RACEWAY 36" LONG, WITH SCREW ON COVER, SURFACE MOUNT BOTTOM AT 90" AFF, WITH (3) 1-1/4" CONDUITS STUB UP ABOVE CEILING.
SPKR-1	LEFT ARRAY	LEFT SPEAKER CLUSTER, SINGLE GANG BOX WITH (1) 1-1/4" CONDUIT TO CB-2
SPKR-R	RIGHT ARRAY	RIGHT SPEAKER CLUSTER, SINGLE GANG BOX WITH (1) 1-1/2" CONDUIT TO CB-2
CTR-2	STAGE LEFT PROSCENIUM WALL	LIGHTING AND OPERATION PANEL BY THEATRICAL SHOWN AS A GUIDE FOR THE MOUNTING OF CB-1.
CB-3	STAGE LEFT PROSCENIUM WALL	COLLECTION BOX, 6" x 6" RACEWAY 48" LONG SURFACE MOUNT CENTER AT 18" AFF WITH (2) 1-1/4" CONDUITS AND (2) 1" CONDUITS TO CB-2 AND (5) 1-1/4", (2) 1" CONDUITS TO STAGE MANAGER RACK LOCATED DIRECTLY ABOVE, AND (1) 1-1/2" CONDUITS INTO THE BOTTOM OF CB-10.
CB-4	FRONT STAGE LEFT	COLLECTION BOX, 15" X 12" X 4" NEMA TYPE 1 WITH SCREW ON COVER SURFACE MOUNT, (HUBBLE SC1215GNKL), AT 18" AFF WITH (11) 1-1/4" CONDUITS AND (2) 1" CONDUIT TO CB-3.
CB-5	FRONT STAGE RIGHT	COLLECTION BOX, 15" X 12" X 4" NEMA TYPE 1 WITH SCREW ON COVER SURFACE MOUNT, (HUBBLE SC1215GNKL), AT 18" AFF WITH (11) 1-1/4" CONDUITS AND (2) 1" CONDUIT TO CB-3.
VC	VARIOUS	VOLUME CONTROL, SINGLE GANG BOX AT 48" AFF WITH (1) 1" CONDUIT STUB UP ABOVE CEILING AND TURN INTO ROOM.
CB-6	REAR STAGE LEFT	COLLECTION BOX, 15" X 12" X 4" NEMA TYPE 1 WITH SCREW ON COVER SURFACE MOUNT, (HUBBLE SC1215GNKL), AT 18" AFF WITH (1) 1-1/4" CONDUITS AND (1) 1" CONDUITS TO CB-3.
CB-7	REAR STAGE RIGHT	COLLECTION BOX, 15" X 12" X 4" NEMA TYPE 1 WITH SCREW ON COVER SURFACE MOUNT, (HUBBLE SC1215GNKL), AT 18" AFF WITH (1) 1-1/4" CONDUITS AND (1) 1" CONDUITS TO CB-3.
CB-8	CENTER FRONT STAGE	FLOOR BOX, FSR FL-1550 WITH (2) 1" CONDUITS TO CB-3 AND (3) 1" CONDUIT TO
CB-9	CATWALK	COLLECTION BOX, 4-GANG BOX MOUNTED ON CATWALK LOCATED AT 20'-6" WITH (1) 1-1/4" CONDUIT TO CB-4.
CB-10	STAGE LEFT PROSCENIUM WALL	WALL-MOUNTED EQUIPMENT CABINET FOR ORGONNAX, BY E.C., LOWELL PART # LWCR-7/16 MOUNT WITH BOTTOM AT 72" AS SHOWN ON THE DRAWINGS, WITH (1) 1" CONDUIT TO CB-11 AND (1) 2" CONDUIT TO CB-3. SEE CB-3 DRAWING FOR CONDUIT DETAILS.
CB-11	STAGE LEFT PROSCENIUM WALL	STAGE MANAGER RACK, MIDDLE ATLANTIC SWR-36-32 BY E.C. MOUNT WITH BOTTOM AT 24" AS SHOWN ON THE DRAWINGS.
CB-12	STAGE LEFT PROSCENIUM WALL	SQUARE LIGHTING CONTROL BY OTHERS. SHOWN FOR REFERENCE
IC-1	GREEN RM	INTERCOM STATION, WALL MOUNT, FOUR-GANG BOX AT 48" AFF WITH (1) 1" CONDUIT TO IC-2.
IC-2	STAGE L REAR	INTERCOM, SINGLE GANG BOX AT 18" AFF WITH (1) 1" CONDUIT TO IC-17.
IC-3	MEN DR	INTERCOM STATION, WALL MOUNT, FOUR-GANG BOX AT 48" AFF WITH (1) 1" CONDUIT TO IC-4.
IC-4	WOMEN DR	INTERCOM STATION, WALL MOUNT, FOUR-GANG BOX AT 48" AFF WITH (1) 1" CONDUIT TO IC-16.
IC-5	SHOP	INTERCOM STATION, WALL MOUNT, 4-GANG BOX AT 48" AFF WITH (1) 1" CONDUIT TO IC-14.
IC-6	FOLLOW SPOT	INTERCOM, SINGLE GANG BOX AT 18" AFF WITH (1) 1" CONDUIT TO CB-2.
IC-7	SOUND BOOTH	INTERCOM, SINGLE GANG BOX ABOVE COUNTER TOP WITH (1) 1" CONDUIT TO IC-12.
IC-8	LIGHTING	INTERCOM, SINGLE GANG BOX ABOVE COUNTER TOP WITH (1) 1" CONDUIT TO EB-1.
IC-9	LIGHTING	INTERCOM, SINGLE GANG BOX ABOVE COUNTER TOP WITH (1) 1" CONDUIT TO IC-8.
IC-13	CATWALK	INTERCOM, SINGLE GANG BOX WITH (1) 1" CONDUIT TO CB-2.
IC-10	MID AUDI. CROSS-ISLE	INTERCOM, THEATER SYSTEM FLOOR BOX WITH (1) 1" CONDUIT TO CB-2. SEE DRAWING TL-211 FOR DRAWING TL821 DETAIL 6.
IC-12	SOUND BOOTH	INTERCOM, SINGLE GANG BOX ABOVE COUNTER TOP WITH (1) 1" CONDUIT TO EB-1.
IC-18	STAGE MANAGER	FOR INTERCOM IN STAGE MANAGER RACK, (1) 1" CONDUIT TO CB-3.
IC-19	FOH BOOTH	INTERCOM, SINGLE GANG BOX WITH (1) 1" CONDUIT TO CB-2.
IC-15	STAGE R	NOT USED
IC-16	STAGE L FRONT	INTERCOM, SINGLE GANG BOX WITH (1) 1" CONDUIT TO IC-13.
IC-17	REAR WALL ST R	INTERCOM, SINGLE GANG BOX AT 18" AFF WITH (1) 1" CONDUIT TO CB-3.
SP-1	STAGE UP	VIDEO MONITOR CONNECTION POINT, FLOOR BOX, FSR SF6-CP3AVD-BLK WITH (1) 1-1/4" CONDUIT TO SP-2
SP-2	STAGE UP	STAGE VIDEO MONITOR CONNECTION POINT, FLOOR BOX, FSR SF6-CP3AVD-BLK WITH (1) 1-1/4" CONDUIT TO SP-3.
SP-3	STAGE UP	STAGE VIDEO MONITOR CONNECTION POINT FLOOR BOX, FSR SF6-CP3AVD-BLK WITH (1) 1-1/4" CONDUIT TO CB-11.
SCR-1	PROSCENIUM STAGE SIDE	PROJECTION SCREEN CONTROLLER, SINGLE GANG BOX AT 23 1/2" AFF WITH (1) 1-1/4" CONDUIT TO CB-11.
ALS	LOCATE ON AUDIENCE SIDE OF FRONT WALL OF SOUND BOOTH	ALS ANTENNA, SINGLE GANG BOX LOCATED ON AUDIENCE SIDE OF WALL ADJACENT TO SIDE OF WINDOW WITH (1) 1" CONDUIT TO STUB INTO SOUND BOOTH ABOVE CEILIN G.

STRUCTURED CABLING NOTES

1. SCC TO INSTALL DESIGNATED NUMBER OF CATEGORY 6 CABLES AT EACH DROP LOCATION.
2. SCC TO FURNISH ALL MATERIALS AND INSTALLATION LABOR TO COMPLETE A FULLY FUNCTIONAL STRUCTURED CABLING SYSTEM INCLUDING, BUT NOT LIMITED TO: HORIZONTAL AND BACKBONE COPPER CABLE, JACKS, ADAPTERS, FACEPLATES, COPPER PATCH PANELS, COPPER TERMINATION BLOCKS, FIBER OPTIC CABLE, FIBER INNERDUCT, FIBER TERMINATION HARDWARE, FIBER CONNECTORS, VERTICAL AND HORIZONTAL CABLE MANAGEMENT, EQUIPMENT RACKS, CABLE TRAYS AND MOUNTING HARDWARE, CABLE SUPPORT HARDWARE, COPPER AND FIBER PATCH CORDS, LABELS, GROUNDING AND BONDING, TESTING AND CERTIFICATION.
3. UNLESS OTHERWISE NOTED, PROVIDE 6"-12" CABLE SLACK AT THE TELECOMMUNICATIONS OUTLET AND 10' CABLE SLACK AT THE TR. NEATLY MANAGE CABLE SLACK AT THE TR TO PERMIT RELOCATION OF EQUIPMENT RACKS.
4. EC TO FURNISH AND INSTALL ALL CONDUIT, CONDUIT SLEEVES, CORES, J-BOXES, PULL BOXES, AND OUTLET BOXES IN WALLS, FLOORS AND CEILINGS FOR SCC INSTALLED CABLING. PROVIDE BUSHINGS ON ALL CONDUIT AND CONDUIT SLEEVE ENDS. PROVIDE PULL STRINGS IN ALL CONDUITS.
5. TELECOMMUNICATION CONDUIT ROUTES AND LOCATIONS SHOWN ARE APPROXIMATE. INSTALL CONDUITS WITH A MAXIMUM OF TWO 90-DEGREE BENDS BETWEEN PULL POINTS. LOCATE PULL BOXES IN ACCESSIBLE AREAS.
6. UNLESS OTHERWISE NOTED THE SCC SHALL INSTALL APPROVED FIRE STOPPING MATERIALS IN ALL CONDUITS AND CONDUIT SLEEVES USED FOR COMMUNICATIONS AND/OR OTHER LOW-VOLTAGE CABLE INSTALLED BY THE SCC.
7. EC TO PROVIDE A TELECOMMUNICATIONS GROUNDING SYSTEM IN ALL TELECOMMUNICATIONS ROOMS. SYSTEM TO CONSIST OF A TELECOMMUNICATIONS MAIN GROUDING BUSBAR (TMGB) LOCATED IN THE ENTRANCE FACILITY AND A TELECOMMUNICATIONS GROUNDING BUSBAR (TGB) IN ALL TRS. THE TMGB/TGB SHALL BE CONNECTED TO THE BUILDING GROUNDING ELECTRODE AT THE CLOSEST PRACTICABLE POINT. REFER TO ANSI J-STD-607-A FOR FURTHER INFORMATION.
8. UNLESS OTHERWISE NOTED THE SCC SHALL BE CERTIFIED BY THE MANUFACTURER TO INSTALL THE STRUCTURED CABLING SYSTEM AND PROVIDE TO THE OWNER A SYSTEM PERFORMANCE WARRANTY WITH A TERM OF NO LESS THAN 20 YEARS.
9. CATEGORY 6 CABLING SYSTEMS WILL BE COLOR CODED:
   - o DATA - BLUE
   - o AUDIOVISUAL - WHITE
   - o VIDEO SURVEILLANCE - YELLOW

AUDIOVISUAL NOTES

1. AUDIO VISUAL CONTRACTOR TO FURNISH AND INSTALL A COMPLETE AV SYSTEM FOR ALL DESIGNATED AREAS.
2. ALL EMPTY CONDUITS SHALL BE CLEANED, CAPPED, LABELED AND FURNISHED WITH A PULL STRING.
3. EC TO FURNISH AND INSTALL ALL CONDUITS AND BACK BOXES FOR ALL SYSTEMS AND DEVICES AS SHOWN ON THE DRAWINGS.
4. THERE SHALL BE ONE PULL BOX FOR EVERY 100 FEET OF CONDUIT AND A PULL BOX IF MORE THAN 180 DEGREES OF BEND ARE REQUIRED IN ANY RUN.
5. ELECTRICAL FEEDS SHOULD NOT RUN PARALLEL WITH AUDIOVISUAL SYSTEM CONDUIT. IF ELECTRICAL FEEDS CROSS AUDIOVISUAL CONDUITS, THEY MUST CROSS AT 90DEGREES.
6. AVOID ROUTING AV CABLES NEAR SOURCES OF EMI. KEEP A MINIMUM CLEARANCE OF 4 FEET FROM POWER TRANSFORMERS AND MOTORS AND 6 INCHES FROM ALL CONDUIT AND CABLE USED FOR POWER DISTRIBUTION.
7. ALL POWER CONDUIT AND POWER OUTLET BOXES ARE TO BE REVIEWED BY ELECTRICAL ENGINEER.
8. ANY CABLE SHALL NOT REST DIRECTLY ON ANY BUILDING STRUCTURE PIPING, DUCT, ETC. CABLE SHALL BE SUPPORTED BY J-HOOKS OR APPROVED METHOD. SUPPORT METHOD SHALL HAVE A 5 FOOT SPACING MAXIMUM.
9. AVC IS RESPONSIBLE FOR FIRE STOPPING THE CONDUITS, SLEEVES AND CORES THAT EITHER THE AVC OR THE EC INSTALLS THAT ARE DESIGNATED FOR USE BY THE AVC, PER APPLICABLE CODES UNLESS NOTED OTHERWISE.
10. AVC TO FURNISH AND INSTALL CABLE MANAGEMENTS AS REQUIRED.
11. DATA AND POWER OUTLETS ARE SHOWN TO INDICATE REQUIREMENTS AND ARE FOR REFERENCE ONLY. REFER TO COMMUNICATIONS AND ELECTRICAL DRAWINGS FOR FURTHER INFORMATION.

RESPONSIBILITY MATRIX

SYSTEMS/EQUIPMENT	EC	SCC	AVC	SC	OFE	COMMENTS
CONDUITS AND SLEEVES (SEE COMMENTS)	X					
FIRESTOP PENETRATIONS	X	X	X	X		
FIRESTOP CONDUITS/SLEEVES	X	X	X	X		* (SEE NOTE BELOW)
OUTLET BOXES	X					
WIRE MESH BASKET TRAY	X					
NETWORK EQUIPMENT					X	
PHONE SWITCH					X	
PHONE HAND SETS					X	
AV EQUIPMENT			X			
AV CABLE		X	X			SCC INSTALLS DATA CABLE
VOICE/DATA CABLE		X				
CATV CABLE		X				ACTIVE AND PASSIVE HARDWARE BY CATV CONTRACTOR
INTERCOM DEVICES					X	
INTERCOM CABLE	X					
PAGING SPEAKERS	N/A	N/A	N/A	N/A	N/A	
PAGING CABLE	N/A	N/A	N/A	N/A	N/A	
SECURITY DEVICES				X		
SECURITY CABLE		X				SCC INSTALLS DATA CABLE
SECURITY HEAD-END				X		

* SCC RESPONSIBLE FOR COMMUNICATIONS CONDUITS/SLEEVES

C:\Users\Erich.Bretz\OneDrive - Gerald H. Phipps, Inc\Documents\R22_HLPUSD-PAC_Central_HJSA_mbbimsolutions.rvt

APPL No. A03-122864

IDENTIFICATION STAMP
DIV. OF THE STATE ARCHITECT
APP: 03-122864 INC:
REVIEWED FOR
SS ☑ FLS ☑ ACS ☑
DATE: 10/03/2023

DSA

Architect

RACHLIN PARTNERS
8640 National Boulevard
Culver City, CA 90232
310.204.3400

Disclaimer:

THESE DRAWINGS ARE THE PROPERTY OF THE ARCHITECT. THE DESIGNS SHOWN AND DESCRIBED HEREIN INCLUDING ALL TECHNICAL DRAWINGS ARE PROPRIETARY AND CANNOT BE COPIED, DUPLICATED OR COMMERCIALLY EXPLOITED EXCEPT BY WRITTEN AGREEMENT. THESE DRAWINGS AND DESIGNS SHALL NOT BE USED BY THE OWNER ON OTHER PROJECTS, FOR ADDITIONS TO THIS PROJECT, OR FOR COMPLETION OF THIS PROJECT BY OTHERS. THE OWNER AGREES TO HOLD HARMLESS, INDEMNIFY AND DEFEND THE ARCHITECT AGAINST ALL DAMAGES, CLAIMS AND LOSSES, INCLUDING DEFENSE COSTS, ARISING OUT OF ANY REUSE OF PLANS AND SPECIFICATIONS WITHOUT THE WRITTEN AUTHORIZATION OF THE ARCHITECT OF RECORD.

Copyright © 2022 Rachlin Partners, All Rights Reserved.

Performing Arts Center

Hacienda La Puente Unified School District
635 North California Avenue
La Puente, CA 91744

Re	Date	Issue
1	7.22.22	50% DD
2	10.21.22	50% CD
3	12.09.22	100% CD DSA SUBMITTAL
4	6.19.23	100% CD DSA RESUBMITTAL
5	9.20.23	DSA BACK CHECK

Date: 9.20.2023
Scale:
Drawn By: EMB
Checked By: HJSA

Architect / Engineer

LICENSED ARCHITECT — RICHARD H. PHIPPS — NO. C-26225 — REN. 8-31-25 — STATE OF CALIFORNIA

Consultants

Miyamoto International, Inc.
The Ruzika Company, Inc.
MDC Consulting Engineers
Pocock Design Solutions
Newson Brown Acoustics, LLC
VCA Engineers, Inc.
HJSA Consulting

Sheet Title

Audiovisual / Security / Telecomm General Notes

Sheet

T000

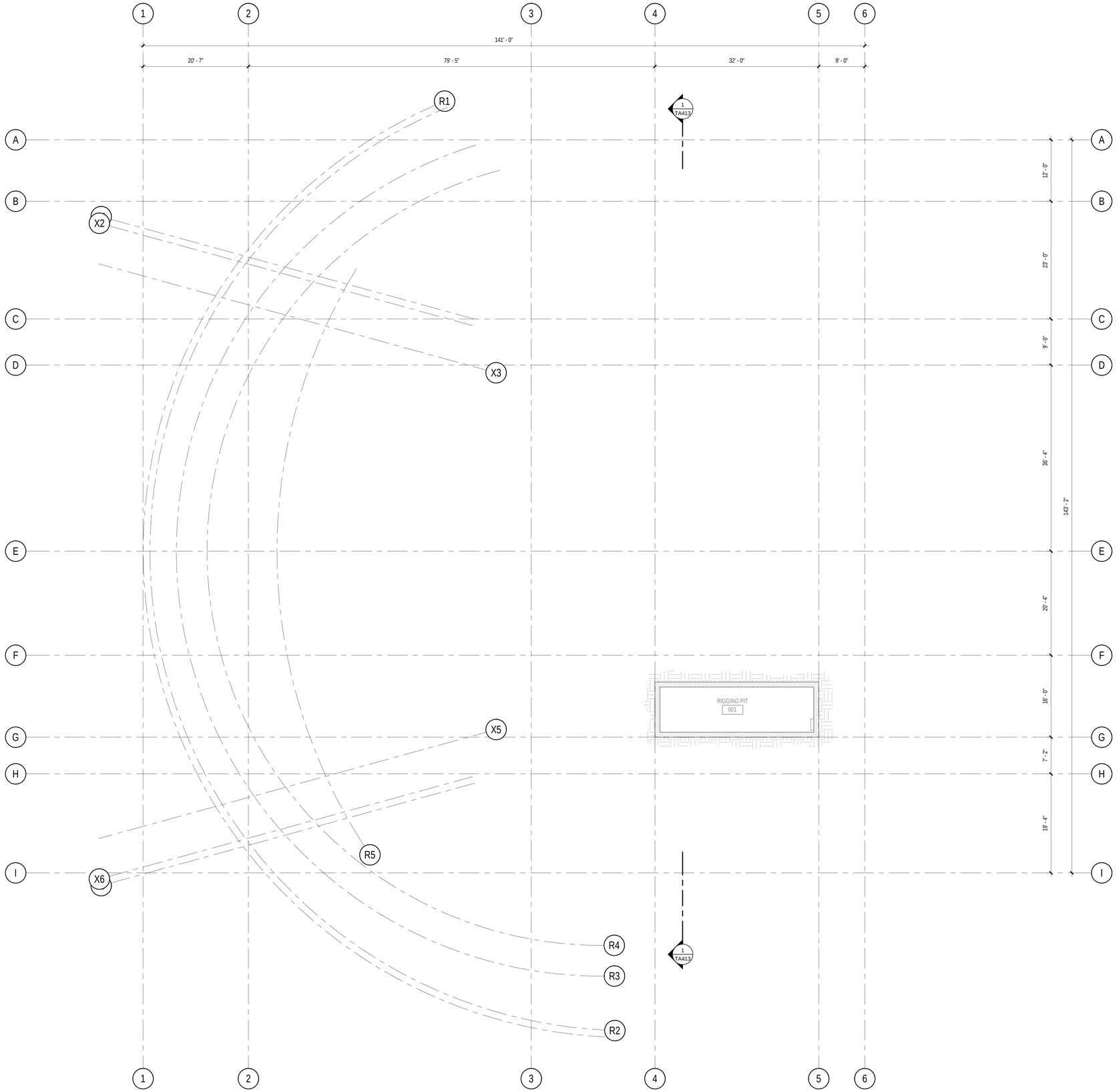

1 RIGGING PIT LEVEL FLOOR PLAN

SCALE: 1/8" = 1'-0"

0' 4' 8' 16' 24'

NORTH

C:\Users\Erich.Bretz\OneDrive - Gerald H. Phipps, Inc\Documents\R22_HLPUSD-PAC_Central_HJSA_mbbimsolutions.rvt

APPL No. A03-122864

IDENTIFICATION STAMP
DIV. OF THE STATE ARCHITECT
APP: 03-122864 INC:
REVIEWED FOR
SS ☑ FLS ☑ ACS ☑
DATE: 10/03/2023

DSA

Architect

RACHLIN
PARTNERS
8640 National Boulevard
Culver City, CA 90232
310.204.3400

Disclaimer:

THESE DRAWINGS ARE THE PROPERTY OF THE ARCHITECT. THE DESIGNS SHOWN AND DESCRIBED HEREIN INCLUDING ALL TECHNICAL DRAWINGS ARE PROPRIETARY AND CANNOT BE COPIED, DUPLICATED OR COMMERCIALLY EXPLOITED EXCEPT WITH THE WRITTEN PERMISSION OF THE ARCHITECT AND SHALL NOT BE USED BY THE OWNER ON OTHER PROJECTS, FOR ADDITIONS TO THIS PROJECT, OR FOR COMPLETION OF THIS PROJECT BY OTHERS. THE OWNER AGREES TO HOLD HARMLESS, INDEMNIFY AND DEFEND THE ARCHITECT AGAINST ALL DAMAGES, CLAIMS AND LOSSES, INCLUDING DEFENSE COSTS, ARISING OUT OF ANY REUSE OF PLANS AND SPECIFICATIONS WITHOUT THE WRITTEN AUTHORIZATION OF THE ARCHITECT OF RECORD.

Copyright © 2022 Rachlin Partners, All Rights Reserved.

Performing Arts Center

Hacienda La Puente Unified School District
635 North California Avenue
La Puente, CA 91744

Re	Date	Issue
1	7.22.22	50% DD
2	10.21.22	50% CD
3	12.09.22	100% CD DSA SUBMITTAL
4	6.19.23	100% CD DSA RESUBMITTAL
5	9.20.23	DSA BACK CHECK

Date: 9.20.2023
Scale: 1/8" = 1'-0"
Drawn By: EMB
Checked By: HJSA

Architect / Engineer

LICENSED ARCHITECT
ELIZABETH M. BRETZ
NO. C-35229
REN. 8-31-25
STATE OF CALIFORNIA

Consultants
Miyamoto International, Inc.
The Ruzika Company, Inc.
MDC Consulting Engineers
Pocock Design Solutions
Newson Brown Acoustics, LLC
VCA Engineers, Inc.
HJSA Consulting

Sheet Title

Audiovisual - Rigging Pit Plan

Sheet

TA210

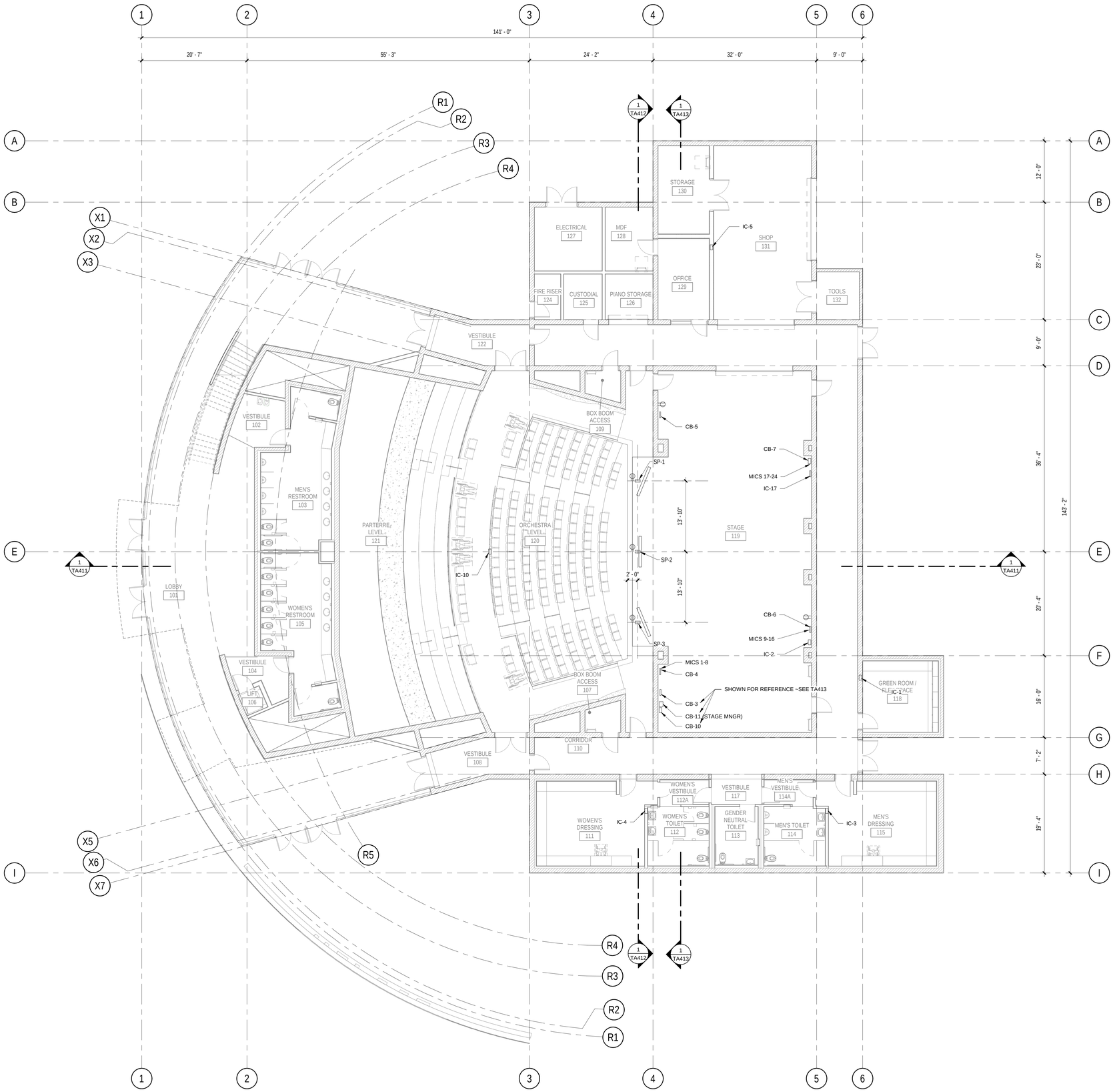

1 ORCHESTRA/PARTERRE LEVEL FLOOR PLAN

SCALE: 1/8" = 1'-0"

0' 4' 8' 16' 24'

NORTH

C:\Users\Erich.Bretz\OneDrive - Gerald H. Phipps, Inc\Documents\R22_HLPUSD-PAC_Central_HJSA_mbbimsolutions.rvt

APPL No. A03-122864

IDENTIFICATION STAMP
DIV. OF THE STATE ARCHITECT
APP: 03-122864 INC:
REVIEWED FOR
SS ☑ FLS ☑ ACS ☑
DATE: 10/03/2023

DSA

Architect

RACHLIN PARTNERS
8640 National Boulevard
Culver City, CA 90232
310.204.3400

Disclaimer:

THESE DRAWINGS ARE THE PROPERTY OF THE ARCHITECT. THE DESIGNS SHOWN AND DESCRIBED HEREIN INCLUDING ALL TECHNICAL DRAWINGS ARE PROPRIETARY AND CANNOT BE COPIED, DUPLICATED OR COMMERCIALLY EXPLOITED EITHER IN WHOLE OR IN PART WITHOUT PRIOR WRITTEN CONSENT. SHALL NOT BE USED BY THE OWNER ON OTHER PROJECTS, FOR ADDITIONS TO THIS PROJECT, OR FOR COMPLETION OF THIS PROJECT BY OTHERS. THE OWNER AGREES TO HOLD HARMLESS, INDEMNIFY AND DEFEND THE ARCHITECT AGAINST ALL DAMAGES, CLAIMS AND LOSSES, INCLUDING DEFENSE COSTS, ARISING OUT OF ANY REUSE OF PLANS AND SPECIFICATIONS WITHOUT THE WRITTEN AUTHORIZATION OF THE ARCHITECT OF RECORD.

Copyright © 2022 Rachlin Partners, All Rights Reserved.

Performing Arts Center

Hacienda La Puente Unified School District
635 North California Avenue
La Puente, CA 91744

Re	Date	Issue
1	7.22.22	50% DD
2	10.21.22	50% CD
3	12.09.22	100% CD DSA SUBMITTAL
4	6.19.23	100% CD DSA RESUBMITTAL
5	9.20.23	DSA BACK CHECK

Date: 9.20.2023
Scale: 1/8" = 1'-0"
Drawn By: EMB
Checked By: HJSA

Architect / Engineer

LICENSED ARCHITECT
JOSEPH M. HASSER
NO. C-28229
REN. 8-31-25
STATE OF CALIFORNIA

Consultants

Miyamoto International, Inc.
The Ruzika Company, Inc.
MDC Consulting Engineers
Pocock Design Solutions
Newson Brown Acoustics, LLC
VCA Engineers, Inc.
HJSA Consulting

Sheet Title

Audiovisual - Orchestra Level Plan

Sheet

TA211

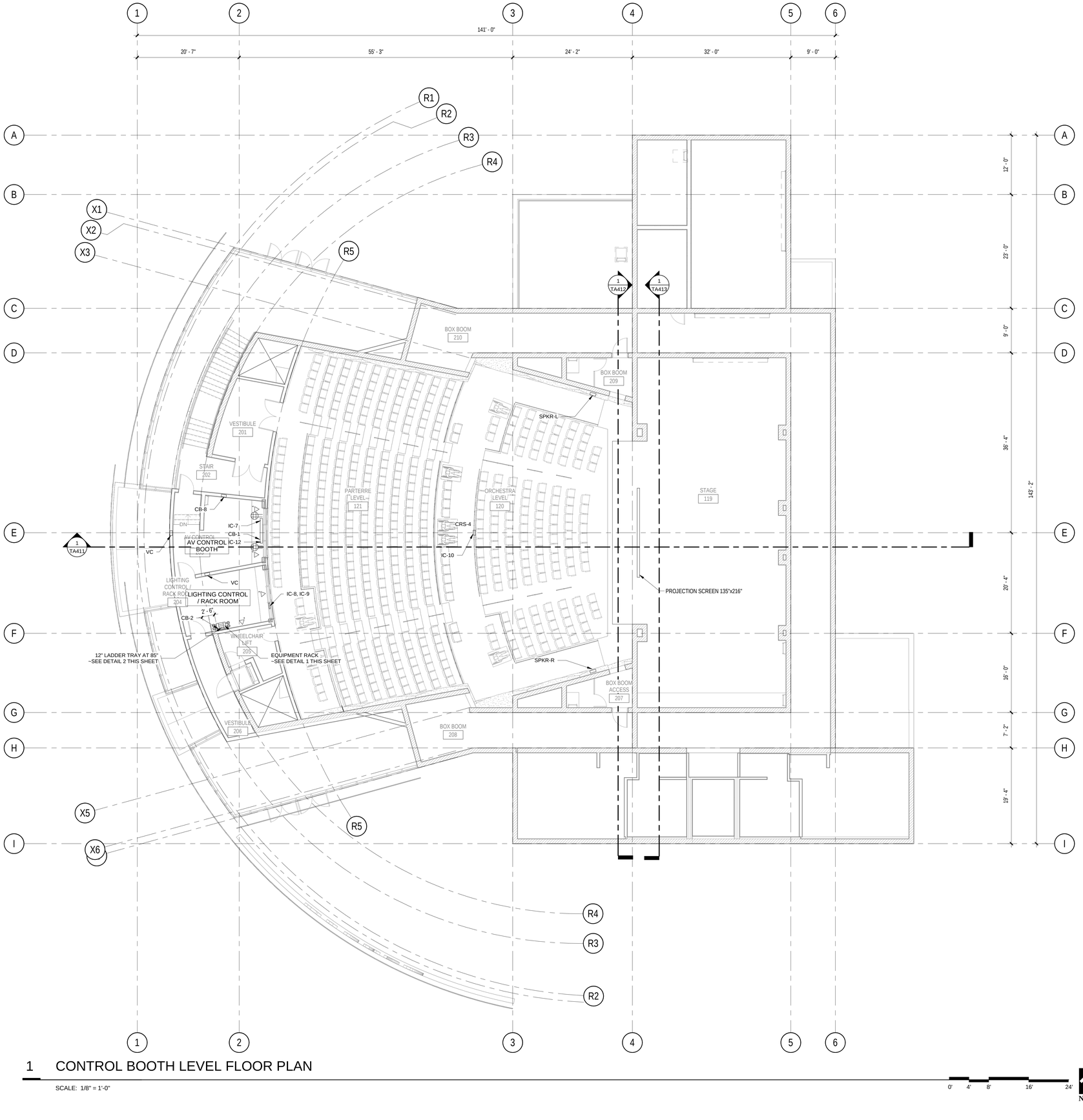

1 CONTROL BOOTH LEVEL FLOOR PLAN

SCALE: 1/8" = 1'-0"

0' 4' 8' 16' 24'

NORTH

"3/8" DIAMETER HILTI KB-TZ2 X 2 3/4" MIN. EFFECTIVE EMBEDMENT (ICC ESR 4266)

NOTE: Do not use washers. The bolt head must contact the inside of seismic bracket

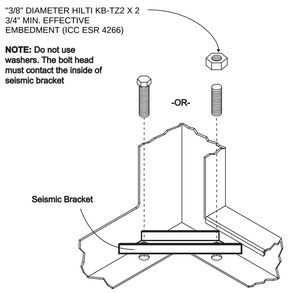

Rack Inside Corner
NOT Typical of all Installations

NOTE: The leveling foot rivnut located in the corner does not need to be removed. Tighten the floor anchor completely. Deflection will occur around the rivnut. This is required, it pre-loads the corner in compression.

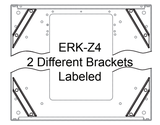

Front of Rack

SEISMIC BRACKETS
AT BOTTOM OF RACK

RACK WEIGHT = 368 LBS.

DETAIL 1 EQUIPMENT RACK

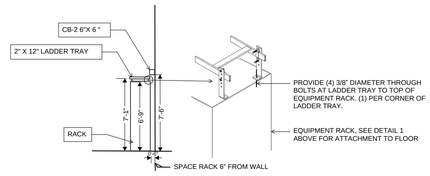

DETAIL 2 LADDER TRAY

APPL No. A03-122864

IDENTIFICATION STAMP
DIV. OF THE STATE ARCHITECT
APP: 03-122864 INC:
REVIEWED FOR
SS ☑ FLS ☑ ACS ☑
DATE: 10/03/2023

DSA

Architect

RACHLIN
PARTNERS
8640 National Boulevard
Culver City, CA 90232
310.204.3400

Disclaimer:

THESE DRAWINGS ARE THE PROPERTY OF THE ARCHITECT. THE DESIGNS SHOWN AND DESCRIBED HEREIN INCLUDING ALL TECHNICAL DRAWINGS ARE PROPRIETARY AND CANNOT BE COPIED, DUPLICATED OR COMMERCIALLY EXPLOITED EXCEPT BY WRITTEN AGREEMENT. THESE DRAWINGS AND SPECIFICATIONS SHALL NOT BE USED BY THE OWNER ON OTHER PROJECTS, FOR ADDITIONS TO THIS PROJECT, OR FOR COMPLETION OF THIS PROJECT BY OTHERS. THE OWNER AGREES TO HOLD HARMLESS, INDEMNIFY AND DEFEND THE ARCHITECT AGAINST ALL DAMAGES, CLAIMS AND LOSSES, INCLUDING DEFENSE COSTS, ARISING OUT OF ANY REUSE OF PLANS AND SPECIFICATIONS WITHOUT THE WRITTEN AUTHORIZATION OF THE ARCHITECT OF RECORD.

Copyright © 2022 Rachlin Partners, All Rights Reserved.

Performing Arts Center

Hacienda La Puente Unified School District
635 North California Avenue
La Puente, CA 91744

Re	Date	Issue
1	7.22.22	50% DD
2	10.21.22	50% CD
3	12.09.22	100% CD DSA SUBMITTAL
4	6.19.23	100% CD DSA RESUBMITTAL
5	9.20.23	DSA BACK CHECK

Date: 9.20.2023
Scale: 1/8" = 1'-0"
Drawn By: EMB
Checked By: HJSA

Architect / Engineer

LICENSED ARCHITECT
HOWARD J. SAKAI
NO. C-26229
REN. 8-31-25
STATE OF CALIFORNIA

Consultants
Miyamoto International, Inc.
The Ruzika Company, Inc.
MDC Consulting Engineers
Pocock Design Solutions
Newson Brown Acoustics, LLC
VCA Engineers, Inc.
HJSA Consulting

Sheet Title

Audiovisual - Control Booth Level Plan

Sheet

TA212

C:\Users\Erich.Bretz\OneDrive - Gerald H. Phipps, Inc\Documents\R22_HLPUSD-PAC_Central_HJSA_mbbmsolutions.rvt

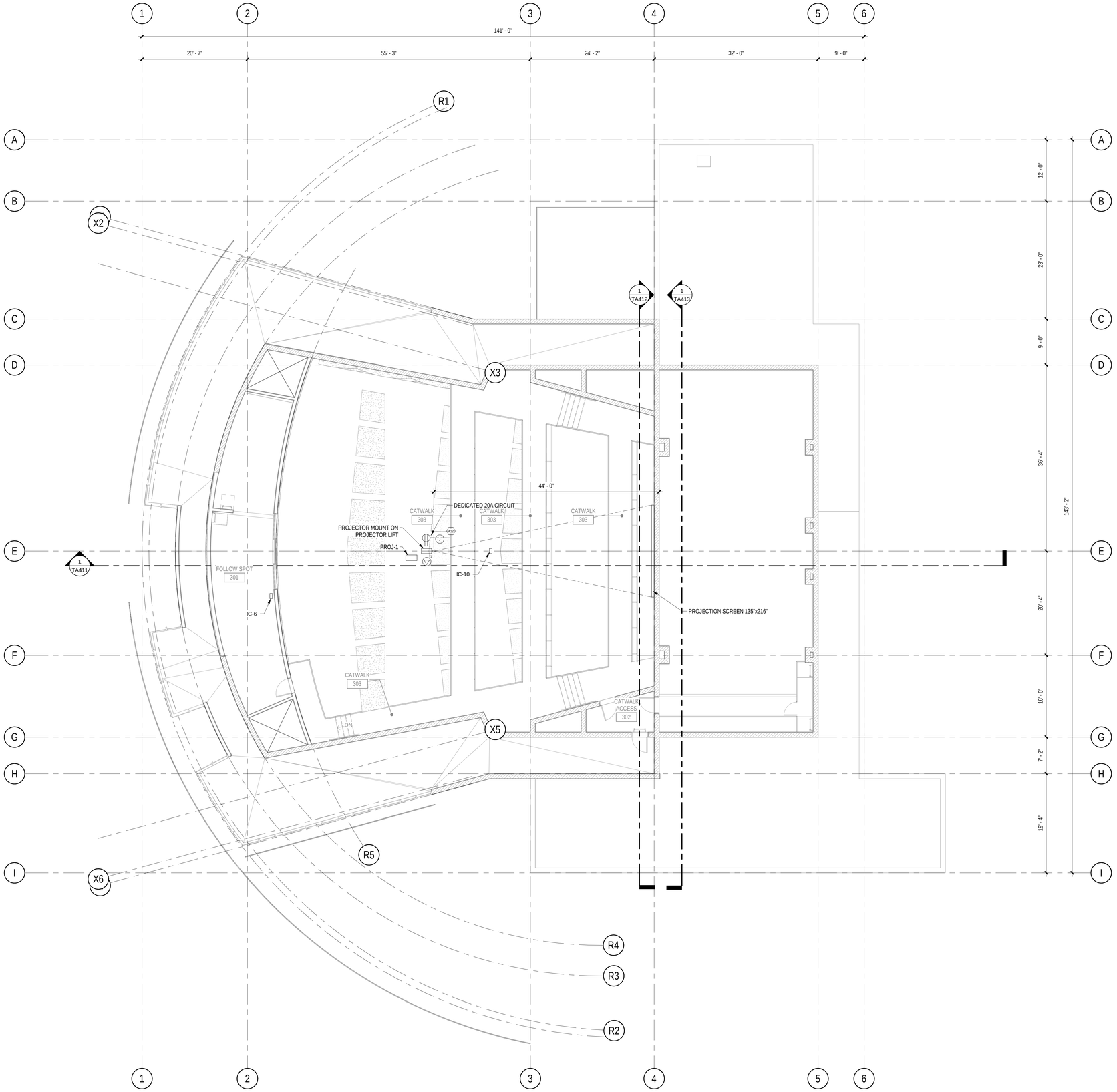

1 FOLLOW SPOT LEVEL FLOOR PLAN

SCALE: 1/8" = 1'-0"

0' 4' 8' 16' 24'

NORTH

C:\Users\ErichBretz\OneDrive - Gerald H. Phipps, Inc\Documents\R22_HLPUSD-PAC_Central_HJSA_mbimsolutions.rvt

CONSTRUCTION KEYNOTES

No.	DESCRIPTION

APPL No. A03-122864

IDENTIFICATION STAMP
DIV. OF THE STATE ARCHITECT
APP: 03-122864 INC:
REVIEWED FOR
SS ☑ FLS ☑ ACS ☑
DATE: 10/03/2023

DSA

Architect

RACHLIN
PARTNERS
8640 National Boulevard
Culver City, CA 90232
310.204.3400

Disclaimer:

THESE DRAWINGS ARE THE PROPERTY OF THE ARCHITECT. THE DESIGNS SHOWN AND DESCRIBED HEREIN INCLUDING ALL TECHNICAL DRAWINGS ARE PROPRIETARY AND CANNOT BE COPIED, DUPLICATED OR COMMERCIALLY EXPLOITED EXCEPT BY WRITTEN AGREEMENT. THESE DRAWINGS AND DESIGNS SHALL NOT BE USED BY THE OWNER ON OTHER PROJECTS, FOR ADDITIONS TO THIS PROJECT, OR FOR COMPLETION OF THIS PROJECT BY OTHERS. THE OWNER AGREES TO HOLD HARMLESS, INDEMNIFY AND DEFEND THE ARCHITECT AGAINST ALL DAMAGES, CLAIMS AND LOSSES, INCLUDING DEFENSE COSTS, ARISING OUT OF ANY REUSE OF PLANS AND SPECIFICATIONS WITHOUT THE WRITTEN AUTHORIZATION OF THE ARCHITECT OF RECORD.

Copyright © 2022 Rachlin Partners, All Rights Reserved.

Performing Arts Center

Hacienda La Puente Unified School District
635 North California Avenue
La Puente, CA 91744

Re	Date	Issue
1	7.22.22	50% DD
2	10.21.22	50% CD
3	12.09.22	100% CD DSA SUBMITTAL
4	6.19.23	100% CD DSA RESUBMITTAL
5	9.20.23	DSA BACK CHECK

Date: 9.20.2023
Scale: 1/8" = 1'-0"
Drawn By: EMB
Checked By: HJSA

Architect / Engineer

LICENSED ARCHITECT
RICHARD H. PHIPPS
NO. C-25225
REN. 8-31-25
STATE OF CALIFORNIA

Consultants
Miyamoto International, Inc.
The Ruzika Company, Inc.
MDC Consulting Engineers
Pocock Design Solutions
Newson Brown Acoustics, LLC
VCA Engineers, Inc.
HJSA Consulting

Sheet Title

Audiovisual - Follow Spot Level Plan

Sheet

TA213

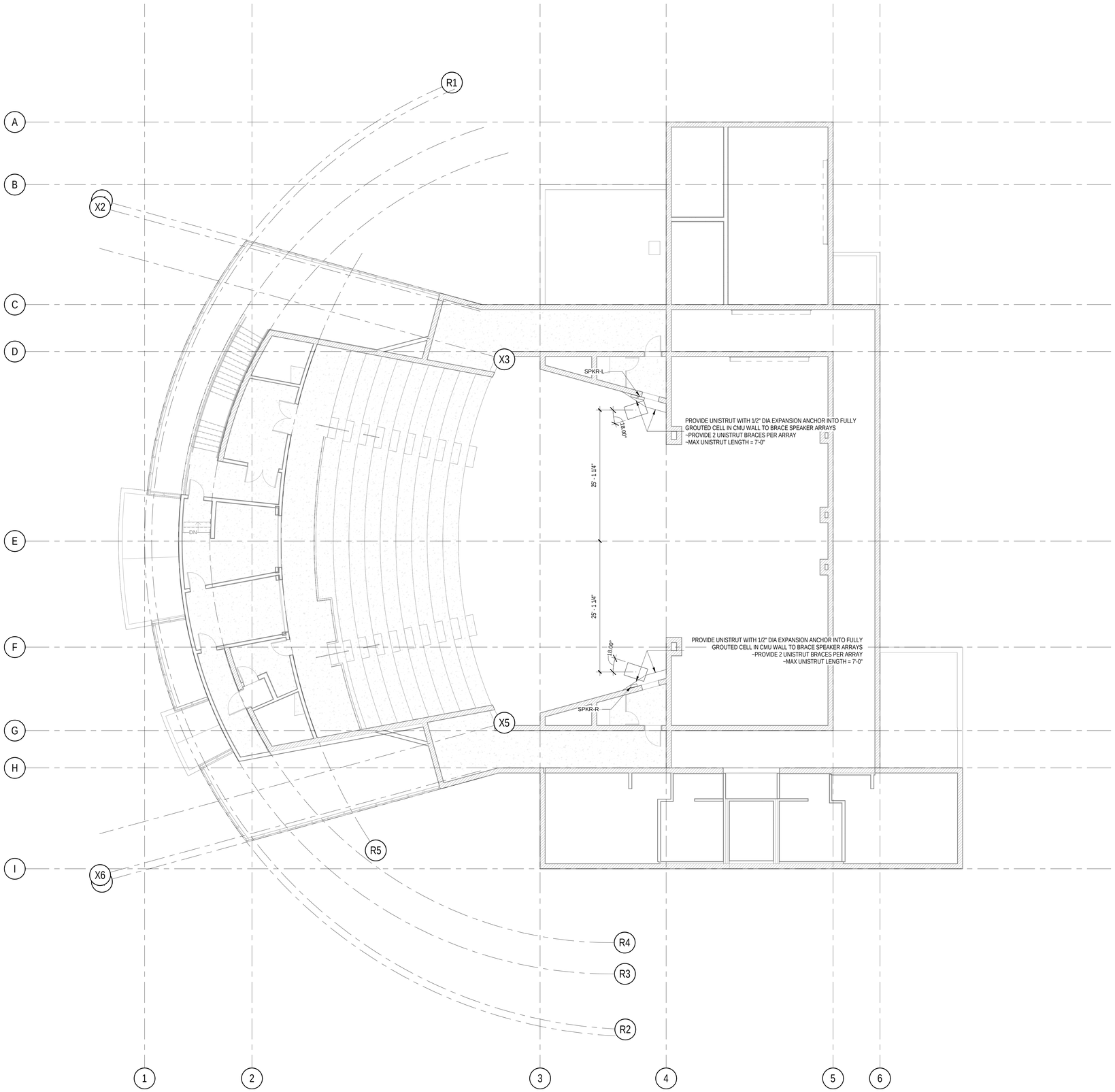

1 SPEAKER DETAILS

SCALE: 1/8" = 1'-0"

NOTE:
EACH SPEAKER ARRAY WEIGHTS 666.46 LBS.
MOUNTING POINT MUST SUPPORT 3 X THE WEIGHT.
DESIGN MUST BE STAMPED BY A PROFESSIONAL ENGINEER.

C:\Users\Erich.Bretz\OneDrive - Gerald H. Phipps, Inc\Documents\R22_HLPUSD-PAC_Central_HJSA_mbbimsolutions.rvt

APPL No. A03-122864

IDENTIFICATION STAMP
DIV. OF THE STATE ARCHITECT
APP: 03-122864 INC:
REVIEWED FOR
SS ☑ FLS ☑ ACS ☑
DATE: 10/03/2023

DSA

Architect

RACHLIN PARTNERS
8640 National Boulevard
Culver City, CA 90232
310.204.3400

Disclaimer:

THESE DRAWINGS ARE THE PROPERTY OF THE ARCHITECT. THE DESIGNS SHOWN AND DESCRIBED HEREIN INCLUDING ALL TECHNICAL DRAWINGS ARE PROPRIETARY AND CANNOT BE COPIED, DUPLICATED OR COMMERCIALLY EXPLOITED EITHER IN WHOLE OR IN PART WITHOUT PRIOR WRITTEN CONSENT. SHALL NOT BE USED BY THE OWNER ON OTHER PROJECTS, FOR ADDITIONS TO THIS PROJECT, OR FOR COMPLETION OF THIS PROJECT BY OTHERS. THE OWNER AGREES TO HOLD HARMLESS, INDEMNIFY AND DEFEND THE ARCHITECT AGAINST ALL DAMAGES, CLAIMS AND LOSSES, INCLUDING DEFENSE COSTS, ARISING OUT OF ANY REUSE OF PLANS AND SPECIFICATIONS WITHOUT THE WRITTEN AUTHORIZATION OF THE ARCHITECT OF RECORD.

Copyright © 2022 Rachlin Partners, All Rights Reserved.

Performing Arts Center

Hacienda La Puente Unified School District
635 North California Avenue
La Puente, CA 91744

Re	Date	Issue
1	7.22.22	50% DD
2	10.21.22	50% CD
3	12.09.22	100% CD DSA SUBMITTAL
4	6.19.23	100% CD DSA RESUBMITTAL
5	9.20.23	DSA BACK CHECK

Date: 9.20.2023
Scale: 1/8" = 1'-0"
Drawn By: EMB
Checked By: HJSA

Architect / Engineer

LICENSED ARCHITECT
ERICH M. BRETZ
NO. C-28229
REN. 8-31-25
STATE OF CALIFORNIA

Consultants
Miyamoto International, Inc.
The Ruzika Company, Inc.
MDC Consulting Engineers
Pocock Design Solutions
Newson Brown Acoustics, LLC
VCA Engineers, Inc.
HJSA Consulting

Sheet Title

Audiovisual - Speaker Array Mounting Details

Sheet

TA232

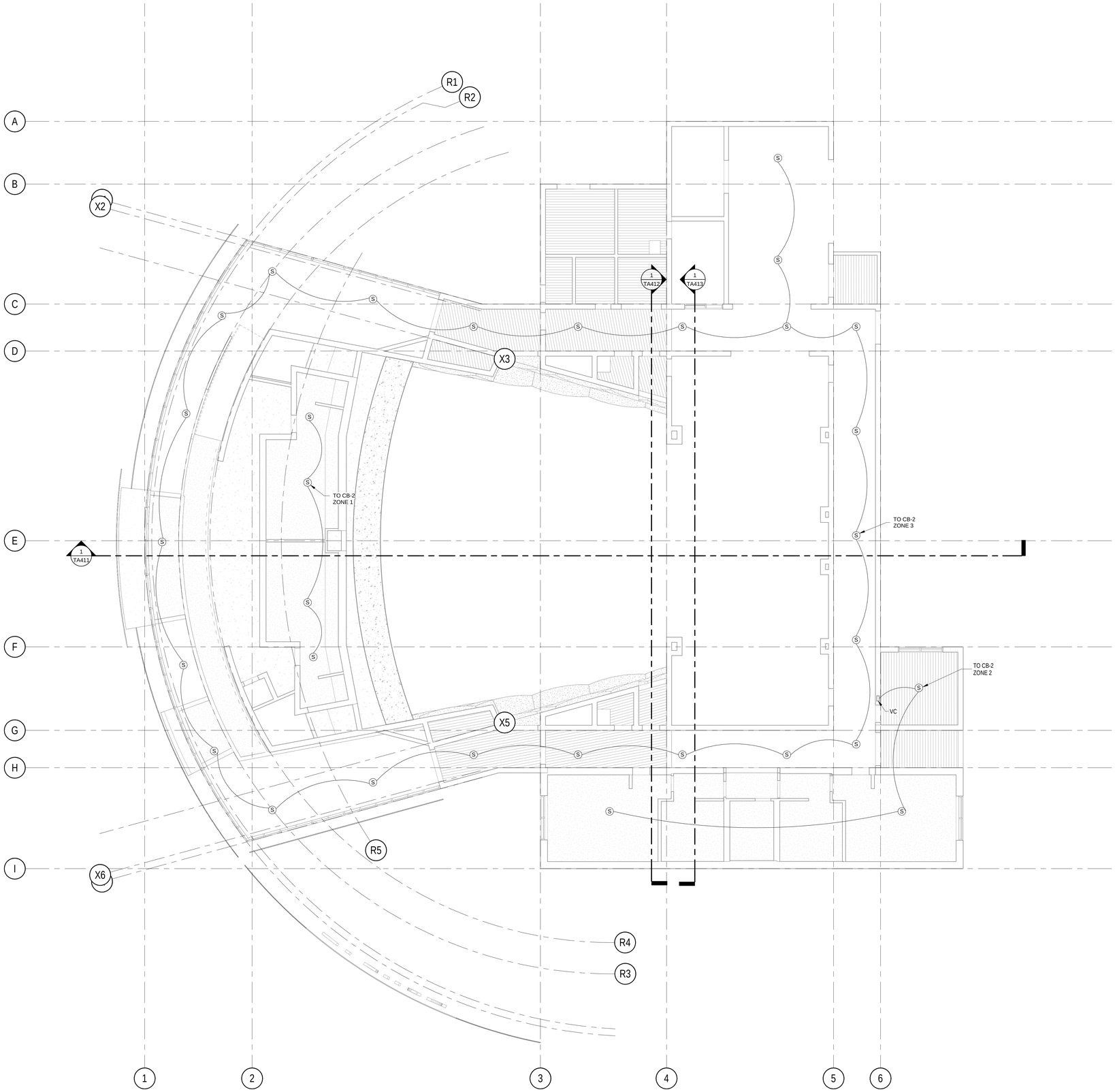

1 ORCHESTRA LEVEL REFLECTED CEILING PLAN

SCALE: 1/8" = 1'-0"

0' 4' 8' 16' 24'

NORTH

C:\Users\Erich.Bretz\Onedrive - Gerald H. Phipps, Inc\Documents\R22_HLP\SD-PAC_Central_HJSA_mbimsolutions.rvt

APPL No. A03-122864

IDENTIFICATION STAMP
DIV. OF THE STATE ARCHITECT
APP: 03-122864 INC:
REVIEWED FOR
SS ☑ FLS ☑ ACS ☑
DATE: 10/03/2023

DSA

Architect

RACHLIN
PARTNERS
8640 National Boulevard
Culver City, CA 90232
310.204.3400

Disclaimer:

THESE DRAWINGS ARE THE PROPERTY OF THE ARCHITECT. THE DESIGNS SHOWN AND DESCRIBED HEREIN INCLUDING ALL TECHNICAL DRAWINGS ARE PROPRIETARY AND CANNOT BE COPIED, DUPLICATED OR COMMERCIALLY EXPLOITED EXCEPT BY WRITTEN AGREEMENT. THESE DRAWINGS AND SPECIFICATIONS SHALL NOT BE USED BY THE OWNER ON OTHER PROJECTS, FOR ADDITIONS TO THIS PROJECT, OR FOR COMPLETION OF THIS PROJECT BY OTHERS. THE OWNER AGREES TO HOLD HARMLESS, INDEMNIFY AND DEFEND THE ARCHITECT AGAINST ALL DAMAGES, CLAIMS AND LOSSES, INCLUDING DEFENSE COSTS, ARISING OUT OF ANY REUSE OF PLANS AND SPECIFICATIONS WITHOUT THE WRITTEN AUTHORIZATION OF THE ARCHITECT OF RECORD.

Copyright © 2022 Rachlin Partners, All Rights Reserved.

Performing Arts Center

Hacienda La Puente Unified School District
635 North California Avenue
La Puente, CA 91744

Re	Date	Issue
1	7.22.22	50% DD
2	10.21.22	50% CD
3	12.09.22	100% CD DSA SUBMITTAL
4	6.19.23	100% CD DSA RESUBMITTAL
5	9.20.23	DSA BACK CHECK

Date: 9.20.2023
Scale: 1/8" = 1'-0"
Drawn By: EMB
Checked By: HJSA

Architect / Engineer

LICENSED ARCHITECT
JOSEPH INFANTE
NO. C-28229
REN. 8-31-25
STATE OF CALIFORNIA

Consultants

Miyamoto International, Inc.
The Ruzika Company, Inc.
MDC Consulting Engineers
Pocock Design Solutions
Newson Brown Acoustics, LLC
VCA Engineers, Inc.
HJSA Consulting

Sheet Title

Audiovisual - Orchestra Level - Reflected Ceiling Plan

Sheet

TA241

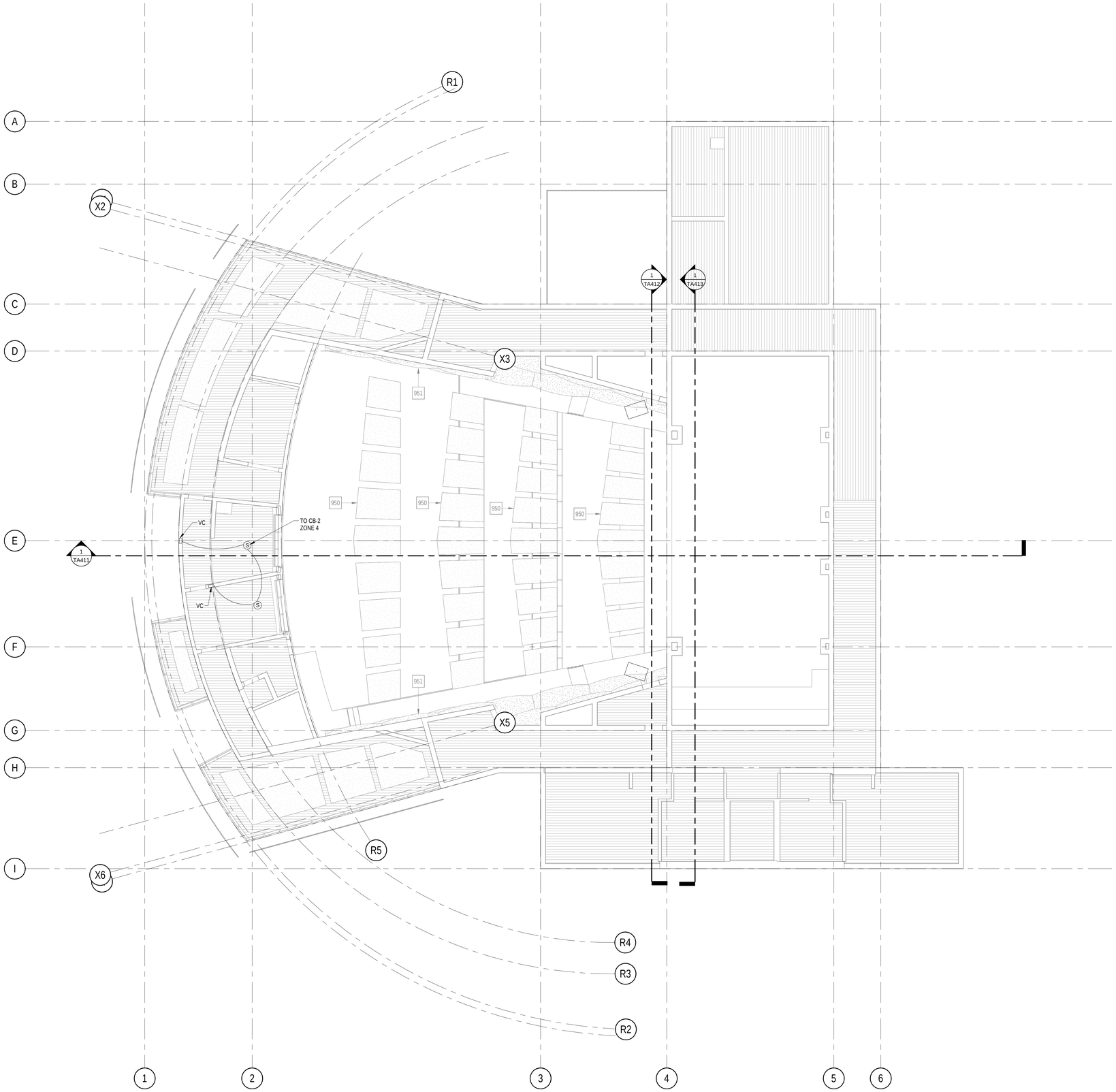

1 CONTROL BOOTH LEVEL REFLECTED CEILING PLAN

SCALE: 1/8" = 1'-0"

0' 4' 8' 16' 24'

NORTH

C:\Users\Erich.Bretz\OneDrive - Gerald H. Phipps, Inc\Documents\R22_HLPUSD-PAC_Central_HJSA_mbimsolutions.rvt

APPL No. A03-122864

IDENTIFICATION STAMP
DIV. OF THE STATE ARCHITECT
APP: 03-122864 INC:
REVIEWED FOR
SS ☑ FLS ☑ ACS ☑
DATE: 10/03/2023

DSA

Architect

RACHLIN
PARTNERS
8640 National Boulevard
Culver City, CA 90232
310.204.3400

Disclaimer:

THESE DRAWINGS ARE THE PROPERTY OF THE ARCHITECT. THE DESIGNS SHOWN AND DESCRIBED HEREIN INCLUDING ALL TECHNICAL DRAWINGS ARE PROPRIETARY AND CANNOT BE COPIED, DUPLICATED OR COMMERCIALLY EXPLOITED EXCEPT BY WRITTEN AGREEMENT. THESE DRAWINGS AND SPECIFICATIONS SHALL NOT BE USED BY THE OWNER ON OTHER PROJECTS, FOR ADDITIONS TO THIS PROJECT, OR FOR COMPLETION OF THIS PROJECT BY OTHERS. THE OWNER AGREES TO HOLD HARMLESS, INDEMNIFY AND DEFEND THE ARCHITECT AGAINST ALL DAMAGES, CLAIMS AND LOSSES, INCLUDING DEFENSE COSTS, ARISING OUT OF ANY REUSE OF PLANS AND SPECIFICATIONS WITHOUT THE WRITTEN AUTHORIZATION OF THE ARCHITECT OF RECORD.

Copyright © 2022 Rachlin Partners, All Rights Reserved.

Performing Arts Center

Hacienda La Puente Unified School District
635 North California Avenue
La Puente, CA 91744

Re	Date	Issue
1	7.22.22	50% DD
2	10.21.22	50% CD
3	12.09.22	100% CD DSA SUBMITTAL
4	6.19.23	100% CD DSA RESUBMITTAL
5	9.20.23	DSA BACK CHECK

Date: 9.20.2023
Scale: 1/8" = 1'-0"
Drawn By: EMB
Checked By: HJSA

Architect / Engineer

LICENSED ARCHITECT
JAMES H. JOHNSON
NO. C-28029
REN. 8-31-25
STATE OF CALIFORNIA

Consultants

Miyamoto International, Inc.
The Ruzika Company, Inc.
MDC Consulting Engineers
Pocock Design Solutions
Newson Brown Acoustics, LLC
VCA Engineers, Inc.
HJSA Consulting

Sheet Title

Audiovisual - Control Booth Level - Reflected Ceiling Plan

Sheet

TA242

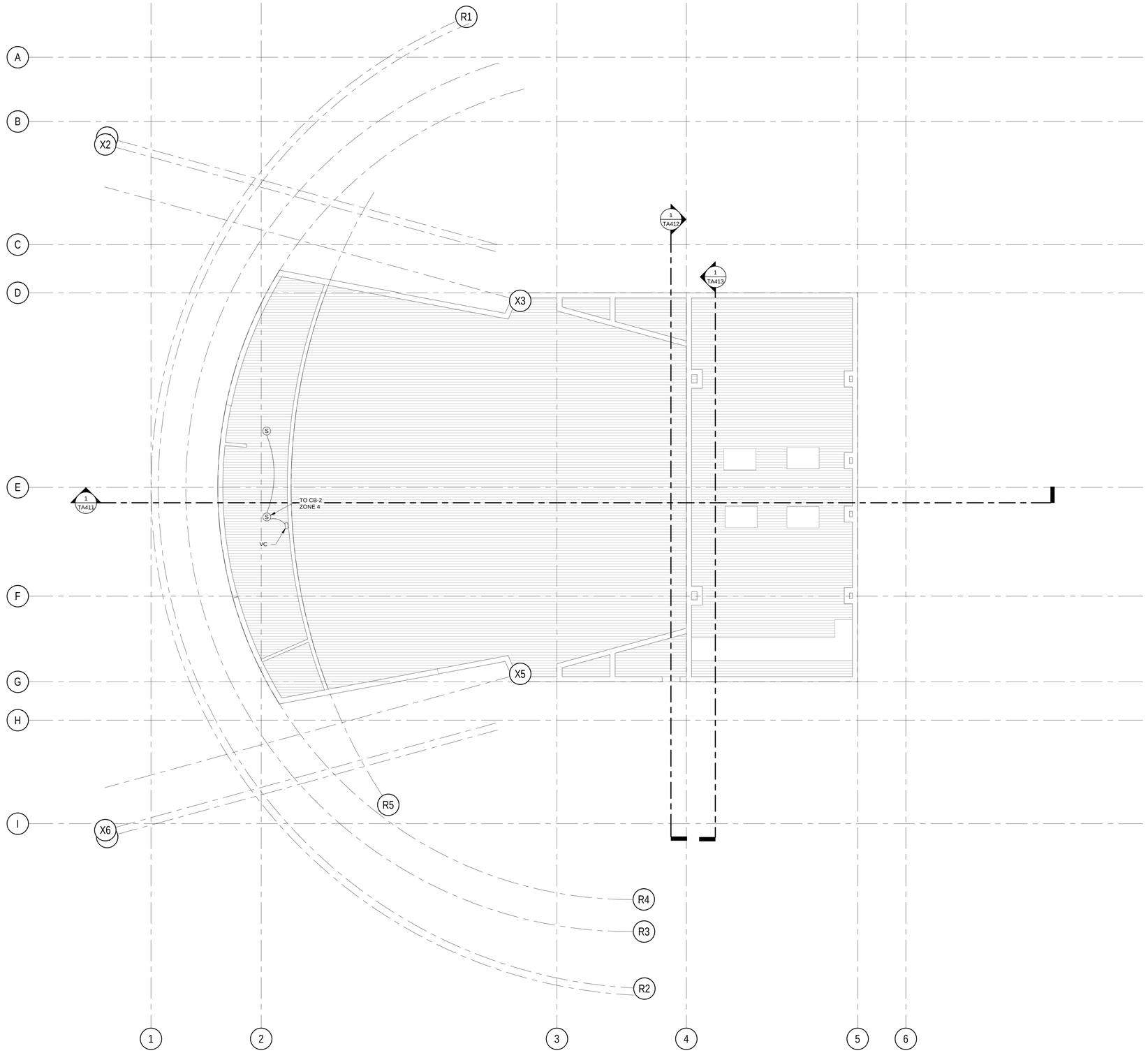

1 FOLLOW SPOT LEVEL REFLECTED CEILING PLAN

SCALE: 1/8" = 1'-0"

0' 4' 8' 16' 24'

NORTH

C:\Users\Erich.Bretz\OneDrive - Gerald H. Phipps, Inc\Documents\R22_HLPUSD-PAC_Central_HJSA_mbbimsolutions.rvt

APPL No. A03-122864

IDENTIFICATION STAMP
DIV. OF THE STATE ARCHITECT
APP: 03-122864 INC:
REVIEWED FOR
SS ☑ FLS ☑ ACS ☑
DATE: 10/03/2023

DSA

Architect

RACHLIN
PARTNERS
8640 National Boulevard
Culver City, CA 90232
310.204.3400

Disclaimer:

THESE DRAWINGS ARE THE PROPERTY OF THE ARCHITECT. THE DESIGNS SHOWN AND DESCRIBED HEREIN INCLUDING ALL TECHNICAL DRAWINGS ARE PROPRIETARY AND CANNOT BE COPIED, DUPLICATED OR COMMERCIALLY EXPLOITED EXCEPT BY WRITTEN AGREEMENT. THESE DRAWINGS AND DESIGNS SHALL NOT BE USED BY THE OWNER ON OTHER PROJECTS, FOR ADDITIONS TO THIS PROJECT, OR FOR COMPLETION OF THIS PROJECT BY OTHERS. THE OWNER AGREES TO HOLD HARMLESS, INDEMNIFY AND DEFEND THE ARCHITECT AGAINST ALL DAMAGES, CLAIMS AND LOSSES, INCLUDING DEFENSE COSTS, ARISING OUT OF ANY REUSE OF PLANS AND SPECIFICATIONS WITHOUT THE WRITTEN AUTHORIZATION OF THE ARCHITECT OF RECORD.

Copyright © 2022 Rachlin Partners, All Rights Reserved.

Performing Arts Center

Hacienda La Puente Unified School District
635 North California Avenue
La Puente, CA 91744

Re	Date	Issue
1	7.22.22	50% DD
2	10.21.22	50% CD
3	12.09.22	100% CD DSA SUBMITTAL
4	6.19.23	100% CD DSA RESUBMITTAL
5	9.20.23	DSA BACK CHECK

Date: 9.20.2023
Scale: 1/8" = 1'-0"
Drawn By: EMB
Checked By: HJSA

Architect / Engineer

LICENSED ARCHITECT
JAMES CONRAD HJSA
NO. C-28029
REN. 8-31-25
STATE OF CALIFORNIA

Consultants
Miyamoto International, Inc.
The Ruzika Company, Inc.
MDC Consulting Engineers
Pocock Design Solutions
Newson Brown Acoustics, LLC
VCA Engineers, Inc.
HJSA Consulting

Sheet Title

Audiovisual - Follow Spot Level - Reflected Ceiling Plan

Sheet

TA243

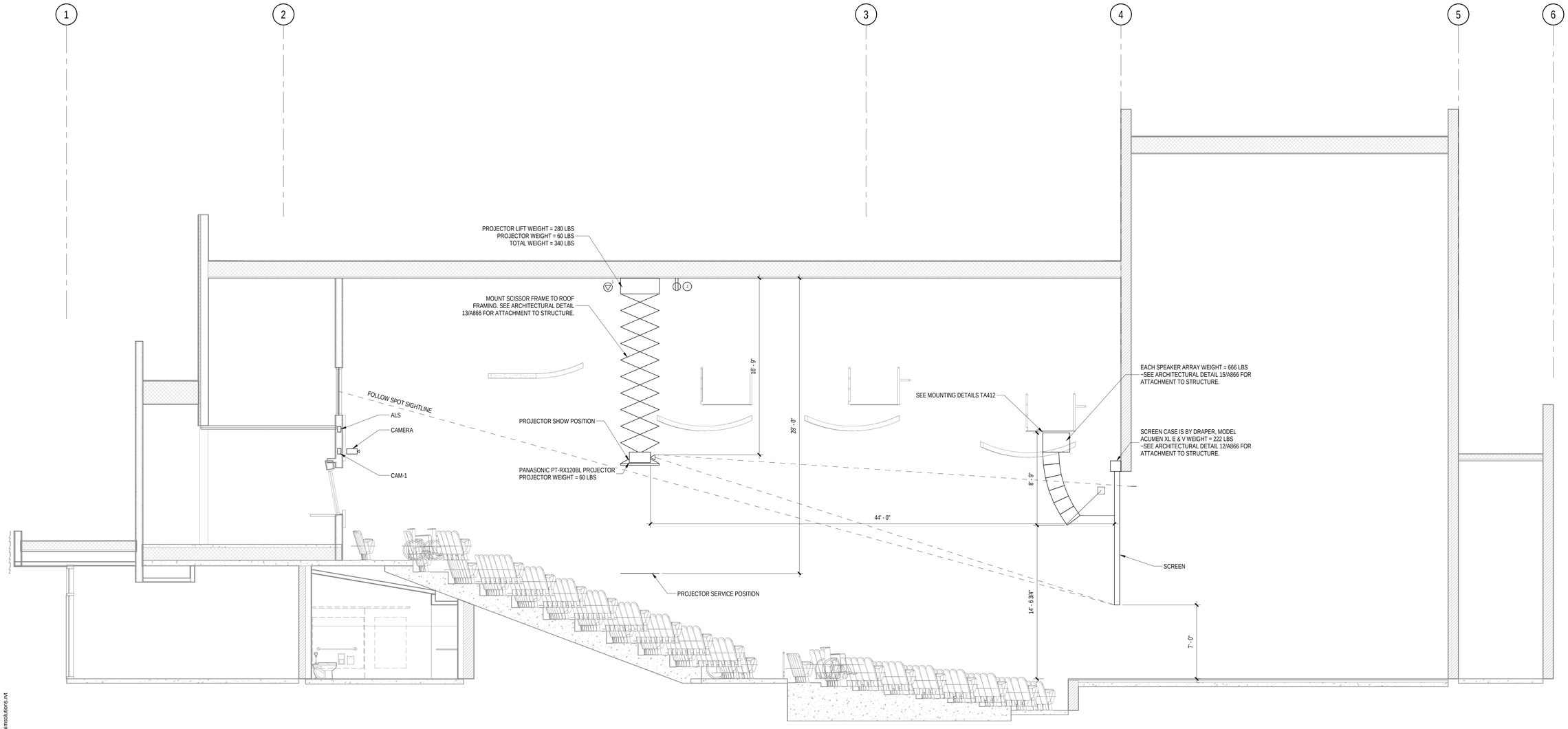

1 PROJECTION SIGHTLINES

SCALE: 1/4" = 1'-0"

C:\Users\Erich.Bretz\OneDrive - Gerald H. Phipps, Inc\Documents\R22_HLP\SD-PAC_Central_HJSA_mblimsolutions.rvt

APPL No. A03-122864

IDENTIFICATION STAMP
DIV. OF THE STATE ARCHITECT
APP: 03-122864 INC:
REVIEWED FOR
SS ☑ FLS ☑ ACS ☑
DATE: 10/03/2023

DSA

Architect

RACHLIN
PARTNERS
8640 National Boulevard
Culver City, CA 90232
310.204.3400

Disclaimer:

THESE DRAWINGS ARE THE PROPERTY OF THE ARCHITECT. THE DESIGNS SHOWN AND DESCRIBED HEREIN INCLUDING ALL TECHNICAL DRAWINGS ARE PROPRIETARY AND CANNOT BE COPIED, DUPLICATED OR COMMERCIALLY EXPLOITED EXCEPT BY WRITTEN AGREEMENT. THESE DRAWINGS AND SPECIFICATIONS SHALL NOT BE USED BY THE OWNER ON OTHER PROJECTS, FOR ADDITIONS TO THIS PROJECT, OR FOR COMPLETION OF THIS PROJECT BY OTHERS. THE OWNER AGREES TO HOLD HARMLESS, INDEMNIFY AND DEFEND THE ARCHITECT AGAINST ALL DAMAGES, CLAIMS AND LOSSES, INCLUDING DEFENSE COSTS, ARISING OUT OF ANY REUSE OF PLANS AND SPECIFICATIONS WITHOUT THE WRITTEN AUTHORIZATION OF THE ARCHITECT OF RECORD.

Copyright © 2022 Rachlin Partners, All Rights Reserved.

Performing Arts Center

Hacienda La Puente Unified School District
635 North California Avenue
La Puente, CA 91744

Re	Date	Issue
1	7.22.22	50% DD
2	10.21.22	50% CD
3	12.09.22	100% CD DSA SUBMITTAL
4	6.19.23	100% CD DSA RESUBMITTAL
5	9.20.23	DSA BACK CHECK

Date: 9.20.2023
Scale: 1/4" = 1'-0"
Drawn By: EMB
Checked By: HJSA

Architect / Engineer

LICENSED ARCHITECT
ERICH JOHN BRETZ
NO. C-28029
REN. 8-31-25
STATE OF CALIFORNIA

Consultants
Miyamoto International, Inc.
The Ruzika Company, Inc.
MDC Consulting Engineers
Pocock Design Solutions
Newson Brown Acoustics, LLC
VCA Engineers, Inc.
HJSA Consulting

Sheet Title

Audiovisual -

Sheet

TA411

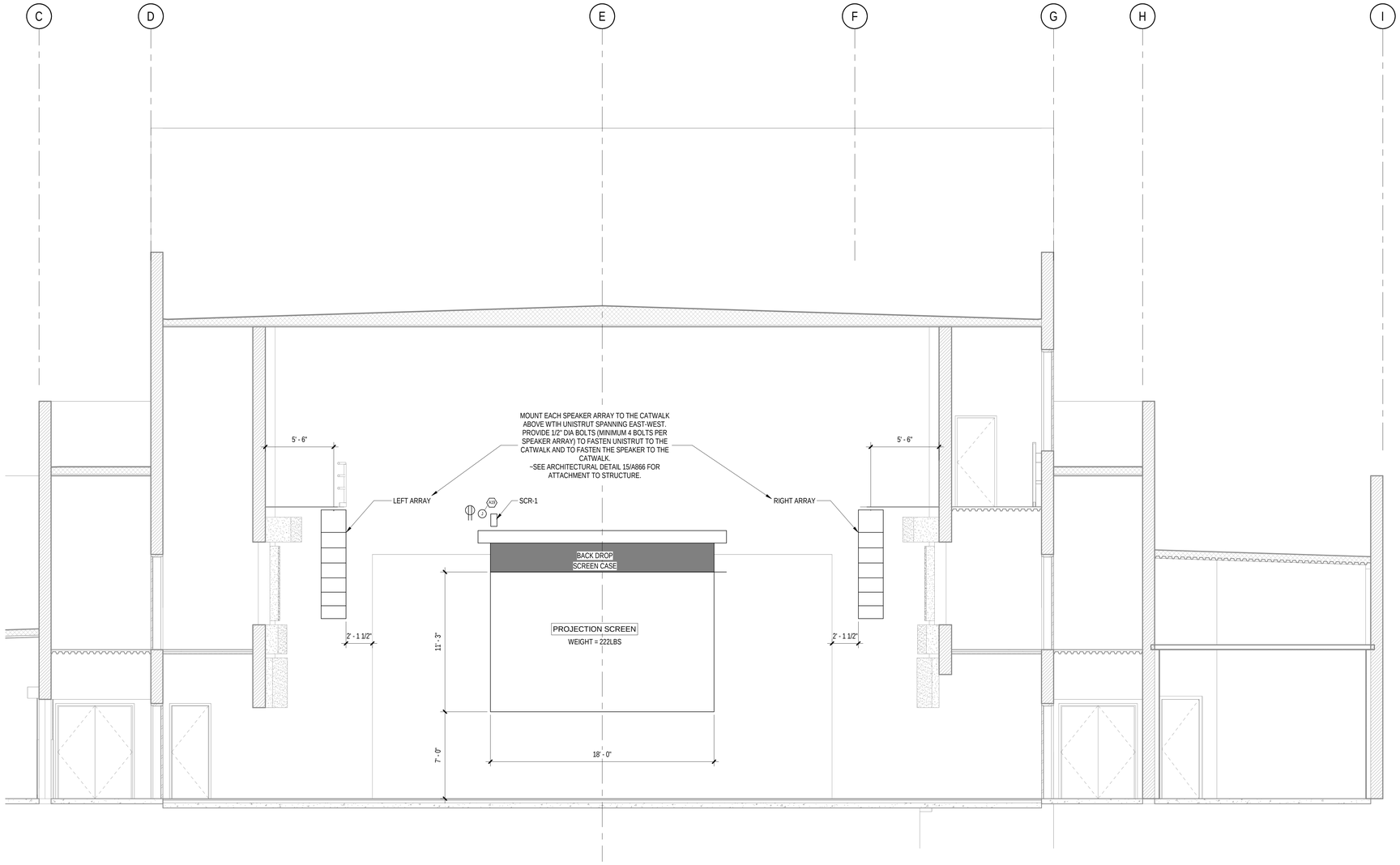

1 BUILDING SECTION LOOKING EAST (PROSCENIUM)

SCALE: 1/4" = 1'-0"

C:\Users\Erich.Bretz\OneDrive - Gerald H. Phipps, Inc\Documents\#22_HLPUSD-PAC_Central_HJSA_mbbimsolutions.rvt

APPL No. A03-122864

IDENTIFICATION STAMP
DIV. OF THE STATE ARCHITECT
APP: 03-122864 INC:
REVIEWED FOR
SS ☑ FLS ☑ ACS ☑
DATE: 10/03/2023

DSA

Architect

RACHLIN
PARTNERS
8640 National Boulevard
Culver City, CA 90232
310.204.3400

Disclaimer:

THESE DRAWINGS ARE THE PROPERTY OF THE ARCHITECT. THE DESIGNS SHOWN AND DESCRIBED HEREIN INCLUDING ALL TECHNICAL DRAWINGS ARE PROPRIETARY AND CANNOT BE COPIED, DUPLICATED OR COMMERCIALLY EXPLOITED EXCEPT BY WRITTEN AGREEMENT. THESE DRAWINGS AND SPECIFICATIONS SHALL NOT BE USED BY THE OWNER ON OTHER PROJECTS, FOR ADDITIONS TO THIS PROJECT, OR FOR COMPLETION OF THIS PROJECT BY OTHERS. THE OWNER AGREES TO HOLD HARMLESS, INDEMNIFY AND DEFEND THE ARCHITECT AGAINST ALL DAMAGES, CLAIMS AND LOSSES, INCLUDING DEFENSE COSTS, ARISING OUT OF ANY REUSE OF PLANS AND SPECIFICATIONS WITHOUT THE WRITTEN AUTHORIZATION OF THE ARCHITECT OF RECORD.

Copyright © 2022 Rachlin Partners, All Rights Reserved.

Performing Arts Center

Hacienda La Puente Unified School District
635 North California Avenue
La Puente, CA 91744

Re	Date	Issue
1	7.22.22	50% DD
2	10.21.22	50% CD
3	12.09.22	100% CD DSA SUBMITTAL
4	6.19.23	100% CD DSA RESUBMITTAL
5	9.20.23	DSA BACK CHECK

Date: 9.20.2023
Scale: 1/4" = 1'-0"
Drawn By: EMB
Checked By: HJSA

Architect / Engineer

LICENSED ARCHITECT
RICHARD M. RACHLIN
NO. C-26229
REN. 8-31-25
STATE OF CALIFORNIA

Consultants
Miyamoto International, Inc.
The Ruzika Company, Inc.
MDC Consulting Engineers
Pocock Design Solutions
Newson Brown Acoustics, LLC
VCA Engineers, Inc.
HJSA Consulting

Sheet Title

Audiovisual - Building Sections

Sheet

TA412

MOUNT PANEL TO WALL
WITH 1/2"Ø HILTI 'KB-TZ2' X
2 1/2" MIN. EMBED. (ICC-ES
ESR-4561) (4) TOTAL

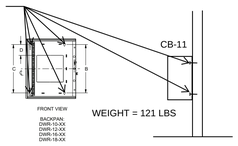

WEIGHT = 121 LBS

DETAIL 1

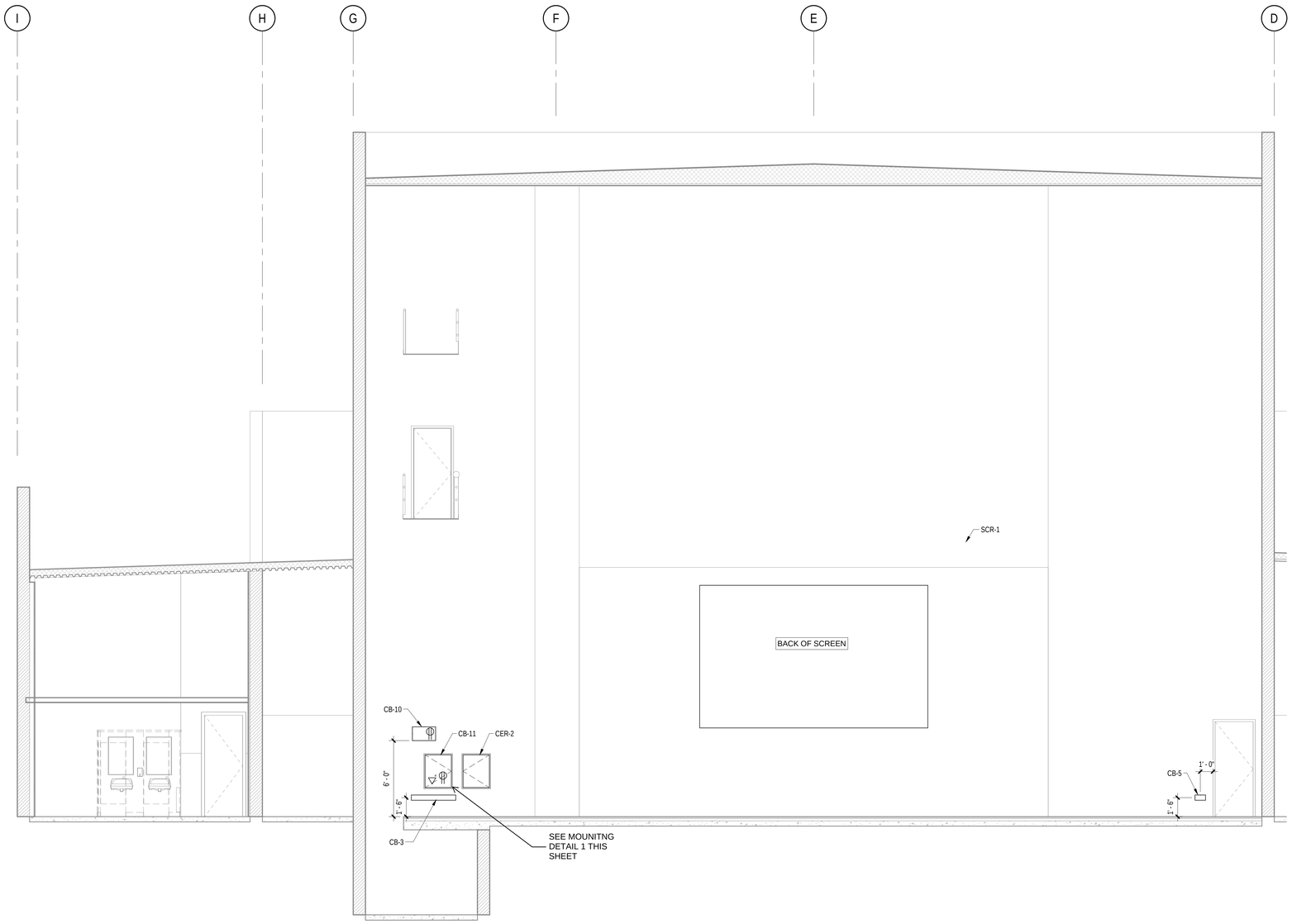

1 BUILDING CROSS SECTION THROUGH STAGE LOOKING WEST

SCALE: 1/4" = 1'-0"

C:\Users\Erich.Bretz\OneDrive - Gerald H. Phipps, Inc\Documents\R22_HLPUSD-PAC_Central_HJSA_mbimsolutions.rvt

APPL No. A03-122864

IDENTIFICATION STAMP
DIV. OF THE STATE ARCHITECT
APP: 03-122864 INC:
REVIEWED FOR
SS ☑ FLS ☑ ACS ☑
DATE: 10/03/2023

DSA

Architect

RACHLIN
PARTNERS
8640 National Boulevard
Culver City, CA 90232
310.204.3400

Disclaimer:

THESE DRAWINGS ARE THE PROPERTY OF THE ARCHITECT. THE DESIGNS SHOWN AND DESCRIBED HEREIN INCLUDING ALL TECHNICAL DRAWINGS ARE PROPRIETARY AND CANNOT BE COPIED, DUPLICATED OR COMMERCIALLY EXPLOITED EXCEPT BY WRITTEN AGREEMENT. THESE DRAWINGS AND SPECIFICATIONS SHALL NOT BE USED BY THE OWNER ON OTHER PROJECTS, FOR ADDITIONS TO THIS PROJECT, OR FOR COMPLETION OF THIS PROJECT BY OTHERS. THE OWNER AGREES TO HOLD HARMLESS, INDEMNIFY AND DEFEND THE ARCHITECT AGAINST ALL DAMAGES, CLAIMS AND LOSSES, INCLUDING DEFENSE COSTS, ARISING OUT OF ANY REUSE OF PLANS AND SPECIFICATIONS WITHOUT THE WRITTEN AUTHORIZATION OF THE ARCHITECT OF RECORD.

Copyright © 2022 Rachlin Partners, All Rights Reserved.

Performing Arts Center

Hacienda La Puente Unified School District
635 North California Avenue
La Puente, CA 91744

Re	Date	Issue
1	7.22.22	50% DD
2	10.21.22	50% CD
3	12.09.22	100% CD DSA SUBMITTAL
4	6.19.23	100% CD DSA RESUBMITTAL
5	9.20.23	DSA BACK CHECK

Date: 9.20.2023
Scale: 1/4" = 1'-0"
Drawn By: EMB
Checked By: HJSA

Architect / Engineer

LICENSED ARCHITECT
NO. C-28029
REN. 8-31-25
STATE OF CALIFORNIA

Consultants
Miyamoto International, Inc.
The Ruzika Company, Inc.
MDC Consulting Engineers
Pocock Design Solutions
Newson Brown Acoustics, LLC
VCA Engineers, Inc.
HJSA Consulting

Sheet Title

Building Sections

Sheet

TA413

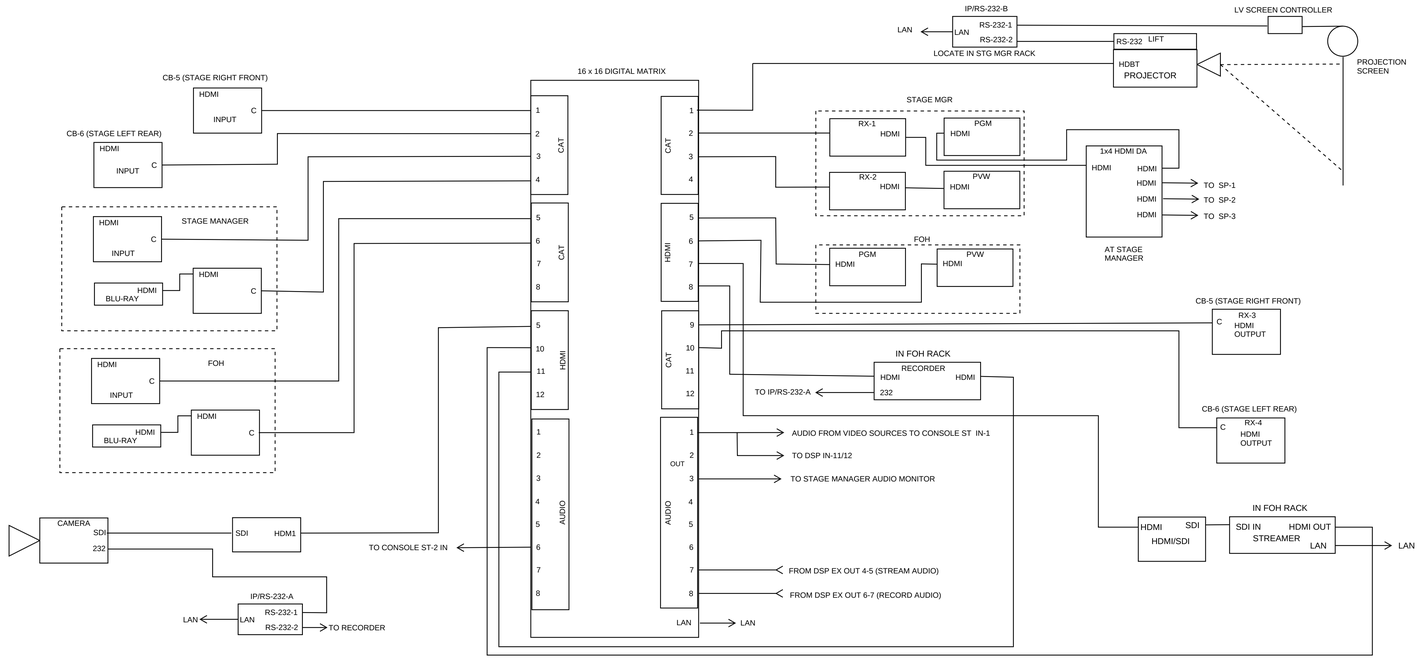

AV VIDEO ONE-LINE

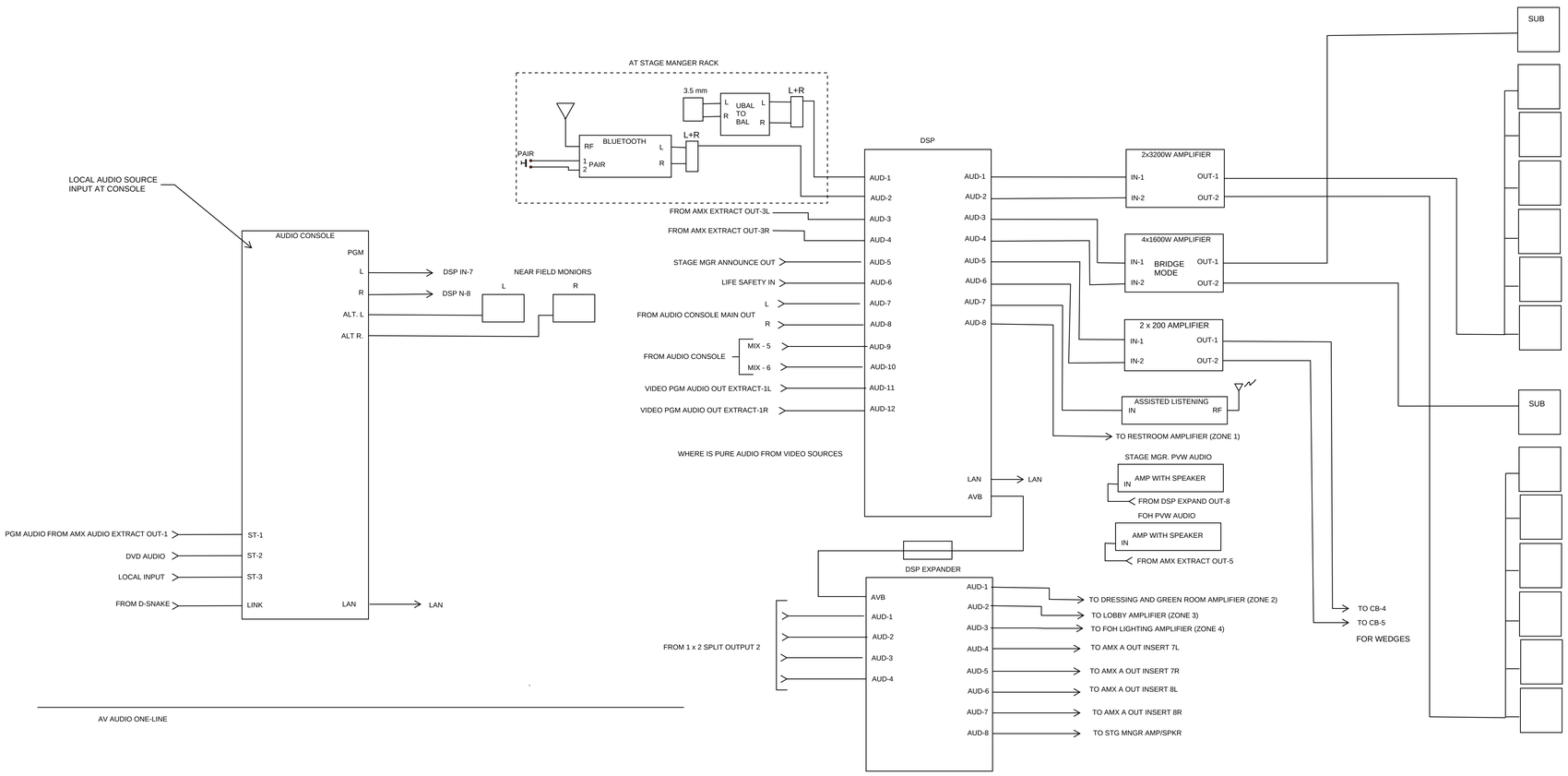

AV AUDIO ONE-LINE

C:\Users\Erich.Bretz\OneDrive - Gerald H. Phipps, Inc\Documents\R22_HLPUSD-PAC_Central_HJSA_mbbimsolutions.rvt

APPL No. A03-122864

IDENTIFICATION STAMP
DIV. OF THE STATE ARCHITECT
APP: 03-122864 INC:
REVIEWED FOR
SS ☑ FLS ☑ ACS ☑
DATE: 10/03/2023

DSA

Architect

RACHLIN PARTNERS
8640 National Boulevard
Culver City, CA 90232
310.204.3400

Disclaimer:

THESE DRAWINGS ARE THE PROPERTY OF THE ARCHITECT. THE DESIGNS SHOWN AND DESCRIBED HEREIN INCLUDING ALL TECHNICAL DRAWINGS ARE PROPRIETARY AND CANNOT BE COPIED, DUPLICATED OR COMMERCIALLY EXPLOITED EITHER WHOLE OR IN PART WITHOUT WRITTEN CONSENT AND SHALL NOT BE USED BY THE OWNER ON OTHER PROJECTS, FOR ADDITIONS TO THIS PROJECT, OR FOR COMPLETION OF THIS PROJECT BY OTHERS. THE OWNER AGREES TO HOLD HARMLESS, INDEMNIFY AND DEFEND THE ARCHITECT AGAINST ALL DAMAGES, CLAIMS AND LOSSES, INCLUDING DEFENSE COSTS, ARISING OUT OF ANY REUSE OF PLANS AND SPECIFICATIONS WITHOUT THE WRITTEN AUTHORIZATION OF THE ARCHITECT OF RECORD.

Copyright © 2022 Rachlin Partners, All Rights Reserved.

Performing Arts Center

Hacienda La Puente Unified School District
635 North California Avenue
La Puente, CA 91744

Re	Date	Issue
1	7.22.22	50% DD
2	10.21.22	50% CD
3	12.09.22	100% CD DSA SUBMITTAL
4	6.19.23	100% CD DSA RESUBMITTAL
5	9.20.23	DSA BACK CHECK

Date: 9.20.2023
Scale:
Drawn By: EMB
Checked By: HJSA

Architect / Engineer

LICENSED ARCHITECT
CULVER CITY, CALIFORNIA
NO. C-29229
REN. 8-31-25
STATE OF CALIFORNIA

Consultants
Miyamoto International, Inc.
The Ruzika Company, Inc.
MDC Consulting Engineers
Pocock Design Solutions
Newson Brown Acoustics, LLC
VCA Engineers, Inc.
HJSA Consulting

Sheet Title

Audiovisual - One Line Diagrams

Sheet

TA500

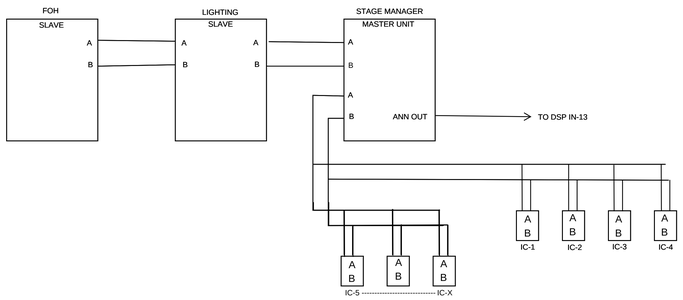

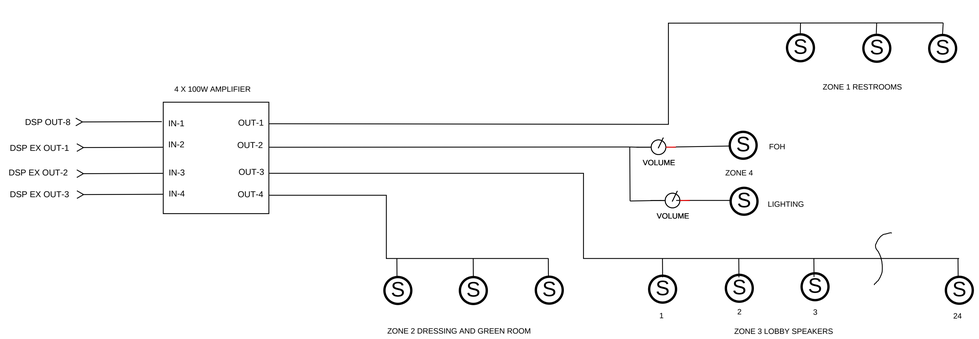

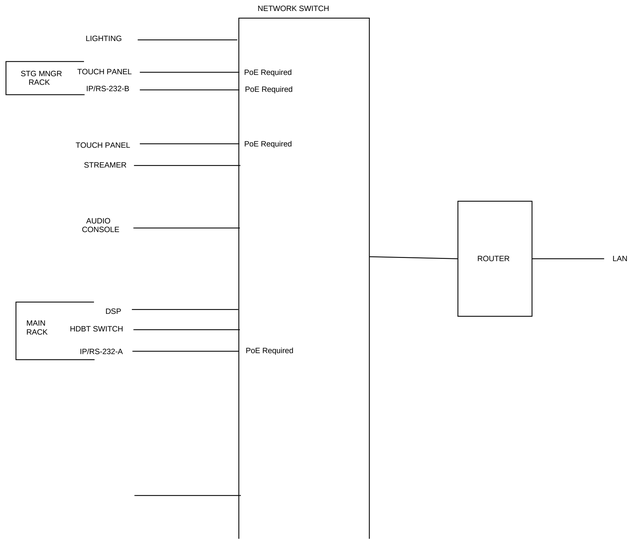

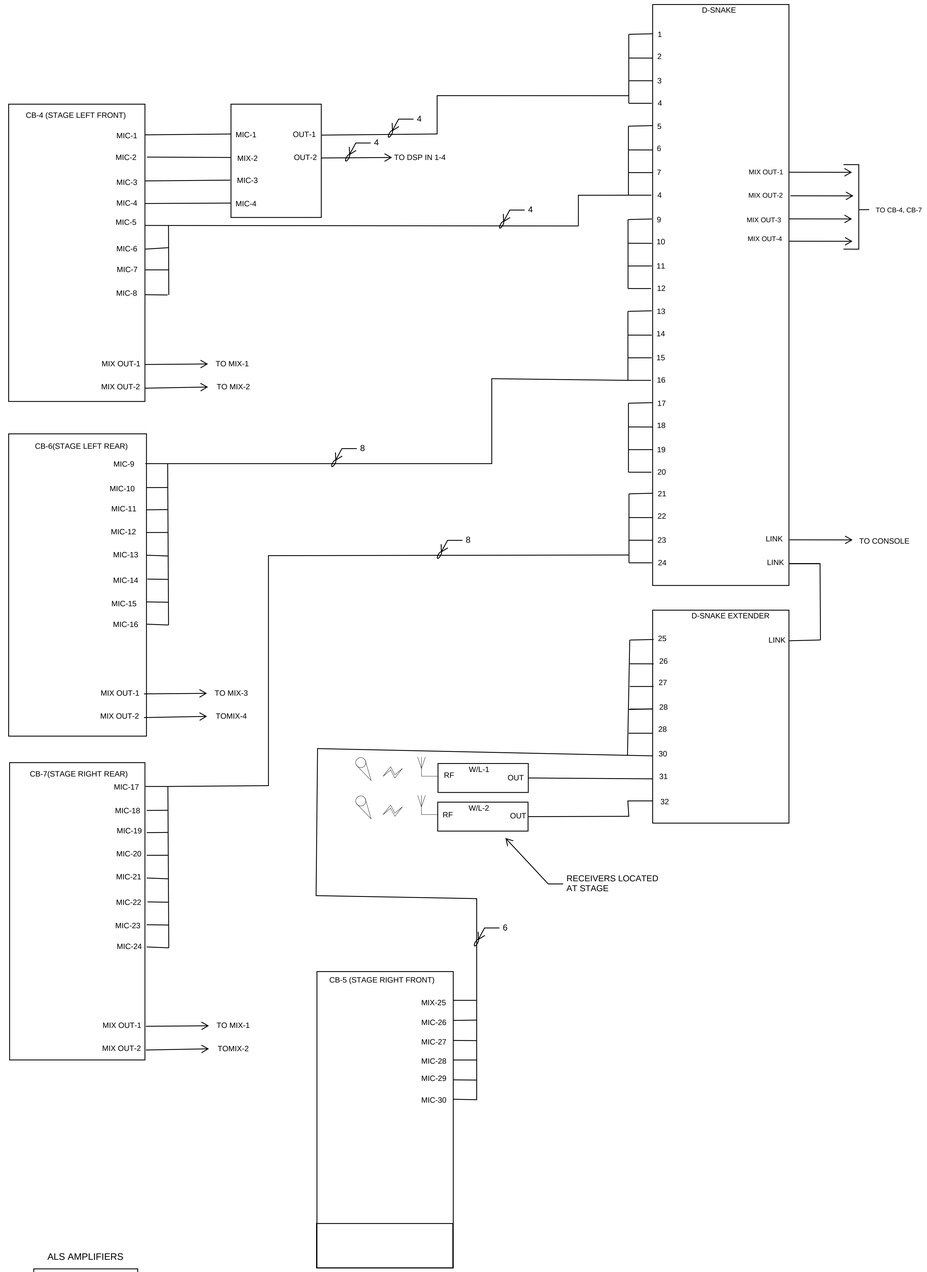

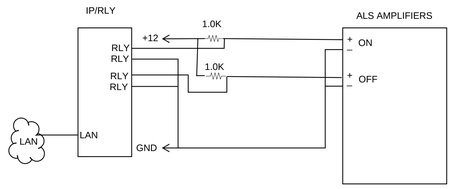

C:\Users\Erich.Bretz\OneDrive - Gerald H. Phipps, Inc\Documents\R22_HLPUSD-PAC_Central_HJSA_mbiminsolutions.rvt

APPL No. A03-122864

IDENTIFICATION STAMP
DIV. OF THE STATE ARCHITECT
APP: 03-122864 INC:
REVIEWED FOR
SS ☑ FLS ☑ ACS ☑
DATE: 10/03/2023

DSA

Architect

RACHLIN
PARTNERS
8640 National Boulevard
Culver City, CA 90232
310.204.3400

Disclaimer:

THESE DRAWINGS ARE THE PROPERTY OF THE ARCHITECT. THE DESIGNS SHOWN AND DESCRIBED HEREIN INCLUDING ALL TECHNICAL DRAWINGS ARE PROPRIETARY AND CANNOT BE COPIED, DUPLICATED OR COMMERCIALLY EXPLOITED EXCEPT WITH THE WRITTEN PERMISSION OF THE ARCHITECT AND SHALL NOT BE USED BY THE OWNER ON OTHER PROJECTS, FOR ADDITIONS TO THIS PROJECT, OR FOR COMPLETION OF THIS PROJECT BY OTHERS. THE OWNER AGREES TO HOLD HARMLESS, INDEMNIFY AND DEFEND THE ARCHITECT AGAINST ALL DAMAGES, CLAIMS AND LOSSES, INCLUDING DEFENSE COSTS, ARISING OUT OF ANY REUSE OF PLANS AND SPECIFICATIONS WITHOUT THE WRITTEN AUTHORIZATION OF THE ARCHITECT OF RECORD.

Copyright © 2022 Rachlin Partners, All Rights Reserved.

Performing Arts Center

Hacienda La Puente Unified School District
635 North California Avenue
La Puente, CA 91744

Re	Date	Issue
1	7.22.22	50% DD
2	10.21.22	50% CD
3	12.09.22	100% CD DSA SUBMITTAL
4	6.19.23	100% CD DSA RESUBMITTAL
5	9.20.23	DSA BACK CHECK

Date: 9.20.2023
Scale:
Drawn By: EMB
Checked By: HJSA

Architect / Engineer

LICENSED ARCHITECT
HOWARD JOSEPH SAMUELS
NO. C-25229
REN. 8-31-25
STATE OF CALIFORNIA

Consultants
Miyamoto International, Inc.
The Ruzika Company, Inc.
MDC Consulting Engineers
Pocock Design Solutions
Newson Brown Acoustics, LLC
VCA Engineers, Inc.
HJSA Consulting

Sheet Title

Audiovisual - One Line Diagrams

Sheet

TA501

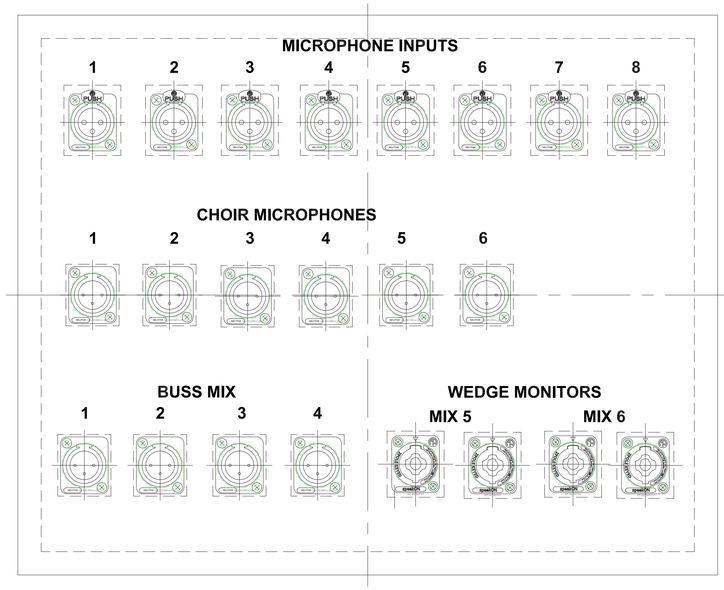

CB-4

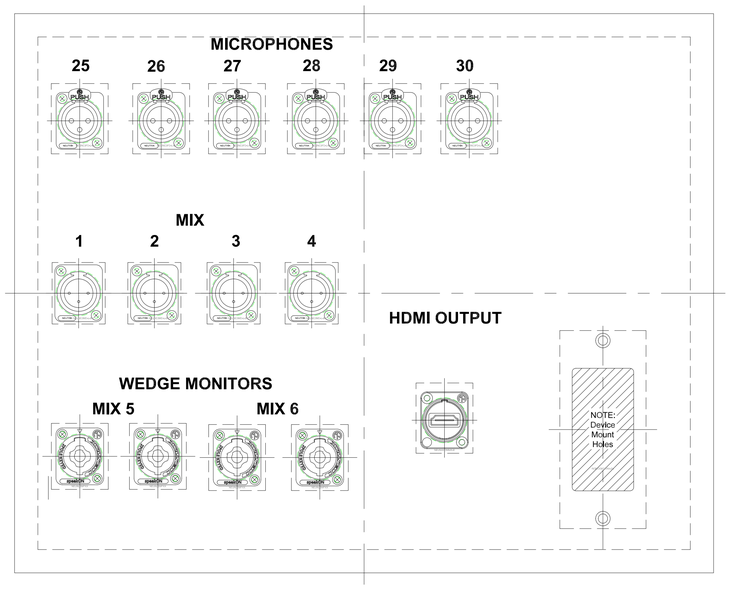

CB-5

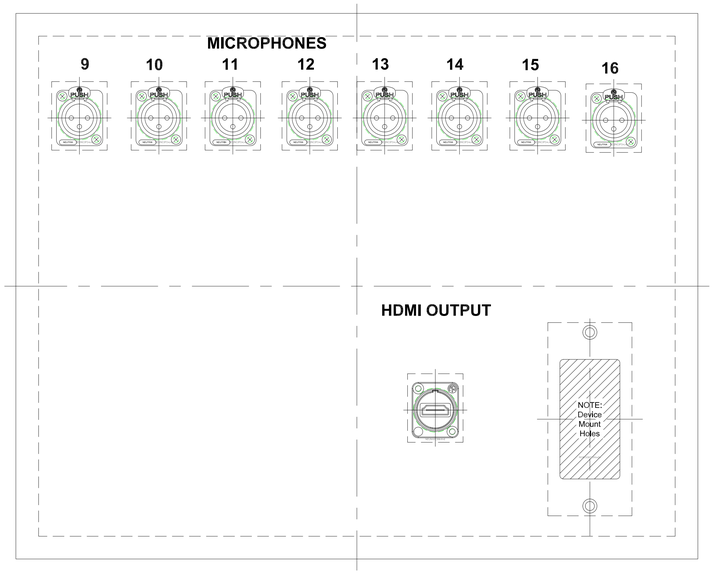

CB-6

Drawing Notes:
Backbox is
Hubble SC121504NK
Please match panel mounting holes to backbox

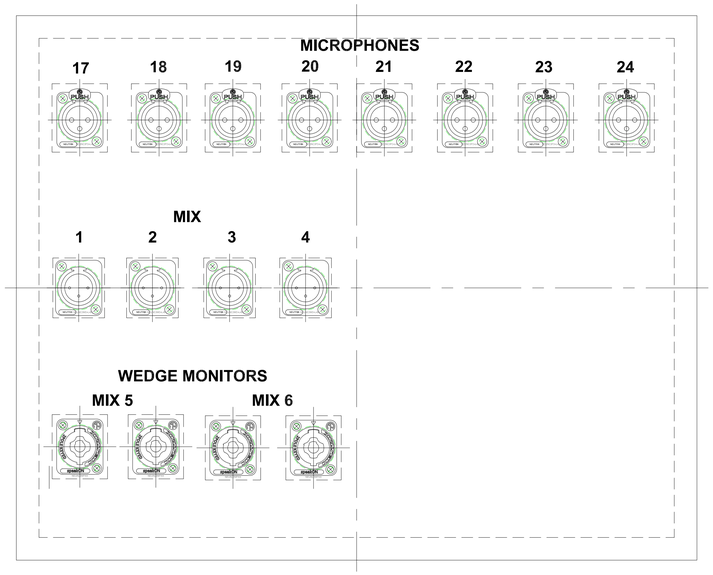

CB-7

C:\Users\Erich.Bretz\OneDrive - Gerald H. Phipps, Inc\Documents\R22_HLPUSD-PAC_Central_HJSA_mbbimsolutions.rvt

APPL No. A03-122864

IDENTIFICATION STAMP
DIV. OF THE STATE ARCHITECT
APP: 03-122864 INC:
REVIEWED FOR
SS ☑ FLS ☑ ACS ☑
DATE: 10/03/2023

DSA

Architect

RACHLIN
PARTNERS
8640 National Boulevard
Culver City, CA 90232
310.204.3400

Disclaimer:

THESE DRAWINGS ARE THE PROPERTY OF THE ARCHITECT. THE DESIGNS SHOWN AND DESCRIBED HEREIN INCLUDING ALL TECHNICAL DRAWINGS ARE PROPRIETARY AND CANNOT BE COPIED, DUPLICATED OR COMMERCIALLY EXPLOITED EXCEPT BY WRITTEN AGREEMENT. THESE DRAWINGS AND DESIGNS SHALL NOT BE USED BY THE OWNER ON OTHER PROJECTS, FOR ADDITIONS TO THIS PROJECT, OR FOR COMPLETION OF THIS PROJECT BY OTHERS. THE OWNER AGREES TO HOLD HARMLESS, INDEMNIFY AND DEFEND THE ARCHITECT AGAINST ALL DAMAGES, CLAIMS AND LOSSES, INCLUDING DEFENSE COSTS, ARISING OUT OF ANY REUSE OF PLANS AND SPECIFICATIONS WITHOUT THE WRITTEN AUTHORIZATION OF THE ARCHITECT OF RECORD.

Copyright © 2022 Rachlin Partners, All Rights Reserved.

Performing Arts Center

Hacienda La Puente Unified School District
635 North California Avenue
La Puente, CA 91744

Re	Date	Issue
1	7.22.22	50% DD
2	10.21.22	50% CD
3	12.09.22	100% CD DSA SUBMITTAL
4	6.19.23	100% CD DSA RESUBMITTAL
5	9.20.23	DSA BACK CHECK

Date: 9.20.2023
Scale:
Drawn By: EMB
Checked By: HJSA

Architect / Engineer

LICENSED ARCHITECT
ELLISON INGRAM
NO. C-31229
REN 8-31-25
STATE OF CALIFORNIA

Consultants
Miyamoto International, Inc.
The Ruzika Company, Inc.
MDC Consulting Engineers
Pocock Design Solutions
Newson Brown Acoustics, LLC
VCA Engineers, Inc.
HJSA Consulting

Sheet Title

Audiovisual -

Sheet

TA502

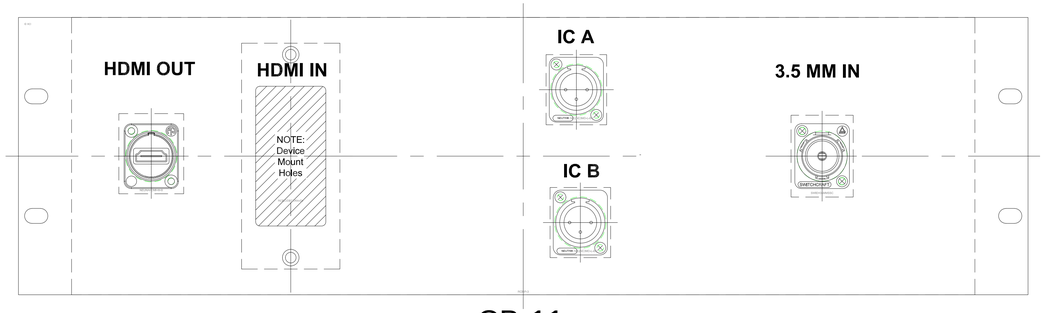

CB-11

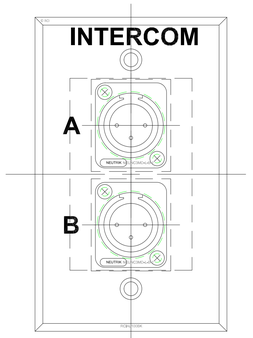

IC PLATE

MOUNT PANEL TO WALL WITH 1/2"Ø HILTI 'KB-TZ2' X 2 1/2" MIN. EMBED. (ICC-ES ESR-4561) (4) TOTAL

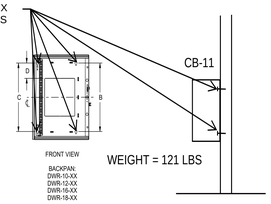

DETAIL 2

"3/8" DIAMETER HILTI KB-TZ2 X 2 3/4" MIN. EFFECTIVE EMBEDMENT (ICC ESR 4266)

NOTE: Do not use washers. The bolt head must contact the inside of seismic bracket

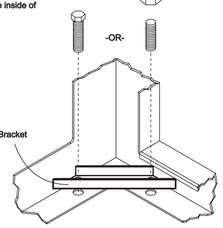

Rack Inside Corner
NOT Typical of all installations

NOTE: The leveling foot rivnut located in the corner does not need to be removed. Tighten the floor anchor completely. Deflection will occur around the rivnut. This is required, it pre-loads the corner in compression.

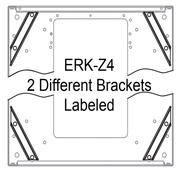

Front of Rack

SEISMIC BRACKETS
AT BOTTOM OF RACK

DETAIL 1

STAGE MANAGER RACK CB-11

CONTACT PANEL	
DUAL VIDEO DISPLAY	BLUETOOTH RCVR
AMPLIFIER / SPEAKER INTERCOM	1
TOUCH PANEL	3
INTERCOM AMPLIFIER/SPEAKER	1
DVD PLAYER	3
IP/RS-232	
I/O PANEL	3

FULLY LOADED WEIGHT
NOT MORE THAN 120 LBS.

SEE DETAIL 2 THIS SHEET
FOR MOUNTING DETAILS

FOH RACK ON RIGHT SIDE OF CONSOLE

CONTACT PANEL	
INTERCOM	1
	3
AMPLIFIER/SPEAKER	1
DVD PLAYER	3
I/O PANEL	3

FULLY LOADED WEIGHT
NOT MORE THAN 120 LBS.

SEE DETAIL 1 THIS SHEET
FOR MOUNTING DETAILS

EQUIPMENT RACK FACEOUT

CONTACT PANEL	
ASSISTED LISTENING	
BLANK	
AMX SWITCHER	
BLANK	
DSP	
VENT	
DSP	
VENT	
VIDEO RECORDER	STREAMER
BLANK	
LABGRUPPEN AMPLIFIER	
BLANK	
BLANK	EXTRON AMPLIFIER
BLANK	
ALC 3200	
VENT	
ALC 1600	
BLANK	
VENT	

FULLY LOADED WEIGHT
NOT MORE THAN 368 LBS.

SEE DETAIL 1 THIS SHEET
FOR MOUNTING DETAILS

C:\Users\Erich.Bretz\OneDrive - Gerald H. Phipps, Inc\Documents\R22_HLP\SD-PAC_Central_HJSA_mblimsolutions.rvt

APPL No. A03-122864

IDENTIFICATION STAMP
DIV. OF THE STATE ARCHITECT
APP: 03-122864 INC:
REVIEWED FOR
SS ☑ FLS ☑ ACS ☑
DATE: 10/03/2023

DSA

Architect

RACHLIN PARTNERS
8640 National Boulevard
Culver City, CA 90232
310.204.3400

Disclaimer:

THESE DRAWINGS ARE THE PROPERTY OF THE ARCHITECT. THE DESIGNS SHOWN AND DESCRIBED HEREIN INCLUDING ALL TECHNICAL DRAWINGS ARE PROPRIETARY AND CANNOT BE COPIED, DUPLICATED OR COMMERCIALLY EXPLOITED EXCEPT BY WRITTEN AGREEMENT. THESE DRAWINGS AND DESIGNS SHALL NOT BE USED BY THE OWNER ON OTHER PROJECTS, FOR ADDITIONS TO THIS PROJECT, OR FOR COMPLETION OF THIS PROJECT BY OTHERS. THE OWNER AGREES TO HOLD HARMLESS, INDEMNIFY AND DEFEND THE ARCHITECT AGAINST ALL DAMAGES, CLAIMS AND LOSSES, INCLUDING DEFENSE COSTS, ARISING OUT OF ANY REUSE OF PLANS AND SPECIFICATIONS WITHOUT THE WRITTEN AUTHORIZATION OF THE ARCHITECT OF RECORD.

Copyright © 2022 Rachlin Partners, All Rights Reserved.

Performing Arts Center

Hacienda La Puente Unified School District
635 North California Avenue
La Puente, CA 91744

Re	Date	Issue
1	7.22.22	50% DD
2	10.21.22	50% CD
3	12.09.22	100% CD DSA SUBMITTAL
4	6.19.23	100% CD DSA RESUBMITTAL
5	9.20.23	DSA BACK CHECK

Date: 9.20.2023
Scale:
Drawn By: EMB
Checked By: HJSA

Architect / Engineer

LICENSED ARCHITECT
RICHARD ERIC PHIPPS
NO. C-25229
REN. 8-31-25
STATE OF CALIFORNIA

Consultants
Miyamoto International, Inc.
The Ruzika Company, Inc.
MDC Consulting Engineers
Pocock Design Solutions
Newson Brown Acoustics, LLC
VCA Engineers, Inc.
HJSA Consulting

Sheet Title

Audiovisual -

Sheet

TA503

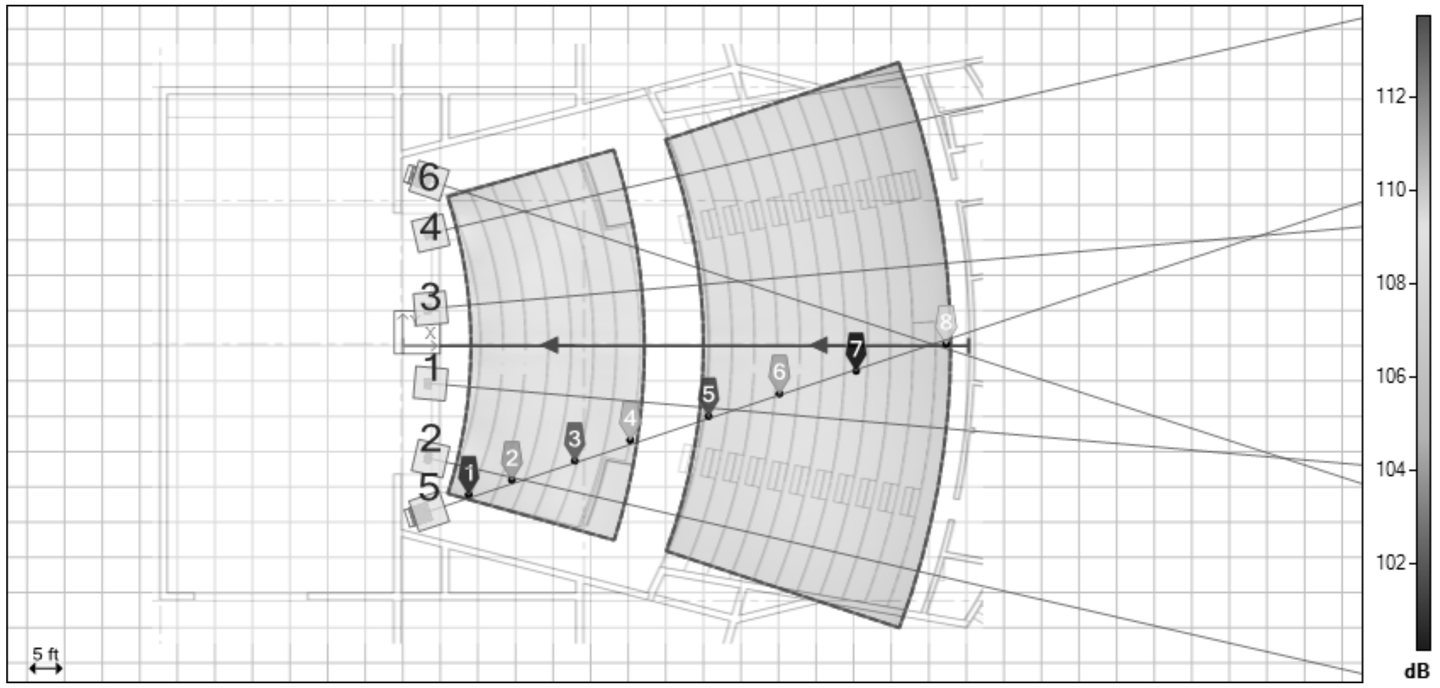

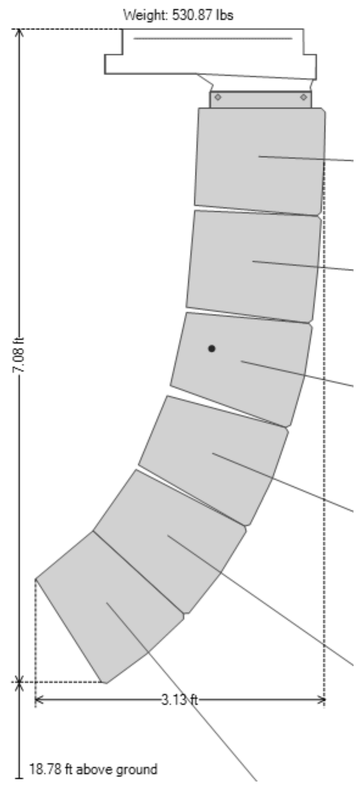

System:	IV6 Modular Vertical Array
Company:	biamp
Label:	IV6 with ONE sub
Position:	X=4.00 ft
	Y=22.00 ft
	Z=26.67 ft
Orientation:	Hor=-18.0°
	Ver=0.0°
Weight:	666.46 lbs
Setup:	IV6-GP-AF
Box Count:	7
Pinpoint Mode:	No Pinpoint
Bottom Angle:	0.0 °
Above Ground:	18.78 ft

	Box Type	Gain	Rigging Angle	Aiming Angle
	(Frame)			0.0°
Box 1	IV6-118S	0.0 dB	0º [S1]	0.0°
Box 2	IV6-1122/05	0.0 dB	2.5º [S1]	-2.5°
Box 3	IV6-1122/05	0.0 dB	2.5º [S2]	-5.0°
Box 4	IV6-1122/15	0.0 dB	7.5º [S2]	-12.5°
Box 5	IV6-1122/15	0.0 dB	10º [S3]	-22.5°
Box 6	IV6-1122/15	0.0 dB	12.5º [S2]	-35.0°
Box 7	IV6-1122/15	0.0 dB	15º [S1]	-50.0°

C:\Users\Erich.Bretz\OneDrive - Gerald H. Phipps, Inc\Documents\R22_HLPUSD-PAC_Central_HJSA_mtbiimsolutions.rvt

APPL No. A03-122864

IDENTIFICATION STAMP
DIV. OF THE STATE ARCHITECT
APP: 03-122864 INC:
REVIEWED FOR
SS ☑ FLS ☑ ACS ☑
DATE: 10/03/2023

DSA

Architect

RACHLIN
PARTNERS
8640 National Boulevard
Culver City, CA 90232
310.204.3400

Disclaimer:

THESE DRAWINGS ARE THE PROPERTY OF THE ARCHITECT. THE DESIGNS SHOWN AND DESCRIBED HEREIN INCLUDING ALL TECHNICAL DRAWINGS ARE PROPRIETARY AND CANNOT BE COPIED, DUPLICATED OR COMMERCIALLY EXPLOITED EXCEPT BY WRITTEN AGREEMENT. THESE DRAWINGS AND DESIGNS SHALL NOT BE USED BY THE OWNER ON OTHER PROJECTS, FOR ADDITIONS TO THIS PROJECT, OR FOR COMPLETION OF THIS PROJECT BY OTHERS. THE OWNER AGREES TO HOLD HARMLESS, INDEMNIFY AND DEFEND THE ARCHITECT AGAINST ALL DAMAGES, CLAIMS AND LOSSES, INCLUDING DEFENSE COSTS, ARISING OUT OF ANY REUSE OF PLANS AND SPECIFICATIONS WITHOUT THE WRITTEN AUTHORIZATION OF THE ARCHITECT OF RECORD.

Copyright © 2022 Rachlin Partners, All Rights Reserved.

Performing Arts Center

Hacienda La Puente Unified School District
635 North California Avenue
La Puente, CA 91744

Re	Date	Issue
1	7.22.22	50% DD
2	10.21.22	50% CD
3	12.09.22	100% CD DSA SUBMITTAL
4	6.19.23	100% CD DSA RESUBMITTAL
5	9.20.23	DSA BACK CHECK

Date: 9.20.2023
Scale:
Drawn By: EMB
Checked By: HJSA

Architect / Engineer

LICENSED ARCHITECT
JOSHUA H. SASSER
NO. C-29229
REN. 8-31-25
STATE OF CALIFORNIA

Consultants

Miyamoto International, Inc.
The Ruzika Company, Inc.
MDC Consulting Engineers
Pocock Design Solutions
Newson Brown Acoustics, LLC
VCA Engineers, Inc.
HJSA Consulting

Sheet Title

Audiovisual -

Sheet

TA504

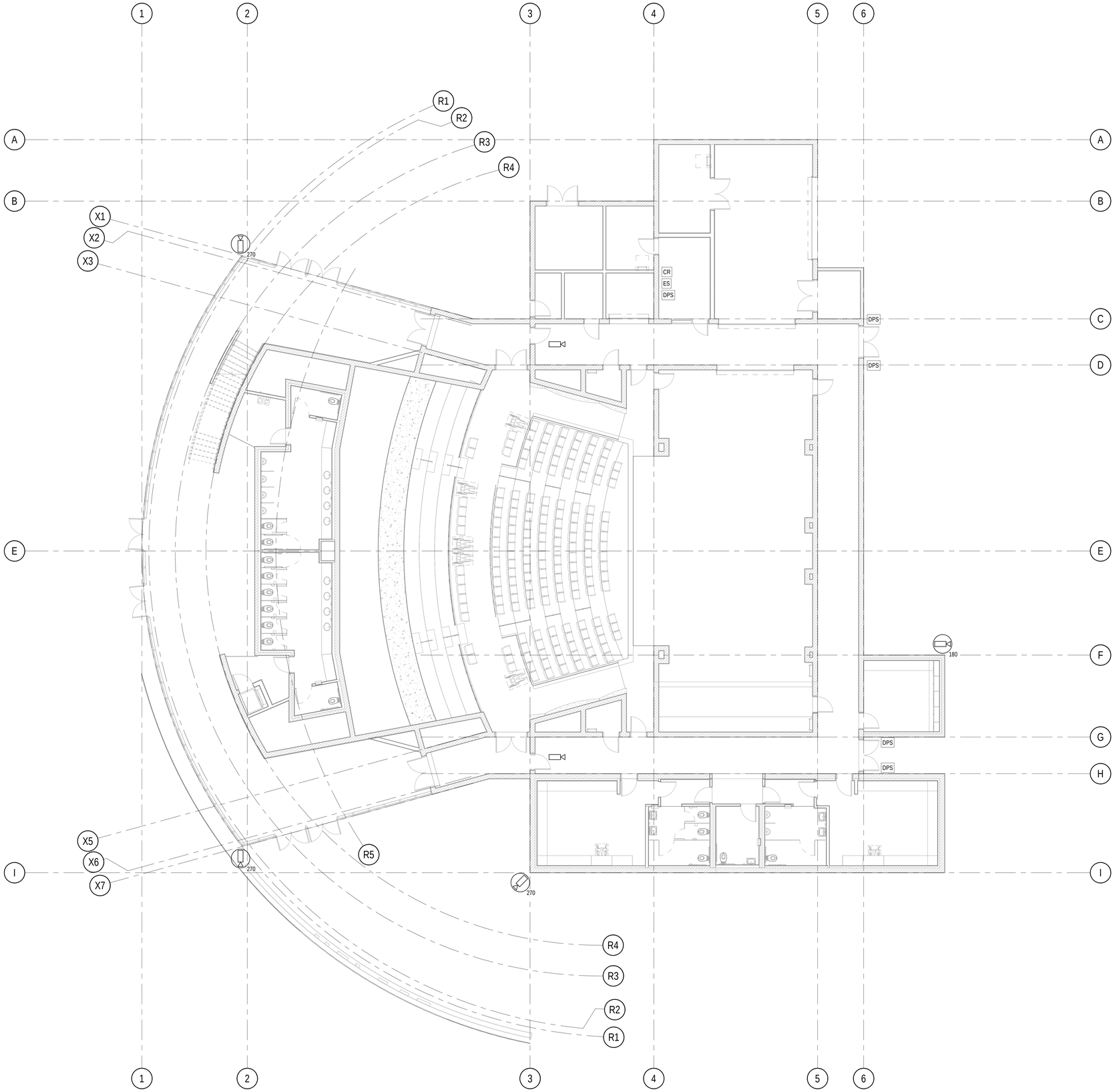

1 ORCHESTRA/PARTERRE LEVEL FLOOR PLAN

SCALE: 1/8" = 1'-0"

0' 4' 8' 16' 24'

NORTH

NOTE:

REFER TO SHEET T000 FOR SYMBOL LEGEND

2

APPL No. A03-122864

IDENTIFICATION STAMP
DIV. OF THE STATE ARCHITECT
APP: 03-122864 INC:
ED FOR
☑ ACS ☑
DATE: 10/03/2023

DSA

Architect

RACHLIN
PARTNERS
8640 National Boulevard
Culver City, CA 90232
310.204.3400

Disclaimer:

THESE DRAWINGS ARE THE PROPERTY OF THE ARCHITECT. THE DESIGNS SHOWN AND DESCRIBED HEREIN INCLUDING ALL TECHNICAL DRAWINGS ARE PROPRIETARY AND CANNOT BE COPIED, DUPLICATED OR COMMERCIALLY EXPLOITED EITHER IN WHOLE OR IN PART WITHOUT PRIOR WRITTEN CONSENT. SHALL NOT BE USED BY THE OWNER ON OTHER PROJECTS, FOR ADDITIONS TO THIS PROJECT, OR FOR COMPLETION OF THIS PROJECT BY OTHERS. THE OWNER AGREES TO HOLD HARMLESS, INDEMNIFY AND DEFEND THE ARCHITECT AGAINST ALL DAMAGES, CLAIMS AND LOSSES, INCLUDING DEFENSE COSTS, ARISING OUT OF ANY REUSE OF PLANS AND SPECIFICATIONS WITHOUT THE WRITTEN AUTHORIZATION OF THE ARCHITECT OF RECORD.

Copyright © 2022 Rachlin Partners, All Rights Reserved.

Performing Arts Center

Hacienda La Puente Unified School District
635 North California Avenue
La Puente, CA 91744

Re	Date	Issue
1	7.22.22	50% DD
2	10.21.22	50% CD
3	12.09.22	100% CD DSA SUBMITTAL
4	6.19.23	100% CD DSA RESUBMITTAL
5	9.20.23	DSA BACK CHECK
6	11.01.23	ADDENDUM NO. 1
7	11.01.23	ADDENDUM NO. 2

Date: 11.01.2023
Scale: 1/8" = 1'-0"
Drawn By: EMB
Checked By: HJSA

Architect / Engineer

LICENSED ARCHITECT
RICHARD HAJIME SAKAI
NO. C-20229
REN. 8-31-25
STATE OF CALIFORNIA

Consultants

Miyamoto International, Inc.
The Ruzika Company, Inc.
MDC Consulting Engineers
Pocock Design Solutions
Newson Brown Acoustics, LLC
VCA Engineers, Inc.
HJSA Consulting

Sheet Title

Security - Orchestra Level Plan

Sheet

SC211

C:\Users\Erich.Brenz\OneDrive - Gerald H. Phipps, Inc\Documents\R22_HLPUSD-PAC_Central_HJSA_mbiminsolutions.rvt

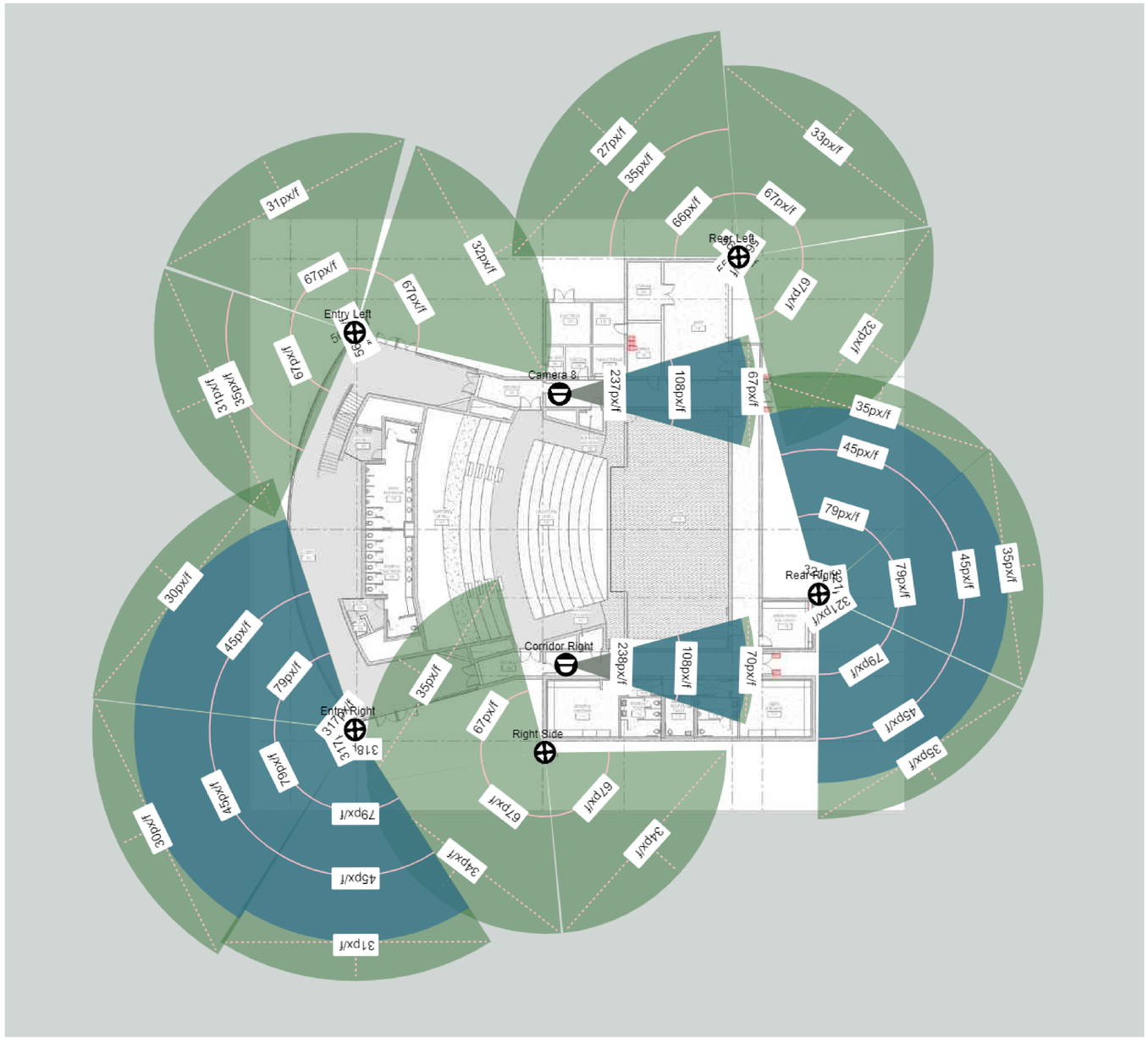

CAMERA COVERAGE MAP

Scene Details

Name	Mounting Height (ft)	Target Height (ft)	Target Distance (ft)	Scene Width (ft)	Mounting Angle	Maximum Distance (ft)	px/ft
Entry Left		6	16.5	0	NaN	NaN	0
Head 1	8.5	6	44.7	81.9	43.5	152	31.6
Head 2	8.5	6	44	80.5	43.4	149.5	32.2
Head 3	8.5	6	44.9	82.3	43.5	152.8	31.5
Rear Left		6	16.5	0	NaN	NaN	0
Head 1	8.5	6	50.7	92.9	43.9	172.4	27.9
Head 2	8.5	6	42.9	78.5	43.3	145.7	33
Head 3	8.5	6	43.5	79.7	43.4	147.9	32.5
Right Side		6	16.5	0	NaN	NaN	0
Head 1	8.5	6	40.5	74.2	43.2	137.7	34.9
Head 2	8.5	6	40.5	74.2	43.1	137.6	34.9
Head 3	8.5	6	40.2	73.6	43.1	136.5	35.2
Entry Right		6	16.5	0	NaN	NaN	0
Head 1	8.5	6	64.2	82	59.2	218.4	31.6
Head 2	8.5	6	67.2	85.8	59.3	228.4	30.2
Head 3	8.5	6	67.5	86.2	59.3	229.5	30.1
Rear Right		6	16.5	0	NaN	NaN	0
Head 1	8.5	6	56.9	72.7	58.9	193.4	35.7
Head 2	8.5	6	57.2	73.1	58.9	194.6	35.5
Head 3	8.5	6	57.4	73.2	58.9	195	35.4
Camera 8	8.5	6	57.4	34.3	74.6	195.2	67.3
Corridor Right	8.5	6	54.8	32.7	74.5	186.5	70.4

C:\Users\Erich.Brenz\OneDrive - Gerald H. Phipps, Inc\Documents\R22_HLPUSD-PAC_Central_HJSA_mtbimsolutions.rvt

APPL No. A03-122864

IDENTIFICATION STAMP
DIV. OF THE STATE ARCHITECT
APP: 03-122864 INC:
REVIEWED FOR
SS ☑ FLS ☑ ACS ☑
DATE: 10/03/2023

DSA

Architect

RACHLIN
PARTNERS
8640 National Boulevard
Culver City, CA 90232
310.204.3400

Disclaimer:

THESE DRAWINGS ARE THE PROPERTY OF THE ARCHITECT. THE DESIGNS SHOWN AND DESCRIBED HEREIN INCLUDING ALL TECHNICAL DRAWINGS ARE PROPRIETARY AND CANNOT BE COPIED, DUPLICATED OR COMMERCIALLY EXPLOITED EITHER IN WHOLE OR IN PART WITHOUT WRITTEN CONSENT AND SHALL NOT BE USED BY THE OWNER ON OTHER PROJECTS, FOR ADDITIONS TO THIS PROJECT, OR FOR COMPLETION OF THIS PROJECT BY OTHERS. THE OWNER AGREES TO HOLD HARMLESS, INDEMNIFY AND DEFEND THE ARCHITECT AGAINST ALL DAMAGES, CLAIMS AND LOSSES, INCLUDING DEFENSE COSTS, ARISING OUT OF ANY REUSE OF PLANS AND SPECIFICATIONS WITHOUT THE WRITTEN AUTHORIZATION OF THE ARCHITECT OF RECORD.

Copyright © 2022 Rachlin Partners, All Rights Reserved.

Performing Arts Center

Hacienda La Puente Unified School District
635 North California Avenue
La Puente, CA 91744

Re	Date	Issue
1	7.22.22	50% DD
2	10.21.22	50% CD
3	12.09.22	100% CD DSA SUBMITTAL
4	6.19.23	100% CD DSA RESUBMITTAL
5	9.20.23	DSA BACK CHECK

Date: 9.20.2023
Scale:
Drawn By: EMB
Checked By: HJSA

Architect / Engineer

LICENSED ARCHITECT
ERICH BRENZ
NO. C-28229
REN. 8-31-25
STATE OF CALIFORNIA

Consultants
Miyamoto International, Inc.
The Ruzika Company, Inc.
MDC Consulting Engineers
Pocock Design Solutions
Newson Brown Acoustics, LLC
VCA Engineers, Inc.
HJSA Consulting

Sheet Title

Security - Camera Coverage

Sheet

SC212

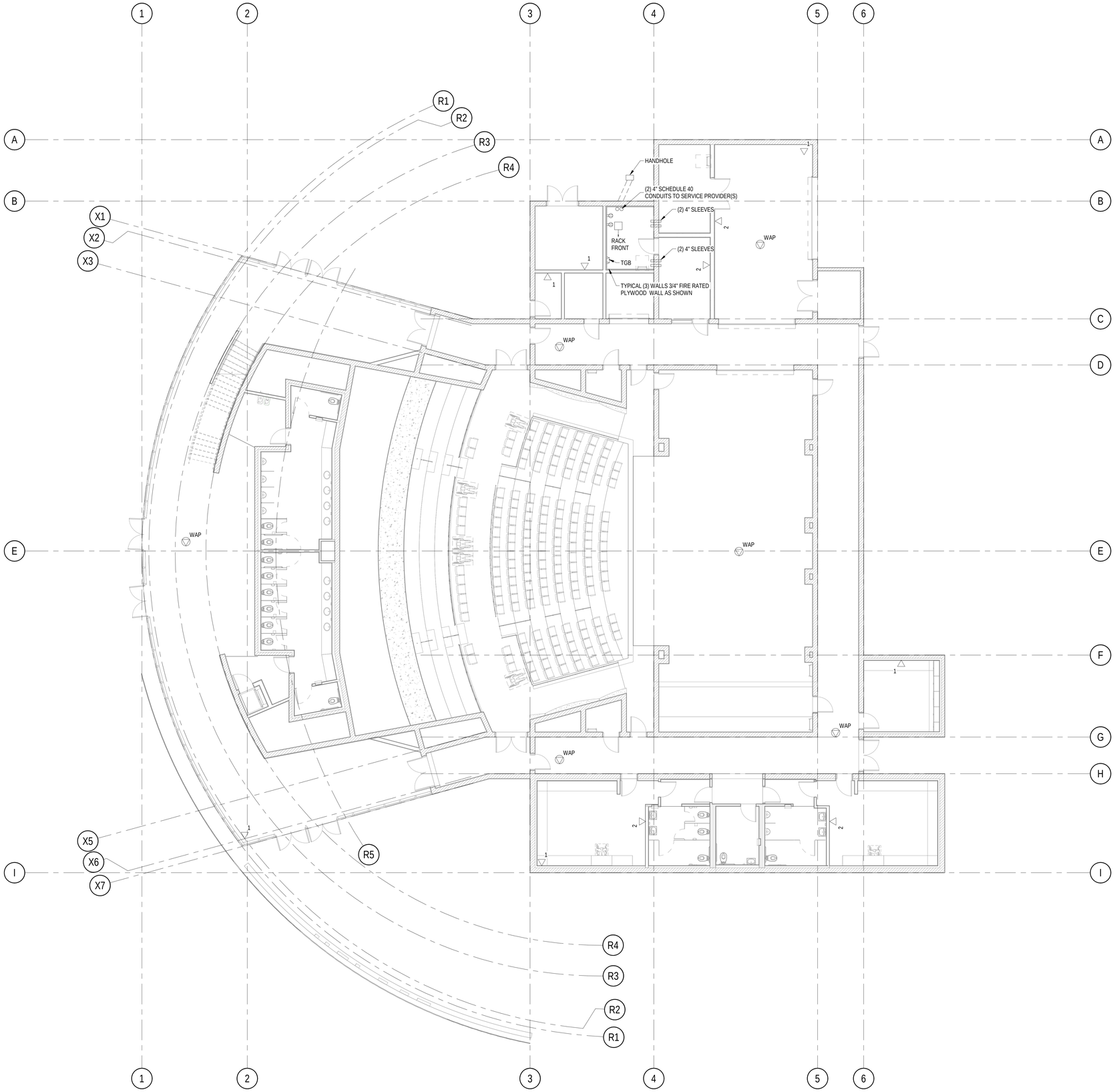

1 ORCHESTRA/PARTERRE LEVEL FLOOR PLAN

SCALE: 1/8" = 1'-0"

0' 4' 8' 16' 24'

NORTH

NOTE:

REFER TO SHEET T000 FOR SYMBOL LEGEND

APPL No. A03-122864

DSA

Architect

RACHLIN PARTNERS
8640 National Boulevard
Culver City, CA 90232
310.204.3400

Disclaimer:

THESE DRAWINGS ARE THE PROPERTY OF THE ARCHITECT. THE DESIGNS SHOWN AND DESCRIBED HEREIN INCLUDING ALL TECHNICAL DRAWINGS ARE PROPRIETARY AND CANNOT BE COPIED, DUPLICATED OR COMMERCIALLY EXPLOITED EXCEPT BY WRITTEN AGREEMENT. THESE DRAWINGS AND DESIGNS SHALL NOT BE USED BY THE OWNER ON OTHER PROJECTS, FOR ADDITIONS TO THIS PROJECT, OR FOR COMPLETION OF THIS PROJECT BY OTHERS. THE OWNER AGREES TO HOLD HARMLESS, INDEMNIFY AND DEFEND THE ARCHITECT AGAINST ALL DAMAGES, CLAIMS AND LOSSES, INCLUDING DEFENSE COSTS, ARISING OUT OF ANY REUSE OF PLANS AND SPECIFICATIONS WITHOUT THE WRITTEN AUTHORIZATION OF THE ARCHITECT OF RECORD.

Copyright © 2022 Rachlin Partners, All Rights Reserved.

Performing Arts Center

Hacienda La Puente Unified School District
635 North California Avenue
La Puente, CA 91744

Re	Date	Issue
1	7.22.22	50% DD
2	10.21.22	50% CD
3	12.09.22	100% CD DSA SUBMITTAL
4	6.19.23	100% CD DSA RESUBMITTAL
5	9.20.23	DSA BACK CHECK
6	11.01.23	ADDENDUM NO. 1
7	11.01.23	ADDENDUM NO. 2

Date: 11.01.2023
Scale: 1/8" = 1'-0"
Drawn By: EMB
Checked By: HJSA

Architect / Engineer

LICENSED ARCHITECT
H. JOSEPH ANDRADE
NO. C-20229
REN. 8-31-25
STATE OF CALIFORNIA

Consultants

Miyamoto International, Inc.
The Ruzika Company, Inc.
MDC Consulting Engineers
Pocock Design Solutions
Newson Brown Acoustics, LLC
VCA Engineers, Inc.
HJSA Consulting

Sheet Title

Telecomm - Orchestra Level Plan

Sheet

TC211

C:\Users\Erich.Brenz\OneDrive - Gerald H. Phipps, Inc\Documents\R22_HLPUSD-PAC_Central_HJSA_mbiminsolutions.rvt

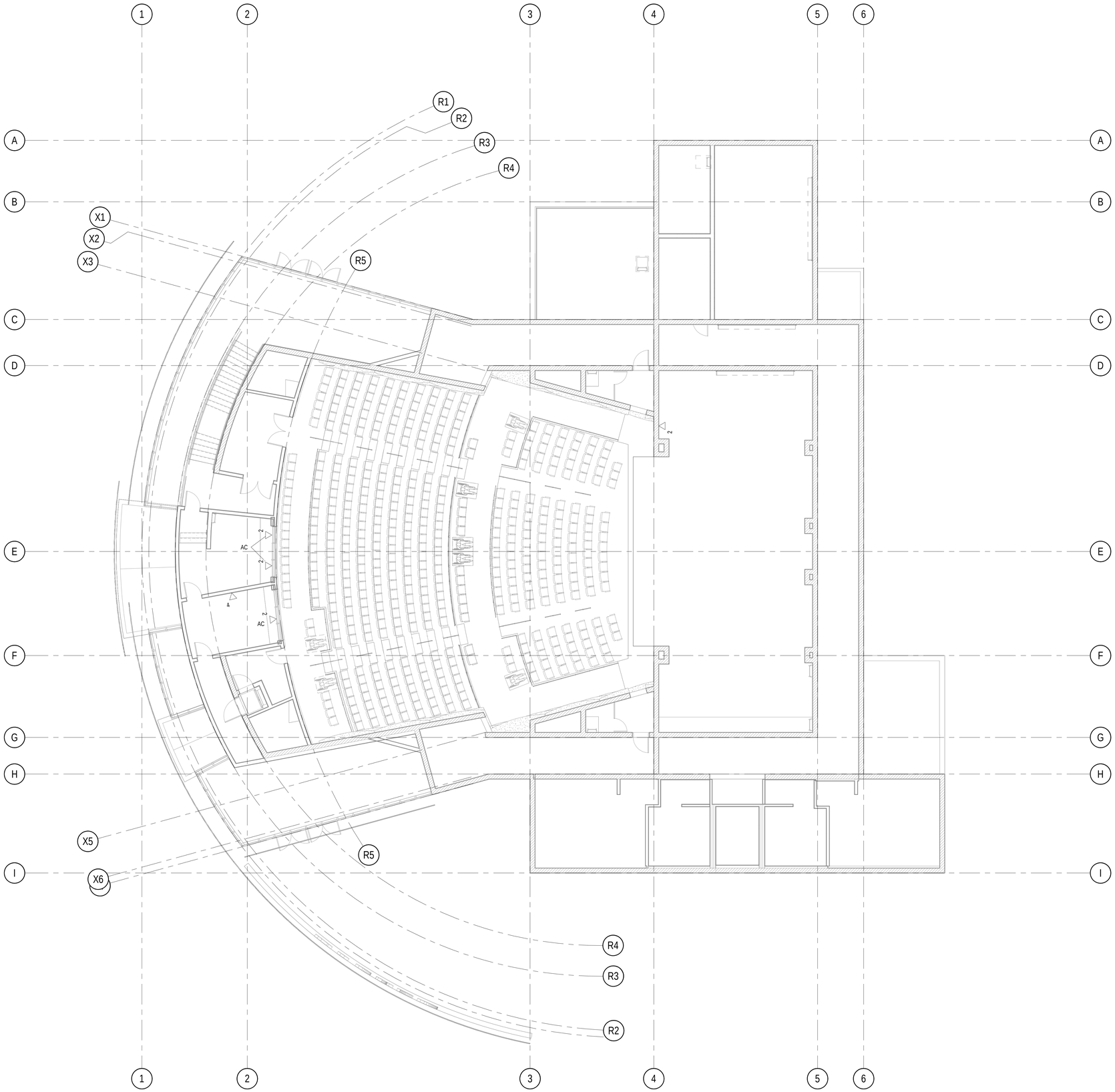

1 CONTROL BOOTH LEVEL FLOOR PLAN

SCALE: 1/8" = 1'-0"

0' 4' 8' 16' 24'

NORTH

NOTE:

REFER TO SHEET T000 FOR SYMBOL LEGEND

APPL No. A03-122864

DSA

Architect

RACHLIN PARTNERS
8640 National Boulevard
Culver City, CA 90232
310.204.3400

Disclaimer:

THESE DRAWINGS ARE THE PROPERTY OF THE ARCHITECT. THE DESIGNS SHOWN AND DESCRIBED HEREIN INCLUDING ALL TECHNICAL DRAWINGS ARE PROPRIETARY AND CANNOT BE COPIED, DUPLICATED OR COMMERCIALLY EXPLOITED EXCEPT BY WRITTEN AGREEMENT. THESE DRAWINGS AND DESIGNS SHALL NOT BE USED BY THE OWNER ON OTHER PROJECTS, FOR ADDITIONS TO THIS PROJECT, OR FOR COMPLETION OF THIS PROJECT BY OTHERS. THE OWNER AGREES TO HOLD HARMLESS, INDEMNIFY AND DEFEND THE ARCHITECT AGAINST ALL DAMAGES, CLAIMS AND LOSSES, INCLUDING DEFENSE COSTS, ARISING OUT OF ANY REUSE OF PLANS AND SPECIFICATIONS WITHOUT THE WRITTEN AUTHORIZATION OF THE ARCHITECT OF RECORD.

Copyright © 2022 Rachlin Partners, All Rights Reserved.

Performing Arts Center

Hacienda La Puente Unified School District
635 North California Avenue
La Puente, CA 91744

Re	Date	Issue
1	7.22.22	50% DD
2	10.21.22	50% CD
3	12.09.22	100% CD DSA SUBMITTAL
4	6.19.23	100% CD DSA RESUBMITTAL
5	9.20.23	DSA BACK CHECK
6	11.01.23	ADDENDUM NO. 1
7	11.01.23	ADDENDUM NO. 2

Date: 11.01.2023
Scale: 1/8" = 1'-0"
Drawn By: EMB
Checked By: HJSA

Architect / Engineer

LICENSED ARCHITECT — HOWARD JAMES SAMUELS — NO. C-26229 — REN. 8-31-25 — STATE OF CALIFORNIA

Consultants

Miyamoto International, Inc.
The Ruzika Company, Inc.
MDC Consulting Engineers
Pocock Design Solutions
Newson Brown Acoustics, LLC
VCA Engineers, Inc.
HJSA Consulting

Sheet Title

Telecomm - Control Booth Level Plan

Sheet

TC212

C:\Users\Erich.Bretz\OneDrive - Gerald H. Phipps, Inc\Documents\R22_HLPUSD-PAC_Central_HJSA_mbimsolutions.rvt

NOTE:

REFER TO SHEET T000 FOR SYMBOL LEGEND

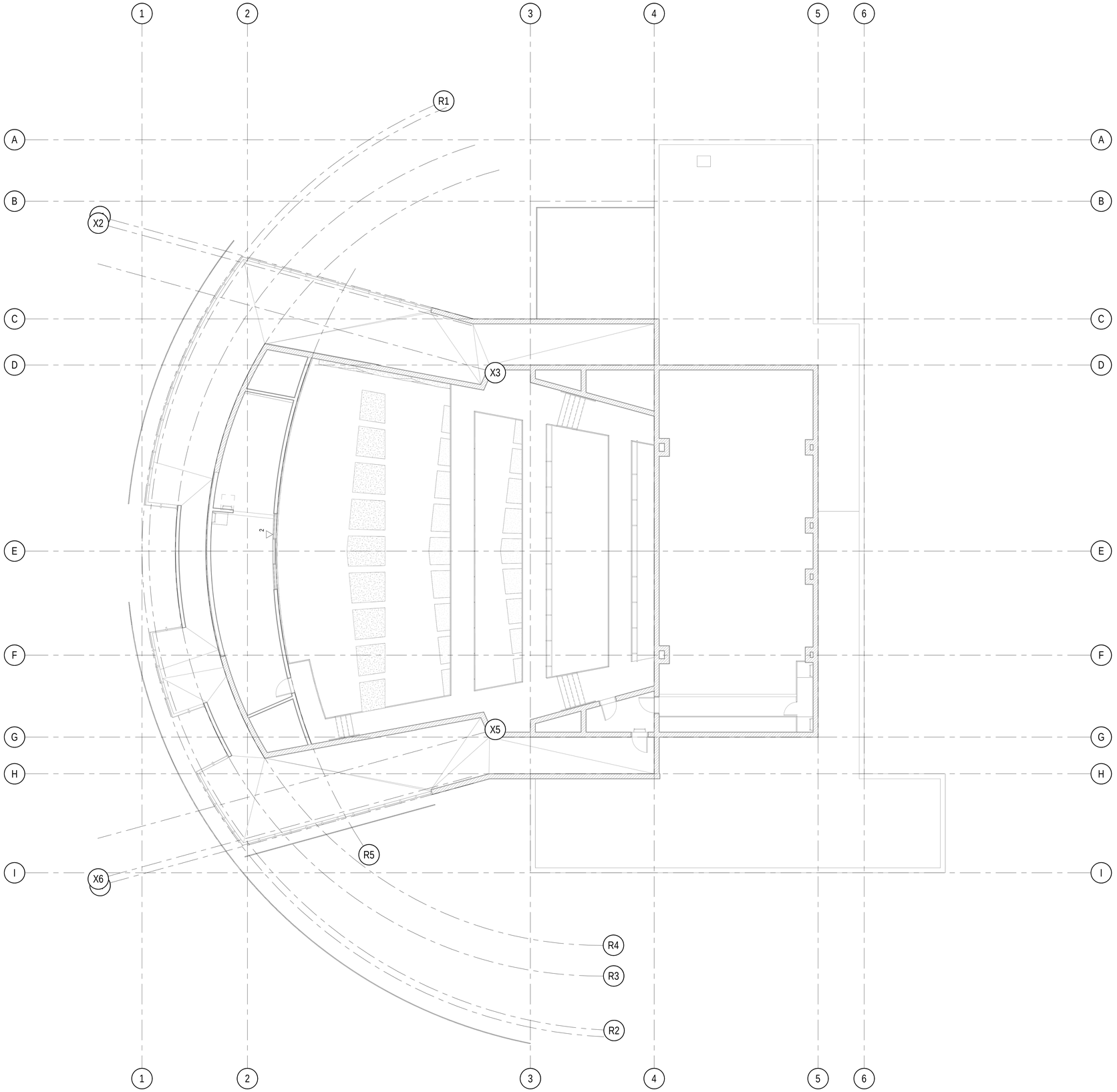

1 FOLLOW SPOT LEVEL FLOOR PLAN

SCALE: 1/8" = 1'-0"

0' 4' 8' 16' 24'

NORTH

C:\Users\Erich.Bretz\OneDrive - Gerald H. Phipps, Inc\Documents\R22_HLPUSD-PAC_Central_HJSA_mbbimsolutions.rvt

APPL No. A03-122864

DSA

Architect

RACHLIN
PARTNERS
8640 National Boulevard
Culver City, CA 90232
310.204.3400

Disclaimer:

THESE DRAWINGS ARE THE PROPERTY OF THE ARCHITECT. THE DESIGNS SHOWN AND DESCRIBED HEREIN INCLUDING ALL TECHNICAL DRAWINGS ARE PROPRIETARY AND CANNOT BE COPIED, DUPLICATED OR COMMERCIALLY EXPLOITED EXCEPT BY WRITTEN AGREEMENT. THESE DRAWINGS AND DESIGNS SHALL NOT BE USED BY THE OWNER ON OTHER PROJECTS, FOR ADDITIONS TO THIS PROJECT, OR FOR COMPLETION OF THIS PROJECT BY OTHERS. THE OWNER AGREES TO HOLD HARMLESS, INDEMNIFY AND DEFEND THE ARCHITECT AGAINST ALL DAMAGES, CLAIMS AND LOSSES, INCLUDING DEFENSE COSTS, ARISING OUT OF ANY REUSE OF PLANS AND SPECIFICATIONS WITHOUT THE WRITTEN AUTHORIZATION OF THE ARCHITECT OF RECORD.

Copyright © 2022 Rachlin Partners, All Rights Reserved.

Performing Arts Center

Hacienda La Puente Unified School District
635 North California Avenue
La Puente, CA 91744

Re	Date	Issue
1	7.22.22	50% DD
2	10.21.22	50% CD
3	12.09.22	100% CD DSA SUBMITTAL
4	6.19.23	100% CD DSA RESUBMITTAL
5	9.20.23	DSA BACK CHECK
6	11.01.23	ADDENDUM NO. 1
7	11.01.23	ADDENDUM NO. 2

Date: 11.01.2023
Scale: 1/8" = 1'-0"
Drawn By: EMB
Checked By: HJSA

Architect / Engineer

LICENSED ARCHITECT
H. JAMES SAITO
NO. C-28229
REN. 8-31-25
STATE OF CALIFORNIA

Consultants

Miyamoto International, Inc.
The Ruzika Company, Inc.
MDC Consulting Engineers
Pocock Design Solutions
Newson Brown Acoustics, LLC
VCA Engineers, Inc.
HJSA Consulting

Sheet Title

Telecomm - Follow Spot Level Plan

Sheet

TC213