MERCED UNION HIGH SCHOOL DISTRICT

BUHACH HIGH SCHOOL

CONCESSIONS/TOILET BUILDINGS, TICKET BOOTH & STADIUM UPGRADES

1800 NORTH BUHACH RD
ATWATER, CA 95301

MERCED COUNTY

SYMBOLS

- 101 — DOOR NUMBER
- 1t — WINDOW TYPE
- 1 — HM FRAME TYPE
- 1i — PARTITION TYPE
- 1.01 — KEYED NOTE
- A — ACCESSORY NOTE
- ROOM TAG: ROOM NAME / 101 / 150 SF / 3 OCC — ROOM NAME, ROOM NUMBER, ROOM AREA / VOLUME, CALCULATED OCCUPANT LOAD
- TURNING / AREA OF REFUGE / CLEAR FLOOR — ACCESSIBILITY CLEARANCES
- Name / Elevat — DATUM / ELEVATION TAG
- ELEVATION — SPOT ELEVATION TAG
- DRAWING REVISION CLOUD
- AD — REVISION NUMBER; AD = ADDENDUM; FO = FIELD ORDER; CO = CHANGE ORDER
- B4 / A3.1 — BUILDING SECTION, SHEET WHERE DRAWN
- D4 / A3.2 — WALL SECTION, SHEET WHERE DRAWN
- A1 / A5.1 — SECTION DETAIL, SHEET WHERE DRAWN
- A1 / A4.1 — ELEVATION DETAIL, SHEET WHERE DRAWN
- A1 / A2.1 — EXTERIOR ELEVATION, SHEET WHERE DRAWN
- 1 / A4.1 — INTERIOR ELEVATION, VIEW / SHEET WHERE DRAWN
- A1 / A4.1 — ENLARGED DETAIL, SHEET WHERE DRAWN

KEY TO MATERIALS

EARTH; E.I.F.S.; GRAVEL; COMPACTED GRANULAR FILL; CONCRETE; BRICK; MASONRY / CMU; ALUMINUM; CONTINUOUS WOOD; BATT INSULATION; STEEL; WOOD BLOCKING; RIGID INSULATION; NEW WOOD STUD FRAMING; PLYWOOD

SCOPE OF WORK

REPLACE (E) DIRT TRACK WITH ALL-WEATHER TRACK AND FIELD EVENTS. PROVIDE NEW HOME AND VISITOR BLEACHER ASSEMBLIES WITH PRESS BOX, NEW TICKET BOOTH BUILDING, VISITOR CONCESSIONS AND TOILET BUILDING, AND HOME CONCESSIONS AND TOILET BUILDING. REPLACEMENT OF NATURAL GRASS FOOTBALL FIELD AND IRRIGATION AND ASSOICATED SITE WORK. RELOCATE TWO EXISTING MUSCO STADIUM LIGHT POLES.

DEFERRED SUBMITTAL

NONE.

APPLICABLE CODES

2022 CALIFORNIA BUILDING STANDARD ADMIINSTRATIVE CODE PART 1, TITLE 24 C.C.R.
2022 CALIFORNIA BUILDING CODE (CBC) PART 2, TITLE 24 C.C.R.
2022 CALIFORNIA ELECRICAL CODE (CEC) PART 3, TITLE 24 C.C.R.
2022 CALIFORNIA MECHANICAL CODE (CMC) PART 4, TITLE 24 C.C.R.
2022 CALIFORNIA PLUMBING CODE (CPC) PART 5, TITLE 24 C.C.R.
2022 CALIFORNIA ENERGY CODE, PART 6, TITLE 24 C.C.R.
2022 CALIFORNIA FIRE CODE (CFC) PART 9, TITLE 24 C.C.R.
2022 CALIFORNIA REFERENCED STANDARD CODE PART 12, TITLE 24 C.C.R.
TITLE 19 C.C.R. PUBLIC SAFETY, STATE FIRE MARSHALL REGULATIONS
NFPA 72, NATIONAL FIRE ALARM CODE, WITH CALIFORNIA AMENDMENTS, 2022 EDITION
NFPA 13, AUTOMATIC SPRINKLER SYSTEM WITH CALIFORNIA AMMENDMENTS, 2022 EDITION
NFPA 24, PRIVATE FIRE MAINS, 2019 EDITION
NFPA 14, STANDPIPE, PRIVATE FIRE HYDRANT HOSE SYSTEMS 2019 EDITION
REFERENCE CODE SECTIONS FOR APPLICABLE STANDARDS - 2022 CBC CHAPTER 35 AND 2022 CFC CHAPTER 80
2012 ICC 300 BLEACHERS, FOLDING AND TELESCOPING SEATING AND GRANDSTANDS

THE ABOVE CODES AND REGULATIONS REFER TO THE LATEST EDITION OR REVISION IN FORCE ON THE DATE OF THE CONTRACT, UNLESS OTHERWISE STATED. NOTHING ON THE DRAWINGS IS TO BE CONSTRUED AS REQUIRING OR PERMITTING WORK THAT IS CONTRARY TO THE LISTED CODES AND REGULATIONS, OR OTHER LOCAL, STATE OR FEDERAL CODES OR REGULATIONS WHICH MAY BE APPLICABLE.
COMPLIANCE WITH CFC CHAPTER 33, FIRE SAFETY DURING CONSTRUCTION AND DEMOLITION, AND CBC CHAPTER 33, SAFETY DURING CONSTRUCTION WILL BE ENFORCED

ABBREVIATIONS

ABS	ACRYLONITRILE-BUTADIENE-STYRENE	MATL	MATERIAL
AC	ASPHALTIC CONCRETE	MAX	MAXIMUM
A.F.F.	ABOVE FINISH FLOOR	MECH	MECHANICAL
ALT	ALTERNATE	MEZZ	MEZZANINE
APPROX	APPROXIMATE(LY)	MFR	MANUFACTURER
ARCH	ARCHITECTURAL	MIN	MINIMUM
		MISC	MISCELLANEOUS
BD	BOARD	MO	MASONRY OPENING
BLDG	BUILDING	MTL	METAL
BLKG	BLOCKING		
B.O.F.	BOTTOM OF FOOTING	NIC	NOT IN CONTRACT
BRG	BEARING	NO.	NUMBER
		NOM	NOMINAL
CI	CAST IRON	NTS	NOT TO SCALE
C.I.P.	CAST IN PLACE		
C.I.	CONTROL JOINT	O/	OVER
CLG	CEILING	O.A.E.	OR APPROVED EQUIVALENT
CLR	CLEAR	O.C.	ON CENTER
CL (℄)	CENTERLINE	OD	OUTSIDE DIAMETER
CMU	CONCRETE MASONRY UNIT	OFCI	OWNER FURNISHED/CONTRACTOR INSTALL
COL	COLUMN	OH	OVERHEAD
CONC	CONCRETE	OPP	OPPOSITE
CONF	CONFERENCE		
CONST	CONSTRUCTION	PARTN	PARTITION
CONT	CONTINUOUS	PART	PARTICLE
CONTR	CONTRACTOR	PERP	PERPENDICULAR
COORD	COORDINATE	PERIM	PERIMETER
		PLAM	PLASTIC LAMINATE
DEMO	(DEMOLISH) DEMOLITION	PL	PLATE
DIA	DIAMETER	PLBG	PLUMBING
DIM	DIMENSION	PR	PAIR
DN	DOWN	PREFAB	PREFABRICATED
DR	DOOR	PREFIN	PREFINISHED
DS	DOWNSPOUT	PVC	POLYVINYL CHLORIDE
DTL	DETAIL		
DWG	DRAWING(S)	QTY	QUANTITY
(E)	EXISTING	RAD	RADIUS
EIFS	EXTERIOR INSULATION & FINISH SYSTEM	RD	ROOF DRAIN
EL	ELEVATION	REINF	REINFORCE(D) / REINFORCING
ELEC	ELECTRICAL	REQD	REQUIRED
ELEV	ELEVATOR	REV	REVISION
EQ	EQUAL	REFR	REFRIGERATOR
EQUIP	EQUIPMENT	RM	ROOM
EXIST	EXISTING	RO	ROUGH OPENING
EXP	EXPANSION	R/R	RESTROOM
EXT	EXTERIOR	RTU	ROOF TOP UNIT
FD	FLOOR DRAIN	SC	SOLID CORE
FDTN	FOUNDATION	SCHED	SCHEDULE(D)
FE(C)	FIRE EXTINGUISHER (CABINET)	SIM	SIMILAR
FIN	FINISH	SPEC	SPECIFICATION(S)
FLR	FLOOR	SQ	SQUARE
FT	FEET	SS	STAINLESS STEEL
FTG	FOOTING	STD	STANDARD
		STOR	STORAGE
GA	GAUGE	STRUC	STRUCTURAL
GALV	GALVANIZED	SUSP	SUSPENDED
GC	GENERAL CONTRACTOR		
GLU-LAM	GLUE LAMINATED	T&G	TONGUE AND GROOVE
GYP	GYPSUM	TEL	TELEPHONE
		THRES	THRESHOLD
HDWD	HARDWOOD	T.O.	TOP OF
HORIZ	HORIZONTAL	T.O.B.	TOP OF BEAM
HSS	HOLLOW STRUCTURAL STEEL	T.O.S.	TOP OF SLAB / TOP OF STRUCTURE
HT	HEIGHT	T.O.D.	TOP OF DECK
HVAC	HEATING, VENTILATION & AIR CONDITIONING	T.O.W.	TOP OF WALL
		TOIL	TOILET
ID	INSIDE DIAMETER	T.S.	TUBE STEEL
INT	INTERIOR	TV	TELEVISION
ISO	ISOMETRIC	TYP	TYPICAL
JAN	JANITOR	UL	UNDERWRITERS LABORATORY
		U.O.N.	UNLESS OTHERWISE NOTED
KD	KNOCKDOWN		
KO	KNOCKOUT	VCT	VINYL COMPOSITION TILE
KOP	KNOCKOUT PANEL	VERT	VERTICAL
		VEST	VESTIBULE
LAB	LABORATORY		
LAV	LAVATORY	WC	WATER CLOSET
LLV	LONG LEG VERTICAL	WF	WIDE FLANGE
LVL	LAMINATED VENEER LUMBER	WH	WATER HEATER
LW	LIGHT WEIGHT	WWF	WELDED WIRE FABRIC
		W/	WITH
		W/O	WITHOUT

CONSULTANTS

CIVIL ENGINEER:
NORTHSTAR ENGINEERING GROUP
620 12th STREET
MODESTO, CA 95354
209-524-3525

STRUCTURAL ENGINEER:
POINT 2 STRUCTURAL ENGINEERS
3701 BUSINESS DRIVE, SUITE 100
SACRAMENTO, CA 95820
916-452-8200

LANDSCAPING:
MTW GROUP LANDSCAPE ARCHITECTURE
2707 K STREET, SUITE 201
SACRAMENTO, CA 95816
916-369-3990

ELECTRICAL ENGINEER:
M.NEILS ENGINEERING
100 HOW AVENUE, SUITE 235 N.
SACRAMENTO, CA 95825
916-923-4400

MECHANICAL / PLUMBING:
WESTON & ASSOCIATES MECHANICAL ENGINEERS
601 UNIVERSITY AVENUE, SUITE 260
SACRAMENTO, CA 95865
916-482-0820

BLEACHERS:
SOUTHERN BLEACHER COMPANY
801 FIFTH STREET
GRAHAM, TX 76450
940-549-0733

STADIUM LIGHTING:
MUSCO / KNA STRUCTURAL ENGINEERS
9931 MUIRLANDS BOULEVARD
IRVINE, CA 92618
949-462-3200

SCOREBOARD:
OES / YJ INC
P.O. BOX 802050
SANTA CLARITA, CA 91380
661-259-0700

VICINITY MAP

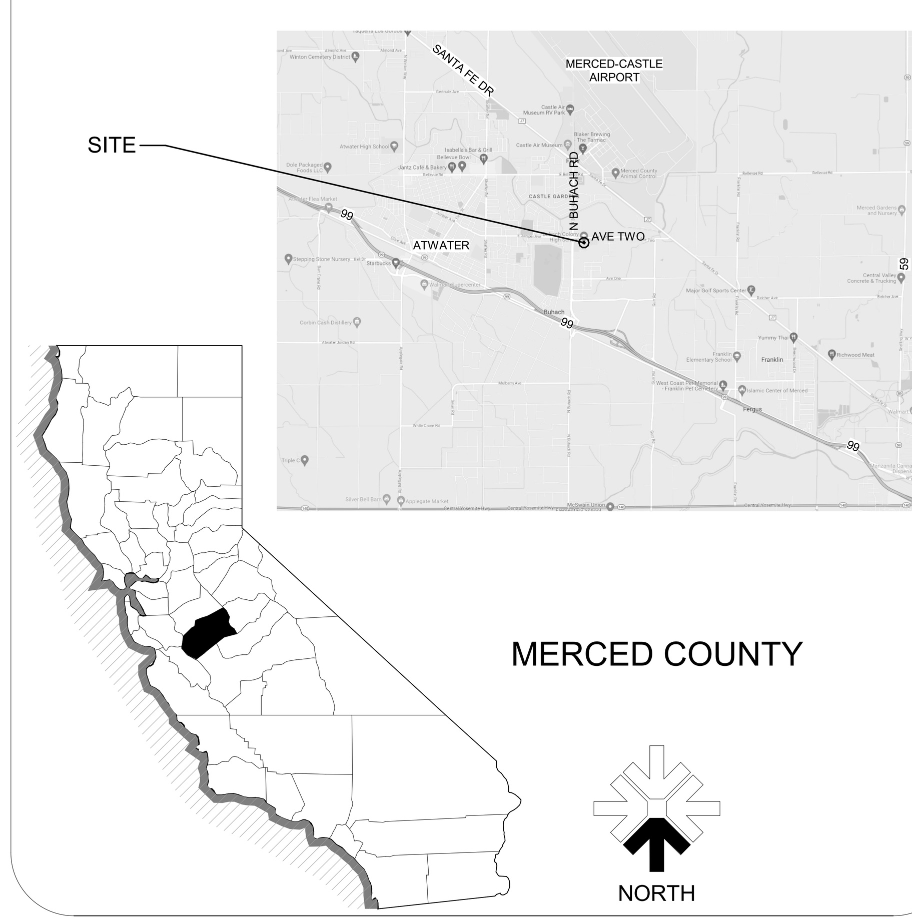

SHEET INDEX

SHEET # — SHEET NAME

GENERAL
G001 COVER SHEET
G002 GENERAL PROJECT NOTES
GS90 OVERALL SITE PLAN - ACS AND CODE ANALYSIS
GS90F SITE PLAN - LOCAL FIRE AUTHORITY REVIEW

DEMOLITION
GS099 ARCHITECTURAL DEMOLITION SITE PLAN

CIVIL
C1.1 COVER SHEET
C1.2 LEGENDS AND ABBREVIATIONS
C1.3 GENERAL NOTES AND SPECIFICATION
C1.4 DETAILS AND CROSS SECTIONS
C1.5 DETAILS AND CROSS SECTIONS
C1.6 DETAILS AND CROSS SECTIONS
C2.1 TOPOGRAPHIC AND DEMOLITION PLAN
C2.2 TOPOGRAPHIC AND DEMOLITION PLAN
C2.3 TOPOGRAPHIC AND DEMOLITION PLAN
C2.4 TOPOGRAPHIC AND DEMOLITION PLAN
C3.1 DIMENSION AND PAVING PLAN
C3.2 DIMENSION AND PAVING PLAN
C3.3 DIMENSION AND PAVING PLAN
C3.4 DIMENSION AND PAVING PLAN
C4.1 GRADING AND DRAINAGE PLAN
C4.2 GRADING AND DRAINAGE PLAN
C4.3 GRADING AND DRAINAGE PLAN
C4.4 GRADING AND DRAINAGE PLAN
C5.1 STORM DRAINAGE AND SANITARY SEWER PLAN
C5.2 STORM DRAINAGE AND SANITARY SEWER PLAN
C5.3 STORM DRAINAGE AND SANITARY SEWER PLAN
C5.4 STORM DRAINAGE AND SANITARY SEWER PLAN
C6.1 WATER AND COMPOSITE UTILITY PLAN
C6.2 WATER AND COMPOSITE UTILITY PLAN
C6.3 WATER AND COMPOSITE UTILITY PLAN
C6.4 WATER AND COMPOSITE UTILITY PLAN
C7.1 EROSION CONTROL PLAN, NOTES, AND DETAILS
C7.2 EROSION CONTROL PLAN, NOTES, AND DETAILS

LANDSCAPE
L1.2 IRRIGATION DEMOLITION PLAN
L1.3 IRRIGATION DEMOLITION PLAN
L2.1 SHRUB/TURF PLANTING PLAN
L2.2 SHRUB/TURF PLANTING PLAN
L2.3 SHRUB/TURF PLANTING PLAN
L3.1 LANDSCAPE IRRIGATION PLAN
L3.2 LANDSCAPE IRRIGATION PLAN
L3.3 LANDSCAPE IRRIGATION PLAN
L4.1 LANDSCAPE DETAILS
L4.2 IRRIGATION DETAILS
L4.3 IRRIGATION DETAILS AND CALCULATIONS
L5.1 TREE SHADING PLAN

ARCHITECTURAL SITE
AS100 OVERALL PROJECT ARCHITECTURAL SITE PLAN - FLOOD ZONE INFORMATION
AS101 ENLARGED PROJECT ARCHITECTURAL SITE PLAN
AS102 ENLARGED PLAN - UNDER BLEACHERS
AS103 PAVING PATTERN PLAN
AS104 ENLARGED SITE PLANS AT BUILDINGS
AS501 SITE DETAILS
AS502 FENCE/ GATE DETAILS

ARCHITECTURAL - BUILDING H
AH101 BUILDING H - FLOOR PLAN
AH103 BUILDING H - DIMENSION PLAN
AH104 BUILDING H - EQUIP. & ACCESSORY SCHEUDLES
AH161 BUILDING H - ROOF PLAN
AH181 BUILDING H - REFLECTED CEILING PLAN
AH221 BUILDING H - EXTERIOR ELEVATIONS
AH291 BUILDING H - INTERIOR ELEVATIONS
AH301 BUILDING H - SECTIONS

ARCHITECTURAL - BUILDING T
AT101 DIMENSION PLAN & FLOOR PLAN - TICKET BUILDING
AT181 ROOF PLAN & REFLECTED CEILING PLAN - TICKET BUILDING
AT221 SECTIONS & ELEVATIONS - TICKET BOOTH

ARCHITECTURAL - BUILDING V
AV101 BUILDING V FLOOR PLAN - VISITOR BUILDING
AV103 BUILDING V - DIMENSION PLAN
AV104 BUILDING V EQUIP. & ACCESSORY SCHEDULES
AV161 BUILDING V - ROOF PLAN
AV181 BUILDING V - REFLECTED CEILING PLAN
AV221 BUILDING V - EXTERIOR ELEVATIONS
AV291 BUILDING V - INTERIOR ELEVATIONS
AV301 BUILDING V - SECTIONS
A541 WALL TYPES, ROOF & MISC. DETAILS
A571 DOOR & WINDOW DETAILS
A581 REFLECTED CEILING PLAN DETAILS
A591 ACCESSIBILITY STANDARDS & MOUNTING HEIGHTS
A592 INTERIOR & CASEWORK DETAILS
A593 EQUIPMENT MOUNTING AND BRACING

SHEET # — SHEET NAME

STRUCTURAL
S1.0 TYPICAL NOTES
S1.01 TYPICAL NOTES
S1.1 TYPICAL DETAILS
S1.2 TYPICAL DETAILS
S1.3 TYPICAL DETAILS
S1.4 TYPICAL DETAILS
S1.5 TYPICAL DETAILS
SH2.0 HOME CONCESSIONS FOUNDATION & SLAB CURB PLAN
SH2.1 HOME CONCESSIONS CEILING & ROOF FRAMING PLAN
SH3.0 SECTIONS
SH3.1 SECTIONS
ST2.0 TICKET BOOTH & STADIUM ENTRY FOUNDATION & SLAB CURB PLAN
ST2.1 TICKET BOOTH & STADIUM ENTRY CEILING & ROOF FRAMING PLAN
ST3.0 SECTIONS
SV2.0 VISITOR CONCESSIONS FOUNDATIN & SLAB CURB PLAN
SV2.1 VISITOR CONCESSIONS ROOF FRAMING PLAN
SV3.0 SECTIONS
SV3.1 SECTIONS
S4.0 DETAILS
S4.1 DETAILS
S5.0 DETAILS

MECHANICAL
M0.1 MECHANICAL SCHEDULES, LEGEND & NOTES
M0.2 MECHANICAL SCHEDULES
M2.1 MECHANICAL FLOOR PLANS
M2.2 MECHANICAL FLOOR PLANS
M5.1 MECHANICAL CONTROLS
M6.1 MECHANICAL DETAILS
M6.2 MECHANICAL DETAILS
M8.1 MECHANICAL TITLE 24 COMPLIANCE
M8.2 MECHANICAL TITLE 24 COMPLIANCE

PLUMBING
P0.1 PLUMBING SCHEDULES LEGEND & NOTES
P0.2 PLUMBING SCHEDULES
P2.1 PLUMBING FLOOR PLANS
P2.2 PLUMBING FLOOR PLANS
P6.1 PLUMBING DETAILS
P6.2 PLUMBING DETAILS

ELECTRICAL
E001 ELECTRICAL COVER SHEET
E100 PARTIAL SITE PLAN - ELECTRICAL DEMOLITION
E110 OVERALL SITE PLAN - ELECTRICAL
E120 - PARTIAL SITE PLAN - ELECTRICAL
E210 FLOOR PLANS - LIGHTING
E220 FLOOR PLANS - POWER
E230 FLOOR PLANS - SIGNAL
E240 FLOOR PLANS - FIRE ALARM
E250 BLEACHER FLOOR PLANS - ELECTRICAL
E300 PARTIAL ONE LINE POWER DIAGRAM, PANEL SCHEDULES
E310 SITE SIGNAL, RISER DIAGRAM, STADIUM SOUND SYSTEM DIAGRAM
E320 STADIUM LIGHTING RISER DIAGRAMS
E400 FIRE ALARM NOTES, DETAILS, OPERATION MATRIX, SCHEDULES
E410 FIRE ALARM RISER DIAGRAM, FA CALCULATIONS
E500 ELECTRICAL DETAILS
E510 ELECTRICAL DETAILS
E600 TITLE 24 - INDOOR LIGHTING COMPLIANCE FORMS
E610 TITLE 24 - OUTDOOR LIGHTING COMPLIANCE FORMS
E620 TITLE 24 - ELECTRICAL POWER DISTRIBUTION FORMS

MUSCO
MT1 NOTES, FOUNDATION AND DETAIL
MS1 POLE DETAIL

SPECIALTY TRACK DRAWINGS
TR-1 TRACK GRADING AND DRAINAGE PLAN
TR-2 TRACK MATERIAL PLAN
TR-3 TRACK DETAIL SHEET
TR-4 TRACK DETAIL SHEET

SHEET # — SHEET NAME

BLEACHER DRAWINGS
B1 COVER PAGE
B2 GENERAL NOTES
B3 FOOTING LAYOUT - HOME
B4 ENLARGED EXIT FOOTING LAYOUTS - HOME
B5 PIER DETAILS - HOME
B5.1 PIER DETAILS - HOME
B6 UNDERSTRUCTURE LAYOUT - HOME
B7 ENLARGED EXIT UNDERSTRUCTURE LAYOUTS - HOME
B8 ELEVATION VIEWS - HOME
B9 SECTION VIEW - HOME
B10 SECTION VIEWS - HOME
B11 SECTION VIEWS - HOME
B12 SECTION VIEWS - HOME
B13 SIGHT LINES - HOME
B14 SEATING LAYOUT - HOME
B15 ENLARGED EXIT LAYOUT - HOME
B16 EXITS - HOME
B17 EXITS - HOME
B18 SEAT BRACKET LAYOUT - HOME
B19 PRESS BOX LAYOUT - HOME
B20 PRESS BOX FRAMING PLAN - HOME
B21 PRESS BOX ROOF HATCH - HOME
B22 PRESS BOX DETAILS - HOME
B23 PRESS BOX DETAILS - HOME
B24 PRESS BOX CEILING DETAILS - HOME
B25 APPENDIX -A- MATERIAL SPECS
B26 FOOTING LAYOUT - VISITOR
B27 ENLARGED EXIT FOOTING LAYOUTS - VISITOR
B28 PIER DETAILS - VISITOR
B29 UNDERSTRUCTURE - VISITOR
B30 ENLARGED EXIT UNDERSTRUCTURE LAYOUTS - VISITOR
B31 ELEVATION VIEWS - VISITOR
B32 SECTION VIEWS - VISITOR
B33 SIGHT LINES - VISITOR
B34 SEATING LAYOUT - VISITOR
B35 ENLARGED EXIT LAYOUTS - VISITOR
B36 EXITS - VISITOR
B37 SEAT BRACKET LAYOUT - VISITOR
B38 PLANK DETAILS
B39 EXIT DETAILS
B40 EXIT DETAILS
B41 GRANDSTAND DETAILS
B42 GRANDSTAND DETAILS

SCOREBOARD
SB-1 SCOREBOARD ELEVATIONS
SB-2 CONNECTION DETAIL

TOTAL SHEETS: 184

Statement of General Conformance

FOR ARCHITECTS/ENGINEERS WHO UTILIZE PLANS, INCLUDING BUT NOT LIMITED TO SHOP DRAWINGS, PREPARED BY OTHER LICENSED DESIGN PROFESSIONALS AND/OR CONSULTANTS

(Application No. 02-121275 **File No.** 24-H5 **)**

☑ The drawings or sheets listed on the cover or index sheet
☐ This drawing, page of specifications/calculations

have been prepared by other design professionals or consultants who are licensed and/or authorized to prepare such drawings in this state. It has been examined by me for:

1) Design intent and appears to meet the appropriate requirements of Title 24, California Code of Regulations and the project specifications prepared by me, and
2) Coordination with my plans and specifications and is acceptable for incorporation into the construction of this project.

The Statement of General Conformance "shall not be construed as relieving me of my rights, duties, and responsibilities under Sections 17302 and 81138 of the Education Code and Sections 4-336, 4-341 and 4-344" of Title 24, Part 1. (Title 24, Part 1, Section 4-317 [b])

I find that: ☑ All drawings or sheets listed on the cover or index sheet ☐ This drawing or page

☑ is/are in general conformance with the project design intent, and ☑ has/have been coordinated with the project plans and specifications.	☐ is/are in general conformance with the project design intent, and ☐ has/have been coordinated with the project plans and specifications.
[signature] 12/8/23 — **Signature** / **Date**	**Signature** / **Date**
Architect or Engineer designated to be in general responsible charge	**Architect or Engineer delegated responsibility for this portion of the work**
MITCHELL A. MCALLISTER — **Print Name**	**Print Name**
C17250 — **License Number**; 2-28-2025 — **Expiration Date**	**License Number** / **Expiration Date**

IDENTIFICATION STAMP
DIV. OF THE STATE ARCHITECT
APP: 02-121275 INC:
REVIEWED FOR
SS ☑ FLS ☑ ACS ☑
DATE: 12/15/2023

DESIGN California WEST

CALIFORNIA DESIGN WEST ARCHITECTS, Inc.
2100 19th Street
Sacramento, CA 95818

These plans and prints thereof, as instruments of service, are owned by the architect and are for the use on this project only. Reproduction and/or distribution without the prior written consent of the architect is forbidden.

Copyright California Design West Architects, Inc.

ARCHITECT:

LICENSED ARCHITECT — MITCHELL A. McALLISTER — NO. C 17250 — REN. 2-28-2025 — STATE OF CALIFORNIA

CONSULTANT:

PROJECT NAME:
BUHACH HIGH SCHOOL

1800 NORTH BUHACH RD
ATWATER, CA 95301

CONCESSIONS/TOILET BUILDINGS, TICKET BOOTH & STADIUM UPGRADES

MERCED UNION HIGH SCHOOL DISTRICT

MERCED COUNTY

KEY PLAN:

SHEET TITLE:
COVER SHEET

JOB NUMBER:
DATE: NOV 17, 2023
REVISION:
SHEET NUMBER: **G001**

C:\Users\strump\Documents\A22_BCHS-NewStadium-SITE_strump-2100.rvt

1. IT IS THE RESPONSIBILITY OF THE GENERAL CONTRACTOR TO SEE TO IT THAT ALL MATERIALS AND/OR WORK DESCRIBED, DEPICTED OR DETAILED WITHIN THESE DOCUMENTS, BE FURNISHED AND OR INSTALLED REGARDLESS OF THE LOCATION OF THAT MATERIAL OR WORK WITHIN THE DOCUMENTS OR OMISSION (WHETHER DELIBERATE OR ACCIDENTAL) OF THAT MATERIAL OR WORK BY A SUBCONTRACTOR ON HIS/HER BID.

2. ALL CONTRACTORS, WHETHER THE GENERAL OR SUB, SHALL CONSIDER THESE DOCUMENTS IN THEIR ENTIRETY. DISCREPANCIES OR CONTRADICTIONS BETWEEN PORTIONS OF THESE DOCUMENTS MUST BE BROUGHT TO THE ATTENTION OF THE ARCHITECT AT LEAST 48 HRS PRIOR TO BID OPENING FOR CLARIFICATION. OTHERWISE EITHER DESCRIPTION OR INSTRUCTION SHALL BE IN FORCE UNTIL ONE IS OMITTED BY THE ARCHITECT, AT NO ADDITIONAL COST TO THE OWNER.

3. THE CONTRACTOR IS RESPONSIBLE FOR PROVIDING AND MAINTAINING TEMPORARY FENCING AND GATES, SIGNAGE, SECURITY LIGHTING OR OTHER SECURITY AND CONTROL MEASURES NECESSARY TO PROVIDE FOR THE SAFETY OF STUDENTS, FACULTY AND STAFF AROUND THE WORK, UNTIL THE COMPLETION OF THE WORK UNLESS OTHERWISE DETERMINED BY THE ARCHITECT OR CONSTRUCTION MANAGER.

4. THE CONTRACTOR IS RESPONSIBLE TO REPAIR AND/OR REPLACE ALL DISTRICT PROPERTY DAMAGED DURING THE COURSE ON THE WORK, ESPECIALLY BUT NOT LIMITED TO ASPHALT PAVING AROUND THE SITE, STAGING AREA OR PATH OF TRAVEL TO EITHER.

5. THE CONTRACTOR SHALL LIMIT HIS/HER ACTIVITY TO THE AREA DESCRIBED WITHIN THE DOCUMENTS SO AS TO LIMIT HIS/HER LIABILITY FOR DAMAGED PROPERTY UNLESS OTHERWISE PERMITTED BY THE CONSTRUCTION MANAGER OR OWNER.

6. ALL WORK SHALL BE IN ACCORDANCE WITH REQUIREMENTS OF ALL APPLICABLE CODES. SEE LIST THIS SHEET.

7. CONTRACTOR IS RESPONSIBLE FOR OBTAINING ALL REQUIRED PERMITS PRIOR TO COMMENCEMENT OF CONSTRUCTION EXCEPT DSA APPROVAL.

8. ALL DIMENSIONS SHALL BE FACE OF STUD, UNLESS OTHERWISE NOTED. DIMENSIONS NOTED AS "CLR" MEAN CLEAR DIMENSION TO FACE OF FINISH. VERIFY ALL EXISTING DIMENSIONS AND CONDITIONS AND NOTIFY ARCHITECT OF ANY DISCREPANCIES FOUND.

9. ALL ITEMS IN THESE DRAWINGS ARE NEW UNLESS OTHERWISE NOTED.

10. SCHEDULE ALL WORK OUTSIDE THE "EXTENT OF WORK" SET FORTH IN THESE DOCUMENTS WITH THE CONSTRUCTION MANAGER INCLUDING ACCESS AND STORAGE. THE CONSTRUCTION SCHEDULE SHALL BE APPROVED BY THE OWNER PRIOR TO THE START OF CONSTRUCTION.

11. ALL UTILITIES REQUIRED FOR THE CONTINUOUS OPERATION OF ALL EXISTING FACILITIES TO REMAIN MUST BE MAINTAINED IN SERVICE AT ALL TIMES. ANY SHUT DOWNS FOR NEW CONNECTIONS MUST BE COORDINATED WITH THE CONSTRUCTION MANAGER TWO WEEKS PRIOR TO THE REQUESTED SHUT DOWN.

12. THE CONTRACTOR IS RESPONSIBLE FOR THE REPAIR OR REPLACEMENT OF ANY ITEMS DAMAGED OR DISTURBED DURING THE COURSE OF THE WORK. INSTALLATION SHALL MATCH EXISTING IN KIND, QUALITY, AND PERFORMANCE.

13. THE CONTRACTOR SHALL CONTAIN ALL DUST AND DEBRIS TO THE CONSTRUCTION AREA. BROOM CLEAN ALL SIDEWALKS AND DRIVEWAYS EACH DAY. KEEP DIRT AND DUST TO A MINIMUM.

14. ALL REMODELED ITEMS LISTED TO BE SALVAGED FOR THE OWNER SHALL BE DELIVERED TO A PLACE OF STORAGE AS DIRECTED BY THE OWNER. ALL OTHER ITEMS MUST BE DISPOSED OF OFF SITE IN A LEGAL MANNER.

15. ALL WORK SHALL BE EXECUTED IN A CAREFUL AND ORDERLY MANNER WITH THE LEAST POSSIBLE DISTURBANCE TO THE PUBLIC AND TO OCCUPANTS OF EXISTING BUILDINGS.

16. THE CONTRACTOR SHALL ASSUME SOLE RESPONSIBILITY FOR THE SAFETY OF ALL PERSONS ON OR ABOUT THE CONSTRUCTION SITE, IN ACCORDANCE WITH APPLICABLE LAWS AND CODES. GUARD ALL HAZARDS IN ACCORDANCE WITH THE SAFETY PROVISIONS OF THE LATEST MANUAL OF ACCIDENT PREVENTION PUBLISHED BY THE ASSOCIATED GENERAL CONTRACTORS OF AMERICA.
A. COORDINATION WITH OTHER CONTRACTS: IF ANY PART OF THIS CONTRACTOR'S WORK DEPENDS UPON THE WORK OF A SEPARATE CONTRACTOR, THIS CONTRACTOR SHALL INSPECT SUCH OTHER WORK AND PROMPTLY REPORT IN WRITING TO THE CONSTRUCTION MANAGER ANY DEFECTS IN SUCH OTHER WORK THAT RENDER IT UNSUITABLE TO RECEIVE THE WORK OF THIS CONTRACTOR. FAILURE OF THIS CONTRACTOR TO SO INSPECT AND REPORT SHALL CONSTITUTE AN ACCEPTANCE OF THE OTHER CONTRACTOR'S WORK, EXCEPT AS TO DEFECTS WHICH MAY DEVELOP IN OTHER CONTRACTOR'S WORK AFTER EXECUTION OF THIS CONTRACTOR'S WORK.
B. COORDINATION SCHEDULE: PORTIONS OF WORK UNDER THIS CONTRACTOR'S WORK MUST BE COMPLETED ON SCHEDULE IN ORDER FOR OTHER NOT-IN-CONTRACT WORK TO BE COMPLETED BY OTHERS. COORDINATION WITH THE CONSTRUCTION MANAGER AND STRICT ADHERENCE TO THE COMPLETION DATES FOR DESIGNATED PORTIONS OF WORK ARE IMPERATIVE. SEE SPECIFICATIONS FOR LIQUIDATED DAMAGES.

17. DEMOLITION IS NOT NECESSARILY LIMITED TO ONLY WHAT IS SHOWN ON THIS OR OTHER DRAWINGS OR AS OUTLINED IN THE SPECIFICATIONS. THE INTENT IS TO INDICATE GENERAL SCOPE OF DEMOLITION REQUIRED TO COMPLETE THE PROJECT WITH THE CONSTRUCTION DOCUMENTS.

18. OF PARTICULAR IMPORTANCE IS THE NEED FOR CONTRACTOR TO ASSURE THAT ALL PERSONS ENTERING A POSSIBLY HAZARDOUS AREA, INCLUDING SUPERINTENDENTS, WORKERS, SUBCONTRACTORS, OTHER CONTRACTORS, AND OTHER PERSONS NOT UNDER CONTRACTUAL CONTROL TO THE CONTRACTOR, ARE AWARE OF PROCEDURES.

19. SPECIAL ATTENTION IS CALLED TO THE REQUIREMENT OF THE CONTRACTOR TO COMPLY WITH DSA REQUIREMENTS IN GENERAL AND WITH REGULATIONS INVOLVING ASBESTOS IN PARTICULAR. THESE REGULATIONS ARE STATED IN SECTION 5208, ASBESTOS REGULATIONS, OF TITLE 8, CALIFORNIA CODES OF REGULATIONS. THIS SECTION STIPULATES THAT THE CONTRACTOR MUST INITIATE REPORTS, TESTS, SIGNS AND OTHER ACTIVITIES UNDER CERTAIN JOB CONDITIONS.

20. ALL PIPE AND DUCT PENETRATIONS THROUGH FIRE RATED CONSTRUCTION SHALL BE FIRE STOPPED AND SEALED TO MAINTAIN THE REQUIRED RATING.

21. DETAIL DRAWINGS WITH REFERENCES TO FIRE-RATED ASSEMBLIES OR CONSTRUCTION WHICH HAVE BEEN TESTED BY UNDERWRITERS LABORATORIES, THE CALIFORNIA BUILDING CODE OR ANY OTHER APPROVED TESTING AGENCY, SHALL BE CONSTRUED TO INDICATE ALL CONSTRUCTION AND PROCEDURES CONTAINED IN THE REFERENCED ASSEMBLY FOR CONSTRUCTION.

22. CONTRACTOR TO MAINTAIN CONTEMPORANEOUSLY RECORDED "AS-BUILT" INFORMATION OF ALL WORK, WHICH SHALL BE MARKED IN COLOR ON THE DRAWINGS AND SPECIFICATIONS. A SCANNED PDF OF THE "AS-BUILT" DRAWINGS AND SPECIFICATIONS SHALL BE TURNED OVER TO THE OWNER'S REPRESENTATIVE PRIOR TO FINAL APPLICATION FOR PAYMENT. REFER TO SPECIFICATIONS FOR ADDITIONAL INFORMATION AND REQUIREMENTS.

23. SAFETY DURING DEMOLITION AND CONSTRUCTION MUST COMPLY WITH CFC CHAPTER 33

2 GENERAL PROJECT NOTES
1/4" = 1'-0"

1. ALTERATION, REHABILITATION OR RECONSTRUCTION IS TO BE IN ACCORDANCE WITH TITLE 24, CCR. SHOULD ANY EXISTING CONDITIONS SUCH AS DETERIORATION OR NON-COMPLYING CONSTRUCTION BE DISCOVERED WHICH IS NOT COVERED BY THE CONTRACT DOCUMENTS WHEREIN THE FINISHED WORK WILL NOT COMPLY WITH TITLE 24, CCR, A CONSTRUCTION CHANGE DOCUMENT (CCD), OR A SEPARATE SET OF PLANS AND SPECIFICATIONS, DETAILING AND SPECIFYING THE REQUIRED WORK SHALL BE SUBMITTED TO AND APPROVED BY DSA BEFORE PROCEEDING WITH THE WORK. (SECTION 4-317(C), PART 1, TITLE 24, CCR)

2. A COPY OF PARTS 1 AND 2, TITLE 24 C.C.R. SHALL BE KEPT ON THE JOB SITE AT ALL TIMES DURING CONSTRUCTION.

3. CHANGE TO THE APPROVED DRAWINGS AND SPECIFICATIONS SHALL BE MADE BY ADDENDA OR CONSTRUCTION CHANGE DOCUMENT (CCD) APPROVED BY DSA, AS REQUIRED BY SECTION 4-338, PART 1, TITLE 24, CCR AND PER DSA IR A-6.

4. TESTS OF MATERIALS AND TESTING LABORATORY SHALL BE IN ACCORDANCE WITH SECTION 4-335 OF PART 1, TITLE 24 AND THE DISTRICT SHALL EMPLOY AND PAY THE LABORATORY. COSTS OF RE-TEST MAY BE BACK CHARGED TO THE CONTRACTOR.

5. A DSA ACCEPTED TESTING LABORATORY DIRECTLY EMPLOYED BY THE DISTRICT (OWNER) SHALL CONDUCT ALL THE REQUIRED TESTS AND INSPECTIONS FOR THE PROJECT.

6. DSA SHALL BE NOTIFIED AT THE START OF CONSTRUCTION AND PRIOR TO THE PLACEMENT OF CONCRETE PER SECTION 4-331, PART 1, TITLE 24.

7. A "DSA CERTIFIED" CLASS 2 PROJECT INSPECTOR EMPLOYED BY THE DISTRICT (OWNER) AND APPROVED BY DSA SHALL PROVIDE CONTINUOUS INSPECTION OF THE WORK. THE DUTIES OF THE INSPECTOR ARE DEFINED IN SECTION 4-342, PART 1, TITLE 24, CCR. INSPECTION SHALL BE IN ACCORDANCE WITH SECTION 4-333 (B).

8. SUPERVISION OF CONSTRUCTION BY DSA SHALL BE IN ACCORDANCE WITH SECTION 4-334, PART 1, TITLE 24.

9. CONTRACTOR, INSPECTOR, ARCHITECT, AND ENGINEERS SHALL SUBMIT VERIFIED REPORTS (FORM DSA-6 IN ACCORDANCE WITH SECTION 4-336 AND 4-343, PART 1, TITLE 24.

10. THE ARCHITECT AND THE STRUCTURAL ENGINEER SHALL PERFORM THEIR DUTIES IN ACCORDANCE WITH SECTION 4-333(A) AND 4-341, PART 1, TITLE 24.

11. THE CONTRACTOR SHALL PERFORM HIS DUTIES IN ACCORDANCE WITH SECTION 4-343, PART 1, TITLE 24.

12. NO CHANGES OR REVISIONS SHALL BE MADE FOLLOWING WRITTEN APPROVAL WHICH AFFECTS ACCESS COMPLIANCE ITEMS UNLESS SUCH CHANGES OR REVISIONS ARE SUBMITTED TO THE DSA FOR APPROVAL.

13. SUBSTITUTIONS AFFECTING DSA REGULATED ITEMS SHALL BE SUBMITTED AS A CONSTRUCTION CHANGE DOCUMENT OR ADDENDA, AND SHALL BE APPROVED BY DSA PRIOR TO FABRICATION AND INSTALLATION.

14. CONSTRUCTION CHANGE DOCUMENTS MUST BE SIGNED BY THE FOLLOWING:
· ARCHITECT OR ENGINEER OF RECORD.
· STRUCTURAL ENGINEER (WHEN APPLICABLE)
· DELEGATED PROFESSIONAL ENGINEER.
· DSA

15. MATERIALS AND THEIR INSTALLATION SHALL COMPLY WITH APPLICABLE CODES, STANDARDS AND MANUFACTURER'S RECOMMENDATIONS.

16. PER CBC 11B-104.1 "ALL DIMENSIONS ARE SUBJECT TO CONVENTIONAL INDUSTRY TOLERANCES EXCEPT WHERE THE REQUIREMENT IS STATED AS A RANGE WITH SPECIFIC MINIMUM AND MAXIMUM END POINTS.

17. NEWLY INSTALLED AND/OR UPGRADED FIRE ALARM:
a) THE ENTIRE LENS OF STROBE LIGHT IS BETWEEN 80" AND 96".
b) FLASH RATE SHALL NOT EXCEED 2 FLASHES PER SECOND NOR LESS THAN 1 FLASH PER SECOND.
c) MANUAL ALARM ACTIVATING HANDLE 42"-48".
d) BOXES TO COMPLY WITH CBC 11B-309.4, NO TIGHT GRASPING, PINCHING OR TWISTING OF THE WIRES

1 ADMINISTRATIVE NOTES
1/4" = 1'-0"

THE CALIFORNIA ENERGY CODE SECTION 10-103 REQUIRES ACCEPTANCE TESTING ON ALL NEWLY INSTALLED LIGHTING CONTROLS, MECHANICAL SYSTEMS, ENVELOPES, ADN PROCESS EQUIPMENT AFTER INSTALLATION AND BEFORE PROJECT COMPLETION. AN ACCEPTANCE TEST IS A FUNCATION PERFORMANCE TEST TO HELP ENSURE THAT NEWLY INSTALLED EQUIPMENT IS OPERATING AND IN COMPLIANCE WITH THE ENTERGY CODE.

LIGHTING CONTROLS ACCPTANCE TESTS MUST BE PERFORMED BY A CERTIFIED LIGHTING CONTROLS **A**CCPTANCE **T**EST **T**ECHNICIAN (**ATT**).

MECHANICAL SYSTEM ACCEPTANCE TESTS MUST BE PERFORMED BY A CERTIFIED MECHANICAL ATT FOR PROJECTS SUBMITTED ON OR AFTER OCTOBER 1, 2021.

ENVELOPE AND PROCESS EQUIPMENT ACCEPTANCE TESTS SHALL BE PERFORMED BY THE INSTALLING CONTRACTOR, ENGINEER/ARCHITECT OF RECORD OR THE OWNER'S AGENT.

A LIST OF CERTIFIED ATT CAN BE FOUND AT:
https://www.energy.ca.gov/programs-and-topics/programs/acceptance-test-technician-certification-provider-program/acceptance

THE ACCEPTANCE TESTING PROCEDURES MUST BE REPEATED, AND DEFICIENCIES MUST BE CORRECTED BY THEY BUILDER OR INSTALLING CONTRACTOR UNTIL THE CONSTRUCTION / INSTALLATION OF TEH SPECIFIED SYSTEMS CONFROM AND PASS THE REQUIRED ACCEPTANCE CRITERIA.

PROJECT INSPECTORS WILL COLLECT THE FORMS TO CONFIRM THAT THE REQUIRED ACCEPTANCE TESTS HAVE BEEN COMPLETED.

IDENTIFICATION STAMP
DIV. OF THE STATE ARCHITECT
APP: 02-121275 INC:
REVIEWED FOR
SS ☑ FLS ☑ ACS ☑
DATE: 12/15/2023

CALIFORNIA DESIGN
WEST ARCHITECTS, Inc.

2100 19th Street
Sacramento, CA 95818

Phone: (916) 446-2466
Fax: (916) 446-5118
Web Page: ca-dw.com

These plans and prints thereof, as instruments of service, are owned by the architect and are for the use on this project only. Reproduction and/or distribution without the prior written consent of the architect is forbidden.

Copyright California Design West Architects, Inc.

ARCHITECT: CONSULTANT:

LICENSED ARCHITECT
MITCHELL A. McALISTER
NO. C 17258
REN. 08-31-2025
STATE OF CALIFORNIA

CONSULTANT:

PROJECT NAME:

BUHACH COLONY HIGH SCHOOL

1800 NORTH BUHACH RD
ATWATER, CA 95301

CONCESSIONS/TOILET BUILDINGS, TICKET BOOTH & STADIUM UPGRADES

MERCED UNION HIGH SCHOOL DISTRICT

MERCED COUNTY

KEY PLAN:

SHEET TITLE:
GENERAL PROJECT NOTES

JOB NUMBER:	SHEET NUMBER:
DATE: NOV 17, 2023	**G002**
REVISION:	

C:\Users\dtrump\Documents\A22_BCHS-NewStadium-SITE_dtrump-2100.rvt

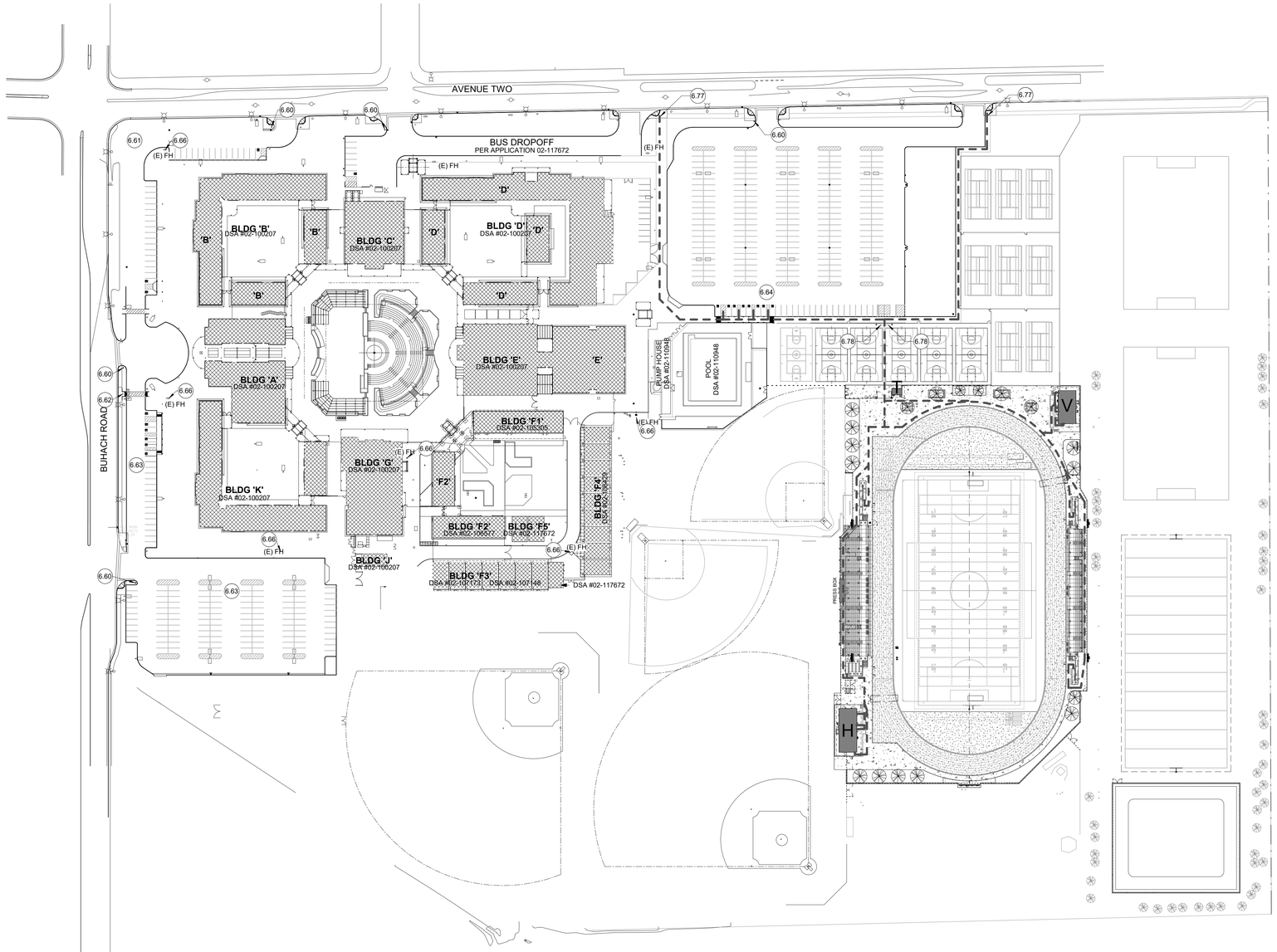

1 OVERALL SITE PLAN
1" = 80'-0"

N

GENERAL NOTES

1. PATH OF TRAVEL (P.O.T.) IS INDICATED AS :

- A COMMON BARRIER FREE ACCESSIBLE ROUTE AT LEAST 48" WIDE WITHOUT ANY ABRUPT VERTICAL CHANGES EXCEEDING 1/2" BEVELED AT 1:2 MAXIMUM SLOPE. EXCEPT THAT ABRUPT LEVEL CHANGES DO NOT EXCEED 1/4" VERTICAL.
- THE PATH SURFACE IS SLIP RESISTANT, STABLE, FIRM AND SMOOTH.
- PASSING SPACES AT LEAST 5'-0" x 5'-0" ARE LOCATED NOT MORE THAN 200' APART (11B-403.5.3).
- CONTINUOUS GRADIENTS HAVE 60" LEVEL AREA (2% MAX SLOPE ALL DIRECTIONS), NO MORE THAN 400' APART (11B-403.7).
- THE CROSS SLOPE DOES NOT EXCEED 2% (1/4":12").
- THE SLOPE OF THE WALKWAY IN THE DIRECTION OF TRAVEL DOES NOT EXCEED 5% (1:20 SLOPE). REFER TO ENLARGED PLAN CS/GS501 FOR RAMP INFORMATION.
- 8% MAX SLOPE IN THE DIRECTION OF TRAVEL AS INDICATED AS A RAMP (1:12 SLOPE).
- MAINTAIN P.O.T. FREE OF OVERHANGING OBSTRUCTIONS TO 80" MINIMUM CLEAR HEIGHT ABOVE FINISH FLOOR / GRADE; INCLUDING ANY OBJECTS PROTRUDING GREATER THAN 4" PROJECTION FROM WALL OR EDGE AND MORE THAN 27" ABOVE FINISH FLOOR / GRADE (11B-307.2).

2. ALL NEW CONCRETE WALKS THAT ARE A PART OF THE PATH OF TRAVEL WILL HAVE A MAXIMUM CROSS SLOPE OF 2% AND A MAXIMUM SLOPE OF 5% IN THE DIRECTION OF TRAVEL, TYP.

3. DESIGN PROFESSIONAL IN GENERAL RESPONSIBLE CHARGE STATEMENT: THE P.O.T. IDENTIFIED IN THESE CONSTRUCTION DOCUMENTS IS COMPLIANT WITH THE CURRENT APPLICABLE CALIFORNIA BUILDING CODE ACCESSIBILITY PROVISIONS FOR PATH OF TRAVEL REQUIREMENTS FOR ALTERATIONS, ADDITIONS AND STRUCTURAL REPAIRS. AS PART OF THE DESIGN OF THIS PROJECT THE P.O.T. WAS EXAMINED AND ANY ELEMENTS, COMPONENTS OR PORTIONS OF THE P.O.T. THAT WERE DETERMINED TO BE NON-COMPLIANT:
1) HAVE BEEN IDENTIFIED AND
2) THE CORRECTIVE WORK NECESSARY TO BRING THEM INTO COMPLIANCE HAS BEEN INCLUDED WITHIN THE SCOPE OF THIS PROJECTS WORK THROUGH DETAILS, DRAWINGS, AND SPECIFICATIONS INCORPORATED INTO THESE CONSTRUCTION DOCUMENTS.
ANY NON-COMPLIANT ELEMENTS, COMPONENTS OR PORTIONS OF THE P.O.T. THAT WILL NOT BE CORRECTED BY THIS PROJECT BASED ON VALUATION THRESHOLD LIMITATIONS OR A FINDING OF UNREASONABLE HARDSHIP ARE SO INDICATED IN THESE CONSTRUCTION DOCUMENTS.

4. DURING CONSTRUCTION, IF P.O.T. ITEMS WITHIN THE SCOPE OF THIS PROJECT REPRESENTED AS CODE COMPLIANT ARE FOUND TO BE NON-CONFORMING BEYOND RESONABLE CONSTRUCTION TOLERANCES, THEY SHALL BE BROUGHT INTO COMPLIANCE WITH THE CBC AS A PART OF THIS PROJECT BY MEANS OF A CONSTRUCTION CHANGE DOCUMENT.

5. THERE IS NO DROP OFF MORE THE 4" AT THE EDGE OF WALK OR LANDING UNLESS IDENTIFIED BY A GUARD, HANDRAIL OR A WARNING CURB AT LEAST 6" IN HEIGHT ABOVE THE WALK. CBC 11B-303.5

LEGEND

EXISTING CAMPUS BUILDINGS N.I.C. UNLESS OTHERWISE NOTED.

NEW PROPOSED STRUCTURES PER THIS APPLICATION; TICKET BOOTH, HOME-SIDE CONCESSIONS / RESTROOM / TEAM ROOM BUILDING, VISITOR-SIDE CONCESSIONS / RESTROOM / TEAM ROOM BUILDING.

PATH OF TRAVEL (P.O.T.). REFER TO GENERAL NOTES.

1.01 KEYED NOTE. REFER TO KEYED NOTES SCHEDULE. KEYED NOTE TAG WITHOUT LEADER APPLIES TO THE ENTIRE ROOM OR SURFACE IN WHICH (ON WHICH) THE TAG IS LOCATED. KEYED NOTES MAY SKIP NUMBERS.

1.00 - KEYED NOTES SCHEDULE

6.60 (E) TOW-AWAY SIGNAGE PER DSA APP #02-117672. SIGN PANEL IS FALLING OFF OF SIGN POST. PROVIDE HARDWARE TO MATCH (E) AND REATTACH SIGNAGE TO EXISTING POST.

6.61 36 PARKING SPACES; 2 ACESSIBLE PARKING SPACES, AND 2 VAN ACCESSIBLE PARKING SPACES WITH ADA SIGNAGE PER DSA APP # 02-100207

6.62 ACCESS TO PUBLIC WAY MODIFIED PER DSA APP #02-117672

6.63 140 PARKING SPACES; 4 ACCESSIBLE PARKING SPACES, AND 2 VAN ACCESSIBLE PARKING SPACES WITH ADA SIGNAGE MODIFIED UNDER DSA APP #02-117672

6.64 (E) ACCESSIBLE PARKING & VAN ACCESSIBLE PARKING DSA #02-100207 & #02-110948. 251 PARKING SPACES; 6 ACCESSIBLE PARKING SPACES, AND 2 VAN ACCESSIBLE PARKING SPACES MODERNIZED UNDER DSA APP # 02-117672

6.66 (E) FIRE HYDRANT TO REMAIN.

6.77 PATH OF TRAVEL TO PUBLIC WAY.

6.78 MOUNT SIGNAGE TO EXTERIOR OF BOTH (E) GATE PANELS; CENTERED ON GATE PANEL AND MOUNTED AT 60" AFG. SIGNAGE TO READ: "GATE MAINTAINED AND CONTROLLED BY SECURITY PERSONNEL. GATE SHALL REMAIN OPEN DURING STADIUM EVENTS."

CODE ANALYSIS - PRESS BOX

BUILDING FUNCTION: PRESS BOX

BUILDING USE CLASSIFICATION (SECTION 305) :
BUILDING OCCUPANCY: EDUCATIONAL; GROUP E

BUILDING HEIGHT (TABLE 504.3 & 504.4):
GROUP E, TYPE V-B, NOT SPRINKLERED:

ALLOWABLE:	ACTUAL DESIGN:
40' HEIGHT 1 STORY	30' HEIGHT 1 STORY

BUILDING AREA (TABLE 506.2):
GROUP E, TYPE V-B, NOT SPRINKLERED:

ALLOWABLE:	ACTUAL DESIGN:
9,500 SF	288 SF

ACCESSIBILITY SCOPING REQUIREMENTS EXEMPTION:
PRESS BOXES (11B-206.2.7):
AGGREGATE AREA LESS THAN 500 SF.

CODE ANALYSIS - BLDG T

BUILDING FUNCTION: TICKET BUILDING

BUILDING USE CLASSIFICATION (SECTION 305) :
BUILDING OCCUPANCY: EDUCATIONAL; GROUP E

BUILDING HEIGHT (TABLE 504.3 & 504.4):
GROUP E, TYPE V-B, NOT SPRINKLERED:

ALLOWABLE:	ACTUAL DESIGN:
40' HEIGHT 1 STORY	12' HEIGHT 1 STORY

BUILDING AREA (TABLE 506.2):
GROUP E, TYPE V-B, NOT SPRINKLERED:

ALLOWABLE:	ACTUAL DESIGN:
9,500 SF	155 SF

BUILDING CONSTRUCTION TYPE/CLASSIFICATION:
TYPE V-B (TABLE 601):
FIRE-RESISTANCE RATING REQUIREMENTS:
0-HR PRIMARY STRUCTURAL FRAME
0-HR EXTERIOR BEARING WALLS
0-HR INTERIOR BEARING WALLS
0-HR INTERIOR NON-BEARING WALLS AND PARTITIONS
0-HR FLOOR CONSTRUCTION AND SECONDARY MEMEBERS
0-HR ROOF CONSTRUCTION AND SECONDARY MEMBERS

CODE ANALYSIS - BLDG H

BUILDING FUNCTION: TOILET ROOM, CONCESSIONS STAND, TEAM ROOM

BUILDING USE CLASSIFICATION (SECTION 305) :
BUILDING OCCUPANCY: EDUCATIONAL; GROUP E

BUILDING HEIGHT (TABLE 504.3 & 504.4):
GROUP E, TYPE V-B, NOT SPRINKLERED:

ALLOWABLE:	ACTUAL DESIGN:
40' HEIGHT 1 STORY	14' HEIGHT 1 STORY

BUILDING AREA (TABLE 506.2):
GROUP E, TYPE V-B, NOT SPRINKLERED:

ALLOWABLE:	ACTUAL DESIGN:
9,500 SF	1,923 SF

BUILDING CONSTRUCTION TYPE/CLASSIFICATION:
TYPE V-B (TABLE 601):
FIRE-RESISTANCE RATING REQUIREMENTS:
0-HR PRIMARY STRUCTURAL FRAME
0-HR EXTERIOR BEARING WALLS
0-HR INTERIOR BEARING WALLS
0-HR INTERIOR NON-BEARING WALLS AND PARTITIONS
0-HR FLOOR CONSTRUCTION AND SECONDARY MEMEBERS
0-HR ROOF CONSTRUCTION AND SECONDARY MEMBERS

CODE ANALYSIS - BLDG V

BUILDING FUNCTION: TOILET ROOM, SNACK BAR, TEAM ROOM

BUILDING USE CLASSIFICATION (SECTION 305) :
BUILDING OCCUPANCY: EDUCATIONAL; GROUP E

BUILDING HEIGHT (TABLE 504.3 & 504.4):
GROUP E, TYPE V-B, NOT SPRINKLERED:

ALLOWABLE:	ACTUAL DESIGN:
40' HEIGHT 1 STORY	14' HEIGHT 1 STORY

BUILDING AREA (TABLE 506.2):
GROUP E, TYPE V-B, NOT SPRINKLERED:

ALLOWABLE:	ACTUAL DESIGN:
9,500 SF	1,456 SF

BUILDING CONSTRUCTION TYPE/CLASSIFICATION:
TYPE V-B (TABLE 601):
FIRE-RESISTANCE RATING REQUIREMENTS:
0-HR PRIMARY STRUCTURAL FRAME
0-HR EXTERIOR BEARING WALLS
0-HR INTERIOR BEARING WALLS
0-HR INTERIOR NON-BEARING WALLS AND PARTITIONS
0-HR FLOOR CONSTRUCTION AND SECONDARY MEMEBERS
0-HR ROOF CONSTRUCTION AND SECONDARY MEMBERS

IDENTIFICATION STAMP
DIV. OF THE STATE ARCHITECT
APP: 02-121275 INC:
REVIEWED FOR
SS ☑ FLS ☑ ACS ☑
DATE: 12/15/2023

CALIFORNIA DESIGN
WEST ARCHITECTS, Inc.

2100 19th Street
Sacramento, CA 95818

Phone: (916) 446-2466
Fax: (916) 446-5118
Web Page: ca-dw.com

These plans and prints thereof, as instruments of service, are owned by the architect and are for the use on this project only. Reproduction and/or distribution without the prior written consent of the architect is forbidden.

Copyright California Design West Architects, Inc.

ARCHITECT: CONSULTANT:

LICENSED ARCHITECT
MITCHELL A. MCALISTER
LIC. NO. C 17258
RENEWAL 08/31/2025
STATE OF CALIFORNIA

CONSULTANT:

PROJECT NAME:

BUHACH COLONY HIGH SCHOOL

1800 NORTH BUHACH RD
ATWATER, CA 95301

CONCESSIONS/TOILET BUILDINGS, TICKET BOOTH & STADIUM UPGRADES

MERCED UNION HIGH SCHOOL DISTRICT

MERCED COUNTY

KEY PLAN:

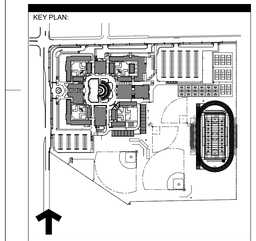

SHEET TITLE:
OVERALL SITE PLAN - ACS & CODE ANALYSIS

JOB NUMBER:	SHEET NUMBER:
DATE: NOV 17, 2023	**GS90**
REVISION:	

C:\Users\stumy\Documents\A22_BCHS-NewStadium-SITE_stump-2100.rvt

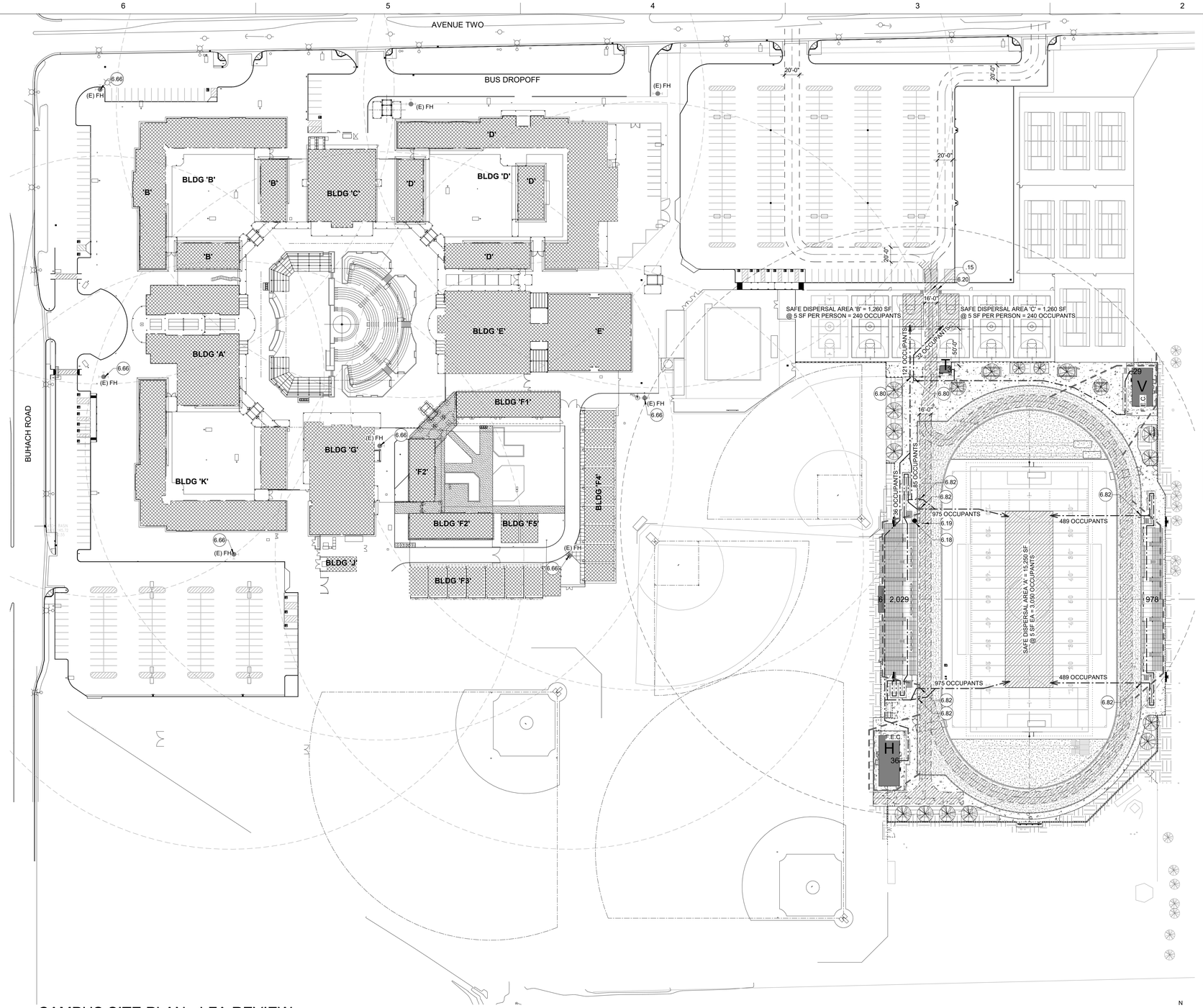

1 CAMPUS SITE PLAN - LFA REVIEW
1" = 60'-0"

N

DSA 810

FIRE & LIFE SAFETY SITE CONDITIONS SUBMITTAL

Division of the State Architect (DSA) documents referenced within this publication are available on the DSA Forms or DSA Publications webpages.

To facilitate the Division of the State Architect's (DSA) fire and life safety plan review of project site conditions, DSA requires the design professional to provide the following information at time of project submittal for projects consisting of construction of a new campus, construction of new building(s), additions to existing buildings, and for site alternate design means for fire department emergency vehicle access, and fire suppression water supply.

Information associated with compliance items 1 through 3 below is to be provided for all project types indicated above. Information associated with items 4 through 7 is to be completed when an alternate means is utilized. Acknowledgement by the school district and signature from the Local Fire Authority (LFA) is only required when an alternate design means is being requested.

The Project Information and Fire & Life Safety Information sections are to be completed for all projects and imaged onto the fire access site plan. When an alternate design/means is proposed, all sections on pages 1 and 2 are to be completed and imaged on the fire access site plan.

For additional information refer to the instructions at the end of this form and DSA Policy *PL 09-01: Fire Flow for Buildings*.

PROJECT INFORMATION	
School District/Owner:	MERCED UNION HIGH SCHOOL DISTRICT
Project Name/School:	BUHACH COLONY HIGH SCHOOL
Project Address:	1800 N BUHACH RD. ATWATER, CA 95301

FIRE & LIFE SAFETY INFORMATION				
1.	Has a fire hydrant flow test been performed within the past 12 months? *(If yes, provide a copy of the test data.)*	Yes ✓		No ☐
2.	Was the fire hydrant water flow test performed as part of this LFA review?	Yes ✓		No ☐
3.	Is the project located within a designated fire hazard severity zone (FHSZ) as established by Cal-Fire? *(If yes, indicate FHSZ classification below.)*	Yes ☐		No ✓
	Refer to the following website for FHSZ locations: http://egis.fire.ca.gov/FHSZ/	Moderate ☐	High ☐	Very High ☐
	Wildland Interface Area (WIFA) *(If any designations are checked, project design must meet the requirements of CBC Chapter 7A.)*			WIFA ☐

CONDITION MEANS AND METHODS RESOLUTION		ALTERNATE ACCEPTED			
		Yes	No	N/A	N/R
4.	Emergency vehicle access roadways do not meet CFC requirements.	✓			
4a.	**Acceptable Alternate:** Emergency vehicle and personnel access as proposed by the project architect is acceptable for providing fire suppression and protection of life and property. 16' WIDE MINIMUM SERVING THE STADIUM	✓			
5.	**Fire Hydrants:** Number and spacing does not meet CFC requirements.	✓			
5a.	**Acceptable Alternate:** Number of fire hydrants and spacing as proposed by the project architect is acceptable for fire suppression and protection of life and property. ONE NEW ADDED FIRE HYDRANT AT THE NORTH END OF THE HOME SIDE BLEACHERS ADDED FOR THE ENTIRE STADIUM COVERAGE	✓			
6.	**Fire Hydrants:** Water flow and pressure are less than CFC minimum.	✓			
6a.	**Acceptable Alternate:** The available flow and pressure is acceptable for providing fire suppression and protection of life and property. RESIDUAL 40 PSI IS ACCEPTABLE	✓			
7.	Location of fire department connection(s) serving fire sprinkler systems or standpipe systems does not meet CFC requirements. NO FIRE SPRINKLERS				✓
7a.	**Acceptable Alternate:** The location of fire department connection serving the fire sprinkler system and/or standpipe system is acceptable for providing fire suppression and protection of life and property.				✓

School District Acceptance of Acceptable Design Alternates

By signing this form, the school district acknowledges and accepts the proposed design as an alternative to California Building Code (CBC) and California Fire Code (CFC) minimum requirements, as indicated by one or more of the conditions indicated at items 4a, 5a, 6a or 7a, for providing fire and life safety protection of life and property.

Accepted by: Melissa Miller Title: MUHSD Facilities Planning Manager

Signature: Date: 10/11/23

LOCAL FIRE AUTHORITY (LFA) INFORMATION		
LFA Agency Name:	Atwater City Fire Department/CAL FIRE	
LFA Review Official:	Blaine Lopes	
Title:	Battalion Chief	Work Phone: 209-203-9556
Work Email:	Blaine.Lopes@fire.ca.gov	

LFA Reviewer's Signature: Blaine Lopes Date: 9/29/2023

GENERAL NOTES

1. (E) GATES ALONG THE MAIN CAMPUS FIRE TRUCK ROUTE ARE TO REMAIN UNCHANGED.
2. (E) KNOX BOXES AND KNOX PADLOCKS AT ALL MAIN CAMPUS EXISTING GATES ALONG THE FIRE TRUCK ROUTE ARE TO REMAIN UNCHANGED.
3. (E) MAIN CAMPUS FIRE TRUCK ROUTE TO REMAIN.
4. FIRE TRUCK ROUTE AT STADIUM SHALL MAINTAIN 16'-0" CLEAR ROUTE AT EXSTING ENTRY FENCE AND WITHIN NEW STADIUM.
5. REFER TO MUSCO DRAWINGS AND ELECTRICAL DRAWINGS FOR EGRESS LIGHTING LEVELS REQURIED.

1.00 – KEYED NOTES SCHEDULE

.15 (E) FIRE LANE GATE TO REMAIN.

6.18 NEW FIRE HYDRANT. REFER TO CIVIL.

6.19 KNOX PADLOCK AT GATE TO ACCESS THE FIRE HYDRANT.

6.20 PROVIDE NEW KNOX BOX AT EXSTING GATE POST.

6.66 (E) FIRE HYDRANT TO REMAIN.

6.80 48" GATE (44" CLEAR) / .2" PER OCCUPANT = 220 MAXIMUM OCCUPANT FOR EGRESS.

6.82 44" GATE (CLEAR MIN) / .08" PER OCCUPANT = 550 MAXIMUM OCCUPANT FOR EGRESS. EGRESS THROUGH GATE TO FIELD (SAFE DISPERSAL AREA) SHALL MAINTAIN CONSTANT SUPERVISION WHENEVER PUBLIC IS PRESENT. EVERY GATE SHALL HAVE A SIGN MOUNTED AT 48" AFG WHICH READS, "GATE SHALL BE UNDER CONSTANT SUPERVISION WHEN PUBLIC IS PRESENT".

LEGEND

- EXISTING CAMPUS BUILDINGS N.I.C. UNLESS OTHERWISE NOTED.
- NEW PROPOSED BUILDING.
- EXISTING FIRE LANE AS INCIDATED. PER DSA APP # 02-118331
- NEW FIRE LANE AS INCIDATED.
- (E) FIRE HYDRANT TO REMAIN (400' RADIUS SHOWN DASHED)
- NEW FIRE HYDRANT. REFER TO CIVIL (400' RADIUS SHOWN DASHED)
- 150' HOSE COVERAGE.
- EGRESS PATHWAY TO SAFE-DISPERSAL AREA

IDENTIFICATION STAMP
DIV. OF THE STATE ARCHITECT
APP: 02-121275 INC:
REVIEWED FOR
SS ☑ FLS ☑ ACS ☑
DATE: 12/15/2023

CALIFORNIA DESIGN WEST ARCHITECTS, Inc.

2100 19th Street
Sacramento, CA 95818

Phone: (916) 446-2466
Fax: (916) 446-5118
Web Page: ca-dw.com

These plans and prints thereof, as instruments of service, are owned by the architect and are for the use on this project only. Reproduction and/or distribution without the prior written consent of the architect is forbidden.

Copyright California Design West Architects, Inc.

ARCHITECT: CONSULTANT:

LICENSED ARCHITECT MITCHELL A. MCALISTER RENEWAL 08/31/2025 NO. C 17258 OF CALIFORNIA

CONSULTANT:

PROJECT NAME:

BUHACH COLONY HIGH SCHOOL

1800 NORTH BUHACH RD
ATWATER, CA 95301

CONCESSIONS/TOILET BUILDINGS, TICKET BOOTH & STADIUM UPGRADES

MERCED UNION HIGH SCHOOL DISTRICT

MERCED COUNTY

KEY PLAN:

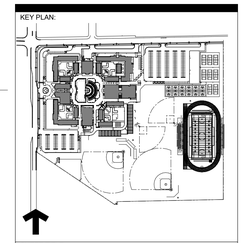

SHEET TITLE:

SITE PLAN - LOCAL FIRE AUTHORITY REVIEW

JOB NUMBER:	SHEET NUMBER:
DATE: NOV 17, 2023	**GS90F**
REVISION:	

C:\Users\ktrump\Documents\A22_BCHS-NewStadium-SITE_ktrump-2100.rvt

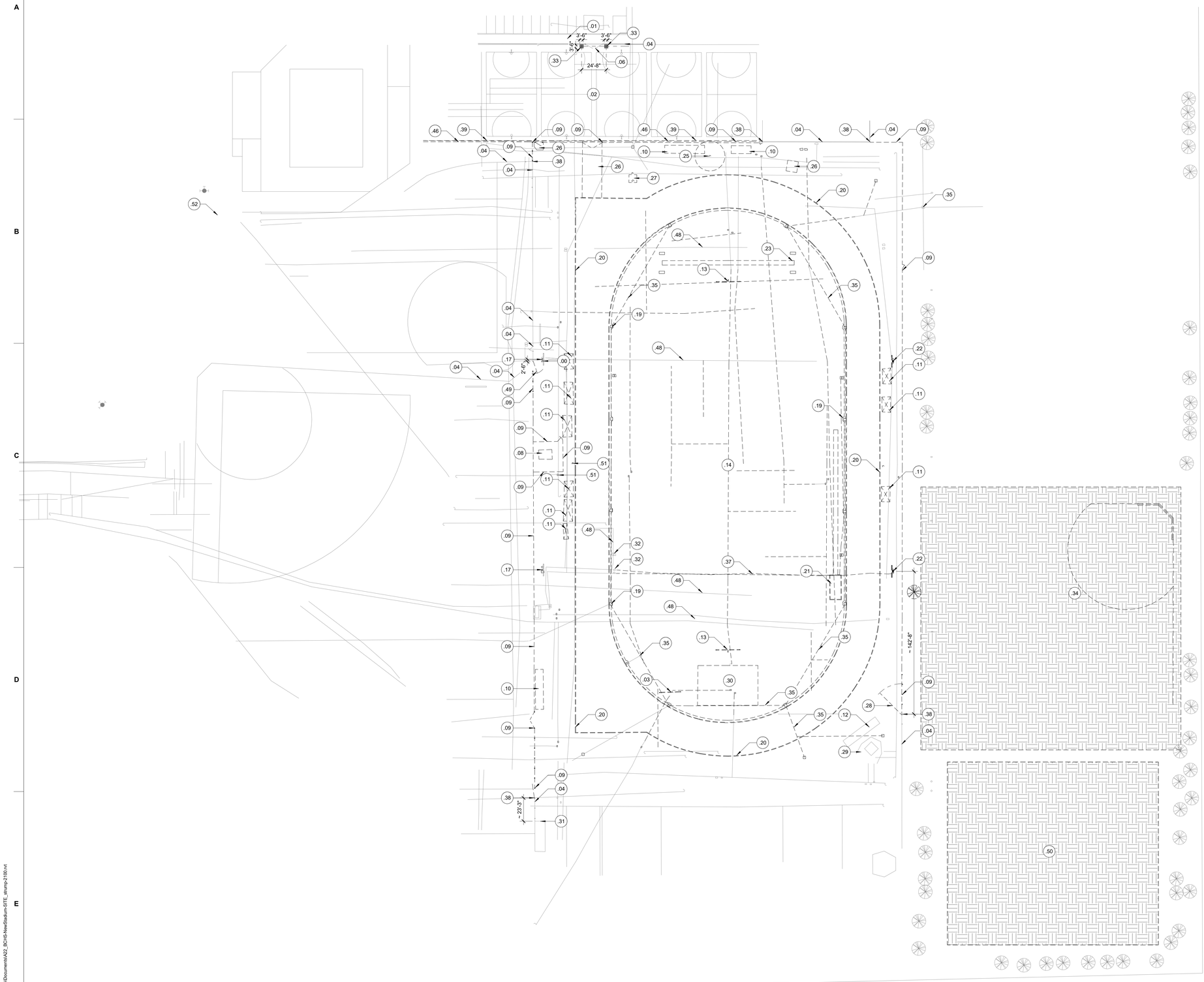

1 ARCHITECTURAL DEMOLITION SITE PLAN
1" = 40'-0"

GENERAL NOTES

1. ALL COMPONETS, FIXTURES, FINISHES, EQUIPMENT, AND FURNISHINGS EXISTING TO REMAIN SHALL BE PROTECTED FROM DUST OR DAMAGE DURING DEMOLITION AND CONSTRUCTION.

2. UTILITIES SHALL REMAIN IN SERVICE, UNLESS OWNER APPROVES SHUTDOWN OF THOSE UTILITIES. UNLESS NOTED TO BE DEMOLISHED, UTILITIES ARE TO BE PROTECTED OR RESTORED TO PRE-DEMOLITION CONDITION DURING CONSTRUCTION.

3. BLACK DASHED LINES SHOW COMONENTS, FIXTURES, EQUIPMENT, ETC TO BE REMOVED. REFER TO KEYED NOTES. EXISTING COMPONENTS TO REMAIN ARE SHOWN AS LIGHT / GRAY CONTINUOUS LINES. REFER TO SYMBOL LEGEND BELOW.

4. REFER TO NEW PLANS AND SCHEDULES AND CONSULTANT SHEETS FOR ADDITIONAL INFORMATION.

5. PROVIDE CONSTRUCTION BARRIER AS REQUIRED BY OWNER.

6. COORDINATE ARCHITECTURAL DEMOLITION WITH CIVIL, MECHANICAL, PLUMBING, ELECTRICAL, AND LANDSCAPE DEMOLITION DRAWINGS.

7. IF ANY ITEM OR FINISH TO REMAIN IS DAMAGED DURING DEMOLITION REMOVAL OR NEW CONSTRUCTION, CONTRACTOR SHALL FURNISH TO REPLACE AND/OR MATCH EXISTING ITEM OR FINISH WHICH WAS DAMAGED.

8. FIELD VERIFY ALL DIMENSIONS TO EXISTING CONDITIONS AT START OF CONSTRUCTION. NOTIFY ARCHITECT OF ANY DISCREPANCIES OF DIMENSIONS PRIOR TO ANY WORK IN THAT RESPECTIVE AREA.

LEGEND

(E) WALLS, FIXTURES, AND COMPONENTS TO REMAIN.

WALLS, FIXTURES, AND COMPONENTS TO BE DEMOLISHED.

(1.01) KEYED NOTE. REFER TO KEYED NOTES SCHEDULE. KEYED NOTE TAGS WITHOUT LEADER APPLIES TO THE ENTIRE ROOM OR SURFACE IN WHICH (ON WHICH) THE TAG IS LOCATED. KEYED NOTES MAY SKIP NUMBERS.

PROTECT EXISTING TREE TO REMAIN, TYP.

(1.00) KEYED NOTES SCHEDULE

.00 DEMOLITION PLANS

.01 (E) CONCRETE WALKWAY TO REMAIN U.O.N. PROTECT DURING CONSTRUCTION.

.02 (E) AC PAVING TO REMAIN U.O.N. PROTECT AC AND STRIPING DURING CONSTRUCTION. PROTECT ALL (E) BASKETBALL STANDARDS.

.03 DEMOLISH (E) SCOREBOARD ASSEMBLY. BACKFILL AND COMPACT FOOTING CAVITIES, TYP. REFER TO ELECTRICAL.

.04 PROTECT (E) FENCING TO REMAIN U.O.N.

.06 (E) 16' WIDE CHAIN LINK GATE TO REMAIN, U.O.N. PROTECT DURING CONSTRUCTION.

.08 DEMOLISH (E) FABRICATED WATCH TOWER AND ALL ASSOCIATED ELECTRICAL CONNECTIONS.

.09 DEMOLISH (E) FENCING ASSEMBLY TO EXTENTS NOTED; FABRIC, POSTS, FOOTINGS, ETC. BACKFILL AND COMPACT FOOTING CAVITIES, TYP.

.10 (E) STORAGE CONTAINER TO BE REMOVED BY THE DISTRICT PRIOR TO START OF CONSTRUCTION. (N.I.C.)

.11 (E) TEMPORARY BLEACHER ASSEMBY TO BE REMOVED BY THE DISTRICT PRIOR TO START OF CONSTRUCTION, TYP. (N.I.C.)

.12 (E) STORAGE CONTAINER TO BE RELOCATED BY CONTRACTOR. RELCOATE / SHIFT AS NECESSARY TO PERFORM WORK AS REQUIRED. INTENT IS THAT THE CONTAINER'S FINAL LOCATION IS WITHIN 400' OF WHERE IT IS CURRENTLY.

.13 (E) FOOTBALL FIELD GOAL TO BE REMOVED, PROTECTED, AND RETURNED TO THE DISTIRCT. CONTRACTOR SHALL REMOVE ASSOCIATED FOOTING, AND BACKFILL AND COMPACT CAVITIY.

.14 REGRADE AND AMMEND FOOTBALL FIELD, TYP. PROTECT UNDERGROUND UTILITIES TO BE RE-USED, U.O.N. DEMOLISH (E) IRRIGATION; CUT / CAP FOR FUTURE RECONNECTION. REFER TO CIVIL. REFER TO LANDSCAPE.

.17 PROTECT (E) STADIUM HOME-SIDE LIGHT POLE ASSEMBLY TO REMAIN. ADJUST PULL BOXES TO NEW GRADES WHERE REQURIED, TYP. REFER TO ELECTRICAL. REFER TO CIVIL.

.19 ADJUST / RELOCATE (E) DRAIN INLETS, TYP. NEW TRACK SLOT DRAIN TO TIE INTO EXISTING SD LINE, TYP. REFER TO CIVIL AND TRACK DRAWINGS.

.20 EXTERIOR TRACK PERIMETER CURB TO BE DEMOLISHED, TYP.

.21 DEMOLISH (E) LONG-JUMP ASSEMBLY.

.22 REMOVE, SALVAGE AND PROTECT (E) STADIUM VISITORS-SIDE LIGHT POST - TO BE RELOCATED TO NEW LOCATION. DISCONNECT AND RELOCATE ELECTRICAL PER ELECTRICAL DRAWINGS. REFER TO PROJECT SITE PLAN FOR NEW LOCATION AND ADDITIONAL INFORMATION. CONTRACTOR TO SAW-CUT AND DEMOLISH TOP OF EXISTING FOUNDATION TO AN ELEVATION 12" BELOW FINAL FINISH GRADE. FILL REMAINING EXISTING FOUNDATION CAVITY WITH CONCRETE.

.23 DEMOLISH (E) HIGH-JUMP ASSEMBLY.

.25 DEMOLISH (E) TREE ASSEMBLY COMPLETELY; ROOTS INCLUDED.

.26 DEMOLISH (E) CONCRETE SLAB ON GRADE TO EXTENTS NOTED.

.27 DEMOLISH (E) DRINKING FOUNTAIN ASSEMBLY AND CONCRETE SLAB ON GRADE. REFER TO CIVIL.

.28 PROTECT FENCE POST AND CHAIN LINK FABRIC THIS LOCATION. (E) CHAIN-LINK FENCE FABRIC MAY BE SALVAGED FROM DEMOLISHED SECTION TO BE REINSTALLED AT NEW POSTS FOR CHAIN-LINK NW RETURN SEGMENT (APPROX 31'). REFER TO PROJECT SITE PLAN.

.29 PROTECT (E) FIELD EVENT / DISCUSS BACKSTOP ASSEMBLY TO REMAIN.

.30 DEMOLISH (E) AC PAVED HIGH-JUMP AREA.

.31 (E) DUGOUT TO REMAIN.

.32 CONNECT TO (E) ELECTRICAL CONDUIT. PROVIDE NEW BOXES AT NEW GRADES, TYP. REFER TO ELECTRICAL.

.33 SAW-CUT AND DEMOLISH AC PAVING FOR NEW ENTRY WAY LIGHT POLE INSTALLATION. CENTER INSTALLATION ON EXISTING GATE. USE CAUTION TO PROTECT (E) ADJACENT AC PAVING TO REMAIN.

.34 DEMOLISH COMPLETE (E) SOFTBALL FIELD AND ASSOCIATED COMPONENTS; INCLUDING BACKSTOP FENCING ASSEMBLY, BASES, INFIELD, IRRIGATION, ETC. GRADE AND PREPARE FOR NEW IRRIGATION AND NEW GRASS. REFER TO CIVIL AND LANDSCAPE.

.35 DEMLISH (E) UG SD UTILITY. REFER TO CIVIL.

.37 DEMOLISH (E) ELECTRICAL UTILITY. REFER TO ELECTRICAL.

.38 PROTECT (E) FENCE POST TO REMAIN.

.39 SAW-CUT CLEAN STRIGHT EDGE OF (E) AC PAVING FOR NEW WORK. PROTECT EDGE UNTIL ADJACNET CONCRETE IS CURED IN PLACE.

.46 DEMOLISH (E) CONCRETE CURB / MOW-STRIP.

.48 PROTECT (E) UG UTILITY. REFER TO ELECTRICAL. REFER TO CIVIL.

.49 (E) CHAIN-LINK FENCE FABRIC MAY BE SALVAGED FROM DEMOLISHED SECTION TO BE REINSTALLED AT NEW POSTS FOR CHAIN-LINK SOUTHERN SEGMENT TIED TO NEW FENCE (APPROX 12'). REFER TO PROJECT SITE PLAN.

.50 GRADE AND PREPARE AREA TO ACCOMMODATE NEW STORM DRAIN RETENTION BASIN. REFER TO CIVIL. REFER TO LANDSCAPE.

.51 DEMOLISH (E) SITE ELECTRICAL RECEPTACLE PEDESTAL, TYP. REMOVE FEEDERS TO SOURCE.

.52 REFER TO CIVIL FOR ADDITIONAL DEMO AND PAVING REPAIR REQUIRED WHERE WATER, SEWER AND FIRE WATER CONNECT TO EXSTING.

IDENTIFICATION STAMP
DIV. OF THE STATE ARCHITECT
APP: 02-121275 INC:
REVIEWED FOR
SS ☑ FLS ☑ ACS ☑
DATE: 12/15/2023

CALIFORNIA DESIGN WEST ARCHITECTS, Inc.

2100 19th Street
Sacramento, CA 95818

Phone: (916) 446-2466
Fax: (916) 446-5118
Web Page: ca-dw.com

These plans and prints thereof, as instruments of service, are owned by the architect and are for the use on this project only. Reproduction and/or distribution without the prior written consent of the architect is forbidden.

Copyright California Design West Architects, Inc.

ARCHITECT: CONSULTANT:

LICENSED ARCHITECT MITCHELL A. McALISTER No. C-17250 REN: 08-31-2025 STATE OF CALIFORNIA

CONSULTANT:

PROJECT NAME:

BUHACH COLONY HIGH SCHOOL

1800 NORTH BUHACH RD
ATWATER, CA 95301

CONCESSIONS/TOILET BUILDINGS, TICKET BOOTH & STADIUM UPGRADES

MERCED UNION HIGH SCHOOL DISTRICT

MERCED COUNTY

KEY PLAN:

SHEET TITLE:
ARCHITECTURAL DEMOLITION SITE PLAN

JOB NUMBER:

SHEET NUMBER:
GS099

DATE:
NOV 17, 2023

REVISION:

C:\Users\stump\Documents\A22_BCHS-NewStadium-SITE_stump-2100.rvt

CIVIL IMPROVEMENT PLANS FOR

BUHACH COLONY HIGH SCHOOL FOOTBALL FIELD, ALL-WEATHER TRACK, BLEACHERS, CONCESSIONS UPGRADES

ATWATER, CALIFORNIA

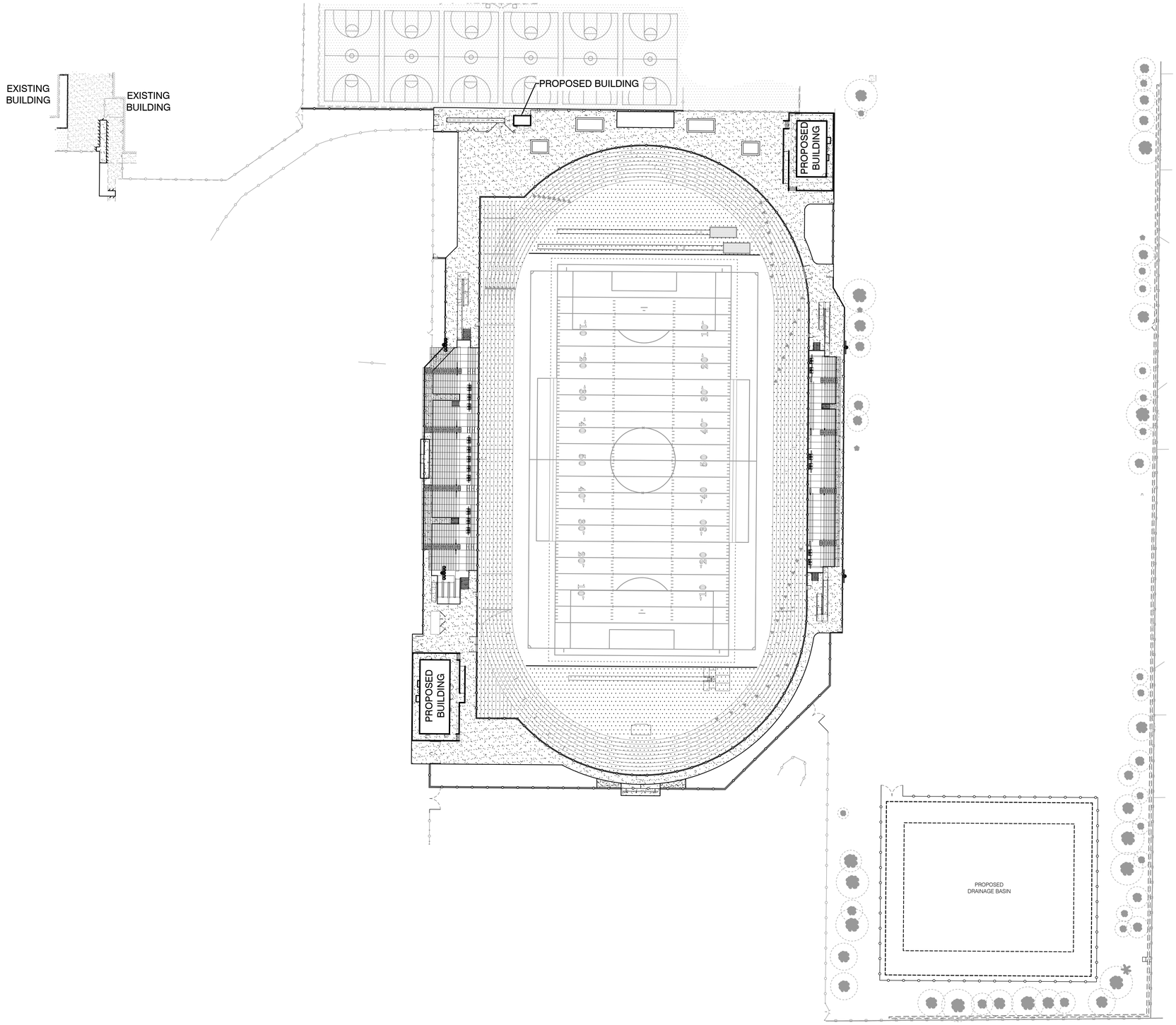

CALL BEFORE YOU DIG 800-227-2600

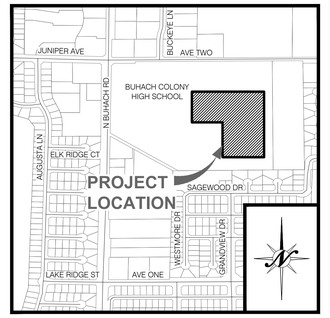

VICINITY MAP

NTS

BENCHMARK

ELEVATION:	170.20' (NAVD88)
BM	SURVEY CONTROL POINT 98. USGS BRASS DISC #V745, TC, E SIDE TRAFFIC CIRLE, 600' NE CASTLE AIRPORT MAIN GATE.

40 20 0 40

1" = 40'

CONTACTS

A. REGULATORY AGENCY:	DIVISION OF THE STATE ARCHITECT-SACRAMENTO 1102 Q STREET, SUITE 5200 SACRAMENTO, CA 95811 T: (916) 445-8730
B. OWNER/DEVELOPER:	MERCED UNION HIGH SCHOOL DISTRICT 3430 A STREET ATWATER, CA. 95301 T: (209) 325-2000
C. PROJECT LOCATION:	BUHACH COLONY HIGH SCHOOL 1800 N BUHACH RD ATWATER, CA 95301
D. ENGINEER:	NORTHSTAR ENGINEERING GROUP, INC. 620 12TH STREET MODESTO, CA. 95354 T: (209) 524-3525 F: (209) 524-3526 CONTACT: COREY WALKER, P.E.
E. ARCHITECT:	CALIFORNIA DESIGN WEST ARCHITECTS 2100 19TH STREET SACRAMENTO, CA, 95818 T: (916) 446-2466 CONTACT: ANNE PERKINS

SHEET INDEX

GENERAL INFORMATION
1. C1.1 COVER SHEET
2. C1.2 LEGENDS AND ABBREVIATIONS
3. C1.3 GENERAL NOTES AND SPECIFICATIONS
4. C1.4 DETAILS AND CROSS SECTIONS
5. C1.5 DETAILS AND CROSS SECTIONS
6. C1.6 DETAILS AND CROSS SECTIONS

SITE PLANS
7. C2.1 TOPOGRAPHIC AND DEMOLITION PLAN
8. C2.2 TOPOGRAPHIC AND DEMOLITION PLAN
9. C2.3 TOPOGRAPHIC AND DEMOLITION PLAN
10. C2.4 TOPOGRAPHIC AND DEMOLITION PLAN
11. C3.1 DIMENSION AND PAVING PLAN
12. C3.2 DIMENSION AND PAVING PLAN
13. C3.3 DIMENSION AND PAVING PLAN
14. C3.4 DIMENSION AND PAVING PLAN
15. C4.1 GRADING AND DRAINAGE PLAN
16. C4.2 GRADING AND DRAINAGE PLAN
17. C4.3 GRADING AND DRAINAGE PLAN
18. C4.4 GRADING AND DRAINAGE PLAN
19. C5.1 STORM DRAINAGE AND SANITARY SEWER PLAN
20. C5.2 STORM DRAINAGE AND SANITARY SEWER PLAN
21. C5.3 STORM DRAINAGE AND SANITARY SEWER PLAN
22. C5.4 STORM DRAINAGE AND SANITARY SEWER PLAN
23. C6.1 WATER AND COMPOSITE UTILITY PLAN
24. C6.2 WATER AND COMPOSITE UTILITY PLAN
25. C6.3 WATER AND COMPOSITE UTILITY PLAN
26. C6.4 WATER AND COMPOSITE UTILITY PLAN

EROSION CONTROL PLAN
27. C7.1 EROSION CONTROL PLAN, NOTES AND DETAILS
28. C7.2 EROSION CONTROL PLAN, NOTES AND DETAILS

IDENTIFICATION STAMP
DIV. OF THE STATE ARCHITECT
APP: 02-121275 INC:
REVIEWED FOR
SS ☑ FLS ☑ ACS ☑
DATE: 12/15/2023

CALIFORNIA DESIGN WEST ARCHITECTS, Inc.

2100 19th Street
Sacramento, CA 95818

Phone: (916) 446-2466
Fax: (916) 446-5118
Web Page: ca-dw.com

These plans and prints thereof, as instruments of service, are owned by the architect and are for the use on this project only. Reproduction and/or distribution without the prior written consent of the architect is forbidden.

Copyright California Design West Architects, Inc.

ARCHITECT: CONSULTANT:

LICENSED ARCHITECT MITCHELL A. MCALISTER No. C17258 RENEWAL 08/31/2025 STATE OF CALIFORNIA

REGISTERED PROFESSIONAL ENGINEER COREY M. WALKER No. C85920 Date Signed: 10/10/23 CIVIL STATE OF CALIFORNIA

CONSULTANT:

NorthStar Engineering Group, Inc.
• CIVIL ENGINEERING • SURVEYING • PLANNING •
620 12th Street Modesto, CA 95354
(209) 524-3525 Phone (209) 524-3526 Fax

PROJECT NAME:

BUHACH COLONY HIGH SCHOOL

1800 NORTH BUHACH RD
ATWATER, CA 95301

NEW STADIUM; FOOTBALL FIELD, ALL-WEATHER TRACK, BLEACHERS, CONCESSIONS UPGRADES

MERCED UNION HIGH SCHOOL DISTRICT

MERCED COUNTY

KEY PLAN:

SHEET TITLE:
COVER SHEET

JOB NUMBER:

SHEET NUMBER:
C1.1

DATE:
OCT. 10, 2023

REVISION:

PLOTTED: 10/10/2023 15:58 PLOTTED BY: Johnson
P:\2020\20-214 Atwater\Buhach High School\Civil\Sheet Files and Work\20-214 BEx\Buhach Plan\C1-1 Cover.dwg

LEGEND

	EXISTING	PROPOSED
BOUNDARY LINE		
CENTERLINE		
RIGHT-OF-WAY		
LOT LINE		
SECTION LINE		N/A
EASEMENT		
RIGHT-OF-WAY EASEMENT		
SETBACK LINE	N/A	
RESTRICTED ACCESS		
CENTERLINE STATION POINT		
MONUMENT		
PROPERTY CORNER		
BENCHMARK		
TREE		
BOULDER		N/A
STUMP		N/A
CONCRETE		
CURB + GUTTER		
ACCESSIBLE RAMP		
DETECTABLE WARNING SURFACE		
EDGE OF PAVEMENT		
BUILDING OVERHEAD		
RAILROAD		
BUILDING		
WHEEL STOP		
HANDRAIL		
BOLLARD	N/A	
DOOR		
VALLEY GUTTER		
WALL		
WALL		
RETAINING WALL		
FENCE - CHAINLINK/VINYL/CABLE		
FENCE - WOOD/METAL/STEEL		
FENCE - BARBED WIRE		
FENCE - PICKET		
FENCE - SPLIT RAIL		N/A
FENCE - HOGWIRE		
BARRICADE		
GUARDRAIL		N/A
ROLLING GATE		
SWING GATE		
TRENCH		N/A
SAWCUT		N/A
UTILITY REMOVAL		N/A
CONTOUR - MAJOR	32	32
CONTOUR - MINOR	32	32
DAYLIGHT CUT	N/A	
DAYLIGHT FILL	N/A	
GRADE BREAK		
PAD ELEVATION	10.0	10.0
SLOPE	0.00%	0.00%
ELEVATION TAG	00.00 CC	00.00 CC
TOE OF SLOPE		
HIGH POINT		
SIGN		
SINGLE LINE		
DOUBLE LINE		
STOP BAR/CROSSWALK		
DASHED LINE		
DOUBLE DASHED LINE		
MANHOLE		MH
MAILBOX	MAIL	MAIL
UTILITY STRUCTURE	US	US
WATER VALVE	WV	WV
WATER METER	WM	WM
BLOW OFF VALVE	BO	BO
BACKFLOW PREVENTER	BFP	BFP
DOUBLE CHECK DETECTOR ASSEMBLY	DCDA DCDA	DCDA DCDA
FIRE HYDRANT		
MONITORING WELL	MW1	MW1
AIR RELEASE VALVE	ARV	ARV
WATER WELL	W	W
WATER (DOMESTIC)	W Ex8"W	8"W
WATER (NON-POTABLE WATER)	W Ex8"NPW	8"NPW
WATER (FIRE SERVICE)	W Ex8"FS	8"FS
WATER STRUCTURE ID	N/A	FH-1
IRRIGATION MANHOLE		
IRRIGATION METER	IM	IM
BACKFLOW PREVENTER	BFP	BFP
IRRIGATION CONTROL BOX	ICB	ICB
IRRIGATION CONTROL VALVE	ICV	ICV
IRRIGATION LINE	I Ex12"IRRI	12"IRR
GAS VALVE	GV	GV
GAS METER	GM	GM
GAS LINE	G Ex4"G	GAS 4"G
ELECTROLIER		
SITE LIGHTING		
TRAFFIC SIGNAL		N/A
TRAFFIC SIGNAL WITH STREET LIGHT		N/A

	EXISTING	PROPOSED
UTILITY POLE	UP	UP
UTILITY POLE WITH LIGHT	UP	UP
WIRE ANCHOR		N/A
UTILITY BOX	UTL	UTL
TELEPHONE MAINTENANCE HOLE	T	T
ELECTRIC MAINTENANCE HOLE	E	E
CABLE MAINTENANCE HOLE	C	C
TRANSFORMER		
OUTLET		N/A
UTILITY VALVE	UTL	UTL
JOINT TRENCH	JT	JT
OVERHEAD ELECTRICAL	OHE	OHE
TELEVISION/CABLE	TV	TV
UNDERGROUND ELECTRICAL	UG	UG
TELEPHONE	TEL	TEL
ELECTRICAL	E	E
MISCELLANEOUS UTILITY	U	U
SEWER MANHOLE	S	S
ECCENTRIC SEWER MANHOLE		
SEWER CLEAN OUT		
SEPTIC TANK		
SEWER STRUCTURE ID	N/A	MH-1
SEWER (MAIN)	SS Ex12"SS	12"SS
SEWER (LATERAL)	N/A	
SEWER (FORCE MAIN)	SS Ex12"FM	12"SSFM
STORM DRAIN MANHOLE	SD	SD
DEWATERING MANHOLE	DW	DW
ECCENTRIC MANHOLE		
STORM DRAIN CLEAN OUT		
CURB INLET		
DRAIN INLET		
DRAIN INLET ON MANHOLE		
STORM DRAIN STRUCTURE ID	N/A	SDNN
RAINWATER LEADER	RWL	RWL
RIPRAP (ROCK DISCHARGE PAD)		
STORM DRAIN	SD Ex12"SD	12"SD
STORM DRAIN TRENCH DRAIN		
SWALE		
STORM DRAIN (LANDSCAPE SERVICES)	N/A	
ROCK TRENCH		
FRENCH DRAIN	N/A	
CULVERT		

ABBREVIATIONS

±	PLUS OR MINUS (NOT EXACT)
@	AT
Ø	DIAMETER
AB	AGGREGATE BASE
ABDN	ABANDONED
AC	ACRE, ASPHALT CONCRETE
A/C	AIR CONDITIONING
ACP	ASBESTOS CEMENT PIPE
ACM	ASBESTOS CONTAINING MATERIAL
AD	AREA DRAIN
ADA	AMERICANS W/ DISABILITIES ACT
AG	ATRIUM GRATE
AGG	AGGREGATE
ALGN	ALIGNMENT
ALT	ALTERNATE
APN	ASSESSORS PARCEL NUMBER
ARV	AIR RELEASE VALVE
ASB	AGGREGATE SUBBASE
ASPH	ASPHALT
ASR	AUTOMATIC SPRINKLER RISER
BC	BEGIN CURVE
BDRY	BOUNDARY
BFP	BACK FLOW PREVENTOR
BK	BOOK
BLDC	BUILDING CORNER
BLDG	BUILDING
BMP	BEST MANAGEMENT PRACTICES
BM	BENCHMARK
BO	BLOW OFF
BOD	BOTTOM OF DOCK
BOL	BOLLARD
BOW	BACK OF WALK
BSW	BACK OF SIDEWALK
BS	BEGIN STRIPING
BSL	BUILDING SETBACK LINE
BVC	BEGIN VERTICAL CURVE
BW	FINISHED GRADE AT BOTTOM OF WALL
C	CIVIL
CC	CONCRETE
CB	CATCH BASIN
CBL	CABLE
CDS	CONTINUOUS DEFLECTION
CG/C&G	CURB AND GUTTER
CG&S	CURB, GUTTER & SIDEWALK
CI	CAST IRON/CURB INLET
CIP	CAST IRON PIPE
℄ OR CL	CENTER LINE
CLR	CLEAR
CMH	CABLE MAINTENANCE HOLE
CMN	COMMUNICATION
CMP	CORRUGATED METAL PIPE
CO	CLEAN OUT
COA OR C.O.A.	CITY OF ATWATER
COM OR C.O.M	COUNTY OF MERCED
COMP.	COMPACTION
CONC OR CC	CONCRETE
CONST	CONSTRUCTION OR CONSTRUCT
CONF	CONFORM TO EXISTING
CR	CURB/CROWN
CT.	COURT/CUBIC
CU	CULVERT
CV	CHECK VALVE
CY	CUBIC YARD
D=	DELTA (CURVE)
DCDA	DOUBLE CHECK DETECTOR ASSEMBLY
DEMO	DEMOLISH
DEPT	DEPARTMENT
DI	DROP/DRAIN INLET/DUCTILE IRON
DIA	DIAMETER
DIP	DUCTILE IRON PIPE
DOM, (DOM)	DOMESTIC
DR	DRIVE
DS	DOWNSPOUT
DTL	DETAIL
DW	DOMESTIC WATER/DRYWELL/DEWATERING
DWG	DRAWING
DWY	DRIVEWAY
DYL	DOUBLE YELLOW LINE
E	EAST/EASTING COORDINATE/ELECTRIC
(E)	EXISTING
EC	END CURVE
EG	EXISTING GRADE
EL, ELEV	ELEVATION
ELB	ELECTRIC BOX
ELC/ELEC	ELECTRICAL
ELV	ELECTRIC VAULT
EM	ELECTRIC METER
EMH	ELECTRIC MAINTENANCE HOLE
EP	EDGE OF PAVEMENT
ES	END STRIPING
ESMT OR EASE	EASEMENT
EVC	END OF VERTICAL CURVE
EX OR EXIST	EXISTING
EVA	EMERGENCY VEHICLE ACCESS
(F)	FUTURE
FA	FIRE ALARM
FAB	FIRE ALARM BOX
FC, F/C	FACE OF CURB
FD	FOUND/FRENCH DRAIN
FDC	FIRE DEPARTMENT CONNECTION
FE	FENCE
FES	FLARED END SECTION
FF	FINISH FLOOR
FFE	FINISH FLOOR ELEVATION
FG	FINISH GRADE
FH	FIRE HYDRANT
FIPT	FEMALE IRON PIPE THREAD
FL	FLOW LINE/FLANGE
FLG	FLANGE
FM	FLOWMETER/FORCE MAIN
FOUND	FOUNDATION
FS	FINISHED SURFACE, FIRE SERVICE
FSR	FIRE SPRINKLER RISER
FT	FOOT, FEET
FW	FIRE WATER
G	GAS, GROUND
GB	GRADE BREAK
GE	GROUND ELEVATION
GI	GALVANIZED IRON
GM	GAS METER
GR	GRATE
GRD	GROUND
GS	GROUND SHOT ELEVATION
GUY	GUY/GUIDE LINE
GV	GAS VALVE
H2O	WATER
HB	HOSE BIB
HMA	HOT MIX ASPHALT
HORIZ	HORIZONTAL
HT	HEIGHT
HP	HIGH POINT
HPS	HIGH PRESSURE SODIUM/SYSTEM
HT	HEIGHT
HWY	HIGHWAY
HWL	HIGH WATER LINE
IBX	IRRIGATION BOX
ICB	IRRIGATION CONTROL BOX
ICV	IRRIGATION CONTROL VALVE
IHW	IRRIGATION HEADWALL
IM	IRRIGATION METER
IMH	IRRIGATION MAINTENANCE HOLE
ID	INSIDE DIAMETER
INV	INVERT
INST	INSTALL
IRR	IRRIGATION
ISP	IRRIGATION STAND PIPE
IV	IRRIGATION VALVE
JB	JUNCTION BOX
JP	JUNCTION POLE
JT	JOINT TRENCH
JP	JOINT POLE
L, LT	LEFT
L=	LENGTH (CURVE)
LF	LINEAL/LINEAR FEET
LAT	LATERAL
LIP	LIP OF GUTTER
LN	LANE
LP	LIGHT POLE, LOW POINT
FH	FIRE HYDRANT
LS	LANDSCAPE
LSA	LANDSCAPE ARCHITECT
MA	MEDICAL AIR
MAX	MAXIMUM
MEP	MECHANICAL/ELECTRICAL/PLUMBING
MH	MAN/MAINTENANCE HOLE
MIN	MINIMUM
MIPT	MALE IRON PIPE THREAD
MJ	MECHANICAL JOINT
MPVC	MIDPOINT OF VERTICAL CURVE
MON	MONUMENT
MS	MOW STRIP
MW	MONITORING WELL
N	NORTH, NORTHING COORDINATE
(N)	NEW
NDS	NDS INC. (MANUFACTURER)
NIC	NOT INCLUDED/IN CONTRACT
NO	NUMBER
NSE	NORTHSTAR ENGINEERING
NTS	NOT TO SCALE
OC	ON CENTER
OG	ORIGINAL GROUND / GRADE
OHE	OVERHEAD ELECTRICAL

O.R.	OFFICIAL RECORDS
(P)	PROPOSED
P, PAV	PAVEMENT
PB	PULL BOX
PCC	POINT OF COMPOUND/CONVERSE CURVATURE
PCC	PORTLAND CEMENT CONCRETE
PE	PLAIN END
PED	PEDESTRIAN
PERF	PERFORATED
PG	PAGE
PG&E	PACIFIC GAS AND ELECTRIC
PH	POTHOLE
PID	POINT ID
PIV	POST/PRESSURE INDICATOR VALVE
PL	PROPERTY LINE
PM	PARKING METER, PARCEL MAP
PMH	POWER MANHOLE
PO	PUSH-ON
POC	POINT ON CURVE/POINT OF CONNECTION
POI	POINT OF INTERSECTION
PP	POWER POLE
PRC	POINT OF REVERSE CURVATURE
PROF	PROFILE
PRV	PRESSURE REDUCING VALVE
PRUE	PRIVATE UTILITY EASEMENT
PT	POINT
PT&T	PACIFIC TELEPHONE & TELEGRAPH
PUE	PUBLIC UTILITY EASEMENT
PVC	POLYVINYL CHLORIDE PIPE
R	RIGHT
R=	RADIUS
RC	RELATIVE COMPACTION
RCP	REINFORCED CONCRETE PIPE
RD	ROAD, RELATIVE DENSITY
RJ	RESTRAINED JOINT
RP	RADIUS POINT
RPPA	REDUCED PRESSURE PRINCIPLE ASSEMBLY
RSC	RECEIVING AND SUPPORT CENTER
RV	RESISTANCE VALUE
RW	RECYCLED WATER
RW, R/W, ROW	RIGHT-OF-WAY
RWL	RAINWATER LEADER
S	SOUTH, SLOPE
S.A.D.	SEE ARCHITECTURAL DRAWINGS
SBL	SETBACK LINE, SOLID BLACK LINE
SCO	SEWER CLEANOUT
SD	STORM DRAIN
SDB	STORM DRAIN BASIN
SDCB	STORM DRAIN CATCH BASIN
SDCO	STORM DRAIN CLEAN OUT
SDDW	STORM DRAIN DEWATERING
SDI	STORM DRAIN INLET
SDFM	STORM DRAIN FORCE MAIN
SDMH	STORM DRAIN MAINTENANCE HOLE
S.E.D.	SEE ELECTRICAL DRAWINGS
SG	SUB-GRADE
SF	SILT FENCE SG SUBGRADE
SHT	SHEET
SIM	SIMILAR
SL	STREET LIGHT
S.L.D.	SEE LANDSCAPE DRAWINGS
SLB	STREET LIGHT BOX
SMH	SIGNAL MANHOLE
S.M.D.	SEE MECHANICAL DRAWINGS
SNS	STREET NAME SIGN
SP	SERVICE POLE
S.P.D	SEE PLUMBING DRAWINGS
SRL	SOLID RED LINE
SS	SANITARY SEWER
SSCO	SANITARY SEWER CLEAN OUT
SSFM	SANITARY SEWER FORCE MAIN
SSMH	SANITARY SEWER MAN/MAINTENANCE HOLE
SSPS	SANITARY SEWER PUMP STATION
ST	STREET, SEPTIC TANK
STA	STATION
STD	STANDARD
STL	STEEL
S/W, SW	SIDEWALK
SWL	SOLID WHITE LINE, SWALE
T	TELEPHONE
TC	TOP OF CURB
TBC	TOP BACK OF CURB
TCP	TEMPORARY CONTROL POINT
TD	TRENCH DRAIN
TEL	TELEPHONE
TELB	TELEPHONE BOX
TELV	TELEPHONE VAULT
TEMP	TEMPORARY
TFC	TOP FACE OF GRATE
TG	TOP OF GRATE
TH	THRESHOLD
THK	THICK
TI	TRAFFIC INDEX
TMH	TELEPHONE MAINTENANCE HOLE
TOD	TOP OF DOCK
TOW	TOP OF WALL
TP	TELEPHONE POLE, TEST PIT
TPE	TREE PLANTING EASEMENT
TS	TRAFFIC SIGNAL
TSB	TRAFFIC SIGNAL BOX
TSCE	TEMPORARY STABILIZED CONSTRUCTION ENTRANCE
TSP	TRAFFIC SIGNAL POLE
TV	TELEVISION
TVR	CABLE TV RISER
TYP	TYPICAL
U/UTIL/UTL	UTILITY
UG, U/G	UNDERGROUND
UON	UNLESS OTHERWISE NOTED
UOS	UNLESS OTHERWISE SPECIFIED
USA-B	WATER (BLUE)
USA-G	SEWER/STORM DRAIN (GREEN)
USA-M	TEMPORARY SURVEY MARKINGS (MAGENTA)
USA-O	COMMUNICATION CATV (ORANGE)
USA-P	RECLAIMED WATER IRR. SLURRY (PURPLE)
USA-R	ELECTRICAL (RED)
USA-W	PROPOSED EXCAVATION (WHITE)
USA-Y	GAS, OIL, STEAM (YELLOW)
VC	VERTICAL CURVE
VCP	VITRIFIED CLAY PIPE
VERT	VERTICAL
W	WEST, WATER
W/	WITH
WA	WALL
WB	WATER BOX
WM	WATER METER
WMB	WATER METER BOX
WOA	WASHOUT AREA
WS	WATER SERVICE
WV	WATER VALVE
WW	WATER WELL
WWF	WELDED WIRE FABRIC
WY	WAY
YD	YARD

CALL BEFORE YOU DIG USA 800-227-2600

IDENTIFICATION STAMP
DIV. OF THE STATE ARCHITECT
APP: 02-121275 INC:
REVIEWED FOR
SS ☑ FLS ☑ ACS ☑
DATE: 12/15/2023

CALIFORNIA DESIGN WEST ARCHITECTS, Inc.

2100 19th Street
Sacramento, CA 95818

Phone: (916) 446-2466
Fax: (916) 446-5118
Web Page: ca-dw.com

These plans and prints thereof, as instruments of service, are owned by the architect and are for the use on this project only. Reproduction and/or distribution without the prior written consent of the architect is forbidden.

Copyright California Design West Architects, Inc.

ARCHITECT: CONSULTANT:

LICENSED ARCHITECT MITCHELL A. McALLISTER NO. C 17250 REN. 2-28-2025 STATE OF CALIFORNIA

REGISTERED PROFESSIONAL ENGINEER COREY M. WALKER No. C89920 Date Signed: 10/10/23 CIVIL STATE OF CALIFORNIA

CONSULTANT:

NorthStar Engineering Group, Inc.
• CIVIL ENGINEERING • SURVEYING • PLANNING •
620 12th Street Modesto, CA 95354
(209) 524-3525 Phone (209) 524-3526 Fax

PROJECT NAME:

BUHACH COLONY HIGH SCHOOL

1800 NORTH BUHACH RD
ATWATER, CA 95301

NEW STADIUM; FOOTBALL FIELD, ALL-WEATHER TRACK, BLEACHERS, CONCESSIONS UPGRADES

MERCED UNION HIGH SCHOOL DISTRICT

MERCED COUNTY

KEY PLAN:

SHEET TITLE:

LEGENDS AND ABBREVIATIONS

JOB NUMBER:

SHEET NUMBER: C1.2

DATE: OCT. 10, 2023

REVISION:

PLOTTED: 10/10/2023 15:59 PLOTTED BY: Jwheeler
DWGNAME: F:\22-3174 Buhach Colony High School Track and Field\22-3174B\Civil\Imp Plans\C1.2 L&A.dwg

GENERAL NOTES

1. CONTRACTOR SHALL BE AWARE THAT THE FOLLOWING NOTES LISTED BELOW ARE NORTHSTAR ENGINEERING GROUP'S TYPICAL GENERAL NOTES AND SOME NOTES MAY NOT BE APPLICABLE TO THIS PLAN SET.

2. ALL IMPROVEMENTS SHALL BE CONSTRUCTED IN STRICT ACCORDANCE WITH THE FOLLOWING: CITY OF ATWATER ("CITY") STANDARD SPECIFICATIONS AND THE LATEST EDITION OF THE CALIFORNIA BUILDING CODE. WHERE THERE IS A CONFLICT BETWEEN THE PLANS AND THE CITY AND/OR CALIFORNIA BUILDING CODE STANDARDS, THE CITY AND/OR CALIFORNIA BUILDING CODE STANDARDS SHALL PREVAIL. ALL WORK SHALL BE SUBJECT TO THE INSPECTION OF THE CITY OF ATWATER.

3. PRIOR TO ANY WORK BEING PERFORMED, THE CONTRACTOR SHALL CONTACT THE APPROPRIATE REGULATORY AGENCIES FOR A PRE-CONSTRUCTION CONFERENCE. CONTRACTOR SHALL ALSO NOTIFY THE PROJECT CONTACTS LISTED ON THIS SHEET FORTY-EIGHT (48) HOURS IN ADVANCE OF SAID MEETING.

4. IT IS INTENDED THAT THESE PLANS AND SPECIFICATIONS REQUIRE ALL LABOR AND MATERIALS NECESSARY AND PROPER FOR THE WORK CONTEMPLATED AND THAT THE WORK BE COMPLETED IN ACCORDANCE WITH THEIR TRUE INTENT AND PURPOSE. THE CONTRACTOR SHALL NOTIFY NORTHSTAR ENGINEERING GROUP, INC. ("ENGINEER") IMMEDIATELY REGARDING ANY DISCREPANCIES AND AMBIGUITIES WHICH MAY EXIST IN THE PLANS AND SPECIFICATIONS. IF THE PLANS OR SPECIFICATIONS DESCRIBE PORTIONS OF THE WORK IN GENERAL TERMS BUT NOT IN COMPLETE DETAIL, IT IS UNDERSTOOD THAT ONLY THE BEST GENERAL PRACTICE IS TO PREVAIL AND THAT ONLY MATERIALS AND WORKMANSHIP OF THE FIRST QUALITY ARE TO BE USED.

5. IF NORTHSTAR ENGINEERING GROUP, INC. IS TO PERFORM ANY SURVEY STAKING, THEN CONSTRUCTION STAKING FOR GRADING, CURB, GUTTER, SIDEWALK, SANITARY SEWER, STORM DRAIN, AND WATER SHALL BE DONE UNDER THE DIRECTION OF THE ENGINEER. THE CONTRACTOR SHALL NOTIFY THE ENGINEER SEVENTY-TWO (72) HOURS IN ADVANCE OF THIS NEED FOR STAKING. ANY STAKING REQUESTED BY THE CONTRACTOR OR HIS SUBCONTRACTORS THAT IS ABOVE AND BEYOND NORMAL STANDARD STAKING NEEDS AS OUTLINED IN THE CONTRACT, WILL BE SUBJECT TO AN EXTRA BACK CHARGE TO THE CONTRACTOR.

6. THE CONTRACTOR SHALL EXERCISE DUE CAUTION AND SHALL CAREFULLY PRESERVE BENCH MARKS, REFERENCE POINTS AND ALL SURVEY STAKES, AND SHALL BEAR ALL EXPENSE FOR REPLACEMENT AND/OR ERRORS CAUSED BY THEIR UNNECESSARY LOSS OR DISTURBANCE.

7. CONTRACTOR AGREES THAT HE SHALL ASSUME SOLE AND COMPLETE RESPONSIBILITY FOR JOB SITE CONDITIONS DURING THE COURSE OF CONSTRUCTION OF THIS PROJECT, INCLUDING SAFETY OF ALL PERSONS AND PROPERTY; THAT THIS REQUIREMENT SHALL APPLY CONTINUOUSLY AND NOT BE LIMITED TO NORMAL WORKING HOURS; AND THAT THE CONTRACTOR SHALL DEFEND, INDEMNIFY AND HOLD THE OWNER, ENGINEER AND THE CITY HARMLESS FROM ANY AND ALL LIABILITY, REAL OR ALLEGED, IN CONNECTION WITH THE PERFORMANCE OF WORK ON THIS PROJECT, EXCEPTING FOR LIABILITY ARISING FROM THE SOLE NEGLIGENCE OF THE OWNER OR THE ENGINEER.

8. THE CONTRACTOR SHALL BE HELD RESPONSIBLE FOR ANY FIELD CHANGES MADE WITHOUT WRITTEN AUTHORIZATION FROM THE PROJECT ENGINEER.

9. THE CONTRACTOR SHALL PROVIDE ALL LIGHTS, SIGNS, BARRICADES, FLAGMEN, OR OTHER DEVICES NECESSARY FOR PUBLIC SAFETY IN ACCORDANCE WITH THE CURRENT ISSUE OF "MANUAL OF TRAFFIC CONTROLS, WARNING SIGNS, LIGHTS, AND DEVICES FOR USE IN PERFORMANCE OF WORK UPON HIGHWAY" PUBLISHED BY THE STATE OF CALIFORNIA BUSINESS AND TRANSPORTATION AGENCY. CONTRACTOR SHALL COORDINATE WITH THE GOVERNING LOCAL AGENCY TO DETERMINE IF ANY CHANGES TO THE CLASSIFICATION OR OPERATION OF A ROADWAY ARE REQUIRED DUE TO THE IMPROVEMENTS SHOWN ON THESE PLANS (SUCH AS SPEED LIMITS, INTERSECTION TYPE, ETC.) AND SHALL BE RESPONSIBLE FOR PROVIDING ALL NECESSARY INTERIM TRAFFIC MANAGEMENT MEASURES REQUIRED BY THE GOVERNING AGENCY, INCLUDING TRANSITIONAL SIGNAGE AND STRIPING IN PREPARATION OF AND TO BE INSTALLED PRIOR TO COMPLETION AND ACCEPTANCE OF ULTIMATE SIGNAGE AND STRIPING. CONTRACTOR SHALL BE RESPONSIBLE FOR ALL COSTS ASSOCIATED WITH IMPLEMENTING THESE MEASURES.

10. THE OFFICE OF THE CITY OF ATWATER PUBLIC WORKS SHALL BE NOTIFIED AT LEAST 48 HOURS IN ADVANCE OF ANY WORK.

11. CABLE TV, ELECTRICAL, GAS, AND TELEPHONE UNDERGROUND WORK SHALL BE COMPLETED PRIOR TO CONSTRUCTION OF THE CURB, GUTTER, SIDEWALK AND PAVING.

12. THE CONTRACTOR SHALL OBTAIN AN ENCROACHMENT PERMIT FROM THE CITY OF ATWATER, DEPARTMENT OF PUBLIC WORKS OR ANY OTHER APPLICABLE AGENCY PRIOR TO COMMENCEMENT OF WORK WITHIN EXISTING CITY RIGHT-OF-WAY. THE CONTRACTOR SHALL BE RESPONSIBLE FOR ALL PERMITS AND LICENSES REQUIRED FOR THE CONSTRUCTION AND COMPLETION OF THE PROJECT.

13. THE CITY OF ATWATER OR ASSOCIATED UTILITY COMPANY AND RESIDENCES TO BE AFFECTED SHALL BE NOTIFIED IMMEDIATELY UPON ANY UTILITY SERVICE DISRUPTION OTHER THAN SPECIFIED ON THESE IMPROVEMENT PLANS AND A TWENTY-FOUR (24) HOUR NOTICE SHALL BE GIVEN FOR ANY PLANNED DISRUPTION.

14. STREET SIGNS, TRAFFIC CONTROL SIGNS, AND PAVEMENT MARKINGS SHALL BE PROVIDED AND INSTALLED BY THE CONTRACTOR AT LOCATIONS ESTABLISHED BY THE ENGINEER.

15. THE CONTRACTOR SHALL BE RESPONSIBLE FOR PROTECTING EXISTING IMPROVEMENTS FROM DAMAGE. COST OF REPLACING DAMAGED EXISTING IMPROVEMENTS SHALL BE INCLUDED IN THE UNIT PRICE BID FOR ITEMS REQUIRING REMOVAL AND REPLACEMENT.

16. CONTRACTOR IS RESPONSIBLE FOR COORDINATION OF THE REMOVAL OR RELOCATION OF ALL EXISTING UTILITIES WITH RESPECTIVE UTILITY COMPANIES.

17. ASPHALT CONCRETE SHALL BE PLACED ONLY WHEN THE ATMOSPHERIC TEMPERATURE IS ABOVE 50°F AND RISING.

18. DRAWING NUMBERS SHOWN ON THE PLANS REFER TO DRAWINGS CONTAINED IN THE CITY OF ATWATER STANDARD SPECIFICATIONS (I.E. DWG. 30).

19. ALL TRENCHES IN PAVED AREAS SHALL BE PAVED WITH TEMPORARY PAVING, OR COVERED WITH A STEEL PLATE OF APPROPRIATE SIZE AND STRENGTH, THE SAME DAY THE PAVEMENT CUT IS MADE.

20. WHENEVER PAVEMENT IS BROKEN OR CUT IN THE INSTALLATION OF THE WORK COVERED BY THESE SPECIFICATIONS AND PLANS, THE PAVEMENT SHALL BE REPLACED, AFTER PROPER BACK FILLING, WITH PAVEMENT MATERIALS EQUAL TO OR BETTER THAN THE MATERIALS USED IN THE ORIGINAL PAVING. THE FINISHED PAVEMENT SHALL BE SUBJECT TO THE APPROVAL OF THE CITY ENGINEER.

21. PRIOR TO COMMENCING ANY WORK, IT SHALL BE THE CONTRACTOR'S RESPONSIBILITY TO HAVE EACH UTILITY COMPANY LOCATED, IN THE FIELD, THEIR MAIN AND SERVICE LINES. THE CONTRACTOR SHALL NOTIFY MEMBERS OF THE UNDERGROUND SERVICE ALERT (U.S.A.) FORTY-EIGHT (48) HOURS IN ADVANCE OF PERFORMING ANY EXCAVATION WORK BY CALLING THE TOLL-FREE NUMBER (800) 227-2600. THE CONTRACTOR SHALL RECORD THE U.S.A. ORDER NUMBER. IT SHALL BE THE CONTRACTOR'S SOLE RESPONSIBILITY TO PROTECT ALL EXISTING UTILITIES SO THAT NO DAMAGE RESULTS TO THEM DURING THE PERFORMANCE OF THIS CONTRACT. ANY REPAIRS NECESSARY TO DAMAGED UTILITIES SHALL BE PAID FOR BY THE CONTRACTOR. THE CONTRACTOR SHALL BE REQUIRED TO COOPERATE WITH OTHER CONTRACTORS AND UTILITY COMPANIES INSTALLING NEW STRUCTURES, UTILITIES AND SERVICE TO THE DEVELOPMENT.

22. PAYMENT FOR PAVEMENT WILL BE MADE ONLY FOR AREAS SHOWN ON THE PLANS. REPLACEMENT OF PAVEMENT WHICH IS BROKEN OR CUT DURING THE INSTALLATION OF THE WORK COVERED BY THESE SPECIFICATIONS AND PLANS, AND WHICH LIES OUTSIDE OF SAID AREAS, SHALL BE INDICATED IN THE CONTRACTOR'S UNIT PRICE FOR PAVEMENT, AND NO ADDITIONAL PAYMENT SHALL BE MADE FOR SUCH WORK.

23. EXCAVATIONS OF 5 FEET OR MORE IN DEPTH WILL REQUIRE AN EXCAVATION PERMIT FROM THE STATE OF CALIFORNIA DEPARTMENT OF INDUSTRIAL SAFETY. FOR TRENCHES 5 FEET OR MORE IN DEPTH, THE CONTRACTOR SHALL COMPLY WITH SECTION 5-1.02A OF THE CALTRANS STANDARDS, CHAPTER 9 OF THE STATE OF CALIFORNIA LABOR CODE, AND ANY LOCAL CODES OR ORDINANCES.

24. WE CALL YOUR ATTENTION TO TITLE 8 CALIFORNIA ADMINISTRATION CODE SECTION 1540 (A) (1) OF THE CONSTRUCTION SAFETY ORDERS ISSUED BY THE OCCUPATIONAL SAFETY AND HEALTH STANDARDS BOARD PURSUANT TO THE CALIFORNIA OCCUPATIONS SAFETY AND HEALTH ACT OF 1973 AS AMENDED WHICH STATES: (1) PRIOR TO OPENING AN EXCAVATION EFFORT SHALL BE MADE TO DETERMINE WHETHER UNDERGROUND INSTALLATIONS; I.E. SEWER, WATER, FUEL, ELECTRICAL LINES, ETC., WILL BE ENCOUNTERED AND IF SO, WHERE SUCH UNDERGROUND INSTALLATIONS ARE LOCATED. WHEN THE EXCAVATION APPROACHES THE APPROXIMATE LOCATION OF SUCH INSTALLATION, THE EXACT LOCATION SHALL BE DETERMINED BY CAREFUL PROBING OR HAND DIGGING; AND, WHEN IT IS UNCOVERED, ADEQUATE PROTECTION SHALL BE PROVIDED FOR THE EXISTING INSTALLATION. ALL KNOWN OWNERS OF UNDERGROUND FACILITIES IN THE AREA CONCERNED SHALL BE ADVISED OF PROPOSED WORK AT LEAST FORTY-EIGHT (48) HOURS PRIOR TO THE START OF ACTUAL EXCAVATION.

25. THE CONTRACTOR SHALL MAINTAIN A NEATLY MARKED SET OF FULL-SIZE AS-BUILT RECORD DRAWINGS SHOWING THE FINAL LOCATION AND LAYOUT OF ALL MECHANICAL, ELECTRICAL AND INSTRUMENTATION EQUIPMENT, PIPING AND CONDUITS, STRUCTURES AND OTHER FACILITIES. AS-BUILT RECORD DRAWINGS SHALL REFLECT CHANGE ORDERS, ACCOMMODATIONS, AND ADJUSTMENTS TO ALL IMPROVEMENTS CONSTRUCTED. WHERE NECESSARY, SUPPLEMENTAL DRAWINGS SHALL BE PREPARED AND SUBMITTED BY THE CONTRACTOR TO THE DEVELOPER AND APPROVAL AGENCY.

26. SIGNING, STRIPING AND PAVEMENT MARKINGS SHALL BE IN STRICT CONFORMANCE WITH THE CITY OF ATWATER STANDARDS AND SPECIFICATIONS.

27. PRIOR TO ACCEPTANCE OF THE PROJECT, THE CONTRACTOR SHALL DELIVER TO THE ENGINEER, ONE SET OF NEATLY MARKED AS-BUILT RECORD DRAWINGS SHOWING THE INFORMATION REQUIRED ABOVE. AS-BUILT RECORD DRAWINGS SHALL BE REVIEWED AND THE COMPLETE AS-BUILT RECORD DRAWING SET SHALL BE CURRENT WITH ALL CHANGES AND DEVIATIONS REDLINED AS A PRECONDITION TO THE FINAL PROGRESS PAYMENT APPROVAL AND/OR FINAL ACCEPTANCE.

28. AFTER CONSTRUCTION OF ALL IMPROVEMENTS, THE CONTRACTOR SHALL SUBMIT ONE SET OF REPRODUCIBLE PLANS. FINAL INVERT ELEVATIONS FOR SEWER AND STORM DRAIN LINES THAT ARE TO BE EXTENDED FOR FUTURE CONSTRUCTION SHALL ALSO BE SHOWN ON THE "AS-BUILT" PLANS ALL AS PROVIDED BY THE CONTRACTOR.

29. THE CONTRACTOR SHALL NOTIFY NORTHSTAR ENGINEERING AT LEAST 48 HOURS PRIOR TO BACK FILLING OF ANY PIPE WHICH STUBS TO A FUTURE PHASE OF CONSTRUCTION FOR INVERT VERIFICATION. TOLERANCE SHALL BE IN ACCORDANCE WITH THE CITY OF ATWATER STANDARD SPECIFICATIONS.

30. WHENEVER EXISTING FACILITIES ARE REMOVED, DAMAGED, BROKEN, OR CUT IN THE INSTALLATION OF THE WORK COVERED BY THESE PLANS OR SPECIFICATIONS, SAID FACILITIES SHALL BE REPLACED AT THE CONTRACTORS EXPENSE, AFTER PROPER BACKFILLING AND/OR CONSTRUCTION, WITH MATERIALS EQUAL TO OR BETTER THAN THE MATERIALS USED IN THE ORIGINAL EXISTING FACILITIES. THE FINISHED PRODUCT SHALL BE SUBJECT TO THE APPROVAL OF THE OWNER, THE ENGINEER, AND THE RESPECTIVE REGULATORY AGENCY.

31. DUST CONTROL SHALL BE PROVIDED AT ALL TIMES, AT THE CONTRACTOR'S EXPENSE TO MINIMIZE ANY DUST NUISANCE AND SHALL BE IN ACCORDANCE WITH THE REQUIREMENTS OF THE CITY OF ATWATER. CONTRACTOR SHALL OBTAIN A PERMIT FROM CITY OF ATWATER FOR USE OF WATER FROM FIRE HYDRANTS FOR CONSTRUCTION PURPOSES. THE PERMIT SHALL BE APPROVED BY THE CITY OF ATWATER FIRE DEPARTMENT.

32. CONTRACTOR SHALL PROVIDE CITY WITH A CERTIFICATE SIGNED BY A REGISTERED CIVIL ENGINEER OR LAND SURVEYOR STATING THAT ALL BUILDING PAD ELEVATIONS ARE IN ACCORDANCE WITH THE APPROVED GRADING PLAN.

33. UNLESS OTHERWISE STATED, ALL STATIONS INDICATED ON THE IMPROVEMENT PLANS ARE REFERENCED TO THE CENTERLINE OF THE STREET. ALL STATIONS OFF CENTER ARE PERPENDICULAR TO OR RADIALLY OPPOSITE CENTERLINE STATIONS, UNLESS OTHERWISE NOTED.

GENERAL NOTES (CONT)

34. DRIVEWAYS ON STREETS TO BE LOCATED IN THE FIELD BY THE ENGINEER AT THE TIME OF CONSTRUCTION. DRIVEWAYS SHALL NOT COINCIDE WITH WHEELCHAIR RAMPS.

35. IF THE PROJECT IS SUBJECT TO THE INDIRECT SOURCE REVIEW (ISR) REQUIREMENT, THE CONTRACTOR IS REQUIRED TO KEEP DAILY RECORDS OF THE TOTAL HOURS OF OPERATION FOR EACH PIECE OF EQUIPMENT GREATER THAN 50-HORSEPOWER BEING USED ON THE PROJECT SITE DURING CONSTRUCTION. WITHIN 30 DAYS OF COMPLETING CONSTRUCTION OF EACH PROJECT PHASE, A REPORT SUMMARIZING TOTAL HOURS OF OPERATION BY EQUIPMENT TYPE, MODEL, YEAR, AND HORSEPOWER FOR EACH PIECE OF CONSTRUCTION EQUIPMENT GREATER THAN 50-HORSEPOWER MUST BE SUBMITTED TO THE AIR DISTRICT. TO ASSIST IN THIS RECORDKEEPING, THE "DETAILED FLEET TEMPLATE" IS AVAILABLE ON THE DISTRICT'S WEBSITE AT HTTP://WWW.VALLEYAIR.ORG/ISR/ISRFORMSANDAPPLICATIONS.HTM. FOR EACH PROJECT PHASE, THE DISTRICT WILL VERIFY THAT THE FLEET DETAILS ACHIEVED THE REQUIRED EMISSION REDUCTIONS. IF THE CONTRACTOR IS NOT GOING TO MEET THE STANDARDS AND/OR RECORD KEEPING REQUIRED BY THE AIR DISTRICT, THE CONTRACTOR SHALL NOTIFY THE AIR BOARD PRIOR TO CONSTRUCTION SO THE NECESSARY MITIGATION FEE SHALL BE PAID. IF THE AIR BOARD IS NOT NOTIFIED PRIOR TO CONSTRUCTION, THE CONTRACTOR SHALL BE REQUIRED TO PAY THE PENALTY TO THE AIR BOARD.

36. PRIOR TO FINALIZING IMPROVEMENTS AND OPENING ROADS THE CONTRACTOR SHALL COORDINATE WITH THE GOVERNING LOCAL AGENCY FOR POTENTIAL TRAFFIC SIGNAGE AND STRIPING MODIFICATIONS (FOR EXAMPLE, SPEED LIMIT CHANGES OR REDUCTIONS) BEYOND THE PROJECT LIMITS THAT ARE NECESSITATED BY THE CONSTRUCTION OF THE IMPROVEMENTS SHOWN ON THESE PLANS. CONTRACTOR SHALL BE RESPONSIBLE FOR ALL COSTS ASSOCIATED WITH SIGNAGE AND STRIPING MODIFICATIONS REQUIRED BY THE GOVERNING AGENCY.

37. ANY ASSUMPTION MADE BY THE CONTRACTOR IS NOT THE RESPONSIBILITY OF THE ENGINEER OR DESIGN CONSULTANT. CONTRACTOR SHALL SUBMIT A PRE-BID REQUEST FOR INFORMATION (RFI) FOR ANY CLARIFICATION NEEDED AND SHALL BE RESPONSIBLE FOR COMPLETING THE PROJECT AT THE CONTRACTOR'S EXPENSE FOR ANY WRONG ASSUMPTIONS MADE.

GRADING NOTES

1. EARTHWORK SHALL BE PERFORMED IN ACCORDANCE WITH THE CITY OF ATWATER STANDARDS AND THE PROJECT SOILS REPORT. ALL FILL AREAS SHALL BE TESTED AS REQUIRED BY THE CITY OF ATWATER AND SHALL BE PAID FOR BY THE CONTRACTOR.

2. THE DEVELOPER SHALL BE RESPONSIBLE FOR COST OF INITIAL TEST FOR MOISTURE DENSITY CURVE. IF THE FIRST TEST FAILS, THE CONTRACTOR SHALL BE RESPONSIBLE FOR COST OF ALL SUBSEQUENT CURVES AND TESTS.

3. THE CONTRACTOR SHALL REVIEW SITE PRIOR TO BIDDING. ALL VEGETATION AND DELETERIOUS MATERIALS SHALL BE REMOVED FROM THE SITE AT THE EXPENSE OF THE CONTRACTOR AND SHALL BE INCLUDED IN THE LUMP SUM CLEARING COST.

4. THE CONTRACTOR SHALL PRESERVE ALL STAKES AND POINTS SET FOR LINES, GRADES OR MEASUREMENT OF THE WORK IN THEIR PROPER PLACES UNTIL AUTHORIZED TO REMOVE THEM BY THE ENGINEER. ALL EXPENSES INCURRED IN REPLACING STAKES THAT HAVE BEEN REMOVED WITHOUT PROPER AUTHORITY SHALL BE PAID FOR BY THE CONTRACTOR.

5. CONTRACTOR'S PRICE SHALL INCLUDE COST TO ACHIEVE A BALANCED SITE. IT IS THE CONTRACTOR'S RESPONSIBILITY TO IMPORT AND EXPORT MATERIAL AS REQUIRED TO BALANCE SITE.

6. CONTRACTOR SHALL GRADE ALL LANDSCAPE AREAS TO WITHIN 0.10 FEET OF FINAL GRADE ELEVATIONS WITH APPROPRIATE LANDSCAPE SECTIONS INCLUDED.

7. GRADE TAGS LOCATED ON CURBS REFERENCE TOP OF CURB ELEVATION UNLESS OTHERWISE NOTED. ADDITIONAL DESCRIPTIONS ARE PROVIDED TO DENOTE HORIZONTAL AND VERTICAL CHANGES IN ACCORDANCE WITH ABBREVIATIONS DEFINED ON COVER SHEET.

8. THE CONTRACTOR SHALL BE RESPONSIBLE FOR DETERMINING HIS OWN EARTHWORK QUANTITIES FOR BIDDING, CONTRACT AND CONSTRUCTION PURPOSE. IF IT APPEARS THERE WILL BE AN EXCESS OR SHORTAGE OF MATERIAL, THE CONTRACTOR SHALL NOTIFY THE ENGINEER TO DETERMINE IF POSSIBLE GRADE ADJUSTMENTS CAN BE MADE.

9. SITE CONTRACTOR SHALL COORDINATE WITH BUILDING CONTRACTOR TO ACCOMMODATE THE PROPER CLEARANCE BETWEEN THE BOTTOM OF THE STUCCO AND THE TOP OF THE GRADE TREATMENT ALONG THE BUILDING AS APPLICABLE, IN ACCORDANCE WITH SECTION 2512.1.2. OF THE MOST CURRENT CALIFORNIA BUILDING CODE, IF THE SUBJECT BUILDING SIDING TREATMENT IS STUCCO. CONTRACTOR SHALL NOTIFY ENGINEER IF ANY GRADES ARE ADJUSTED. CONTRACTOR SHALL ALSO APPLY FLASHING WHERE APPLICABLE WITHIN AREAS OF GRADE TRANSITION.

10. ALL LANDSCAPE AREAS THAT ABUT ANY PORTION OF THE BUILDING SHALL BE GRADED SUCH THAT THE FINISHED GRADE IN LANDSCAPE AREAS SHALL BE A MINIMUM OF EIGHT INCHES (8") BELOW FINISHED FLOOR OF THE ABUTTING BUILDING AND IN NO CASE SHALL THE LANDSCAPE AREA BE GRADED OR LANDSCAPED SUCH THAT WATER DRAINS TOWARD THE BUILDING.

11. SINCE THE ENGINEER CANNOT CONTROL THE EXACT METHOD OR MEANS USED BY THE CONTRACTOR DURING GRADING OPERATIONS, NOR CAN THE ENGINEER GUARANTEE THE EXACT SOIL CONDITION OVER THE ENTIRE SITE, THE ENGINEER ASSUMES NO RESPONSIBILITY FOR FINAL EARTHWORK QUANTITIES.

12. CONTRACTOR IS RESPONSIBLE FOR THE OFF HAUL AND DISPOSAL OF ANY AND ALL EXCESS DIRT FROM CONSTRUCTION SITE.

13. CONTRACTOR SHALL COORDINATE WITH THE EXISTING ADJOINING PROPERTY OWNERS PRIOR TO ANY WORK BEING STARTED THAT MAY AFFECT THEIR PROPERTY.

14. CONTRACTOR SHALL PROVIDE A SMOOTH TRANSITION FROM THE PROPOSED GRADING TO THE EXISTING FLOWLINE, CURB, CONCRETE, AND OR PAVEMENT ELEVATIONS.

15. ALL EXISTING WELLS AND SEPTIC TANKS SHALL BE REMOVED AND/OR ABANDONED PER THE REQUIREMENTS OF THE COUNTY HEALTH DEPARTMENT AND THE CITY OF ATWATER. THIS WORK SHALL BE INCLUDED IN THE LUMP SUM CLEARING COST.

16. CONTRACTOR SHALL VERIFY BUILDING SUBGRADE SECTIONS WITH ARCHITECT PLANS BEFORE CONSTRUCTION. IF A DISCREPANCY EXISTS, CONTRACTOR TO NOTIFY THE ENGINEER IMMEDIATELY.

17. PRIOR TO CONSTRUCTING ANY FLATWORK THE CONTRACTOR SHALL VERIFY THE FINISH FLOOR ELEVATIONS AT ALL DOORS. NOTE THAT FINISH FLOOR ELEVATIONS MAY HAVE BEEN CHANGED DUE TO FOUNDATION ADJUSTMENTS IN FIELD. CONTRACTOR SHALL HOLD ADJUSTED FINISH FLOOR GRADES, ACCOUNT FOR DOOR THRESHOLDS, AND ADJUST GRADES AS NECESSARY TO STAY IN COMPLIANCE WITH CURRENT ADA STANDARDS. CONTRACTOR SHALL NOTIFY NORTHSTAR ENGINEERING IMMEDIATELY IF ANY GRADE ADJUSTMENTS WILL CREATE ADA ACCESSIBILITY ISSUES.

18. THE VALUES SHOWN ON THE GRADING PLAN ARE FOR REFERENCE AND FEE PURPOSES ONLY. SINCE THE ENGINEER CANNOT CONTROL THE EXACT METHOD OR MEANS USED BY THE CONTRACTOR DURING GRADING OPERATIONS, NOR CAN THE ENGINEER GUARANTEE THE EXACT SOIL CONDITION OVER THE ENTIRE SITE, THE ENGINEER ASSUMES NO RESPONSIBILITY FOR FINAL EARTHWORK QUANTITIES.

19. THE VALUES SHOWN ON THE GRADING PLAN ARE TO AID THE CONTRACTOR IN DETERMINING THE QUANTITIES OF DIRT TO BE MOVED. THE CUT AND FILL QUANTITIES SHOWN INDICATE A THEORETICAL YARDAGE FIGURE AND ARE GIVEN ONLY AS A CONVENIENCE TO THE CONTRACTOR. THE QUANTITIES SHOWN SHALL NOT BE USED AS THE BASIS OF BID COSTS.

20. EARTHWORK QUANTITY VALUES SHOWN ON PAVING PLAN REPRESENT THE DIFFERENCE BETWEEN THE ESTIMATED EXISTING GRADES FROM ASBUILT DOCUMENTS COMPARED WITH THE SUBGRADE STRUCTURAL SECTIONS OF THE PROPOSED GRADING DESIGN. SEE STRUCTURAL SECTIONS IN HATCH LEGEND ON PAVING PLAN.

21. EARTHWORK QUANTITY CALCULATIONS DO NOT INCLUDE STRIPPING, SHRINKAGE, SWELL FACTORS OR MATERIAL FROM UTILITY TRENCH SPOILS.

NPDES NOTES

1. STORM DRAIN NPDES PERMIT TO COMPLY WITH THE STATE OF CALIFORNIA'S STATEWIDE GENERAL NPDES PERMIT, REGULATING DISCHARGES OF STORM WATER ASSOCIATED WITH CONSTRUCTION ACTIVITY FROM SOIL DISTURBANCES OF ONE (1) ACRE OR MORE, A NOTICE OF INTENT (NOI) TO COMPLY WITH THE TERMS OF THE GENERAL PERMIT TO DISCHARGE STORM WATER ASSOCIATED WITH CONSTRUCTION ACTIVITY MUST BE FILED AND THE APPROPRIATE FEE PAID PRIOR TO COMMENCEMENT OF CONSTRUCTION. IN ADDITION, AT THE CONCLUSION OF THE PROJECT A NOTICE OF TERMINATION (NOT) MUST ALSO BE FILED. SUBMIT THE FEE, NOI, AND NOT TO THE STATE WATER RESOURCES CONTROL BOARD UTILIZING THE STORM WATER MULTIPLE APPLICATION AND REPORT TRACKING SYSTEM (SMARTS) AT THE FOLLOWING ADDRESS:

   WWW.SMARTS.WATERBOARDS.CA.GOV

   FEES AND PAYMENTS CAN BE MADE TO THE FOLLOWING ADDRESS:

   STATE WATER RESOURCES CONTROL BOARD
   DIVISION OF WATER QUALITY
   ATTN: STORM WATER PERMIT UNIT
   P.O. BOX 1977
   SACRAMENTO, CA 95812-1977

   IF YOU HAVE ANY QUESTIONS CALL JOSEPH HENAO, WATER QUALITY CONTROL ENGINEER, CALIFORNIA REGIONAL WATER QUALITY CONTROL BOARD, AT (916) 255-3028.

THE FOLLOWING MUST BE SUBMITTED TO THE CITY PRIOR TO BEGINNING WORK AND PRIOR TO THE ISSUANCE OF AN ENCROACHMENT PERMIT:

A) TRANSMITTAL MEMO THAT INCLUDES:
   * THE NAME AND PHONE NUMBER OF THE PERSON RESPONSIBLE FOR SWPPP IMPLEMENTATION, AND
   * IF APPLICABLE, A LISTING OF THE POST-CONSTRUCTION BEST MANAGEMENT PRACTICES THAT WILL BE INSTALLED TO SATISFY THE REQUIREMENTS OF THE CITY OF ATWATER MUNICIPAL CODE CHAPTER TITLES 13 AND 15.
   * COPY OF SWPPP MUST REMAIN ON SITE DURING CONSTRUCTION AT ALL TIMES.

B) COPY OF A SIGNED NOTICE OF INTENT FORM OR A WASTE DISCHARGE IDENTIFICATION NUMBER.
   WDID#: CONTRACTOR TO PROVIDE PRIOR TO CONSTRUCTION; IF REQUIRED

DEWATERING NOTES

1. THE CONTRACTOR SHALL FURNISH, INSTALL, OPERATE AND MAINTAIN ALL MACHINERY APPLIANCES, AND EQUIPMENT TO MAINTAIN ALL EXCAVATIONS FREE FROM WATER DURING CONSTRUCTION. THE CONTRACTOR SHALL DISPOSE OF THE WATER SO AS NOT TO CAUSE DAMAGE TO PUBLIC OR PRIVATE PROPERTY, OR TO CAUSE A NUISANCE OR MENACE TO THE PUBLIC OR VIOLATE THE LAW. THE DEWATERING SYSTEM SHALL BE INSTALLED AND OPERATED SO THAT THE GROUNDWATER LEVEL OUTSIDE THE EXCAVATION IS NOT REDUCED TO THE EXTENT WHICH WOULD CAUSE DAMAGE OR ENDANGERED ADJACENT STRUCTURES OR PROPERTY. ALL COST FOR DEWATERING SHALL BE INCLUDED IN THE UNIT PRICE BID FOR ALL PIPE CONSTRUCTION. THE STATIC WATER LEVEL SHALL BE DRAWN DOWN A MINIMUM OF 1 FOOT BELOW THE BOTTOM OF EXCAVATIONS TO MAINTAIN THE UNDISTURBED STATE OF NATURAL SOILS AND ALLOW THE PLACEMENT OF ANY FILL TO THE SPECIFIED DENSITY. THE CONTRACTOR SHALL HAVE ON HAND, PUMPING EQUIPMENT AND MACHINERY IN GOOD WORKING CONDITION FOR EMERGENCIES AND SHALL HAVE WORKMEN AVAILABLE FOR IT'S OPERATION. DEWATERING SYSTEMS SHALL OPERATE CONTINUOUSLY UNTIL BACK FILL HAS BEEN COMPLETED TO 1 FOOT ABOVE THE NORMAL STATIC GROUNDWATER LEVEL.

2. THE CONTRACTOR SHALL CONTROL SURFACE WATER TO PREVENT ENTRY INTO EXCAVATIONS. AT EACH EXCAVATION, A SUFFICIENT NUMBER OF TEMPORARY OBSERVATION WELLS TO CONTINUOUSLY CHECK THE GROUNDWATER LEVEL SHALL BE PROVIDED.

3. THE CONTROL OF GROUNDWATER SHALL BE SUCH THAT SOFTENING OF THE BOTTOM OF EXCAVATIONS, OR FORMATION OF "QUICK" CONDITIONS OR "BOILS", DOES NOT OCCUR. DEWATERING SYSTEMS SHALL BE DESIGNED AND OPERATED SO AS TO PREVENT REMOVAL OF THE NATURAL SOILS. THE RELEASE OF GROUNDWATER AT ITS STATIC LEVEL SHALL BE PERFORMED IN SUCH A MANNER AS TO MAINTAIN THE UNDISTURBED STATE OF THE NATURAL FOUNDATIONS SOILS, PREVENT DISTURBANCE OF COMPACTED BACK FILL, AND PREVENT FLOTATION OR MOVEMENT OF STRUCTURES, PIPELINES AND SEWERS. IF AN NPDES (NATIONAL POLLUTANT DISCHARGE ELIMINATION SYSTEM) PERMIT IS REQUIRED FOR DISPOSAL OF WATER FROM CONSTRUCTION DEWATERING ACTIVITIES, IT SHALL BE OBTAINED BY THE CONTRACTOR PRIOR TO ANY DEWATERING ACTIVITIES.

4. ONE HUNDRED PERCENT STANDBY PUMPING CAPACITY SHALL BE AVAILABLE ON SITE AT ALL TIMES AND SHALL BE CONNECTED TO THE DEWATERING SYSTEM PIPING TO PERMIT IMMEDIATE USE. IN ADDITION, STANDBY AUXILIARY EQUIPMENT AND APPLIANCES FOR ALL ORDINARY EMERGENCIES, AND COMPETENT WORKMEN FOR OPERATION AND MAINTENANCE OF ALL DEWATERING EQUIPMENT SHALL BE ON SITE AT ALL TIMES. STANDBY EQUIPMENT SHALL INCLUDE EMERGENCY POWER GENERATION AND AUTOMATIC SWITCH OVER TO THE EMERGENCY GENERATOR WHEN NORMAL POWER FAILS. DEWATERING SYSTEMS SHALL NOT BE SHUT DOWN BETWEEN SHIFTS, ON HOLIDAYS, ON WEEKENDS, OR DURING WORK STOPPAGES.

5. SUMPS SHALL BE NO DEEPER THAN 5 FEET AND SHALL BE AT THE LOW POINT OF EXCAVATION. EXCAVATION SHALL BE GRADED TO DRAIN TO THE SUMPS.

STORM DRAIN NOTES

1. ALL STORM DRAIN CONSTRUCTION, MATERIALS AND WORKMANSHIP SHALL BE IN ACCORDANCE WITH THE REQUIREMENTS OF THE LATEST EDITION OF THE CALIFORNIA PLUMBING CODE AND CITY OF ATWATER STANDARDS AND SPECIFICATIONS.

2. THE CONTRACTOR SHALL PROVIDE ALL LIGHTS, SIGNS, BARRICADES, FLAGMEN OR OTHER DEVICES NECESSARY FOR PUBLIC SAFETY.

3. THE CONTRACTOR SHALL PROVIDE ALL SHORING, BRACING, SLOPING OR OTHER PROVISIONS NECESSARY TO PROTECT WORKMEN FOR ALL AREAS TO BE EXCAVATED TO A DEPTH OF 5 FEET OR MORE. SAID PROTECTION TO BE DONE IN ACCORDANCE WITH THE REQUIREMENTS OF THE CITY OF ATWATER DEPARTMENT OF PUBLIC WORKS, AND STATE REGULATIONS.

4. ALL MAINTENANCE HOLE RIMS TO BE ADJUSTED TO PROPOSED FINISH GRADE AFTER STREET PAVING, UNLESS OTHERWISE NOTED. COST FOR RAISING FACILITIES TO BE INCLUDED IN UNIT PRICES FOR MAINTENANCE HOLES.

5. ALL STORM DRAIN LINES SHALL BE CLEANED OF ALL SAND AND DEBRIS PRIOR TO ACCEPTANCE BY THE CITY OF ATWATER.

6. THE CONTRACTOR SHALL EXPOSE ALL EXISTING STORM DRAIN PIPES, WHERE A CONNECTION IS TO BE MADE, AND NOTIFY THE ENGINEER IF THERE IS A DISCREPANCY BETWEEN THE SIGNED PLANS AND THE EXISTING FIELD CONDITION PRIOR TO THE START OF CONSTRUCTION.

7. STORM DRAIN CONTRACTOR SHALL VERIFY LOCATION OF ALL EXISTING UNDERGROUND UTILITIES AND WILL BE RESPONSIBLE FOR PROTECTION OF THE SAME.

8. CONTRACTOR TO BE RESPONSIBLE FOR ALL TESTING OF STORM DRAIN FACILITIES IN ACCORDANCE WITH THE CITY OF ATWATER STANDARD SPECIFICATIONS AND PLANS.

9. STORM DRAINAGE SYSTEM WILL BE PRIVATELY OWNED AND MAINTAINED.

10. ALL STORM DRAIN PIPE MATERIALS SHALL BE IN ACCORDANCE WITH CITY OF ATWATER STANDARDS AND SPECIFICATIONS AND/OR THE CALIFORNIA PLUMBING CODE. PIPES WITHIN THE PUBLIC RIGHT-OF-WAY SHALL BE REINFORCED CONCRETE PIPE (RCP) PER THE CITY OF ATWATER STANDARDS AND SPECIFICATIONS. PIPES NOT IN THE PUBLIC RIGHT-OF-WAY SHALL BE PER TABLE 701.2 OF THE 2019 CALIFORNIA PLUMBING CODE. CONTRACTOR SHALL HAVE PIPE MANUFACTURER PERFORM CALCULATIONS TO DETERMINE PIPE CLASS PRIOR TO CONSTRUCTION DUE TO EXCESSIVE DEPTH.

11. ALL STORM DRAIN MAINTENANCE HOLES AND BASES SHALL BE PRECAST AND CONSTRUCTED IN ACCORDANCE WITH CITY OF ATWATER STANDARDS, CONTRACTOR SHALL SET MAINTENANCE HOLE CASTING AND COVERS TO FINISH GRADE AFTER STREET IMPROVEMENTS ARE COMPLETE, AND SHALL BE RESPONSIBLE FOR LOCATION OF MAINTENANCE HOLES BENEATH THE FINISH PAVEMENT.

SANITARY SEWER NOTES

1. ALL SANITARY SEWER CONSTRUCTION, MATERIALS AND WORKMANSHIP SHALL BE IN ACCORDANCE WITH THE REQUIREMENTS OF THE LATEST EDITION OF THE CALIFORNIA PLUMBING CODE AND CITY OF ATWATER STANDARDS AND SPECIFICATIONS.

2. THE CONTRACTOR SHALL EXPOSE EXISTING SANITARY SEWER WHERE CONNECTION IS TO BE MADE, SO THAT THE ENGINEER CAN VERIFY EXISTING FLOW LINES AND LOCATIONS BEFORE START OF CONSTRUCTION.

3. SEWER MAINS SHALL BE INSTALLED FROM THE EXISTING FACILITIES UPSTREAM TO THE END OF THE LINE.

4. ALL SANITARY SEWER CONSTRUCTION SHALL BE DONE IN ACCORDANCE WITH THE REQUIREMENTS OF THE CITY OF ATWATER. MAIN LINES AND LATERAL SHALL BE AIR TESTED FOR LEAKAGE IN CONFORMANCE WITH THE CITY OF ATWATER STANDARDS.

5. ALL TESTING REQUIRED BY THE CITY SHALL BE THE RESPONSIBILITY OF THE CONTRACTOR, INCLUDING THE TELEVISING OF ALL SEWER LINES.

6. THE CONTRACTOR SHALL PROVIDE ALL SHORING, BRACING, SLOPING OR OTHER PROVISIONS NECESSARY TO PROTECT WORKMEN FOR ALL AREAS TO BE EXCAVATED TO A DEPTH OF 5 FEET OR MORE. SAID PROTECTION TO BE IN ACCORDANCE WITH THE REQUIREMENTS OF THE CITY OF ATWATER DEPARTMENT OF PUBLIC WORKS, AND STATE REGULATIONS.

7. SEWER PIPES SHALL BE IN ACCORDANCE WITH CITY OF ATWATER STANDARDS AND SPECIFICATIONS AND/OR THE CALIFORNIA PLUMBING CODE. PIPES WITHIN THE PUBLIC RIGHT-OF-WAY SHALL BE VITRIFIED CLAY PIPE (VCP) OR DUCTILE IRON PIPE PER THE CITY OF ATWATER STANDARDS AND SPECIFICATIONS. PIPES NOT IN THE PUBLIC RIGHT-OF-WAY SHALL BE PER TABLE 701.2 OF THE CALIFORNIA PLUMBING CODE. CONTRACTOR SHALL HAVE PIPE MANUFACTURER PERFORM CALCULATIONS TO DETERMINE PIPE CLASS PRIOR TO CONSTRUCTION DUE TO EXCESSIVE OR INSUFFICIENT DEPTH. ANY PROPOSED CLEANOUT WITHIN THE PUBLIC RIGHT-OF-WAY SHALL BE INSTALLED IN THE AREA BETWEEN THE CURB AND THE SIDEWALK.

8. THE CONTRACTOR SHALL PROVIDE ALL LIGHTS, SIGNS, BARRICADES, FLAGMEN, OR OTHER DEVICES NECESSARY FOR PUBLIC SAFETY.

9. ALL SANITARY SEWER CONSTRUCTION SHALL COMPLY WITH THE REQUIREMENTS OF THE STATE HEALTH DEPARTMENT. WHERE SANITARY SEWER SERVICES AND LATERALS CROSS ABOVE WATER MAINS, A 20 FEET MINIMUM JOINT OF PVC C-900, CLASS 200, OR AN 18 FEET JOINT OF CLASS 50 D.I.P., SHALL BE CENTERED ON THE SEWER MAIN. CONTRACTOR SHALL CONSTRUCT ALL CROSSINGS IN ACCORDANCE WITH THE CALIFORNIA HEALTH DEPARTMENT REQUIREMENTS.

10. SEWER CONTRACTOR SHALL VERIFY LOCATION OF ALL EXISTING UNDERGROUND UTILITIES, AND WILL BE RESPONSIBLE FOR THE PROTECTION OF SAME.

11. MAINTENANCE HOLE CASTINGS AND COVERS SHALL BE ADJUSTED TO FINISH GRADES BY THE PAVING CONTRACTOR AFTER STREET IMPROVEMENTS ARE COMPLETED. COST FOR ADJUSTING FACILITIES TO BE INCLUDED IN THE UNIT PRICE FOR MAINTENANCE HOLES AND CLEANOUTS.

12. THE CONTRACTOR SHALL BE RESPONSIBLE FOR ADEQUATELY MARKING INSTALLED LOCATION OF SERVICE LATERALS. THE CONTRACTOR SHALL STAMP AN "S" AT THE CURB FACE DIRECTLY OVER THE SERVICE.

13. SANITARY SEWER SYSTEM WILL BE PRIVATELY OWNED AND MAINTAINED.

WATER NOTES

1. ALL WATER CONSTRUCTION, MATERIALS AND WORKMANSHIP SHALL BE IN ACCORDANCE WITH THE REQUIREMENTS OF CITY OF ATWATER STANDARDS AND SPECIFICATIONS AND THE LATEST EDITION OF THE CALIFORNIA PLUMBING CODE AND CALIFORNIA FIRE CODE.

2. CONTRACTOR SHALL EXPOSE EXISTING WATER LINES WHERE CONNECTIONS ARE TO BE MADE TO VERIFY EXISTING ELEVATION AND LOCATION PRIOR TO START OF CONSTRUCTION.

3. ALL CONNECTIONS TO EXISTING CITY OF ATWATER FACILITIES SHALL BE MADE IN THE PRESENCE OF THE CITY OF ATWATER ENGINEER, OR HIS APPOINTED REPRESENTATIVE.

4. FOR EXCAVATIONS OF FIVE FEET OR MORE, TRENCHES SHALL BE MADE IN CONFORMANCE WITH APPROPRIATE SHORING SYSTEM STANDARDS.

5. PAVING REPLACEMENT TO MATCH EXISTING PAVEMENT SECTION, OR IN ACCORDANCE WITH STREET DETAILS ON THESE PLANS.

6. WATER LINE TESTING SHALL BE AS FOLLOWS:
   A) ALL WATER LINES SHALL BE TESTED AND DISINFECTED IN CONFORMANCE WITH THE REQUIREMENTS OF THE CITY OF ATWATER AND THE AMERICAN WATER WORKS ASSOCIATION (AWWA) STANDARDS, SECTION C-651.

   B) WATER LINE TESTING SHALL INCLUDE: HYDROSTATIC PRESSURE TESTING PER CITY OF ATWATER STANDARDS & SPECIFICATIONS; BACTERIOLOGICAL TESTING PER OF CITY OF ATWATER STANDARDS AND SPECIFICATIONS.

   C) AFTER THE FINAL FLUSHING AND BEFORE THE NEW WATER MAIN IS CONNECTED TO THE DISTRIBUTION SYSTEM, TWO CONSECUTIVE SETS OF ACCEPTABLE SAMPLES, TAKEN 24 HOURS APART, SHALL BE COLLECTED AT SITES SHOWN ON THE PLANS. (AT LEAST ONE SET OF SAMPLES SHALL BE COLLECTED EVERY 1200 FEET OF THE NEW WATER MAIN, PLUS ONE SET AT EACH END OF THE LINE AND AT LEAST ONE SET FROM EACH BRANCH). ALL SAMPLES SHALL BE TESTED FOR BACTERIOLOGICAL QUALITY, AND SHALL SHOW THE ABSENCE OF COLIFORM ORGANISMS. A STANDARD HETEROPHIC PLATE COUNT MAY BE REQUIRED AT THE OPTION OF THE ENGINEER.

WATER NOTES (CONT)

   D) SAMPLES SHALL BE TAKEN FROM WATER THAT HAS STOOD IN THE NEW MAIN FOR AT LEAST 16 HOURS AFTER FINAL FLUSHING HAS BEEN COMPLETED.

   E) IF THE INITIAL DISINFECTION FAILS TO PRODUCE SATISFACTORY BACTERIOLOGICAL SAMPLES, THE MAIN SHALL BE REFLUSHED AND RESAMPLED DAILY FROM THE SAME POINT(S) UNTIL TWO CONSECUTIVE SAMPLES ARE NEGATIVE FOR COLIFORM ORGANISMS.

   F) THE DEVELOPER SHALL PAY FOR THE INITIAL BACTERIOLOGICAL TESTS. THE CONTRACTOR SHALL PAY FOR ALL TESTING NECESSITATED BY FAILURE OF THE INITIAL TEST(S).

   G) IF TRENCH WATER HAS ENTERED THE NEW MAIN DURING CONSTRUCTION,OR, IF IN THE OPINION OF THE CITY OF ATWATER, EXCESSIVE QUANTITIES OF DIRT AND DEBRIS HAVE ENTERED THE NEW MAIN, BACTERIOLOGICAL SAMPLES SHALL BE TAKEN AT INTERVALS OF APPROXIMATELY 200 FEET AND SHALL BE IDENTIFIED BY LOCATION. THE CONTRACTOR SHALL INSTALL ADDITIONAL WATER SERVICE TAPS AND SAMPLING STATIONS AS REQUIRED. THE CONTRACTOR SHALL ALSO REMOVE SAMPLING STATIONS AND SERVICES UPON SATISFACTORY COMPLETION OF TESTING. THE CONTRACTOR SHALL PAY FOR TESTING OF THE CONTAMINATED AREAS.

   H) CONTRACT PRICE SHALL INCLUDE FULL COMPENSATION FOR FURNISHING ALL LABOR, MATERIALS, TOOLS, EQUIPMENT, AND INCIDENTALS, AND FOR DOING ALL OF THE WORK INVOLVED IN TESTING AND DISINFECTION OF THE WATER MAINS.

7. CONTRACTOR SHALL PROVIDE ALL LIGHTS, SIGNS, BARRICADES, FLAGMEN, OR OTHER DEVICES NECESSARY FOR PUBLIC SAFETY.

8. WATER PIPE MATERIALS FOR PIPES 12" AND SMALLER SHALL BE PER THE CITY OF ATWATER STANDARDS AND SPECIFICATIONS AND/OR THE CALIFORNIA PLUMBING CODE. PIPES WITHIN THE PUBLIC RIGHT-OF-WAY SHALL BE PER THE CITY OF ATWATER STANDARDS AND SPECIFICATIONS. PIPES NOT IN THE PUBLIC RIGHT-OF-WAY SHALL BE PER TABLE 604.1 OF THE CALIFORNIA PLUMBING CODE.

9. COVERAGE ON THE WATER LINE SHALL BE 30 INCHES MINIMUM FROM TOP OF PIPE TO PROPOSED FINISH GRADE AS SPECIFIED BY THE CITY OF ATWATER.

10. ALL WATER IMPROVEMENTS MUST BE REVIEWED AND APPROVED BY THE CITY OF ATWATER.

11. WATER LINES SHALL BE A MINIMUM OF 10 FEET OUTSIDE OF PIPE TO OUTSIDE OF PIPE FROM SEWER AND STORM DRAIN MAINS. CROSSINGS SHALL MEET STATE HEALTH STANDARDS.

12. ALL FIRE SERVICE LINES BEYOND THE DOUBLE DETECTOR CHECK VALVE EXTENDING TO THE PROPOSED BUILDING SHALL BE C900 CL200.

13. WHERE WATER LINE CROSSES UNDER STORM DRAIN, A 20 FEET MIN JOINT OF PVC C-900 CLASS 200, OR AN 18 FEET JOINT OF CLASS 50 D.I.P. SHALL BE CENTERED ON STORM DRAIN OR IN ACCORDANCE WITH CITY OF ATWATER STANDARDS AND SPECIFICATIONS.

14. ALL VALVE BOXES TO BE ADJUSTED TO FINISH GRADE AFTER PAVING. COST FOR RAISING FACILITIES TO BE INCLUDED IN UNIT PRICES FOR VALVES.

15. PROVIDE THRUST BLOCKS AT FIRE HYDRANTS, BLOW-OFFS, TEES, AND AT CHANGES IN SIZE AND DIRECTION, AND AT CAPS, BENDS, AND ENDS. INSTALL THRUST BLOCKS, AS REQUIRED, IN ACCORDANCE WITH CITY OF ATWATER STANDARDS AND SPECIFICATIONS.

16. CONTRACTOR IS ADVISED THAT ANY FIELD CHANGES DUE TO EXISTING CONDITIONS MUST COMPLY WITH STATE HEALTH DEPARTMENT CRITERIA.

17. ALL VALVES TWELVE (12) INCHES AND LARGER SHALL BE BUTTERFLY VALVES AND OPERATORS INTENDED FOR BURIED SERVICE IN A DOMESTIC WATER SYSTEM.

18. ACTUAL CONNECTIONS TO EXISTING WATER LINES WILL NOT BE PERMITTED PRIOR TO THE COMPLETION OF STERILIZATION AND TESTING OF NEW WATER MAINS. ALL EXISTING WATER VALVES TO BE OPERATED UNDER THE DIRECTION OF THE WATER DIVISION OF THE REGULATORY AGENCY PERSONNEL ONLY.

19. REDUCED PRESSURE BACKFLOW PREVENTION DEVICE MUST BE INSPECTED AND APPROVED BY AN APPROVED TESTING FIRM PRIOR TO THE FINAL APPROVAL OF THE BUILDING.

20. THE WATER METER AND METER BOX SHALL BE PROVIDED AND INSTALLED BY THE CITY OF ATWATER, PAID BY THE DEVELOPER.

21. FIRE HYDRANT MAINS SHALL BE HYDROSTATICALLY TESTED AT 50 PSI FOR ONE HOUR AND FIRE SPRINKLER MAINS, ON THE SYSTEM SIDE OF THE FDC, SHALL BE HYDROSTATICALLY TESTED AT 200 PSI FOR TWO HOURS. CALL THE FIRE PREVENTION BUREAU 48 HOURS PRIOR TO DESIRED TEST.

22. SELF ADHESIVE BLUE REFLECTIVE FIRE HYDRANT MARKERS ARE TO BE PROVIDED TO THE FIRE DEPARTMENT BY THE CONTRACTOR. THEY SHALL BE PROVIDED AT A RATIO OF ONE REFLECTOR PER HYDRANT, UNLESS THE FIRE HYDRANT FACES TWO STREETS THEN TWO REFLECTORS SHALL BE REQUIRED. CONTRACTOR SHALL REFER TO THE MUTCD, CALIFORNIA SUPPLEMENT, SECTION 3B.11 AND FIGURE 3B-102.

23. CONTRACTOR SHALL PAINT FIRE HYDRANTS WITH ENAMEL SAFETY YELLOW PAINT.

24. FIRE HYDRANT STEM BREAKAWAY MUST COINCIDE WITH BREAKAWAY SPOOL.

25. A LOCATING "TRACE WIRE" IS REQUIRED ON ALL MAINS AND SERVICE LINES. THE "TRACE WIRE" SHALL BE FIRMLY ATTACHED TO THE TOP CENTER OF THE PIPE AT INTERVALS NOT EXCEEDING FIVE (5) FEET. ALL MAIN LINE "TRACE WIRES" SHALL BE INTERCONNECTED TO FORM A GRID. ALL SPLICES SHALL BE MECHANICALLY AND ELECTRONICALLY SOUND AND MADE WATERPROOF WITH AN APPROVED COMPOUND. INSTALLATION OF THE "TRACE WIRE" SYSTEM SHALL BE INSPECTED AND APPROVED BY THE ENGINEER PRIOR TO BACKFILL. THE "TRACE WIRE" SYSTEM SHALL BE TESTED BY APPROVED TESTING PERSONNEL AFTER THE TRENCHES HAVE BEEN BACKFILLED AND HYDROSTATIC TESTS HAVE BEEN PERFORMED, BUT BEFORE ANY PAVEMENT HAS BEEN PLACED. THE CITY SHALL PAY THE COST OF THE INITIAL TEST. ANY SUBSEQUENT TESTING COSTS SHALL BE THE RESPONSIBILITY OF THE CONTRACTOR.

26. THE DISCHARGE OF CHLORINATED AND DE-CHLORINATED WATER INTO THE STORM DRAIN SYSTEM IS PROHIBITED. THE DISCHARGE OF CHLORINATED AND DE-CHLORINATED WATER INTO THE SANITARY SEWER SYSTEM REQUIRES PRIOR APPROVAL FROM CITY OF ATWATER.

27. WATER SYSTEM WILL BE PRIVATELY OWNED AND MAINTAINED.

28. PRIOR TO COMMENCEMENT OF CONSTRUCTION, THE FIRE DEPARTMENT REQUIRES ALL ACCESS ROADS AND WATER SUPPLIES TO BE SUFFICIENTLY PROVIDED FOR THE PROPOSED DEVELOPMENT SITE. IF THERE IS ANY ALTERATION TO THIS REQUIREMENT, THE PROPOSED DEVELOPMENT WILL BE SUBJECT TO A FINE AND CONSTRUCTION MAY BE SHUTDOWN FOR AN INDEFINITE PERIOD OF TIME, OR UNTIL COMPLIANCE HAS BEEN MET.

TOPOGRAPHY NOTES

1. PLAN SET DESIGN BASED OFF OF TOPOGRAPHIC SURVEY PERFORMED ON NOVEMBER 14, 2022. CONTRACTOR SHALL BE AWARE THAT SINCE THIS INITIAL SURVEY THE SITE MAY HAVE CHANGED.

2. ALL EXISTING UTILITIES WERE PLOTTED FROM RECORD INFORMATION AND FIELD TOPOGRAPHY. ACTUAL LOCATIONS MAY VARY AND ADDITIONAL CROSSINGS MAY EXIST IN THE FIELD.

3. THE CONTRACTOR SHALL USE EXTREME CAUTION WHEN EXPOSING EXISTING UTILITY CROSSINGS AND SERVICES.

4. ANY DAMAGE TO EXISTING UTILITIES WILL BE THE SOLE RESPONSIBILITY OF THE CONTRACTOR.

5. PRIOR TO BEGINNING CONSTRUCTION THE CONTRACTOR SHALL CALL U.S.A. (800) 227-2600 TO HAVE THE SITE MARKED. THE CONTRACTOR SHALL POTHOLE ALL EXISTING UTILITIES TO VERIFY THAT NO CONFLICTS EXIST BETWEEN PROPOSED AND EXISTING IMPROVEMENTS.

6. CONTRACTOR/DEVELOPER SHALL OBTAIN AN ENCROACHMENT PERMIT FROM THE APPROPRIATE AGENCY TO DO ANY WORK WITHIN RIGHT-OF-WAY PRIOR TO CONSTRUCTION.

7. CONTRACTOR TO BE CAUTIOUS OF UNDERGROUND STUBS AND LINES. CONTRACTOR SHALL USE EXTREME CAUTION AS TO OTHER LINES MAY EXIST ON THE SITE THAT ARE NOT CLEARLY MARKED.

8. AN ATTEMPT HAS BEEN MADE TO SHOW ALL EXISTING STRUCTURES, UTILITIES, DRIVES, PAVEMENTS, CURBS, WALKS, ETC. IN THEIR APPROXIMATE LOCATION ON THE SURVEY AND/OR WORKING DRAWINGS. HOWEVER, OTHERS THAT ARE NOT SHOWN MAY EXIST AND MAY BE FOUND UPON VISITING THE SITE OR DURING THE CLEARING AND REMOVAL WORK. IT WILL BE THE RESPONSIBILITY OF THIS CONTRACTOR TO ACCURATELY LOCATE ALL EXISTING FACILITIES AND TO DETERMINE THEIR EXTENT. IF SUCH FACILITIES OBSTRUCT THE PROGRESS OF THE WORK AND ARE NOT INDICATED TO BE REMOVED OR RELOCATED, THEY SHALL BE REMOVED OR RELOCATED ONLY AS DIRECTED BY THE OWNER.

9. THE CONTRACTOR SHALL REPORT ANY EXISTING SITE ELEMENT NOT SHOWN ON THE WORKING DRAWINGS TO THE ARCHITECT OF RECORD SO THAT THE PROPER DISPENSATION OF THAT ELEMENT MAY BE MADE.

10. IN CONJUNCTION WITH CONTACTING USA TO LOCATE UNDERGROUND UTILITIES WITHIN THE PUBLIC RIGHT-OF-WAY IT IS HIGHLY RECOMMENDED THAT THE CONTRACTOR UTILIZE (GPR) GROUND PENETRATING RADAR UNDERGROUND SERVICES TO IDENTIFY ONSITE UTILITIES THAT MAY NOT BE VISIBLE FROM THE SURFACE.

11. CONTRACTOR SHALL REVIEW ALL OF THE CONSULTANT'S PLAN SETS FOR ADDITIONAL DEMOLITION, REPLACEMENT AND IMPROVEMENTS PRIOR TO BEGINNING OF ANY WORK. IF A CONFLICT IS FOUND THEN THE CONTRACTOR SHALL NOTIFY THE ARCHITECT AND ENGINEER IMMEDIATELY.

12. IN ACCORDANCE WITH SECTION 8771 OF THE PROFESSIONAL LAND SURVEYORS ACT
   A) MONUMENTS SET SHALL BE SUFFICIENT IN NUMBER AND DURABILITY AND EFFICIENTLY PLACED SO AS NOT TO BE READILY DISTURBED, TO ASSURE, TOGETHER WITH MONUMENTS ALREADY EXISTING, THE PERPETUATION OR FACILE REESTABLISHMENT OF ANY POINT OR LINE OF THE SURVEY.

TOPOGRAPHY NOTES (CONT)

   B) WHEN MONUMENTS EXIST THAT CONTROL THE LOCATION OF SUBDIVISIONS, TRACTS, BOUNDARIES, ROADS, STREETS, OR HIGHWAYS, OR PROVIDE HORIZONTAL OR VERTICAL SURVEY CONTROL, THE MONUMENTS SHALL BE LOCATED AND REFERENCED BY OR UNDER THE DIRECTION OF A LICENSED LAND SURVEYOR OR REGISTERED CIVIL ENGINEER PRIOR TO THE TIME WHEN ANY STREETS, HIGHWAYS, OTHER RIGHTS-OF-WAY, OR EASEMENTS ARE IMPROVED, CONSTRUCTED, RECONSTRUCTED, MAINTAINED, RESURFACED, OR RELOCATED, AND A CORNER RECORD OR RECORD OF SURVEY OF THE REFERENCES SHALL BE FILED WITH THE COUNTY SURVEYOR. THEY SHALL BE RESET IN THE SURFACE OF THE NEW CONSTRUCTION, A SUITABLE MONUMENT BOX PLACED THEREON, OR PERMANENT WITNESS MONUMENTS SET TO PERPETUATE THEIR LOCATION IF ANY MONUMENT COULD BE DESTROYED, DAMAGED, COVERED, OR OTHERWISE OBLITERATED, AND A CORNER RECORD OR RECORD OF SURVEY FILED WITH THE COUNTY SURVEYOR PRIOR TO THE RECORDING OF A CERTIFICATE OF COMPLETION FOR THE PROJECT. SUFFICIENT CONTROLLING MONUMENTS SHALL BE RETAINED OR REPLACED IN THEIR ORIGINAL POSITIONS TO ENABLE PROPERTY, RIGHT-OF-WAY AND EASEMENT LINES, PROPERTY CORNERS, AND SUBDIVISION AND TRACT BOUNDARIES TO BE REESTABLISHED WITHOUT PREVIOUS SURVEYS NECESSARILY ORIGINATING ON MONUMENTS DIFFERING FROM THOSE THAT CURRENTLY CONTROL THE AREA. IT SHALL BE THE RESPONSIBILITY OF THE GOVERNMENTAL AGENCY OR OTHERS PERFORMING CONSTRUCTION WORK TO PROVIDE FOR THE MONUMENTATION REQUIRED BY THIS SECTION. IT SHALL BE THE DUTY OF EVERY LAND SURVEYOR OR CIVIL ENGINEER TO COOPERATE WITH THE GOVERNMENTAL AGENCY IN MATTERS OF MAPS, FIELD NOTES, AND OTHER PERTINENT RECORDS. MONUMENTS SET TO MARK THE LIMITING LINES OF HIGHWAYS, ROADS, STREETS OR RIGHT-OF-WAY OR EASEMENT LINES SHALL NOT BE DEEMED ADEQUATE FOR THIS PURPOSE UNLESS SPECIFICALLY NOTED ON THE CORNER RECORD OR RECORD OF SURVEY OF THE IMPROVEMENT WORKS WITH DIRECT TIES IN BEARING OR AZIMUTH AND DISTANCE BETWEEN THESE AND OTHER MONUMENTS OF RECORD.

   C) CONTRACTOR SHALL COORDINATE WITH THE LAND SURVEYOR OF RECORD, PRIOR TO STARTING CONSTRUCTION, TO IDENTIFY ALL SURVEY MONUMENTS THAT MAY BE SUBJECT TO DISTURBANCE AND SHALL INCLUDE COSTS FOR MONUMENT PRESERVATION, REPLACEMENT, AND PREPARATION OF CORNER RECORDS OR RECORD OF SURVEY IN CONTRACTOR'S BID.

   D) THE DECISION TO FILE EITHER THE REQUIRED CORNER RECORD OR A RECORD OF SURVEY PURSUANT TO SUBDIVISION (B) SHALL BE AT THE ELECTION OF THE LICENSED LAND SURVEYOR OR REGISTERED CIVIL ENGINEER SUBMITTING THE DOCUMENT, AT CONTRACTOR'S EXPENSE.

   §732.5, §1492.5, §1810.5 OF THE CALIFORNIA STREETS AND HIGHWAYS CODES STATE: SURVEY MONUMENTS SHALL BE PRESERVED, REFERENCED, OR REPLACED PURSUANT TO SECTION 8771 OF THE BUSINESS AND PROFESSIONS CODE.

SITE LAYOUT NOTES

1. SEE ARCHITECTURAL PLANS FOR ALL BUILDING DETAILS, STRUCTURAL DETAILS, FOOTING DETAILS, UTILITY POINTS OF CONNECTION, ROOF DRAIN LOCATIONS, ADA PATH OF TRAVEL, ADA SIGNAGE, ADA ACCESSIBILITY DETAILS, TRUNCATED DOME LOCATIONS, ENTRY MONUMENTS, GENERAL SIGNAGE, PARKING LOT STRIPING AND SITE PLAN CONSTRAINTS.

2. SEE PLUMBING PLANS FOR CONTINUATION OF UTILITIES WITHIN 5 FEET OF THE BUILDING.

3. SEE LANDSCAPE PLANS FOR ALL LANDSCAPE IMPROVEMENTS INCLUDING LANDSCAPE IRRIGATION, LANDSCAPE AREA GRADING, LANDSCAPE SLEEVE CROSSINGS AND LANDSCAPE SLOPE TREATMENT. ANY AND ALL LANDSCAPE REMOVAL OR RELOCATION.

4. SEE ELECTRICAL PLANS FOR DRY UTILITY LAYOUT, DRY UTILITY DETAILS AND SPECIFICATIONS, MODIFICATIONS TO EXISTING DRY UTILITIES, SITE LIGHTING LOCATIONS AND DETAILS, POINTS OF CONNECTION, AND SLEEVE CROSSINGS. ANY AND ALL ELECTRICAL REMOVAL OR RELOCATION.

5. SEE GEOTECHNICAL SERVICES REPORT PREPARED BY TECHNICON ENGINEERING SERVICES, INC. DATED FEBRUARY 9, 2023 TITLED "PROPOSED STADIUM IMPROVEMENTS BUHACH COLONY HIGH SCHOOL, 1800 BUHACH ROAD, ATWATER, CALIFORNIA" FOR SITE GEOTECHNICAL SPECIFICATIONS. ADDITIONAL GEOTECHNICAL REPORTS OR ADDENDUMS MAY EXIST IN WHICH CASE THE CONTRACTOR SHALL CONTACT THE CLIENT PRIOR TO CONSTRUCTION TO ENSURE THAT ALL REPORTS AND ADDENDUMS HAVE BEEN PROVIDED. CONTRACTOR SHALL REVIEW ALL REPORTS AND ADDENDUMS THEN NOTIFY NORTHSTAR ENGINEERING SHOULD A CONFLICT IS FOUND OR DESIGN SHOWN ON THESE PLANS DOES NOT MEET THE GEOTECHNICAL ENGINEERS RECOMMENDATIONS.

6. STRIPING SHALL BE APPLIED PER CITY STANDARDS AS SHOWN ON THIS PLAN SET. ADDITIONALLY STRIPING AND SIGNAGE INFORMATION SHALL FOLLOW MANUAL OF UNIFORM TRAFFIC CONTROL DEVICES (MUTCD) LATEST EDITION, MUTCD CALIFORNIA SUPPLEMENTS.

7. FLATWORK SHALL BE INSTALLED WITH CRACK CONTROL JOINTS AT APPROPRIATE SPACING.

8. CONSTRUCT CONTROL AND CONSTRUCTION JOINTS IN ACCORDANCE WITH CURRENT PORTLAND CEMENT ASSOCIATION GUIDELINES AND CITY STANDARDS; USE WHICH EVER IS MORE STRINGENT. SEE GEOTECHNICAL REPORT FOR ADDITIONAL PCC RECOMMENDATIONS.

9. ANY UNSUITABLE MATERIAL ENCOUNTERED AT OR BELOW GRADE SHALL BE COMPLETELY REMOVED TO THE FULL DEPTH AND REPLACED WITH COMPACTED ENGINEERED FILL OR APPROVED IMPORT SOILS.

10. GEOTECHNICAL ENGINEER SHALL VERIFY MOISTURE CONTENT AND CONDITIONING PRIOR TO POURING ANY CONCRETE OR ASPHALT.

11. PRIOR TO CONSTRUCTION CONTRACTOR SHALL REVIEW EXISTING GRADES ALONG SAWCUT LINE AND TRANSITIONS TO MATCH EXISTING IMPROVEMENTS TO ENSURE BOTH DRAINAGE FLOW IS CONTINUOUS AND UNINTERRUPTED AND ACCESSIBILITY REQUIREMENTS ARE BEING MET.

12. CONTRACTOR SHALL ADJUST ANY AND ALL BOXES, STRUCTURES, ETC. TO FINISH GRADE WITH TRAFFIC RATED LID FOR VEHICULAR AREAS AND ACCESSIBLE LID FOR PEDESTRIAN AREAS BASED ON PROPOSED GRADING DESIGN SHOWN IN THIS PLAN SET. SEE ARCHITECTURAL PLANS, SEE LANDSCAPE ARCHITECT PLANS.

13. CONTRACTOR SHALL MAINTAIN EROSION RESISTANT VEGETATION ON FACE OF ALL SLOPES.

CALL BEFORE YOU DIG
USA
800-227-2600

IDENTIFICATION STAMP
DIV. OF THE STATE ARCHITECT
APP: 02-121275 INC:
REVIEWED FOR
SS ☑ FLS ☑ ACS ☑
DATE: 12/15/2023

CALIFORNIA DESIGN
WEST ARCHITECTS, Inc.

2100 19th Street
Sacramento, CA 95818

Phone: (916) 446-2466
Fax: (916) 446-5118
Web Page: ca-dw.com

These plans and prints thereof, as instruments of service, are owned by the architect and are for the use on this project only. Reproduction and/or distribution without the prior written consent of the architect is forbidden.

Copyright California Design West Architects, Inc.

ARCHITECT: CONSULTANT:

LICENSED ARCHITECT — MITCHELL A. McALLISTER — NO. C 17250 — STATE OF CALIFORNIA

REGISTERED PROFESSIONAL ENGINEER — COREY M. WALKER — No. C89920 — Date Signed: 10/10/23 — CIVIL — STATE OF CALIFORNIA

CONSULTANT:

NorthStar Engineering Group, Inc.
• CIVIL ENGINEERING • SURVEYING • PLANNING •
620 12th Street Modesto, CA 95354
(209) 524-3525 Phone (209) 524-3526 Fax

PROJECT NAME:

BUHACH COLONY HIGH SCHOOL

1800 NORTH BUHACH RD
ATWATER, CA 95301

NEW STADIUM; FOOTBALL FIELD, ALL-WEATHER TRACK, BLEACHERS, CONCESSIONS UPGRADES

MERCED UNION HIGH SCHOOL DISTRICT

MERCED COUNTY

KEY PLAN:

SHEET TITLE:

GENERAL NOTES AND SPECIFICATIONS

JOB NUMBER:	SHEET NUMBER:
DATE: OCT. 10, 2023	
REVISION:	C1.3

PLOTTED: 10/10/2023 15:59 PLOTTED BY: Jwheeler
DWGNAME: F:\22-3174 Buhach Colony High School Track and Field\22-3174B\Civil\Imp Plans\C1.3 NTS.dwg

CITY OF ATWATER STANDARD DETAILS

1. PRIOR TO CONSTRUCTION, THE CONTRACTOR SHALL OBTAIN THE MOST UP TO DATE CITY STANDARDS FOR REFERENCE PRIOR TO AND DURING CONSTRUCTION.
2. THE LATEST COPY OF THE CITY OF ATWATER STANDARDS SHALL BE CONSIDERED PART OF THIS PLAN SET.
3. IN THE EVENT OF A DISCREPANCY BETWEEN THIS PLAN SET AND CITY STANDARDS; THE CITY STANDARDS SHALL PREVAIL.
4. STANDARD PLAN DRAWINGS REFERENCED WITHIN THIS PLAN SET INCLUDE, BUT ARE NOT LIMITED TO THE FOLLOWING DRAWINGS:

CITY OF ATWATER:

DTL No. S-6	SANITARY SEWER-TESTING REQUIREMENTS
DTL No. S-7	SANITARY SEWER-TESTING REQUIREMENTS
DTL No. S-8	SANITARY SEWER-TESTING REQUIREMENTS
DTL No. T-1	TRENCH EXCAVATION AND BACKFILL
DTL No. T-2	TRENCHING AND BACKFILL REQUIREMENTS
DTL No. T-3	TRENCHING AND BACKFILL REQUIREMENTS
DTL No. T-5	PIPE BEDDING AND INITIAL BACKFILL
DTL No. T-7	UTILITY CROSSING
DTL No. W-4	TYPICAL THRUST BLOCK DETAILS
DTL No. W-7	WATER SYSTEM-TESTING SPECIFICATIONS
DTL No. W-8	WATER SYSTEM-TESTING SPECIFICATIONS

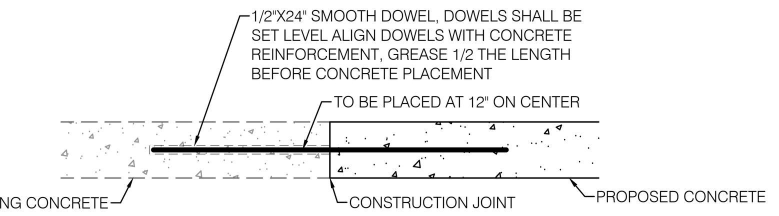

1 CONSTRUCTION JOINT
NTS

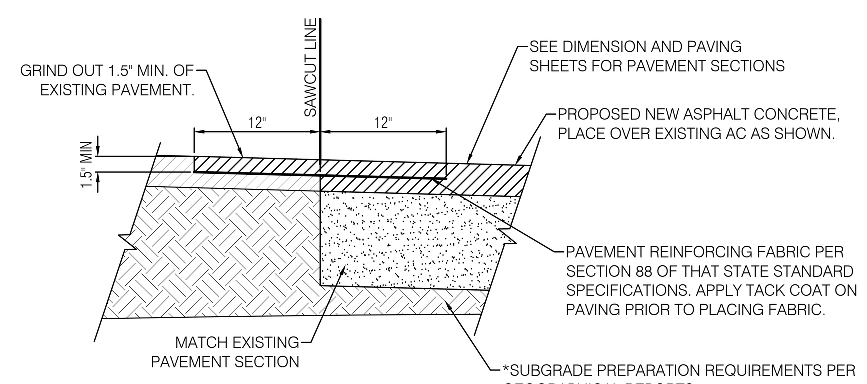

*NOTE:
1. *SUBGRADE PREPARATION REQUIREMENTS PER GEOTECHNICAL REPORTS, CITY OF ATWATER STANDARDS AND SPECIFICATIONS, AND PROJECT SPECIFICATIONS.
2. LAP JOINT SHALL APPLY AT ALL SAWCUT LOCATIONS ALONG ALL PAVEMENT UNLESS OTHERWISE NOTED.

2 LAP JOINT DETAIL
NTS

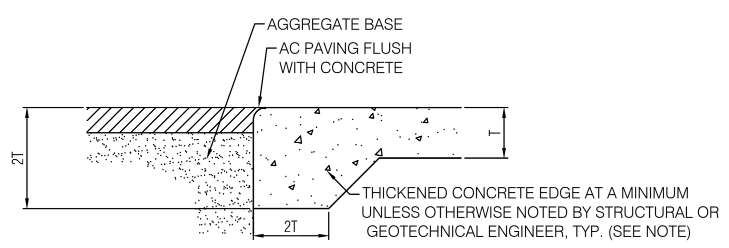

NOTE:
CONTRACTOR SHALL TRANSITION THICKENED EDGE PER SOILS REPORT RECOMMENDATIONS.

3 CONC / AC PAVING TRANSITION AND THICKENED EDGE
NTS

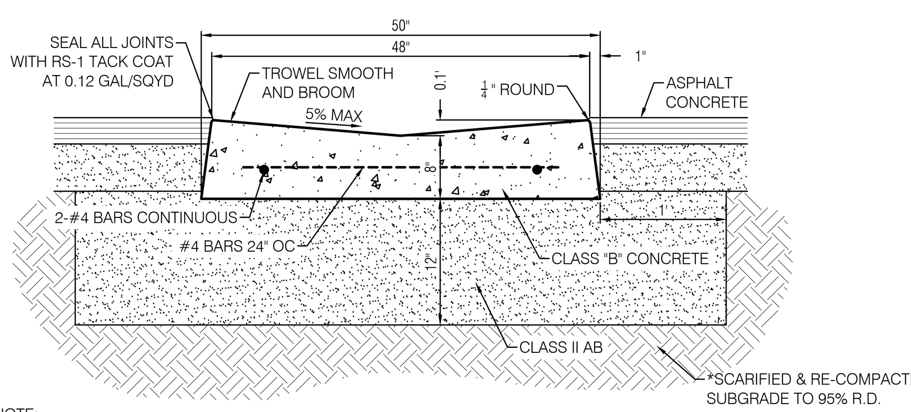

*NOTE:
1. *SUBGRADE PREPARATION REQUIREMENTS PER GEOTECHNICAL REPORTS, CITY OF ATWATER STANDARDS AND SPECIFICATIONS, AND PROJECT SPECIFICATIONS.
2. CONTRACTOR SHALL CONSTRUCT VALLEY GUTTER WITH MAXIMUM 2.0% CROSS SLOPE AT ALL CROSSWALK LOCATIONS.

4 TYPICAL 4' VALLEY GUTTER DETAIL
NTS

*NOTE:
1. *SUBGRADE PREPARATION REQUIREMENTS PER GEOTECHNICAL REPORT.
2. AT EXPANSION JOINT USE 1/2"x24" SMOOTH DOWELS, 18" OC. GREASE 1/2 THE LENGTH BEFORE CONCRETE PLACEMENT. SEE EXPANSION JOINT DETAIL THIS SHEET.
3. CONSTRUCT CONTROL AND CONSTRUCTION JOINTS IN ACCORDANCE WITH CURRENT PORTLAND CEMENT ASSOCIATION GUIDELINES.
4. SEE STRUCTURAL SECTIONS ON DIMENSIONS AND PAVING PLANS: SHEET C3.1-C3.4

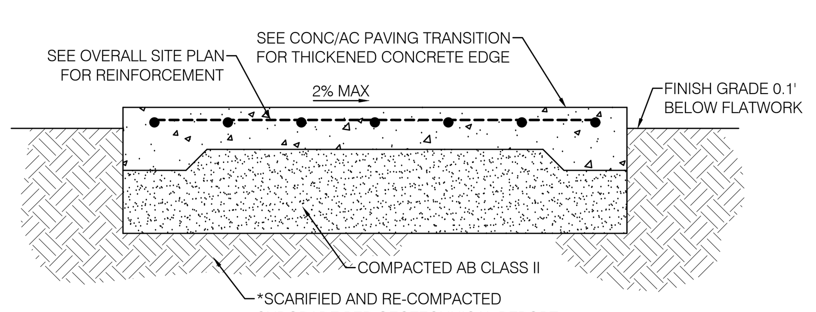

5 CONCRETE FLATWORK
NTS

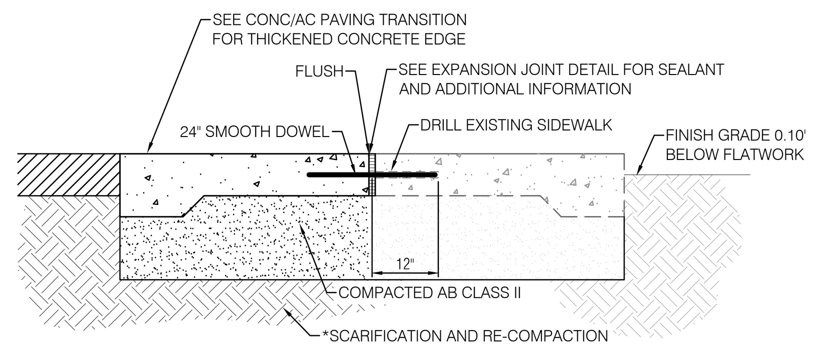

*NOTE:
1. * SUBGRADE PREPARATION REQUIREMENTS FOR GEOTECHNICAL REPORT AND CITY OF ATWATER STANDARDS AND SPECIFICATIONS.
2. AT EXPANSION JOINT INSTALL DOWELS PER GEOTECHNICAL REPORT. SEE EXPANSION JOINT DETAIL THIS SHEET.

6 CONCRETE FLATWORK AT EXISTING FLATWORK
NTS

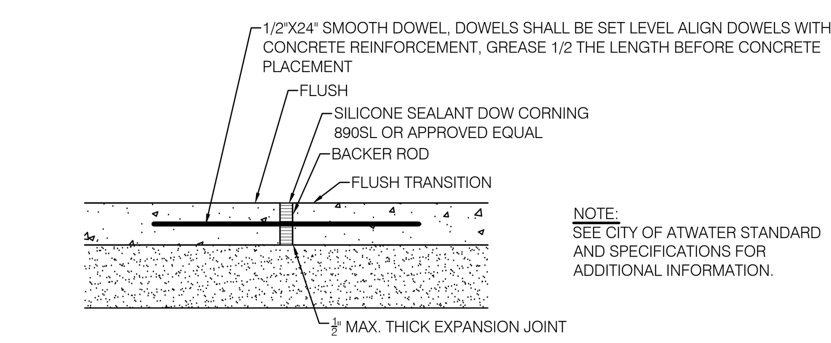

NOTE:
SEE CITY OF ATWATER STANDARD AND SPECIFICATIONS FOR ADDITIONAL INFORMATION.

7 EXPANSION JOINT
NTS

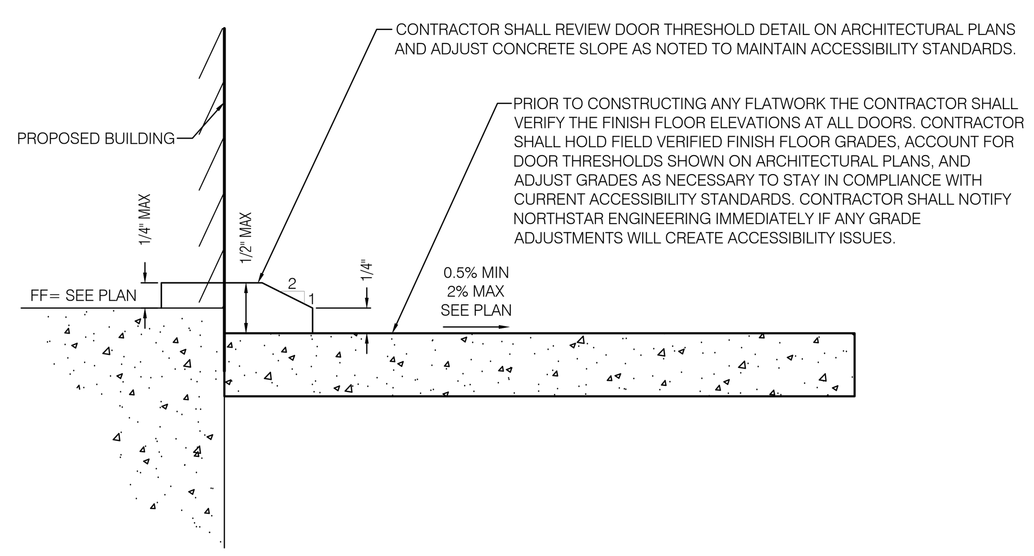

8 TYPICAL DOOR THRESHOLD AT CONCRETE LANDING
NTS

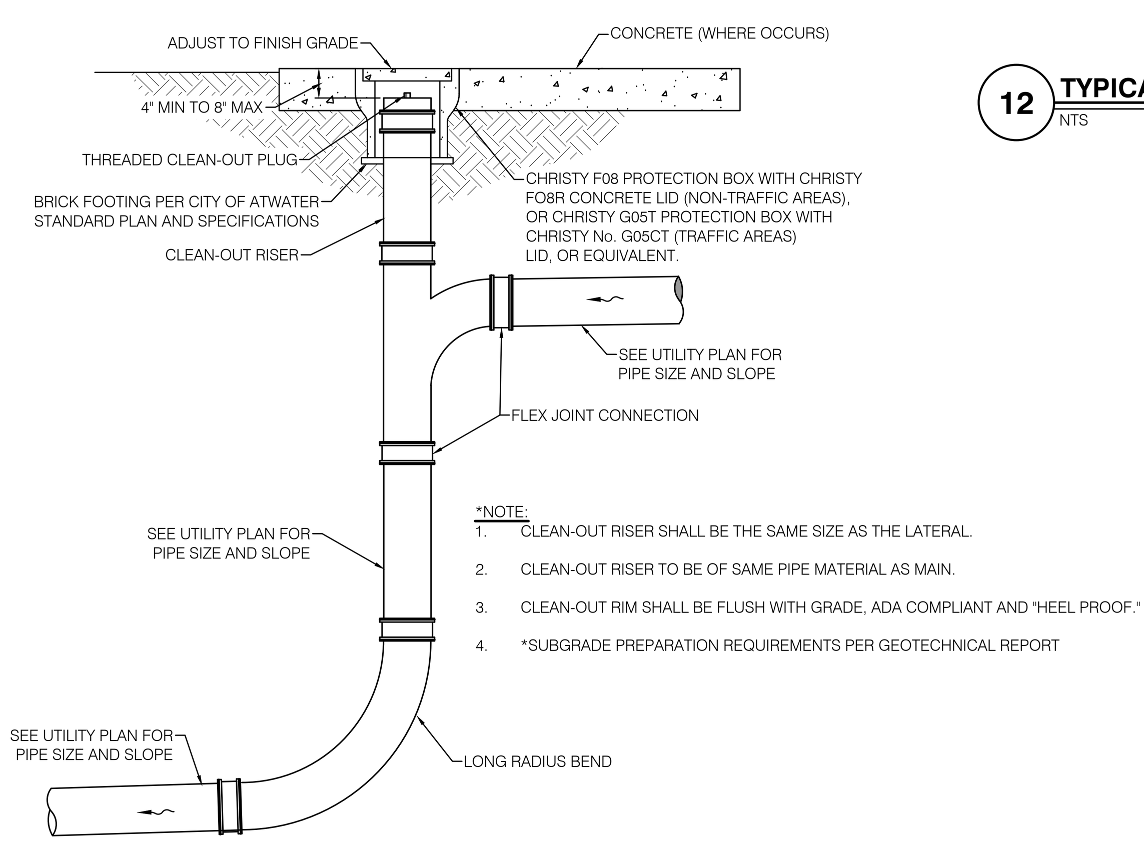

*NOTE:
1. CLEAN-OUT RISER SHALL BE THE SAME SIZE AS THE LATERAL.
2. CLEAN-OUT RISER TO BE OF SAME PIPE MATERIAL AS MAIN.
3. CLEAN-OUT RIM SHALL BE FLUSH WITH GRADE, ADA COMPLIANT AND "HEEL PROOF."
4. *SUBGRADE PREPARATION REQUIREMENTS PER GEOTECHNICAL REPORT

9 CLEAN-OUT SWEEP FOR STORM DRAIN AND/OR SEWER
NTS

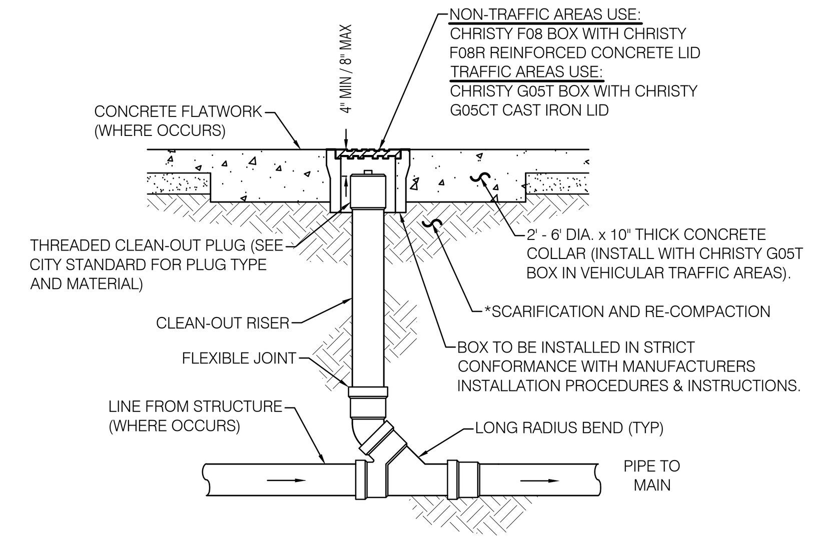

*NOTE:
1. CLEAN-OUT RISER SHALL BE THE SAME SIZE AS THE LATERAL.
2. CLEAN-OUT RISER TO BE OF SAME PIPE MATERIAL AS MAIN.
3. CLEAN-OUT RIM SHALL BE FLUSH WITH GRADE, ADA COMPLIANT AND "HEEL PROOF."
4. *SUBGRADE PREPARATION REQUIREMENTS PER GEOTECHNICAL REPORT

10 TYPICAL STORM DRAIN OR SANITARY SEWER CLEAN OUT RISER
NTS

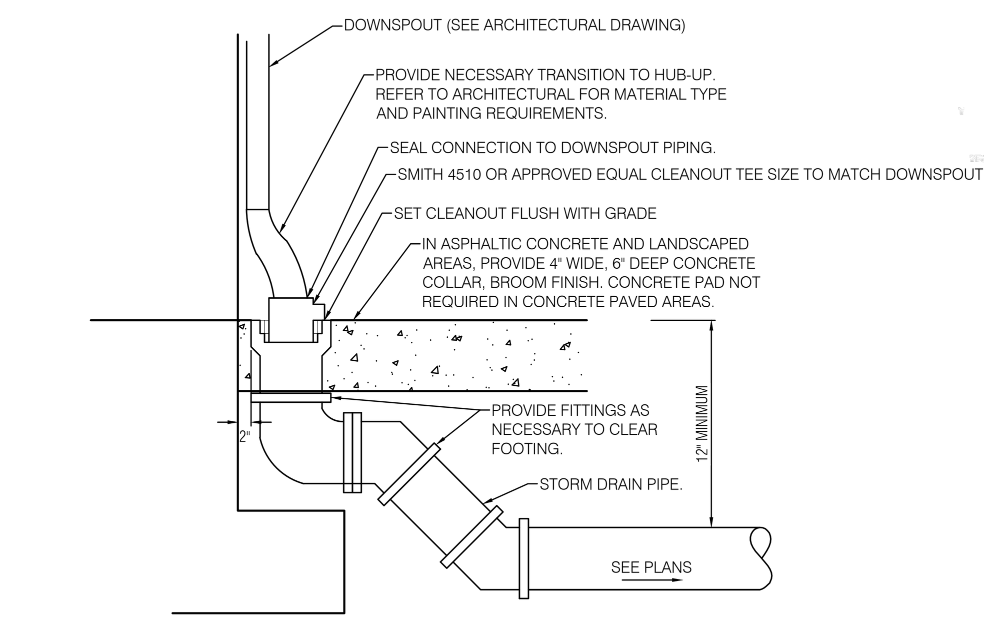

11 DOWNSPOUT CONNECTION TO STORM DRAIN
NTS

*NOTE:
1. ALL LANDSCAPE DRAINAGE PLANTER AREAS WILL REQUIRE AN ATRIUM GRATE AND ALL TURF AREAS WILL REQUIRE A FLAT GRATE. SEE STORM DRAINAGE AND SANITARY SEWER PLAN SHEETS FOR ADDITIONAL INFORMATION.
2. ALL INLETS WITHIN PATH OF TRAVEL SHALL COMPLY WITH SECTION 11B-302.3 OF THE CALIFORNIA BUILDING CODE.

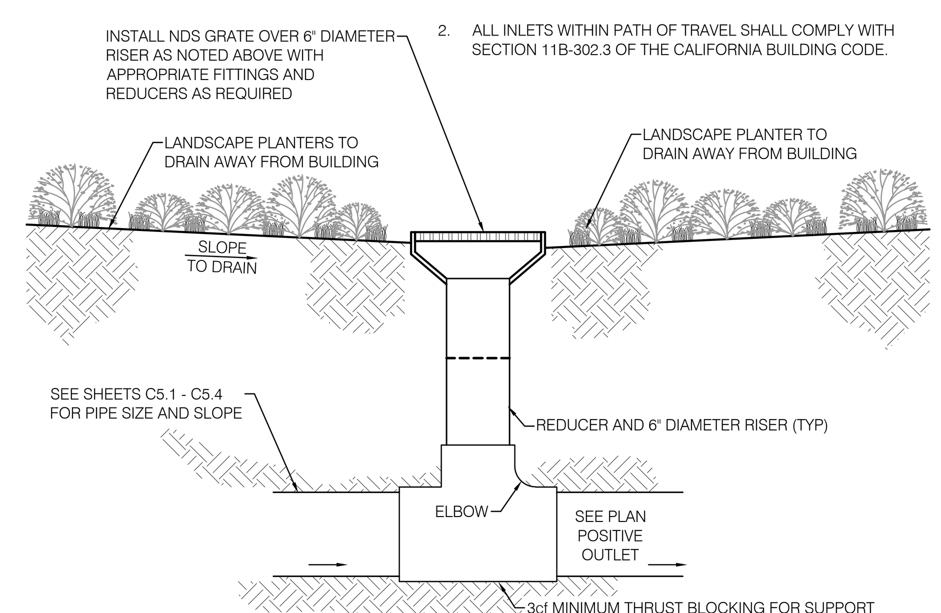

12 TYPICAL NDS LANDSCAPE DRAIN
NTS

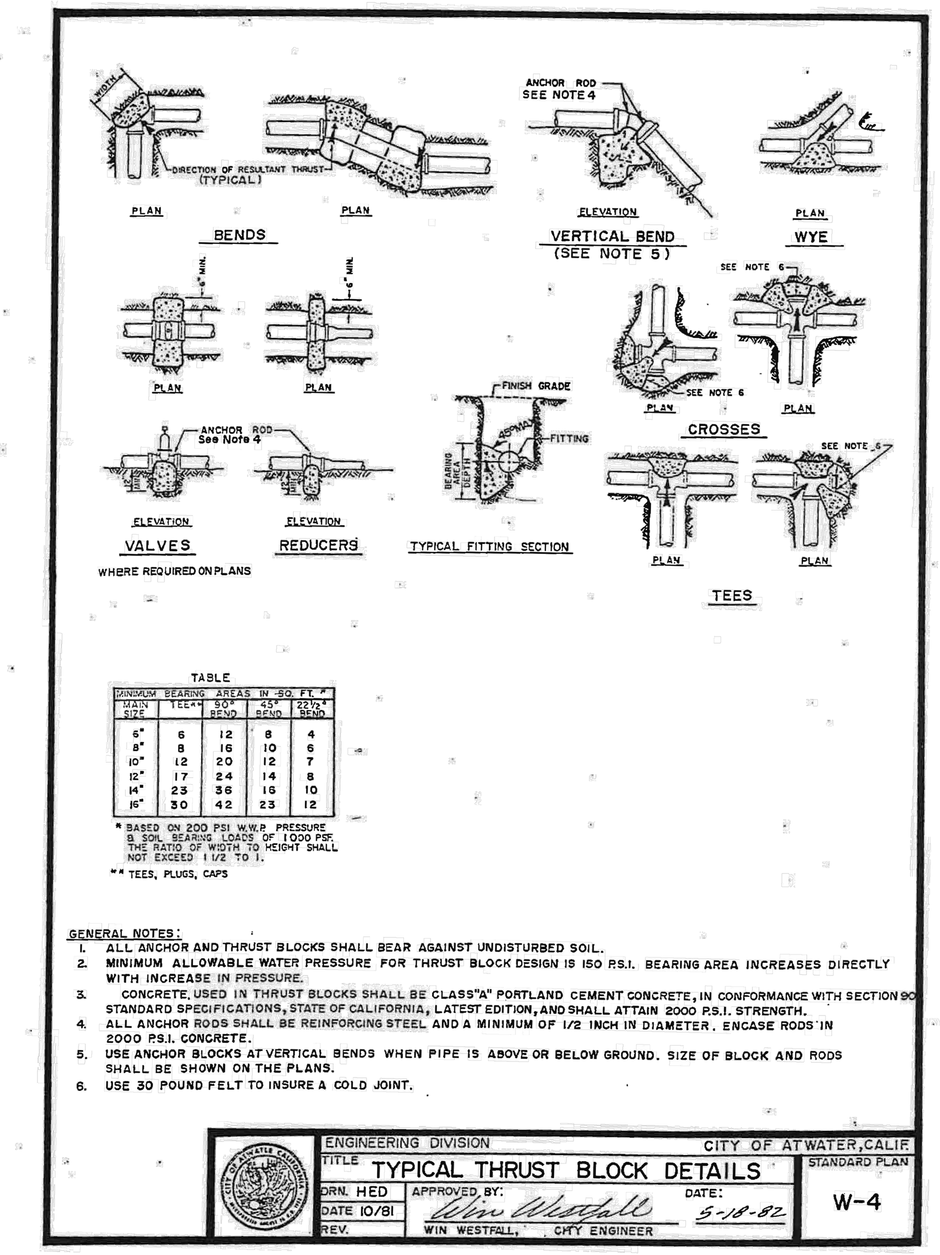

MAIN SIZE	TEE**	90° BEND	45° BEND	22½° BEND
6"	6	12	8	4
8"	8	16	10	6
10"	12	20	12	7
12"	17	24	14	8
14"	23	36	16	10
16"	30	42	23	12

* BASED ON 200 PSI W.W.P. PRESSURE & SOIL BEARING LOADS OF 1000 PSF. THE RATIO OF WIDTH TO HEIGHT SHALL NOT EXCEED 1 1/2 TO 1.
** TEES, PLUGS, CAPS

GENERAL NOTES:
1. ALL ANCHOR AND THRUST BLOCKS SHALL BEAR AGAINST UNDISTURBED SOIL.
2. MINIMUM ALLOWABLE WATER PRESSURE FOR THRUST BLOCK DESIGN IS 150 P.S.I. BEARING AREA INCREASES DIRECTLY WITH INCREASE IN PRESSURE.
3. CONCRETE USED IN THRUST BLOCKS SHALL BE CLASS "A" PORTLAND CEMENT CONCRETE, IN CONFORMANCE WITH SECTION 90 STANDARD SPECIFICATIONS, STATE OF CALIFORNIA, LATEST EDITION, AND SHALL ATTAIN 2000 P.S.I. STRENGTH.
4. ALL ANCHOR RODS SHALL BE REINFORCING STEEL AND A MINIMUM OF 1/2 INCH IN DIAMETER. ENCASE RODS IN 2000 P.S.I. CONCRETE.
5. USE ANCHOR BLOCKS AT VERTICAL BENDS WHEN PIPE IS ABOVE OR BELOW GROUND. SIZE OF BLOCK AND RODS SHALL BE SHOWN ON THE PLANS.
6. USE 30 POUND FELT TO INSURE A COLD JOINT.

ENGINEERING DIVISION — CITY OF ATWATER, CALIF.
TITLE: TYPICAL THRUST BLOCK DETAILS — STANDARD PLAN W-4
DRN. HED — DATE 10/81 — REV.
APPROVED BY: Win Westfall — WIN WESTFALL, CITY ENGINEER — DATE: 5-18-82

13 CITY OF ATWATER - STANDARD DETAIL W-4
NTS

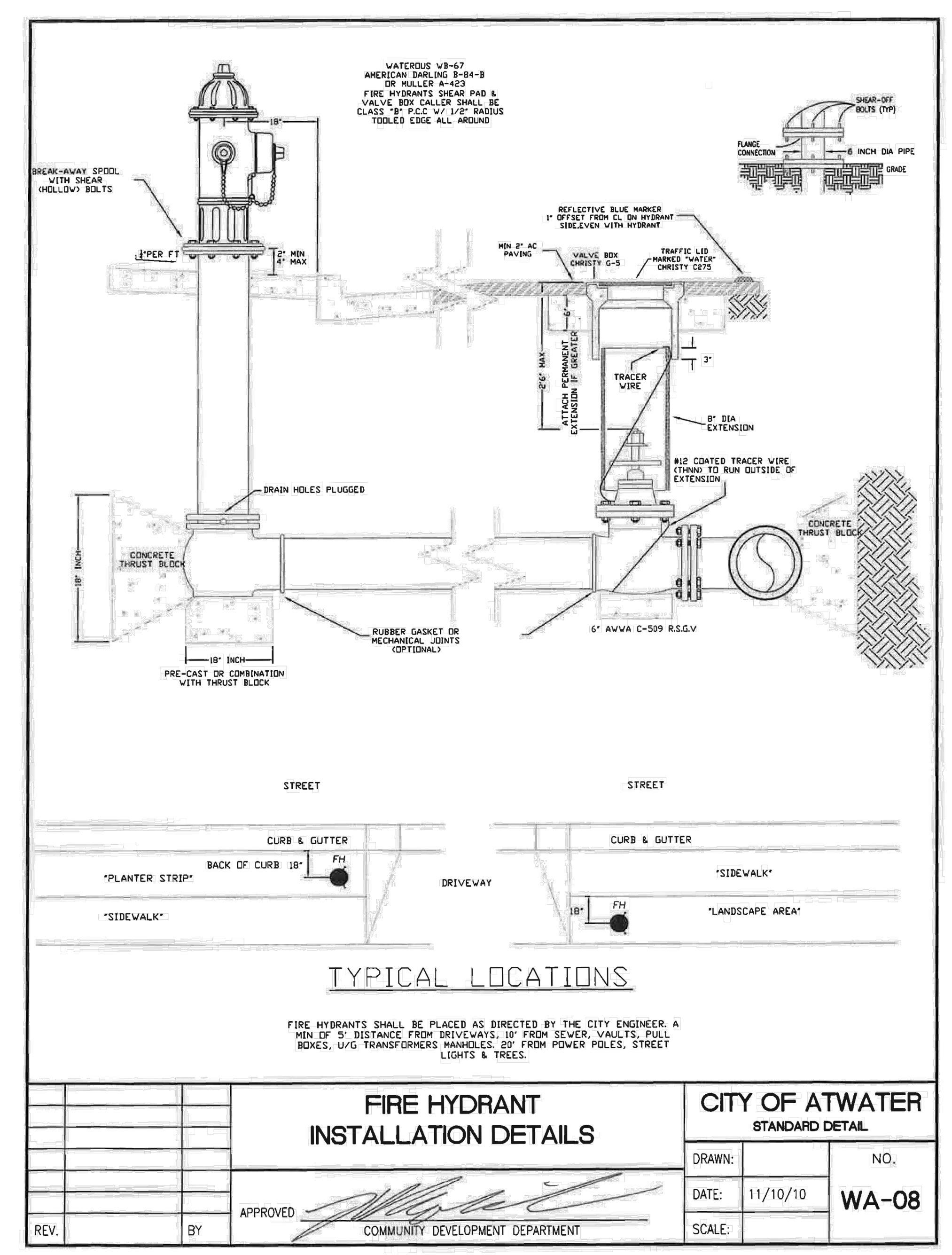

FIRE HYDRANT INSTALLATION DETAILS — CITY OF ATWATER STANDARD DETAIL
REV. — BY — APPROVED — COMMUNITY DEVELOPMENT DEPARTMENT
DRAWN: — DATE: 11/10/10 — SCALE: — NO. WA-08

14 CITY OF ATWATER - STANDARD DETAIL WA-08
NTS

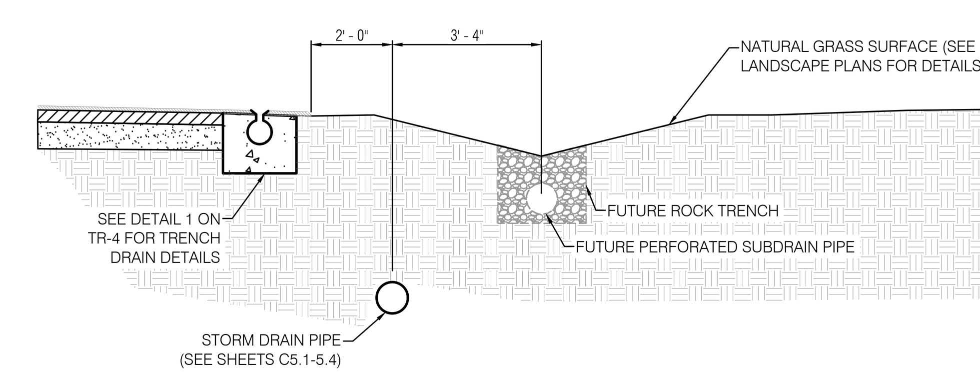

A TRACK CROSS SECTION
NTS

CALL BEFORE YOU DIG — USA — 800-227-2600

IDENTIFICATION STAMP
DIV. OF THE STATE ARCHITECT
APP: 02-121275 INC:
REVIEWED FOR
SS ☑ FLS ☑ ACS ☑
DATE: 12/15/2023

DESIGN California WEST

CALIFORNIA DESIGN WEST ARCHITECTS, Inc.

2100 19th Street
Sacramento, CA 95818

Phone: (916) 446-2466
Fax: (916) 446-5118
Web Page: ca-dw.com

These plans and prints thereof, as instruments of service, are owned by the architect and are for the use on this project only. Reproduction and/or distribution without the prior written consent of the architect is forbidden.

Copyright California Design West Architects, Inc.

ARCHITECT: CONSULTANT:

LICENSED ARCHITECT — MITCHELL A. McALLISTER — NO. C 17250 — REN. 2-28-2025 — STATE OF CALIFORNIA

REGISTERED PROFESSIONAL ENGINEER — COREY M. WALKER — No. C89920 — Date Signed: 10/10/23 — CIVIL — STATE OF CALIFORNIA

CONSULTANT:

NorthStar Engineering Group, Inc.
• CIVIL ENGINEERING • SURVEYING • PLANNING •
620 12th Street, Modesto, CA 95354
(209) 524-3525 Phone (209) 524-3526 Fax

PROJECT NAME:

BUHACH COLONY HIGH SCHOOL

1800 NORTH BUHACH RD
ATWATER, CA 95301

NEW STADIUM; FOOTBALL FIELD, ALL-WEATHER TRACK, BLEACHERS, CONCESSIONS UPGRADES

MERCED UNION HIGH SCHOOL DISTRICT

MERCED COUNTY

KEY PLAN:

SHEET TITLE:

DETAILS AND CROSS SECTIONS

JOB NUMBER:

SHEET NUMBER: C1.4

DATE: OCT. 10, 2023

REVISION:

PLOTTED: 10/10/2023 16:43 PLOTTED BY: Corey
DWGNAME: F:\22-3174 Buhach Colony High School Track and Field\22-3174B\Civil\Imp Plans\C1.4 DTL.dwg

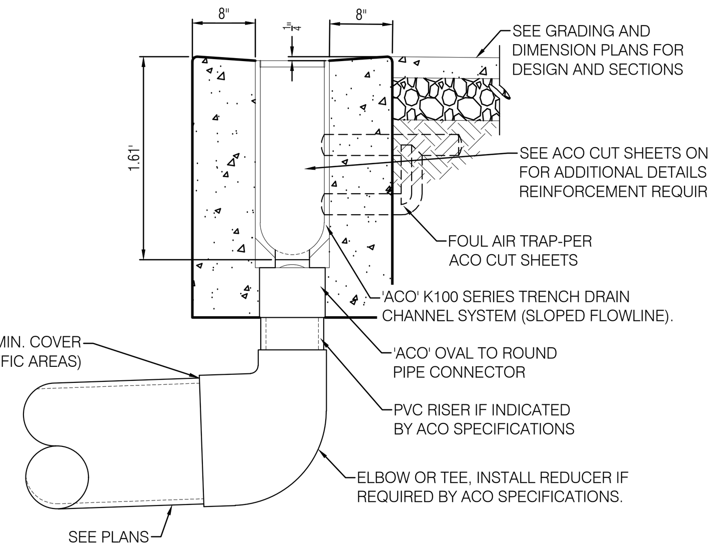

SECTION

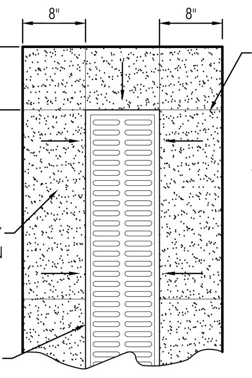

TOP VIEW

*NOTE:
1. SEE PROJECT SPECIFICATION SECTION 33 42 36 OR ACO INSTALLATION MANUAL FOR SPECIFICATIONS AND REQUIREMENTS.
2. CONTRACTOR SHALL USE DETAILS AND SPECIFICATIONS PROVIDED BY SUPPLIER FOR CONSTRUCTION.
3. TRENCH DRAIN SHALL BE CLASS "C" IN TRAFFIC AREAS.
4. CONTRACTOR MUST OBTAIN APPROVAL FROM THE ENGINEER PRIOR TO INSTALLATION IF DEVOTION OCCURS FROM THIS STANDARD DETAIL.

1 "ACO" TRENCH DRAIN DETAIL
NTS

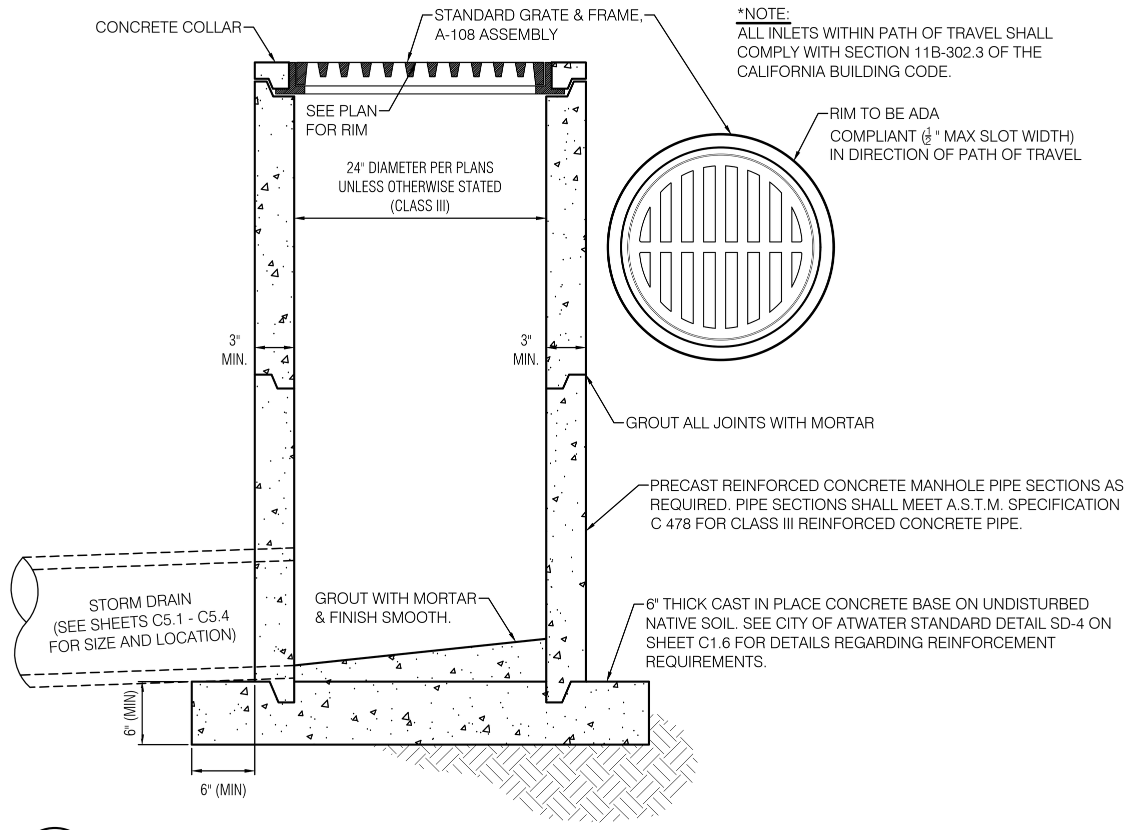

*NOTE:
ALL INLETS WITHIN PATH OF TRAVEL SHALL COMPLY WITH SECTION 11B-302.3 OF THE CALIFORNIA BUILDING CODE.

2 CATCH BASIN DETAIL
NTS

NOTE:

ALL INLETS WITHIN PATH OF TRAVEL SHALL COMPLY WITH SECTION 11B-302.3 OF THE CALIFORNIA BUILDING CODE.

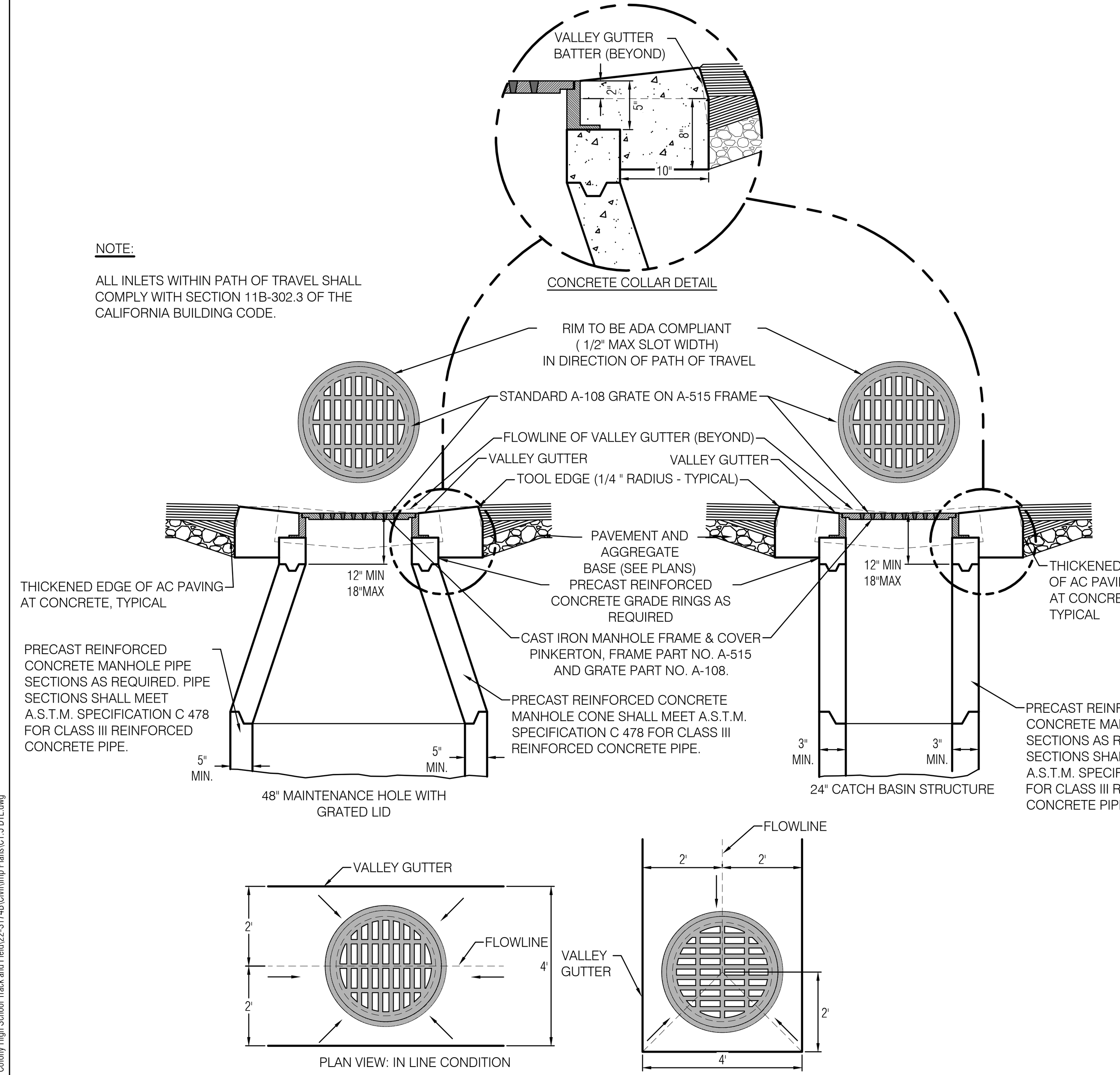

3 CATCH BASIN AT 4' WIDE VALLEY GUTTER
NTS

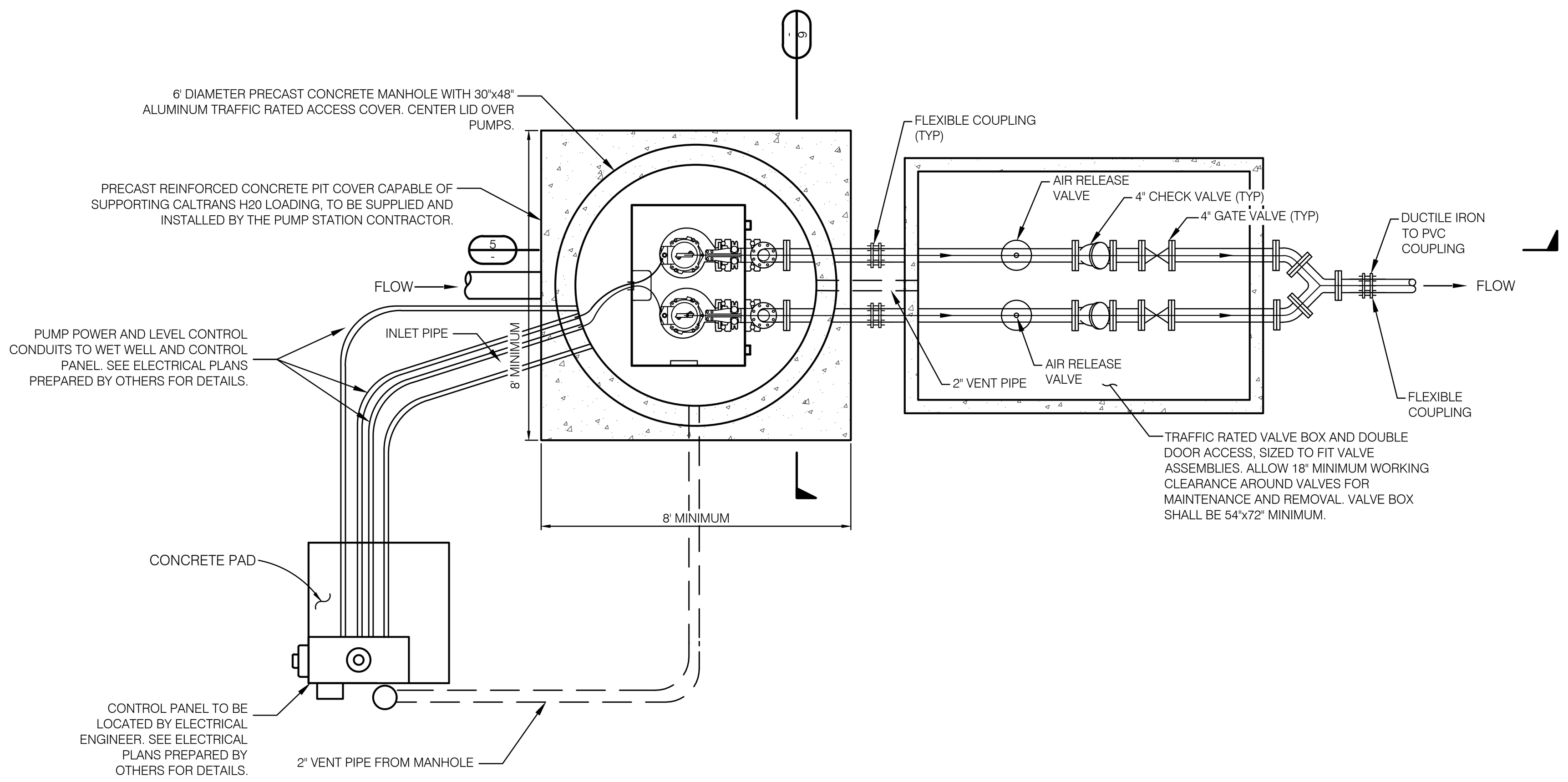

4 PUMP STATION - PLAN VIEW
NTS

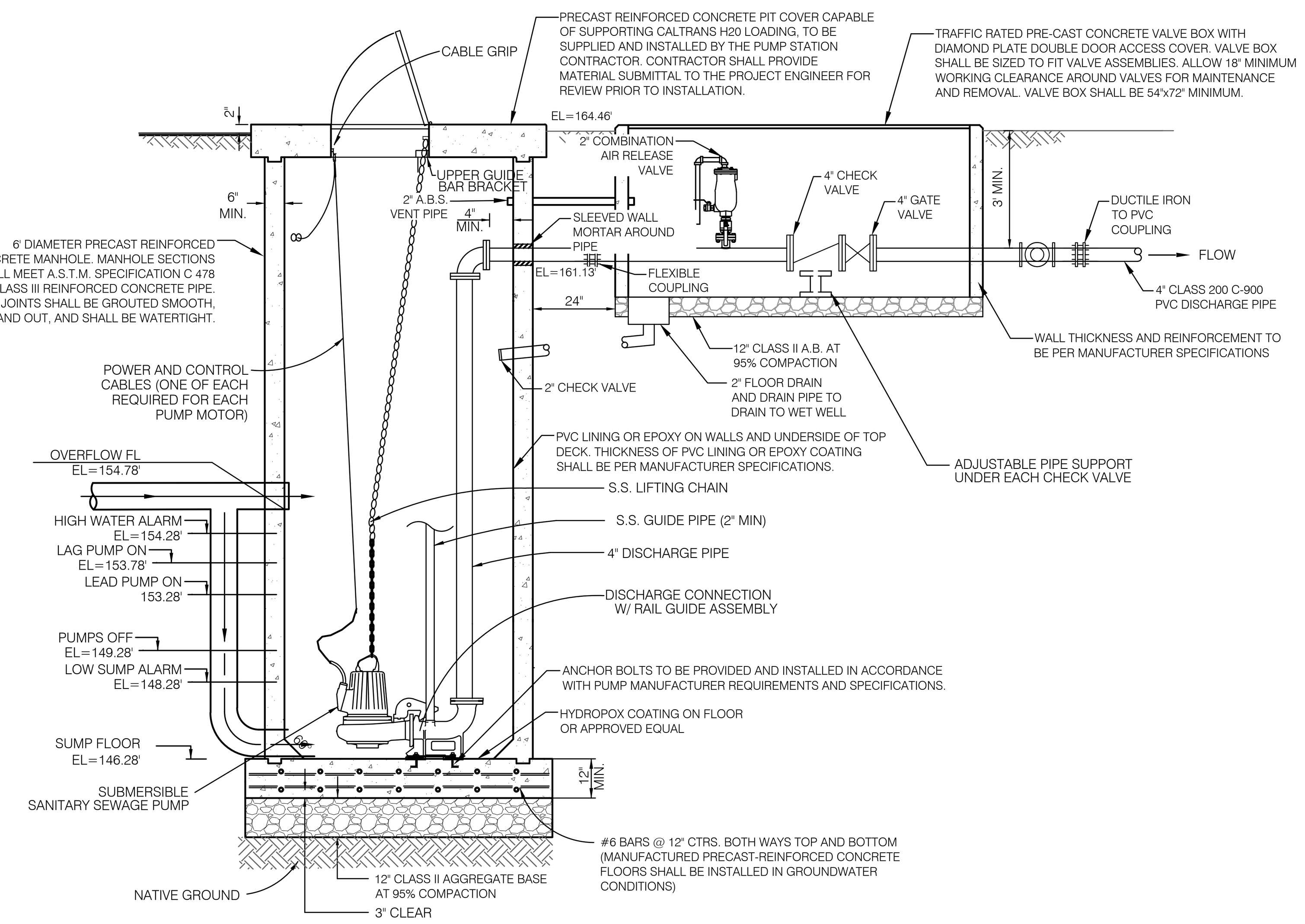

NOTES

REFER TO APPLICABLE NOTES ON SHEET C1.3 AND APPLICABLE DETAILS ON SHEETS C1.4-C1.5.

1. CONTRACTOR SHALL INSTALL CONTROL PANEL PER ELECTRICAL PLANS BY OTHERS. CONTRACTOR SHALL COORDINATE WITH PUMP MANUFACTURER AND ELECTRICAL DESIGNER FOR ADDITIONAL PUMP INSTALLATION SPECIFICATIONS AND WIRING REQUIREMENTS.
2. CONTRACTOR SHALL INSTALL AND COORDINATE WITH MANUFACTURER TO DETERMINE TYPE OF PUMPS, ELECTRICAL PANEL, POWER REQUIREMENTS, PUMP FLOW, ETC. PRIOR TO CONSTRUCTION.
3. CONTRACTOR SHALL INSTALL H-20 TRAFFIC RATED ACCESS COVER AND FRAME AND SHALL SIZE PER PUMP MANUFACTURER'S ACCESS SPECIFICATIONS.
4. CONTRACTOR TO PROVIDE SHOP DRAWINGS FOR APPROVAL BY THE CITY OF ATWATER PRIOR TO CONSTRUCTION.
5. THE CONTRACTOR SHALL FURNISH AND INSTALL TWO (2) SUBMERSIBLE NON-CLOG WASTEWATER PUMPS. EACH PUMP SHALL BE CAPABLE OF DELIVERING 220 GPM @ 25.0' TDH.
6. THE DETAILS SHOWN ON THESE PLANS ARE NOT INTENDED TO IDENTIFY OR EXCLUDE ANY MANUFACTURER OF THIS TYPE OF INSTALLATION. THEREFORE, THE CONTRACTOR SHALL SUBMIT SHOP DRAWINGS OF ALL MOUNTING HARDWARE, GUIDE RAILS, DISCHARGE DISCONNECT BASE AND PERFORMANCE CURVES TO THE ENGINEER FOR APPROVAL. ANY EQUIPMENT PURCHASED BY THE CONTRACTOR, PRIOR TO APPROVAL BY THE ENGINEER, SHALL BE AT THE CONTRACTOR'S RISK.
7. THE PUMP STATION SHALL BE INSPECTED AND TESTED TO THE SATISFACTION OF THE CITY OF ATWATER.
8. THE CONTRACTOR SHALL FURNISH ALL MATERIALS, TOOLS, EQUIPMENT, AND LABOR AND PERFORM ALL WORK NECESSARY TO CONSTRUCT THE SANITARY SEWER LIFT STATION, COMPLETE AND READY FOR OPERATION, AS SHOWN ON THESE PLANS AND DETAILS, AND IN CONFORMANCE TO THE SPECIFICATIONS. MATERIALS, EQUIPMENT, AND WORK SHALL COMPLY WITH ALL APPLICABLE RULES, REGULATIONS, AND SPECIFICATIONS OF THE CITY OF ATWATER.
9. SEWER LIFT STATION SHALL BE PRIVATELY OWNED, OPERATED, AND MAINTAINED.

   THE PUMP SHALL BE SUPPLIED WITH A MOTOR THAT SATISFIES THE REQUIREMENTS OVER THE SPECIFIED OPERATING CONDITIONS. IN NO WAY WILL THE SERVICE FACTOR BE USED IN SATISFYING NORMAL OPERATING CONDITIONS.
10. THE PUMP AND MOTOR ASSEMBLY SHALL BE LISTED BY UNDERWRITER'S LABORATORY AS "PORTABLE UTILIZATION EQUIPMENT", PERMITTING THE USE OF FLEXIBLE POWER AND CONTROL CABLE ENTRY POINT AT THE TOP OF THE PUMP MOTOR SHALL BE SEALED TO PREVENT ENTRANCE OF MOISTURE INTO THE MOTOR ENCLOSURE. THE ELECTRICAL CONNECTORS IN THE PIT SHALL BE STAINLESS STEEL. WIRE GRIPS SHALL BE STAINLESS STEEL AS MANUFACTURED BY KELLEMS GRIP, OR APPROVED EQUAL.
11. THE PUMP SHALL BE AUTOMATICALLY AND FIRMLY CONNECTED TO THE DISCHARGE CONNECTION GUIDED BY NO LESS THAN TWO GUIDE BARS EXTENDING FROM THE TOP OF THE STATION TO THE DISCHARGE DISCONNECTION. THE GUIDE RAILS, BOLTS, ANCHORS, ATTACHING HARDWARE AND STRAPS SHALL BE STAINLESS STEEL. THERE SHALL BE NO NEED FOR PERSONNEL TO ENTER THE WET WELL. SEALING OF THE PUMPING UNIT TO THE DISCHARGE CONNECTION SHALL BE ACCOMPLISHED BY A MACHINED O-RING OR PROFILE GASKET. NO PORTION OF THE PUMP SHALL BEAR DIRECTLY ON THE SUMP FLOOR. THE BASE ASSEMBLY SHALL PROVIDE STABLE, THREE POINT SUPPORT OF THE PUMPING UNIT DURING PUMP OPERATION.
12. PUMP STATION PIPING SHALL BE SCHEDULE 40 STEEL SAND BLASTED TO NEAR WHITE AND GIVEN A RUST INHIBITING PRIME COAT AND TWO FINISHED COATS OF EPOXY PAINT TO A MINIMUM THICKNESS OF 10 MILS. FLANGES SHALL BE RATED TO 125 PSI. ALL BOLTS SHALL BE HOT DIPPED GALVANIZED OR STAINLESS STEEL. ALL COMPRESSION FITTINGS SHALL BE CAST IRON. ALL VALVES SHALL BE AMERICAN MADE. CHECK VALVES SHALL COMPLY WITH AWWA C508, LATEST REVISION. GATE VALVES SHALL COMPLY WITH AWWA C509, LATEST REVISION.

5 PUMP STATION - CROSS SECTION
NTS

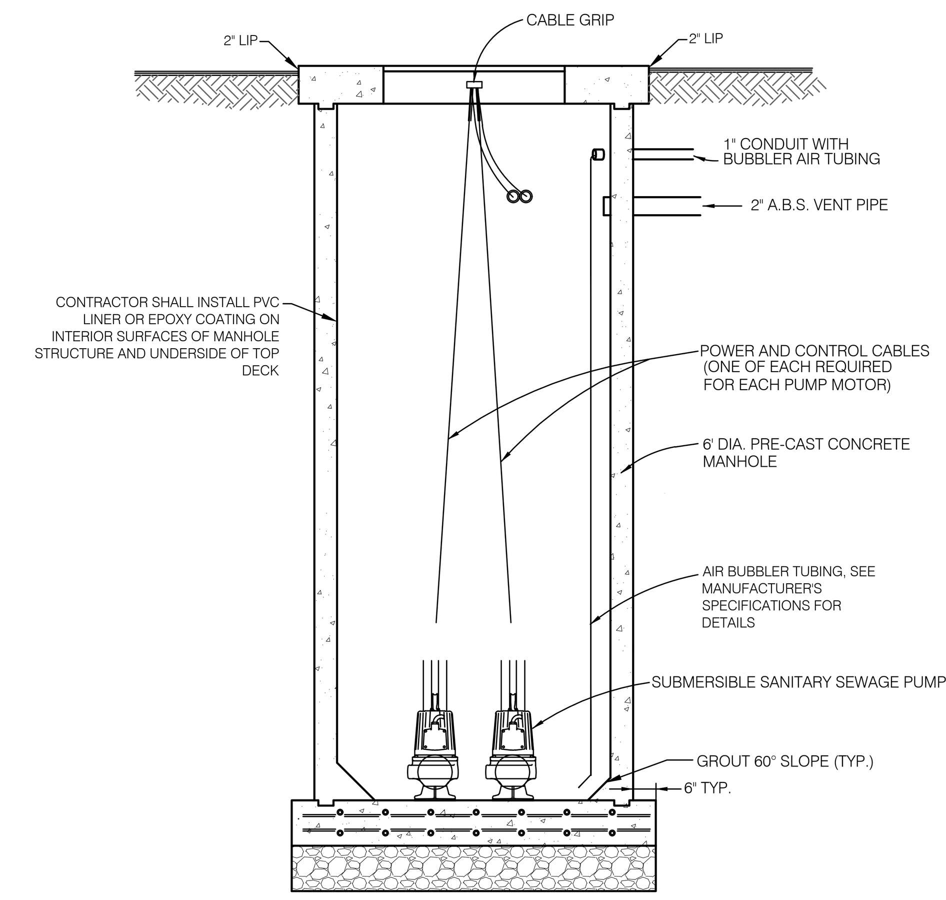

6 PUMP STATION - CROSS SECTION
NTS

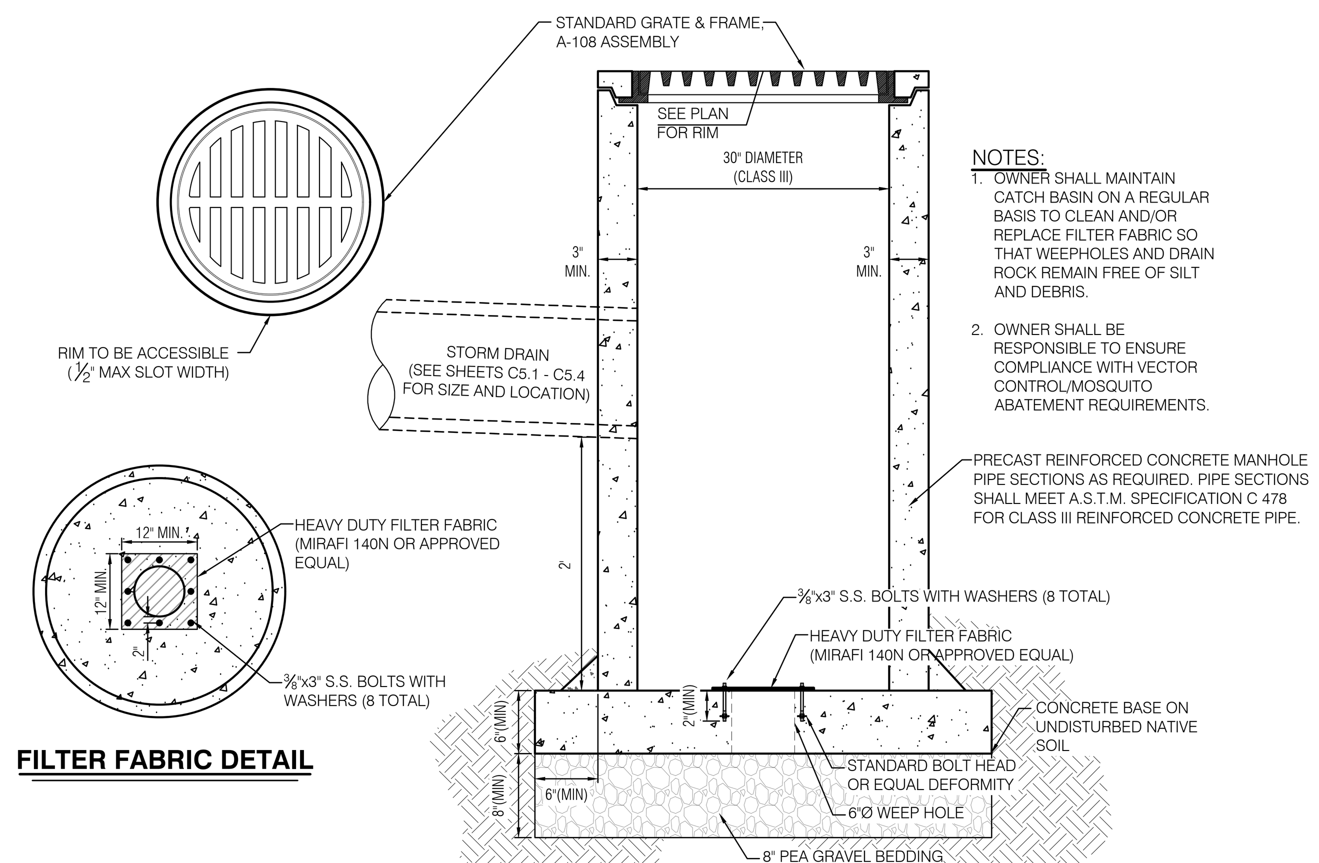

NOTES:
1. OWNER SHALL MAINTAIN CATCH BASIN ON A REGULAR BASIS TO CLEAN AND/OR REPLACE FILTER FABRIC SO THAT WEEPHOLES AND DRAIN ROCK REMAIN FREE OF SILT AND DEBRIS.
2. OWNER SHALL BE RESPONSIBLE TO ENSURE COMPLIANCE WITH VECTOR CONTROL/MOSQUITO ABATEMENT REQUIREMENTS.

7 TYPICAL BUBBLE UP STRUCTURE
NTS

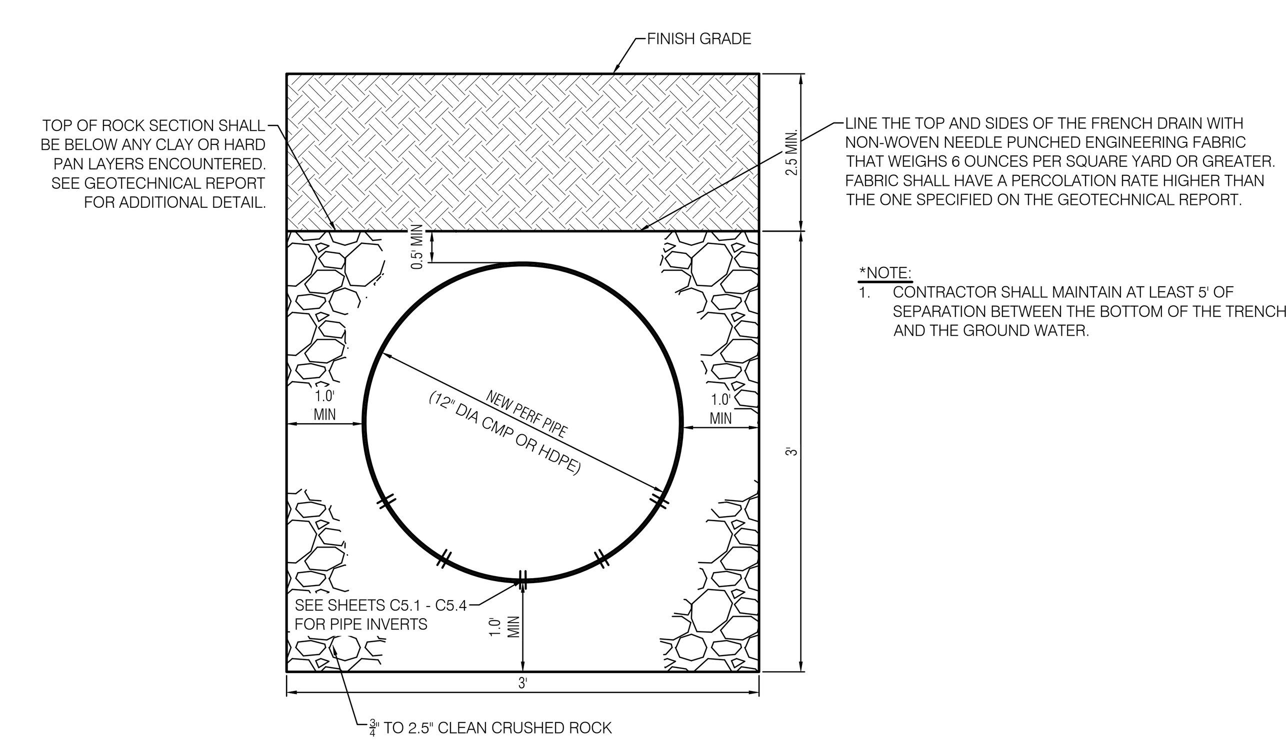

*NOTE:
1. CONTRACTOR SHALL MAINTAIN AT LEAST 5' OF SEPARATION BETWEEN THE BOTTOM OF THE TRENCH AND THE GROUND WATER.

8 FRENCH DRAIN DETAIL
NTS

IDENTIFICATION STAMP
DIV. OF THE STATE ARCHITECT
APP: 02-121275 INC:
REVIEWED FOR
SS ☑ FLS ☑ ACS ☑
DATE: 12/15/2023

CALIFORNIA DESIGN WEST ARCHITECTS, Inc.

2100 19th Street
Sacramento, CA 95818

Phone: (916) 446-2466
Fax: (916) 446-5118
Web Page: ca-dw.com

These plans and prints thereof, as instruments of service, are owned by the architect and are for the use on this project only. Reproduction and/or distribution without the prior written consent of the architect is forbidden.

Copyright California Design West Architects, Inc.

ARCHITECT: CONSULTANT:

LICENSED ARCHITECT MITCHELL A. McALLISTER NO. C 17250 REN. 2-28-2025 STATE OF CALIFORNIA

REGISTERED PROFESSIONAL ENGINEER COREY M. WALKER No. C89920 Date Signed: 10/10/23 CIVIL STATE OF CALIFORNIA

CONSULTANT:

NorthStar Engineering Group, Inc.
• CIVIL ENGINEERING • SURVEYING • PLANNING •
620 12th Street Modesto, CA 95354
(209) 524-3525 Phone (209) 524-3526 Fax

PROJECT NAME:

BUHACH COLONY HIGH SCHOOL

1800 NORTH BUHACH RD
ATWATER, CA 95301

NEW STADIUM; FOOTBALL FIELD, ALL-WEATHER TRACK, BLEACHERS, CONCESSIONS UPGRADES

MERCED UNION HIGH SCHOOL DISTRICT

MERCED COUNTY

KEY PLAN:

SHEET TITLE:

DETAILS AND CROSS SECTIONS

JOB NUMBER:

SHEET NUMBER:

DATE:
OCT. 10, 2023

REVISION:

C1.5

PLOTTED: 10/10/2023 15:59 PLOTTED BY: Jwheeler
DWGNAME: F:\22-3174 Buhach Colony High School Track and Field\22-3174B\Civil\Imp Plans\C1.5 DTL.dwg

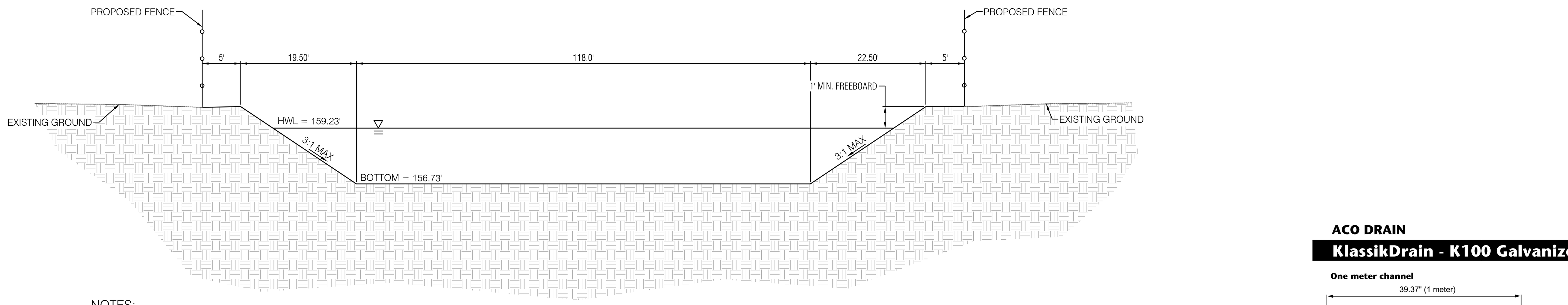

NOTES:

1. CONTRACTOR SHALL MAINTAIN A MINIMUM OF 5' OF SEPARATION FROM THE BOTTOM OF THE BASIN TO THE GROUND WATER LEVEL.
2. CONTRACTOR SHALL INSTALL BUBBLE UP STRUCTURE AT POINT OF DISCHARGE FROM THE 24" STORM DRAIN PIPE PER DETAIL 7 ON SHEET C1.5.
3. GEOTECHNICAL ENGINEER SHALL BE PRESENT TO VERIFY PERCOLATION RATE OF SOILS IN BASIN AREAS. IF HARDPAN OR UNSUITABLE SOILS ARE ENCOUNTERED, CONTRACTOR SHALL REMOVE THE HARDPAN OR UNSUITABLE SOILS AND REPLACE WITH APPROVED SOILS.
4. CONTRACTOR SHALL MAINTAIN EROSION CONTROL MEASURES ON ALL EXPOSED OR DISTURBED SURFACES. SEE SHEET C7.1 FOR ADDITIONAL NOTES AND DETAILS.

A **BASIN CROSS SECTION (NORTH-SOUTH)**

NTS

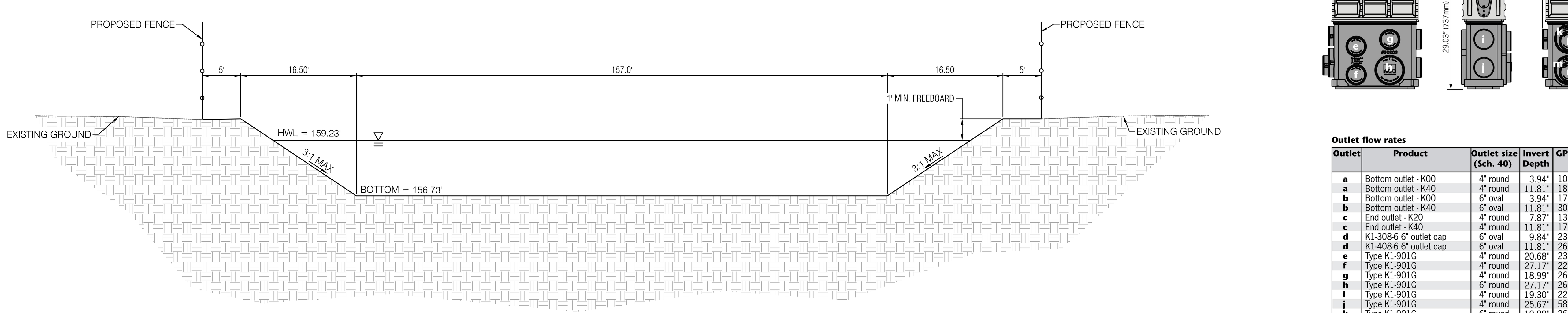

NOTES:

1. CONTRACTOR SHALL MAINTAIN A MINIMUM OF 5' OF SEPARATION FROM THE BOTTOM OF THE BASIN TO THE GROUND WATER LEVEL.
2. CONTRACTOR SHALL INSTALL BUBBLE UP STRUCTURE AT POINT OF DISCHARGE FROM THE 24" STORM DRAIN PIPE PER DETAIL 7 ON SHEET C1.5.
3. GEOTECHNICAL ENGINEER SHALL BE PRESENT TO VERIFY PERCOLATION RATE OF SOILS IN BASIN AREAS. IF HARDPAN OR UNSUITABLE SOILS ARE ENCOUNTERED, CONTRACTOR SHALL REMOVE THE HARDPAN OR UNSUITABLE SOILS AND REPLACE WITH APPROVED SOILS.
4. CONTRACTOR SHALL MAINTAIN EROSION CONTROL MEASURES ON ALL EXPOSED OR DISTURBED SURFACES. SEE SHEET C7.1 FOR ADDITIONAL NOTES AND DETAILS.

B **BASIN CROSS SECTION (WEST-EAST)**

NTS

ACO DRAIN

KlassikDrain - K100 Galvanized steel edge rail channel system

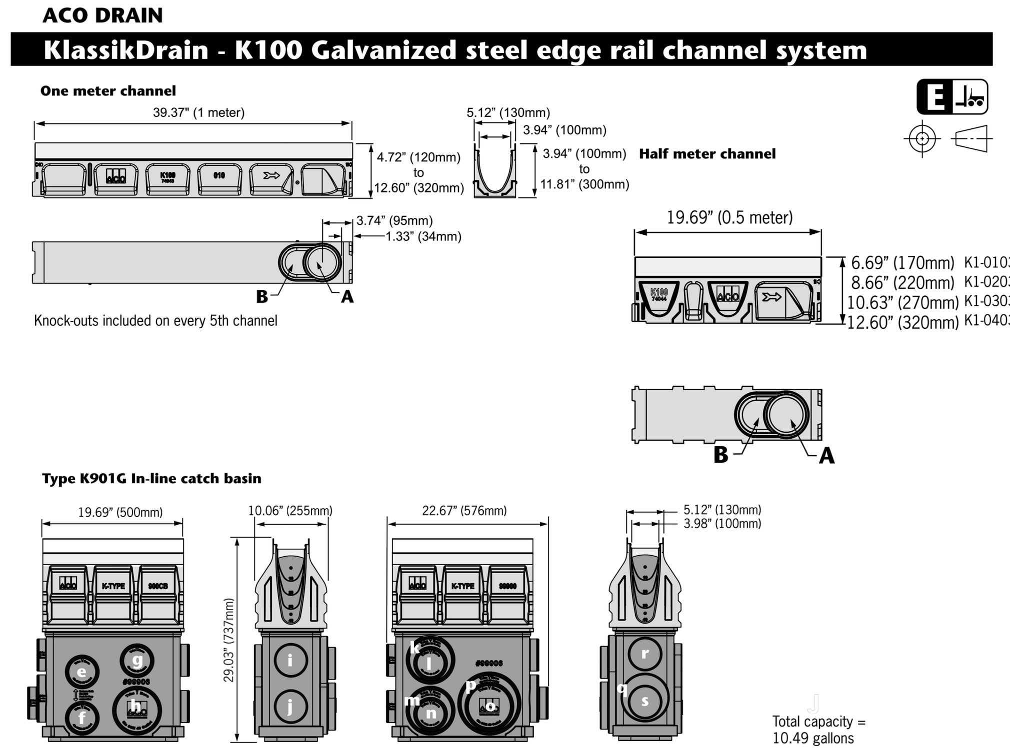

Outlet flow rates

Outlet	Product	Outlet size (Sch. 40)	Invert Depth	GPM	CFS
a	Bottom outlet - K00	4" round	3.94"	108	0.24
a	Bottom outlet - K40	4" round	11.81"	187	0.42
b	Bottom outlet - K00	6" oval	3.94"	177	0.39
b	Bottom outlet - K40	6" oval	11.81"	306	0.68
c	End outlet - K20	4" round	7.87"	132	0.29
c	End outlet - K40	4" round	11.81"	171	0.38
d	K1-308-6 6" outlet cap	6" oval	9.84"	233	0.52
d	K1-408-6 6" outlet cap	6" oval	11.81"	264	0.59
e	Type K1-901G	4" round	20.68"	235	0.52
f	Type K1-901G	4" round	27.17"	226	0.50
g	Type K1-901G	4" round	18.99"	265	0.59
h	Type K1-901G	6" round	27.17"	263	0.59
i	Type K1-901G	4" round	19.30"	222	0.49
j	Type K1-901G	4" round	25.67"	586	1.30
k	Type K1-901G	6" round	19.99"	269	0.60
l	Type K1-901G	4" round	19.36"	227	0.51
m	Type K1-901G	6" round	27.30"	604	1.35
n	Type K1-901G	4" round	26.43"	505	1.12
o	Type K1-901G	6" round	26.43"	593	1.32
p	Type K1-901G	8" round	27.30"	1051	2.34
q	Type K1-901G	6" round	25.85"	273	0.61
r	Type K1-901G	4" round	18.56"	235	0.52
s	Type K1-901G	4" round	25.30"	224	0.50

Note: These are the pipe flow rates at the specified outlet, **NOT** channel flow rates. Catch basin flow rates are without trash bucket - using trash bucket reduces flow.

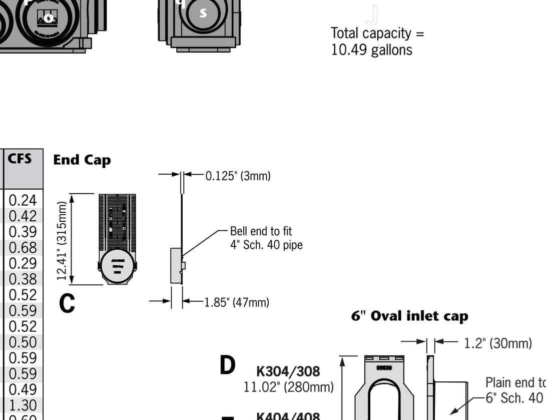

ACO Specification Information

February 2019 www.acousa.com

ACO DRAIN

KlassikDrain - K100 Galvanized steel edge rail channel system

Description	Part No.	Invert Inches	Invert mm	Weight Lbs.
K1-00 Neutral channel - 39.37" (1m)	**74041**	**3.94**	**100**	**28.1**
K1-1 Sloped channel - 39.37" (1m)	74001	4.13	105	28.1
K1-2 Sloped channel - 39.37" (1m)	74002	4.33	110	28.9
K1-3 Sloped channel - 39.37" (1m)	74003	4.53	115	29.7
K1-4 Sloped channel - 39.37" (1m)	74004	4.72	120	30.5
K1-5 Sloped channel - 39.37" (1m)	74005	4.92	125	31.3
K1-6 Sloped channel - 39.37" (1m)	74006	5.12	130	32.1
K1-7 Sloped channel - 39.37" (1m)	74007	5.31	135	32.9
K1-8 Sloped channel - 39.37" (1m)	74008	5.51	140	33.7
K1-9 Sloped channel - 39.37" (1m)	74009	5.71	145	34.5
K1-10 Sloped channel - 39.37" (1m)	74010	5.91	150	35.3
K1-010 Neutral channel - 39.37" (1m)	**74043**	**5.91**	**150**	**35.3**
K1-0103 Neutral channel - 19.69" (0.5m)	**74044**	**5.91**	**150**	**17.0**
K1-11 Sloped channel - 39.37" (1m)	74011	6.10	155	36.1
K1-12 Sloped channel - 39.37" (1m)	74012	6.30	160	36.9
K1-13 Sloped channel - 39.37" (1m)	74013	6.50	165	37.7
K1-14 Sloped channel - 39.37" (1m)	74014	6.69	170	38.5
K1-15 Sloped channel - 39.37" (1m)	74015	6.89	175	39.3
K1-16 Sloped channel - 39.37" (1m)	74016	7.09	180	40.1
K1-17 Sloped channel - 39.37" (1m)	74017	7.28	185	40.9
K1-18 Sloped channel - 39.37" (1m)	74018	7.48	190	41.7
K1-19 Sloped channel - 39.37" (1m)	74019	7.68	195	42.5
K1-20 Sloped channel - 39.37" (1m)	74020	7.87	200	43.4
K1-020 Neutral channel - 39.37" (1m)	**74045**	**7.87**	**200**	**43.4**
K1-0203 Neutral channel - 19.69" (0.5m)	**74046**	**7.87**	**200**	**20.5**
K1-21 Sloped channel - 39.37" (1m)	74021	8.07	205	44.2
K1-22 Sloped channel - 39.37" (1m)	74022	8.27	210	45.0
K1-23 Sloped channel - 39.37" (1m)	74023	8.46	215	45.8
K1-24 Sloped channel - 39.37" (1m)	74024	8.66	220	46.6
K1-25 Sloped channel - 39.37" (1m)	74025	8.86	225	47.4
K1-26 Sloped channel - 39.37" (1m)	74026	9.06	230	48.2
K1-27 Sloped channel - 39.37" (1m)	74027	9.25	235	49.0
K1-28 Sloped channel - 39.37" (1m)	74028	9.45	240	49.8
K1-29 Sloped channel - 39.37" (1m)	74029	9.65	245	50.6
K1-30 Sloped channel - 39.37" (1m)	74030	9.84	250	51.4
K1-030 Neutral channel - 39.37" (1m)	**74047**	**9.84**	**250**	**51.4**
K1-0303 Neutral channel - 19.69" (0.5m)	**74048**	**9.84**	**250**	**24.0**
K1-31 Sloped channel - 39.37" (1m)	74031	10.04	255	52.2
K1-32 Sloped channel - 39.37" (1m)	74032	10.24	260	53.0
K1-33 Sloped channel - 39.37" (1m)	74033	10.43	265	53.8
K1-34 Sloped channel - 39.37" (1m)	74034	10.63	270	54.6
K1-35 Sloped channel - 39.37" (1m)	74035	10.83	275	55.4
K1-36 Sloped channel - 39.37" (1m)	74036	11.02	280	56.2
K1-37 Sloped channel - 39.37" (1m)	74037	11.22	285	57.0
K1-38 Sloped channel - 39.37" (1m)	74038	11.42	290	57.9
K1-39 Sloped channel - 39.37" (1m)	74039	11.61	295	58.7
K1-40 Sloped channel - 39.37" (1m)	74040	11.81	300	59.5
K1-040 Neutral channel - 39.37" (1m)	**74049**	**11.81**	**300**	**59.5**
K1-0403 Neutral channel - 19.69" (0.5m)	**74050**	**11.81**	**300**	**27.5**
K1-901G In-line catch basin - 19.69" (0.5m)	94608	28.81	701.9	52.6
K1-621G catch basin - 19.69" (0.5m)	94617	28.84	732.5	55.8
K1-631G catch basin - 19.69" (0.5m)	94631	40.84	1037.4	65.8
K1-Series 600 Optional plastic riser	99902	-	-	10.0
Foul air trap - fits both 900 & 600 series basins	90854	-	-	1.2
K1-304-6 6" Inlet Cap	96839	9.84	250	5.2
K1-308-6 6" Outlet Cap	96840	9.84	250	5.0
K1-404-6 6" Inlet Cap	96834	11.81	300	6.0
K1-408-6 6" Outlet Cap	96836	11.81	300	5.8
Universal end cap	96822	11.81	300	0.4
Debris strainer for 4" bottom knockout	93488	-	-	0.2
4" Oval to 6" round outlet adapter	95140	-	-	1.1
K1-Installation device	97477	-	-	2.8
Grate removal tool	01318	-	-	0.3
K1-QuickLok locking bar	02899	-	-	0.1

Notes:
1. This channel offers a bottom knockout feature; 4" round/6" oval.
2. Inverts shown are for the male end; for female invert depth subtract 5mm (≈0.2") from the male invert (except for neutral channels, where it will be same as male invert). To calculate the overall channel depth add 20mm (≈0.8") to invert depth.
3. This catch basin kit includes a polymer concrete top, removable Quicklok locking bar, trash bucket and plastic base. Select an appropriate grate.
4. This catch basin kit includes a polymer concrete top, removable Quicklok locking bar, deep trash bucket, plastic riser and plastic base. Select an appropriate grate.

Specifications

General
The surface drainage system shall be ACO Drain K100 complete with gratings secured with 'QuickLok' locking as manufactured by ACO, Inc. or approved equal.

Materials
The trench system bodies shall be manufactured from polyester polymer concrete with the minimum properties as follows:

Compressive strength:	14,000 psi
Flexural strength:	4,000 psi
Water absorption	0.07%
Frost proof	YES
Salt proof	YES
Dilute acid and alkali resistant	YES

The nominal clear opening shall be 4" (100mm) with overall width of 5.12" (130mm). Pre-cast units shall be manufactured with either an invert slope of 0.5% or with neutral invert and have a wall thickness of at least 0.50" (13mm). Each unit will feature a partial radius in the trench bottom and a male to female interconnecting end profile. Units shall have horizontal cast in anchoring keys on the outside wall to ensure maximum mechanical bond to the surrounding bedding material and pavement surface. The galvanized steel edge rail will be integrally cast in by the manufacturer to ensure maximum homogeneity between polymer concrete body and edge rail. Each edge rail shall be at least 3/32" (2.5mm) thick.

Grates
Grates shall be specified. See separate ACO Spec Info grate sheets for details. After removal of grates and 'QuickLok' bar there shall be uninterrupted access to the trench to aid maintenance.

Installation
The trench drain system shall be installed in accordance with the manufacturer's installation instructions and recommendations.

ACO, Inc.
Northeast Sales Office 9470 Pinecone Drive, Mentor, OH 44060, Tel: (440) 639-7230, Toll free: (800) 543-4764, Fax: (440) 639-7235
West Sales Office 825 W. Beechcraft St., Casa Grande, AZ 85122, Tel: (520) 421-9988, Toll Free: (888) 490-9552, Fax: (520) 421-9899
Southeast Sales Office 4211 Pleasant Road, Fort Mill, SC 29708, Toll free: (800) 543-4764, Fax: (803) 802-1063
Electronic Contact: info@acousa.com, www.acousa.com

SPEC INFO ACO

© February 2019 ACO, Inc. This information is believed to be accurate but it is not guaranteed to be so. We cannot assume liability for results that buyer obtains with our product since conditions of use are beyond the control of the company. It is the customer's responsibility to evaluate suitability and safety of product for his own use. ACO, Inc. reserves the right to change the product and specifications without notice. v1.1

February 2019 www.acousa.com

2 **ACO TRENCH DRAIN CUT SHEETS**

NTS

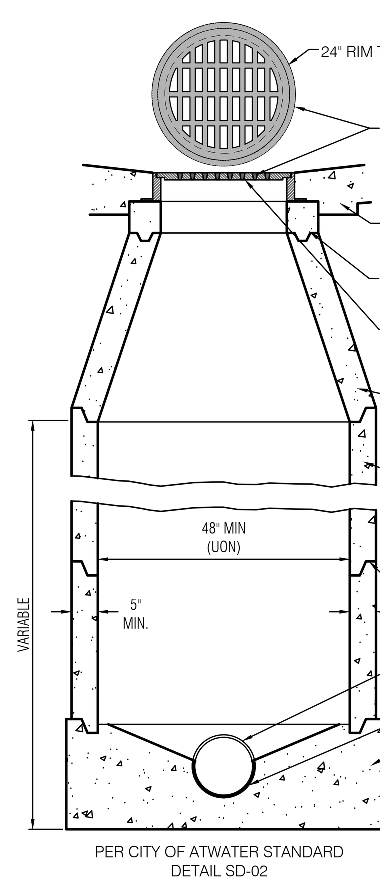

PER CITY OF ATWATER STANDARD DETAIL SD-02

*NOTE:
1. *MAINTENANCE HOLE FOR 33" DIA AND SMALLER STORM DRAIN PIPE REFER TO CITY OF ATWATER STANDARD DETAIL SD-02.
2. ALL INLETS WITHIN PATH OF TRAVEL SHALL COMPLY WITH SECTION 11B-302.3 OF THE CALIFORNIA BUILDING CODE.

1 **48" MAINTENANCE HOLE FRAME AND COVER**

NTS

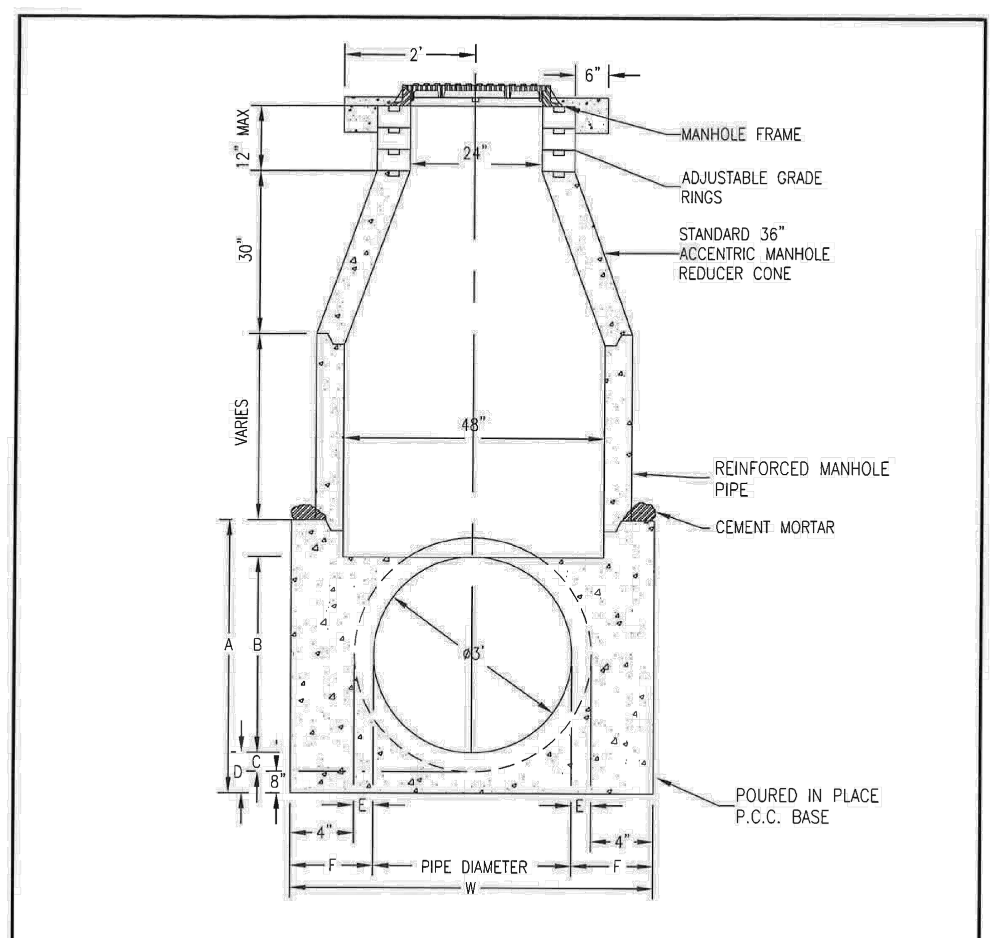

PIPE DIA	A	B	C	D	E	F	W
36	53-1/2	36	3-1/2	11-1/2	4-1/2	8-1/2	56
42	60	42	4	12	5	9	60
48	67	48	5	13	6	10	68
54	70-1/2	54	5-1/2	13-1/2	6-1/2	10-1/2	75
60	81	60	6	14	7	11	82
66	87	66	6-1/2	14-1/2	7-1/2	11-1/2	89
72	94	72	7	15	8	12	96

MANHOLE PIPE STANDARD

CITY OF ATWATER STANDARD DETAIL

DRAWN: R.GARCIA · DATE: 12/09/13 · SCALE: N.T.S · NO. SD-02

APPROVED · COMMUNITY DEVELOPMENT DEPARTMENT · REV. · BY

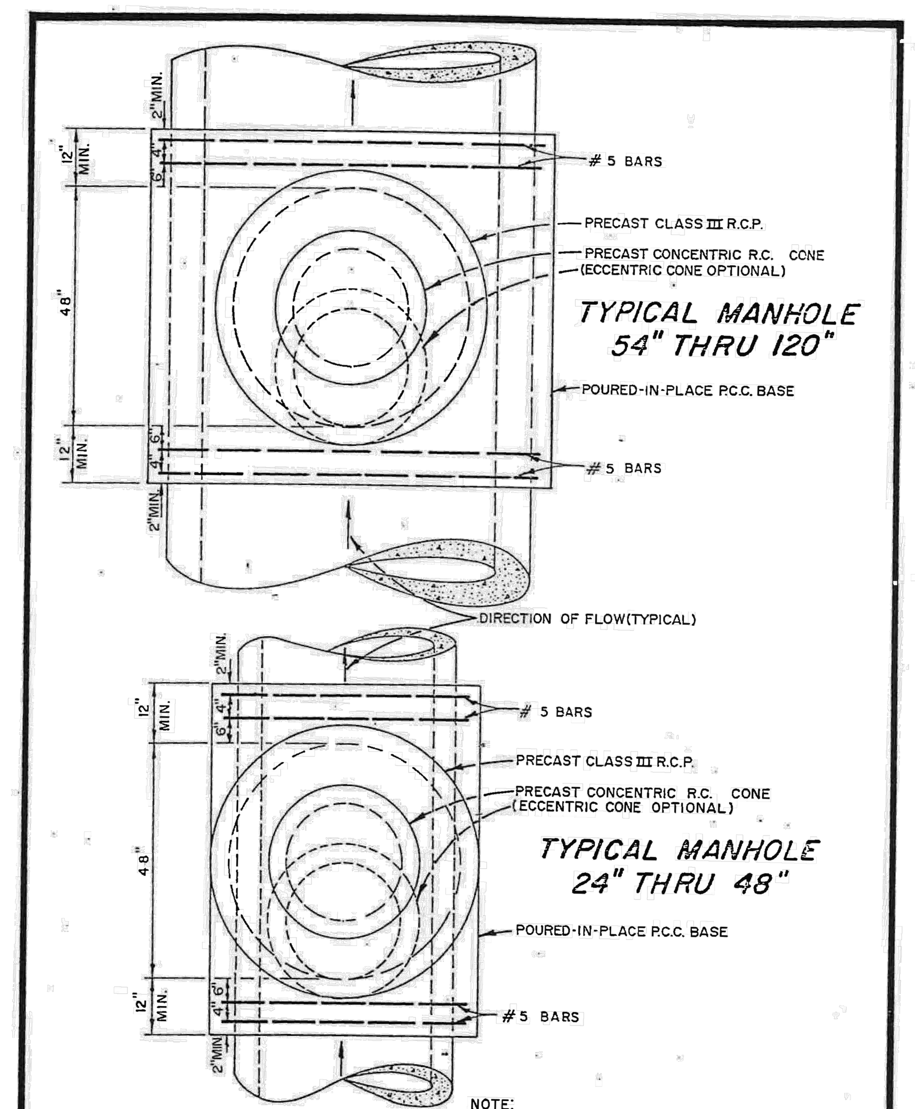

ENGINEERING DIVISION · CITY OF ATWATER, CALIF.

TITLE STORM DRAIN M.H.'S, PLAN VIEW · STANDARD PLAN SD-4

DRN. H.E.D. · DATE 8/81 · REV. · APPROVED BY: WIN WESTFALL, CITY ENGINEER · DATE: 5-18-82

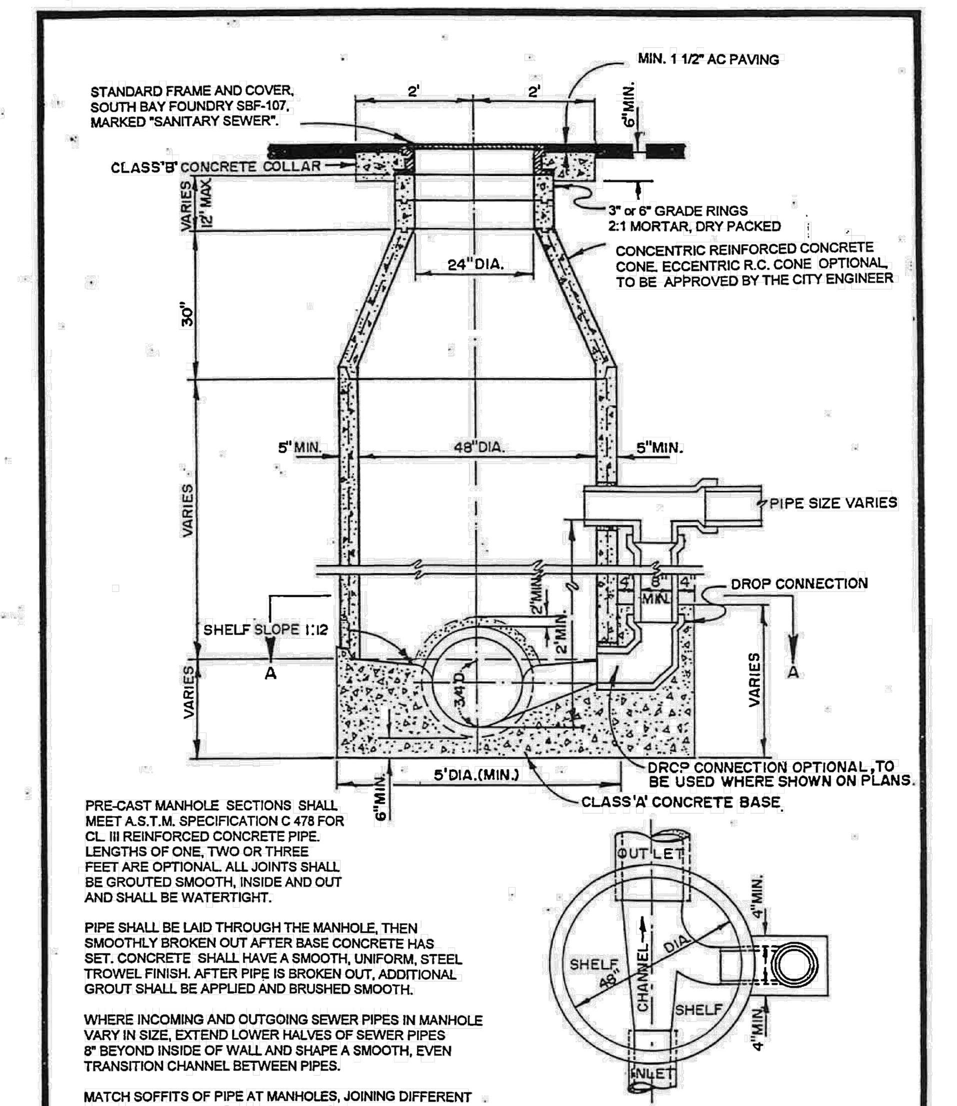

PRE-CAST MANHOLE SECTIONS SHALL MEET A.S.T.M. SPECIFICATION C 478 FOR CL. III REINFORCED CONCRETE PIPE. LENGTHS OF ONE, TWO OR THREE FEET ARE OPTIONAL. ALL JOINTS SHALL BE GROUTED SMOOTH, INSIDE AND OUT AND SHALL BE WATERTIGHT.

PIPE SHALL BE LAID THROUGH THE MANHOLE, THEN SMOOTHLY BROKEN OUT AFTER BASE CONCRETE HAS SET. CONCRETE SHALL HAVE A SMOOTH, UNIFORM, STEEL TROWEL FINISH. AFTER PIPE IS BROKEN OUT, ADDITIONAL GROUT SHALL BE APPLIED AND BRUSHED SMOOTH.

WHERE INCOMING AND OUTGOING SEWER PIPES IN MANHOLE VARY IN SIZE, EXTEND LOWER HALVES OF SEWER PIPES 8" BEYOND INSIDE OF WALL AND SHAPE A SMOOTH, EVEN TRANSITION CHANNEL BETWEEN PIPES.

MATCH SOFFITS OF PIPE AT MANHOLES, JOINING DIFFERENT SIZED PIPES, IF LARGER IS DOWNSTREAM.

ENGINEERING DIVISION · CITY OF ATWATER, CALIF.

TITLE SANITARY SEWER MANHOLE DETAILS SHOWING A DROP CONNECTION · STANDARD PLAN S-1

DRN. H.E.D. · DATE 9/81 · REV. 2/96 · APPROVED BY: CITY ENGINEER · DATE: 2-22-96

3 **CITY OF ATWATER - STANDARD DETAILS**

NTS

CALL BEFORE YOU DIG USA 800-227-2600

IDENTIFICATION STAMP
DIV. OF THE STATE ARCHITECT
APP: 02-121275 INC:
REVIEWED FOR
SS ☑ FLS ☑ ACS ☑
DATE: 12/15/2023

DESIGN California WEST

CALIFORNIA DESIGN WEST ARCHITECTS, Inc.

2100 19th Street
Sacramento, CA 95818

Phone: (916) 446-2466
Fax: (916) 446-5118
Web Page: ca-dw.com

These plans and prints thereof, as instruments of service, are owned by the architect and are for the use on this project only. Reproduction and/or distribution without the prior written consent of the architect is forbidden.

Copyright California Design West Architects, Inc.

ARCHITECT: CONSULTANT:

LICENSED ARCHITECT · MITCHELL A. McALLISTER · NO. C 17250 · REN. 2-28-2025 · STATE OF CALIFORNIA

REGISTERED PROFESSIONAL ENGINEER · COREY M. WALKER · No. C89920 · Date Signed: 10/10/23 · CIVIL · STATE OF CALIFORNIA

CONSULTANT:

NorthStar Engineering Group, Inc.
• CIVIL ENGINEERING • SURVEYING • PLANNING •
620 12th Street, Modesto, CA 95354
(209) 524-3525 Phone · (209) 524-3526 Fax

PROJECT NAME:

BUHACH COLONY HIGH SCHOOL

1800 NORTH BUHACH RD
ATWATER, CA 95301

NEW STADIUM; FOOTBALL FIELD, ALL-WEATHER TRACK, BLEACHERS, CONCESSIONS UPGRADES

MERCED UNION HIGH SCHOOL DISTRICT

MERCED COUNTY

KEY PLAN:

SHEET TITLE:

DETAILS AND CROSS SECTIONS

JOB NUMBER:

DATE: OCT. 10, 2023

REVISION:

SHEET NUMBER: C1.6

PLOTTED: 10/10/2023 15:59 PLOTTED BY: Jwheeler
DWGNAME: F:\22-3174 Buhach Colony High School Track and Field\22-3174B\Civil\Imp Plans\C1.6 DTL.dwg

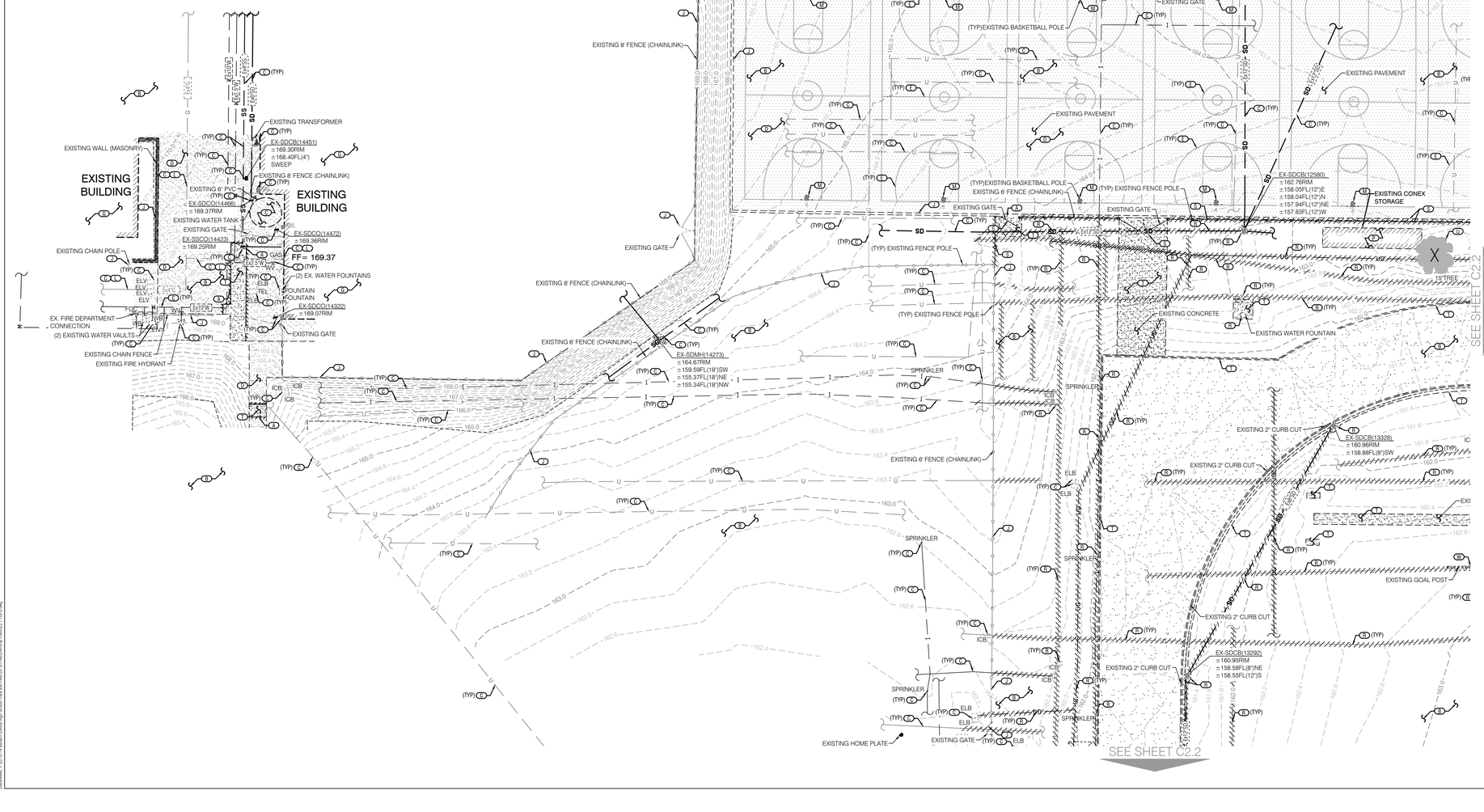

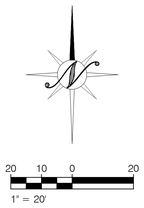

HATCH LEGEND

- EXISTING PAVEMENT
- EXISTING PAVEMENT TO BE REMOVED
- EXISTING CONCRETE
- EXISTING CONCRETE TO BE REMOVED
- EXISTING UTILITY OR FENCE TO BE REMOVED OR RELOCATED
- EXISTING TRACK TO BE REMOVED

KEY NOTES

(1) SAWCUT AND REMOVE EXISTING PAVEMENT, CONCRETE, AND OR CURB AS REQUIRED PER THESE PLANS. CONTRACTOR MAY NEED TO FIELD ADJUST SAWCUT LINE TO REMOVE THE PAVEMENT OR CONCRETE SECTION AT A CLEAN EDGE OR NEAREST JOINT BASED ON FIELD CONDITIONS WHILE MAINTAINING ACCESSIBLE TRANSITION TO PROVIDE COMPLIANCE WITH ACCESSIBILITY STANDARDS, WHERE APPLICABLE. LAP JOINT PER DETAIL 2 ON SHEET C1.4 SHALL APPLY TO ALL SAWCUT LOCATIONS ALONG AC PAVEMENT, UNLESS OTHERWISE NOTED.

(2) CONTRACTOR SHALL "USE EXTREME CAUTION" THROUGHOUT THE COURSE OF CONSTRUCTION AS ADDITIONAL UNDERGROUND LINES AND STRUCTURES NOT SHOWN ON THIS PLAN MAY EXIST AND ARE NOT CLEARLY MARKED OR VISIBLE FROM THE SURFACE. ADDITIONALLY CONTRACTOR SHALL USE EXTREME CAUTION WHILE WORKING BY LOW HANGING POWER LINES. IN CONJUNCTION WITH CONTACTING USA TO LOCATE UNDERGROUND UTILITIES WITHIN THE PUBLIC RIGHT-OF-WAY IT IS HIGHLY RECOMMENDED THAT THE CONTRACTOR UTILIZE (GPR) GROUND PENETRATING RADAR UNDERGROUND SERVICES TO IDENTIFY UTILITIES THAT MAY NOT BE VISIBLE FROM THE SURFACE.

(3) *USE EXTREME CAUTION* CONTRACTOR SHALL PROTECT EXISTING STRUCTURES, OVERHEAD LINES AND UNDERGROUND UTILITIES THROUGHOUT THE COURSE OF CONSTRUCTION AND REPAIR/REPLACE IF DAMAGED DURING CONSTRUCTION, AT CONTRACTORS EXPENSE. COORDINATE WITH APPROPRIATE CONSULTANT AND/OR AGENCY FOR ANY RELOCATION OR REMOVAL, CONTRACTOR SHALL ADJUST TO PROPOSED GRADE AS NECESSARY.

(4) CONTRACTOR SHALL PROTECT EXISTING CONCRETE, CURB AND/OR PAVEMENT THROUGHOUT THE COURSE OF CONSTRUCTION AND REPAIR/REPLACE IF DAMAGED DURING CONSTRUCTION, AT CONTRACTOR'S EXPENSE, SEE KEYNOTE "A" ABOVE.

(5) CONTRACTOR SHALL PROTECT EXISTING STRIPING AND/OR SIGNAGE THROUGHOUT THE COURSE OF CONSTRUCTION AND REPAIR/REPLACE IF DAMAGED DURING CONSTRUCTION, AT CONTRACTOR'S EXPENSE.

(6) CONTRACTOR SHALL PROTECT EXISTING TREE, SHRUB, AND ROOTS THROUGHOUT THE COURSE OF CONSTRUCTION. EXCAVATION AND GRADING SHOULD BE KEPT TO A MINIMUM AND NOTIFY THE OWNER IMMEDIATELY SHOULD THE TREE NEED TO BE REMOVED TO COMPLETE IMPROVEMENTS.

(7) CONTRACTOR SHALL PROTECT EXISTING BUILDING, OVERHEAD STRUCTURES AND COLUMNS THROUGHOUT THE COURSE OF CONSTRUCTION AND REPAIR/REPLACE IF DAMAGED DURING CONSTRUCTION, AT CONTRACTOR'S EXPENSE.

(8) CONTRACTOR SHALL PROTECT EXISTING STORAGE THROUGHOUT THE COURSE OF CONSTRUCTION AND REPAIR/REPLACE IF DAMAGED DURING CONSTRUCTION, AT CONTRACTORS EXPENSE.

(9) CONTRACTOR SHALL PROTECT EXISTING FENCE, GATE AND/OR MOWSTRIP THROUGHOUT THE COURSE OF CONSTRUCTION AND REPAIR/REPLACE IF DAMAGED DURING CONSTRUCTION, AT CONTRACTORS EXPENSE.

(10) CONTRACTOR SHALL PROTECT EXISTING CONCRETE WHEEL STOP THROUGHOUT THE COURSE OF CONSTRUCTION AND REPAIR/REPLACE IF DAMAGED DURING CONSTRUCTION, AT CONTRACTORS EXPENSE.

(11) CONTRACTOR SHALL "USE EXTREME CAUTION" WHEN PERFORMING CONSTRUCTION ACTIVITIES NEAR EXISTING GAS LINE STRUCTURES AND/OR UNDERGROUND UTILITIES. SEE KEYNOTE "C" FOR ADDITIONAL INFORMATION.

(12) CONTRACTOR SHALL PROTECT EXISTING TRACK AND FIELD EQUIPMENT THROUGHOUT THE COURSE OF CONSTRUCTION AND REPAIR/REPLACE IF DAMAGED DURING CONSTRUCTION, AT CONTRACTORS EXPENSE.

(13) CONTRACTOR SHALL REMOVE EXISTING BUILDING AND ASSOCIATED COLUMNS, ALONG WITH ANY UTILITIES WITHIN THE BUILDING FOOTPRINT. CONTRACTOR SHALL COORDINATE WITH PROPERTY OWNER FOR ANY SALVAGING OF MATERIALS, OTHERWISE, CONTRACTOR SHALL DISPOSE OF OFFSITE AT THE CONTRACTORS EXPENSE.

(14) CONTRACTOR SHALL REMOVE EXISTING STORAGE. CONTRACTOR SHALL COORDINATE WITH PROPERTY OWNER FOR ANY SALVAGING OF MATERIALS, OTHERWISE, CONTRACTOR SHALL DISPOSE OF OFFSITE AT THE CONTRACTORS EXPENSE.

(15) *USE EXTREME CAUTION* CONTRACTOR SHALL COORDINATE WITH THE APPROPRIATE AGENCIES AND REMOVE OR RELOCATE EXISTING STRUCTURE AND ASSOCIATED OVERHEAD AND/OR UNDERGROUND LINES. IF BEING RELOCATED, CONTRACTOR SHALL PROTECT, REPAIR/REPLACE IF DAMAGED DURING CONSTRUCTION, AT CONTRACTOR'S EXPENSE, AND RELOCATE TO NEW LOCATION, IF BEING REMOVED, CONTRACTOR SHALL DISPOSE OF OFF-SITE AT CONTRACTORS EXPENSE.

(16) CONTRACTOR SHALL REMOVE EXISTING FENCE, GATE AND/OR MOWSTRIP, AND DISPOSE OF OFFSITE AT THE CONTRACTOR'S EXPENSE.

(17) CONTRACTOR SHALL REMOVE EXISTING CONCRETE, CURB, AND/OR PAVEMENT AS SHOWN AND DISPOSE OF OFF-SITE AT THE CONTRACTOR'S EXPENSE. SEE KEYNOTE "A" ABOVE FOR ADDITIONAL INFORMATION.

(18) CONTRACTOR SHALL REMOVE EXISTING TREE AND SHRUB, ALONG WITH ANY ROOTS TO THE DEPTH SPECIFIED BY THE GEOTECHNICAL ENGINEER, AND DISPOSE OF OFFSITE AT THE CONTRACTORS EXPENSE.

(19) CONTRACTOR SHALL REMOVE EXISTING OUTDOOR BENCH. CONTRACTOR SHALL COORDINATE WITH PROPERTY OWNER FOR ANY SALVAGING OF MATERIALS, OTHERWISE, CONTRACTOR SHALL DISPOSE OF OFFSITE AT THE CONTRACTORS EXPENSE.

(20) CONTRACTOR SHALL REMOVE EXISTING TRACK AND FIELD EQUIPMENT. CONTRACTOR SHALL COORDINATE WITH PROPERTY OWNER FOR ANY SALVAGING OF MATERIALS, OTHERWISE, CONTRACTOR SHALL DISPOSE OF OFFSITE AT THE CONTRACTORS EXPENSE.

IDENTIFICATION STAMP
DIV. OF THE STATE ARCHITECT
APP: 02-121275 INC:
REVIEWED FOR
SS ☑ FLS ☑ ACS ☑
DATE: 12/15/2023

DESIGN WEST California

CALIFORNIA DESIGN WEST ARCHITECTS, Inc.

2100 19th Street
Sacramento, CA 95818

Phone: (916) 446-2466
Fax: (916) 446-5118
Web Page: ca-dw.com

These plans and prints thereof, as instruments of service, are owned by the architect and are for the use on this project only. Reproduction and/or distribution without the prior written consent of the architect is forbidden.

Copyright California Design West Architects, Inc.

ARCHITECT: CONSULTANT:

LICENSED ARCHITECT MITCHELL A. MCALISTER No. C-17258 REGISTERED PROFESSIONAL ENGINEER SCOTT M. WHITE No. C85920 Date Signed: 10/10/23 CIVIL STATE OF CALIFORNIA

CONSULTANT:

NorthStar Engineering Group, Inc.
• CIVIL ENGINEERING • SURVEYING • PLANNING •
620 12th Street Modesto, CA 95354
(209) 524-3525 Phone (209) 524-3526 Fax

PROJECT NAME:

BUHACH COLONY HIGH SCHOOL

1800 NORTH BUHACH RD
ATWATER, CA 95301

NEW STADIUM; FOOTBALL FIELD, ALL-WEATHER TRACK, BLEACHERS, CONCESSIONS UPGRADES

MERCED UNION HIGH SCHOOL DISTRICT

MERCED COUNTY

KEY PLAN:

SHEET TITLE:

TOPOGRAPHIC AND DEMOLITION PLAN

JOB NUMBER:	SHEET NUMBER:
DATE: OCT. 10, 2023	C2.1
REVISION:	

PLOTTED: 10/10/2023 16:49 PLOTTED BY: Johnson
DRAWING: V:\2021\14 Merced County High School\Drawings\Sheet Files\C2.1 EXISTING PLAN.dwg

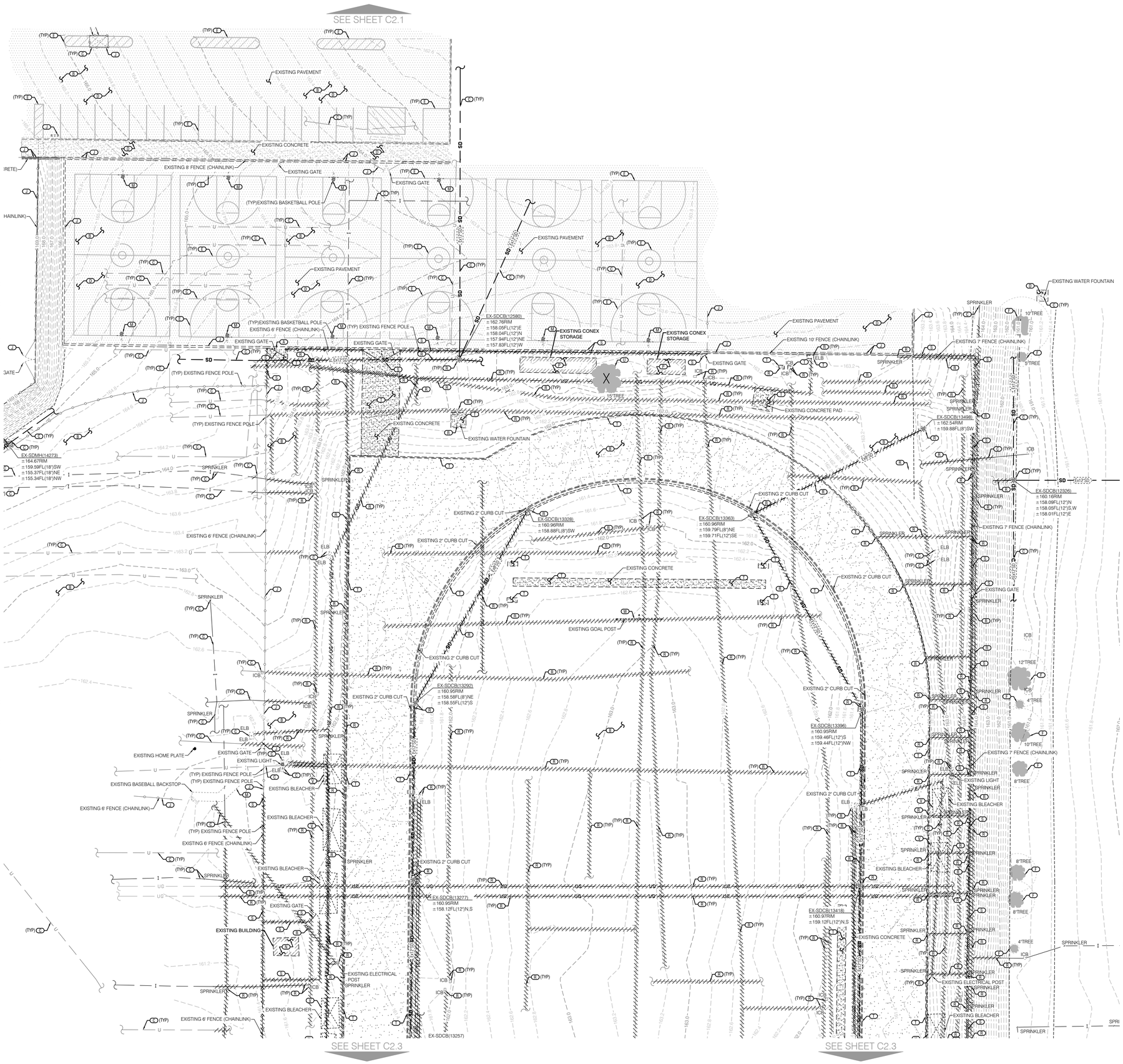

CALL BEFORE YOU DIG 800-227-2600

20 10 0 20
1" = 20'

HATCH LEGEND

- EXISTING PAVEMENT
- EXISTING PAVEMENT TO BE REMOVED
- EXISTING CONCRETE
- EXISTING CONCRETE TO BE REMOVED
- EXISTING UTILITY OR FENCE TO BE REMOVED OR RELOCATED
- EXISTING TRACK TO BE REMOVED

KEY NOTES

1. SAWCUT AND REMOVE EXISTING PAVEMENT, CONCRETE, AND OR CURB AS REQUIRED PER THESE PLANS. CONTRACTOR MAY NEED TO FIELD ADJUST SAWCUT LINE TO REMOVE THE PAVEMENT OR CONCRETE SECTION AT A CLEAN EDGE OR NEAREST JOINT BASED ON FIELD CONDITIONS WHILE MAINTAINING ACCESSIBLE TRANSITION TO PROVIDE COMPLIANCE WITH ACCESSIBILITY STANDARDS, WHERE APPLICABLE. LAP JOINT PER DETAIL 2 ON SHEET C1.4 SHALL APPLY TO ALL SAWCUT LOCATIONS ALONG AC PAVEMENT, UNLESS OTHERWISE NOTED.
2. CONTRACTOR SHALL "USE EXTREME CAUTION" THROUGHOUT THE COURSE OF CONSTRUCTION AS ADDITIONAL UNDERGROUND LINES AND STRUCTURES NOT SHOWN ON THIS PLAN MAY EXIST AND ARE NOT CLEARLY MARKED OR VISIBLE FROM THE SURFACE. ADDITIONALLY CONTRACTOR SHALL USE EXTREME CAUTION WHILE WORKING BY LOW HANGING POWER LINES, IN CONJUNCTION WITH CONTACTING USA TO LOCATE UNDERGROUND UTILITIES WITHIN THE PUBLIC RIGHT-OF-WAY IT IS HIGHLY RECOMMENDED THAT THE CONTRACTOR UTILIZE (GPR) GROUND PENETRATING RADAR UNDERGROUND SERVICES TO IDENTIFY UTILITIES THAT MAY NOT BE VISIBLE FROM THE SURFACE.
3. "USE EXTREME CAUTION" CONTRACTOR SHALL PROTECT EXISTING STRUCTURES, OVERHEAD LINES AND UNDERGROUND UTILITIES THROUGHOUT THE COURSE OF CONSTRUCTION AND REPAIR/REPLACE IF DAMAGED DURING CONSTRUCTION, AT CONTRACTORS EXPENSE. COORDINATE WITH APPROPRIATE CONSULTANT AND/OR AGENCY FOR ANY RELOCATION OR REMOVAL, CONTRACTOR SHALL ADJUST TO PROPOSED GRADE AS NECESSARY.
4. CONTRACTOR SHALL PROTECT EXISTING CONCRETE, CURB AND/OR PAVEMENT THROUGHOUT THE COURSE OF CONSTRUCTION AND REPAIR/REPLACE IF DAMAGED DURING CONSTRUCTION, AT CONTRACTORS EXPENSE, SEE KEYNOTE 'A' ABOVE.
5. CONTRACTOR SHALL PROTECT EXISTING STRIPING AND/OR SIGNAGE THROUGHOUT THE COURSE OF CONSTRUCTION AND REPAIR/REPLACE IF DAMAGED DURING CONSTRUCTION, AT CONTRACTORS EXPENSE.
6. CONTRACTOR SHALL PROTECT EXISTING TREE, SHRUB, AND ROOTS THROUGHOUT THE COURSE OF CONSTRUCTION. EXCAVATION AND GRADING SHOULD BE KEPT TO A MINIMUM AND NOTIFY THE OWNER IMMEDIATELY SHOULD THE TREE NEED TO BE REMOVED TO COMPLETE IMPROVEMENTS.
7. CONTRACTOR SHALL PROTECT EXISTING BUILDING, OVERHEAD STRUCTURES AND COLUMNS THROUGHOUT THE COURSE OF CONSTRUCTION AND REPAIR/REPLACE IF DAMAGED DURING CONSTRUCTION, AT CONTRACTORS EXPENSE.
8. CONTRACTOR SHALL PROTECT EXISTING STORAGE THROUGHOUT THE COURSE OF CONSTRUCTION AND REPAIR/REPLACE IF DAMAGED DURING CONSTRUCTION, AT CONTRACTORS EXPENSE.
9. CONTRACTOR SHALL PROTECT EXISTING FENCE, GATE AND/OR MOWSTRIP THROUGHOUT THE COURSE OF CONSTRUCTION AND REPAIR/REPLACE IF DAMAGED DURING CONSTRUCTION, AT CONTRACTORS EXPENSE.
10. CONTRACTOR SHALL PROTECT EXISTING CONCRETE WHEEL STOP THROUGHOUT THE COURSE OF CONSTRUCTION AND REPAIR/REPLACE IF DAMAGED DURING CONSTRUCTION, AT CONTRACTORS EXPENSE.
11. CONTRACTOR SHALL "USE EXTREME CAUTION" WHEN PERFORMING CONSTRUCTION ACTIVITIES NEAR EXISTING GAS LINE STRUCTURES AND/OR UNDERGROUND UTILITIES. SEE KEYNOTE 'C' FOR ADDITIONAL INFORMATION.
12. CONTRACTOR SHALL PROTECT EXISTING TRACK AND FIELD EQUIPMENT THROUGHOUT THE COURSE OF CONSTRUCTION AND REPAIR/REPLACE IF DAMAGED DURING CONSTRUCTION, AT CONTRACTORS EXPENSE.
13. CONTRACTOR SHALL REMOVE EXISTING BUILDING AND ASSOCIATED COLUMNS, ALONG WITH ANY UTILITIES WITHIN THE BUILDING FOOTPRINT. CONTRACTOR SHALL COORDINATE WITH PROPERTY OWNER FOR ANY SALVAGING OF MATERIALS; OTHERWISE, CONTRACTOR SHALL DISPOSE OF OFFSITE AT THE CONTRACTOR'S EXPENSE.
14. CONTRACTOR SHALL REMOVE EXISTING STORAGE. CONTRACTOR SHALL COORDINATE WITH PROPERTY OWNER FOR ANY SALVAGING OF MATERIALS; OTHERWISE, CONTRACTOR SHALL DISPOSE OF OFFSITE AT THE CONTRACTOR'S EXPENSE.
15. "USE EXTREME CAUTION" CONTRACTOR SHALL COORDINATE WITH THE APPROPRIATE AGENCIES AND REMOVE OR RELOCATE EXISTING STRUCTURE AND ASSOCIATED OVERHEAD AND/OR UNDERGROUND LINES. IF BEING RELOCATED, CONTRACTOR SHALL PROTECT, REPAIR/REPLACE IF DAMAGED DURING CONSTRUCTION, AT CONTRACTOR'S EXPENSE, AND RELOCATE TO NEW LOCATION. IF BEING REMOVED, CONTRACTOR SHALL DISPOSE OF OFF-SITE AT CONTRACTORS EXPENSE.
16. CONTRACTOR SHALL REMOVE EXISTING FENCE, GATE AND/OR MOWSTRIP, AND DISPOSE OF OFFSITE AT THE CONTRACTORS EXPENSE.
17. CONTRACTOR SHALL REMOVE EXISTING CONCRETE, CURB, AND/OR PAVEMENT AS SHOWN AND DISPOSE OF OFF-SITE AT THE CONTRACTORS EXPENSE. SEE KEYNOTE 'A' ABOVE FOR ADDITIONAL INFORMATION.
18. CONTRACTOR SHALL REMOVE EXISTING TREE AND SHRUB, ALONG WITH ANY ROOTS TO THE DEPTH SPECIFIED BY THE GEOTECHNICAL ENGINEER, AND DISPOSE OF OFFSITE AT THE CONTRACTORS EXPENSE.
19. CONTRACTOR SHALL REMOVE EXISTING OUTDOOR BENCH. CONTRACTOR SHALL COORDINATE WITH PROPERTY OWNER FOR ANY SALVAGING OF MATERIALS; OTHERWISE, CONTRACTOR SHALL DISPOSE OF OFFSITE AT THE CONTRACTOR'S EXPENSE.
20. CONTRACTOR SHALL REMOVE EXISTING TRACK AND FIELD EQUIPMENT. CONTRACTOR SHALL COORDINATE WITH PROPERTY OWNER FOR ANY SALVAGING OF MATERIALS; OTHERWISE, CONTRACTOR SHALL DISPOSE OF OFFSITE AT THE CONTRACTOR'S EXPENSE.

PLOTTED: 10/3/2023 9:49 PLOTTED BY: Jahaan
P:\2022\22-0214 Merced Union High School\Cad files and Work\22-0214BSurPlan Plan\C2.2 TOPO.dwg

IDENTIFICATION STAMP
DIV. OF THE STATE ARCHITECT
APP: 02-121275 INC:
REVIEWED FOR
SS ☑ FLS ☑ ACS ☑
DATE: 12/15/2023

DESIGN California WEST

CALIFORNIA DESIGN
WEST ARCHITECTS, Inc.

2100 19th Street
Sacramento, CA 95818

Phone: (916) 446-2466
Fax: (916) 446-5118
Web Page: ca-dw.com

These plans and prints thereof, as instruments of service, are owned by the architect and are for the use on this project only. Reproduction and/or distribution without the prior written consent of the architect is forbidden.

Copyright California Design West Architects, Inc.

ARCHITECT: CONSULTANT:

LICENSED ARCHITECT TIMOTHY L. McALISTER NO. C 7258 REGISTERED PROFESSIONAL ENGINEER OF CALIFORNIA

REGISTERED PROFESSIONAL ENGINEER JAHAAN M. WAHAB No. C89920 Date Signed: 10/10/23 CIVIL STATE OF CALIFORNIA

CONSULTANT:

NorthStar Engineering Group, Inc.
• CIVIL ENGINEERING • SURVEYING • PLANNING •
620 12th Street Modesto, CA 95354
(209) 524-3525 Phone (209) 524-3526 Fax

PROJECT NAME:

BUHACH COLONY HIGH SCHOOL

1800 NORTH BUHACH RD
ATWATER, CA 95301

NEW STADIUM; FOOTBALL FIELD, ALL-WEATHER TRACK, BLEACHERS, CONCESSIONS UPGRADES

MERCED UNION HIGH SCHOOL DISTRICT

MERCED COUNTY

KEY PLAN:

SHEET TITLE:

TOPOGRAPHIC AND DEMOLITION PLAN

JOB NUMBER:	SHEET NUMBER:
DATE: OCT. 10, 2023	C2.2
REVISION:	

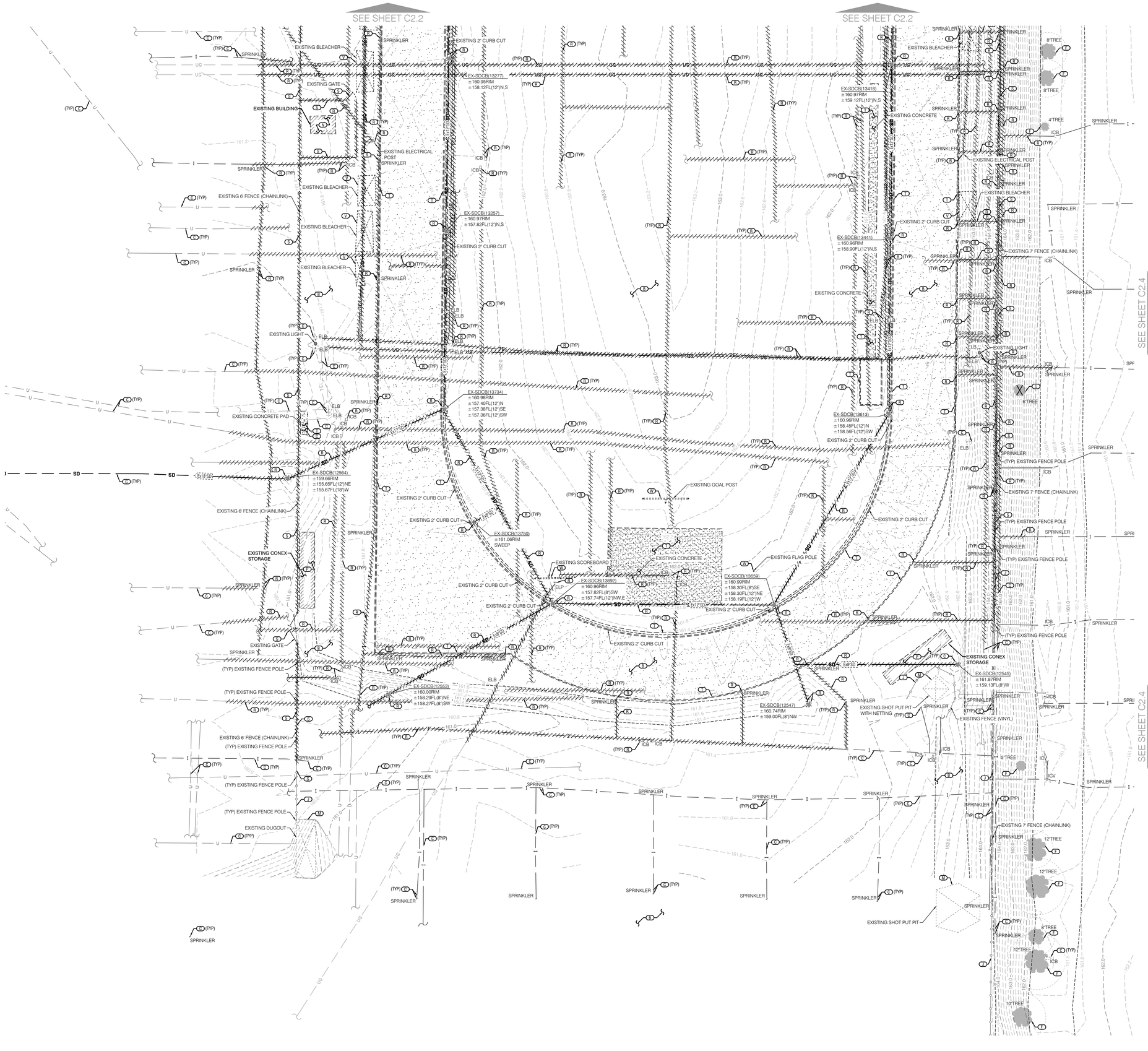

HATCH LEGEND

- EXISTING PAVEMENT
- EXISTING PAVEMENT TO BE REMOVED
- EXISTING CONCRETE
- EXISTING CONCRETE TO BE REMOVED
- EXISTING UTILITY OR FENCE TO BE REMOVED OR RELOCATED
- EXISTING TRACK TO BE REMOVED

KEY NOTES

(A) SAWCUT AND REMOVE EXISTING PAVEMENT, CONCRETE, AND OR CURB AS REQUIRED PER THESE PLANS. CONTRACTOR MAY NEED TO FIELD ADJUST SAWCUT LINE TO REMOVE THE PAVEMENT OR CONCRETE SECTION AT A CLEAN EDGE OR NEAREST JOINT BASED ON FIELD CONDITIONS WHILE MAINTAINING ACCESSIBLE TRANSITION TO PROVIDE COMPLIANCE WITH ACCESSIBILITY STANDARDS, WHERE APPLICABLE. LAP JOINT PER DETAIL 2 ON SHEET C1.4 SHALL APPLY TO ALL SAWCUT LOCATIONS ALONG AC PAVEMENT, UNLESS OTHERWISE NOTED.

(B) CONTRACTOR SHALL "USE EXTREME CAUTION" THROUGHOUT THE COURSE OF CONSTRUCTION AS ADDITIONAL UNDERGROUND LINES AND STRUCTURES NOT SHOWN ON THIS PLAN MAY EXIST AND ARE NOT CLEARLY MARKED OR VISIBLE FROM THE SURFACE. ADDITIONALLY CONTRACTOR SHALL USE EXTREME CAUTION WHILE WORKING BY LOW HANGING POWER LINES. IN CONJUNCTION WITH CONTACTING USA TO LOCATE UNDERGROUND UTILITIES WITHIN THE PUBLIC RIGHT-OF-WAY IT IS HIGHLY RECOMMENDED THAT THE CONTRACTOR UTILIZE (GPR) GROUND PENETRATING RADAR UNDERGROUND SERVICES TO IDENTIFY UTILITIES THAT MAY NOT BE VISIBLE FROM THE SURFACE.

(C) "USE EXTREME CAUTION" CONTRACTOR SHALL PROTECT EXISTING STRUCTURES, OVERHEAD LINES AND UNDERGROUND UTILITIES THROUGHOUT THE COURSE OF CONSTRUCTION AND REPAIR/REPLACE IF DAMAGED DURING CONSTRUCTION, AT CONTRACTORS EXPENSE. COORDINATE WITH APPROPRIATE CONSULTANT AND/OR AGENCY FOR ANY RELOCATION OR REMOVAL, CONTRACTOR SHALL ADJUST TO PROPOSED GRADE AS NECESSARY.

(D) CONTRACTOR SHALL PROTECT EXISTING CONCRETE, CURB AND/OR PAVEMENT THROUGHOUT THE COURSE OF CONSTRUCTION AND REPAIR/REPLACE IF DAMAGED DURING CONSTRUCTION, AT CONTRACTOR'S EXPENSE, SEE KEYNOTE 'A' ABOVE.

(E) CONTRACTOR SHALL PROTECT EXISTING STRIPING AND/OR SIGNAGE THROUGHOUT THE COURSE OF CONSTRUCTION AND REPAIR/REPLACE IF DAMAGED DURING CONSTRUCTION, AT CONTRACTOR'S EXPENSE.

(F) CONTRACTOR SHALL PROTECT EXISTING TREE, SHRUB, AND ROOTS THROUGHOUT THE COURSE OF CONSTRUCTION. EXCAVATION AND GRADING SHOULD BE KEPT TO A MINIMUM AND NOTIFY THE OWNER IMMEDIATELY SHOULD THE TREE NEED TO BE REMOVED TO COMPLETE IMPROVEMENTS.

(G) CONTRACTOR SHALL PROTECT EXISTING BUILDING, OVERHEAD STRUCTURES AND COLUMNS THROUGHOUT THE COURSE OF CONSTRUCTION AND REPAIR/REPLACE IF DAMAGED DURING CONSTRUCTION, AT CONTRACTOR'S EXPENSE.

(H) CONTRACTOR SHALL PROTECT EXISTING STORAGE THROUGHOUT THE COURSE OF CONSTRUCTION AND REPAIR/REPLACE IF DAMAGED DURING CONSTRUCTION, AT CONTRACTORS EXPENSE.

(I) CONTRACTOR SHALL PROTECT EXISTING FENCE, GATE AND/OR MOWSTRIP THROUGHOUT THE COURSE OF CONSTRUCTION AND REPAIR/REPLACE IF DAMAGED DURING CONSTRUCTION, AT CONTRACTORS EXPENSE.

(J) CONTRACTOR SHALL PROTECT EXISTING CONCRETE WHEEL STOP THROUGHOUT THE COURSE OF CONSTRUCTION AND REPAIR/REPLACE IF DAMAGED DURING CONSTRUCTION, AT CONTRACTOR'S EXPENSE.

(K) CONTRACTOR SHALL "USE EXTREME CAUTION" WHEN PERFORMING CONSTRUCTION ACTIVITIES NEAR EXISTING GAS LINE STRUCTURES AND/OR UNDERGROUND UTILITIES. SEE KEYNOTE 'C' FOR ADDITIONAL INFORMATION.

(M) CONTRACTOR SHALL PROTECT EXISTING TRACK AND FIELD EQUIPMENT THROUGHOUT THE COURSE OF CONSTRUCTION AND REPAIR/REPLACE IF DAMAGED DURING CONSTRUCTION, AT CONTRACTOR'S EXPENSE.

(N) CONTRACTOR SHALL REMOVE EXISTING BUILDING AND ASSOCIATED COLUMNS, ALONG WITH ANY UTILITIES WITHIN THE BUILDING FOOTPRINT. CONTRACTOR SHALL COORDINATE WITH PROPERTY OWNER FOR ANY SALVAGING OF MATERIALS, OTHERWISE, CONTRACTOR SHALL DISPOSE OF OFFSITE AT THE CONTRACTOR'S EXPENSE.

(P) CONTRACTOR SHALL REMOVE EXISTING STORAGE. CONTRACTOR SHALL COORDINATE WITH PROPERTY OWNER FOR ANY SALVAGING OF MATERIALS, OTHERWISE, CONTRACTOR SHALL DISPOSE OF OFFSITE AT THE CONTRACTORS EXPENSE.

(Q) "USE EXTREME CAUTION" CONTRACTOR SHALL COORDINATE WITH THE APPROPRIATE AGENCIES AND REMOVE OR RELOCATE EXISTING STRUCTURE AND ASSOCIATED OVERHEAD AND/OR UNDERGROUND LINES. IF BEING RELOCATED, CONTRACTOR SHALL PROTECT, REPAIR/REPLACE IF DAMAGED DURING CONSTRUCTION, AT CONTRACTOR'S EXPENSE, AND RELOCATE TO NEW LOCATION. IF BEING REMOVED, CONTRACTOR SHALL DISPOSE OF OFF-SITE AT CONTRACTORS EXPENSE.

(S) CONTRACTOR SHALL REMOVE EXISTING FENCE, GATE AND/OR MOWSTRIP, AND DISPOSE OF OFFSITE AT THE CONTRACTOR'S EXPENSE.

(T) CONTRACTOR SHALL REMOVE EXISTING CONCRETE, CURB, AND/OR PAVEMENT AS SHOWN AND DISPOSE OF OFF-SITE AT THE CONTRACTOR'S EXPENSE. SEE KEYNOTE 'A' ABOVE FOR ADDITIONAL INFORMATION.

(U) CONTRACTOR SHALL REMOVE EXISTING TREE AND SHRUB, ALONG WITH ANY ROOTS TO THE DEPTH SPECIFIED BY THE GEOTECHNICAL ENGINEER, AND DISPOSE OF OFFSITE AT THE CONTRACTOR'S EXPENSE.

(V) CONTRACTOR SHALL REMOVE EXISTING OUTDOOR BENCH. CONTRACTOR SHALL COORDINATE WITH PROPERTY OWNER FOR ANY SALVAGING OF MATERIALS, OTHERWISE, CONTRACTOR SHALL DISPOSE OF OFFSITE AT THE CONTRACTOR'S EXPENSE.

(W) CONTRACTOR SHALL REMOVE EXISTING TRACK AND FIELD EQUIPMENT. CONTRACTOR SHALL COORDINATE WITH PROPERTY OWNER FOR ANY SALVAGING OF MATERIALS, OTHERWISE, CONTRACTOR SHALL DISPOSE OF OFFSITE AT THE CONTRACTORS EXPENSE.

IDENTIFICATION STAMP
DIV. OF THE STATE ARCHITECT
APP: 02-121275 INC:
REVIEWED FOR
SS ☑ FLS ☑ ACS ☑
DATE: 12/15/2023

CALIFORNIA DESIGN WEST ARCHITECTS, Inc.

2100 19th Street
Sacramento, CA 95818

Phone: (916) 446-2466
Fax: (916) 446-5118
Web Page: ca-dw.com

These plans and prints thereof, as instruments of service, are owned by the architect and are for the use on this project only. Reproduction and/or distribution without the prior written consent of the architect is forbidden.

Copyright California Design West Architects, Inc.

ARCHITECT: CONSULTANT:

LICENSED ARCHITECT MITCHELL A. McALISTER No. C17250 REGISTERED PROFESSIONAL ENGINEER MATTHEW W. WALKER No. C89920 Date Signed: 10/10/23 CIVIL STATE OF CALIFORNIA

CONSULTANT:

NorthStar Engineering Group, Inc.
• CIVIL ENGINEERING • SURVEYING • PLANNING •
620 12th Street Modesto, CA 95354
(209) 524-3525 Phone (209) 524-3526 Fax

PROJECT NAME:

BUHACH COLONY HIGH SCHOOL

1800 NORTH BUHACH RD
ATWATER, CA 95301

NEW STADIUM; FOOTBALL FIELD, ALL-WEATHER TRACK, BLEACHERS, CONCESSIONS UPGRADES

MERCED UNION HIGH SCHOOL DISTRICT

MERCED COUNTY

KEY PLAN:

SHEET TITLE:

TOPOGRAPHIC AND DEMOLITION PLAN

JOB NUMBER:	SHEET NUMBER:
DATE: OCT. 10, 2023	C2.3
REVISION:	

PLOTTED: 10/10/2023 9:01 PM PLOTTED BY: Jaheim
FILENAME: Y:\2014 Buhach Colony High School Track and Field\23 311MS\Survey Prep\C2.3 SWPPP.dwg

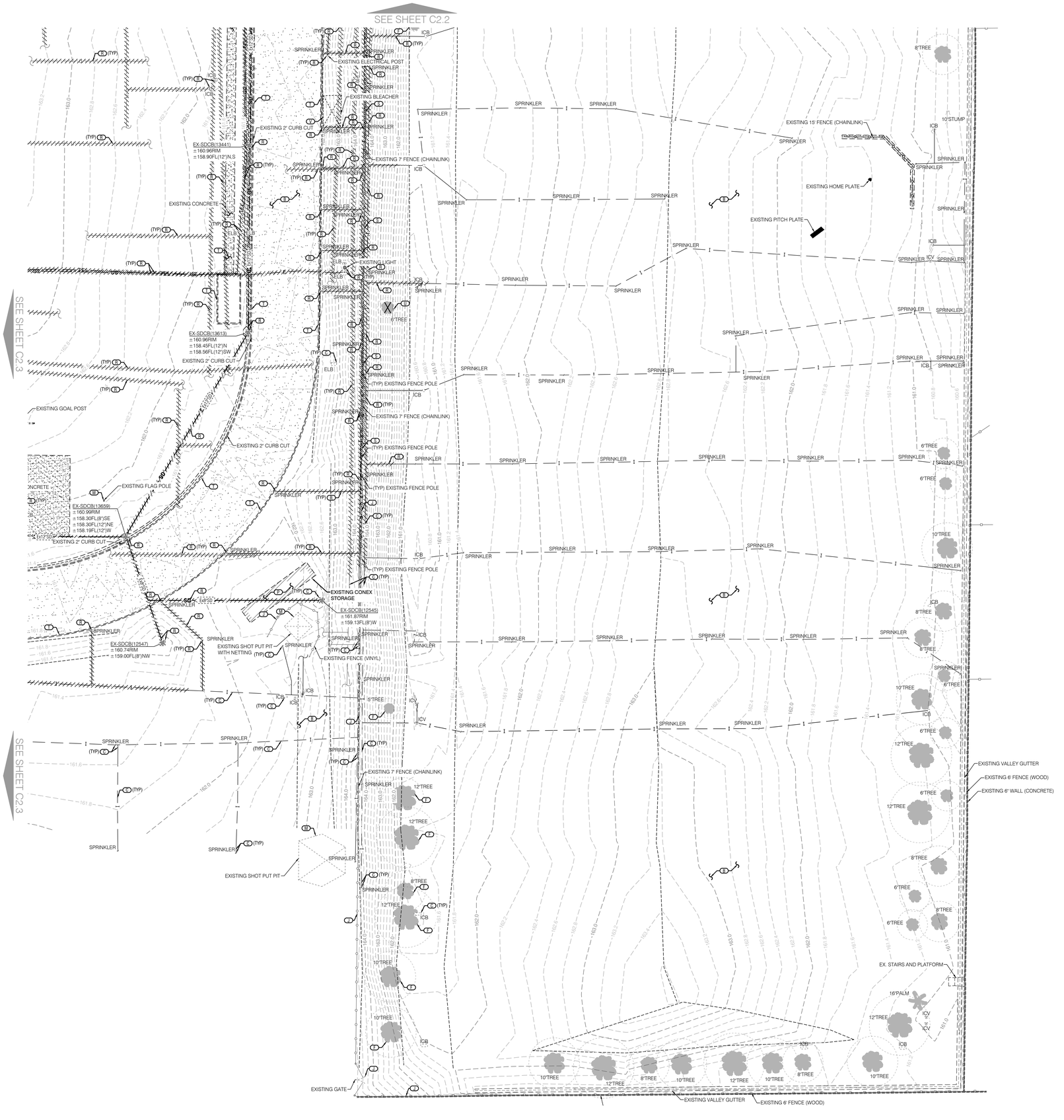

HATCH LEGEND

- EXISTING PAVEMENT
- EXISTING PAVEMENT TO BE REMOVED
- EXISTING CONCRETE
- EXISTING CONCRETE TO BE REMOVED
- EXISTING UTILITY OR FENCE TO BE REMOVED OR RELOCATED
- EXISTING TRACK TO BE REMOVED

KEY NOTES

1. SAWCUT AND REMOVE EXISTING PAVEMENT, CONCRETE, AND OR CURB AS REQUIRED PER THESE PLANS. CONTRACTOR MAY NEED TO FIELD ADJUST SAWCUT LINE TO REMOVE THE PAVEMENT OR CONCRETE SECTION AT A CLEAN EDGE OR NEAREST JOINT BASED ON FIELD CONDITIONS WHILE MAINTAINING ACCESSIBLE TRANSITION TO PROVIDE COMPLIANCE WITH ACCESSIBILITY STANDARDS, WHERE APPLICABLE. LAP JOINT PER DETAIL 2 ON SHEET C1.4 SHALL APPLY TO ALL SAWCUT LOCATIONS ALONG AC PAVEMENT, UNLESS OTHERWISE NOTED.
2. CONTRACTOR SHALL "USE EXTREME CAUTION" THROUGHOUT THE COURSE OF CONSTRUCTION AS ADDITIONAL UNDERGROUND LINES AND STRUCTURES NOT SHOWN ON THIS PLAN MAY EXIST AND ARE NOT CLEARLY MARKED OR VISIBLE FROM THE SURFACE. ADDITIONALLY CONTRACTOR SHALL USE EXTREME CAUTION WHILE WORKING BY LOW HANGING POWER LINES. IN CONJUNCTION WITH CONTACTING USA TO LOCATE UNDERGROUND UTILITIES WITHIN THE PUBLIC RIGHT-OF-WAY IT IS HIGHLY RECOMMENDED THAT THE CONTRACTOR UTILIZE (GPR) GROUND PENETRATING RADAR UNDERGROUND SERVICES TO IDENTIFY UTILITIES THAT MAY NOT BE VISIBLE FROM THE SURFACE.
3. "USE EXTREME CAUTION" CONTRACTOR SHALL PROTECT EXISTING STRUCTURES, OVERHEAD LINES AND UNDERGROUND UTILITIES THROUGHOUT THE COURSE OF CONSTRUCTION AND REPAIR/REPLACE IF DAMAGED DURING CONSTRUCTION, AT CONTRACTORS EXPENSE. COORDINATE WITH APPROPRIATE CONSULTANT AND/OR AGENCY FOR ANY RELOCATION OR REMOVAL. CONTRACTOR SHALL ADJUST TO PROPOSED GRADE AS NECESSARY.
4. CONTRACTOR SHALL PROTECT EXISTING CONCRETE, CURB AND/OR PAVEMENT THROUGHOUT THE COURSE OF CONSTRUCTION AND REPAIR/REPLACE IF DAMAGED DURING CONSTRUCTION, AT CONTRACTORS EXPENSE. SEE KEYNOTE 'A' ABOVE.
5. CONTRACTOR SHALL PROTECT EXISTING STRIPING AND/OR SIGNAGE THROUGHOUT THE COURSE OF CONSTRUCTION AND REPAIR/REPLACE IF DAMAGED DURING CONSTRUCTION, AT CONTRACTORS EXPENSE.
6. CONTRACTOR SHALL PROTECT EXISTING TREE, SHRUB, AND ROOTS THROUGHOUT THE COURSE OF CONSTRUCTION. EXCAVATION AND GRADING SHOULD BE KEPT TO A MINIMUM AND NOTIFY THE OWNER IMMEDIATELY SHOULD THE TREE NEED TO BE REMOVED TO COMPLETE IMPROVEMENTS.
7. CONTRACTOR SHALL PROTECT EXISTING BUILDING, OVERHEAD STRUCTURES AND COLUMNS THROUGHOUT THE COURSE OF CONSTRUCTION AND REPAIR/REPLACE IF DAMAGED DURING CONSTRUCTION, AT CONTRACTORS EXPENSE.
8. CONTRACTOR SHALL PROTECT EXISTING STORAGE THROUGHOUT THE COURSE OF CONSTRUCTION AND REPAIR/REPLACE IF DAMAGED DURING CONSTRUCTION, AT CONTRACTORS EXPENSE.
9. CONTRACTOR SHALL PROTECT EXISTING FENCE, GATE AND/OR MOWSTRIP THROUGHOUT THE COURSE OF CONSTRUCTION AND REPAIR/REPLACE IF DAMAGED DURING CONSTRUCTION, AT CONTRACTORS EXPENSE.
10. CONTRACTOR SHALL PROTECT EXISTING CONCRETE WHEEL STOP THROUGHOUT THE COURSE OF CONSTRUCTION AND REPAIR/REPLACE IF DAMAGED DURING CONSTRUCTION, AT CONTRACTORS EXPENSE.
11. CONTRACTOR SHALL "USE EXTREME CAUTION" WHEN PERFORMING CONSTRUCTION ACTIVITIES NEAR EXISTING GAS LINE STRUCTURES AND/OR UNDERGROUND UTILITIES. SEE KEYNOTE 'C' FOR ADDITIONAL INFORMATION.
12. CONTRACTOR SHALL PROTECT EXISTING TRACK AND FIELD EQUIPMENT THROUGHOUT THE COURSE OF CONSTRUCTION AND REPAIR/REPLACE IF DAMAGED DURING CONSTRUCTION, AT CONTRACTORS EXPENSE.
13. CONTRACTOR SHALL REMOVE EXISTING BUILDING AND ASSOCIATED COLUMNS, ALONG WITH ANY UTILITIES WITHIN THE BUILDING FOOTPRINT. CONTRACTOR SHALL COORDINATE WITH PROPERTY OWNER FOR ANY SALVAGING OF MATERIALS, OTHERWISE, CONTRACTOR SHALL DISPOSE OF OFFSITE AT THE CONTRACTORS EXPENSE.
14. CONTRACTOR SHALL REMOVE EXISTING STORAGE. CONTRACTOR SHALL COORDINATE WITH PROPERTY OWNER FOR ANY SALVAGING OF MATERIALS, OTHERWISE, CONTRACTOR SHALL DISPOSE OF OFFSITE AT THE CONTRACTORS EXPENSE.
15. "USE EXTREME CAUTION" CONTRACTOR SHALL COORDINATE WITH THE APPROPRIATE AGENCIES AND REMOVE OR RELOCATE EXISTING STRUCTURE AND ASSOCIATED OVERHEAD AND/OR UNDERGROUND LINES. IF BEING RELOCATED, CONTRACTOR SHALL PROTECT, REPAIR/REPLACE IF DAMAGED DURING CONSTRUCTION, AT CONTRACTORS EXPENSE, AND RELOCATE TO NEW LOCATION. IF BEING REMOVED, CONTRACTOR SHALL DISPOSE OF OFF-SITE AT CONTRACTOR'S EXPENSE.
16. CONTRACTOR SHALL REMOVE EXISTING FENCE, GATE AND/OR MOWSTRIP, AND DISPOSE OF OFFSITE AT THE CONTRACTORS EXPENSE.
17. CONTRACTOR SHALL REMOVE EXISTING CONCRETE, CURB, AND/OR PAVEMENT AS SHOWN AND DISPOSE OF OFF-SITE AT THE CONTRACTOR'S EXPENSE. SEE KEYNOTE 'A' ABOVE FOR ADDITIONAL INFORMATION.
18. CONTRACTOR SHALL REMOVE EXISTING TREE AND SHRUB, ALONG WITH ANY ROOTS TO THE DEPTH SPECIFIED BY THE GEOTECHNICAL ENGINEER, AND DISPOSE OF OFFSITE AT THE CONTRACTORS EXPENSE.
19. CONTRACTOR SHALL REMOVE EXISTING OUTDOOR BENCH. CONTRACTOR SHALL COORDINATE WITH PROPERTY OWNER FOR ANY SALVAGING OF MATERIALS, OTHERWISE, CONTRACTOR SHALL DISPOSE OF OFFSITE AT THE CONTRACTORS EXPENSE.
20. CONTRACTOR SHALL REMOVE EXISTING TRACK AND FIELD EQUIPMENT. CONTRACTOR SHALL COORDINATE WITH PROPERTY OWNER FOR ANY SALVAGING OF MATERIALS, OTHERWISE, CONTRACTOR SHALL DISPOSE OF OFFSITE AT THE CONTRACTORS EXPENSE.

IDENTIFICATION STAMP
DIV. OF THE STATE ARCHITECT
APP: 02-121275 INC:
REVIEWED FOR
SS ☑ FLS ☑ ACS ☑
DATE: 12/15/2023

CALIFORNIA DESIGN WEST ARCHITECTS, Inc.

2100 19th Street
Sacramento, CA 95818

Phone: (916) 446-2466
Fax: (916) 446-5118
Web Page: ca-dw.com

These plans and prints thereof, as instruments of service, are owned by the architect and are for the use on this project only. Reproduction and/or distribution without the prior written consent of the architect is forbidden.

Copyright California Design West Architects, Inc.

ARCHITECT: CONSULTANT:

LICENSED ARCHITECT MITCHELL A. McALISTER No. C-12750 REGISTERED PROFESSIONAL ENGINEER

REGISTERED PROFESSIONAL ENGINEER MATTHEW W. WAGNER No. C85920 Date Signed: 10/10/23 CIVIL STATE OF CALIFORNIA

CONSULTANT:

NorthStar Engineering Group, Inc.
• CIVIL ENGINEERING • SURVEYING • PLANNING •
620 12th Street Modesto, CA 95354
(209) 524-3525 Phone (209) 524-3526 Fax

PROJECT NAME:

BUHACH COLONY HIGH SCHOOL

1800 NORTH BUHACH RD
ATWATER, CA 95301

NEW STADIUM; FOOTBALL FIELD, ALL-WEATHER TRACK, BLEACHERS, CONCESSIONS UPGRADES

MERCED UNION HIGH SCHOOL DISTRICT

MERCED COUNTY

KEY PLAN:

SHEET TITLE:

TOPOGRAPHIC AND DEMOLITION PLAN

JOB NUMBER:	SHEET NUMBER:
DATE: OCT. 10, 2023	C2.4
REVISION:	

PLOTTED: 10/3/2023 9:45 PLOTTED BY: Jahnavi
DRAWING: F:\2021\21 Buhach Colony High School\Civil\Sheet Files and Xrefs\C2.21 HSBColony Sheet\C2.4 TOPO.dwg

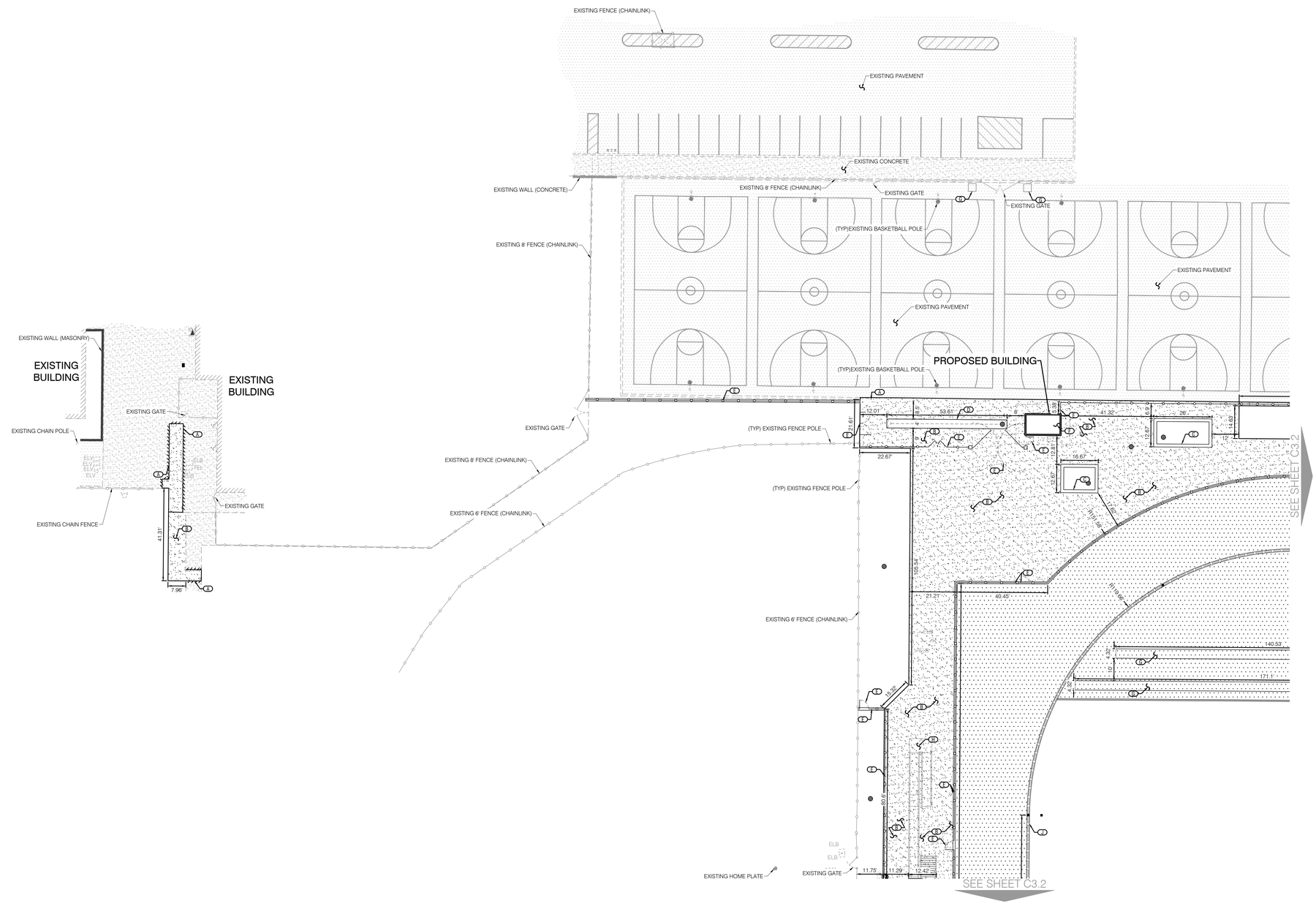

PLOTTED: 10/3/2023 9:45:5 PLOTTED BY: Jaheer
DRAWING: I:\22-121 Merced Union High School\Plans and Work\23-24 HBD\DwgTitle\Plan\C3.1 SW.dwg

IDENTIFICATION STAMP
DIV. OF THE STATE ARCHITECT
APP: 02-121275 INC:
REVIEWED FOR
SS ☑ FLS ☑ ACS ☑
DATE: 12/15/2023

CALIFORNIA DESIGN WEST ARCHITECTS, Inc.

2100 19th Street
Sacramento, CA 95818

Phone: (916) 446-2466
Fax: (916) 446-5118
Web Page: ca-dw.com

These plans and prints thereof, as instruments of service, are owned by the architect and are for the use on this project only. Reproduction and/or distribution without the prior written consent of the architect is forbidden.

Copyright California Design West Architects, Inc.

ARCHITECT: CONSULTANT:

LICENSED ARCHITECT MITCHELL A. McALISTER No. C-17258 RENEWAL 08-31-2025 STATE OF CALIFORNIA

REGISTERED PROFESSIONAL ENGINEER SCOTT M. WHITE No. C85920 Date Signed: 10/10/23 CIVIL STATE OF CALIFORNIA

CONSULTANT:

NorthStar Engineering Group, Inc.
• CIVIL ENGINEERING • SURVEYING • PLANNING •
620 12th Street Modesto, CA 95354
(209) 524-3525 Phone (209) 524-3526 Fax

PROJECT NAME:

BUHACH COLONY HIGH SCHOOL

1800 NORTH BUHACH RD
ATWATER, CA 95301

NEW STADIUM; FOOTBALL FIELD, ALL-WEATHER TRACK, BLEACHERS, CONCESSIONS UPGRADES

MERCED UNION HIGH SCHOOL DISTRICT

MERCED COUNTY

KEY PLAN:

SHEET TITLE:

DIMENSION AND PAVING PLAN

JOB NUMBER:

SHEET NUMBER: C3.1

DATE: OCT. 10, 2023

REVISION:

LEGEND

EXISTING CONCRETE

EXISTING PAVEMENT

*PAVEMENT SECTION
TI = 5, R-VALUE = 43, 2.5"AC/4.5" CLASS II AB (95% RC)
SEE SPECIALTY TRACK PLANS FOR DETAILS REGARDING ALL-WEATHER SURFACING.

*CONCRETE SECTION - PEDESTRIAN
4"PCC/6" CLASS II AB (90% RC) W/ #4 REBAR @ 24" O.C., BOTH WAYS

*CONTRACTOR SHALL REVIEW GEOTECHNICAL REPORT FOR ADDITIONAL RECOMMENDATIONS INCLUDING SUBGRADE AND AGGREGATE BASE PREPARATION AND COMPACTION AND TO CONFIRM STRUCTURAL SECTIONS SHOWN ABOVE.
**SEE ARCHITECTURAL PLANS FOR SCORING, CONTROL JOINTS, PATTERN, COLOR AND ADDITIONAL CONCRETE DETAILS AND SPECIFICATIONS.

KEY NOTES

SEE TOPOGRAPHIC AND DEMOLITION SHEET C2.1-2.4 FOR ADDITIONAL REMOVAL, REPLACEMENT AND PROTECTION NOTES.

SEE ARCHITECTURAL AND SPECIALTY TRACK PLANS FOR ADDITIONAL DETAILS REGARDING THE DIMENSIONS AND CONSTRUCTION OF THE TRACK AND COMPETITION AREAS.

A SAWCUT AND REMOVE EXISTING PAVEMENT, CONCRETE, AND OR CURB AS REQUIRED PER THESE PLANS. CONTRACTOR MAY NEED TO FIELD ADJUST SAWCUT LINE TO REMOVE THE PAVEMENT OR CONCRETE SECTION AT A CLEAN EDGE OR NEAREST JOINT BASED ON FIELD CONDITIONS. WHILE MAINTAINING ACCESSIBLE LAP JOINT PER DETAIL 2 ON SHEET C1.4 SHALL APPLY TO ALL SAWCUT LOCATIONS ALONG AC PAVEMENT, UNLESS OTHERWISE NOTED.

B ACCESSIBLE PATH OF TRAVEL NOT TO EXCEED 5.0% MAX RUNNING SLOPE AND 2.0% MAX CROSS SLOPE. PLAZA/COURTYARD AREAS, INTERSECTING PATHS, AND LANDINGS SHALL HAVE A 2% MAX SLOPE IN ANY DIRECTION. ACCESSIBLE PATH OF TRAVEL DETERMINATION, ACCESSIBILITY AND SIGNAGE SHALL BE DETERMINED BY ARCHITECTURAL AND LANDSCAPE PLANS. SEE ARCHITECTURAL AND LANDSCAPE PLANS FOR DIMENSIONS AND DETAILS, INCLUDING HANDRAILS, WHERE APPLICABLE.

C CONTRACTOR SHALL INSTALL RAISED PLANTER PER ARCHITECTURAL PLANS AND SPECIFICATIONS.

D CONTRACTOR SHALL INSTALL 4' VALLEY GUTTER PER CITY OF ATWATER STANDARDS AND SPECIFICATIONS. SEE DETAIL 4 ON SHEET C1.4 FOR ADDITIONAL INFORMATION.

E CONTRACTOR SHALL INSTALL FENCE AND/OR GATE, AND MOW STRIP PER ARCHITECTURAL PLANS AND SPECIFICATIONS.

F CONTRACTOR SHALL CONSTRUCT BUILDING PER ARCHITECTURAL PLANS AND SPECIFICATIONS.

G CONTRACTOR SHALL INSTALL EQUIPMENT/ARCHITECTURAL AMENITY PER ARCHITECTURAL PLANS. REFER TO ARCHITECTURAL PLANS FOR ADDITIONAL INFORMATION. *USE EXTREME CAUTION* WHEN INSTALLING POST OR FOOTINGS TO AVOID UNDERGROUND UTILITIES.

H CONTRACTOR SHALL INSTALL OUTDOOR BLEACHERS PER ARCHITECTURAL PLANS AND SPECIFICATIONS.

J CONTRACTOR SHALL INSTALL SLOT DRAIN PER ARCHITECTURAL DETAIL 1 ON SHEET TR-4.

K CONTRACTOR SHALL INSTALL "ACO" TRENCH DRAIN OR APPROVED EQUAL PER DETAIL 1 ON SHEET C1.5.

P ACCESSIBLE RAMP 8.33% MAX SLOPE WITH A 2.0% MAX LEVEL LANDING PER CITY OF ATWATER STANDARD PLANS AND SPECIFICATIONS. SEE ARCHITECTURAL PLANS FOR ADDITIONAL INFORMATION.

W CONTRACTOR SHALL INSTALL WALL PER ARCHITECTURAL PLANS AND SPECIFICATIONS.

S CONTRACTOR SHALL INSTALL STEPS, GUARDRAIL, AND/OR HAND RAILINGS, SEE ARCHITECTURAL PLANS FOR DETAILS AND SPECIFICATIONS.

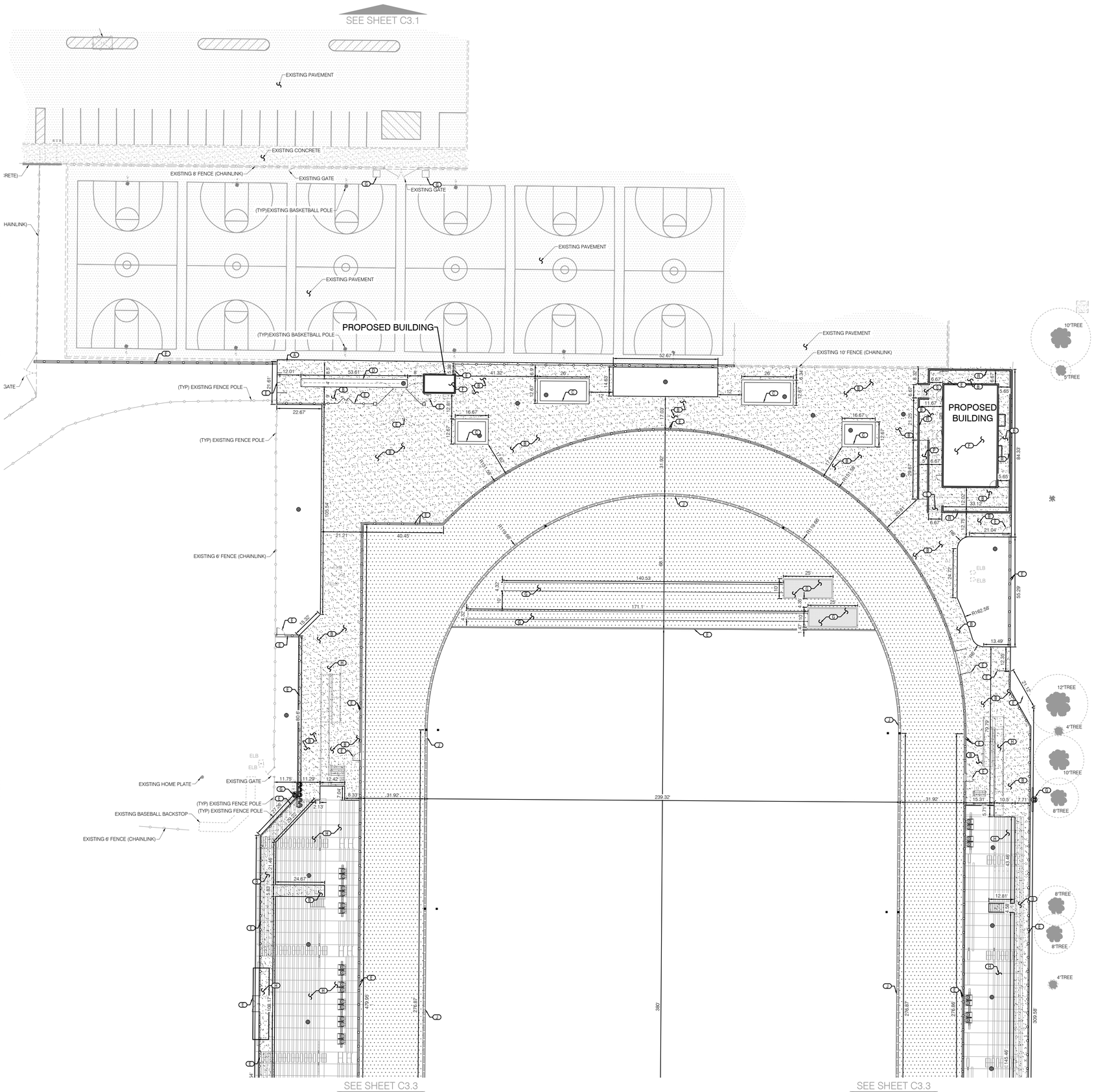

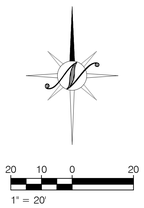

LEGEND

- EXISTING CONCRETE
- EXISTING PAVEMENT
- *PAVEMENT SECTION TI = 5, R-VALUE = 43, 2.5"AC/4.5" CLASS II AB (95% RC) SEE SPECIALTY TRACK PLANS FOR DETAILS REGARDING ALL-WEATHER SURFACING.
- *CONCRETE SECTION - PEDESTRIAN 4"PCC/6" CLASS II AB (90% RC) W/ #4 REBAR @ 24" O.C., BOTH WAYS

*CONTRACTOR SHALL REVIEW GEOTECHNICAL REPORT FOR ADDITIONAL RECOMMENDATIONS INCLUDING SUBGRADE AND AGGREGATE BASE PREPARATION AND COMPACTION AND TO CONFIRM STRUCTURAL SECTIONS SHOWN ABOVE.
**SEE ARCHITECTURAL PLANS FOR SCORING, CONTROL JOINTS, PATTERN, COLOR AND ADDITIONAL CONCRETE DETAILS AND SPECIFICATIONS.

KEY NOTES

SEE TOPOGRAPHIC AND DEMOLITION SHEET C2.1-2.4 FOR ADDITIONAL REMOVAL, REPLACEMENT AND PROTECTION NOTES.

SEE ARCHITECTURAL AND SPECIALTY TRACK PLANS FOR ADDITIONAL DETAILS REGARDING THE DIMENSIONS AND CONSTRUCTION OF THE TRACK AND COMPETITION AREAS.

(E) SAWCUT AND REMOVE EXISTING PAVEMENT, CONCRETE, AND OR CURB AS REQUIRED PER THESE PLANS. CONTRACTOR MAY NEED TO FIELD ADJUST SAWCUT LINE TO REMOVE THE PAVEMENT OR CONCRETE SECTION AT A CLEAN EDGE OR NEAREST JOINT BASED ON FIELD CONDITIONS. WHILE MAINTAINING ACCESSIBLE LAP JOINT PER DETAIL 2 ON SHEET C1.4 SHALL APPLY TO ALL SAWCUT LOCATIONS ALONG AC PAVEMENT, UNLESS OTHERWISE NOTED.

(E) ACCESSIBLE PATH OF TRAVEL NOT TO EXCEED 5.0% MAX RUNNING SLOPE AND 2.0% MAX CROSS SLOPE. PLAZA/COURTYARD AREAS, INTERSECTING PATHS, AND LANDINGS SHALL HAVE A 2% MAX SLOPE IN ANY DIRECTION. ACCESSIBLE PATH OF TRAVEL DETERMINATION, ACCESSIBILITY AND SIGNAGE SHALL BE DETERMINED BY ARCHITECTURAL AND LANDSCAPE PLANS. SEE ARCHITECTURAL AND LANDSCAPE PLANS FOR DIMENSIONS AND DETAILS, INCLUDING HANDRAILS, WHERE APPLICABLE.

(E) CONTRACTOR SHALL INSTALL RAISED PLANTER PER ARCHITECTURAL PLANS AND SPECIFICATIONS.

(E) CONTRACTOR SHALL INSTALL 4' VALLEY GUTTER PER CITY OF ATWATER STANDARDS AND SPECIFICATIONS. SEE DETAIL 4 ON SHEET C1.4 FOR ADDITIONAL INFORMATION.

(E) CONTRACTOR SHALL INSTALL FENCE AND/OR GATE, AND MOW STRIP PER ARCHITECTURAL PLANS AND SPECIFICATIONS.

(E) CONTRACTOR SHALL CONSTRUCT BUILDING PER ARCHITECTURAL PLANS AND SPECIFICATIONS.

(E) CONTRACTOR SHALL INSTALL EQUIPMENT/ARCHITECTURAL AMENITY PER ARCHITECTURAL PLANS. REFER TO ARCHITECTURAL PLANS FOR ADDITIONAL INFORMATION. *USE EXTREME CAUTION* WHEN INSTALLING POST OR FOOTINGS TO AVOID UNDERGROUND UTILITIES.

(E) CONTRACTOR SHALL INSTALL OUTDOOR BLEACHERS PER ARCHITECTURAL PLANS AND SPECIFICATIONS.

(E) CONTRACTOR SHALL INSTALL SLOT DRAIN PER ARCHITECTURAL DETAIL 1 ON SHEET TR-4.

(E) CONTRACTOR SHALL INSTALL "ACO" TRENCH DRAIN OR APPROVED EQUAL PER DETAIL 1 ON SHEET C1.5.

(E) ACCESSIBLE RAMP 8.33% MAX SLOPE WITH A 2.0% MAX LEVEL LANDING PER CITY OF ATWATER STANDARD PLANS AND SPECIFICATIONS. SEE ARCHITECTURAL PLANS FOR ADDITIONAL INFORMATION.

(E) CONTRACTOR SHALL INSTALL WALL PER ARCHITECTURAL PLANS AND SPECIFICATIONS.

(E) CONTRACTOR SHALL INSTALL STEPS, GUARDRAIL, AND/OR HAND RAILINGS, SEE ARCHITECTURAL PLANS FOR DETAILS AND SPECIFICATIONS.

IDENTIFICATION STAMP
DIV. OF THE STATE ARCHITECT
APP: 02-121275 INC:
REVIEWED FOR
SS ☑ FLS ☑ ACS ☑
DATE: 12/15/2023

DESIGN WEST California

CALIFORNIA DESIGN WEST ARCHITECTS, Inc.

2100 19th Street
Sacramento, CA 95818

Phone: (916) 446-2466
Fax: (916) 446-5118
Web Page: ca-dw.com

These plans and prints thereof, as instruments of service, are owned by the architect and are for the use on this project only. Reproduction and/or distribution without the prior written consent of the architect is forbidden.

Copyright California Design West Architects, Inc.

ARCHITECT: CONSULTANT:

LICENSED ARCHITECT — NO. C 17258 — MITCHELL A. MCALISTER — STATE OF CALIFORNIA

REGISTERED PROFESSIONAL ENGINEER — SCOTT M. WHITE — No. C85920 — Date Signed: 10/10/23 — CIVIL — STATE OF CALIFORNIA

CONSULTANT:

NorthStar Engineering Group, Inc.
• CIVIL ENGINEERING • SURVEYING • PLANNING •
620 12th Street Modesto, CA 95354
(209) 524-3525 Phone (209) 524-3526 Fax

PROJECT NAME:

BUHACH COLONY HIGH SCHOOL

1800 NORTH BUHACH RD
ATWATER, CA 95301

NEW STADIUM; FOOTBALL FIELD, ALL-WEATHER TRACK, BLEACHERS, CONCESSIONS UPGRADES

MERCED UNION HIGH SCHOOL DISTRICT

MERCED COUNTY

KEY PLAN:

SHEET TITLE:

DIMENSION AND PAVING PLAN

JOB NUMBER:	SHEET NUMBER:
DATE: OCT. 10, 2023	C3.2
REVISION:	

PLOTTED: 10/10/2023 14:42 PLOTTED BY: Johnnie
DRAWING: P:\2021\21 Merced County High School\Civil\Sheet Files\C3.2\21BUDrafting Plan\C3.2 Site.dwg

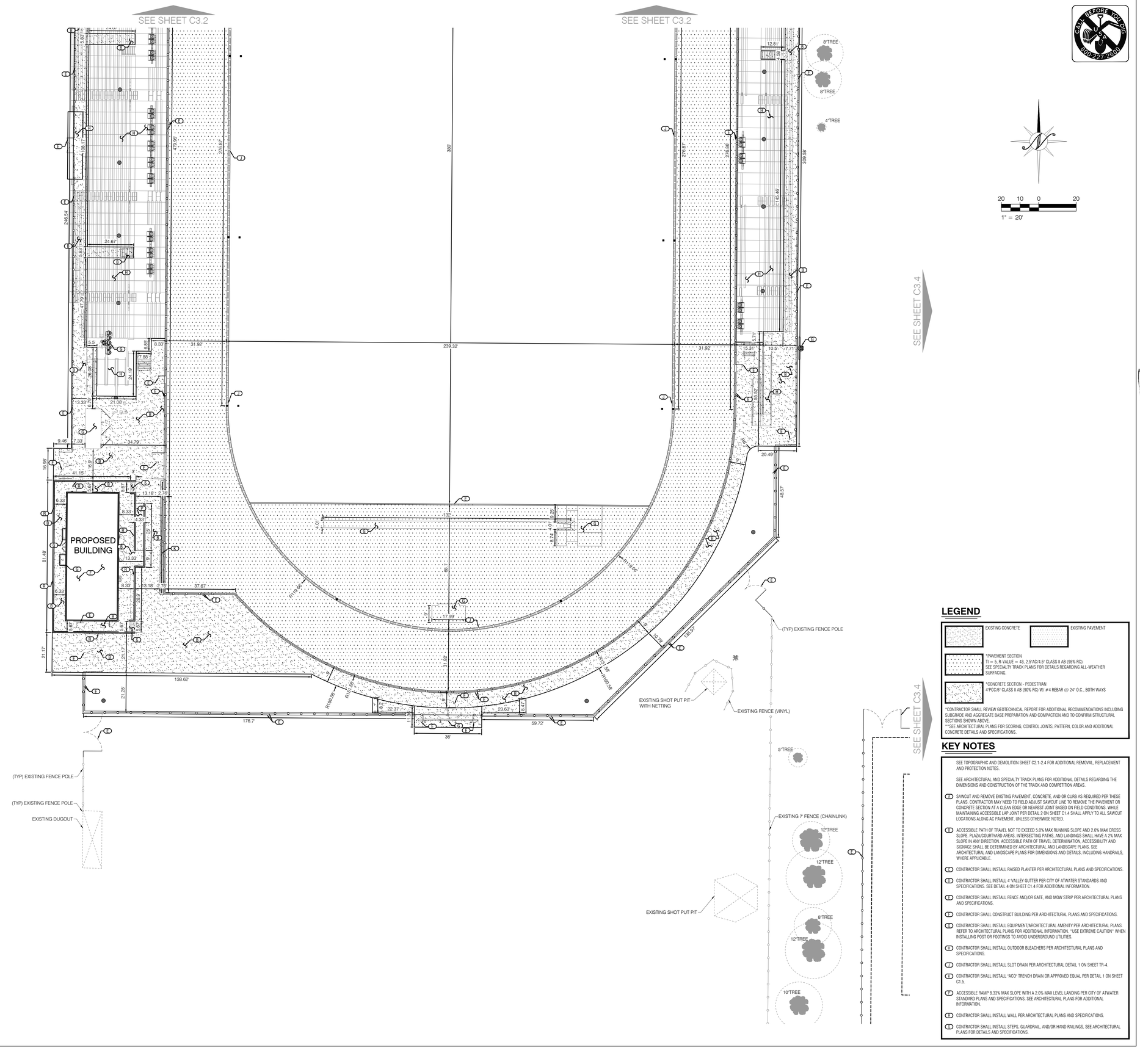

LEGEND

- EXISTING CONCRETE
- EXISTING PAVEMENT
- *PAVEMENT SECTION TI = 5, R-VALUE = 43, 2.5"AC/4.5" CLASS II AB (95% RC) SEE SPECIALTY TRACK PLANS FOR DETAILS REGARDING ALL-WEATHER SURFACING.
- *CONCRETE SECTION - PEDESTRIAN 4"PCC/6" CLASS II AB (90% RC) W/ #4 REBAR @ 24" O.C., BOTH WAYS

*CONTRACTOR SHALL REVIEW GEOTECHNICAL REPORT FOR ADDITIONAL RECOMMENDATIONS INCLUDING SUBGRADE AND AGGREGATE BASE PREPARATION AND COMPACTION AND TO CONFIRM STRUCTURAL SECTIONS SHOWN ABOVE.
**SEE ARCHITECTURAL PLANS FOR SCORING, CONTROL JOINTS, PATTERN, COLOR AND ADDITIONAL CONCRETE DETAILS AND SPECIFICATIONS.

KEY NOTES

SEE TOPOGRAPHIC AND DEMOLITION SHEET C2.1-2.4 FOR ADDITIONAL REMOVAL, REPLACEMENT AND PROTECTION NOTES.

SEE ARCHITECTURAL AND SPECIALTY TRACK PLANS FOR ADDITIONAL DETAILS REGARDING THE DIMENSIONS AND CONSTRUCTION OF THE TRACK AND COMPETITION AREAS.

(2) SAWCUT AND REMOVE EXISTING PAVEMENT, CONCRETE, AND OR CURB AS REQUIRED PER THESE PLANS. CONTRACTOR MAY NEED TO FIELD ADJUST SAWCUT LINE TO REMOVE THE PAVEMENT OR CONCRETE SECTION AT A CLEAN EDGE OR NEAREST JOINT BASED ON FIELD CONDITIONS. WHILE MAINTAINING ACCESSIBLE LAP JOINT PER DETAIL 2 ON SHEET C1.4 SHALL APPLY TO ALL SAWCUT LOCATIONS ALONG AC PAVEMENT, UNLESS OTHERWISE NOTED.

(3) ACCESSIBLE PATH OF TRAVEL NOT TO EXCEED 5.0% MAX RUNNING SLOPE AND 2.0% MAX CROSS SLOPE. PLAZA/COURTYARD AREAS, INTERSECTING PATHS, AND LANDINGS SHALL HAVE A 2% MAX SLOPE IN ANY DIRECTION. ACCESSIBLE PATH OF TRAVEL DETERMINATION, ACCESSIBILITY AND SIGNAGE SHALL BE DETERMINED BY ARCHITECTURAL AND LANDSCAPE PLANS. SEE ARCHITECTURAL AND LANDSCAPE PLANS FOR DIMENSIONS AND DETAILS, INCLUDING HANDRAILS, WHERE APPLICABLE.

(4) CONTRACTOR SHALL INSTALL RAISED PLANTER PER ARCHITECTURAL PLANS AND SPECIFICATIONS.

(5) CONTRACTOR SHALL INSTALL 4' VALLEY GUTTER PER CITY OF ATWATER STANDARDS AND SPECIFICATIONS. SEE DETAIL 4 ON SHEET C1.4 FOR ADDITIONAL INFORMATION.

(6) CONTRACTOR SHALL INSTALL FENCE AND/OR GATE, AND MOW STRIP PER ARCHITECTURAL PLANS AND SPECIFICATIONS.

(7) CONTRACTOR SHALL CONSTRUCT BUILDING PER ARCHITECTURAL PLANS AND SPECIFICATIONS.

(8) CONTRACTOR SHALL INSTALL EQUIPMENT/ARCHITECTURAL AMENITY PER ARCHITECTURAL PLANS. REFER TO ARCHITECTURAL PLANS FOR ADDITIONAL INFORMATION. "USE EXTREME CAUTION" WHEN INSTALLING POST OR FOOTINGS TO AVOID UNDERGROUND UTILITIES.

(11) CONTRACTOR SHALL INSTALL OUTDOOR BLEACHERS PER ARCHITECTURAL PLANS AND SPECIFICATIONS.

(7) CONTRACTOR SHALL INSTALL SLOT DRAIN PER ARCHITECTURAL DETAIL 1 ON SHEET TR-4.

(9) CONTRACTOR SHALL INSTALL "ACO" TRENCH DRAIN OR APPROVED EQUAL PER DETAIL 1 ON SHEET C1.5.

(F) ACCESSIBLE RAMP 8.33% MAX SLOPE WITH A 2.0% MAX LEVEL LANDING PER CITY OF ATWATER STANDARD PLANS AND SPECIFICATIONS. SEE ARCHITECTURAL PLANS FOR ADDITIONAL INFORMATION.

(B) CONTRACTOR SHALL INSTALL WALL PER ARCHITECTURAL PLANS AND SPECIFICATIONS.

(S) CONTRACTOR SHALL INSTALL STEPS, GUARDRAIL, AND/OR HAND RAILINGS, SEE ARCHITECTURAL PLANS FOR DETAILS AND SPECIFICATIONS.

IDENTIFICATION STAMP
DIV. OF THE STATE ARCHITECT
APP: 02-121275 INC:
REVIEWED FOR
SS ☑ FLS ☑ ACS ☑
DATE: 12/15/2023

CALIFORNIA DESIGN WEST ARCHITECTS, Inc.

2100 19th Street
Sacramento, CA 95818

Phone: (916) 446-2466
Fax: (916) 446-5118
Web Page: ca-dw.com

These plans and prints thereof, as instruments of service, are owned by the architect and are for the use on this project only. Reproduction and/or distribution without the prior written consent of the architect is forbidden.

Copyright California Design West Architects, Inc.

ARCHITECT: CONSULTANT:

LICENSED ARCHITECT MITCHELL A. McALISTER NO. C17250 REGISTERED PROFESSIONAL ENGINEER MITCHELL M. WARD No. C85920 Date Signed 10/10/23 CIVIL STATE OF CALIFORNIA

CONSULTANT:

NorthStar Engineering Group, Inc.
• CIVIL ENGINEERING • SURVEYING • PLANNING •
620 12th Street Modesto, CA 95354
(209) 524-3525 Phone (209) 524-3526 Fax

PROJECT NAME:

BUHACH COLONY HIGH SCHOOL

1800 NORTH BUHACH RD
ATWATER, CA 95301

NEW STADIUM; FOOTBALL FIELD, ALL-WEATHER TRACK, BLEACHERS, CONCESSIONS UPGRADES

MERCED UNION HIGH SCHOOL DISTRICT

MERCED COUNTY

KEY PLAN:

SHEET TITLE:
DIMENSION AND PAVING PLAN

JOB NUMBER:	SHEET NUMBER:
DATE: OCT. 10, 2023	C3.3
REVISION:	

PLOTTED: 10/10/2023 9:42 PLOTTED BY: Jwheeler
FILENAME: C:\22-214 Buhach Colony High School\Site and Field\22-214BUCoSheet Plans\C3.3 DIM.dwg

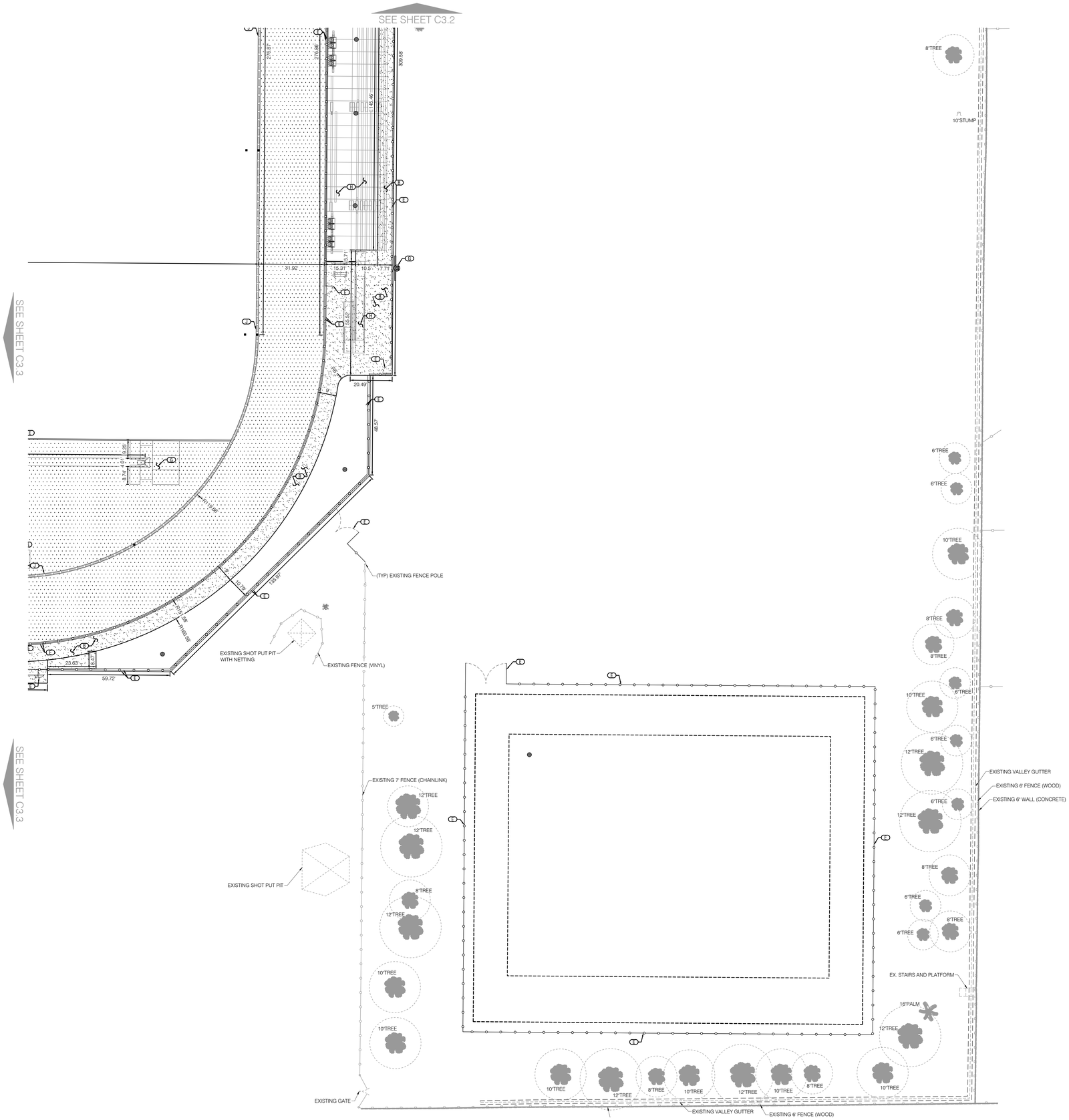

CALL BEFORE YOU DIG
800-227-2600

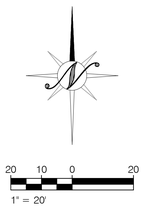

LEGEND

EXISTING CONCRETE

EXISTING PAVEMENT

*PAVEMENT SECTION
TI = 5, R-VALUE = 43, 2.5"AC/4.5" CLASS II AB (95% RC)
SEE SPECIALTY TRACK PLANS FOR DETAILS REGARDING ALL-WEATHER SURFACING.

*CONCRETE SECTION - PEDESTRIAN
4"PCC/6" CLASS II AB (90% RC) W/ #4 REBAR @ 24" O.C., BOTH WAYS

*CONTRACTOR SHALL REVIEW GEOTECHNICAL REPORT FOR ADDITIONAL RECOMMENDATIONS INCLUDING SUBGRADE AND AGGREGATE BASE PREPARATION AND COMPACTION AND TO CONFIRM STRUCTURAL SECTIONS SHOWN ABOVE.
**SEE ARCHITECTURAL PLANS FOR SCORING, CONTROL JOINTS, PATTERN, COLOR AND ADDITIONAL CONCRETE DETAILS AND SPECIFICATIONS.

KEY NOTES

SEE TOPOGRAPHIC AND DEMOLITION SHEET C2.1-2.4 FOR ADDITIONAL REMOVAL, REPLACEMENT AND PROTECTION NOTES.

SEE ARCHITECTURAL AND SPECIALTY TRACK PLANS FOR ADDITIONAL DETAILS REGARDING THE DIMENSIONS AND CONSTRUCTION OF THE TRACK AND COMPETITION AREAS.

(A) SAWCUT AND REMOVE EXISTING PAVEMENT, CONCRETE, AND OR CURB AS REQUIRED PER THESE PLANS. CONTRACTOR MAY NEED TO FIELD ADJUST SAWCUT LINE TO REMOVE THE PAVEMENT OR CONCRETE SECTION AT A CLEAN EDGE OR NEAREST JOINT BASED ON FIELD CONDITIONS. WHILE MAINTAINING ACCESSIBLE LAP JOINT PER DETAIL 2 ON SHEET C1.4 SHALL APPLY TO ALL SAWCUT LOCATIONS ALONG AC PAVEMENT, UNLESS OTHERWISE NOTED.

(B) ACCESSIBLE PATH OF TRAVEL NOT TO EXCEED 5.0% MAX RUNNING SLOPE AND 2.0% MAX CROSS SLOPE. PLAZA/COURTYARD AREAS, INTERSECTING PATHS, AND LANDINGS SHALL HAVE A 2% MAX SLOPE IN ANY DIRECTION. ACCESSIBLE PATH OF TRAVEL DETERMINATION, ACCESSIBILITY AND SIGNAGE SHALL BE DETERMINED BY ARCHITECTURAL AND LANDSCAPE PLANS. SEE ARCHITECTURAL AND LANDSCAPE PLANS FOR DIMENSIONS AND DETAILS, INCLUDING HANDRAILS, WHERE APPLICABLE.

(C) CONTRACTOR SHALL INSTALL RAISED PLANTER PER ARCHITECTURAL PLANS AND SPECIFICATIONS.

(D) CONTRACTOR SHALL INSTALL 4' VALLEY GUTTER PER CITY OF ATWATER STANDARDS AND SPECIFICATIONS. SEE DETAIL 4 ON SHEET C1.4 FOR ADDITIONAL INFORMATION.

(E) CONTRACTOR SHALL INSTALL FENCE AND/OR GATE, AND MOW STRIP PER ARCHITECTURAL PLANS AND SPECIFICATIONS.

(F) CONTRACTOR SHALL CONSTRUCT BUILDING PER ARCHITECTURAL PLANS AND SPECIFICATIONS.

(G) CONTRACTOR SHALL INSTALL EQUIPMENT/ARCHITECTURAL AMENITY PER ARCHITECTURAL PLANS. REFER TO ARCHITECTURAL PLANS FOR ADDITIONAL INFORMATION. *USE EXTREME CAUTION* WHEN INSTALLING POST OR FOOTINGS TO AVOID UNDERGROUND UTILITIES.

(H) CONTRACTOR SHALL INSTALL OUTDOOR BLEACHERS PER ARCHITECTURAL PLANS AND SPECIFICATIONS.

(J) CONTRACTOR SHALL INSTALL SLOT DRAIN PER ARCHITECTURAL DETAIL 1 ON SHEET TR-4.

(K) CONTRACTOR SHALL INSTALL "ACO" TRENCH DRAIN OR APPROVED EQUAL PER DETAIL 1 ON SHEET C1.5.

(P) ACCESSIBLE RAMP 8.33% MAX SLOPE WITH A 2.0% MAX LEVEL LANDING PER CITY OF ATWATER STANDARD PLANS AND SPECIFICATIONS. SEE ARCHITECTURAL PLANS FOR ADDITIONAL INFORMATION.

(R) CONTRACTOR SHALL INSTALL WALL PER ARCHITECTURAL PLANS AND SPECIFICATIONS.

(S) CONTRACTOR SHALL INSTALL STEPS, GUARDRAIL, AND/OR HAND RAILINGS, SEE ARCHITECTURAL PLANS FOR DETAILS AND SPECIFICATIONS.

IDENTIFICATION STAMP
DIV. OF THE STATE ARCHITECT
APP: 02-121275 INC:
REVIEWED FOR
SS ☑ FLS ☑ ACS ☑
DATE: 12/15/2023

CALIFORNIA DESIGN
WEST ARCHITECTS, Inc.

2100 19th Street
Sacramento, CA 95818

Phone: (916) 446-2466
Fax: (916) 446-5118
Web Page: ca-dw.com

These plans and prints thereof, as instruments of service, are owned by the architect and are for the use on this project only. Reproduction and/or distribution without the prior written consent of the architect is forbidden.

Copyright California Design West Architects, Inc.

ARCHITECT: CONSULTANT:

LICENSED ARCHITECT
MITCHELL A. MCALISTER
No. C17250
REGISTERED PROFESSIONAL ENGINEER
No. C85920
Date Signed: 10/10/23
CIVIL
STATE OF CALIFORNIA

CONSULTANT:

NorthStar Engineering Group, Inc.
• CIVIL ENGINEERING • SURVEYING • PLANNING •
620 12th Street Modesto, CA 95354
(209) 524-3525 Phone (209) 524-3526 Fax

PROJECT NAME:

BUHACH COLONY HIGH SCHOOL

1800 NORTH BUHACH RD
ATWATER, CA 95301

NEW STADIUM; FOOTBALL FIELD, ALL-WEATHER TRACK, BLEACHERS, CONCESSIONS UPGRADES

MERCED UNION HIGH SCHOOL DISTRICT

MERCED COUNTY

KEY PLAN:

SHEET TITLE:

DIMENSION AND PAVING PLAN

JOB NUMBER:	SHEET NUMBER:
DATE: OCT. 10, 2023	C3.4
REVISION:	

PLOTTED: 10/13/2023 9:42:29 PLOTTED BY: Jatinder
Path:N:\Projects\Buhach Colony High School\Cad Files and Files\Sheets\C3.3-3.4 DIM.dwg

CALL BEFORE YOU DIG 800-227-2600

IDENTIFICATION STAMP
DIV. OF THE STATE ARCHITECT
APP: 02-121275 INC:
REVIEWED FOR
SS ☑ FLS ☑ ACS ☑
DATE: 12/15/2023

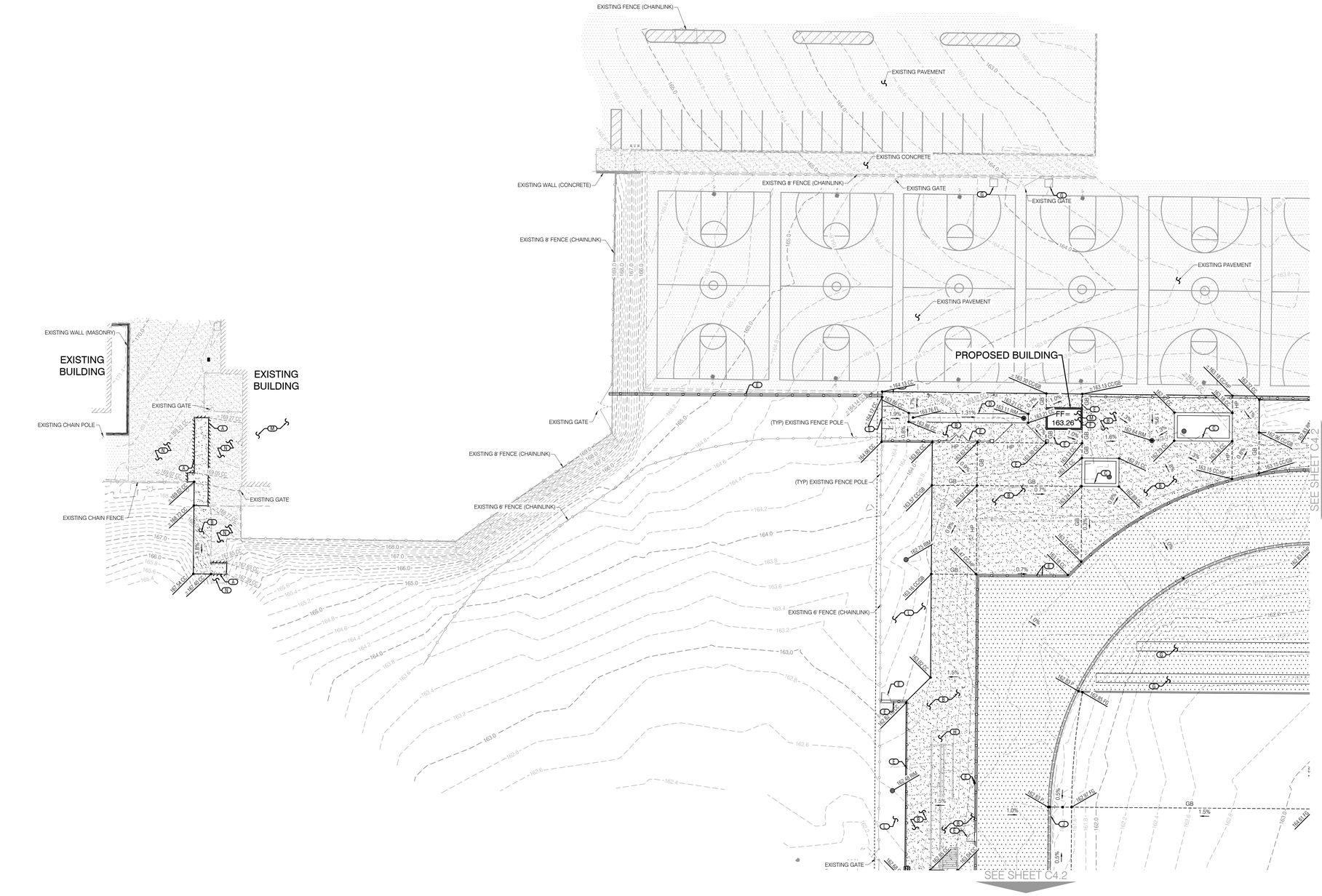

20 10 0 20
1" = 20'

KEY NOTES

SEE TOPOGRAPHIC AND DEMOLITION SHEET C2.1-2.4 FOR ADDITIONAL REMOVAL, REPLACEMENT AND PROTECTION NOTES.

SEE ARCHITECTURAL PLANS FOR ADDITIONAL DETAILS REGARDING THE DIMENSIONS AND CONSTRUCTION OF THE TRACK AND COMPETITION AREAS.

(A) SAWCUT AND REMOVE EXISTING PAVEMENT, CONCRETE, AND OR CURB AS REQUIRED PER THESE PLANS. CONTRACTOR MAY NEED TO FIELD ADJUST SAWCUT LINE TO REMOVE THE PAVEMENT OR CONCRETE SECTION AT A CLEAN EDGE OR NEAREST JOINT BASED ON FIELD CONDITIONS. WHILE MAINTAINING ACCESSIBLE LAP JOINT PER DETAIL 2 ON SHEET C1.4 SHALL APPLY TO ALL SAWCUT LOCATIONS ALONG AC PAVEMENT, UNLESS OTHERWISE NOTED.

(B) ACCESSIBLE PATH OF TRAVEL NOT TO EXCEED 5.0% MAX RUNNING SLOPE AND 2.0% MAX CROSS SLOPE. PLAZA/COURTYARD AREAS, INTERSECTING PATHS, AND LANDINGS SHALL HAVE A 2% MAX SLOPE IN ANY DIRECTION. ACCESSIBLE PATH OF TRAVEL DETERMINATION, ACCESSIBILITY AND SIGNAGE SHALL BE DETERMINED BY ARCHITECTURAL AND LANDSCAPE PLANS. SEE ARCHITECTURAL AND LANDSCAPE PLANS FOR DIMENSIONS AND DETAILS, INCLUDING HANDRAILS, WHERE APPLICABLE.

(C) CONTRACTOR SHALL INSTALL RAISED PLANTER PER ARCHITECTURAL PLANS AND SPECIFICATIONS.

(D) CONTRACTOR SHALL INSTALL 4' VALLEY GUTTER PER CITY OF ATWATER STANDARDS AND SPECIFICATIONS. SEE DETAIL 4 ON SHEET C1.4 FOR ADDITIONAL INFORMATION.

(E) CONTRACTOR SHALL INSTALL FENCE AND/OR GATE, AND MOW STRIP PER ARCHITECTURAL PLANS AND SPECIFICATIONS.

(F) CONTRACTOR SHALL CONSTRUCT BUILDING PER ARCHITECTURAL PLANS AND SPECIFICATIONS.

(G) CONTRACTOR SHALL INSTALL EQUIPMENT/ARCHITECTURAL AMENITY PER ARCHITECTURAL PLANS. REFER TO ARCHITECTURAL PLANS FOR ADDITIONAL INFORMATION. "USE EXTREME CAUTION" WHEN INSTALLING POST OR FOOTINGS TO AVOID UNDERGROUND UTILITIES.

(H) CONTRACTOR SHALL INSTALL OUTDOOR BLEACHERS PER ARCHITECTURAL PLANS AND SPECIFICATIONS.

(I) CONTRACTOR SHALL INSTALL SLOT DRAIN PER ARCHITECTURAL DETAIL 1 ON SHEET TR-4.

(J) CONTRACTOR SHALL INSTALL ACO TRENCH DRAIN OR APPROVED EQUAL PER DETAIL 1 ON SHEET C1.5.

(K) CONTRACTOR SHALL SWALE AND GRADE LANDSCAPE AREA IN SUCH A WAY THAT NO PONDING WILL OCCUR. CONTRACTOR SHALL GRADE LANDSCAPE AREAS SO THAT ALL RUNOFF IS COLLECTED IN THE STORM DRAIN SYSTEM. ALL LANDSCAPE AREAS THAT ABUT ANY PORTION OF THE BUILDING SHALL BE A MINIMUM OF EIGHT INCHES (8") BELOW FINISHED FLOOR OF THE ABUTTING BUILDING AND IN NO CASE SHALL THE LANDSCAPE AREA BE GRADED OR LANDSCAPED SUCH THAT WATER DRAINS TOWARD THE BUILDING.

(M) PRIOR TO CONSTRUCTING ANY CONCRETE OR PAVEMENT THE CONTRACTOR SHALL VERIFY THE FINISH FLOOR ELEVATIONS AT ALL DOORS. CONTRACTOR SHALL HOLD FIELD VERIFIED FINISH FLOOR GRADES, ACCOUNT FOR DOOR THRESHOLDS, AND ADJUST GRADES AS NECESSARY TO STAY IN COMPLIANCE WITH CURRENT ACCESSIBLE STANDARDS. CONTRACTOR SHALL NOTIFY NORTHSTAR ENGINEERING IMMEDIATELY IF ANY GRADE ADJUSTMENTS WILL CREATE ANY ACCESSIBILITY ISSUES.

(N) CONTRACTOR SHALL TRANSITION GRADE TO MATCH EXISTING.

(P) ACCESSIBLE RAMP 8.33% MAX SLOPE WITH A 2.0% MAX LEVEL LANDING PER CITY OF ATWATER STANDARD PLANS AND SPECIFICATIONS. SEE ARCHITECTURAL PLANS FOR ADDITIONAL INFORMATION.

(R) CONTRACTOR SHALL INSTALL WALL AND/OR RAILING PER ARCHITECTURAL PLANS AND DETAILS.

(S) CONTRACTOR SHALL INSTALL STEPS, GUARDRAIL, AND/OR HAND RAILINGS, SEE ARCHITECTURAL PLANS FOR DETAILS AND SPECIFICATIONS.

DESIGN California WEST

CALIFORNIA DESIGN WEST ARCHITECTS, Inc.

2100 19th Street
Sacramento, CA 95818

Phone: (916) 446-2466
Fax: (916) 446-5118
Web Page: ca-dw.com

These plans and prints thereof, as instruments of service, are owned by the architect and are for the use on this project only. Reproduction and/or distribution without the prior written consent of the architect is forbidden.

Copyright California Design West Architects, Inc.

ARCHITECT: CONSULTANT:

LICENSED ARCHITECT MITCHELL A. McALISTER NO. C 17250 REN. 08-31-2025 STATE OF CALIFORNIA

REGISTERED PROFESSIONAL ENGINEER MITCHELL W. WARD No. C89920 Date Signed: 10/10/23 CIVIL STATE OF CALIFORNIA

CONSULTANT:

NorthStar Engineering Group, Inc.
• CIVIL ENGINEERING • SURVEYING • PLANNING •
620 12th Street Modesto, CA 95354
(209) 524-3525 Phone (209) 524-3526 Fax

PROJECT NAME:

BUHACH COLONY HIGH SCHOOL

1800 NORTH BUHACH RD
ATWATER, CA 95301

NEW STADIUM; FOOTBALL FIELD, ALL-WEATHER TRACK, BLEACHERS, CONCESSIONS UPGRADES

MERCED UNION HIGH SCHOOL DISTRICT

MERCED COUNTY

KEY PLAN:

SHEET TITLE:

GRADING AND DRAINAGE PLAN

JOB NUMBER:	SHEET NUMBER:
DATE: OCT. 10, 2023	C4.1
REVISION:	

PLOTTED: 10/10/2023 7:28 PLOTTED BY: Corey
PATHNAME: T:\2021\Buhach Colony High School Track and Field\23-24 FBB\Drafting Plans\C4.1.DWG.dwg

SEE SHEET C4.1

SEE SHEET C4.1

SEE SHEET C4.1

SEE SHEET C4.3

SEE SHEET C4.3

SEE SHEET C4.4

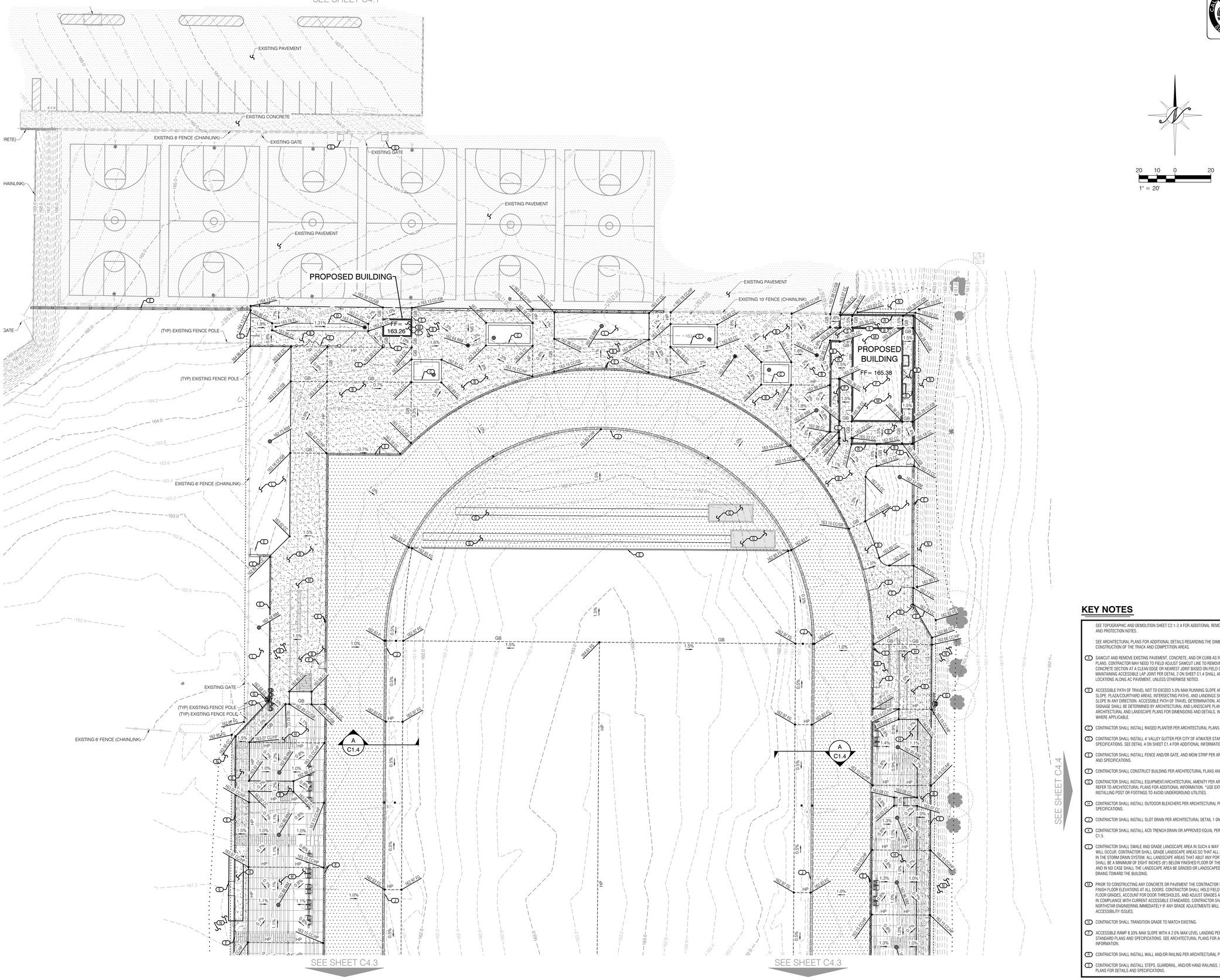

20 10 0 20

1" = 20'

KEY NOTES

SEE TOPOGRAPHIC AND DEMOLITION SHEET C2.1-2.4 FOR ADDITIONAL REMOVAL, REPLACEMENT AND PROTECTION NOTES.

SEE ARCHITECTURAL PLANS FOR ADDITIONAL DETAILS REGARDING THE DIMENSIONS AND CONSTRUCTION OF THE TRACK AND COMPETITION AREAS.

(1) SAWCUT AND REMOVE EXISTING PAVEMENT, CONCRETE, AND OR CURB AS REQUIRED PER THESE PLANS. CONTRACTOR MAY NEED TO FIELD ADJUST SAWCUT LINE TO REMOVE THE PAVEMENT OR CONCRETE SECTION AT A CLEAN EDGE OR NEAREST JOINT BASED ON FIELD CONDITIONS. WHILE MAINTAINING ACCESSIBLE LAP JOINT PER DETAIL 2 ON SHEET C1.4 SHALL APPLY TO ALL SAWCUT LOCATIONS ALONG AC PAVEMENT, UNLESS OTHERWISE NOTED.

(2) ACCESSIBLE PATH OF TRAVEL NOT TO EXCEED 5.0% MAX RUNNING SLOPE AND 2.0% MAX CROSS SLOPE. PLAZA/COURTYARD AREAS, INTERSECTING PATHS, AND LANDINGS SHALL HAVE A 2% MAX SLOPE IN ANY DIRECTION. ACCESSIBLE PATH OF TRAVEL DETERMINATION, ACCESSIBILITY AND SIGNAGE SHALL BE DETERMINED BY ARCHITECTURAL AND LANDSCAPE PLANS. SEE ARCHITECTURAL AND LANDSCAPE PLANS FOR DIMENSIONS AND DETAILS, INCLUDING HANDRAILS, WHERE APPLICABLE.

(3) CONTRACTOR SHALL INSTALL RAISED PLANTER PER ARCHITECTURAL PLANS AND SPECIFICATIONS.

(4) CONTRACTOR SHALL INSTALL 4' VALLEY GUTTER PER CITY OF ATWATER STANDARDS AND SPECIFICATIONS. SEE DETAIL 4 ON SHEET C1.4 FOR ADDITIONAL INFORMATION.

(5) CONTRACTOR SHALL INSTALL FENCE AND/OR GATE, AND MOW STRIP PER ARCHITECTURAL PLANS AND SPECIFICATIONS.

(6) CONTRACTOR SHALL CONSTRUCT BUILDING PER ARCHITECTURAL PLANS AND SPECIFICATIONS.

(7) CONTRACTOR SHALL INSTALL EQUIPMENT/ARCHITECTURAL AMENITY PER ARCHITECTURAL PLANS. REFER TO ARCHITECTURAL PLANS FOR ADDITIONAL INFORMATION. "USE EXTREME CAUTION" WHEN INSTALLING POST OR FOOTINGS TO AVOID UNDERGROUND UTILITIES.

(8) CONTRACTOR SHALL INSTALL OUTDOOR BLEACHERS PER ARCHITECTURAL PLANS AND SPECIFICATIONS.

(9) CONTRACTOR SHALL INSTALL SLOT DRAIN PER ARCHITECTURAL DETAIL 1 ON SHEET TR-4.

(10) CONTRACTOR SHALL INSTALL ACO TRENCH DRAIN OR APPROVED EQUAL PER DETAIL 1 ON SHEET C1.5.

(11) CONTRACTOR SHALL SWALE AND GRADE LANDSCAPE AREA IN SUCH A WAY THAT NO PONDING WILL OCCUR. CONTRACTOR SHALL GRADE LANDSCAPE AREAS SO THAT ALL RUNOFF IS COLLECTED IN THE STORM DRAIN SYSTEM. ALL LANDSCAPE AREAS THAT ABUT ANY PORTION OF THE BUILDING SHALL BE A MINIMUM OF EIGHT INCHES (8") BELOW FINISHED FLOOR OF THE ABUTTING BUILDING AND IN NO CASE SHALL THE LANDSCAPE AREA BE GRADED OR LANDSCAPED SUCH THAT WATER DRAINS TOWARD THE BUILDING.

(12) PRIOR TO CONSTRUCTING ANY CONCRETE OR PAVEMENT THE CONTRACTOR SHALL VERIFY THE FINISH FLOOR ELEVATIONS AT ALL DOORS. CONTRACTOR SHALL HOLD FIELD VERIFIED FINISH FLOOR GRADES, ACCOUNT FOR DOOR THRESHOLDS, AND ADJUST GRADES AS NECESSARY TO STAY IN COMPLIANCE WITH CURRENT ACCESSIBLE STANDARDS. CONTRACTOR SHALL NOTIFY NORTHSTAR ENGINEERING IMMEDIATELY IF ANY GRADE ADJUSTMENTS WILL CREATE ANY ACCESSIBILITY ISSUES.

(13) CONTRACTOR SHALL TRANSITION GRADE TO MATCH EXISTING.

(14) ACCESSIBLE RAMP 8.33% MAX SLOPE WITH A 2.0% MAX LEVEL LANDING PER CITY OF ATWATER STANDARD PLANS AND SPECIFICATIONS. SEE ARCHITECTURAL PLANS FOR ADDITIONAL INFORMATION.

(15) CONTRACTOR SHALL INSTALL WALL AND/OR RAILING PER ARCHITECTURAL PLANS AND DETAILS.

(16) CONTRACTOR SHALL INSTALL STEPS, GUARDRAIL, AND/OR HAND RAILINGS, SEE ARCHITECTURAL PLANS FOR DETAILS AND SPECIFICATIONS.

IDENTIFICATION STAMP
DIV. OF THE STATE ARCHITECT
APP: 02-121275 INC:
REVIEWED FOR
SS ☑ FLS ☑ ACS ☑
DATE: 12/15/2023

CALIFORNIA DESIGN
WEST ARCHITECTS, Inc.

2100 19th Street
Sacramento, CA 95818

Phone: (916) 446-2466
Fax: (916) 446-5118
Web Page: ca-dw.com

These plans and prints thereof, as instruments of service, are owned by the architect and are for the use on this project only. Reproduction and/or distribution without the prior written consent of the architect is forbidden.

Copyright California Design West Architects, Inc.

ARCHITECT: CONSULTANT:

LICENSED ARCHITECT MITCHELL A. McALISTER NO. C 17250 STATE OF CALIFORNIA

REGISTERED PROFESSIONAL ENGINEER MITCHELL M. WEAVER No. C85920 Date Signed: 10/10/23 CIVIL STATE OF CALIFORNIA

CONSULTANT:

NorthStar Engineering Group, Inc.
• CIVIL ENGINEERING • SURVEYING • PLANNING •
620 12th Street Modesto, CA 95354
(209) 524-3525 Phone (209) 524-3526 Fax

PROJECT NAME:

BUHACH COLONY HIGH SCHOOL

1800 NORTH BUHACH RD
ATWATER, CA 95301

NEW STADIUM; FOOTBALL FIELD, ALL-WEATHER TRACK, BLEACHERS, CONCESSIONS UPGRADES

MERCED UNION HIGH SCHOOL DISTRICT

MERCED COUNTY

KEY PLAN:

SHEET TITLE:

GRADING AND DRAINAGE PLAN

JOB NUMBER:	SHEET NUMBER:
	C4.2

DATE: OCT. 10, 2023

REVISION:

PLOTTED: 9/18/2023 1:29 PLOTTED BY: Corey
PRGNAME: V:\2021\21 Buhach Colony High School\Site Plan and Field\C2.3\1BSiteGrading Plan\C4.2 GRD.dwg

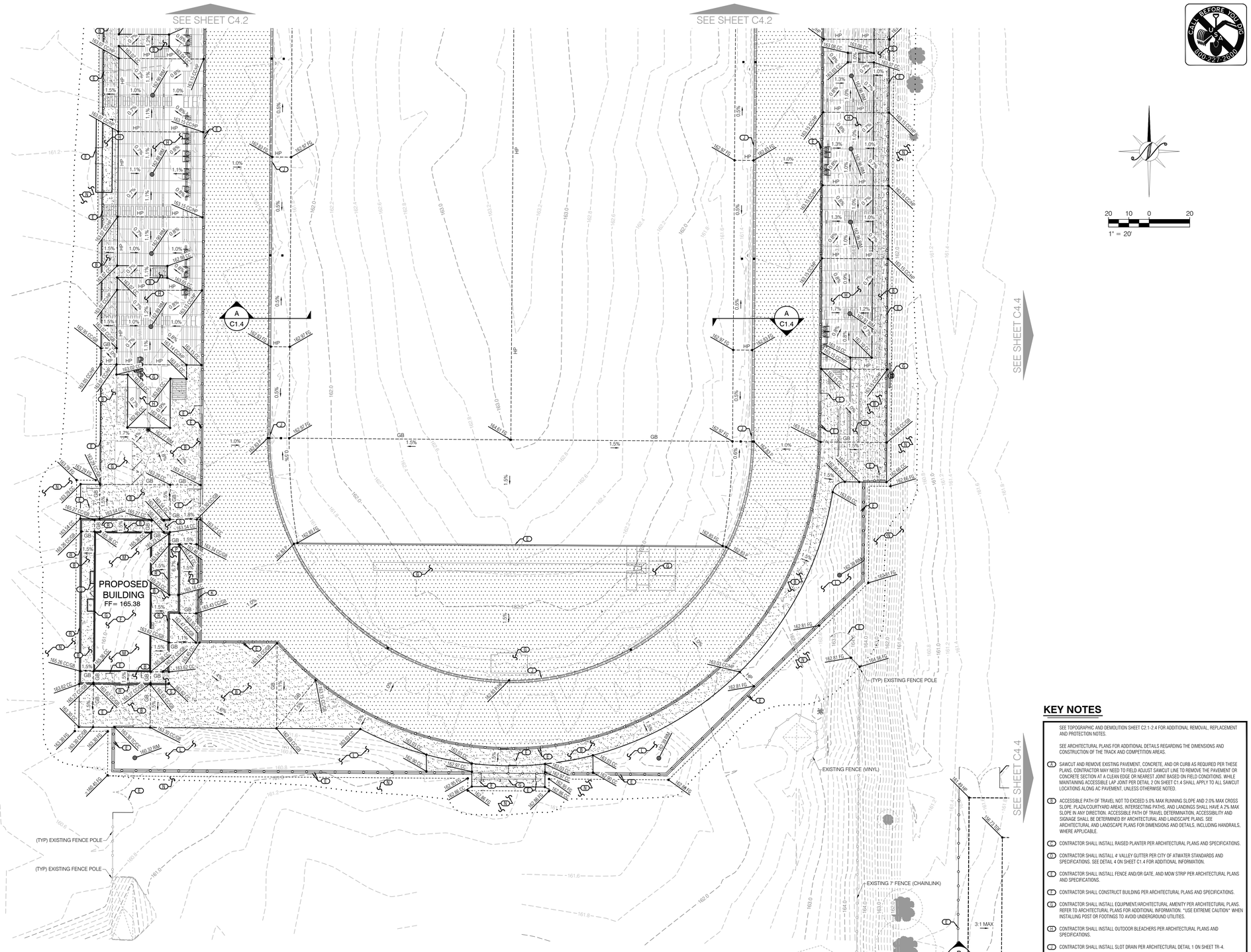

KEY NOTES

SEE TOPOGRAPHIC AND DEMOLITION SHEET C2.1-2.4 FOR ADDITIONAL REMOVAL, REPLACEMENT AND PROTECTION NOTES.

SEE ARCHITECTURAL PLANS FOR ADDITIONAL DETAILS REGARDING THE DIMENSIONS AND CONSTRUCTION OF THE TRACK AND COMPETITION AREAS.

(A) SAWCUT AND REMOVE EXISTING PAVEMENT, CONCRETE, AND OR CURB AS REQUIRED PER THESE PLANS. CONTRACTOR MAY NEED TO FIELD ADJUST SAWCUT LINE TO REMOVE THE PAVEMENT OR CONCRETE SECTION AT A CLEAN EDGE OR NEAREST JOINT BASED ON FIELD CONDITIONS. WHILE MAINTAINING ACCESSIBLE LAP JOINT PER DETAIL 2 ON SHEET C1.4 SHALL APPLY TO ALL SAWCUT LOCATIONS ALONG AC PAVEMENT, UNLESS OTHERWISE NOTED.

(B) ACCESSIBLE PATH OF TRAVEL NOT TO EXCEED 5.0% MAX RUNNING SLOPE AND 2.0% MAX CROSS SLOPE. PLAZA/COURTYARD AREAS, INTERSECTING PATHS, AND LANDINGS SHALL HAVE A 2% MAX SLOPE IN ANY DIRECTION. ACCESSIBLE PATH OF TRAVEL DETERMINATION, ACCESSIBILITY AND SIGNAGE SHALL BE DETERMINED BY ARCHITECTURAL AND LANDSCAPE PLANS. SEE ARCHITECTURAL AND LANDSCAPE PLANS FOR DIMENSIONS AND DETAILS. INCLUDING HANDRAILS, WHERE APPLICABLE.

(C) CONTRACTOR SHALL INSTALL RAISED PLANTER PER ARCHITECTURAL PLANS AND SPECIFICATIONS.

(D) CONTRACTOR SHALL INSTALL 4' VALLEY GUTTER PER CITY OF ATWATER STANDARDS AND SPECIFICATIONS. SEE DETAIL 4 ON SHEET C1.4 FOR ADDITIONAL INFORMATION.

(E) CONTRACTOR SHALL INSTALL FENCE AND/OR GATE, AND MOW STRIP PER ARCHITECTURAL PLANS AND SPECIFICATIONS.

(F) CONTRACTOR SHALL CONSTRUCT BUILDING PER ARCHITECTURAL PLANS AND SPECIFICATIONS.

(G) CONTRACTOR SHALL INSTALL EQUIPMENT/ARCHITECTURAL AMENITY PER ARCHITECTURAL PLANS. REFER TO ARCHITECTURAL PLANS FOR ADDITIONAL INFORMATION. "USE EXTREME CAUTION" WHEN INSTALLING POST OR FOOTINGS TO AVOID UNDERGROUND UTILITIES.

(H) CONTRACTOR SHALL INSTALL OUTDOOR BLEACHERS PER ARCHITECTURAL PLANS AND SPECIFICATIONS.

(J) CONTRACTOR SHALL INSTALL SLOT DRAIN PER ARCHITECTURAL DETAIL 1 ON SHEET TR-4.

(K) CONTRACTOR SHALL INSTALL ACO TRENCH DRAIN OR APPROVED EQUAL PER DETAIL 1 ON SHEET C1.5.

(L) CONTRACTOR SHALL SWALE AND GRADE LANDSCAPE AREA IN SUCH A WAY THAT NO PONDING WILL OCCUR. CONTRACTOR SHALL GRADE LANDSCAPE AREAS SO THAT ALL RUNOFF IS COLLECTED IN THE STORM DRAIN SYSTEM. ALL LANDSCAPE AREAS THAT ABUT ANY PORTION OF THE BUILDING SHALL BE A MINIMUM OF EIGHT INCHES (8") BELOW FINISHED FLOOR OF THE ABUTTING BUILDING AND IN NO CASE SHALL THE LANDSCAPE AREA BE GRADED OR LANDSCAPED SUCH THAT WATER DRAINS TOWARD THE BUILDING.

(M) PRIOR TO CONSTRUCTING ANY CONCRETE OR PAVEMENT THE CONTRACTOR SHALL VERIFY THE FINISH FLOOR ELEVATIONS AT ALL DOORS. CONTRACTOR SHALL HOLD FIELD VERIFIED FINISH FLOOR GRADES, ACCOUNT FOR DOOR THRESHOLDS, AND ADJUST GRADES AS NECESSARY TO STAY IN COMPLIANCE WITH CURRENT ACCESSIBLE STANDARDS. CONTRACTOR SHALL NOTIFY NORTHSTAR ENGINEERING IMMEDIATELY IF ANY GRADE ADJUSTMENTS WILL CREATE ANY ACCESSIBILITY ISSUES.

(N) CONTRACTOR SHALL TRANSITION GRADE TO MATCH EXISTING.

(P) ACCESSIBLE RAMP 8.33% MAX SLOPE WITH A 2.0% MAX LEVEL LANDING PER CITY OF ATWATER STANDARD PLANS AND SPECIFICATIONS. SEE ARCHITECTURAL PLANS FOR ADDITIONAL INFORMATION.

(R) CONTRACTOR SHALL INSTALL WALL AND/OR RAILING PER ARCHITECTURAL PLANS AND DETAILS.

(S) CONTRACTOR SHALL INSTALL STEPS, GUARDRAIL, AND/OR HAND RAILINGS, SEE ARCHITECTURAL PLANS FOR DETAILS AND SPECIFICATIONS.

IDENTIFICATION STAMP
DIV. OF THE STATE ARCHITECT
APP: 02-121275 INC:
REVIEWED FOR
SS ☑ FLS ☑ ACS ☑
DATE: 12/15/2023

CALIFORNIA DESIGN WEST ARCHITECTS, Inc.

2100 19th Street
Sacramento, CA 95818

Phone: (916) 446-2466
Fax: (916) 446-5118
Web Page: ca-dw.com

These plans and prints thereof, as instruments of service, are owned by the architect and are for the use on this project only. Reproduction and/or distribution without the prior written consent of the architect is forbidden.

Copyright California Design West Architects, Inc.

ARCHITECT: CONSULTANT:

LICENSED ARCHITECT — No. C17258 — MITCHELL A. McALISTER — STATE OF CALIFORNIA

REGISTERED PROFESSIONAL ENGINEER — MATT W. WELLS — No. C85920 — Date Signed: 10/10/23 — CIVIL — STATE OF CALIFORNIA

CONSULTANT:

NorthStar Engineering Group, Inc.
• CIVIL ENGINEERING • SURVEYING • PLANNING •
620 12th Street Modesto, CA 95354
(209) 524-3525 Phone (209) 524-3526 Fax

PROJECT NAME:

BUHACH COLONY HIGH SCHOOL

1800 NORTH BUHACH RD
ATWATER, CA 95301

NEW STADIUM; FOOTBALL FIELD, ALL-WEATHER TRACK, BLEACHERS, CONCESSIONS UPGRADES

MERCED UNION HIGH SCHOOL DISTRICT

MERCED COUNTY

KEY PLAN:

SHEET TITLE:

GRADING AND DRAINAGE PLAN

JOB NUMBER:	SHEET NUMBER:
DATE: OCT. 10, 2023	C4.3
REVISION:	

PLOTTED: 10/10/2023 7:29 PLOTTED BY: Corey
pw:\\dwest 1 2021\14 Buhach Colony High School Track and Field\20 3d\18Grading Plans\C4.3.DWG.dwg

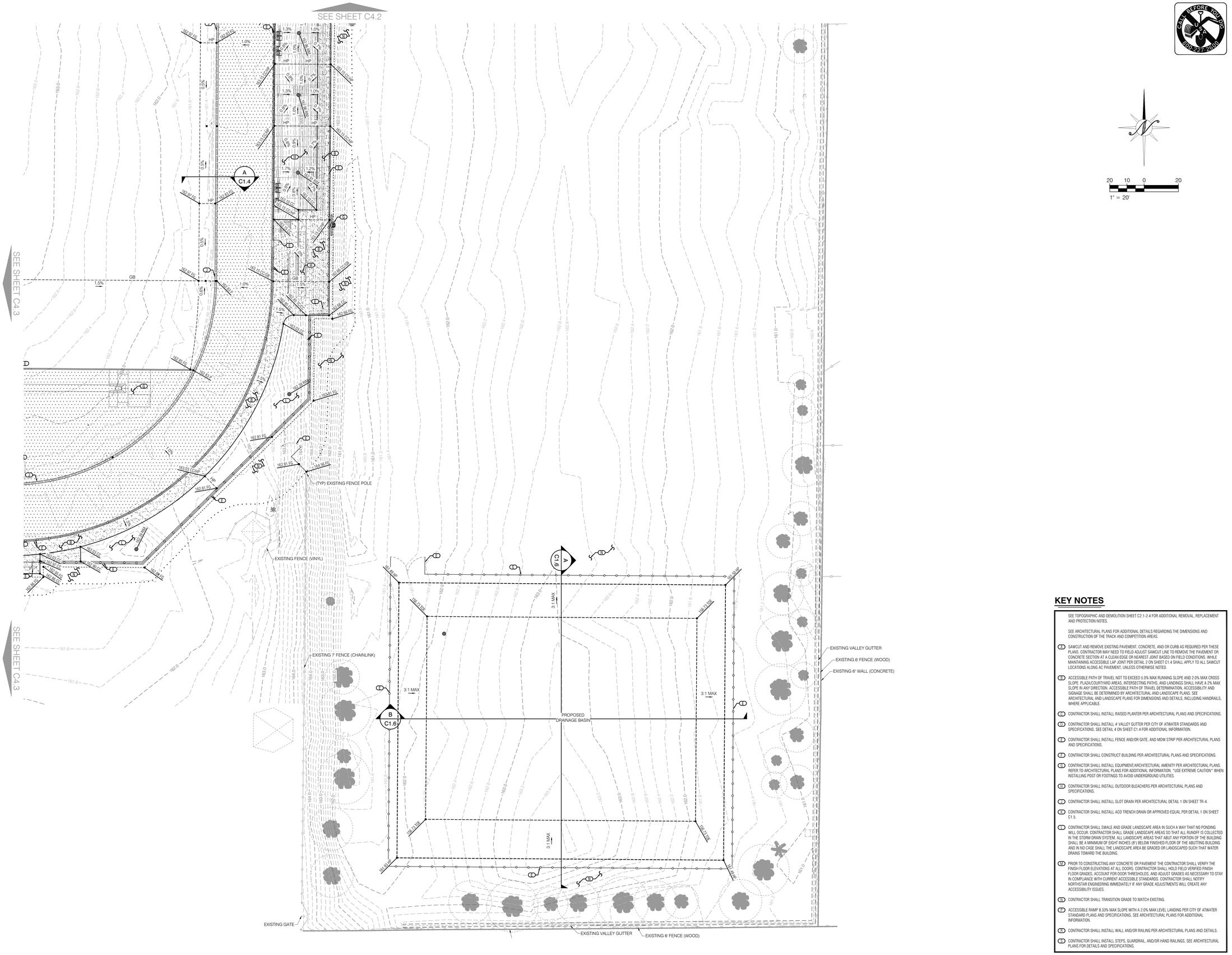

CALL BEFORE YOU DIG 800-227-2600

IDENTIFICATION STAMP
DIV. OF THE STATE ARCHITECT
APP: 02-121275 INC:
REVIEWED FOR
SS ☑ FLS ☑ ACS ☑
DATE: 12/15/2023

DESIGN California WEST

CALIFORNIA DESIGN WEST ARCHITECTS, Inc.

2100 19th Street
Sacramento, CA 95818

Phone: (916) 446-2466
Fax: (916) 446-5118
Web Page: ca-dw.com

These plans and prints thereof, as instruments of service, are owned by the architect and are for the use on this project only. Reproduction and/or distribution without the prior written consent of the architect is forbidden.

Copyright California Design West Architects, Inc.

ARCHITECT: CONSULTANT:

LICENSED ARCHITECT MITCHELL A. MCALISTER No. C17258 RENEWAL 08/31/2025 STATE OF CALIFORNIA

REGISTERED PROFESSIONAL ENGINEER MITCHELL W. WARD No. C89920 Date Signed: 10/10/23 CIVIL STATE OF CALIFORNIA

CONSULTANT:

NorthStar Engineering Group, Inc.
• CIVIL ENGINEERING • SURVEYING • PLANNING •
620 12th Street Modesto, CA 95354
(209) 524-3525 Phone (209) 524-3526 Fax

PROJECT NAME:

BUHACH COLONY HIGH SCHOOL

1800 NORTH BUHACH RD
ATWATER, CA 95301

NEW STADIUM; FOOTBALL FIELD, ALL-WEATHER TRACK, BLEACHERS, CONCESSIONS UPGRADES

MERCED UNION HIGH SCHOOL DISTRICT

MERCED COUNTY

KEY NOTES

SEE TOPOGRAPHIC AND DEMOLITION SHEET C2.1-2.4 FOR ADDITIONAL REMOVAL, REPLACEMENT AND PROTECTION NOTES.

SEE ARCHITECTURAL PLANS FOR ADDITIONAL DETAILS REGARDING THE DIMENSIONS AND CONSTRUCTION OF THE TRACK AND COMPETITION AREAS.

(1) SAWCUT AND REMOVE EXISTING PAVEMENT, CONCRETE, AND OR CURB AS REQUIRED PER THESE PLANS. CONTRACTOR MAY NEED TO FIELD ADJUST SAWCUT LINE TO REMOVE THE PAVEMENT OR CONCRETE SECTION AT A CLEAN EDGE OR NEAREST JOINT BASED ON FIELD CONDITIONS. WHILE MAINTAINING ACCESSIBLE LAP JOINT PER DETAIL 2 ON SHEET C1.4 SHALL APPLY TO ALL SAWCUT LOCATIONS ALONG AC PAVEMENT, UNLESS OTHERWISE NOTED.

(2) ACCESSIBLE PATH OF TRAVEL NOT TO EXCEED 5.0% MAX RUNNING SLOPE AND 2.0% MAX CROSS SLOPE. PLAZA/COURTYARD AREAS, INTERSECTING PATHS, AND LANDINGS SHALL HAVE A 2% MAX SLOPE IN ANY DIRECTION. ACCESSIBLE PATH OF TRAVEL DETERMINATION, ACCESSIBILITY AND SIGNAGE SHALL BE DETERMINED BY ARCHITECTURAL AND LANDSCAPE PLANS. SEE ARCHITECTURAL AND LANDSCAPE PLANS FOR DIMENSIONS AND DETAILS, INCLUDING HANDRAILS, WHERE APPLICABLE.

(3) CONTRACTOR SHALL INSTALL RAISED PLANTER PER ARCHITECTURAL PLANS AND SPECIFICATIONS.

(4) CONTRACTOR SHALL INSTALL 4' VALLEY GUTTER PER CITY OF ATWATER STANDARDS AND SPECIFICATIONS. SEE DETAIL 4 ON SHEET C1.4 FOR ADDITIONAL INFORMATION.

(5) CONTRACTOR SHALL INSTALL FENCE AND/OR GATE, AND MOW STRIP PER ARCHITECTURAL PLANS AND SPECIFICATIONS.

(6) CONTRACTOR SHALL CONSTRUCT BUILDING PER ARCHITECTURAL PLANS AND SPECIFICATIONS.

(7) CONTRACTOR SHALL INSTALL EQUIPMENT/ARCHITECTURAL AMENITY PER ARCHITECTURAL PLANS. REFER TO ARCHITECTURAL PLANS FOR ADDITIONAL INFORMATION. "USE EXTREME CAUTION" WHEN INSTALLING POST OR FOOTINGS TO AVOID UNDERGROUND UTILITIES.

(8) CONTRACTOR SHALL INSTALL OUTDOOR BLEACHERS PER ARCHITECTURAL PLANS AND SPECIFICATIONS.

(9) CONTRACTOR SHALL INSTALL SLOT DRAIN PER ARCHITECTURAL DETAIL 1 ON SHEET TR-4.

(10) CONTRACTOR SHALL INSTALL ACO TRENCH DRAIN OR APPROVED EQUAL PER DETAIL 1 ON SHEET C1.3.

(11) CONTRACTOR SHALL SWALE AND GRADE LANDSCAPE AREA IN SUCH A WAY THAT NO PONDING WILL OCCUR. CONTRACTOR SHALL GRADE LANDSCAPE AREAS SO THAT ALL RUNOFF IS COLLECTED IN THE STORM DRAIN SYSTEM. ALL LANDSCAPE AREAS THAT ABUT ANY PORTION OF THE BUILDING SHALL BE A MINIMUM OF EIGHT INCHES (8") BELOW FINISHED FLOOR OF THE ABUTTING BUILDING AND IN NO CASE SHALL THE LANDSCAPE AREA BE GRADED OR LANDSCAPED SUCH THAT WATER DRAINS TOWARD THE BUILDING.

(12) PRIOR TO CONSTRUCTING ANY CONCRETE OR PAVEMENT THE CONTRACTOR SHALL VERIFY THE FINISH FLOOR ELEVATIONS AT ALL DOORS. CONTRACTOR SHALL HOLD FIELD VERIFIED FINISH FLOOR GRADES, ACCOUNT FOR DOOR THRESHOLDS, AND ADJUST GRADES AS NECESSARY TO STAY IN COMPLIANCE WITH CURRENT ACCESSIBLE STANDARDS. CONTRACTOR SHALL NOTIFY NORTHSTAR ENGINEERING IMMEDIATELY IF ANY GRADE ADJUSTMENTS WILL CREATE ANY ACCESSIBILITY ISSUES.

(13) CONTRACTOR SHALL TRANSITION GRADE TO MATCH EXISTING.

(14) ACCESSIBLE RAMP 8.33% MAX SLOPE WITH A 2.0% MAX LEVEL LANDING PER CITY OF ATWATER STANDARD PLANS AND SPECIFICATIONS. SEE ARCHITECTURAL PLANS FOR ADDITIONAL INFORMATION.

(15) CONTRACTOR SHALL INSTALL WALL AND/OR RAILING PER ARCHITECTURAL PLANS AND DETAILS.

(16) CONTRACTOR SHALL INSTALL STEPS, GUARDRAIL, AND/OR HAND RAILINGS, SEE ARCHITECTURAL PLANS FOR DETAILS AND SPECIFICATIONS.

KEY PLAN:

SHEET TITLE:

GRADING AND DRAINAGE PLAN

JOB NUMBER:	SHEET NUMBER:
DATE: OCT. 10, 2023	C4.4
REVISION:	

PLOTTED: 9/19/2023 11:36 PLOTTED BY: Corey
DRAWING: C:\2021\14 Buhach Colony High School - Track and Field\21 311\BIM\Corey Revit\C4.4 GRD.dwg

CALL BEFORE YOU DIG
USA
800-227-2600

IDENTIFICATION STAMP
DIV. OF THE STATE ARCHITECT
APP: 02-121275 INC:
REVIEWED FOR
SS ☑ FLS ☑ ACS ☑
DATE: 12/15/2023

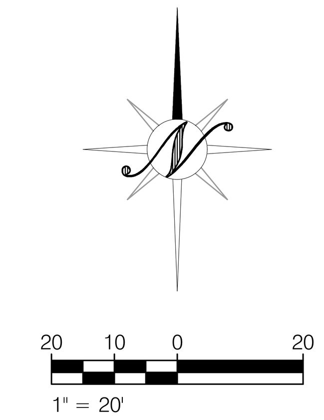

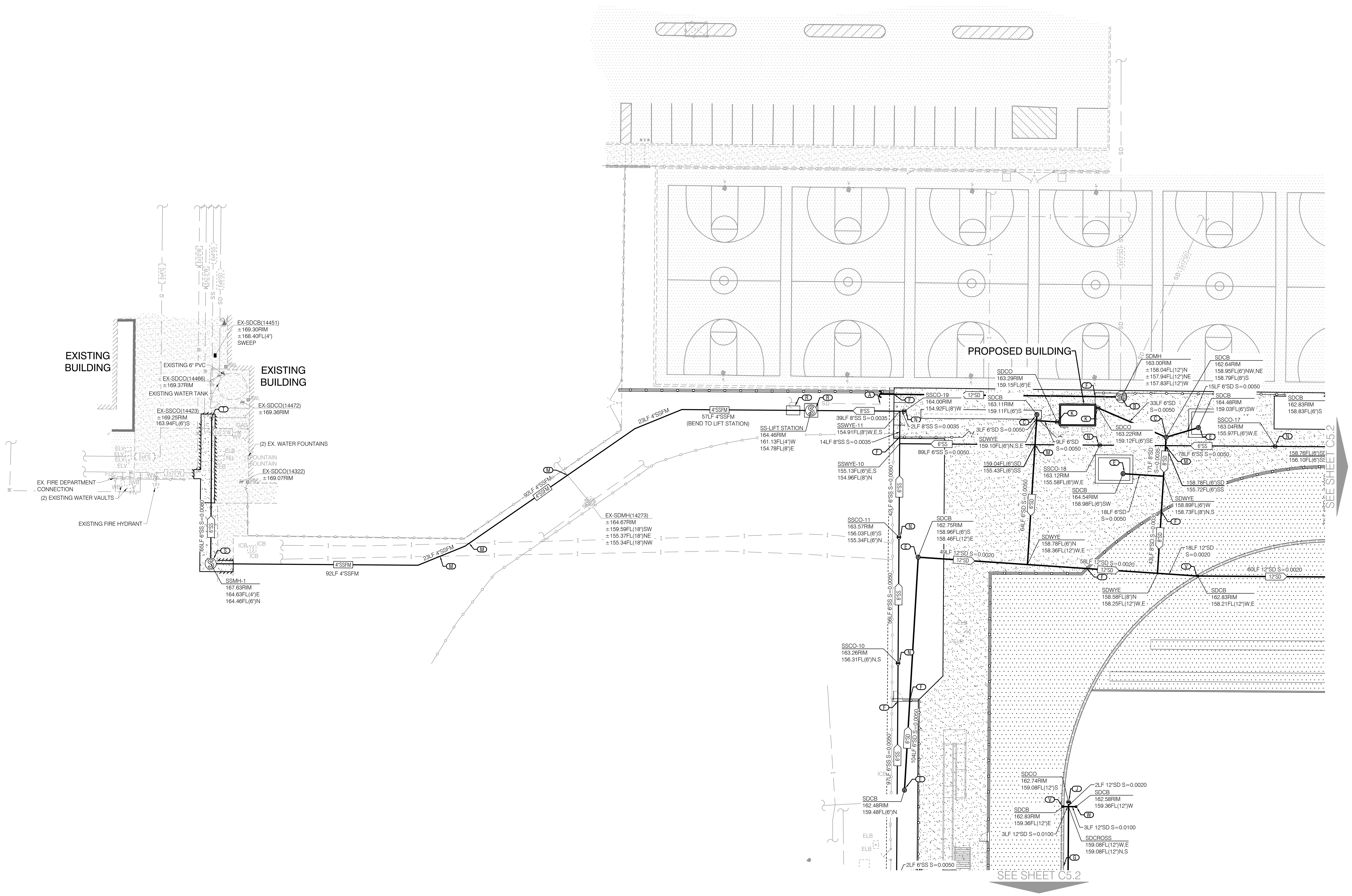

KEY NOTES

SEE TOPOGRAPHIC AND DEMOLITION SHEETS C2.1-2.4 FOR ADDITIONAL REMOVAL, REPLACEMENT AND PROTECTION NOTES.

(A) CONTRACTOR SHALL EXCAVATE EXISTING STORM DRAINAGE SYSTEM TO VERIFY THE HORIZONTAL AND VERTICAL ALIGNMENT PRIOR TO THE INSTALLATION OF THE STORM DRAINAGE SYSTEM. CONTRACTOR SHALL INFORM THE ENGINEER IF THE ALIGNMENTS ARE DIFFERENT THAN SHOWN. CONTRACTOR SHALL CONNECT TO EXISTING STORM DRAINAGE SYSTEM PER CITY OF ATWATER STANDARDS AND SPECIFICATIONS.

(B) CONTRACTOR SHALL INSTALL 24" CATCH BASIN PER DETAIL 2 ON SHEET C1.5. CATCH BASIN SHALL HAVE A SOLID LID AND COVER COMPLYING WITH SECTION 11B-302.5 OF THE CALIFORNIA BUILDING CODE.

(C) CONTRACTOR SHALL INSTALL 24" CATCH BASIN PER DETAIL 2 ON SHEET C1.5. SEE DETAIL 3 ON SHEET C1.5 FOR INLETS AT VALLEY GUTTERS.

(D) CONTRACTOR SHALL INSTALL 30" INSIDE DIAMETER BUBBLE-UP STRUCTURE PER DETAIL 7 ON SHEET C1.5.

(E) CONTRACTOR SHALL INSTALL STORM DRAIN CATCH BASIN (SDCB) WITH FLAT GRATED LID FOR SDCB LOCATED IN TURF/CONCRETE, AND ATRIUM GRATE FOR SDCB LOCATED IN PLANTER. SEE LANDSCAPE ARCHITECT PLANS FOR TURF LOCATION AND LANDSCAPE DETAILS. SEE DETAILS ON SHEET C1.4 FOR DRAIN DETAIL. CONTRACTOR SHALL UTILIZE NDS BLACK PLASTIC IN LANDSCAPE NON-TRAFFIC RATED AREAS. CONTRACTOR SHALL SET THE RIM ELEVATION TO FINISH GRADE AND ENSURE THAT NO PONDING OCCURS. GRATES IN ACCESSIBLE PATH OF TRAVEL SHALL BE ACCESSIBLE, HEEL-PROOF, AND RATED FOR THE APPROPRIATE LOADING.

(F) *USE EXTREME CAUTION* TO AVOID UNDERGROUND UTILITIES WHEN INSTALLING FOOTINGS FOR SIGNS, FENCES, BOLLARDS, AND ARCHITECTURAL AMENITIES AT ALL UTILITY SIGN/FENCE/BOLLARD/AMENITY CROSSINGS.

(G) CONTRACTOR SHALL INSTALL SLOT DRAIN PER DETAIL 1 ON SHEET TR-4.

(H) CONTRACTOR SHALL INSTALL "ACO" TRENCH DRAIN OR APPROVED EQUAL PER MANUFACTURER'S SPECIFICATIONS. SEE DETAIL 1 ON SHEET C1.5 FOR ADDITIONAL INFORMATION.

(J) CONTRACTOR SHALL INSTALL STORM DRAIN CLEANOUT PER DETAIL 9 OR DETAIL 10 ON SHEET C1.4.

(K) APPROXIMATE LOCATION OF ROOF DRAIN SPOUT OR DRAIN CONNECTION, SEE ARCHITECTURAL PLANS FOR EXACT LOCATION AND CONSTRUCTION DETAILS. INSTALL APPROPRIATE REDUCER FITTING TO MATCH PROPOSED BUILDING ROOF DRAIN PIPE SIZE. CONTRACTOR SHALL INSTALL APPROPRIATE LID AS NOTED: INSTALL A SOLID LID FOR CLEANOUT (SDCO), FLAT GRATED LID FOR CATCH BASIN (SDCB) LOCATED IN TURF, AND ATRIUM GRATE FOR SDCB LOCATED IN PLANTER. SEE LANDSCAPE ARCHITECT PLANS FOR TURF LOCATION AND LANDSCAPE DETAILS. SEE DETAIL 10 ON SHEET C1.4 FOR CONNECTION DETAILS. CONTRACTOR SHALL NOTIFY THE ENGINEER IMMEDIATELY IF ROOF DRAIN CANNOT ACCOMMODATE CONNECTION. CONTRACTOR SHALL SET THE RIM ELEVATION TO FINISH GRADE AND ENSURE THAT NO PONDING OCCURS.

(L) CONTRACTOR SHALL INSTALL STORM DRAIN MAINTAINANCE HOLE PER CITY OF ATWATER STANDARD DETAIL SD-02. SEE DETAIL 3 ON SHEET C1.6.

(M) CONTRACTOR SHALL *USE EXTREME CAUTION* AT ALL UTILITY CROSSINGS AND SHALL COMPLY WITH ALL APPLICABLE STANDARDS. IF A CONFLICT IS FOUND, THE CONTRACTOR SHALL NOTIFY THE ENGINEER IMMEDIATELY.

(N) CONTRACTOR SHALL INSTALL SEWER CLEANOUT PER DETAIL 9 OR DETAIL 10 ON SHEET C1.4.

(P) CONTRACTOR SHALL INSTALL SEWER CLEANOUT PER DETAIL 9 OR DETAIL 10 ON SHEET C1.4 WITH APPROPRIATE FITTINGS AND REDUCER. CONTRACTOR SHALL VERIFY THE LOCATIONS OF THE UTILITY CONNECTIONS WITH THE PLUMBING PLANS PRIOR TO CONSTRUCTION OF PROPOSED STUBS AND STUB 5 FEET FROM THE FACE OF THE BUILDING.

(R) CONTRACTOR SHALL INSTALL SEWER LIFT STATION PER DETAIL 4 ON SHEET C1.5 AND CITY OF ATWATER STANDARDS AND SPECIFICATIONS.

(S) CONTRACTOR SHALL INSTALL SEWER MANHOLE PER CITY OF ATWATER STANDARD DETAIL S-1. SEE DETAIL 3 ON SHEET C1.6.

(T) CONTRACTOR SHALL EXCAVATE EXISTING SEWER LINE TO VERIFY THE HORIZONTAL AND VERTICAL ALIGNMENT PRIOR TO THE INSTALLATION OF THE SEWER SYSTEM. CONTRACTOR SHALL INFORM THE ENGINEER IF THE ALIGNMENTS ARE DIFFERENT THAN SHOWN. CONTRACTOR SHALL CONNECT TO EXISTING SEWER SYSTEM PER CITY OF ATWATER STANDARDS AND SPECIFICATIONS WITH APPROPRIATE FITTINGS.

(U) CONTRACTOR SHALL INSTALL FRENCH DRAIN PER DETAIL 8 ON SHEET C1.5.

(V) CONTRACTOR SHALL CONNECT SLOT DRAIN INTO STORM DRAIN PIPE AT SLOT DRAIN CATCH BASIN. SEE DETAIL 1 ON SHEET TR-4 FOR DETAILS REGARDING SLOT DRAIN AND CATCH BASINS AT TRACK.

(W) CONTRACTOR SHALL INSTALL 24" CATCH BASIN PER DETAIL 2 ON SHEET C1.5.

(X) CONTRACTOR SHALL INSTALL 48" STORM DRAIN MANHOLE WITH GRATED LID PER DETAIL 1 ON SHEET C1.6.

CALIFORNIA DESIGN WEST

CALIFORNIA DESIGN
WEST ARCHITECTS, Inc.

2100 19th Street
Sacramento, CA 95818

Phone: (916) 446-2466
Fax: (916) 446-5118
Web Page: ca-dw.com

These plans and prints thereof, as instruments of service, are owned by the architect and are for the use on this project only. Reproduction and/or distribution without the prior written consent of the architect is forbidden.

Copyright California Design West Architects, Inc.

ARCHITECT: CONSULTANT:

LICENSED ARCHITECT
MITCHELL A. McALLISTER
NO. C 17250
REN. 2-28-2023
STATE OF CALIFORNIA

REGISTERED PROFESSIONAL ENGINEER
COREY M. WALKER
No. C89920
Date Signed: 10/10/23
CIVIL
STATE OF CALIFORNIA

CONSULTANT:

NorthStar Engineering Group, Inc.
• CIVIL ENGINEERING • SURVEYING • PLANNING •
620 12th Street
Modesto, CA 95354
(209) 524-3525 Phone
(209) 524-3526 Fax

PROJECT NAME:

BUHACH COLONY HIGH SCHOOL

1800 NORTH BUHACH RD
ATWATER, CA 95301

NEW STADIUM; FOOTBALL FIELD, ALL-WEATHER TRACK, BLEACHERS, CONCESSIONS UPGRADES

MERCED UNION HIGH SCHOOL DISTRICT

MERCED COUNTY

KEY PLAN:

SHEET TITLE:

STORM DRAINAGE AND SANITARY SEWER PLAN

JOB NUMBER:	SHEET NUMBER:
DATE: OCT. 10, 2023	
REVISION:	C5.1

PLOTTED: 10/10/2023 17:30 PLOTTED BY: Corey
DWGNAME: F:\22-3174 Buhach Colony High School Track and Field\22-3174B\Civil\Imp Plans\C5.1 SD-SS.dwg

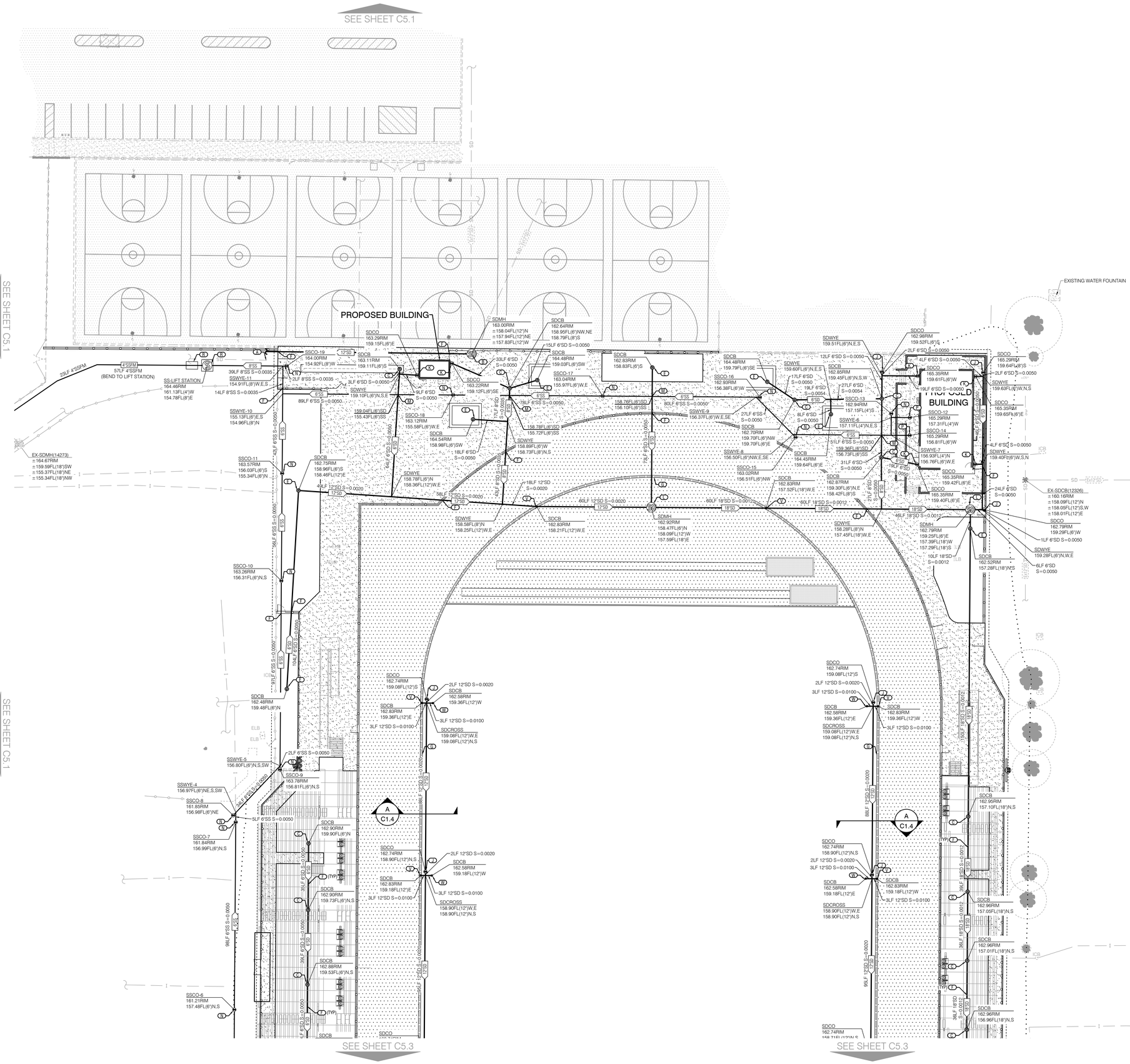

KEY NOTES

SEE TOPOGRAPHIC AND DEMOLITION SHEETS C2.1-2.4 FOR ADDITIONAL REMOVAL, REPLACEMENT AND PROTECTION NOTES.

(A) CONTRACTOR SHALL EXCAVATE EXISTING STORM DRAINAGE SYSTEM TO VERIFY THE HORIZONTAL AND VERTICAL ALIGNMENT PRIOR TO THE INSTALLATION OF THE STORM DRAINAGE SYSTEM. CONTRACTOR SHALL INFORM THE ENGINEER IF THE ALIGNMENTS ARE DIFFERENT THAN SHOWN. CONTRACTOR SHALL CONNECT TO EXISTING STORM DRAINAGE SYSTEM PER CITY OF ATWATER STANDARDS AND SPECIFICATIONS.

(B) CONTRACTOR SHALL INSTALL 24" CATCH BASIN PER DETAIL 2 ON SHEET C1.5. CATCH BASIN SHALL HAVE A SOLID LID AND COVER COMPLYING WITH SECTION 11B-302.5 OF THE CALIFORNIA BUILDING CODE.

(C) CONTRACTOR SHALL INSTALL 24" CATCH BASIN PER DETAIL 2 ON SHEET C1.5. SEE DETAIL 3 ON SHEET C1.5 FOR INLETS AT VALLEY GUTTERS.

(D) CONTRACTOR SHALL INSTALL 30" INSIDE DIAMETER BUBBLE-UP STRUCTURE PER DETAIL 7 ON SHEET C1.5.

(E) CONTRACTOR SHALL INSTALL STORM DRAIN CATCH BASIN (SDCB) WITH FLAT GRATED LID FOR SDCB LOCATED IN TURF-CONCRETE, AND ATRIUM GRATE FOR SDCB LOCATED IN PLANTER. SEE LANDSCAPE ARCHITECT PLANS FOR TURF LOCATION AND LANDSCAPE DETAILS. SEE DETAILS ON SHEET C1.4 FOR DRAIN DETAIL. CONTRACTOR SHALL UTILIZE NDS BLACK PLASTIC IN LANDSCAPE NON-TRAFFIC RATED AREAS. CONTRACTOR SHALL SET THE RIM ELEVATION TO FINISH GRADE AND ENSURE THAT NO PONDING OCCURS. GRATES IN ACCESSIBLE PATH OF TRAVEL SHALL BE ACCESSIBLE, HEEL-PROOF, AND RATED FOR THE APPROPRIATE LOADING.

(F) "USE EXTREME CAUTION" TO AVOID UNDERGROUND UTILITIES WHEN INSTALLING FOOTINGS FOR SIGNS, FENCES, BOLLARDS, AND ARCHITECTURAL AMENITIES AT ALL UTILITY SIGN/FENCE/BOLLARD/AMENITY CROSSINGS.

(G) CONTRACTOR SHALL INSTALL SLOT DRAIN PER DETAIL 1 ON SHEET TR-4.

(H) CONTRACTOR SHALL INSTALL "ACO" TRENCH DRAIN OR APPROVED EQUAL PER MANUFACTURER'S SPECIFICATIONS. SEE DETAIL 1 ON SHEET C1.5 FOR ADDITIONAL INFORMATION.

(I) CONTRACTOR SHALL INSTALL STORM DRAIN CLEANOUT PER DETAIL 9 OR DETAIL 10 ON SHEET C1.4.

(K) APPROXIMATE LOCATION OF ROOF DRAIN SPOUT OR DRAIN CONNECTION, SEE ARCHITECTURAL PLANS FOR EXACT LOCATION AND CONSTRUCTION DETAILS. INSTALL APPROPRIATE REDUCER FITTING TO MATCH PROPOSED BUILDING ROOF DRAIN PIPE SIZE. CONTRACTOR SHALL INSTALL APPROPRIATE LID AS NOTED: INSTALL A SOLID LID FOR CLEANOUT (SDCO), FLAT GRATED LID FOR CATCH BASIN (SDCB) LOCATED IN TURF, AND ATRIUM GRATE FOR SDCB LOCATED IN PLANTER. SEE LANDSCAPE ARCHITECT PLANS FOR TURF LOCATION AND LANDSCAPE DETAILS. SEE DETAIL 10 ON SHEET C1.4 FOR CONNECTION DETAILS. CONTRACTOR SHALL NOTIFY THE ENGINEER IMMEDIATELY IF ROOF DRAIN CANNOT ACCOMMODATE CONNECTION. CONTRACTOR SHALL SET THE RIM ELEVATION TO FINISH GRADE AND ENSURE THAT NO PONDING OCCURS.

(L) CONTRACTOR SHALL INSTALL STORM DRAIN MAINTAINANCE HOLE PER CITY OF ATWATER STANDARD DETAIL SD-02. SEE DETAIL 3 ON SHEET C1.6.

(M) CONTRACTOR SHALL "USE EXTREME CAUTION" AT ALL UTILITY CROSSINGS AND SHALL COMPLY WITH ALL APPLICABLE STANDARDS. IF A CONFLICT IS FOUND, THE CONTRACTOR SHALL NOTIFY THE ENGINEER IMMEDIATELY.

(N) CONTRACTOR SHALL INSTALL SEWER CLEANOUT PER DETAIL 9 OR DETAIL 10 ON SHEET C1.4.

(P) CONTRACTOR SHALL INSTALL SEWER CLEANOUT PER DETAIL 9 OR DETAIL 10 ON SHEET C1.4 WITH APPROPRIATE FITTINGS AND REDUCER. CONTRACTOR SHALL VERIFY THE LOCATIONS OF THE UTILITY CONNECTIONS WITH THE PLUMBING PLANS PRIOR TO CONSTRUCTION OF PROPOSED STUBS AND STUB 5 FEET FROM THE FACE OF THE BUILDING.

(R) CONTRACTOR SHALL INSTALL SEWER LIFT STATION PER DETAIL 4 ON SHEET C1.5 AND CITY OF ATWATER STANDARDS AND SPECIFICATIONS.

(S) CONTRACTOR SHALL INSTALL SEWER MANHOLE PER CITY OF ATWATER STANDARD DETAIL S-1. SEE DETAIL 3 ON SHEET C1.6.

(T) CONTRACTOR SHALL EXCAVATE EXISTING SEWER LINE TO VERIFY THE HORIZONTAL AND VERTICAL ALIGNMENT PRIOR TO THE INSTALLATION OF THE SEWER SYSTEM. CONTRACTOR SHALL INFORM THE ENGINEER IF THE ALIGNMENTS ARE DIFFERENT THAN SHOWN. CONTRACTOR SHALL CONNECT TO EXISTING SEWER SYSTEM PER CITY OF ATWATER STANDARDS AND SPECIFICATIONS WITH APPROPRIATE FITTINGS.

(U) CONTRACTOR SHALL INSTALL FRENCH DRAIN PER DETAIL 8 ON SHEET C1.5.

(V) CONTRACTOR SHALL CONNECT SLOT DRAIN INTO STORM DRAIN PIPE AT SLOT DRAIN CATCH BASIN. SEE DETAIL 1 ON SHEET TR-4 FOR DETAILS REGARDING SLOT DRAIN AND CATCH BASINS AT TRACK.

(W) CONTRACTOR SHALL INSTALL 24" CATCH BASIN PER DETAIL 2 ON SHEET C1.5.

(X) CONTRACTOR SHALL INSTALL 48" STORM DRAIN MANHOLE WITH GRATED LID PER DETAIL 1 ON SHEET C1.6.

CALL BEFORE YOU DIG 800-227-2600

IDENTIFICATION STAMP
DIV. OF THE STATE ARCHITECT
APP: 02-121275 INC:
REVIEWED FOR
SS ☑ FLS ☑ ACS ☑
DATE: 12/15/2023

DESIGN California WEST

CALIFORNIA DESIGN
WEST ARCHITECTS, Inc.

2100 19th Street
Sacramento, CA 95818

Phone: (916) 446-2466
Fax: (916) 446-5118
Web Page: ca-dw.com

These plans and prints thereof, as instruments of service, are owned by the architect and are for the use on this project only. Reproduction and/or distribution without the prior written consent of the architect is forbidden.

Copyright California Design West Architects, Inc.

ARCHITECT: CONSULTANT:

LICENSED ARCHITECT MITCHELL A. MCALISTER NO. C 17258 REGISTERED PROFESSIONAL ENGINEER MICHAEL W. WOOD No. C85920 Date Signed: 10/10/23 CIVIL STATE OF CALIFORNIA

CONSULTANT:

NorthStar Engineering Group, Inc.
• CIVIL ENGINEERING • SURVEYING • PLANNING •
620 12th Street Modesto, CA 95354
(209) 524-3525 Phone (209) 524-3526 Fax

PROJECT NAME:

BUHACH COLONY HIGH SCHOOL

1800 NORTH BUHACH RD
ATWATER, CA 95301

NEW STADIUM; FOOTBALL FIELD, ALL-WEATHER TRACK, BLEACHERS, CONCESSIONS UPGRADES

MERCED UNION HIGH SCHOOL DISTRICT

MERCED COUNTY

KEY PLAN:

SHEET TITLE:

STORM DRAINAGE AND SANITARY SEWER PLAN

JOB NUMBER:	SHEET NUMBER:
DATE: OCT. 10, 2023	C5.2
REVISION:	

PLOTTED: 10/10/2023 7:30 PLOTTED BY: Corey
DRAWING: T:\2021\16 Bolden Colony High School Track and Field\20 SHTS\Buhach Ranch\C5.2 SD-SS.dwg

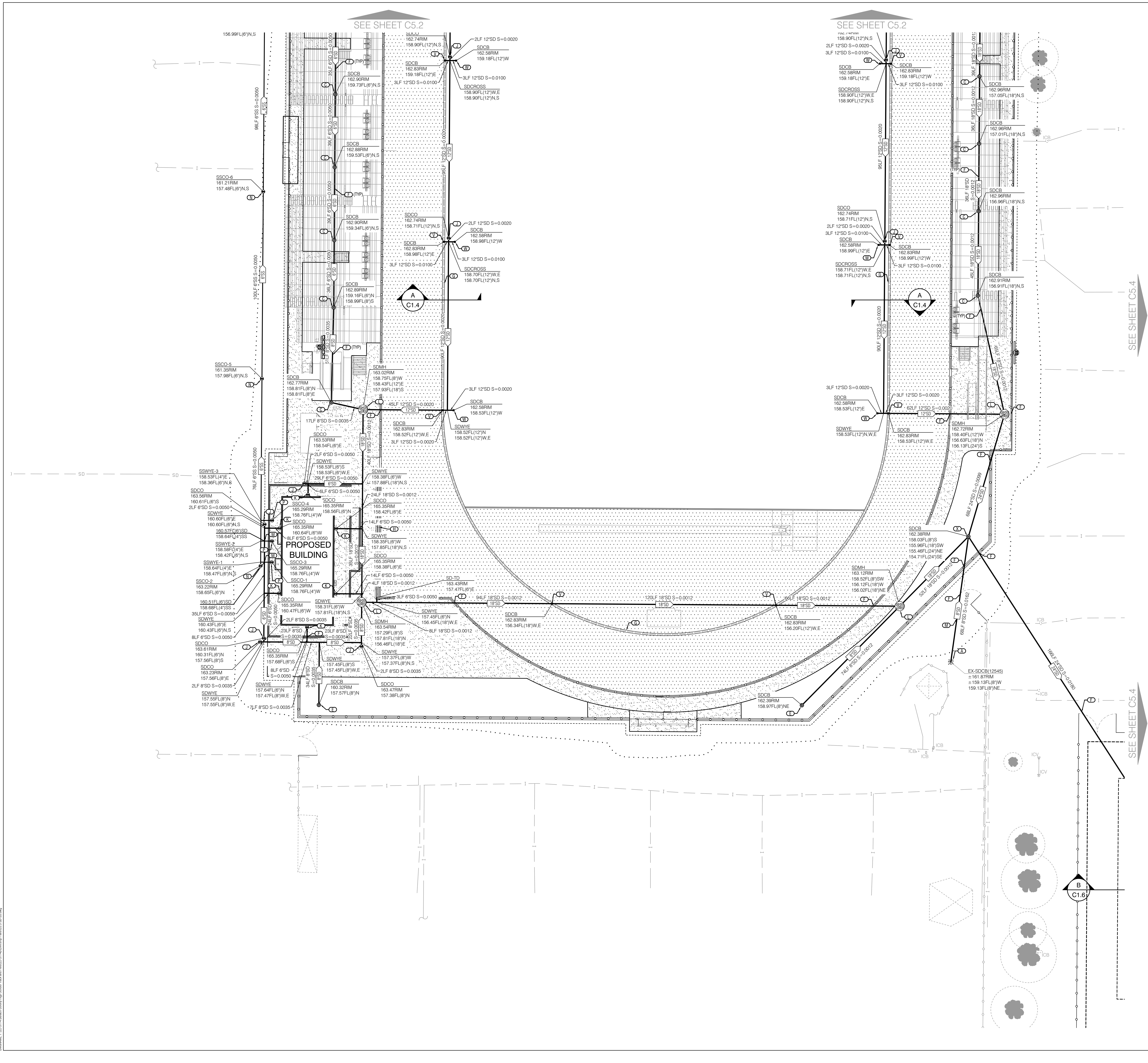

20 10 0 20

1" = 20'

KEY NOTES

SEE TOPOGRAPHIC AND DEMOLITION SHEETS C2.1-2.4 FOR ADDITIONAL REMOVAL, REPLACEMENT AND PROTECTION NOTES.

(A) CONTRACTOR SHALL EXCAVATE EXISTING STORM DRAINAGE SYSTEM TO VERIFY THE HORIZONTAL AND VERTICAL ALIGNMENT PRIOR TO THE INSTALLATION OF THE STORM DRAINAGE SYSTEM. CONTRACTOR SHALL INFORM THE ENGINEER IF THE ALIGNMENTS ARE DIFFERENT THAN SHOWN. CONTRACTOR SHALL CONNECT TO EXISTING STORM DRAINAGE SYSTEM PER CITY OF ATWATER STANDARDS AND SPECIFICATIONS.

(B) CONTRACTOR SHALL INSTALL 24" CATCH BASIN PER DETAIL 2 ON SHEET C1.5. CATCH BASIN SHALL HAVE A SOLID LID AND COVER COMPLYING WITH SECTION 11B-302.5 OF THE CALIFORNIA BUILDING CODE.

(C) CONTRACTOR SHALL INSTALL 24" CATCH BASIN PER DETAIL 2 ON SHEET C1.5. SEE DETAIL 3 ON SHEET C1.5 FOR INLETS AT VALLEY GUTTERS.

(D) CONTRACTOR SHALL INSTALL 30" INSIDE DIAMETER BUBBLE-UP STRUCTURE PER DETAIL 7 ON SHEET C1.5.

(E) CONTRACTOR SHALL INSTALL STORM DRAIN CATCH BASIN (SDCB) WITH FLAT GRATED LID FOR SDCB LOCATED IN TURF/CONCRETE, AND ATRIUM GRATE FOR SDCB LOCATED IN PLANTER. SEE LANDSCAPE ARCHITECT PLANS FOR TURF LOCATION AND LANDSCAPE DETAILS. SEE DETAILS ON SHEET C1.4 FOR DRAIN DETAIL. CONTRACTOR SHALL UTILIZE NDS BLACK PLASTIC IN LANDSCAPE NON-TRAFFIC RATED AREAS. CONTRACTOR SHALL SET THE RIM ELEVATION TO FINISH GRADE AND ENSURE THAT NO PONDING OCCURS. GRATES IN ACCESSIBLE PATH OF TRAVEL SHALL BE ACCESSIBLE, HEEL-PROOF, AND RATED FOR THE APPROPRIATE LOADING.

(F) *USE EXTREME CAUTION* TO AVOID UNDERGROUND UTILITIES WHEN INSTALLING FOOTINGS FOR SIGNS, FENCES, BOLLARDS, AND ARCHITECTURAL AMENITIES AT ALL UTILITY SIGN/FENCE/BOLLARD/AMENITY CROSSINGS.

(G) CONTRACTOR SHALL INSTALL SLOT DRAIN PER DETAIL 1 ON SHEET TR-4.

(H) CONTRACTOR SHALL INSTALL "ACO" TRENCH DRAIN OR APPROVED EQUAL PER MANUFACTURER'S SPECIFICATIONS. SEE DETAIL 1 ON SHEET C1.5 FOR ADDITIONAL INFORMATION.

(J) CONTRACTOR SHALL INSTALL STORM DRAIN CLEANOUT PER DETAIL 9 OR DETAIL 10 ON SHEET C1.4.

(K) APPROXIMATE LOCATION OF ROOF DRAIN SPOUT OR DRAIN CONNECTION, SEE ARCHITECTURAL PLANS FOR EXACT LOCATION AND CONSTRUCTION DETAILS. INSTALL APPROPRIATE REDUCER FITTING TO MATCH PROPOSED BUILDING ROOF DRAIN PIPE SIZE. CONTRACTOR SHALL INSTALL APPROPRIATE LID AS NOTED: INSTALL A SOLID LID FOR CLEANOUT (SDCO), FLAT GRATED LID FOR CATCH BASIN (SDCB) LOCATED IN TURF, AND ATRIUM GRATE FOR SDCB LOCATED IN PLANTER. SEE LANDSCAPE ARCHITECT PLANS FOR TURF LOCATION AND LANDSCAPE DETAILS. SEE DETAIL 10 ON SHEET C1.4 FOR CONNECTION DETAILS. CONTRACTOR SHALL NOTIFY THE ENGINEER IMMEDIATELY IF ROOF DRAIN CANNOT ACCOMMODATE CONNECTION. CONTRACTOR SHALL SET THE RIM ELEVATION TO FINISH GRADE AND ENSURE THAT NO PONDING OCCURS.

(L) CONTRACTOR SHALL INSTALL STORM DRAIN MAINTAINANCE HOLE PER CITY OF ATWATER STANDARD DETAIL SD-02. SEE DETAIL 3 ON SHEET C1.6.

(M) CONTRACTOR SHALL *USE EXTREME CAUTION* AT ALL UTILITY CROSSINGS AND SHALL COMPLY WITH ALL APPLICABLE STANDARDS. IF A CONFLICT IS FOUND, THE CONTRACTOR SHALL NOTIFY THE ENGINEER IMMEDIATELY.

(N) CONTRACTOR SHALL INSTALL SEWER CLEANOUT PER DETAIL 9 OR DETAIL 10 ON SHEET C1.4.

(P) CONTRACTOR SHALL INSTALL SEWER CLEANOUT PER DETAIL 9 OR DETAIL 10 ON SHEET C1.4 WITH APPROPRIATE FITTINGS AND REDUCER. CONTRACTOR SHALL VERIFY THE LOCATIONS OF THE UTILITY CONNECTIONS WITH THE PLUMBING PLANS PRIOR TO CONSTRUCTION OF PROPOSED STUBS AND STUB 5 FEET FROM THE FACE OF THE BUILDING.

(R) CONTRACTOR SHALL INSTALL SEWER LIFT STATION PER DETAIL 4 ON SHEET C1.5 AND CITY OF ATWATER STANDARDS AND SPECIFICATIONS.

(S) CONTRACTOR SHALL INSTALL SEWER MANHOLE PER CITY OF ATWATER STANDARD DETAIL S-1. SEE DETAIL 3 ON SHEET C1.6.

(T) CONTRACTOR SHALL EXCAVATE EXISTING SEWER LINE TO VERIFY THE HORIZONTAL AND VERTICAL ALIGNMENT PRIOR TO THE INSTALLATION OF THE SEWER SYSTEM. CONTRACTOR SHALL INFORM THE ENGINEER IF THE ALIGNMENTS ARE DIFFERENT THAN SHOWN. CONTRACTOR SHALL CONNECT TO EXISTING SEWER SYSTEM PER CITY OF ATWATER STANDARDS AND SPECIFICATIONS WITH APPROPRIATE FITTINGS.

(U) CONTRACTOR SHALL INSTALL FRENCH DRAIN PER DETAIL 8 ON SHEET C1.5.

(V) CONTRACTOR SHALL CONNECT SLOT DRAIN INTO STORM DRAIN PIPE AT SLOT DRAIN CATCH BASIN. SEE DETAIL 1 ON SHEET TR-4 FOR DETAILS REGARDING SLOT DRAIN AND CATCH BASINS AT TRACK.

(W) CONTRACTOR SHALL INSTALL 24" CATCH BASIN PER DETAIL 2 ON SHEET C1.5.

(X) CONTRACTOR SHALL INSTALL 48" STORM DRAIN MANHOLE WITH GRATED LID PER DETAIL 1 ON SHEET C1.6.

IDENTIFICATION STAMP
DIV. OF THE STATE ARCHITECT
APP: 02-121275 INC:
REVIEWED FOR
SS ☑ FLS ☑ ACS ☑
DATE: 12/15/2023

CALIFORNIA DESIGN WEST ARCHITECTS, Inc.

2100 19th Street
Sacramento, CA 95818

Phone: (916) 446-2466
Fax: (916) 446-5118
Web Page: ca-dw.com

These plans and prints thereof, as instruments of service, are owned by the architect and are for the use on this project only. Reproduction and/or distribution without the prior written consent of the architect is forbidden.

Copyright California Design West Architects, Inc.

ARCHITECT: CONSULTANT:

LICENSED ARCHITECT MITCHELL A. McALLISTER NO. C 17250 REN. 2-28-2025 STATE OF CALIFORNIA

REGISTERED PROFESSIONAL ENGINEER COREY M. WALKER No. C89920 Date Signed: 10/10/23 CIVIL STATE OF CALIFORNIA

CONSULTANT:

NorthStar Engineering Group, Inc.
• CIVIL ENGINEERING • SURVEYING • PLANNING •
620 12th Street Modesto, CA 95354
(209) 524-3525 Phone (209) 524-3526 Fax

PROJECT NAME:

BUHACH COLONY HIGH SCHOOL

1800 NORTH BUHACH RD
ATWATER, CA 95301

NEW STADIUM; FOOTBALL FIELD, ALL-WEATHER TRACK, BLEACHERS, CONCESSIONS UPGRADES

MERCED UNION HIGH SCHOOL DISTRICT

MERCED COUNTY

KEY PLAN:

SHEET TITLE:

STORM DRAINAGE AND SANITARY SEWER PLAN

JOB NUMBER:

SHEET NUMBER:

DATE:
OCT. 10, 2023

REVISION:

C5.3

PLOTTED: 10/10/2023 17:31 PLOTTED BY: Corey
DWGNAME: F:\22-3174 Buhach Colony High School Track and Field\22-3174B\Civil\Imp Plans\C5.3 SD-SS.dwg

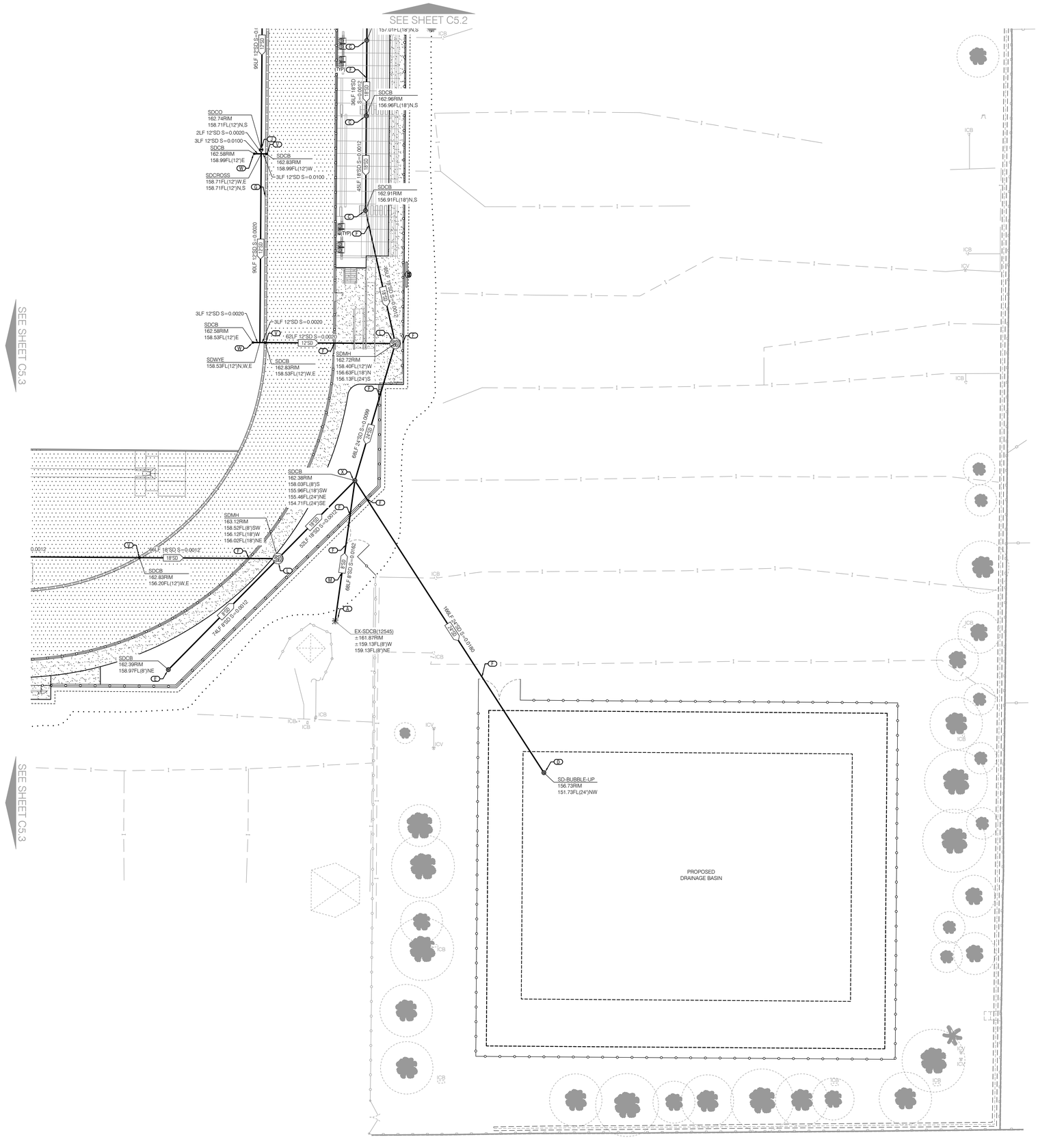

KEY NOTES

SEE TOPOGRAPHIC AND DEMOLITION SHEETS C2.1-2.4 FOR ADDITIONAL REMOVAL, REPLACEMENT AND PROTECTION NOTES.

(A) CONTRACTOR SHALL EXCAVATE EXISTING STORM DRAINAGE SYSTEM TO VERIFY THE HORIZONTAL AND VERTICAL ALIGNMENT PRIOR TO THE INSTALLATION OF THE STORM DRAINAGE SYSTEM. CONTRACTOR SHALL INFORM THE ENGINEER IF THE ALIGNMENTS ARE DIFFERENT THAN SHOWN. CONTRACTOR SHALL CONNECT TO EXISTING STORM DRAINAGE SYSTEM PER CITY OF ATWATER STANDARDS AND SPECIFICATIONS.

(B) CONTRACTOR SHALL INSTALL 24" CATCH BASIN PER DETAIL 2 ON SHEET C1.5. CATCH BASIN SHALL HAVE A SOLID LID AND COVER COMPLYING WITH SECTION 11B-302.5 OF THE CALIFORNIA BUILDING CODE

(C) CONTRACTOR SHALL INSTALL 24" CATCH BASIN PER DETAIL 2 ON SHEET C1.5. SEE DETAIL 3 ON SHEET C1.5 FOR INLETS AT VALLEY GUTTERS.

(D) CONTRACTOR SHALL INSTALL 30" INSIDE DIAMETER BUBBLE-UP STRUCTURE PER DETAIL 7 ON SHEET C1.5.

(E) CONTRACTOR SHALL INSTALL STORM DRAIN CATCH BASIN (SDCB) WITH FLAT GRATED LID FOR SDCB LOCATED IN TURF/CONCRETE, AND ATRIUM GRATE FOR SDCB LOCATED IN PLANTER. SEE LANDSCAPE ARCHITECT PLANS FOR TURF LOCATION AND LANDSCAPE DETAILS. SEE DETAILS ON SHEET C1.4 FOR DRAIN DETAIL. CONTRACTOR SHALL UTILIZE NDS BLACK PLASTIC IN LANDSCAPE NON-TRAFFIC RATED AREAS. CONTRACTOR SHALL SET THE RIM ELEVATION TO FINISH GRADE AND ENSURE THAT NO PONDING OCCURS. GRATES IN ACCESSIBLE PATH OF TRAVEL SHALL BE ACCESSIBLE, HEEL -PROOF, AND RATED FOR THE APPROPRIATE LOADING.

(F) "USE EXTREME CAUTION" TO AVOID UNDERGROUND UTILITIES WHEN INSTALLING FOOTINGS FOR SIGNS, FENCES, BOLLARDS, AND ARCHITECTURAL AMENITIES AT ALL UTILITY SIGN/FENCE/BOLLARD/AMENITY CROSSINGS.

(G) CONTRACTOR SHALL INSTALL SLOT DRAIN PER DETAIL 1 ON SHEET TR-4.

(H) CONTRACTOR SHALL INSTALL "ACO" TRENCH DRAIN OR APPROVED EQUAL PER MANUFACTURER'S SPECIFICATIONS. SEE DETAIL 1 ON SHEET C1.5 FOR ADDITIONAL INFORMATION.

(I) CONTRACTOR SHALL INSTALL STORM DRAIN CLEANOUT PER DETAIL 9 OR DETAIL 10 ON SHEET C1.4.

(K) APPROXIMATE LOCATION OF ROOF DRAIN SPOUT OR DRAIN CONNECTION. SEE ARCHITECTURAL PLANS FOR EXACT LOCATION AND CONSTRUCTION DETAILS. INSTALL APPROPRIATE REDUCER FITTING TO MATCH PROPOSED BUILDING ROOF DRAIN PIPE SIZE. CONTRACTOR SHALL INSTALL APPROPRIATE LID AS NOTED: INSTALL A SOLID LID FOR CLEANOUT (SDCO), FLAT GRATED LID FOR CATCH BASIN (SDCB) LOCATED IN TURF, AND ATRIUM GRATE FOR SDCB LOCATED IN PLANTER. SEE LANDSCAPE ARCHITECT PLANS FOR TURF LOCATION AND LANDSCAPE DETAILS. SEE DETAIL 10 ON SHEET C1.4 FOR CONNECTION DETAILS. CONTRACTOR SHALL NOTIFY THE ENGINEER IMMEDIATELY IF ROOF DRAIN CANNOT ACCOMMODATE CONNECTION. CONTRACTOR SHALL SET THE RIM ELEVATION TO FINISH GRADE AND ENSURE THAT NO PONDING OCCURS.

(L) CONTRACTOR SHALL INSTALL STORM DRAIN MAINTAINANCE HOLE PER CITY OF ATWATER STANDARD DETAIL SD-02. SEE DETAIL 3 ON SHEET C1.6.

(M) CONTRACTOR SHALL "USE EXTREME CAUTION" AT ALL UTILITY CROSSINGS AND SHALL COMPLY WITH ALL APPLICABLE STANDARDS. IF A CONFLICT IS FOUND, THE CONTRACTOR SHALL NOTIFY THE ENGINEER IMMEDIATELY.

(N) CONTRACTOR SHALL INSTALL SEWER CLEANOUT PER DETAIL 9 OR DETAIL 10 ON SHEET C1.4.

(P) CONTRACTOR SHALL INSTALL SEWER CLEANOUT PER DETAIL 9 OR DETAIL 10 ON SHEET C1.4 WITH APPROPRIATE FITTINGS AND REDUCER. CONTRACTOR SHALL VERIFY THE LOCATIONS OF THE UTILITY CONNECTIONS WITH THE PLUMBING PLANS PRIOR TO CONSTRUCTION OF PROPOSED STUBS AND STUB 5 FEET FROM THE FACE OF THE BUILDING.

(R) CONTRACTOR SHALL INSTALL SEWER LIFT STATION PER DETAIL 4 ON SHEET C1.5 AND CITY OF ATWATER STANDARDS AND SPECIFICATIONS.

(S) CONTRACTOR SHALL INSTALL SEWER MANHOLE PER CITY OF ATWATER STANDARD DETAIL S-1. SEE DETAIL 3 ON SHEET C1.6.

(T) CONTRACTOR SHALL EXCAVATE EXISTING SEWER LINE TO VERIFY THE HORIZONTAL AND VERTICAL ALIGNMENT PRIOR TO THE INSTALLATION OF THE SEWER SYSTEM. CONTRACTOR SHALL INFORM THE ENGINEER IF THE ALIGNMENTS ARE DIFFERENT THAN SHOWN. CONTRACTOR SHALL CONNECT TO EXISTING SEWER SYSTEM PER CITY OF ATWATER STANDARDS AND SPECIFICATIONS WITH APPROPRIATE FITTINGS.

(U) CONTRACTOR SHALL INSTALL FRENCH DRAIN PER DETAIL 8 ON SHEET C1.5.

(V) CONTRACTOR SHALL CONNECT SLOT DRAIN INTO STORM DRAIN PIPE AT SLOT DRAIN CATCH BASIN. SEE DETAIL 1 ON SHEET TR-4 FOR DETAILS REGARDING SLOT DRAIN AND CATCH BASINS AT TRACK.

(W) CONTRACTOR SHALL INSTALL 24" CATCH BASIN PER DETAIL 2 ON SHEET C1.5.

(X) CONTRACTOR SHALL INSTALL 48" STORM DRAIN MANHOLE WITH GRATED LID PER DETAIL 1 ON SHEET C1.6.

CALL BEFORE YOU DIG
800-227-2600

IDENTIFICATION STAMP
DIV. OF THE STATE ARCHITECT
APP: 02-121275 INC:
REVIEWED FOR
SS ☑ FLS ☑ ACS ☑
DATE: 12/15/2023

CALIFORNIA DESIGN WEST ARCHITECTS, Inc.

2100 19th Street
Sacramento, CA 95818

Phone: (916) 446-2466
Fax: (916) 446-5118
Web Page: ca-dw.com

These plans and prints thereof, as instruments of service, are owned by the architect and are for the use on this project only. Reproduction and/or distribution without the prior written consent of the architect is forbidden.

Copyright California Design West Architects, Inc.

ARCHITECT: CONSULTANT:

LICENSED ARCHITECT — MITCHELL A. McALISTER — No. C-7258 — REGISTERED IN THE STATE OF CALIFORNIA

REGISTERED PROFESSIONAL ENGINEER — JAMES W. WARD — No. C85920 — Date Signed: 10/10/23 — CIVIL — STATE OF CALIFORNIA

CONSULTANT:

NorthStar Engineering Group, Inc.
• CIVIL ENGINEERING • SURVEYING • PLANNING •
620 12th Street Modesto, CA 95354
(209) 524-3525 Phone (209) 524-3526 Fax

PROJECT NAME:

BUHACH COLONY HIGH SCHOOL

1800 NORTH BUHACH RD
ATWATER, CA 95301

NEW STADIUM; FOOTBALL FIELD, ALL-WEATHER TRACK, BLEACHERS, CONCESSIONS UPGRADES

MERCED UNION HIGH SCHOOL DISTRICT

MERCED COUNTY

KEY PLAN:

SHEET TITLE:

STORM DRAINAGE AND SANITARY SEWER PLAN

JOB NUMBER:	SHEET NUMBER:
DATE: OCT. 10, 2023	C5.4
REVISION:	

PLOTTED: 10/10/2023 1:31 PLOTTED BY: Corey
DRAWING: I:\2021\21-Buhach Colony High School - Track and Field\21.31\Bid\Survey Base\C5.4 SS-SD.dwg

IDENTIFICATION STAMP
DIV. OF THE STATE ARCHITECT
APP: 02-121275 INC:
REVIEWED FOR
SS ☑ FLS ☑ ACS ☑
DATE: 12/15/2023

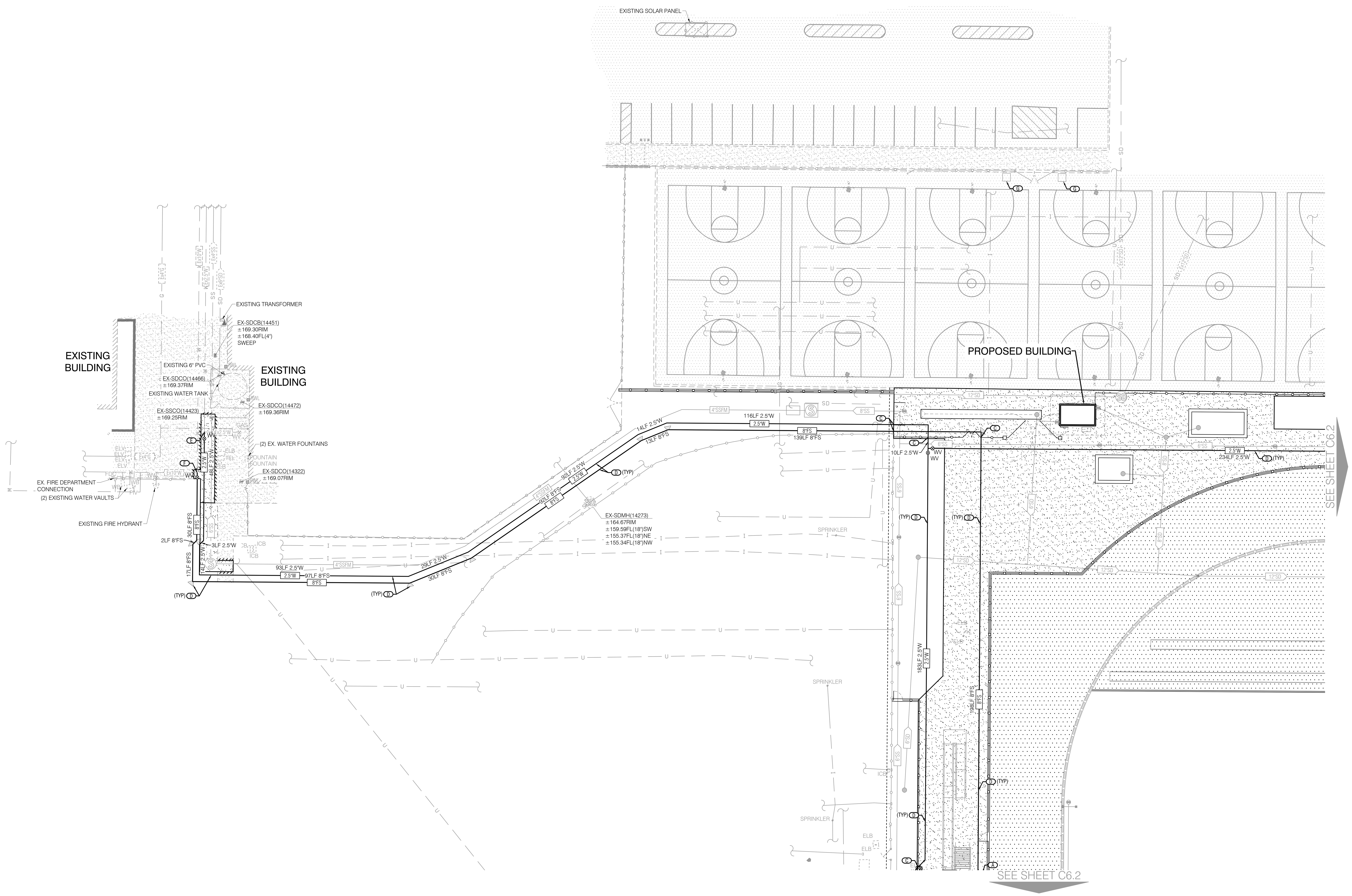

20 10 0 20
1" = 20'

KEY NOTES

SEE TOPOGRAPHIC AND DEMOLITION SHEETS C2.1-2.4 FOR ADDITIONAL REMOVAL, REPLACEMENT AND PROTECTION NOTES.

CONTRACTOR SHALL *USE EXTREME CAUTION* AT ALL UTILITY CROSSINGS AND SHALL COMPLY WITH ALL APPLICABLE STANDARDS. IF A CONFLICT IS FOUND, THE CONTRACTOR SHALL NOTIFY THE ENGINEER IMMEDIATELY.

(A) CONTRACTOR SHALL INSTALL FIRE HYDRANT ASSEMBLY PER CITY OF ATWATER STANDARD DETAIL WA-08, MAINTAINING A 3 FEET MINIMUM CLEARANCE SPACE. SEE DETAIL 14 ON SHEET C1.4. *USE EXTREME CAUTION* WHEN INSTALLING FOOTINGS TO AVOID UNDERGROUND UTILITIES.

(B) PROPOSED DOMESTIC WATER WITH SHUT OFF VALVE TO BE STUBBED 5 FEET FROM THE FACE OF THE BUILDING. CONTRACTOR SHALL VERIFY THE LOCATIONS OF THE UTILITY CONNECTIONS WITH THE PLUMBING PLANS PRIOR TO CONSTRUCTION OF PROPOSED STUBS.

(C) *USE EXTREME CAUTION* TO AVOID UNDERGROUND UTILITIES WHEN INSTALLING FOOTINGS FOR SIGNS, FENCES, BOLLARDS, AND ARCHITECTURAL AMENITIES AT ALL UTILITY SIGN/FENCE/BOLLARD/AMENITY CROSSINGS.

(D) CONTRACTOR SHALL INSTALL WATER PIPES WITH SUFFICIENT ENOUGH DEPTH TO MAINTAIN 1' MINIMUM VERTICAL CLEARANCE FORM OUTSIDE DIAMETER OF PIPES AND COMPLY WITH THE MOST CURRENT STATE HEALTH CODE AND THE CALIFORNIA BUILDING AND PLUMBING CODE STANDARDS. CONTRACTOR SHALL DEEPEN WATER PIPES AS NECESSARY AND USE EXTREME CAUTION WHEN PLACING THRUST BLOCKS AS TO AVOID CONFLICTS WITH OTHER UTILITY PIPES. CONTRACTOR SHALL INSTALL REDUCERS AS REQUIRED. WATER VALVES SHALL BE INSTALLED ON 4" WATER PIPES OR LARGER AND BALL VALVES/CORP STOPS SHOULD BE INSTALLED ON 3" WATER PIPES OR SMALLER. THRUST BLOCKS SHALL BE INSTALLED AT FIRE HYDRANTS, BLOW-OFFS, TEES, CAPS, BENDS, ENDS, AND CHANGES IN SIZE AND/OR DIRECTION. WATER SEPARATION SHALL BE CONSTRUCTED IN ACCORDANCE WITH SECTION 720.0 AND TABLE 7-7 OF THE CALIFORNIA PLUMBING CODE. SEE CITY OF ATWATER STANDARD DETAIL W-4 FOR THRUST BLOCK DETAILS AND SPECIFICATIONS. SEE DETAIL 13 ON SHEET C1.4.

(E) CONTRACTOR SHALL CONNECT TO EXISTING DOMESTIC WATER LINE PER CITY OF ATWATER STANDARDS AND SPECIFICATIONS. CONTRACTOR SHALL EXCAVATE EXISTING WATER LINE TO VERIFY THE HORIZONTAL AND VERTICAL ALIGNMENT PRIOR TO THE INSTALLATION OF THE PROPOSED WATER PIPE. CONTRACTOR SHALL INFORM THE ENGINEER IF THE ALIGNMENTS ARE DIFFERENT THAN SHOWN.

(F) CONTRACTOR SHALL CONNECT TO EXISTING FIRE SERVICE WATER LINE PER CITY OF ATWATER STANDARDS AND SPECIFICATIONS. CONTRACTOR SHALL EXCAVATE EXISTING WATER LINE TO VERIFY THE HORIZONTAL AND VERTICAL ALIGNMENT PRIOR TO THE INSTALLATION OF THE PROPOSED WATER PIPE. CONTRACTOR SHALL INFORM THE ENGINEER IF THE ALIGNMENTS ARE DIFFERENT THAN SHOWN.

(G) LIGHT SHOWN FOR REFERENCE ONLY. SEE ELECTRICAL AND DRY UTILITY PLANS BY OTHERS FOR DETAILS AND SPECIFICATIONS.

CALIFORNIA DESIGN WEST ARCHITECTS, Inc.

2100 19th Street
Sacramento, CA 95818

Phone: (916) 446-2466
Fax: (916) 446-5118
Web Page: ca-dw.com

These plans and prints thereof, as instruments of service, are owned by the architect and are for the use on this project only. Reproduction and/or distribution without the prior written consent of the architect is forbidden.

Copyright California Design West Architects, Inc.

ARCHITECT: CONSULTANT:

LICENSED ARCHITECT MITCHELL A. McALLISTER NO. C 17250 REN. 2-28-2025 STATE OF CALIFORNIA

REGISTERED PROFESSIONAL ENGINEER COREY M. WALKER No. C89920 Date Signed: 10/10/23 CIVIL STATE OF CALIFORNIA

CONSULTANT:

NorthStar Engineering Group, Inc.
• CIVIL ENGINEERING • SURVEYING • PLANNING •
620 12th Street (209) 524-3525 Phone
Modesto, CA 95354 (209) 524-3526 Fax

PROJECT NAME:

BUHACH COLONY HIGH SCHOOL

1800 NORTH BUHACH RD
ATWATER, CA 95301

NEW STADIUM; FOOTBALL FIELD, ALL-WEATHER TRACK, BLEACHERS, CONCESSIONS UPGRADES

MERCED UNION HIGH SCHOOL DISTRICT

MERCED COUNTY

KEY PLAN:

SHEET TITLE:

WATER AND COMPOSITE UTILITY PLAN

JOB NUMBER:	SHEET NUMBER:
DATE: OCT. 10, 2023	
REVISION:	C6.1

PLOTTED: 10/10/2023 17:32 PLOTTED BY: Corey
DWGNAME: F:\22-3174 Buhach Colony High School Track and Field\22-3174B\Civil\Imp Plans\C6.1 UTIL.dwg

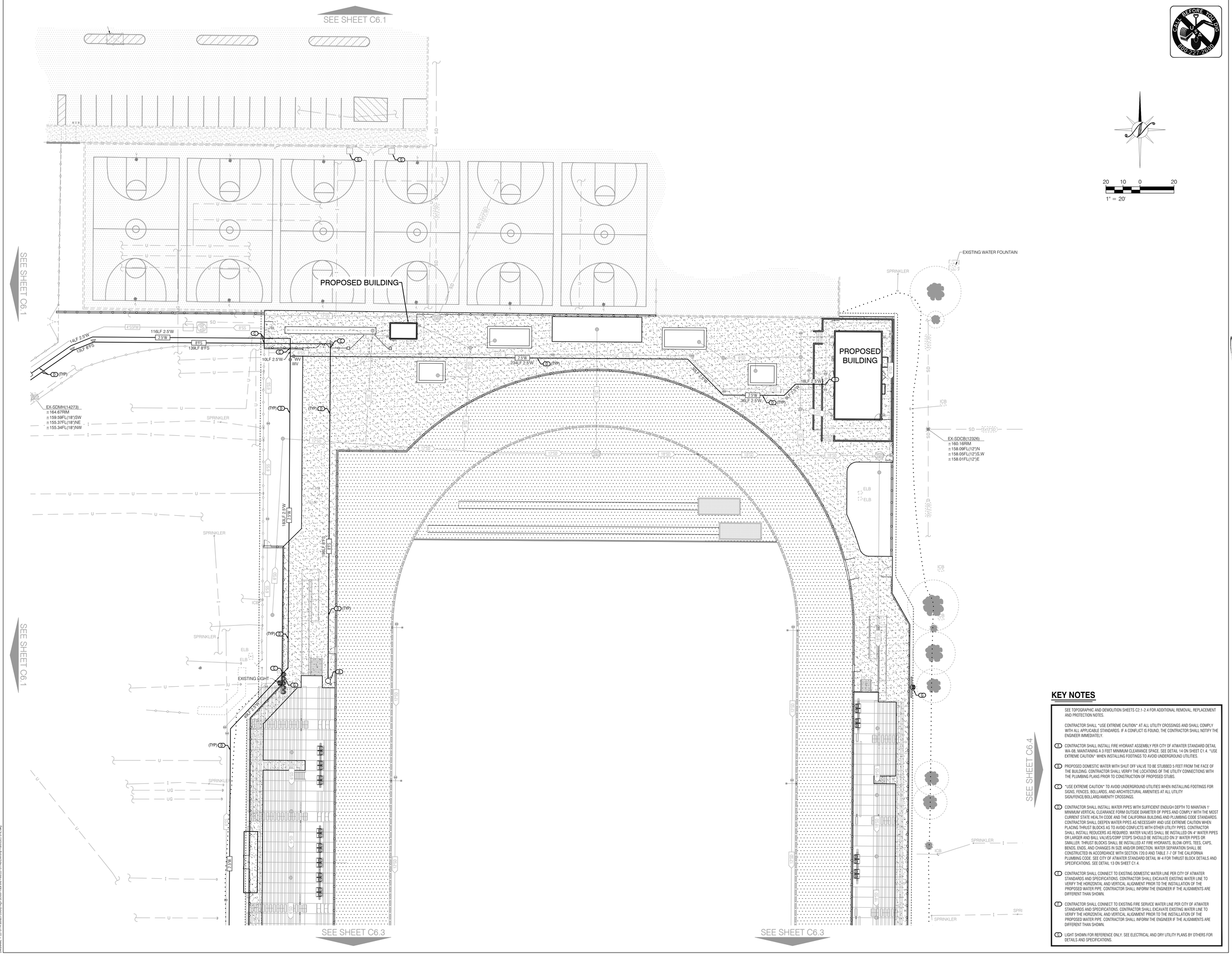

KEY NOTES

SEE TOPOGRAPHIC AND DEMOLITION SHEETS C2.1-2.4 FOR ADDITIONAL REMOVAL, REPLACEMENT AND PROTECTION NOTES.

CONTRACTOR SHALL "USE EXTREME CAUTION" AT ALL UTILITY CROSSINGS AND SHALL COMPLY WITH ALL APPLICABLE STANDARDS. IF A CONFLICT IS FOUND, THE CONTRACTOR SHALL NOTIFY THE ENGINEER IMMEDIATELY.

1. CONTRACTOR SHALL INSTALL FIRE HYDRANT ASSEMBLY PER CITY OF ATWATER STANDARD DETAIL WA-08, MAINTAINING A 3 FEET MINIMUM CLEARANCE SPACE. SEE DETAIL 14 ON SHEET C1.4. "USE EXTREME CAUTION" WHEN INSTALLING FOOTINGS TO AVOID UNDERGROUND UTILITIES.
2. PROPOSED DOMESTIC WATER WITH SHUT OFF VALVE TO BE STUBBED 5 FEET FROM THE FACE OF THE BUILDING. CONTRACTOR SHALL VERIFY THE LOCATIONS OF THE UTILITY CONNECTIONS WITH THE PLUMBING PLANS PRIOR TO CONSTRUCTION OF PROPOSED STUBS.
3. "USE EXTREME CAUTION" TO AVOID UNDERGROUND UTILITIES WHEN INSTALLING FOOTINGS FOR SIGNS, FENCES, BOLLARDS, AND ARCHITECTURAL AMENITIES AT ALL UTILITY SIGN/FENCE/BOLLARD/AMENITY CROSSINGS.
4. CONTRACTOR SHALL INSTALL WATER PIPES WITH SUFFICIENT ENOUGH DEPTH TO MAINTAIN 1' MINIMUM VERTICAL CLEARANCE FORM OUTSIDE DIAMETER OF PIPES AND COMPLY WITH THE MOST CURRENT STATE HEALTH CODE AND THE CALIFORNIA BUILDING AND PLUMBING CODE STANDARDS. CONTRACTOR SHALL DEEPEN WATER PIPES AS NECESSARY AND USE EXTREME CAUTION WHEN PLACING THRUST BLOCKS AS TO AVOID CONFLICTS WITH OTHER UTILITY PIPES. CONTRACTOR SHALL INSTALL REDUCERS AS REQUIRED. WATER VALVES SHALL BE INSTALLED ON 4" WATER PIPES OR LARGER AND BALL VALVES/CORP STOPS SHOULD BE INSTALLED ON 3" WATER PIPES OR SMALLER. THRUST BLOCKS SHALL BE INSTALLED AT FIRE HYDRANTS, BLOW-OFFS, TEES, CAPS, BENDS, ENDS, AND CHANGES IN SIZE AND/OR DIRECTION. WATER SEPARATION SHALL BE CONSTRUCTED IN ACCORDANCE WITH SECTION 720.0 AND TABLE 7-1 OF THE CALIFORNIA PLUMBING CODE. SEE CITY OF ATWATER STANDARD DETAIL W-4 FOR THRUST BLOCK DETAILS AND SPECIFICATIONS. SEE DETAIL 13 ON SHEET C1.4.
5. CONTRACTOR SHALL CONNECT TO EXISTING DOMESTIC WATER LINE PER CITY OF ATWATER STANDARDS AND SPECIFICATIONS. CONTRACTOR SHALL EXCAVATE EXISTING WATER LINE TO VERIFY THE HORIZONTAL AND VERTICAL ALIGNMENT PRIOR TO THE INSTALLATION OF THE PROPOSED WATER PIPE. CONTRACTOR SHALL INFORM THE ENGINEER IF THE ALIGNMENTS ARE DIFFERENT THAN SHOWN.
6. CONTRACTOR SHALL CONNECT TO EXISTING FIRE SERVICE WATER LINE PER CITY OF ATWATER STANDARDS AND SPECIFICATIONS. CONTRACTOR SHALL EXCAVATE EXISTING WATER LINE TO VERIFY THE HORIZONTAL AND VERTICAL ALIGNMENT PRIOR TO THE INSTALLATION OF THE PROPOSED WATER PIPE. CONTRACTOR SHALL INFORM THE ENGINEER IF THE ALIGNMENTS ARE DIFFERENT THAN SHOWN.
7. LIGHT SHOWN FOR REFERENCE ONLY. SEE ELECTRICAL AND DRY UTILITY PLANS BY OTHERS FOR DETAILS AND SPECIFICATIONS.

IDENTIFICATION STAMP
DIV. OF THE STATE ARCHITECT
APP: 02-121275 INC:
REVIEWED FOR
SS ☑ FLS ☑ ACS ☑
DATE: 12/15/2023

CALIFORNIA DESIGN WEST ARCHITECTS, Inc.

2100 19th Street
Sacramento, CA 95818

Phone: (916) 446-2466
Fax: (916) 446-5118
Web Page: ca-dw.com

These plans and prints thereof, as instruments of service, are owned by the architect and are for the use on this project only. Reproduction and/or distribution without the prior written consent of the architect is forbidden.

Copyright California Design West Architects, Inc.

ARCHITECT: CONSULTANT:

LICENSED ARCHITECT — MITCHELL A. McALISTER — NO. C 17258 — REGISTERED PROFESSIONAL ENGINEER — No. C85920 — Date Signed: 10/10/23 — CIVIL — STATE OF CALIFORNIA

CONSULTANT:

NorthStar Engineering Group, Inc.
• CIVIL ENGINEERING • SURVEYING • PLANNING •
620 12th Street Modesto, CA 95354
(209) 524-3525 Phone (209) 524-3526 Fax

PROJECT NAME:

BUHACH COLONY HIGH SCHOOL

1800 NORTH BUHACH RD
ATWATER, CA 95301

NEW STADIUM; FOOTBALL FIELD, ALL-WEATHER TRACK, BLEACHERS, CONCESSIONS UPGRADES

MERCED UNION HIGH SCHOOL DISTRICT

MERCED COUNTY

KEY PLAN:

SHEET TITLE:

WATER AND COMPOSITE UTILITY PLAN

JOB NUMBER:	SHEET NUMBER:
DATE: OCT. 10, 2023	C6.2
REVISION:	

PLOTTED: 10/10/2023 7:12 AUTHOR: Corey
DRAWING: V:\2021\Buhach Colony High School - Soccer Field\01 2018\Building Plans\SHEETS\C6.2.dwg

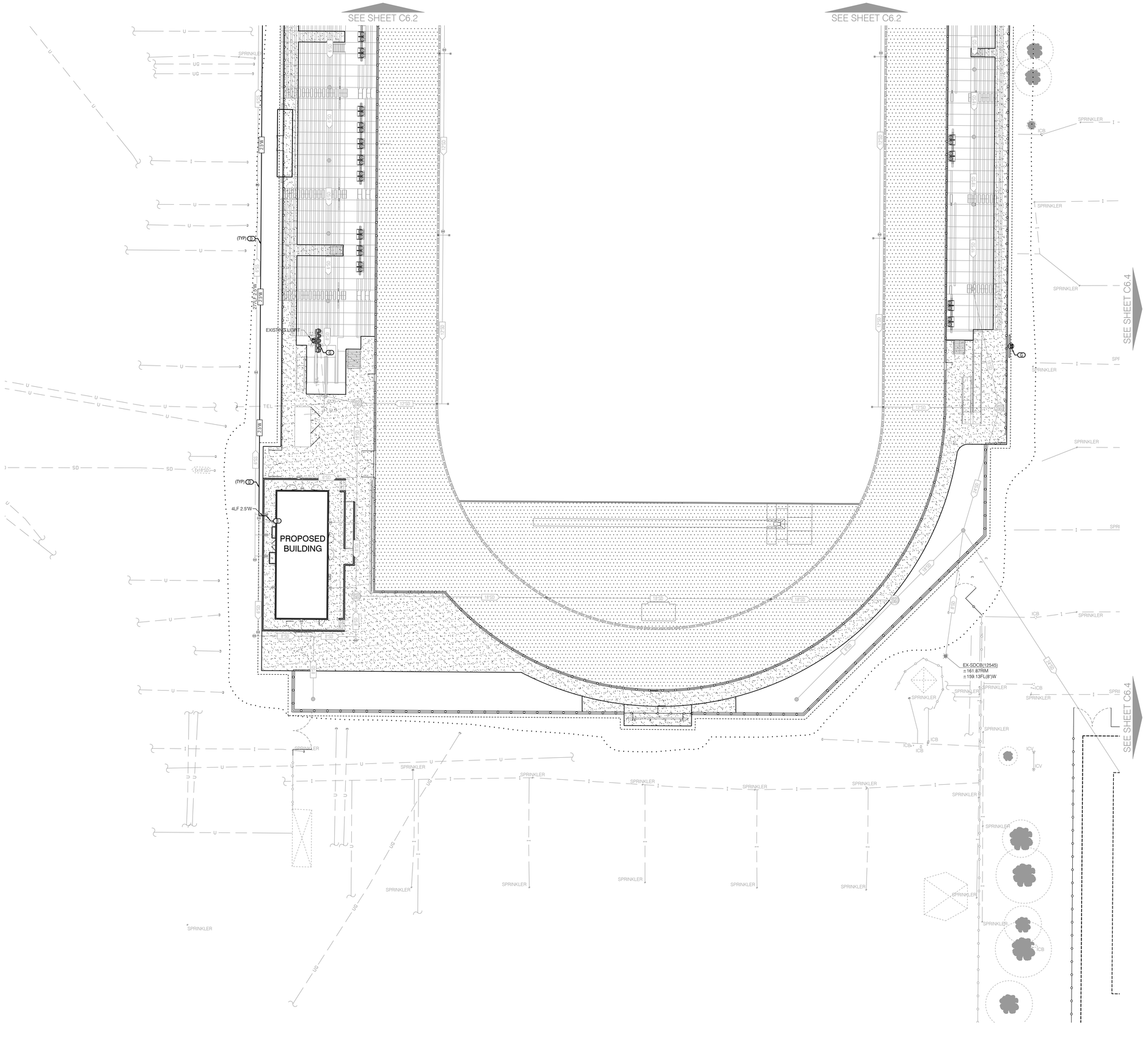

KEY NOTES

SEE TOPOGRAPHIC AND DEMOLITION SHEETS C2.1-2.4 FOR ADDITIONAL REMOVAL, REPLACEMENT AND PROTECTION NOTES.

CONTRACTOR SHALL "USE EXTREME CAUTION" AT ALL UTILITY CROSSINGS AND SHALL COMPLY WITH ALL APPLICABLE STANDARDS. IF A CONFLICT IS FOUND, THE CONTRACTOR SHALL NOTIFY THE ENGINEER IMMEDIATELY.

1. CONTRACTOR SHALL INSTALL FIRE HYDRANT ASSEMBLY PER CITY OF ATWATER STANDARD DETAIL WA-08. MAINTAINING A 3 FEET MINIMUM CLEARANCE SPACE. SEE DETAIL 14 ON SHEET C1.4. "USE EXTREME CAUTION" WHEN INSTALLING FOOTINGS TO AVOID UNDERGROUND UTILITIES.
2. PROPOSED DOMESTIC WATER WITH SHUT OFF VALVE TO BE STUBBED 5 FEET FROM THE FACE OF THE BUILDING. CONTRACTOR SHALL VERIFY THE LOCATIONS OF THE UTILITY CONNECTIONS WITH THE PLUMBING PLANS PRIOR TO CONSTRUCTION OF PROPOSED STUBS.
3. "USE EXTREME CAUTION" TO AVOID UNDERGROUND UTILITIES WHEN INSTALLING FOOTINGS FOR SIGNS, FENCES, BOLLARDS, AND ARCHITECTURAL AMENITIES AT ALL UTILITY SIGN/FENCE/BOLLARD/AMENITY CROSSINGS.
4. CONTRACTOR SHALL INSTALL WATER PIPES WITH SUFFICIENT ENOUGH DEPTH TO MAINTAIN 1' MINIMUM VERTICAL CLEARANCE FORM OUTSIDE DIAMETER OF PIPES AND COMPLY WITH THE MOST CURRENT STATE HEALTH CODE AND THE CALIFORNIA BUILDING AND PLUMBING CODE STANDARDS. CONTRACTOR SHALL DEEPEN WATER PIPES AS NECESSARY AND USE EXTREME CAUTION WHEN PLACING THRUST BLOCKS AS TO AVOID CONFLICTS WITH OTHER UTILITY PIPES. CONTRACTOR SHALL INSTALL REDUCERS AS REQUIRED. WATER VALVES SHALL BE INSTALLED ON 4" WATER PIPES OR LARGER AND BALL VALVES/CORP STOPS SHOULD BE INSTALLED ON 3" WATER PIPES OR SMALLER. THRUST BLOCKS SHALL BE INSTALLED AT FIRE HYDRANTS, BLOW-OFFS, TEES, CAPS, BENDS, ENDS, AND CHANGES IN SIZE AND/OR DIRECTION. WATER SEPARATION SHALL BE CONSTRUCTED IN ACCORDANCE WITH SECTION 720.0 AND TABLE 7-1 OF THE CALIFORNIA PLUMBING CODE. SEE CITY OF ATWATER STANDARD DETAIL W-4 FOR THRUST BLOCK DETAILS AND SPECIFICATIONS. SEE DETAIL 13 ON SHEET C1.4.
5. CONTRACTOR SHALL CONNECT TO EXISTING DOMESTIC WATER LINE PER CITY OF ATWATER STANDARDS AND SPECIFICATIONS. CONTRACTOR SHALL EXCAVATE EXISTING WATER LINE TO VERIFY THE HORIZONTAL AND VERTICAL ALIGNMENT PRIOR TO THE INSTALLATION OF THE PROPOSED WATER PIPE. CONTRACTOR SHALL INFORM THE ENGINEER IF THE ALIGNMENTS ARE DIFFERENT THAN SHOWN.
6. CONTRACTOR SHALL CONNECT TO EXISTING FIRE SERVICE WATER LINE PER CITY OF ATWATER STANDARDS AND SPECIFICATIONS. CONTRACTOR SHALL EXCAVATE EXISTING WATER LINE TO VERIFY THE HORIZONTAL AND VERTICAL ALIGNMENT PRIOR TO THE INSTALLATION OF THE PROPOSED WATER PIPE. CONTRACTOR SHALL INFORM THE ENGINEER IF THE ALIGNMENTS ARE DIFFERENT THAN SHOWN.
7. LIGHT SHOWN FOR REFERENCE ONLY. SEE ELECTRICAL AND DRY UTILITY PLANS BY OTHERS FOR DETAILS AND SPECIFICATIONS.

IDENTIFICATION STAMP
DIV. OF THE STATE ARCHITECT
APP: 02-121275 INC:
REVIEWED FOR
SS ☑ FLS ☑ ACS ☑
DATE: 12/15/2023

CALIFORNIA DESIGN WEST ARCHITECTS, Inc.

2100 19th Street
Sacramento, CA 95818

Phone: (916) 446-2466
Fax: (916) 446-5118
Web Page: ca-dw.com

These plans and prints thereof, as instruments of service, are owned by the architect and are for the use on this project only. Reproduction and/or distribution without the prior written consent of the architect is forbidden.

Copyright California Design West Architects, Inc.

ARCHITECT: CONSULTANT:

LICENSED ARCHITECT MITCHELL A. McALISTER No. C-17258 RENEWAL 08/31/2025 STATE OF CALIFORNIA

REGISTERED PROFESSIONAL ENGINEER SCOTT M. WAY No. C85920 Date Signed: 10/10/23 CIVIL STATE OF CALIFORNIA

CONSULTANT:

NorthStar Engineering Group, Inc.
• CIVIL ENGINEERING • SURVEYING • PLANNING •
620 12th Street Modesto, CA 95354
(209) 524-3525 Phone (209) 524-3526 Fax

PROJECT NAME:

BUHACH COLONY HIGH SCHOOL

1800 NORTH BUHACH RD
ATWATER, CA 95301

NEW STADIUM; FOOTBALL FIELD, ALL-WEATHER TRACK, BLEACHERS, CONCESSIONS UPGRADES

MERCED UNION HIGH SCHOOL DISTRICT

MERCED COUNTY

KEY PLAN:

SHEET TITLE:

WATER AND COMPOSITE UTILITY PLAN

JOB NUMBER:	SHEET NUMBER:
DATE: OCT. 10, 2023	C6.3
REVISION:	

PLOTTED: 9/19/2023 11:32 PLOTTED BY: Corey
DRAWING: T:\2021\14 Buhach Colony High School - Track and Field\21 221465\Working Plans\Civil\C6.3 UTIL.dwg

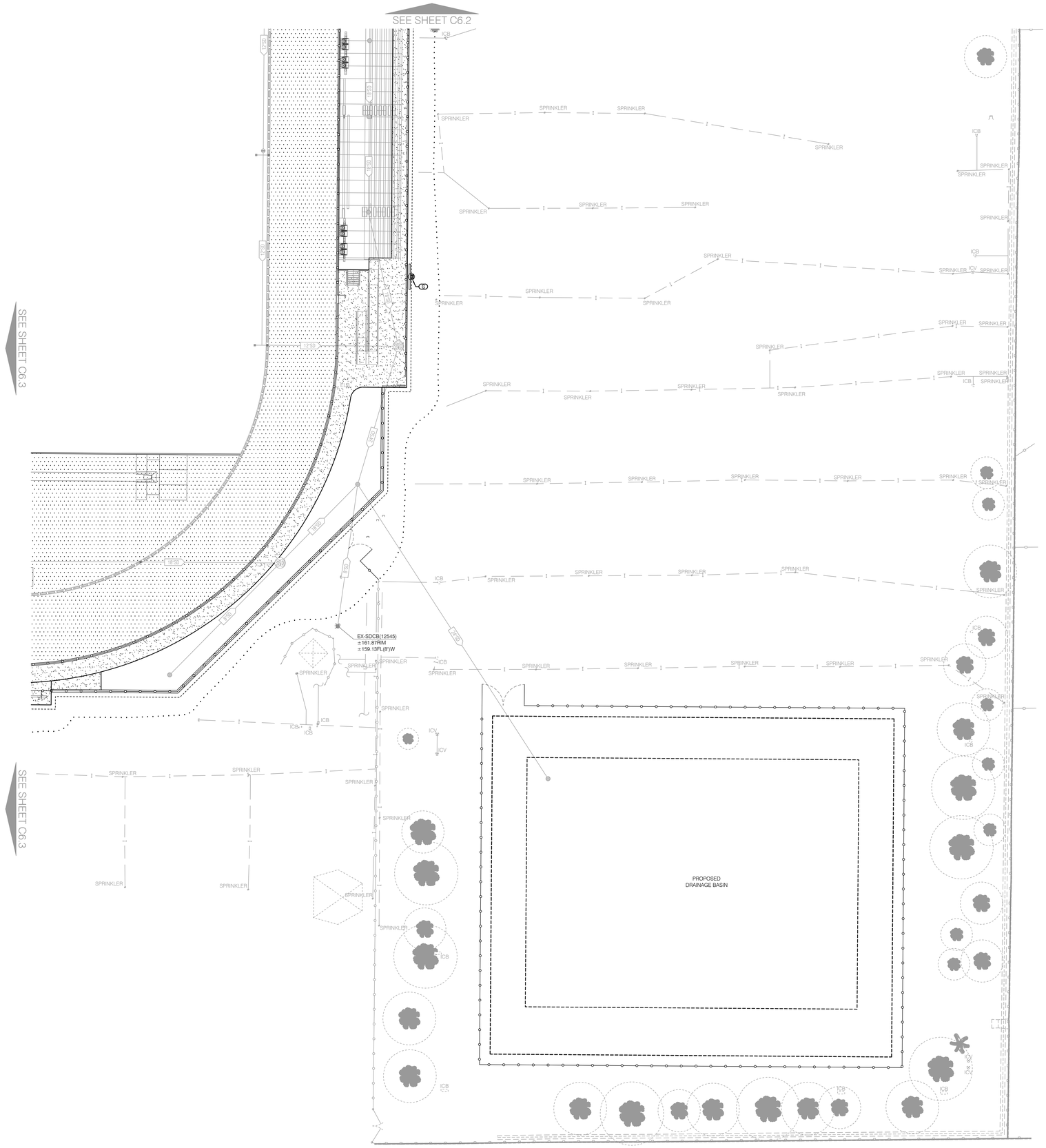

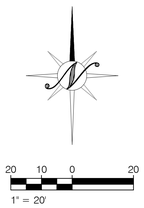

KEY NOTES

SEE TOPOGRAPHIC AND DEMOLITION SHEETS C2.1-2.4 FOR ADDITIONAL REMOVAL, REPLACEMENT AND PROTECTION NOTES.

CONTRACTOR SHALL "USE EXTREME CAUTION" AT ALL UTILITY CROSSINGS AND SHALL COMPLY WITH ALL APPLICABLE STANDARDS. IF A CONFLICT IS FOUND, THE CONTRACTOR SHALL NOTIFY THE ENGINEER IMMEDIATELY.

(4) CONTRACTOR SHALL INSTALL FIRE HYDRANT ASSEMBLY PER CITY OF ATWATER STANDARD DETAIL WA-08, MAINTAINING A 3 FEET MINIMUM CLEARANCE SPACE. SEE DETAIL 14 ON SHEET C1.4. "USE EXTREME CAUTION" WHEN INSTALLING FOOTINGS TO AVOID UNDERGROUND UTILITIES.

(5) PROPOSED DOMESTIC WATER WITH SHUT OFF VALVE TO BE STUBBED 5 FEET FROM THE FACE OF THE BUILDING. CONTRACTOR SHALL VERIFY THE LOCATIONS OF THE UTILITY CONNECTIONS WITH THE PLUMBING PLANS PRIOR TO CONSTRUCTION OF PROPOSED STUBS.

(7) "USE EXTREME CAUTION" TO AVOID UNDERGROUND UTILITIES WHEN INSTALLING FOOTINGS FOR SIGNS, FENCES, BOLLARDS, AND ARCHITECTURAL AMENITIES AT ALL UTILITY SIGN/FENCE/BOLLARD/AMENITY CROSSINGS.

(10) CONTRACTOR SHALL INSTALL WATER PIPES WITH SUFFICIENT ENOUGH DEPTH TO MAINTAIN 1' MINIMUM VERTICAL CLEARANCE FORM OUTSIDE DIAMETER OF PIPES AND COMPLY WITH THE MOST CURRENT STATE HEALTH CODE AND THE CALIFORNIA BUILDING AND PLUMBING CODE STANDARDS. CONTRACTOR SHALL DEEPEN WATER PIPES AS NECESSARY AND USE EXTREME CAUTION WHEN PLACING THRUST BLOCKS AS TO AVOID CONFLICTS WITH OTHER UTILITY PIPES. CONTRACTOR SHALL INSTALL REDUCERS AS REQUIRED. WATER VALVES SHALL BE INSTALLED ON 4" WATER PIPES OR LARGER AND BALL VALVES/CORP STOPS SHOULD BE INSTALLED ON 2" WATER PIPES OR SMALLER. THRUST BLOCKS SHALL BE INSTALLED AT FIRE HYDRANTS, BLOW-OFFS, TEES, CAPS, BENDS, ENDS, AND CHANGES IN SIZE AND/OR DIRECTION. WATER SEPARATION SHALL BE CONSTRUCTED IN ACCORDANCE WITH SECTION 720.0 AND TABLE 7-1 OF THE CALIFORNIA PLUMBING CODE. SEE CITY OF ATWATER STANDARD DETAIL W-4 FOR THRUST BLOCK DETAILS AND SPECIFICATIONS. SEE DETAIL 13 ON SHEET C1.4.

(11) CONTRACTOR SHALL CONNECT TO EXISTING DOMESTIC WATER LINE PER CITY OF ATWATER STANDARDS AND SPECIFICATIONS. CONTRACTOR SHALL EXCAVATE EXISTING WATER LINE TO VERIFY THE HORIZONTAL AND VERTICAL ALIGNMENT PRIOR TO THE INSTALLATION OF THE PROPOSED WATER PIPE. CONTRACTOR SHALL INFORM THE ENGINEER IF THE ALIGNMENTS ARE DIFFERENT THAN SHOWN.

(12) CONTRACTOR SHALL CONNECT TO EXISTING FIRE SERVICE WATER LINE PER CITY OF ATWATER STANDARDS AND SPECIFICATIONS. CONTRACTOR SHALL EXCAVATE EXISTING WATER LINE TO VERIFY THE HORIZONTAL AND VERTICAL ALIGNMENT PRIOR TO THE INSTALLATION OF THE PROPOSED WATER PIPE. CONTRACTOR SHALL INFORM THE ENGINEER IF THE ALIGNMENTS ARE DIFFERENT THAN SHOWN.

(13) LIGHT SHOWN FOR REFERENCE ONLY. SEE ELECTRICAL AND DRY UTILITY PLANS BY OTHERS FOR DETAILS AND SPECIFICATIONS.

IDENTIFICATION STAMP
DIV. OF THE STATE ARCHITECT
APP: 02-121275 INC:
REVIEWED FOR
SS ☑ FLS ☑ ACS ☑
DATE: 12/15/2023

DESIGN California WEST

CALIFORNIA DESIGN WEST ARCHITECTS, Inc.

2100 19th Street
Sacramento, CA 95818

Phone: (916) 446-2466
Fax: (916) 446-5118
Web Page: ca-dw.com

These plans and prints thereof, as instruments of service, are owned by the architect and are for the use on this project only. Reproduction and/or distribution without the prior written consent of the architect is forbidden.

Copyright California Design West Architects, Inc.

ARCHITECT: CONSULTANT:

LICENSED ARCHITECT MITCHELL A. McALISTER No. C-17258 STATE OF CALIFORNIA

REGISTERED PROFESSIONAL ENGINEER MITCHELL A. McALISTER No. C89920 Date Signed: 10/10/23 CIVIL STATE OF CALIFORNIA

CONSULTANT:

NorthStar Engineering Group, Inc.
• CIVIL ENGINEERING • SURVEYING • PLANNING •
620 12th Street Modesto, CA 95354
(209) 524-3525 Phone (209) 524-3526 Fax

PROJECT NAME:

BUHACH COLONY HIGH SCHOOL

1800 NORTH BUHACH RD
ATWATER, CA 95301

NEW STADIUM; FOOTBALL FIELD, ALL-WEATHER TRACK, BLEACHERS, CONCESSIONS UPGRADES

MERCED UNION HIGH SCHOOL DISTRICT

MERCED COUNTY

KEY PLAN:

SHEET TITLE:

WATER AND COMPOSITE UTILITY PLAN

JOB NUMBER:	SHEET NUMBER:
DATE: OCT. 10, 2023	C6.4
REVISION:	

PLOTTED: 10/10/2023 17:28 PLOTTED BY: Corey
DRAWING: I:\2021\21-Buhach Colony High School - Ideal and Field\23-2116\Electrical Plans\EA-E1P0L.dwg

EROSION CONTROL NOTES

1. THESE PLANS DEPICT APPROPRIATE MEASURES TO CONTROL EROSION ON THE SITE TO BE GRADED AS SHOWN ON THE PLANS THE NATIVE VEGETATION WILL BE REMOVED ONLY FROM THOSE AREAS TO BE GRADED. AREAS OUTSIDE OF AND DOWNSLOPE OF THE LIMITS OF GRADING WILL BE PROTECTED FROM SILT LADEN RUNOFF BY PERIMETER SILT FENCES AS DEPICTED ON THIS PLAN. SLOPED AREAS WHICH HAVE BEEN STRIPPED OF VEGETATION AND NEW SLOPES OVER FOUR FEET HIGH CREATED DURING THE GRADING OPERATION WILL BE TRACKWALKED & HYDROSEEDED.
2. ALL EROSION SEDIMENT STRUCTURES SHALL BE INSPECTED AFTER EACH RAINSTORM AND SHALL BE CLEANED OUT AS NECESSARY.
3. A STABILIZED CONSTRUCTION ENTRANCE SHALL BE INSTALLED PRIOR TO COMMENCEMENT OF GRADING. THE LOCATION IS SHOWN ON THESE PLANS. ALL CONSTRUCTION TRAFFIC ENTERING THE PAVED ROAD MUST CROSS THE ENTRANCE.
4. THE CONTRACTOR IS RESPONSIBLE FOR ALL ASPECTS OF EROSION CONTROL FOR THE LIFE OF THE PROJECT AND SHALL INSTALL AND MAINTAIN ANY DEVICES AND MEASURES NECESSARY TO THE SATISFACTION OF THE CITY ENGINEER, DURING CONSTRUCTION ACTIVITIES.
5. TO MINIMIZE EROSION OF GRADED BANKS, ALL GRADED BANKS AND STOCKPILE AREAS SHALL BE HYDROSEEDED, LANDSCAPED OR SEALED.
6. STRAW BALES, PIECES OF WOOD, FABRIC OR OTHER SUITABLE MATERIALS SHALL BE USED TO PREVENT SEDIMENT LADEN RUNOFF FROM ENTERING ANY COMPLETED STORM DRAIN INLETS. THESE PROTECTION MEASURES SHALL BE MAINTAINED UNTIL THE PROJECT IS COMPLETED.
7. WHEN TEMPORARY STRUCTURES HAVE SERVED THEIR INTENDED PURPOSE AND THE CONTRIBUTING DRAINAGE AREA HAS BEEN PROPERLY STABILIZED. THE EMBANKMENT AND RESULTING SEDIMENT DEPOSITS ARE TO BE LEVELED OR OTHERWISE DISPOSED OF BY THE CONTRACTOR AS RECOMMENDED BY THE SOILS ENGINEER.
8. GRADED AREAS MUST DRAIN AWAY FROM THE FACE OF SLOPES AT THE CONCLUSION OF EACH WORKING DAY. DRAINAGE SHALL BE DIRECTED TOWARDS DRAINAGE INLETS.
9. TEMPORARY EROSION CONTROL DEVICES SHOWN ON THIS PLAN WHICH INTERFERE WITH THE WORK SHALL BE RELOCATED OR MODIFIED AS AND WHEN THE INSPECTOR SO DIRECTS AS THE WORK PROGRESSES.
10. ALL LOOSE SOIL AND DEBRIS SHALL BE REMOVED FROM THE STREET AREAS UPON STARTING OPERATIONS AND PERIODICALLY THEREAFTER AS DIRECTED BY THE INSPECTOR.
11. HYDROMULCHING OF SLOPES OVER 5' IN HEIGHT SHALL BE COMPLETED BETWEEN SEPTEMBER 1 AND OCTOBER 1 OF THE YEAR IN WHICH THEY ARE CONSTRUCTED OR IMMEDIATELY AFTER THEIR CONSTRUCTION IF THEY ARE COMPLETED AFTER OCTOBER 1ST. APPLICATION RATES SHALL BE AS FOLLOWS AS REQUIRED BY CITY OF ATWATER:

HYDROSEED MIX: BOTANICAL NAME	(COMMON NAME)	MIN. % PURITY	MIN. % GERMINATION	LB/ACRE
ARISTIDA TERNIPES VAR. HAMULOSA	(THREE-AWN)	90%	85%	2
BROMUS CARINATUS	(CALIFORNIA BROME)	90%	85%	2
ELYMUS GLAUCUS	(BLUE WILD RYE)	90%	85%	4
ELYMUS TRACHYCAULUS SSP. TRACHYCAULUS	(SLENDER WHEATGRASS)	90%	85%	3
MELICA CALIFORNICA	(CALIFORNIA ONION GRASS)	90%	85%	2
MUHLENBERGIA RIGENS	(DEER GRASS)	90%	85%	4
NASSELLA LEPIDA	(FOOTHILL NEEDLEGRASS)	90%	85%	6
TRIFOLIUM HIRTUM	('HYKON' ROSE CLOVER)	90%	85%	10
CELLULOSE FIBER MULCH				2000
ORGANIC BINDER WITH HYDROSEED SLURRY				50
16-20-O-S FERTILIZER				300

12. WHEN DIRECTED BY THE INSPECTOR, A 12-INCH BERM SHALL BE MAINTAINED ALONG THE TOP OF THE SLOPE OF THOSE FILLS ON WHICH GRADING IS NOT IN PROGRESS.
13. STAND-BY CREWS SHALL BE ALERTED BY THE PERMITTEE OR CONTRACTOR FOR EMERGENCY WORK DURING RAINSTORMS.
14. SEWER OR STORM DRAIN TRENCHES THAT DRAIN THROUGH BASIN DIKES SHALL BE PLUGGED WITH SANDBAGS FROM TOP OF PIPE TO TOP OF DIKE.
15. ALL UTILITY TRENCHES SHALL BE BLOCKED WHEN DIRECTED BY THE DESIGN ENGINEER AT THE PRESCRIBED INTERVALS FROM THE BOTTOM TO TOP WITH DOUBLE ROW OF SANDBAGS PRIOR TO BACKFILL. SANDBAGS ARE TO BE PLACED WITH ALTERNATE HEADER AND STRETCHER COURSES. THE INTERVALS PRESCRIBED BETWEEN SANDBAG BLOCKING SHALL DEPEND ON THE SLOPE OF THE GROUND SURFACE, BUT NOT TO EXCEED THE FOLLOWING:

GRADE OF GROUND SURFACE OR STREET	INTERVAL
LESS THAN 2%	AS REQUIRED
2% TO 4%	100 FEET
4% TO 10%	50 FEET
OVER 10%	25 FEET

16. PROVIDE VELOCITY CHECK DAMS IN ALL UNPAVED STREET AREAS AT THE INTERVALS INDICATED ABOVE. VELOCITY CHECK DAMS MAY BE CONSTRUCTED OF SANDBAGS, TIMBER, OR OTHER EROSION RESISTANT MATERIALS APPROVED BY THE INSPECTOR, AND SHALL EXTEND COMPLETELY ACROSS THE STREET OR CHANNEL AT RIGHT ANGLES TO THE CENTERLINE. EARTH DIKES MAY NOT BE USED AS VELOCITY CHECK DAMS.
17. AFTER SEWER AND UTILITY TRENCHES ARE BACKFILLED AND COMPACTED, THE SURFACES OVER SUCH TRENCHES SHALL BE MOUNDED SLIGHTLY TO PREVENT CHANNELING OF WATER IN THE TRENCH AREA. CARE SHOULD BE EXERCISED TO PROVIDE FOR CROSS-FLOW AT FREQUENT INTERVALS WHERE TRENCHES ARE NOT ON THE CENTERLINE OF A CROWNED STREET. REMOVE ALL CHECK DAMS PRIOR TO BACKFILL.
18. TO CONTROL SEDIMENT ENTERING FIELD INLETS, PLACE TWO STRAW BALES IN THE CONCRETE V-DITCH AT THE SIDE OPENING OF THE FIELD INLET AT THE LOCATIONS SHOWN ON THIS PLAN.
19. EXCEPT AS OTHERWISE DIRECTED BY THE INSPECTOR, ALL DEVICES SHOWN SHALL BE IN PLACE AT THE END OF EACH WORKING DAY OR WHEN DIRECTED BY THE INSPECTOR.
20. ALL BASINS AND CHECK DAMS SHALL HAVE BEEN PUMPED DRY, AND ALL DEBRIS AND SILT REMOVED WITHIN 24 HOURS AFTER EACH STORM.
21. SANDBAGS SHALL BE STOCKPILED ON-SITE, READY TO BE PLACED IN POSITION WHEN RAIN FORECAST IS 40% CHANCE OR GREATER
22. EXPOSED SLOPES SHALL BE PROTECTED BY VEGETATION COVER OR FABRIC COVER AS APPROVED BY THE CITY ENGINEER.
23. WHEN PAD ELEVATION OF ADJACENT LOTS OR ELEVATION BETWEEN STREET AND LOT ARE SEPARATED BY MORE THAN 6 FEET, A MINIMUM 12" BERM SHALL BE MAINTAINED ALONG THE PROPERTY LINE SEPARATING THE LOTS, AND THE BERM SHALL DIRECT THE WATER TO THE OUTLET. VELOCITY CHECK DAMS SHALL BE INSTALLED BETWEEN THE OUTLET ON THE LOT AND THE STREET.
24. ALL EROSION CONTROL MEASURES SHALL BE IN COMPLIANCE WITH THE LATEST EDITION OF THE CASQA STORMWATER MANAGEMENT HANDBOOK.
25. ALL FINISHED PADS SHALL BE PROTECTED.
26. THE FOLLOWING PLANS ARE ACCURATE FOR EROSION CONTROL PURPOSES ONLY.
27. THE INFORMATION ON THIS PLAN IS INTENDED TO BE USED AS A GUIDELINE FOR THE CONTRACTOR AND SUBCONTRACTORS TO COMPLY WITH THE REQUIREMENTS OF THE STATE WATER RESOURCES CONTROL BOARD. FIELD CONDITIONS MAY NECESSITATE MODIFICATIONS TO THIS PLAN.
28. NO ONSITE FUELING SHALL TAKE PLACE.
29. SEAL OR SKIRT BETWEEN TRAILER & GRADING TO PREVENT EXPOSURE TO DRAIN.
30. STRAW WATTLES INSTALLED ON A SLOPE SHALL CONFORM TO THE GUIDELINES SPECIFIED BY THE UNITED STATES ENVIRONMENTAL PROTECTION AGENCY NATIONAL POLLUTANT DISCHARGE ELIMINATION SYSTEM BEST MANAGEMENT PRACTICES.
31. EROSION RESISTANT VEGETATION SHOULD BE MAINTAINED ON THE FACE OF ALL SLOPES.
32. CONTRACTOR SHALL REFER TO THE PROJECT STORM WATER POLLUTION PLAN (SWPPP) FOR ALL PRE AND POST CONSTRUCTION EROSION CONTROL MEASURES AND BEST MANAGEMENT PRACTICES (BMPs).
33. ALL BASINS SHALL BE HYDROSEEDED IN ACCORDANCE TO THE PROJECT SWPPP.
34. CONTRACTOR SHALL INSTALL DRAIN INLET PROTECTION FOR ALL CATCH BASINS LOCATED IN THE VICINITY OF WORK. THIS INCLUDES ANY CATCH BASINS LOCATED IN THE PUBLIC RIGHT-OF-WAY, AS WELL AS ANY ONSITE CATCH BASINS.
35. CONTRACTOR SHALL ENSURE THAT CONSTRUCTION ACTIVITIES DO NOT DEPOSIT SEDIMENT ON TO THE PUBLIC ROADWAY, SIDEWALKS AND GUTTERS.
36. CONTRACTOR SHALL USE STREET SWEEPING OR OTHER DRY SWEEPING METHODS, AS NECESSARY, TO REMOVE CONSTRUCTION RELATED SEDIMENT FROM PAVEMENT IN THE PROJECT AREA AND PROJECT ROADWAY.
37. CONTRACTOR SHALL SCHEDULE WORK FOR DRY WEATHER DAYS WHEN NO RAIN IS IN THE IMMEDIATE FORECAST.

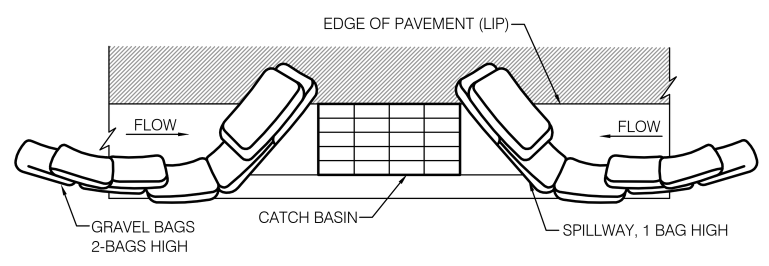

A **TYPICAL PROTECTION FOR INLET ON SUMP**
NTS

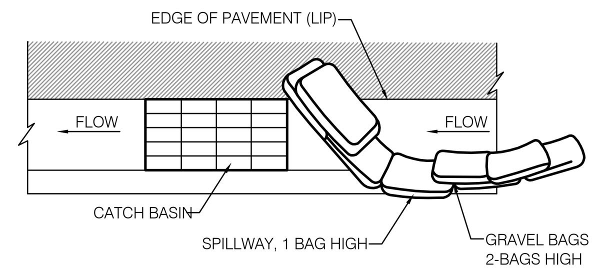

B **TYPICAL PROTECTION FOR INLET ON GRADE**
NTS

NOTES:

1. INTENDED FOR SHORT-TERM USE.
2. USE TO INHIBIT NON-STORM WATER FLOW.
3. ALLOW FOR PROPER MAINTENANCE AND CLEAN UP.
4. BAGS MUST BE REMOVED AFTER ADJACENT OPERATION IS COMPLETED.
5. NOT APPLICABLE IN AREAS WITH HIGH SILTS AND CLAYS WITHOUT FILTER FABRIC.

DI PROTECTION TYPE 3 - GRAVEL BAG

THE GRAVEL BAG BARRIER (TYPE 3) IS SHOWN IN THE FIGURES. FLOW FROM A SEVERE STORM SHOULD NOT OVERTOP THE CURB. IN AREAS OF HIGH CLAY AND SILTS, USE FILTER FABRIC AND GRAVEL AS ADDITIONAL FILTER MEDIA. GRAVEL BAGS SHOULD BE USED DUE TO THEIR HIGH PERMEABILITY.

1. USE SAND BAG MADE OF GEOTEXTILE FABRIC (NOT BURLAP) AND FILL WITH 0.75 IN. ROCK OR 0.25 IN. PEA GRAVEL.
2. CONSTRUCT ON GENTLY SLOPING STREET.
3. LEAVE ROOM UPSTREAM OF BARRIER FOR WATER TO POND AND SEDIMENT TO SETTLE.
4. PLACE SEVERAL LAYERS OF SAND BAGS - OVERLAPPING THE BAGS AND PACKING THEM TIGHTLY TOGETHER.
5. LEAVE GAP OF ONE BAG ON THE TOP ROW TO SERVE AS A SPILLWAY. FLOW FROM A SEVERE STORM (E.G., 10 YEAR STORM) SHOULD NOT OVERTOP THE CURB.
6. THIS DETAIL IS TO BE USED ON EXISTING STREETS WHERE SILTED FLOW IS TO BE INTERCEPTED (CAUGHT) PRIOR TO ENTERING THE STORM DRAIN SYSTEM. SANDBAGS CAN ALSO BE USED WHEN THE ROUGH GRADED STREETS HAVE POURED INPLACE CONCRETE SURROUNDING THE INLET TO CREATE A "FLOW LINE" WHERE A DAM CAN BE ACHIEVED TO PROTECT THE STORM SYSTEM FROM THE INFLOW OF SEDIMENT.

C **DI PROTECTION - TYPE 3**
NTS

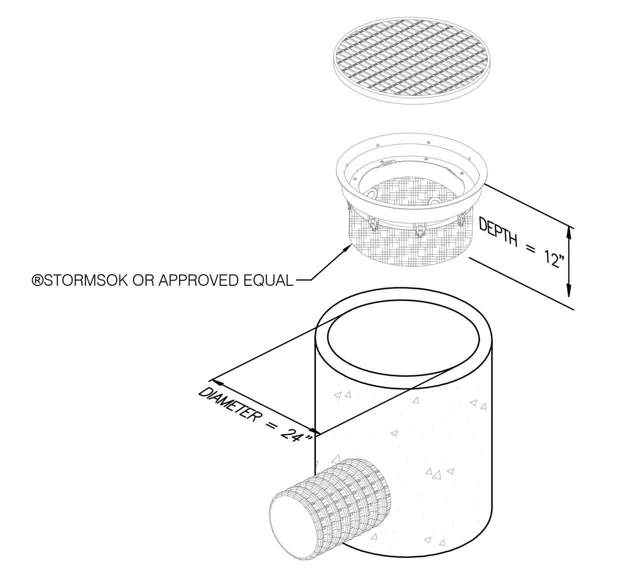

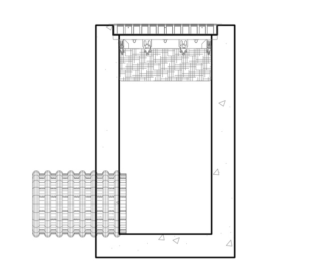

INSTALLATION DETAIL

D **TYPICAL ®STORMSOK CONSTRUCTION**
NTS

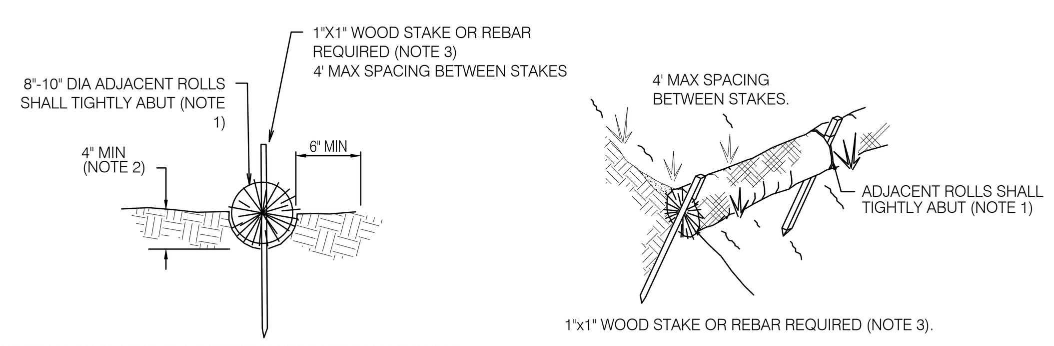

NOTES:

1. WATTLES SHALL BE PLACED IN A ROW WITH ENDS TIGHTLY ABUTTING.
2. EACH WATTLE SHALL BE EMBEDDED IN THE SOIL A MINIMUM OF 4 INCHES. AFTER CONSTRUCTION, CONTRACTOR TO REMOVE WATTLES AND FILL CAVITY.
3. WATTLES SHALL BE SECURELY ANCHORED IN PLACE BY TWO STAKES OR REBARS DRIVEN THROUGH THE WATTLES. THE FIRST STAKE IN EACH WATTLE SHALL BE DRIVEN TOWARD THE PREVIOUSLY LAID WATTLE TO FORCE THE WATTLES TOGETHER.
4. THE DIKE SHALL BE INSPECTED AFTER EACH STORM, AND REPAIR OR REPLACEMENT SHALL BE MADE PROMPTLY AS NEEDED. THE WATTLES SHALL BE REMOVED ONCE THEY HAVE SERVED THEIR PURPOSE SO AS NOT TO BLOCK OR IMPEDE STORM FLOW OR DRAINAGE.

E **STRAW WATTLE DETAIL**
NTS

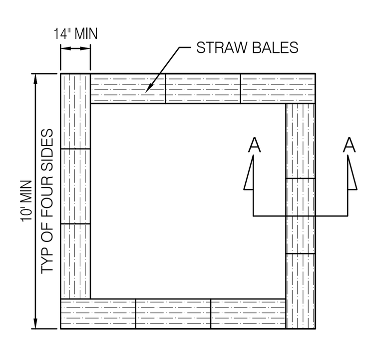

BALE CONFIGURATION

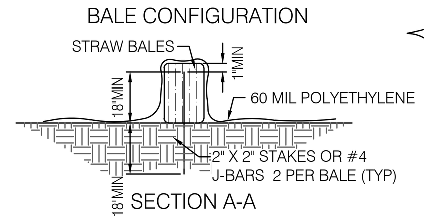

SECTION A-A

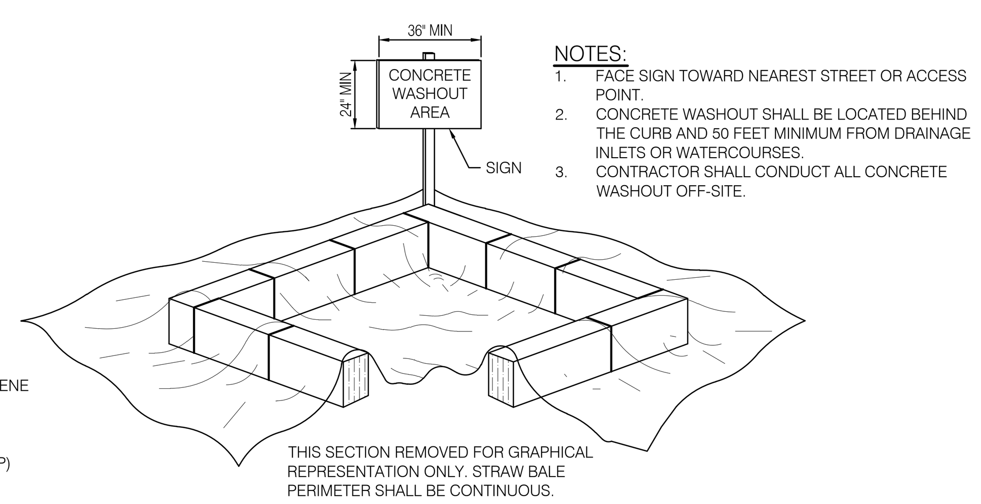

NOTES:

1. FACE SIGN TOWARD NEAREST STREET OR ACCESS POINT.
2. CONCRETE WASHOUT SHALL BE LOCATED BEHIND THE CURB AND 50 FEET MINIMUM FROM DRAINAGE INLETS OR WATERCOURSES.
3. CONTRACTOR SHALL CONDUCT ALL CONCRETE WASHOUT OFF-SITE.

F **CONCRETE WASHOUT**
NTS

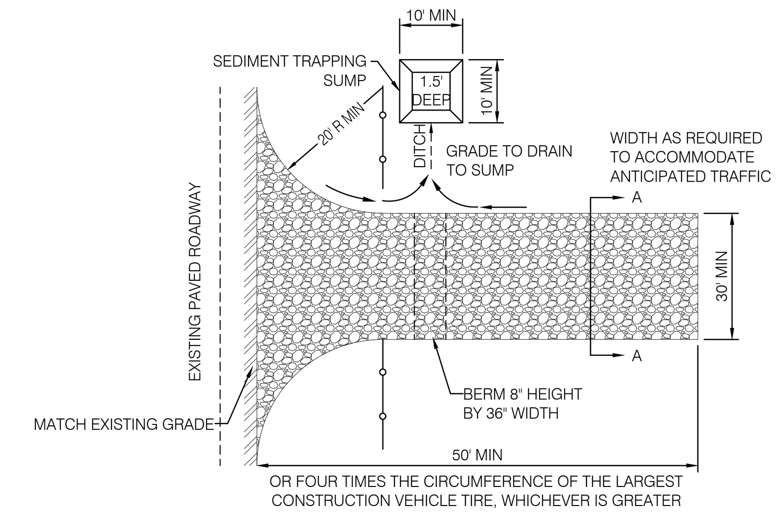

NOTE:
CONSTRUCT SEDIMENT BARRIER AND CHANNELIZE RUNOFF TO SEDIMENT TRAPPING DEVICE

G1 **PLAN (OPTION 1)**
NTS

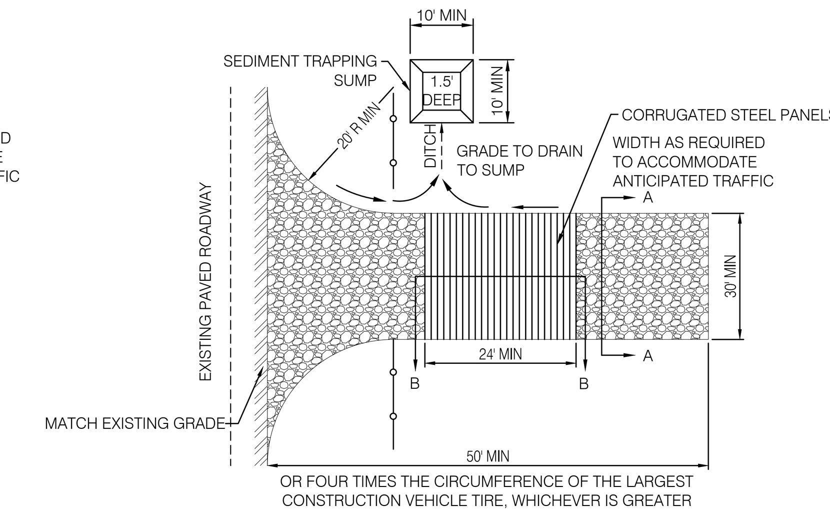

NOTE:
CONSTRUCT SEDIMENT BARRIER AND CHANNELIZE RUNOFF TO SEDIMENT TRAPPING DEVICE

G2 **PLAN (OPTION 2)**
NTS

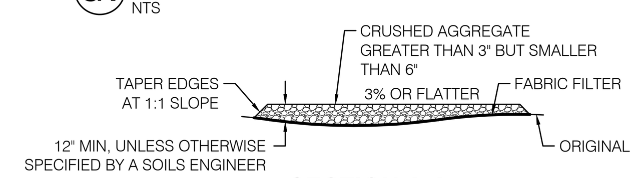

SECTION A-A
NTS

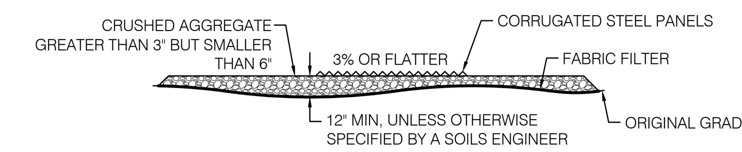

SECTION B-B
NTS

TEMPORARY STABILIZED CONSTRUCTION ENTRANCE
DESIGN AND CONSTRUCTION SPECIFICATIONS:

1. THE TEMPORARY STABILIZED CONSTRUCTION ENTRANCE SHALL BE CONSTRUCTED IN STRICT ACCORDANCE WITH THE PLANS AND SPECIFICATIONS OF THE LATEST EDITION OF THE CALIFORNIA STORMWATER HANDBOOK, DETAIL TC-1. WHERE THERE IS A DISCREPANCY BETWEEN THIS DETAIL AND THE CALIFORNIA STORMWATER HANDBOOK, THE HANDBOOK SHALL GOVERN.
2. CONTRACTOR SHALL CONSTRUCT A STABILIZED CONSTRUCTION ENTRANCE AT EACH ENTRANCE TO THE PROJECT SITE AND SHALL BE CONSTRUCTED ON LEVEL GROUND.
3. THE MATERIAL FOR CONSTRUCTION OF THE PAD SHALL BE 3 TO 6 INCH DIA. STONE.
4. THE THICKNESS FOR THE PAD SHALL NOT BE LESS THAN 12 INCHES OR AS RECOMMENDED BY SOILS ENGINEER.
5. THE WIDTH OF THE PAD SHALL NOT BE LESS THAN 30' OR THE FULL WIDTH OF ALL POINTS OF INGRESS OR EGRESS, WHICHEVER IS GREATER.
6. THE LENGTH OF THE PAD SHALL BE AS REQUIRED, BUT NOT LESS THAN 50 FEET.
7. THE ENTRANCE SHALL BE MAINTAINED IN A CONDITION THAT WILL PREVENT TRACKING OR FLOWING OF SEDIMENT ONTO PUBLIC RIGHT-OF-WAY. THIS MAY REQUIRE PERIODIC TOP DRESSING WITH ADDITIONAL STONE AS CONDITIONS DEMAND, AND REPAIR AND/OR CLEAN OUT ANY MEASURES USED TO TRAP SEDIMENT. ALL SEDIMENT SPILLED, DROPPED, WASHED OR TRACKED ONTO PUBLIC RIGHT-OF-WAY SHALL BE REMOVED IMMEDIATELY.
8. WHEN NECESSARY, WHEELS SHALL BE CLEANED TO REMOVE SEDIMENT PRIOR TO ENTRANCE ONTO PUBLIC RIGHT-OF-WAY. WHEN WASHING IS REQUIRED, IT SHALL BE DONE ON AN AREA STABILIZED WITH CRUSHED STONE THAT DRAINS INTO AN APPROVED SEDIMENT TRAP, SEDIMENT BASIN, OR SEDIMENT SWALE. ALL SEDIMENT SHALL BE PREVENTED FROM ENTERING ANY STORM DRAIN, DITCH, OR WATERCOURSE THROUGH USE OF GRAVEL BAGS, GRAVEL, BOARDS, OR OTHER APPROVED METHODS.
9. CONTRACTOR TO REMOVE AND DISPOSE OF STABILIZED CONSTRUCTION ENTRANCE UPON COMPLETION OF CONSTRUCTION.
10. CONSTRUCTION AND MAINTENANCE SHALL BE IN ACCORDANCE WITH THE 2003 CALIFORNIA STORMWATER BMP HANDBOOK.

G **TEMPORARY STABILIZED CONSTRUCTION ENTRANCE**
NTS

CALL BEFORE YOU DIG
USA
800-227-2600

IDENTIFICATION STAMP
DIV. OF THE STATE ARCHITECT
APP: 02-121275 INC:
REVIEWED FOR
SS ☑ FLS ☑ ACS ☑
DATE: 12/15/2023

CALIFORNIA DESIGN
WEST ARCHITECTS, Inc.

2100 19th Street
Sacramento, CA 95818

Phone: (916) 446-2466
Fax: (916) 446-5118
Web Page: ca-dw.com

These plans and prints thereof, as instruments of service, are owned by the architect and are for the use on this project only. Reproduction and/or distribution without the prior written consent of the architect is forbidden.

Copyright California Design West Architects, Inc.

ARCHITECT: CONSULTANT:

LICENSED ARCHITECT
MITCHELL A. McALLISTER
NO. C 17250
REN. 2-28-2025
STATE OF CALIFORNIA

REGISTERED PROFESSIONAL ENGINEER
COREY M. WALKER
No. C89920
Date Signed: 10/10/23
CIVIL
STATE OF CALIFORNIA

CONSULTANT:

NorthStar
Engineering Group, Inc.
• CIVIL ENGINEERING • SURVEYING • PLANNING •
620 12th Street Modesto, CA 95354
(209) 524-3525 Phone (209) 524-3526 Fax

PROJECT NAME:

BUHACH COLONY HIGH SCHOOL

1800 NORTH BUHACH RD
ATWATER, CA 95301

NEW STADIUM; FOOTBALL FIELD, ALL-WEATHER TRACK, BLEACHERS, CONCESSIONS UPGRADES

MERCED UNION HIGH SCHOOL DISTRICT

MERCED COUNTY

KEY PLAN:

SHEET TITLE:

EROSION CONTROL PLAN, NOTES, AND DETAILS

JOB NUMBER:

DATE:
OCT. 10, 2023

REVISION:

SHEET NUMBER:
C7.1

PLOTTED: 10/10/2023 16:06 PLOTTED BY: Jwheeler
DWGNAME: F:\22-3174 Buhach Colony High School Track and Field\22-3174B\Civil\Imp Plans\C7.1 ERS.dwg

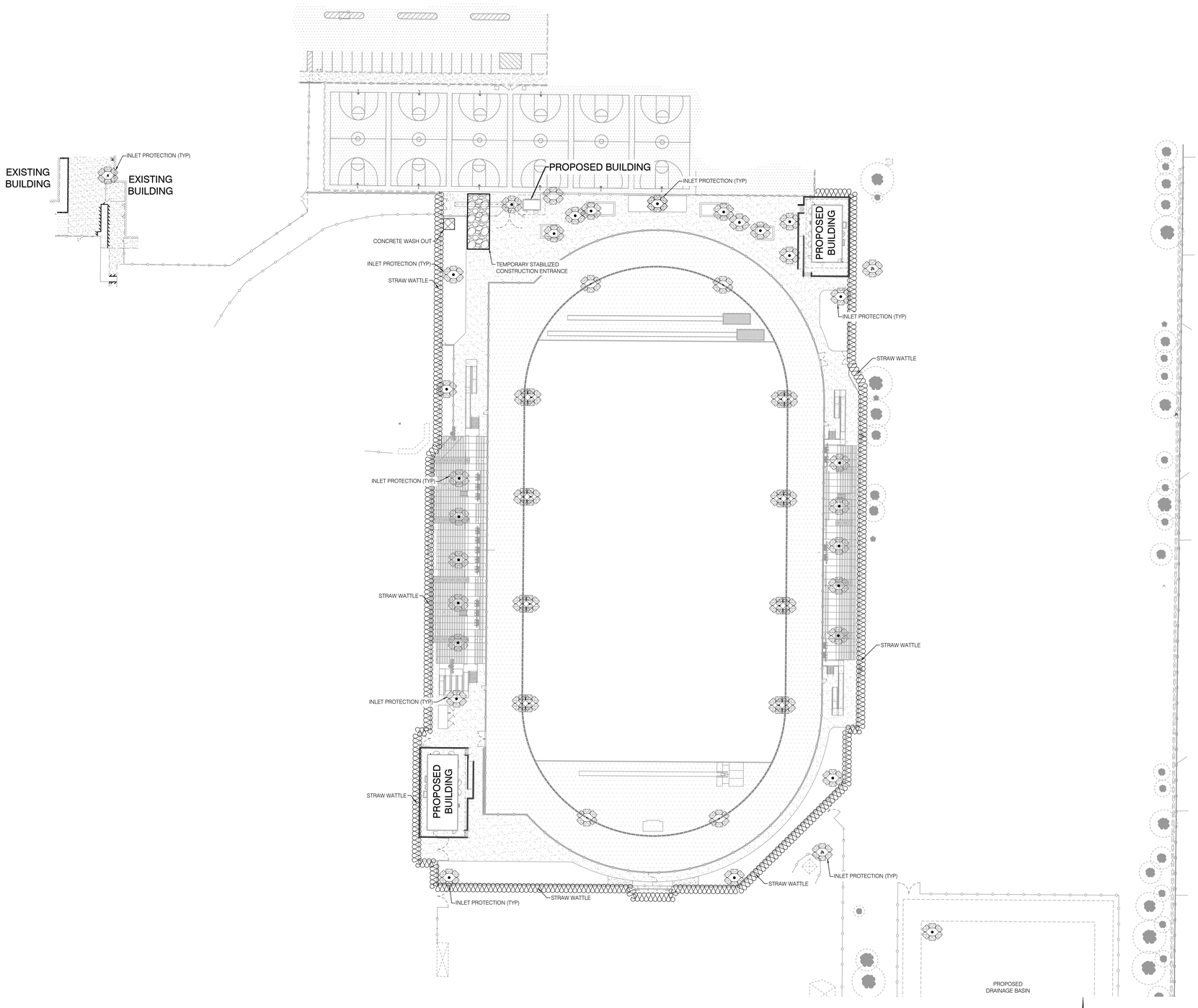

40 20 0 40

1" = 40'

LEGEND

	STRAW WATTLE (SEE DETAIL "E") TO BE PLACED AT ALL LOCATIONS SHOWN. STRAW WATTLES SHALL ALSO BE PLACED AT THE FRONT OF ANY LOT WHERE AN UNDERCUT IS NOT PRESENT AS SHOWN ON DETAIL E, SHEET C7.1.
	CONCRETE WASHOUT AREA (SEE DETAIL "F")
	INLET PROTECTION (SEE DETAILS 'A', 'B', C, AND 'D') SHALL BE PLACED AROUND ALL CATCH BASINS WITHIN THE PROJECT DRAINAGE LIMITS; INCLUDING BUT NOT LIMITED TO ALL LANDSCAPE DRAINAGE. ALSO, INLET PROTECTION SHALL BE PLACED AT THE FIRST INLET DOWNSTREAM FROM THE PROJECT SITE (ON EITHER DIRECTION).
	TEMPORARY STABILIZED CONSTRUCTION ENTRANCE (SEE DETAIL "G") TO BE DETERMINED BY CONTRACTOR IN FIELD.

PLOTTED: 10/3/2023 9:42:0 PLOTTED BY: Jatveer
DWG NAME: I:\2021\21-174 Atwater-Cressy High School\Civil\Site and Grading\Sheets\21-174 Site Grading Plans\C2.2 ESC.dwg

IDENTIFICATION STAMP
DIV. OF THE STATE ARCHITECT
APP: 02-121275 INC:
REVIEWED FOR
SS ☑ FLS ☑ ACS ☑
DATE: 12/15/2023

CALIFORNIA DESIGN WEST ARCHITECTS, Inc.

2100 19th Street
Sacramento, CA 95818

Phone: (916) 446-2466
Fax: (916) 446-5118
Web Page: ca-dw.com

These plans and prints thereof, as instruments of service, are owned by the architect and are for the use on this project only. Reproduction and/or distribution without the prior written consent of the architect is forbidden.

Copyright California Design West Architects, Inc.

ARCHITECT: CONSULTANT:

LICENSED ARCHITECT MITCHELL A. McALISTER No. C-17258 REGISTERED PROFESSIONAL ENGINEER No. C89920 Date Signed: 10/10/23 CIVIL STATE OF CALIFORNIA

CONSULTANT:

NorthStar Engineering Group, Inc.
CIVIL ENGINEERING • SURVEYING • PLANNING
620 12th Street Modesto, CA 95354
(209) 524-3525 Phone (209) 524-3526 Fax

PROJECT NAME:

BUHACH COLONY HIGH SCHOOL

1800 NORTH BUHACH RD
ATWATER, CA 95301

NEW STADIUM; FOOTBALL FIELD, ALL-WEATHER TRACK, BLEACHERS, CONCESSIONS UPGRADES

MERCED UNION HIGH SCHOOL DISTRICT

MERCED COUNTY

KEY PLAN:

SHEET TITLE:

EROSION CONTROL PLAN, NOTES, AND DETAILS

JOB NUMBER:	SHEET NUMBER:
DATE: OCT. 10, 2023	C7.2
REVISION:	

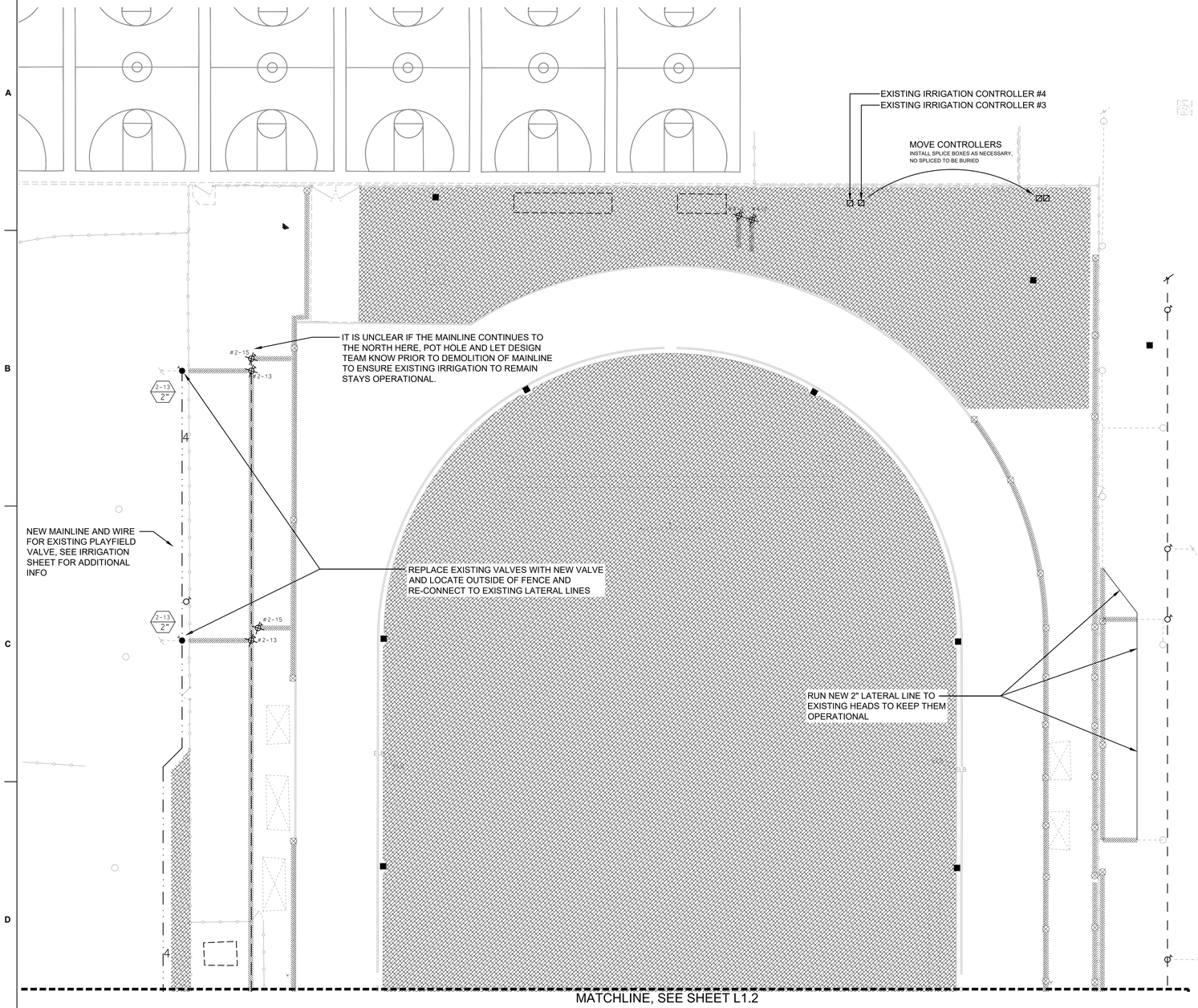

KEY	IRRIGATION DEMOLITION LEGEND
	EXISTING TREE TO REMAIN
	AREAS OF UNIDENTIFIED IRRIGATION, REMOVE ALL IRRIGATION IN THIS AREA
	EXISTING IRRIGATION CONTROLLER TO BE RELOCATED
	EXISTING AUTOMATIC CONTROL VALVE TO REMAIN
	EXISTING AUTOMATIC CONTROL VALVE TO REMOVE
	EXISTING SPRINKLER HEAD TO REMAIN
	EXISTING SPRINKLER HEAD TO REMOVE
	EXISTING IRRIGATION MAINLINE TO REMAIN
	EXISTING IRRIGATION MAINLINE TO REMOVE
	EXISTING LATERAL LINE TO REMAIN
	EXISTING LATERAL LINE TO REMOVE

PRE-CONSTRUCTION SPRINKLER IRRIGATION NOTES

1. PRIOR TO START OF CONSTRUCTION CONTRACTOR REQUIRED TO CONTACT DISTRICT PERSONAL TO SET UP A MEETING ON SITE TO OPERATE THE EXISTING SPRINKLER IRRIGATION SYSTEM AND DISCUSS THE MODIFICATIONS THAT ARE TO BE MADE TO THE EXISTING SYSTEM TO ACCOMMODATE FOR THE NEW CONSTRUCTION.
2. CONTRACTOR TO OPERATE AND PROGRAM EXISTING SPRINKLER IRRIGATION SYSTEM THAT IS TO REMAIN IN ORDER TO PROVIDE WATER TO THE EXISTING LANDSCAPE TO REMAIN.
3. CONTRACTOR TO REMOVE ALL EXISTING PIPE AND SPRINKLER HEADS WHEN THEY ARE IN NEW PLANTING AREAS.
4. CONTRACTOR TO RESTORE AND REPAIR ANY EXISTING SPRINKLER IRRIGATION SYSTEM OR EXISTING LANDSCAPE WHICH IS IN AREAS TO REMAIN THAT IS DAMAGED BY NEW WORK.
5. ALL WORK TO EXISTING SPRINKLER IRRIGATION SYSTEM TO BE COMPLETED PRIOR TO SITE DEMOLITION.

20' 10' 0 20' 40'

SCALE: 1"= 20'-0"

IDENTIFICATION STAMP
DIV. OF THE STATE ARCHITECT
APP: 02-121275 INC:
REVIEWED FOR
SS ☑ FLS ☑ ACS ☑
DATE: 12/15/2023

CALIFORNIA DESIGN WEST ARCHITECTS, Inc.

2100 19th Street
Sacramento, CA 95818

Phone: (916) 446-2466
Fax: (916) 446-5118
Web Page: ca-dw.com

These plans and prints thereof, as instruments of service, are owned by the architect and are for the use on this project only. Reproduction and/or distribution without the prior written consent of the architect is forbidden.

Copyright California Design West Architects, Inc.

ARCHITECT CONSULTANT:

LICENSED ARCHITECT MITCHELL A. McALLISTER NO. C17250 REN. 2-28-2025 STATE OF CALIFORNIA

CONSULTANT:
23-07

MTW group
LANDSCAPE ARCHITECTURE AND PLANNING
2707 K Street, Suite 201
Sacramento, CA 95816
916 369-3990

LICENSED LANDSCAPE ARCHITECT PETER D. LAMIVER 10/20/23 6/30/24 STATE OF CALIFORNIA

PROJECT NAME:

BUHACH COLONY HIGH SCHOOL

1800 NORTH BUHACH RD
ATWATER, CA 95301

CONCESSIONS/TOILET BUILDINGS, TICKET BOOTH & STADIUM UPGRADES

MERCED UNION HIGH SCHOOL DISTRICT

MERCED COUNTY

KEY PLAN:

SHEET TITLE:
IRRIGATION DEMOLITION PLAN

JOB NUMBER:

SHEET NUMBER:

DATE:
NOVEMBER 15, 2023

REVISION:

L1.1

C:\Users\stump\Documents\A22_BCHS-NewStadium-SITE_stump-2100.rvt

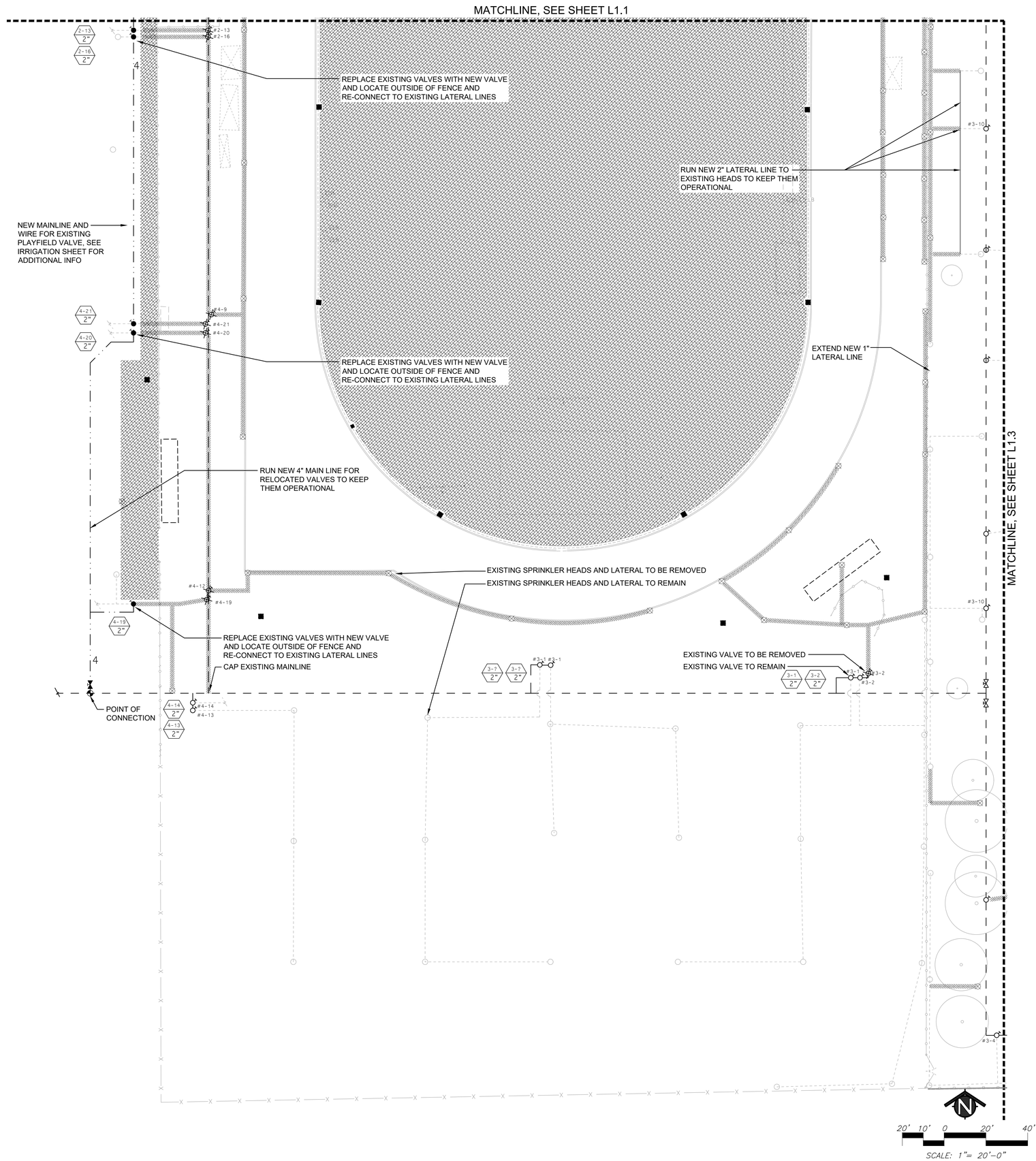

KEY	IRRIGATION DEMOLITION LEGEND
	EXISTING TREE TO REMAIN
	AREAS OF UNIDENTIFIED IRRIGATION, REMOVE ALL IRRIGATION IN THIS A
	EXISTING IRRIGATION CONTROLLER TO BE RELOCATED
	EXISTING AUTOMATIC CONTROL VALVE TO REMAIN
	EXISTING AUTOMATIC CONTROL VALVE TO REMOVE
	EXISTING SPRINKLER HEAD TO REMAIN
	EXISTING SPRINKLER HEAD TO REMOVE
	EXISTING IRRIGATION MAINLINE TO REMAIN
	EXISTING IRRIGATION MAINLINE TO REMOVE
	EXISTING LATERAL LINE TO REMAIN
	EXISTING LATERAL LINE TO REMOVE

PRE-CONSTRUCTION SPRINKLER IRRIGATION NOTES

1. PRIOR TO START OF CONSTRUCTION CONTRACTOR REQUIRED TO CONTACT DISTRICT PERSONAL TO SET UP A MEETING ON SITE TO OPERATE THE EXISTING SPRINKLER IRRIGATION SYSTEM AND DISCUSS THE MODIFICATIONS THAT ARE TO BE MADE TO THE EXISTING SYSTEM TO ACCOMMODATE FOR THE NEW CONSTRUCTION.
2. CONTRACTOR TO OPERATE AND PROGRAM EXISTING SPRINKLER IRRIGATION SYSTEM THAT IS TO REMAIN IN ORDER TO PROVIDE WATER TO THE EXISTING LANDSCAPE TO REMAIN.
3. CONTRACTOR TO REMOVE ALL EXISTING PIPE AND SPRINKLER HEADS WHEN THEY ARE IN NEW PLANTING AREAS.
4. CONTRACTOR TO RESTORE AND REPAIR ANY EXISTING SPRINKLER IRRIGATION SYSTEM OR EXISTING LANDSCAPE WHICH IS IN AREAS TO REMAIN THAT IS DAMAGED BY NEW WORK.
5. ALL WORK TO EXISTING SPRINKLER IRRIGATION SYSTEM TO BE COMPLETED PRIOR TO SITE DEMOLITION.

IDENTIFICATION STAMP
DIV. OF THE STATE ARCHITECT
APP: 02-121275 INC:
REVIEWED FOR
SS ☑ FLS ☑ ACS ☑
DATE: 12/15/2023

CALIFORNIA DESIGN WEST ARCHITECTS, Inc.

2100 19th Street
Sacramento, CA 95818

Phone: (916) 446-2466
Fax: (916) 446-5118
Web Page: ca-dw.com

These plans and prints thereof, as instruments of service, are owned by the architect and are for the use on this project only. Reproduction and/or distribution without the prior written consent of the architect is forbidden.

Copyright California Design West Architects, Inc.

ARCHITECT CONSULTANT:

LICENSED ARCHITECT MITCHELL A. McALLISTER NO. C-17250 REGISTERED PROFESSIONAL ENGINEER OF CALIFORNIA

CONSULTANT:
23-07

MTW group
LANDSCAPE ARCHITECTURE AND PLANNING
2707 K Street, Suite 201
Sacramento, CA 95816
916 369-3990

LICENSED LANDSCAPE ARCHITECT PETER D. LARTIGER 2204 10/20/23 6/30/24 STATE OF CALIFORNIA

PROJECT NAME:

BUHACH COLONY HIGH SCHOOL

1800 NORTH BUHACH RD
ATWATER, CA 95301

CONCESSIONS/TOILET BUILDINGS, TICKET BOOTH & STADIUM UPGRADES

MERCED UNION HIGH SCHOOL DISTRICT

MERCED COUNTY

KEY PLAN:

SHEET TITLE:
IRRIGATION DEMOLITION PLAN

JOB NUMBER:
SHEET NUMBER:
DATE: NOVEMBER 15, 2023
REVISION:
L1.2

C:\Users\stromp\Documents\A22_BCHS-NewStadium-SITE_stromp-2100.rvt

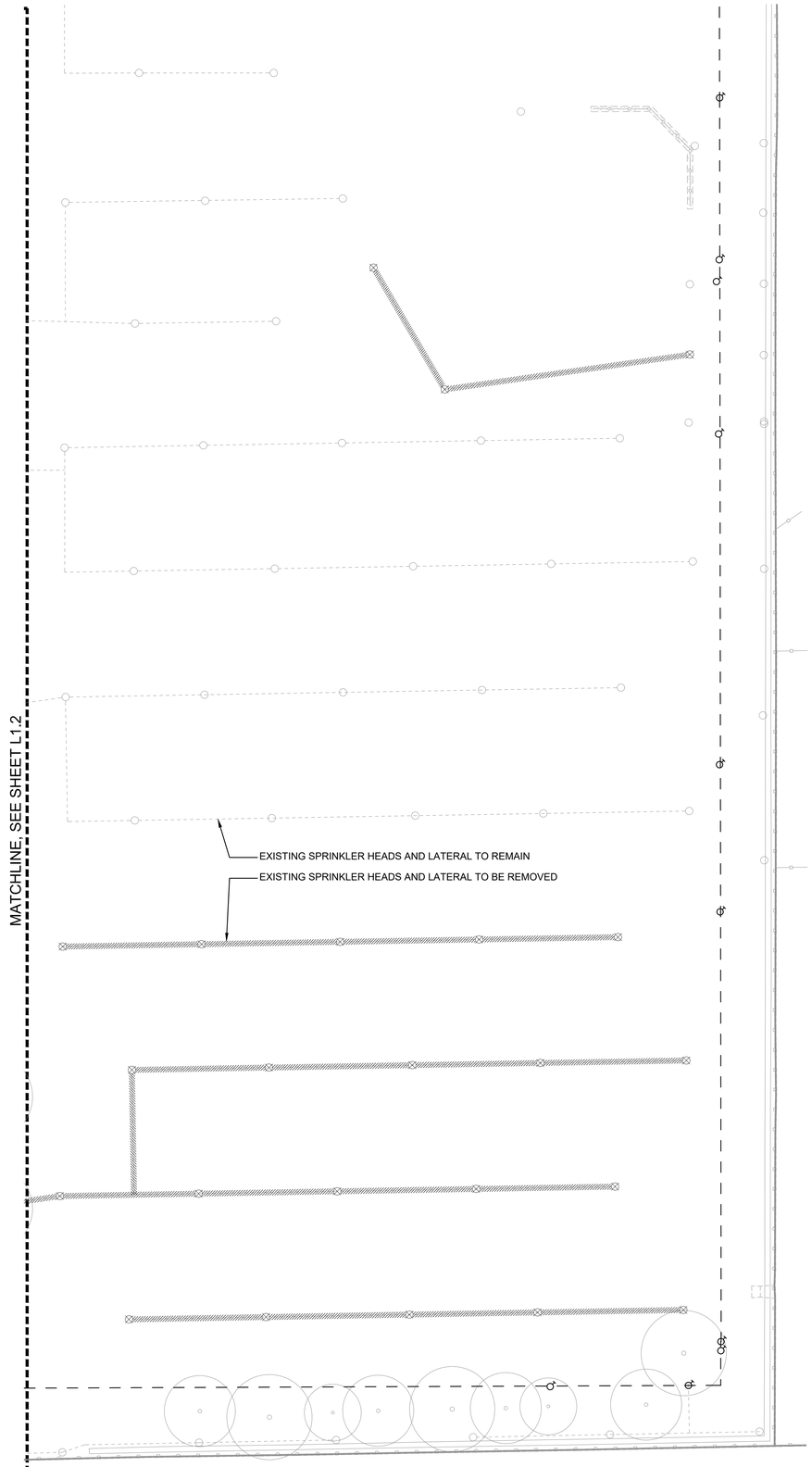

KEY	IRRIGATION DEMOLITION LEGEND
	EXISTING TREE TO REMAIN
	AREAS OF UNIDENTIFIED IRRIGATION, REMOVE ALL IRRIGATION IN THIS AR
	EXISTING IRRIGATION CONTROLLER TO BE RELOCATED
	EXISTING AUTOMATIC CONTROL VALVE TO REMAIN
	EXISTING AUTOMATIC CONTROL VALVE TO REMOVE
	EXISTING SPRINKLER HEAD TO REMAIN
	EXISTING SPRINKLER HEAD TO REMOVE
	EXISTING IRRIGATION MAINLINE TO REMAIN
	EXISTING IRRIGATION MAINLINE TO REMOVE
	EXISTING LATERAL LINE TO REMAIN
	EXISTING LATERAL LINE TO REMOVE

PRE-CONSTRUCTION SPRINKLER IRRIGATION NOTES

1. PRIOR TO START OF CONSTRUCTION CONTRACTOR REQUIRED TO CONTACT DISTRICT PERSONAL TO SET UP A MEETING ON SITE TO OPERATE THE EXISTING SPRINKLER IRRIGATION SYSTEM AND DISCUSS THE MODIFICATIONS THAT ARE TO BE MADE TO THE EXISTING SYSTEM TO ACCOMMODATE FOR THE NEW CONSTRUCTION.
2. CONTRACTOR TO OPERATE AND PROGRAM EXISTING SPRINKLER IRRIGATION SYSTEM THAT IS TO REMAIN IN ORDER TO PROVIDE WATER TO THE EXISTING LANDSCAPE TO REMAIN.
3. CONTRACTOR TO REMOVE ALL EXISTING PIPE AND SPRINKLER HEADS WHEN THEY ARE IN NEW PLANTING AREAS.
4. CONTRACTOR TO RESTORE AND REPAIR ANY EXISTING SPRINKLER IRRIGATION SYSTEM OR EXISTING LANDSCAPE WHICH IS IN AREAS TO REMAIN THAT IS DAMAGED BY NEW WORK.
5. ALL WORK TO EXISTING SPRINKLER IRRIGATION SYSTEM TO BE COMPLETED PRIOR TO SITE DEMOLITION.

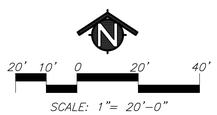

IDENTIFICATION STAMP
DIV. OF THE STATE ARCHITECT
APP: 02-121275 INC:
REVIEWED FOR
SS ☑ FLS ☑ ACS ☑
DATE: 12/15/2023

CALIFORNIA DESIGN WEST ARCHITECTS, Inc.

2100 19th Street
Sacramento, CA 95818

Phone: (916) 446-2466
Fax: (916) 446-5118
Web Page: ca-dw.com

These plans and prints thereof, as instruments of service, are owned by the architect and are for the use on this project only. Reproduction and/or distribution without the prior written consent of the architect is forbidden.

Copyright California Design West Architects, Inc.

ARCHITECT CONSULTANT:

LICENSED ARCHITECT MITCHELL A. McALLISTER NO. C17250 REGISTERED PROFESSIONAL ENGINEER STATE OF CALIFORNIA

CONSULTANT:
23-07

MTW group
LANDSCAPE ARCHITECTURE AND PLANNING
2707 K Street, Suite 201
Sacramento, CA 95816
916 369-3990

LICENSED LANDSCAPE ARCHITECT KEITH D. LANTHER 10/20/23 6/30/24 STATE OF CALIFORNIA

PROJECT NAME:

BUHACH COLONY HIGH SCHOOL

1800 NORTH BUHACH RD
ATWATER, CA 95301

CONCESSIONS/TOILET BUILDINGS, TICKET BOOTH & STADIUM UPGRADES

MERCED UNION HIGH SCHOOL DISTRICT

MERCED COUNTY

KEY PLAN:

SHEET TITLE:
IRRIGATION DEMOLITION PLAN

JOB NUMBER:

SHEET NUMBER:

DATE:
NOVEMBER 15, 2023

REVISION:

L1.3

C:\Users\stump\Documents\A22_BCHS-NewStadium-SITE_stump-2100.rvt

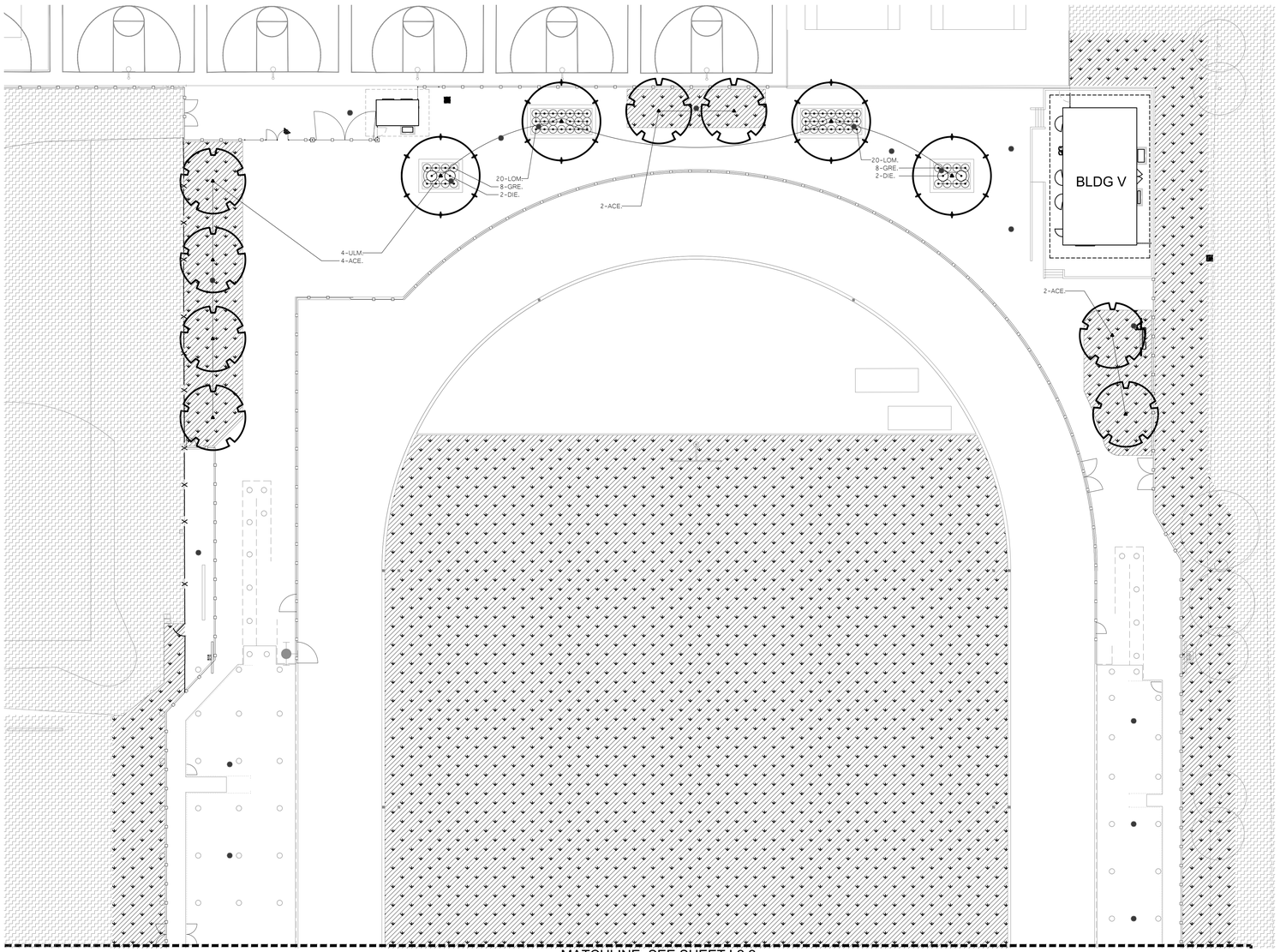

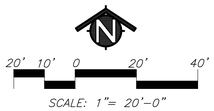

KEY — LANDSCAPE LEGEND

- TREES - NOT ALL SYMBOLS SHOWN
- ROOT BARRIER, INSTALL WHERE SHOWN ON PLANS
- SHRUBS
- LAWN (SOD)
- EXISTING LANDSCAPE AND SPRINKLER AREAS TO REMAIN
- 7 - AAA. — PLANT QUANTITY / PLANT KEY
- EXISTING TREES TO REMAIN

PLANT MATERIAL LIST

SIZE	QTY.	KEY	BOTANICAL NAME ... COMMON NAME	WATER USE
			TREES:	
24" BOX	14	ACE.	ACER RUBRUM 'OCTOBER GLORY' ... RED MAPLE	MEDIUM
24" BOX	4	ULM.	ULMUS WILSONIANA 'PROSPECTOR' ... PROSPECTOR ELM	LOW
			SHRUBS:	
5 G.C.	4	DIE.	DIETES VEGETA ... FORTNIGHT LILY	LOW
1 G.C.	16	GRE.	GREVILLEA LANIGERA 'MT. TAMBORITHA' ... WOOLY GREVILLEA	LOW
1 G.C.	40	LOM.	LOMANDRA 'PLATINUM BEAUTY' ... PLATINUM BEAUTY LOMANDRA	LOW

GENERAL LANDSCAPE REQUIREMENTS/NOTES

1. NO PLANTING SHALL BE STARTED UNTIL SPRINKLER IRRIGATION SYSTEM HAS BEEN TESTED BY CONTRACTOR IN PRESENCE OF OWNER'S REPRESENTATIVE AND NOTED DEFICIENCIES CORRECTED.
2. NO PLANTING SHALL BE STARTED UNTIL SOIL PREPARATION AND FINISH GRADING OPERATIONS HAVE BEEN COMPLETED AND APPROVED BY THE OWNER'S REPRESENTATIVE.
3. QUANTITIES SHOWN ON PLANT MATERIAL LIST ARE APPROXIMATE. PROVIDE QUANTITIES INDICATED ON LANDSCAPE PLAN.
4. PLANT MATERIAL IS SUBJECT TO APPROVAL OF OWNER'S REPRESENTATIVE.
5. SEE SHEET L4.1 FOR PLANTING INSTALLATION DETAILS.

ENVIRONMENTAL REQUIREMENTS:

GENERAL: PROCEED WITH WORK IN ORDERLY AND TIMELY MANNER TO COMPLETE INSTALLATION OF LANDSCAPING WITHIN CONTRACT LIMITS.

PROTECTION:

EXISTING CONSTRUCTION: EXECUTE WORK IN AN ORDERLY AND CAREFUL MANNER TO PROTECT NEW CONCRETE WALKS, WORK OF OTHER TRADES, AND OTHER IMPROVEMENTS.

EXISTING UTILITIES: DETERMINE LOCATION OF UNDERGROUND UTILITIES AND PERFORM WORK IN A MANNER WHICH WILL AVOID POSSIBLE DAMAGE. HAND EXCAVATE, AS REQUIRED, TO MINIMIZE POSSIBILITY OF DAMAGE TO UNDERGROUND UTILITIES. MAINTAIN GRADE STAKES SET BY OTHERS UNTIL REMOVAL IS MUTUALLY AGREED UPON BY ALL PARTIES CONCERNED. BE RESPONSIBLE FOR PROTECTION OF EXISTING UTILITIES WITHIN CONSTRUCTION AREA; REPAIR DAMAGE TO UTILITIES THAT OCCUR AS A RESULT OF OPERATIONS OF THIS WORK.

LANDSCAPING: PROTECT LANDSCAPE WORK AND MATERIALS FROM DAMAGE DUE TO LANDSCAPE OPERATIONS, OPERATIONS BY OTHER CONTRACTORS AND TRADES AND TRESPASSERS. MAINTAIN PROTECTION DURING INSTALLATION AND MAINTENANCE PERIODS. TREAT, REPAIR OR REPLACE DAMAGED LANDSCAPE WORK AS DIRECTED AT NO ADDITIONAL COST TO CONTRACT.

ADVERSE CONDITIONS: WHEN CONDITIONS DETRIMENTAL TO SOD OR PLANT GROWTH ARE ENCOUNTERED, SUCH AS RUBBLE FILL, ADVERSE DRAINAGE CONDITIONS, OR OBSTRUCTIONS, NOTIFY OWNER'S REPRESENTATIVE BEFORE STARTING WORK.

PLANTING AND TURF INSTALLATION SEASONS AND CONDITIONS

NO WORK SHALL BE DONE WHEN GROUND IS FROZEN, SNOW COVERED, TOO WET OR IN AN OTHERWISE UNSUITABLE CONDITION FOR AMENDING SOIL, FINISH GRADING OR PLANTING.

SOIL TESTING/SOIL IMPROVEMENT:

SEE SPECIFICATIONS 32 90 00, SECTION 3.2 SOIL TESTING AND SECTION 3.3 PREPARATION.

SOIL PERCOLATION

EXCAVATE 10 PLANTING PITS IN RANDOM AREAS OF SITE. FILL EXCAVATED PLANTING PITS WITH WATER TO 1/2 DEPTH OF PIT. PITS SHOULD DRAIN WITHIN 4 HOURS. IF PLANTING PITS DO NOT DRAIN, NOTIFY INSPECTOR IMMEDIATELY. PLANTING SHALL NOT BE STARTED UNTIL OWNER'S REPRESENTATIVE HAS RESOLVED A METHOD TO REMEDY DRAINAGE ISSUE.

PLANT MATERIAL STANDARDS

PLANTS SHALL BE IN ACCORDANCE WITH AMERICAN NATIONAL STANDARDS INSTITUTE (ANSI) ANSI Z60.1- AMERICAN STANDARD FOR NURSERY STOCK, EXCEPT AS OTHERWISE STATED IN SPECIFICATIONS OR SHOWN ON DRAWINGS. WHERE DRAWINGS OR SPECIFICATIONS ARE IN CONFLICT WITH ANSI Z60.1, DRAWINGS AND SPECIFICATIONS SHALL PREVAIL. PRUNE, THIN OUT AND SHAPE TREES IN ACCORDANCE WITH ANSI STANDARD HORTICULTURAL PRACTICE. PRUNE TREES TO RETAIN REQUIRED HEIGHT AND SPREAD. UNLESS OTHERWISE DIRECTED BY LANDSCAPE ARCHITECT, DO NOT CUT TREE LEADERS, AND REMOVE ONLY INJURED OR DEAD BRANCHES FROM FLOWERING TREES.

EXISTING LANDSCAPE AND SPRINKLER IRRIGATION SYSTEM

WORK LIMITS OF THIS PROJECT EXTEND INTO AREAS THAT WERE PREVIOUSLY DEVELOPED UNDER OTHER CONTRACTS. PRIOR TO START OF WORK, CONTRACTOR SHALL MEET WITH OWNER'S REPRESENTATIVE TO LOCATE ALL CONNECTIONS CALLED FOR ON DRAWINGS. WORK LIMITS/FENCING SHALL BE LAID OUT BY CONTRACTOR AND VERIFIED BY OWNER'S REPRESENTATIVE. FENCE TO BE INSTALLED AND IRRIGATION SYSTEM SHALL BE TESTED WITH CONTRACTOR, INSPECTOR, AND OWNER'S REPRESENTATIVE PRESENT. DEFICIENCIES SHALL BE NOTED AT THIS TIME AND ARE THE RESPONSIBILITY OF OWNER. AT COMPLETION OF WORK, SYSTEM WILL AGAIN BE TESTED. DEFICIENCIES NOTED AT THIS TIME THAT WERE NOT NOTED PREVIOUSLY WILL BE RESPONSIBILITY OF CONTRACTOR. EXISTING LANDSCAPE THAT HAS BEEN DAMAGED DUE TO CONSTRUCTION SHALL BE RESTORED TO ORIGINAL CONDITION BY CONTRACTOR AT NO ADDITIONAL COST TO OWNER. PRIOR TO MAKING ANY CONNECTION TO MAIN LINE, CONTRACTOR SHALL NOTIFY OWNER 1 WEEK IN ADVANCE SO ADJUSTMENTS TO EXISTING WATERING PROGRAMS CAN BE MADE.

IDENTIFICATION STAMP
DIV. OF THE STATE ARCHITECT
APP: 02-121275 INC:
REVIEWED FOR
SS ☑ FLS ☑ ACS ☑
DATE: 12/15/2023

CALIFORNIA DESIGN WEST ARCHITECTS, Inc.

2100 19th Street
Sacramento, CA 95818

Phone: (916) 446-2466
Fax: (916) 446-5118
Web Page: ca-dw.com

These plans and prints thereof, as instruments of service, are owned by the architect and are for the use on this project only. Reproduction and/or distribution without the prior written consent of the architect is forbidden.

Copyright California Design West Architects, Inc.

ARCHITECT CONSULTANT:

LICENSED ARCHITECT MITCHELL A. MCALISTER RENEWAL 08/31/2025 LICENSE NO. C 17258 STATE OF CALIFORNIA

CONSULTANT:
23-07

MTW group
LANDSCAPE ARCHITECTURE AND PLANNING
2707 K Street, Suite 201
Sacramento, CA 95816
916 369-3990

LANDSCAPE ARCHITECT KEITH D. LARKINS 2978 10/20/23 6/30/24 STATE OF CALIFORNIA

PROJECT NAME:

BUHACH COLONY HIGH SCHOOL

1800 NORTH BUHACH RD
ATWATER, CA 95301

CONCESSIONS/TOILET BUILDINGS, TICKET BOOTH & STADIUM UPGRADES

MERCED UNION HIGH SCHOOL DISTRICT

MERCED COUNTY

KEY PLAN:

SHEET TITLE:
SHRUB/TURF PLANTING PLAN

JOB NUMBER:

SHEET NUMBER:
L2.1

DATE:
NOVEMBER 15, 2023

REVISION:

C:\Users\drump\Documents\A22_BCHS-NewStadium-SITE_drump-2100.rvt

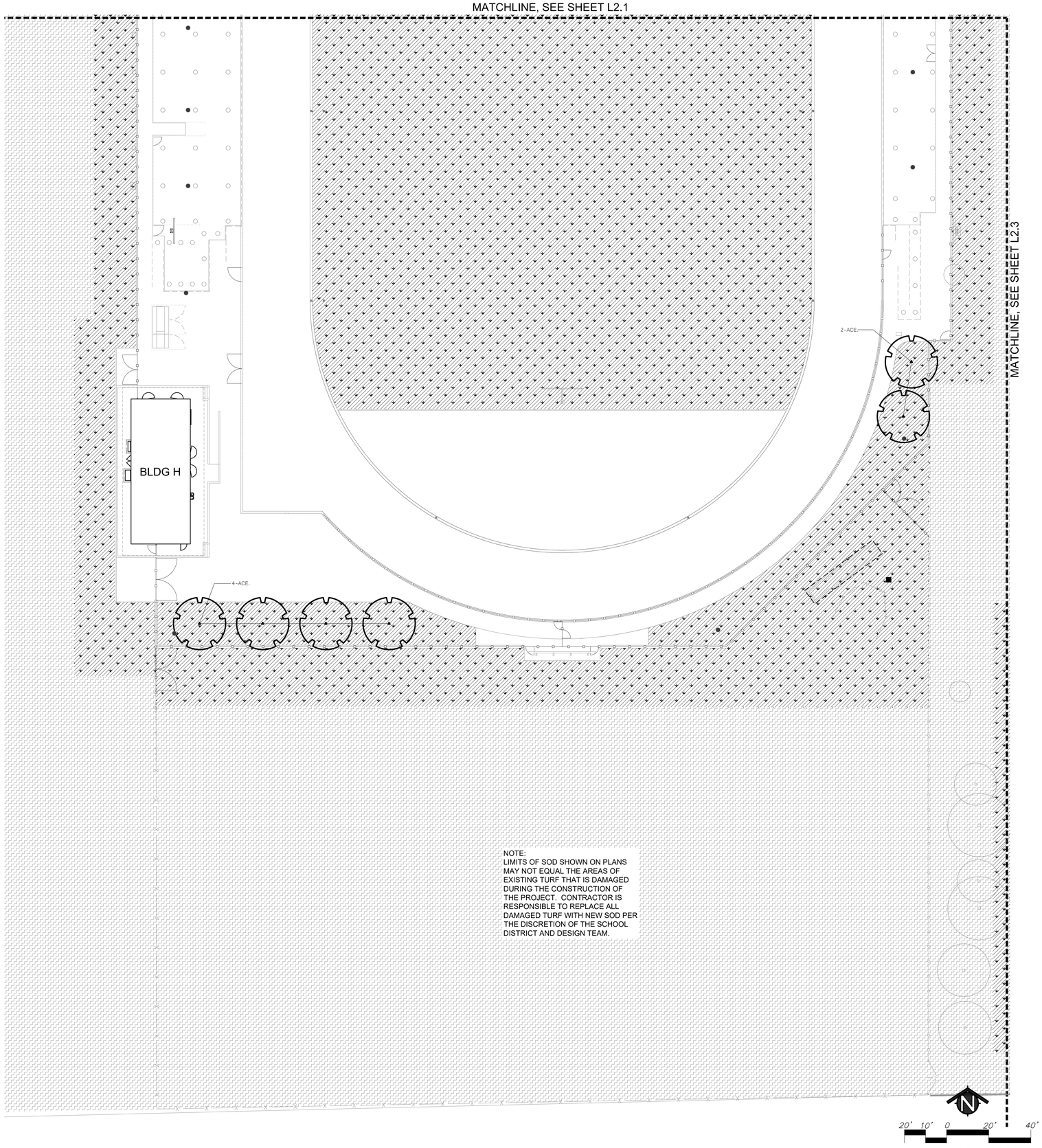

KEY — LANDSCAPE LEGEND

- TREES - NOT ALL SYMBOLS SHOWN
- ROOT BARRIER, INSTALL WHERE SHOWN ON PLANS
- SHRUBS
- LAWN (SOD)
- EXISTING LANDSCAPE AND SPRINKLER AREAS TO REMAIN
- 7 - AAA. — PLANT QUANTITY / PLANT KEY
- EXISTING TREES TO REMAIN

PLANT MATERIAL LIST

SIZE	QTY.	KEY	BOTANICAL NAME ... COMMON NAME	WATER USE
			TREES:	
24" BOX 24" BOX	14 4	ACE. ULM.	ACER RUBRUM 'OCTOBER GLORY' ... RED MAPLE ULMUS WILSONIANA 'PROSPECTOR' ... PROSPECTOR ELM	MEDIUM LOW
			SHRUBS:	
5 G.C. 1 G.C. 1 G.C.	4 16 40	DIE. GRE. LOM.	DIETES VEGETA ... FORTNIGHT LILY GREVILLEA LANIGERA 'MT. TAMBORITHA' ... WOOLY GREVILLEA LOMANDRA 'PLATINUM BEAUTY' ... PLATINUM BEAUTY LOMANDRA	LOW LOW LOW

GENERAL LANDSCAPE REQUIREMENTS/NOTES

1. NO PLANTING SHALL BE STARTED UNTIL SPRINKLER IRRIGATION SYSTEM HAS BEEN TESTED BY CONTRACTOR IN PRESENCE OF OWNER'S REPRESENTATIVE AND NOTED DEFICIENCIES CORRECTED.
2. NO PLANTING SHALL BE STARTED UNTIL SOIL PREPARATION AND FINISH GRADING OPERATIONS HAVE BEEN COMPLETED AND APPROVED BY THE OWNER'S REPRESENTATIVE.
3. QUANTITIES SHOWN ON PLANT MATERIAL LIST ARE APPROXIMATE. PROVIDE QUANTITIES INDICATED ON LANDSCAPE PLAN.
4. PLANT MATERIAL IS SUBJECT TO APPROVAL OF OWNER'S REPRESENTATIVE.
5. SEE SHEET L4.1 FOR PLANTING INSTALLATION DETAILS.

ENVIRONMENTAL REQUIREMENTS:

GENERAL: PROCEED WITH WORK IN ORDERLY AND TIMELY MANNER TO COMPLETE INSTALLATION OF LANDSCAPING WITHIN CONTRACT LIMITS.

PROTECTION:

EXISTING CONSTRUCTION: EXECUTE WORK IN AN ORDERLY AND CAREFUL MANNER TO PROTECT NEW CONCRETE WALKS, WORK OF OTHER TRADES, AND OTHER IMPROVEMENTS.

EXISTING UTILITIES: DETERMINE LOCATION OF UNDERGROUND UTILITIES AND PERFORM WORK IN A MANNER WHICH WILL AVOID POSSIBLE DAMAGE. HAND EXCAVATE, AS REQUIRED, TO MINIMIZE POSSIBILITY OF DAMAGE TO UNDERGROUND UTILITIES. MAINTAIN GRADE STAKES SET BY OTHERS UNTIL REMOVAL IS MUTUALLY AGREED UPON BY ALL PARTIES CONCERNED. BE RESPONSIBLE FOR PROTECTION OF EXISTING UTILITIES WITHIN CONSTRUCTION AREA; REPAIR DAMAGE TO UTILITIES THAT OCCUR AS A RESULT OF OPERATIONS OF THIS WORK.

LANDSCAPING: PROTECT LANDSCAPE WORK AND MATERIALS FROM DAMAGE DUE TO LANDSCAPE OPERATIONS, OPERATIONS BY OTHER CONTRACTORS AND TRADES AND TRESPASSERS. MAINTAIN PROTECTION DURING INSTALLATION AND MAINTENANCE PERIODS. TREAT, REPAIR OR REPLACE DAMAGED LANDSCAPE WORK AS DIRECTED AT NO ADDITIONAL COST TO CONTRACT.

ADVERSE CONDITIONS: WHEN CONDITIONS DETRIMENTAL TO SOD OR PLANT GROWTH ARE ENCOUNTERED, SUCH AS RUBBLE FILL, ADVERSE DRAINAGE CONDITIONS, OR OBSTRUCTIONS, NOTIFY OWNER'S REPRESENTATIVE BEFORE STARTING WORK.

PLANTING AND TURF INSTALLATION SEASONS AND CONDITIONS

NO WORK SHALL BE DONE WHEN GROUND IS FROZEN, SNOW COVERED, TOO WET OR IN AN OTHERWISE UNSUITABLE CONDITION FOR AMENDING SOIL, FINISH GRADING OR PLANTING.

SOIL TESTING/SOIL IMPROVEMENT:

SEE SPECIFICATIONS 32 90 00, SECTION 3.2 SOIL TESTING AND SECTION 3.3 PREPARATION.

SOIL PERCOLATION

EXCAVATE 10 PLANTING PITS IN RANDOM AREAS OF SITE. FILL EXCAVATED PLANTING PITS WITH WATER TO 1/2 DEPTH OF PIT. PITS SHOULD DRAIN WITHIN 4 HOURS. IF PLANTING PITS DO NOT DRAIN, NOTIFY INSPECTOR IMMEDIATELY. PLANTING SHALL NOT BE STARTED UNTIL OWNER'S REPRESENTATIVE HAS RESOLVED A METHOD TO REMEDY DRAINAGE ISSUE.

PLANT MATERIAL STANDARDS

PLANTS SHALL BE IN ACCORDANCE WITH AMERICAN NATIONAL STANDARDS INSTITUTE (ANSI) ANSI Z60.1- AMERICAN STANDARD FOR NURSERY STOCK, EXCEPT AS OTHERWISE STATED IN SPECIFICATIONS OR SHOWN ON DRAWINGS. WHERE DRAWINGS OR SPECIFICATIONS ARE IN CONFLICT WITH ANSI Z60.1, DRAWINGS AND SPECIFICATIONS SHALL PREVAIL. PRUNE, THIN OUT AND SHAPE TREES IN ACCORDANCE WITH ANSI STANDARD HORTICULTURAL PRACTICE. PRUNE TREES TO RETAIN REQUIRED HEIGHT AND SPREAD. UNLESS OTHERWISE DIRECTED BY LANDSCAPE ARCHITECT, DO NOT CUT TREE LEADERS, AND REMOVE ONLY INJURED OR DEAD BRANCHES FROM FLOWERING TREES.

EXISTING LANDSCAPE AND SPRINKLER IRRIGATION SYSTEM

WORK LIMITS OF THIS PROJECT EXTEND INTO AREAS THAT WERE PREVIOUSLY DEVELOPED UNDER OTHER CONTRACTS. PRIOR TO START OF WORK, CONTRACTOR SHALL MEET WITH OWNER'S REPRESENTATIVE TO LOCATE ALL CONNECTIONS CALLED FOR ON DRAWINGS. WORK LIMITS/FENCING SHALL BE LAID OUT BY CONTRACTOR AND VERIFIED BY OWNER'S REPRESENTATIVE. FENCE TO BE INSTALLED AND IRRIGATION SYSTEM SHALL BE TESTED, WITH CONTRACTOR, INSPECTOR, AND OWNER'S REPRESENTATIVE PRESENT. DEFICIENCIES SHALL BE NOTED AT THIS TIME AND ARE THE RESPONSIBILITY OF OWNER. AT COMPLETION OF WORK, SYSTEM WILL AGAIN BE TESTED, DEFICIENCIES NOTED AT THIS TIME THAT WERE NOT NOTED PREVIOUSLY WILL BE RESPONSIBILITY OF CONTRACTOR. EXISTING LANDSCAPE THAT HAS BEEN DAMAGED DUE TO CONSTRUCTION SHALL BE RESTORED TO ORIGINAL CONDITION BY CONTRACTOR AT NO ADDITIONAL COST TO OWNER. PRIOR TO MAKING ANY CONNECTION TO MAIN LINE, CONTRACTOR SHALL NOTIFY OWNER 1 WEEK IN ADVANCE SO ADJUSTMENTS TO EXISTING WATERING PROGRAMS CAN BE MADE.

IDENTIFICATION STAMP
DIV. OF THE STATE ARCHITECT
APP: 02-121275 INC:
REVIEWED FOR
SS ☑ FLS ☑ ACS ☑
DATE: 12/15/2023

CALIFORNIA DESIGN WEST ARCHITECTS, Inc.

2100 19th Street
Sacramento, CA 95818

Phone: (916) 446-2466
Fax: (916) 446-5118
Web Page: ca-dw.com

These plans and prints thereof, as instruments of service, are owned by the architect and are for the use on this project only. Reproduction and/or distribution without the prior written consent of the architect is forbidden.

Copyright California Design West Architects, Inc.

ARCHITECT CONSULTANT:

LICENSED ARCHITECT — MITCHELL A. McALISTER — NO. C 17258 — REN. 08-31-2024 — STATE OF CALIFORNIA

CONSULTANT:
23-07

MTW group
LANDSCAPE ARCHITECTURE AND PLANNING
2707 K Street, Suite 201
Sacramento, CA 95816
916 369-3990

LANDSCAPE ARCHITECT — KEITH D. LARKIN — 10/20/23 — 6/30/24 — STATE OF CALIFORNIA

PROJECT NAME:

BUHACH COLONY HIGH SCHOOL

1800 NORTH BUHACH RD
ATWATER, CA 95301

CONCESSIONS/TOILET BUILDINGS, TICKET BOOTH & STADIUM UPGRADES

MERCED UNION HIGH SCHOOL DISTRICT

MERCED COUNTY

KEY PLAN:

SHEET TITLE:
SHRUB/TURF PLANTING PLAN

JOB NUMBER:
SHEET NUMBER: L2.2

DATE: NOVEMBER 15, 2023

REVISION:

C:\Users\dmg\Documents\A22_BCHS-NewStadium-SITE_dmg-2100.rvt

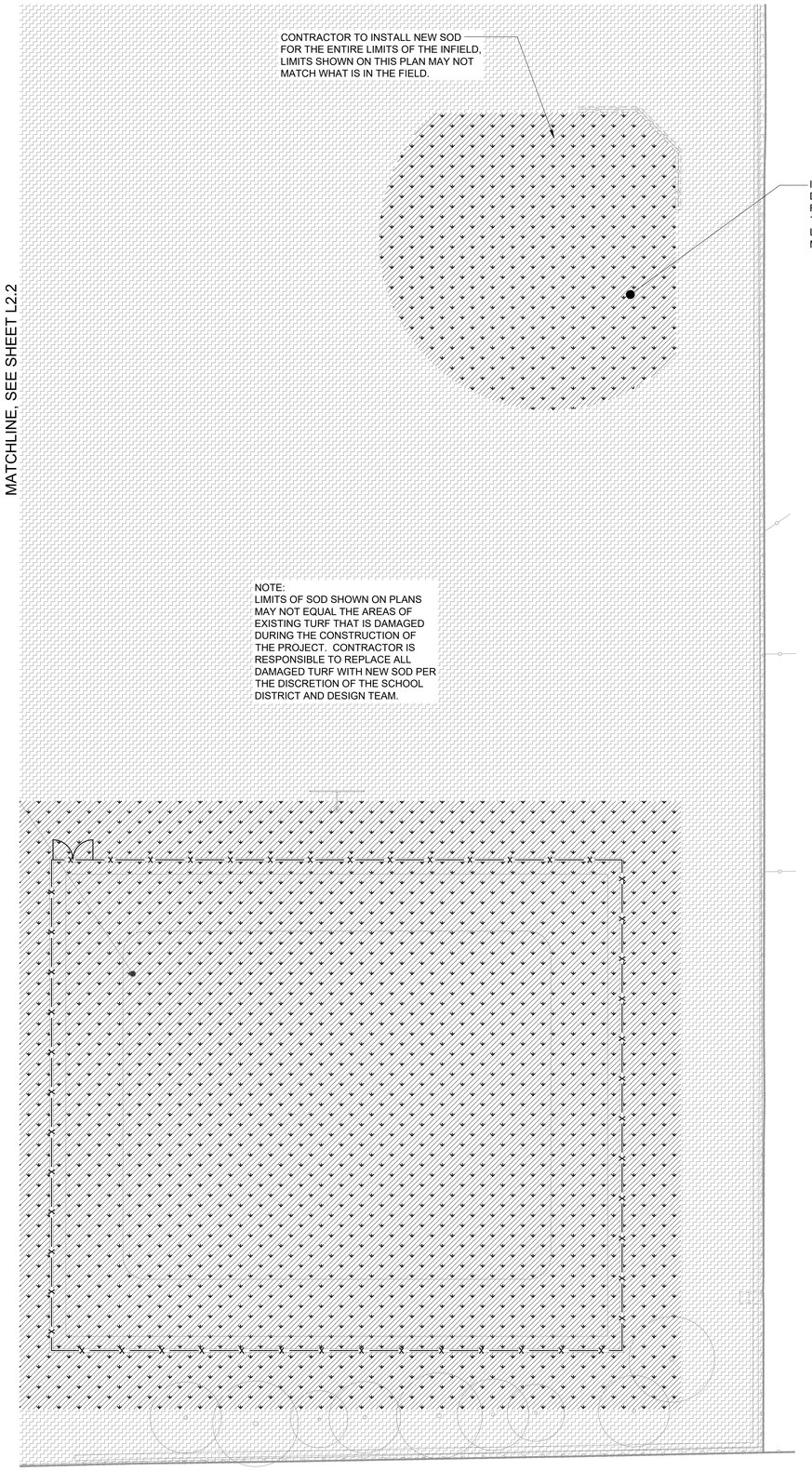

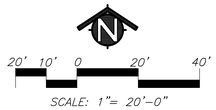

SCALE: 1"= 20'-0"

KEY LANDSCAPE LEGEND

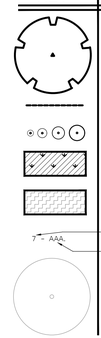

- TREES - NOT ALL SYMBOLS SHOWN
- ROOT BARRIER, INSTALL WHERE SHOWN ON PLANS
- SHRUBS
- LAWN (SOD)
- EXISTING LANDSCAPE AND SPRINKLER AREAS TO REMAIN
- PLANT QUANTITY
- PLANT KEY
- EXISTING TREES TO REMAIN

PLANT MATERIAL LIST

SIZE	QTY.	KEY	BOTANICAL NAME ... COMMON NAME	WATER USE
			TREES:	
24" BOX	14	ACE.	ACER RUBRUM 'OCTOBER GLORY' ... RED MAPLE	MEDIUM
24" BOX	4	ULM.	ULMUS WILSONIANA 'PROSPECTOR' ... PROSPECTOR ELM	LOW
			SHRUBS:	
5 G.C.	4	DIE.	DIETES VEGETA ... FORTNIGHT LILY	LOW
1 G.C.	16	GRE.	GREVILLEA LANIGERA 'MT. TAMBORITHA' ... WOOLY GREVILLEA	LOW
1 G.C.	40	LOM.	LOMANDRA 'PLATINUM BEAUTY' ... PLATINUM BEAUTY LOMANDRA	LOW

GENERAL LANDSCAPE REQUIREMENTS/NOTES

1. NO PLANTING SHALL BE STARTED UNTIL SPRINKLER IRRIGATION SYSTEM HAS BEEN TESTED BY CONTRACTOR IN PRESENCE OF OWNER'S REPRESENTATIVE AND NOTED DEFICIENCIES CORRECTED.
2. NO PLANTING SHALL BE STARTED UNTIL SOIL PREPARATION AND FINISH GRADING OPERATIONS HAVE BEEN COMPLETED AND APPROVED BY THE OWNER'S REPRESENTATIVE.
3. QUANTITIES SHOWN ON PLANT MATERIAL LIST ARE APPROXIMATE. PROVIDE QUANTITIES INDICATED ON LANDSCAPE PLAN.
4. PLANT MATERIAL IS SUBJECT TO APPROVAL OF OWNER'S REPRESENTATIVE.
5. SEE SHEET L4.1 FOR PLANTING INSTALLATION DETAILS.

ENVIRONMENTAL REQUIREMENTS:

GENERAL: PROCEED WITH WORK IN ORDERLY AND TIMELY MANNER TO COMPLETE INSTALLATION OF LANDSCAPING WITHIN CONTRACT LIMITS.

PROTECTION:

EXISTING CONSTRUCTION: EXECUTE WORK IN AN ORDERLY AND CAREFUL MANNER TO PROTECT NEW CONCRETE WALKS, WORK OF OTHER TRADES, AND OTHER IMPROVEMENTS.

EXISTING UTILITIES: DETERMINE LOCATION OF UNDERGROUND UTILITIES AND PERFORM WORK IN A MANNER WHICH WILL AVOID POSSIBLE DAMAGE. HAND EXCAVATE, AS REQUIRED, TO MINIMIZE POSSIBILITY OF DAMAGE TO UNDERGROUND UTILITIES. MAINTAIN GRADE STAKES SET BY OTHERS UNTIL REMOVAL IS MUTUALLY AGREED UPON BY ALL PARTIES CONCERNED. BE RESPONSIBLE FOR PROTECTION OF EXISTING UTILITIES WITHIN CONSTRUCTION AREA; REPAIR DAMAGE TO UTILITIES THAT OCCUR AS A RESULT OF OPERATIONS OF THIS WORK.

LANDSCAPING: PROTECT LANDSCAPE WORK AND MATERIALS FROM DAMAGE DUE TO LANDSCAPE OPERATIONS, OPERATIONS BY OTHER CONTRACTORS AND TRADES AND TRESPASSERS. MAINTAIN PROTECTION DURING INSTALLATION AND MAINTENANCE PERIODS. TREAT, REPAIR OR REPLACE DAMAGED LANDSCAPE WORK AS DIRECTED AT NO ADDITIONAL COST TO CONTRACT.

ADVERSE CONDITIONS: WHEN CONDITIONS DETRIMENTAL TO SOD OR PLANT GROWTH ARE ENCOUNTERED, SUCH AS RUBBLE FILL, ADVERSE DRAINAGE CONDITIONS, OR OBSTRUCTIONS, NOTIFY OWNER'S REPRESENTATIVE BEFORE STARTING WORK.

PLANTING AND TURF INSTALLATION SEASONS AND CONDITIONS

NO WORK SHALL BE DONE WHEN GROUND IS FROZEN, SNOW COVERED, TOO WET OR IN AN OTHERWISE UNSUITABLE CONDITION FOR AMENDING SOIL, FINISH GRADING OR PLANTING.

SOIL TESTING/SOIL IMPROVEMENT:

SEE SPECIFICATIONS 32 90 00, SECTION 3.2 SOIL TESTING AND SECTION 3.3 PREPARATION.

SOIL PERCOLATION

EXCAVATE 10 PLANTING PITS IN RANDOM AREAS OF SITE. FILL EXCAVATED PLANTING PITS WITH WATER TO 1/2 DEPTH OF PIT. PITS SHOULD DRAIN WITHIN 4 HOURS. IF PLANTING PITS DO NOT DRAIN, NOTIFY INSPECTOR IMMEDIATELY. PLANTING SHALL NOT BE STARTED UNTIL OWNER'S REPRESENTATIVE HAS RESOLVED A METHOD TO REMEDY DRAINAGE ISSUE.

PLANT MATERIAL STANDARDS

PLANTS SHALL BE IN ACCORDANCE WITH AMERICAN NATIONAL STANDARDS INSTITUTE (ANSI) ANSI Z60.1- AMERICAN STANDARD FOR NURSERY STOCK, EXCEPT AS OTHERWISE STATED IN SPECIFICATIONS OR SHOWN ON DRAWINGS. WHERE DRAWINGS OR SPECIFICATIONS ARE IN CONFLICT WITH ANSI Z60.1, DRAWINGS AND SPECIFICATIONS SHALL PREVAIL. PRUNE, THIN OUT AND SHAPE TREES IN ACCORDANCE WITH ANSI STANDARD HORTICULTURAL PRACTICE. PRUNE TREES TO RETAIN REQUIRED HEIGHT AND SPREAD, UNLESS OTHERWISE DIRECTED BY LANDSCAPE ARCHITECT, DO NOT CUT TREE LEADERS, AND REMOVE ONLY INJURED OR DEAD BRANCHES FROM FLOWERING TREES.

EXISTING LANDSCAPE AND SPRINKLER IRRIGATION SYSTEM

WORK LIMITS OF THIS PROJECT EXTEND INTO AREAS THAT WERE PREVIOUSLY DEVELOPED UNDER OTHER CONTRACTS. PRIOR TO START OF WORK, CONTRACTOR SHALL MEET WITH OWNER'S REPRESENTATIVE TO LOCATE ALL CONNECTIONS CALLED FOR ON DRAWINGS. WORK LIMITS/FENCING SHALL BE LAID OUT BY CONTRACTOR AND VERIFIED BY OWNER'S REPRESENTATIVE. FENCE TO BE INSTALLED AND IRRIGATION SYSTEM SHALL BE TESTED WITH CONTRACTOR, INSPECTOR, AND OWNER'S REPRESENTATIVE PRESENT. DEFICIENCIES SHALL BE NOTED AT THIS TIME AND ARE THE RESPONSIBILITY OF OWNER. AT COMPLETION OF WORK, SYSTEM WILL AGAIN BE TESTED, DEFICIENCIES NOTED AT THIS TIME THAT WERE NOT NOTED PREVIOUSLY WILL BE RESPONSIBILITY OF CONTRACTOR. EXISTING LANDSCAPE THAT HAS BEEN DAMAGED DUE TO CONSTRUCTION SHALL BE RESTORED TO ORIGINAL CONDITION BY CONTRACTOR AT NO ADDITIONAL COST TO OWNER. PRIOR TO MAKING ANY CONNECTION TO MAIN LINE, CONTRACTOR SHALL NOTIFY OWNER 1 WEEK IN ADVANCE SO ADJUSTMENTS TO EXISTING WATERING PROGRAMS CAN BE MADE.

IDENTIFICATION STAMP
DIV. OF THE STATE ARCHITECT
APP: 02-121275 INC:
REVIEWED FOR
SS ☑ FLS ☑ ACS ☑
DATE: 12/15/2023

CALIFORNIA DESIGN WEST ARCHITECTS, Inc.

2100 19th Street
Sacramento, CA 95818

Phone: (916) 446-2466
Fax: (916) 446-5118
Web Page: ca-dw.com

These plans and prints thereof, as instruments of service, are owned by the architect and are for the use on this project only. Reproduction and/or distribution without the prior written consent of the architect is forbidden.

Copyright California Design West Architects, Inc.

ARCHITECT CONSULTANT:

LICENSED ARCHITECT MITCHELL A. McALISTER RENEWAL 08/31/2025 NO. C 17258 STATE OF CALIFORNIA

CONSULTANT:
23-07

MTW group
LANDSCAPE ARCHITECTURE AND PLANNING
2707 K Street, Suite 201
Sacramento, CA 95816
916 369-3990

LICENSED LANDSCAPE ARCHITECT CHRISTOPHER D. LARIMER No. 6130 10/20/23 to 6/30/24 RENEWAL STATE OF CALIFORNIA

PROJECT NAME:

BUHACH COLONY HIGH SCHOOL

1800 NORTH BUHACH RD
ATWATER, CA 95301

CONCESSIONS/TOILET BUILDINGS, TICKET BOOTH & STADIUM UPGRADES

MERCED UNION HIGH SCHOOL DISTRICT

MERCED COUNTY

KEY PLAN:

SHEET TITLE:
SHRUB/TURF PLANTING PLAN

JOB NUMBER:
SHEET NUMBER: L2.3

DATE:
NOVEMBER 15, 2023

REVISION:

C:\Users\tturnip\Documents\A22_BCHS-NewStadium-SITE_tturnip-2100.rvt

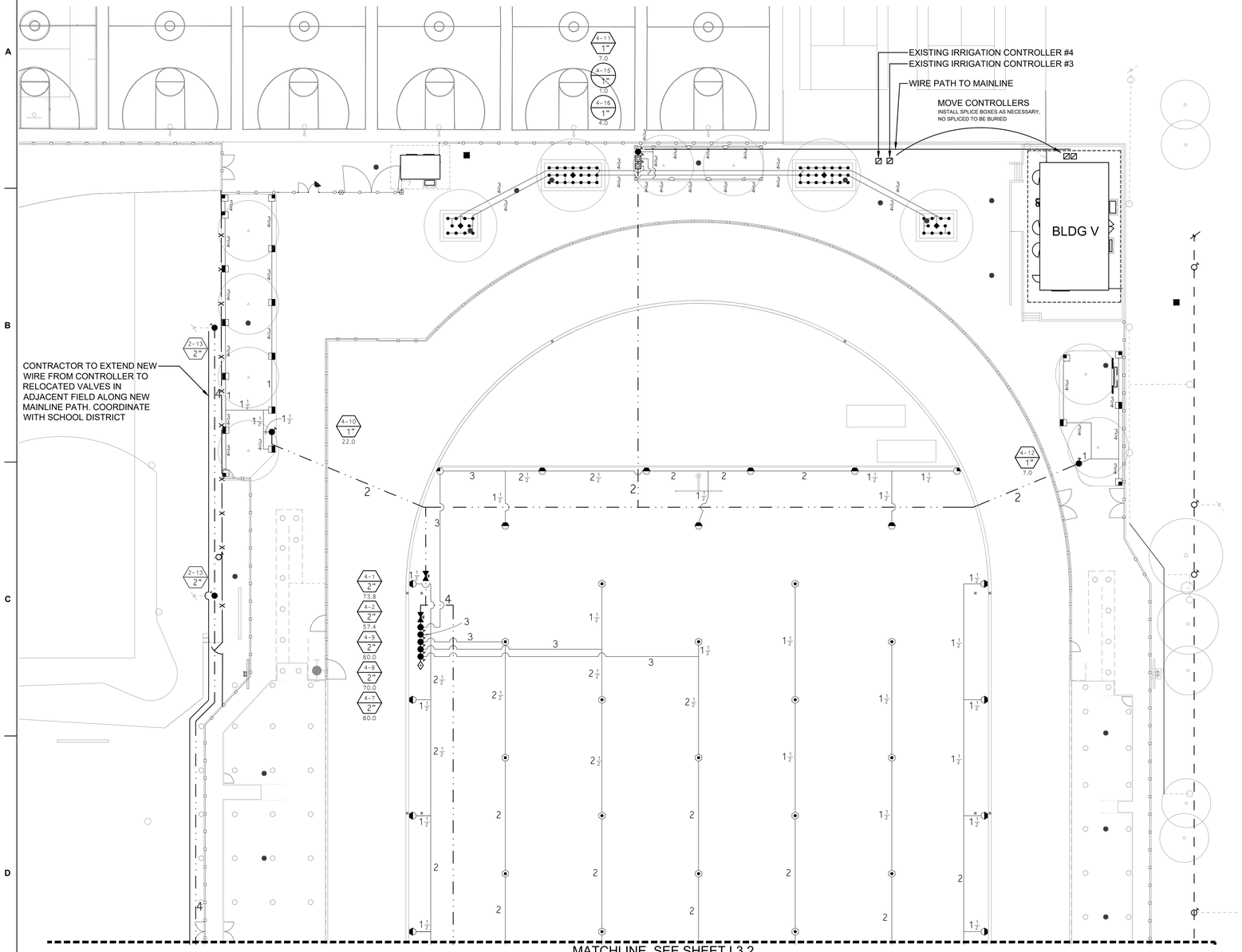

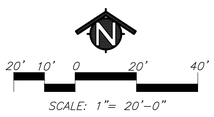

KEY

SPRINKLER IRRIGATION LEGEND

EXISTING AUTOMATIC CONTROLLER:
COORDINATE 110V SERVICE AND POWER CONNECTION WITH ELECTRICAL SUB-CONTRACTOR.
COORDINATE ETHERNET CONNECTION WITH THE ELECTRICAL SUB-CONTRACTOR.

POINT OF CONNECTION:
IRRIGATION SYSTEM OPERATING WATER PRESSURE: 70 PSI
MAXIMUM FLOW IS 200 GPM

CONTRACTOR SHALL LOCATE IRRIGATION MAINLINE AS SHOWN ON PLANS.
CONNECT AT THIS POINT AND EXTEND AS INDICATED ON DRAWINGS.

GATE VALVE:
TYPE:
3" SIZE AND SMALLER: LEEMCO LGT-XXSS THREADED WITH A NON-RISING STEM AND HANDWHEEL.
4" SIZE AND LARGER: LEEMCO LMV-XXFF FLANGED WITH A NON-RISING STEM AND OPERATING NUT.
LEEMCO LMV-XXBB BELL WITH A NON-RISING STEM AND OPERATING NUT.

GATE VALVE INSTALLLED IN A VALVE BOX WITH TOP OF BOX SET FLUSH TO FINISH GRADE.
GATE VALVE TO BE LINE SIZE.

PRESSURE MAIN LINE:
TYPE:
3" SIZE AND SMALLER: ASTM D1785, PVC SCHEDULE 40.
4" SIZE AND LARGER: ASTM D2241 SDR 21, 200 PSI, RUBBER GASKETED.

TRENCH DEPTH:
IN PLANTED AREAS: 24" MINIMUM COVER.
UNDER PAVED AREAS: 24" MINIMUM COVER.
PVC SCHEDULE 40 SLEEVES ARE REQUIRED FOR ALL PIPING UNDER PAVEMENT.

LATERAL LINE:
TYPE:
ASTM D1785, PVC SCHEDULE 40, SOLVENT WELD ALL UNSIZED PIPE SHALL BE 3/4" SIZE.
TRENCH DEPTH:
IN PLANTED AREAS:
POP-UP SPRAY HEADS - 12" MINIMUM COVER.
ROTOR HEADS: - 18" MINIMUM COVER.
BUBBLER HEADS: - 12" MINIMUM COVER.
UNDER PAVED AREAS: 24" MINIMUM COVER.
PVC SCHEDULE 40 SLEEVES ARE REQUIRED FOR ALL PIPING UNDER PAVEMENT.

AUTOMATIC CONTROL VALVE:
RAINBIRD PEB-PRS-D SERIES, TORO P220-27 SERIES, HUNTER ICV-AS OR APPROVED EQUAL. VALVE SHALL HAVE PRESSURE REGULATION OPTION.

QUICK COUPLER VALVE:
RAINBIRD 44NP, TORO 100-25LLVC, HUNTER HQ-44-LRC-R OR APPROVED EQUAL.
VALVES SHALL HAVE LOCKING RUBBER COVERS, INSTALLED IN VALVE BOXES. TOP OF VALVE BOX SHALL HAVE BOLT DOWN LID AND TOP SET LEVEL TO FINISH GRADE.

LAWN POP-UP ROTOR HEADS:
FULL CIRCLE
RAINBIRD: F4-FC-SS-10
THREE QUARTER
RAINBIRD: F4-PC-SS-10
HALF CIRCLE
RAINBIRD: F4-PC-SS-8
QUARTER CIRCLE
RAINBIRD: F4-PC-SS-8

LAWN POP-UP SPRAY HEADS:
RAINBIRD: RD06-S-P45 BODY WITH RAINBIRD R-VAN24 SERIES NOZZLES. (45 PSI REGULATION)
FULL, THREE QUARTER, HALF, THIRD AND QUARTER SPRAY PATTERNS.

LAWN POP-UP SPRAY HEADS:
RAINBIRD: RD06-S-P45 BODY WITH RAINBIRD R-VAN18 SERIES NOZZLES. (45 PSI REGULATION)
FULL, THREE QUARTER, HALF, THIRD AND QUARTER SPRAY PATTERNS.

LAWN POP-UP SPRAY HEADS:
RAINBIRD: RD06-S-P45 BODY WITH RAINBIRD R-VAN14 SERIES NOZZLES. (45 PSI REGULATION)
FULL, HALF, AND QUARTER SPRAY PATTERNS.

TREE BUBBLER HEADS:
RAINBIRD: 1402 BUBBLER NOZZLE WITH INLINE CHECK VALVE.

SHRUB BUBBLER:
HUNTER HEB-20 EMITTER WITH SCREEN CV.

AUTOMATIC DRIP IRRIGATION VALVE/FILTER/PRESSURE REGULATOR:
RAINBIRD CONTROL ZONE KIT MODEL XCZ-100-PRB-COM.

A1 / 1" / 0.00
INDICATES CONTROL VALVE AND STATION NUMBER
INDICATES CONTROL VALVE SIZE
INDICATES GALLONS PER MINUTE

EXISTING TREE PROTECTION AREA:
THE PROTECTION AREA UNDER ANY EXISTING TREE THAT IS TO REMAIN IS DEFINED BY ITS DRIP LINE OR CANOPY COVER. WITHIN THIS AREA NO STORAGE OR PARKING WILL BE PERMITTED. ALL TRENCHING WILL BE PERFORMED BY HAND. DO NOT CUT ROOTS 1" IN DIAMETER OR LARGER. USE BORING PROCEDURES WHEN ENCOUNTERING ROOTS 1" SIZE AND LARGER. NO ROOTS ARE TO BE EXPOSED LONGER THAN 48 HOURS.

SPRINKLER IRRIGATION NOTES

1. COMPOSITE BASE SHEET: PROPOSED IMPROVEMENTS SHOWN ON DRAWINGS ARE SUPERIMPOSED ON A COMPOSITE BASE SHEET. THE COMPOSITE BASE SHEET IS A COMPILATION OF ARCHITECTURAL, ENGINEERING, AND OTHER DATA THAT IS PROVIDED. THE LANDSCAPE ARCHITECT SHALL NOT BE HELD LIABLE FOR CHANGES, INACCURACIES, OMISSIONS, OR ERRORS PERTAINING TO THE COMPOSITE BASE SHEET. CONTRACTOR SHALL BE RESPONSIBLE FOR REVIEWING THESE DOCUMENTS. ANY DISCREPANCIES NEED TO BE BROUGHT TO THE ATTENTION OF THE DESIGN TEAM AND RESOLVED PRIOR TO CONTINUATION OF WORK.
2. DESIGN PRESSURE SHOWN ON PLANS HAS BEEN FURNISHED BY WATER COMPANY OR WATER DISTRICT SERVING SITE. VERIFY PRESSURE ON-SITE PRIOR TO THE INSTALLATION OF ANY SPRINKLER IRRIGATION EQUIPMENT. IF THERE IS A DISCREPANCY, NOTIFY OWNER'S REPRESENTATIVE IMMEDIATELY IN WRITING SO ADJUSTMENTS CAN BE MADE BY LANDSCAPE ARCHITECT. FAILURE TO REPORT DISCREPANCIES AND CONTINUANCE OF WORK WILL RESULT IN ALL RE-DESIGN COSTS BEING CHARGED TO CONTRACTOR.
3. DETERMINE LOCATION OF UNDERGROUND UTILITIES. DAMAGE CAUSED BY INSTALLATION OF THIS WORK SHALL BE REPAIRED TO SATISFACTION OF GOVERNING AGENCY OR OWNER AT NO ADDITIONAL COST TO THE CONTRACT.
4. SPRINKLER OVER SPRAY SHALL NOT BE ALLOWED ON PUBLIC SIDEWALKS, BUILDING WALLS OR FENCES. MINIMUM OVERSPRAY MAY OCCUR IN PARKING AREAS. USE ADJUSTABLE NOZZLES WHENEVER POSSIBLE TO CONTROL SPRINKLER OVERSPRAY.
5. ALL LOCAL CODES AND ORDINANCES SHALL BE COMPLIED WITH. IF THERE IS A CONFLICT, NOTIFY OWNER'S REPRESENTATIVE IMMEDIATELY.
6. TESTING:
   A. PRESSURE TEST ALL UNDERGROUND PIPING AS FOLLOWS:
      SYSTEMS WITH BOOSTER PUMP:
      MAIN LINE - AT 100 PSI FOR 4 HOURS.
      LATERAL LINES - AT 100 PSI FOR 2 HOURS.
      SYSTEMS WITH OUT BOOSTER PUMP:
      MAIN LINE - AT STATIC PSI FOR 4 HOURS.
      LATERAL LINES - AT STATIC PSI FOR 2 HOURS.
   B. COVERAGE TEST: NOTE: PRIOR TO REQUESTING COVERAGE TEST, INSURE ALL HEADS ARE SET PLUMB, NOZZLES ARE ADJUSTED PROPERLY AND SYSTEM HAS BEEN CHECKED FOR AUTOMATION. REQUEST OWNER'S REPRESENTATIVES PRESENCE ON-SITE WHEN SPRINKLER SYSTEM IS COMPLETELY INSTALLED AND FULLY AUTOMATIC. PROVIDE ADEQUATE PERSONNEL AT THIS MEETING TO ADJUST AND FINE TUNE SYSTEM TO SATISFACTION OF OWNER'S REPRESENTATIVE.
7. LAYOUT ALL WORK PRIOR TO TRENCHING OPERATIONS TO DETERMINE IF MINOR MODIFICATIONS OR ADJUSTMENTS WILL BE REQUIRED.
8. INSTALL ALL SPRINKLER HEADS PERPENDICULAR TO SLOPES OR GRADE.
9. CONTROL WIRE SHALL BE UF-14, COLOR FOR LEAD AND WHITE FOR COMMON. SPLICES SHALL BE PERMITTED AT VALVE BOX LOCATIONS ONLY.
10. PROVIDE AND INSTALL AUTOMATIC CONTROLLER AND UF-14 CONTROL WIRE. ELECTRICAL SUBCONTRACTOR SHALL PROVIDE 110V SERVICE AND SERVICE HOOKUP FROM POWER SOURCE TO AUTOMATIC CONTROLLER.
11. COORDINATE ALL WORK WITH OTHER TRADES SO PROGRESS OF WORK IS NOT INTERRUPTED AND CAN BE COMPLETED IN A TIMELY MANNER.
12. NO PLANTING SHALL BE STARTED UNTIL ALL SPRINKLER WORK HAS BEEN TESTED AND APPROVED IN PRESENCE OF OWNER'S REPRESENTATIVE.
13. FOR SPRINKLER IRRIGATION INSTALLATION DETAILS, SEE SHEET NO. L4.2 AND L4.3.

IDENTIFICATION STAMP
DIV. OF THE STATE ARCHITECT
APP: 02-121275 INC:
REVIEWED FOR
SS ☑ FLS ☑ ACS ☑
DATE: 12/15/2023

CALIFORNIA DESIGN WEST ARCHITECTS, Inc.

2100 19th Street
Sacramento, CA 95818

Phone: (916) 446-2466
Fax: (916) 446-5118
Web Page: ca-dw.com

These plans and prints thereof, as instruments of service, are owned by the architect and are for the use on this project only. Reproduction and/or distribution without the prior written consent of the architect is forbidden.

Copyright California Design West Architects, Inc.

ARCHITECT | CONSULTANT:

LICENSED ARCHITECT MITCHELL A. MCALISTER No. C 17250 REGISTERED STATE OF CALIFORNIA

CONSULTANT:
23-07

MTW group
LANDSCAPE ARCHITECTURE AND PLANNING
2707 K Street, Suite 201
Sacramento, CA 95816
916 369-3990

LICENSED LANDSCAPE ARCHITECT KEITH D. LARKINS No. 5824 STATE OF CALIFORNIA
10/20/23 to 6/30/24

PROJECT NAME:

BUHACH COLONY HIGH SCHOOL

1800 NORTH BUHACH RD
ATWATER, CA 95301

CONCESSIONS/TOILET BUILDINGS, TICKET BOOTH & STADIUM UPGRADES

MERCED UNION HIGH SCHOOL DISTRICT

MERCED COUNTY

KEY PLAN:

SHEET TITLE:
LANDSCAPE IRRIGATION PLAN

JOB NUMBER:
SHEET NUMBER: L3.1

DATE: NOVEMBER 15, 2023

REVISION:

C:\Users\tturoy\Documents\A22_BCHS-NewStadium-SITE_tturoy-2100.rvt

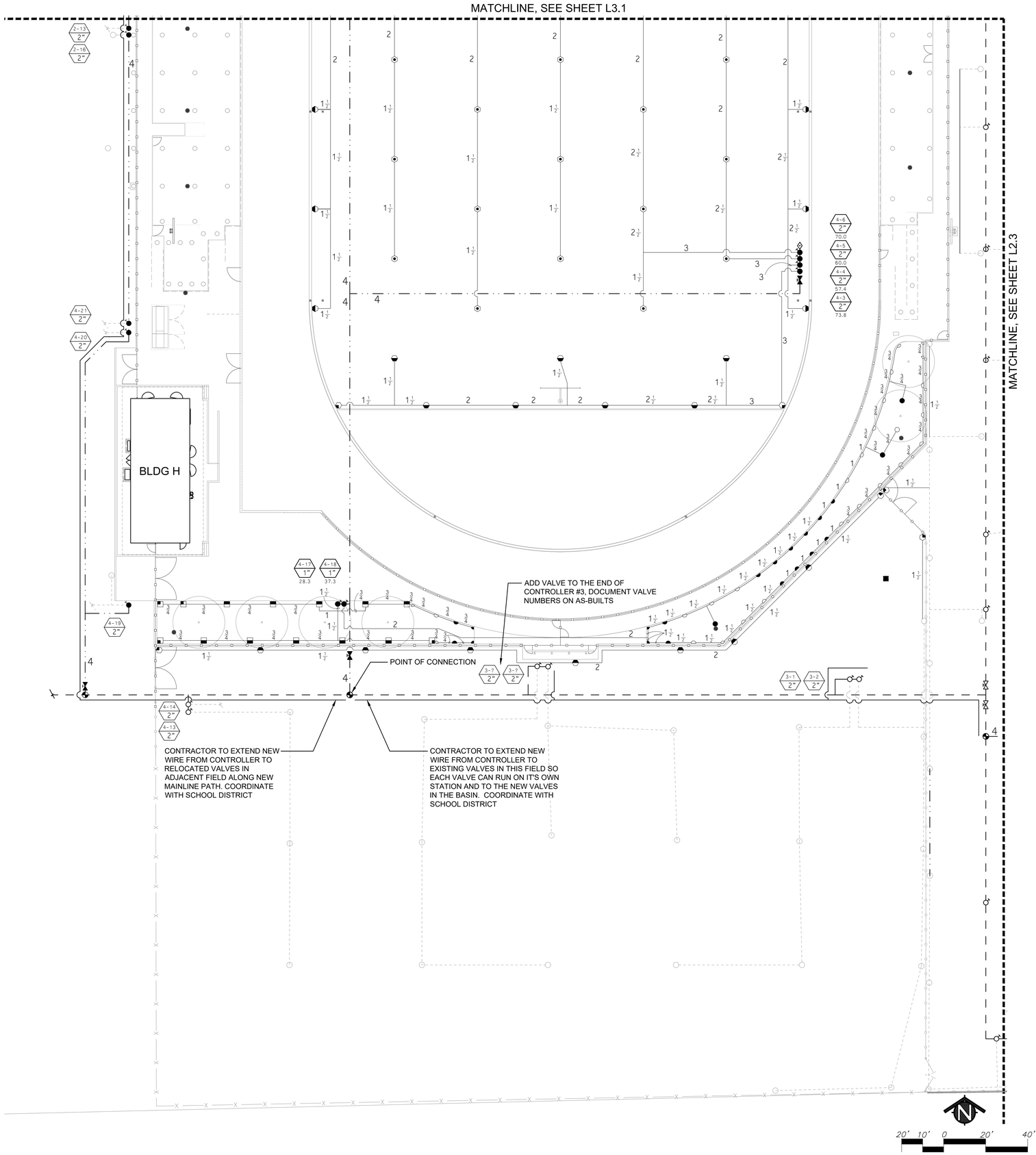

KEY

SPRINKLER IRRIGATION LEGEND

EXISTING AUTOMATIC CONTROLLER:
COORDINATE 110V SERVICE AND POWER CONNECTION WITH ELECTRICAL SUB-CONTRACTOR.
COORDINATE ETHERNET CONNECTION WITH THE ELECTRICAL SUB-CONTRACTOR.

POINT OF CONNECTION:
IRRIGATION SYSTEM OPERATING WATER PRESSURE: 70 PSI
MAXIMUM FLOW IS 200 GPM

CONTRACTOR SHALL LOCATE IRRIGATION MAINLINE AS SHOWN ON PLANS.
CONNECT AT THIS POINT AND EXTEND AS INDICATED ON DRAWINGS.

GATE VALVE:
TYPE:
3" SIZE AND SMALLER: LEEMCO LGT-XXSS THREADED WITH A NON-RISING STEM AND HANDWHEEL.
4" SIZE AND LARGER: LEEMCO LMV-XXFF FLANGED WITH A NON-RISING STEM AND OPERATING NUT.
LEEMCO LMV-XXBB BELL WITH A NON-RISING STEM AND OPERATING NUT.

GATE VALVE INSTALLED IN A VALVE BOX WITH TOP OF BOX SET FLUSH TO FINISH GRADE.
GATE VALVE TO BE LINE SIZE.

PRESSURE MAIN LINE:
TYPE:
3" SIZE AND SMALLER: ASTM D1785, PVC SCHEDULE 40.
4" SIZE AND LARGER: ASTM D2241 SDR 21, 200 PSI, RUBBER GASKETED.

TRENCH DEPTH:
IN PLANTED AREAS: 24" MINIMUM COVER.
UNDER PAVED AREAS: 24" MINIMUM COVER.
PVC SCHEDULE 40 SLEEVES ARE REQUIRED FOR ALL PIPING UNDER PAVEMENT.

LATERAL LINE:
TYPE:
ASTM D1785, PVC SCHEDULE 40, SOLVENT WELD ALL UNSIZED PIPE SHALL BE 3/4" SIZE.
TRENCH DEPTH:
IN PLANTED AREAS:
POP-UP SPRAY HEADS - 12" MINIMUM COVER.
ROTOR HEADS: - 18" MINIMUM COVER.
BUBBLER HEADS: - 12" MINIMUM COVER.
UNDER PAVED AREAS: 24" MINIMUM COVER.
PVC SCHEDULE 40 SLEEVES ARE REQUIRED FOR ALL PIPING UNDER PAVEMENT.

AUTOMATIC CONTROL VALVE:
RAINBIRD PEB-PRS-D SERIES, TORO P220-27 SERIES, HUNTER ICV-AS OR APPROVED EQUAL. VALVE SHALL HAVE PRESSURE REGULATION OPTION.

QUICK COUPLER VALVE:
RAINBIRD 44NP, TORO 100-25LLVC, HUNTER HQ-44-LRC-R OR APPROVED EQUAL.
VALVES SHALL HAVE LOCKING RUBBER COVERS, INSTALLED IN VALVE BOXES. TOP OF VALVE BOX SHALL HAVE BOLT DOWN LID AND TOP SET LEVEL TO FINISH GRADE.

LAWN POP-UP ROTOR HEADS:
FULL CIRCLE
RAINBIRD: F4-FC-SS-10
THREE QUARTER
RAINBIRD: F4-PC-SS-10
HALF CIRCLE
RAINBIRD: F4-PC-SS-8
QUARTER CIRCLE
RAINBIRD: F4-PC-SS-8

LAWN POP-UP SPRAY HEADS:
RAINBIRD: RD06-S-P45 BODY WITH RAINBIRD R-VAN24 SERIES NOZZLES. (45 PSI REGULATION)
FULL, THREE QUARTER, HALF, THIRD AND QUARTER SPRAY PATTERNS.

LAWN POP-UP SPRAY HEADS:
RAINBIRD: RD06-S-P45 BODY WITH RAINBIRD R-VAN18 SERIES NOZZLES. (45 PSI REGULATION)
FULL, THREE QUARTER, HALF, THIRD AND QUARTER SPRAY PATTERNS.

LAWN POP-UP SPRAY HEADS:
RAINBIRD: RD06-S-P45 BODY WITH RAINBIRD R-VAN14 SERIES NOZZLES. (45 PSI REGULATION)
FULL, HALF, AND QUARTER SPRAY PATTERNS.

TREE BUBBLER HEADS:
RAINBIRD: 1402 BUBBLER NOZZLE WITH INLINE CHECK VALVE.

SHRUB BUBBLER:
HUNTER HEB-20 EMITTER WITH SCREEN CV.

AUTOMATIC DRIP IRRIGATION VALVE/FILTER/PRESSURE REGULATOR:
RAINBIRD CONTROL ZONE KIT MODEL XCZ-100-PRB-COM.

A1 / 1" / 0.00
- INDICATES CONTROL VALVE AND STATION NUMBER
- INDICATES CONTROL VALVE SIZE
- INDICATES GALLONS PER MINUTE

EXISTING TREE PROTECTION AREA:
THE PROTECTION AREA UNDER ANY EXISTING TREE THAT IS TO REMAIN IS DEFINED BY ITS DRIP LINE OR CANOPY COVER. WITHIN THIS AREA NO STORAGE OR PARKING WILL BE PERMITTED. ALL TRENCHING WILL BE PERFORMED BY HAND. DO NOT CUT ROOTS 1" IN DIAMETER OR LARGER. USE BORING PROCEDURES WHEN ENCOUNTERING ROOTS 1" SIZE AND LARGER. NO ROOTS ARE TO BE EXPOSED LONGER THAN 48 HOURS.

SPRINKLER IRRIGATION NOTES

1. COMPOSITE BASE SHEET: PROPOSED IMPROVEMENTS SHOWN ON DRAWINGS ARE SUPERIMPOSED ON A COMPOSITE BASE SHEET. THE COMPOSITE BASE SHEET IS A COMPILATION OF ARCHITECTURAL, ENGINEERING, AND OTHER DATA THAT IS PROVIDED. THE LANDSCAPE ARCHITECT SHALL NOT BE HELD LIABLE FOR CHANGES, INACCURACIES, OMISSIONS, OR ERRORS PERTAINING TO THE COMPOSITE BASE SHEET. CONTRACTOR SHALL BE RESPONSIBLE FOR REVIEWING THESE DOCUMENTS. ANY DISCREPANCIES NEED TO BE BROUGHT TO THE ATTENTION OF THE DESIGN TEAM AND RESOLVED PRIOR TO CONTINUATION OF WORK.
2. DESIGN PRESSURE SHOWN ON PLANS HAS BEEN FURNISHED BY WATER COMPANY OR WATER DISTRICT SERVING SITE. VERIFY PRESSURE ON-SITE PRIOR TO THE INSTALLATION OF ANY SPRINKLER IRRIGATION EQUIPMENT. IF THERE IS A DISCREPANCY, NOTIFY OWNER'S REPRESENTATIVE IMMEDIATELY IN WRITING SO ADJUSTMENTS CAN BE MADE BY LANDSCAPE ARCHITECT. FAILURE TO REPORT DISCREPANCIES AND CONTINUANCE OF WORK WILL RESULT IN ALL RE-DESIGN COSTS BEING CHARGED TO CONTRACTOR.
3. DETERMINE LOCATION OF UNDERGROUND UTILITIES. DAMAGE CAUSED BY INSTALLATION OF THIS WORK SHALL BE REPAIRED TO SATISFACTION OF GOVERNING AGENCY OR OWNER AT NO ADDITIONAL COST TO THE CONTRACT.
4. SPRINKLER OVER SPRAY SHALL NOT BE ALLOWED ON PUBLIC SIDEWALKS, BUILDING WALLS OR FENCES. MINIMUM OVERSPRAY MAY OCCUR IN PARKING AREAS. USE ADJUSTABLE NOZZLES WHENEVER POSSIBLE TO CONTROL SPRINKLER OVERSPRAY.
5. ALL LOCAL CODES AND ORDINANCES SHALL BE COMPLIED WITH. IF THERE IS A CONFLICT, NOTIFY OWNER'S REPRESENTATIVE IMMEDIATELY.
6. TESTING:
   A. PRESSURE TEST ALL UNDERGROUND PIPING AS FOLLOWS:
      SYSTEMS WITH BOOSTER PUMP:
      MAIN LINE - AT 100 PSI FOR 4 HOURS.
      LATERAL LINES - AT 100 PSI FOR 2 HOURS.
      SYSTEMS WITH OUT BOOSTER PUMP:
      MAIN LINE - AT STATIC PSI FOR 4 HOURS.
      LATERAL LINES - AT STATIC PSI FOR 2 HOURS.
   B. COVERAGE TEST, NOTE: PRIOR TO REQUESTING COVERAGE TEST, INSURE ALL HEADS ARE SET PLUMB, NOZZLES ARE ADJUSTED PROPERLY AND SYSTEM HAS BEEN CHECKED FOR AUTOMATION. REQUEST OWNER'S REPRESENTATIVES PRESENCE ON-SITE WHEN SPRINKLER SYSTEM IS COMPLETELY INSTALLED AND FULLY AUTOMATIC. PROVIDE ADEQUATE PERSONNEL AT THIS MEETING TO ADJUST AND FINE TUNE SYSTEM TO SATISFACTION OF OWNER'S REPRESENTATIVE.
7. LAYOUT ALL WORK PRIOR TO TRENCHING OPERATIONS TO DETERMINE IF MINOR MODIFICATIONS OR ADJUSTMENTS WILL BE REQUIRED.
8. INSTALL ALL SPRINKLER HEADS PERPENDICULAR TO SLOPES OR GRADE.
9. CONTROL WIRE SHALL BE UF-14, COLOR FOR LEAD AND WHITE FOR COMMON. SPLICES SHALL BE PERMITTED AT VALVE BOX LOCATIONS ONLY.
10. PROVIDE AND INSTALL AUTOMATIC CONTROLLER AND UF-14 CONTROL WIRE. ELECTRICAL SUBCONTRACTOR SHALL PROVIDE 110V SERVICE AND SERVICE HOOKUP FROM POWER SOURCE TO AUTOMATIC CONTROLLER.
11. COORDINATE ALL WORK WITH OTHER TRADES SO PROGRESS OF WORK IS NOT INTERRUPTED AND CAN BE COMPLETED IN A TIMELY MANNER.
12. NO PLANTING SHALL BE STARTED UNTIL ALL SPRINKLER WORK HAS BEEN TESTED AND APPROVED IN PRESENCE OF OWNER'S REPRESENTATIVE.
13. FOR SPRINKLER IRRIGATION INSTALLATION DETAILS, SEE SHEET NO. L4.2 AND L4.3.

IDENTIFICATION STAMP
DIV. OF THE STATE ARCHITECT
APP: 02-121275 INC:
REVIEWED FOR
SS ☑ FLS ☑ ACS ☑
DATE: 12/15/2023

CALIFORNIA DESIGN WEST ARCHITECTS, Inc.

2100 19th Street
Sacramento, CA 95818

Phone: (916) 446-2466
Fax: (916) 446-5118
Web Page: ca-dw.com

These plans and prints thereof, as instruments of service, are owned by the architect and are for the use on this project only. Reproduction and/or distribution without the prior written consent of the architect is forbidden.

Copyright California Design West Architects, Inc.

ARCHITECT CONSULTANT:

LICENSED ARCHITECT MITCHELL A. McALISTER NO. C 17250 RENEWAL 08-31-2025 STATE OF CALIFORNIA

CONSULTANT:
23-07

MTW group
LANDSCAPE ARCHITECTURE AND PLANNING
2707 K Street, Suite 201
Sacramento, CA 95816
916 369-3990

LANDSCAPE ARCHITECT KEVIN D. LAWLOR 2989 STATE OF CALIFORNIA

10/20/23
6/30/24

PROJECT NAME:

BUHACH COLONY HIGH SCHOOL

1800 NORTH BUHACH RD
ATWATER, CA 95301

CONCESSIONS/TOILET BUILDINGS, TICKET BOOTH & STADIUM UPGRADES

MERCED UNION HIGH SCHOOL DISTRICT

MERCED COUNTY

KEY PLAN:

SHEET TITLE:
LANDSCAPE IRRIGATION PLAN

JOB NUMBER:
SHEET NUMBER: L3.2

DATE:
NOVEMBER 15, 2023

REVISION:

C:\Users\stump\Documents\A22_BCHS-NewStadium-SITE_stump-2100.rvt

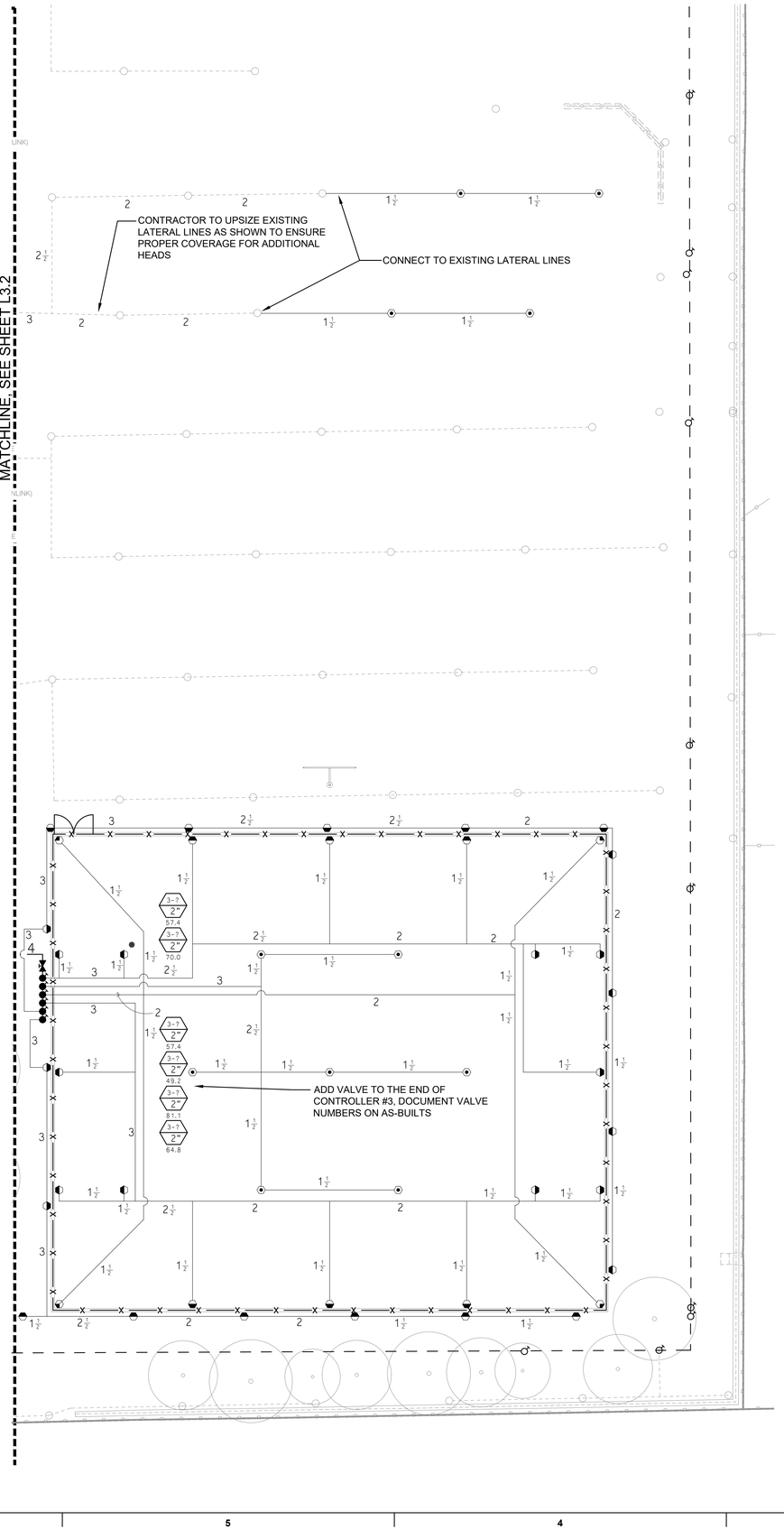

KEY

SPRINKLER IRRIGATION LEGEND

EXISTING AUTOMATIC CONTROLLER:
COORDINATE 110V SERVICE AND POWER CONNECTION WITH ELECTRICAL SUB-CONTRACTOR.
COORDINATE ETHERNET CONNECTION WITH THE ELECTRICAL SUB-CONTRACTOR.

POINT OF CONNECTION:
IRRIGATION SYSTEM OPERATING WATER PRESSURE: 70 PSI
MAXIMUM FLOW IS 200 GPM

CONTRACTOR SHALL LOCATE IRRIGATION MAINLINE AS SHOWN ON PLANS.
CONNECT AT THIS POINT AND EXTEND AS INDICATED ON DRAWINGS.

GATE VALVE:
TYPE:
3" SIZE AND SMALLER: LEEMCO LGT-XXSS THREADED WITH A NON-RISING STEM AND HANDWHEEL.
4" SIZE AND LARGER: LEEMCO LMV-XXFF FLANGED WITH A NON-RISING STEM AND OPERATING NUT.
LEEMCO LMV-XXBB BELL WITH A NON-RISING STEM AND OPERATING NUT.

GATE VALVE INSTALLLED IN A VALVE BOX WITH TOP OF BOX SET FLUSH TO FINISH GRADE.
GATE VALVE TO BE LINE SIZE.

PRESSURE MAIN LINE:
TYPE:
3" SIZE AND SMALLER: ASTM D1785, PVC SCHEDULE 40.
4" SIZE AND LARGER: ASTM D2241 SDR 21, 200 PSI, RUBBER GASKETED.

TRENCH DEPTH:
IN PLANTED AREAS: 24" MINIMUM COVER.
UNDER PAVED AREAS: 24" MINIMUM COVER.
PVC SCHEDULE 40 SLEEVES ARE REQUIRED FOR ALL PIPING UNDER PAVEMENT.

LATERAL LINE:
TYPE:
ASTM D1785, PVC SCHEDULE 40, SOLVENT WELD ALL UNSIZED PIPE SHALL BE 3/4" SIZE.
TRENCH DEPTH:
IN PLANTED AREAS:
POP-UP SPRAY HEADS - 12" MINIMUM COVER.
ROTOR HEADS: - 18" MINIMUM COVER.
BUBBLER HEADS: - 12" MINIMUM COVER.
UNDER PAVED AREAS: 24" MINIMUM COVER.
PVC SCHEDULE 40 SLEEVES ARE REQUIRED FOR ALL PIPING UNDER PAVEMENT.

AUTOMATIC CONTROL VALVE:
RAINBIRD PEB-PRS-D SERIES, TORO P220-27 SERIES, HUNTER ICV-AS OR APPROVED EQUAL. VALVE SHALL HAVE PRESSURE REGULATION OPTION.

QUICK COUPLER VALVE:
RAINBIRD 44NP, TORO 100-2SLLVC, HUNTER HQ-44-LRC-R OR APPROVED EQUAL.
VALVES SHALL HAVE LOCKING RUBBER COVERS, INSTALLED IN VALVE BOXES. TOP OF VALVE BOX SHALL HAVE BOLT DOWN LID AND TOP SET LEVEL TO FINISH GRADE.

LAWN POP-UP ROTOR HEADS:
FULL CIRCLE
RAINBIRD: F4-FC-SS-10
THREE QUARTER
RAINBIRD: F4-PC-SS-10
HALF CIRCLE
RAINBIRD: F4-PC-SS-8
QUARTER CIRCLE
RAINBIRD: F4-PC-SS-8

LAWN POP-UP SPRAY HEADS:
RAINBIRD: RD06-S-P45 BODY WITH RAINBIRD R-VAN24 SERIES NOZZLES. (45 PSI REGULATION)
FULL, THREE QUARTER, HALF, THIRD AND QUARTER SPRAY PATTERNS.

LAWN POP-UP SPRAY HEADS:
RAINBIRD: RD06-S-P45 BODY WITH RAINBIRD R-VAN18 SERIES NOZZLES. (45 PSI REGULATION)
FULL, THREE QUARTER, HALF, THIRD AND QUARTER SPRAY PATTERNS.

LAWN POP-UP SPRAY HEADS:
RAINBIRD: RD06-S-P45 BODY WITH RAINBIRD R-VAN14 SERIES NOZZLES. (45 PSI REGULATION)
FULL, HALF, AND QUARTER SPRAY PATTERNS.

TREE BUBBLER HEADS:
RAINBIRD: 1402 BUBBLER NOZZLE WITH INLINE CHECK VALVE.

SHRUB BUBBLER:
HUNTER HEB-20 EMITTER WITH SCREEN CV.

AUTOMATIC DRIP IRRIGATION VALVE/FILTER/PRESSURE REGULATOR:
RAINBIRD CONTROL ZONE KIT MODEL XCZ-100-PRB-COM.

A1 / 1" / 0.00
- INDICATES CONTROL VALVE AND STATION NUMBER
- INDICATES CONTROL VALVE SIZE
- INDICATES GALLONS PER MINUTE

EXISTING TREE PROTECTION AREA:
THE PROTECTION AREA UNDER ANY EXISTING TREE THAT IS TO REMAIN IS DEFINED BY ITS DRIP LINE OR CANOPY COVER. WITHIN THIS AREA NO STORAGE OR PARKING WILL BE PERMITTED. ALL TRENCHING WILL BE PERFORMED BY HAND. DO NOT CUT ROOTS 1" IN DIAMETER OR LARGER. USE BORING PROCEDURES WHEN ENCOUNTERING ROOTS 1" SIZE AND LARGER. NO ROOTS ARE TO BE EXPOSED LONGER THAN 48 HOURS.

SPRINKLER IRRIGATION NOTES

1. COMPOSITE BASE SHEET: PROPOSED IMPROVEMENTS SHOWN ON DRAWINGS ARE SUPERIMPOSED ON A COMPOSITE BASE SHEET. THE COMPOSITE BASE SHEET IS A COMPILATION OF ARCHITECTURAL, ENGINEERING, AND OTHER DATA THAT IS PROVIDED. THE LANDSCAPE ARCHITECT SHALL NOT BE HELD LIABLE FOR CHANGES, INACCURACIES, OMISSIONS, OR ERRORS PERTAINING TO THE COMPOSITE BASE SHEET. CONTRACTOR SHALL BE RESPONSIBLE FOR REVIEWING THESE DOCUMENTS. ANY DISCREPANCIES NEED TO BE BROUGHT TO THE ATTENTION OF THE DESIGN TEAM AND RESOLVED PRIOR TO CONTINUATION OF WORK.
2. DESIGN PRESSURE SHOWN ON PLANS HAS BEEN FURNISHED BY WATER COMPANY OR WATER DISTRICT SERVING SITE. VERIFY PRESSURE ON-SITE PRIOR TO THE INSTALLATION OF ANY SPRINKLER IRRIGATION EQUIPMENT. IF THERE IS A DISCREPANCY, NOTIFY OWNER'S REPRESENTATIVE IMMEDIATELY IN WRITING SO ADJUSTMENTS CAN BE MADE BY LANDSCAPE ARCHITECT. FAILURE TO REPORT DISCREPANCIES AND CONTINUANCE OF WORK WILL RESULT IN ALL RE-DESIGN COSTS BEING CHARGED TO CONTRACTOR.
3. DETERMINE LOCATION OF UNDERGROUND UTILITIES. DAMAGE CAUSED BY INSTALLATION OF THIS WORK SHALL BE REPAIRED TO SATISFACTION OF GOVERNING AGENCY OR OWNER AT NO ADDITIONAL COST TO THE CONTRACT.
4. SPRINKLER OVER SPRAY SHALL NOT BE ALLOWED ON PUBLIC SIDEWALKS, BUILDING WALLS OR FENCES. MINIMUM OVERSPRAY MAY OCCUR IN PARKING AREAS. USE ADJUSTABLE NOZZLES WHENEVER POSSIBLE TO CONTROL SPRINKLER OVERSPRAY.
5. ALL LOCAL CODES AND ORDINANCES SHALL BE COMPLIED WITH. IF THERE IS A CONFLICT, NOTIFY OWNER'S REPRESENTATIVE IMMEDIATELY.
6. TESTING:
   A. PRESSURE TEST ALL UNDERGROUND PIPING AS FOLLOWS:
      SYSTEMS WITH BOOSTER PUMP:
      MAIN LINE - AT 100 PSI FOR 4 HOURS.
      LATERAL LINES - AT 100 PSI FOR 2 HOURS.
      SYSTEMS WITH OUT BOOSTER PUMP:
      MAIN LINE - AT STATIC PSI FOR 4 HOURS.
      LATERAL LINES - AT STATIC PSI FOR 2 HOURS.
   B. COVERAGE TEST: NOTE: PRIOR TO REQUESTING COVERAGE TEST, INSURE ALL HEADS ARE SET PLUMB, NOZZLES ARE ADJUSTED PROPERLY AND SYSTEM HAS BEEN CHECKED FOR AUTOMATION. REQUEST OWNER'S REPRESENTATIVES PRESENCE ON-SITE WHEN SPRINKLER SYSTEM IS COMPLETELY INSTALLED AND FULLY AUTOMATIC. PROVIDE ADEQUATE PERSONNEL AT THIS MEETING TO ADJUST AND FINE TUNE SYSTEM TO SATISFACTION OF OWNER'S REPRESENTATIVE.
7. LAYOUT ALL WORK PRIOR TO TRENCHING OPERATIONS TO DETERMINE IF MINOR MODIFICATIONS OR ADJUSTMENTS WILL BE REQUIRED.
8. INSTALL ALL SPRINKLER HEADS PERPENDICULAR TO SLOPES OR GRADE.
9. CONTROL WIRE SHALL BE UF-14, COLOR FOR LEAD AND WHITE FOR COMMON. SPLICES SHALL BE PERMITTED AT VALVE BOX LOCATIONS ONLY.
10. PROVIDE AND INSTALL AUTOMATIC CONTROLLER AND UF-14 CONTROL WIRE. ELECTRICAL SUBCONTRACTOR SHALL PROVIDE 110V SERVICE AND SERVICE HOOKUP FROM POWER SOURCE TO AUTOMATIC CONTROLLER.
11. COORDINATE ALL WORK WITH OTHER TRADES SO PROGRESS OF WORK IS NOT INTERRUPTED AND CAN BE COMPLETED IN A TIMELY MANNER.
12. NO PLANTING SHALL BE STARTED UNTIL ALL SPRINKLER WORK HAS BEEN TESTED AND APPROVED IN PRESENCE OF OWNER'S REPRESENTATIVE.
13. FOR SPRINKLER IRRIGATION INSTALLATION DETAILS, SEE SHEET NO. L4.2 AND L4.3.

20' 10' 0 20' 40'
SCALE: 1"= 20'-0"

IDENTIFICATION STAMP
DIV. OF THE STATE ARCHITECT
APP: 02-121275 INC:
REVIEWED FOR
SS ☑ FLS ☑ ACS ☑
DATE: 12/15/2023

CALIFORNIA DESIGN WEST ARCHITECTS, Inc.

2100 19th Street
Sacramento, CA 95818

Phone: (916) 446-2466
Fax: (916) 446-5118
Web Page: ca-dw.com

These plans and prints thereof, as instruments of service, are owned by the architect and are for the use on this project only. Reproduction and/or distribution without the prior written consent of the architect is forbidden.

Copyright California Design West Architects, Inc.

ARCHITECT CONSULTANT:

LICENSED ARCHITECT MITCHELL A. McALISTER NO. C 17258 RENEWAL 08-31-2024 STATE OF CALIFORNIA

CONSULTANT:
23-07

MTW group
LANDSCAPE ARCHITECTURE AND PLANNING
2707 K Street, Suite 201
Sacramento, CA 95816
916 369 3990

10/20/23 to 6/30/24

PROJECT NAME:

BUHACH COLONY HIGH SCHOOL

1800 NORTH BUHACH RD
ATWATER, CA 95301

CONCESSIONS/TOILET BUILDINGS, TICKET BOOTH & STADIUM UPGRADES

MERCED UNION HIGH SCHOOL DISTRICT

MERCED COUNTY

KEY PLAN:

SHEET TITLE:
LANDSCAPE IRRIGATION PLAN

JOB NUMBER:
SHEET NUMBER: L3.3

DATE:
NOVEMBER 15, 2023

REVISION:

C:\Users\tmurray\Documents\A23_BCHS-NewStadium-SITE_tmurray-2100.rvt

NOTES:
1. VITAMIN B-1: SUPERTHRIVE, LIQUINOX START OR EQUAL. APPLY AS PER MANUFACTURER'S INSTRUCTIONS WITH THE SECOND WATERING OF THE BASIN.
2. INSTALL ARBORGUARD TREE PROTECTION WHEN TREES ARE IN LAWN AREAS.
3. TREE TO HAVE DOMINANT MAIN LEADER.
4. TREE STAKES ARE INTENDED TO HOLD THE TREE UPRIGHT, IF NEEDED, TALLER TREE STAKES ARE TO BE USED.
5. TREE BRANCHES EXTENDING MORE THAN 4" OVER A WALKWAY MUST BE PRUNED UP TO AN 80" CLEARANCE PER CBC 1133B.8.6.1

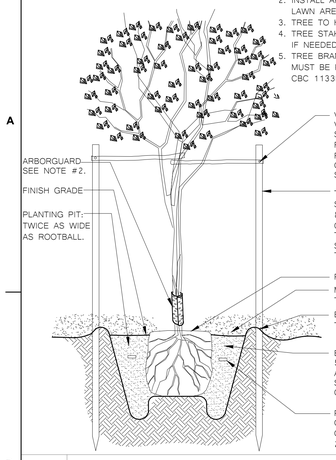

1 TREE PLANTING AND STAKING DETAIL

NOTES:
1. FINISH GRADE OF SOIL TO BE 1" BELOW ADJACENT HARDSCAPE FOR BOTH LAWN AREAS AND PLANTER BED AREAS
2. BARK MULCH DEPTH DOES NOT DICTATE THE ELEVATION OF THE FINISH GRADE
3. BARK MULCH TO BE FEATHERED DOWN TO 1" DEPTH, 12" FROM EDGE OF HARDSCAPE

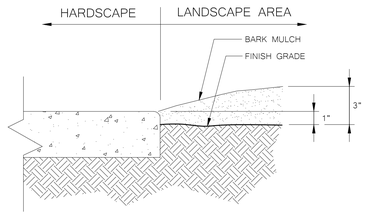

4 LANDSCAPE GRADE ADJACENT TO HARDSCAPE DETAIL

NOTE:
1. SEE TREE PLANTING DETAIL FOR ADDITIONAL INFORMATION.

TREE ROOT BARRIER PROTECTION

1. CONTRACTOR TO REMOVE ALL CONCRETE SPOILS FROM FLATWORK, CURBS OR OTHER CONCRETE STRUCTURES TO ENSURE THE ROOT BARRIER IS ADJACENT TO THE CONCRETE AND VERTICAL. ANGLED INSTALLATION IS NOT ACCEPTABLE.
2. TREE SHALL BE LOCATED IN CENTER OR MIDPOINT OF PLANTER.
3. TREE ROOT BARRIER IS TO BE INSTALLED IN LOCATIONS SHOWN ON THE PLANS.
4. TREE ROOT BARRIER SHALL BE INSTALLED ADJACENT TO EDGE OF PAVING AS DETAILED
5. PLACE ROOT BARRIER SO THAT VERTICAL RIBS FACE TOWARD THE TREE.

ROOT BARRIER

BY: DEEP ROOT PARTNERS OR NDS INC. OR APPROVED EQ.

15 GAL SIZE TREE OR LARGER:

24" MODULAR ROOT BARRIER PANEL

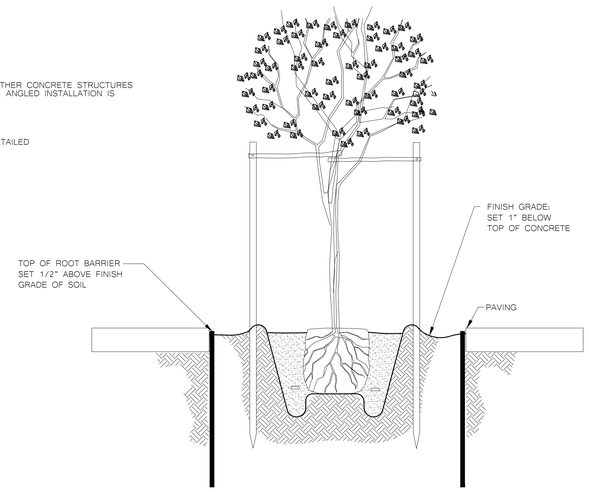

2 ROOT BARRIER CONTROL DETAIL

NOTES:
1. IF SOD IS NOT USED, CONTRACTOR SHALL REMOVE AN 36" ROUND AREA OF LAWN TO CREATE A "MULCH RING".
2. THE "MULCH RING" TO BE CENTERED ON THE TREE TRUNK AND THE TREE STAKES TO BE INSTALLED WITHIN THE "MULCH RING"

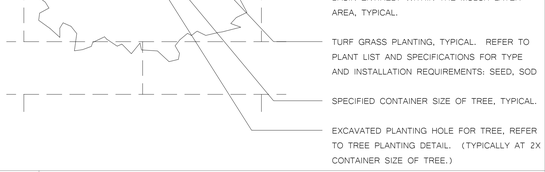

5 TREE MULCH RING IN TURF GRASS

NOTE:
1. SEE SPECIFICATION SECTION 32 90 00 FOR SOD BLEND.

6 TURF REPAIR WITH SOD DETAIL

NOTE: VITAMIN B-1 SUPERTHRIVE LIQUINOX OR EQUAL. APPLY AS PER MANUFACTURE'S INSTRUCTIONS WITH SECOND WATERING OF THE BASIN.

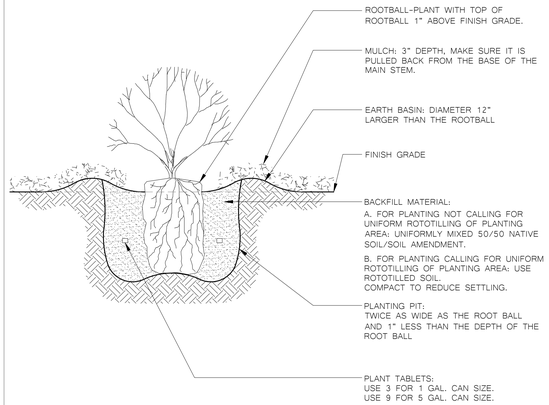

3 SHRUB PLANTING DETAIL

IDENTIFICATION STAMP
DIV. OF THE STATE ARCHITECT
APP: 02-121275 INC:
REVIEWED FOR
SS ☑ FLS ☑ ACS ☑
DATE: 12/15/2023

CALIFORNIA DESIGN WEST ARCHITECTS, Inc.

2100 19th Street
Sacramento, CA 95818

Phone: (916) 446-2466
Fax: (916) 446-5118
Web Page: ca-dw.com

These plans and prints thereof, as instruments of service, are owned by the architect and are for the use on this project only. Reproduction and/or distribution without the prior written consent of the architect is forbidden.

Copyright California Design West Architects, Inc.

ARCHITECT CONSULTANT:

LICENSED ARCHITECT MITCHELL A. McALISTER RENEWAL 08/31/2025 NO. C 17258 STATE OF CALIFORNIA

CONSULTANT:
23-07

MTW group
LANDSCAPE ARCHITECTURE AND PLANNING
2707 K Street, Suite 201
Sacramento, CA 95816
916 369 3990

LANDSCAPE ARCHITECT KEITH D. LARKIN 10/20/23 6/30/24 STATE OF CALIFORNIA

PROJECT NAME:

BUHACH COLONY HIGH SCHOOL

1800 NORTH BUHACH RD
ATWATER, CA 95301

CONCESSIONS/TOILET BUILDINGS, TICKET BOOTH & STADIUM UPGRADES

MERCED UNION HIGH SCHOOL DISTRICT

MERCED COUNTY

KEY PLAN:

SHEET TITLE:
LANDSCAPE DETAILS

JOB NUMBER:

SHEET NUMBER:
L4.1

DATE:
NOVEMBER 15, 2023

REVISION:

C:\Users\stump\Documents\A22_BCHS-NewStadium-SITE_stump-2100.rvt

NOTE:
1. SA6 ASSEMBLY TO INCLUDE:
   CONTROLLER MODEL, ENCLOSURE MODEL, AND OPTIONS AS SPECIFIED
   TERMINAL STRIPS
   TEMPLETE AND BOLTS
   UL LISTED 8' COPPER GROUND ROD
   GROUND ROD CLAMP OR CADWELD
   10' OF #6 GROUNDING WIRE
2. ALL CABLES AND ELECTRICAL WIRES MUST BE RUN IN CONDUIT

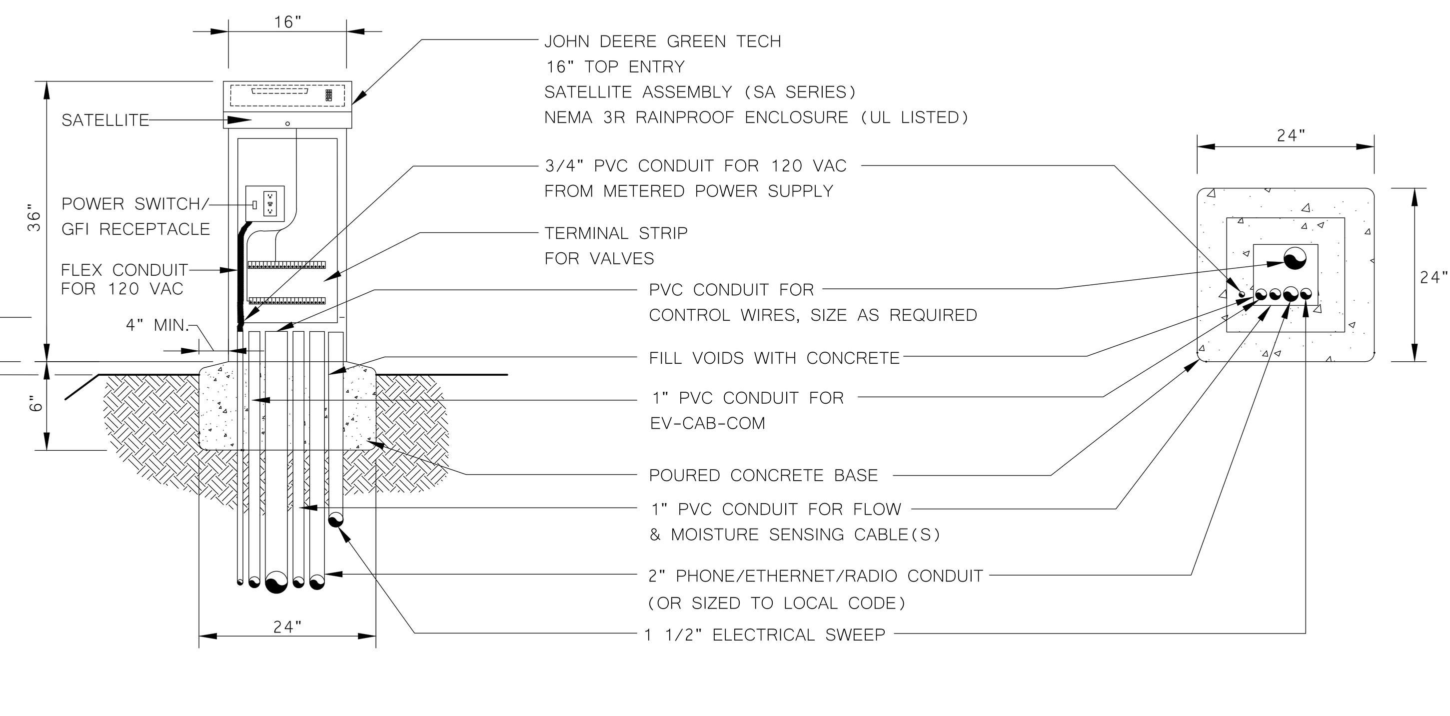

1 TOP ENTRY SATELLITE ASSEMBLY (SA6 SERIES)

NOTES:
1. ALL LEEMCO HARDWARE TO BE STAINLESS STEEL.

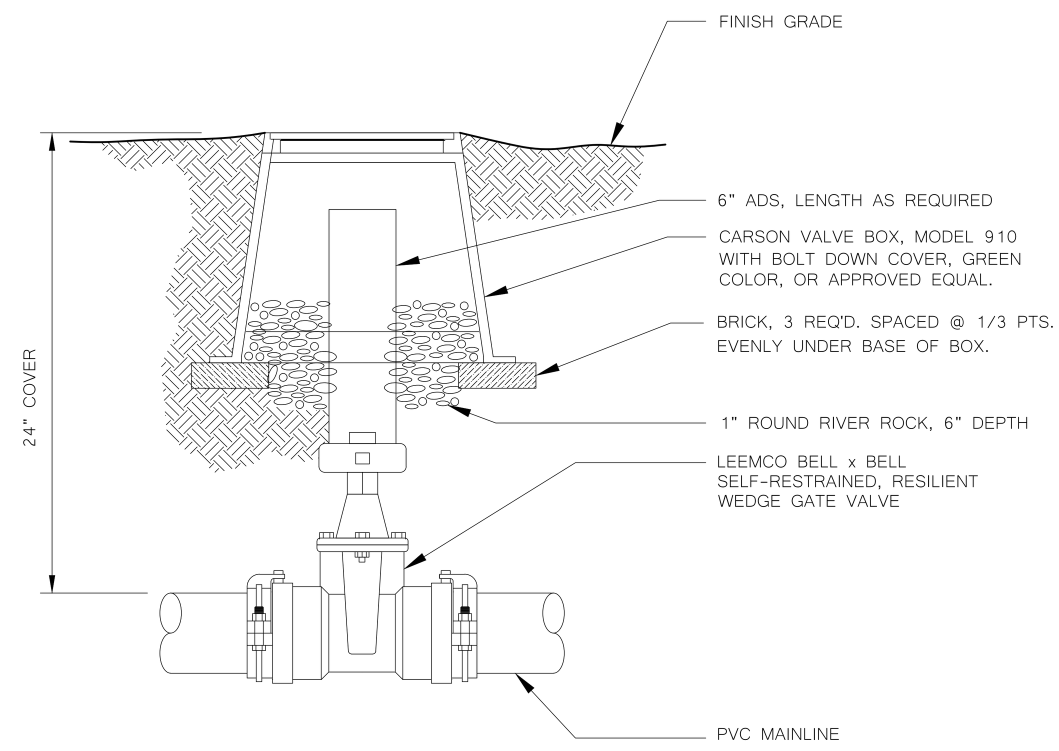

2 LEEMCO SELF-RESTRAINED GATE VALVE DETAIL

NOTES:
1. INSTALL VALVE BOXES SO THAT THE TOP OF THE BOX IS FLUSH WITH THE TOP OF ADJACENT SURFACE.
2. USE TEFLON TAPE ON ALL THREADED CONNECTIONS.
3. ALL LEEMCO HARDWARE TO BE STAINLESS STEEL.

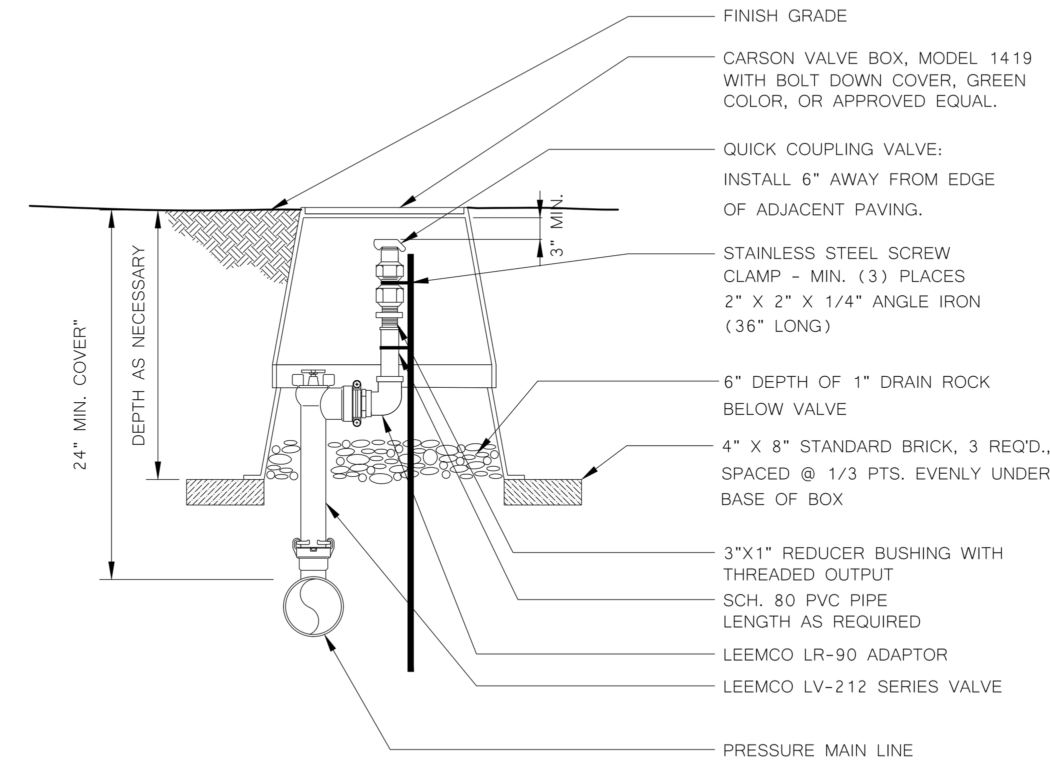

3 QUICK COUPLING VALVE/LEEMCO ANGLE VALVE DETAIL

NOTES:
1. SET VALVE BOX LEVEL, PLACE LOCATOR INSIDE. VALVE BOX TO BE LEVEL WITH GRADE.
2. INSTALL VALVE BOX EXTENSIONS AS REQUIRED.
3. CONNECT ALL WIRES WITH WEATHER TIGHT CONNECTORS. SPLICES IN WIRE SHALL BE PERMITTED ONLY AT VALVE LOCATIONS.
4. TAPE AND BUNDLE WIRE EVERY 10 FEET
5. PROVIDE 18" EXPANSION LOOP AT EACH WIRE CONNECTION IN VALVE BOX
6. ALL LEEMCO HARDWARE TO BE STAINLESS STEEL.

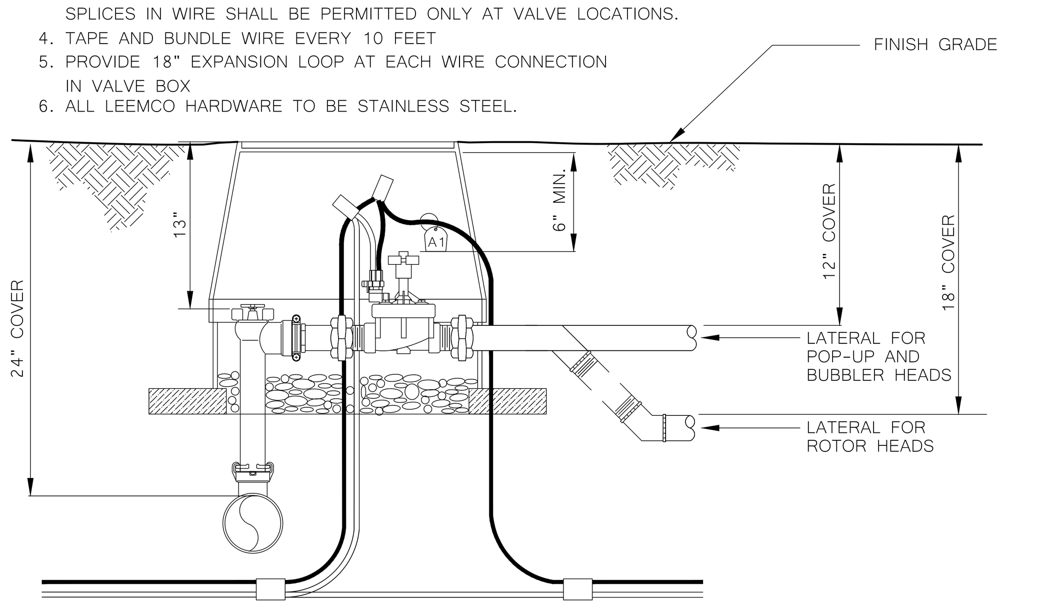

6. FOR VALVES WITH PRESSURE REGULATION FEATURE, SET VALVE PRESSURE AS PER MANUFACTURERS RECOMMENDATIONS TO THE PRESSURE AS FOLLOWS:

POP-UP SPRAY HEADS:	35 - 40 PSI
INTERMEDIATE POP-UP ROTOR HEADS:	50 - 55 PSI
POP-UP ROTOR HEADS:	60 - 70 PSI
BUBBLER HEADS:	30 - 40 PSI
DRIP SYSTEMS:	15 - 20 PSI

VALVE BOX, SETTINGS, AND CLEARANCES

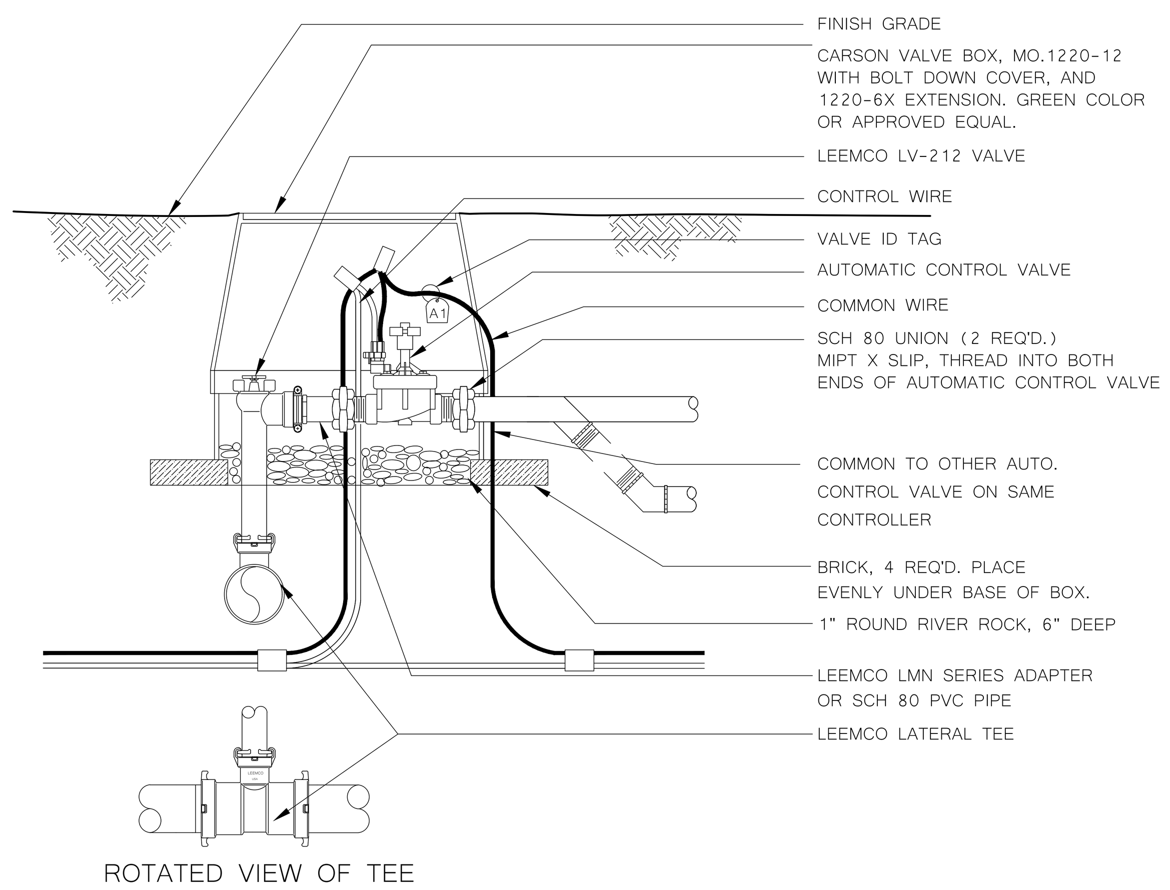

COMPONENTS INSTALLATION

4 AUTOMATIC CONTROL VALVE/LEEMCO ANGLE VALVE DETAIL

NOTES:
1. SET VALVE BOX LEVEL, PLACE LOCATOR INSIDE. VALVE BOX TO BE LEVEL WITH GRADE.
2. INSTALL VALVE BOX EXTENSIONS AS REQUIRED.
3. CONNECT ALL WIRES WITH WEATHER TIGHT CONNECTORS. SPLICES IN WIRE SHALL BE PERMITTED ONLY AT VALVE LOCATIONS.
4. TAPE AND BUNDLE WIRE EVERY 10 FEET
5. PROVIDE 18" EXPANSION LOOP AT EACH WIRE CONNECTION IN VALVE BOX
6. ALL LEEMCO HARDWARE TO BE STAINLESS STEEL.

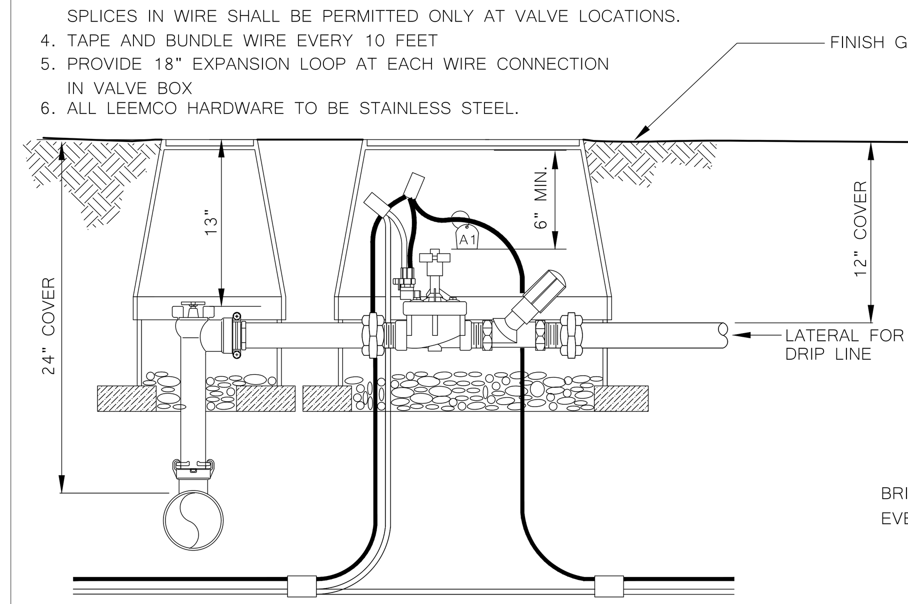

6. FOR VALVES WITH PRESSURE REGULATION FEATURE, SET VALVE PRESSURE AS PER MANUFACTURERS RECOMMENDATIONS TO THE PRESSURE AS FOLLOWS:

DRIP SYSTEMS:	25 - 30 PSI

VALVE BOX, SETTINGS, AND CLEARANCES

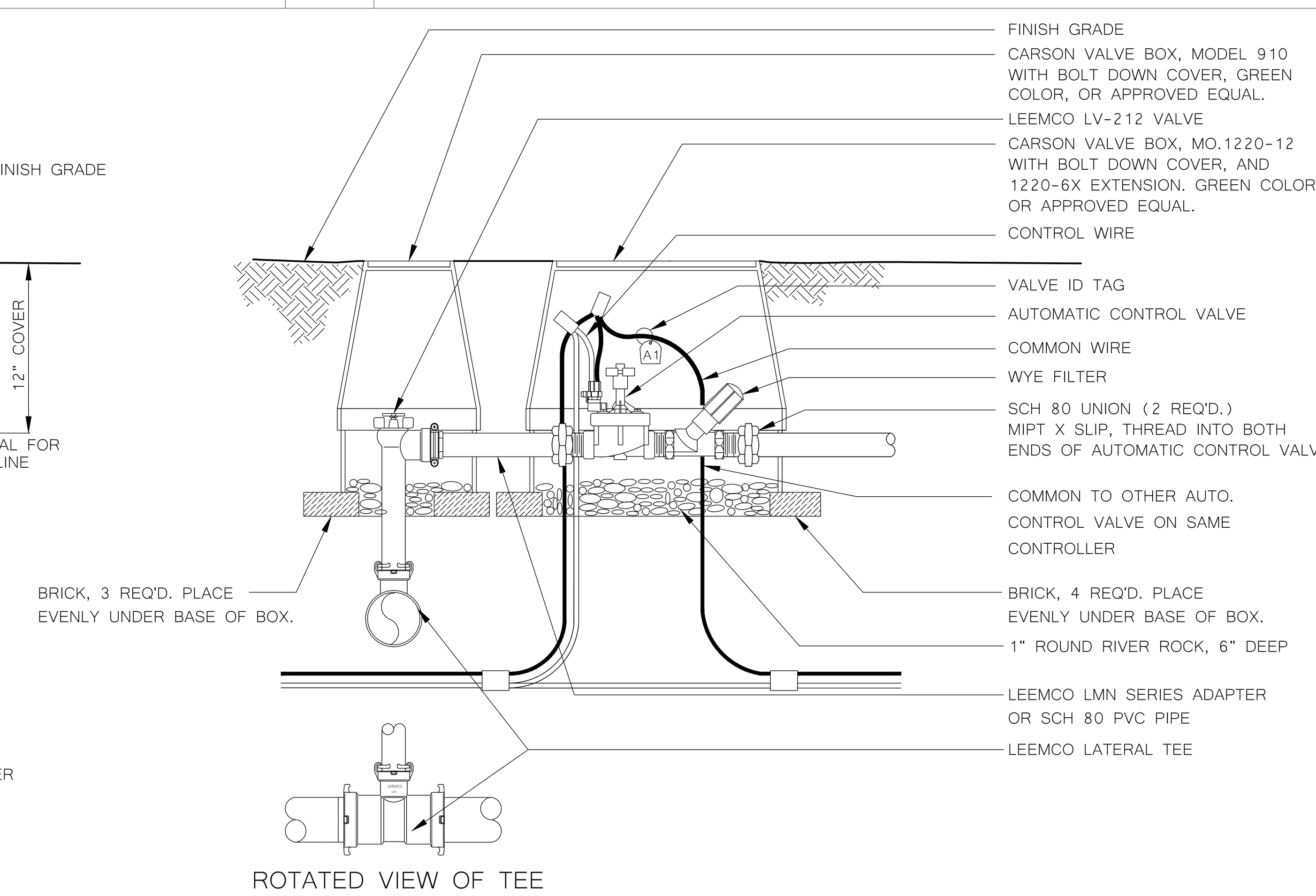

COMPONENTS INSTALLATION

5 AUTOMATIC CONTROL DRIP VALVE/LEEMCO ANGLE VALVE DETAIL

NOTES:
1. REFER TO SPECIFICATION SECTION 32 80 00 AND PLAN SHEETS FOR MORE INFORMATION.
2. WHEN TRENCHES ARE LOCATED UNDER PAVEMENT, COMPACTION RATE FOR THE BACKFILL SHALL COMPLY WITH THE COMPACTION RATES REQUIRED FOR THOSE PAVING SECTIONS.
3. PIPES TO HAVE A MINIMUM OF 6" HORIZONTAL SEPARATION WHEN PLACED IN THE SAME TRENCH ALONG WITH A MINIMUM OF 6" VERTICAL SEPARATION BETWEEN PIPES.

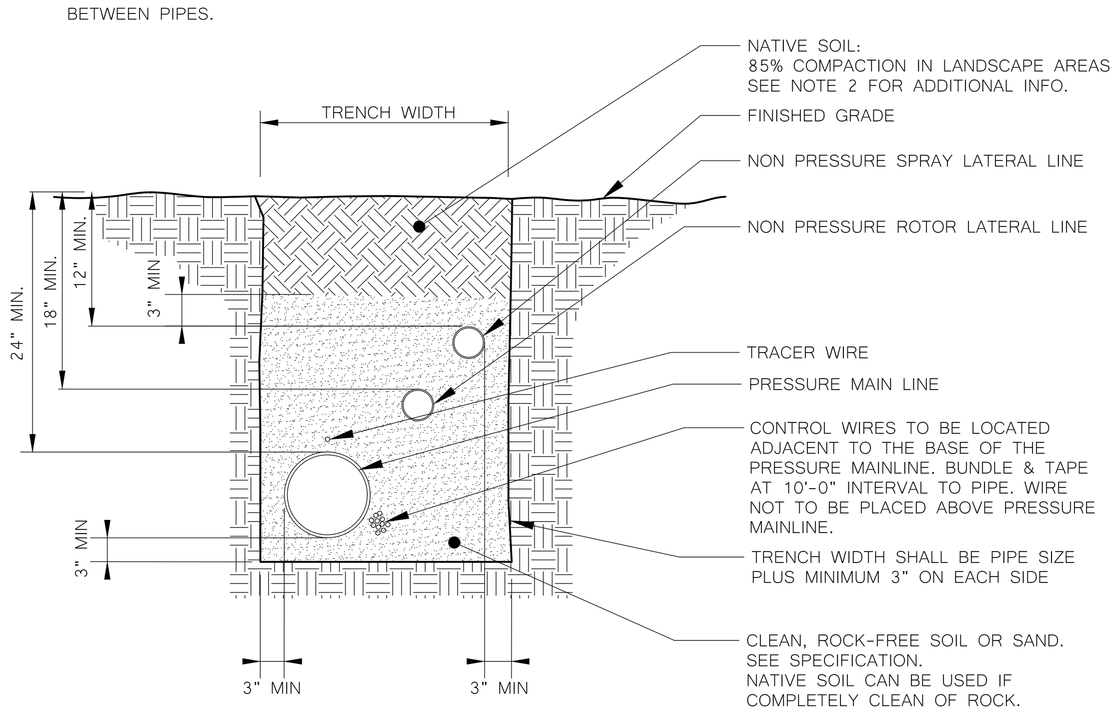

6 PIPE TRENCH DETAIL

NOTES:
1. ALL PIPE AND FITTINGS TO BE SCHEDULE 40, P.V.C. SEE PLAN FOR LOCATION.
2. SLEEVES TO BE LARGE ENOUGH TO ACCEPT THE PIPE AND FITTINGS TO BE ENCASED.
3. PROVIDE A SEPARATE SLEEVE FOR EACH LATERAL OR MAIN CROSSING.
4. PROVIDE A SEPARATE SLEEVE FOR CONTROL WIRE
5. TAPE ALL ENDS WITH DUCT TAPE TO PREVENT ENTRY OF SOIL.

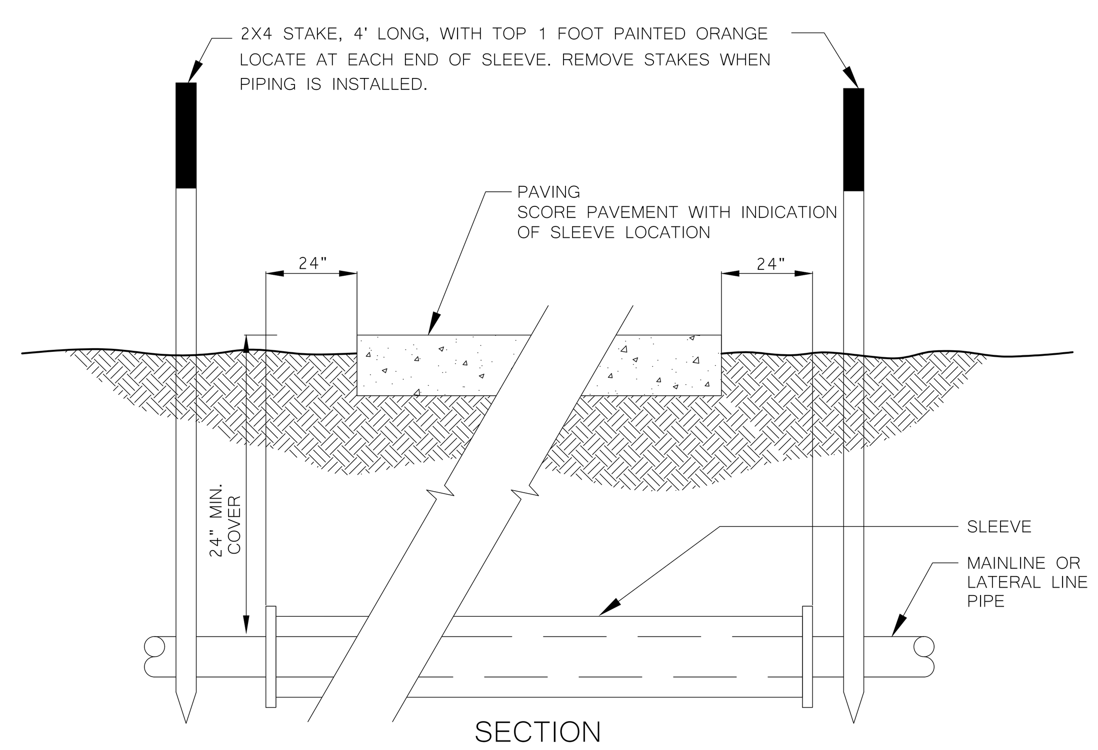

7 SLEEVE DETAIL

NOTES:
1. SET BODY PLUMB SO TOP OF HEAD IS LEVEL WITH FINISH GRADE.
2. COMPACT SOIL AROUND HEAD TO PREVENT SETTLEMENT.
3. ADJUST ARC PATTERN TO PROVIDE FOR BEST COVERAGE.

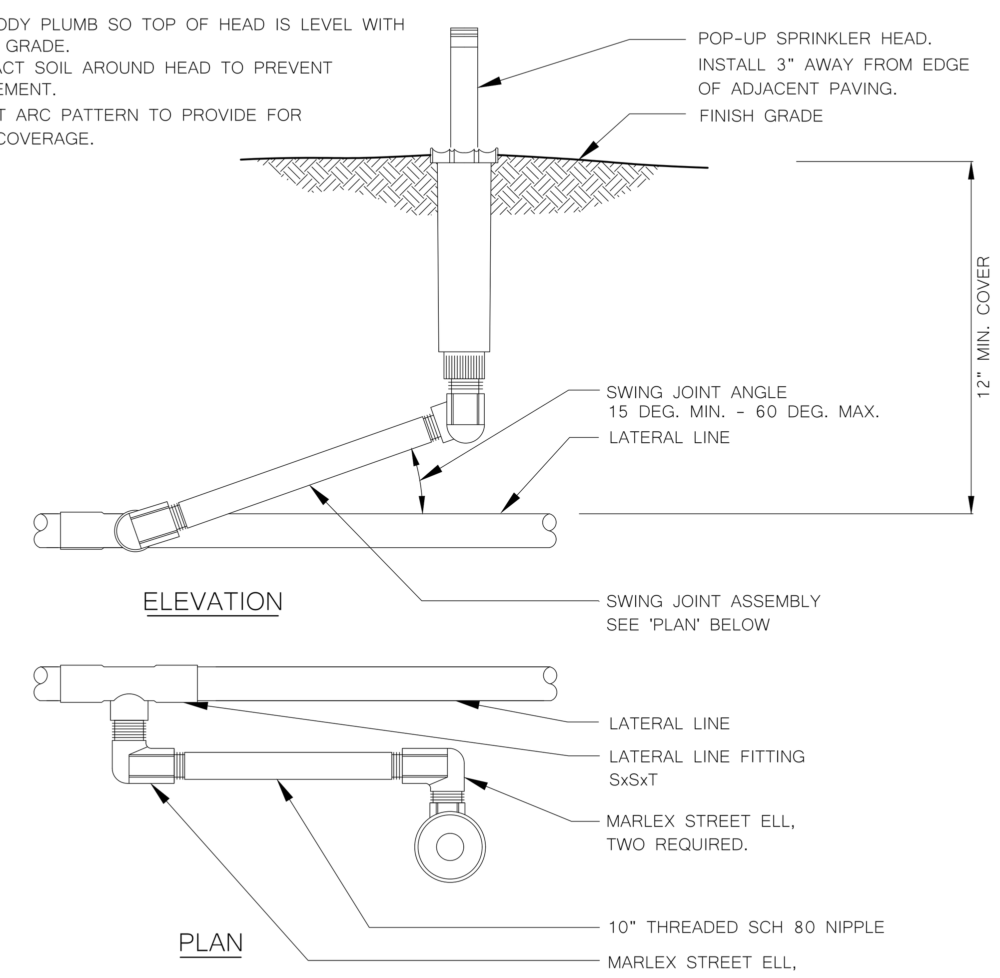

8 POP-UP SPRINKLER HEAD DETAIL

NOTES:
1. SET BODY PLUMB SO TOP OF HEAD IS LEVEL WITH FINISH GRADE.
2. COMPACT SOIL AROUND HEAD TO PREVENT SETTLEMENT.
3. ADJUST ARC PATTERN AND NOZZLE BREAKUP TO PROVIDE BEST COVERAGE.

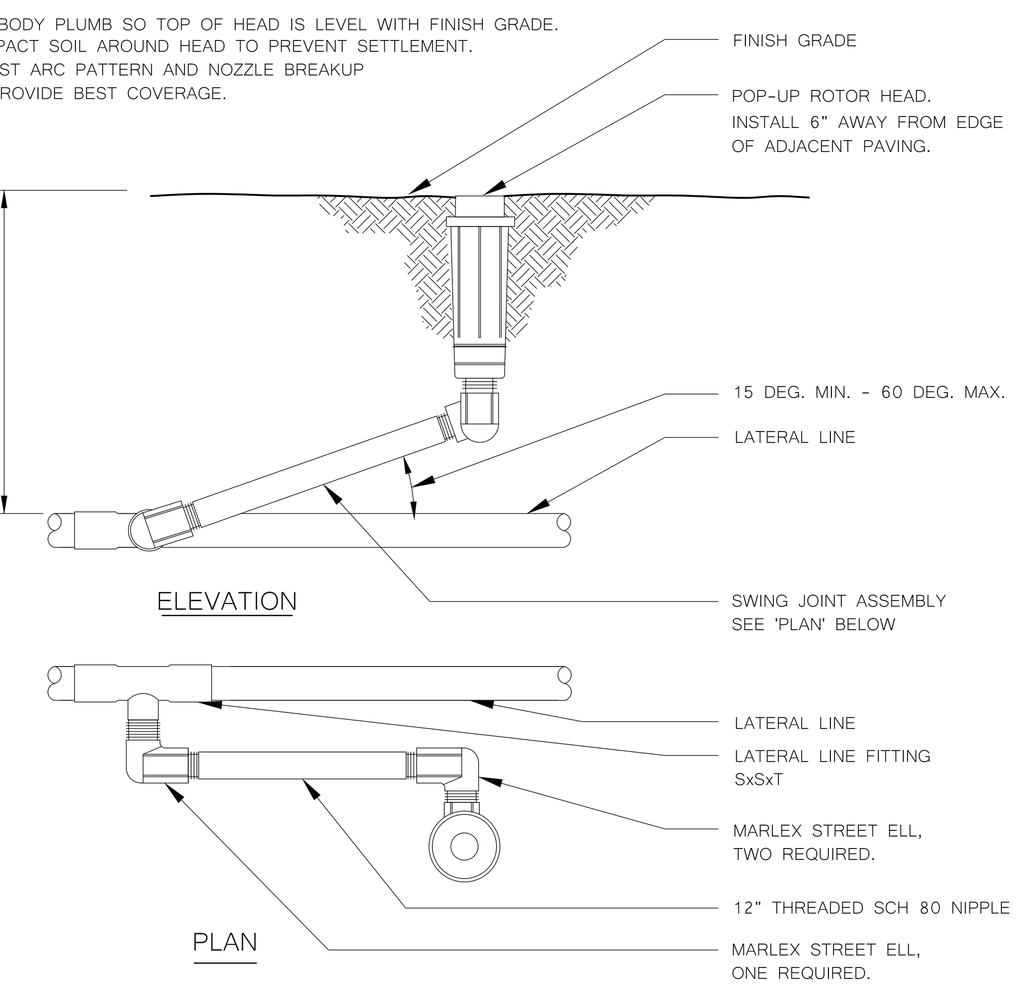

9 POP-UP ROTOR HEAD DETAIL

IDENTIFICATION STAMP
DIV. OF THE STATE ARCHITECT
APP: 02-121275 INC:
REVIEWED FOR
SS ☑ FLS ☑ ACS ☑
DATE: 12/15/2023

CALIFORNIA DESIGN WEST ARCHITECTS, Inc.

2100 19th Street
Sacramento, CA 95818

Phone: (916) 446-2466
Fax: (916) 446-5118
Web Page: ca-dw.com

These plans and prints thereof, as instruments of service, are owned by the architect and are for the use on this project only. Reproduction and/or distribution without the prior written consent of the architect is forbidden.

Copyright California Design West Architects, Inc.

ARCHITECT CONSULTANT:

LICENSED ARCHITECT
MITCHELL A. McALLISTER
NO. C 17250
REN. 2-28-2025
STATE OF CALIFORNIA

CONSULTANT:
23-07

MTW group
LANDSCAPE ARCHITECTURE AND PLANNING
2707 K Street, Suite 201
Sacramento, CA 95816
916 369-3990

LICENSED LANDSCAPE ARCHITECT
PETER D. LARIMER
3284
SIGNATURE
10/20/23
DATE
6/30/24
RENEWAL DATE
STATE OF CALIFORNIA

PROJECT NAME:

BUHACH COLONY HIGH SCHOOL

1800 NORTH BUHACH RD
ATWATER, CA 95301

CONCESSIONS/TOILET BUILDINGS, TICKET BOOTH & STADIUM UPGRADES

MERCED UNION HIGH SCHOOL DISTRICT

MERCED COUNTY

KEY PLAN:

SHEET TITLE:
IRRIGATION DETAILS

JOB NUMBER:

SHEET NUMBER:

DATE:
NOVEMBER 15, 2023

REVISION:

L4.2

C:\Users\strump\Documents\A22_BCHS-NewStadium-SITE_strump-2100.rvt

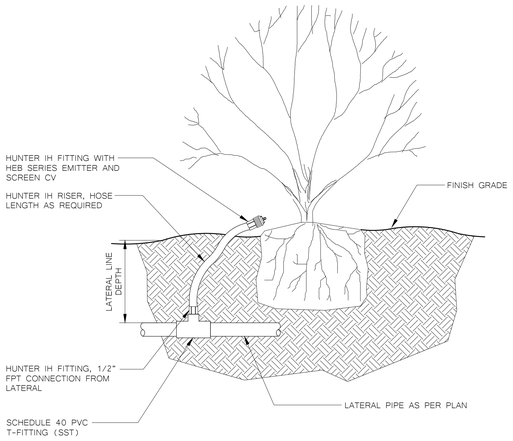

1 SHRUB BUBBLER DETAIL

NOTES:
1. A SWING JOINT ASSEMBLY IS NOT REQUIRED FOR THIS INSTALLATION.
2. SEE TREE PLANTING DETAIL FOR ADDITIONAL INFORMATION.

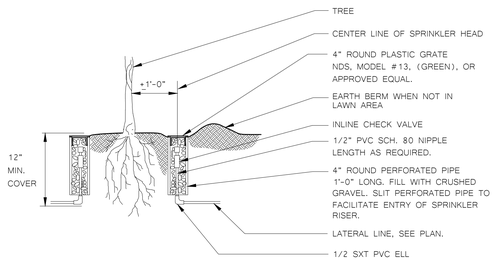

2 TREE BUBBLER HEAD DETAIL

IRRIGATION HYDROZONE INFORMATION TABLE

STATION #/HYDROZONE	PLANT WATER USE TYPE	PLANT FACTOR (PF)	HYDROZONE AREA (HA) (SQ.FT.)	PF x HA (SQ.FT.)	IRRIGATION EFFICIENCY (IE)	ETWU (GALLONS)
1-9	LAWN - HIGH - SLA	0.7	89,262	62,483.4	0.75	2,660,127
10	LAWN - HIGH	0.7	2,526	1,768.2	0.75	75,278
11	LAWN - HIGH	0.7	770	539.0	0.75	22,947
12	LAWN - HIGH	0.7	1,298	908.6	0.75	38,682
13	LAWN - HIGH	0.7	3,396	2,377.2	0.75	101,205
14	LAWN - HIGH	0.7	2,583	1,808.1	0.75	76,977
15	SHRUB - LOW	0.2	746	149.2	0.81	5,881
16	TREE - MED	0.5	100	50.0	0.81	1,971
		TOTAL AREA	100,681		ETWU TOTAL	2,983,069
		TOTAL AREA (SLA)	89,262			
Eto (Merced)	51.5					
ESTIMATED TOTAL WATER USAGE (ETWU) = (ETo)(0.62)((PF)(HA)/IE+SLA) = GAL/YEAR						
MAXIMUM APPLIED WATER ALLOWANCE (MAWA) = (ETo)(0.62)[(0.45 x LA)+(0.55 x SLA)] = GAL/YEAR						
					MAWA TOTAL	3,014,210

Plant Water Use Type	Plant Factor
Very Low	0 - 0.1
Low	0.2 - 0.3
Medium	0.4 - 0.6
High	0.7 - 1.0
SLA	1.0

Irrigation Efficiency	IE
	0.75
	0.81

IDENTIFICATION STAMP
DIV. OF THE STATE ARCHITECT
APP: 02-121275 INC:
REVIEWED FOR
SS ☑ FLS ☑ ACS ☑
DATE: 12/15/2023

CALIFORNIA DESIGN WEST ARCHITECTS, Inc.

2100 19th Street
Sacramento, CA 95818

Phone: (916) 446-2466
Fax: (916) 446-5118
Web Page: ca-dw.com

These plans and prints thereof, as instruments of service, are owned by the architect and are for the use on this project only. Reproduction and/or distribution without the prior written consent of the architect is forbidden.

Copyright California Design West Architects, Inc.

ARCHITECT CONSULTANT:

LICENSED ARCHITECT MITCHELL A. McALLISTER NO. C17250 REGISTERED PROFESSIONAL ENGINEER STATE OF CALIFORNIA

CONSULTANT:
23-07

MTW group
LANDSCAPE ARCHITECTURE AND PLANNING
2707 K Street, Suite 201
Sacramento, CA 95816
916 369-3990

LICENSED LANDSCAPE ARCHITECT PETER D. LAMINER 10/20/23 6/30/24 STATE OF CALIFORNIA

PROJECT NAME:

BUHACH COLONY HIGH SCHOOL

1800 NORTH BUHACH RD
ATWATER, CA 95301

CONCESSIONS/TOILET BUILDINGS, TICKET BOOTH & STADIUM UPGRADES

MERCED UNION HIGH SCHOOL DISTRICT

MERCED COUNTY

KEY PLAN:

SHEET TITLE:
IRRIGATION DETAILS AND CALCULATIONS

JOB NUMBER:
SHEET NUMBER:
DATE: NOVEMBER 15, 2023
REVISION:
L4.3

C:\Users\stump\Documents\A22_BCHS-NewStadium-SITE_stump-2100.rvt

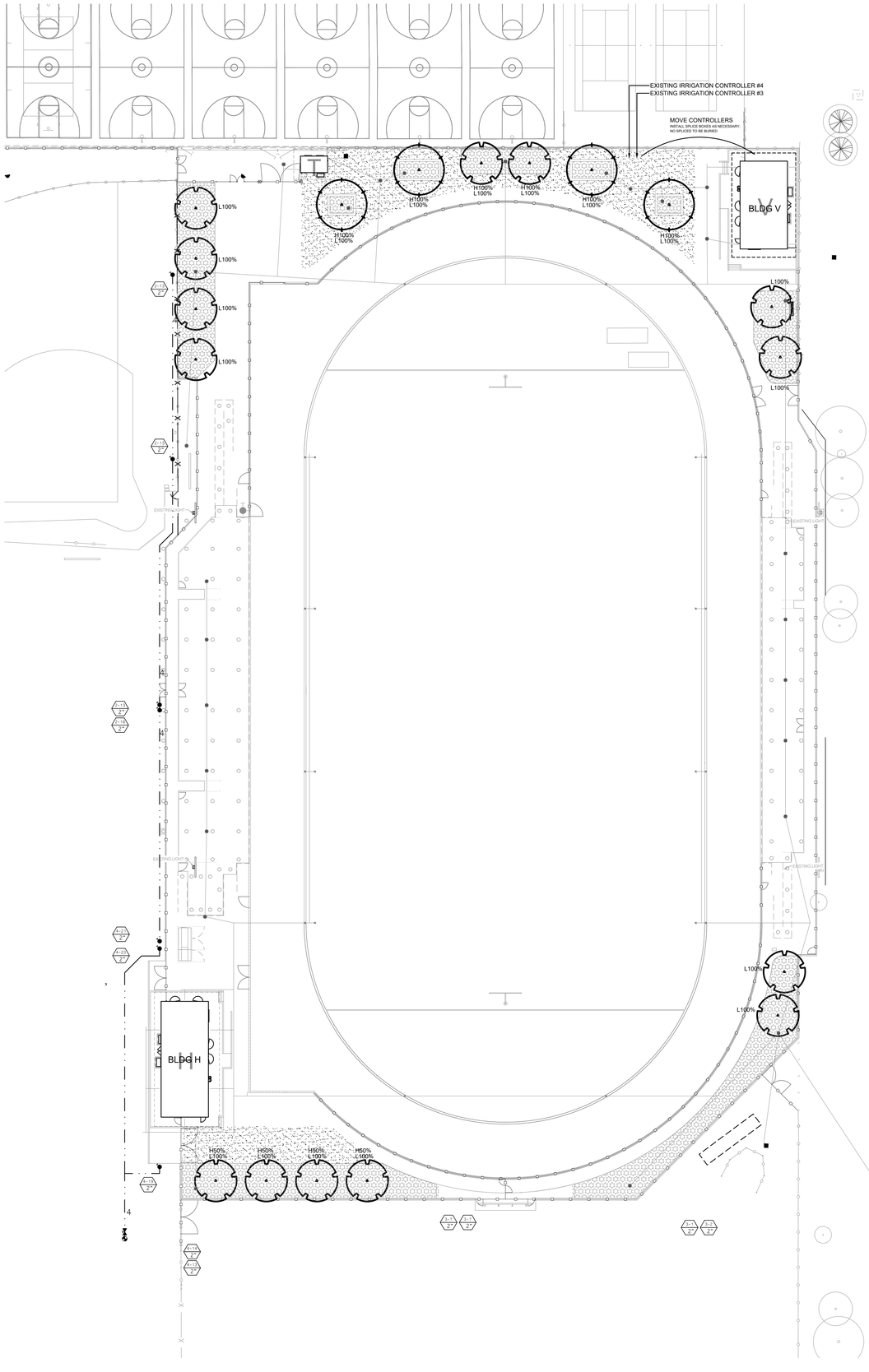

KEY	LANDSCAPE LEGEND
	TREES - NOT ALL SYMBOLS SHOWN
	TOTAL HARDSCAPE AREA (H)
	TOTAL LANDSCAPE AREA (L)
	EXISTING TREES TO REMAIN

HARDSCAPE SHADING (20% WITHIN 15 YEARS)		
TREES	100%	50%
20-25'	6 (491) = 2,826 S.F.	4 (157) = 628 S.F.
SUB-TOTALS	2,826 S.F.	628 S.F.
TOTAL HARDSCAPE AREA = 9,163 S.F.		
TOTAL SHADED AREA = 3,454 S.F.		
PERCENTAGE OF SHADE = 37.7%		

LANDSCAPE SHADING (20% WITHIN 15 YEARS)	
TREES	100%
20-25'	18 (491) = 8,838 S.F.
SUB-TOTALS	8,838 S.F.
TOTAL LANDSCAPE AREA = 11,320 S.F.	
TOTAL SHADED AREA = 8,838 S.F.	
PERCENTAGE OF SHADE = 78%	

IDENTIFICATION STAMP
DIV. OF THE STATE ARCHITECT
APP: 02-121275 INC:
REVIEWED FOR
SS ☑ FLS ☑ ACS ☑
DATE: 12/15/2023

CALIFORNIA DESIGN WEST ARCHITECTS, Inc.

2100 19th Street
Sacramento, CA 95818

Phone: (916) 446-2466
Fax: (916) 446-5118
Web Page: ca-dw.com

These plans and prints thereof, as instruments of service, are owned by the architect and are for the use on this project only. Reproduction and/or distribution without the prior written consent of the architect is forbidden.

Copyright California Design West Architects, Inc.

ARCHITECT CONSULTANT:

LICENSED ARCHITECT MITCHELL A. McALLISTER NO. C-17250 REGISTERED PROFESSIONAL ENGINEER OF CALIFORNIA

CONSULTANT:
23-07

MTW group
LANDSCAPE ARCHITECTURE AND PLANNING
2707 K Street, Suite 201
Sacramento, CA 95816
916 369-3990

LICENSED LANDSCAPE ARCHITECT STEVEN D. LAMIRAN 10/20/23 6/30/24 STATE OF CALIFORNIA

PROJECT NAME:

BUHACH COLONY HIGH SCHOOL

1800 NORTH BUHACH RD
ATWATER, CA 95301

CONCESSIONS/TOILET BUILDINGS, TICKET BOOTH & STADIUM UPGRADES

MERCED UNION HIGH SCHOOL DISTRICT

MERCED COUNTY

KEY PLAN:

SHEET TITLE:
TREE SHADING PLAN

JOB NUMBER:

SHEET NUMBER:

DATE:
NOVEMBER 15, 2023

REVISION:

L5.1

C:\Users\stump\Documents\A22_BCHS-NewStadium-SITE_stump-2100.rvt

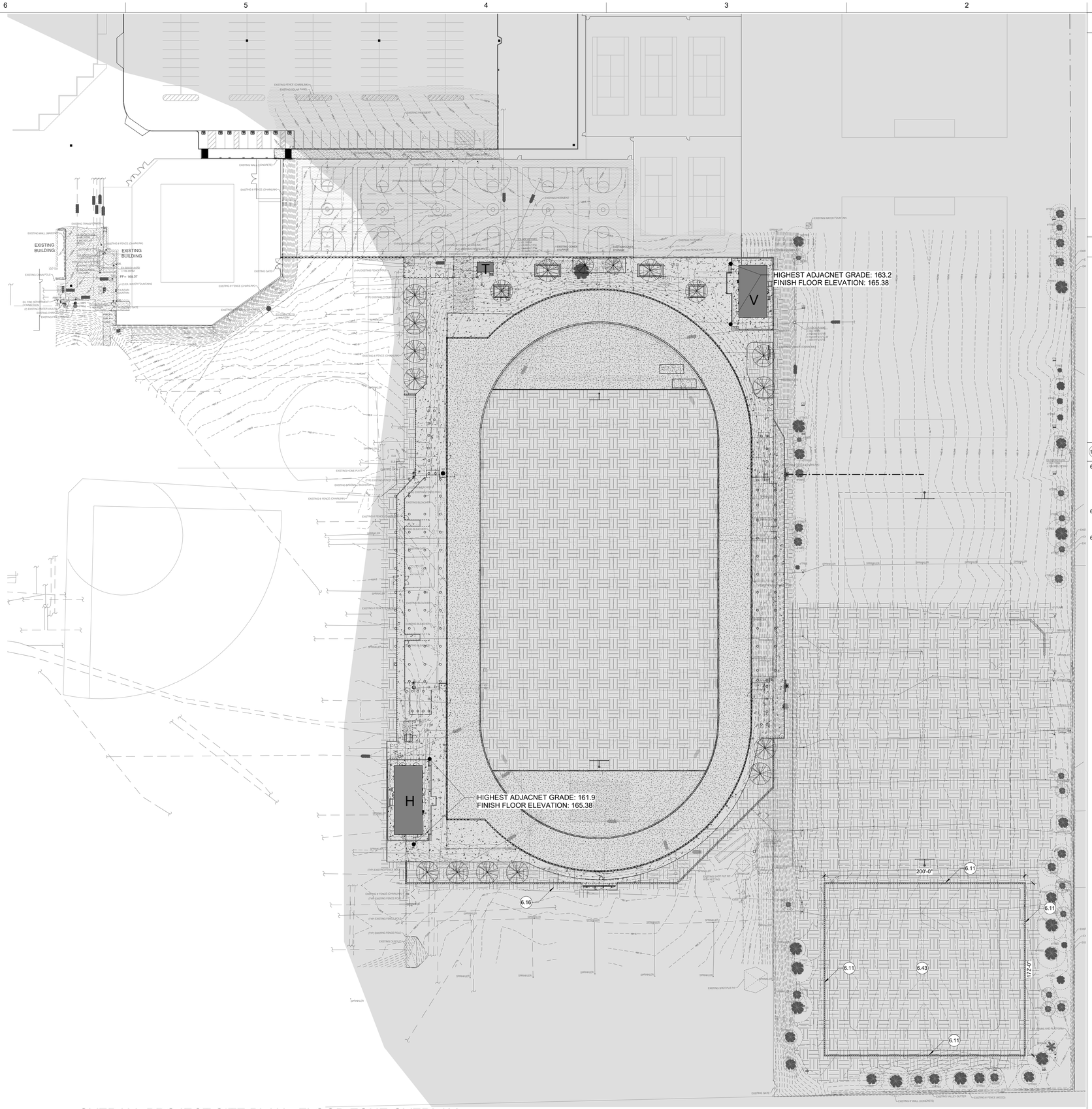

E6 OVERALL PROJECT SITE PLAN - FLOOD ZONE OVERLAY
1" = 40'-0"

GENERAL NOTES

1. PER CITY OF ATWATER MUNICIPAL CODE SECTIONS 16.14.055 FF AND 16.14.170 C.2, NONRESIDENTIAL CONSTRCUTION SHALL BE ELEVATED SO THAT THE LOWEST FLOOR IS AT LEAST 0.10 FEET ABOVE THE DEPTH NUMBER SPECIFIED ON THE 'FIRM' OR AT LEAST TWO FEET ABOVE THE HIGHEST ADJACENT GRADE (WHICHEVER YEILDS THE HIGHER ELEVATION).
2. REFER TO SHEET AS101 FOR ADDITIONAL INFORMATION.

LEGEND

AREA OF FEMA FLOOD ZONE.
FLOOD ZONE AO (DEPTH 1)
REFER TO CITY OF ATWATER MUNICIPAL CODE SECTIONS 16.14.055 FF AND 16.14.170 C.2.

(1.01) KEYED NOTE. REFER TO KEYED NOTES SCHEDULE. KEYED NOTE TAGS WITHOUT LEADER APPLIES TO THE ENTIRE ROOM OR SURFACE IN WHICH (ON WHICH) THE TAG IS LOCATED. KEYED NOTES WITH LEADERS APPLY TO ENTIRE LENGTH / SEGMENT OF THE COMPONETN WHICH THE TAG IS NOTING. TYPICAL ITEMS ARE NOT ALL TAGGED BUT ARE REPRESENTED GRAPHICALLY. KEYED NOTES MAY SKIP NUMBERS.

(1.00) KEYED NOTES SCHEDULE

6.11 6'-0" TALL GALVANIZED CHAIN LINK FENCE / GATE ASSEMBLY. REFER TO SITE PLAN FOR GATE SCHEDULE. PROVIDE 14" WIDE x 5" DEEP CONTINUOUS CONC. MOW STRIP WHERE FENCING IS WITHIN LANDSCAPE AREAS, TYP. FENCE TO BE 7" FROM EDGE OF CONCRETE TO CENTERLINE WHERE WITHIN CONCRETE WHERE APPLICABLE. FENCE TO BE 4" FROM EDGE OF CONCRETE WHERE RAISED ON BUILDING PLATFORMS.

6.16 MODIFY IRRIGATION AND PROVIDE NEW PLANTING AS REQUIRED AROUND NEW BUILDINGS AND PROJECT PAVING, TYP. REFER TO LANDSCAPE. REGRADE PER CIVIL.

6.43 GRADE TO ACCOMMODATE NEW STORM DRAIN RETENTION BASIN PER CIVIL. REFER TO LANDSCAPE FOR PLANTING AND IRRIGATION.

IDENTIFICATION STAMP
DIV. OF THE STATE ARCHITECT
APP: 02-121275 INC:
REVIEWED FOR
SS ☑ FLS ☑ ACS ☑
DATE: 12/15/2023

DESIGN California WEST

CALIFORNIA DESIGN WEST ARCHITECTS, Inc.

2100 19th Street
Sacramento, CA 95818

Phone: (916) 446-2466
Fax: (916) 446-5118
Web Page: ca-dw.com

These plans and prints thereof, as instruments of service, are owned by the architect and are for the use on this project only. Reproduction and/or distribution without the prior written consent of the architect is forbidden.

Copyright California Design West Architects, Inc.

ARCHITECT: CONSULTANT:

LICENSED ARCHITECT MITCHELL A. McALISTER NO. C 17258 REN. 08-31-2025 STATE OF CALIFORNIA

CONSULTANT:

PROJECT NAME:

BUHACH COLONY HIGH SCHOOL

1800 NORTH BUHACH RD
ATWATER, CA 95301

CONCESSIONS/TOILET BUILDINGS, TICKET BOOTH & STADIUM UPGRADES

MERCED UNION HIGH SCHOOL DISTRICT

MERCED COUNTY

KEY PLAN:

SHEET TITLE:
OVERALL PROJECT ARCHITECTURAL SITE PLAN - FLOOD ZONE INFORMATION

JOB NUMBER:	SHEET NUMBER:
DATE: NOV 17, 2023	**AS100**
REVISION:	

C:\Users\stump\Documents\A02_BCHS-NewStadium-SITE_stump-2100.rvt

GENERAL NOTES

1. REFER TO BUILDING PLANS FOR ADDITIONAL INFORMATION ON BUILDINGS.
2. REFER TO SOUTHERN BLEACHER PLANS FOR BLEACHER ASSEMBLY INFORMATION.
3. REFER TO TRACK DRAWINGS FOR ADDITINOAL INFORMATION AND DETAILS PERTAINING TO THE ALL-WEATHER TRACK.
4. REFER TO CIVIL DRAWINGS FOR PAVING SECTIONS AND GRADES.
5. REFER TO LANDSCAPE DRAWINGS FOR IRRIGATION AND PLANTING INFORMATION.
6. PROVIDE MEDIUM BROOM FINISH ON ALL NEW CONCRETE WALKS LESS THAN 5% SLOPE. HEAVY BROOM FINISH GREATER THAN 5% SLOPE.
7. ALL NEW CONCRETE WALKS THAT ARE A PART OF THE PATH OF TRAVEL OR IN OPEN CROSS-TRAFFIC AREAS SHALL HAVE A MAXIMUM SLOPE OF 2%.
8. GATE ASSEMBLIES ARE NOTED IN PROJECT SITE PLAN WITH 'G' PREFIX. REFER TO ENLARGED PLANS FOR GATES BELOW BLEACHERS.

GATE SCHEDULE

GATE # - WIDTH - TYPE	H.W. GROUP	DETAIL ON AS502
G01 - 22'-0" WIDE - DOUBLE	12.4	C6
G02 - 3'-6" WIDE - SINGLE	12.1	D5
G03 - 10'-0" WIDE - DOUBLE	12.3	C6
G04 - 4'-0" WIDE - SINGLE	13.2	C6 (SINGLE)
G05 - 4'-0" WIDE - SINGLE	12.6	D5
G06 - 8'-0" WIDE - SINGLE	12.7	C6 (SINGLE)
G07 - 4'-0" WIDE - SINGLE	13.2	C6 (SINGLE)
G08 - 8'-0" WIDE - DOUBLE	13.4	C6
G09 - 8'-0" WIDE - DOUBLE	13.4	C6
G10 - 4'-0" WIDE - SINGLE	13.2	C6 (SINGLE)
G11 - 5'-0" WIDE - SINGLE	13.2	C6 (SINGLE)
G12 - 14'-0" WIDE - DOUBLE	13.5	C6
G13 - 7'-0" WIDE - SINGLE	13.3	C6 (SINGLE)
G14 - 14'-0" WIDE - DOUBLE	13.6	C6
G15 - 4'-0" WIDE - SINGLE	12.6	D5
G16 - 14'-0" WIDE - DOUBLE	12.8	D6
G17 - 22'-0" WIDE - ROLLING (18'-0" CLEAR MIN.)	12.9	D3
G18 - 4'-0" WIDE - SINGLE	13.1	D5
G19 - 20'-0" WIDE - DOUBLE	13.7	C6
G20 - 20'-0" WIDE - DOUBLE	13.7	C6
G21 - 4'-0" WIDE - SINGLE	13.1	D5
G22 - 4'-0" WIDE - SINGLE	13.1	D5
G23 - 4'-0" WIDE - SINGLE	12.5	D5
G24 - 4'-0" WIDE - SINGLE	12.5	D5
G25 - 4'-0" WIDE - SINGLE	13.1	D5
G26 - 4'-0" WIDE - SINGLE	12.6	D5
G27 - 8'-0" WIDE - DOUBLE	13.4	C6
G28 - 4'-0" WIDE - SINGLE	13.2	C6 (SINGLE)
G29 - 4'-0" WIDE - SINGLE	12.6	D5
G30 - 12'-0" WIDE - DOUBLE	12.8	D6
G31 - 12'-0" WIDE - DOUBLE	13.6	C6
G32 - 4'-0" WIDE - SINGLE	13.2	C6 (SINGLE)
G33 - 20'-0" WIDE - ROLLING (18'-0" CLEAR MIN.)	12.9	D3
G34 - 4'-0" WIDE - SINGLE PANIC	12.2	C3
G35 - 4'-0" WIDE - SINGLE PANIC	12.2	C3
G36 - 14'-0" WIDE - DOUBLE	13.5	C6
G37 - 16'-0" WIDE - DOUBLE	13.5	C6
G38 - 4'-0" WIDE - SINGLE	12.6	D5
G39 - 4'-0" WIDE - SINGLE	12.6	D5

GATE SCHEDULE NOTE:
REFER TO KEYED NOTE IN PLAN LOCATED ON THE FENCING SEGMENT WHERE THE GATE IS LOCATED TO DETERMINE TYPE AND HEIGHT OF FENCING ASSEMBLY THE GATE IS LOCATED IN (TO MATCH).

LEGEND

- 4" THICK CONCRETE WALK. REFER TO GENERAL NOTES ABOVE. PROVIDE #4 REBAR AT 24" O.C. EACH WAY. COORDINATE WITH CIVIL AND GEOTECHNICAL. REFER TO DETAIL A6/AS501.
- APPROXIMATE AREA OF NEW IRRIGATION / PLANTING. REFER TO LANDSCAPE. MODIFY IRRIGATION AS REQUIRED AT PERIMETER / EXTENTS OF PROJECT SCOPE.
- 12" WIDE x ~18" HIGH EXPOSED ARCHITECTRUAL CONCRETE CURB.
- DS ⟲ DOWNSPOUT CONNECTION TO UNDERGROUND STORM DRAIN. REFER TO DOWNSPOUTS ON BUILDING PLANS. KEEP BACK OF SD CONNECTION APPROX. 3/4" FROM FINISH FACE OF BUILDING. PROVIDE POSITIVE CONNECTION FROM BUILDING DOWNSPOUT PIPES TO 'T' CLEANOUT TO UG SD. REFER TO CIVIL.
- PROTECT (E) TREE TO REMAIN. REFER TO LANDSCAPE.
- NEW TREE. REFER TO LANDSCAPE.
- 1.01 KEYED NOTE. REFER TO KEYED NOTES SCHEDULE. KEYED NOTE TAGS WITHOUT LEADER APPLIES TO THE ENTIRE ROOM OR SURFACE IN WHICH (ON WHICH) THE TAG IS LOCATED. KEYED NOTES WITH LEADERS APPLY TO ENTIRE LENGTH / SEGMENT OF THE COMPONETN WHICH THE TAG IS NOTING. TYPICAL ITEMS ARE NOT ALL TAGGED BUT ARE REPRESENTED GRAPHICALLY. KEYED NOTES MAY SKIP NUMBERS.
- EGRESS PATHWAY TO SAFE-DISPERSAL AREA

1.00 KEYED NOTES SCHEDULE

.01 (E) CONCRETE WALKWAY TO REMAIN U.O.N. PROTECT DURING CONSTRUCTION.

.02 (E) AC PAVING TO REMAIN U.O.N. PROTECT AC AND STRIPING DURING CONSTRUCTION. PROTECT ALL (E) BASKETBALL STANDARDS.

.04 PROTECT (E) FENCING TO REMAIN U.O.N.

.12 (E) STORAGE CONTAINER TO BE RELOCATED BY CONTRACTOR. RELCOATE / SHIFT AS NECESSARY TO PERFORM WORK AS REQUIRED. INTENT IS THAT THE CONTAINER'S FINAL LOCATION IS WITHIN 400' OF WHERE IT IS CURRENTLY.

.38 PROTECT (E) FENCE POST TO REMAIN.

.47 PROTECT (E) LANDSCAPE AREA AND IRRIGATION TO REMAIN, U.N.O. REFER TO CIVIL AND LANDSCAPE DRAWINGS.

6.04 NEW PROPSED VISITOR SIDE SNACK BAR / TEAM ROOM / TOILET BUILDING. REFER TO BUILDING FLOOR PLANS.

6.05 NEW PROPOSED TICKET BOOTH BUILDING. REFER TO FLOOR PLAN.

6.06 PROTECT (E) HOME-SIDE MUSCO STADIUM LIGHT POLE ASSEMBLY TO REMAIN.

6.07 NEW PROPOSED HOME-SIDE CONCESSIONS / TEAM ROOM / TOILET BUILDING. REFER TO BUILDING FLOOR PLANS.

6.08 NEW PROPOSED ENTRYWAY LIGHTING ASSEMBLY (4) UNITS TOTAL. REFER TO ELECTRICAL. REFER TO DETAIL 9/SS.0.

6.09 RE-GRADE AND AMMEND SOIL AT INFIELD. PROVIDE NEW IRRIGATION AND PLANTING PER LANDSCAPE. ADJUST (E) UTILITY BOXES TO REMAIN TO NEW GRADES. REFER TO CIVIL.

6.11 6'-0" TALL GALVANIZED CHAIN LINK FENCE / GATE ASSEMBLY. REFER TO SITE PLAN FOR GATE SCHEDULE. PROVIDE 14" WIDE x 5" DEEP CONTINUOUS CONC. MOW STRIP WHERE FENCING IS WITHIN LANDSCAPE AREAS, TYP. FENCE TO BE 7" FROM EDGE OF CONCRETE TO CENTERLINE WHERE WITHIN CONCRETE WHERE APPLICABLE. FENCE TO BE 4" FROM EDGE OF CONCRETE WHERE RAISED ON BUILDING PLATFORMS.

6.14 8'-0" TALL BLACK-VINYL-COATED CHAIN LINK FENCE / GATE ASSEMBLY. PROVIDE 14" WIDE x 5" DEEP CONTINUOUS CONC. MOW STRIP WHERE FENCING IS WITHIN LANDSCAPE AREAS, TYP. REFER TO GATE SCHEDULE FOR GATE INFORMATION. REFER TO STRUCUTRAL WHERE COLUMNS ARE LOCATED NEAR THE STRUCTURES, TYP.

6.16 MODIFY IRRIGATION AND PROVIDE NEW PLANTING AS REQUIRED AROUND NEW BUILDINGS AND PROJECT PAVING, TYP. REFER TO LANDSCAPE. REGRADE PER CIVIL.

6.25 NEW VIDEO SCOREBOARD ASSEMBLY. REFER TO OES SCOREBOARD DRAWINGS. REFER TO ELECTRICAL.

6.31 RELOCATE SALVAGED VISITOR-SIDE STADIUM LIGHT POLE ASSEMBLY. CONNECT TO NEW MUSCO PRECAST FOUNDATION PIER PROVIDED AND INSTALLED AS A PART OF THIS PROJECT. PROTECT ALL HIGH LUMINARIES. ADD EGRESS LUMINAIRES AND SPEAKERS PER ELECTRICAL. REFER TO MUSCO DRAWINGS.

6.33 12" WIDE CONCRETE CURB SEAT WALL (NOT A PART OF THE DSA APPROVAL). TOP OF WALL TO BE LEVEL (AND LEVEL WITH ADJACNET WALLS), APPROXIMATELY 1'-6" ABOVE GRADE.

6.34 NEW ALL-WEATHER TRACK ASSEMBLY. REFER TO SPECIALTY TRACK DRAWINGS.

6.35 NEW BLEACHER ASSEMBLY INCLUDING STAIWAYS AND RAMPS. REFER TO SOUTHERN BLEACHER DRAWINGS.

6.37 SALVAGE SECTION OF (E) FENCE FABRIC TO BE REINSTALLED FROM EXSTING POST AND EXTENDED TO NEW FENCING ASEMBLY. ALIGN FENCE POST AT NEW FENCING TO ALIGN WITH EXSTING FENCELINE (WHERE APPLICABLE).

6.39 4'-0" TALL BLACK-VINYL-COATED CHAIN-LINK ROLLING GATE ASSEMBLY CENTERED ON 16" WIDE CURB AT ENDS OF TRACK STRAIGHT-AWAY. REFER TO TRACK DRAWINGS.

6.41 4'-0" TALL BLACK-VINYL-COATED CHAIN-LINK FENCE / GATE ASSEMBLY CENTERED ON 12" WIDE CURB AROUND TRACK. REFER TO TRACK DRAWINGS. FENCE ASSEMBLY TO EXTEND / TERMINATE WITHIN 4 INCHES OF NORTH AND SOUTH FRONT EDGE OF BLEACHER ASSEMBLY, TYP.

6.42 6'-0" TALL BLACK-VINYL-COATED CHAIN-LINK FENCE / GATE ASSEMBLY. ALIGN CENTERED ON QUADRANT OF TRACK.

6.43 GRADE TO ACCOMMODATE NEW STORM DRAIN RETENTION BASIN PER CIVIL. REFER TO LANDSCAPE FOR PLANTING AND IRRIGATION.

6.44 NEW ALL-WEATHER 'D'-ZONE WITH LONG-JUMP AND TRIPLE JUMP PITS. REFER TO TRACK DRAWINGS. COORDINATE DRAINAGE WITH CIVIL.

6.45 NEW ALL-WEATHER 'D'-ZONE WITH HIGH-JUMP AND POLE-VAULT ASSEMBLIES. REFER TO TRACK DRAWINGS.

6.46 PROVIDE 6' TALL FENCEPOST AT QUADRANT OF 4' TALL TRACK FENCING ASSEMBLY.

6.47 PROVIDE APPROXMATELY 42' OF TRACK PROTECTION MATS.

6.48 NEW SLOT DRAIN AROUND INSIDE PERIMETER OF TRACK. CONNECT TO (E) UG SD LINES. ADJUST BASINS / CONNECTIONS AS NECESSARY. REFER TO TRACK DRAWINGS. REFER TO CIVIL.

6.49 6" WIDE CONCRETE CURB. REFER TO TRACK DRAWINGS.

6.52 ALIGN GALVANIZED FENCE POST CENTERED ON FIELD / SCOREBOARD TO ALIGN WITH INTERSECTING FENCE ASSEMBLY.

6.53 FOOTBALL FIELD GOAL ASSEMBLY.

6.56 ADJACENT FENCE AT PROPERTY LINE.

6.84 RELOCATE / REINSTALL SALVAGED FOOTBALL FIELD GOAL ASSEMBLY (FROM EXISTING FOOTBALL FIELD).

6.85 REFER TO OVERALL PROJECT ARCHITECTURAL SITE PLAN ON AS100 FOR OVERALL STORM DRAIN BASIN SIZE AND LOCATION. REFER TO CIVIL C3.4.

6.86 ADJUST (E) ELECTRICAL BOX ELEVATION AS REQUIRED, TYP. PROVIDE NEW EXTENSION AND COVER, TYP.

6.88 DOUBLE ENTRY GATES TO HAVE SIGNAGE THAT READS "GATE OPERATED BY AUTORIZED DISTRICT PERONNEL ONLY". CENTER SIGN ON GATE AND AFFIX AT 60" ABOVE GRADE TO TOP OF SIGN.

1 ENLARGED PROJECT SITE PLAN
1" = 30'-0"

IDENTIFICATION STAMP
DIV. OF THE STATE ARCHITECT
APP: 02-121275 INC:
REVIEWED FOR
SS ☑ FLS ☑ ACS ☑
DATE: 12/15/2023

CALIFORNIA DESIGN WEST ARCHITECTS, Inc.

2100 19th Street
Sacramento, CA 95818

Phone: (916) 446-2466
Fax: (916) 446-5118
Web Page: ca-dw.com

These plans and prints thereof, as instruments of service, are owned by the architect and are for the use on this project only. Reproduction and/or distribution without the prior written consent of the architect is forbidden.

Copyright California Design West Architects, Inc.

ARCHITECT: CONSULTANT:

LICENSED ARCHITECT MITCHELL A. McALISTER LIC. NO. C 17250 STATE OF CALIFORNIA

CONSULTANT:

PROJECT NAME:

BUHACH COLONY HIGH SCHOOL

1800 NORTH BUHACH RD
ATWATER, CA 95301

CONCESSIONS/TOILET BUILDINGS, TICKET BOOTH & STADIUM UPGRADES

MERCED UNION HIGH SCHOOL DISTRICT

MERCED COUNTY

KEY PLAN:

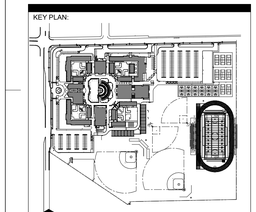

SHEET TITLE:

ENLARGED PROJECT ARCHITECTURAL SITE PLAN

JOB NUMBER:	SHEET NUMBER:
DATE: NOV 17, 2023	AS101
REVISION:	

C:\Users\stump\Documents\A02_BCHS-NewStadium-SITE_stump-2100.rvt

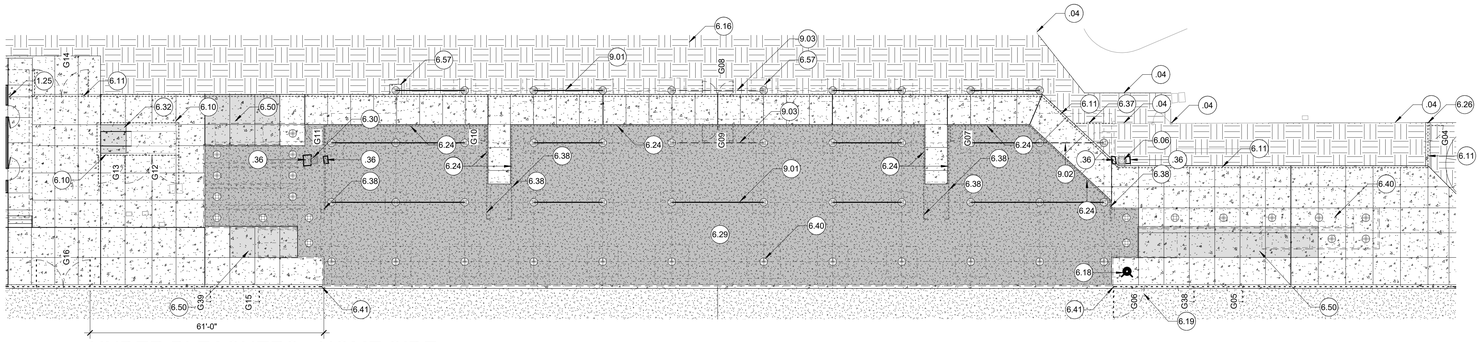

B5 UNDER BLEACHERS - HOME SIDE

1/16" = 1'-0"

N

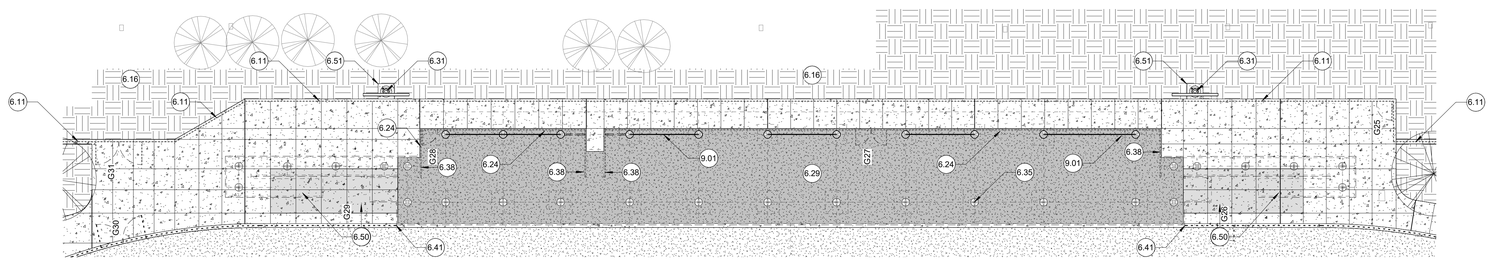

D5 UNDER BLEACHERS - VISITOR SIDE

1/16" = 1'-0"

N

GENERAL NOTES

1. REFER TO BUILDING PLANS FOR ADDITIONAL INFORMATION ON BUILDINGS.
2. REFER TO SOUTHERN BLEACHER PLANS FOR BLEACHER ASSEMBLY INFORMATION.
3. REFER TO TRACK DRAWINGS FOR ADDITINOAL INFORMATION AND DETAILS PERTAINING TO THE ALL-WEATHER TRACK.
4. REFER TO CIVIL DRAWINGS FOR PAVING SECTIONS AND GRADES.
5. REFER TO LANDSCAPE DRAWINGS FOR IRRIGATION AND PLANTING INFORMATION.
6. PROVIDE MEDIUM BROOM FINISH ON ALL NEW CONCRETE WALKS LESS THAN 5% SLOPE. HEAVY BROOM FINISH GREATER THAN 5% SLOPE.
7. ALL NEW CONCRETE WALKS THAT ARE A PART OF THE PATH OF TRAVEL OR IN OPEN CROSS-TRAFFIC AREAS SHALL HAVE A MAXIMUM SLOPE OF 2%.
8. GATE ASSEMBLIES ARE NOTED IN PROJECT SITE PLAN WITH 'G' PREFIX. REFER TO ENLARGED PLANS FOR GATES BELOW BLEACHERS.

LEGEND

4" THICK CONCRETE WALK. REFER TO GENERAL NOTES ABOVE. PROVIDE #4 REBAR AT 24" O.C. EACH WAY. COORDINATE WITH CIVIL AND GEOTECHNICAL. REFER TO DETAIL A6/AS501.

2" STABILIZED DECOMPOSED GRANITE OVER 4" COMPACTED AGG BASE OVER CONT. WEED BARRIER. EDGES TO BE FLUSH WITH ADJACENT CONCRETE WALKS. REFER TO LANDSCAPE FOR MORE INFORMATION. TO BE SET AND COMPACTED PRIOR TO BLEACHER ASSEMBLY ABOVE BEING INSTALLED.

APPROXIMATE AREA OF NEW IRRIGATION / PLANTING. REFER TO LANDSCAPE. MODIFY IRRIGATION AS REQUIRED AT PERIMETER / EXTENTS OF PROJECT SCOPE.

PROTECT (E) TREE TO REMAIN. REFER TO LANDSCAPE.

NEW TREE. REFER TO LANDSCAPE.

1.01 KEYED NOTE. REFER TO KEYED NOTES SCHEDULE. KEYED NOTE TAGS WITHOUT LEADER APPLIES TO THE ENTIRE ROOM OR SURFACE IN WHICH (ON WHICH) THE TAG IS LOCATED. KEYED NOTES WITH LEADERS APPLY TO ENTIRE LENGTH / SEGMENT OF THE COMPONETN WHICH THE TAG IS NOTING. TYPICAL ITEMS ARE NOT ALL TAGGED BUT ARE REPRESENTED GRAPHICALLY. KEYED NOTES MAY SKIP NUMBERS.

1.00 – KEYED NOTES SCHEDULE

.04 PROTECT (E) FENCING TO REMAIN U.O.N.

.36 PROTECT (E) UG ELECTRICAL UTILITY TO REMAIN AND ASSOCATED PULL-BOXES. ADJUST BOXES TO NEW GRADE, TYP. PROVIDE NEW BOX WHERE REQUIRED. REFER TO ELECTRICAL.

1.25 SITE FENCE / GATE POST SET WITHIN 4" OF FACE OF BUILDING. REFER TO PROJECT SITE PLAN FOR GATE LOCATION / SCHEDULE. REFER TO STRUCTURAL FOR FOOTING / SLEEVE DETAIL &/SS.0.

6.06 PROTECT (E) HOME-SIDE MUSCO STADIUM LIGHT POLE ASSEMBLY TO REMAIN.

6.10 6'-0" TALL GALVANIZED CHAIN LINK FENCE AND GATE ASSEMBLY WITH PRIVACY SLATS AROUND ELECTRICAL GEAR. WITH OF GATES G12 AND G13 TO BE COORDINATED WITH WIDTH REQUIRED FOR (E) AND NEW GEAR / EQUIPMENT. COORDINATE WITH ELECTRICAL.

6.11 6'-0" TALL GALVANIZED CHAIN LINK FENCE / GATE ASSEMBLY. REFER TO SITE PLAN FOR GATE SCHEDULE. PROVIDE 14" WIDE x 5" DEEP CONTINUOUS CONC. MOW STRIP WHERE FENCING IS WITHIN LANDSCAPE AREAS, TYP. FENCE TO BE 7" FROM EDGE OF CONCRETE TO CENTERLINE WHERE WITHIN CONCRETE WHERE APPLICABLE. FENCE TO BE 4" FROM EDGE OF CONCRETE WHERE RAISED ON BUILDING PLATFORMS.

6.16 MODIFY IRRIGATION AND PROVIDE NEW PLANTING AS REQUIRED AROUND NEW BUILDINGS AND PROJECT PAVING, TYP. REFER TO LANDSCAPE. REGRADE PER CIVIL.

6.18 NEW FIRE HYDRANT. REFER TO CIVIL.

6.19 KNOX PADLOCK AT GATE TO ACCESS THE FIRE HYDRANT.

6.24 6'-0" TALL GALVANIZED CHAIN LINK FENCE / GATE ASSEMBLY SET IN DG 4" FROM EDGE OF CONCRETE PAVING TO CENTERLINE, TYP. REFER TO SITE PLAN FOR GATE SCHEDULE.

6.26 ALIGN NEW FENCE SEGMENT WITH EXISTING FENCE POST. COORDINATE LOCATION WITH ARCHITECT ON SITE TO DETERMINE IF PAVING IS ADJUSTED SLIGHTLY TO ACCOMODATE.

6.29 DECOMPOSED GRANITE. REFER TO LEGEND.

6.30 PROTECT EXISTING HOME-SIDE STADIUM LIGHT POLE TO REMAIN. REMOVE AND REPLACE LOW EGRESS LUMINAIRES AND ADD SPEAKERS SPEAKERS. REFER TO MUSCO AND ELECTRICAL DRAWINGS.

6.31 RELOCATE SALVAGED VISITOR-SIDE STADIUM LIGHT POLE ASSEMBLY. CONNECT TO NEW MUSCO PRECAST FOUNDATION PIER PROVIDED AND INSTALLED AS A PART OF THIS PROJECT. PROTECT ALL HIGH LUMINARIES. ADD EGRESS LUMINAIRES AND SPEAKERS PER ELECTRICAL. REFER TO MUSCO DRAWINGS.

6.32 EXTEND HOUSEKEEPING PAD AS REQUIRED FOR NEW ELECTRICAL GEAR. COORD. W/ ELECTRICAL.

6.35 NEW BLEACHER ASSEMBLY INCLUDING STAIWAYS AND RAMPS. REFER TO SOUTHERN BLEACHER DRAWINGS.

6.37 SALVAGE SECTION OF (E) FENCE FABRIC TO BE REINSTALLED FROM EXSTING POST AND EXTENDED TO NEW FENCING ASEMBLY. ALIGN FENCE POST AT NEW FENCING TO ALIGN WITH EXSTING FENCELINE (WHERE APPLICABLE).

6.38 REDUCE CHAIN LINK FENCING ASSEMBLY HEIGHT TO MAINTAIN ~4" FROM BLEACHER ASSEMBLY. TOP RAIL SHALL BE ANGLED WHERE APPLICABLE AND SHALL PARALLEL BLEACHER STRUCTURE. RETURN FENCE ASSEMBLY TO CLOSE AGAINST STAIRWAY. RETURN ENDS AS REQUIRED TO MAINTAIN 4" MAXIMUM GAPS TO BLEACHER ASSEMBLY, TYP.

6.40 BLEACHER ASSEMBLY CONCRETE PIER, TYP. COORDINATE WITH BLEACHER DRAWINGS.

6.41 4'-0" TALL BLACK-VINYL-COATED CHAIN-LINK FENCE / GATE ASSEMBLY CENTERED ON 12" WIDE CURB AROUND TRACK. REFER TO TRACK DRAWINGS. FENCE ASSEMBLY TO EXTEND / TERMINATE WITHIN 4 INCHES OF NORTH AND SOUTH FRONT EDGE OF BLEACHER ASSEMBLY, TYP.

6.50 COORDINATE CONCRETE POUR TO PROVIDE CONTINUOUS CONCRETE LANDING PAD EXTENDED TO CONTROL JOINTS IN LIEU OF SEPARATE SMALLER FOOTING PADS PER BLEACHER DRAWINGS.

6.51 PROVIDE SQUARE MOW CURB AROUND LIGHT POLE FOUNDATION. MAINTAIN MINIMUM OF 7" WIDE CONCRETE, TYP.

6.57 PROVIDE SQUARE MOW CURB AROUND BLEACHER FOUNDATION PIER WHERE EXPOSED IN LANDSCAPE AREA, TYP. MAINTAIN MINIMUM OF 7" WIDE CONCRETE, TYP.

9.01 BLEACHER CROSS-BRACING, TYP.

9.02 RAISED / OMITTED CROSS-BRACING TO ALLOW FOR PEDESTRIAN EGRESS. REFER TO BLEACHER DRAWINGS.

9.03 RAISED / MODIFED BLEACHER CROSS BRACING TO ALLOW FOR MAINTENANCE ACCESS. REFER TO BLEACHER DRAWINGS.

IDENTIFICATION STAMP
DIV. OF THE STATE ARCHITECT
APP: 02-121275 INC:
REVIEWED FOR
SS ☑ FLS ☑ ACS ☑
DATE: 12/15/2023

CALIFORNIA DESIGN WEST ARCHITECTS, Inc.

2100 19th Street
Sacramento, CA 95818

Phone: (916) 446-2466
Fax: (916) 446-5118
Web Page: ca-dw.com

These plans and prints thereof, as instruments of service, are owned by the architect and are for the use on this project only. Reproduction and/or distribution without the prior written consent of the architect is forbidden.

Copyright California Design West Architects, Inc.

ARCHITECT: CONSULTANT:

LICENSED ARCHITECT
MITCHELL A. MCALISTER
No. C-17258
REN. 08-31-2025
STATE OF CALIFORNIA

CONSULTANT:

PROJECT NAME:

BUHACH COLONY HIGH SCHOOL

1800 NORTH BUHACH RD
ATWATER, CA 95301

CONCESSIONS/TOILET BUILDINGS, TICKET BOOTH & STADIUM UPGRADES

MERCED UNION HIGH SCHOOL DISTRICT

MERCED COUNTY

KEY PLAN:

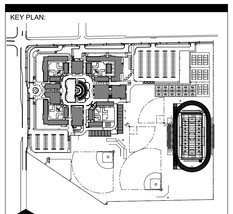

SHEET TITLE:

ENLARGED PLAN - UNDER BLEACHERS

JOB NUMBER:	SHEET NUMBER:
DATE: NOV 17, 2023	AS102
REVISION:	

C:\Users\tturney\Documents\A22_BCHS-NewStadium-SITE_tturney-2100.rvt

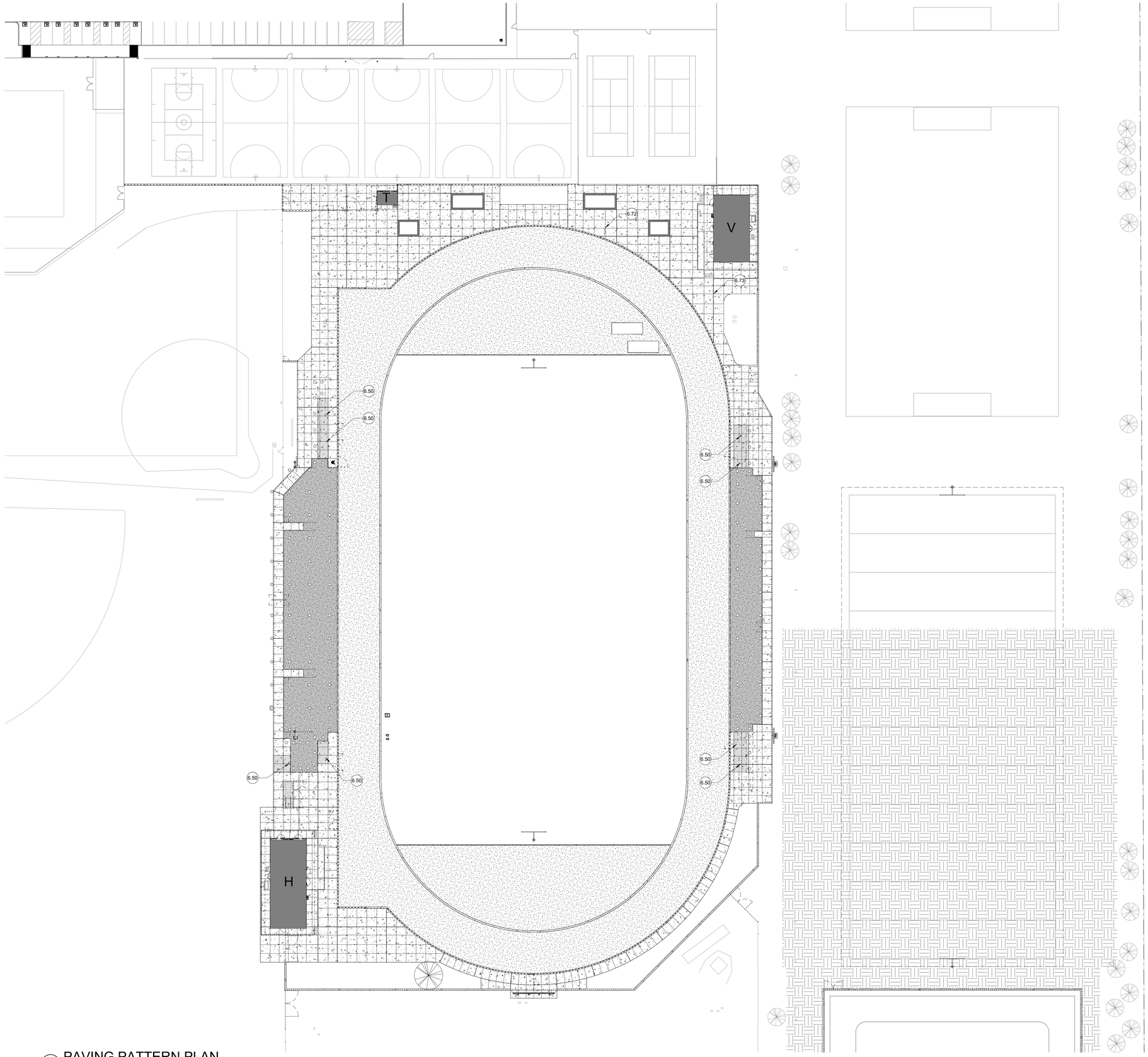

1 PAVING PATTERN PLAN
1" = 30'-0"

LEGEND

NEW CONCRETE WALK. REFER TO CIVIL AND GEOTECHNICAL.

CONTROL JOINTS @ APPROXIMATELY 6' - 8' O.C., TYP.
EXPANSION JOINTS @ APPROXIMATELY 40' - 50' O.C., TYP.

NEW AC PAVING. REFER TO CIVIL AND GEOTECHNICAL FOR REQUIRED SECTION.

NEW STABILIED DECPOMOSED GRANITE. REFER TO PROJECT SITE PLAN FOR SECTION.

1.01 KEYED NOTE. REFER TO KEYED NOTES SCHEDULE. KEYED NOTE TAGS WITHOUT LEADER APPLIES TO THE ENTIRE ROOM OR SURFACE IN WHICH (ON WHICH) THE TAG IS LOCATED. KEYED NOTES WITH LEADERS APPLY TO ENTIRE LENGTH / SEGMENT OF THE COMPONETN WHICH THE TAG IS NOTING. TYPICAL ITEMS ARE NOT ALL TAGGED BUT ARE REPRESENTED GRAPHICALLY. KEYED NOTES MAY SKIP NUMBERS.

1.00 - KEYED NOTES SCHEDULE

6.50 COORIDINATE CONCRETE POUR TO PROVIDE CONTINUOUS CONCRETE LANDING PAD EXTENDED TO CONTROL JOINTS IN LIEU OF SEPARATE SMALLER FOOTING PADS PER BLEACHER DRAWINGS.

6.72 CJ, TYP.

6.73 EJ, TYP.

IDENTIFICATION STAMP
DIV. OF THE STATE ARCHITECT
APP: 02-121275 INC:
REVIEWED FOR
SS ☑ FLS ☑ ACS ☑
DATE: 12/15/2023

CALIFORNIA DESIGN WEST ARCHITECTS, Inc.

2100 19th Street
Sacramento, CA 95818

Phone: (916) 446-2466
Fax: (916) 446-5118
Web Page: ca-dw.com

These plans and prints thereof, as instruments of service, are owned by the architect and are for the use on this project only. Reproduction and/or distribution without the prior written consent of the architect is forbidden.

Copyright California Design West Architects, Inc.

ARCHITECT: CONSULTANT:

LICENSED ARCHITECT
MITCHELL A. McALLISTER
NO. C17250
EXPIRES 12-28-2023
STATE OF CALIFORNIA

CONSULTANT:

PROJECT NAME:

BUHACH COLONY HIGH SCHOOL

1800 NORTH BUHACH RD
ATWATER, CA 95301

CONCESSIONS/TOILET BUILDINGS, TICKET BOOTH & STADIUM UPGRADES

MERCED UNION HIGH SCHOOL DISTRICT

MERCED COUNTY

KEY PLAN:

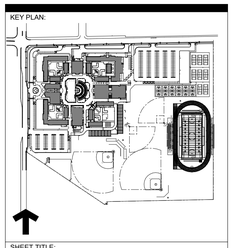

SHEET TITLE:

PAVING PATTERN PLAN

JOB NUMBER:

SHEET NUMBER:

DATE: NOV 17, 2023

REVISION:

AS103

C:\Users\ahrump\Documents\A22_BCHS-NewStadium-SITE_ahrump-2100.rvt

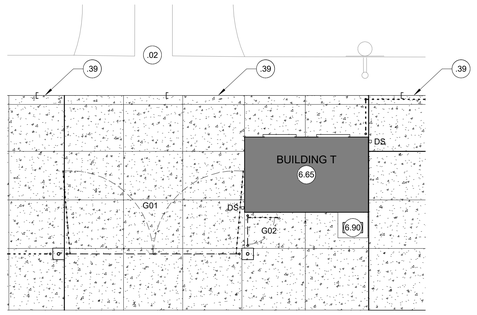

B4 TICKET BUILDING ENLARGED SITE PLAN
1/8" = 1'-0"

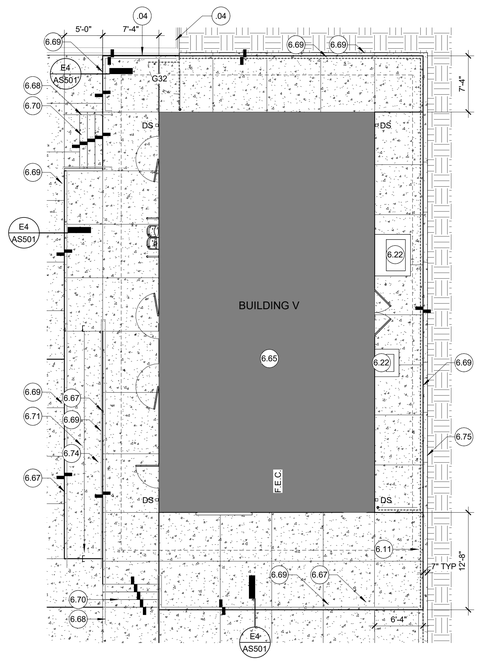

C3 VISITOR BUILDING ENLARGED SITE PLAN
1/8" = 1'-0"

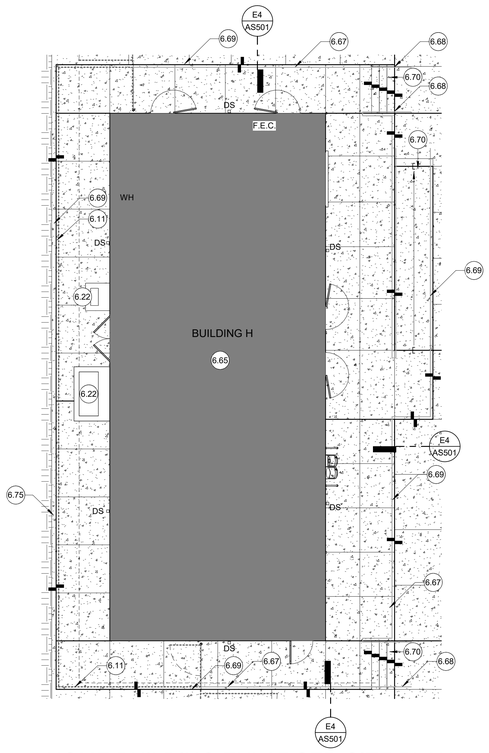

E5 HOME BUILDING ENLARGED SITE PLAN
1/8" = 1'-0"

GENERAL NOTES

1. REFER TO BUILDING PLANS FOR ADDITIONAL INFORMATION ON BUILDINGS.
2. REFER TO SOUTHERN BLEACHER PLANS FOR BLEACHER ASSEMBLY INFORMATION.
3. REFER TO TRACK DRAWINGS FOR ADDITINOAL INFORMATION AND DETAILS PERTAINING TO THE ALL-WEATHER TRACK.
4. REFER TO CIVIL DRAWINGS FOR PAVING SECTIONS AND GRADES.
5. REFER TO LANDSCAPE DRAWINGS FOR IRRIGATION AND PLANTING INFORMATION.
6. PROVIDE MEDIUM BROOM FINISH ON ALL NEW CONCRETE WALKS LESS THAN 5% SLOPE. HEAVY BROOM FINISH GREATER THAN 5% SLOPE.
7. ALL NEW CONCRETE WALKS THAT ARE A PART OF THE PATH OF TRAVEL OR IN OPEN CROSS-TRAFFIC AREAS SHALL HAVE A MAXIMUM SLOPE OF 2%.
8. GATE ASSEMBLIES ARE NOTED IN PROJECT SITE PLAN WITH 'G' PREFIX. REFER TO ENLARGED PLANS FOR GATES BELOW BLEACHERS.

LEGEND

4" THICK CONCRETE WALK. REFER TO GENERAL NOTES ABOVE. PROVIDE #4 REBAR AT 24" O.C. EACH WAY. COORDINATE WITH CIVIL AND GEOTECHNICAL. REFER TO DETAIL A6/AS501.

APPROXIMATE AREA OF NEW IRRIGATION / PLANTING. REFER TO LANDSCAPE. MODIFY IRRIGATION AS REQUIRED AT PERIMETER / EXTENTS OF PROJECT SCOPE.

DS ○ DOWNSPOUT CONNECTION TO UNDERGROUND STORM DRAIN. REFER TO DOWNSPOUTS ON BUILDING PLANS. KEEP BACK OF SD CONNECTION APPROX. 3/4" FROM FINISH FACE OF BUILDING. PROVIDE POSITIVE CONNECTION FROM BUILDING DOWNSPOUT PIPES TO 'T' CLEANOUT TO UG SD. REFER TO CIVIL.

1.01 KEYED NOTE. REFER TO KEYED NOTES SCHEDULE. KEYED NOTE TAGS WITHOUT LEADER APPLIES TO THE ENTIRE ROOM OR SURFACE IN WHICH (ON WHICH) THE TAG IS LOCATED. KEYED NOTES WITH LEADERS APPLY TO ENTIRE LENGTH / SEGMENT OF THE COMPONETN WHICH THE TAG IS NOTING. TYPICAL ITEMS ARE NOT ALL TAGGED BUT ARE REPRESENTED GRAPHICALLY. KEYED NOTES MAY SKIP NUMBERS.

1.00 - KEYED NOTES SCHEDULE

.02 (E) AC PAVING TO REMAIN U.O.N. PROTECT AC AND STRIPING DURING CONSTRUCTION. PROTECT ALL (E) BASKETBALL STANDARDS.

.04 PROTECT (E) FENCING TO REMAIN U.O.N.

.39 SAW-CUT CLEAN STRIGHT EDGE OF (E) AC PAVING FOR NEW WORK. PROTECT EDGE UNTIL ADJACNET CONCRETE IS CURED IN PLACE.

6.11 6'-0" TALL GALVANIZED CHAIN LINK FENCE / GATE ASSEMBLY. REFER TO SITE PLAN FOR GATE SCHEDULE. PROVIDE 14" WIDE x 5" DEEP CONTINUOUS CONC. MOW STRIP WHERE FENCING IS WITHIN LANDSCAPE AREAS, TYP. FENCE TO BE 7" FROM EDGE OF CONCRETE TO CENTERLINE WHERE WITHIN CONCRETE WHERE APPLICABLE. FENCE TO BE 4" FROM EDGE OF CONCRETE WHERE RAISED ON BUILDING PLATFORMS.

6.22 MECHANICAL UNIT SET ATOP CONCRETE HOUSEKEEPING PAD. REFER TO DETAIL 1/M6.1 AND S/M6.2 FOR HOUSEKEEPING PAD. HOUSEKEEPING PAD TO BE APPROXIMATLY 8" LARGER THAN THE MECHANICAL UNIT (ON FRONT THREE SIDES, OR 6" EDGE DISTANCE, TYP FROM BOLT MOUNTING LOCATIONS). EXTEND HOUSEKEEPING PAD ON BACK SIDE TO FOUNDATION WALL.

6.65 REFER TO BUILDING PLAN SHEETS.

6.67 GALVANIZED HANDRAIL ASSEMBLY WITH INTERAL WHEEL STOP. REFER TO DETAIL E2 AND E4/AS501.

6.68 GALVANIZED HANDRAIL ASSEMBLY AT STAIRWAY, TYP. REFER TO DETAIL E6/AS501.

6.69 8" WIDE SITE RETAINING WALL BELOW CONCRETE SLAB. REFER TO DETAIL E4/AS501. REFER TO CIVIL.

6.70 CIP CONCRETE STAIRWAY. REFER TO DETAIL E6/AS501. REFER TO CIVIL FOR GRADES.

6.71 CIP CONCRETE RAMP. REFER TO DETAIL E2/AS501. REFER TO CIVIL FOR GRADES.

6.74 GALVANIZED HANDRAIL ASSEMBLY AT RAMP, TYP. REFER TO E2/AS501. BOTTOM EDGE PROTECTION BAR NOT REQUIRED WHERE INSTALLED BY AN ADJACENT WALL.

6.75 7" WIDE MOW-STRIP ALONG CIP CONCRETE SITE RETAINING WALL.

6.90 PROVIDE COMMERCIAL GRADE, POWDER-COATED EXPANDED METAL HINGED LOCKING CAGE ENCLOSURE AROUND MECHANICAL COMPRESSOR UNIT. ENCLOSURE TO BE 38"L x 22"W x 28"H. REFER TO DETAIL 1/M6.1 FOR HOUSEKEEPING PAD. HOUSEKEEPING PAD TO BE LARGER THE ENCLOSURE AT THE FRONT THREE SIDES, AND SHALL EXTEND TO THE BUILDING ON THE BACK SIDE (APPROXIMATELY 38"W x 54"L). BOLT ENCLOSURE TO CONCRETE HOUSEKEEPING PAD WITH (4) 3/8" DIAMETER STAINLESS STEEL HILTI KB-TZ2 304. REFER TO B/S1.0 FOR EMBED, INSTALLATION TORQUE AND ESR REPORT NUMBER. LOCATE BOLTS MINIMUM 6" FROM EDGE OF CONCRETE PAD, TYP. CONTRACTOR TO COORDINATE SIZE OF PAD WITH SELECTED / MANUFACTURED ENCLOSURE ASSEMBLY. ENCLOSURE ASSEMBLY SHALL NOT EXCEED 400#.

IDENTIFICATION STAMP
DIV. OF THE STATE ARCHITECT
APP: 02-121275 INC:
REVIEWED FOR
SS ☑ FLS ☑ ACS ☑
DATE: 12/15/2023

CALIFORNIA DESIGN
WEST ARCHITECTS, Inc.

2100 19th Street
Sacramento, CA 95818

Phone: (916) 446-2466
Fax: (916) 446-5118
Web Page: ca-dw.com

These plans and prints thereof, as instruments of service, are owned by the architect and are for the use on this project only. Reproduction and/or distribution without the prior written consent of the architect is forbidden.

Copyright California Design West Architects, Inc.

ARCHITECT: CONSULTANT:

LICENSED ARCHITECT
MITCHELL A. MCALISTER
NO. C 17250
RENEWAL 08-31-2025
STATE OF CALIFORNIA

CONSULTANT:

PROJECT NAME:

BUHACH COLONY HIGH SCHOOL

1800 NORTH BUHACH RD
ATWATER, CA 95301

CONCESSIONS/TOILET BUILDINGS, TICKET BOOTH & STADIUM UPGRADES

MERCED UNION HIGH SCHOOL DISTRICT

MERCED COUNTY

KEY PLAN:

SHEET TITLE:

ENLARGED SITE PLANS AT BUILDINGS

JOB NUMBER:

SHEET NUMBER:

AS104

DATE: NOV 17, 2023

REVISION:

C:\Users\strump\Documents\A22_BCHS-NewStadium-SITE_strump-2100.rvt

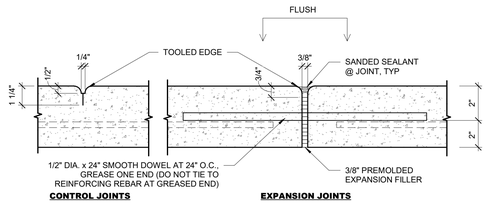

THESE DETAILS APPLY TO EXTERIOR SLAB-ON-GRADE CONDITIONS ONLY. REFER TO STRUCTURAL DRAWING S1.1 FOR INTERIOR SLAB-ON GRADE CONDITIONS.

A6 TYP. CONCRETE JOINTS
3" = 1'-0"

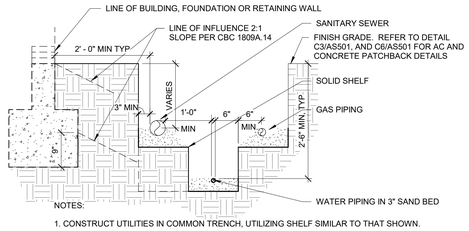

NOTES:

1. CONSTRUCT UTILITIES IN COMMON TRENCH, UTILIZING SHELF SIMILAR TO THAT SHOWN.
2. ALL PIPING SHALL BE LOCATED ABOVE THE INFLUENCE LINE OF ADJOINING STRUCTURES (RETAINING WALLS, BUILDING WALLS, FOOTINGS, ETC.).
3. SEWER AND WATER LINES SHALL BE INSTALLED IN ACCORDANCE WITH 2022 CPC SECTION 720.0.

A4 TRENCH DETAIL
3/4" = 1'-0"

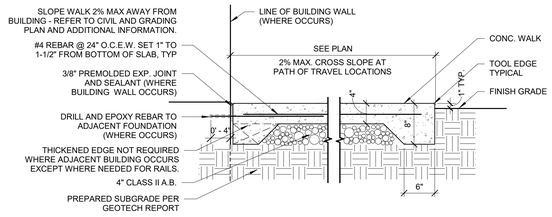

GENERAL NOTES:
1. EXPANSION JOINTS @ 40'-0" MAX. SEE EXPANSION JOINT DETAIL A6/AS501.
2. EXPANSION JOINT ON SIDEWALK SHALL MATCH WITH JOINTS ON CURB AND GUTTER CONTROL JOINTS BETWEEN EXPANSION JOINTS SHALL BE APPROXIMATELY 6'-0" O.C. SEE CONTROL JOINT DETAIL A6/AS501.
3. ALL EDGES SHALL HAVE 1/2" TOOLED RADIUS.
4. APPLY MEDIUM BROOM FINISH TO SURFACE OF CURB AND GUTTER PARALLEL W/ STREET.

A3 TYP CONC. PAVING
1" = 1'-0"

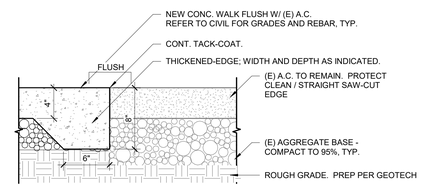

A1 CONC. TO (E) AC EDGE
1 1/2" = 1'-0"

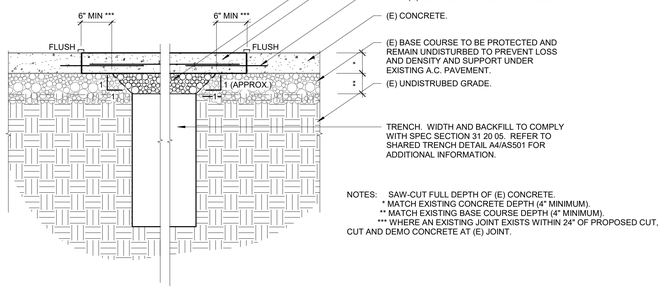

NOTES: SAW-CUT FULL DEPTH OF (E) CONCRETE.
* MATCH EXISTING CONCRETE DEPTH (4" MINIMUM).
** MATCH EXISTING BASE COURSE DEPTH (4" MINIMUM).
*** WHERE AN EXISTING JOINT EXISTS WITHIN 24" OF PROPOSED CUT, CUT AND DEMO CONCRETE AT (E) JOINT.

C6 PATCH-BACK CONC.
1" = 1'-0"

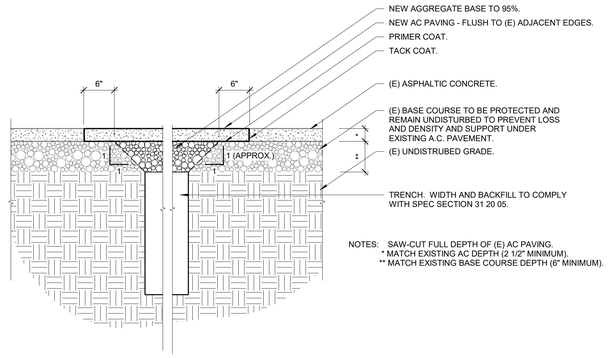

NOTES: SAW-CUT FULL DEPTH OF (E) AC PAVING.
* MATCH EXISTING AC DEPTH (2 1/2" MINIMUM).
** MATCH EXISTING BASE COURSE DEPTH (6" MINIMUM).

C3 PATCH-BACK - A.C. PAVING
1" = 1'-0"

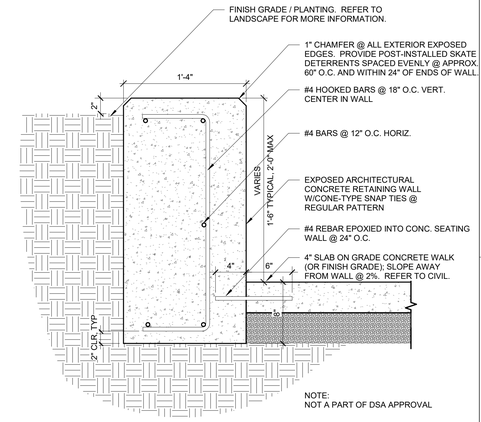

NOTE:
NOT A PART OF DSA APPROVAL

C1 PLANTER SEAT WALL
1 1/2" = 1'-0"

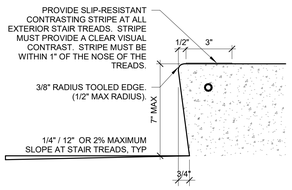

D6 ENLARGED TREAD
3" = 1'-0"

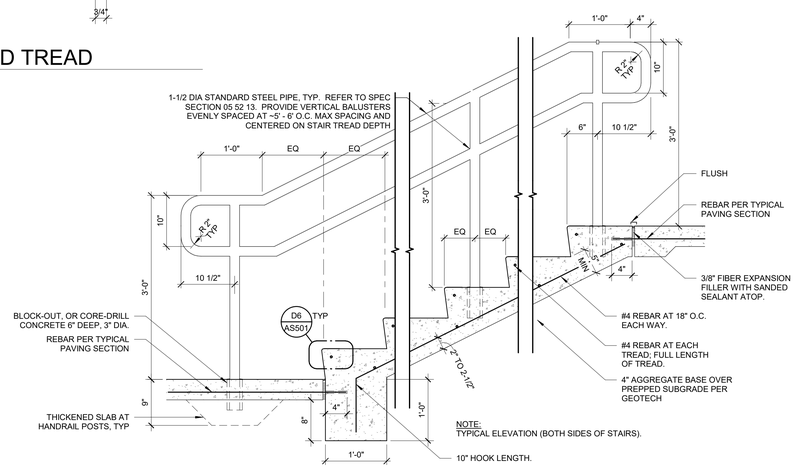

E6 TYP. STAIR SECTION
1" = 1'-0"

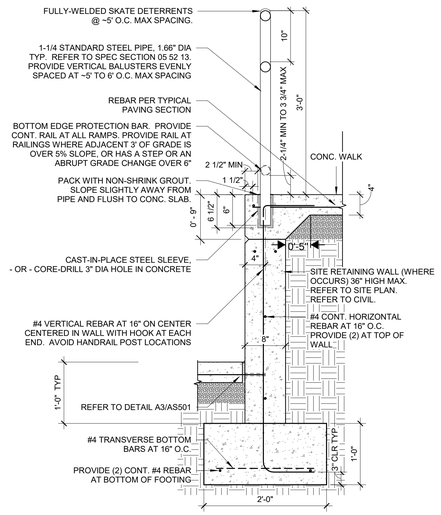

E4 TYP. RAILING / WALL SECTION
1" = 1'-0"

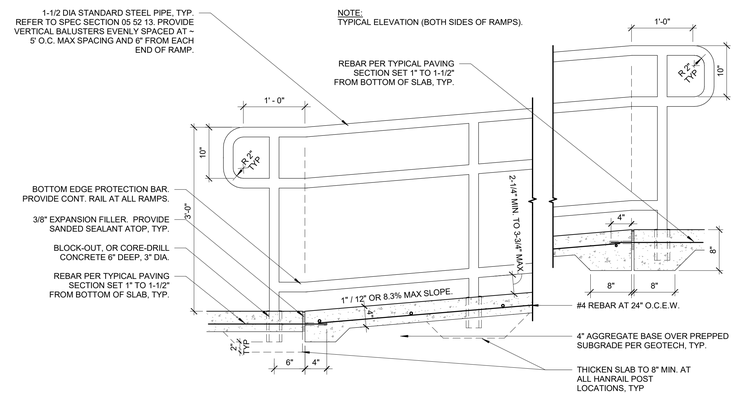

E2 TYP. RAMP SECTION & HANDRAIL
1" = 1'-0"

IDENTIFICATION STAMP
DIV. OF THE STATE ARCHITECT
APP: 02-121275 INC:
REVIEWED FOR
SS ☑ FLS ☑ ACS ☑
DATE: 12/15/2023

CALIFORNIA DESIGN WEST

CALIFORNIA DESIGN WEST ARCHITECTS, Inc.

2100 19th Street
Sacramento, CA 95818

Phone: (916) 446-2466
Fax: (916) 446-5118
Web Page: ca-dw.com

These plans and prints thereof, as instruments of service, are owned by the architect and are for the use on this project only. Reproduction and/or distribution without the prior written consent of the architect is forbidden.

Copyright California Design West Architects, Inc.

ARCHITECT: CONSULTANT:

LICENSED ARCHITECT
MITCHELL A. MCALISTER
NO. C 17250
OF CALIFORNIA

CONSULTANT:

PROJECT NAME:

BUHACH COLONY HIGH SCHOOL

1800 NORTH BUHACH RD
ATWATER, CA 95301

CONCESSIONS/TOILET BUILDINGS, TICKET BOOTH & STADIUM UPGRADES

MERCED UNION HIGH SCHOOL DISTRICT

MERCED COUNTY

KEY PLAN:

SHEET TITLE:
SITE DETAILS

JOB NUMBER:

SHEET NUMBER:
AS501

DATE:
NOV 17, 2023

REVISION:

C:\Users\stump\Documents\A22_BCHS-NewStadium-SITE_stump-2100.rvt

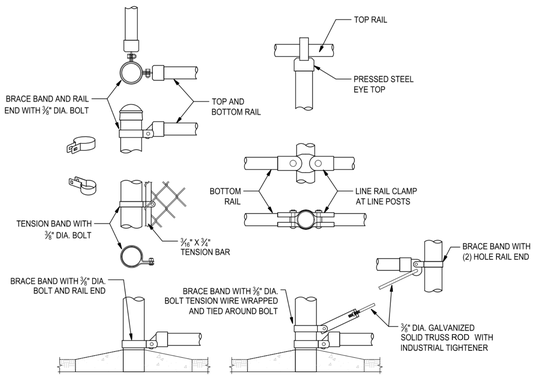

A6 CHAIN LINK FENCING CONNECTIONS
1/4" = 1'-0"

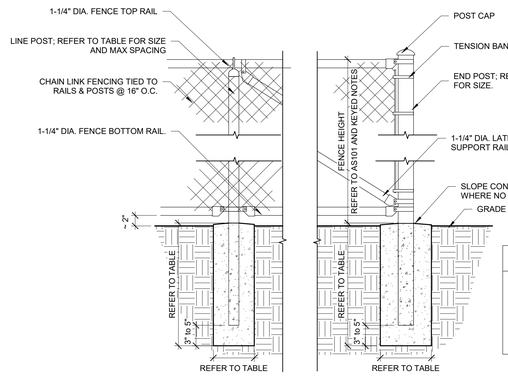

B3 CHAINLINK FENCE DETAIL
1" = 1'-0"

CHAIN LINK FENCE NOTES:

1. FOR CHAIN LINK FENCE AND GATES AROUND TRACK - PLACE FABRIC ON OUTSIDE OF FENCE.
2. ALL ADJOINING FENCE FABRIC SHALL BE CUT AND KNUCKLED TOGETHER.
3. CONTRACTOR SHALL PROVIDE SHOP DRAWINGS FOR ACCEPTANCE BY DISTRICT REPRESENTATIVE PRIOR TO FABRICATION.
4. BOTTOM EDGE OF FENCE FABRIC AROUND TRACK TO BE 1" FROM FINISH GRADE. 2" ELSEWHERE.
5. PROVDIE LOCKING DEVICE TO SECURE ALL DOUBLE GATES IN CLOSED POSITION.
6. REFER TO KEYED NOTES ON SHEET AS101 FOR EACH FENCING SEGMENT TYPE AND FENCING HEIGHT, TYP.

CHAIN LINK FENCE MINIMUM REQUIREMENTS

FENCE HT	TERMINAL POST DIMENSIONS	LINE POST DIMENSIONS	TERMINAL POST CONC. FDTN. SIZE	LINE POST CONC. FDTN SIZE
UP to 4'-0"	2 3/8" x 0.042	1 5/8" x 0.047	10" x 24"	8" x 24"
4'-0" to 5'-0"	2 3/8" x 0.042	1 7/8" x 0.055	10" x 24"	8" x 24"
5'-0" to 6'-0"	2 3/8" x 0.042	1 7/8" x 0.065	10" x 24"	8" x 24"
6'-0" to 8'-0"	2 3/8" x 0.110	2 3/8" x 0.095	10" x 36"	10" x 36"
8'-0" to 10'-0"	2 7/8" x 0.110	2 3/8" x 0.130	12" x 40"	10" x 40"
10'-0" to 12'-0"	2 7/8" x 0.160	2 7/8" x 0.120	12" x 42"	12" x 42"

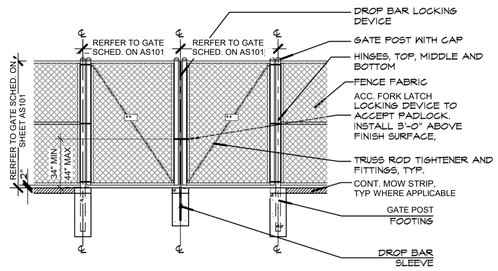

** DOUBLE ENTRY GATES TO HAVE SIGNAGE THAT READS "GATE OPERATED BY AUTORIZED DISTRICT PERONNEL ONLY" REFER TO SITE PLAN KEYED NOTE 6.88

C6 CHAIN LINK GATE
1/4" = 1'-0"

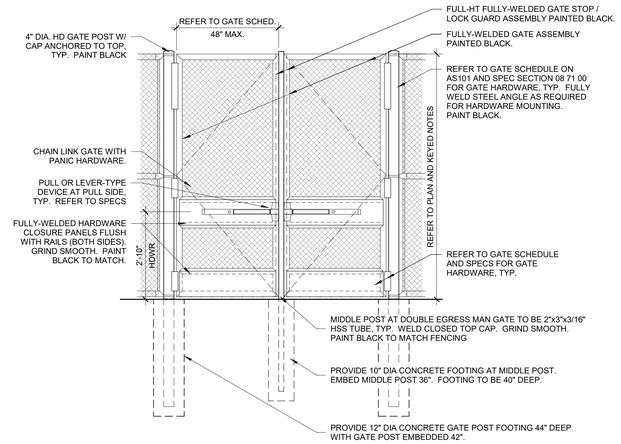

C3 ENTRY PEDESTRIAN EGRESS GATE
1/2" = 1'-0"

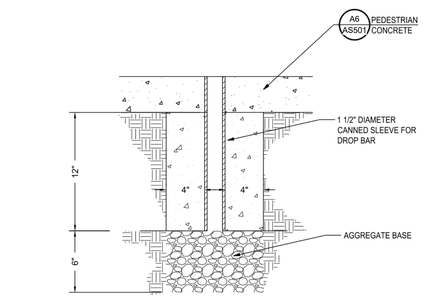

C1 CHAIN LINK GATE DROP BAR SLEEVE
1/4" = 1'-0"

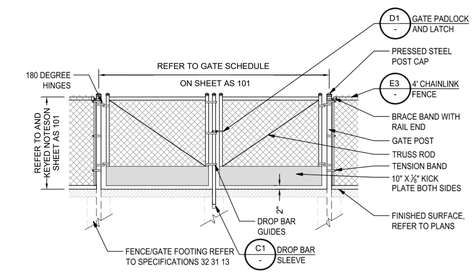

NOTES:
A. GROUND SURFACE SHALL COMPLY WITH CBC 11B-404.2.4.4,CBC TABLE 11B-404.2.4.1 & 11B-302. GATE OPENING TO REQUIRE LESS THAN 5LB FORCE.
B. KICK PLATE SHALL BE 10" OFF THE FINISH GROUND WITH SMOOTH SIDES ON BOTH SIDES EXTENDING THE FULL WIDTH OF THE GATE (TYP).
C. CAP TOP OF KICK PLATE

D6 CHAIN LINK DOUBLE GATE
1/4" = 1'-0"

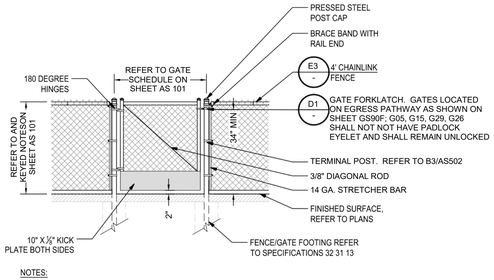

NOTES:
1. GROUND SURFACE SHALL COMPLY WITH CBC 11B-404.2.4.4,CBC TABLE 11B-404.2.4.1 & 11B-302. GATE OPENING TO REQUIRE LESS THAN 5LB FORCE.
2. KICK PLATE SHALL BE 10" OFF THE FINISH GROUND WITH SMOOTH SIDES ON BOTH SIDES EXTENDING THE FULL WIDTH OF THE GATE (TYP).
3. CAP TOP OF KICK PLATE
4. GATES LOCATED ALONG PATH OF TRAVEL PER SHEET AS101 TO HAVE SIGN FOR CONSTANT SUPERVISION AS INDICATED IN KEYED NOTES, AND PER CBC SECTION 1010.4.1
   4.1. SIGN SHALL READ " GATE SHALL BE UNDER CONSTANT SUPERVISION WHEN PUBLIC IS PRESENT"
5. OPERABLE PARTS TO COMPLY WITH 11B-309.4

D5 CHAIN LINK SINGLE GATE
1/4" = 1'-0"

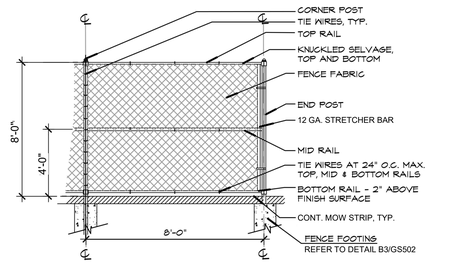

D3 4' TALL CHAIN LINK ROLLING GATE
1/4" = 1'-0"

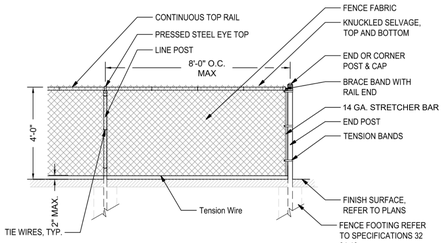

D1 CHAIN LINK GATE FORK LATCH
1/4" = 1'-0"

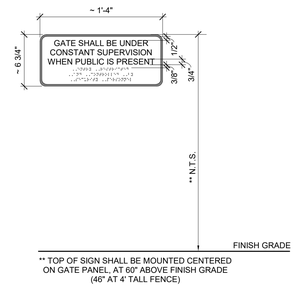

** TOP OF SIGN SHALL BE MOUNTED CENTERED ON GATE PANEL, AT 60" ABOVE FINISH GRADE (46" AT 4' TALL FENCE)

E6 CHAIN LINK 8' FENCE PANEL
1/4" = 1'-0"

E5 CHAIN LINK 6' FENCE PANEL
1/4" = 1'-0"

E3 CHAIN LINK 4' FENCE PANEL
1/4" = 1'-0"

E1 GATE SIGN
1 1/2" = 1'-0"

IDENTIFICATION STAMP
DIV. OF THE STATE ARCHITECT
APP: 02-121275 INC:
REVIEWED FOR
SS ☑ FLS ☑ ACS ☑
DATE: 12/15/2023

CALIFORNIA DESIGN WEST ARCHITECTS, Inc.

2100 19th Street
Sacramento, CA 95818

Phone: (916) 446-2466
Fax: (916) 446-5118
Web Page: ca-dw.com

These plans and prints thereof, as instruments of service, are owned by the architect and are for the use on this project only. Reproduction and/or distribution without the prior written consent of the architect is forbidden.

Copyright California Design West Architects, Inc.

ARCHITECT: CONSULTANT:

LICENSED ARCHITECT MITCHELL A. McALISTER No. C 17250 RENEWAL 08/31/2025 STATE OF CALIFORNIA

CONSULTANT:

PROJECT NAME:

BUHACH COLONY HIGH SCHOOL

1800 NORTH BUHACH RD
ATWATER, CA 95301

CONCESSIONS/TOILET BUILDINGS, TICKET BOOTH & STADIUM UPGRADES

MERCED UNION HIGH SCHOOL DISTRICT

MERCED COUNTY

KEY PLAN:

SHEET TITLE:
FENCE / GATE DETAILS

JOB NUMBER:

SHEET NUMBER:
AS502

DATE:
NOV 17, 2023

REVISION:

C:\Users\ahump\Documents\A22_BCHS-NewStadium-SITE_shump-2100.rvt

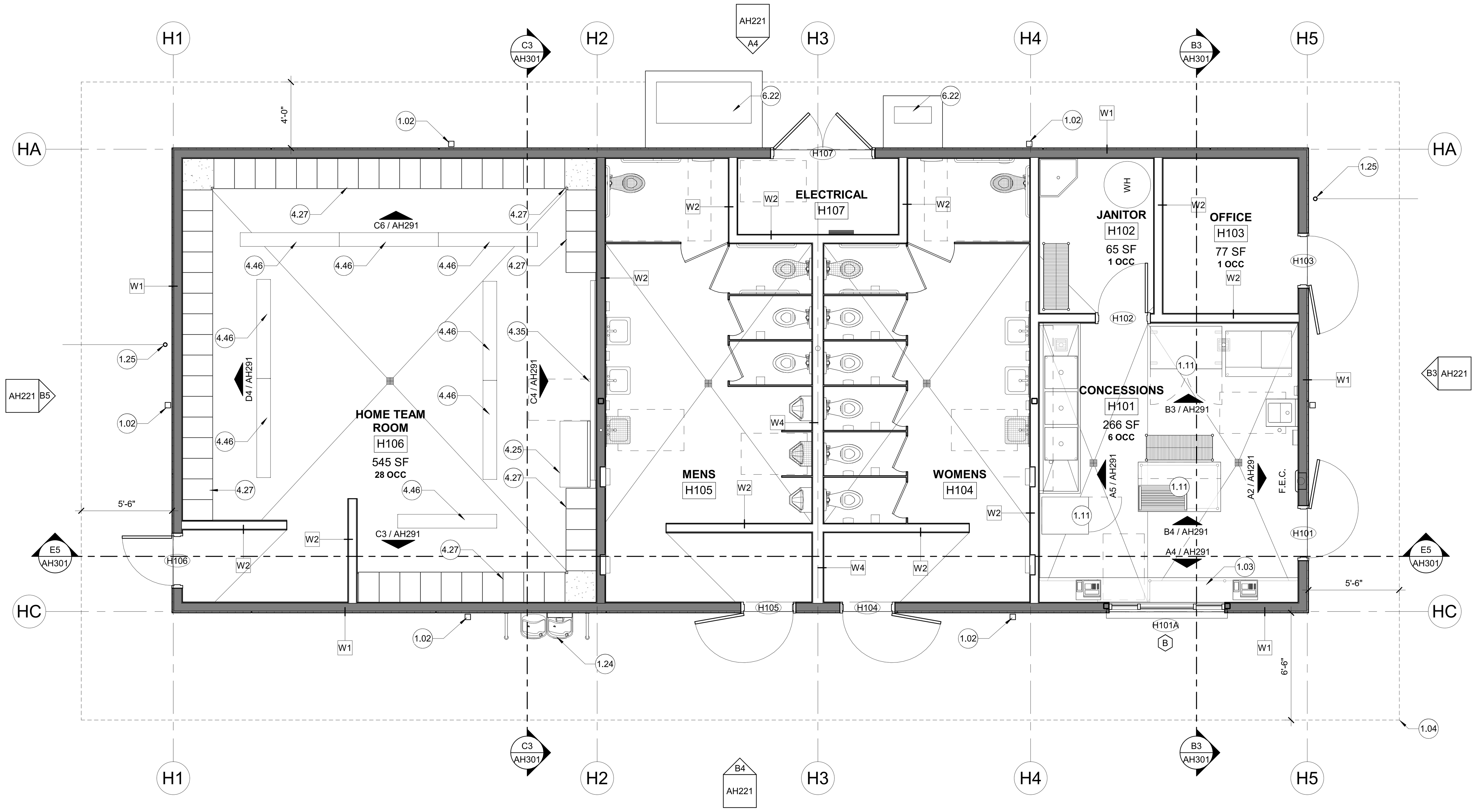

1 BUILDING H - HOME CONCESSIONS + TOILET BUILDING

1/4" = 1'-0"

PLAN NORTH

KEYED NOTES SCHEDULE

1.02 HEAVY GUAGE VANDAL RESISTANT GALVANIZED METAL DOWNSPOUT ASSEMBLY (BOTTOM 8' MIN). PAINT. REFER TO ELEVATIONS. COORDINATE WITH CIVIL. REFER TO D4/A541.

1.03 BUILT-IN STAINLESS STEEL TRANSACTION COUNTERTOP, TYP. PROVIDE SEAMLESS CLOSURES AT ALL EXPOSED ENDS. REFEER TO DETAIL A4/A571.

1.04 ROOF OVERHANG ABOVE, TYP. REFER TO DIMENSION PLANS.

1.11 KITCHEN EQUIPMENT, TYP. REFER TO EQUIPMENT & ACCESSORY SCHEDULE SHEET.

1.24 HIGH/LOW + BOTTLE FILLER DRINKING FOUNTAION. PROVIDE GUARD BARS ON BOTH SIDES. COORD WITH ELECTRICAL AND PLUMBING. REFER TO D4/A592 FOR ADDITIONAL INFORMATION.

1.25 SITE FENCE / GATE POST SET WITHIN 4" OF FACE OF BUILDING. REFER TO PROJECT SITE PLAN FOR GATE LOCATION / SCHEDULE. REFER TO STRUCTURAL FOR FOOTING / SLEEVE DETAIL 8/S5.0.

4.25 20" WIDE x 48" LONG FIXED ADA BENCH ASSEMBLY WITH INTEGRAL BACKREST. FACE OF BACK REST TO BE SET IN FRONT OF MARKERBOARD TRAY ASSEMBLY. MOUNT BENCH WITHIN 3/4" OF THE LOCKERS AT END. REFER TO ANCHORAGE DETAIL E6/A592.

4.27 15" WIDE x 22" DEEP SINGLE-TIER LOCKER ASSEMBLY, TYP. HOME-SIDE. SET OVER 6" CONCRETE BASE. PROVIDE SLOPED TOP, TYP. PROVIDE CLOSURE FILLERS AT CORNERS AND CORNER TOPS, TYP. REFER TO EQUIPMENT & ACCESSORY SCHEDULE PLAN AH104 FOR LOCKER TYPE, QUANTITY, AND ACCESSIBILITY REQUIREMENTS. REFER TO DETAILS D2 AND E2 / A592.

4.35 12' LONG WHITEBOARD ASSEMBLY.

4.46 6' LONG MOBILE / UNATTACHED ALUMINUM BENCH, TYP. REFER TO SPEC SECTION 10 51 50.

6.22 MECHANICAL UNIT SET ATOP CONCRETE HOUSEKEEPING PAD. REFER TO DETAIL 1/M6.1 AND 5/M6.2 FOR HOUSEKEEPING PAD. HOUSEKEEPING PAD TO BE APPROXIMATLY 8" LARGER THAN THE MECHANICAL UNIT (ON FRONT THREE SIDES, OR 6" EDGE DISTANCE, TYP FROM BOLT MOUNTING LOCATIONS). EXTEND HOUSEKEEPING PAD ON BACK SIDE TO FOUNDATION WALL.

GENERAL NOTES

1. DIMENSIONS TO CENTERLINE OF STUD WALLS ARE TO THE CENTERLINE OF THE STUD. DIMENSIONS TO THE FACE OF STUD WALLS ARE TO FACE OF STUD - UNLESS NOTING 'CLEAR' DIMENSIONS OR DIMENSIONS TO PLUMBING FIXTURES - THEN DIMENSION IS TO FACE OF FINISH. FACE OF STUD OCCURS ON THE GRID AT INTERIOR WALLS, AND FACE OF SHEATHING AT EXTERIOR WALLS, UNLESS SHOWN OTHERWISE. DIMENSIONS TO FRAMES ARE TO THE CENTERLINE OF FRAME OPENING IN STUD FRAMED WALLS. DIMENSIONS TO ROOF OVERHANGS WILL BE TO EXTERIOR FACE OF FASCIA AT THE END OF THE OVERHANG.

2. FIELD VERIFY ALL DIMENSIONS TO EXISTING CONDITIONS - NOTIFY ARCHITECT OF ANY DISCREPANCIES PRIOR TO ANY WORK IN THAT AREA.

3. CHANGES IN FLOOR MATERIAL SHALL OCCUR AT THE CENTERLINE OF THE DOOR PANEL (BELOW THE DOOR IN CLOSED POSITION) U.N.O.

4. FOR CONSTRUCTION OF WALLS AT RECESSED CABINETS (I.E.: FEC, ELECTRICAL PANELS, ETC.) SEE DETAIL D2/A-541.

5. ALL DOORS TO PROVIDE 18" MIN. CLEAR ON PULL SIDE INTERIOR AND 24" MIN. CLEAR ON EXTERIOR, 12" CLEAR ON PUSH SIDE OF ACCESSIBLE DOORS WITH CLOSER AND LATCHES. SEE ACCESSIBILITY DETAILS. REFER TO DOOR SCHEDULE FOR APPLICABLE HARDWARE.

6. COORDINATE ALL OPENING SIZES AND HEAD HEIGHTS WITH SCHEDULES.

7. CONCRETE SLABS SLOPE TO DRAIN, TYP. SLOPE SHALL NOT EXCEED 2% MAXIMUM

8. BATT (SOUND) INSULATION SHALL BE INSTALLED TO FILL ALL NEW FRAMED WALL CAVITIES.

9. REFER TO EQUIPMENT PLAN FOR KICTHEN EQUIPMENT SCHEDULE AND TOILET ACECSSORIES.

LEGEND

- FULL-HT STUD FRAMED BEARING WALL. REFER TO STRUCTURAL FRAMING PLAN SH2.1.
- FULL-HT STUD FRAMED NON-BEARING WALL. REFER TO STRUCTURAL FRAMING PLAN SH2.1 AND SLIP TRACK CONNECTION 7/S1.3
- 1.01 — KEYED NOTE. REFER TO KEYED NOTES SCHEDULE. KEYED NOTE TAGS WITHOUT LEADER APPLIES TO THE ENTIRE ROOM OR SURFACE IN WHICH (ON WHICH) THE TAG IS LOCATED. KEYED NOTES MAY SKIP NUMBERS.
- 1i — WALL TYPE AS INDICATED. REFER TO SHEET A-541.
- 1t — ALUMINUM WINDOW FRAMES AS INDICATED. REFER TO SHEET A571.
- F.E.C. — FIRE EXTINGUISHER CABINET; SEMI-RECESSED IN STUD FRAMED WALLS. REFER TO DETAIL D2/ A541. EXTINGUISHER TYPE TO BE 2A:10B:C.
- FLOOR DRAIN, COORDINATE W/ PLUMBING. MAINTAIN POSITIVE DRAINAGE AT ALL FLOORS TO DRAIN AT 2% MAXIMUM.
- FLOOR SINK, COORDINATE W/ PLUMBING

ROOM FINISH SCHEDULE

ROOM #	ROOM NAME	FLOOR FINISH	BASE FINISH	WALLS NORTH	WALLS EAST	WALLS SOUTH	WALLS WEST	CEILING FINISH	REMARKS	ROOM #
LEVEL 1										
H101	CONCESSIONS	F2	B3	W3	W3	W3	W3	C3		H101
H102	JANITOR	F1	B3	W3	W3	W3	W3	C2		H102
H103	OFFICE	F1	B4	W1	W1	W1	W1	C4		H103
H104	WOMENS	F2	B2	W2	W2	W2	W2	C2		H104
H105	MENS	F2	B2	W2	W2	W2	W2	C2		H105
H106	HOME TEAM ROOM	F1	B1	W1	W1	W1	W1	C1		H106
H107	ELECTRICAL	F1	B4	W1	W1	W1	W1	C5	(1)	H107

REMARKS:
(1) REFER TO ELECTRICAL FOR REQUIRED PLYWOOD BACKER PANELS

FINISH SCHEDULE LEGEND

FLOOR/ BASE		BASE		WALLS / WAINSCOT		CEILING	
F1	SEALED CONCRETE FLOOR - SMOOTH TROWEL FINISH	B1	6" RUBBER BASE	W1	PAINTED GYP. BD.	C1	PAINTED GYP. BD.
F2	RESINOUS / EPOXY FLOORING SYSTEM	B2	6" SLIM FOOT COVED TILE SANITARY BASE	W2	THIN-SET CERAMIC TILE TO 7'-2"; EPOXY-PAINTED GYP. BD. ABOVE	C2	EPOXY-PAINTED GYP. BD.
		B3	6" INTEGRAL COVED EPOXY BASE	W3	FRP PANEL TO 8'-0" A.F.F.; EPOXY-PAINTED GYP. BD. ABOVE	C3	VINYL-COATED WASHABLE 2x4 LAY-IN SUSPENDED CEILING ASSEMBLY
		B4	4" RUBBER BASE			C4	2x4 ACOUSTICAL LAY-IN SUSPENDED CEILING ASSEMBLY
						C5	OPEN-TO-STRUCTURE. PAINT.

DOOR SCHEDULE

WT	DOOR (2) TYPE	DOOR WIDTH	DOOR HEIGHT	DOOR (3) THICKNESS	DOOR (4) MATERIAL	DOOR (5) GLAZING	FRAME (6) TYPE	FRAME (7) MATERIAL	(8) DETAILS HEAD	(8) DETAILS JAMB	(8) DETAILS SILL	(9) FIRE RATING	(10) HARDWARE	(11) SIGNAGE	(12) REMARKS	DOOR #
LEVEL 1																
H101	A	3'-0"	7'-0"	1 3/4"	HMP	NA	1	HMP	D3/A571	D4/A571	D2/A571	-	2.2	1	a	H101
H101A	E	7'-0"	5'-10"	3/4"	S/S	NA	4	S/S	A5/A571	D1/A571	A4/A571	-	11.1	5	b	H101A
H102	A	3'-0"	7'-0"	1 3/4"	HMP	NA	1	HMP	D5/A571	C5/A571	D2/A571	-	5.3	1		H102
H103	A	3'-0"	7'-0"	1 3/4"	HMP	NA	1	HMP	D3/A571	D4/A571	D2/A571	-	3.2	1		H103
H104	A	3'-0"	7'-0"	1 3/4"	HMP	NA	1	HMP	D3/A571	D4/A571	D2/A571	-	3.1	1,4,5		H104
H105	A	3'-0"	7'-0"	1 3/4"	HMP	NA	1	HMP	D3/A571	D4/A571	D2/A571	-	3.1	1,4,5		H105
H106	A	3'-0"	7'-0"	1 3/4"	HMP	NA	1	HMP	D3/A571	D4/A571	D2/A571	-	2.1	1, 3	a	H106
H107	AA	6'-0"	7'-0"	1 3/4"	HMP	NA	1	HMP	D3/A571	D4/A571	D2/A571	-	1.3	1		H107

DOOR SCHEDULE GENERAL NOTES:

1. REFER TO DOOR SCHEDULE INFO LEGEND TO THE RIGHT FOR MORE DETAILED INFORMATION ON EACH NUMBERED COLUMN HEADING SHOWN IN BOLD.
2. PROVIDE CONTINUOUS SEALANT AT ALL JOINTS OF ALL DISSIMILAR MATERAL CONNECTIONS.
3. GYP BD SHALL BE SEATED MIN 1/2" INTO METAL FRAMES, TYP.
4. WALL FINISHES SHALL BE SET WITHIN THE THROAT OF THE DOOR FRAMES, TYP.
5. FOR OPERABLE WINDOW LOCATIONS, SEE FRAME TYPE AND/OR SEE ELEVATIONS. OPERATING PANE/DIRECTION INDICATED BY ARROW.
6. FOR ANCHORING OF HM FRAMES, SEE DETAILS C2, C3 AND C4/ A- 571 .
7. THE CONTRACTOR IS TO FILED VERIFY ALL FRAME DIMENSIONS PRIOR TO ORDERING.

DOOR SCHEDULE INFO

IF A ' - ' IS IN THE SCHEDULE BOX, THAT ITEM IS NOT APPLCIABLE TO THE SPECIFIED DOOR.

(2) DOOR TYPES:

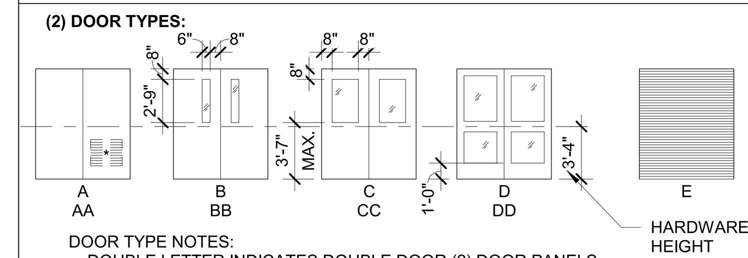

DOOR TYPE NOTES:
- DOUBLE LETTER INDICATES DOUBLE DOOR (2) DOOR PANELS.
* PROVIDE DOOR LOUVERS WHERE INDICATED BY MECHANICAL.
- PAINT TRIM AROUND GLASS OPENINGS TO MATCH HM DOOR PAINT.

(3) THICKNESS:
THICKNESS INDICATES ITS NOMINAL SIZE
(4) CONSTRUCTION/ FINISH:
SCL = SOLID CORE, PLASTIC LAMINATE FINISH
AL = ALUMINUM WITH GLASS
HMP = HOLLOW METAL, PAINTED
HMIP = HOLLOW METAL, INSULATED, PAINTED
S/S = STAINLESS STEEL
(5) GLASS:
SG = SAFETY GLASS (TEMPERED OR LAMINATED)
SGI = SAFETY GLASS, INSULATED (TEMPERED OR LAMINATED)
SGR = SAFETY GLASS - RATED

(6) FRAME TYPES:

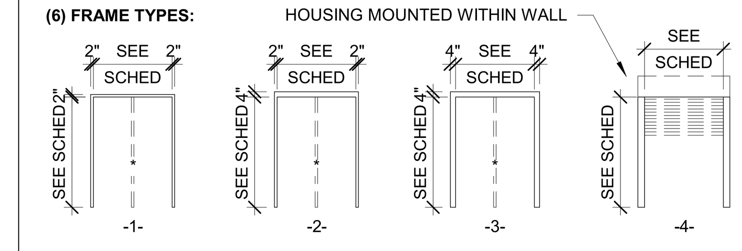

DOOR TYPE NOTES:
* REMOVABLE MULLION AT DOUBLE DOORS WHERE INDICATED.

(7) FRAME MATERIAL:
AL = ALUMINUM
HMP = HOLLOW METAL - PAINTED
HMPC = HOLLOW METAL - POWDER-COAT PAINTED
SS = STAINLESS STEEL
SP = SPECIAL (REFER TO SPECIFICATIONS)
(8) DETAIL NUMBER:
INDICATES DETAIL(S) SHOWN ON SHEET A571.
(9) RATING:
20, 45, 60, ETC INDICATES RATED DOOR ASSEMBLY FIRE-RATING IN MINUTES
(10) HARDWARE:
HARDWARE GROUP #. REFER TO SPEC SECTION 08 71 00 FOR HARDWARE GROUPS.
(11) SIGNAGE:
1, = ROOM IDENTIFICATION SIGNAGE. REFER TO DETAIL C1/A591.
2, = ROOM IDENTIFICATION SIGNAGE (BOTH SIDES). REFER TO DETAIL C1/A591.
3, = TACTILE EXIT SIGNAGE. REFER TO DETAIL A1/A591.
4, = ACCESSIBLE RESTROOM SIGNAGE. REFER TO DETAIL B1/A591.
5, = DIMENSIONAL LETTERS, REFER TO SPEC SECTION 10 14 23.
(12) REMARKS:
a, = PROVIDE POWER FOR ACCESS CONTROLS. REFER TO HARDWARE GROUPS NOTED IN SPEC SECTION 08 71 00, AND TO SPEC SECTION 28 15 00.
b, = REFER TO WINDOW TYPES, SHEET A571 FOR ALUMINUM FRAME TYPE.

IDENTIFICATION STAMP
DIV. OF THE STATE ARCHITECT
APP: 02-121275 INC:
REVIEWED FOR
SS ☑ FLS ☑ ACS ☑
DATE: 12/15/2023

DESIGN California WEST

CALIFORNIA DESIGN
WEST ARCHITECTS, Inc.

2100 19th Street
Sacramento, CA 95818

Phone: (916) 446-2466
Fax: (916) 446-5118
Web Page: ca-dw.com

These plans and prints thereof, as instruments of service, are owned by the architect and are for the use on this project only. Reproduction and/or distribution without the prior written consent of the architect is forbidden.

Copyright California Design West Architects, Inc.

ARCHITECT: CONSULTANT:

LICENSED ARCHITECT — MITCHELL A. McALLISTER — NO. C 17250 — REN. 2-28-2025 — STATE OF CALIFORNIA

CONSULTANT:

PROJECT NAME:

BUHACH COLONY HIGH SCHOOL

1800 NORTH BUHACH ROAD
ATWATER, CA 95301

CONCESSIONS/TOILET BUILDINGS, TICKET BOOTH & STADIUM UPGRADES

MERCED UNION HIGH SCHOOL DISTRICT

MERCED COUNTY

KEY PLAN:

SHEET TITLE:

BUILDING H - FLOOR PLAN

JOB NUMBER:

SHEET NUMBER:

DATE:
NOV 17, 2023

REVISION:

AH101

C:\Users\strump\Documents\A22_BCHS-Concessions+TeamsRoom-HOME - CENTRAL_strump-2100.rvt

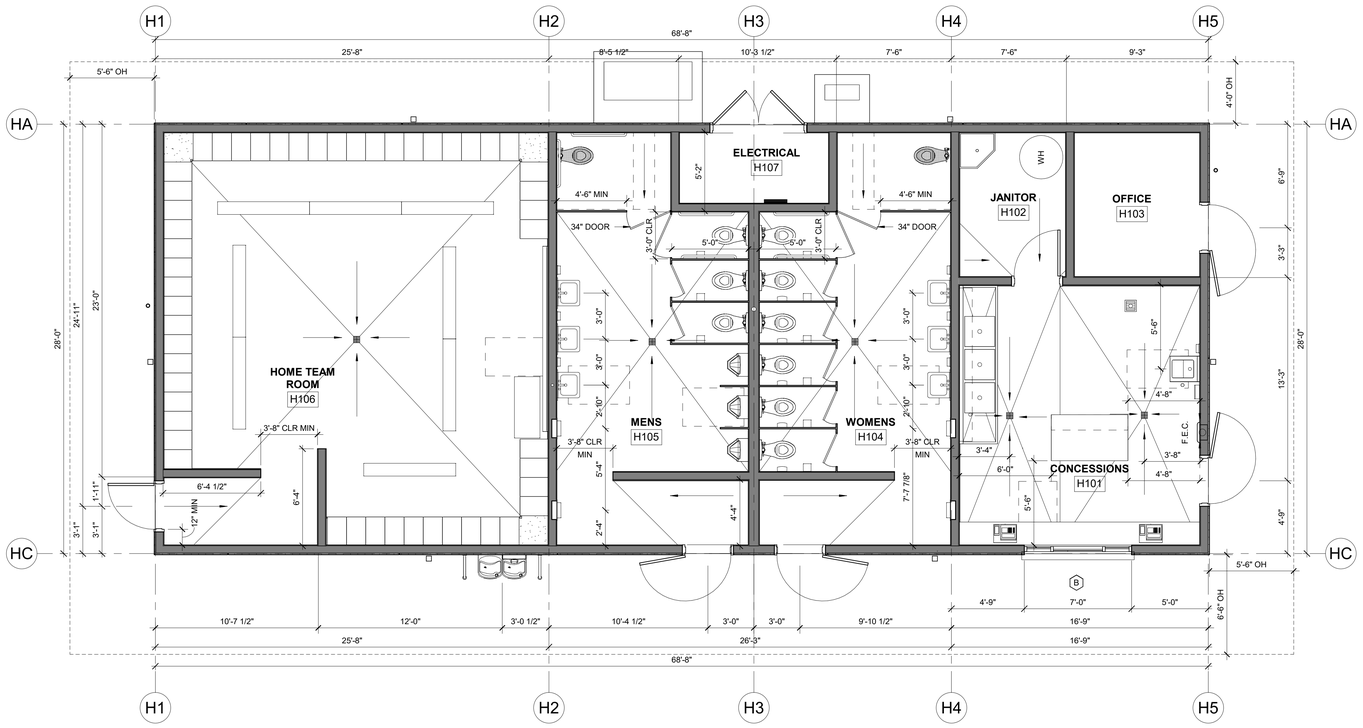

B4 BUILDING H - DIMENSION PLAN

1/4" = 1'-0"

N

GENERAL NOTES

1. DIMENSIONS TO CENTERLINE OF STUD WALLS ARE TO THE CENTERLINE OF THE STUD. DIMENSIONS TO THE FACE OF STUD WALLS ARE TO FACE OF STUD - UNLESS NOTING 'CLEAR DIMENSIONS OR DIMENSIONS TO PLUMBING FIXTURES - THEN DIMENSION IS TO FACE OF FINISH. FACE OF STUD OCCURS ON THE GRID AT INTERIOR WALLS, AND FACE OF SHEATHING AT EXTERIOR WALLS, UNLESS SHOWN OTHERWISE. DIMENSIONS TO FRAMES ARE TO THE CENTERLINE OF FRAME OPENING IN STUD FRAMED WALLS. DIMENSIONS TO ROOF OVERHANGS WILL BE TO EXTERIOR FACE OF FASCIA AT THE END OF THE OVERHANG.

2. FIELD VERIFY ALL DIMENSIONS TO EXISTING CONDITIONS - NOTIFY ARCHITECT OF ANY DISCREPANCIES PRIOR TO ANY WORK IN THAT AREA.

3. CHANGES IN FLOOR MATERIAL SHALL OCCUR AT THE CENTERLINE OF THE DOOR PANEL (BELOW THE DOOR IN CLOSED POSITION) U.N.O.

4. FOR CONSTRUCTION OF WALLS AT RECESSED CABINETS (I.E.: FEC, ELECTRICAL PANELS, ETC.) SEE DETAIL D2/A-541.

5. ALL DOORS TO PROVIDE 18" MIN. CLEAR ON PULL SIDE INTERIOR AND 24" MIN. CLEAR ON EXTERIOR, 12" CLEAR ON PUSH SIDE OF ACCESSIBLE DOORS WITH CLOSER AND LATCHES. SEE ACCESSIBILITY DETAILS. REFER TO DOOR SCHEDULE FOR APPLICABLE HARDWARE.

6. COORDINATE ALL OPENING SIZES AND HEAD HEIGHTS WITH SCHEDULES.

7. CONCRETE SLABS SLOPE TO DRAIN, TYP. SLOPE SHALL NOT EXCEED 2% MAXIMUM

8. BATT (SOUND) INSULATION SHALL BE INSTALLED TO FILL ALL NEW FRAMED WALL CAVITIES.

9. REFER TO EQUIPMENT PLAN FOR KICTHEN EQUIPMENT SCHEDULE AND TOILET ACECSSORIES.

LEGEND

STUD FRAMED WALL. REFER TO STRUCTURAL.

F.E.C. FIRE EXTINGUISHER CABINET, SEMI-RECESSED IN STUD FRAMED WALLS, SURFACE-MOUNTED AT CONCRETE AND MASONRY WALLS. REFER TO DETAIL D2/ A541. EXTINGUISHER TYPE TO BE 2A:10B:C.

FLOOR DRAIN, COORDINATE W/ PLUMBING. MAINTAIN POSITIVE DRAINAGE AT ALL FLOORS TO DRAIN AT 2% MAXIMUM.

FLOOR SINK, COORDINATE W/ PLUMBING

1.00 KEYED NOTES SCHEDULE

IDENTIFICATION STAMP
DIV. OF THE STATE ARCHITECT
APP: 02-121275 INC:
REVIEWED FOR
SS ☑ FLS ☑ ACS ☑
DATE: 12/15/2023

DESIGN California WEST

CALIFORNIA DESIGN
WEST ARCHITECTS, Inc.

2100 19th Street
Sacramento, CA 95818

Phone: (916) 446-2466
Fax: (916) 446-5118
Web Page: ca-dw.com

These plans and prints thereof, as instruments of service, are owned by the architect and are for the use on this project only. Reproduction and/or distribution without the prior written consent of the architect is forbidden.

Copyright California Design West Architects, Inc.

ARCHITECT: CONSULTANT:

LICENSED ARCHITECT
MITCHELL A. MCALISTER
NO. C 17250
REN. 08-31-2025
STATE OF CALIFORNIA

CONSULTANT:

PROJECT NAME:

BUHACH COLONY HIGH SCHOOL

1800 NORTH BUHACH ROAD
ATWATER, CA 95301

CONCESSIONS/TOILET BUILDINGS, TICKET BOOTH & STADIUM UPGRADES

MERCED UNION HIGH SCHOOL DISTRICT

MERCED COUNTY

KEY PLAN:

SHEET TITLE:

BUILDING H - DIMENSION PLAN

JOB NUMBER:	SHEET NUMBER:
DATE: NOV 17, 2023	**AH103**
REVISION:	

C:\Users\stump\Documents\A22_BCHS-Concessions+TeamsRoom-HOME - CENTRAL_stump-2100.rvt

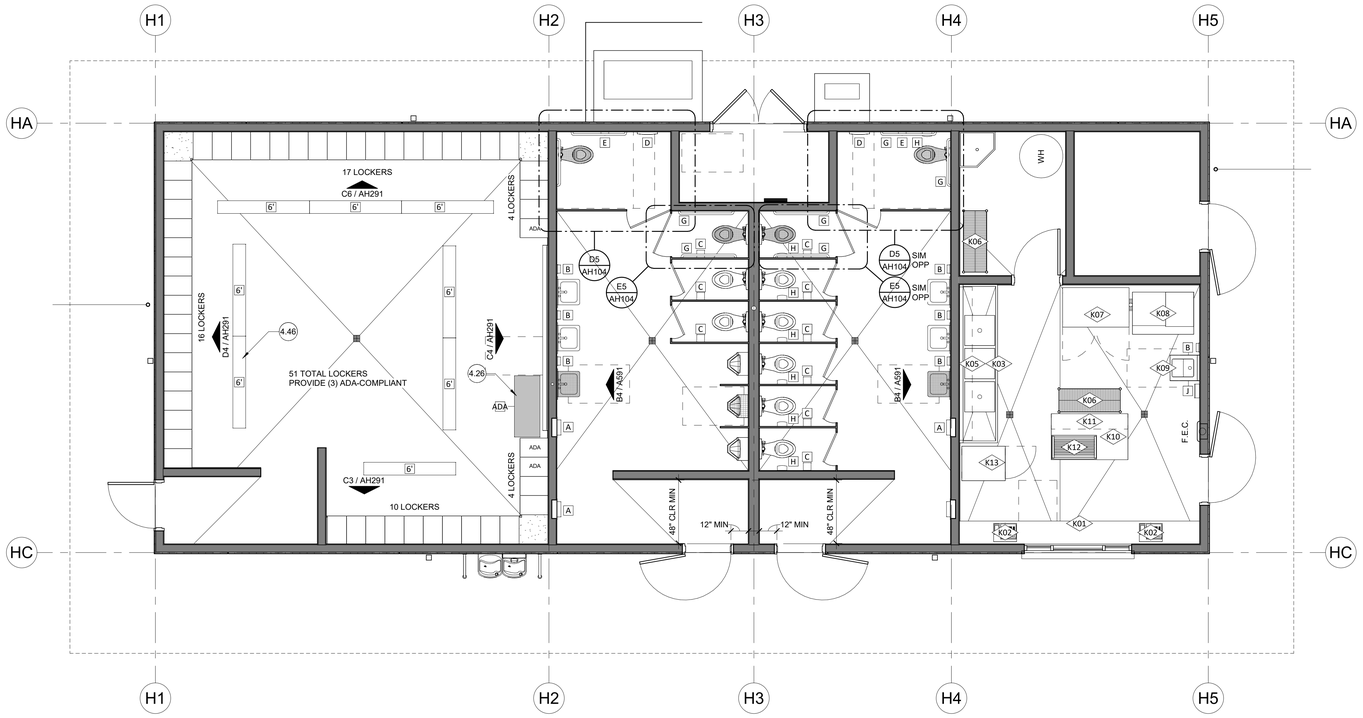

BUILDING H - EQUIPMENT / ACCESSORIES PLAN

1/4" = 1'-0"

PLAN NORTH

TOILET ACCESSORY SCHEDULE

TAG	DESCRIPTION
6'	UNFIXED MOBILE BENCH ASSEMBLY. LENGTH INDICATED. REFER TO SPEC SECTION 10 51 50.
A	ELECTRICAL HAND DRYER, COORD. W/ ELECTRICAL
ADA	SOLID PLASTIC PEDESTAL BENCH
B	SURFACE-MOUNTED SOAP DISPENSER
C	SURFACE MOUNTED TOILET PAPER DISPENSER
D	SURFACE MOUNTED TOILET SEAT COVER DISPENSER
E	RECESSED MULTI-ROLL TOILET TISSUE DISPENSER
G	ADA GRAB BARS, REFER TO ELEVATIONS FOR SIZES.
H	SURFACE-MOUNTED SANITARY NAPKIN DISPOSAL
J	SURFACE-MOUNTED PAPER TOWEL DISPENSER 4" MAX. PROJECTION

KITCHEN EQUIPMENT SCHEDULE

MARK	DESCRIPTION
K01	CUSTOM SEAMLESS S/S COUNTERTOP WITH UNDERSHEVES
K02	P.O.S. CASH REGISTER BY OWNER
K03	2'-6" x 10'-4" THREE-COMPARTMENT SS SINK WITH 24" DRAINBOARDS
K05	(2) 10"W x120"L S/S WALL MOUNTED SHELVES WITH POT RACK AND 20 HOOKS AT LOWER SHELF.
K06	18" x 48" WIRE SHELVING UNIT ON 5" POLY CASTERS
K07	TWO-DOOR REACH-IN REFRIGERATOR
K08	ICE MAKER, FLAKE/NUGGET STYLE - HOSHIZAKI MODEL NO. F-801MAJ-C WITH FILTER ASSEMBLY AND 800# ICE STORAGE BIN.
K09	SS ADA HAND SINK WITH SPLASH GUARDS. PROVIDE SOAP AND PAPER TOWELL DISPENSERS.
K10	36" x 60" x 34"H SS WORK TABLE WITH LOWER SHELF
K11	12 x 60 S/S DOUBLE OVER-SHELF MOUNTED TO WORK TABLE
K12	35" WIDE, TABLE-TOP SLANTED NON-STICK HOT DOG ROLLER GRILL (50 CAPACITY) W/ BUN WARMER
K13	RETHERMALIZATION CABINET

REFER TO DETAILS D6 AND E6 A593 FOR TYPICAL SMACNA MOUNTING DETAILS WHERE APPLICABLE.

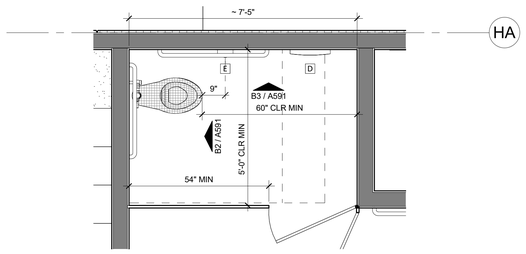

D5 TYP. ENLARGED ADA TOILET STALL

1/2" = 1'-0"

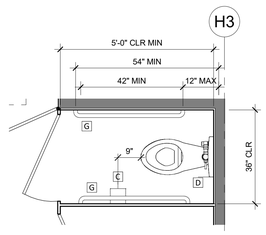

E5 TYP. ENLARGED AMBULATORY STALL

1/2" = 1'-0"

GENERAL NOTES

1. DIMENSIONS TO CENTERLINE OF STUD WALLS ARE TO THE CENTERLINE OF THE STUD. DIMENSIONS TO THE FACE OF STUD WALLS ARE TO FACE OF STUD - UNLESS NOTING 'CLEAR' OR DIMENSIONS TO PLUMBING FIXTURES - THEN DIMENSION IS TO FACE OF FINISH. FACE OF STUD OCCURS ON THE GRID AT INTERIOR WALLS, AND FACE OF SHEATHING AT EXTERIOR WALLS, UNLESS SHOWN OTHERWISE. DIMENSIONS TO FRAMES ARE TO THE CENTERLINE OF FRAME OPENING IN STUD FRAMED WALLS. DIMENSIONS TO ROOF OVERHANGS WILL BE TO EXTERIOR FACE OF FASCIA AT THE END OF THE OVERHANG.

2. FACE OF STUD OCCURS ON THE GRID UNLESS SHOWN OTHERWISE.

3. DIMENSIONS TO ROOF OVERHANG ARE TO EXTERIOR FACE OF STUD AT THE END OF THE OVERHANG.

4. DIMENSIONS TO DOOR / WINDOW FRAMES ARE TO CENTERLINE OF FRAME OPENING IN STUD WALLS.

5. FIELD VERIFY ALL DIMENSIONS TO EXISTING CONDITIONS UPON START OF CONSTRUCTION, AND NOTIFY THE ARCHITECT OF ANY DISCREPANCIES OF DIMENSIONS PRIOR TO ANY WORK IN THE RESPECTIVE AREA.

6. CHANGES IN FLOOR MATERIAL SHALL OCCUR AT THE CENTERLINE OF THE DOOR PANEL (BELOW THE DOOR IN CLOSED POSITION) U.N.O.

7. FOR CONSTRUCTION OF WALLS AT RECESSED CABINETS (I.E.: FEC, ELECTRICAL PANELS, ETC.) SEE DETAIL D2/A-541.

8. MAINTAIN 18" MIN. CLEAR ON PULL SIDE OF ALL INTERIOR DOORS. MAINTAIN 24" MIN. CLEAR ON PULL SIDE OF EXTERIOR DOORS. MAINTAIN 12" CLEAR ON PUSH SIDE OF ALL ACCESSIBLE DOORS WHICH HAVE BOTH CLOSER AND LATCH. REFER TO ACCESSIBILITY DETAILS. REFER TO DOOR SCHEDULE FOR APPLICABLE HARDWARE.

9. COORDINATE ALL OPENING SIZES AND HEAD HEIGHTS WITH SCHEDULES.

10. CONCRETE SLABS SLOPE TO DRAIN, TYP. COORD. W/ PLUMBING.

11. BATT (SOUND) INSULATION SHALL BE INSTALLED TO FILL ALL NEW FRAMED WALL CAVITIES.

12. PROVIDE NEW (OR SUPPLEMENTAL) INSULATION AT ALL ROOF INSULATION TO MAINTAIN A MINIMUM OF R-38 ROOF INSULATION.

13. WALL ASSEMBLIES, REFER TO WALL TYPES ON PAGE A-541

14. REFER TO OVERALL FLOOR PLANS FOR DOOR AND WINDOW TAGS.

LEGEND

- STUD FRAMED WALL. REFER TO STRUCTURAL.
- (1.01) KEYED NOTE. REFER TO KEYED NOTES SCHEDULE. KEYED NOTE TAGS WITHOUT LEADER APPLIES TO THE ENTIRE ROOM OR SURFACE IN WHICH (ON WHICH) THE TAG IS LOCATED. KEYED NOTES MAY SKIP NUMBERS.
- F.E.C. FIRE EXTINGUISHER CABINET; SEMI-RECESSED IN STUD FRAMED WALLS. REFER TO DETAIL D2/A541. EXTINGUISHER TYPE TO BE 2A:10B:C.
- FLOOR DRAIN, COORDINATE W/ PLUMBING. MAINTAIN POSITIVE DRAINAGE AT ALL FLOORS TO DRAIN AT 2% MAXIMUM.
- FLOOR SINK, COORDINATE W/ PLUMBING

(1.00) KEYED NOTES SCHEDULE

4.26 20" WIDE x 48" LONG FIXED ADA BENCH ASSEMBLY. MOUNT WITHIN 2" OF BACK WALL AND 3/4" OF THE LOCKER SIDE. REFER TO ANCHORAGE DETAIL E6/A592.

4.46 6' LONG MOBILE / UNATTACHED ALUMINUM BENCH, TYP. REFER TO SPEC SECTION 10 51 50.

IDENTIFICATION STAMP
DIV. OF THE STATE ARCHITECT
APP: 02-121275 INC:
REVIEWED FOR
SS ☑ FLS ☑ ACS ☑
DATE: 12/15/2023

CALIFORNIA DESIGN WEST ARCHITECTS, Inc.

2100 19th Street
Sacramento, CA 95818

Phone: (916) 446-2466
Fax: (916) 446-5118
Web Page: ca-dw.com

These plans and prints thereof, as instruments of service, are owned by the architect and are for the use on this project only. Reproduction and/or distribution without the prior written consent of the architect is forbidden.

Copyright California Design West Architects, Inc.

ARCHITECT: CONSULTANT:

LICENSED ARCHITECT
MITCHELL A. McALISTER
NO. C 17250
REN. 08-31-2025
STATE OF CALIFORNIA

CONSULTANT:

PROJECT NAME:

BUHACH COLONY HIGH SCHOOL

1800 NORTH BUHACH ROAD
ATWATER, CA 95301

CONCESSIONS/TOILET BUILDINGS, TICKET BOOTH & STADIUM UPGRADES

MERCED UNION HIGH SCHOOL DISTRICT

MERCED COUNTY

KEY PLAN:

SHEET TITLE:

BUILDING H EQUIP. & ACCESSORY SCHEDULES

JOB NUMBER:

SHEET NUMBER:

AH104

DATE:
NOV 17, 2023

REVISION:

C:\Users\atrump\Documents\A22_BCHS-Concessions+ToiletsRoom-HOME - CENTRAL_atrump-2100.rvt

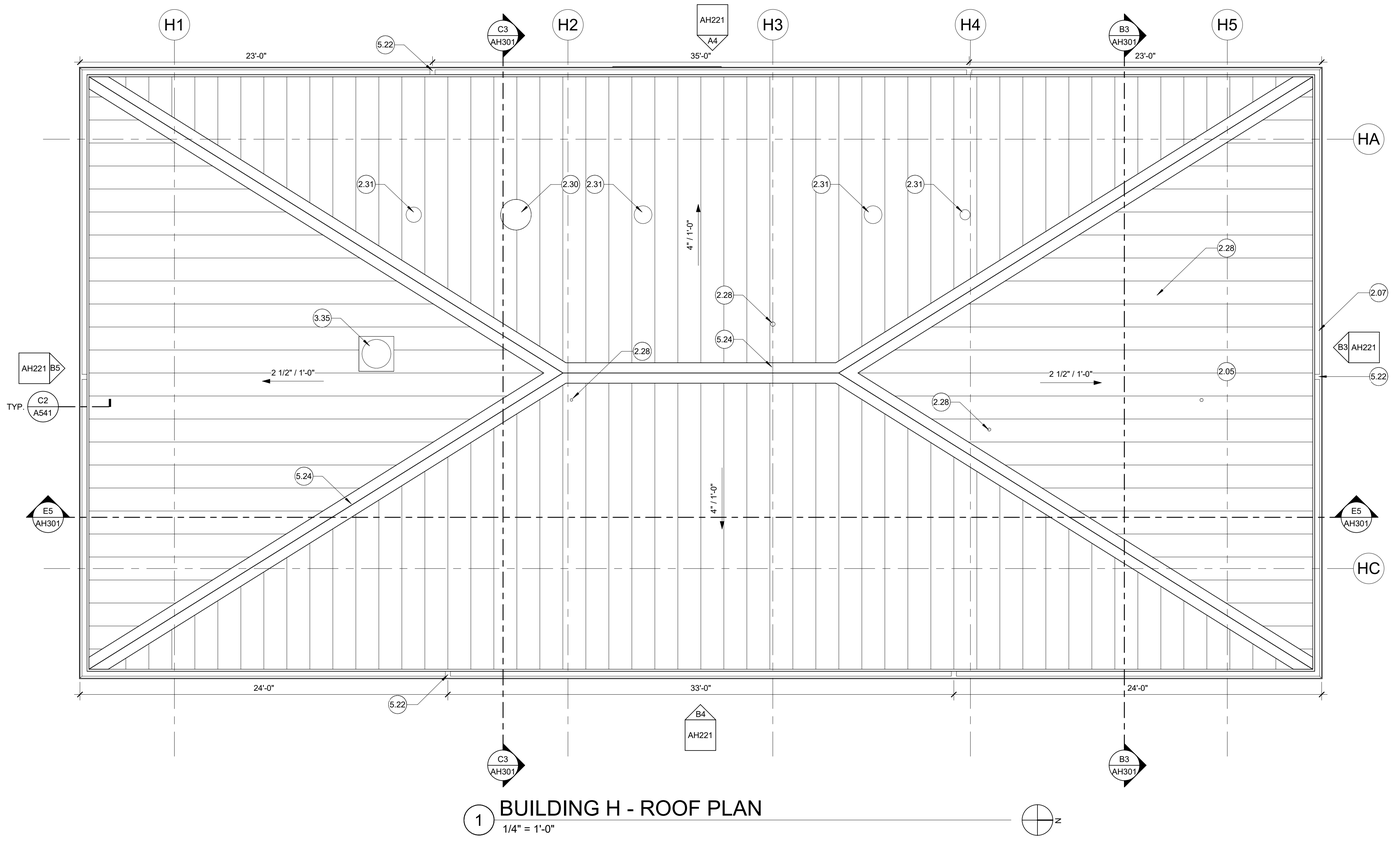

1 BUILDING H - ROOF PLAN

1/4" = 1'-0"

GENERAL NOTES

1. ROOF PLAN INDICATES MAJOR ROOF PENENTRATIONS, AND DOES NOT REPRESENT ALL PENETRATIONS REQUIRED BY EVERY DISCIPLINE / UTILITY. COORDINATE ALL PENETRATIONS WITH EACH DISCIPLINE.
2. MAINTAIN POSITIVE SEPERATION BETWEEN ALL DISSIMILAR METALS. PROVIDE SEALANT AT ALL DISSIMILAR METERIAL CONNECTIONS.
3. MINIMUM ROOF CLASS TO BE TYPE "A" OR ABOVE, SEE SPECIFICATIONS 07 41 13.
4. ROOF SLOPES AS INDICATED BY ROOF SLOPE INDICATORS IN ROOF PLAN.
5. ALL MECHANICAL, ELECTRICAL, AND PLUMBING PENETRATIONS THROUGH ROOFING SHALL HAVE PIPE BOOTS INTEGREAL TO (AND SEALED AROUND) ROOFING ASSEMBLY. SEE SHEET A541 FOR DETAILS. COORDINATE WITH MECHANICAL AND ELECTRICAL.

LEGEND

CLASS A PRE-FINISHED STANDING SEAM METAL ROOFING ASSEMBLY OVER 1" RIGID INSULATION.

1/2" / 12" — DOWN SLOPE OF ROOF OR CRICKET; SLOPE AS INDICATED.

.00 — KEYED NOTE. REFER TO KEYED NOTES SCHEDULE. KEYED NOTE TAGS W/O LEADER APPLIES TO THE ENTIRE ROOM (OR SURFACE IN WHICH (ON WHICH) THE TAG IS LOCATED. KEYED NOTES MAY SKIP NUMBERS.

1.00 KEYED NOTES SCHEDULE

2.05 PRE-FINISHED METAL STANDING SEAM ROOFING ASSEMBLY O/ 1" RIGID INSULATION O/ WEATHER BARRIER, TYP.

2.07 PRE-FINISHED METAL GUTTER ASSEMBLY, TYP.

2.28 PLUMBING VENT THROUGH ROOF, TYP. REFER TO MECHANICAL P2.1 AND P2.2.

2.30 MECHANICAL INTAKE VENT ASSEMBLY. REFER TO MECHANICAL M2.1 AND M2.2 AND DETAIL 1/M6.2.

2.31 MECHANICAL EXHAUST VENT ASSEMBLY THROUGH ROOF, TYP. REFER TO MECHANICAL M2.1 AND M2.2.

3.35 SOLATUBE DAYLIGHT ASSEMBLY. REFER TO SPEC SECTION 08 62 23.

5.22 DOWNSPOUT LOCATION, TYP. REFER TO ELEVATIONS.

5.24 ROOFING ASSEMBLY PRE-FINISHED METAL RIDGE / HIP, TYP. REFER TO DETAIL B4/A541.

IDENTIFICATION STAMP
DIV. OF THE STATE ARCHITECT
APP: 02-121275 INC:
REVIEWED FOR
SS ☑ FLS ☑ ACS ☑
DATE: 12/15/2023

CALIFORNIA DESIGN WEST ARCHITECTS, Inc.

2100 19th Street
Sacramento, CA 95818

Phone: (916) 446-2466
Fax: (916) 446-5118
Web Page: ca-dw.com

These plans and prints thereof, as instruments of service, are owned by the architect and are for the use on this project only. Reproduction and/or distribution without the prior written consent of the architect is forbidden.

Copyright California Design West Architects, Inc.

ARCHITECT: CONSULTANT:

LICENSED ARCHITECT MITCHELL A. MCALISTER LIC. NO. C 17250 REN. 08-31-2025 STATE OF CALIFORNIA

CONSULTANT:

PROJECT NAME:

BUHACH COLONY HIGH SCHOOL

1800 NORTH BUHACH ROAD
ATWATER, CA 95301

CONCESSIONS/TOILET BUILDINGS, TICKET BOOTH & STADIUM UPGRADES

MERCED UNION HIGH SCHOOL DISTRICT

MERCED COUNTY

KEY PLAN:

SHEET TITLE:
BUILDING H - ROOF PLAN

JOB NUMBER:

SHEET NUMBER:
AH161

DATE:
NOV 17, 2023

REVISION:

C:\Users\stump\Documents\A20_BCHS-Concessions-TeamsRoom-HOME - CENTRAL_stump-2100.rvt

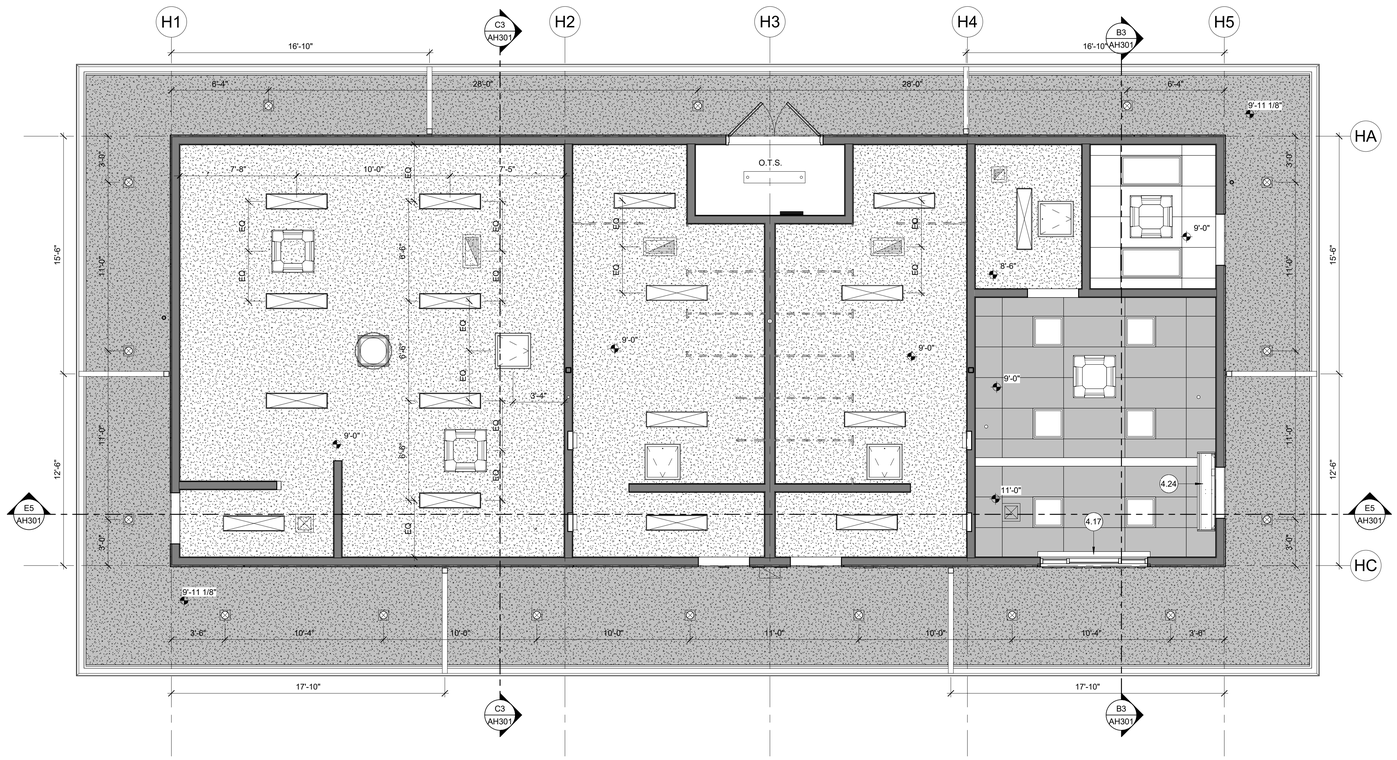

1 BUILDING H - REFLECTED CEILING PLAN
1/4" = 1'-0"

N

GENERAL NOTES

1. REFER TO ROOM FINISH SCHEDULE FOR ADDITIONAL INFORMATION. FOR STANDARD SUSPENSION DETAILS SEE SHEET A581.
2. CEILING SPOT ELEVATIONS ARE ROUNDED OFF FOR CLARITY IN SOME DRAWINGS. RATIONAL CEILING ELEVATION IS TO BOTTOM OF FRAMING.
3. NOT ALL CEILING ACCESS DOORS ARE SHOWN ON PLANS. REFER TO MECHANICAL, PLUMBING & ELECTRICAL DRAWINGS AND SPECIFICATIONS FOR ADDITIONAL CEILINGS ACCESS DOOR LOCATIONS.
4. CEILING GRID LAYOUT TO BE CENTERED IN EACH ROOM, U.O.N.
5. ALL CEILING-MOUNTED FIXTURES (FOR EXAMPLE: LIGHTING, SENSORS, SPEAKERS, ETC.) SHALL BE CENTERED IN ROOM, CENTERED OVER DOOR, OR CENTERED IN ACOUSTICAL PANEL (OR HALF OF 2x4 PANEL) - WHICHEVER IS MOST APPLICABLE. INSTALLER TO VERIFY WITH OWNER REP OR ARCHITECT PRIOR TO FINAL INSTALLATION.
6. CEILING ELEVATION HEIGHT DIMENSIONS ARE RELATIVE TO FINISH FLOOR DIRECTLY BELOW ELEVATION MARKER.

LEGEND

- FULL-HEIGHT FRAMED WALL - EXTENDED TO STRUCTURE / DECK ABOVE.
- 1.01 KEYED NOTE. REFER TO KEYED NOTES SCHEDULE. KEYED NOTE TAGS WITHOUT LEADER APPLIES TO THE ENTIRE ROOM OR SURFACE IN WHICH (ON WHICH) THE TAG IS LOCATED. KEYED NOTES MAY SKIP NUMBERS.
- 2'x4' , 2'x2' RECESSED LIGHT FIXTURE, COORD W/ ELEC.
- 1'x4' SURFACE-MOUNTED LIGHT FIXTURE, COORD W/ ELEC.
- RECESSED LIGHT FIXTURE, COORD. W/ ELECTRICAL.
- EXTERIOR WALL SCONCE LIGHT, REFER TO ELECTRICAL.
- EXHAUST AIR GRILLE, COORD W/ MECH.
- SUPPLY/ RETURN COMBO, COORD. W/ MECH.
- 22" X 30" LOCKING ACCESS PANEL. COORDINATE LOCATIONS REQUIRED WITH M,E,P AND FIRE. REFER TO DETAIL B5/A-581.
- 2'x2' SOLATUBE DIFFUSER LENS.
- 2'-0" x 4'-0" SUSPENDED ASSEMBLY WITH VINYL WASHABLE LAY-IN PANELS. EACH AREA TO HAVE (2) ADJACENT SIDES FIXED TO WALL W/ (2) OPPOSING SIDES 'FLOATING' PER DETAILS ON A-581. TYPICAL STRUTS TO BE PLACED AT 12'-0" O.C. MAXIMUM EACH WAY. ALL LIGHTING FIXTURES IN THIS AREA TO HAVE SHATTER-PROOF LENSES.
- GYP. BD. CEILING O/ 2x6 WD CEILING JOISTS @ 24" O.C. (UNLESS NOTED OTHERWISE). REFER TO STRUCTURAL CEILING FRAMING PLAN A/SH2.1
- PLASTER CEILING ASSEMBLY O/ 2x6 WD CEILING JOISTS @ 24" O.C. (UNLESS OTHERWISE NOTED). REFER TO DETAIL C4/A541. REFER TO STRUCTURAL CEILING FRAMING PLAN A/SH2.1

1.00 KEYED NOTES SCHEDULE

4.17 STAINLESS STEEL OVERHEAD COILING DOOR ASSEMLBY. REFER TO DOOR SCHEDULE.

4.24 FLY FAN ABOVE DOORWAY. REFER TO MECH DETAIL 6/M6.2. REFER TO ELEC.

IDENTIFICATION STAMP
DIV. OF THE STATE ARCHITECT
APP: 02-121275 INC:
REVIEWED FOR
SS ☑ FLS ☑ ACS ☑
DATE: 12/15/2023

CALIFORNIA DESIGN WEST ARCHITECTS, Inc.

2100 19th Street
Sacramento, CA 95818

Phone: (916) 446-2466
Fax: (916) 446-5118
Web Page: ca-dw.com

These plans and prints thereof, as instruments of service, are owned by the architect and are for the use on this project only. Reproduction and/or distribution without the prior written consent of the architect is forbidden.

Copyright California Design West Architects, Inc.

ARCHITECT: CONSULTANT:

LICENSED ARCHITECT
MITCHELL A. McALISTER
No. C 17250
REGISTERED
STATE OF CALIFORNIA

CONSULTANT:

PROJECT NAME:

BUHACH COLONY HIGH SCHOOL

1800 NORTH BUHACH ROAD
ATWATER, CA 95301

CONCESSIONS/TOILET BUILDINGS, TICKET BOOTH & STADIUM UPGRADES

MERCED UNION HIGH SCHOOL DISTRICT

MERCED COUNTY

KEY PLAN:

SHEET TITLE:
BUILDING H - REFLECTED CEILING PLAN

JOB NUMBER:

SHEET NUMBER:
AH181

DATE:
NOV 17, 2023

REVISION:

C:\Users\stump\Documents\A22_BOHS-Concessions+ToiletRoom-HOME - CENTRAL_stump-2100.rvt

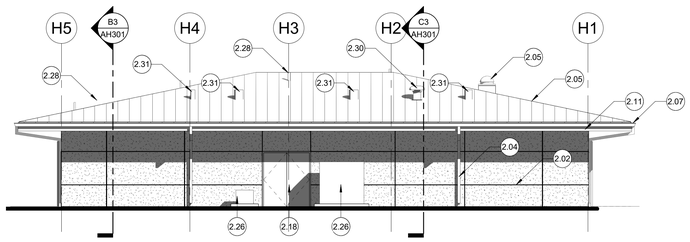

A4 EXTERIOR ELEVATION - WEST
1/8" = 1'-0"

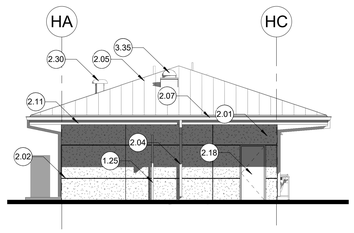

B5 EXTERIOR ELEVATION - SOUTH
1/8" = 1'-0"

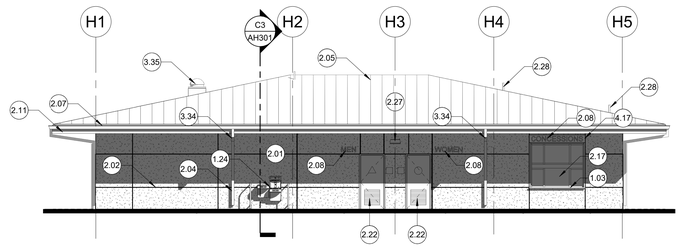

B4 EXTERIOR ELEVATION - EAST
1/8" = 1'-0"

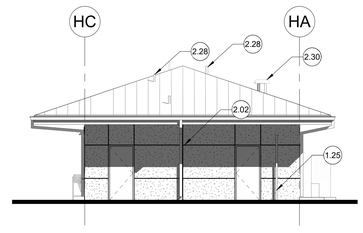

B3 EXTERIOR ELEVATION - NORTH
1/8" = 1'-0"

GENERAL NOTES

1. REFER TO PLANS FOR SCHEDULED DOORS, WINDOWS, FIXTURES AND ACCESSORIES.
2. EXTERIOR VENEER TYPE, TEXTURE, COLORS AND PATTERNS TO MATCH EXISTING.
3. ROOFING COLOR AND PROFILE TO MATCH EXISTING.

1.00 KEYED NOTES SCHEDULE

1.03 BUILT-IN STAINLESS STEEL TRANSACTION COUNTERTOP, TYP. PROVIDE SEAMLESS CLOSURES AT ALL EXPOSED ENDS. REFEER TO DETAIL A4/A571.

1.24 HIGH/LOW + BOTTLE FILLER DRINKING FOUNTAION. PROVIDE GUARD BARS ON BOTH SIDES. COORD WITH ELECTRICAL AND PLUMBING. REFER TO D4/A592 FOR ADDITIONAL INFORMATION.

1.25 SITE FENCE / GATE POST SET WITHIN 4" OF FACE OF BUILDING. REFER TO PROJECT SITE PLAN FOR GATE LOCATION / SCHEDULE. REFER TO STRUCTURAL FOR FOOTING / SLEEVE DETAIL 8/SS.0.

2.01 PLASTER ASSEMBLY, TYP. REFER TO WALL TYPES.

2.02 PLASTER CONTROL JOINT REVEAL, TYP. REFER TO DETAIL D3/A541.

2.04 HD GALVANIZED METAL DOWNSPOUT ASSEMBLY. BOTTOM 8'-0" SHALL BE HEAVY-GUAGE VANDAL RESISTANT. PAINT. REFER TO D4/A541. PROVIDE A CLEANOUT 'T' AT GRADE AND CONNECT TO STROM DRAIN. REFER TO CIVIL DETAIL 11/C1.4.

2.05 PRE-FINISHED METAL STANDING SEAM ROOFING ASSEMBLY O/ 1" RIGID INSULATION O/ WEATHER BARRIER, TYP.

2.07 PRE-FINISHED METAL GUTTER ASSEMBLY, TYP.

2.08 8" HIGH CAST-ALUMINUM RAISED DIMENSIONAL LETTERING.

2.11 PRE-FINISHED METAL FASCIA, REFER TO DETAIL C2/A541.

2.17 SCHEDULED WINDOW ASSEMBLY, REFER TO WINDOW TYPES ON A571.

2.18 SCHEDULED DOOR ASSEMBLY. REFER TO PLAN AND DOOR SCHEDULE.

2.22 DOOR LOUVER ASSEMBLY. REFER TO MECH.

2.26 MECHANICAL CONDENSING UNIT OVER CONCRETE HOUSEKEEPING PAD. REFER TO MECHANICAL DETAIL 5/M6.2. SIZE OF PAD TO BE 8" LARGER THAN THE UNIT ON THE THREE FRONT SIDES (6" MIN EDGE-DISTANCE TO MOUNTING BOLTS). EXTEND BACK EDGE OF PAD TO BUILDING FOUNDATION.

2.27 WALL LIGHT SCONCE. REFER TO ELECTRICAL.

2.28 PLUMBING VENT THROUGH ROOF, TYP. REFER TO MECHANICAL P2.1 AND P2.2.

2.30 MECHANICAL INTAKE VENT ASSEMBLY. REFER TO MECHANICAL M2.1 AND M2.2 AND DETAIL 1/M6.2.

2.31 MECHANICAL EXHAUST VENT ASSEMBLY THROUGH ROOF, TYP. REFER TO MECHANICAL M2.1 AND M2.2.

3.34 PROVIDE ADDED DOWNSPOUT SUPPORT AT MIDDLE-SPAN OF TWO FRONT DOWNSPOUTS AT 8' SOFFITS.

3.35 SOLATUBE DAYLIGHT ASSEMBLY. REFER TO SPEC SECTION 08 62 23.

4.17 STAINLESS STEEL OVERHEAD COILING DOOR ASSEMLBY. REFER TO DOOR SCHEDULE.

IDENTIFICATION STAMP
DIV. OF THE STATE ARCHITECT
APP: 02-121275 INC:
REVIEWED FOR
SS ☑ FLS ☑ ACS ☑
DATE: 12/15/2023

CALIFORNIA DESIGN WEST ARCHITECTS, Inc.

2100 19th Street
Sacramento, CA 95818

Phone: (916) 446-2466
Fax: (916) 446-5118
Web Page: ca-dw.com

These plans and prints thereof, as instruments of service, are owned by the architect and are for the use on this project only. Reproduction and/or distribution without the prior written consent of the architect is forbidden.

Copyright California Design West Architects, Inc.

ARCHITECT: CONSULTANT:

LICENSED ARCHITECT MITCHELL A. McALISTER No. C-17250 STATE OF CALIFORNIA

CONSULTANT:

PROJECT NAME:

BUHACH COLONY HIGH SCHOOL

1800 NORTH BUHACH ROAD
ATWATER, CA 95301

CONCESSIONS/TOILET BUILDINGS, TICKET BOOTH & STADIUM UPGRADES

MERCED UNION HIGH SCHOOL DISTRICT

MERCED COUNTY

KEY PLAN:

SHEET TITLE:
BUILDING H - EXTERIOR ELEVATIONS

JOB NUMBER:

SHEET NUMBER:
AH221

DATE:
NOV 17, 2023

REVISION:

C:\Users\ktrump\Documents\A22_BCHS-Concessions+TeamsRoom-HOME - CENTRAL_ktrump-2100.rvt

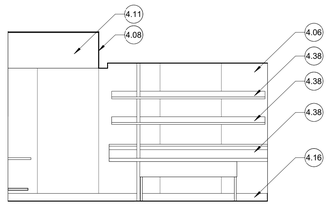

A5 SNACK BAR - REAR WALL
1/4" = 1'-0"

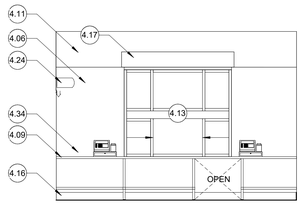

A4 SNACK BAR - CONCESSIONS SERVICE
1/4" = 1'-0"

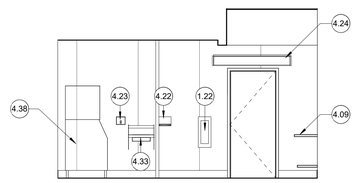

A2 SNACK BAR - ENTRY WALL
1/4" = 1'-0"

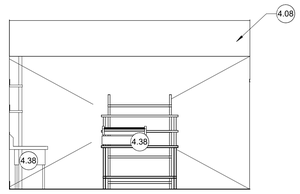

B4 SNACK BAR - ISLAND
1/4" = 1'-0"

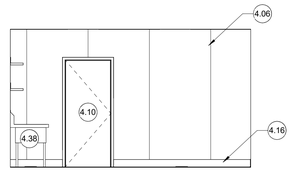

B3 SNACK BAR - RIGHT WALL
1/4" = 1'-0"

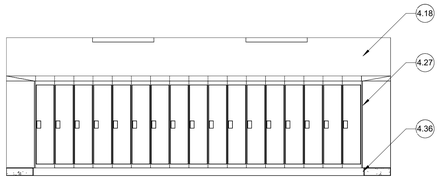

C6 HOME TEAM ROOM - LEFT WALL
1/4" = 1'-0"

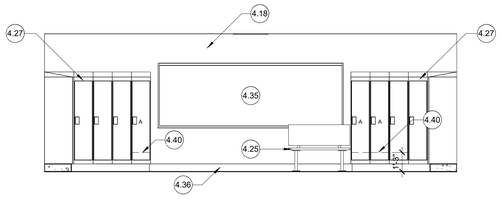

C4 HOME TEAM ROOM - FRONT WALL
1/4" = 1'-0"

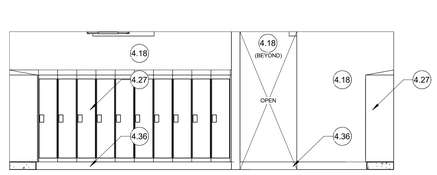

C3 HOME TEAM ROOM - RIGHT WALL
1/4" = 1'-0"

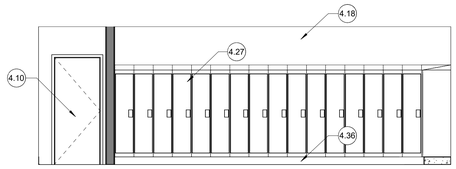

D4 HOME TEAM ROOM - REAR WALL
1/4" = 1'-0"

GENERAL NOTES

1. ALL WALL-HUNG CABINETS, FIXTURES, EQUIPMENT TO BE FASTENED TO WALL PER TYPICAL MOUNTING DETAILS ON A592.

2. ALL FLOOR SUPPORED STORAGE RACKS, CABINETS, AND BOOK STACKS SHALL BE FASTENED TO WALL SEE TYPICAL MOUNTING DETAILS ON A592.

3. ALL COUNTER TOPS AND MILLWORK EXPOSED SURFACES TO BE P-LAM, UNLESS NOTED OTHERWISE.

4. HOLES INDICATED IN MILLWORK COUNTERTOPS TO BE SIZE INDICATED, WITH PREFAB HOLE FINISH AND COVER LOCATION INDICATED ARE TO BE 2" FROM BACK OF SURFACE.

5. PROVIDE BLOCKING AT ALL STUD LOCATIONS FOR ATTACHMENT OF MILLWORK AS INDICATED ON SHEET A592. PROVIDE ALL OTHER ITEMS ON THESE SHEETS PER MANUFACTURERS REQUIREMENTS.

6. ALL MARKERBOARDS SHALL BE WALL MOUNTED UNLESS OTHERWISE NOTED.

7. ALL ACOUSTICAL PANEL LAYOUTS: EQ = EQUAL 4'-0" WIDE PANELS. REM = REMAINDER OF WIDTH REQUIRED. AT FULL WALL LAYOUTS, THE TYPICAL LAYOUT OF THE 4'-0" WIDE PANELS WILL ORIGINATE @ THE CENTER OF WALL, WITH REMAINING PANELS AT EACH END OF WALL TO BE EQUAL IN WIDTH.

8. REFER TO PLANS FOR SCHEDULED DOORS, WINDOWS, FIXTURES AND ACCESSORIES.

9. REFER TO SHEET A581 FOR TYPICAL SUSPENDED CEILING ASSEMBLY DETAILS.

10. TILE WALL PATTERNS INDICATE WALL TILE LOCATIONS AND HEIGHT ONLY, AND DO NOT REPRESENT ACTUAL WALL TILE PATTERN. REFER TO SPEC SECTION 09 30 00.

1.01 KEYED NOTE. REFER TO KEYED NOTES SCHEDULE. KEYED NOTE TAGS WITHOUT LEADER APPLIES TO THE ENTIRE ROOM OR SURFACE IN WHICH (ON WHICH) THE TAG IS LOCATED. KEYED NOTES MAY SKIP NUMBERS.

1.00 - KEYED NOTES SCHEDULE

1.22 SEMI-RECESSED FIRE EXTINGUISHER CABINET.

4.06 FRP PANEL ASSEMBLY WITH ALUMINUM TOP J-TRIM (WHERE APPLICABLE) AND ALUMINUM H-TRIM JOINTS. FRP TO BE MOUNTED 6" FROM FLOOR OVERLAPPING EPOXY BASE WITH NO BOTTOM TRIM. REFER TO DETAILS.

4.08 EPOXY-PAINTED GYP BD BULKHEAD.

4.09 STAINLESS STEEL COUNTERTOP WITH FIXED UNDERSHELF WHERE INDICATED. REFER TO PLAN AND ELEVATIONS FOR LOCATIONS.

4.10 SCHEDULED DOOR ASSEMBLY. REFER TO PLAN AND DOOR SCHEDULE.

4.11 EPOXY-PAINTED GYP BD.

4.13 SCHEDULED WINDOW ASSEMBLY. REFER TO WINDOW TYPE.

4.16 6" COVED EPOXY BASE, TYP. REFER TO DETAIL A4/A592.

4.17 STAINLESS STEEL OVERHEAD COILING DOOR ASSEMLBY. REFER TO DOOR SCHEDULE.

4.18 PAINTED GYP BD., TYP.

4.22 PAPER TOWEL DISPENSER.

4.23 SOAP DISPENSER, TYP.

4.24 FLY FAN ABOVE DOORWAY. REFER TO MECH DETAIL 6/M6.2. REFER TO ELEC.

4.25 20" WIDE x 48" LONG FIXED ADA BENCH ASSEMBLY WITH INTEGRAL BACKREST. FACE OF BACK REST TO BE SET IN FRONT OF MARKERBOARD TRAY ASSEMBLY. MOUNT BENCH WITHIN 3/4" OF THE LOCKERS AT END. REFER TO ANCHORAGE DETAIL E6/A592.

4.27 15" WIDE x 22" DEEP SINGLE-TIER LOCKER ASSEMBLY, TYP. HOME-SIDE. SET OVER 6" CONCRETE BASE. PROVIDE SLOPED TOP, TYP. PROVIDE CLOSURE FILLERS AT CORNERS AND CORNER TOPS, TYP. REFER TO EQUIPMENT & ACCESSORY SCHEDULE PLAN AH104 FOR LOCKER TYPE, QUANTITY, AND ACCESSIBILITY REQUIREMENTS. REFER TO DETAILS D2 AND E2 / A592.

4.33 S/S ADA HAND-WASH SINK WITH INTEGRAL SPLASH GUARDS. REFER TO D3/A591. REFER TO MECHANICAL.

4.34 4" HIGH S/S BACKSPLASH, TYP.

4.35 12' LONG WHITEBOARD ASSEMBLY.

4.36 6" RUBBER BASE, TYP.

4.38 SCHEDULED EQUIPMENT. REFER TO PLAN. REFER TO MECANICAL AND ELECTRICAL.

4.40 FIXED LOWER ACCESSIBLE SHELF @ 15" ABOVE FINSIH FLOOR. REFER TO ACCESSORY SCHEDULE PLAN FOR ACESSIBLE LOCKER LOCATIONS.

IDENTIFICATION STAMP
DIV. OF THE STATE ARCHITECT
APP: 02-121275 INC:
REVIEWED FOR
SS ☑ FLS ☑ ACS ☑
DATE: 12/15/2023

CALIFORNIA DESIGN WEST ARCHITECTS, Inc.

2100 19th Street
Sacramento, CA 95818

Phone: (916) 446-2466
Fax: (916) 446-5118
Web Page: ca-dw.com

These plans and prints thereof, as instruments of service, are owned by the architect and are for the use on this project only. Reproduction and/or distribution without the prior written consent of the architect is forbidden.

Copyright California Design West Architects, Inc.

ARCHITECT: CONSULTANT:

LICENSED ARCHITECT
MITCHELL A. MCALISTER
NO. C 17250
REN. 08-31-2025
STATE OF CALIFORNIA

CONSULTANT:

PROJECT NAME:

BUHACH COLONY HIGH SCHOOL

1800 NORTH BUHACH ROAD
ATWATER, CA 95301

CONCESSIONS/TOILET BUILDINGS, TICKET BOOTH & STADIUM UPGRADES

MERCED UNION HIGH SCHOOL DISTRICT

MERCED COUNTY

KEY PLAN:

SHEET TITLE:

BUILDING H - INTERIOR ELEVATIONS

JOB NUMBER:	SHEET NUMBER:
DATE: NOV 17, 2023	**AH291**
REVISION:	

C:\Users\strump\Documents\A22_BCHS-Concessions+ToiletsRoom+HOME - CENTRAL_strump-2100.rvt

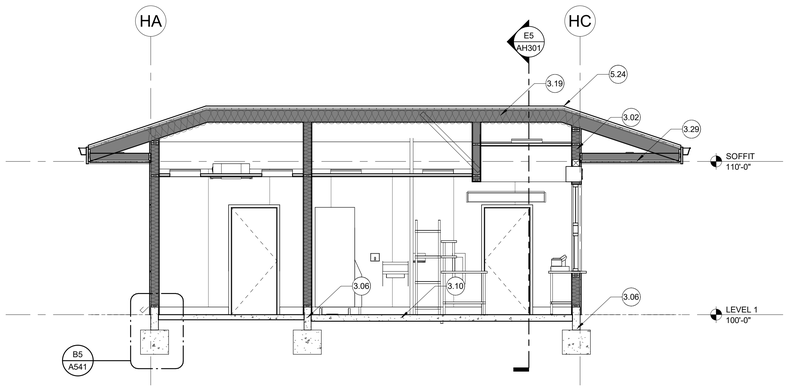

B3 HOME BUILDING - LATERAL SECTION @ CONCESSIONS
1/4" = 1'-0"

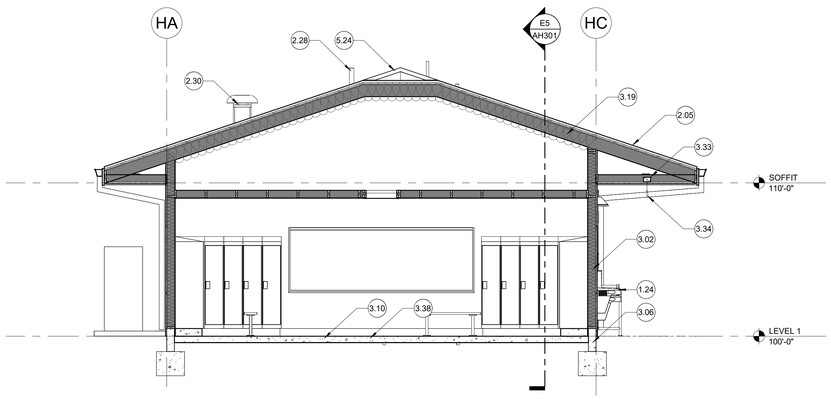

C3 HOME BUILDING - LATERAL SECTION @ TEAMS
1/4" = 1'-0"

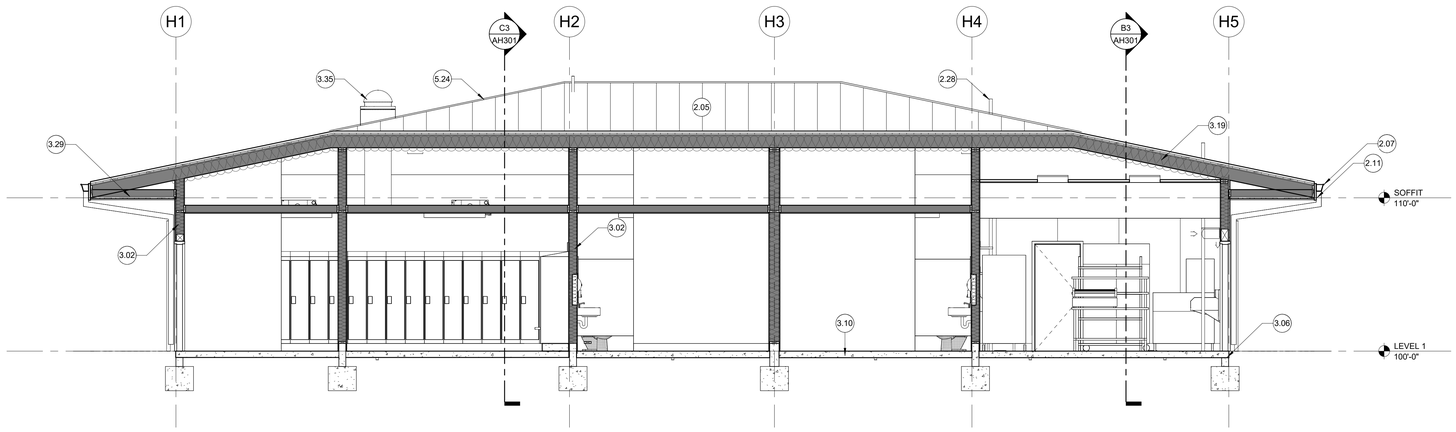

E5 HOME BUILDING - LONGITUDINAL SECTION
1/4" = 1'-0"

GENERAL NOTES

1. REFER TO PLANS FOR SCHEUDLED FIXTURES AND ACCESSORIES.

1.00 KEYED NOTES SCHEDULE

1.24 HIGH/LOW + BOTTLE FILLER DRINKING FOUNTAION. PROVIDE GUARD BARS ON BOTH SIDES. COORD WITH ELECTRICAL AND PLUMBING. REFER TO D4/A592 FOR ADDITIONAL INFORMATION.

2.05 PRE-FINISHED METAL STANDING SEAM ROOFING ASSEMBLY O/ 1" RIGID INSULATION O/ WEATHER BARRIER, TYP.

2.07 PRE-FINISHED METAL GUTTER ASSEMBLY, TYP.

2.11 PRE-FINISHED METAL FASCIA, REFER TO DETAIL C2/A541.

2.28 PLUMBING VENT THROUGH ROOF, TYP. REFER TO MECHANICAL P2.1 AND P2.2.

2.30 MECHANICAL INTAKE VENT ASSEMBLY. REFER TO MECHANICAL M2.1 AND M2.2 AND DETAIL 1/M6.2.

3.02 R-19 BATT INSULATION FILLING ALL STUD CAVITIES.

3.06 FOOTING / FOUNDATION PER STRUCTURAL.

3.10 SLOPED CONC. SLAB OVER VAPOR BARRIER OVER CRUSHED AGGREGATE OVER PREPPED SUB GRADE PER GEOTECH. REFER TO STRUCTURAL FOR THICKNESSES AND REINFORCING.

3.19 R-25 MIN. BATT INSULATION IN ALL ROOFING CAVATIES, TYP.

3.29 PLASTER SOFFIT ASSEMBLY O/ WOOD SHEATHING O/ 2x6 WD CEILING JOISTS @ 24" O.C. UNLESS OTHERWISE NOTED. COORD. BRACING W/ STRUCT. REFER TO DETAIL C4/A541. REFER TO STRUCTURAL CEILING FRAMING PLAN A/SH2.1 AND STRUCTRUAL DETAIL 7/S4.0

3.33 ADD 4x6 BLOCKING AT TWO FRONT DOWNSPOUT LOCATIONS AT MID-POINT OF SOFFIT TO PROVIDE ADDED SUPPORT FOR LONGER HORIZONTAL SECTION OF DOWNSPOUT ASSEMBLY. END-NAIL WITH (3) 16d NAILS AT EACH END.

3.34 PROVIDE ADDED DOWNSPOUT SUPPORT AT MIDDLE-SPAN OF TWO FRONT DOWNSPOUTS AT 8' SOFFITS.

3.35 SOLATUBE DAYLIGHT ASSEMBLY. REFER TO SPEC SECTION 08 62 23.

3.38 5" CONC. SLAB OVER VAPOR BARRIER OVER 4" CRUSHED AGGREGATE OVER PREPPED SUB GRADE PER GEOTECH. REFER TO BUILDING STRUCTURAL SLAB PLANS ON SH2.0.

5.24 ROOFING ASSEMBLY PRE-FINISHED METAL RIDGE / HIP, TYP. REFER TO DETAIL B4/A541.

IDENTIFICATION STAMP
DIV. OF THE STATE ARCHITECT
APP: 02-121275 INC:
REVIEWED FOR
SS ☑ FLS ☑ ACS ☑
DATE: 12/15/2023

CALIFORNIA DESIGN
WEST ARCHITECTS, Inc.

2100 19th Street
Sacramento, CA 95818

Phone: (916) 446-2466
Fax: (916) 446-5118
Web Page: ca-dw.com

These plans and prints thereof, as instruments of service, are owned by the architect and are for the use on this project only. Reproduction and/or distribution without the prior written consent of the architect is forbidden.

Copyright California Design West Architects, Inc.

ARCHITECT: CONSULTANT:

LICENSED ARCHITECT
MITCHELL A. MCALISTER
NO. C 17250
REN. 08-31-2025
STATE OF CALIFORNIA

CONSULTANT:

PROJECT NAME:

BUHACH COLONY HIGH SCHOOL

1800 NORTH BUHACH ROAD
ATWATER, CA 95301

CONCESSIONS/TOILET BUILDINGS, TICKET BOOTH & STADIUM UPGRADES

MERCED UNION HIGH SCHOOL DISTRICT

MERCED COUNTY

KEY PLAN:

SHEET TITLE:
BUILDING H - SECTIONS

JOB NUMBER:

SHEET NUMBER:
AH301

DATE:
NOV 17, 2023

REVISION:

C:\Users\stump\Documents\A2Q_BCHS-Concessions+TeamsRoom+HOME - CENTRAL_stump-2100.rvt

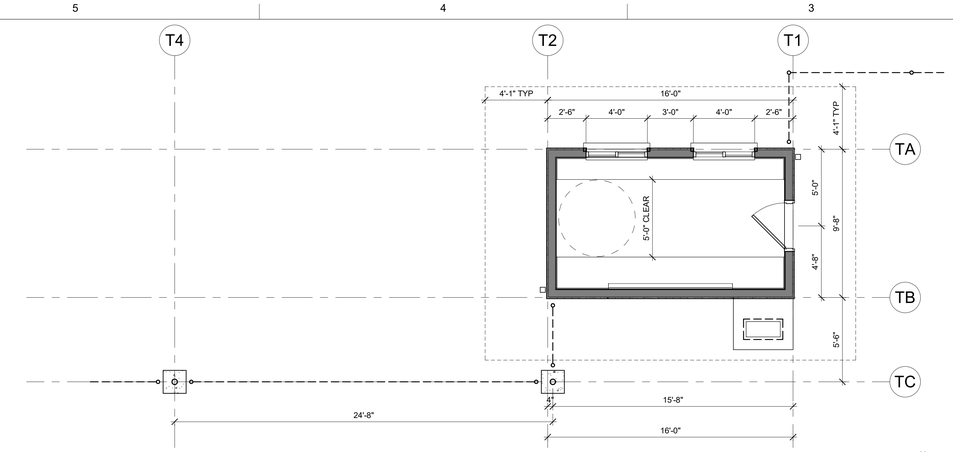

2 BUILDING T - DIMENSION PLAN
1/4" = 1'-0"

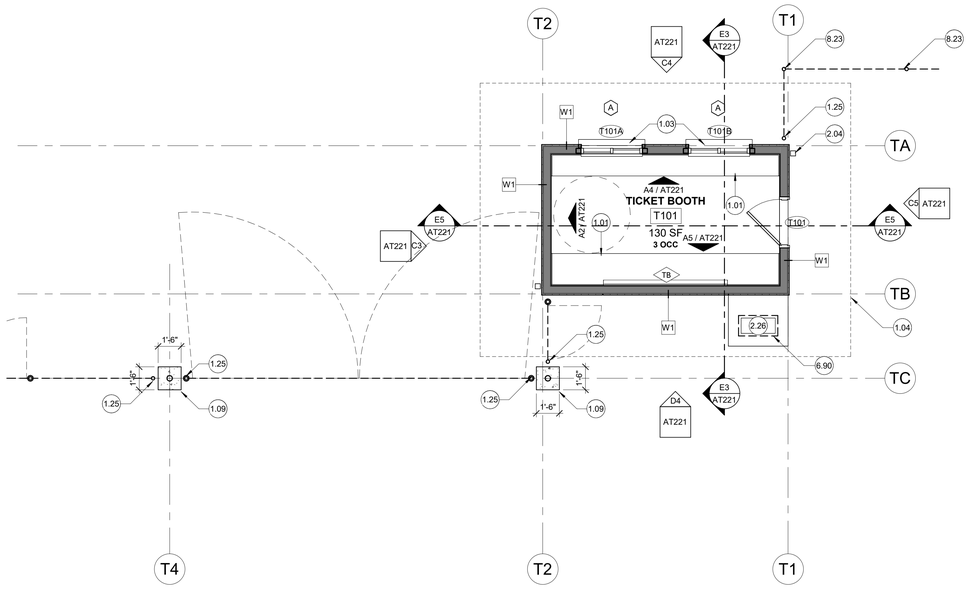

1 BUILDING T - TICKET BOOTH FLOOR PLAN
1/4" = 1'-0"

ROOM FINISH SCHEDULE

ROOM #	ROOM NAME	FLOOR FINISH	BASE FINISH	WALLS				CEILING FINISH	REMARKS	ROOM #
				NORTH	EAST	SOUTH	WEST			
LEVEL 1										
T101	TICKET BOOTH	F1	B1	W1	W1	W1	W1	C1		T101

FINISH SCHEDULE LEGEND

FLOOR/ BASE		BASE		WALLS / WAINSCOT		CEILING	
F1	SEALED CONCRETE FLOOR - SMOOTH TROWEL FINISH	B1	4" RUBBER BASE	W1	PAINTED GYP. BD.	C1	1'x1' ADHERED ACOUSTICAL TILES OVER GYP. BD.

DOOR SCHEDULE

WT	DOOR (2) TYPE	WIDTH	HEIGHT	(3) THICKNESS	(4) MATERIAL	(5) GLAZING	FRAME (6) TYPE	FRAME (7) MATERIAL	(8) DETAILS HEAD	(8) DETAILS JAMB	(8) DETAILS SILL	(9) FIRE RATING	(10) HARDWARE	(11) SIGNAGE	(12) REMARKS	DOOR #
LEVEL 1																
T101	A	3'-0"	7'-0"	1 3/4"	HMP	NA	1	HMP	D3/A571	D4/A571	D2/A571	-	2.2	1.2	a	T101
T101A	E	4'-0"	4'-2"	3/4"	SS	NA	4	SS	A5/A571	D1/A571	B4A571	-	11.1	5	b	T101A
T101B	E	4'-0"	4'-2"	3/4"	SS	NA	4	SS	A5/A571	D1/A571	B4/A571	-	11.1	5	b	T101B

DOOR SCHEDULE GENERAL NOTES:

1. REFER TO DOOR SCHEDULE INFO LEGEND TO THE RIGHT FOR MORE DETAILED INFORMATION ON EACH NUMBERED COLUMN HEADING SHOWN IN BOLD.
2. PROVIDE CONTINUOUS SEALANT AT ALL JOINTS OF ALL DISSIMILAR MATERAL CONNECTIONS.
3. GYP BD SHALL BE SEATED MIN 1/2" INTO METAL FRAMES, TYP.
4. WALL FINISHES SHALL BE SET WITHIN THE THROAT OF THE DOOR FRAMES, TYP.
5. FOR OPERABLE WINDOW LOCATIONS, SEE FRAME TYPE AND/OR SEE ELEVATIONS. OPERATING PANE/DIRECTION INDICATED BY ARROW.
6. FOR ANCHORING OF HM FRAMES, SEE DETAILS C2, C3 AND C4/ A571.
7. THE CONTRACTOR IS TO FILED VERIFY ALL FRAME DIMENSIONS PRIOR TO ORDERING.

KEYED NOTES SCHEDULE

1.00

1.01 BUILT-IN PLAM CASEWORK, TYP. REFER TO ELEVATIONS.

1.03 BUILT-IN STAINLESS STEEL TRANSACTION COUNTERTOP, TYP. PROVIDE SEAMLESS CLOSURES AT ALL EXPOSED ENDS. REFEER TO DETAIL A4/A571.

1.04 ROOF OVERHANG ABOVE, TYP. REFER TO DIMENSION PLANS.

1.09 PLASTER FINISH COAT OVER CONCRETE LIGHT POLE BASE PLINTH. REFER TO STRUCTURAL DETAIL 7/S5.0.

1.25 SITE FENCE / GATE POST SET WITHIN 4" OF FACE OF BUILDING. REFER TO PROJECT SITE PLAN FOR GATE LOCATION / SCHEDULE. REFER TO STRUCTURAL FOR FOOTING / SLEEVE DETAIL 8/S5.0.

2.04 HD GALVANIZED METAL DOWNSPOUT ASSEMBLY. BOTTOM 8'-0" SHALL BE HEAVY-GUAGE VANDAL RESISTANT. PAINT. REFER TO D4/A541. PROVIDE A CLEANOUT 'T' AT GRADE AND CONNECT TO STROM DRAIN. REFER TO CIVIL DETAIL 11/C1.4.

2.26 MECHANICAL CONDENSING UNIT OVER CONCRETE HOUSEKEEPING PAD. REFER TO MECHANICAL DETAIL 5/M6.2. SIZE OF PAD TO BE 8" LARGER THAN THE UNIT ON THE THREE FRONT SIDES (6" MIN EDGE-DISTANCE TO MOUNTING BOLTS). EXTEND BACK EDGE OF PAD TO BUILDING FOUNDATION.

6.90 PROVIDE COMMERCIAL GRADE, POWDER-COATED EXPANDED METAL HINGED LOCKING CAGE ENCLOSURE AROUND MECHANICAL COMPRESSOR UNIT. ENCLOSURE TO BE 38"L x 22"W x 28"H. REFER TO DETAIL 1/M6.1 FOR HOUSEKEEPING PAD. HOUSEKEEPING PAD TO BE LARGER THE ENCLOSURE AT THE FRONT THREE SIDES, AND SHALL EXTEND TO THE BUILDING ON THE BACK SIDE (APPROXIMATELY 38"W x 54"L). BOLT ENCLOSURE TO CONCRETE HOUSEKEEPING PAD WITH (4) 3/8" DIAMETER STAINLESS STEEL HILTI KB-TZ2 304. REFER TO B/S1.0 FOR EMBED, INSTALLATION TORQUE AND ESR REPORT NUMBER. LOCATE BOLTS MINIMUM 6" FROM EDGE OF CONCRETE PAD, TYP. CONTRACTOR TO COORDINATE SIZE OF PAD WITH SELECTED / MANUFACTURED ENCLOSURE ASSEMBLY. ENCLOSURE ASSEMBLY SHALL NOT EXCEED 400#.

8.23 SITE FENCING / GATE ASSEMBLY. REFER TO SITE PLAN FOR KEYED NOTES AND GATE SCHEDULE. REFER TO SHEET AS502 FOR REFERENCED DETAILS.

GENERAL NOTES

1. DIMENSIONS TO CENTERLINE OF STUD WALLS ARE TO THE CENTERLINE OF THE STUD. DIMENSIONS TO THE FACE OF STUD WALLS ARE TO FACE OF STUD - UNLESS NOTING 'CLEAR' DIMENSION OR DIMENSION TO PLUMBING FIXTURE WHEN DIMENSION IS TO FACE OF FINISH. FACE OF STUD OCCURS ON THE GRID UNLESS SHOWN OTHERWISE. DIMENSIONS TO FRAMES ARE TO THE CENTERLINE OF FRAME OPENING IN STUD FRAMED WALLS. DIMENSIONS TO ROOF OVERHANGS WILL BE TO EXTERIOR FACE OF FASCIA AT THE END OF THE OVERHANG.
2. FIELD VERIFY ALL DIMENSIONS TO EXISTING CONDITIONS - NOTIFY ARCHITECT OF ANY DISCREPANCIES PRIOR TO ANY WORK IN THAT AREA.
3. CHANGES IN FLOOR MATERIAL SHALL OCCUR AT THE CENTERLINE OF THE DOOR PANEL (BELOW THE DOOR IN CLOSED POSITION) U.N.O.
4. FOR CONSTRUCTION OF WALLS AT RECESSED CABINETS (I.E.: FEC, ELECTRICAL PANELS, ETC.) SEE DETAIL D2/A-541.
5. ALL DOORS TO PROVIDE 18" MIN. CLEAR ON PULL SIDE INTERIOR AND 24" MIN. CLEAR ON EXTERIOR, 12" CLEAR ON PUSH SIDE OF ACCESSIBLE DOORS WITH CLOSER AND LATCHES. SEE ACCESSIBILITY DETAILS. REFER TO DOOR SCHEDULE FOR APPLICABLE HARDWARE.
6. COORDINATE ALL OPENING SIZES AND HEAD HEIGHTS WITH SCHEDULES.
7. BATT (SOUND) INSULATION SHALL BE INSTALLED TO FILL ALL NEW FRAMED WALL CAVITIES.
8. REFER TO SITE PLAN FOR SCHEDULED GATES.

LEGEND

FULL-HT STUD FRAMED BEARING WALL. REFER TO STRUCTURAL FRAMING PLAN ST2.1.

1.01 KEYED NOTE. REFER TO KEYED NOTES SCHEDULE. KEYED NOTE TAGS WITHOUT LEADER APPLIES TO THE ENTIRE ROOM OR SURFACE IN WHICH (ON WHICH) THE TAG IS LOCATED. KEYED NOTES MAY SKIP NUMBERS.

W1 WALL TYPE AS INDICATED. REFER TO SHEET A541.

1t ALUMINUM WINDOW FRAMES AS INDICATED. REFER TO SHEET A571.

DOOR SCHEDULE INFO

IF A '-' IS IN THE SCHEDULE BOX, THAT ITEM IS NOT APPLCIABLE TO THE SPECIFIED DOOR.

(2) DOOR TYPES:

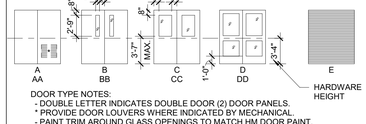

DOOR TYPE NOTES:
- DOUBLE LETTER INDICATES DOUBLE DOOR (2) DOOR PANELS.
- PROVIDE DOOR LOUVERS WHERE INDICATED BY MECHANICAL.
- PAINT TRIM AROUND GLASS OPENINGS TO MATCH HM DOOR PAINT.

(3) THICKNESS:
THICKNESS INDICATES ITS NOMINAL SIZE
(4) CONSTRUCTION/ FINISH:
SCL = SOLID CORE, PLASTIC LAMINATE FINISH
AL = ALUMINUM WITH GLASS
HMP = HOLLOW METAL, PAINTED
HMIP = HOLLOW METAL, INSULATED, PAINTED
SS = STAINLESS STEEL
(5) GLASS:
SG = SAFETY GLASS (TEMPERED OR LAMINATED)
SGI = SAFETY GLASS, INSULATED (TEMPERED OR LAMINATED)
SGR = SAFETY GLASS - RATED

(6) FRAME TYPES: HOUSING MOUNTED WITHIN WALL

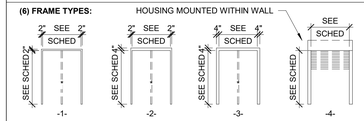

DOOR TYPE NOTES:
** REFER TO WINDOW TYPES, SHEET A571 FOR STOREFRONT FRAME TYPE.

(7) FRAME MATERIAL:
AL = ALUMINUM
HMP = HOLLOW METAL - PAINTED
HMPC = HOLLOW METAL - POWDER-COAT PAINTED
SS = STAINLESS STEEL
SP = SPECIAL (REFER TO SPECIFICATIONS)
(8) DETAIL NUMBER:
INDICATES DETAIL(S) SHOWN ON SHEET INDICATED
(9) RATING:
20, 45, 60, ETC INDICATES RATED DOOR ASSEMBLY FIRE-RATING IN MINUTES
(10) HARDWARE:
HARDWARE GROUP #. REFER TO SPEC SECTION 08 71 00 FOR HARDWARE GROUPS.
(11) SIGNAGE:
1, = ROOM IDENTIFICATION SIGNAGE. REFER TO DTL. C1/A591.
2, = ROOM IDENTIFICATION SIGNAGE (BOTH SIDES). REFER TO DTL. C1/A591.
3, = N/A
4, = N/A
5, = DIMENSIONAL LETTERS, REFER TO SPEC SECTION 10 14 23. REFER TO BUILDING ELEVATION.
(12) REMARKS:
a, = PROVIDE POWER FOR ACCESS CONTROLS. REFER TO HARDWARE GROUPS NOTED IN SPEC SECTION 08 71 00, AND TO SPEC SECTION 28 15 00.
b, = REFER TO WINDOW TYPES, SHEET A571 FOR ALUMINUM FRAME TYPE.

IDENTIFICATION STAMP
DIV. OF THE STATE ARCHITECT
APP: 02-121275 INC:
REVIEWED FOR
SS ☑ FLS ☑ ACS ☑
DATE: 12/15/2023

CALIFORNIA DESIGN
WEST ARCHITECTS, Inc.

2100 19th Street
Sacramento, CA 95818

Phone: (916) 446-2466
Fax: (916) 446-5118
Web Page: ca-dw.com

These plans and prints thereof, as instruments of service, are owned by the architect and are for the use on this project only. Reproduction and/or distribution without the prior written consent of the architect is forbidden.

Copyright California Design West Architects, Inc.

ARCHITECT: CONSULTANT:

LICENSED ARCHITECT
MITCHELL A. MCALISTER
No. C-17250
REN: 08-31-2025
STATE OF CALIFORNIA

CONSULTANT:

PROJECT NAME:

BUHACH COLONY HIGH SCHOOL

1800 NORTH BUHACH ROAD
ATWATER, CA 95301

CONCESSIONS/TOILET BUILDINGS, TICKET BOOTH & STADIUM UPGRADES

MERCED UNION HIGH SCHOOL DISTRICT

MERCED COUNTY

KEY PLAN:

SHEET TITLE:
DIMENSION PLAN & FLOOR PLAN - TICKET BUILDING

JOB NUMBER:
SHEET NUMBER:
AT101

DATE: NOV 17, 2023

REVISION:

C:\Users\stump\Documents\A2Q_BCHS_TicketBuilding+Entryway - CENTRAL_stump-2100.rvt

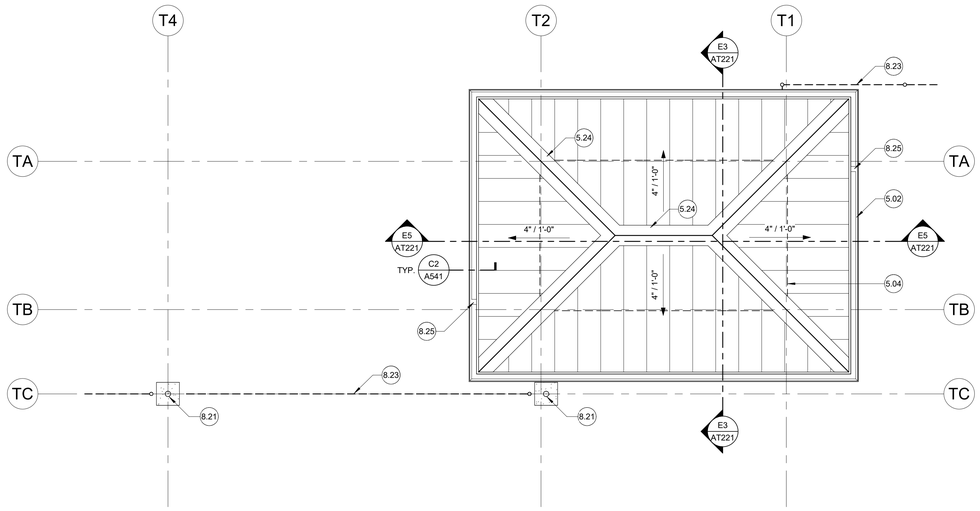

B5 ROOF PLAN - TICKET BUILDING
1/4" = 1'-0"

N

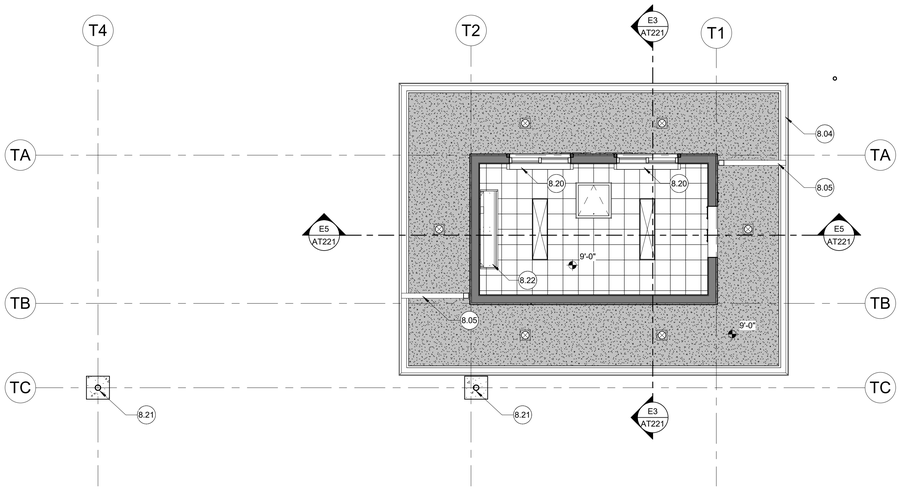

E5 REFLECTED CEILING PLAN - TICKET BUILDING
1/4" = 1'-0"

N

GENERAL NOTES

1. MAINTAIN POSITIVE SEPERATION BETWEEN ALL DISSIMILAR METALS. PROVIDE SEALANT AT ALL DISSIMILAR METERIAL CONNECTIONS.
2. MINIMUM ROOF CLASS TO BE TYPE "A" OR ABOVE, SEE SPEC SECTION 07 41 13.
3. ROOF SLOPES AS INDICATED BY ROOF SLOPE INDICATORS IN ROOF PLAN.

LEGEND

CLASS A PRE-FINISHED STANDING SEAM METAL ROOFING ASSEMBLY OVER 1" RIGID INSULATION.

1/2" / 12" DOWN SLOPE OF ROOF OR CRICKET; SLOPE AS INDICATED.

.00 KEYED NOTE. REFER TO KEYED NOTES SCHEDULE. KEYED NOTE TAGS W/O LEADER APPLIES TO THE ENTIRE ROOM (OR SURFACE IN WHICH (ON WHICH) THE TAG IS LOCATED. KEYED NOTES MAY SKIP NUMBERS.

GENERAL NOTES

1. REFER TO ROOM FINISH SCHEDULE FOR ADDITIONAL INFORMATION. FOR STANDARD SUSPENSION DETAILS SEE SHEET A581.
2. CEILING SPOT ELEVATIONS ARE ROUNDED OFF FOR CLARITY IN SOME DRAWINGS. RATIONAL CEILING ELEVATION IS TO BOTTOM OF FINISHED ASSEMBLY.
3. NOT ALL CEILING ACCESS DOORS ARE SHOWN ON PLANS. REFER TO MECHANICAL, PLUMBING & ELECTRICAL DRAWINGS AND SPECIFICATIONS FOR ADDITIONAL CEILINGS ACCESS DOOR LOCATIONS.
4. CEILING GRID LAYOUT TO BE CENTERED IN EACH ROOM, U.O.N.
5. ALL CEILING-MOUNTED FIXTURES (FOR EXAMPLE; LIGHTING, SENSORS, SPEAKERS, ETC.) SHALL BE CENTERED IN ROOM, CENTERED OVER DOOR, OR CENTERED IN ACOUSTICAL PANEL (OR HALF OF 2x4 PANEL) - WHICHEVER IS MOST APPLICABLE. CONTRACTOR TO VERIFY WITH OWNER OR ARCHITECT PRIOR TO INSTALLATION, IF QUESTIONABLE TYP.
6. CEILING ELEVATION HEIGHT DIMENSIONS ARE RELATIVE TO FINISH FLOOR DIRECTLY BELOW ELEVATION MARKER.

LEGEND

FULL-HEIGHT FRAMED BEARING WALL - EXTENDED TO STRUCTURE / DECK ABOVE.

1.01 KEYED NOTE. REFER TO KEYED NOTES SCHEDULE. KEYED NOTE TAGS WITHOUT LEADER APPLIES TO THE ENTIRE ROOM OR SURFACE IN WHICH (ON WHICH) THE TAG IS LOCATED. KEYED NOTES MAY SKIP NUMBERS.

1'x4' SURFACE-MOUNTED LIGHT FIXTURE, COORD W/ ELEC.

RECESSED LIGHT FIXTURE, COORD. W/ ELECTRICAL.

24" x 24" LOCKING ACCESS PANEL. COORDINATE LOCATIONS REQUIRED WITH M,E, AND P. REFER TO DETAIL B5/A581.

1'-0" x 1'-0", ADHERED ACOUSTICAL CEILING ASSEMBLY OVER 5/8" GYP BD. REFER TO DETAIL C5/A541.

PLASTER CEILING ASSEMBLY O/ 2x6 WD CEILING JOISTS @ 24" O.C. UNLESS OTHERWISE NOTED. REFER TO STRUCTURAL DETAIL 14/S1.3 REFER TO DETAIL C4/A541.

KEYED NOTES SCHEDULE

1.00

5.02 PREFINISHED METAL GUTTER SYSTEM, REFER TO DETAILS ON A541.

5.04 EXTENT OF BUILDING WALL / COMPONENT BELOW. REFER TO SECTIONS.

5.24 ROOFING ASSEMBLY PRE-FINISHED METAL RIDGE / HIP, TYP. REFER TO DETAIL B4/A541.

8.04 PRE-FINISHED METAL SEAMLESS GUTTER ASSEMBLY, TYP.

8.05 PRE-FINISHED METAL DOWNSPOUT ASSEMBLY.

8.20 OVERHEAD COILING DOOR HOOD ASSEMBLY SET WITHIN WALL FRAMING BELOW HEADER, TYP. REFER TO DOOR SCHEDULE / DETAILS.

8.21 SITE LIGHT POLE OVER CONCRETE PLINTH. REFER TO SITE PLAN FOR LOCATIONS. REFER TO DETAIL 9/S5.0. FINISH CONCRETE PILASTER WITH PLASTER COLOR COAT, TYP.

8.22 WALL-MOUNTED MECHANICAL UNIT. REFER TO MECHANICAL DETAIL 2/M6.1.

8.23 SITE FENCING / GATE ASSEMBLY. REFER TO SITE PLAN FOR KEYED NOTES AND GATE SCHEDULE. REFER TO SHEET AS502 FOR REFERENCED DETAILS.

8.25 DOWNSPOUT LOCATION. REFER TO ELEVATIONS. REFER TO SITE PLAN. COORDINATE WITH UGSD.

IDENTIFICATION STAMP
DIV. OF THE STATE ARCHITECT
APP: 02-121275 INC:
REVIEWED FOR
SS ☑ FLS ☑ ACS ☑
DATE: 12/15/2023

DESIGN California WEST

CALIFORNIA DESIGN WEST ARCHITECTS, Inc.

2100 19th Street
Sacramento, CA 95818

Phone: (916) 446-2466
Fax: (916) 446-5118
Web Page: ca-dw.com

These plans and prints thereof, as instruments of service, are owned by the architect and are for the use on this project only. Reproduction and/or distribution without the prior written consent of the architect is forbidden.

Copyright California Design West Architects, Inc.

ARCHITECT: CONSULTANT:

LICENSED ARCHITECT
MITCHELL A. McALISTER
No. C-17258
REN. 08-31-2025
STATE OF CALIFORNIA

CONSULTANT:

PROJECT NAME:

BUHACH COLONY HIGH SCHOOL

1800 NORTH BUHACH ROAD
ATWATER, CA 95301

CONCESSIONS/TOILET BUILDINGS, TICKET BOOTH & STADIUM UPGRADES

MERCED UNION HIGH SCHOOL DISTRICT

MERCED COUNTY

KEY PLAN:

SHEET TITLE:

ROOF PLAN & REFLECTED CEILING PLAN - TICKET BUILDING

JOB NUMBER:	SHEET NUMBER:
DATE: NOV 17, 2023	**AT181**
REVISION:	

C:\Users\tatump\Documents\A22_BCHS_TicketBuilding+Entryway_CENTRAL_atump-2100.rvt

GENERAL NOTES

1. SEE SPEC SECTION 06 40 23 FOR NAAWS STANDARDS FOR LAMINATE CLAD CASEWORK. ALL CASWORK TO COMPLY W/ TITLE 24 SEISMIC ATTACHMENT REQUIREMENTS. ALL SURFACE TO BE PLASTIC LAMINATE U.N.O.

2. MILLWORK DESIGNATION NUMBERS CORRESPOND TO NAAWS CASEWORK NUMBERS, WIDTH x HEIGHT x DEPTH. HEIGHT OF CABINET INCLUDES BASE AND COUNTER TOP. CONTRACTOR TO FEILD VERIFY EXISTING CONDITIONS FOR DETERMINATION OF ACTUAL WIDTH.

3. ALL WALL HUNG CABINETS TO BE FASTENED TO WALL; SEE TYPICAL MOUNTING DETAILS ON A592.

4. ALL FLOOR SUPPORED STORAGE RACKS, CABINETS, AND BOOK STACKS SHALL BE FASTENED TO WALL SEE TYPICAL MOUNTING DETAILS ON A592.

5. ALL COUNTER TOPS AND MILLWORK EXPOSED SURFACES TO BE P-LAM, UNLESS NOTED OTHERWISE.

6. HOLES INDICATED IN MILLWORK COUNTERTOPS TO BE SIZE INDICATED, WITH PREFAB HOLE FINISH AND COVER LOCATION INDICATED ARE TO BE 2" FROM BACK OF SURFACE.

7. PROVIDE BLOCKING AT ALL STUD LOCATIONS FOR ATTACHMENT OF MILLWORK AS INDICATED ON SHEET A592. PROVIDE ALL OTHER ITEMS ON THESE SHEETS PER MANUFACTURERS REQUIREMENTS.

8. ALL MARKERBOARDS SHALL BE WALL MOUNTED UNLESS OTHERWISE NOTED.

9. ALL ACOUSTICAL PANEL LAYOUTS: EQ = EQUAL 4'-0" WIDE PANELS. REM = REMAINDER OF WIDTH REQUIRED. AT FULL WALL LAYOUTS, THE TYPICAL LAYOUT OF THE 4'-0" WIDE PANELS WILL ORIGINATE @ THE CENTER OF WALL, WITH REMAINING PANELS AT EACH END OF WALL TO BE EQUAL IN WIDTH.

10. REFER TO PLANS FOR SCHEDULED DOORS, WINDOWS, FIXTURES AND ACCESSORIES.

11. REFER TO SHEET A581 FOR TYPICAL SUSPENDED CEILING ASSEMBLY DETAILS.

12. TILE WALL PATTERNS INDICATE WALL TILE LOCATIONS AND HEIGHT ONLY, AND DO NOT REPRESENT ACTUAL WALL TILE PATTERN. REFER TO SPEC SECTION 09 30 00.

13. CASEWORK TAGS:

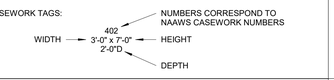

GENERAL NOTES

1. REFER TO PLANS FOR SCHEDULED DOORS, WINDOWS, FIXTURES AND ACCESSORIES.

2. EXTERIOR VENEER TYPE, TEXTURE, COLORS AND PATTERNS TO MATCH EXISTING BUILDINGS ON CAMPUS AS MUCH AS POSSIBLE.

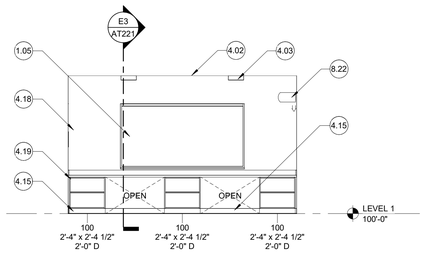

A5 ELEVATION - TICKET SOUTH
1/4" = 1'-0"

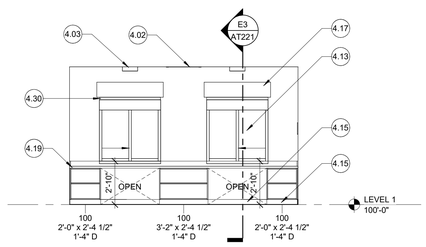

A4 ELEVATION - TICKET NORTH
1/4" = 1'-0"

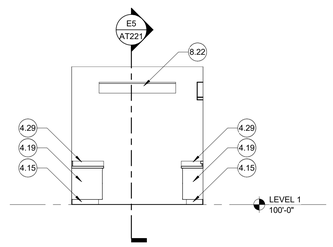

A2 ELEVATION - TICKET WEST
1/4" = 1'-0"

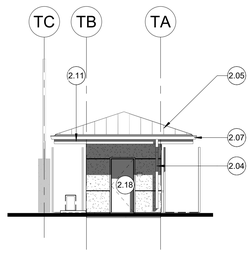

C5 TICKET BOOTH ELEVATION - EAST
1/8" = 1'-0"

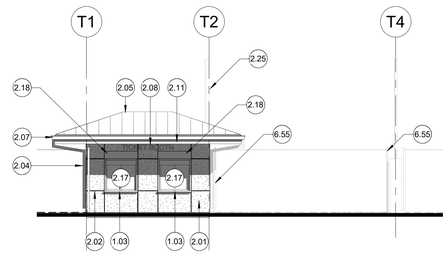

C4 TICKET BOOTH ELEVATION - NORTH
1/8" = 1'-0"

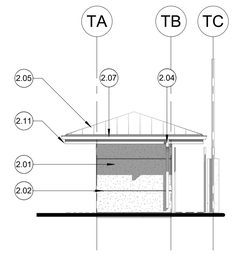

C3 TICKET BOOTH ELEVATION - WEST
1/8" = 1'-0"

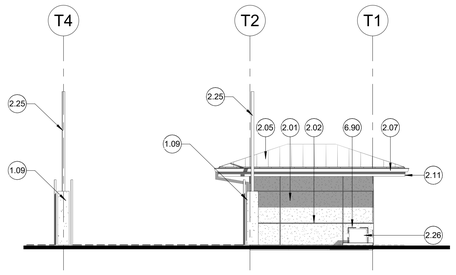

D4 TICKET BOOTH ELEVATION - SOUTH
1/8" = 1'-0"

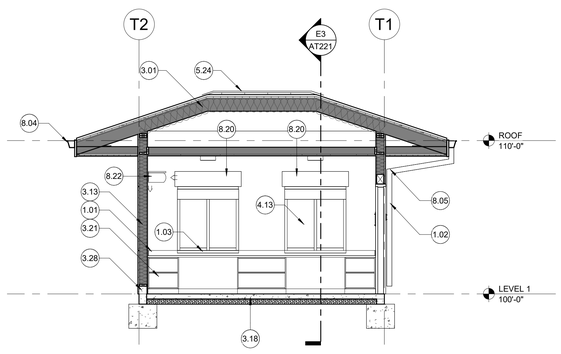

E5 SECTION - LONGITUDINAL TICKET BOOTH
1/4" = 1'-0"

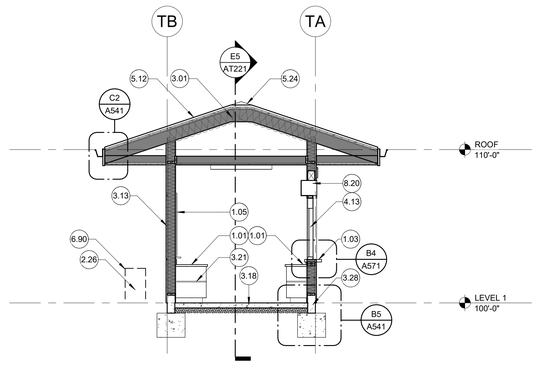

E3 SECTION - LATERAL TICKET BOOTH
1/4" = 1'-0"

KEYED NOTES SCHEDULE

1.00

1.01 BUILT-IN PLAM CASEWORK, TYP. REFER TO ELEVATIONS.

1.02 HEAVY GUAGE VANDAL RESISTANT GALVANIZED METAL DOWNSPOUT ASSEMBLY (BOTTOM 8' MIN). PAINT. REFER TO ELEVATIONS. COORDINATE WITH CIVIL. REFER TO D4/A541.

1.03 BUILT-IN STAINLESS STEEL TRANSACTION COUNTERTOP, TYP. PROVIDE SEAMLESS CLOSURES AT ALL EXPOSED ENDS. REFEER TO DETAIL A4/A571.

1.05 4'x8' TACKBOARD ASSEMBLY.

1.09 PLASTER FINISH COAT OVER CONCRETE LIGHT POLE BASE PLINTH. REFER TO STRUCTURAL DETAIL 7/SS.0.

2.01 PLASTER ASSEMBLY, TYP. REFER TO WALL TYPES.

2.02 PLASTER CONTROL JOINT REVEAL, TYP. REFER TO DETAIL D3/A541.

2.04 HD GALVANIZED METAL DOWNSPOUT ASSEMBLY. BOTTOM 8'-0" SHALL BE HEAVY-GUAGE VANDAL RESISTANT. PAINT. REFER TO D4/A541. PROVIDE A CLEANOUT "T" AT GRADE AND CONNECT TO STROM DRAIN. REFER TO CIVIL DETAIL 11/C1.4.

2.05 PRE-FINISHED METAL STANDING SEAM ROOFING ASSEMBLY O/ 1" RIGID INSULATION O/ WEATHER BARRIER, TYP.

2.07 PRE-FINISHED METAL GUTTER ASSEMBLY, TYP.

2.08 8" HIGH CAST-ALUMINUM RAISED DIMENSIONAL LETTERING.

2.11 PRE-FINISHED METAL FASCIA, REFER TO DETAIL C2/A541.

2.17 SCHEDULED WINDOW ASSEMBLY, REFER TO WINDOW TYPES ON A571.

2.18 SCHEDULED DOOR ASSEMBLY. REFER TO PLAN AND DOOR SCHEDULE.

2.25 ALUMINUM LIGHT POST. REFER TO DETAIL 1/E500 FOR ADDITIONAL INFORMATION REGARDING LIGHT POST.

2.26 MECHANICAL CONDENSING UNIT OVER CONCRETE HOUSEKEEPING PAD. REFER TO MECHANICAL DETAIL 5/M6.2. SIZE OF PAD TO BE 8" LARGER THAN THE UNIT ON THE THREE FRONT SIDES (6" MIN EDGE-DISTANCE TO MOUNTING BOLTS). EXTEND BACK EDGE OF PAD TO BUILDING FOUNDATION.

3.01 R-38 BATT INSULATION FILLING ALL CEILING / RAFTER CAVITIES.

3.13 7/8" PLASTER ASSEMBLY O/ MOISTURE BARRIER O/ 1/2" PLYWD SHEATHING O/ 2x WD FRAMING. REFER TO WALL TYPES.

3.18 5" CONC. SLAB OVER VAPOR BARRIER OVER 4" CRUSHED AGGREGATE OVER PREPPED SUB GRADE PER GEOTECH. REFER TO BUILDING STRUCTURAL SLAB PLANS ON ST2.0.

3.21 BUILT-IN OPEN CABINETRY.

3.28 REFER TO STRUCTURAL FOR FOOTING INFORMATION, TYP.

4.02 SCHEDULED CEILING ASSEMBLY. REFER TO R.C.P.

4.03 SCHEDULED LIGHT FIXTURE, TYP. COORD. W/ ELECTRICAL.

4.13 SCHEDULED WINDOW ASSEMBLY. REFER TO WINDOW TYPE.

4.15 4" RUBBER BASE, TYP.

4.17 STAINLESS STEEL OVERHEAD COILING DOOR ASSEMLBY. REFER TO DOOR SCHEDULE.

4.18 PAINTED GYP BD., TYP.

4.19 BUILT-IN PLAM CASEWORK WITH PLAM COUNTERTOP. PROVIDE 4" PLAM BACKSPLASH, TYP. ALL OPEN SIDES TO BE FINISHED, TYP.

4.29 4" PLAM SPLASH U.O.N. AT ALL ADJOINING WALLS OF COUNTERTOP, TYP.

4.30 EXPOSED S/S HSS WINDOW FRAME. JAMBS BOLTED TO WOOD FRAMING AT TWO SIDES. REFER TO DETAIL D1/A571. REFER TO WINDOW TYPE ON SHEET A571 FOR ADDITIONAL DETAILS.

5.12 STANDING SEAM METAL ROOFING, REFER DETAILS ON SHEET A541. REFER TO STRUCTURAL.

5.24 ROOFING ASSEMBLY PRE-FINISHED METAL RIDGE / HIP, TYP. REFER TO DETAIL B4/A541.

6.55 SITE FENCING / GATE ASSEMBLY. REFER TO PROJECT ARCHITECTURAL SITE PLAN AS101 FOR GATE SCHEDULE.

6.90 PROVIDE COMMERCIAL GRADE, POWDER-COATED EXPANDED METAL HINGED LOCKING CAGE ENCLOSURE AROUND MECHANICAL COMPRESSOR UNIT. ENCLOSURE TO BE 38"L x 22"W x 28"H. REFER TO DETAIL 1/M6.1 FOR HOUSEKEEPING PAD. HOUSEKEEPING PAD TO BE LARGER THE ENCLOSURE AT THE FRONT THREE SIDES, AND SHALL EXTEND TO THE BUILDING ON THE BACK SIDE (APPROXIMATELY 38"W x 54"L). BOLT ENCLOSURE TO CONCRETE HOUSEKEEPING PAD WITH (4) 3/8" DIAMETER STAINLESS STEEL HILTI KB-TZ2 304. REFER TO BIS1.0 FOR EMBED, INSTALLATION TORQUE AND ESR REPORT NUMBER. LOCATE BOLTS MINIMUM 6" FROM EDGE OF CONCRETE PAD, TYP. CONTRACTOR TO COORDINATE SIZE OF PAD WITH SELECTED / MANUFACTURED ENCLOSURE ASSEMBLY. ENCLOSURE ASSEMBLY SHALL NOT EXCEED 400#.

8.04 PRE-FINISHED METAL SEAMLESS GUTTER ASSEMBLY, TYP.

8.05 PRE-FINISHED METAL DOWNSPOUT ASSEMBLY.

8.20 OVERHEAD COILING DOOR HOOD ASSEMBLY SET WITHIN WALL FRAMING BELOW HEADER, TYP. REFER TO DOOR SCHEDULE / DETAILS.

8.22 WALL-MOUNTED MECHANICAL UNIT. REFER TO MECHANICAL DETAIL 2/M6.1.

IDENTIFICATION STAMP
DIV. OF THE STATE ARCHITECT
APP: 02-121275 INC:
REVIEWED FOR
SS ☑ FLS ☑ ACS ☑
DATE: 12/15/2023

CALIFORNIA DESIGN
WEST ARCHITECTS, Inc.

2100 19th Street
Sacramento, CA 95818

Phone: (916) 446-2466
Fax: (916) 446-5118
Web Page: ca-dw.com

These plans and prints thereof, as instruments of service, are owned by the architect and are for the use on this project only. Reproduction and/or distribution without the prior written consent of the architect is forbidden.

Copyright California Design West Architects, Inc.

ARCHITECT: CONSULTANT:

LICENSED ARCHITECT
MITCHELL A. MCALISTER
LIC. NO. C 17250
REN. 08-31-2025
STATE OF CALIFORNIA

CONSULTANT:

PROJECT NAME:

BUHACH COLONY HIGH SCHOOL

1800 NORTH BUHACH ROAD
ATWATER, CA 95301

CONCESSIONS/TOILET BUILDINGS, TICKET BOOTH & STADIUM UPGRADES

MERCED UNION HIGH SCHOOL DISTRICT

MERCED COUNTY

KEY PLAN:

SHEET TITLE:
SECTIONS & ELEVATIONS - TICKET BOOTH

JOB NUMBER:	SHEET NUMBER:
DATE: NOV 17, 2023	**AT221**
REVISION:	

C:\Users\stump\Documents\A22_BCHS_TicketBuilding+Entryway_CENTRAL_stump-2100.rvt

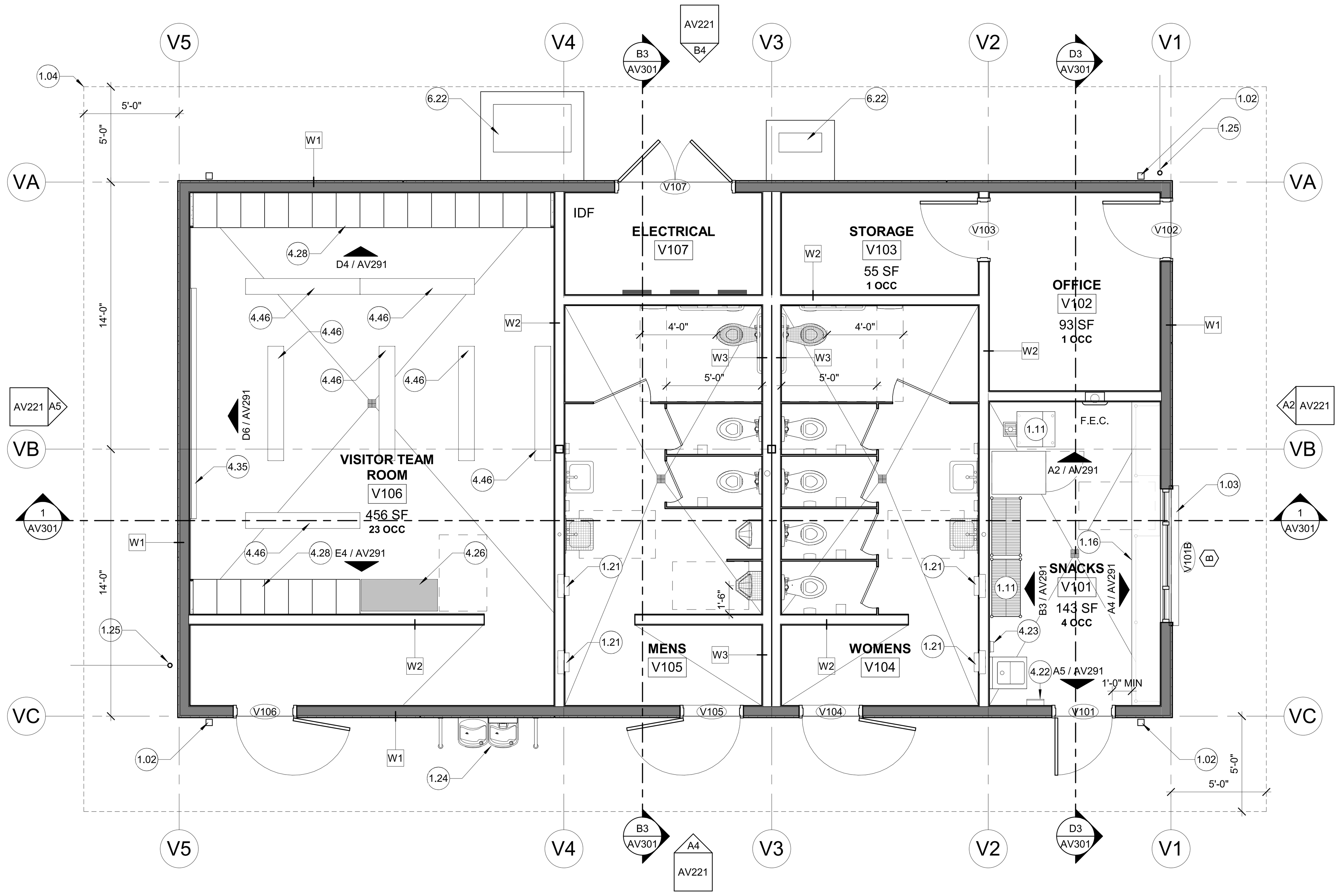

1 BUILDING V PLAN - VISITOR SNACK BAR + TOILET BUILDING

1/4" = 1'-0"

N

ROOM FINISH SCHEDULE

ROOM #	ROOM NAME	FLOOR FINISH	BASE FINISH	WALLS NORTH	WALLS EAST	WALLS SOUTH	WALLS WEST	CEILING FINISH	REMARKS	ROOM #
LEVEL 1										
V101	SNACKS	F2	B3	W4	W4	W4	W4	C3		V101
V102	OFFICE	F1	B4	W1	W1	W1	W1	C1		V102
V103	STORAGE	F1	B4	W1	W1	W1	W1	C1		V103
V104	WOMENS	F2	B2	W2	W2	W2	W2	C2		V104
V105	MENS	F2	B2	W2	W2	W2	W2	C2		V105
V106	VISITOR TEAM ROOM	F1	B1	W1	W1	W1	W1	C1		V106
V107	ELECTRICAL	F1	B4	W1	W1	W1	W1	C5	(1)	V107

REMARKS:
(1) REFER TO ELECTRICAL FOR REQUIRED PLYWOOD BACKER PANELS

FINISH SCHEDULE LEGEND

FLOOR/ BASE		BASE		WALLS / WAINSCOT		CEILING	
F1	SEALED CONCRETE FLOOR - SMOOTH TROWEL FINISH	B1	6" RUBBER BASE	W1	PAINTED GYP. BD.	C1	PAINTED GYP. BD.
F2	RESINOUS / EPOXY FLOORING SYSTEM	B2	6" SLIM FOOT COVED TILE SANITARY BASE	W2	THIN-SET CERAMIC TILE TO 7'-2"; EPOXY-PAINTED GYP. BD. ABOVE	C2	EPOXY-PAINTED GYP. BD.
		B3	6" INTEGRAL COVED EPOXY BASE	W3	FRP PANEL FULL-HEIGHT	C3	VINYL-COATED WASHABLE 2x4 LAY-IN SUSPENDED CEILING ASSEMBLY
		B4	4" RUBBER BASE	W4	FRP PANEL TO 8'-0" A.F.F.; EPOXY-PAINTED GYP. BD. ABOVE	C4	2x4 ACOUSTICAL LAY-IN SUSPENDED CEILING ASSEMBLY
						C5	OPEN-TO-STRUCTURE. PAINT.

DOOR SCHEDULE

WT	DOOR (2) TYPE	DOOR WIDTH	DOOR HEIGHT	DOOR (3) THICKNESS	DOOR (4) MATERIAL	DOOR (5) GLAZING	FRAME (6) TYPE	FRAME (7) MATERIAL	(8) DETAILS HEAD	(8) DETAILS JAMB	(8) DETAILS SILL	(9) FIRE RATING	(10) HARDWARE	(11) SIGNAGE	(12) REMARKS	DOOR #
LEVEL 1																
V101	A	3'-0"	7'-0"	1 3/4"	HMP	NA	1	HMP	D3/A571	D4/A571	D2/A571	-	2.2	1,3,5	a	V101
V101B	E	7'-0"	5'-10"	1"	SS	NA	4	SS	A5/A571	D1/A571	A4/A571	-	11.1	5	b	V101B
V102	A	3'-0"	7'-0"	1 3/4"	HMP	NA	1	HMP	D5/A571	C5/A571	D2/A571	-	5.4	1		V102
V103	A	3'-0"	7'-0"	1 3/4"	HMP	NA	1	HMP	D5/A571	C5/A571	D2/A571	-	5.3	1		V103
V104	A	3'-0"	7'-0"	1 3/4"	HMP	NA	1	HMP	D3/A571	D4/A571	D2/A571	-	3.1	1,4,5		V104
V105	A	3'-0"	7'-0"	1 3/4"	HMP	NA	1	HMP	D3/A571	D4/A571	D2/A571	-	3.1	1,4,5		V105
V106	A	3'-0"	7'-0"	1 3/4"	HMP	NA	1	HMP	D3/A571	D4/A571	D2/A571	-	2.1	1,3,5	a	V106
V107	AA	6'-0"	7'-0"	1 3/4"	HMP	NA	1	HMP	D3/A571	D4/A571	D2/A571	-	1.3	1		V107

DOOR SCHEDULE GENERAL NOTES:

1. REFER TO DOOR SCHEDULE INFO LEGEND TO THE RIGHT FOR MORE DETAILED INFORMATION ON EACH NUMBERED COLUMN HEADING SHOWN IN BOLD.
2. PROVIDE CONTINUOUS SEALANT AT ALL JOINTS OF ALL DISSIMILAR MATERAL CONNECTIONS.
3. GYP BD SHALL BE SEATED MIN 1/2" INTO METAL FRAMES, TYP.
4. WALL FINISHES SHALL BE SET WITHIN THE THROAT OF THE DOOR FRAMES, TYP.
5. FOR OPERABLE WINDOW LOCATIONS, SEE FRAME TYPE AND/OR SEE ELEVATIONS. OPERATING PANE/DIRECTION INDICATED BY ARROW.
6. FOR ANCHORING OF HM FRAMES, SEE DETAILS C2, C3 AND C4/ A- 571 .
7. THE CONTRACTOR IS TO FILED VERIFY ALL FRAME DIMENSIONS PRIOR TO ORDERING.

1.00 KEYED NOTES SCHEDULE

1.02 HEAVY GUAGE VANDAL RESISTANT GALVANIZED METAL DOWNSPOUT ASSEMBLY (BOTTOM 8' MIN). PAINT. REFER TO ELEVATIONS. COORDINATE WITH CIVIL. REFER TO D4/A541.

1.03 BUILT-IN STAINLESS STEEL TRANSACTION COUNTERTOP, TYP. PROVIDE SEAMLESS CLOSURES AT ALL EXPOSED ENDS. REFEER TO DETAIL A4/A571.

1.04 ROOF OVERHANG ABOVE, TYP. REFER TO DIMENSION PLANS.

1.11 KITCHEN EQUIPMENT, TYP. REFER TO EQUIPMENT & ACCESSORY SCHEDULE SHEET.

1.16 BUILT-IN SEAMLESS STAINLESS STEEL COUNTERTOP WITH UNDERSHELF (WHERE INDCIATED AS DASHED LIGHT LINES). REFER TO ELEVATIONS. REFEER TO DETAIL A4/A571.

1.21 ELECTRIC HAND DRYER, TYP. REFER TO ELECTRICAL.

1.24 HIGH/LOW + BOTTLE FILLER DRINKING FOUNTAION. PROVIDE GUARD BARS ON BOTH SIDES. COORD WITH ELECTRICAL AND PLUMBING. REFER TO D4/A592 FOR ADDITIONAL INFORMATION.

1.25 SITE FENCE / GATE POST SET WITHIN 4" OF FACE OF BUILDING. REFER TO PROJECT SITE PLAN FOR GATE LOCATION / SCHEDULE. REFER TO STRUCTURAL FOR FOOTING / SLEEVE DETAIL 8/S5.0.

4.22 PAPER TOWEL DISPENSER.

4.23 SOAP DISPENSER, TYP.

4.26 20" WIDE x 48" LONG FIXED ADA BENCH ASSEMBLY. MOUNT WITHIN 2" OF BACK WALL AND 3/4" OF THE LOCKER SIDE. REFER TO ANCHORAGE DETAIL E6/A592.

4.28 15" WIDE x 22" DEEP DOUBLE-TIER LOCKER ASSEMBLY, TYP. VISITOR'S-SIDE. SET OVER 6" CONCRETE BASE. PROVIDE SLOPED TOP, TYP. PROVIDE CLOSURE FILLERS AT CORNERS AND CORNER TOPS, TYP. REFER TO EQUIPMENT & ACCESSORY SCHEDULE PLAN AV104 FOR LOCKER TYPE, QUANTIY, AND ACCESSIBILITY REQUIREMENTS. REFER TO DETAILS D2 AND E2 / A592.

4.35 12' LONG WHITEBOARD ASSEMBLY.

4.46 6' LONG MOBILE / UNATTACHED ALUMINUM BENCH, TYP. REFER TO SPEC SECTION 10 51 50.

6.22 MECHANICAL UNIT SET ATOP CONCRETE HOUSEKEEPING PAD. REFER TO DETAIL 1/M6.1 AND 5/M6.2 FOR HOUSEKEEPING PAD. HOUSEKEEPING PAD TO BE APPROXIMATLY 8" LARGER THAN THE MECHANICAL UNIT (ON FRONT THREE SIDES, OR 6" EDGE DISTANCE, TYP FROM BOLT MOUNTING LOCATIONS). EXTEND HOUSEKEEPING PAD ON BACK SIDE TO FOUNDATION WALL.

GENERAL NOTES

1. DIMENSIONS TO CENTERLINE OF STUD WALLS ARE TO THE CENTERLINE OF THE STUD. DIMENSIONS TO THE FACE OF STUD WALLS ARE TO FACE OF STUD - UNLESS NOTING 'CLEAR' DIMENSION OR DIMENSION TO PLUMBING FIXTURE WHEN DIMENSION IS TO FACE OF FINISH. FACE OF STUD OCCURS ON THE GRID UNLESS SHOWN OTHERWISE. DIMENSIONS TO FRAMES ARE TO THE CENTERLINE OF FRAME OPENING IN STUD FRAMED WALLS. DIMENSIONS TO ROOF OVERHANGS WILL BE TO EXTERIOR FACE OF FASCIA AT THE END OF THE OVERHANG.
2. FIELD VERIFY ALL DIMENSIONS TO EXISTING CONDITIONS - NOTIFY ARCHITECT OF ANY DISCREPANCIES PRIOR TO ANY WORK IN THAT AREA.
3. CHANGES IN FLOOR MATERIAL SHALL OCCUR AT THE CENTERLINE OF THE DOOR PANEL (BELOW THE DOOR IN CLOSED POSITION) U.N.O.
4. FOR CONSTRUCTION OF WALLS AT RECESSED CABINETS (I.E.: FEC, ELECTRICAL PANELS, ETC.) SEE DETAIL D2/A-541.
5. ALL DOORS TO PROVIDE 18" MIN. CLEAR ON PULL SIDE INTERIOR AND 24" MIN. CLEAR ON EXTERIOR, 12" CLEAR ON PUSH SIDE OF ACCESSIBLE DOORS WITH CLOSER AND LATCHES. SEE ACCESSIBILITY DETAILS. REFER TO DOOR SCHEDULE FOR APPLICABLE HARDWARE.
6. COORDINATE ALL OPENING SIZES AND HEAD HEIGHTS WITH SCHEDULES.
7. CONCRETE SLABS SLOPE TO DRAIN, TYP.
8. BATT (SOUND) INSULATION SHALL BE INSTALLED TO FILL ALL NEW FRAMED WALL CAVITIES.
9. REFER TO EQUIPMENT PLAN FOR KICTHEN EQUIPMENT SCHEDULE AND TOILET ACECSSORIES.

LEGEND

- FULL-HT STUD FRAMED BEARING WALL. REFER TO STRUCTURAL FRAMING PLAN SH2.1.
- FULL-HT STUD FRAMED NON-BEARING WALL. REFER TO STRUCTURAL FRAMING PLAN SH2.1 AND SLIP TRACK CONNECTION 7/S1.3
- 1.01 KEYED NOTE. REFER TO KEYED NOTES SCHEDULE. KEYED NOTE TAGS WITHOUT LEADER APPLIES TO THE ENTIRE ROOM OR SURFACE IN WHICH (ON WHICH) THE TAG IS LOCATED. KEYED NOTES MAY SKIP NUMBERS.
- 1i WALL TYPE AS INDICATED. REFER TO SHEET A-541.
- 1t ALUMINUM WINDOW FRAMES AS INDICATED. REFER TO SHEET A571.
- F.E.C. FIRE EXTINGUISHER CABINET; SEMI-RECESSED IN STUD FRAMED WALLS. REFER TO DETAIL D2/ A541. EXTINGUISHER TYPE TO BE 2A:10B:C.
- FLOOR DRAIN, COORDINATE W/ PLUMBING. MAINTAIN POSITIVE DRAINAGE AT ALL FLOORS TO DRAIN AT 2% MAXIMUM.
- FLOOR SINK, COORDINATE W/ PLUMBING

DOOR SCHEDULE INFO

IF A ' - ' IS IN THE SCHEDULE BOX, THAT ITEM IS NOT APPLCIABLE TO THE SPECIFIED DOOR.

(2) DOOR TYPES:

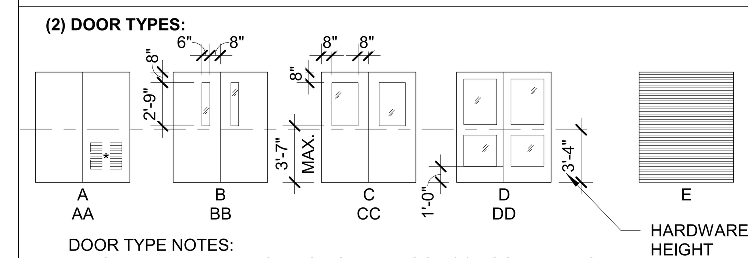

DOOR TYPE NOTES:
- DOUBLE LETTER INDICATES DOUBLE DOOR (2) DOOR PANELS.
* PROVIDE DOOR LOUVERS WHERE INDICATED BY MECHANICAL.
- PAINT TRIM AROUND GLASS OPENINGS TO MATCH HM DOOR PAINT.

(3) THICKNESS:
THICKNESS INDICATES ITS NOMINAL SIZE
(4) CONSTRUCTION/ FINISH:
SCL = SOLID CORE, PLASTIC LAMINATE FINISH
AL = ALUMINUM WITH GLASS
HMP = HOLLOW METAL, PAINTED
HMIP = HOLLOW METAL, INSULATED, PAINTED
SS = STAINLESS STEEL
(5) GLASS:
SG = SAFETY GLASS (TEMPERED OR LAMINATED)
SGI = SAFETY GLASS, INSULATED (TEMPERED OR LAMINATED)
SGR = SAFETY GLASS - RATED

(6) FRAME TYPES:

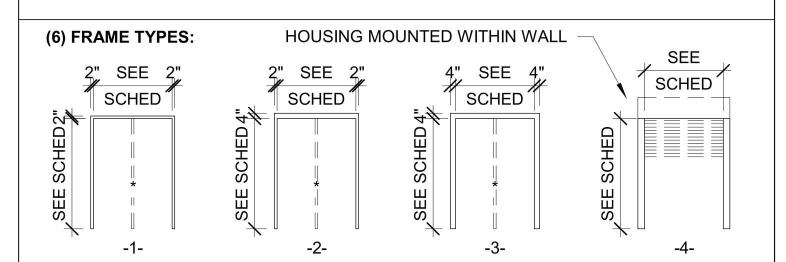

DOOR TYPE NOTES:
* REMOVABLE MULLION AT DOUBLE DOORS WHERE INDICATED.

(7) FRAME MATERIAL:
AL = ALUMINUM
HMP = HOLLOW METAL - PAINTED
HMPC = HOLLOW METAL - POWDER-COAT PAINTED
SS = STAINLESS STEEL
SP = SPECIAL (REFER TO SPECIFICATIONS)
(8) DETAIL NUMBER:
INDICATES DETAIL(S) SHOWN ON SHEET A571
(9) RATING:
20, 45, 60, ETC INDICATES RATED DOOR ASSEMBLY FIRE-RATING IN MINUTES
(10) HARDWARE:
HARDWARE GROUP #. REFER TO SPEC SECTION 08 71 00 FOR HARDWARE GROUPS.
(11) SIGNAGE:
1, = ROOM IDENTIFICATION SIGNAGE. REFER TO DTL. C1/A591.
2, = ROOM IDENTIFICATION SIGNAGE (BOTH SIDES). REFER TO DTL. C1/A591.
3, = TACTILE EXIT SIGNAGE. REFER TO DTL. A1/A591.
4, = ACCESSIBLE RESTROOM SIGNAGE. REFER TO DETAIL B1/A591.
5, = DIMENSIONAL LETTERS, REFER TO SPEC SECTION 10 14 23.
(12) REMARKS:
a, = PROVIDE POWER FOR ACCESS CONTROLS. REFER TO HARDWARE GROUPS NOTED IN SPEC SECTION 08 71 00, AND TO SPEC SECTION 28 15 00.
b, = REFER TO WINDOW TYPES, SHEET A571 FOR ALUMINUM FRAME TYPE.

IDENTIFICATION STAMP
DIV. OF THE STATE ARCHITECT
APP: 02-121275 INC:
REVIEWED FOR
SS ☑ FLS ☑ ACS ☑
DATE: 12/15/2023

DESIGN California WEST

CALIFORNIA DESIGN WEST ARCHITECTS, Inc.

2100 19th Street
Sacramento, CA 95818

Phone: (916) 446-2466
Fax: (916) 446-5118
Web Page: ca-dw.com

These plans and prints thereof, as instruments of service, are owned by the architect and are for the use on this project only. Reproduction and/or distribution without the prior written consent of the architect is forbidden.

Copyright California Design West Architects, Inc.

ARCHITECT: CONSULTANT:

LICENSED ARCHITECT
MITCHELL A. McALLISTER
NO. C 17250
REN. 2-28-2025
STATE OF CALIFORNIA

CONSULTANT:

PROJECT NAME:

BUHACH COLONY HIGH SCHOOL

1800 NORTH BUHACH ROAD
ATWATER, CA 95301

CONCESSIONS/TOILET BUILDINGS, TICKET BOOTH & STADIUM UPGRADES

MERCED UNION HIGH SCHOOL DISTRICT

MERCED COUNTY

KEY PLAN:

SHEET TITLE:

BUILDING V FLOOR PLAN - VISITOR BUILDING

JOB NUMBER:

SHEET NUMBER:

DATE:
NOV 17, 2023

REVISION:

AV101

C:\Users\strump\Documents\A22_BCHS-TeamsRoom-VISITOR+SnackBar - CENTRAL_strump-2100.rvt

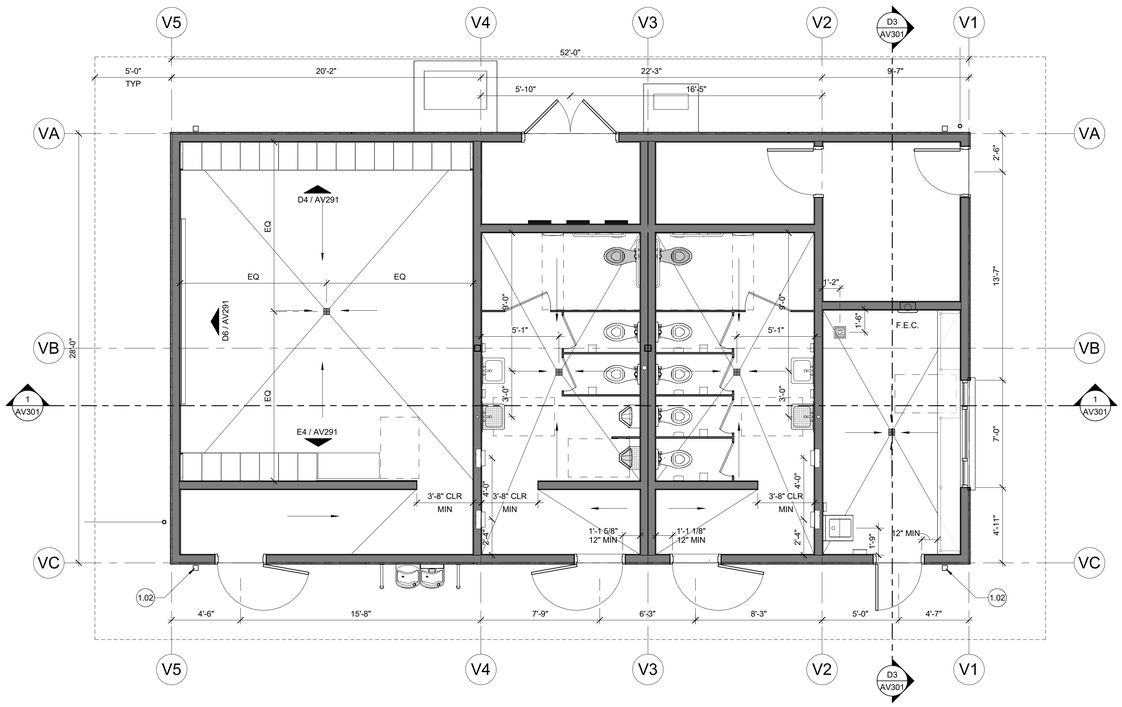

B4 BUILDING V - DIMENSION PLAN
1/4" = 1'-0"

PLAN NORTH
N

GENERAL NOTES

1. DIMENSIONS TO CENTERLINE OF STUD WALLS ARE TO THE CENTERLINE OF THE STUD. DIMENSIONS TO THE FACE OF STUD WALLS ARE TO FACE OF STUD - UNLESS NOTING 'CLEAR' DIMENSION OR DIMENSION TO PLUMBING FIXTURE WHEN DIMENSION IS TO FACE OF FINISH. FACE OF STUD OCCURS ON THE GRID UNLESS SHOWN OTHERWISE. DIMENSIONS TO FRAMES ARE TO THE CENTERLINE OF FRAME OPENING IN STUD FRAMED WALLS. DIMENSIONS TO ROOF OVERHANGS WILL BE TO EXTERIOR FACE OF FASCIA AT THE END OF THE OVERHANG.

2. FIELD VERIFY ALL DIMENSIONS TO EXISTING CONDITIONS - NOTIFY ARCHITECT OF ANY DISCREPANCIES PRIOR TO ANY WORK IN THAT AREA.

3. CHANGES IN FLOOR MATERIAL SHALL OCCUR AT THE CENTERLINE OF THE DOOR PANEL (BELOW THE DOOR IN CLOSED POSITION) U.N.O.

4. FOR CONSTRUCTION OF WALLS AT RECESSED CABINETS (I.E.: FEC, ELECTRICAL PANELS, ETC.) SEE DETAIL D2/A-541.

5. ALL DOORS TO PROVIDE 18" MIN. CLEAR ON PULL SIDE INTERIOR AND 24" MIN. CLEAR ON EXTERIOR, 12" CLEAR ON PUSH SIDE OF ACCESSIBLE DOORS WITH CLOSER AND LATCHES. SEE ACCESSIBILITY DETAILS. REFER TO DOOR SCHEDULE FOR APPLICABLE HARDWARE.

6. COORDINATE ALL OPENING SIZES AND HEAD HEIGHTS WITH SCHEDULES.

7. CONCRETE SLABS SLOPE TO DRAIN, TYP.

8. BATT (SOUND) INSULATION SHALL BE INSTALLED TO FILL ALL NEW FRAMED WALL CAVITIES.

9. REFER TO EQUIPMENT PLAN FOR KICTHEN EQUIPMENT SCHEDULE AND TOILET ACECSSORIES.

LEGEND

STUD FRAMED WALL. REFER TO STRUCTURAL.

F.E.C. FIRE EXTINGUISHER CABINET; SEMI-RECESSED IN STUD FRAMED WALLS, SURFACE-MOUNTED AT CONCRETE AND MASONRY WALLS. REFER TO DETAIL D2/A541. EXTINGUISHER TYPE TO BE 2A:10B:C.

FLOOR DRAIN, COORDINATE W/ PLUMBING. MAINTAIN POSITIVE DRAINAGE AT ALL FLOORS TO DRAIN AT 2% MAXIMUM.

FLOOR SINK, COORDINATE W/ PLUMBING.

IDENTIFICATION STAMP
DIV. OF THE STATE ARCHITECT
APP: 02-121275 INC:
REVIEWED FOR
SS ☑ FLS ☑ ACS ☑
DATE: 12/15/2023

CALIFORNIA DESIGN WEST ARCHITECTS, Inc.

2100 19th Street
Sacramento, CA 95818

Phone: (916) 446-2466
Fax: (916) 446-5118
Web Page: ca-dw.com

These plans and prints thereof, as instruments of service, are owned by the architect and are for the use on this project only. Reproduction and/or distribution without the prior written consent of the architect is forbidden.

Copyright California Design West Architects, Inc.

ARCHITECT: CONSULTANT:

LICENSED ARCHITECT
MITCHELL A. McALLISTER
NO. C-17250
REGISTERED
STATE OF CALIFORNIA

CONSULTANT:

PROJECT NAME:

BUHACH COLONY HIGH SCHOOL

1800 NORTH BUHACH ROAD
ATWATER, CA 95301

CONCESSIONS/TOILET BUILDINGS, TICKET BOOTH & STADIUM UPGRADES

MERCED UNION HIGH SCHOOL DISTRICT

MERCED COUNTY

KEY PLAN:

SHEET TITLE:
BUILDING V - DIMENSION PLAN

JOB NUMBER:

SHEET NUMBER:

DATE:
NOV 17, 2023

REVISION:

AV103

C:\Users\strump\Documents\A22_BCHS-TeamsRoom-VISITOR-SnackBar - CENTRAL_strump-2100.rvt

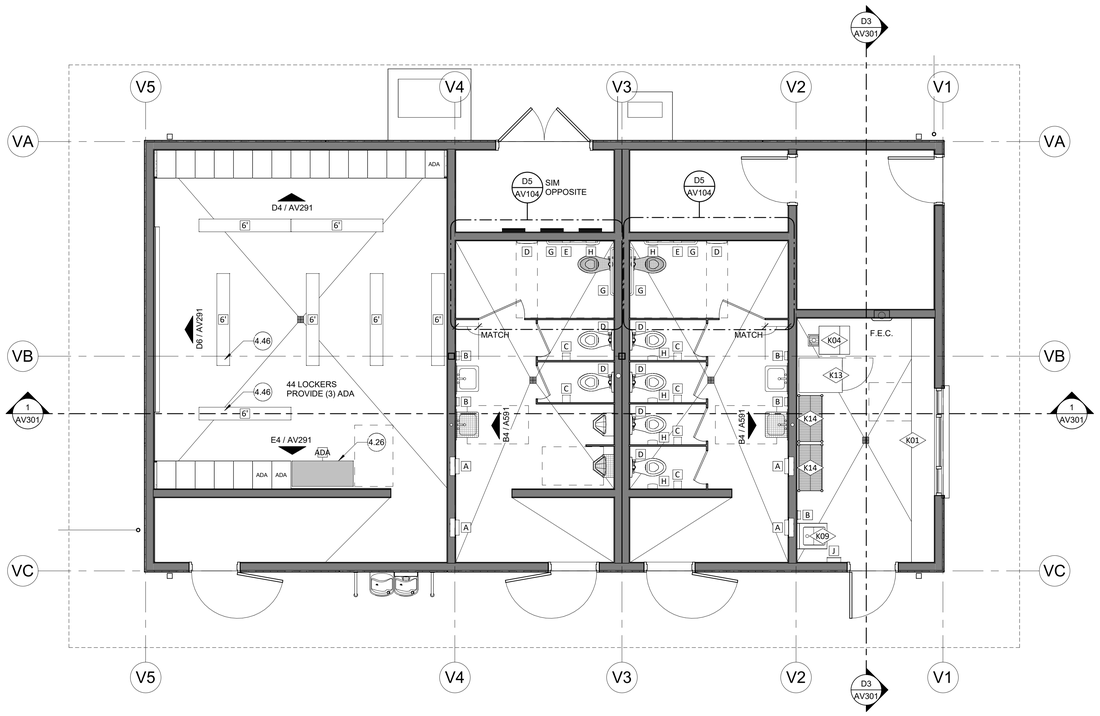

BUILDING V - EQUIP / ACCESSORIES PLAN

1/4" = 1'-0"

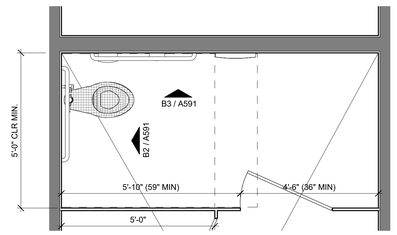

D5 TYP. ENLARGED ADA TOILET STALL

1/2" = 1'-0"

TOILET ACCESSORY SCHEDULE

TAG	DESCRIPTION
6'	UNFIXED MOBILE BENCH ASSEMBLY. LENGTH INDICATED. REFER TO SPEC SECTION 10 51 50.
A	ELECTRICAL HAND DRYER, COORD. W/ ELECTRICAL
ADA	FIXED ADA PEDESTAL BENCH. REFER TO SPECS
B	SURFACE-MOUNTED SOAP DISPENSER
C	SURFACE MOUNTED TOILET PAPER DISPENSER
D	SURFACE MOUNTED TOILET SEAT COVER DISPENSER
E	RECESSED MULTI-ROLL TOILET TISSUE DISPENSER
G	ADA GRAB BARS, REFER TO ELEVATIONS FOR SIZES.
H	SURFACE-MOUNTED SANITARY NAPKIN DISPOSAL
J	SURFACE-MOUNTED PAPER TOWEL DISPENSER 4" MAX. PROJECTION

KITCHEN EQUIPMENT SCHEDULE

MARK	DESCRIPTION
K01	CUSTOM SEAMLESS S/S COUNTERTOP WITH UNDERSHEVES
K04	ICE MAKER, FLAKE/NUGGET STYLE - HOSHIZAKI MODEL NO. F-450MAJ WITH FILTER ASSEMBLY ON 300# ICE STORAGE BIN
K09	SS ADA HAND SINK WITH SPLASH GUARDS. PROVIDE SOAP AND PAPER TOWELL DISPENSERS.
K13	RETHERMALIZATION CABINET
K14	36" W x 18" D WIRE SHELVING ON LOCKING CASTERS. PROVIDE 5 SHELVES.

REFER TO DETAILS ON A593 FOR TYPICAL EQUIPMENT BRACING AND BLOCKING DETAILS.

LEGEND

STUD FRAMED WALL. REFER TO STRUCTURAL.

F.E.C. FIRE EXTINGUISHER CABINET; SEMI-RECESSED IN STUD FRAMED WALLS, SURFACE-MOUNTED AT CONCRETE AND MASONRY WALLS. REFER TO DETAIL D2/A541. EXTINGUISHER TYPE TO BE 2A:10B:C.

FLOOR DRAIN, COORDINATE W/ PLUMBING. MAINTAIN POSITIVE DRAINAGE AT ALL FLOORS TO DRAIN AT 2% MAXIMUM.

FLOOR SINK, COORDINATE W/ PLUMBING.

1.00 KEYED NOTES SCHEDULE

4.26 20" WIDE x 48" LONG FIXED ADA BENCH ASSEMBLY. MOUNT WITHIN 2" OF BACK WALL AND 3/4" OF THE LOCKER SIDE. REFER TO ANCHORAGE DETAIL E6/A592.

4.46 6' LONG MOBILE / UNATTACHED ALUMINUM BENCH, TYP. REFER TO SPEC SECTION 10 51 50.

IDENTIFICATION STAMP
DIV. OF THE STATE ARCHITECT
APP: 02-121275 INC:
REVIEWED FOR
SS ☑ FLS ☑ ACS ☑
DATE: 12/15/2023

CALIFORNIA DESIGN WEST ARCHITECTS, Inc.

2100 19th Street
Sacramento, CA 95818

Phone: (916) 446-2466
Fax: (916) 446-5118
Web Page: ca-dw.com

These plans and prints thereof, as instruments of service, are owned by the architect and are for the use on this project only. Reproduction and/or distribution without the prior written consent of the architect is forbidden.

Copyright California Design West Architects, Inc.

ARCHITECT: CONSULTANT:

LICENSED ARCHITECT MITCHELL A. McALLISTER NO. C17250 SEN. 2-28-2023 STATE OF CALIFORNIA

CONSULTANT:

PROJECT NAME:

BUHACH COLONY HIGH SCHOOL

1800 NORTH BUHACH ROAD
ATWATER, CA 95301

CONCESSIONS/TOILET BUILDINGS, TICKET BOOTH & STADIUM UPGRADES

MERCED UNION HIGH SCHOOL DISTRICT

MERCED COUNTY

KEY PLAN:

SHEET TITLE:

BUILDING V EQUIP & ACCESSORY SCHEDULES

JOB NUMBER:

SHEET NUMBER:

DATE: NOV 17, 2023

REVISION:

AV104

C:\Users\strump\Documents\A22_BCHS-TeamsRoom-VISITOR-SnackBar - CENTRAL_strump-2100.rvt

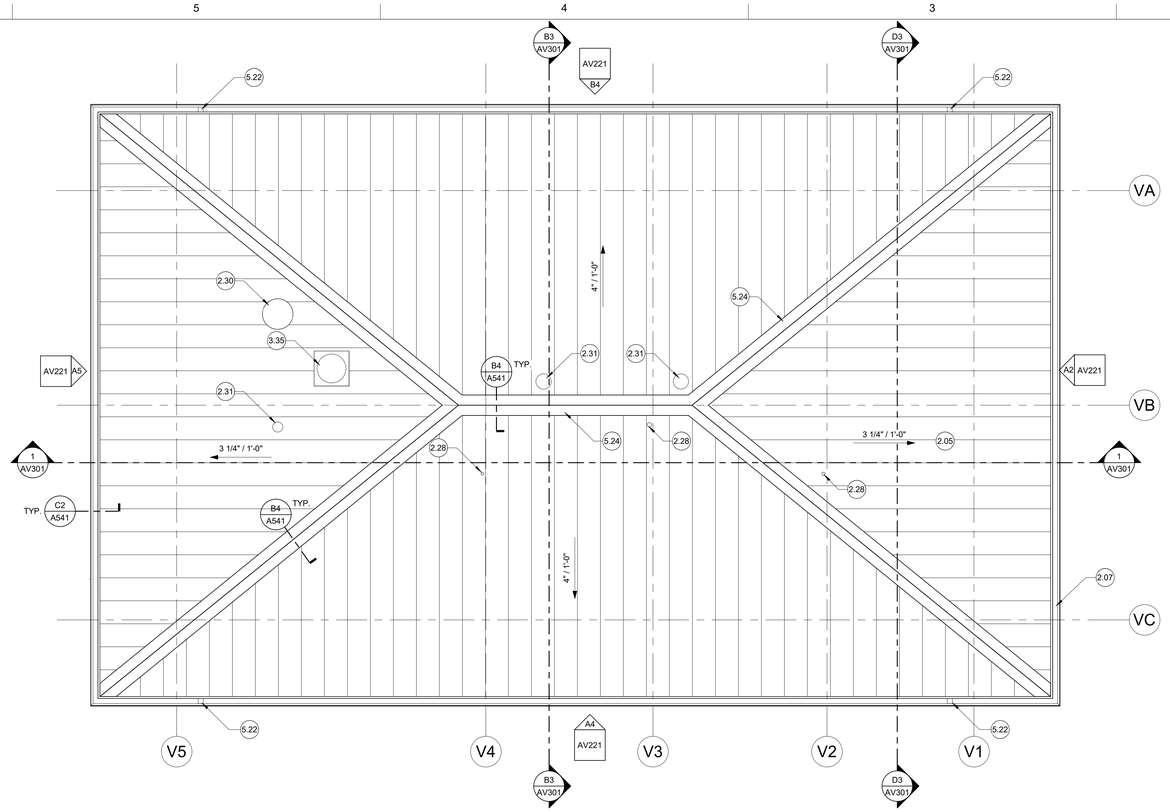

1 BUILDING V - ROOF PLAN
1/4" = 1'-0"

PLAN NORTH
N

GENERAL NOTES

1. ROOF PLAN INDICATES MAJOR ROOF PENENTRATIONS, AND DOES NOT REPRESENT ALL PENETRATIONS REQUIRED BY EVERY DISCIPLINE / UTILITY. COORDINATE ALL PENETRATIONS WITH EACH DISCIPLINE.
2. MAINTAIN POSITIVE SEPERATION BETWEEN ALL DISSIMILAR METALS. PROVIDE SEALANT AT ALL DISSIMILAR METERIAL CONNECTIONS.
3. MINIMUM ROOF CLASS TO BE TYPE "A" OR ABOVE, SEE SPEC SECTION 07 41 13.
4. ROOF SLOPES AS INDICATED BY ROOF SLOPE INDICATORS IN ROOF PLAN.
5. ALL MECHANICAL, ELECTRICAL, AND PLUMBING PENETRATIONS THROUGH ROOFING SHALL HAVE PIPE BOOTS INTEGREAL TO (AND SEALED AROUND) ROOFING ASSEMBLY. SEE SHEET A541 FOR DETAILS. COORDINATE WITH MECHANICAL AND ELECTRICAL.

LEGEND

CLASS A PRE-FINISHED STANDING SEAM METAL ROOFING ASSEMBLY OVER 1" RIGID INSULATION.

1/2" / 1'-0" DOWN SLOPE OF ROOF OR CRICKET; SLOPE AS INDICATED.

.00 KEYED NOTE. REFER TO KEYED NOTES SCHEDULE. KEYED NOTE TAGS W/O LEADER APPLIES TO THE ENTIRE ROOM (OR SURFACE IN WHICH (ON WHICH) THE TAG IS LOCATED. KEYED NOTES MAY SKIP NUMBERS.

1.00 KEYED NOTES SCHEDULE

2.05 PRE-FINISHED METAL STANDING SEAM ROOFING ASSEMBLY O/ 1" RIGID INSULATION O/ WEATHER BARRIER, TYP.

2.07 PRE-FINISHED METAL GUTTER ASSEMBLY, TYP.

2.28 PLUMBING VENT THROUGH ROOF, TYP. REFER TO MECHANICAL P2.1 AND P2.2.

2.30 MECHANICAL INTAKE VENT ASSEMBLY. REFER TO MECHANICAL M2.1 AND M2.2 AND DETAIL 1/M6.2.

2.31 MECHANICAL EXHAUST VENT ASSEMBLY THROUGH ROOF, TYP. REFER TO MECHANICAL M2.1 AND M2.2.

3.35 SOLATUBE DAYLIGHT ASSEMBLY. REFER TO SPEC SECTION 08 62 23.

5.22 DOWNSPOUT LOCATION, TYP. REFER TO ELEVATIONS.

5.24 ROOFING ASSEMBLY PRE-FINISHED METAL RIDGE / HIP, TYP. REFER TO DETAIL B4/A541.

IDENTIFICATION STAMP
DIV. OF THE STATE ARCHITECT
APP: 02-121275 INC:
REVIEWED FOR
SS ☑ FLS ☑ ACS ☑
DATE: 12/15/2023

CALIFORNIA DESIGN WEST ARCHITECTS, Inc.

2100 19th Street
Sacramento, CA 95818

Phone: (916) 446-2466
Fax: (916) 446-5118
Web Page: ca-dw.com

These plans and prints thereof, as instruments of service, are owned by the architect and are for the use on this project only. Reproduction and/or distribution without the prior written consent of the architect is forbidden.

Copyright California Design West Architects, Inc.

ARCHITECT: CONSULTANT:

LICENSED ARCHITECT
MITCHELL A. McALLISTER
NO. C17250
SEN. 2-28-2023
STATE OF CALIFORNIA

CONSULTANT:

PROJECT NAME:

BUHACH COLONY HIGH SCHOOL

1800 NORTH BUHACH ROAD
ATWATER, CA 95301

CONCESSIONS/TOILET BUILDINGS, TICKET BOOTH & STADIUM UPGRADES

MERCED UNION HIGH SCHOOL DISTRICT

MERCED COUNTY

KEY PLAN:

SHEET TITLE:
BUILDING V - ROOF PLAN

JOB NUMBER:

SHEET NUMBER:

DATE:
NOV 17, 2023

REVISION:

AV161

C:\Users\strump\Documents\A22_BCHS-TeamsRoom-VISITOR-SnackBar - CENTRAL_strump-2100.rvt

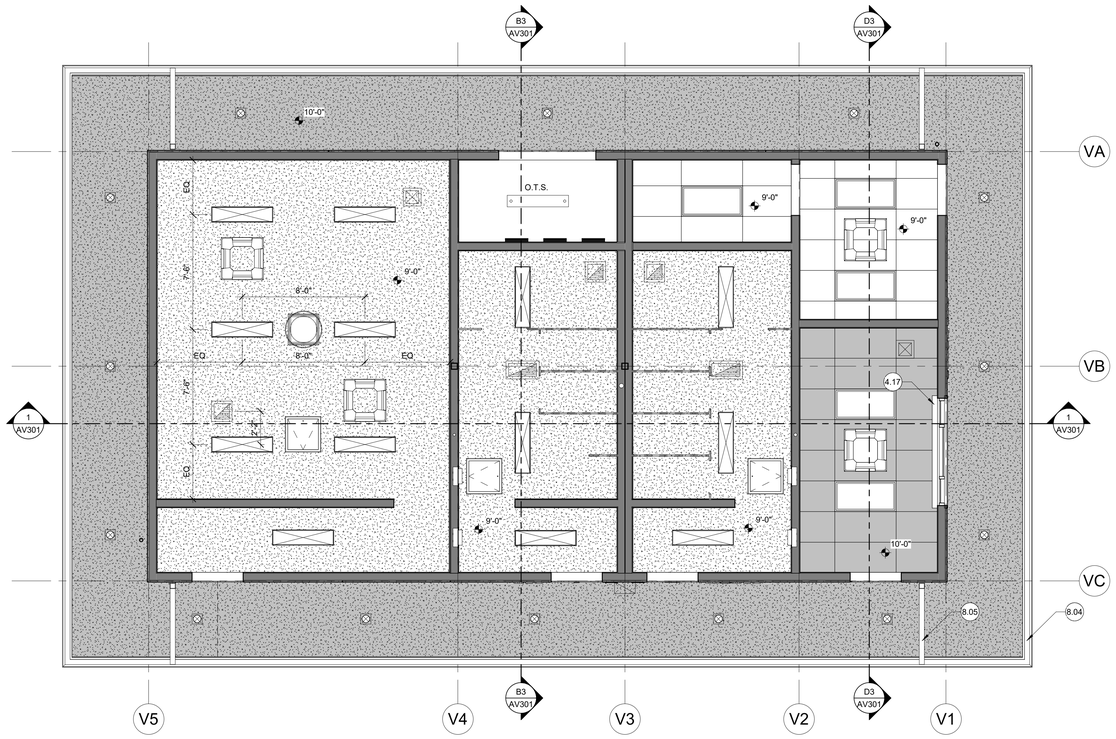

1 BUILDING V - REFLECTED CEILING PLAN
1/4" = 1'-0"

PLAN NORTH
N

GENERAL NOTES

1. REFER TO ROOM FINISH SCHEDULE FOR ADDITIONAL INFORMATION. FOR STANDARD SUSPENSION DETAILS SEE SHEET A581.
2. CEILING SPOT ELEVATIONS ARE ROUNDED OFF FOR CLARITY IN SOME DRAWINGS. RATIONAL CEILING ELEVATION IS TO BOTTOM OF FRAMING.
3. NOT ALL CEILING ACCESS DOORS ARE SHOWN ON PLANS. REFER TO MECHANICAL, PLUMBING & ELECTRICAL DRAWINGS AND SPECIFICATIONS FOR ADDITIONAL CEILINGS ACCESS DOOR LOCATIONS.
4. CEILING GRID LAYOUT TO BE CENTERED IN EACH ROOM, U.O.N.
5. ALL CEILING-MOUNTED FIXTURES (FOR EXAMPLE LIGHTING, SENSORS, SPEAKERS, STROBES, ETC.) SHALL BE CENTERED IN ROOM, CENTERED OVER DOOR, OR CENTERED IN ACOUSTICAL PANEL (HALF OF 2x4 PANEL) - WHICHEVER IS MOST APPLICABLE.
6. CEILING ELEVATION HEIGHT DIMENSIONS RELATIVE TO FINISH FLOOR DIRECTLY BELOW ELEVATION MARKER.

LEGEND

- FULL-HEIGHT FRAMED WALL - EXTENDED TO STRUCTURE / DECK ABOVE. REFER TO STRUCTURAL.
- 1.01 — KEYED NOTE. REFER TO KEYED NOTES SCHEDULE. KEYED NOTE TAGS WITHOUT LEADER APPLIES TO THE ENTIRE ROOM OR SURFACE IN WHICH (ON WHICH) THE TAG IS LOCATED. KEYED NOTES MAY SKIP NUMBERS.
- 2'x4' , 2'x2' RECESSED LIGHT FIXTURE, COORD W/ ELEC.
- 1'x4' SURFACE-MOUNTED LIGHT FIXTURE, COORD W/ ELEC.
- RECESSED LIGHT FIXTURE, COORD. W/ ELECTRICAL.
- EXTERIOR LIGHT, REFER TO ELECTRICAL.
- EXHAUST AIR GRILLE, COORD W/ MECH.
- SUPPLY/ RETURN COMBO, COORD. W/ MECH.
- 24" x 24" LOCKING ACCESS PANEL. COORDINATE LOCATIONS REQUIRED WITH M,E, AND P. REFER TO DETAIL B5/A581.
- 2'x2' SOLATUBE DIFFUSER LENS.
- 2'-0" x 4'-0" SUSPENDED ASSEMBLY WITH VINYL WASHABLE LAY-IN PANELS. EACH AREA TO HAVE (2) ADJACENT SIDES FIXED TO WALL W/ (2) OPPOSING SIDES 'FLOATING' PER DETAILS ON A-581. TYPICAL STRUTS TO BE PLACED AT 12'-0" O.C. MAXIMUM EACH WAY. ALL LIGHTING FIXTURES IN THIS AREA TO HAVE SHATTER-PROOF LENSES.
- GYP. BD. CEILING O/ 2x6 WD CEILING JOISTS @ 24" O.C. (UNLESS NOTED OTHERWISE). REFER TO STRUCTURAL CEILING FRAMING PLAN A/SV2.1
- PLASTER CEILING ASSEMBLY O/ 1/2" PLYWOOD O/ 2x6 WD CEILING JOISTS @ 24" O.C. (UNLESS OTHERWISE NOTED). REFER TO DETAIL C4/A541. REFER TO STRUCTURAL CEILING FRAMING PLAN A/SV2.1

1.00 KEYED NOTES SCHEDULE

4.17 STAINLESS STEEL OVERHEAD COILING DOOR ASSEMLBY. REFER TO DOOR SCHEDULE.

8.04 PRE-FINISHED METAL SEAMLESS GUTTER ASSEMBLY, TYP.

8.05 PRE-FINISHED METAL DOWNSPOUT ASSEMBLY.

IDENTIFICATION STAMP
DIV. OF THE STATE ARCHITECT
APP: 02-121275 INC:
REVIEWED FOR
SS ☑ FLS ☑ ACS ☑
DATE: 12/15/2023

CALIFORNIA DESIGN WEST ARCHITECTS, Inc.

2100 19th Street
Sacramento, CA 95818

Phone: (916) 446-2466
Fax: (916) 446-5118
Web Page: ca-dw.com

These plans and prints thereof, as instruments of service, are owned by the architect and are for the use on this project only. Reproduction and/or distribution without the prior written consent of the architect is forbidden.

Copyright California Design West Architects, Inc.

ARCHITECT: CONSULTANT:

LICENSED ARCHITECT
MITCHELL A. MCALISTER
NO. C 17250
STATE OF CALIFORNIA

CONSULTANT:

PROJECT NAME:

BUHACH COLONY HIGH SCHOOL

1800 NORTH BUHACH ROAD
ATWATER, CA 95301

CONCESSIONS/TOILET BUILDINGS, TICKET BOOTH & STADIUM UPGRADES

MERCED UNION HIGH SCHOOL DISTRICT

MERCED COUNTY

KEY PLAN:

SHEET TITLE:
BUILDING V - REFLECTED CEILING PLAN

JOB NUMBER:

SHEET NUMBER:
AV181

DATE:
NOV 17, 2023

REVISION:

C:\Users\trump\Documents\AA22_BOHS-TrainingRoom-VISITOR-SwaddBar_CENTRAL_trump-2100.rvt

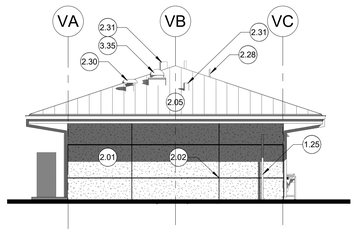

A5 EXTERIOR ELEVATION - NORTH
1/8" = 1'-0"

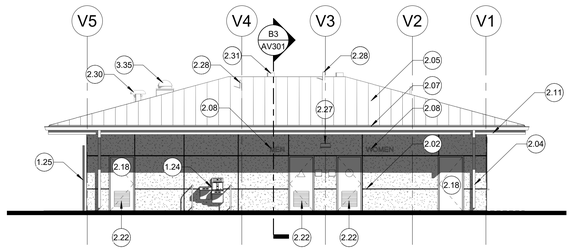

A4 EXTERIOR ELEVATION - WEST
1/8" = 1'-0"

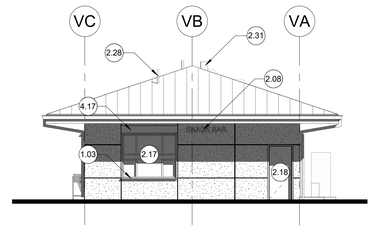

A2 EXTERIOR ELEVATION - SOUTH
1/8" = 1'-0"

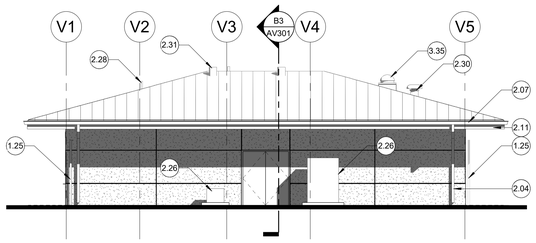

B4 EXTERIOR ELEVATION - EAST
1/8" = 1'-0"

GENERAL NOTES

1. REFER TO PLANS FOR SCHEDULED DOORS, WINDOWS, FIXTURES AND ACCESSORIES.

2. EXTERIOR VENEER TYPE, TEXTURE, COLORS AND PATTERNS TO MATCH EXISTING ON CAMPUS.

1.00 KEYED NOTES SCHEDULE

1.03 BUILT-IN STAINLESS STEEL TRANSACTION COUNTERTOP, TYP. PROVIDE SEAMLESS CLOSURES AT ALL EXPOSED ENDS. REFEER TO DETAIL A4/A571.

1.24 HIGH/LOW + BOTTLE FILLER DRINKING FOUNTAION. PROVIDE GUARD BARS ON BOTH SIDES. COORD WITH ELECTRICAL AND PLUMBING. REFER TO D4/A592 FOR ADDITIONAL INFORMATION.

1.25 SITE FENCE / GATE POST SET WITHIN 4" OF FACE OF BUILDING. REFER TO PROJECT SITE PLAN FOR GATE LOCATION / SCHEDULE. REFER TO STRUCTURAL FOR FOOTING / SLEEVE DETAIL 8/SS.0.

2.01 PLASTER ASSEMBLY, TYP. REFER TO WALL TYPES.

2.02 PLASTER CONTROL JOINT REVEAL, TYP. REFER TO DETAIL D3/A541.

2.04 HD GALVANIZED METAL DOWNSPOUT ASSEMBLY. BOTTOM 8'-0" SHALL BE HEAVY-GUAGE VANDAL RESISTANT. PAINT. REFER TO D4/A541. PROVIDE A CLEANOUT 'T' AT GRADE AND CONNECT TO STROM DRAIN. REFER TO CIVIL DETAIL 11/C1.4.

2.05 PRE-FINISHED METAL STANDING SEAM ROOFING ASSEMBLY O/ 1" RIGID INSULATION O/ WEATHER BARRIER, TYP.

2.07 PRE-FINISHED METAL GUTTER ASSEMBLY, TYP.

2.08 8" HIGH CAST-ALUMINUM RAISED DIMENSIONAL LETTERING.

2.11 PRE-FINISHED METAL FASCIA, REFER TO DETAIL C2/A541.

2.17 SCHEDULED WINDOW ASSEMBLY, REFER TO WINDOW TYPES ON A571.

2.18 SCHEDULED DOOR ASSEMBLY. REFER TO PLAN AND DOOR SCHEDULE.

2.22 DOOR LOUVER ASSEMBLY. REFER TO MECH.

2.26 MECHANICAL CONDENSING UNIT OVER CONCRETE HOUSEKEEPING PAD. REFER TO MECHANICAL DETAIL 5/M6.2. SIZE OF PAD TO BE 8" LARGER THAN THE UNIT ON THE THREE FRONT SIDES (6" MIN EDGE-DISTANCE TO MOUNTING BOLTS). EXTEND BACK EDGE OF PAD TO BUILDING FOUNDATION.

2.27 WALL LIGHT SCONCE. REFER TO ELECTRICAL.

2.28 PLUMBING VENT THROUGH ROOF, TYP. REFER TO MECHANICAL P2.1 AND P2.2.

2.30 MECHANICAL INTAKE VENT ASSEMBLY. REFER TO MECHANICAL M2.1 AND M2.2 AND DETAIL 1/M6.2.

2.31 MECHANICAL EXHAUST VENT ASSEMBLY THROUGH ROOF, TYP. REFER TO MECHANICAL M2.1 AND M2.2.

3.35 SOLATUBE DAYLIGHT ASSEMBLY. REFER TO SPEC SECTION 08 62 23.

4.17 STAINLESS STEEL OVERHEAD COILING DOOR ASSEMLBY. REFER TO DOOR SCHEDULE.

IDENTIFICATION STAMP
DIV. OF THE STATE ARCHITECT
APP: 02-121275 INC:
REVIEWED FOR
SS ☑ FLS ☑ ACS ☑
DATE: 12/15/2023

CALIFORNIA DESIGN WEST ARCHITECTS, Inc.

2100 19th Street
Sacramento, CA 95818

Phone: (916) 446-2466
Fax: (916) 446-5118
Web Page: ca-dw.com

These plans and prints thereof, as instruments of service, are owned by the architect and are for the use on this project only. Reproduction and/or distribution without the prior written consent of the architect is forbidden.

Copyright California Design West Architects, Inc.

ARCHITECT: CONSULTANT:

LICENSED ARCHITECT
NO. C 17250
MITCHELL A. MCALISTER
STATE OF CALIFORNIA

CONSULTANT:

PROJECT NAME:

BUHACH COLONY HIGH SCHOOL

1800 NORTH BUHACH ROAD
ATWATER, CA 95301

CONCESSIONS/TOILET BUILDINGS, TICKET BOOTH & STADIUM UPGRADES

MERCED UNION HIGH SCHOOL DISTRICT

MERCED COUNTY

KEY PLAN:

SHEET TITLE:
BUILDING V - EXTERIOR ELEVATIONS

JOB NUMBER:

SHEET NUMBER:
AV221

DATE:
NOV 17, 2023

REVISION:

C:\Users\stump\Documents\A22_BCHS-TeamsRoom-VISITOR-SheddBar - CENTRAL_stump-2100.rvt

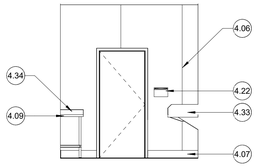

A5 SNACK BAR - ENTRY WALL
1/4" = 1'-0"

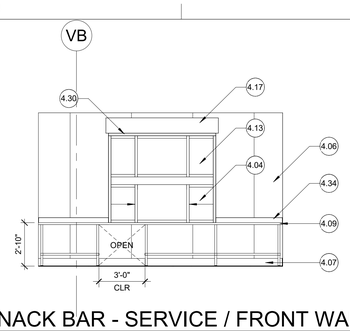

A4 SNACK BAR - SERVICE / FRONT WALL
1/4" = 1'-0"

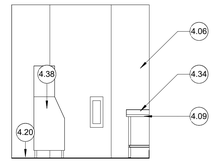

A2 SNACK BAR - FAR WALL
1/4" = 1'-0"

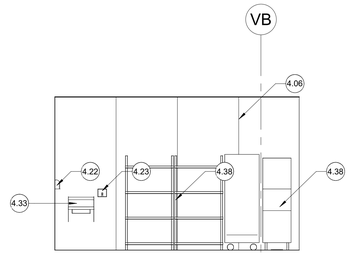

B3 SNACK BAR - REAR WALL
1/4" = 1'-0"

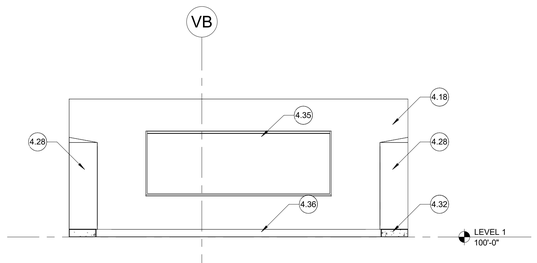

D6 VISITOR TEAM TEACHING WALL
1/4" = 1'-0"

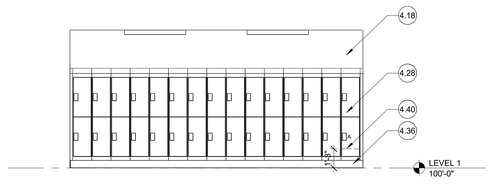

D4 VISITOR TEAM - FAR WALL
1/4" = 1'-0"

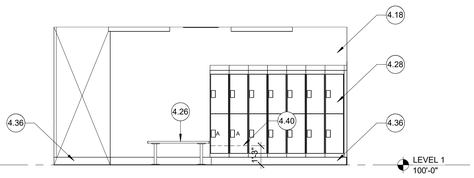

E4 VISITOR TEAM ENTRY WALL
1/4" = 1'-0"

GENERAL NOTES

1. ALL WALL-HUNG CABINETS, FIXTURES, EQUIPMENT TO BE FASTENED TO WALL PER TYPICAL MOUNTING DETAILS ON A592.

2. ALL FLOOR SUPPORED STORAGE RACKS, CABINETS, AND BOOK STACKS SHALL BE FASTENED TO WALL SEE TYPICAL MOUNTING DETAILS ON A592.

3. ALL COUNTER TOPS AND MILLWORK EXPOSED SURFACES TO BE P-LAM, UNLESS NOTED OTHERWISE.

4. HOLES INDICATED IN MILLWORK COUNTERTOPS TO BE SIZE INDICATED, WITH PREFAB HOLE FINISH AND COVER LOCATION INDICATED ARE TO BE 2" FROM BACK OF SURFACE.

5. PROVIDE BLOCKING AT ALL STUD LOCATIONS FOR ATTACHMENT OF MILLWORK AS INDICATED ON SHEET A592. PROVIDE ALL OTHER ITEMS ON THESE SHEETS PER MANUFACTURERS REQUIREMENTS.

6. ALL MARKERBOARDS SHALL BE WALL MOUNTED UNLESS OTHERWISE NOTED.

7. ALL ACOUSTICAL PANEL LAYOUTS: EQ = EQUAL 4'-0" WIDE PANELS, REM = REMAINDER OF WIDTH REQUIRED. AT FULL WALL LAYOUTS, THE TYPICAL LAYOUT OF THE 4'-0" WIDE PANELS WILL ORIGINATE @ THE CENTER OF WALL, WITH REMAINING PANELS AT EACH END OF WALL TO BE EQUAL IN WIDTH.

8. REFER TO PLANS FOR SCHEDULED DOORS, WINDOWS, FIXTURES AND ACCESSORIES.

9. REFER TO SHEET A581 FOR TYPICAL SUSPENDED CEILING ASSEMBLY DETAILS.

10. TILE WALL PATTERNS INDICATE WALL TILE LOCATIONS AND HEIGHT ONLY, AND DO NOT REPRESENT ACTUAL WALL TILE PATTERN. REFER TO SPEC SECTION 09 30 00.

1.01 KEYED NOTE. REFER TO KEYED NOTES SCHEDULE. KEYED NOTE TAGS WITHOUT LEADER APPLIES TO THE ENTIRE ROOM OR SURFACE IN WHICH (ON WHICH) THE TAG IS LOCATED. KEYED NOTES MAY SKIP NUMBERS.

1.00 - KEYED NOTES SCHEDULE

4.04 OPERABLE TRANSACTION WINDOW. REFER TO WINDOW TYPE.

4.06 FRP PANEL ASSEMBLY WITH ALUMINUM TOP J-TRIM (WHERE APPLICABLE) AND ALUMINUM H-TRIM JOINTS. FRP TO BE MOUNTED 6" FROM FLOOR OVERLAPPING EPOXY BASE WITH NO BOTTOM TRIM. REFER TO DETAILS.

4.07 6" SANITARY SLIM-FOOT COVED TILE BASE. REFER TO DETAIL B3/A592.

4.09 STAINLESS STEEL COUNTERTOP WITH FIXED UNDERSHELF WHERE INDICATED. REFER TO PLAN AND ELEVATIONS FOR LOCATIONS.

4.13 SCHEDULED WINDOW ASSEMBLY. REFER TO WINDOW TYPE.

4.17 STAINLESS STEEL OVERHEAD COILING DOOR ASSEMLBY. REFER TO DOOR SCHEDULE.

4.18 PAINTED GYP BD., TYP.

4.20 FLOOR SINK, TYP. COORD. W/ PLUMBING.

4.22 PAPER TOWEL DISPENSER.

4.23 SOAP DISPENSER, TYP.

4.26 20" WIDE x 48" LONG FIXED ADA BENCH ASSEMBLY. MOUNT WITHIN 2" OF BACK WALL AND 3/4" OF THE LOCKER SIDE. REFER TO ANCHORAGE DETAIL E6/A592.

4.28 15" WIDE x 22" DEEP DOUBLE-TIER LOCKER ASSEMBLY, TYP. VISITOR'S-SIDE. SET OVER 6" CONCRETE BASE. PROVIDE SLOPED TOP, TYP. PROVIDE CLOSURE FILLERS AT CORNERS AND CORNER TOPS, TYP. REFER TO EQUIPMENT & ACCESSORY SCHEDULE PLAN AV104 FOR LOCKER TYPE, QUANTITY, AND ACCESSIBILITY REQUIREMENTS. REFER TO DETAILS D2 AND E2 / A592.

4.30 EXPOSED S/S HSS WINDOW FRAME. JAMBS BOLTED TO WOOD FRAMING AT TWO SIDES. REFER TO DETAIL D1/A571. REFER TO WINDOW TYPE ON SHEET A571 FOR ADDITIONAL DETAILS.

4.32 CONCRETE LOCKER BASE. REFER TO STRUCTURAL.

4.33 S/S ADA HAND-WASH SINK WITH INTEGRAL SPLASH GUARDS. REFER TO D3/A591. REFER TO MECHANICAL.

4.34 4" HIGH S/S BACKSPLASH, TYP.

4.35 12' LONG WHITEBOARD ASSEMBLY.

4.36 6" RUBBER BASE, TYP.

4.38 SCHEDULED EQUIPMENT. REFER TO PLAN. REFER TO MECANICAL AND ELECTRICAL.

4.40 FIXED LOWER ACCESSIBLE SHELF @ 15" ABOVE FINSIH FLOOR. REFER TO ACCESSORY SCHEDULE PLAN FOR ACESSIBLE LOCKER LOCATIONS.

IDENTIFICATION STAMP
DIV. OF THE STATE ARCHITECT
APP: 02-121275 INC:
REVIEWED FOR
SS ☑ FLS ☑ ACS ☑
DATE: 12/15/2023

CALIFORNIA DESIGN WEST ARCHITECTS, Inc.

2100 19th Street
Sacramento, CA 95818

Phone: (916) 446-2466
Fax: (916) 446-5118
Web Page: ca-dw.com

These plans and prints thereof, as instruments of service, are owned by the architect and are for the use on this project only. Reproduction and/or distribution without the prior written consent of the architect is forbidden.

Copyright California Design West Architects, Inc.

ARCHITECT: CONSULTANT:

LICENSED ARCHITECT
MITCHELL A. MCALISTER
NO. C 17250
REN. 08-31-2025
STATE OF CALIFORNIA

CONSULTANT:

PROJECT NAME:

BUHACH COLONY HIGH SCHOOL

1800 NORTH BUHACH ROAD
ATWATER, CA 95301

CONCESSIONS/TOILET BUILDINGS, TICKET BOOTH & STADIUM UPGRADES

MERCED UNION HIGH SCHOOL DISTRICT

MERCED COUNTY

KEY PLAN:

SHEET TITLE:

BUILDING V - INTERIOR ELEVATIONS

JOB NUMBER:

SHEET NUMBER:

AV291

DATE:
NOV 17, 2023

REVISION:

C:\Users\trump\Documents\AA22_BOHS-TrainedRoom-VISITOR+SnackBar_CENTRAL_trump-2100.rvt

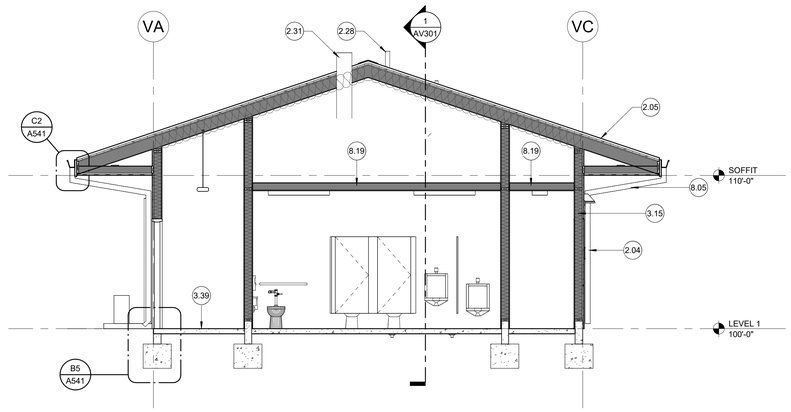

B3 VISITOR SECTION - LATERAL @ TOILETS
1/4" = 1'-0"

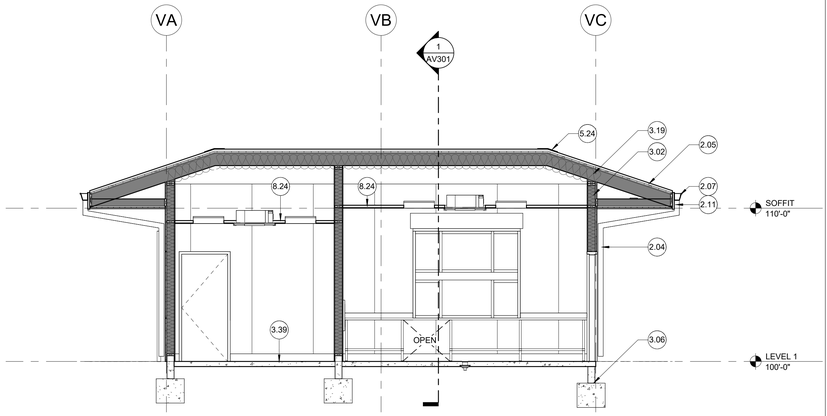

D3 VISITOR SECTION - LATERAL @ SNACK BAR
1/4" = 1'-0"

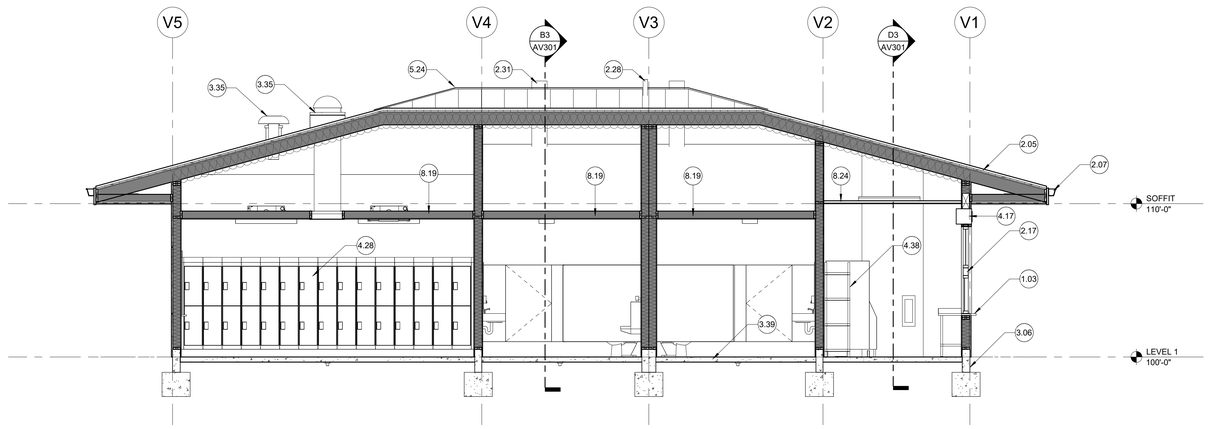

1 VISITOR SECTION - LONGITUDINAL
1/4" = 1'-0"

GENERAL NOTES

1. REFER TO PLANS FOR SCHEUDLED FIXTURES AND ACCESSORIES.
2. REFER TO DETAILS FOR ADDITIONAL INFORMATION.

1.00 KEYED NOTES SCHEDULE

1.03 BUILT-IN STAINLESS STEEL TRANSACTION COUNTERTOP, TYP. PROVIDE SEAMLESS CLOSURES AT ALL EXPOSED ENDS. REFEER TO DETAIL A4/A571.

2.04 HD GALVANIZED METAL DOWNSPOUT ASSEMBLY. BOTTOM 8'-0" SHALL BE HEAVY-GUAGE VANDAL RESISTANT. PAINT. REFER TO D4/A541. PROVIDE A CLEANOUT 'T' AT GRADE AND CONNECT TO STROM DRAIN. REFER TO CIVIL DETAIL 11/C1.4.

2.05 PRE-FINISHED METAL STANDING SEAM ROOFING ASSEMBLY O/ 1" RIGID INSULATION O/ WEATHER BARRIER, TYP.

2.07 PRE-FINISHED METAL GUTTER ASSEMBLY, TYP.

2.11 PRE-FINISHED METAL FASCIA, REFER TO DETAIL C2/A541.

2.17 SCHEDULED WINDOW ASSEMBLY, REFER TO WINDOW TYPES ON A571.

2.28 PLUMBING VENT THROUGH ROOF, TYP. REFER TO MECHANICAL P2.1 AND P2.2.

2.31 MECHANICAL EXHAUST VENT ASSEMBLY THROUGH ROOF, TYP. REFER TO MECHANICAL M2.1 AND M2.2.

3.02 R-19 BATT INSULATION FILLING ALL STUD CAVITIES.

3.06 FOOTING / FOUNDATION PER STRUCTURAL.

3.15 R-19 BATT INSULATION WITHIN ALL 2x EXTERIOR WALL CAVITIES, CONTINUES TO ROOF DECK/ROOF INSULATION.

3.19 R-25 MIN. BATT INSULATION IN ALL ROOFING CAVATIES, TYP.

3.35 SOLATUBE DAYLIGHT ASSEMBLY. REFER TO SPEC SECTION 08 62 23.

3.39 5" CONC. SLAB OVER VAPOR BARRIER OVER 4" CRUSHED AGGREGATE OVER PREPPED SUB GRADE PER GEOTECH. REFER TO BUILDING STRUCTURAL SLAB PLANS ON SV2.0.

4.17 STAINLESS STEEL OVERHEAD COILING DOOR ASSEMLBY. REFER TO DOOR SCHEDULE.

4.28 15" WIDE x 22" DEEP DOUBLE-TIER LOCKER ASSEMBLY, TYP. VISITOR'S-SIDE. SET OVER 6" CONCRETE BASE. PROVIDE SLOPED TOP, TYP. PROVIDE CLOSURE FILLERS AT CORNERS AND CORNER TOPS, TYP. REFER TO EQUIPMENT & ACCESSORY SCHEDULE PLAN AV104 FOR LOCKER TYPE, QUANTIY, AND ACCESSIBILITY REQUIREMENTS. REFER TO DETAILS D2 AND E2 / A592.

4.38 SCHEDULED EQUIPMENT. REFER TO PLAN. REFER TO MECANICAL AND ELECTRICAL.

5.24 ROOFING ASSEMBLY PRE-FINISHED METAL RIDGE / HIP, TYP. REFER TO DETAIL B4/A541.

8.05 PRE-FINISHED METAL DOWNSPOUT ASSEMBLY.

8.19 GYP. BD CEILING, TYP. REFER TO C5/A541.

8.24 SUSPENDED CEILING ASSEMBLY. REFER TO DETAILS ON SHEET A581.

IDENTIFICATION STAMP
DIV. OF THE STATE ARCHITECT
APP: 02-121275 INC:
REVIEWED FOR
SS ☑ FLS ☑ ACS ☑
DATE: 12/15/2023

DESIGN WEST California

CALIFORNIA DESIGN WEST ARCHITECTS, Inc.

2100 19th Street
Sacramento, CA 95818

Phone: (916) 446-2466
Fax: (916) 446-5118
Web Page: ca-dw.com

These plans and prints thereof, as instruments of service, are owned by the architect and are for the use on this project only. Reproduction and/or distribution without the prior written consent of the architect is forbidden.

Copyright California Design West Architects, Inc.

ARCHITECT: CONSULTANT:

LICENSED ARCHITECT
MITCHELL A. McALISTER
NO. C 17258
REN. 08-31-2025
STATE OF CALIFORNIA

CONSULTANT:

PROJECT NAME:

BUHACH COLONY HIGH SCHOOL

1800 NORTH BUHACH ROAD
ATWATER, CA 95301

CONCESSIONS/TOILET BUILDINGS, TICKET BOOTH & STADIUM UPGRADES

MERCED UNION HIGH SCHOOL DISTRICT

MERCED COUNTY

KEY PLAN:

SHEET TITLE:
BUILDING V - SECTIONS

JOB NUMBER:	SHEET NUMBER:
DATE: NOV 17, 2023	**AV301**
REVISION:	

C:\Users\stumyr\Documents\A22_BCHS-TrainsRoom-VISITOR+SnackBar - CENTRAL_stumyr-2100.rvt

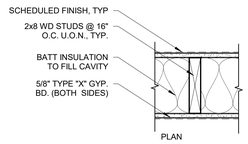

W4 WALL TYPE 4
1 1/2" = 1'-0"

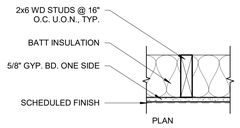

W3 WALL TYPE 3
1 1/2" = 1'-0"

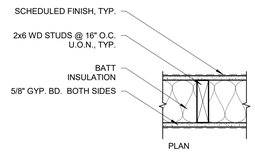

W2 WALL TYPE 2
1 1/2" = 1'-0"

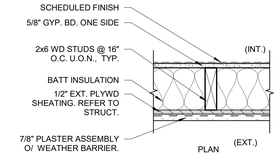

W1 WALL TYPE 1
1 1/2" = 1'-0"

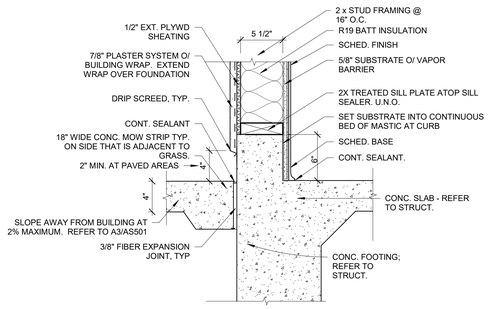

B5 TYP. FOOTING DETAIL
1 1/2" = 1'-0"

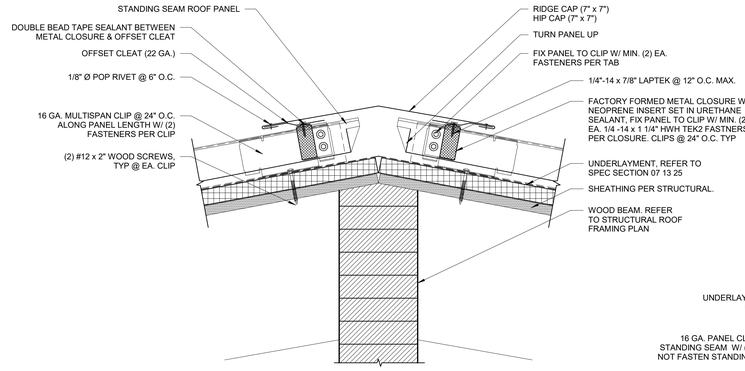

B4 ROOFING RIDGE / HIP DETAIL
3" = 1'-0"

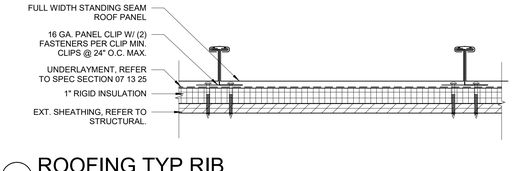

B1 ROOFING TYP RIB
3" = 1'-0"

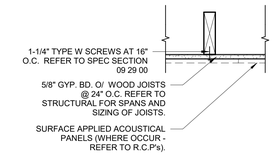

C5 GYP. BD. CEILING
1 1/2" = 1'-0"

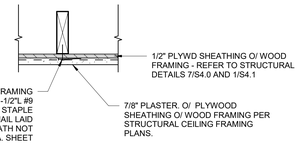

C4 PLASTER DETAIL
1 1/2" = 1'-0"

C2 GUTTER / SOFFIT
3" = 1'-0"

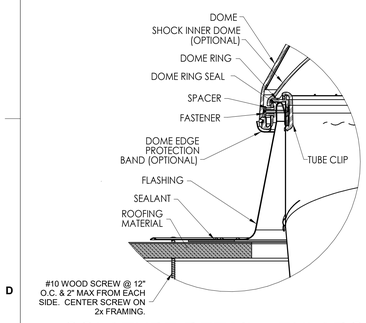

D6 SOLATUBE DETAIL - ENLARGED CURB
1 1/2" = 1'-0"

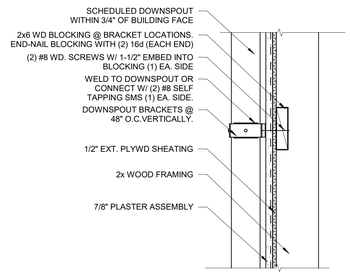

D4 DOWNSPOUT
1 1/2" = 1'-0"

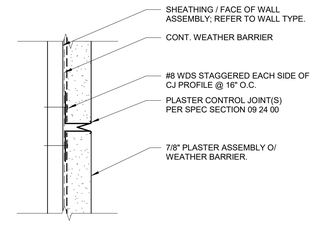

D3 TYP. "V" GROVE
6" = 1'-0"

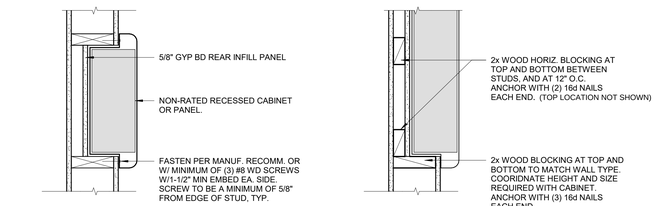

D2 SEMI-RECESSED CAB.
1 1/2" = 1'-0"

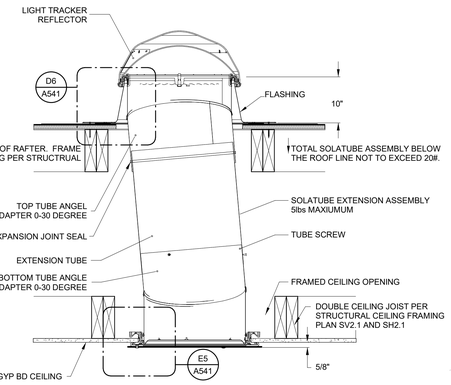

E6 SOLATUBE DETAIL
1 1/2" = 1'-0"

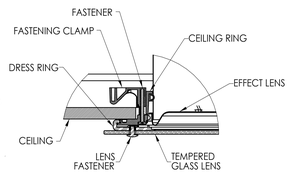

E5 SOLATUBE DETAIL AT CEILING
1 1/2" = 1'-0"

IDENTIFICATION STAMP
DIV. OF THE STATE ARCHITECT
APP: 02-121275 INC:
REVIEWED FOR
SS ☑ FLS ☑ ACS ☑
DATE: 12/15/2023

CALIFORNIA DESIGN WEST ARCHITECTS, Inc.

2100 19th Street
Sacramento, CA 95818

Phone: (916) 446-2466
Fax: (916) 446-5118
Web Page: ca-dw.com

These plans and prints thereof, as instruments of service, are owned by the architect and are for the use on this project only. Reproduction and/or distribution without the prior written consent of the architect is forbidden.

Copyright California Design West Architects, Inc.

ARCHITECT: CONSULTANT:

CONSULTANT:

PROJECT NAME:

BUHACH COLONY HIGH SCHOOL

1800 NORTH BUHACH ROAD
ATWATER, CA 95301

CONCESSIONS/TOILET BUILDINGS, TICKET BOOTH & STADIUM UPGRADES

MERCED UNION HIGH SCHOOL DISTRICT

MERCED COUNTY

KEY PLAN:

SHEET TITLE:
WALL TYPES, ROOF & MISC. DETAILS

JOB NUMBER:

SHEET NUMBER:
A541

DATE:
NOV 17, 2023

REVISION:

C:\Users\stumpi\Documents\A22_BCHS-TrainsRoom-VISITOR+Snack\Bar - CENTRAL_stumpi-2100.rvt

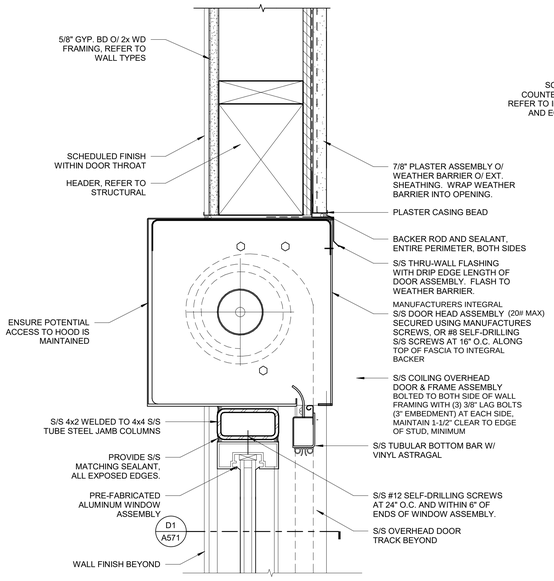

A5 COILING DOOR HEAD
3" = 1'-0"

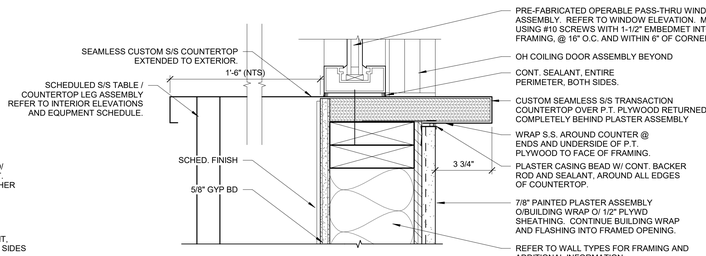

A4 TRANSACTION SILL @ CONCESSIONS
3" = 1'-0"

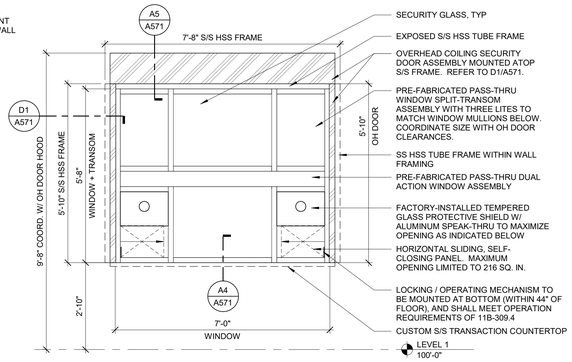

B WINDOW TYPE 'B'
1/2" = 1'-0"

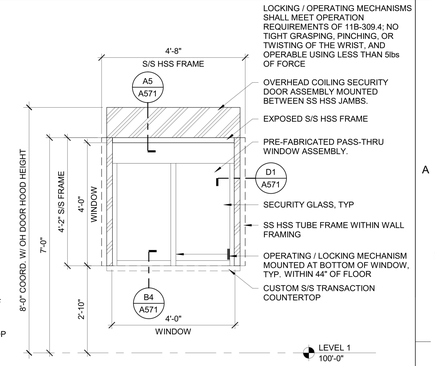

A WINDOW TYPE 'A'
1/2" = 1'-0"

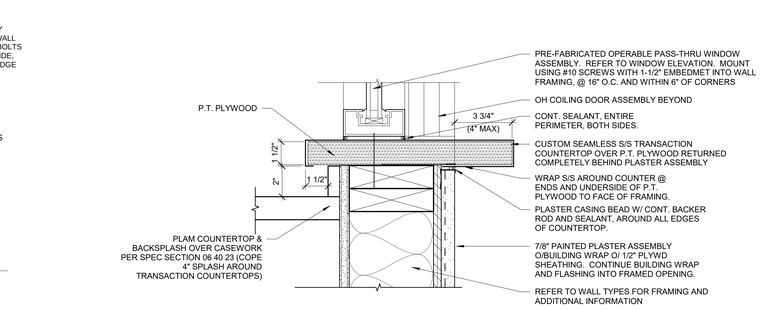

B4 TRANSACTION SILL @ TICKET BLDG
3" = 1'-0"

C5 HM DOOR JAMB - INT.
3" = 1'-0"

C4 DOOR CONN. DETAIL
3" = 1'-0"

C3 DOOR CONN. DETAIL
3" = 1'-0"

C2 DOOR CONN. DETAIL
3" = 1'-0"

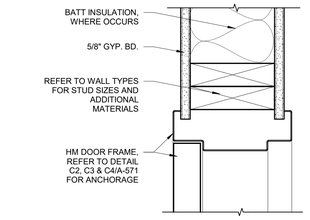

D5 HM DOOR HEAD - INT.
3" = 1'-0"

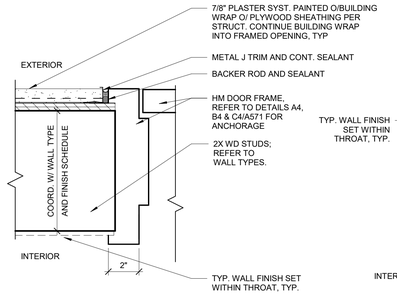

D4 HM DOOR JAMB - EXT.
3" = 1'-0"

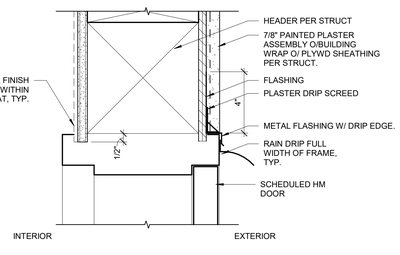

D3 HM DOOR HEAD - EXT.
3" = 1'-0"

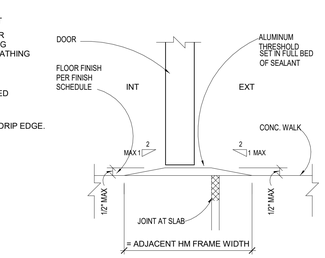

D2 THRESHOLD DETAIL
3" = 1'-0"

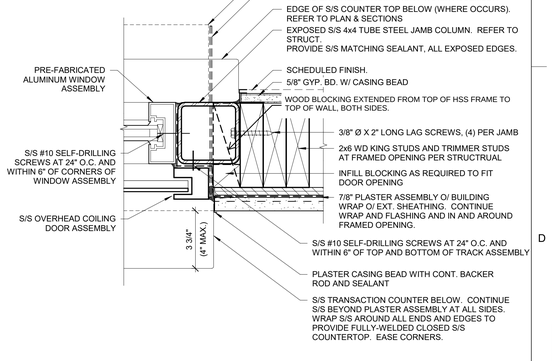

D1 COILING DOOR & WINDOW JAMB
3" = 1'-0"

IDENTIFICATION STAMP
DIV. OF THE STATE ARCHITECT
APP: 02-121275 INC:
REVIEWED FOR
SS ☑ FLS ☑ ACS ☑
DATE: 12/15/2023

CALIFORNIA DESIGN WEST ARCHITECTS, Inc.

2100 19th Street
Sacramento, CA 95818

Phone: (916) 446-2466
Fax: (916) 446-5118
Web Page: ca-dw.com

These plans and prints thereof, as instruments of service, are owned by the architect and are for the use on this project only. Reproduction and/or distribution without the prior written consent of the architect is forbidden.

Copyright California Design West Architects, Inc.

ARCHITECT: CONSULTANT:

LICENSED ARCHITECT MITCHELL A. MCALISTER RENEWAL 08/31/2025 OF CALIFORNIA NO. C 17250

CONSULTANT:

PROJECT NAME:

BUHACH COLONY HIGH SCHOOL

1800 NORTH BUHACH ROAD
ATWATER, CA 95301

CONCESSIONS/TOILET BUILDINGS, TICKET BOOTH & STADIUM UPGRADES

MERCED UNION HIGH SCHOOL DISTRICT

MERCED COUNTY

KEY PLAN:

SHEET TITLE:

DOOR & WINDOW DETAILS

JOB NUMBER:	SHEET NUMBER:
DATE: NOV 17, 2023	**A571**
REVISION:	

C:\Users\atrump\Documents\A22_BCHS-TeamsRoom-VISITOR+Snack&Bar - CENTRAL_atrump-2100.rvt

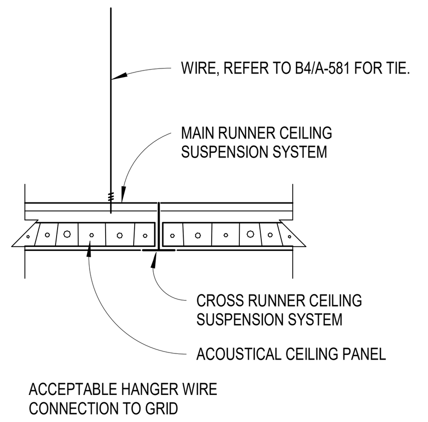

A4 SUSP. CEILING
3" = 1'-0"

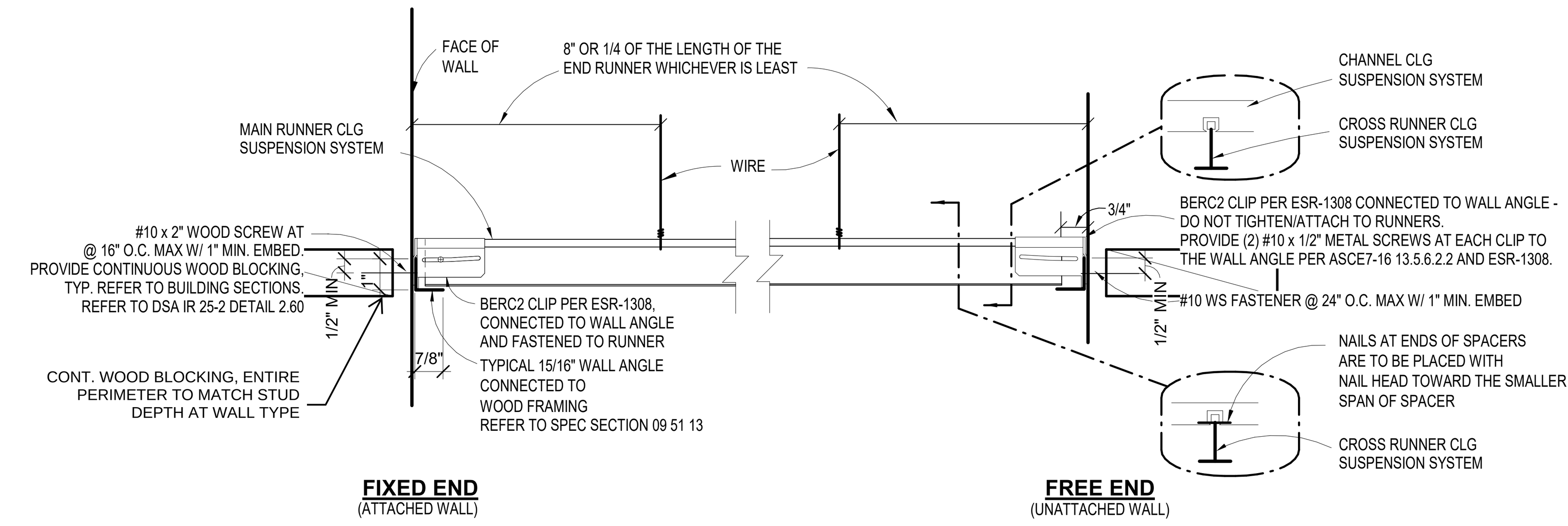

A3 T-BAR ANCHORAGE
3" = 1'-0"

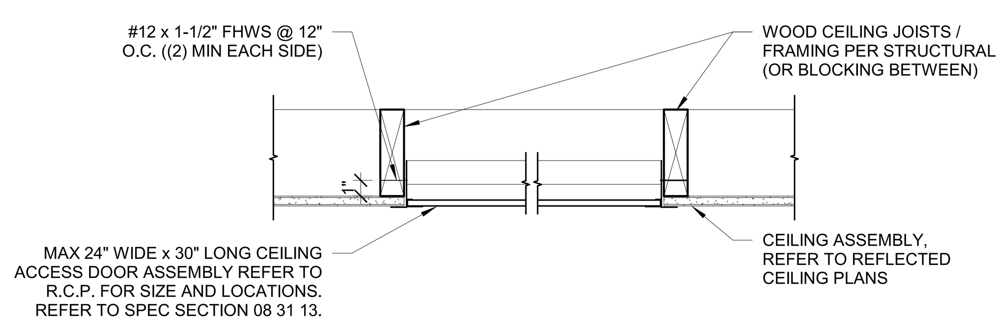

NOTE:
SEE MECHANICAL, PLUMBING, ELECTRICAL DRAWINGS FOR ADDITIONAL CEILING ACCESS DOOR LOCATIONS REQUIRED. SIZE TO ACCOMODATE ACCESS / REACH AS NECESSARY.

B5 CEILING ACCESS
1 1/2" = 1'-0"

12 GA. WIRE AT SUSPENDED ACCOUSTICAL CEILINGS
8 GA. WIRE AT SUSPENDED GYPSUM BD. SUSPENDED SYSTEMS

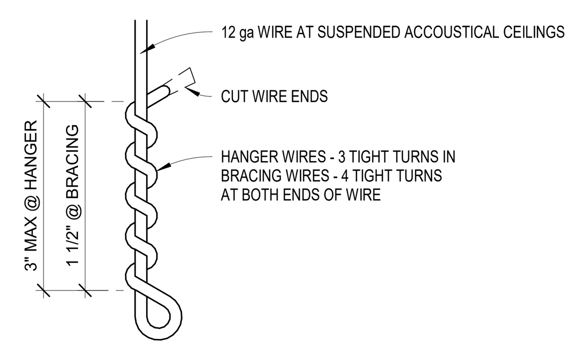

B4 HANGER/ BRACING WIRES
12" = 1'-0"

1. ACOUSTIC CEILING SPACING TO COMPLY W/ LAY-IN TILE SIZES 2 X 4 OR 2 X 2

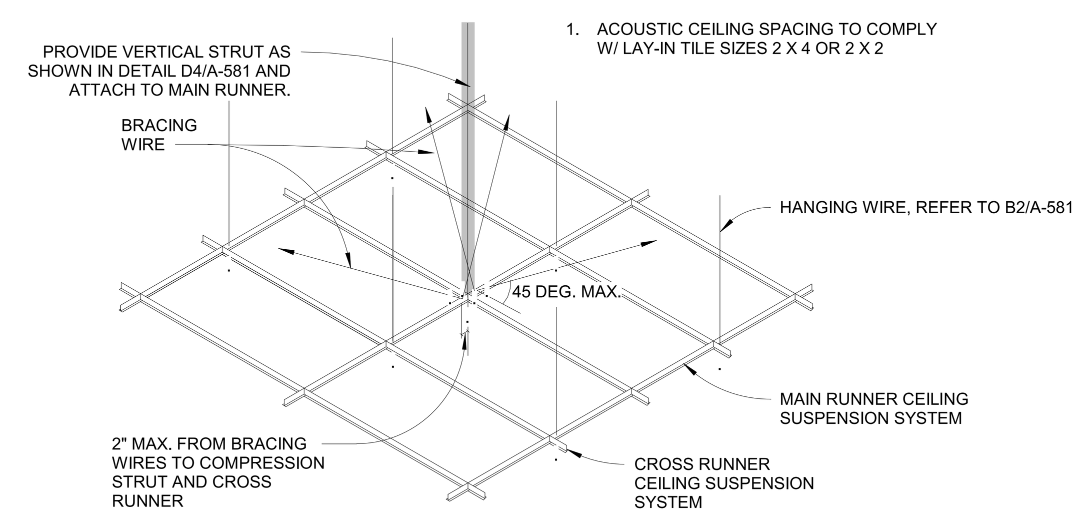

B3 WIRE CONNECTION
1 1/2" = 1'-0"

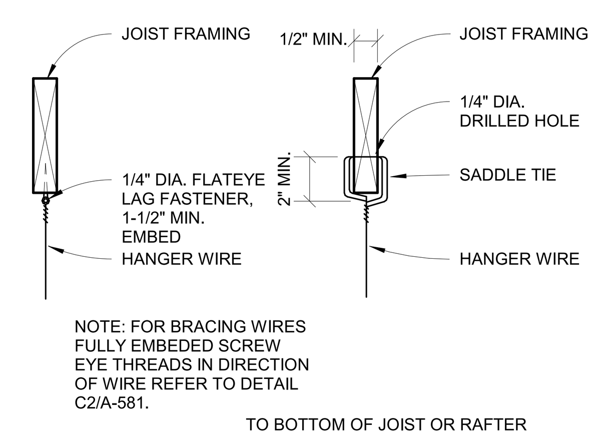

NOTE: FOR BRACING WIRES FULLY EMBEDED SCREW EYE THREADS IN DIRECTION OF WIRE REFER TO DETAIL C2/A-581.

TO BOTTOM OF JOIST OR RAFTER

B2 HANGER WIRE CONNECTION
1 1/2" = 1'-0"

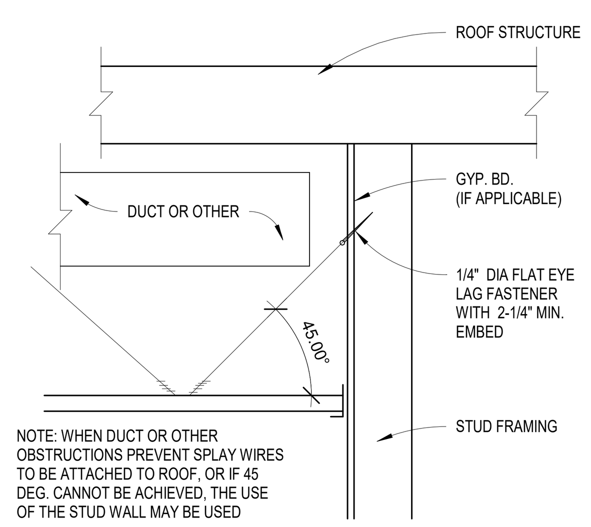

NOTE: WHEN DUCT OR OTHER OBSTRUCTIONS PREVENT SPLAY WIRES TO BE ATTACHED TO ROOF, OR IF 45 DEG. CANNOT BE ACHIEVED, THE USE OF THE STUD WALL MAY BE USED

C4 WIRE CONNECTION
1" = 1'-0"

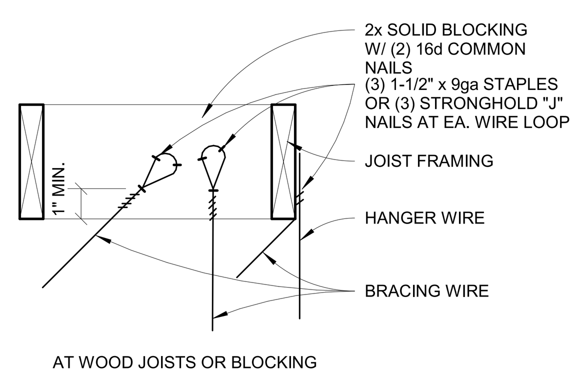

C3 SPLAY WIRE CONNECTION
1 1/2" = 1'-0"

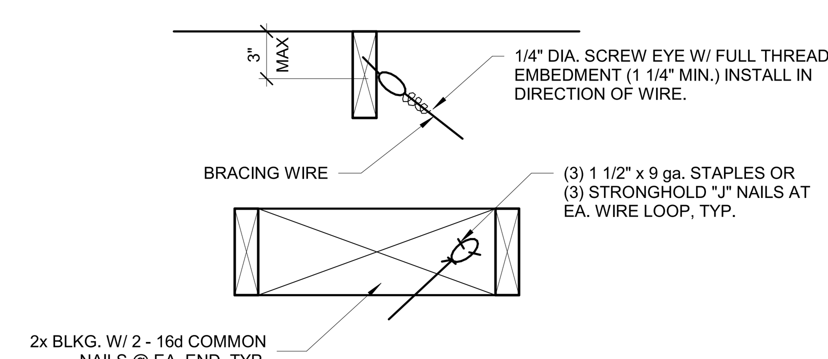

C2 HANGER WIRE CONNECTION
1 1/2" = 1'-0"

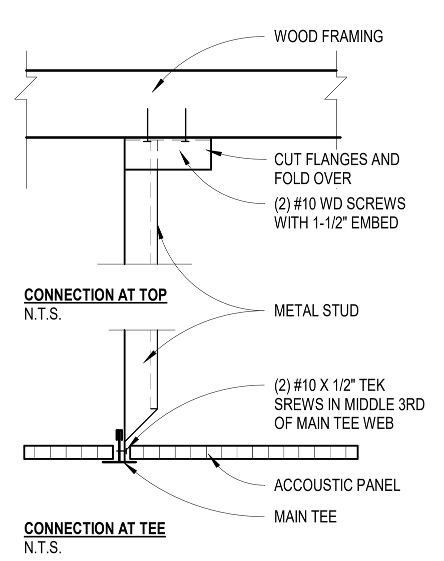

D5 STRUT CONN.
1/2" = 1'-0"

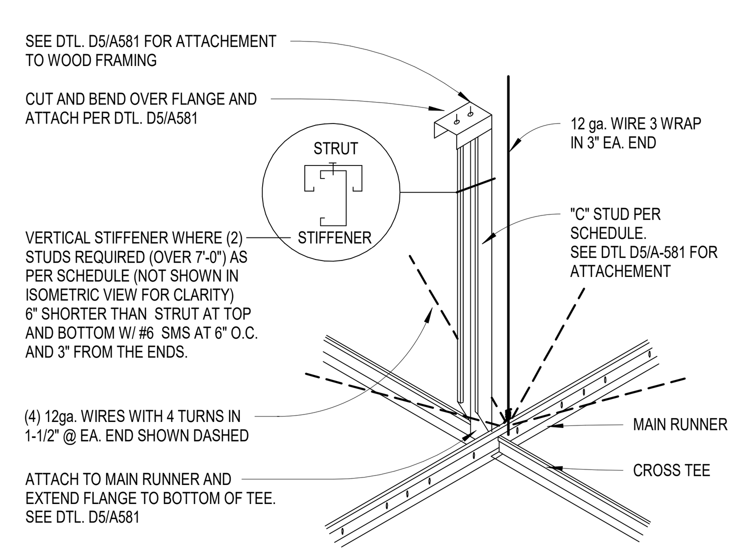

COMPRESSION STRUT SCHEDULE

MAX. LENGTH OF STRUT	STRUT
7'-0"	(1) 1 625 S 1 25 - 33
11'-2"	(2) 1 625 S 1 25 - 33
16'-6"	(2) 2 50 S 1 25 - 33
22'-6"	(2) 3 62 S 1 25 - 33

D4 STRUT DETAIL
3/4" = 1'-0"

GENERAL NOTES

(I) THE FOLLOWING NOTES WILL BE ACCEPTABLE IN PLANS AND SPECIFICATIONS FOR CEILING SYSTEMS WHOSE TOTAL WEIGHT INCLUDING AIR CONDITIONING GRILLES AND LIGHT FIXTURES DOES NOT EXCEED FOUR (4) psf. HEAVIER SYSTEMS AND THOSE SUPPORTING LATERAL LOADS FROM PARTITIONS WILL REQUIRE SPECIAL DESIGN DETAILS.

1. 12 GA.(MIN) HANGER WIRES MAY BE USED FOR UP TO AND INCLUDING 4'-0" X 4'-0" GRID SPACING ALONG MAIN RUNNER.
2. PROVIDE 12 GA HANGER WIRES AT THE ENDS OF ALL MAIN AND CROSS RUNNERS WITHIN 8" FROM THE SUPPORT OR WITHIN 1/4 OF THE LENGTH OF THE END TEE, WHICHEVER IS LEAST, FOR THE PERIMETER OF THE CEILING AREA. END CONNECTIONS FOR RUNNERS WHICH ARE DESIGNED AND DETAILED TO RESIST THE APPLIED HORIZONTAL FORCES MAY BE USED IN LIEU OF THE 12 GA. HANGER WIRES SUBJECT TO DSA REVIEW AND APPROVAL.
3. PROVIDE TRAPEZE OR OTHER SUPPLEMENTARY SUPPORT MEMBERS AT OBSTRUCTIONS TO MAIN HANGER SPACING PROVIDE ADDITIONAL HANGER, STRUTS OR BRACES AS REQUIRED AT ALL CEILING BREAKS, SOFFITS, OR DISCONTINUOUS AREAS. HANGER WIRES THAT ARE MORE THAN 1 IN 6 OUT IF PLUMB ARE TO HAVE COUNTER-SLOPING WIRES.
4. CEILING GRID MEMBERS MAY BE ATTACHED TO NOT MORE THAN 2 ADJACENT WALLS. CEILING GRID MEMBERS SHOULD BE AT LEAST 3/4 INCH FREE OF OTHER WALLS. IF WALLS RUN DIAGONALLY TO CEILING GRID SYSTEM RUNNERS, ONE END OF MAIN AND CROSS RUNNERS SHOULD BE FREE AND A MINIMUM OF 1.2 INCH CLEAR OF WALL.
5. AT THE PERIMETER OF THE CEILING AREA WHERE MAIN OR CROSS RUNNERS ARE NOT CONNECTED TO THE ADJACENT WALL, PROVIDE INTERCONNECTION BETWEEN THE RUNNERS AT THE FREE END TO PREVENT LATERAL SPREADING. A METAL STRUT OR A 16 GA. WIRE WITH A POSITIVE MECHANICAL CONNECTION TO THE RUNNER MAY BE USED. WHERE THE PERPENDICULAR DISTANCE FROM THE WALL TO THE FIRST PARALLEL RUNNER IS 12" OR LESS, THIS INTERLOCK IS NOT REQUIRED.
6. PROVIDE SETS OF FOUR 12 GA. SPLAYED BRACING WIRES ORIENTED 90 DEGREES FROM EACH OTHER AT THE FOLLOWING SPACING: (A) FOR SCHOOL BUILDINGS, PLACE SETS OF BRACING WIRES AT A SPACING NOT MORE THAN 12 FEET BY 12 FEET ON CENTER. (B) PROVIDE BRACING WIRES AT LOCATIONS NOT MORE THAN 1/2 THE SPACING GIVEN IN THE ROOM. (C) ABOVE FROM EACH PERIMETER WALL AND AT THE EDGE OF VERTICAL CEILING OFFSETS FOR SCHOOL BUILDINGS. THE SLOPE OF THESE WIRES SHOULD NOT EXCEED 45 DEGREES FROM THE PLANE OF THE CEILING AND SHOULD BE TAUT WITHOUT CAUSING THE CEILING TO LIFT. SPLICES IN BRACING WIRES ARE NOT TO BE PERMITTED WITHOUT SPECIAL DSA APPROVAL.
7. FASTEN HANGER WIRES WITH NOT LESS THAN 3 TIGHT TURNS. FASTEN BRACING WIRES WITH 4 TIGHT TURNS. MAKE ALL TIGHT TURNS WITHIN A DISTANCE OF 1-1/2 INCHES. HANGER OR BRACING WIRE ANCHORS TO THE STRUCTURE SHOULD BE INSTALLED IN SUCH A MANNER THAT THE DIRECTION OF THE WIRE ALIGNS AS CLOSE AS POSSIBLE WITH THE DIRECTION OF THE FORCES ACTING ON THE WIRE. NOTE: WIRE TURNS MADE BY MACHINE WHERE BOTH STRANDS HAVE BEEN DEFORMED OR BENT IN WRAPPING CAN WAIVE THE 1-1/2 INCHES REQUIREMENT, BUT THE NUMBER OF TURNS SHOULD BE MAINTAINED, AND BE AS TIGHT AS POSSIBLE. DSA APPROVAL REQUIRED.
8. SEPARATE ALL CEILING HANGING AND BRACING WIRES AT LEAST 6 INCHES FROM ALL UNBRACED DUCTS, PIPES, CONDUIT, ETC. IT IS ACCEPTABLE TO ATTACH LIGHTWEIGHT ITEMS, SUCH AS SINGLE ELECTRICAL CONDUIT NOT EXCEEDING 3/4 INCH NOMINAL DIAMETER TO HANGER WIRES USING CONNECTORS ACCEPTABLE TO DSA.
9. ATTACH ALL LIGHT FIXTURES TO THE CEILING GRID RUNNERS TO RESIST A CBC 2501A.5.8 FORCE EQUAL TO THE WEIGHT OF THE FIXTURE ACTING IN ANY DIRECTION.
10. FLUSH OR RECESSED LIGHT FIXTURES AND AIR TERMINALS OR SERVICES WEIGHTING LESS THAN 56 POUNDS MAY BE SUPPORTED DIRECTLY ON THE RUNNERS OF A HEAVY DUTY GRID SYSTEM BUT, IN ADDITION, THEY MUST HAVE A MINIMUM OF TWO 12 GA. SLACK SAFETY WIRES EACH ATTACHED TO THE FIXTURE DIAGONAL CORNERS AND ANCHORED TO THE STRUCTURE ABOVE. ALL 4'-0" X 4'-0" LIGHT FIXTURES MUST HAVE SLACK SAFETY WIRES AT EACH CORNER , ALL FLUSH OR RECESSED LIGHT FIXTURES AND AIR TERMINALS OR SERVICES WEIGHING 56 POUNDS OR MORE MUST BE INDEPENDENTLY SUPPORTED BY NOT LESS THAN 4 TAUT 12 GA WIRES EACH ATTACHED TO THE FIXTURE AND TO THE STRUCTURE ABOVE REGARDLESS OF THE TYPE OF CEILING GRID SYSTEM USED. THE 4 TAUT 12 GA. WIRES INCLUDING THEIR ATTACHMENT TO THE STRUCTURE MUST BE CAPABLE OR SUPPORTING 4 TIMES THE WEIGHT OF THE UNIT.
11. SUPPORT SURFACE MOUNTED LIGHT FIXTURES BY AT LEAST TWO POSITIVE DEVICES WHICH SURROUND THE CEILING RUNNER AND WHICH ARE EACH SUPPORT FROM THE STRUCTURE ABOVE BY A 12 GA. WIRE SPRING CLIPS OR CLAMPS THAT CONNECT ONLY TO THE RUNNER ARE NOT ACCEPTABLE. PROVIDE ADDITIONAL SUPPORTS WHEN LIGHT FIXTURES ARE 8 FEET OR LONGER.
12. SUPPORT PENDANT MOUNTED LIGHT FIXTURES DIRECTLY FROM THE STRUCTURE ABOVE WITH HANGER WIRES OR CABLES PASSING THROUGH EACH PENDANT HANGER AND CAPABLE OF SUPPORTING 4 TIMES THE WEIGHT OF THE FIXTURE. SPECIAL DETAILS ARE NECESSARY FOR THIS CONDITION AT THE CEILING GRID.

(II) ADDITIONAL REQUIREMENTS FOR FIRE RATED CEILINGS:

A. PROVIDE UNDERWRITER LABORATORY (U.L.) DESIGN NUMBER OR STATE FIRE MARSHALL (SFM) LISTING NUMBER. THE COMPONENTS AND INSTALLATION DETAILS MUST CONFORM IN EVERY PARTICULAR WITH THE U.L. OR SFM APPROVAL FOR THE DESIGN NUMBER SPECIFIED. CUSTOM DESIGNS WHICH COMBINE COMPONENTS FROM DIFFERENT APPROVED DESIGNS BUT HAVE NOT BEEN TESTED AS A COMPLETE ASSEMBLY WILL NOT BE ACCEPTABLE.
B. FOR SCHOOL BUILDINGS, PLACE BRACING ASSEMBLIES AT A SPACING NOT MORE THAN 12' X 12' ON CENTER. THE FIRST SET OF BRACING WIRES ARE REQUIRED NOT MORE THAN 4'-0" FROM EACH WALL. A MINIMUM OF ONE SET OF BRACING WIRES IS REQUIRED BETWEEN ANY TWO ADJACENT EXPANSION CUT-OUTS ON RUNNERS BEING BRACED.
C. POP RIVETS, SCREWS, OR OTHER ATTACHMENTS ARE NOT ACCEPTABLE UNLESS SPECIFICALLY DETAILED ON THE DRAWINGS AND APPROVED BY U.L. AND SFM.

IDENTIFICATION STAMP
DIV. OF THE STATE ARCHITECT
APP: 02-121275 INC:
REVIEWED FOR
SS ☑ FLS ☑ ACS ☑
DATE: 12/15/2023

CALIFORNIA DESIGN WEST ARCHITECTS, Inc.

2100 19th Street
Sacramento, CA 95818

Phone: (916) 446-2466
Fax: (916) 446-5118
Web Page: ca-dw.com

These plans and prints thereof, as instruments of service, are owned by the architect and are for the use on this project only. Reproduction and/or distribution without the prior written consent of the architect is forbidden.

Copyright California Design West Architects, Inc.

ARCHITECT: CONSULTANT:

LICENSED ARCHITECT
MITCHELL A. McALLISTER
NO. C 17250
REN. 2-28-2025
STATE OF CALIFORNIA

CONSULTANT:

PROJECT NAME:

BUHACH COLONY HIGH SCHOOL

1800 NORTH BUHACH ROAD
ATWATER, CA 95301

CONCESSIONS/TOILET BUILDINGS, TICKET BOOTH & STADIUM UPGRADES

MERCED UNION HIGH SCHOOL DISTRICT

MERCED COUNTY

KEY PLAN:

SHEET TITLE:
REFLECTED CEILING PLAN DETAILS

JOB NUMBER:
SHEET NUMBER:
DATE:
NOV 17, 2023
REVISION:

A581

C:\Users\strump\Documents\A22_BCHS-TeamsRoom-VISITOR+SnackBar - CENTRAL_strump-2100.rvt

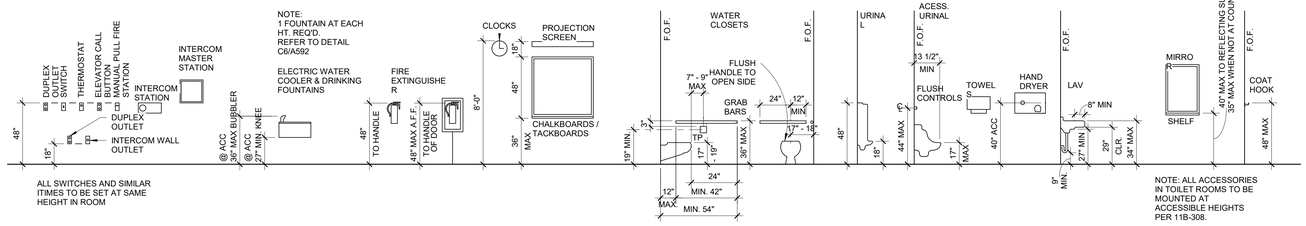

A5 KINDERGARTEN & STANDARD HEIGHTS
1/4" = 1'-0"

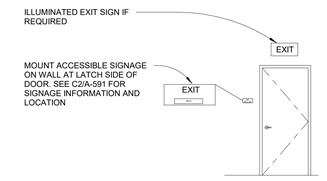

A1 TACTILE EXIT SIGNAGE
3" = 1'-0"

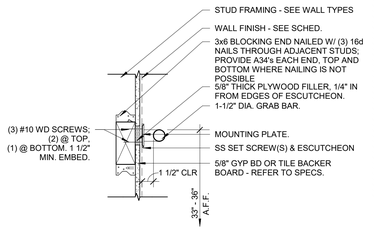

B5 GRAB BAR ANCHORAGE
1 1/2" = 1'-0"

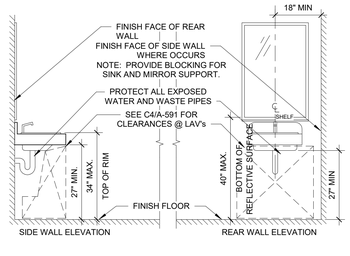

B4 SINK & MIRROR
1/2" = 1'-0"

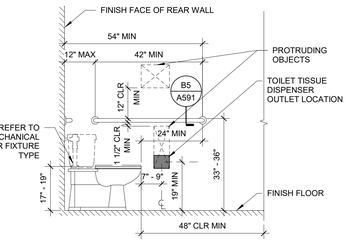

B3 ACC. TOILET SIDE WALL
1/2" = 1'-0"

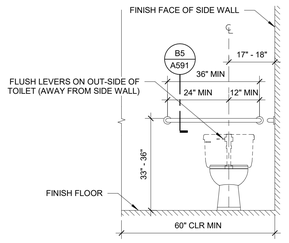

B2 ACC. TOILET REAR WALL
1/2" = 1'-0"

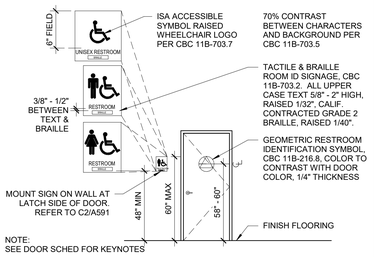

B1 RESTROOM SIGNAGE
3" = 1'-0"

C5 TYP KNEE CLEARANCE
1/2" = 1'-0"

C4 KNEE CLR. @ LAV
1/2" = 1'-0"

C3 TOE CLEARANCE
1/2" = 1'-0"

C2 TYP. SIGN ELEMENTS
3" = 1'-0"

C1 ROOM NAME SIGNAGE
3" = 1'-0"

D5 LEVEL CHANGE
6" = 1'-0"

D4 VERTICAL CLEARANCE
1/2" = 1'-0"

D3 ACCESS. SINK
3/4" = 1'-0"

D1 RESTROOM SIGN SYMBOLS
1 1/2" = 1'-0"

IDENTIFICATION STAMP
DIV. OF THE STATE ARCHITECT
APP: 02-121275 INC:
REVIEWED FOR
SS ☑ FLS ☑ ACS ☑
DATE: 12/15/2023

CALIFORNIA DESIGN WEST ARCHITECTS, Inc.

2100 19th Street
Sacramento, CA 95818

Phone: (916) 446-2466
Fax: (916) 446-5118
Web Page: ca-dw.com

These plans and prints thereof, as instruments of service, are owned by the architect and are for the use on this project only. Reproduction and/or distribution without the prior written consent of the architect is forbidden.

Copyright California Design West Architects, Inc.

ARCHITECT: CONSULTANT:

CONSULTANT:

PROJECT NAME:

BUHACH COLONY HIGH SCHOOL

1800 NORTH BUHACH ROAD
ATWATER, CA 95301

CONCESSIONS/TOILET BUILDINGS, TICKET BOOTH & STADIUM UPGRADES

MERCED UNION HIGH SCHOOL DISTRICT

MERCED COUNTY

KEY PLAN:

SHEET TITLE:
ACCESSIBILITY STANDARDS & MOUNTING HEIGHTS

JOB NUMBER:
SHEET NUMBER: **A591**

DATE: NOV 17, 2023

REVISION:

C:\Users\strump\Documents\A22_BCHS-TrainsRoom-VISITOR+SnackBar_CENTRAL_strump-2100.rvt

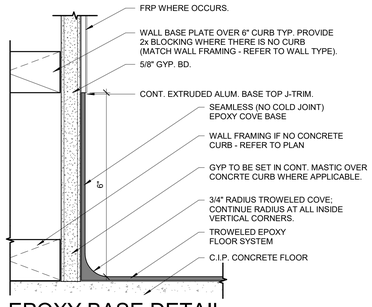

A4 EPOXY BASE DETAIL
6" = 1'-0"

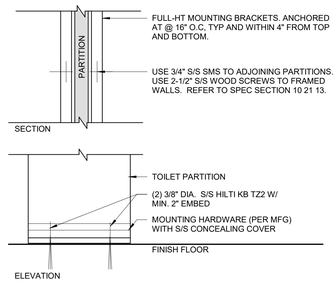

A3 TOILET PARTITION
1 1/2" = 1'-0"

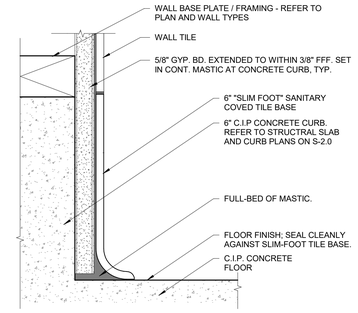

B3 COVED TILE BASE AT RESTROOMS
6" = 1'-0"

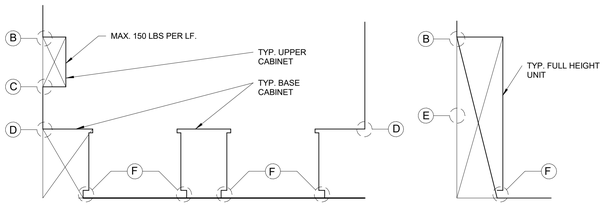

A EQUIPMENT / CASEWORK SECTION KEY
NO SCALE

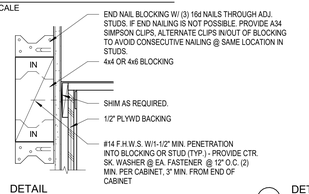

B DETAIL
3" = 1'-0"

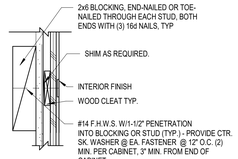

E DETAIL
3" = 1'-0"

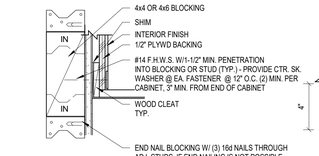

C DETAIL
3" = 1'-0"

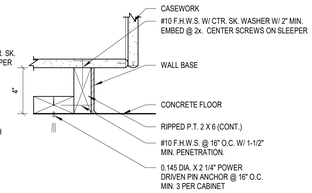

F DETAIL
3" = 1'-0"
NOTE: F.H.W.S. = FLUSH HEAD WOOD SCREW

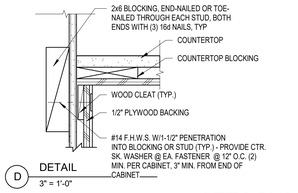

D DETAIL
3" = 1'-0"

C1 ATTACHMENT DETAILS
3" = 1'-0"

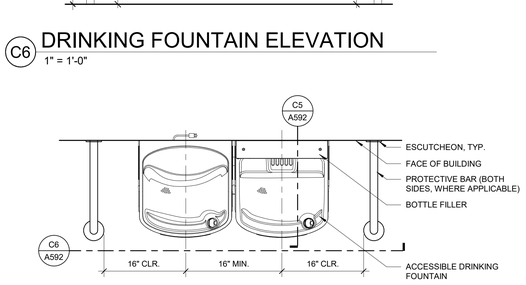

C6 DRINKING FOUNTAIN ELEVATION
1" = 1'-0"

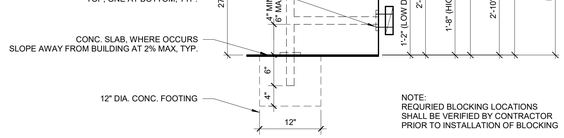

C5 DRINKING FOUNTAIN SECTION
1" = 1'-0"

D6 DRINKING FOUNTAIN PLAN
1" = 1'-0"

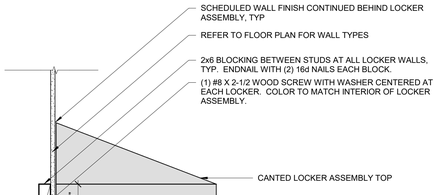

D2 LOCKER TOP ANCHORAGE
1 1/2" = 1'-0"

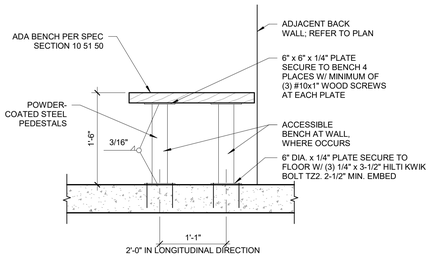

E6 ADA BENCH
1" = 1'-0"

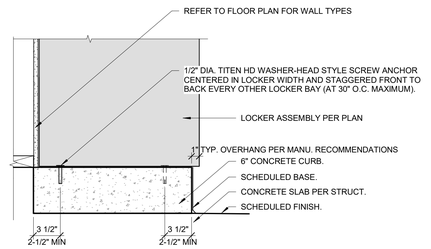

E2 LOCKER BASE ANCHORAGE
1 1/2" = 1'-0"

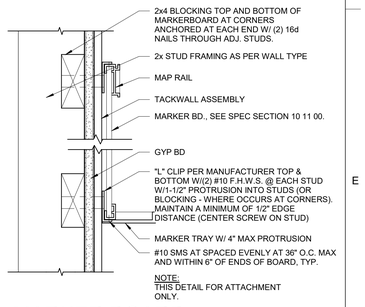

E1 MARKER BOARD
3" = 1'-0"

CALIFORNIA DESIGN WEST ARCHITECTS, Inc.

2100 19th Street
Sacramento, CA 95818

Phone: (916) 446-2466
Fax: (916) 446-5118
Web Page: ca-dw.com

These plans and prints thereof, as instruments of service, are owned by the architect and are for the use on this project only. Reproduction and/or distribution without the prior written consent of the architect is forbidden.

Copyright California Design West Architects, Inc.

ARCHITECT: CONSULTANT:

LICENSED ARCHITECT MITCHELL A. McALISTER No. C 17250 REGISTERED OF CALIFORNIA

CONSULTANT:

PROJECT NAME:

BUHACH COLONY HIGH SCHOOL

1800 NORTH BUHACH ROAD
ATWATER, CA 95301

CONCESSIONS/TOILET BUILDINGS, TICKET BOOTH & STADIUM UPGRADES

MERCED UNION HIGH SCHOOL DISTRICT

MERCED COUNTY

KEY PLAN:

SHEET TITLE:
INTERIOR & CASEWORK DETAILS

JOB NUMBER:

DATE:
NOV 17, 2023

REVISION:

SHEET NUMBER:
A592

IDENTIFICATION STAMP
DIV. OF THE STATE ARCHITECT
APP: 02-121275 INC:
REVIEWED FOR
SS ☑ FLS ☑ ACS ☑
DATE: 12/15/2023

C:\Users\atturp\Documents\A22_BCHS-TrainerRoom-VISITOR-SnackBar - CENTRAL_atturp-2100.rvt

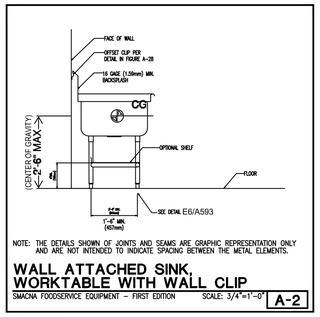

NOTE: THE DETAILS SHOWN OF JOINTS AND SEAMS ARE GRAPHIC REPRESENTATION ONLY AND ARE NOT INTENDED TO INDICATE SPACING BETWEEN THE METAL ELEMENTS.

WALL ATTACHED SINK, WORKTABLE WITH WALL CLIP

SMACNA FOODSERVICE EQUIPMENT – FIRST EDITION SCALE: 3/4"=1'-0" **A-2**

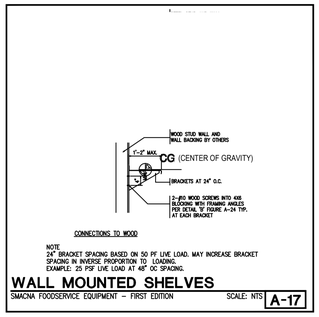

NOTE
24" BRACKET SPACING BASED ON 50 PF LIVE LOAD. MAY INCREASE BRACKET SPACING IN INVERSE PROPORTION TO LOADING.
EXAMPLE: 25 PSF LIVE LOAD AT 48" OC SPACING.

WALL MOUNTED SHELVES

SMACNA FOODSERVICE EQUIPMENT – FIRST EDITION SCALE: NTS **A-17**

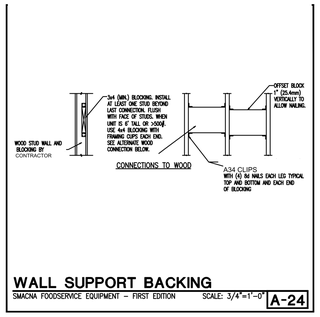

WALL SUPPORT BACKING

SMACNA FOODSERVICE EQUIPMENT – FIRST EDITION SCALE: 3/4"=1'-0" **A-24**

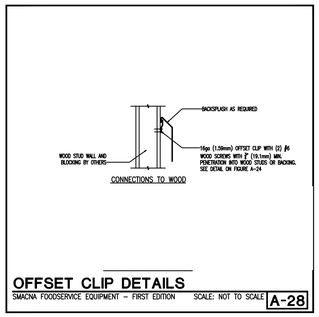

OFFSET CLIP DETAILS

SMACNA FOODSERVICE EQUIPMENT – FIRST EDITION SCALE: NOT TO SCALE **A-28**

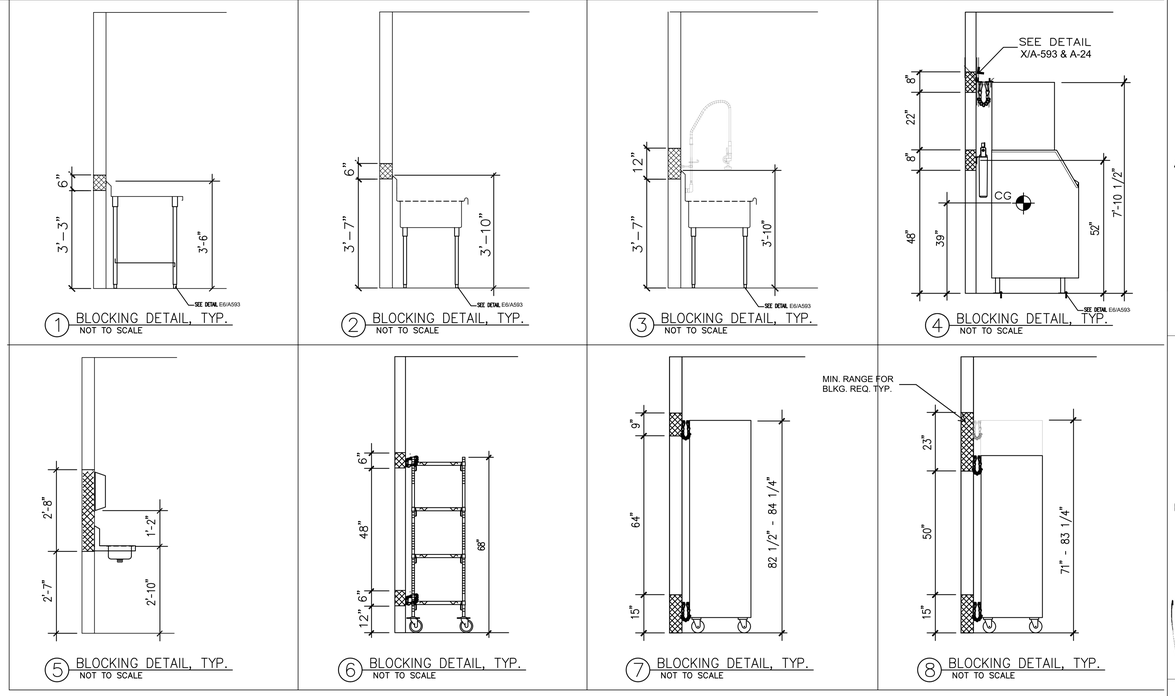

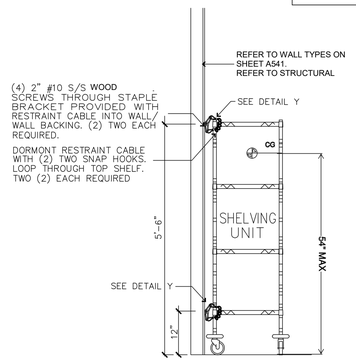

C3 - SHELVING UNIT ANCHOR

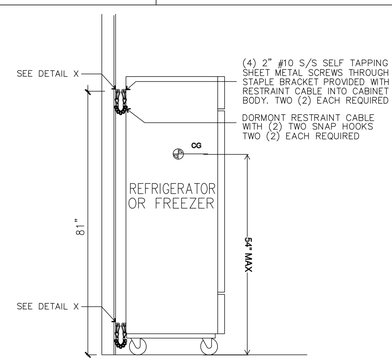

C2 - MOBILE CABINET, REFRIGERATOR ANCHOR TO WALL

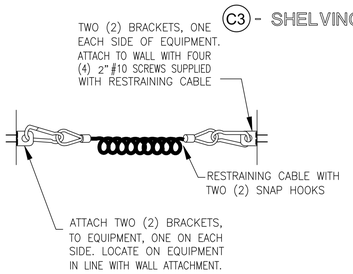

X - RESTRAINING CABLE DETAIL

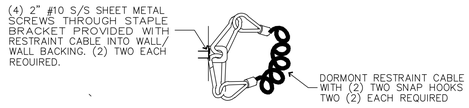

Y - LOOPED RESTRAINING CABLE DETAIL

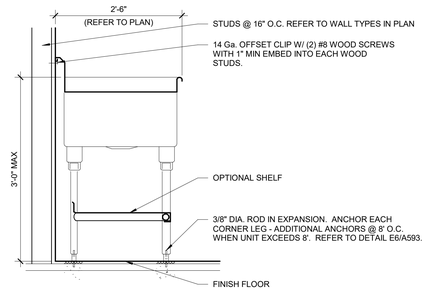

D6 SMACNA DETAILS
1" = 1'-0"

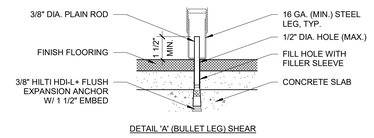

DETAIL 'A' (BULLET LEG) SHEAR

E6 SMACNA DETAILS
3" = 1'-0"

IDENTIFICATION STAMP
DIV. OF THE STATE ARCHITECT
APP: 02-121275 INC:
REVIEWED FOR
SS ☑ FLS ☑ ACS ☑
DATE: 12/15/2023

CALIFORNIA DESIGN WEST ARCHITECTS, Inc.

2100 19th Street
Sacramento, CA 95818

Phone: (916) 446-2466
Fax: (916) 446-5118
Web Page: ca-dw.com

These plans and prints thereof, as instruments of service, are owned by the architect and are for the use on this project only. Reproduction and/or distribution without the prior written consent of the architect is forbidden.

Copyright California Design West Architects, Inc.

ARCHITECT: CONSULTANT:

LICENSED ARCHITECT MITCHELL A. MCALISTER REG. NO. C17258 STATE OF CALIFORNIA

CONSULTANT:

PROJECT NAME:

1800 NORTH BUHACH ROAD
ATWATER, CA 95301

CONCESSIONS/TOILET BUILDINGS, TICKET BOOTH & STADIUM UPGRADES

MERCED UNION HIGH SCHOOL DISTRICT

MERCED COUNTY

KEY PLAN:

SHEET TITLE:
EQUIPMENT MOUNTING AND BRACING

JOB NUMBER:

SHEET NUMBER:
A593

DATE:
NOV 17, 2023

REVISION:

C:\Users\atrump\Documents\A22_BCHS-TrainerRoom-VISITOR+SnackBar - CENTRAL_atrump-2100.rvt

STRUCTURAL ABBREVIATIONS

@	AT	LFRS	LATERAL FORCE RESISTING SYTEM
AB	ANCHOR BOLTS	LLH	LONG LEG HORIZONTAL
AC	ASPHALTIC CONCRETE	LLV	LONG LEG VERTICAL
AFF	ABOVE FINISH FLOOR	LP	LOW POINT
BN	BOUNDARY NAILING	LS	LAG SCREW
BEV	BEVELED	LT WT	LIGHT WEIGHT
BOC	BOTTOM OF CONCRETE	LVL	LAMINATED VENEER LUMBER
BOF	BOTTOM OF FOOTING	MU	MECHANICAL UNIT
CIP	CAST IN PLACE	NIC	NOT IN CONTRACT
CJ	CONSTRUCTION JOINT	NTS	NOT TO SCALE
CJP	COMPLETE JOINT PENETRATION	NSG	NON SHRINK GROUT
CL	CENTER LINE	OC	ON CENTER
CMU	CONCRETE MASONRY UNIT	OD	OUTSIDE DIAMETER
COL	COLUMN	OSB	ORIENTED STRAND BOARD
CONC	CONCRETE	OWSG	OPEN WEB STEEL GIRDER
CONN	CONNECTION	OWSJ	OPEN WEB STEEL JOIST
CONT	CONTINUOUS	OH	OPPOSITE HAND
DF	DOUGLAS FIR	PCC	PRECAST CONCRETE
(E)	EXISTING	PSF	POUNDS PER SQUARE FOOT
EF	EACH FACE	PSI	POUNDS PER SQUARE INCH
EW	EACH WAY	PT	PRESSURE TREATED POINT
EJ	EXPANSION JOINT	PW	PLYWOOD
EOS	EDGE OF SLAB	R	RADIUS
EN	EDGE NAILING	SAD	SEE ARCHITECTURAL DRAWINGS
ES	EACH SIDE	SDST	SELF DRILLING SELF TAPPING
FA	FRAMING ANCHOR	SIM	SIMILAR
FD	FLOOR DRAIN	SCJ	SLIP CONTROL JOINT
FF	FINISH FLOOR	SLH	SHORT LEG HORIZONTAL
FLG	FLANGE	SLV	SHORT LEG VERTICAL
FN	FIELD NAILING	SOG	SLAB ON GRADE
FOC	FACE OF CONCRETE	SP	STRUCTURAL PLYWOOD
FOM	FACE OF MASONRY	SS	STAINLESS STEEL
FOS	FACE OF STUD	T24	TITLE 24 CALIFORNIA CODE
GLB	GLUE LAMINATED BEAM	TOC	TOP OF CONCRETE
GSM	GALVANIZED SHEET METAL	TOF	TOP OF FOOTING TOP OF FRAMING
GT	GIRDER TRUSS	TOM	TOP OF MASONRY
HAS	HEADED ANCHOR STUD	T.O. SLAB	TOP OF SLAB
HDG	HOT DIPPED GALVANIZED	TOS	TOP OF STEEL
HP	HIGH POINT	TOW	TOP OF WALL
HSB	HIGH STRENGTH BOLT	UNO	UNLESS NOTED OTHERWISE
HSS	HOLLOW STRUCTURAL SECTION	WS	WATER STOP
HT	HIP TRUSS	WWF	WELDED WIRE FABRIC
ID	INSIDE DIAMETER	WPJ	WEAKENED PLANE JOINT
JT	JACK TRUSS		

EXPANSION ANCHOR & ADHESIVE ANCHOR NOTES

1. WHERE "EPOXY" OR "EXPANSION" ANCHORS ARE INDICATED IN DRAWINGS THESE NOTES & SCHEDULE A/S1.0 B/S1.0 SHALL APPLY.
2. ANCHORS SHALL BE INSTALLED IN ACCORDANCE WITH THE RECOMMENDATIONS GIVEN IN THE ICC REPORT.
3. PERIODIC SPECIAL INSPECTION IS REQUIRED, UNLESS NOTED OTHERWISE IN THESE DRAWINGS. VERIFICATION OF THE FOLLOWING IS REQUIRED DURING SPECIAL INSPECTION:
   A. ANCHOR TYPE AND DIMENSIONS.
   B. CONCRETE TYPE AND COMPRESSIVE STRENGTH.
   C. HOLE DIMENSIONS AND HOLE CLEANING PROCEDURES.
   D. ANCHOR SPACING, EDGE DISTANCES, CONCRETE/MASONRY THICKNESS, AND ANCHOR EMBEDMENT DEPTH.
   E. TIGHTENING TORQUE.
   F. COMPLIANCE WITH MANUFACTURER'S PUBLISHED INSTALLATION INSTRUCTIONS.
4. WHEN INSTALLING DRILLED IN ANCHORS IN EXISTING CONCRETE, USE CARE & CAUTION TO AVOID CUTTING OR DAMAGING EXISTING REINFORCING BARS.
5. ALL POST INSTALLED EXPANSION & ADHESIVE ANCHORS SHALL BE TESTED TO THE VALUES GIVEN IN THE SCHEDULE.
   EXCEPTIONS:
   a. SILL BOLTING APPLICATIONS: 10% OF THE ANCHORS SHALL BE TESTED.
   b. NON STRUCTURAL APPLICATIONS: 50% OF THE ANCHORS SHALL BE TESTED.
   IF ANY ANCHOR FAILS TESTING, ALL ANCHORS OF THE SAME TYPE NOT PREVIOUSLY TESTED SHALL BE TESTED UNTIL 20 CONSECUTIVE ANCHORS PASS, THEN RESUME THE INITIAL TESTING FREQUENCY.
6. THE TESTING OF THE ANCHORS SHALL BE DONE BY THE TESTING LABORATORY IN THE PRESENCE OF THE PROJECT INSPECTOR & A REPORT OF THE TEST RESULTS SHALL BE SUBMITTED TO THE GOVERNING AGENCY AND ARCHITECT/STRUCTURAL ENGINEER.

A/S1.0 HAMMER DRILLED ADHESIVE ANCHORS

HIT-RE 500-V3 EPOXY ADHESIVE ANCHOR
ICC ESR #3814 REISSUED 2021

REBAR/BOLT SIZE	MINIMUM EMBEDMENT*	MINIMUM CONCRETE THICKNESS	MAX EMBEDMENT	NORMAL WEIGHT CONCRETE (145 PCF): MINIMUM SPACING AND EDGE DISTANCE	NORMAL WEIGHT CONCRETE (145 PCF): PULL TEST VALUE AT MIN EMBEDMENT (LBS)
#3 OR 3/8	2 3/8"	3 5/8"	7 1/2"	1 7/8"	1600
#4 OR 1/2	2 3/4"	4"	10"	2 1/2"	2250
#5 OR 5/8	3 1/8"	4 5/8"	12 1/2"	3 1/8"	2900
#6 OR 3/4	3 1/2"	5 1/2"	15"	3 3/4"	3600
#7 OR 7/8	3 1/2"	5 1/2"	17 1/2"	4 3/8"	4000
#8 OR 1	4"	6 1/4"	20"	5"	4850

NOTES
1. MINIMUM F'C = 2500 PSI.
2. DESIGN BASED ON CRACKED CONCRETE.
3. VALUES FOR REBAR. -ASTM A615-GRADE 60 MIN.
4. ASSUMES ALL HOLES TO BE DRILLED BY A HAMMER DRILL WITH A CARBIDE BIT.
5. *FOR DEEPER EMBEDMENTS THE MINIMUM MEMBER THICKNESS MUST BE INCREASED BY THE SAME AMOUNT.
6. PULL TEST VALUES FOR EMBEDMENTS GREATER THAN MIN ARE INDICATED IN PLANS.

B/S1.0 EXPANSION ANCHORS

HILTI KWIK BOLT-TZ 2
ICC ESR #4266

SIZE	NOMINAL EMBEDMENT	MINIMUM CONCRETE THICKNESS	MINIMUM EDGE DISTANCE	NORMAL WEIGHT CONCRETE (145 PCF): TORQUE TEST VALUE CARBON STEEL (FT-LBS)	NORMAL WEIGHT CONCRETE (145 PCF): TORQUE TEST VALUE STAINLESS STEEL (FT-LBS)
1/4"	1 3/4"	3 1/4"	1 1/2"	4	6
3/8"	2 1/2"	4"	4 3/8"	30	30
1/2"	2 1/2"	4"	5 1/2"	50	40
5/8"	3 3/4"	5 1/2"	11 1/2"	40	60
3/4"	4 1/2"	6"	10"	110	125

NOTES
1. MINIMUM F'C = 2500 PSI
2. DESIGN BASED ON CRACKED CONCRETE.
3. SPACING BETWEEN ANCHORS IS 12 DIAMETERS OR MORE.

WOOD:

(SUBMIT SHOP DRAWINGS BEFORE FABRICATION OF GLU-LAM MEMBERS)
1. ALL STRUCTURAL WOOD SHALL CONFORM WITH THE FOLLOWING SPECIFICATIONS:
   - DOUGLAS FIR- LARCH: WESTERN LUMBER GRADING RULES WWPA.
   - GLUED LAMINATED BEAMS: ANSI A190.1, ANSI 405, ANSI 117
   - PLYWOOD: U.S. PRODUCT STANDARD PS 1-09 FOR SOFT PLYWOOD.
2. MINIMUM GRADES SHALL BE:
   - STRUCTURAL FRAMING: DF#1 TYPICAL; MOISTURE CONTENT TO BE < 19% AT TIME OF CONSTRUCTION
   - GLUED LAMINATED MEMBERS: COMBINATION 24F-V4 FOR SIMPLE SPANS AND COMBINATION 24F-V8 FOR CANTILEVERS & CONTINUOUS CONDITIONS. ALL ROOF BEAMS SHALL HAVE 3000 FT RADIUS CAMBER UNO.
   - STRUCTURAL PLYWOOD (UNO): WALL PLYWOOD: 15/32" APA RATED STRUCT 1 SHEATHING, 5 PLY 32/16, EXPOSURE 1. ROOF PLYWOOD: 15/32" APA RATED STRUCT 1 SHEATHING, 5 PLY, 32/16, EXPOSURE 1.
3. WALLS SHALL HAVE DOUBLE TOP PLATES, LAPPED AT WALL & PARTITION INTERSECTION WITH 3-16d NAILS. SPLICE UPPER AND LOWER PLATES WITH 'MIN' SPLICE AS SHOWN IN TYPICAL DETAIL, UNO.
4. PROVIDE SOLID BLKG BETWEEN JOISTS OR RAFTERS AT ALL SUPPORTS.
5. CUTTING OF WOOD JOISTS SHALL BE LIMITED TO CUTS AND BORED HOLES NOT DEEPER THAN ONE-FIFTH THE JOIST DEPTH FROM THE TOP, & LOCATED NOT FARTHER FROM THE END THAN THREE TIMES THE JOIST DEPTH.
6. HOLES FOR BOLTS IN WOOD SHALL BE BORED WITH A BIT OF THE SAME NOMINAL DIAMETER AS THE BOLT + 1/16".
7. HOLES FOR LAG SCREWS SHALL BE FIRST BORED TO THE SAME NOMINAL DIAMETER & DEPTH AS THE SHANK. THE REMAINDER OF THE HOLE SHALL BE NO LARGER THAN THE ROOT OF THE THREAD.
8. LAG SCREWS AND WOOD SCREWS SHALL BE SCREWED AND NOT DRIVEN INTO PLACE.
9. ALL BOLTS AND LAG SCREWS SHALL BE PROVIDED WITH METAL WASHERS UNDER HEADS & NUTS WHICH BEAR ON WOOD. APPLIES ALSO TO INSERTED EXPANDING FASTENERS - KWIK-BOLT, STRONG BOLT, ETC.

BOLT-DIA	ROUND WASHER	SQUARE WASHER
1/2"	3" DIA x 3/16"	3" SQ x .195"
5/8"	3" DIA x 1/4"	3" SQ x .25"
3/4"	3" DIA x 1/4"	3" SQ x .315"
7/8"	3 1/2" DIA x 5/16"	3" SQ x .315"
1"	4" DIA x 3/8"	3 1/2" SQ x .39"

10. ALL BOLT & LAG SCREWS SHALL BE TIGHTENED AT TIME OF INSTALLATION AND RE-TIGHTENED BEFORE CLOSING IN OR AT COMPLETION OF JOB.
11. LAY ALL STRUCTURAL PLYWOOD ON ROOF AND FLOORS WITH FACE GRAIN PERPENDICULAR TO SUPPORTS.
12. BLOCK SP JOINTS WITH 3x4 FLAT BLOCKING WHERE NOTED ON FRAMING PLANS AND WITH BLOCKING SAME SIZE AS STUDS AT WALLS.
13. CROSS BRIDGING OR FULL DEPTH BLOCKING BETWEEN JOISTS OR RAFTERS 2x10 & LARGER REQUIRED AT 8'-0" O.C. MAXIMUM.
14. WHERE FRAMING HANGERS ARE REQUIRED & ARE NOT SHOWN ON SECTIONS, DETAILS OR PLANS THE FOLLOWING SIMPSON HANGERS SHALL BE USED. SLOPE, SKEW, TURN IN FLANGES & PROVIDE TOP FLANGE HANGERS AS REQD.
    - 2x & 3x MEMBERS: U HANGERS
    - 4x MEMBERS: HU HANGERS
    - 6x MEMBERS: HUTF HANGERS
    - I JOIST MEMBERS: BA HANGERS
    - GLU LAM MEMBERS: LEG HANGERS
    - 4x & 6x POSTS: PCZ/EPCZ POST CAPS
15. ALL METAL HARDWARE SHALL BE MANUFACTURED BY SIMPSON STRONG TIE COMPANY. ALL ITEMS SHALL BE INSTALLED PER SIMPSON SPECIFICATIONS. FILL ALL HOLES OF METAL HARDWARE WITH SPECIFIED FASTENERS, UNO.
16. WOOD SYMBOLS:
    CONTINUOUS   BLOCKING
17. NAILS FOR ALL STRUCTURAL FRAMING SHALL BE AS SPECIFIED BELOW.
    STRUCTURAL NAILS

MARK	NAIL TYPE	DIA.	LENGTH
8d	8d COMM	0.131"	2 1/2"
10d	10d COMM	0.148"	3"
16d	16d COMM	0.162"	3 1/2"
20d	20d COMM	0.192"	4"

18. ALL FASTENERS FOR PRESSURE-PRESERVATIVE TREATED & FIRE-RETARDANT TREATED WOOD SHALL BE HOT-DIPPED GALVANIZED OR STAINLESS STEEL.
19. SILL BOLTS TO HAVE SQUARE STEEL WASHERS AS INDICATED IN TABLE ABOVE.
20. ALL WOOD MEMBERS IN DIRECT CONTACT WITH CONCRETE SHALL BE PRESSURE TREATED. MATERIAL TREATED W/ ARSENIC CONTENT ARE NOT PERMITTED (CCA & ACA).
21. MINIMUM FASTENING OF SHEATHING TO SUPPORTING MEMBERS SHALL BE AS FOLLOWS UNLESS NOTED OTHERWISE ON DRAWINGS.

SHEATHING THICKNESS 't'	EDGE FASTENING	FIELD FASTENING	
't' ≤ 3/8"	8d @ 6" O.C.	8d @ 12" O.C.	WOOD
3/8" < 't' < 3/4"	10d @ 6" O.C.	10d @ 12" O.C.	

PREFABRICATED WOOD FRAMING MEMBERS

(SHOP DRAWINGS TO BE SUBMITTED PRIOR TO FABRICATION)
1. PREFABRICATED MEMBERS IDENTIFIED HEREIN ARE BASED ON PRODUCTS MANUFACTURED FOR "RedBuilt LLC"
   AND SHALL BE USED AS THE MINIMUM REQUIREMENT. SUBSTITUTIONS OF ALTERNATE PRODUCTS SHALL HAVE EQUAL OR GREATER PROPERTIES AND CAPACITIES AND MUST HAVE ALL APPROPRIATE APPROVALS.
2. MEMBERS INDICATED AS "LVL" SHALL MEET MINIMUM PROPERTIES AS SET OUT BELOW:

   LVL:
   E = 2.0E6 PSI
   Fb = 2600 PSI
   Fv = 285 PSI

3. WEB STIFFENERS REQUIRED AT ALL END SUPPORTS, HANGERS AND INTERMEDIATE SUPPORTS.
4. FULL DEPTH BLOCKING REQUIRED BETWEEN RAFTERS OR JOISTS AT ALL SUPPORTS & AT 10'-0" O.C. MAX.
5. DOUBLE ALL JOISTS UNDER AND PARALLEL TO PARTITION WALLS.

CONCRETE AND REINFORCING STEEL:

(SUBMIT REBAR SHOP DRAWINGS PRIOR TO FABRICATION)
1. CONCRETE CONSTRUCTION SHALL CONFORM TO ACI 318-19 AS MODIFIED BY CBC.
2. THE MINIMUM 28 DAY STRENGTH AND TYPE OF CONCRETE SHALL BE AS FOLLOWS:
   - INTERIOR SLAB ON GRADE: 4000 PSI (150 PCF)
   - TIE BEAMS AND FOUNDATIONS: 3000 PSI (150 PCF)
3. CEMENT SHALL CONFORM TO ASTM C150-18, TYPE II - V.
4. CONCRETE AGGREGATES:
   NATURAL SAND AND ROCK AGGREGATES SHALL CONFORM TO ASTM C33-18.
5. REINFORCING SHALL CONFORM TO ASTM A615 -- GRADE 60. UNO
6. REINFORCING STEEL SHALL BE DETAILED, FABRICATED AND INSTALLED ACCORDING TO "MANUAL OF STANDARD PRACTICE OF REINFORCED CONCRETE CONSTRUCTION" BY THE CONCRETE REINFORCING STEEL INSTITUTE (CRSI).
7. WIRE FABRIC SHALL CONFORM TO ASTM A1064-18.
8. DIMENSIONS SHOWN FOR LOCATION OF REINFORCING ARE TO THE FACE OF MAIN BARS AND DENOTE CLEAR COVERAGE. CONCRETE COVERAGE SHALL BE AS FOLLOWS, UNO ON DRAWINGS:
   CONCRETE DEPOSITED DIRECTLY AGAINST GROUND (EXCEPT SLABS) ...... 3"
   CONCRETE EXPOSED TO GROUND BUT PLACED IN FORMS .... 2"
   SLABS (ON GROUND) .... POSITION IN CENTER OF SLAB
9. ALL BARS SHALL HAVE A CLASS B MINIMUM SPLICE LAP UNO. SEE TABLE IN THESE DRAWINGS.
10. GENERAL:
    A. NO PIPES OR DUCTS SHALL BE PLACED IN CONCRETE SLABS OR WALLS UNLESS SPECIFICALLY DETAILED.
    B. REFER TO ARCHITECTURAL, STRUCTURAL, CIVIL, ELECTRICAL AND MECHANICAL DRAWINGS FOR ALL MOULDS, GROOVES, ORNAMENTS, CLIPS AND GROUNDS TO BE CAST IN CONCRETE.
11. CONSTRUCTION JOINTS SHALL BE MADE ROUGH AND ALL LAITANCE REMOVED FROM THE SURFACE. CONCRETE MAY BE ROUGHENED BY CHIPPING THE ENTIRE SURFACE, SANDBLASTING OR HOSING THE SURFACE 4 TO 6 HOURS AFTER THE POUR WITH A FINE SPRAY.
12. REMOVE ALL DEBRIS FROM THE FORMS BEFORE PLACING ANY CONCRETE.
13. REINFORCING, DOWELS, BOLTS, ANCHORS, SLEEVES, ETC. TO BE EMBEDDED IN CONCRETE SHALL BE SECURELY POSITIONED BEFORE PLACING CONCRETE. OBTAIN APPROVAL OF ALL AFFECTED TRADES PRIOR TO PLACING CONCRETE.
14. MAXIMUM FREE FALL OF CONCRETE SHALL BE 4'-0".
15. NO WOOD SPREADERS ALLOWED. NO WOOD STAKES ALLOWED IN AREAS TO BE COVERED W/ CONC.
16. CONCRETE MIX DESIGN SHALL BE PREPARED PER CBC CHAPTER 19 AND REVIEWED BY THE STRUCTURAL ENGINEER AT LEAST 3 WORKING DAYS PRIOR TO PLACEMENT.
17. WELDED WIRE FABRIC SHALL BE LAP SPLICED TWO SQUARES MIN. EACH DIRECTION.
18. NOTIFY THE STRUCTURAL ENGINEER 48 HOURS PRIOR TO PLACING CONCRETE.
19. CONTRACTOR TO SUBMIT PROPOSED CONTROL AND CONSTRUCTION JT LOCATION TO STRUCTURAL ENGINEER PRIOR TO CONCRETE POUR. SPACING SHALL BE BETWEEN 24 AND 30 TIMES THE SLAB THICKNESS MAXIMUM.

STRUCTURAL STEEL:

(SUBMIT SHOP DRAWINGS BEFORE FABRICATION)
1. FABRICATION, ERECTION, AND MATERIALS SHALL CONFORM WITH THE AISC 360-16 SPECIFICATION FOR STRUCTURAL STEEL BUILDINGS AND 2022 CBC.
2. STRUCTURAL STEEL SHAPES SHALL CONFORM TO THE FOLLOWING:
   A. WIDE FLANGE BEAMS & COLUMNS (UNO).....ASTM-A992 (Fy = 50 ksi)
   B. ANGLES (UNO)..... ASTM-A36
   C. M, S, C, MC, (UNO) ASTM-A36
   D. HP, WT, MT & ST .....ASTM-A4922 (Fy = 50 ksi)
   E. RECTANGULAR HSS SHAPES (UNO).....ASTM-A500 GRADE C (Fy=50 ksi)
   F. ROUND HSS SHAPES (UNO).....ASTM-A500 GRADE C (Fy = 46 ksi)
   G. PIPES (UNO).....ASTM-A53, TYPE E OR S, GRADE B (Fy = 35 ksi)
   H. PLATES, BARS & MISC. (UNO).....ASTM-A36
   I. ANCHOR RODS (UNO).....ASTM-F1554 (Fy=36ksi)
3. WELDING DONE BY THE ELECTRIC ARC PROCESS IN ACCORDANCE WITH "AWS". STANDARDS:
   PROVIDE E70XX ELECTRODES FOR ALL WELDS UNO.
   USE ONLY CERTIFIED WELDERS. ALL BUTT WELDS SHALL HAVE COMPLETE PENETRATION. ALL EXPOSED BUTT WELDS SHALL BE GROUND.
4. PLACE 2" NON-SHRINK GROUT UNDER ALL BASE PLATES BEFORE ADDING VERTICAL LOAD UNO.
5. ALL STRUCTURAL STEEL SHALL BE ERECTED PLUMB AND TRUE TO LINE. TEMPORARY BRACING SHALL BE INSTALLED AND SHALL BE LEFT IN PLACE UNTIL OTHER MEANS ARE PROVIDED TO ADEQUATELY BRACE THE STRUCTURE.
6. HOLES FOR UNFINISHED BOLTS SHALL BE OF THE SAME NOMINAL DIAMETER AS THE BOLT PLUS 1/16".
7. USE STANDARD AISC GAGE AND PITCH FOR BOLTS UNLESS NOTED OTHERWISE.
8. PROVIDE 3" MINIMUM CONCRETE COVERAGE ON ALL STEEL BELOW GRADE.
9. PAINT ALL EXPOSED STEEL W/ PRIMER.

NON-SHRINK GROUT:

1. PROVIDE NON SHRINK GROUT (NSG) AT ALL LOCATIONS AS INDICATED HEREIN.
2. NON SHRINK GROUT TO BE HIGH STRENGTH, NON-METALLIC, PORTLAND CEMENT BASED PRODUCT WITH EXPANSIVE ADDITIVES DESIGNED FOR GROUTING MACHINERY AND STEEL COLUMNS.
3. GROUT SHALL COMPLY WITH ALL PROPERTIES OF ASTM C1107 & CRD621
4. GROUT SHALL BE INSTALLED IN ACCORDANCE WITH MANUFACTURER'S INSTRUCTIONS.
5. WATER SHALL BE ADDED ONLY AS NECESSARY TO OBTAIN A FLOWABLE CONSISTENCY. DO NOT EXCEED A FLOW RATE OF 20 SECONDS PER ASTM C939
6. ALL SURFACES TO RECEIVE GROUT MUST BE CLEAN.
7. GROUT SHALL OBTAIN THE FOLLOWING STRENGTHS:
   3 DAYS - 5000 PSI MIN
   7 DAYS - 6000 PSI MIN
   28 DAYS - 7000 PSI MIN
8. DO NOT LOAD NSG PRIOR TO 3 DAYS CURE TIME.
9. FINAL LOADS SHALL NOT BE PLACED PRIOR TO OBTAINING 28 DAY STRENGTH.

TYPICAL NOTES

APPLICABLE TO ALL DRAWINGS UNLESS. NOTED OR SHOWN OTHERWISE

GENERAL NOTES:

1. CONSTRUCTION SHALL CONFORM TO THE 2022 CALIFORNIA BUILDING CODE, CBC.
2. NOTES AND DETAILS ON TYPICAL SHEETS SHALL APPLY UNLESS OTHERWISE SHOWN OR NOTED ON PLANS.
3. CONTRACTOR SHALL NOT SCALE DRAWINGS FOR SIZES, LENGTHS, CLEARANCES, ETC.
4. DETAILS OF CONSTRUCTION NOT FULLY SHOWN SHALL BE OF THE SAME NATURE AS SHOWN FOR A SIMILAR CONDITION.
5. PRIOR TO FABRICATION, SHOP DRAWINGS, SHALL BE SUBMITTED FOR REVIEW BY THE STRUCTURAL ENGINEER ON ALL STRUCTURAL STEEL, REINFORCING STEEL, STAIRS, GLUE-LAMINATED BEAMS, CONCRETE MIX PROPORTIONS.
   SHOP DRAWINGS: SHOP DRAWING SUBMITTALS PROCESSED BY THE ENGINEER ARE NOT CHANGE ORDERS AND THE PURPOSE OF SHOP DRAWING SUBMITTALS BY THE CONTRACTOR IS TO DEMONSTRATE TO THE ENGINEER THAT THE CONTRACTOR UNDERSTANDS THE DESIGN CONCEPT BY INDICATING WHICH MATERIAL HE INTENDS TO FURNISH AND INSTALL AND BY DETAILING THE FABRICATION AND INSTALLATION METHODS INTENDED FOR USE. DUPLICATION OF DESIGN DRAWINGS FOR THE PURPOSE OF SHOP DRAWINGS IS NOT ACCEPTABLE.
6. SAFETY NOTE:
   A. IT IS THE CONTRACTOR'S RESPONSIBILITY TO COMPLY WITH THE PERTINENT SECTIONS OF THE "CONSTRUCTION SAFETY ORDERS" ISSUED BY THE STATE OF CALIFORNIA, LATEST EDITION, AND ALL OSHA REQUIREMENTS AS THEY APPLY TO THIS PROJECT.
   B. THE STRUCTURAL ENGINEER DOES NOT ACCEPT ANY RESPONSIBILITY FOR THE CONTRACTOR'S FAILURE TO COMPLY WITH THESE REQUIREMENTS.
   C. THE CONTRACTOR SHALL BE RESPONSIBLE FOR ADEQUATE DESIGN AND CONSTRUCTION OF ALL FORMS AND SHORING REQUIRED.
7. CONTRACTOR SHALL VERIFY ALL DIMENSIONS, ELEVATIONS, PROPERTY LINES, ETC. ON THE JOB.
8. CONTRACTOR SHALL NOTIFY THE ARCHITECT AND STRUCTURAL ENGINEER WHERE A CONFLICT OCCURS ON ANY OF THE CONTRACT DRAWINGS OR DOCUMENTS. CONTRACTOR IS NOT TO ORDER MATERIAL OR CONSTRUCT ANY PORTION OF THE BUILDING THAT IS IN CONFLICT UNTIL SAID CONFLICT IS RESOLVED WITH THE AFFECTED PARTIES. IF NOT RESOLVED PRIOR TO BID, THE MOST STRINGENT CONDITION WILL APPLY.

DESIGN LOADS: TIX BOOTH & CONCESSIONS BLDGS

CODE: 2022 CALIFORNIA BUILDING CODE (CBC)

LIVE LOADS:

ROOF .... 20.0 PSF (REDUCIBLE)

WIND:

BASIC WIND SPEED V (3 SEC GUST)= 93 MPH
RISK CATEGORY: ☐ I ■ II ☐ III ☐ IV
EXPOSURE C

ENCLOSURE CLASSIFICATION:	INTERNAL PRESSURE COEFFICIENT (GCpi)
■ ENCLOSED	+0.18, -0.18
☐ PARTIALLY ENCLOSED	+0.55, -0.55
☐ PARTIALLY OPEN	+0.18, -0.18
☐ OPEN	0.00

VELOCITY PRESSURE q_h = 16 PSF

SEISMIC:

BASIC SEISMIC RESISTING SYSTEM
TYPE: A15
DESCRIPTION: LIGHT FRAMED PLYWOOD SHEARWALLS SHEATHED W/ WOOD STRUCTURAL PANELS RATED FOR SHEAR.

BUILDING LOCATION:
LATITUDE: 37.35 °N
LONGITUDE: -120.57 °W

SEISMIC IMPORTANCE FACTOR I_E	SITE CLASS	RISK CATEGORY	SEISMIC DESIGN CATEGORY
■ 1.00	☐ A	☐ I	☐ A
☐ 1.25	☐ B	■ II	☐ B
☐ 1.50	☐ C	☐ III	☐ C
	■ D	☐ IV	■ D
	☐ E		☐ E
	☐ F		☐ F

MAPPED MAXIMUM CONSIDERED SPECTRAL RESPONSE ACCELERATIONS: S_S = .581, S_1 = .24

DESIGN SPECTRAL RESPONSE ACCELERATIONS PARAMETERS: S_{DS} = .618, S_{D1} = .485

ANALYSIS PROCEDURE:
■ EQUIVALENT LATERAL FORCE PROCEDURE PER 12.8-ASCE 7-16

DESIGN BASE SHEAR $V = C_S W$

SEISMIC RESPONSE COEFFICIENT C_S= .095
RESPONSE MODIFICATION FACTOR R= 6.5
SYSTEM OVER STRENGTH FACTOR Ω_0= 3
DEFLECTION AMPLIFICATION FACTOR C_d= 4

FOUNDATIONS:

1. REFER TO RECOMMENDATIONS IN SOILS REPORT NO 220875.001 BY TECHNICON ENGINEERING SERVICES DATED 2/9/2023
2. SOILS ENGINEER SHALL VERIFY CONDITION AND/OR ADEQUACY OF ALL SUB GRADES, FILLS AND BACKFILLS, ETC.
3. IT SHALL BE THE RESPONSIBILITY OF THE CONTRACTOR TO SHORE AND BRACE AS REQUIRED.
4. EXCAVATIONS SHALL BE CLEANED OF ALL DEBRIS. STANDING WATER SHALL BE REMOVED.
5. NOTIFY THE STRUCTURAL ENGINEER 48 HOURS IN ADVANCE OF PLACING CONCRETE.
6. ALLOWABLE SOIL BEARING PRESSURE (D & L) = 1500 psf, D+L+LAT= 2250 psf

IDENTIFICATION STAMP
DIV. OF THE STATE ARCHITECT
APP: 02-121275 INC:
REVIEWED FOR
SS ☑ FLS ☑ ACS ☑
DATE: 12/15/2023

CALIFORNIA DESIGN WEST ARCHITECTS, Inc.
2100 19th Street
Sacramento, CA 95818
Phone: (916) 446-2466
Fax: (916) 446-5118
Web Page: ca-dw.com

These plans and prints thereof, as instruments of service, are owned by the architect and are for the use on this project only. Reproduction and/or distribution without the prior written consent of the architect is forbidden.
Copyright California Design West Architects, Inc.

ARCHITECT: CONSULTANT:

LICENSED ARCHITECT MITCHELL A. McALLISTER NO. C 17250 REN. 2-28-2025 STATE OF CALIFORNIA
REGISTERED PROFESSIONAL ENGINEER WILLIAM P. LARSON 3148 STRUCTURAL STATE OF CALIFORNIA

CONSULTANT:

POINT 2 STRUCTURAL ENGINEERS, INC.
3701 BUSINESS DR SUITE 100
SACRAMENTO, CA. 95820
(916)-452-8200
(916)-452-8212 (FAX)

PROJECT NAME:
BUHACH COLONY HIGH SCHOOL

1800 NORTH BUHACH ROAD
ATWATER, CA 95301

CONCESSIONS/TOILET BUILDINGS, TICKET BOOTH & STADIUM UPGRADES

MERCED UNION HIGH SCHOOL DISTRICT

MERCED COUNTY

KEY PLAN:

SHEET TITLE:
TYPICAL NOTES

JOB NUMBER: 2022-099
DATE: NOV 17, 2023
REVISION:
SHEET NUMBER: **S1.0**

TABLE No. 2304.10.2 FASTENING SCHEDULE.

CONNECTION	FASTENING	LOCATION
1. BLKG. BTWN GLB JOISTS, TRUSSES OR RAFTERS TO TOP PLATE	3-8d COMMON (2 1/2"x0.131")	TOENAIL EA END
2. CEILING JOISTS TO TOP PLATE	3-8d COMMON (2 1/2"x0.131")	TOENAIL, EA JOIST
3. CEILING JOISTS, LAPS OVER PARTITIONS (SEE SEC. 2308.7.3.1, TABLE 2308.7.3.1)	3-16d COMMON (3 1/2"x0.162")	FACE NAIL
4. CEILING JOISTS TO PARALLEL RAFTERS (SEE SEC. 2308.7.3.1, TABLE 2308.7.3.1)	SEE TABLE 2308.7.3.1	FACE NAIL
5. COLLAR TIE TO RAFTER	3-10d COMMON (3"x0.148")	FACE NAIL
6. RAFTER OR ROOF TRUSS OR PLATE (SEE SEC. 2308.7.5, TABLE 2308.7.5)	3-10d COMMON (3"x0.148")	TOENAIL
7. JACK RAFTER TO HIP OR VALLEY OR ROOF RAFTER TO 2x RIDGE BEAM	3-10d COMMON (3"x0.148") 2-16d COMMON (3 1/2"x0.162")	TOENAIL END NAIL
8. STUD TO STUD	16d COMMON (3 1/2"x0.162") @ 24" O.C.	FACE NAIL
9. BUILT-UP CORNER STUDS	16d COMMON (3 1/2"x0.162")	16" O.C. FACE NAIL
11. CONTINUOUS HEADER TO STUD	4-8d COMMON (2 1/2"x0.131")	TOENAIL
12. TOP PLATE TO TOP PLATE	16d COMMON (3 1/2"x0.162") @ 16" O.C.	TYP. FACE NAIL
14. BOTT PL TO JOIST, RIM JOIST, BAND JOIST OR BLKG.	16d COMMON (3 1/2"x0.162") @ 16" O.C.	TYP. FACE NAIL
15. BOTT PL TO JOIST, RIM JOIST, BAND JOIST OR BLKG.	2-16d COMMON (3 1/2"x0.162") @ 16" O.C.	TYP. FACE NAIL
16. STUD TO TOP OR BOTTOM PLATE	4-8d COMMON (2 1/2"x0.131") 2-16d COMMON (3 1/2"x0.162")	TOENAIL END NAIL
17. TOP OR BOTTOM PLATE TO STUD	2-16d COMMON (3 1/2"x0.162")	END NAIL
18. TOP PLATES, LAPS AT CORNERS AND INTERSECTIONS	2-16d COMMON (3 1/2"x0.162")	FACE NAIL
19. 1" DIAG. BRACE TO EA. STUD AND PLATE	2-8d COMMON (2 1/2"x0.131")	FACE NAIL
21. 1"x8" AND WIDER SHEATHING TO EA. BEARING	3-8d COMMON (2 1/2"x0.131")	FACE NAIL
22. JOIST TO SILL, TOP PLATE OR GIRDER	3-8d COMMON (2 1/2"x0.131")	TOENAIL
23. RIM JOISTBAND JOIST, OR BLOCKING TO TOP TOP PLATE, SILL OR FRMS BELOW	8d COMMON (2 1/2"x0.131") @ 6" O.C.	TOENAIL
24. 1"x6" SUBFLOOR OR LESS TO EA. JOIST	2-8d COMMON (2 1/2"x0.131")	FACE NAIL
25. 2" SUBFLOOR TO JOIST OR GIRDER	2-16d COMMON (3 1/2"x0.162")	FACE NAIL
26. 2" PLANKS	16d COMMON (3 1/2"x0.162")	@ EA. BEARING FACE NAIL
27. BUILT-UP GIRDER AND BEAMS (2" LUMBER LAYERS)	20d COMMON (4"x0.192") @ 32" O.C. 2-20d COMMON (4"x0.192")	FACE NAIL @ TOP & BOT. STAGG. ON OPP. SIDES FACE NAIL @ ENDS & @ EA. SPLICE
28. LEDGER STRIP SUPPORTING JOIST OR RAFTERS	3-16d COMMON (3 1/2"x0.162")	FACE NAIL @ EA. JOIST OR RAFTER
29. JOIST TO BAND JOIST OR RIM JOIST	3-16d COMMON (3 1/2"x0.162")	END NAIL
30. BRIDGING OR BLOCKING TO JOIST OR STUD	2-8d COMMON (2 1/2"x0.131")	TOENAIL EA. END
31. WOOD STRUCTURAL PANELS SUBFLOOR, ROOF AND WALL SHEATHING TO FRAMING AND PARTICLEBOARD WALL SHEATHING TO FRAMING [C] SINGLE FLOOR (COMBINATION SUBFLOOR-UNDERLAYMENT TO FRAMING)	1/2" AND LESS 6d COMMON 19/32" TO 3/4" 8d COMMON 7/8" TO 1 1/4" 10d COMMON 3/4" OR LESS 8d COMMON 7/8" TO 1" 8d COMMON 1 1/8" TO 1 1/4" 10d COMMON	6" @ EDGES 12" @ INTERMEDIATE SUPPORTS
34. FIBERBOARD SHEATHING [C,D]	1/2" THICK 1 1/2" GALV ROOFING NAIL 25/32" THICK 1 3/4" GALV ROOFING NAIL	
39. PANEL SIDING (TO FRAMING) [C]	1/2" OR LESS 6d COMMON 5/8" 8d COMMON	
42. INTERIOR PANELING	1/4" 4d CASING (1 1/2"x0.080") 3/8" 6d CASING (2"x0.099")	

A. COMMON NAILS SHALL BE USED.
B. FOR ITEMS 31-42 ALTERNATIVE NAILING IS ACCEPTABLE. SEE CBC TABLE 2304.10.2 FOR OPTIONS.
C. NAILS SPACED AT 6" AT INTERMEDIATE SUPPORTS WHERE SPANS ARE 48" OR MORE. FOR NAILING OF WOOD STRUCTURAL PANEL AND PARTICLEBOARD DIAPHRAGMS AND SHEAR WALLS, REFER TO SECTION 2305. NAILS FOR WALL SHEATHING ARE PERMITTED TO BE COMMON, BOX OR CASING.
D. SPACING SHALL BE 6" ON CENTER ON THE EDGES AND 12" ON CENTER AT INTERMEDIATE SUPPORTS FOR NONSTRUCTURAL APPLICATIONS. PANEL SUPPORTS AT 16" (20" IF STRENGTH AXIS IN THE LONG DIRECTION OF THE PANEL, UNLESS OTHERWISE MARKED).
E. WHERE A RAFTER IS FASTENED TO AN ADJACENT PARALLEL CEILING JOIST IN ACCORDANCE WITH THIS SCHEDULE AND THE CEILING JOIST IS FASTENED TO THE TOP PLATE IN ACCORDANCE WITH THIS SCHEDULE, THE NUMBER OF TOENAILS IN THE RAFTER SHALL BE PERMITTED TO BE REDUCED BY ONE NAIL.

TYPICAL NOTES

APPLICABLE TO ALL DRAWINGS UNLESS NOTED OR SHOWN OTHERWISE

ITEMS EXEMPT FROM DSA STRUCTURAL TEST/SPECIAL INSPECTION:

1. EPOXY SHEAR DOWELS IN FLATWORK AND/ OR OTHER NON-STRUCTURAL CONCRETE.
2. MANUFACTURED SUPPORT FRAMES AND CURBS USING HOT ROLLED OR COLD-FORMED STEEL(i.e. LIGHT GAUGE) FOR MECHANICAL, ELECTRICAL, OR PLUMBING EQUIPMENT WEIGHING LESS THAN 2000# (EQUIPMENT ONLY) (CONNECTIONS OF SUCH FRAMES TO SUPERSTRUCTURE ELEMENTS USING WELDING WILL REQUIRE SPECIAL INSPECTION AS NOTED IN SELECTED ITEM(S) FOR SECTIONS 9/A3, 9/A4 AND/OR 9/A5 OF DSA 103 FORM).
3. MANUFACTURED COMPONENTS (e.g., TOLCO, B-LINE, AFCON, ETC.) FOR MECHANICAL, ELECTRICAL, OR PLUMBING HANGER SUPPORT AND BRACING (CONNECTIONS OF SUCH COMPONENTS TO SUPERSTRUCTURE ELEMENTS USING WELDING WILL REQUIRE SPECIAL INSPECTION AS NOTED IN SELECTED ITEM(S) FOR SECTIONS 9/A3, 9/A4 AND/OR 9/A5 OF DSA 103 FORM).
4. TV BRACKETS, PROJECTOR MOUNTS WITH A VALID LISTING (SEE DSA IR A-5) AND RECREATIONAL EQUIPMENT (e.g., PLAYGROUND STRUCTURES, BASKETBALL BACKSTOPS, ETC.) (CONNECTIONS OF SUCH ELEMENTS TO SUPERSTRUCTURE ELEMENTS USING WELDING WILL REQUIRE SPECIAL INSPECTION AS NOTED IN SELECTED ITEM(S) FOR SECTIONS 9/A3, 9/A4 AND/OR 9/A5 LOCATED IN THE STEEL/ALUMINUM CATEGORY).
5. ANY SUPPORT FOR EXEMPT NON-STRUCTURAL COMPONENTS GIVEN IN CBC SECTION 1617A.1.18 (WHICH REPLACES ASCE 7-16, SECTION 13.1.4) MEETING THE FOLLOWING:
   A. WHEN SUPPORT ON A FLOOR/ROOF, <400# AND RESULTING COMPOSITE CENTER MASS (INCLUDING COMPONENT'S CENTER OF MASS) 54' ABOVE SUPPORTING FLOOR/ROOF.
   B. WHEN HUNG FROM A WALL OR ROOF/FLOOR>20# FOR DISCRETE UNITS OR <5 PLF FOR DISTRIBUTED SYSTEMS.

STRUCTURAL SITE OBSERVATION

FOR STRUCTURES INCLUDED IN SEISMIC DESIGN CATEGORIES D, E, AND F (CBC 1613A), THE STRUCTURAL ENGINEER SHALL PERFORM STRUCTURAL OBSERVATIONS OF STRUCTURAL SYSTEMS FOR GENERAL CONFORMANCE TO THE APPROVED CONSTRUCTION DOCUMENTS (CBC 1704A). THE FOLLOWING CONSTRUCTION STAGES REQUIRE STRUCTURAL OBSERVATION:

- FOUNDATION REINFORCEMENT, RETAINING WALL REINFORCEMENT AND HARDWARE PLACEMENT
- LATERAL SHEAR ELEMENTS (DIAPHRASM)
- FINAL FRAMING

SEOR OR HIS DESIGNATED ENGINEER SHALL BE NOTIFIED BY CONTRACTOR 48 HOURS PRIOR TO SITE OBSERVATION. SEOR OR HIS DESIGNATED ENGINEER SHALL OBSERVE CONSTRUCTION OF EA BUILDING.

SPECIAL INSPECTION

A. REFER TO APPROVED DSA TEST & INSPECTION FORM FOR REQUIRED INSPECTIONS. ALSO SEE CURRENT CBC SECTION 1704A.
B. SEOR SHALL PREPARE A STATEMENT OF SPECIAL INSPECTION IN ACCORDANCE WITH SECTION 1704A CBC FOR SUBMITTAL.

STRUCTURAL TESTING AND INSPECTION PROGRAM:

1. ALL STRUCTURAL TEST AND INSPECTIONS SHALL COMPLY WITH ALL REQUIREMENTS AS STATED IN CBC CHAPTER 17A.
2. ALL TESTS AND INSPECTIONS SHALL BE PERFORMED BY AN INDEPENDENT AGENCY EMPLOYED BY THE OWNER OR ARCHITECT OF RECORD ACTING AS THE OWNER'S AGENT, BUT NOT THE CONTRACTOR OR ANY OTHER PERSON RESPONSIBLE FOR WORK.
3. TESTING LABORATORY SHALL PROVIDE SPECIAL INSPECTION DURING CONSTRUCTION, COMPLYING WITH CBC SECTION 1704A. TESTING LABORATORY SHALL FURNISH COPIES OF TEST RESULTS AND FINAL INSPECTION REPORTS TO THE STRUCTURAL ENGINEER OF RECORD IN ADDITION TO OTHER NORMAL DISTRIBUTION WITHIN ONE WEEK OF TEST AND INSPECTION.
4. FOUNDATION INSPECTIONS SHALL BE COORDINATED WITH PROJECT SOIL ENGINEER AND SHALL COMPLY WITH ALL REQUIREMENTS OF THE CALIFORNIA BUILDING CODE, INCLUDING BUT NOT LIMITED TO, CBC CHAPTER 18A AND CHAPTER 33.
5. FOR TESTING AND INSPECTION FORM (DSA-103), SEE SPECIFICATIONS.

NOTE REGARDING STRUCTURAL DRAWINGS

THE STRUCTURAL DRAWINGS SHOW ONLY THE BASIC STRUCTURAL FRAMING. REFER TO ARCHITECTURAL, MECHANICAL, AND ELECTRICAL DRAWINGS FOR NON-STRUCTURAL ITEMS INCLUDING NONSTRUCTURAL WALLS, WHICH REQUIRE SPECIAL PROVISIONS DURING CONSTRUCTION. ONLY OPENINGS REQUIRING SPECIAL FRAMING ARE SHOWN ON STRUCTURAL PLANS. SEE TYPICAL DETAILS FOR REINFORCING AROUND NOMINAL OPENINGS NOT SHOWN.

IDENTIFICATION STAMP
DIV. OF THE STATE ARCHITECT
APP: 02-121275 INC:
REVIEWED FOR
SS ☑ FLS ☑ ACS ☑
DATE: 12/15/2023

DESIGN California WEST

CALIFORNIA DESIGN
WEST ARCHITECTS, Inc.

2100 19th Street
Sacramento, CA 95818

Phone: (916) 446-2466
Fax: (916) 446-5118
Web Page: ca-dw.com

These plans and prints thereof, as instruments of service, are owned by the architect and are for the use on this project only. Reproduction and/or distribution without the prior written consent of the architect is forbidden.

Copyright California Design West Architects, Inc.

ARCHITECT: CONSULTANT:

LICENSED ARCHITECT MITCHELL A. MCALISTER No. C 17258 REN. 08/31/2025 STATE OF CALIFORNIA

REGISTERED PROFESSIONAL ENGINEER WILLIAM P. LAWSON No. 3146 STRUCTURAL CIVIL STATE OF CALIFORNIA

CONSULTANT:

POINT 2
STRUCTURAL ENGINEERS, INC.
3701 BUSINESS DR SUITE 100
SACRAMENTO, CA. 95820
(916)-452-8200
(916)-452-8212 (FAX)

PROJECT NAME:

BUHACH COLONY HIGH SCHOOL

1800 NORTH BUHACH ROAD
ATWATER, CA 95301

CONCESSIONS/TOILET BUILDINGS, TICKET BOOTH & STADIUM UPGRADES

MERCED UNION HIGH SCHOOL DISTRICT

MERCED COUNTY

KEY PLAN:

SHEET TITLE:
TYPICAL NOTES

JOB NUMBER:	SHEET NUMBER:
2022-099	**S1.01**
DATE: NOV 17, 2023	
REVISION:	

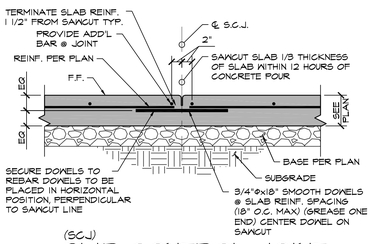

(SCJ)
SLIP CONTROL JOINT
12 / S1.1
1" = 1'-0" CONC24

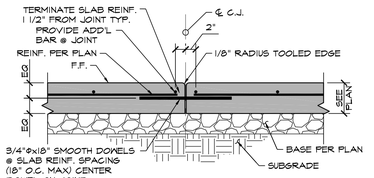

(CJ)
CONSTRUCTION JOINT
13 / S1.1
1" = 1'-0" CONC25

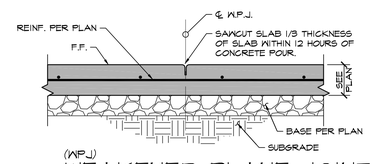

(WPJ)
WEAKENED PLANE JOINT
14 / S1.1
1" = 1'-0" CONC26

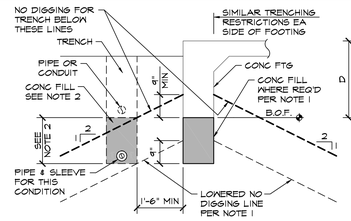

PARALLEL TO FTG

NOTES:
1. WHERE TRENCH OCCURS BELOW "NO DIGGING LINE" (SHOWN AS HEAVY DASHED LINE), LOWER BOTTOM OF FTG WITH CONC FILL TO LOWER NO DIGGING LINE AS REQ'D (SHOWN AS LT DASHED LINE).
2. IN LIEU OF LOWERING BOTT OF FTG WHERE TRENCH OCCURS BELOW NO DIGGING LINE, FILL PORTION OF TRENCH BELOW NO DIGGING LINE W/ CONC FILL PRIOR TO EXCAVATING FTG. PROVIDE SLEEVE W/ 1" CLR AROUND PIPE ENCASED IN CONC.
3. SEE PIPES PERPENDICULAR TO FOOTING FOR ADDITIONAL NOTES.

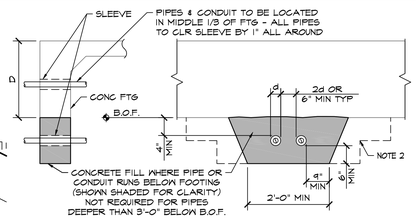

PERPENDICULAR TO FTG

NOTES:
1. CONCRETE FILL SHALL HAVE f'c @ 28 DAYS > 1500 PSI.
2. CONCRETE FILL TO BE SAME WIDTH AS FTG AND FULL WIDTH OF PIPE TRENCH. STEP FILL IF PIPE IS MORE THAN 2'-0" BELOW BOTT OF FTG.
3. NO PIPES SHALL BE PLACED BELOW SPREAD FTGS - TYP.
4. IF PIPE IS IN PLACE PRIOR TO CASTING CONCRETE, WRAP PIPE W/ 1" THICK GLASS WOOL INSULATION IN LIEU OF SLEEVE.
5. PROVIDE 2" CLR MINIMUM BETWEEN PIPES OR CONDUIT & REINFORCING.
6. NO PIPES UNDER PRESSURE ALLOWED WITHIN FTG IN LONGITUDINAL DIRECTION.
7. CONDUITS WITHIN FTG SHALL BE LOCATED SUCH THAT VERTICAL RISERS DO NOT CROSS ADJACENT HORIZONTAL CONDUIT. MINIMUM COVER SHALL BE 1 1/2" AND 2d MINIMUM SEPARATION.

PIPE & CONDUIT DETAIL
5 / S1.1
1/2" = 1'-0" CONC06

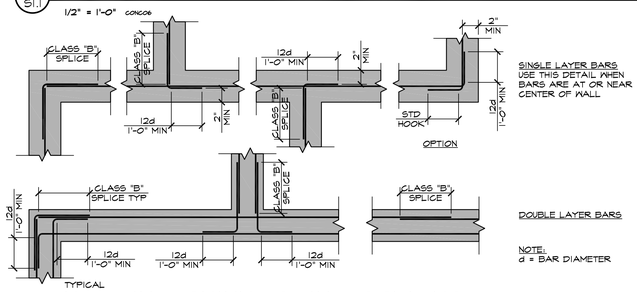

FOOTING REINFORCING SPLICES
6 / S1.1
1/2" = 1'-0" CONC5

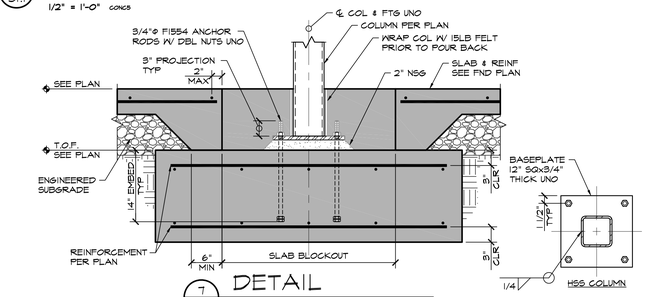

DETAIL
7 / S1.1
1" = 1'-0" STEEL16

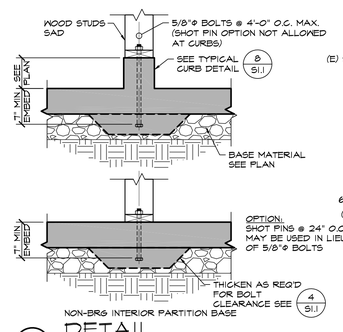

DETAIL
10 / S1.1
1" = 1'-0" CONC14

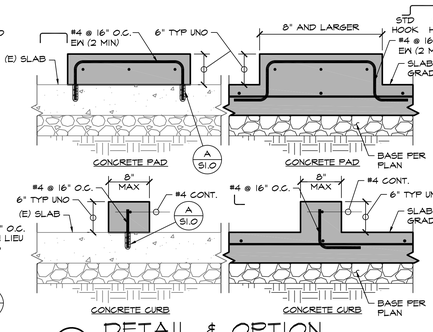

DETAIL & OPTION
8 / S1.1
1" = 1'-0" CONC8

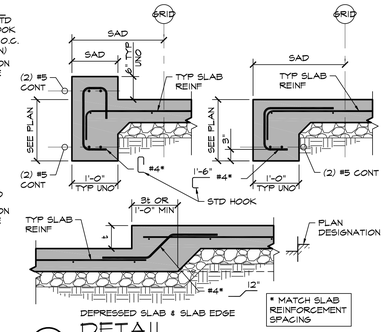

DETAIL
3 / S1.1
3/4" = 1'-0" CONC01

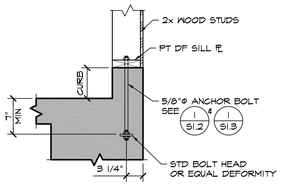

NOTES:
1. VERIFY EXACT LOCATION OF STUDS, POSTS, ETC. BEFORE PLACEMENT OF ANCHOR BOLTS.
2. PLACE 2 BOLTS PER SILL PLATE MIN.
3. USE PLATE WASHERS AT ALL A.B. PER DET. 10 / S1.2

ANCHOR BOLT PLACEMENT
DETAIL
11 / S1.1
1" = 1'-0" CONC4A

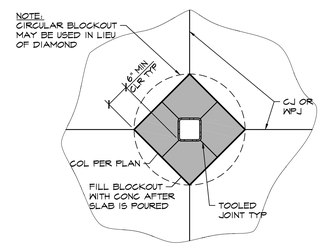

SLAB ON GRADE BLOCKOUT
DETAIL
9 / S1.1
3/4" = 1'-0" CONC24

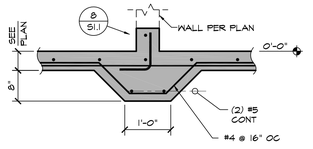

SECTION
4 / S1.1
3/4" = 1'-0"

TYPICAL DETAILS
APPLICABLE TO ALL DRAWINGS UNLESS NOTED OR SHOWN OTHERWISE

BAR SIZE	MAIN REINFORCEMENT 90° HOOK LENGTH "L"	MAIN REINFORCEMENT INSIDE DIA. "D1"	MAIN REINFORCEMENT 180° HOOK LENGTH "L"	STIRRUPS & TIES 90° HOOK LENGTH "L"	STIRRUPS & TIES INSIDE DIA. "D2"	STIRRUPS & TIES 135° HOOK LENGTH "L"
#3	4 1/2"	2 1/4"	2 1/2"	3"	1 1/2"	3"
#4	6"	3"	2 1/2"	3"	2"	3"
#5	7 1/2"	3 3/4"	2 1/2"	3 3/4"	2 1/2"	3 3/4"
#6	9"	4 1/2"	3"	9"	4 1/2"	4 1/2"
#7	10 1/2"	5 1/4"	3 1/2"	10 1/2"	5 1/4"	5 1/4"
#8	1'-0"	6"	4"	1'-0"	6"	6"
#9	1'-1 1/2"	6 1/2"	4 1/2"	-	-	-
#10	1'-3 1/4"	10 3/4"	5 1/4"	-	-	-
#11	1'-5"	1'-0"	5 3/4"	-	-	-

STANDARD HOOKS
1 / S1.1
1" = 1'-0"

CONCRETE STRENGTH	f'c = 3000 PSI				f'c = 4000 PSI			
CLASS OF LAP SPLICE	CLASS "A"		CLASS "B"		CLASS "A"		CLASS "B"	
BAR SIZE	TOP BARS	OTHER BARS	TOP BARS	OTHER BARS	TOP BARS	OTHER BARS	TOP BARS	OTHER BARS
#3	1'-10"	1'-5"	2'-4"	1'-10"	1'-7"	1'-5"	2'-1"	1'-7"
#4	2'-5"	1'-10"	3'-1"	2'-5"	2'-1"	1'-7"	2'-8"	2'-1"
#5	3'-0"	2'-4"	3'-11"	3'-0"	2'-7"	2'-0"	3'-5"	2'-7"
#6	3'-7"	2'-9"	4'-8"	3'-7"	3'-1"	2'-5"	4'-1"	3'-1"
#7	5'-3"	4'-0"	6'-9"	5'-2"	4'-6"	3'-6"	5'-11"	4'-6"
#8	6'-0"	4'-7"	7'-9"	6'-0"	5'-2"	4'-0"	6'-9"	5'-2"
#9	6'-9"	5'-2"	8'-9"	6'-9"	5'-10"	4'-6"	7'-7"	5'-10"
#10	7'-7"	5'-10"	9'-10"	7'-7"	6'-7"	5'-1"	8'-6"	6'-7"
#11	8'-5"	6'-6"	10'-11"	8'-5"	7'-3"	5'-7"	9'-5"	7'-3"

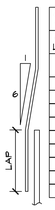

NOTES:
1. UNLESS INDICATED OTHERWISE, USE CLASS "B" LAP SPLICE LENGTHS, MULTIPLIED BY THE APPLICABLE FACTORS(S) LISTED BELOW.
2. WHERE THE CLEAR SPACING OF BARS BEING SPLICED IS LESS THAN 2 BAR DIAMETERS, INCREASE THE LAP LENGTH BY 50%.
3. WHERE THE BAR COVER IS LESS THAN OR EQUAL TO THE BAR DIAMETER, INCREASE THE LAP LENGTH BY 50%
4. A CLASS "A" SPLICE MAY BE USED ONLY WHERE NOTED ON THE DRAWINGS. WHERE DEVELOPMENT LENGTH (Ld) IS REQUIRED OR CALLED OUT ON THE DRAWINGS, USE CLASS "A" LAP SPLICE LENGTH.
5. TOP BARS ARE HORIZONTAL BARS WITH MORE THAN 12 INCHES OF CONCRETE CAST BELOW THE BARS.
6. LAP SPLICE LENGTHS IN TABLE ARE FOR NORMAL WEIGHT CONCRETE. WHERE LIGHTWEIGHT AGGREGATE CONCRETE IS USED, INCREASE LAP SPLICE LENGTH BY 30%
7. SPLICES OF HORIZONTAL REINFORCEMENT IN WALLS SHALL BE STAGGERED
8. SPLICES OF HORIZONTAL REINFORCEMENT IN WALLS CONTAINING TWO CURTAINS OF REINFORCEMENT SHALL NOT OCCUR IN THE SAME LOCATION.

REBAR OFFSET & LAP SPLICES
2 / S1.1

IDENTIFICATION STAMP
DIV. OF THE STATE ARCHITECT
APP: 02-121275 INC:
REVIEWED FOR
SS ☑ FLS ☑ ACS ☑
DATE: 12/15/2023

DESIGN California WEST
CALIFORNIA DESIGN WEST ARCHITECTS, Inc.
2100 19th Street
Sacramento, CA 95818
Phone: (916) 446-2466
Fax: (916) 446-5118
Web Page: ca-dw.com

These plans and prints thereof, as instruments of service, are owned by the architect and are for the use on this project only. Reproduction and/or distribution without the prior written consent of the architect is forbidden.
Copyright California Design West Architects, Inc.

ARCHITECT: CONSULTANT:

LICENSED ARCHITECT MITCHELL A. McALISTER LIC. NO. C 17258 STATE OF CALIFORNIA
REGISTERED PROFESSIONAL ENGINEER WILLIAM P. LAWSON STRUCTURAL STATE OF CALIFORNIA

CONSULTANT:

POINT 2
STRUCTURAL ENGINEERS, INC.
3701 BUSINESS DR SUITE 100
SACRAMENTO, CA. 95820
(916)-452-8200
(916)-452-8212 (FAX)

PROJECT NAME:

BUHACH COLONY HIGH SCHOOL

1800 NORTH BUHACH ROAD
ATWATER, CA 95301

CONCESSIONS/TOILET BUILDINGS, TICKET BOOTH & STADIUM UPGRADES

MERCED UNION HIGH SCHOOL DISTRICT

MERCED COUNTY

KEY PLAN:

SHEET TITLE:
TYPICAL DETAILS

JOB NUMBER:	SHEET NUMBER:
2022-099	**S1.1**
DATE: NOV 17, 2023	
REVISION:	

TYPICAL DETAILS

APPLICABLE TO ALL DRAWINGS UNLESS NOTED OR SHOWN OTHERWISE

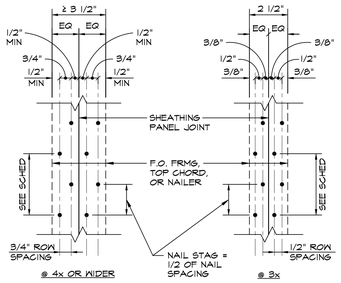

SHEATHING EDGE NAILING

12 / S1.2 DETAIL

NO SCALE NOOD16.dwg 3"

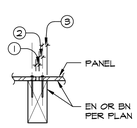

STUD OR JST FRAMING

NOTE 1 1/8" PANEL GAP

NOTE 2 5/16" MIN PANEL EDGE DIST

NOTE 3 3/8" MIN LUMBER EDGE DIST @ 2x FRAMING
1/2" MIN LUMBER EDGE DIST @ 3x & GREATER

13 / S1.2 DETAIL

NO SCALE NOOD05.dwg 8-28-00 12:27:01 pm EST

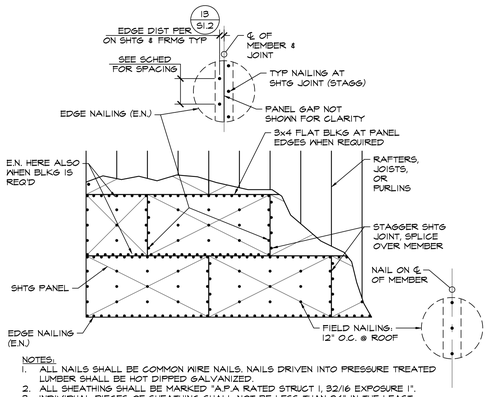

NOTES:
1. ALL NAILS SHALL BE COMMON WIRE NAILS. NAILS DRIVEN INTO PRESSURE TREATED LUMBER SHALL BE HOT DIPPED GALVANIZED.
2. ALL SHEATHING SHALL BE MARKED "A.P.A RATED STRUCT I, 32/16 EXPOSURE 1".
3. INDIVIDUAL PIECES OF SHEATHING SHALL NOT BE LESS THAN 24" IN THE LEAST DIMENSION NOR LESS THAN 8 SQ-FT IN AREA.
4. PROVIDE EDGE NAILING ALONG ALL SHEAR WALL LINES AND MEMBERS IN LINE WITH SHEARWALLS. USE TWO ROWS OF EDGE NAILING AT ALL INTERIOR SHEAR WALL LINES AND STRUTS. PROVIDE EDGE NAILING AS SHOWN ELSEWHERE ON DRAWINGS.
5. PREDRILL HOLES WHERE WOOD TENDS TO SPLIT.

ROOF SHEATHING

14 / S1.2 DETAIL

1" = 1'-0" NOOD12B

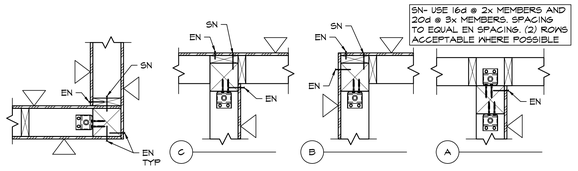

SHEARWALL WITH HOLDOWNS

8 / S1.2 DETAIL

1" = 1'-0" NOOD08

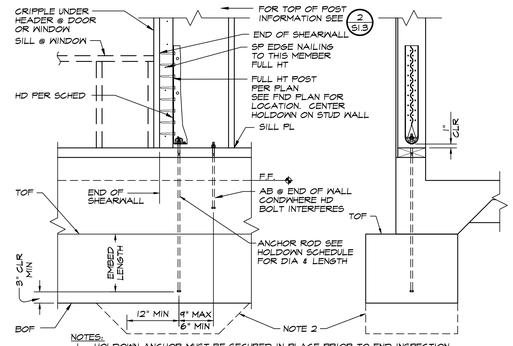

NOTES:
1. HOLDOWN ANCHOR MUST BE SECURED IN PLACE PRIOR TO FND INSPECTION.
2. (APPLIES TO NEW FOOTINGS ONLY) DEEPEN FOOTING AS NECESSARY FOR EMBED LENGTH PER SCHEDULE, MIN 12" EACH SIDE OF HD ANCHOR, 3" CLR TO B.O.F. BOTTOM FTG REINFORCING NEED NOT BE DEEPENED

TYPICAL HOLDOWN

9 / S1.2 DETAIL

NO SCALE NOOD12B.dwg 3/4"

ADD CURB HT TO AB LENGTH @ CURB

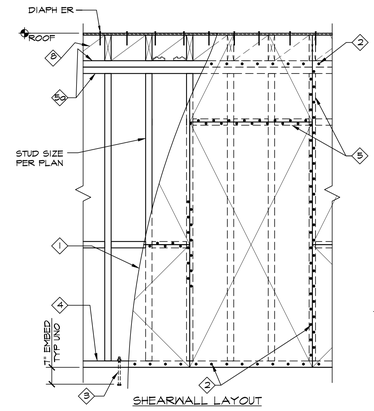

SHEARWALL NOTES

1. SEE PLAN FOR SHEATHING TYPE, NAIL SIZE AND SPACING
2. PROVIDE EN AT ALL SHEET EDGES, SILL PLS, TOP PLS, BLOCKING POSTS AND POSTS AT HOLDOWNS.
3. FIELD NAILING TO BE 10d @ 12" OC TYP
4. SHEAR WALLS MORE THAN ONE VERTICAL PANEL IN HEIGHT SHALL HAVE EITHER VERTICAL OR HORIZONTAL STAGGERED SPLICE JOINTS.
5. SILL PLATES AND FRAMING/BLOCKING AT ADJOINING PANEL EDGES SHALL BE 3" NOMINAL OR WIDER AND NAILS SHALL BE STAGGERED WHERE NAILS ARE SPACED 4" OC OR LESS
6. EDGE NAILING INTO ALL PRESSURE TREATED LUMBER SHALL BE HOT DIPPED GALVANIZED, BRASS, COPPER OR STAINLESS STEEL MAY BE USED AS AN OPTION.
7. THE MINIMAL EDGE DISTANCE FOR NAILS IN THE FRAMING MEMBERS AND THE PLYWOOD SHALL BE 3/8" FOR 2" NOMINAL FRAMING MEMBERS AND 1/2" FOR 3" NOMINAL FRAMING MEMBERS
8. ALL NAILS TO BE COMMON WIRE NAILS, TYP UNO
9. TYP. LENGTH OF SHEAR WALL IS FULL LENGTH BETWEEN OPENINGS OR INTERSECTING WALLS
10. F.A.: USE SIMPSON A35 OR EQUAL UNO
11. HOLDOWN BOLTS SHALL NOT BE CONSIDERED TO REPLACE (OR ACT AS) ANCHOR BOLTS
12. IF NOT INDICATED OTHERWISE NAIL SP AT WALLS PER 6
13. FND PLATE BOLTS SHALL COMPLY WITH 5 / S1.2

SCHEDULE NOTES

XX=XX" — MIN LENGTH OF SHEAR WALL IN FT

6 — NAIL SPACING

* MIN (2) 5/8"ø AB PER FOUNDATION PL.

1 / S1.2 SHEARWALL SCHEDULE — SEE SCHDL NOTES ABOVE

MARK	1 STRUCT I APA RATED SHEATHING	2 EN (EDGE NAILING)	3 AB* (FND PLATE) ANCHOR BOLTS)	4 SOLE PLATE ON CONC	4 SOLE PLATE ON WOOD	4&5 PL'S, JOINT STUDS & BLKG	6 SN (SHEAR NAILING)	7 * FA SPACING RIM JOIST	7 * NUMBER OF FA'S PER BLOCK BLKG @ 16"	7 * NUMBER OF FA'S PER BLOCK BLKG @ 24"	8 BLKG OR RIM JOIST
6	15/32"	10d @ 6"	5/8" ø @ 32"	2x	2x	2x	1/4"ø x6" SDS @ 10" OC	16"	1	2	2x

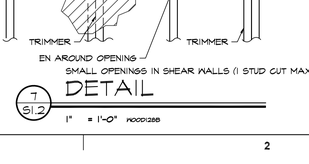

SHEARWALL ANCHOR BOLT

5 / S1.2 DETAIL

3" = 1'-0" NOOD10A

SP EDGE NAILING SHALL BE 10d COMMON @ 6"OC UNO ON D'NGS THIS NAILING APPLIES TO EDGES OF ALL PLYWOOD SHEETS AND ALONG OTHER LINES AS FOLLOWS:

1. WHERE SP CONTACTS WALL PLS & SOLID BLKG OVER WALL
2. @ STUDS W/ HOLDOWNS ATTACHED.

NOTE:
SP SHEETS SHALL NOT BE LESS THAN 24" WIDE @ ROOFS & FLOORS OR LESS THAN 12" WIDE AT SHEAR WALLS.

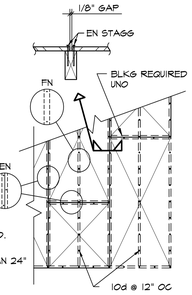

STRUCTURAL SHEARWALL PLY NAILING

2 / S1.2 DETAIL

NO SCALE WOOD08.dwg

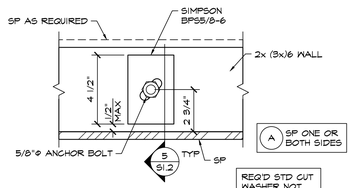

SHEARWALL ANCHOR BOLT

10 / S1.2 DETAIL

3" = 1'-0" NOOD10

HOLDOWN SCHEDULE

MARK	HOLDOWN	ANCHOR BOLT	AB (MIN) EMBED	STUD FASTENERS	80% ALLOWABLE TENSION K
3 ▼	HDU2-SDS2.5	5/8" dia	11"	(6) SDS 1/4x2 1/2 WOOD SCREWS	2.5
5 ▼	HDU5-SDS2.5	5/8" dia	15"	(14) SDS 1/4x2 1/2 WOOD SCREWS	4.5

NOTES:
1. PROVIDE 6x POST THE SAME DEPTH AS THE WALL STUDS AT EACH HOLDOWN UNO
2. PROVIDE SHEAR WALL NAILING TO POST FULL HEIGHT
3. FOR TYP HOLDOWN DETAIL SEE 4 / S1.2
4. HD ARE SIMPSON STRONG TIE PRODUCTS.

3 / S1.2

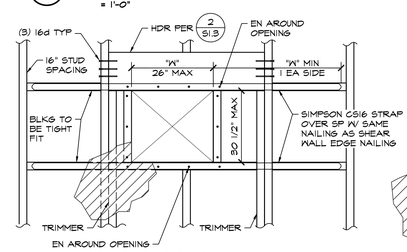

SMALL OPENINGS IN SHEAR WALLS (1 STUD CUT MAX)

7 / S1.2 DETAIL

1" = 1'-0" NOOD12BB

6 / S1.2 NOT USED

= 1'-0"

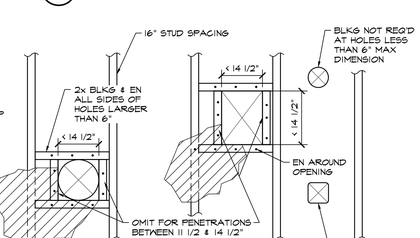

SMALL OPENINGS IN SHEAR WALLS

4 / S1.2 DETAIL

1" = 1'-0" NOOD12B

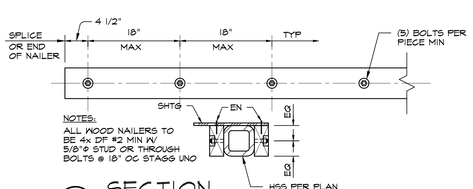

NOTES:
ALL WOOD NAILERS TO BE 4x DF #2 MIN W/ 5/8"ø STUD OR THROUGH BOLTS @ 18" OC STAGG UNO

SECTION

11 / S1.2

NO SCALE STEEL32.dwg

IDENTIFICATION STAMP
DIV. OF THE STATE ARCHITECT
APP: 02-121275 INC:
REVIEWED FOR
SS ☑ FLS ☑ ACS ☑
DATE: 12/15/2023

CALIFORNIA DESIGN WEST ARCHITECTS, Inc.

2100 19th Street
Sacramento, CA 95818

Phone: (916) 446-2466
Fax: (916) 446-5118
Web Page: ca-dw.com

These plans and prints thereof, as instruments of service, are owned by the architect and are for the use on this project only. Reproduction and/or distribution without the prior written consent of the architect is forbidden.

Copyright California Design West Architects, Inc.

ARCHITECT: CONSULTANT:

LICENSED ARCHITECT — MITCHELL A. MCALISTER — No. C17258 — REGISTERED PROFESSIONAL ENGINEER — WILLIAM P. LAWSON — STRUCTURAL

CONSULTANT:

POINT 2
STRUCTURAL ENGINEERS, INC.
3701 BUSINESS DR SUITE 100
SACRAMENTO, CA. 95820
(916)-452-8200
(916)-452-8212 (FAX)

PROJECT NAME:

BUHACH COLONY HIGH SCHOOL

1800 NORTH BUHACH ROAD
ATWATER, CA 95301

CONCESSIONS/TOILET BUILDINGS, TICKET BOOTH & STADIUM UPGRADES

MERCED UNION HIGH SCHOOL DISTRICT

MERCED COUNTY

KEY PLAN:

SHEET TITLE: **TYPICAL DETAILS**

JOB NUMBER:	SHEET NUMBER:
2022-099	S1.2
DATE: NOV 17, 2023	
REVISION:	

TYPICAL DETAILS

APPLICABLE TO ALL DRAWINGS UNLESS NOTED OR SHOWN OTHERWISE

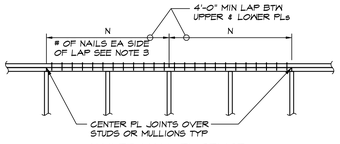

NAILED WALL PL SPLICE

NOTES

1. SPLICES TO OCCUR ONLY OVER CENTER LINE OF STUD
2. WHEN UPPER PL IS A 3x OR GREATER, NAIL UPWARD THRU 2x BOT PL
3. NAILS @ 2" STAG, INCREASE PL LAP AS REQ'D

MARK	N (NUMBER)	CONNECTOR
MIN	5	16d
A	8	16d
B	10	16d

13/S1.3 TOP PL SPLICE DETAIL

NO SCALE WOOD14.dwg 1/2"

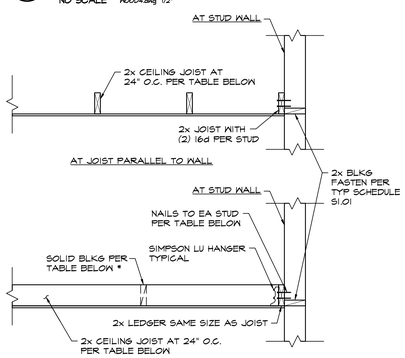

JOIST SIZE	MAX SPAN GYP BD	MAX SPAN PLASTER	LEDGER NAILS	BOLT SPACING	BLOCKING (NOTE #5)
2x4	6'-0"	4'-0"	(2) 16d	48" O.C.	NOT REQ'D
2x6	12'-0"	8'-0"	(2) 16d	48" O.C.	MID-SPAN
2x8	16'-0"	12'-0"	(3) 16d	32" O.C.	MID-SPAN
2x10	20'-0"	16'-0"	(3) 16d	32" O.C.	TWO ROWS
2x12	24'-0"	20'-0"	(4) 16d	24" O.C.	TWO ROWS

NOTES:
1. DESIGN LOADS: DL=6psf AT GYP BD; 10psf AT PLASTER LL=10psf
2. AT CONTRACTOR'S OPTION, 10d x 1 1/2" NAILS MAY BE USED FOR ATTATCHMENT OF JOIST HANGER TO LEDGERS.
3. SPACE CEILING JOISTS @ 16" O.C. AT FIRE RATED CONSTRUCTION, WHERE REQ'D PER ARCH DWGS.
4. SEE TYPICAL "CEILING FRAMING OPENING" SEE 11/S1.3 FOR FRAMING AT OPENINGS OR RECESSED FIXTURES.
5. ROWS OF BLOCKING TO BE EQUALLY SPACED BETWEEN SUPPORTS

TYPICAL CEILING FRAMING

14/S1.3 DETAIL

3/4" = 1'-0" DSAN0002

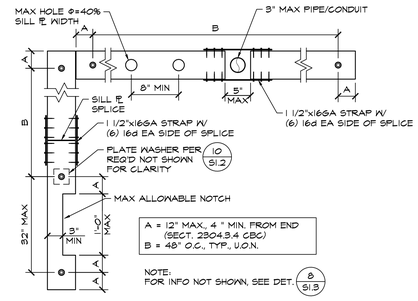

NOTCHES/HOLES/CUTS IN SILL PL (PART WALL)

9/S1.3 DETAIL

1" = 1'-0" WOOD114

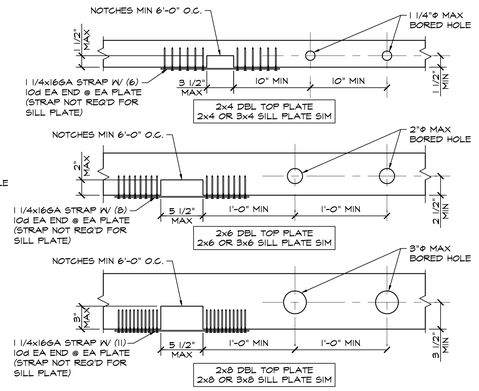

NOTE: OPENINGS OR PENETRATIONS MAY EXCEED THIS AMOUNT WHERE DESIGNED AND SHOWN ON THE APPROVED DRAWINGS

WALL TOP PLATE PENETRATION

10/S1.3 DETAIL

1 1/2" = 1'-0" WOOD111

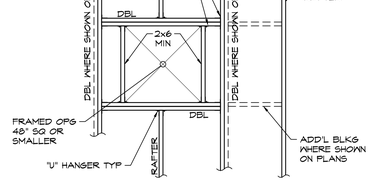

TYPICAL FLAT FRAMED OPENING

11/S1.3 DETAIL

1/2" = 1'-0" WOOD20

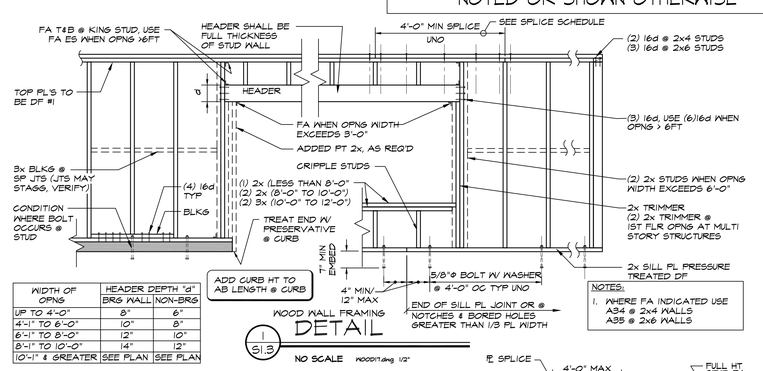

WIDTH OF OPNG	HEADER DEPTH "d" BRG WALL	HEADER DEPTH "d" NON-BRG
UP TO 4'-0"	8"	6"
4'-1" TO 8'-0"	10"	8"
8'-1" TO 10'-0"	12"	10"
10'-1" & GREATER	SEE PLAN	SEE PLAN

NOTES:
1. WHERE FA INDICATED USE A34 @ 2x4 WALLS A35 @ 2x6 WALLS

1/S1.3 WOOD WALL FRAMING DETAIL

NO SCALE WOOD1.dwg 1/2"

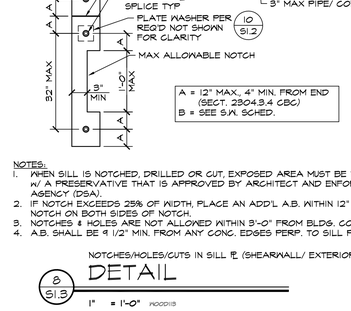

6/S1.3 DETAIL

1" = 1'-0" WOOD19

NON-BRG PARTITION FRMG

7/S1.3 DETAIL

1" = 1'-0" WOOD101

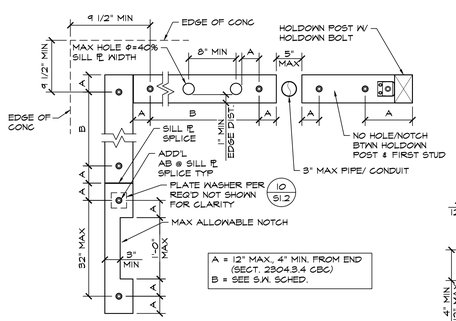

NOTES:
1. WHEN SILL IS NOTCHED, DRILLED OR CUT, EXPOSED AREA MUST BE TREATED W/ A PRESERVATIVE THAT IS APPROVED BY ARCHITECT AND ENFORCEMENT AGENCY (DSA).
2. IF NOTCH EXCEEDS 25% OF WIDTH, PLACE AN ADD'L A.B. WITHIN 12" FROM NOTCH ON BOTH SIDES OF NOTCH.
3. NOTCHES & HOLES ARE NOT ALLOWED WITHIN 3'-0" FROM BLDG. CORNERS.
4. A.B. SHALL BE 9 1/2" MIN. FROM ANY CONC. EDGES PERP. TO SILL PL. @ S.W.

NOTCHES/HOLES/CUTS IN SILL PL (SHEARWALL/ EXTERIOR WALL)

8/S1.3 DETAIL

1" = 1'-0" WOOD113

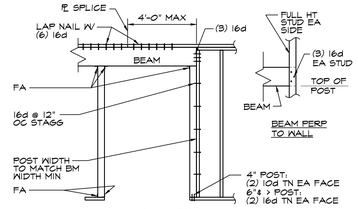

BEAM PERP TO WALL

BEAM PARALLEL TO WALL

FOR FA SEE 1/S1.3

2/S1.3 POST/BEAM CONN DETAIL

NO SCALE WOOD7.dwg 3/8"

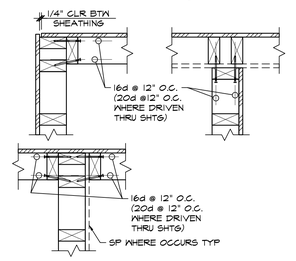

STUD FRAMING @ CORNERS

3/S1.3 DETAIL

1 1/2"= 1'-0" WOOD06

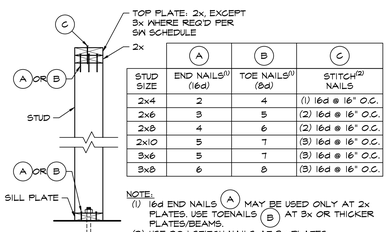

STUD SIZE	(A) END NAILS[1] (16d)	(B) TOE NAILS[1] (8d)	(C) STITCH[2] NAILS
2x4	2	4	(1) 16d @ 16" O.C.
2x6	3	5	(2) 16d @ 16" O.C.
2x8	4	6	(2) 16d @ 16" O.C.
2x10	5	7	(3) 16d @ 16" O.C.
3x6	5	7	(3) 16d @ 16" O.C.
3x8	6	8	(3) 16d @ 16" O.C.

NOTE:
(1) 16d END NAILS (A) MAY BE USED ONLY AT 2x PLATES. USE TOENAILS (B) AT 3x OR THICKER PLATES/BEAMS.
(2) USE 20d STITCH NAILS AT 3x PLATES.

4/S1.3 DETAIL

1" = 1'-0" DSAN0009

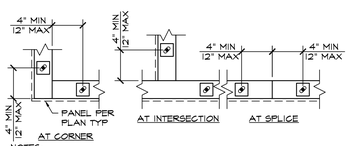

NOTES:
1. WHERE SILL PLATE IS NOTCHED OR DRILLED MORE THAN 1/3 OF ITS WIDTH, A BOLT SHALL BE PLACED ON EA. SIDE OF THE NOTCH.
2. PROVIDE 2 BOLTS MINIMUM EACH PIECE OF SILL PLATE. FOR WALL LESS THAN 2'-0" LONG, THE MINIMUM END DISTANCE MAY BE REDUCED TO 2 1/2".
3. PROVIDE PLATE WASHERS PER 10/S1.2
4. STANDARD WASHERS MAY BE USED AT INTERIOR NON-BRG WALLS.

ANCHOR BOLT

5/S1.3 DETAIL

1" = 1'-0" DSAN0004

NOTES:
1. GLU-LAM SHOP DWGS SHALL INDICATE BEAMS AS "SIMPLE" OR "CONTINUOUS". CANTILEVERED BEAMS SHALL BE CONSIDERED CONT.
2. ALL CONTINOUS BEAMS SHALL HAVE "TENSION ZONE" LAMINATIONS AT BOTH FACES

GLU-LAM FABRICATION

12/S1.3 DETAIL

NO SCALE

CALIFORNIA DESIGN WEST ARCHITECTS, Inc.

2100 19th Street
Sacramento, CA 95818

Phone: (916) 446-2466
Fax: (916) 446-5118
Web Page: ca-dw.com

These plans and prints thereof, as instruments of service, are owned by the architect and are for the use on this project only. Reproduction and/or distribution without the prior written consent of the architect is forbidden.

Copyright California Design West Architects, Inc.

ARCHITECT: CONSULTANT:

CONSULTANT:

POINT 2
STRUCTURAL ENGINEERS, INC.
3701 BUSINESS DR SUITE 100
SACRAMENTO, CA. 95820
(916)-452-8200
(916)-452-8212 (FAX)

PROJECT NAME:

BUHACH COLONY HIGH SCHOOL

1800 NORTH BUHACH ROAD
ATWATER, CA 95301

CONCESSIONS/TOILET BUILDINGS, TICKET BOOTH & STADIUM UPGRADES

MERCED UNION HIGH SCHOOL DISTRICT

MERCED COUNTY

KEY PLAN:

SHEET TITLE: **TYPICAL DETAILS**

JOB NUMBER: 2022-099

DATE: NOV 17, 2023

REVISION:

SHEET NUMBER: **S1.3**

IDENTIFICATION STAMP
DIV. OF THE STATE ARCHITECT
APP: 02-121275 INC:
REVIEWED FOR
SS ☑ FLS ☑ ACS ☑
DATE: 12/15/2023

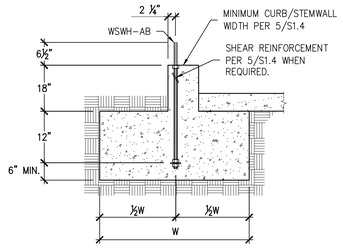

CURB OR STEMWALL FOUNDATION

NOTES :
1. SEE 2/S1.4 FOR DIMENSIONS AND ADDITIONAL NOTES.
2. SEE 5/S1.4 FOR SHEAR REINFORCEMENT WHEN REQUIRED.

STRONG–WALL® WSWH ANCHORAGE – TYPICAL SECTIONS | 1

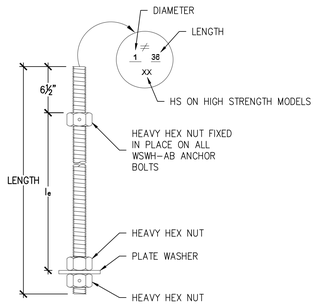

WSWH PANEL MODEL	MODEL NO.	DIAMETER	LENGTH	l_e
WSWH18	WSWH–AB1x42	1"	42"	33½"

WSWH ANCHOR BOLTS | 3

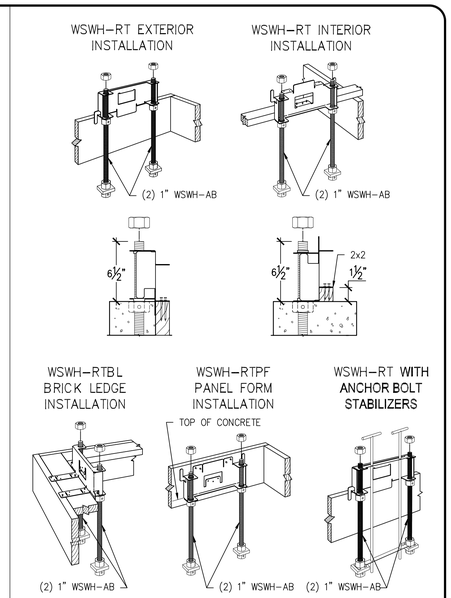

WSWH ANCHOR BOLT TEMPLATES | 6

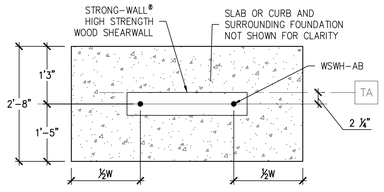

FOUNDATION PLAN VIEW

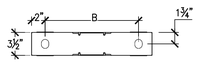

WSWH PLAN VIEW ANCHORAGE LAYOUT

ANCHOR BOLT LAYOUT	
STRONG–WALL® HIGH STRENGTH WOOD SHEARWALL MODEL NO.	DISTANCE FROM CENTER–TO–CENTER OF WSWH–AB, B (in)
WSWH18	14

NOTES :
1. ANCHORAGE DESIGNS CONFORM TO ACI 318–19 CHAPTER 17 WITH NO SUPPLEMENTARY REINFORCEMENT FOR CRACKED OR UNCRACKED CONCRETE AS NOTED.
2. SEISMIC INDICATES SEISMIC DESIGN CATEGORY C–F. SEISMIC ANCHORAGE DESIGNS CONFORM TO ACI 318–19 SECTION 17.10.5.3.
3. FOUNDATION DIMENSIONS ARE FOR ANCHORAGE ONLY. FOUNDATION DESIGN (SIZE AND REINFORCEMENT) BY OTHERS. THE DESIGNER MAY SPECIFY ALTERNATE EMBEDMENT, FOOTING SIZE OR ANCHOR BOLT.
4. REFER TO 1/S1.4 FOR d_e

WSWH ANCHORAGE SOLUTIONS FOR 3000 PSI CONCRETE					
DESIGN CRITERIA	CONCRETE CONDITION	ANCHOR STRENGTH	WSWH–AB1 ANCHOR BOLT		
			ASD ALLOWABLE UPLIFT (lbs)	W (in)	d_e (in)
SEISMIC	CRACKED	ASTM 1554 GR36	16,000	32	12

STRONG–WALL® HIGH STRENGTH WOOD SHEARWALL TENSION ANCHORAGE SCHEDULE 3,000 PSI | 2

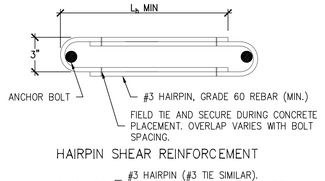

HAIRPIN SHEAR REINFORCEMENT

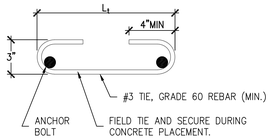

TIE SHEAR REINFORCEMENT

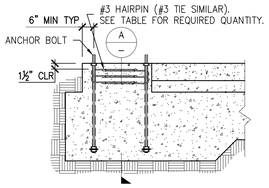

HAIRPIN INSTALLATION
(GARAGE CURB SHOWN. OTHER FOOTING TYPES SIMILAR.)

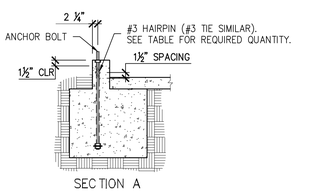

SECTION A

STRONG–WALL® HIGH STRENGTH WOOD SHEARWALL SHEAR ANCHORAGE						
MODEL	SEISMIC[3]			WIND[4]		
	L_x OR L_y (in.)	SHEAR REINFORCEMENT	MIN. CURB/ STEMWALL WIDTH (in.)	SHEAR REINFORCEMENT	MIN. CURB/ STEMWALL WIDTH (in.)	ASD ALLOWABLE SHEAR LOAD, V (lb.)
						UNCRACKED / CRACKED
WSWH18	15	(2) #3 HAIRPINS[5,6]	6	(1) #3 HAIRPIN	6	HAIRPIN REINF. ACHIEVES MAX. ALLOW SHEAR LOAD OF THE WSWH

NOTES :
1. SHEAR ANCHORAGE DESIGNS CONFORM TO ACI 318–19, AND ASSUME MINIMUM 2,500 PSI CONCRETE..
2. SEISMIC INDICATES SEISMIC DESIGN CATEGORY C THROUGH F. SEISMIC SHEAR REINFORCEMENT DESIGNS CONFORM TO ACI 318–19, SECTION 17.10.6.3,
3. CONCRETE EDGE DISTANCE FOR ANCHORS MUST COMPLY WITH ACI 318–19 SECTION 17.9.2.

STRONG–WALL® WSWH SHEAR ANCHORAGE SCHEDULE AND DETAILS | 5

NO.	DATE	REVISIONS
0	02-26-2021	FIRST RELEASE - 2018 IBC
1	03-16-2021	2021 IBC REVISIONS
2	04-29-2022	ADDED WSWH–AB MODELS

SIMPSON Strong-Tie, Co. Inc.
5956 W. Las Positas Blvd.
Pleasanton, CA 94588
Tel: (800) 999-5099
Website: www.strongtie.com
THERE IS NO EQUAL

STRONG-WALL® WSWH
ANCHORAGE DETAILS
ENGINEERED DESIGNS

SIMPSON Strong-Tie THERE IS NO EQUAL

NAME
DATE 04-29-2022
SCALE N.T.S.
CHECKED
SHEET WSWH1
OF SHEETS
JOB NO.

IDENTIFICATION STAMP
DIV. OF THE STATE ARCHITECT
APP: 02-121275 INC:
REVIEWED FOR
SS ☑ FLS ☑ ACS ☑
DATE: 12/15/2023

DESIGN California WEST

CALIFORNIA DESIGN WEST ARCHITECTS, Inc.
2100 19th Street
Sacramento, CA 95818
Phone: (916) 446-2466
Fax: (916) 446-5118
Web Page: ca-dw.com

These plans and prints thereof, as instruments of service, are owned by the architect and are for the use on this project only. Reproduction and/or distribution without the prior written consent of the architect is forbidden.
Copyright California Design West Architects, Inc.

ARCHITECT: CONSULTANT:

LICENSED ARCHITECT MITCHELL A. MCALISTER NO. C 17258 REGISTERED PROFESSIONAL ENGINEER WILLIAM P. LANGAN STRUCTURAL

CONSULTANT:

POINT 2
STRUCTURAL ENGINEERS, INC.
3701 BUSINESS DR SUITE 100
SACRAMENTO, CA. 95820
(916)-452-8200
(916)-452-8212 (FAX)

PROJECT NAME:

BUHACH COLONY HIGH SCHOOL

1800 NORTH BUHACH ROAD
ATWATER, CA 95301

CONCESSIONS/TOILET BUILDINGS, TICKET BOOTH & STADIUM UPGRADES

MERCED UNION HIGH SCHOOL DISTRICT

MERCED COUNTY

KEY PLAN:

SHEET TITLE:
TYPICAL DETAILS

JOB NUMBER: 2022-099
SHEET NUMBER: **S1.4**
DATE: NOV 17, 2023
REVISION:

STRONG-WALL® HIGH STRENGTH WOOD SHEARWALL MODELS

MODEL NO.	W (in.)	H (in.)	ANCHOR BOLTS		TOTAL WALL WEIGHT (lb.)
			QUANTITY	DIA. (in.)	
WSWH18x10	18	120	2	1	210

NOTES :
1. FOR HEIGHTS NOT LISTED, ORDER THE NEXT TALLEST PANEL AND TRIM TO FIT. MINIMUM TRIMMED HEIGHT FOR ALL PANELS IS 74⅛".
2. ALL PANELS COME WITH PRE-ATTACHED HOLDOWNS, TWO HEAVY HEX NUTS, TWO HEAVY BEARING PLATES, ONE WSWH-TP TOP CONNECTION PLATE WITH REQUIRED FASTENERS AND INSTALLATION INSTRUCTIONS.
3. ALL PANELS ARE 3½" THICK.

STRONG-WALL® WSWH MODELS | 1

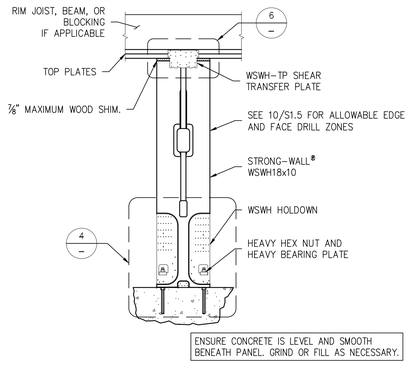

SINGLE STORY WSWH ON CONCRETE | 2

ALTERNATE WSWH GARAGE FRONT OPTIONS | 3

NOT USED

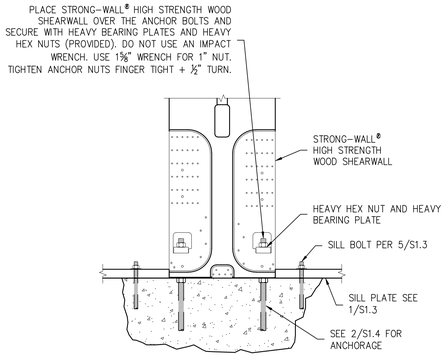

STANDARD INSTALLATION BASE CONNECTION | 4

WOOD FLOOR SYSTEM BASE CONNECTION | 5

NOT USED

NOT USED

WSWH-TP CONNECTION		
MODEL NO.	FASTENER QUANTITY	
	SWS16150	SDS25600
WSWH-TP18	26	4

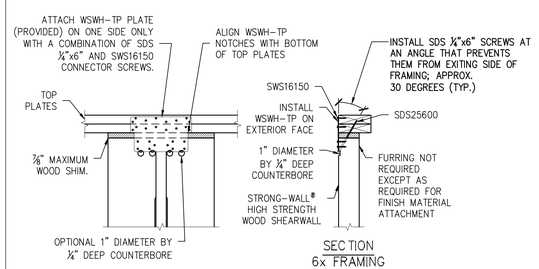

TOP CONNECTION | 6

BACK-TO-BACK TOP CONNECTION | 7

NOT USED

NOT USED

TOP OF WALL HEIGHT ADJUSTMENTS | 9

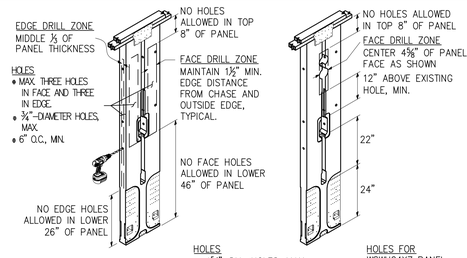

TRIM ZONE AND ALLOWABLE HOLES | 10

NOTES | 11

1. STRONG-WALL® HIGH STRENGTH WOOD SHEARWALL IS MANUFACTURED AND TRADEMARKED BY "SIMPSON STRONG-TIE COMPANY INC." HOME OFFICE: 5956 W. LAS POSITAS BLVD., PLEASANTON, CA 94588 TEL: (800) 999-5099, FAX: (925) 847-1597. "SIMPSON STRONG-TIE COMPANY INC." IS AN ISO 9001-2008 REGISTERED COMPANY.
2. USE OF THIS PRODUCT IS SUBJECT TO THE APPROVAL OF THE LOCAL BUILDING DEPARTMENT.
3. THIS PRODUCT IS PART OF THE OVERALL LATERAL FORCE RESISTING SYSTEM OF THE STRUCTURE. DESIGN OF THE BUILDING'S LATERAL FORCE RESISTING SYSTEM, INCLUDING THE LOAD PATH TO TRANSFER LATERAL FORCES FROM THE STRUCTURE TO THE GROUND, IS THE RESPONSIBILITY OF THE DESIGNER.
4. ENGINEER OF RECORD IS PERMITTED TO MODIFY DETAILS FOR SPECIFIC CONDITIONS.
5. THE CONTRACTOR SHALL VERIFY ALL DIMENSIONS, CONDITIONS, ELEVATIONS, ETC. PRIOR TO INSTALLATION OF ANY COMPONENTS FOR THE STRONG-WALL SB SYSTEM. IF ANY DISCREPANCIES ARE FOUND, THEY SHALL BE BROUGHT TO THE ATTENTION OF THE DESIGNER FOR CLARIFICATION PRIOR TO CONSTRUCTION.
6. INSTALLATION OF PRODUCT SHALL BE DONE IN CONFORMANCE TO THESE DRAWINGS. THE PERFORMANCE OF MODIFIED PRODUCTS OR ALTERED INSTALLATION PROCEDURES ARE THE SOLE RESPONSIBILITY OF THE DESIGNER.
7. SIMPSON STRONG-TIE COMPANY INC. RESERVES THE RIGHT TO CHANGE SPECIFICATIONS, DESIGNS, AND MODELS WITHOUT NOTICE OR LIABILITY FOR SUCH CHANGES.
8. ALL HARDWARE CALLED OUT IS SIMPSON STRONG-TIE.
9. SEE ICC-ES ESR-2652 OR CITY OF LOS ANGELES RR25730 AS APPLICABLE FOR ADDITIONAL INFORMATION.

NO.	DATE	REVISIONS
0	11-30-2020	FIRST RELEASE - 2018 IBC
1	03-16-2021	2021 IBC REVISIONS

SIMPSON Strong-Tie, Co. Inc.
• 5956 W. Las Positas Blvd. Pleasanton, CA 94588
• Tel: (800) 999-5099
• Website: www.strongtie.com
THERE IS NO EQUAL

STRONG-WALL® WSWH
FRAMING DETAILS
ENGINEERED DESIGNS

NAME	
DATE	03-16-2021
SCALE	N.T.S.
CHECKED	
SHEET	WSWH2
OF	SHEETS
JOB NO.	

IDENTIFICATION STAMP
DIV. OF THE STATE ARCHITECT
APP: 02-121275 INC:
REVIEWED FOR
SS ☑ FLS ☑ ACS ☑
DATE: 12/15/2023

CALIFORNIA DESIGN WEST ARCHITECTS, Inc.
2100 19th Street
Sacramento, CA 95818
Phone: (916) 446-2466
Fax: (916) 446-5118
Web Page: ca-dw.com

These plans and prints thereof, as instruments of service, are owned by the architect and are for the use on this project only. Reproduction and/or distribution without the prior written consent of the architect is forbidden.
Copyright California Design West Architects, Inc.

ARCHITECT: CONSULTANT:

LICENSED ARCHITECT MITCHELL A. MCALLISTER NO. C 17250 REN. 08-31-2025 STATE OF CALIFORNIA

REGISTERED PROFESSIONAL ENGINEER WILLIAM P. LAWSON 31447 STRUCTURAL CIVIL STATE OF CALIFORNIA

CONSULTANT:

POINT 2
STRUCTURAL ENGINEERS, INC.
3701 BUSINESS DR SUITE 100
SACRAMENTO, CA. 95820
(916)-452-8200
(916)-452-8212 (FAX)

PROJECT NAME:

BUHACH COLONY HIGH SCHOOL

1800 NORTH BUHACH ROAD
ATWATER, CA 95301

CONCESSIONS/TOILET BUILDINGS, TICKET BOOTH & STADIUM UPGRADES

MERCED UNION HIGH SCHOOL DISTRICT

MERCED COUNTY

KEY PLAN:

SHEET TITLE:
TYPICAL DETAILS

JOB NUMBER:	SHEET NUMBER:
2022-099	S1.5
DATE: NOV 17, 2023	
REVISION:	

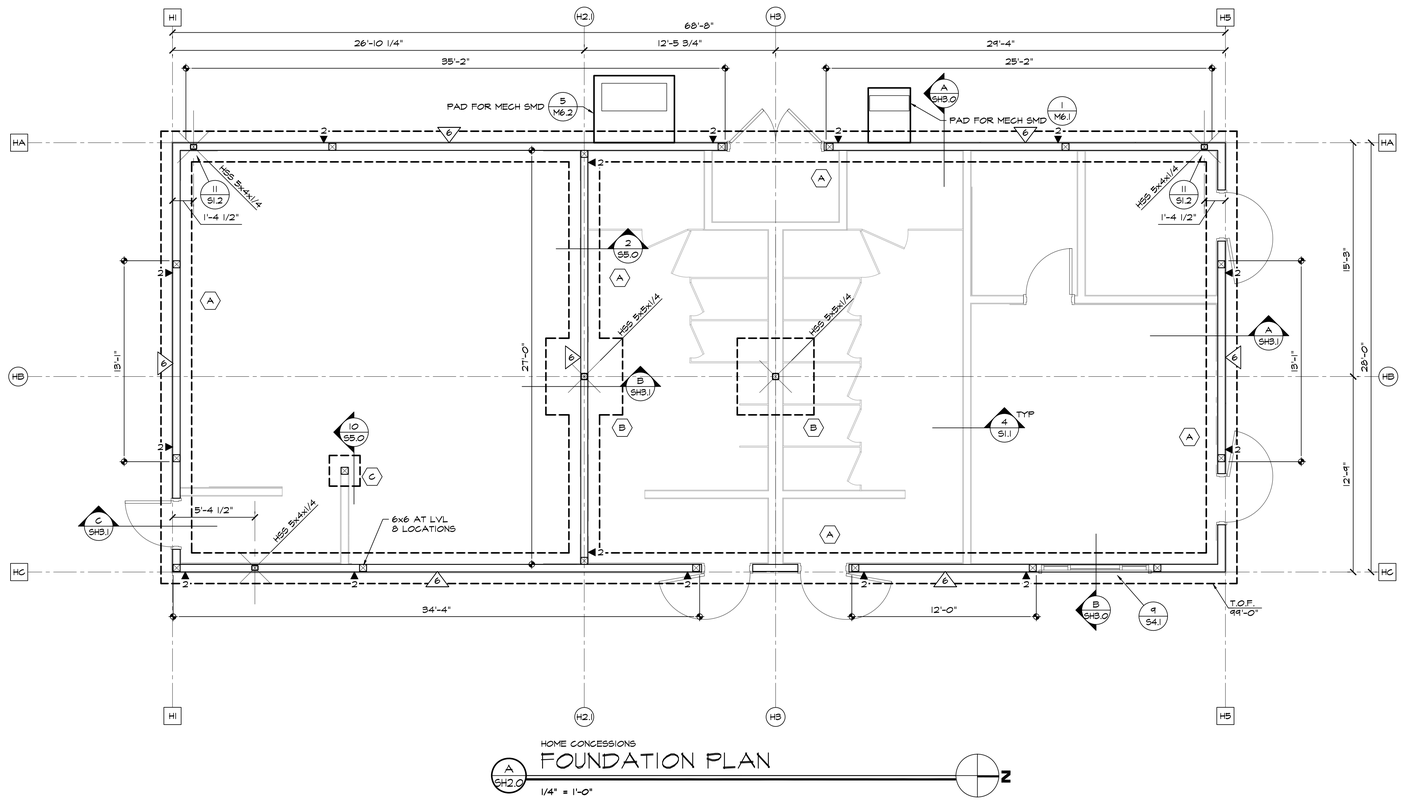

HOME CONCESSIONS
FOUNDATION PLAN
1/4" = 1'-0"

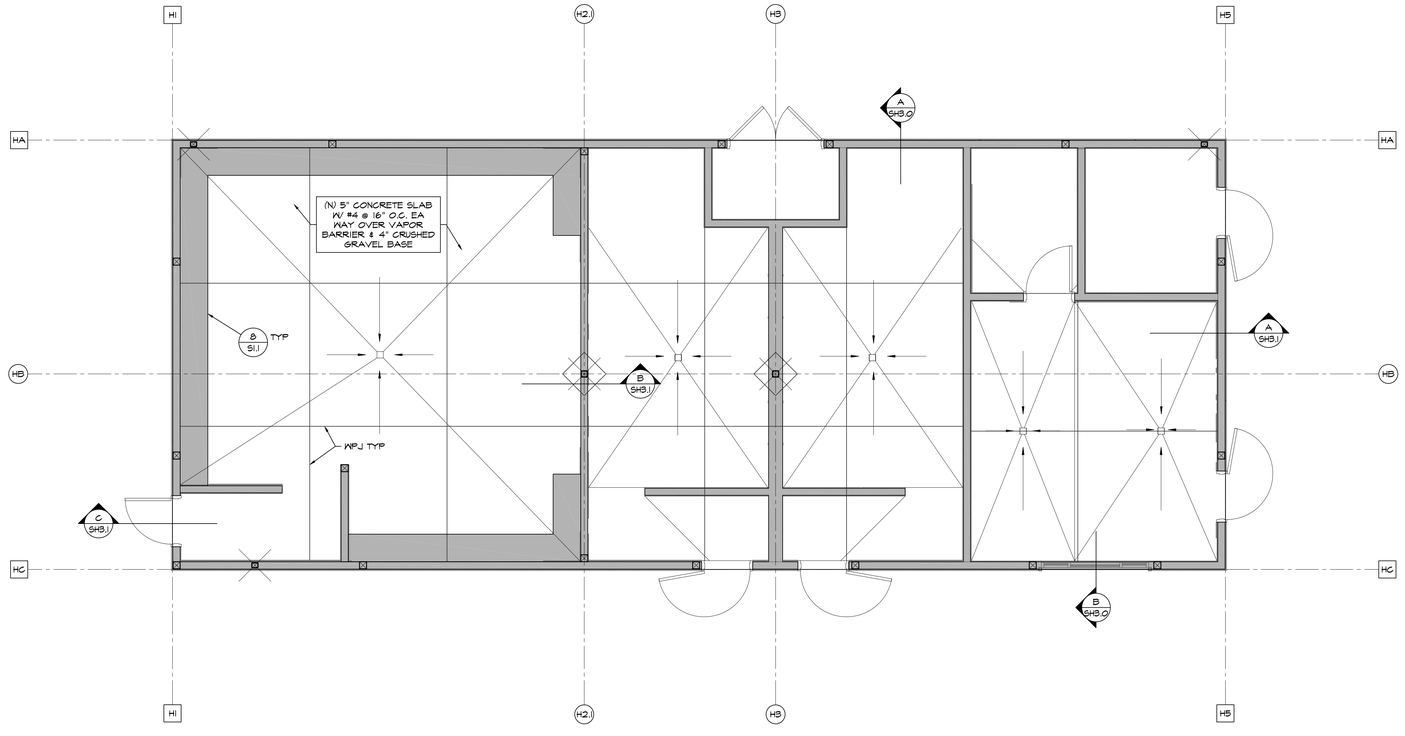

HOME CONCESSIONS
SLAB AND CURB PLAN
1/4" = 1'-0"

FOUNDATION NOTES:
1. FINISH FLOOR EL = +100'-0" (REF) = 165.38 DATUM
2. COLUMNS ARE CENTERED ON GRID LINES OR CENTERED ON WALL TYP. U.N.O.
3. FOOTINGS ARE CENTERED ON COLUMNS TYP UNO.
4. FOOTINGS NOT NOTED TO BE TYPE (A) UNO
5. SEE TYPICAL NOTES & DETAILS ON SHEETS S1.0 - S1.5
6. AVOID FOOTING PENETRATIONS & TRENCHING NEAR FOOTINGS. WHERE UNAVOIDABLE CONFORM TO DETAIL 5/S1.1
7. CONTRACTOR SHALL CHECK FRAMING DIMENSIONS AGAINST THE ARCHITECTURAL PLANS AND NOTIFY ARCHITECT AND ENGINEER OF ANY DIMENSIONS AND/OR DISCREPANCIES BEFORE STARTING WORK.
8. DIMENSIONS ARE TO FACE OF STUD OR ℄ OF COLUMN UNO.
9. CONTINUOUS FOOTING REINFORCEMENT TO EXTEND TO FAIR FACE OF PERPENDICULAR OR END FOOTING, TYP.
10. VERIFY WITH ARCH DRAWINGS: SURFACE SLOPES/CURBS.

WALL FRAMING NOTES
1. ALL EXTERIOR WALLS ARE 2x6 STUDS @ 16" O.C. UNO. 3x STUDS & PLATES REQ'D WHERE NOTED IN SHEARWALL SCHEDULE.
2. ALL INTERIOR STRUCTURAL WOOD STUD FRAMING TO BE 2x6 @ 16" O.C. UNO. PROVIDE 3x STUDS & PLATES AS REQ'D.
3. ALL EXTERIOR WALLS ARE SHEATHED W/ 15/32" APA RATED SHEATHING 32/16 EXPOSURE 1 W/ 10d @ 6" O.C. EDGES & 10d @ 12" OC FIELD NAILING UNO.
4. COORDINATE W/ ARCH DWGS FOR WINDOWS, DOORS & OPENINGS IN WALLS.
5. ALL WOOD SHALL BE 6" ABOVE GRADE MIN.
6. ALL WOOD IN CONTACT WITH CONCRETE SHALL BE PRESSURE TREATED OR EQUAL, TYP

SLAB ON GRADE NOTES
1. SEE S1.1 FOR JOINT DETAILS
2. JOINTS SHALL BE SPACED TO PROVIDE SQUARE OR RECTANGULAR SECTIONS WITH ANY SIDE DIMENSION NOT TO EXCEED 1 1/2 TIMES IT'S ADJACENT SIDE.
3. MAXIMUM JT SPACING SHALL NOT EXCEED 11'-0" UNO ON PLAN
4. DEVIATIONS FROM THE JOINTS SHOWN MUST BE SUBMITTED FOR APPROVAL TO THE STRUCTURAL ENGINEER PRIOR TO CONSTRUCTION.
5. SCJ OR CJ REQUIRED @ EA GRID LINE, TYP.
6. WATER CEMENT RATIO TO BE A MAXIMUM OF 0.45
7. MOIST CURING REQUIRED FOR A MINIMUM OF 7 DAYS
8. AGGREGATE TO CEMENT RATIO TO BE BETWEEN 6.0 AND 7.0

LEGEND
- (A) — FOOTING MARK SEE SCHEDULE 1/SH2.0
- XX'-XX" — T.O. FOOTING ELEV FROM 100'-0" 99'-0" TYP UNO
- INDICATES COLUMN MARK
- INDICATES NEW 6x6 WOOD POST TYP UNO
- B — INDICATES SLAB BLOCKOUT SEE 9/S1.1
- XX'-XX" — INDICATES MINIMUM SHEARWALL LENGTH
- INDICATES SHEARWALL NAILING SEE SCHEDULE 1/S1.2
- B — INDICATES HOLDOWN SEE 5/S1.2
- INDICATES NEW STUD WALL
- INDICATES NEW NON BEARING WALL
- INDICATES 6" CURB
- INDICATES (N) FTG
- GRID — TO FACE OF SHTG
- GRID — TO CENTERLINE OF STUD

FOOTING SCHEDULE (1/SH2.0)

MARK	SIZE	REINF	NOTES
(A)	2'-0" WIDEx1'-6" DEEP CONT	(3) #5 TOP & BOT #3 TIES @ 16" O.C.	
(B)	5'-0" SQ x 1'-6" DEEP	(6) #5 EA WAY TOP & BOT.	7/S1.1
(C)	2'-0" SQ x 1'-0" DEEP	(3) #5 EA WAY BOTTOM CONT.	10/S5.0

IDENTIFICATION STAMP
DIV. OF THE STATE ARCHITECT
APP: 02-121275 INC:
REVIEWED FOR
SS ☑ FLS ☑ ACS ☑
DATE: 12/15/2023

DESIGN California WEST

CALIFORNIA DESIGN WEST ARCHITECTS, Inc.

2100 19th Street
Sacramento, CA 95818

Phone: (916) 446-2466
Fax: (916) 446-5118
Web Page: ca-dw.com

These plans and prints thereof, as instruments of service, are owned by the architect and are for the use on this project only. Reproduction and/or distribution without the prior written consent of the architect is forbidden.

Copyright California Design West Architects, Inc.

ARCHITECT: CONSULTANT:

LICENSED ARCHITECT MITCHELL A. MCALISTER No. C17250 REGISTERED PROFESSIONAL ENGINEER WILLIAM P. LAWSON STRUCTURAL

CONSULTANT:

POINT 2
STRUCTURAL ENGINEERS, INC.
3701 BUSINESS DR SUITE 100
SACRAMENTO, CA. 95820
(916)-452-8200
(916)-452-8212 (FAX)

PROJECT NAME:

BUHACH COLONY HIGH SCHOOL

1800 NORTH BUHACH ROAD
ATWATER, CA 95301

CONCESSIONS/TOILET BUILDINGS, TICKET BOOTH & STADIUM UPGRADES

MERCED UNION HIGH SCHOOL DISTRICT

MERCED COUNTY

KEY PLAN:

SHEET TITLE:
HOME CONCESSIONS FOUNDATION & SLAB CURB PLAN

JOB NUMBER: 2022-099
DATE: NOV 17, 2023
REVISION:
SHEET NUMBER: **SH2.0**

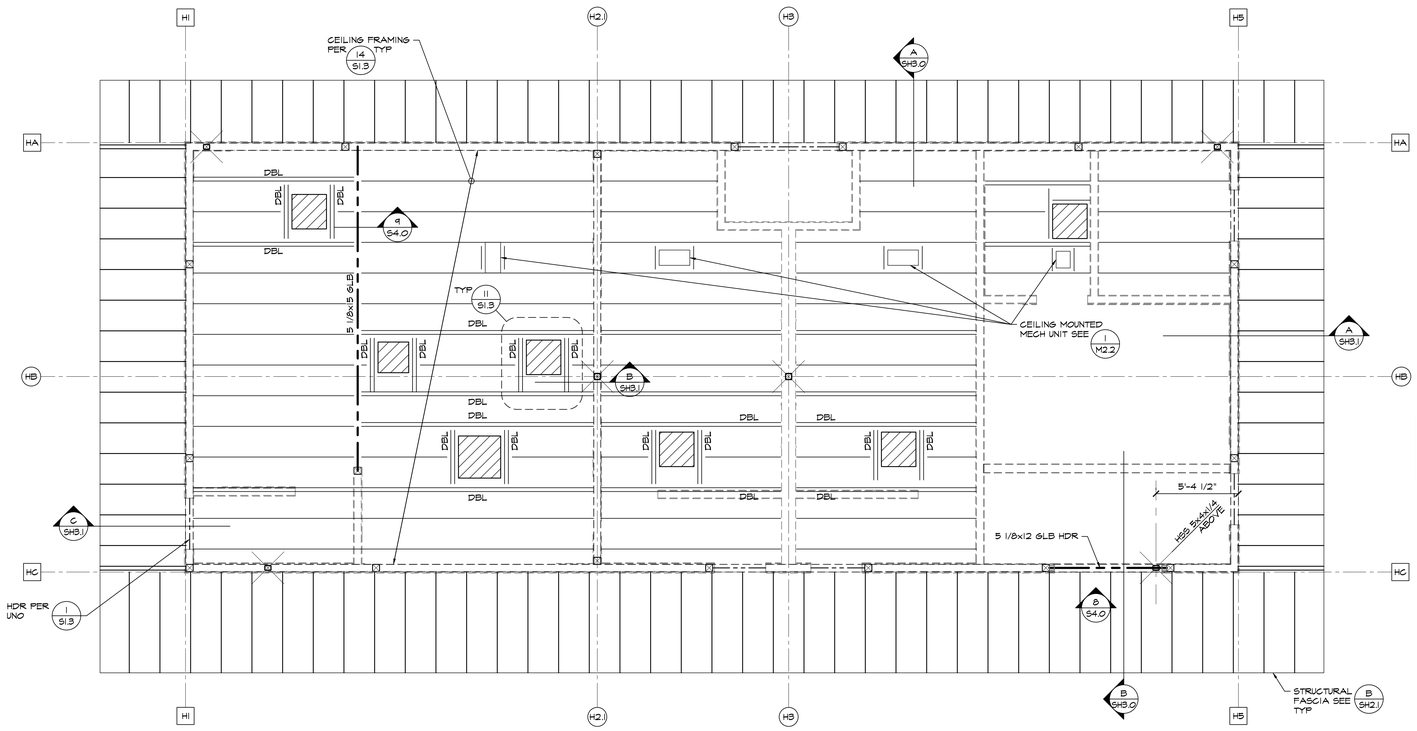

HOME CONCESSIONS

A/SH2.1 CEILING FRAMING PLAN

1/4" = 1'-0"

ROOF FRAMING NOTES

1. FRAMING ELEVATIONS ARE GIVEN IN SECTIONS. ELEVATIONS ARE TO TOF (UNDERSIDE OF PLY.) PLY IS SLOPED IN STRAIGHT LINE BETWEEN ELEVATIONS GIVEN. CONTRACTOR TO TO VERIFY ALL ELEVATIONS.
2. FRAMING ELEVATIONS IN SECTIONS PLANS ARE REFERENCED FROM TOP OF SLAB ON GRADE (+100'-0") VERIFY ALL ELEVATIONS W/ ARCH DWGS.
3. COORDINATE W/ MECH CONTRACTOR & ELEC CONTRACTOR SUPPLIERS FOR LOCATION AND DIMS OF EQUIPMENT AND OPENINGS.
4. CONTRACTOR SHALL CHECK ROOF FRAMING DIMENSIONS AGAINST THE ARCHITECTURAL PLANS AND NOTIFY ARCHITECT AND ENGINEER OF ANY DIMENSIONS AND/OR DISCREPANCIES BEFORE STARTING WORK.
5. SEE ARCH DWGS AH161 FOR ROOF DRAIN LOCATIONS & CRICKETS
6. DBL TOP PLATE SPLICE SHALL BE TYPE A PER 13/S1.3 TYP UNO

CEILING FRAMING NOTES

1. FINAL ROUGH IN LOCATIONS TO BE COORDINATED WITH OWNER/ARCHITECT IN THE FIELD.

LEGEND

- INDICATES SHEATHING LAYOUT. ROOF SHEATHING TO BE 19/32" APA RATED SHEATHING WITH 10d @ 6" O.C. EN AND 12" O.C. FN SEE 14/S1.2 BLOCK ALL PANELS EDGES
- 6R12 — TO FACE OF SHEATHING
- 6R12 — TO CENTERLINE OF STUD
- INDICATES COLUMN BELOW SEE SH2.0
- INDICATES FMS OPENING PER 11/S1.3

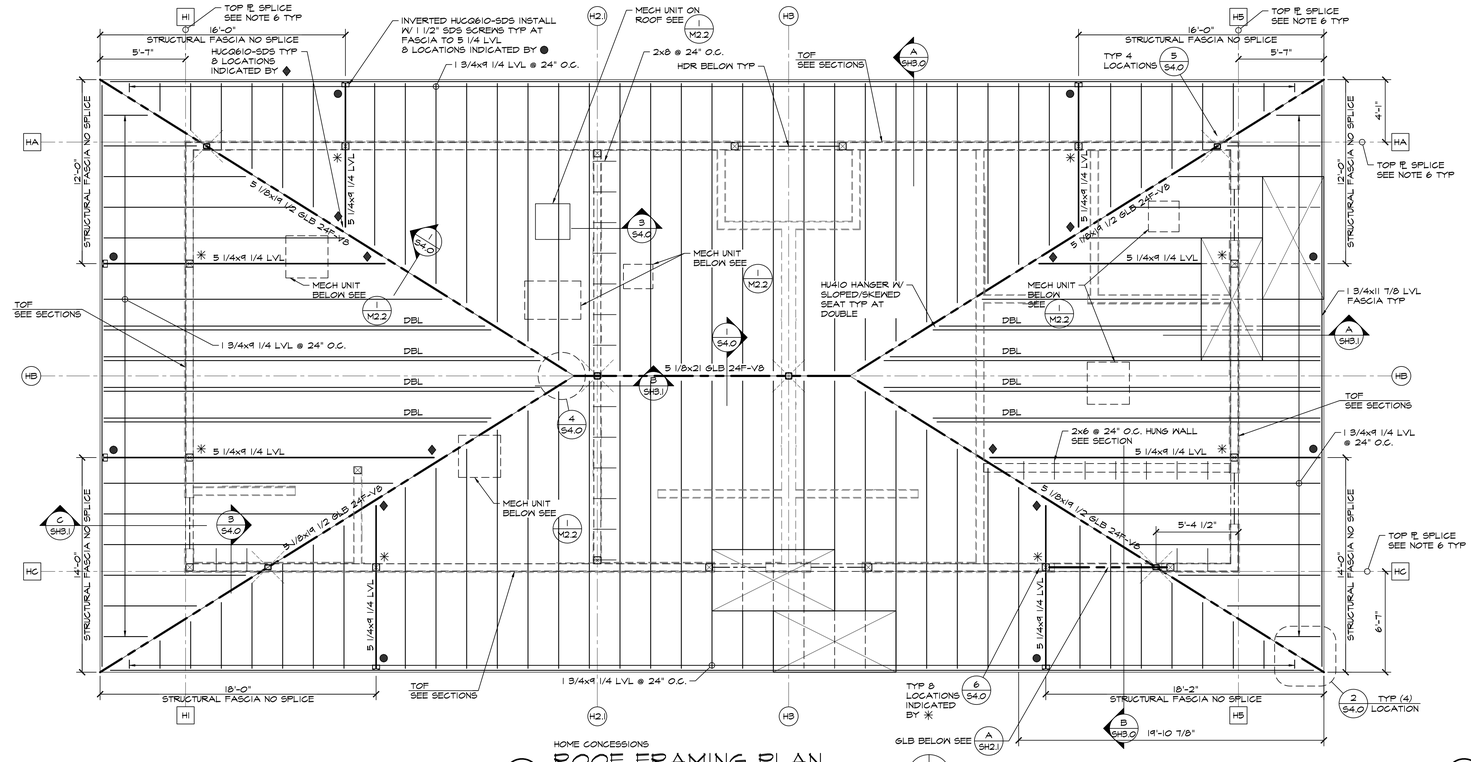

HOME CONCESSIONS

B/SH2.1 ROOF FRAMING PLAN

1/4" = 1'-0"

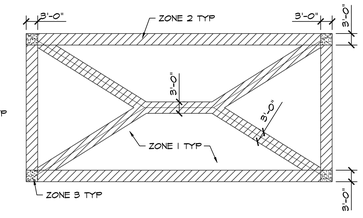

STANDING SEAM STD PANEL CLIPS PER UES REPORT 303 AT 2'-0" O.C. ALONG SEAMS AT ALL ZONES TYP W/ (2) #12x2" WOOD SCREWS INTO PLYWOOD

HOME CONCESSIONS

C/SH2.1 ROOF FASTENING

1/4" = 1'-0"

IDENTIFICATION STAMP
DIV. OF THE STATE ARCHITECT
APP: 02-121275 INC:
REVIEWED FOR
SS ☑ FLS ☑ ACS ☑
DATE: 12/15/2023

CALIFORNIA DESIGN WEST ARCHITECTS, Inc.

2100 19th Street
Sacramento, CA 95818

Phone: (916) 446-2466
Fax: (916) 446-5118
Web Page: ca-dw.com

These plans and prints thereof, as instruments of service, are owned by the architect and are for the use on this project only. Reproduction and/or distribution without the prior written consent of the architect is forbidden.

Copyright California Design West Architects, Inc.

ARCHITECT: CONSULTANT:

LICENSED ARCHITECT MITCHELL A. MCALISTER No. C-17250 REN. 08-31-2025 STATE OF CALIFORNIA

REGISTERED PROFESSIONAL ENGINEER WILLIAM P. LANNON No. 3144 STRUCTURAL STATE OF CALIFORNIA

CONSULTANT:

POINT 2
STRUCTURAL ENGINEERS, INC.
3701 BUSINESS DR SUITE 100
SACRAMENTO, CA. 95820
(916)-452-8200
(916)-452-8212 (FAX)

PROJECT NAME:

BUHACH COLONY HIGH SCHOOL

1800 NORTH BUHACH ROAD
ATWATER, CA 95301

CONCESSIONS/TOILET BUILDINGS, TICKET BOOTH & STADIUM UPGRADES

MERCED UNION HIGH SCHOOL DISTRICT

MERCED COUNTY

KEY PLAN:

SHEET TITLE:

HOME CONCESSIONS CEILING & ROOF FRAMING PLAN

JOB NUMBER:	SHEET NUMBER:
2022-099	SH2.1
DATE: NOV 17, 2023	
REVISION:	

B SECTION
3/4" = 1'-0"

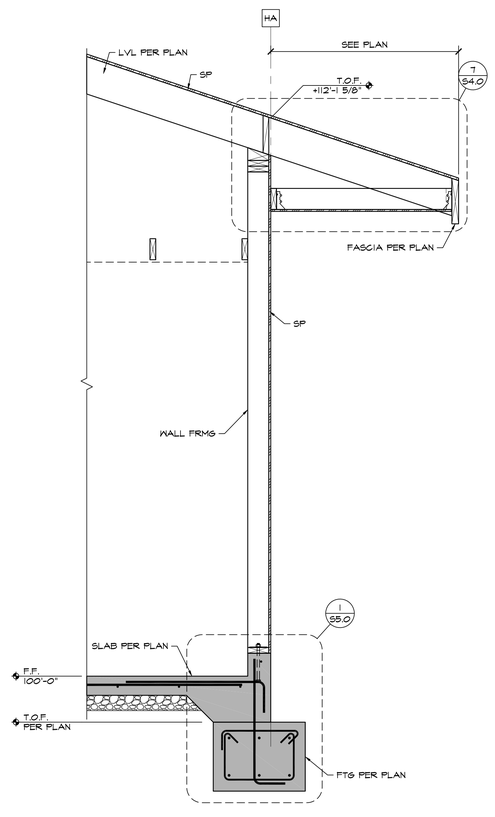

A SECTION
3/4" = 1'-0"

IDENTIFICATION STAMP
DIV. OF THE STATE ARCHITECT
APP: 02-121275 INC:
REVIEWED FOR
SS ☑ FLS ☑ ACS ☑
DATE: 12/15/2023

CALIFORNIA DESIGN
WEST ARCHITECTS, Inc.

2100 19th Street
Sacramento, CA 95818

Phone: (916) 446-2466
Fax: (916) 446-5118
Web Page: ca-dw.com

These plans and prints thereof, as instruments of service, are owned by the architect and are for the use on this project only. Reproduction and/or distribution without the prior written consent of the architect is forbidden.

Copyright California Design West Architects, Inc.

ARCHITECT: CONSULTANT:

LICENSED ARCHITECT MITCHELL A. MCALISTER No. C-17250 REGISTERED PROFESSIONAL ENGINEER WILLIAM P. LAWSON STRUCTURAL

CONSULTANT:

POINT 2
STRUCTURAL ENGINEERS, INC.
3701 BUSINESS DR SUITE 100
SACRAMENTO, CA. 95820
(916)-452-8200
(916)-452-8212 (FAX)

PROJECT NAME:

BUHACH COLONY HIGH SCHOOL

1800 NORTH BUHACH ROAD
ATWATER, CA 95301

CONCESSIONS/TOILET BUILDINGS, TICKET BOOTH & STADIUM UPGRADES

MERCED UNION HIGH SCHOOL DISTRICT

MERCED COUNTY

KEY PLAN:

SHEET TITLE:
SECTIONS

JOB NUMBER:	SHEET NUMBER:
2022-099	SH3.0
DATE: NOV 17, 2023	
REVISION:	

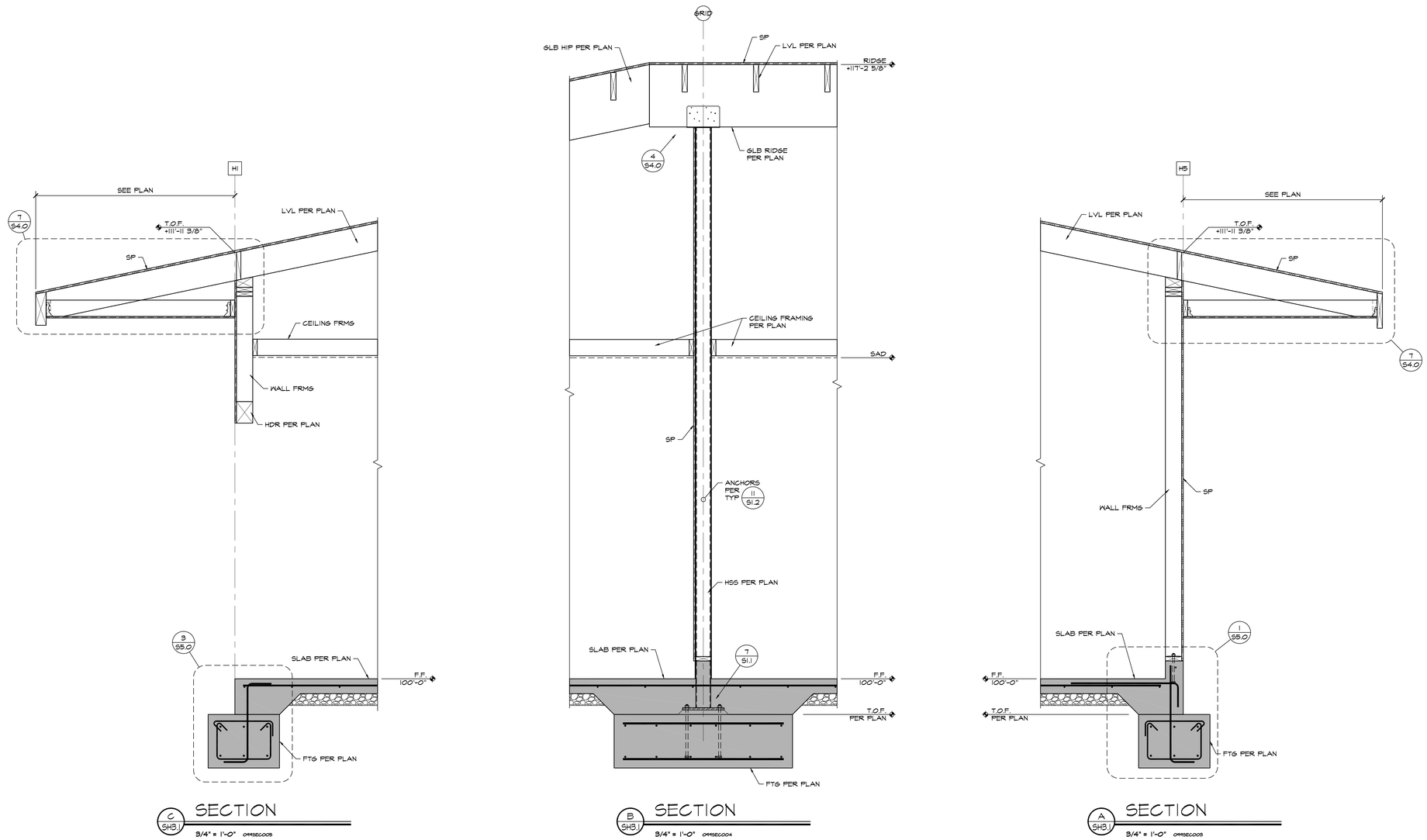

C SH3.1 SECTION
3/4" = 1'-0" 09SEC005

B SH3.1 SECTION
3/4" = 1'-0" 09SEC004

A SH3.1 SECTION
3/4" = 1'-0" 09SEC005

IDENTIFICATION STAMP
DIV. OF THE STATE ARCHITECT
APP: 02-121275 INC:
REVIEWED FOR
SS ☑ FLS ☑ ACS ☑
DATE: 12/15/2023

CALIFORNIA DESIGN
WEST ARCHITECTS, Inc.

2100 19th Street
Sacramento, CA 95818

Phone: (916) 446-2466
Fax: (916) 446-5118
Web Page: ca-dw.com

These plans and prints thereof, as instruments of service, are owned by the architect and are for the use on this project only. Reproduction and/or distribution without the prior written consent of the architect is forbidden.

Copyright California Design West Architects, Inc.

ARCHITECT: CONSULTANT:

LICENSED ARCHITECT MITCHELL A. McALLISTER NO. C17250 REGISTERED PROFESSIONAL ENGINEER WILLIAM P. LARSON 3148 STATE OF CALIFORNIA STRUCTURAL

CONSULTANT:

POINT 2
STRUCTURAL ENGINEERS, INC.
3701 BUSINESS DR SUITE 100
SACRAMENTO, CA. 95820
(916)-452-8200
(916)-452-8212 (FAX)

PROJECT NAME:

BUHACH COLONY HIGH SCHOOL

1800 NORTH BUHACH ROAD
ATWATER, CA 95301

CONCESSIONS/TOILET BUILDINGS, TICKET BOOTH & STADIUM UPGRADES

MERCED UNION HIGH SCHOOL DISTRICT

MERCED COUNTY

KEY PLAN:

SHEET TITLE:
SECTIONS

JOB NUMBER: 2022-099
DATE: NOV 17, 2023
REVISION:
SHEET NUMBER: **SH3.1**

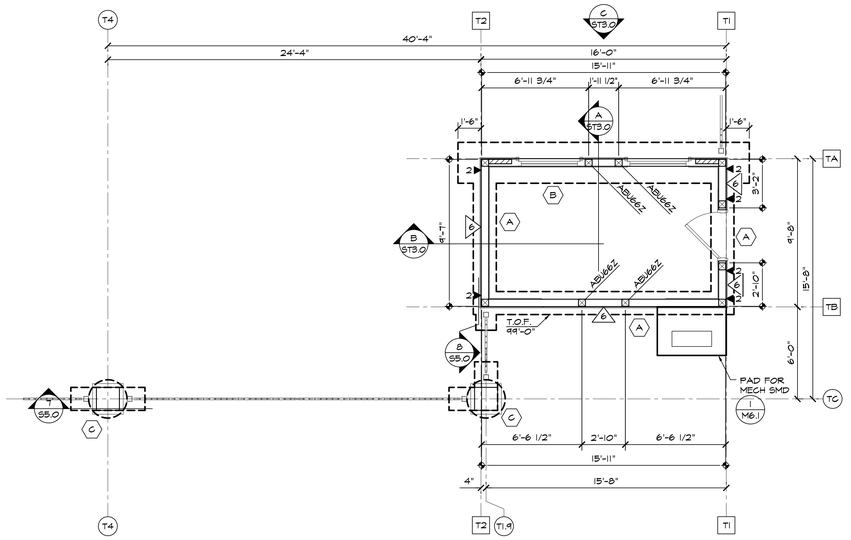

TICKET BOOTH & STADIUM ENTRY

FOUNDATION PLAN

A ST2.0

1/4" = 1'-0"

FOUNDATION NOTES:

1. FINISH FLOOR EL = +100'-0" (REF) = 163.26 DATUM
2. COLUMNS ARE CENTERED ON GRID LINES OR CENTERED ON WALL TYP. U.N.O.
3. FOOTINGS ARE CENTERED ON COLUMNS TYP UNO.
4. FOOTINGS NOT NOTED TO BE TYPE (A) UNO
5. SEE TYPICAL NOTES & DETAILS ON SHEETS S1.0 - S1.5
6. AVOID FOOTING PENETRATIONS & TRENCHING NEAR FOOTINGS. WHERE UNAVOIDABLE CONFORM TO DETAIL 5/S1.1
7. CONTRACTOR SHALL CHECK FRAMING DIMENSIONS AGAINST THE ARCHITECTURAL PLANS AND NOTIFY ARCHITECT AND ENGINEER OF ANY DIMENSIONS AND/OR DISCREPANCIES BEFORE STARTING WORK.
8. DIMENSIONS ARE TO FACE OF STUD OR ℄ OF COLUMN UNO
9. CONTINUOUS FOOTING REINFORCEMENT TO EXTEND TO FAR FACE OF PERPENDICULAR OR END FOOTING, TYP.
10. VERIFY WITH ARCH DRAWINGS: SURFACE SLOPES/CURBS.

WALL FRAMING NOTES

1. ALL EXTERIOR WALLS ARE 2x6 STUDS @ 16" O.C. UNO. 3x STUDS & PLATES REQ'D WHERE NOTED IN SHEARWALL SCHEDULE.
2. ALL EXTERIOR WALLS ARE SHEATHED W/ 15/32" APA RATED SHEATHING 32/16 EXPOSURE 1 W/ 10d @ 6" O.C. EDGES & 10d @ 12" OC FIELD NAILING UNO.
3. COORDINATE W/ ARCH DWGS FOR WINDOWS, DOORS & OPENINGS IN WALLS.
4. ALL WOOD SHALL BE 6" ABOVE GRADE MIN.
5. ALL WOOD IN CONTACT WITH CONCRETE SHALL BE PRESSURE TREATED OR EQUAL, TYP

SLAB ON GRADE NOTES

1. SEE S1.1 FOR JOINT DETAILS
2. JOINTS SHALL BE SPACED TO PROVIDE SQUARE OR RECTANGULAR SECTIONS WITH ANY SIDE DIMENSION NOT TO EXCEED 1 1/2 TIMES IT'S ADJACENT SIDE.
3. MAXIMUM JT SPACING SHALL NOT EXCEED 11'-0" UNO ON PLAN
4. DEVIATIONS FROM THE JOINTS SHOWN MUST BE SUBMITTED FOR APPROVAL TO THE STRUCTURAL ENGINEER PRIOR TO CONSTRUCTION.
5. SCJ OR CJ REQUIRED @ EA GRID LINE, TYP.
6. WATER CEMENT RATIO TO BE A MAXIMUM OF 0.45
7. MOIST CURING REQUIRED FOR A MINIMUM OF 7 DAYS
8. AGGREGATE TO CEMENT RATIO TO BE BETWEEN 6.0 AND 7.0
9. NO FLYASH ALLOWED IN MIX.
10. MAXIMUM SLUMP OF 5"

LEGEND

- (A) — FOOTING MARK SEE SCHEDULE 1/ST2.0
- XX'-XX" — T.O. FOOTING ELEV FROM 100'-0" 99'-0" TYP UNO
- ▫ — INDICATES NEW 6x6 WOOD POST TYP UNO
- XX'-XX" — INDICATES SHEARWALL SEE SCHEDULE 1/S1.2
- INDICATES SHEARWALL NAILING
- B — INDICATES HOLDOWN SEE B/S1.2
- INDICATES NEW STUD WALL
- INDICATES 6" CURB
- INDICATES (N) FTG
- 6GRID — TO FACE OF SHEATHING
- 6GRID — TO CENTERLINE OF STUD
- INDICATES SIMPSON STRONGWALL WSWH18x10 SEE 1/S1.5

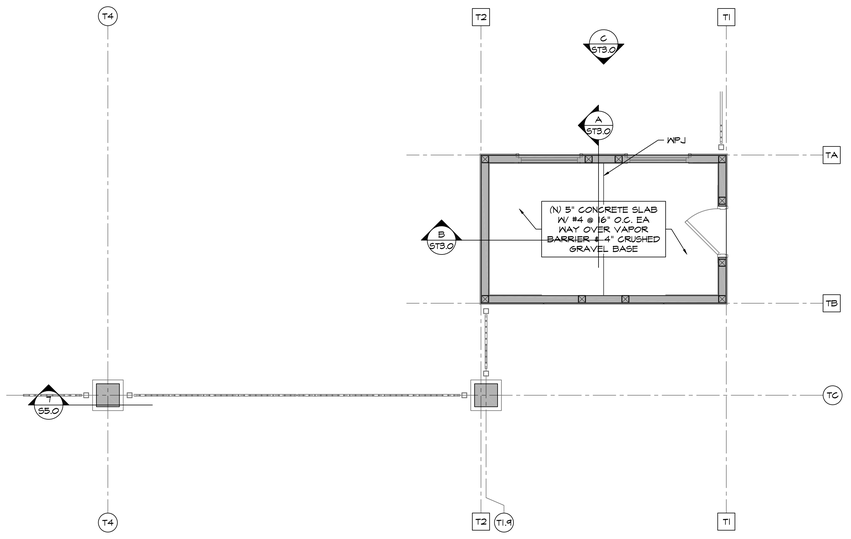

TICKET BOOTH & STADIUM ENTRY

SLAB AND CURB PLAN

B ST2.0

1/4" = 1'-0"

FOOTING SCHEDULE

1 ST2.0

MARK	SIZE	REINF	NOTES
A	1'-6" WIDEx1'-6" DEEP CONT	(3) #5 TOP & BOT #3 TIES @ 16" O.C.	
B	2'-8" WIDEx1'-6" DEEP CONT	(4) #5 TOP & BOTTOM CONT. #3 TIES @ 16" O.C. TRANSV	
C	2'-6"ø DRILLED PIER	SEE 7/SS.0	

IDENTIFICATION STAMP
DIV. OF THE STATE ARCHITECT
APP: 02-121275 INC:
REVIEWED FOR
SS ☑ FLS ☑ ACS ☑
DATE: 12/15/2023

CALIFORNIA DESIGN WEST ARCHITECTS, Inc.

2100 19th Street
Sacramento, CA 95818

Phone: (916) 446-2466
Fax: (916) 446-5118
Web Page: ca-dw.com

These plans and prints thereof, as instruments of service, are owned by the architect and are for the use on this project only. Reproduction and/or distribution without the prior written consent of the architect is forbidden.

Copyright California Design West Architects, Inc.

ARCHITECT: CONSULTANT:

LICENSED ARCHITECT MITCHELL A. MCALISTER LIC NO. C 17251 REN 08-31-2025 STATE OF CALIFORNIA

REGISTERED PROFESSIONAL ENGINEER WILLIAM P. LAWSON STRUCTURAL STATE OF CALIFORNIA

CONSULTANT:

POINT 2
STRUCTURAL ENGINEERS, INC.
3701 BUSINESS DR SUITE 100
SACRAMENTO, CA. 95820
(916)-452-8200
(916)-452-8212 (FAX)

PROJECT NAME:

BUHACH COLONY HIGH SCHOOL

1800 NORTH BUHACH ROAD
ATWATER, CA 95301

CONCESSIONS/TOILET BUILDINGS, TICKET BOOTH & STADIUM UPGRADES

MERCED UNION HIGH SCHOOL DISTRICT

MERCED COUNTY

KEY PLAN:

SHEET TITLE:

TICKET BOOTH & STADIUM ENTRY FOUNDATION & SLAB CURB PLAN

JOB NUMBER:	SHEET NUMBER:
2022-099	ST2.0
DATE: NOV 17, 2023	
REVISION:	

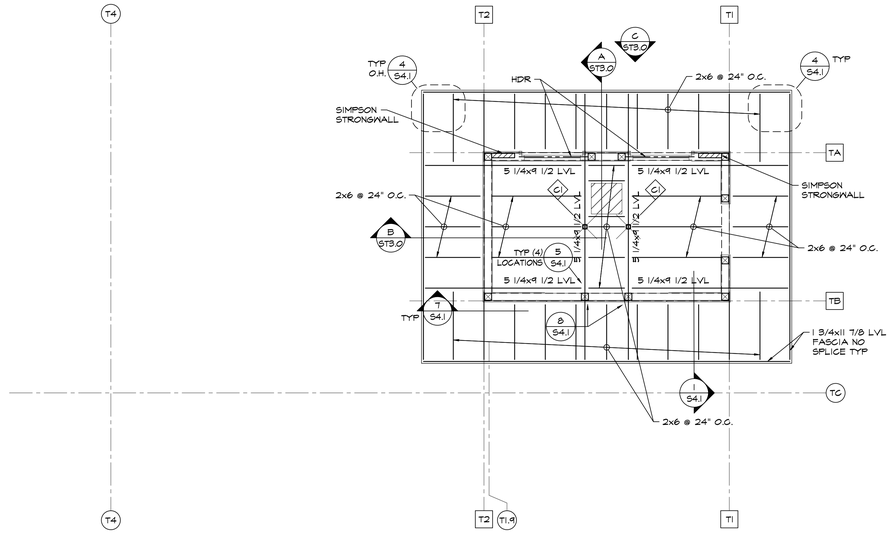

TICKET BOOTH & STADIUM ENTRY

A ST2.1 CEILING FRAMING PLAN

1/4" = 1'-0"

ROOF FRAMING NOTES

1. FRAMING ELEVATIONS ARE GIVEN IN SECTIONS. ELEVATIONS ARE TO TOF (UNDERSIDE OF STHG). DECK IS SLOPED IN STRAIGHT LINE BETWEEN ELEVATIONS GIVEN. CONTRACTOR TO TO VERIFY ALL ELEVATIONS.
2. FRAMING ELEVATIONS NOTED IN SECTIONS ARE REFERENCED FROM TOP OF SLAB ON GRADE (+100'-0") VERIFY ALL ELEVATIONS W/ ARCH DWGS.
3. COORDINATE W/ MECH CONTRACTOR & ELEC CONTRACTOR SUPPLIERS FOR LOCATION AND DIMS OF EQUIPMENT AND OPENINGS.
4. CONTRACTOR SHALL CHECK ROOF FRAMING DIMENSIONS AGAINST THE ARCHITECTURAL PLANS AND NOTIFY ARCHITECT AND ENGINEER OF ANY DIMENSIONS AND/OR DISCREPANCIES BEFORE STARTING WORK.
5. SEE ARCH DWGS B5/AT1B1 FOR ROOF DRAIN LOCATIONS & CRICKETS

1 ST2.1 COLUMN SCHEDULE

MARK	SIZE	NOTES
C1	HSS 3 1/2x3 1/2x1/4	SEE SECTION

LEGEND

INDICATES SHEATHING LAYOUT. ROOF SHEATHING TO BE 19/32" APA RATED SHEATHING WITH 10d @ 6" O.C. EN AND 12" O.C. FN SEE 14 S1.2 BLOCK ALL PANELS EDGES.

GRID — TO FACE OF SHEATHING

GRID — TO CENTERLINE OF STUD

INDICATES COLUMN BELOW

C1 / B — INDICATES COLUMN ABOVE SEE 1 ST2.1

INDICATES FMS OPENINGS PER 11 S1.3

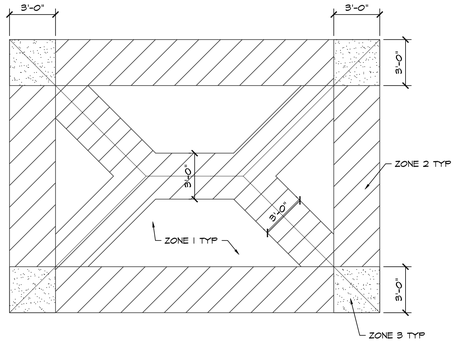

STANDING SEAM STD PANEL CLIPS PER UES REPORT 309 AT 2'-0" O.C. ALONG SEAMS AT ALL ZONES TYP W/ (2) #12x2" WOOD SCREWS INTO PLYWOOD

TICKET BOOTH & STADIUM ENTRY

C ST2.1 ROOF FASTENERS

1/4" = 1'-0"

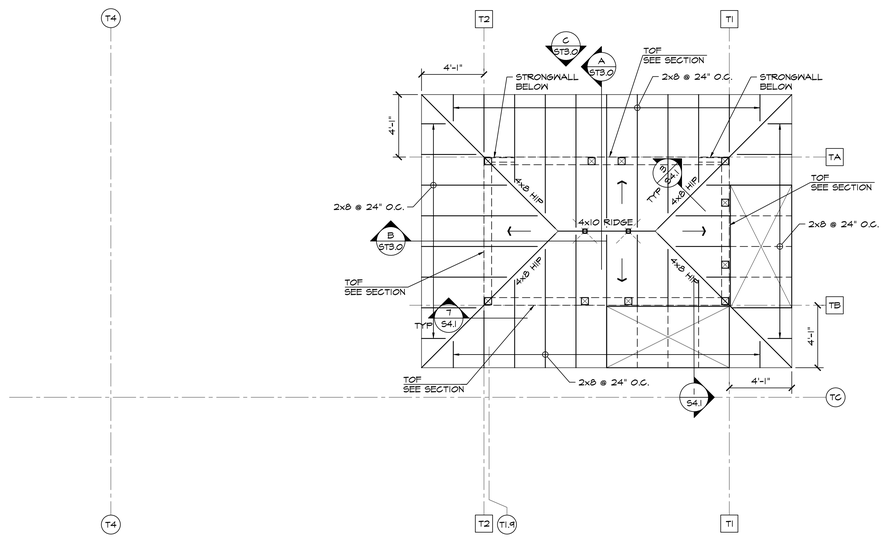

TICKET BOOTH & STADIUM ENTRY

B ST2.1 ROOF FRAMING PLAN

1/4" = 1'-0"

IDENTIFICATION STAMP
DIV. OF THE STATE ARCHITECT
APP: 02-121275 INC:
REVIEWED FOR
SS ☑ FLS ☑ ACS ☑
DATE: 12/15/2023

CALIFORNIA DESIGN WEST ARCHITECTS, Inc.

2100 19th Street
Sacramento, CA 95818

Phone: (916) 446-2466
Fax: (916) 446-5118
Web Page: ca-dw.com

These plans and prints thereof, as instruments of service, are owned by the architect and are for the use on this project only. Reproduction and/or distribution without the prior written consent of the architect is forbidden.

Copyright California Design West Architects, Inc.

ARCHITECT: CONSULTANT:

LICENSED ARCHITECT MITCHELL A. MCALISTER LIC. NO. C 17250 REN. 08-31-2024 STATE OF CALIFORNIA

REGISTERED PROFESSIONAL ENGINEER WILLIAM P. LAWSON STRUCTURAL CIVIL OF CALIFORNIA

CONSULTANT:

POINT 2
STRUCTURAL ENGINEERS, INC.
3701 BUSINESS DR SUITE 100
SACRAMENTO, CA. 95820
(916)-452-8200
(916)-452-8212 (FAX)

PROJECT NAME:

BUHACH COLONY HIGH SCHOOL

1800 NORTH BUHACH ROAD
ATWATER, CA 95301

CONCESSIONS/TOILET BUILDINGS, TICKET BOOTH & STADIUM UPGRADES

MERCED UNION HIGH SCHOOL DISTRICT

MERCED COUNTY

KEY PLAN:

SHEET TITLE:

TICKET BOOTH & STADIUM ENTRY CEILING & ROOF FRAMING PLAN

JOB NUMBER:	SHEET NUMBER:
2022-099	ST2.1
DATE: NOV 17, 2023	
REVISION:	

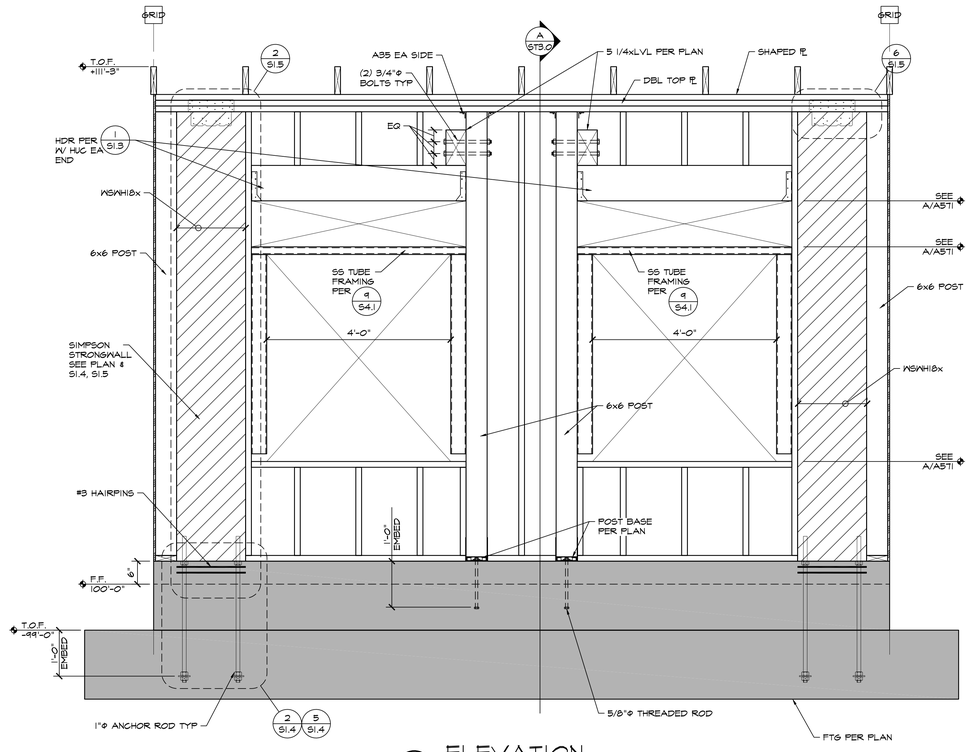

C ST3.0 ELEVATION
3/4" = 1'-0" 099ELEV001

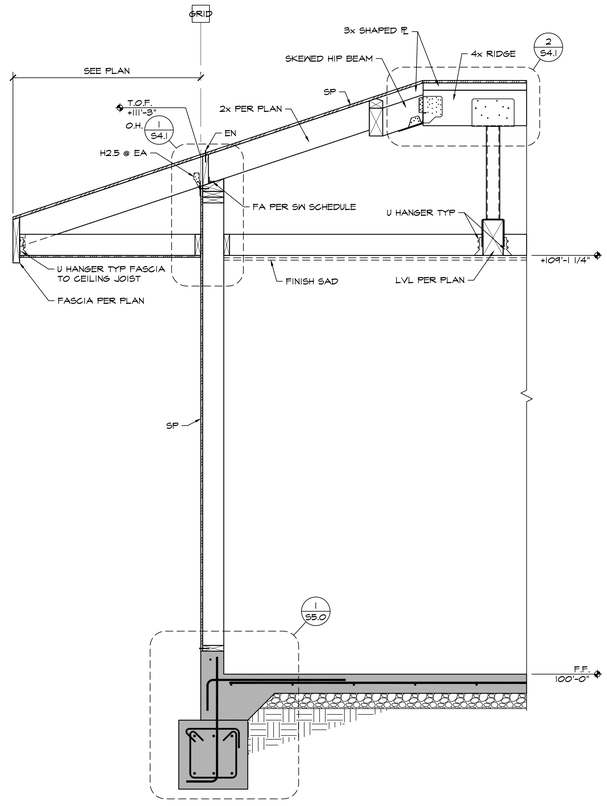

B ST3.0 SECTION
3/4" = 1'-0" 099SEC007

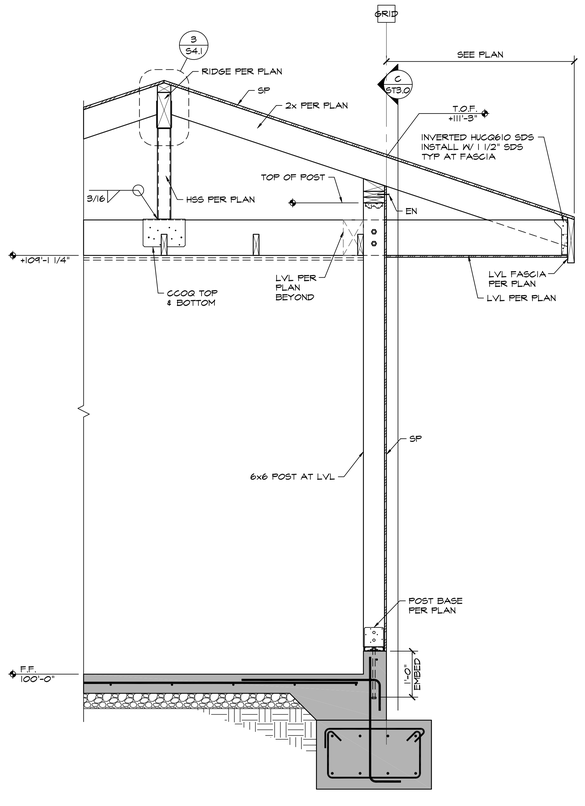

A ST3.0 SECTION
3/4" = 1'-0" 099SEC006

IDENTIFICATION STAMP
DIV. OF THE STATE ARCHITECT
APP: 02-121275 INC:
REVIEWED FOR
SS ☑ FLS ☑ ACS ☑
DATE: 12/15/2023

CALIFORNIA DESIGN WEST ARCHITECTS, Inc.

2100 19th Street
Sacramento, CA 95818

Phone: (916) 446-2466
Fax: (916) 446-5118
Web Page: ca-dw.com

These plans and prints thereof, as instruments of service, are owned by the architect and are for the use on this project only. Reproduction and/or distribution without the prior written consent of the architect is forbidden.

Copyright California Design West Architects, Inc.

ARCHITECT: CONSULTANT:

LICENSED ARCHITECT MITCHELL A. McALLISTER NO. C17250 EXP. 12-28-2023 STATE OF CALIFORNIA

REGISTERED PROFESSIONAL ENGINEER WILLIAM P. LARSON 3148 STATE OF CALIFORNIA

CONSULTANT:

POINT 2
STRUCTURAL ENGINEERS, INC.
3701 BUSINESS DR SUITE 100
SACRAMENTO, CA. 95820
(916)-452-8200
(916)-452-8212 (FAX)

PROJECT NAME:

BUHACH COLONY HIGH SCHOOL

1800 NORTH BUHACH ROAD
ATWATER, CA 95301

CONCESSIONS/TOILET BUILDINGS, TICKET BOOTH & STADIUM UPGRADES

MERCED UNION HIGH SCHOOL DISTRICT

MERCED COUNTY

KEY PLAN:

SHEET TITLE:
SECTIONS

JOB NUMBER: 2022-099
DATE: NOV 17, 2023
REVISION:
SHEET NUMBER: ST3.0

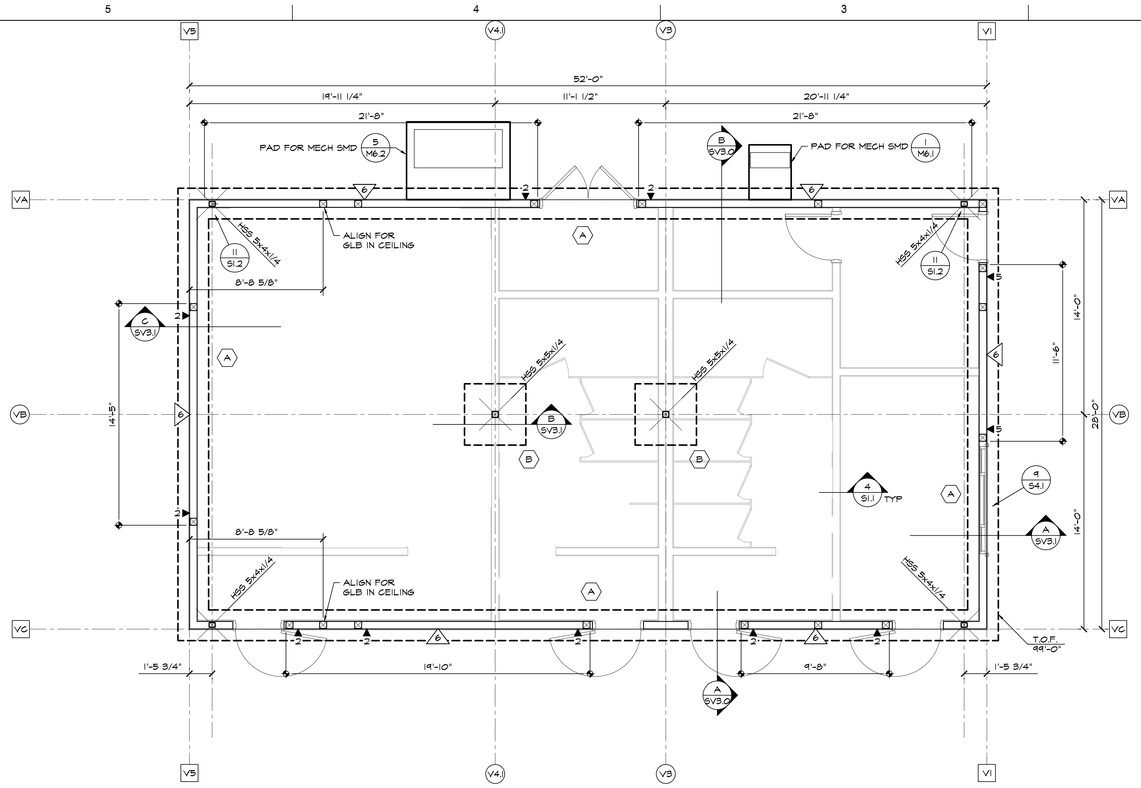

VISITOR CONCESSIONS
FOUNDATION PLAN
A SV2.0 — 1/4" = 1'-0"

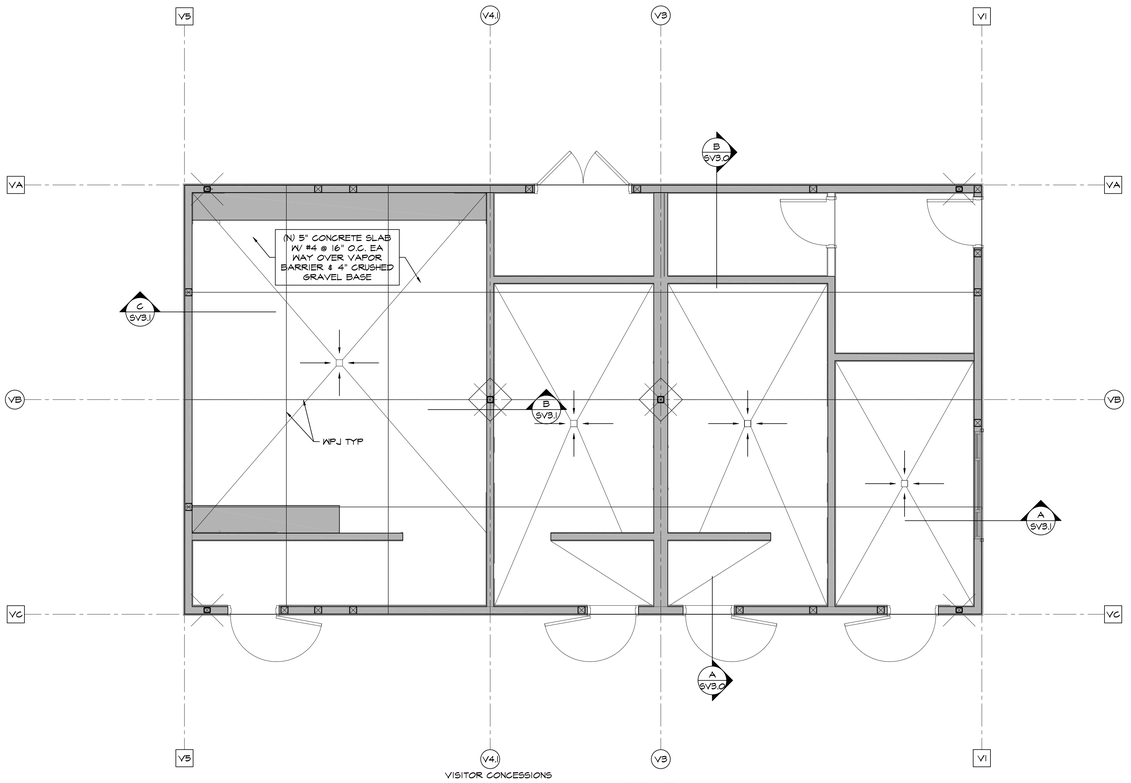

VISITOR CONCESSIONS
SLAB AND CURB PLAN
B SV2.0 — 1/4" = 1'-0"

FOUNDATION NOTES:
1. FINISH FLOOR EL = +100'-0" (REF) = 165.38 DATUM
2. COLUMNS ARE CENTERED ON GRID LINES OR CENTERED ON WALL TYP, U.N.O.
3. FOOTINGS ARE CENTERED ON COLUMNS TYP UNO.
4. FOOTINGS NOT NOTED TO BE TYPE (A) UNO
5. SEE TYPICAL NOTES & DETAILS ON SHEETS S1.0 - S1.5
6. AVOID FOOTING PENETRATIONS & TRENCHING NEAR FOOTINGS. WHERE UNAVOIDABLE CONFORM TO DETAIL 5/S1.1
7. CONTRACTOR SHALL CHECK FRAMING DIMENSIONS AGAINST THE ARCHITECTURAL PLANS AND NOTIFY ARCHITECT AND ENGINEER OF ANY DIMENSIONS AND/OR DISCREPANCIES BEFORE STARTING WORK.
8. DIMENSIONS ARE TO FACE OF STUD OR ℄ OF COLUMN UNO.
9. CONTINUOUS FOOTING REINFORCEMENT TO EXTEND TO FAR FACE OF PERPENDICULAR OR END FOOTING, TYP.
10. VERIFY WITH ARCH DRAWINGS: SURFACE SLOPES/ CURBS.

WALL FRAMING NOTES
1. ALL EXTERIOR WALLS ARE 2x6 STUDS @ 16" O.C. UNO, 3x STUDS & PLATES REQ'D WHERE NOTED IN SHEARWALL SCHEDULE.
2. ALL INTERIOR STRUCTURAL WOOD STUD FRAMING TO BE 2x4 @ 16" O.C. UNO. PROVIDE 3x STUDS & PLATES AS REQ'D.
3. ALL EXTERIOR WALLS ARE SHEATHED W/ 15/32" APA RATED SHEATHING 32/16 EXPOSURE 1 W/ 10d @ 6" O.C. EDGES & 10d @ 12" OC FIELD NAILING UNO.
4. COORDINATE W/ ARCH DNGS FOR WINDOWS, DOORS & OPENINGS IN WALLS.
5. ALL WOOD SHALL BE 6" ABOVE GRADE MIN.
6. ALL WOOD IN CONTACT WITH CONCRETE SHALL BE PRESSURE TREATED OR EQUAL, TYP

SLAB ON GRADE NOTES
1. SEE S1.1 FOR JOINT DETAILS
2. JOINTS SHALL BE SPACED TO PROVIDE SQUARE OR RECTANGULAR SECTIONS WITH ANY SIDE DIMENSION NOT TO EXCEED 1 1/2 TIMES IT'S ADJACENT SIDE.
3. MAXIMUM JT SPACING SHALL NOT EXCEED 11'-0" UNO ON PLAN
4. DEVIATIONS FROM THE JOINTS SHOWN MUST BE SUBMITTED FOR APPROVAL TO THE STRUCTURAL ENGINEER PRIOR TO CONSTRUCTION.
5. SCJ OR CJ REQUIRED @ EA GRID LINE, TYP.
6. WATER CEMENT RATIO TO BE A MAXIMUM OF 0.45
7. MOIST CURING REQUIRED FOR A MINIMUM OF 7 DAYS
8. AGGREGATE TO CEMENT RATIO TO BE BETWEEN 6.0 AND 7.0

LEGEND
- (A) — FOOTING MARK SEE SCHEDULE 1/SV2.0
- XX'-XX" — T.O. FOOTING ELEV FROM 100'-0" 99'-0" TYP UNO
- INDICATES COLUMN MARK
- INDICATES NEW 6x6 WOOD POST TYP UNO
- INDICATES SLAB BLOCKOUT SEE 9/S1.1
- XX'-XX" — INDICATES MINIMUM SHEARWALL LENGTH
- INDICATES SHEARWALL NAILING SEE SCHEDULE 1/S1.2
- 8 — INDICATES HOLDOWN SEE 3/S1.2
- INDICATES NEW STUD WALL
- INDICATES NON BEARING WALL
- INDICATES 6" CURB
- INDICATES (N) FTG
- GRID — TO FACE OF SHTG
- GRID — TO CENTERLINE OF STUD

1/SV2.0 FOOTING SCHEDULE

MARK	SIZE	REINF	NOTES
A	2'-0" WIDEx1'-6" DEEP CONT	(3) #5 TOP & BOT #3 TIES @ 16" O.C.	
B	4'-0" SQ x 1'-6" DEEP	(5) #5 EA WAY TOP & BOT.	7/S1.1

IDENTIFICATION STAMP
DIV. OF THE STATE ARCHITECT
APP: 02-121275 INC:
REVIEWED FOR
SS ☑ FLS ☑ ACS ☑
DATE: 12/15/2023

DESIGN California WEST
CALIFORNIA DESIGN WEST ARCHITECTS, Inc.
2100 19th Street
Sacramento, CA 95818
Phone: (916) 446-2466
Fax: (916) 446-5118
Web Page: ca-dw.com

These plans and prints thereof, as instruments of service, are owned by the architect and are for the use on this project only. Reproduction and/or distribution without the prior written consent of the architect is forbidden.
Copyright California Design West Architects, Inc.

ARCHITECT: CONSULTANT:

LICENSED ARCHITECT MITCHELL A. MCALISTER No. C 17250 REGISTERED PROFESSIONAL ENGINEER WILLIAM P. LAWSON No. 3144 STRUCTURAL STATE OF CALIFORNIA

CONSULTANT:

POINT 2 STRUCTURAL ENGINEERS, INC.
3701 BUSINESS DR SUITE 100
SACRAMENTO, CA. 95820
(916)-452-8200
(916)-452-8212 (FAX)

PROJECT NAME:

BUHACH COLONY HIGH SCHOOL

1800 NORTH BUHACH ROAD
ATWATER, CA 95301

CONCESSIONS/TOILET BUILDINGS, TICKET BOOTH & STADIUM UPGRADES

MERCED UNION HIGH SCHOOL DISTRICT

MERCED COUNTY

KEY PLAN:

SHEET TITLE:
VISITOR CONCESSIONS FOUNDATION & SLAB CURB PLAN

JOB NUMBER:	SHEET NUMBER:
2022-099	SV2.0
DATE: NOV 17, 2023	
REVISION:	

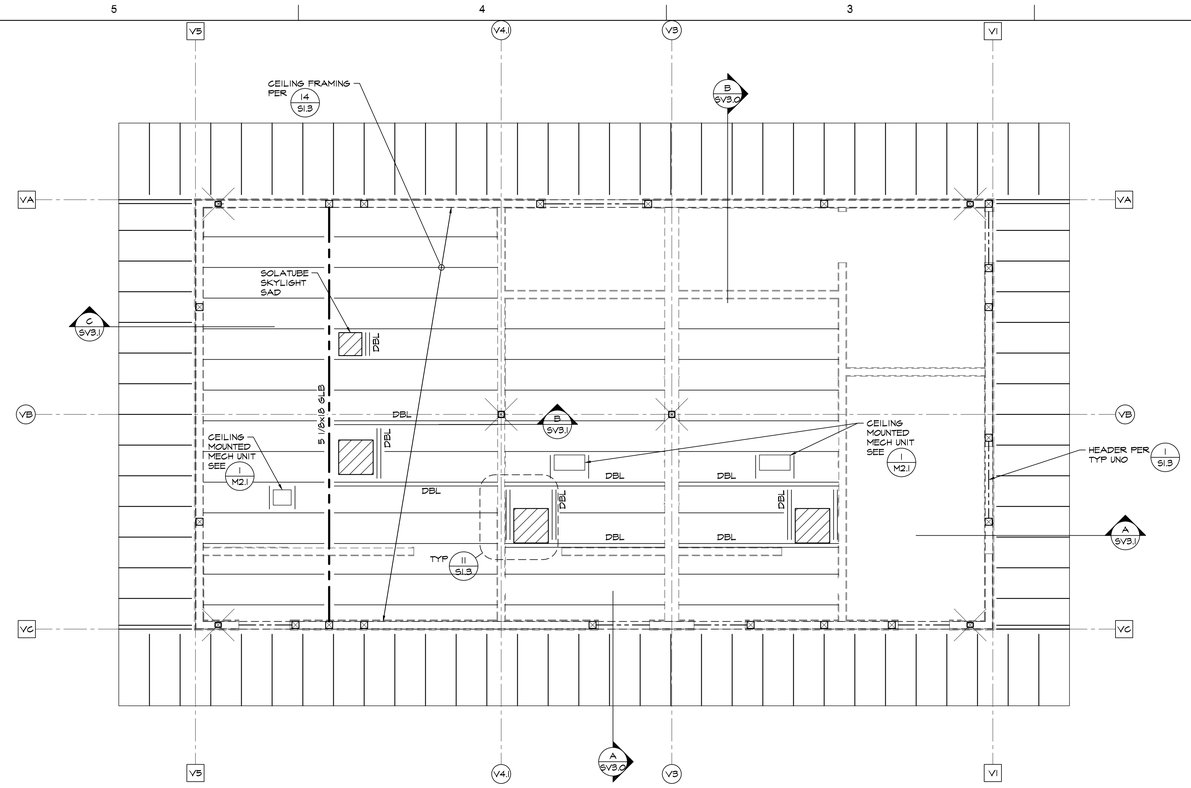

VISITOR CONCESSIONS

CEILING FRAMING PLAN

A S2.1 — 1/4" = 1'-0"

ROOF FRAMING NOTES

1. FRAMING ELEVATIONS ARE GIVEN IN SECTIONS. ELEVATIONS ARE TO TOF (UNDERSIDE OF PLY). PLY IS SLOPED IN STRAIGHT LINE BETWEEN ELEVATIONS GIVEN. CONTRACTOR TO TO VERIFY ALL ELEVATIONS.
2. FRAMING ELEVATIONS NOTED IN SECTIONS ARE REFERENCED FROM TOP OF SLAB ON GRADE (+100'-0") VERIFY ALL ELEVATIONS W/ ARCH DWGS.
3. COORDINATE W/ MECH CONTRACTOR & ELEC CONTRACTOR SUPPLIERS FOR LOCATION AND DIMS OF EQUIPMENT AND OPENINGS.
4. CONTRACTOR SHALL CHECK ROOF FRAMING DIMENSIONS AGAINST THE ARCHITECTURAL PLANS AND NOTIFY ARCHITECT AND ENGINEER OF ANY DIMENSIONS AND/OR DISCREPANCIES BEFORE STARTING WORK.
5. SEE ARCH DWGS A9.1 FOR ROOF DRAIN LOCATIONS & CRICKETS

LEGEND

- INDICATES SHEATHING LAYOUT. ROOF SHEATHING TO BE 19/32" APA RATED SHEATHING WITH 10d @ 6" O.C. EN AND 12" O.C. FN SEE 14 S1.2 BLOCK ALL PANELS EDGES
- GRID — TO FACE OF SHEATHING
- GRID — TO CENTERLINE OF STUD
- INDICATES COLUMN BELOW SEE SV2.0
- INDICATES FMS OPENING PER 11 S1.3

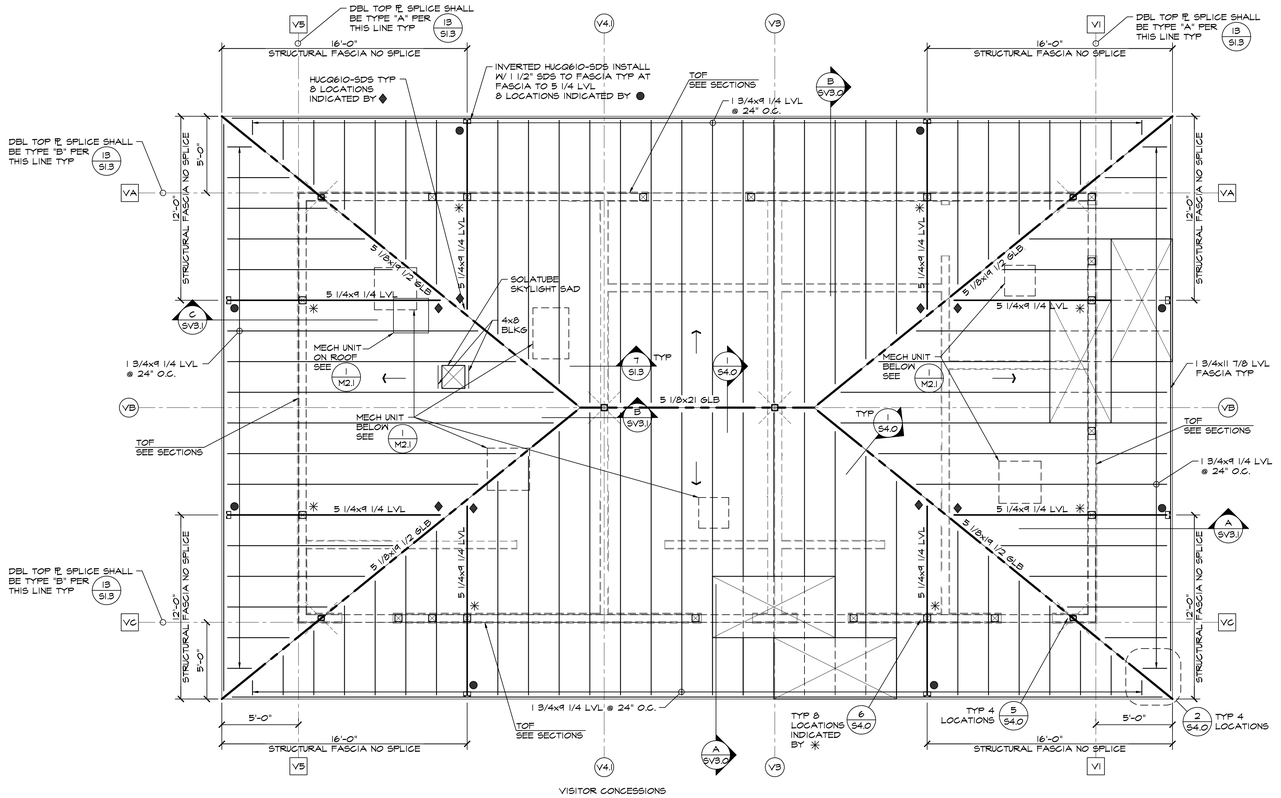

VISITOR CONCESSIONS

ROOF FRAMING PLAN

B SV2.1 — 1/4" = 1'-0"

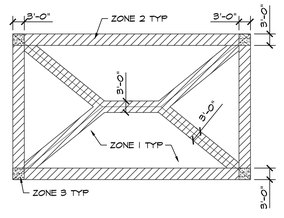

STANDING SEAM STD PANEL CLIPS PER UES REPORT 303 AT 2'-0" O.C. ALONG SEAMS AT ALL ZONES TYP W/ (2) #12x2" WOOD SCREWS INTO PLYWOOD

VISITOR CONCESSIONS

ROOF FASTENING

C SV2.1 — 1/4" = 1'-0"

IDENTIFICATION STAMP
DIV. OF THE STATE ARCHITECT
APP: 02-121275 INC:
REVIEWED FOR
SS ☑ FLS ☑ ACS ☑
DATE: 12/15/2023

CALIFORNIA DESIGN WEST ARCHITECTS, Inc.

2100 19th Street
Sacramento, CA 95818

Phone: (916) 446-2466
Fax: (916) 446-5118
Web Page: ca-dw.com

These plans and prints thereof, as instruments of service, are owned by the architect and are for the use on this project only. Reproduction and/or distribution without the prior written consent of the architect is forbidden.

Copyright California Design West Architects, Inc.

ARCHITECT: CONSULTANT:

LICENSED ARCHITECT MITCHELL A. MCALISTER LIC. NO. C 17250 REN. 08-31-2024 STATE OF CALIFORNIA

REGISTERED PROFESSIONAL ENGINEER WILLIAM P. LAWSON STRUCTURAL STATE OF CALIFORNIA

CONSULTANT:

POINT 2
STRUCTURAL ENGINEERS, INC.
3701 BUSINESS DR SUITE 100
SACRAMENTO, CA. 95820
(916)-452-8200
(916)-452-8212 (FAX)

PROJECT NAME:

BUHACH COLONY HIGH SCHOOL

1800 NORTH BUHACH ROAD
ATWATER, CA 95301

CONCESSIONS/TOILET BUILDINGS, TICKET BOOTH & STADIUM UPGRADES

MERCED UNION HIGH SCHOOL DISTRICT

MERCED COUNTY

KEY PLAN:

SHEET TITLE:
VISITOR CONCESSIONS ROOF FRAMING PLAN

JOB NUMBER:	SHEET NUMBER:
2022-099	SV2.1
DATE: NOV 17, 2023	
REVISION:	

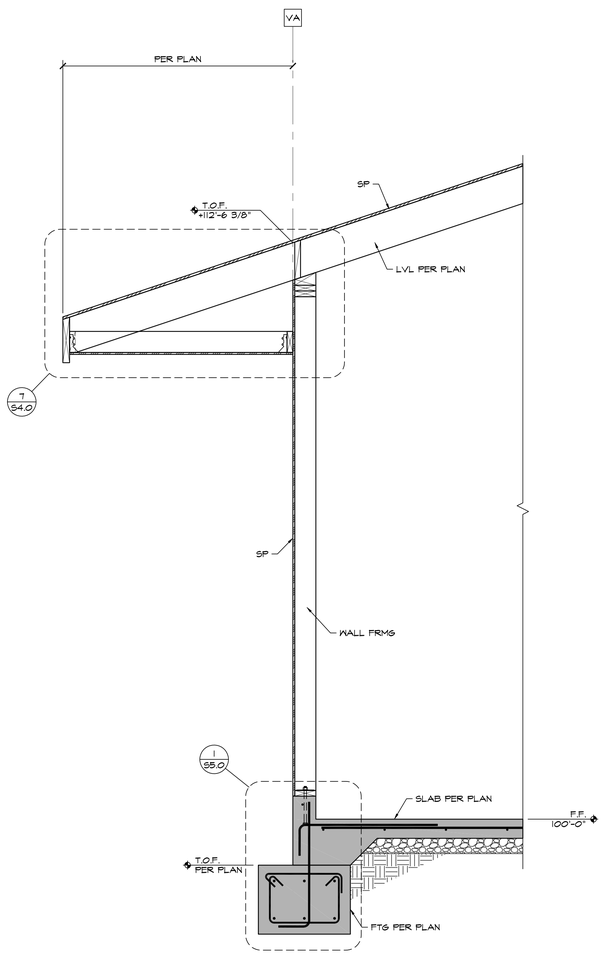

B SV3.0 SECTION
3/4" = 1'-0" 0495EC009

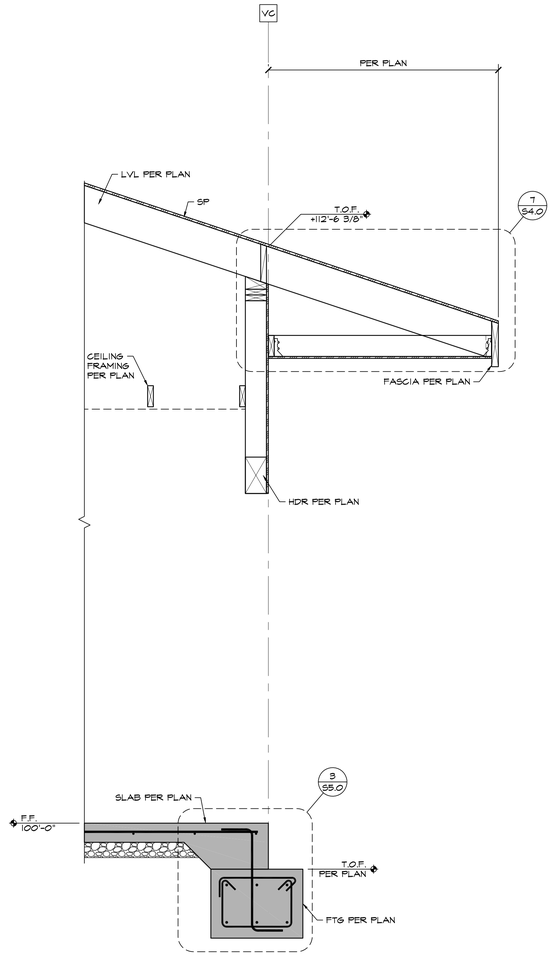

A SV3.0 SECTION
3/4" = 1'-0" 0495EC008

IDENTIFICATION STAMP
DIV. OF THE STATE ARCHITECT
APP: 02-121275 INC:
REVIEWED FOR
SS ☑ FLS ☑ ACS ☑
DATE: 12/15/2023

CALIFORNIA DESIGN WEST ARCHITECTS, Inc.

2100 19th Street
Sacramento, CA 95818

Phone: (916) 446-2466
Fax: (916) 446-5118
Web Page: ca-dw.com

These plans and prints thereof, as instruments of service, are owned by the architect and are for the use on this project only. Reproduction and/or distribution without the prior written consent of the architect is forbidden.

Copyright California Design West Architects, Inc.

ARCHITECT: CONSULTANT:

LICENSED ARCHITECT MITCHELL A. McALLISTER NO. C17250 SEP 28-2023 STATE OF CALIFORNIA

REGISTERED PROFESSIONAL ENGINEER WILLIAM P. LARSON 3148 STRUCTURAL STATE OF CALIFORNIA

CONSULTANT:

POINT 2
STRUCTURAL ENGINEERS, INC.
3701 BUSINESS DR SUITE 100
SACRAMENTO, CA. 95820
(916)-452-8200
(916)-452-8212 (FAX)

PROJECT NAME:

BUHACH COLONY HIGH SCHOOL

1800 NORTH BUHACH ROAD
ATWATER, CA 95301

CONCESSIONS/TOILET BUILDINGS, TICKET BOOTH & STADIUM UPGRADES

MERCED UNION HIGH SCHOOL DISTRICT

MERCED COUNTY

KEY PLAN:

SHEET TITLE:

SECTIONS

JOB NUMBER:	SHEET NUMBER:
2022-099	
DATE: NOV 17, 2023	
REVISION:	**SV3.0**

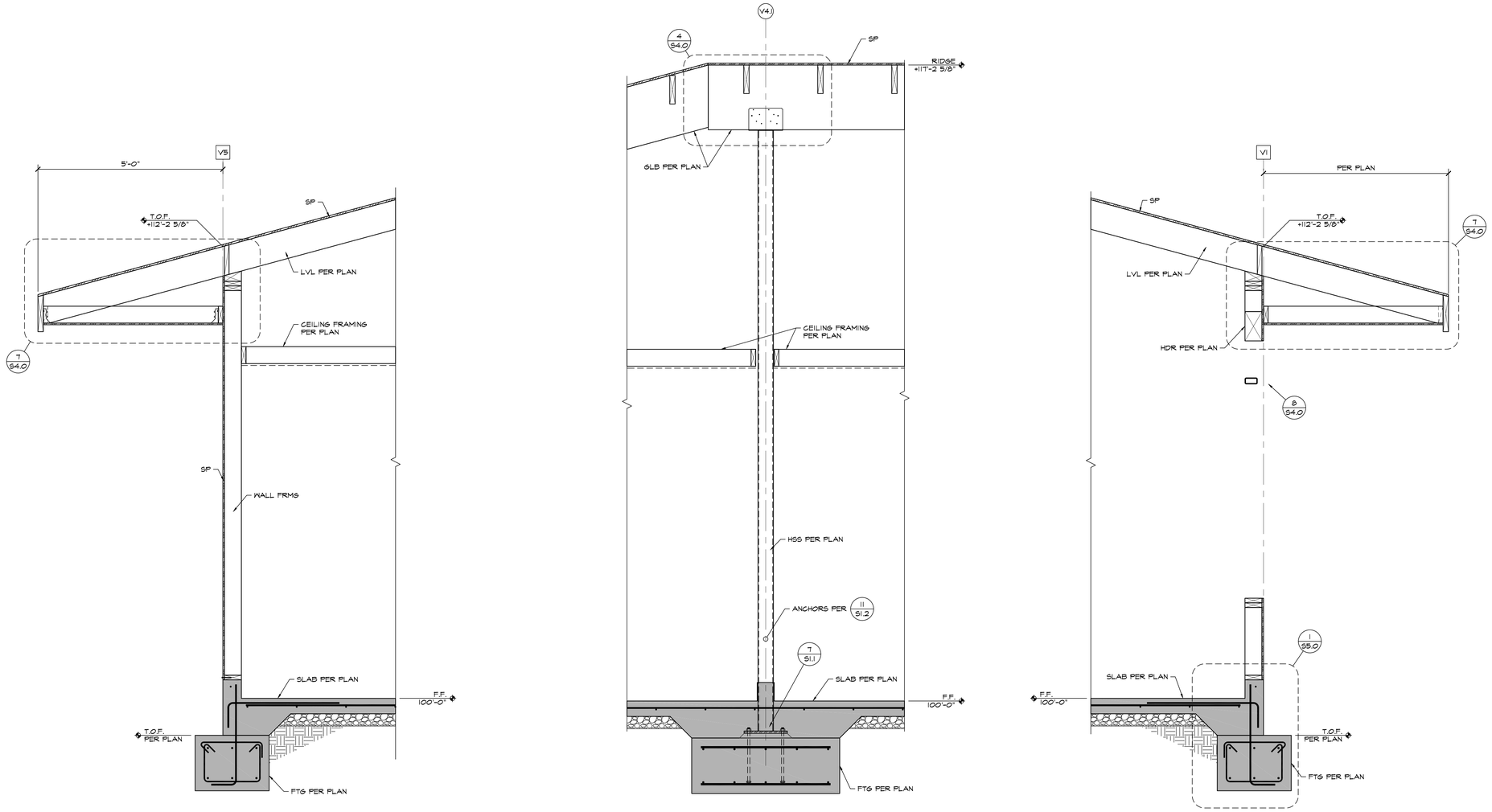

C SV3.1 SECTION
3/4" = 1'-0" CARSEC011

B SV3.1 SECTION
3/4" = 1'-0" CARSEC012

A SV3.1 SECTION
3/4" = 1'-0" CARSEC010

IDENTIFICATION STAMP
DIV. OF THE STATE ARCHITECT
APP: 02-121275 INC:
REVIEWED FOR
SS ☑ FLS ☑ ACS ☑
DATE: 12/15/2023

CALIFORNIA DESIGN WEST ARCHITECTS, Inc.

2100 19th Street
Sacramento, CA 95818

Phone: (916) 446-2466
Fax: (916) 446-5118
Web Page: ca-dw.com

These plans and prints thereof, as instruments of service, are owned by the architect and are for the use on this project only. Reproduction and/or distribution without the prior written consent of the architect is forbidden.

Copyright California Design West Architects, Inc.

ARCHITECT: CONSULTANT:

LICENSED ARCHITECT MITCHELL A. McALLISTER NO. C17250 EXP. 12-28-2023 STATE OF CALIFORNIA

REGISTERED PROFESSIONAL ENGINEER WILLIAM P. LARSON 31148 STATE OF CALIFORNIA

CONSULTANT:

POINT 2
STRUCTURAL ENGINEERS, INC.
3701 BUSINESS DR SUITE 100
SACRAMENTO, CA. 95820
(916)-452-8200
(916)-452-8212 (FAX)

PROJECT NAME:

BUHACH COLONY HIGH SCHOOL

1800 NORTH BUHACH ROAD
ATWATER, CA 95301

CONCESSIONS/TOILET BUILDINGS, TICKET BOOTH & STADIUM UPGRADES

MERCED UNION HIGH SCHOOL DISTRICT

MERCED COUNTY

KEY PLAN:

SHEET TITLE:
SECTIONS

JOB NUMBER: 2022-099
DATE: NOV 17, 2023
REVISION:
SHEET NUMBER: SV3.1

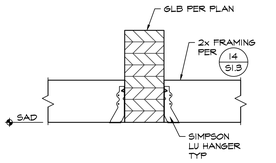

9 S4.0 DETAIL
1 1/2"= 1'-0" 08DETOO9

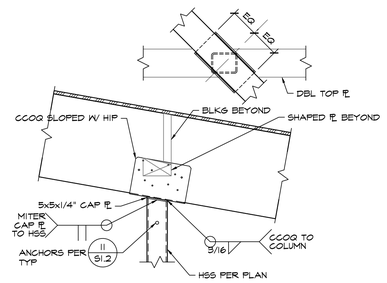

5 S4.0 DETAIL
1" = 1'-0" 02TDET012

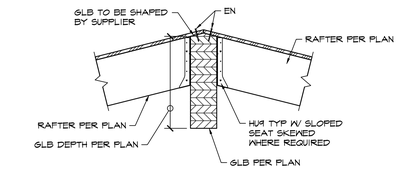

1 S4.0 DETAIL
1" = 1'-0" 02TDET001

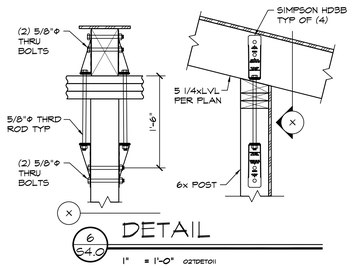

6 S4.0 DETAIL
1" = 1'-0" 02TDET011

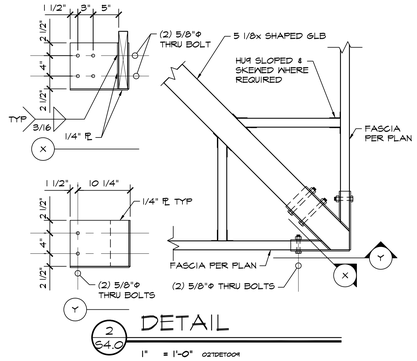

2 S4.0 DETAIL
1" = 1'-0" 02TDET004

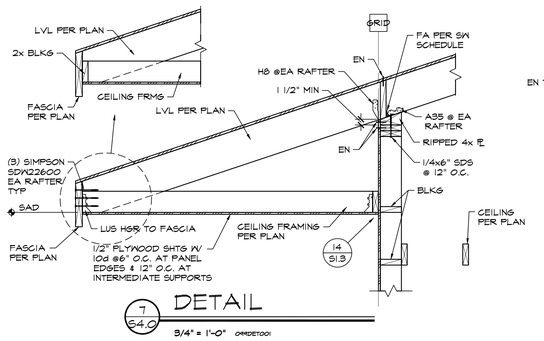

7 S4.0 DETAIL
3/4" = 1'-0" 07DET001

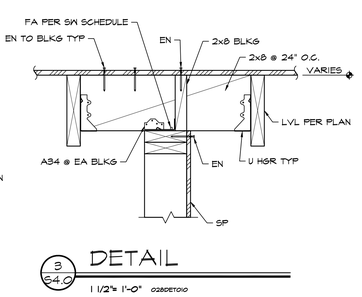

3 S4.0 DETAIL
1 1/2"= 1'-0" 02SDET010

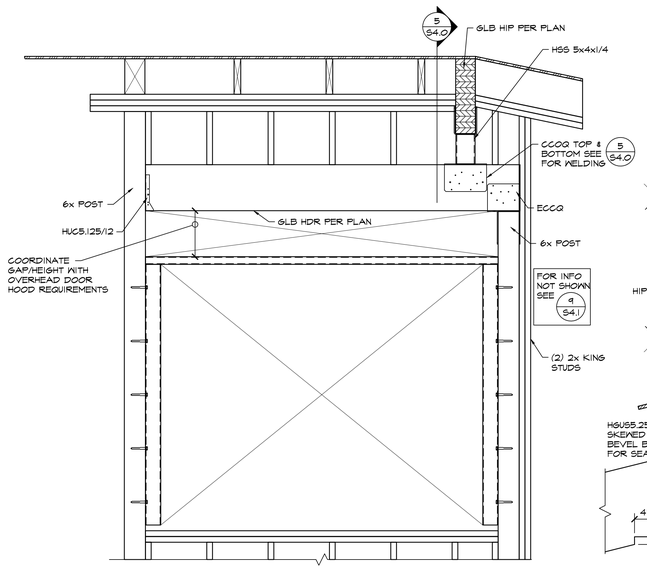

8 S4.0 DETAIL
3/4" = 1'-0" 03TDET013

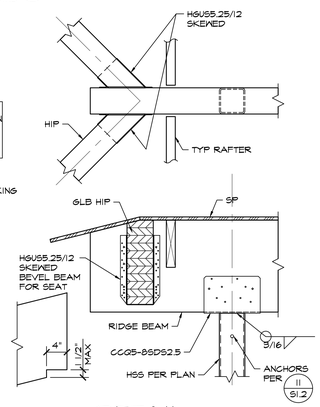

4 S4.0 DETAIL
1" = 1'-0" 02TDET013

IDENTIFICATION STAMP
DIV. OF THE STATE ARCHITECT
APP: 02-121275 INC:
REVIEWED FOR
SS ☑ FLS ☑ ACS ☑
DATE: 12/15/2023

CALIFORNIA DESIGN WEST ARCHITECTS, Inc.

2100 19th Street
Sacramento, CA 95818

Phone: (916) 446-2466
Fax: (916) 446-5118
Web Page: ca-dw.com

These plans and prints (hereof, as instruments of service, are owned by the architect and are for the use on this project only. Reproduction and/or distribution without the prior written consent of the architect is forbidden.

Copyright California Design West Architects, Inc.

ARCHITECT: CONSULTANT:

LICENSED ARCHITECT MITCHELL A. MCALISTER LIC. NO. C 17258 STATE OF CALIFORNIA

REGISTERED PROFESSIONAL ENGINEER WILLIAM P. LAWSON STRUCTURAL STATE OF CALIFORNIA

CONSULTANT:

POINT 2
STRUCTURAL ENGINEERS, INC.
3701 BUSINESS DR SUITE 100
SACRAMENTO, CA. 95820
(916)-452-8200
(916)-452-8212 (FAX)

PROJECT NAME:

BUHACH COLONY HIGH SCHOOL

1800 NORTH BUHACH ROAD
ATWATER, CA 95301

CONCESSIONS/TOILET BUILDINGS, TICKET BOOTH & STADIUM UPGRADES

MERCED UNION HIGH SCHOOL DISTRICT

MERCED COUNTY

KEY PLAN:

SHEET TITLE:
DETAILS

JOB NUMBER:	SHEET NUMBER:
2022-099	**S4.0**
DATE: NOV 17, 2023	
REVISION:	

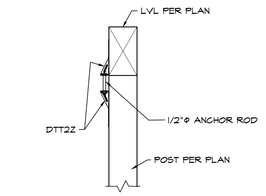

6 S4.1 DETAIL
1" = 1'-0"

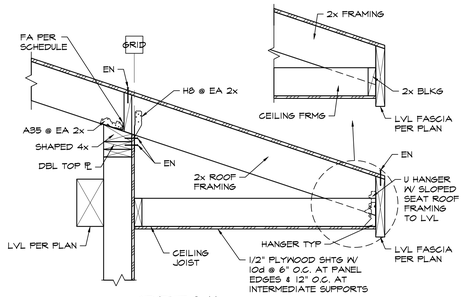

1 S4.1 DETAIL
1" = 1'-0" 027DET015

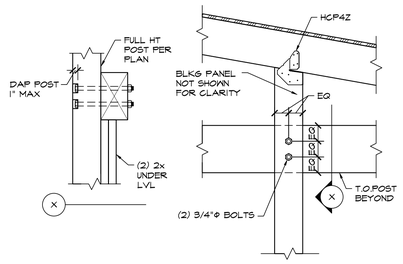

7 S4.1 DETAIL
1" = 1'-0" 027DET016

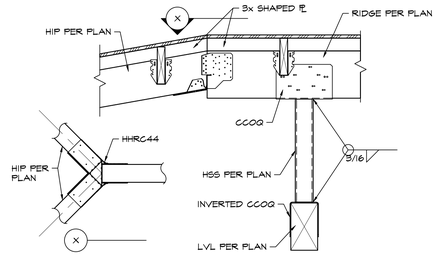

2 S4.1 DETAIL
1" = 1'-0" 027DET003

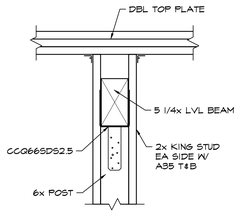

8 S4.1 DETAIL
1" = 1'-0" 019DET008

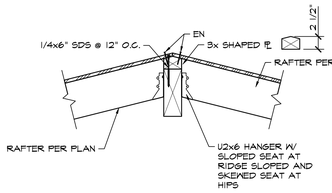

3 S4.1 DETAIL
1" = 1'-0" 027DET004

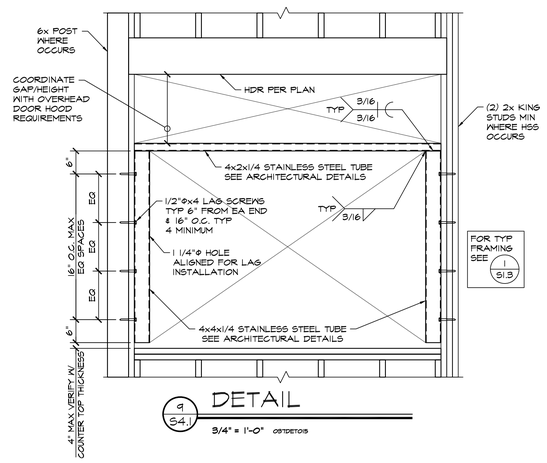

9 S4.1 DETAIL
3/4" = 1'-0" 037DET019

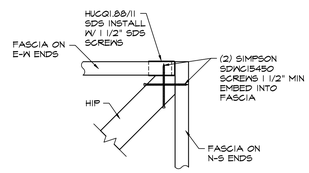

4 S4.1 DETAIL
1 1/2"= 1'-0" 027DET014

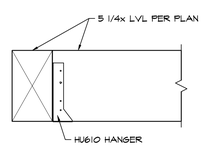

5 S4.1 DETAIL
1 1/2"= 1'-0" 019DET005

IDENTIFICATION STAMP
DIV. OF THE STATE ARCHITECT
APP: 02-121275 INC:
REVIEWED FOR
SS ☑ FLS ☑ ACS ☑
DATE: 12/15/2023

CALIFORNIA DESIGN WEST ARCHITECTS, Inc.

2100 19th Street
Sacramento, CA 95818

Phone: (916) 446-2466
Fax: (916) 446-5118
Web Page: ca-dw.com

These plans and prints thereof, as instruments of service, are owned by the architect and are for the use on this project only. Reproduction and/or distribution without the prior written consent of the architect is forbidden.

Copyright California Design West Architects, Inc.

ARCHITECT: CONSULTANT:

LICENSED ARCHITECT MITCHELL A. MCALISTER NO. C 17250 REN. 08-31-2025 STATE OF CALIFORNIA

REGISTERED PROFESSIONAL ENGINEER WILLIAM P. LAWSON STRUCTURAL STATE OF CALIFORNIA

CONSULTANT:

POINT 2
STRUCTURAL ENGINEERS, INC.
3701 BUSINESS DR SUITE 100
SACRAMENTO, CA. 95820
(916)-452-8200
(916)-452-8212 (FAX)

PROJECT NAME:

BUHACH COLONY HIGH SCHOOL

1800 NORTH BUHACH ROAD
ATWATER, CA 95301

CONCESSIONS/TOILET BUILDINGS, TICKET BOOTH & STADIUM UPGRADES

MERCED UNION HIGH SCHOOL DISTRICT

MERCED COUNTY

KEY PLAN:

SHEET TITLE:
DETAILS

JOB NUMBER:	SHEET NUMBER:
2022-099	**S4.1**
DATE: NOV 17, 2023	
REVISION:	

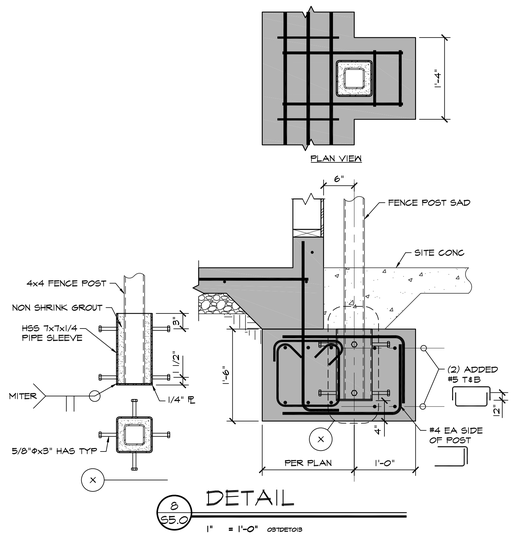

8 / 55.0 DETAIL

1" = 1'-0" 03DET013

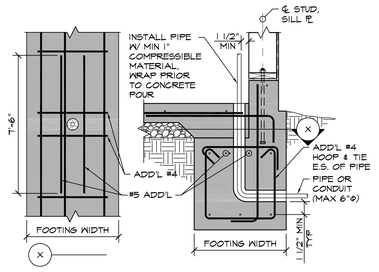

PIPE THROUGH PERIMETER FTG

5 / 55.0 DETAIL

3/4" = 1'-0" 02DET013

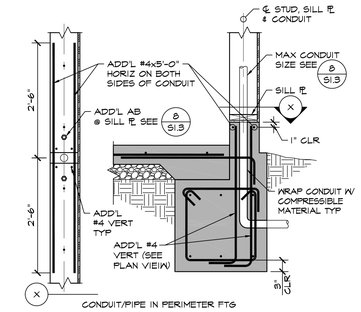

CONDUIT/PIPE IN PERIMETER FTG

6 / 55.0 DETAIL

3/4" = 1'-0" 02DET014

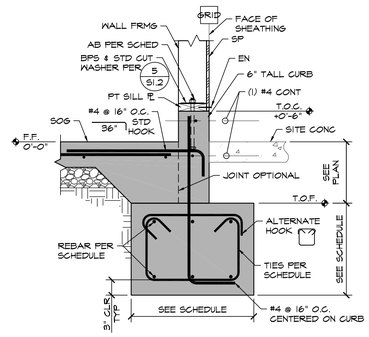

1 / 55.0 DETAIL

1" = 1'-0" 11DET001

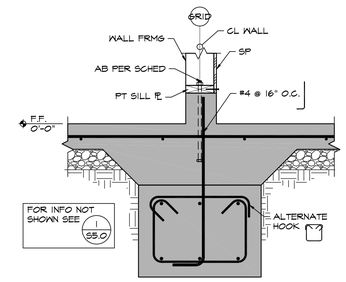

2 / 55.0 DETAIL

1" = 1'-0" 11DET002

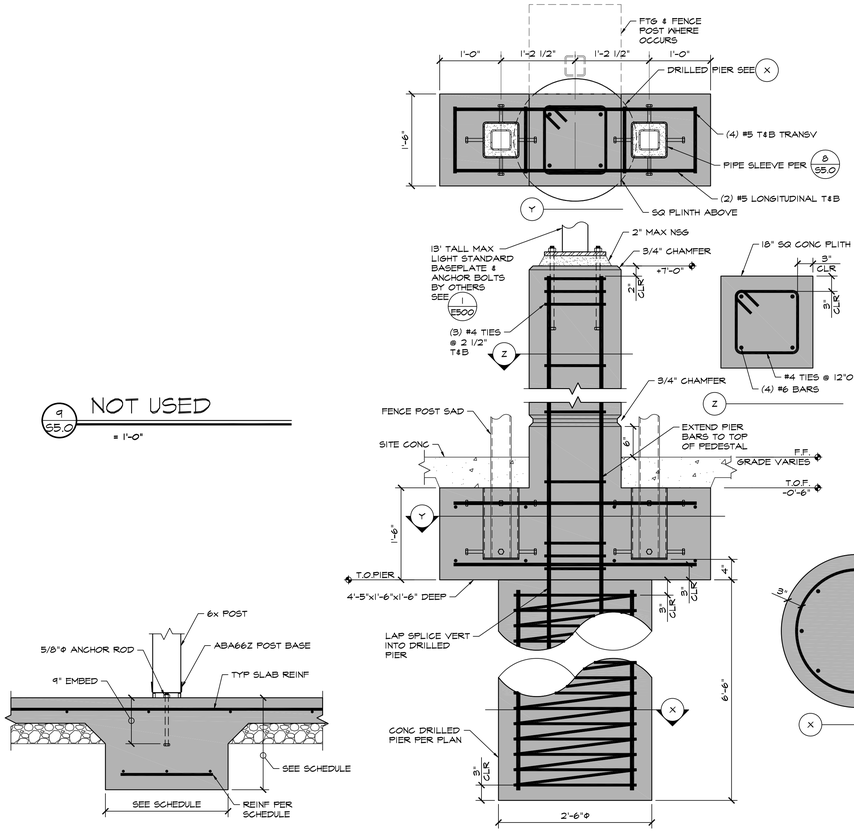

7 / 55.0 DETAIL

1" = 1'-0" 03DET008

10 / 55.0 DETAIL

1" = 1'-0" 04BDET004

9 / 55.0 NOT USED

= 1'-0"

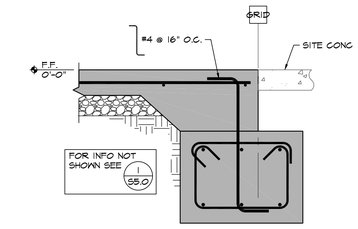

3 / 55.0 DETAIL

1" = 1'-0" 11DET003

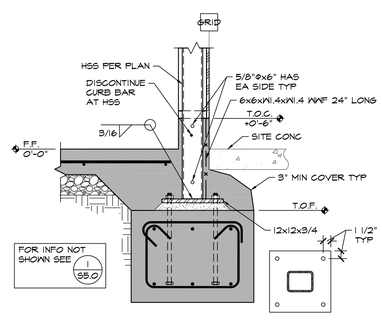

4 / 55.0 DETAIL

1" = 1'-0" 04BDET002

IDENTIFICATION STAMP
DIV. OF THE STATE ARCHITECT
APP: 02-121275 INC:
REVIEWED FOR
SS ☑ FLS ☑ ACS ☑
DATE: 12/15/2023

CALIFORNIA DESIGN WEST ARCHITECTS, Inc.

2100 19th Street
Sacramento, CA 95818

Phone: (916) 446-2466
Fax: (916) 446-5118
Web Page: ca-dw.com

These plans and prints thereof, as instruments of service, are owned by the architect and are for the use on this project only. Reproduction and/or distribution without the prior written consent of the architect is forbidden.

Copyright California Design West Architects, Inc.

ARCHITECT: CONSULTANT:

LICENSED ARCHITECT MITCHELL A. MCALISTER NO. C 17250 REN. 08-31-2023 STATE OF CALIFORNIA

REGISTERED PROFESSIONAL ENGINEER WILLIAM P. LAWSON STRUCTURAL STATE OF CALIFORNIA

CONSULTANT:

POINT 2
STRUCTURAL ENGINEERS, INC.
3701 BUSINESS DR SUITE 100
SACRAMENTO, CA. 95820
(916)-452-8200
(916)-452-8212 (FAX)

PROJECT NAME:

BUHACH COLONY HIGH SCHOOL

1800 NORTH BUHACH ROAD
ATWATER, CA 95301

CONCESSIONS/TOILET BUILDINGS, TICKET BOOTH & STADIUM UPGRADES

MERCED UNION HIGH SCHOOL DISTRICT

MERCED COUNTY

KEY PLAN:

SHEET TITLE:
DETAILS

JOB NUMBER:	SHEET NUMBER:
2022-099	**S5.0**
DATE: NOV 17, 2023	
REVISION:	

ANCHORAGE / BRACING NOTES

ALL MECHANICAL AND PLUMBING COMPONENTS SHALL BE ANCHORED AND INSTALLED PER THE DETAILS ON THE DSA APPROVED CONTRACT DOCUMENTS. WHERE NO DETAIL IS INDICATED, THE FOLLOWING COMPONENTS SHALL BE ANCHORED OR BRACED TO MEET THE FORCE AND DISPLACEMENT REQUIREMENTS PRESCRIBED IN THE 2022 CBC, SECTION 1617A.1.18 THROUGH 1617A.1.26 AND ASCE 7-16, CHAPTERS 13, 26 AND 30:

1. ALL PERMANENT EQUIPMENT AND COMPONENTS.
2. TEMPORARY, MOVABLE OR MOBILE EQUIPMENT THAT IS PERMANENTLY ATTACHED (E.G. HARD WIRED) TO THE BUILDING UTILITY SERVICES SUCH AS ELECTRICITY, GAS, OR WATER. "PERMANENTLY ATTACHED" SHALL INCLUDE ALL ELECTRICAL CONNECTION EXCEPT PLUGS FOR 110/220 VOLT RECEPTACLES HAVING A FLEXIBLE CABLE.
3. TEMPORARY, MOVABLE OR MOBILE EQUIPMENT WHICH IS HEAVIER THAN 400 POUNDS OR HAS A CENTER OF MASS LOCATED 4 FEET OR MORE ABOVE THE ADJACENT FLOOR OR ROOF LEVEL THAT DIRECTLY SUPPORT THE COMPONET IS REQUIRED TO BE RESTRAINED IN A MANNER APPROVED BY DSA.

THE FOLLOWING MECHANICAL COMPONENTS SHALL BE POSITIVELY ATTACHED TO THE STRUCTURE BUT NEED NOT DEMONSTRATE DESIGN COMPLIANCE WITH THE REFERENCES NOTED ABOVE. THESE COMPONENTS SHALL HAVE FLEXIBLE CONNECTIONS PROVIDED BETWEEN THE COMPONENT AND ASSOCIATED DUCTWORK AND PIPING. FLEXIBLE CONNECTION MUST ALLOW MOVEMENT IN BOTH TRANSVERSE AND LONGITUDINAL DIRECTIONS.

A. COMPONENTS WEIGHING LESS THAN 400 POUNDS AND HAVING A CENTER OF MASS LOCATED 4 FEET OR LESS ABOVE THE ADJACENT FLOOR OR ROOF LEVEL THAT DIRECTLY SUPPORT THE COMPONENT.

B. COMPONENTS WEIGHING LESS THAN 20 POUNDS, OR IN THE CASE OF DISTRIBUTED SYSTEMS, LESS THAN 5 POUNDS PER FOOT, WHICH ARE SUSPENDED FROM A ROOF OR FLOOR OR HUNG FROM A WALL.

THE ANCHORAGE OF ALL MECHANICAL AND PLUMBING COMPONENTS SHALL BE SUBJECT TO THE APPROVAL OF THE DESIGN PROFESSIONAL IN GENERAL RESPONSIBLE CHARGE OR STRUCTURAL ENGINEER DELEGATED RESPONSIBILITY AND ACCEPTANCE BY DSA. THE PROJECT INSPECTOR WILL VERIFY THAT ALL COMPONENTS AND EQUIPMENT HAVE BEEN ANCHORED IN ACCORDANCE WITH THE ABOVE REQUIREMENTS.

PIPING AND DUCTWORK SYSTEM BRACING NOTE:
PIPING AND DUCTWORK SHALL BE BRACED TO COMPLY THE FORCE AND DISPLACEMENTS PRESCRIBED IN ASCE 7-16 SECTION 13.3 AS DEFINED IN ASCE 7-16 SECTION 13.6.5, 13.6.6, 13.6.7, 13.6.8; AND 2022 CBC, SECTIONS 1617A.1.24, 1617A.1.25, AND 1617A.1.26.

THE METHOD OF SHOWING BRACING AND ATTACHMENT TO THE STRUCTURE FOR THE IDENTIFIED DISTRIBUTION SYSTEM ARE AS NOTED BELOW. WHEN BRACING AND ATTACHMENTS ARE BASED ON A PRE APPROVED INSTALLATION GUIDE (E.G. OSHPD/ HCAi OPM FOR 2013 CBC OR LATER), COPIES OF THE BRACING SYSTEM INSTALLATION GUIDE OR MANUAL SHALL BE AVAILABLE ON THE JOBSITE PRIOR TO THE START OF AND DURING THE HANGING AND BRACING OF THE DISTRIBUTION SYSTEMS. THE STRUCTURAL ENGINEER OF RECORD SHALL VERIFY THE ADEQUACY OF THE STRUCTURE TO SUPPORT THE HANGER AND BRACE LOADS.

MECHANICAL PIPING (MP). MECHANICAL DUCTS (MD),

_ MP _ MD - OPTION 1:
DETAILED ON THE APPROVED DRAWINGS WITH PROJECT SPECIFIC NOTED AND DETAILS.

X MP X MD - OPTION 2:
SHALL COMPLY WITH THE APPLICABLE OSHPD/ HCAi PRE-APPROVAL (OPM#), MASON OPM-0043-13 SEISMIC RESTRAINT SYSTEMS GUIDELINE.

MECHANICAL NOTES

1. MECHANICAL AND PLUMBING DETAILS APPLY TO ALL BUILDINGS WHETHER REFERENCED OR NOT.
2. REFERENCE ARCHITECTURAL DRAWINGS FOR EXACT LOCATIONS OF DIFFUSERS/GRILLES.
3. DUCTWORK AND/OR PIPING SHALL NOT PENETRATE INTO, OVER, OR THROUGH IT CLOSETS OR ELECTRICAL ROOMS UNLESS IT SERVES THAT SPECIFIC ROOM.
4. DRAWINGS SHALL BE CONSIDERED DIAGRAMMATIC IN NATURE AND ARE NOT INTENDED TO SHOW EVERY OFFSET, FITTING, OR STRUCTURAL DIFFICULTY THAT MAY BE ENCOUNTERED DURING INSTALLATION OF WORK. THE CONTRACTORS SHALL COORDINATE LOCATION OF ALL DUCTWORK AND PIPING WITH ALL OTHER TRADES ON THIS PROJECT. LOCATION OF ALL ITEMS NOT DEFINITELY FIXED BY DIMENSIONS ARE APPROXIMATE ONLY. EXACT LOCATIONS NECESSARY TO SECURE BEST CONDITIONS AND RESULTS MUST BE DETERMINED AT THE JOB SITE AND SHALL HAVE THE APPROVAL OF THE ARCHITECT BEFORE BEING INSTALLED.
5. CEILING SUPPLY AIR DIFFUSERS TO HAVE 4-WAY BLOW PATTERN UNLESS SHOWN OTHERWISE.
6. ALL VALVES SHALL BE FULL LINE SIZES UNLESS NOTED OTHERWISE.
7. SMACNA HANGER DETAILS FOR GRAVITY SUPPORTS MAY BE USED FOR DUCTWORK AND PIPING NOT REQUIRING SEISMIC RESTRAINTS.
8. ACCESS PANELS SHALL BE PROVIDED AS NECESSARY TO PROPERLY ACCESS THE VALVES, EQUIPMENT, ACTUATORS, AND DAMPERS.
9. REFERENCE ARCHITECTURAL DRAWINGS FOR BUILDING DIMENSIONS, EXACT LOCATIONS OF DIFFUSERS, GRILLES, AND MOUNTING HEIGHTS.
10. CONCEAL ALL PIPING AND DUCTWORK IN WALL FURRINGS, PARTITIONS, ABOVE CEILINGS, EXCEPT IN MECHANICAL ROOMS OR WHERE NOTED OTHERWISE.
11. THERMOSTATS TO BE INSTALLED AT 46" AFF (TOP OF THERMOSTAT). DO NOT INSTALL THERMOSTATS OVER CASEWORK OR SHELVING OVER 24" IN DEPTH AND 34" IN HEIGHT.

DUCTWORK LEGEND

GENERAL DUCTWORK NOTES

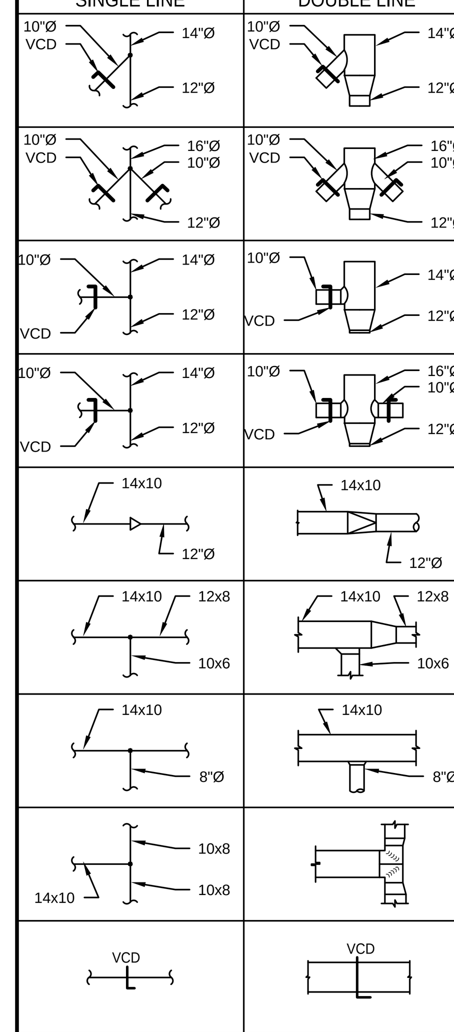

NOTES / DESCRIPTION
45° BRANCH REDUCING LATERAL LOW LOSS
45° REDUCING LATERAL CROSS LOW LOSS
90° TEE LOW LOSS
90° TEE CROSS LOW LOSS
SQUARE TO ROUND
CONVERGING OR DIVERGING TEE, 45° ENTRY, RECTANGULAR MAIN AND BRANCH. WHEN REDUCING MAIN, SIDE OF TAKEOFF OR ENTRY BRANCH TO BE FLAT, OTHER SIDES MAX. SLOPE OF 1:3
ROUND DUCT TAKE OFF FROM RECTANGULAR VIA SMOOTH CONVERGING BELL MOUTH
RECTANGULAR DUCT TEE THROAT SIZED FOR EQUAL PRESSURE DROP
VOLUME CONTROL DAMPER

DUCTWORK SYMBOLS

Symbol	Description
	FLEXIBLE DUCTWORK
12x10	DUCT (FIRST FIGURE SIDE SHOWN, SECOND FIGURE SIDE NOT SHOWN)
12x10L	LINED DUCT (FIRST FIGURE SIDE SHOWN, SECOND FIGURE SIDE NOT SHOWN)
	EXHAUST AIR DUCT SECTION
	RETURN AIR DUCT SECTION
	SUPPLY AIR DUCT SECTION
D	DROP IN DIRECTION OF ARROW
R	RISE IN DIRECTION OF ARROW
	TURNING VANES

APPLICABLE CODES

ALL WORK PERFORMED UNDER THIS CONTRACT IS TO CONFIRM TO THE FOLLOWING CODES AND REGULATIONS:

1. CALIFORNIA CODE OF REGULATIONS - TITLE 24
2. CALIFORNIA BUILDING CODE, 2022
3. CALIFORNIA MECHANICAL CODE, 2022
4. CALIFORNIA PLUMBING CODE, 2022
5. CALIFORNIA FIRE CODE, 2022
6. CALIFORNIA ELECTRICAL CODE, 2022
7. CALIFORNIA BUILDING ENERGY EFFICIENCY STANDARDS, 2022

THE ABOVE CODES AND REGULATIONS REFER TO THE LATEST EDITION OR REVISION IF FORCE ON THE DATE OF THE CONTRACT, UNLESS OTHERWISE STATED. NOTHING ON THE DRAWINGS IS TO BE CONSTRUED AS REQUIRING OR PERMITTING WORK THAT IS CONTRARY TO THE LISTED CODES AND REGULATIONS, OR OTHER LOCAL, STATE OR FEDERAL CODES OR REGULATIONS WHICH MAY BE APPLICABLE.

MECHANICAL LEGEND

ABBREVIATIONS

ABC	ABOVE FINISHED CEILING	FLR	FLOOR	OC	ON CENTER
AC	AIR CONDITIONING	FPM	FEET PER MINUTE	PC	PUMPED CONDENSATE
ACU	AIR CONDITIONING UNIT	FS	FLOW SWITCH	PD	PRESSURE DROP
AD	ACCESS DOOR	FSD	FIRE SMOKE DAMPER	PF	PRE FILTER
AFF	ABOVE FINISHED FLOOR	FT	FEET	PH	PHASE
AFC	ABOVE FINISHED CEILING	GA	GAUGE	PLBG	PLUMBING
AHU	AIR HANDLING UNIT	GC	GENERAL CONTRACTOR	POC	POINT OF CONNECTION
AP	ACCESS PANEL	GALV	GALVANIZED	POD	POINT OF DISCONNECTION
APD	AIR PRESSURE DROP	GSM	GALVANIZED SHEET METAL	PRV	PRESSURE REDUCING VALVE
AVV	AUTOMATIC AIR VENT	GPH	GALLONS PER HOUR	PS	PRESSURE SWITCH
ARCH	ARCHITECT	GPM	GALLONS PER MINUTE	PSI	POUNDS PER SQUARE INCH
BAS	BUILDING AUTOMATION SYSTEM	GV	GATE VALVE	PSIG	POUNDS PER SQUARE INCH GAUGE
BDD	BACK DRAFT DAMPER	HC	HEATING COIL	R	RISER
BF	BELOW FLOOR	HP	HORSEPOWER	RA	RETURN AIR
BHP	BRAKE HORSEPOWER	HPR	HIGH PRESSURE CONDENSATE RETURN	RAD	RETURN AIR DAMPER
BOD	BOTTOM OF DUCT	HPS	HIGH PRESSURE STEAM, ABOVE 60 PSIG	RD	REFRIGERANT DISCHARGE
BOP	BOTTOM OF PIPE	HR	HOUR	RF	RELIEF FAN
BTUH	BRITISH THERMAL UNIT PER HOUR	HRP	HEAT RECOVERY PUMP	RH	RELATIVE HUMIDITY
BV	BUTTERFLY VALVE	HRR	HEAT RECOVERY RETURN	RHC	REHEAT COIL
CA	COMPRESSED AIR	HRS	HEAT RECOVERY SUPPLY	RL	REFRIGERANT LIQUID
CAP	CAPACITY	HVAC	HEATING VENTILATING & AIR CONDITIONING	RLA	RUNNING LOAD AMPS
CAV	CONSTANT AIR VOLUME	HWP	HEATING WATER PUMP	RM	ROOM
CC	CENTER TO CENTER	HWR	HEATING WATER RETURN	RPM	REVOLUTIONS PER MINUTE
CD	CONDENSATE DRAIN	HWS	HEATING WATER SUPPLY	RS	REFRIGERANT SUCTION
CEF	CEILING EXHAUST FAN	HXR	HEAT EXCHANGER	RTS	REFER TO SPECIFICATIONS
CFM	CUBIC FEET PER MINUTE	ID	INSIDE DIAMETER	SA	SUPPLY AIR
CHWP	CHILLED WATER PUMP	IN WC	INCHES OF WATER COLUMN	SCD	SECONDARY CONDENSATE DRAIN
CHWR	CHILLED WATER RETURN	KW	KILOWATTS	SCH	SCHEDULE
CHWS	CHILLED WATER SUPPLY	KWH	KILOWATT HOUR	SCR	STEAM CONDENSATE RETURN
CO2	CARBON DIOXIDE	LAT	LEAVING AIR TEMPERATURE	SF	SUPPLY FAN
CU	CONDENSING UNIT	LBS	POUNDS	SHT	SHEET
CV	CONTROL VALVE	LDB	LEAVING DRY BULB	SHWP	SECONDARY HEATING WATER PUMP
CWP	CONDENSING WATER PUMP	LWB	LEAVING WET BULB	SM	SHEET METAL
CWR	CONDENSING WATER RETURN	LP	LOW PRESSURE	SMS	SHEET METAL SCREW
CWS	CONDENSING WATER SUPPLY	LPR	LOW PRESSURE CONDENSATE RETURN	SP	STATIC PRESSURE
D	DROP	LPS	LOW PRESSURE STEAM, 5-15 PSIG	SPD	STATIC PRESSURE DROP
DB	DRY BULB TEMPERATURE	LWT	LEAVING WATER TEMPERATURES	SQFT	SQUARE FEET
DET	DETAIL	LRA	LOCKED ROTOR AMPS	SQIN	SQUARE INCHES
DIA	DIAMETER	MAV	MANUAL AIR VENT	SS	STAINLESS STEEL
DIS	DEIONIZED (PURE) STEAM	MAX	MAXIMUM	TA	TO ABOVE
DN	DOWN	MBH	1,000 BRITISH THERMAL UNITS PER HOUR	TB	TO BELOW
DSD	DUCT SMOKE DETECTER	MC	MECHANICAL CONTRACTOR	TCV	TEMPERATURE CONTROL VALVE
DTR	DUCT THRU ROOF	MCC	MOTOR CONTROL CENTER	TG	TRANSFER GRILLE
DWG	DRAWING	MD	MANUEL DAMPER	TH	THERMOMETER
(E)	EXISTING	MFR	MANUFACTURER	TSP	TOTAL STATIC PRESSURE
(ER)	EXISTING RELOCATED	MIN	MINIMUM	TSTAT	THERMOSTAT
EA	EXHAUST AIR	MISC	MISCELLANEOUS	TYP	TYPICAL
EAD	EXHAUST AIR DAMPER	MPR	MEDIUM PRESSURE CONDENSATE RETURN	UON	UNLESS OTHERWISE NOTED
EAT	ENTERING AIR TEMPERATURE	(N)	NEW	UG	UNDER GROUND
EF	EXHAUST FAN	NC	NORMALLY CLOSED	UF	UNDER FLOOR
ELEC	ELECTRICAL	NFPA	NATIONAL FIRE PROTECTION ASSOCIATION	V	VOLTS
ESP	EXTERNAL STATIC PRESSURE	NIC	NOT IN CONTRACT	VAV	VARIABLE AIR VOLUME
ET	EXPANSION TANK	NO	NORMALLY OPEN	VD	VOLUME DAMPER
EWT	ENTERING WATER TEMPERATURE	NTS	NOT TO SCALE	VCD	VOLUME CONTROL DAMPER
°F	DEGREES FAHRENHEIT	NA	NOT APPLICABLE	VFD	VARIABLE FREQUENCY DRIVE
FA	FROM ABOVE	OA	OUTSIDE AIR	VLV	VALVE
FB	FROM BELOW	OAD	OUTSIDE AIR DAMPER	WB	WET BULB
FC	FLEXIBLE CONNECTION	OBD	OPPOSED BLADE DAMPER	WPD	WATER PRESSURE DROP
FCU	FAN COIL UNIT			WMS	WIRE MESH SCREEN
FD	FIRE DAMPER			W/	WITH
FF	FINAL FILTER			W/O	WITHOUT
FFU	FAN/FILTER UNIT			WT	WEIGHT
FLA	FULL LOAD AMPS			$	ON/OFF SWTCH/STARTER

SYMBOLS

Symbol	Description	Description
CHWS	CHILLED WATER SUPPLY	BALL VALVE
CHWR	CHILLED WATER RETURN	BALANCE VALVE
CWS	CONDENSER WATER SUPPLY	BUTTERFLY VALVE
CWR	CONDENSER WATER RETURN	CHECK VALVE
HWS	HEATING HOT WATER SUPPLY	LEVER HANDLE GAS COCK
HWR	HEATING HOT WATER RETURN	PRESSURE REDUCING VALVE
RL	REFRIGERANT LIQUID LINE PIPING	SOLENOID VALVE W/ MOTOR ACTUATOR
RS	REFRIGERANT SUCTION LINE PIPING	STRAINER
	FLOW IN DIRECTION OF ARROW	PRESSURE GAUGE
	REDUCER	THERMOMETER
	OUTSIDE AIR INTO LOUVER	UNION
	RETURN OR EXHAUST AIR INTO REGISTER	VALVE BOX
	SUPPLY AIR FROM REGISTER	CAP (END OF PIPE)
	SUPPLY AIR GRILLE ID SIZE/CFM	CIRCULATING PUMP
		ANGLE VALVE
	RETURN AIR GRILLE ID SIZE/CFM	PRESSURE OR TEMP. RELIEF VALVE
		DIAMETER (Ø)
	EXHAUST AIR GRILLE ID SIZE/CFM	ROOM THERMOSTAT
		POINT OF CONNECTION
	ITEM TO BE REMOVED / DEMOED	POINT OF DISCONNECTION
	ITEM TO BE ABANDONED IN PLACE	ROOM NAME -- : ROOM NAME AND NUMBER

IDENTIFICATION STAMP
DIV. OF THE STATE ARCHITECT
APP: 02-121275 INC:
REVIEWED FOR
SS ☑ FLS ☑ ACS ☑
DATE: 12/15/2023

CALIFORNIA DESIGN WEST ARCHITECTS, Inc.
2100 19th Street
Sacramento, CA 95818
Phone: (916) 446-2466
Fax: (916) 446-5118
Web Page: ca-dw.com

These plans and prints thereof, as instruments of service, are owned by the architect and are for the use on this project only. Reproduction and/or distribution without the prior written consent of the architect is forbidden.

Copyright California Design West Architects, Inc.

ARCHITECT: CONSULTANT:

LICENSED ARCHITECT MITCHELL A. McALLISTER NO. C17250 REN. 2-28-2025 STATE OF CALIFORNIA

REGISTERED PROFESSIONAL ENGINEER DAVID A. WESTON No. M31220 RENEWAL DATE: 12/31/2023 MECHANICAL STATE OF CALIFORNIA

CONSULTANT:

WESTON & ASSOCIATES
MECHANICAL ENGINEERS
601 UNIVERSITY AVE, SUITE 260 | SACRAMENTO, CA 95825
WESTON & ASSOCIATES #23-007

PROJECT NAME:

BUHACH COLONY HIGH SCHOOL

1800 NORTH BUHACH ROAD, ATWATER, CA 95301

TEAM ROOMS, CONCESSIONS & RESTROOMS

MERCED UNION HIGH SCHOOL DISTRICT

MERCED COUNTY

KEY PLAN:

SHEET TITLE:

MECHANICAL SCHEDULES, LEGEND & NOTES

JOB NUMBER:

SHEET NUMBER:

DATE: APR 14, 2023

REVISION:

M0.1

DUCTLESS SPLIT SYSTEM UNIT SCHEDULE - SINGLE ZONE

SYMBOL	(DAIKIN) INDOOR UNIT MODEL NUMBER	(DAIKIN) OUTDOOR UNIT MODEL NUMBER	CFM (LOW/HIGH SPEED)	COOLING CAPACITY (BTUH)		HEATING CAPACITY (MBH)	ELECTRICAL REQUIREMENTS			MAXIMUM UNIT WEIGHT INDOOR / OUTDOOR (LBS.)	SEER / EER	HSPF
				RATED	SENSIBLE		VOLT	PHASE	HERTZ			
ACO H1 / ACI H1	FTK12AXVJU	RK12AXVJU	247/436	10,900	9,090	N/A	208	1Ø	60	40 / 80	19 / 12.5	N/A
ACO V1 / ACI V1	FTK12AXVJU	RK12AXVJU	247/436	10,900	9,090	N/A	208	1Ø	60	40 / 80	19 / 12.5	N/A
ACO T1 / ACI T1	FTK12AXVJU	RK12AXVJU	247/436	10,900	9,090	N/A	208	1Ø	60	40 / 80	19 / 12.5	N/A

NOTES:

1. MINIMUM COOLING CAPACITY RATINGS ARE GROSS AT 95°F AMBIENT, 80°F DB / 67°F WB ENTERING AIR AND NOMINAL CFM.
2. REFRIGERANT PIPING TO BE TYPE ACR COPPER HARD DRAWN REFRIGERANT PIPE.
3. REFRIGERANT PIPING TO BE SIZED BY UNIT MANUFACTURER.
4. SET FAN SPEED ON LOW.
5. PROVIDE CONDENSATE DRAIN PUMPS ON ALL UNITS. CONDENSATE DRAIN PUMP TO BE: LITTLE GIANT MODEL VCMA-20ULST CONDENSATE PUMP WITH SAFETY SWITCH & 6' POWER CORD. PUMP TO BE 1/30 HP MOTOR, 120V/1Ø - 1.5 AMPS. WIRE SAFETY SWITCH TO UNIT.
6. PROVIDE EACH UNIT WITH THERMOSTAT AND 1 TEMPERATURE SENSOR IN ROOM BY CONTROLS MANUFACTURER. SET UNIT CONTROL THERMOSTAT TO 76°F (UNLESS DIRECTED OTHERWISE BY OWNER).
7. MOUNTING DETAIL SEE 1/M6.1 AND 2/M6.1

REFRIGERANT CONTROLLER SCHEDULE

SYMBOL	(DAIKIN) MODEL NUMBER	NUMBER OF PORTS	ELECTRICAL REQUIREMENTS			MAXIMUM UNIT WEIGHT (LBS.)	MOUNTING DETAIL
			VOLT	PHASE	HERTZ		
BS H1	BS6Q54TVJ	6	208	1Ø	60	80	2/M6.2
BS V1	BSF6Q54TVJ	6	208	1Ø	60	80	2/M6.2

NOTES:

1. PROVIDE VALVES & CAPS ON ANY UNUSED PORTS

INTAKE VENT SCHEDULE

SYMBOL	MANUFACTURER & MODEL NUMBER	AIRFLOW (CFM)	THROAT SIZE	PRESSURE DROP (IN. WG)	MAXIMUM WEIGHT (POUNDS)
IV H1	GREENHECK MODEL "FGI" HOODED GRAVITY INTAKE VENTILATOR	580	14x14	0.04	60
IV V1	GREENHECK MODEL "FGI" HOODED GRAVITY INTAKE VENTILATOR	460	14x14	0.03	60

NOTES:

1. PROVIDE INTAKE VENTS WITH BIRDSCREEN, MANUFACTURE'S CURB & BACKDRAFT DAMPER.
2. MAX. PRESSURE DROP INCLUDES BIRD SCREEN.
3. SEE DETAIL 1/M6.2 FOR INTAKE VENT MOUNTING DETAIL.

DIFFUSER / GRILLE SCHEDULE

TAG	MANUFACTURER / MODEL #	DESCRIPTION
S1	TITUS MODEL MCD	CEILING SUPPLY AIR DIFFUSER: DIFFUSER TO BE AS FOLLOWS: · DIFFUSER TO HAVE FOUR INDIVIDUALLY ADJUSTABLE MODULAR CORES. · STEEL CONSTRUCTION · STANDARD WHITE FINISH (U.N.O.) · PROVIDE 24"x24" MODULE WITH BORDER TYPE 3 FOR MOUNTING WITHIN TEE-BAR. · PROVIDE BORDER TYPE 6 (BEVELED DROP FACE) FOR FOR MOUNTING WITHIN HARD-LID CEILINGS. · SET FOR 4-WAY BLOW PATTERN UNLESS DEPICTED OTHERWISE

GENERAL DIFFUSER NOTES:

1. REFER TO PLANS FOR SIZE AND QUANTITY.
2. ALL SUPPLY AIR DIFFUSERS ARE 4 WAY BLOW UNLESS SHOWN OTHERWISE.
3. FURNISH ALL PRODUCTS OF A SINGLE MANUFACTURER.
4. COORDINATE DIFFUSER TYPE WITH REFLECTED CEILING PLAN.
5. PROVIDE MANUAL VOLUME CONTROL DAMPER (VCD) AT EACH INDIVIDUAL BRANCH TO A SINGLE DIFFUSER IMMEDIATELY AFTER CONNECTION TO DUCT MAIN. OPPOSED BLADE DAMPERS AT DIFFUSERS/GRILLES ARE NOT ALLOWED.
6. FOR MOUNTING SEE 4/M6.2.

EQUIPMENT LIST

AD 1	AIR DOOR: "MARS" MODEL LPV236-1UA-OB. UNIT TO BE AS FOLLOWS: · UNHEATED AIR DOOR · 120v/1Ø/60 Hz | 2.4 AMPS | 1/6 HP MOTOR · 900 CFM · SERVES 36" DOOR · PROVIDE MAGNETIC DOOR SWITCH. SWITCH TO BE 24V / 1/2 AMP · UNIT MAX WEIGHT < 35 LBS.

DUCTLESS SPLIT SYSTEM - MULTI-ZONE

SYMBOL	(DAIKIN) INDOOR UNIT MODEL NUMBER	(DAIKIN) OUTDOOR UNIT MODEL NUMBER	AREA SERVED	(WET) CFM	RATED HEATING CAPACITY (BTUH)	RATED COOLING CAPACITY (BTUH)	ELECTRICAL REQUIREMENTS					PERFORMANCE			MAXIMUM UNIT WEIGHT (LBS.)	OA CFM
							VOLT	PHASE	HERTZ	MCA	MOCP	EER	IEER	COP		
VRF H1		REYQ192AAYDA	HOME TEAM BLGG.		172,000	177,000	460V	3Ø	60	28.3	30	11.5	21.0	3.9	1,075	
VRF V1		REYQ120AAYDA	VISITING TEAM BLDG.		112,000	113,000	460V	3Ø	60	16.6	20	12.4	23.5	3.5	900	
HP H1	FXFQ48TVJU		HOME TEAM ROOM H106	1,218	55,993	32,994	208	1Ø	60	1.8	15				75	200
HP H2	FXFQ48TVJU		HOME TEAM ROOM H106	1,218	55,993	32,994	208	1Ø	60	1.8	15				75	200
HP H3	FXFQ30TVJU		CONCESSIONS H101	1,112	35,300	21,014	208	1Ø	60	1.3	15				75	150
HP H4	FXFQ07TVJU		OFFICE H103	420	8,803	6,303	208	1Ø	60	0.3	15				50	30
ODAS H1	FXMQ48MFVJU		HOME TEAM BLDG.	580	25,200	19,000	208	1Ø	60	2.1	15				225	580
HP V1	FXFQ30TVJU		VISITOR TM. ROOM V106	1,112	35,300	21,014	208	1Ø	60	1.3	15				75	175
HP V2	FXFQ30TVJU		VISITOR TM. ROOM V106	1,112	35,300	21,014	208	1Ø	60	1.3	15				75	175
HP V3	FXZQ18TAVJU		SNACKS V101	742	20,700	15,149	208	1Ø	60	0.6	15				75	80
HP V4	FXFQ07TVJU		OFFICE V102	420	8,803	6,603	208	1Ø	60	0.3	15				50	30
ODAS V1	FXMQ24PBVJU		VISITING TEAM BLDG.	460	30,824	23,984	208	1Ø	60	1.8	15				100	460

NOTES:

1. MINIMUM COOLING CAPACITY RATINGS ARE GROSS AT 95°F AMBIENT, 80°F DB / 67°F WB ENTERING AIR AND NOMINAL CFM.
2. CFMs LISTED IN SCHEDULES ARE "NOMINAL" UNIT CFMs. BALANCE SYSTEM TO VALUES SHOWN ON DRAWINGS.
3. INDOOR UNITS TO BE PROVIDED WITH INTEGRAL CONDENSATE PUMP.
4. PROVIDE WITH MODEL BRC1E73 WIRED THERMOSTAT/REMOTE CONTROLLER.
5. PROVIDE EACH SYSTEM WITH MODEL DCM601A71 - INTELLIGENT TOUCH MANAGER (iTM). INTERGRATE iTM BACKNET POINTS INTO BMS SYSTEM.
6. FOR VRF MOUNTING SEE 5/M6.2
7. FOR CEILING CASSETTE MOUNTING SEE 3/M6.1; FOR DUCTED FCU MOUNTING SEE 7/M6.1.

CEILING EXHAUST AND FAN SCHEDULE

SYMBOL	MANUFACTURER & MODEL NUMBER	TOTAL CFM	EXTERNAL SP (INCHES W.C.)	MOTOR HP	MOTOR BHP	FAN RPM	ELECTRICAL	MAXIMUM UNIT WEIGHT (LBS.)	AC UNIT INTERLOCK
CEF H1	GREENHECK MODEL: CSP-A700-VG	650	0.5	0.19	0.19	1,219	120v / 1Ø / 60 Hz	50	NA
CEF H2	GREENHECK MODEL: CSP-A700-VG	650	0.5	0.19	0.19	1,219	120v / 1Ø / 60 Hz	50	NA
CEF H3	GREENHECK MODEL: SP-A190	150	0.3	0.03	0.03	1,400	120v / 1Ø / 60 Hz	25	NA
CEF H4	GREENHECK MODEL: CSP-A700-VG	400	0.3	0.07	0.07	907	120v / 1Ø / 60 Hz	50	NA
CEF V1	GREENHECK MODEL: CSP-A700-VG	500	0.5	0.13	0.13	1,146	120v / 1Ø / 60 Hz	50	NA
CEF V2	GREENHECK MODEL: CSP-A700-VG	500	0.5	0.13	0.13	1,146	120v / 1Ø / 60 Hz	50	NA
CEF V3	GREENHECK MODEL: CSP-A390-VG	300	0.3	0.07	0.07	1,195	120v / 1Ø / 60 Hz	30	NA

NOTES:

1. PROVIDE WITH THERMAL OVERLOAD PROTECTED MOTOR.
2. LISTED MAXIMUM UNIT WEIGHT INCLUDES ALL ACCESSORIES (ROOF CURB, BIRDSCREENS, BACKDRAFT DAMPERS, ETC.).
3. SEE DETAIL 8/M6.1 FOR EXHAUST FAN MOUNTING DETAIL.
4. PROVIDE AUTO DELAY TIMER FOR CEF's INTERCONNECTED TO LIGHTS/OCCUPANCY SENSOR. FANS TO SHUT-DOWN 15 MINUTES AFTER LIGHTS ARE TURNED OFF OR OCCUPANCY SENSOR NO LONGER SENSES AN OCCUPANT.
5. TERMINATE EXHAUST DUCT AT ROOF WITH A GREENHECK MODEL RJ-6x9 PITCHED ROOF TERMINATION CAP.

IDENTIFICATION STAMP
DIV. OF THE STATE ARCHITECT
APP: 02-121275 INC:
REVIEWED FOR
SS ☑ FLS ☑ ACS ☑
DATE: 12/15/2023

CALIFORNIA DESIGN WEST ARCHITECTS, Inc.

2100 19th Street
Sacramento, CA 95818

Phone: (916) 446-2466
Fax: (916) 446-5118
Web Page: ca-dw.com

These plans and prints thereof, as instruments of service, are owned by the architect and are for the use on this project only. Reproduction and/or distribution without the prior written consent of the architect is forbidden.

Copyright California Design West Architects, Inc.

ARCHITECT: CONSULTANT:

LICENSED ARCHITECT MITCHELL A McAULEY No. C17250 REN: 08-31-2024 STATE OF CALIFORNIA

REGISTERED PROFESSIONAL ENGINEER No. M31220 RENEWAL DATE: 12/31/2023 MECHANICAL STATE OF CALIFORNIA

CONSULTANT:

WESTON & ASSOCIATES
MECHANICAL ENGINEERS
601 UNIVERSITY AVE, SUITE 260 | SACRAMENTO, CA 95825
WESTON & ASSOCIATES #23-007

PROJECT NAME:

BUHACH COLONY HIGH SCHOOL

1800 NORTH BUHACH ROAD,
ATWATER, CA 95301

TEAM ROOMS, CONCESSIONS & RESTROOMS

MERCED UNION HIGH SCHOOL DISTRICT

MERCED COUNTY

KEY PLAN:

SHEET TITLE:

MECHANICAL SCHEDULES

JOB NUMBER:	SHEET NUMBER:
DATE: APR 14, 2023	**M0.2**
REVISION:	

SHEET NOTES:

1. PROVIDE ELBOW w/ TURNING VANES AT ALL DUCT DROPS/RISERS FROM ROOF MOUNTED EQUIPMENT.

REFRIGERANT PIPING NOTES

1	REFRIGERANT PIPING - 3/8"Ø LIQUID / 5/8"Ø GAS
2	REFRIGERANT PIPING - 1/4"Ø LIQUID / 1/2"Ø GAS
3	REFRIGERANT PIPING - 1/4"Ø LIQUID / 3/8"Ø GAS
4	REFRIGERANT PIPING - 5/8"Ø LIQUID / 1-1/8"Ø GAS / 1-1/8" OIL CATCH LINE
5	REFRIGERANT PIPING - 1/2"Ø LIQUID / 1-1/8"Ø GAS / 3/4" OIL CATCH LINE
6	REFRIGERANT PIPING RISE/DROP 18" AFG. ROUTE PIPING ABOVE FINISHED CEILING AND CONNECT TO INDOOR FAN COIL UNIT. SEE 4/M6.1 FOR REFRIGERANT PIPING THRU WALL DETAIL.

NOTES:

1. SINGLE LINE REPRESENTS BOTH HIGH & LOW PRESSURE REFRIGERANT LINE - SHOW AS SINGLE LINE FOR CLARITY.
2. BENDS IN SOFT COPPER TO BE "LONG RADIUS" TYPE BENDS WERE POSSIBLE.
3. CONTRACTOR TO COORDINATE EXACT POC AT EACH FAN COIL UNIT (IE: LEFT/RIGHT SIDE) AND ADJUST ACCORDINGLY - DRAWINGS SHOW ROUTING AND CONNECTION POINTS DIAGRAMMATIC ONLY.
4. INSULATE BOTH HIGH & LOW PRESSURE REFRIGERANT LINES.
5. AT CONTRACTOR'S OPTION, UTILIZE HARD-COPPER BRAZED PIPING IN LIEU OF SOFT COPPER LINE-SETS.

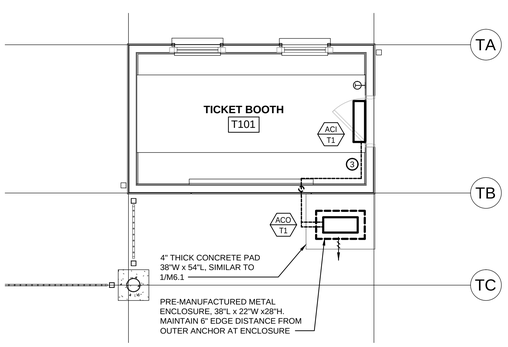

MECHANICAL - TICKET BOOTH FLOOR PLAN

SCALE: 1/4"=1'-0"

2 M2.1

N

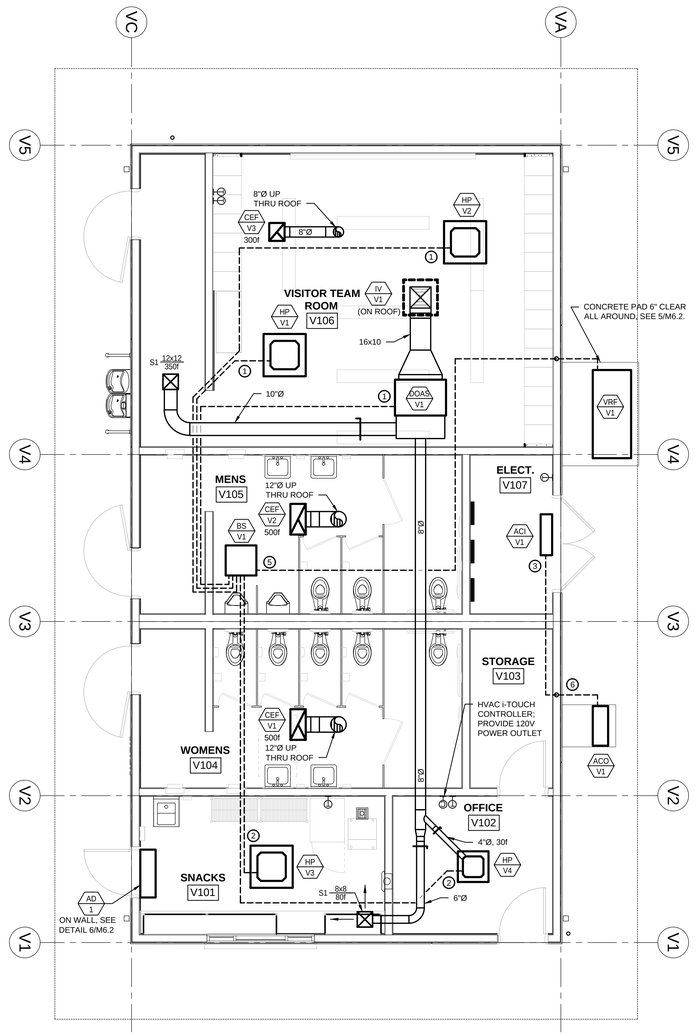

MECHANICAL - VISITORS LOCKER ROOM/RESTROOM

SCALE: 1/4"=1'-0"

1 M2.1

N

IDENTIFICATION STAMP
DIV. OF THE STATE ARCHITECT
APP: 02-121275 INC:
REVIEWED FOR
SS ☑ FLS ☑ ACS ☑
DATE: 12/15/2023

CALIFORNIA DESIGN
WEST ARCHITECTS, Inc.

2100 19th Street
Sacramento, CA 95818

Phone: (916) 446-2466
Fax: (916) 446-5118
Web Page: ca-dw.com

These plans and prints thereof, as instruments of service, are owned by the architect and are for the use on this project only. Reproduction and/or distribution without the prior written consent of the architect is forbidden.

Copyright California Design West Architects, Inc.

ARCHITECT: CONSULTANT:

LICENSED ARCHITECT
MITCHELL A. McALISTER
No. C17250
REN. 08-31-2024
STATE OF CALIFORNIA

REGISTERED PROFESSIONAL ENGINEER
No. M31220
RENEWAL DATE: 12/31/2023
MECHANICAL
STATE OF CALIFORNIA

CONSULTANT:

WESTON & ASSOCIATES
MECHANICAL ENGINEERS
601 UNIVERSITY AVE, SUITE 260 | SACRAMENTO, CA 95825
WESTON & ASSOCIATES #23-007

PROJECT NAME:

BUHACH COLONY HIGH SCHOOL

1800 NORTH BUHACH ROAD,
ATWATER, CA 95301

TEAM ROOMS, CONCESSIONS & RESTROOMS

MERCED UNION HIGH
SCHOOL DISTRICT

MERCED COUNTY

KEY PLAN:

SHEET TITLE:

MECHANICAL FLOOR PLANS

JOB NUMBER:

SHEET NUMBER:

M2.1

DATE:
APR 14, 2023

REVISION:

SHEET NOTES:

1. PROVIDE ELBOW w/ TURNING VANES AT ALL DUCT DROPS/RISERS FROM ROOF MOUNTED EQUIPMENT.

REFRIGERANT PIPING NOTES

1	REFRIGERANT PIPING - 3/8"Ø LIQUID / 5/8"Ø GAS
2	REFRIGERANT PIPING - 1/4"Ø LIQUID / 1/2"Ø GAS
3	REFRIGERANT PIPING - 1/4"Ø LIQUID / 3/8"Ø GAS
4	REFRIGERANT PIPING - 5/8"Ø LIQUID / 1-1/8"Ø GAS / 1-1/8" OIL CATCH LINE
5	REFRIGERANT PIPING - 1/2"Ø LIQUID / 1-1/8"Ø GAS / 3/4" OIL CATCH LINE
6	REFRIGERANT PIPING RISE/DROP 18" AFG. ROUTE PIPING ABOVE FINISHED CEILING AND CONNECT TO INDOOR FAN COIL UNIT. SEE 4/M6.1 FOR REFRIGERANT PIPING THRU WALL DETAIL.

NOTES:

1. SINGLE LINE REPRESENTS BOTH HIGH & LOW PRESSURE REFRIGERANT LINE - SHOW AS SINGLE LINE FOR CLARITY.
2. BENDS IN SOFT COPPER TO BE "LONG RADIUS" TYPE BENDS WERE POSSIBLE.
3. CONTRACTOR TO COORDINATE EXACT POC AT EACH FAN COIL UNIT (IE: LEFT/RIGHT SIDE) AND ADJUST ACCORDINGLY - DRAWINGS SHOW ROUTING AND CONNECTION POINTS DIAGRAMMATIC ONLY.
4. INSULATE BOTH HIGH & LOW PRESSURE REFRIGERANT LINES.
5. AT CONTRACTOR'S OPTION, UTILIZE HARD-COPPER BRAZED PIPING IN LIEU OF SOFT COPPER LINE-SETS.

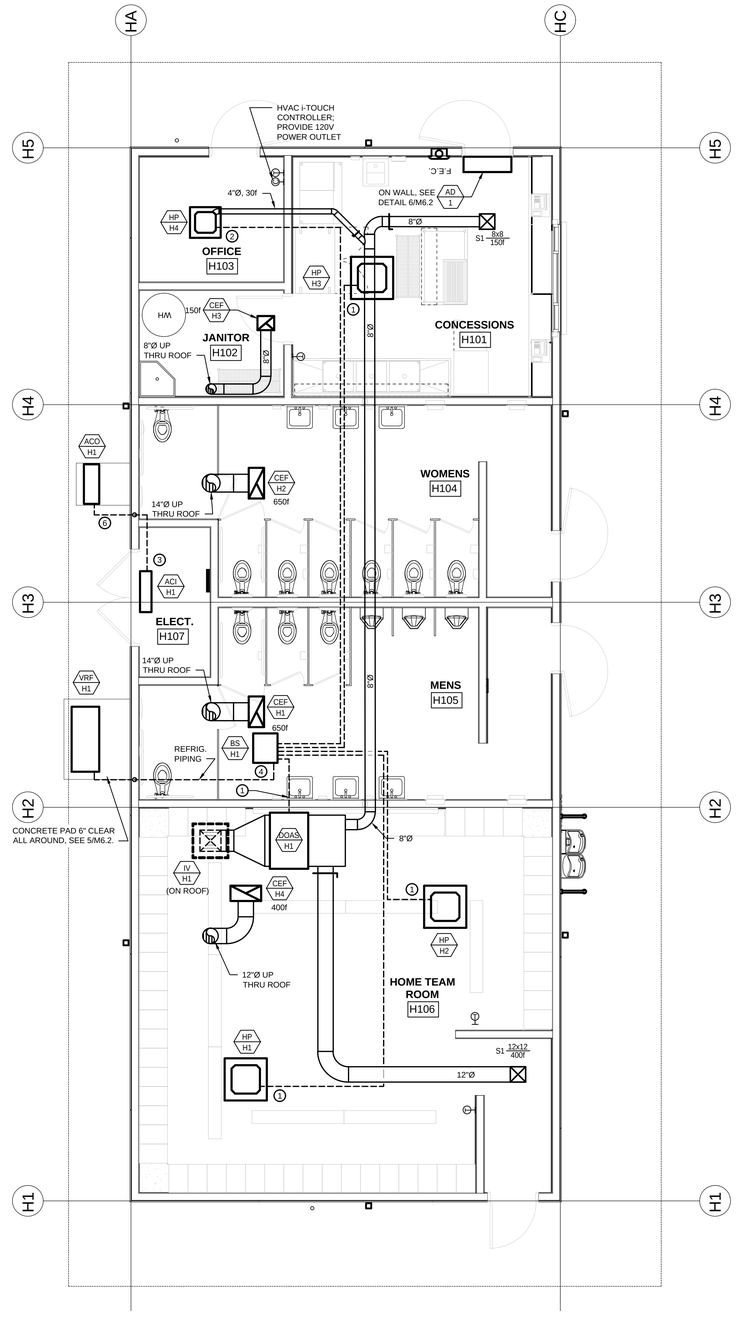

MECHANICAL - HOME LOCKER ROOM/RESTROOM

SCALE: 1/4"=1'-0"

1 M2.2

N

IDENTIFICATION STAMP
DIV. OF THE STATE ARCHITECT
APP: 02-121275 INC:
REVIEWED FOR
SS ☑ FLS ☑ ACS ☑
DATE: 12/15/2023

DESIGN WEST California

CALIFORNIA DESIGN WEST ARCHITECTS, Inc.

2100 19th Street
Sacramento, CA 95818

Phone: (916) 446-2466
Fax: (916) 446-5118
Web Page: ca-dw.com

These plans and prints thereof, as instruments of service, are owned by the architect and are for the use on this project only. Reproduction and/or distribution without the prior written consent of the architect is forbidden.

Copyright California Design West Architects, Inc.

ARCHITECT: CONSULTANT:

LICENSED ARCHITECT MICHELL A. McALLISTER NO. C17250 REGISTERED PROFESSIONAL ENGINEER DAVID A. WESTON No. M31220 REGISTER DATE: 12/31/2023 STATE OF CALIFORNIA

CONSULTANT:

WESTON & ASSOCIATES MECHANICAL ENGINEERS
601 UNIVERSITY AVE, SUITE 260 | SACRAMENTO, CA 95825
WESTON & ASSOCIATES #23-007

PROJECT NAME:

BUHACH COLONY HIGH SCHOOL

1800 NORTH BUHACH ROAD, ATWATER, CA 95301

TEAM ROOMS, CONCESSIONS & RESTROOMS

MERCED UNION HIGH SCHOOL DISTRICT

MERCED COUNTY

KEY PLAN:

SHEET TITLE:

MECHANICAL FLOOR PLANS

JOB NUMBER:

SHEET NUMBER:

DATE: APR 14, 2023

REVISION:

M2.2

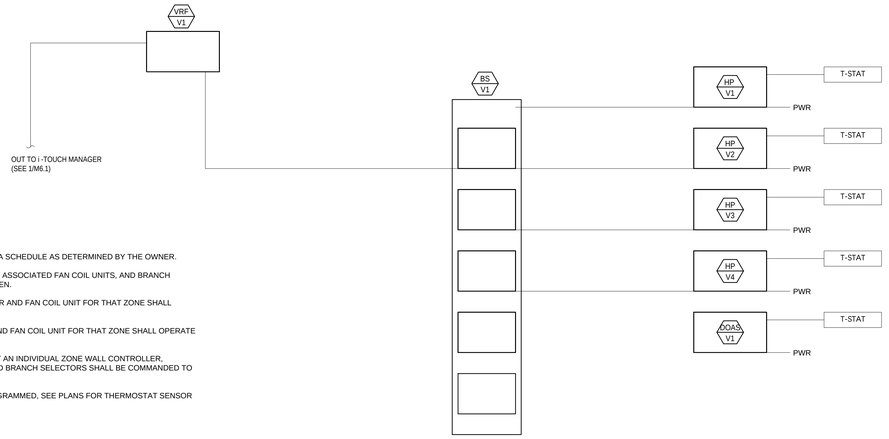

SEQUENCE OF OPERATION:

DAIKEN VRV SYSTEM WILL BE STARTED BY THE i-TOUCH CONTROL SYSTEM ON A SCHEDULE AS DETERMINED BY THE OWNER.

DURING HOURS OF OPERATION, THE OUTSIDE AIR UNIT, CONDENSING UNIT, ALL ASSOCIATED FAN COIL UNITS, AND BRANCH SELECTORS SHALL OPERATE CONTINUOUSLY AND THE OA DAMPERS SHALL OPEN.

UPON A CALL FOR COOLING BY ANY ZONE, THE ASSOCIATED BRANCH SELECTOR AND FAN COIL UNIT FOR THAT ZONE SHALL OPERATE IN COOLING MODE.

UPON A CALL FOR HEAT BY ANY ZONE, THE ASSOCIATED BRANCH SELECTOR AND FAN COIL UNIT FOR THAT ZONE SHALL OPERATE IN HEATING MODE.

DURING HOURS OF NON-OPERATION, UPON A CALL FOR SYSTEM OPERATION AT AN INDIVIDUAL ZONE WALL CONTROLLER, OUTSIDE AIR UNIT SET TO 66% OF MAX AIRFLOW, EXHAUST FAN, FAN COILS, AND BRANCH SELECTORS SHALL BE COMMANDED TO ON FOR OVERRIDE TIME OF 3-HOURS (ADJUSTABLE).

THE ZONE WALL CONTROLLER SHALL MAINTAIN SPACE TEMPERATURE AS PROGRAMMED, SEE PLANS FOR THERMOSTAT SENSOR LOCATIONS.

VRF CONTROL DIAGRAM

NTS

4 / M5.1

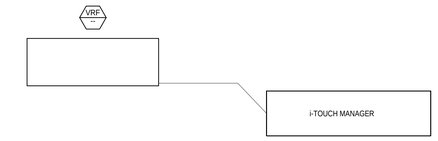

CONTROLS ARCHITECTURE DIAGRAM

NTS

3 / M5.1

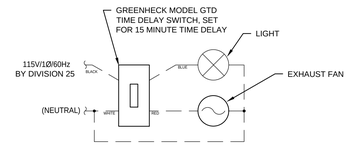

NOTES:

1. TIME DELAY SWITCH TO BE PROVIDE BY THE MECHANICAL CONTRACTOR.
2. TIME DELAY SWITCH TO BE INSTALLED BY THE ELECTRICAL CONTRACTOR.
3. SEE PLANS AND SCHEDULES FOR QUANITIES
4. POWER BY DIV. 25

EF INTERLOCK W/ LIGHTS

EXHAUST FAN INTERLOCK SCHEDULE

2 / M5.1

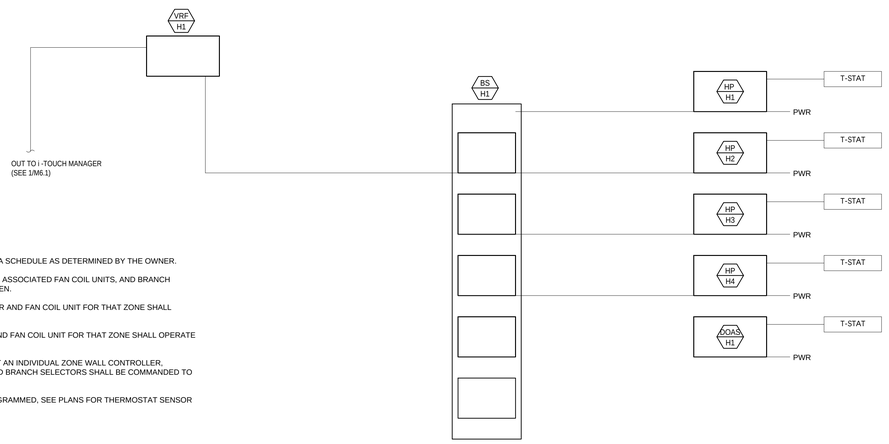

SEQUENCE OF OPERATION:

DAIKEN VRV SYSTEM WILL BE STARTED BY THE i-TOUCH CONTROL SYSTEM ON A SCHEDULE AS DETERMINED BY THE OWNER.

DURING HOURS OF OPERATION, THE OUTSIDE AIR UNIT, CONDENSING UNIT, ALL ASSOCIATED FAN COIL UNITS, AND BRANCH SELECTORS SHALL OPERATE CONTINUOUSLY AND THE OA DAMPERS SHALL OPEN.

UPON A CALL FOR COOLING BY ANY ZONE, THE ASSOCIATED BRANCH SELECTOR AND FAN COIL UNIT FOR THAT ZONE SHALL OPERATE IN COOLING MODE.

UPON A CALL FOR HEAT BY ANY ZONE, THE ASSOCIATED BRANCH SELECTOR AND FAN COIL UNIT FOR THAT ZONE SHALL OPERATE IN HEATING MODE.

DURING HOURS OF NON-OPERATION, UPON A CALL FOR SYSTEM OPERATION AT AN INDIVIDUAL ZONE WALL CONTROLLER, OUTSIDE AIR UNIT SET TO 66% OF MAX AIRFLOW, EXHAUST FAN, FAN COILS, AND BRANCH SELECTORS SHALL BE COMMANDED TO ON FOR OVERRIDE TIME OF 3-HOURS (ADJUSTABLE).

THE ZONE WALL CONTROLLER SHALL MAINTAIN SPACE TEMPERATURE AS PROGRAMMED, SEE PLANS FOR THERMOSTAT SENSOR LOCATIONS.

VRF CONTROL DIAGRAM

NTS

4 / M5.1

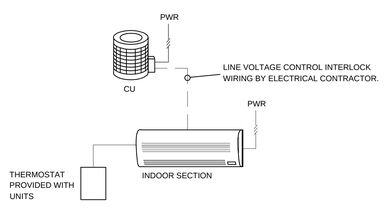

NOTES:

1. TYPICAL FOR ALL UNITS.
2. MOUNT MANUFACTURERS THERMOSTAT WHERE SHOWN ON PLANS.

ACI/ACO UNITS CONTROL DIAGRAM

1 / M5.1

IDENTIFICATION STAMP
DIV. OF THE STATE ARCHITECT
APP: 02-121275 INC:
REVIEWED FOR
SS ☑ FLS ☑ ACS ☑
DATE: 12/15/2023

CALIFORNIA DESIGN
WEST ARCHITECTS, Inc.

2100 19th Street
Sacramento, CA 95818

Phone: (916) 446-2466
Fax: (916) 446-5118
Web Page: ca-dw.com

These plans and prints thereof, as instruments of service, are owned by the architect and are for the use on this project only. Reproduction and/or distribution without the prior written consent of the architect is forbidden.

Copyright California Design West Architects, Inc.

ARCHITECT: CONSULTANT:

LICENSED ARCHITECT
MITCHELL A. McALISTER
No. C17250
REN. 08-31-2024
STATE OF CALIFORNIA

REGISTERED PROFESSIONAL ENGINEER
No. M31220
RENEWAL DATE: 12/31/2023
MECHANICAL
STATE OF CALIFORNIA

CONSULTANT:

WESTON & ASSOCIATES
MECHANICAL ENGINEERS
601 UNIVERSITY AVE, SUITE 260 | SACRAMENTO, CA 95825
WESTON & ASSOCIATES #23-007

PROJECT NAME:

BUHACH COLONY HIGH SCHOOL

1800 NORTH BUHACH ROAD,
ATWATER, CA 95301

TEAM ROOMS, CONCESSIONS & RESTROOMS

MERCED UNION HIGH SCHOOL DISTRICT

MERCED COUNTY

KEY PLAN:

SHEET TITLE:

MECHANICAL CONTROLS

JOB NUMBER:	SHEET NUMBER:
DATE: APR 14, 2023	**M5.1**
REVISION:	

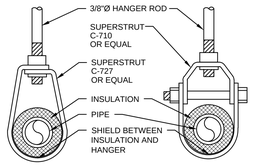

INSULATED COPPER PIPE INSULATED PIPE

NOTES:
1. FOR HANGER ROD SUPPORT TO STRUCTURE, SEE 5/M6.1.

2. HVAC PIPING ASSOCIATED WITH THIS PROJECT ARE SIZED SUCH THAT SEISMIC RESTRAINTS ARE NOT REQUIRED (1-1/8" MAX PIPE DIAMETER).

PIPE HANGER DETAILS
NTS — 9 / M6.1

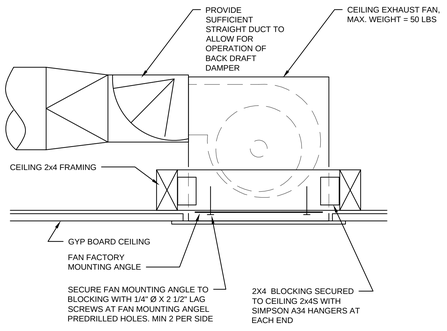

CEILING EXHAUST FAN MOUNTING
NTS — 8 / M6.1

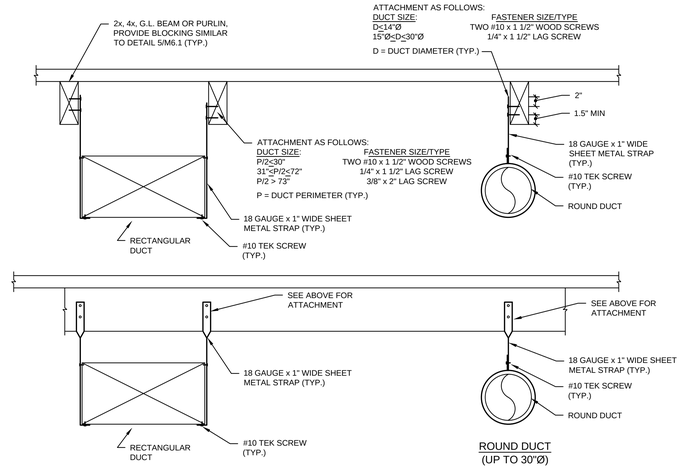

RECTANGULAR DUCT
(PER SMACNA TABLES 5-1 AND 5-2)

NOTES:
1. PROVIDE BLOCKING SIMILAR TO DETAIL 5/M6.1 WHEN NECESSARY.
2. DETAIL IS FOR CONCEALED DUCT THAT IS 5 SQUARE FEET OR LESS

CONCEALED DUCT SUPPORT DETAILS
NTS — 6 / M6.1

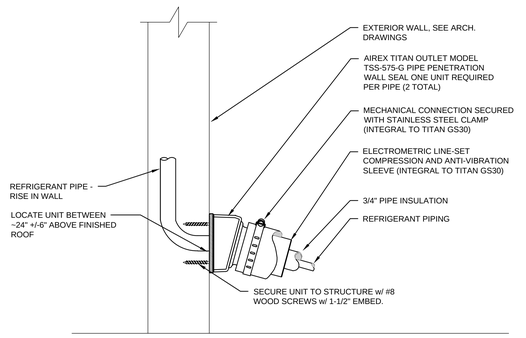

REFRIGERANT PIPING THRU WALL DETAIL
NTS — 4 / M6.1

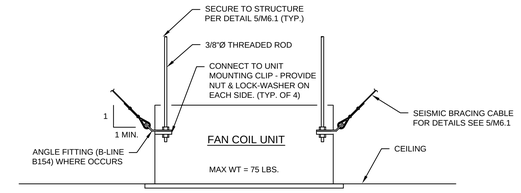

INDOOR CEILING CASSETTE UNIT MOUNTING DETAIL
NTS — 3 / M6.1

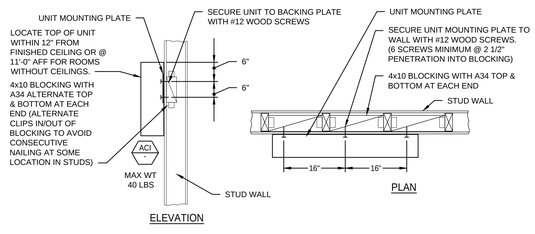

INDOOR WALL MOUNTED UNIT MOUNTING DETAIL
NTS — 2 / M6.1

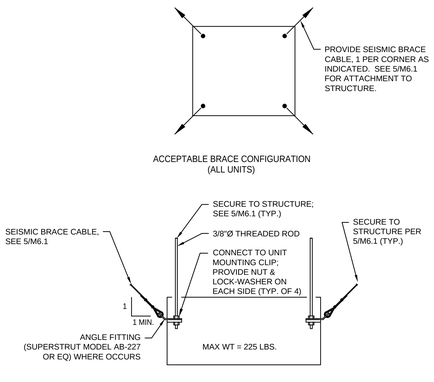

SUSPENDED FAN COIL UNIT MOUNTING DETAIL
NTS — 7 / M6.1

HANGER ROD SCHEDULE	
PIPE SIZE (Ø)	ROD SIZE
1/2" TO 4"	3/8"Ø

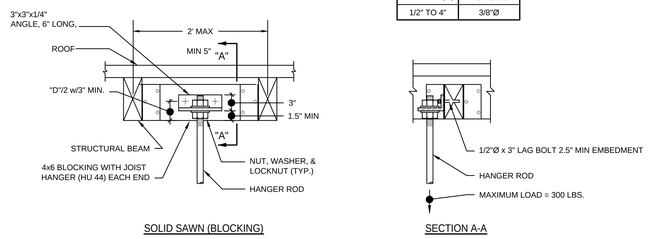

HANGER ROD SUPPORT DETAILS
NTS — 5 / M6.1

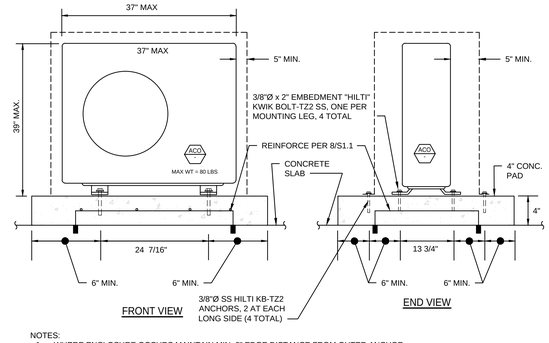

NOTES:
1. WHERE ENCLOSURE OCCURS MAINTAIN MIN. 6" EDGE DISTANCE FROM OUTER ANCHOR.
2. ANCHORS LOCATED MAX. 6" FROM CORNER OF ENCLOSURE
3. MAINTAIN 6" DISTANCE BETWEEN ANCHORS.

CONDENSING UNIT MOUNTING DETAIL
NTS — 1 / M6.1

MECHANICAL AND PLUMBING DETAILS APPLY TO ALL BUILDINGS WHETHER CORSS-REFERENCED OR NOT

IDENTIFICATION STAMP
DIV. OF THE STATE ARCHITECT
APP: 02-121275 INC:
REVIEWED FOR
SS ☑ FLS ☑ ACS ☑
DATE: 12/15/2023

CALIFORNIA DESIGN WEST ARCHITECTS, Inc.

2100 19th Street
Sacramento, CA 95818

Phone: (916) 446-2466
Fax: (916) 446-5118
Web Page: ca-dw.com

These plans and prints thereof, as instruments of service, are owned by the architect and are for the use on this project only. Reproduction and/or distribution without the prior written consent of the architect is forbidden.

Copyright California Design West Architects, Inc.

ARCHITECT: CONSULTANT:

LICENSED ARCHITECT — MITCHELL A. McALISTER — No. C17250 — REN. 08-31-2024 — STATE OF CALIFORNIA

REGISTERED PROFESSIONAL ENGINEER — No. M31220 — MECHANICAL — RENEWAL DATE: 12/31/2023 — STATE OF CALIFORNIA

CONSULTANT:

WESTON & ASSOCIATES
MECHANICAL ENGINEERS
601 UNIVERSITY AVE, SUITE 260 | SACRAMENTO, CA 95825
WESTON & ASSOCIATES #23-007

PROJECT NAME:

BUHACH COLONY HIGH SCHOOL

1800 NORTH BUHACH ROAD,
ATWATER, CA 95301

TEAM ROOMS, CONCESSIONS & RESTROOMS

MERCED UNION HIGH SCHOOL DISTRICT

MERCED COUNTY

KEY PLAN:

SHEET TITLE:

MECHANICAL DETAILS

JOB NUMBER:

SHEET NUMBER: M6.1

DATE: APR 14, 2023

REVISION:

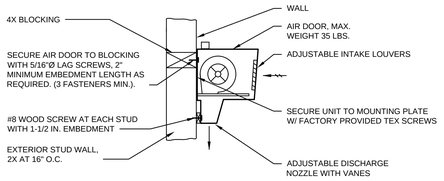

AIR DOOR MOUNTING DETAIL

NTS

6 / M6.2

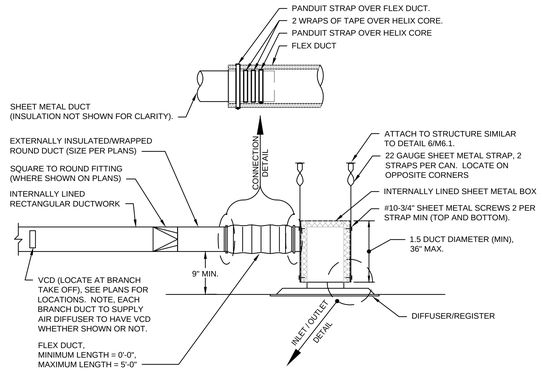

FOR CONCEALED DUCTWORK

NOTES:

1. NO BENDS GREATER THAN 45° WILL BE ALLOWED IN FLEXIBLE DUCTS.
2. MINIMUM BEND RADIUS FOR FLEXIBLE DUCTS SHALL NOT BE LESS THAN 1.5.
3. FLEXIBLE DUCTWORK NOT ALLOWED WITHIN EXPOSED AREAS.
4. PROVIDE LINED DIFFUER/REGISTER CANS ON ALL INLETS & OUTLETS, INCLUDING SUPPLY, RETURN, TRANSFER & EXHAUST.

DUCT RUNOUT TO INLET/OUTLET DETAIL

NTS

4 / M6.2

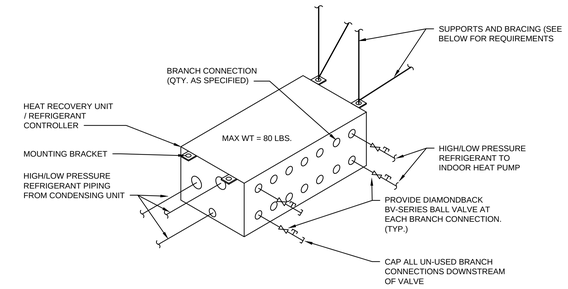

REFRIGERANT CONTROLLER DETAILS

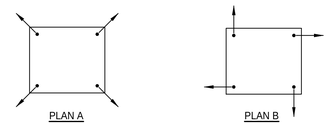

ACCEPTABLE BRACE CONFIGURATION (ALL UNITS)

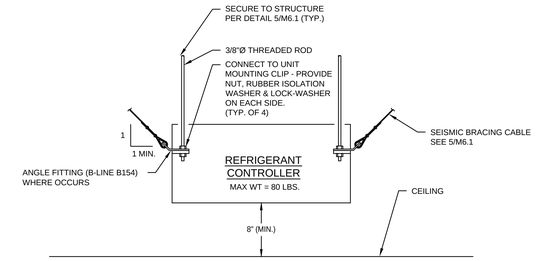

REFRIGERANT CONTROLLER DETAIL

NTS

2 / M6.2

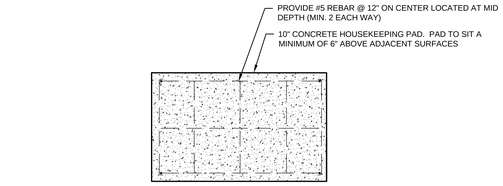

CONCRETE PAD DETAILS

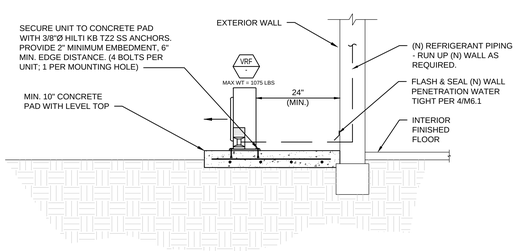

NOTE:

1. OVERALL DIMENSION OF CONCRETE PAD IS DEFINED BY NOTE ADDED TO PLANS TO PROVIDE 6 IN. CLEAR ALL AROUND OUTDOOR UNIT.

VRF CONDENSING UNIT MOUNTING DETAIL

NTS

5 / M6.2

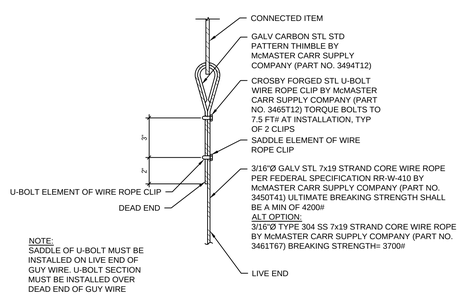

NOTE:
SADDLE OF U-BOLT MUST BE INSTALLED ON LIVE END OF GUY WIRE. U-BOLT SECTION MUST BE INSTALLED OVER DEAD END OF GUY WIRE

SEISMIC CABLE BRACING DETAIL

NTS

3 / M6.2

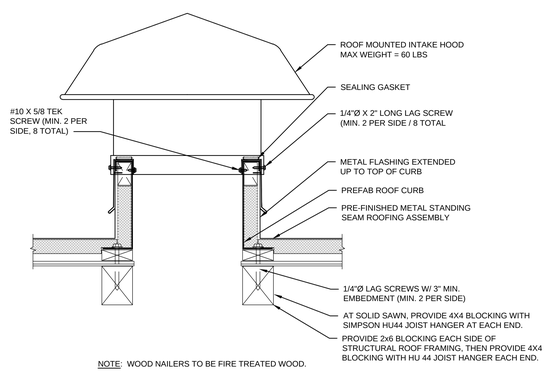

NOTE: WOOD NAILERS TO BE FIRE TREATED WOOD.

ROOF TOP GRAVITY HOOD DETAIL

NTS

1 / M6.2

MECHANICAL AND PLUMBING DETAILS APPLY TO ALL BUILDINGS WHETHER CORSS-REFERENCED OR NOT

IDENTIFICATION STAMP
DIV. OF THE STATE ARCHITECT
APP: 02-121275 INC:
REVIEWED FOR
SS ☑ FLS ☑ ACS ☑
DATE: 12/15/2023

CALIFORNIA DESIGN WEST ARCHITECTS, Inc.

2100 19th Street
Sacramento, CA 95818

Phone: (916) 446-2466
Fax: (916) 446-5118
Web Page: ca-dw.com

These plans and prints thereof, as instruments of service, are owned by the architect and are for the use on this project only. Reproduction and/or distribution without the prior written consent of the architect is forbidden.

Copyright California Design West Architects, Inc.

ARCHITECT: CONSULTANT:

LICENSED ARCHITECT MITCHELL A. McALISTER No. C17250 RENEW: 08-31-2025 STATE OF CALIFORNIA

REGISTERED PROFESSIONAL ENGINEER No. M31220 MECHANICAL RENEW DATE: 12/31/2023 STATE OF CALIFORNIA

CONSULTANT:

WESTON & ASSOCIATES MECHANICAL ENGINEERS
601 UNIVERSITY AVE, SUITE 260 | SACRAMENTO, CA 95825
WESTON & ASSOCIATES #23-007

PROJECT NAME:

BUHACH COLONY HIGH SCHOOL

1800 NORTH BUHACH ROAD, ATWATER, CA 95301

TEAM ROOMS, CONCESSIONS & RESTROOMS

MERCED UNION HIGH SCHOOL DISTRICT

MERCED COUNTY

KEY PLAN:

SHEET TITLE:

MECHANICAL DETAILS

JOB NUMBER:	SHEET NUMBER:
DATE: APR 14, 2023	**M6.2**
REVISION:	

Project Name:	Buhach Colony Team Rooms & Concession	Date Prepared:	2023-05-03

A. General Information

1	Project Name	Buhach Colony Team Rooms & Concession			
2	Run Title	Title 24 Analysis			
3	Project Location	1800 N. Buhach Road			
4	City	Atwater	5	Standards Version	Compliance 2022
6	Zip code	95301	7	Compliance Software (version)	EnergyPro 9.1
8	Climate Zone	12	9	Building Orientation (deg)	0
10	Building Type(s)	• Nonresidential	11	Weather File	MERCED_STYP20.epw
12	Project Scope	• New envelope and mechanical	13	Number of Dwelling Units	0
14	Total Conditioned Floor Area in Scope (ft^2)	2087	15	Total # of hotel/motel rooms	0
16	Total Unconditioned Floor Area (ft^2)	0	17	Fuel Type	Natural gas
18	Nonresidential Conditioned Floor Area	2087	19	Total # of Stories (Habitable Above Grade)	1
20	Residential Conditioned Floor Area	0			

B. PROJECT SUMMARY

Table B shows which building components are included in the performance calculation. If indicated as not included, the project must show compliance prescriptively if within the permit application.

Building Components Complying via Performance						Building Components Complying Prescriptively	
Envelope (See Table G)	Nonres	Performance	Solar Thermal Water Heating (See Table I3)	☐	Performance	The following building components are ONLY eligible for prescriptive compliance and should be documented on the NRCC form listed if within the scope of the permit application (i.e. compliance will not be shown on the NRCC-PRF-E).	
	MultiFam	Not Included		☒	Not Included		
Mechanical (See Table H)	Nonres	Performance	Covered Process: Commercial Kitchens (see Table J)	☐	Performance	Indoor Lighting (Unconditioned) 140.6 & 170.2(e)	NRCC-LTI-E is required
	MultiFam	Not Included		☒	Not Included	Outdoor Lighting 140.7 & 170.2(e)	NRCC-LTO-E is required
Domestic Hot Water (See Table I)	Nonres	Performance	Covered Process: Laboratory Exhaust (see Table J)	☐	Performance	Sign Lighting 140.8 & 170.2(e)	NRCC-LTS-E is required
	MultiFam	Not Included		☒	Not Included	**Building Components Complying with Mandatory Measures**	
Lighting (Indoor Conditioned, see Table K)	Nonres	Not Included	Photovoltaics (see Table F)	☒	Performance	Electrical power systems, commissioning, solar ready, elevator and escalator requirements are mandatory and should be documented on the NRCC form listed if applicable (i.e. compliance will not be shown on the NRCC-PRF-E.)	
	MultiFam	Not Included		☐	Not Included	Electrical Power Distribution 110.11	NRCC-ELC-E is required
			Battery (see Table F)	☐	Performance	Commissioning 120.8	NRCC-CXR-E is required
				☒	Not Included	Solar and Battery 110.10	NRCC-SAB-E is required

C1. COMPLIANCE SUMMARY

COMPLIES[3]

	Time Dependent Valuaton (TDV)		Source Energy Use
	Efficiency[1] (kBtu/ft^2 - yr)	Total[2] (kBtu/ft^2 - yr)	Total[2] (kBtu/ft^2 - yr)
Standard Design	375.86	375.86	48.23
Proposed Design	288.31	288.31	23.41
Compliance Margins	**87.55**	**87.55**	**24.82**
	Pass	**Pass**	**Pass**

[1] *Efficiency measures include improvements like a better building envelope and more efficient equipment*
[2] *Compliance Totals include efficiency, photovoltaics and batteries*
[3] *Building complies when efficiency and total compliance margins are greater than or equal to zero and unmet load hour limits are not exceeded*

C2. TDV ENERGY COMPLIANCE RESULTS FOR PERFORMANCE COMPONENTS (Annual TDV Energy Use, kBtu/ft^2 - yr)

COMPLIES[2]

Energy Component	Standard Design (TDV)	Proposed Design (TDV)	Compliance Margin (TDV)[1]
Space Heating	68	21.64	46.36
Space Cooling	113.84	91.42	22.42
Indoor Fans	137.5	117.13	20.37
Heat Rejection	0	0	0
Pumps & Misc.	0	0	0
Domestic Hot Water	10.64	12.24	-1.6
Indoor Lighting	45.88	45.88	0
Flexibility	---	---	---
EFFICIENCY COMPLIANCE TOTAL	**375.86**	**288.31**	**87.55 (23.3%)**
Photovoltaics	---	---	---
Batteries	---	---	---
TOTAL COMPLIANCE	**375.86**	**288.31**	**87.55 (23.3%)**

[1] *Notes: This number in parenthesis following the Compliance Margin in column 4, represents the Percent Better than Standard.*

C3. TDV ENERGY RESULTS FOR NON-REGULATED COMPONENTS[1]

Non-Regulated Energy Component	Standard Design (TDV)	Proposed Design (TDV)	Compliance Margin (TDV)[1]
Receptacle	80.63	80.63	---
Process	---	---	---
Other Ltg	---	---	---
Process Motors	---	---	---
TOTAL (TOTAL COMPLIANCE + NON-REGULATED COMPONENTS)	**456.49**	**368.94**	**87.55 (19.2%)**

[1] *Notes: This table is not used for Energy Code Compliance.*

C4. SOURCE ENERGY COMPLIANCE RESULTS FOR PERFORMANCE COMPONENTS (Annual SOURCE Energy Use, kBtu/ft^2 /yr)

COMPLIES[2]

Energy Component	Standard Design (SOURCE)	Proposed Design (SOURCE)	Compliance Margin (SOURCE)[1]
Space Heating	22.47	2.98	19.49
Space Cooling	5.57	4.9	0.67
Indoor Fans	12.26	10.35	1.91
Heat Rejection	0	0	0
Pumps & Misc.	0	0	0
Domestic Hot Water	3.87	1.12	2.75
Indoor Lighting	4.06	4.06	0
Flexibility	---	---	---
EFFICIENCY COMPLIANCE TOTAL	**48.23**	**23.41**	**24.82 (51.5%)**
Photovoltaics	---	---	---
Batteries	---	---	---
TOTAL COMPLIANCE	**48.23**	**23.41**	**24.82 (51.5%)**

[1] *Notes: This number in parenthesis following the Compliance Margin in column 4, represents the Percent Better than Standard.*

C5. SOURCE ENERGY RESULTS FOR NON-REGULATED COMPONENTS[1]

Non-Regulated Energy Component	Standard Design (SOURCE)	Proposed Design (SOURCE)	Compliance Margin (SOURCE)[1]
Receptacle	7.09	7.09	---
Process	---	---	---
Other Ltg	---	---	---
Process Motors	---	---	---
TOTAL (TOTAL COMPLIANCE + NON-REGULATED COMPONENTS)	**55.32**	**30.5**	**24.82 (44.9%)**

[1] *Notes: This table is not used for Energy Code Compliance.*

C6. 'ABOVE CODE' QUALIFICATIONS

☐ This project is pursuing CalGreen Tier 1 ☐ This project is pursuing CalGreen Tier 2

C7. ENERGY USE SUMMARY

Energy Component	Standard Design Site (MWh)	Proposed Design Site (MWh)	Margin (MWh)	Standard Design Site (MBtu)	Proposed Design Site (MBtu)	Margin (MBtu)
Space Heating	---	1.5	---	50.3	---	---
Space Cooling	5.6	5.1	0.5	---	---	---
Indoor Fans	10	8.7	1.3	---	---	---
Heat Rejection	---	---	---	---	---	---
Pumps & Misc.	---	---	---	---	---	---
Domestic Hot Water	0	0.9	-0.9	8.7	---	---
Indoor Lighting	3.4	3.4	0	---	---	---
Flexibility	---	---	---	---	---	---
EFFICIENCY TOTAL	**19**	**19.6**	**-0.6**	**59**	**0**	**59**
Photovoltaics	---	---	---	---	---	---
Batteries	---	---	---	---	---	---
ENERGY USE SUBTOTAL	**19**	**19.6**	**-0.6**	**59**	**0**	**59**
Receptacle	5.9	5.9	0	---	---	---
Process	---	---	---	---	---	---
Other Ltg	---	---	---	---	---	---
Process Motors	---	---	---	---	---	---
ENERGY USE TOTAL	**24.9**	**25.5**	**-0.6**	**59**	**0**	**59**

C8. ENERGY USE INTENSITY (EUI)

	Standard Design (kBtu/ft^2 / yr)	Proposed Design (kBtu/ft^2 / yr)	Margin (kBtu/ft^2 / yr)	Margin Percentage
GROSS EUI[1]	68.98	41.69	27.29	39.56
NET EUI[1]	68.98	41.69	27.29	39.56

[1] *Notes: Gross EUI is Energy Use Total (not including PV)/Total Building Area. Net EUI is Energy Use Total (including PV)/Total Building Area.*

D1. EXCEPTIONAL CONDITIONS

- The project uses the Simplified Geometry Performance Modeling Approach which is not capable of modeling daylighting controls and assumes the prescriptive Secondary Daylit Control requirements are met. PRESCRIPTIVE COMPLIANCE documentation (form NRCC-LTI-02-E) for the requirements of section 140.6(d) Automatic Daylighting Controls in Secondary Daylit Zones is required.
- The user model includes space(s) that are designed to be served by mechanical cooling systems, but the cooling systems were not included in the simulation model. A cooling system has been modeled for both the proposed and standard cases.
- The user model includes space(s) without sufficient cooling equipment. Cooling equipment has been added to the model to meet cooling loads.
- Project is claiming Exception 2 to Section 140.10(a): No PV system is required where the required PV system size is less than 4 kWdc.
- PV/Battery Building Type has been modified from software defaults for one or more spaces. Review project's PV/Battery Building Type(s) with documentation author. Refer to Energy Code section 140.10 for Nonresidential or 170.2(g) for more information.

F1. REQUIRED PV SYSTEMS

01	02	03	04	05	06	07	08	09	10	11	12
DC System Size (kWdc)	Exception[1]	Module Type	Array Type	Power Electronics	CFI	Azimuth (deg)	Tilt Input	Array Angle (deg)	Tilt: (x in 12)	Inverter Eff. (%)	Annual Solar Access (%)

[1]*See Table D1 for any PV exceptions used.*

IDENTIFICATION STAMP
DIV. OF THE STATE ARCHITECT
APP: 02-121275 INC:
REVIEWED FOR
SS ☑ FLS ☑ ACS ☑
DATE: 12/15/2023

CALIFORNIA DESIGN WEST ARCHITECTS, Inc.
2100 19th Street
Sacramento, CA 95818
Phone: (916) 446-2466
Fax: (916) 446-5118
Web Page: ca-dw.com

These plans and prints thereof, as instruments of service, are owned by the architect and are for the use on this project only. Reproduction and/or distribution without the prior written consent of the architect is forbidden.
Copyright California Design West Architects, Inc.

ARCHITECT: CONSULTANT:

LICENSED ARCHITECT MITCHELL A. McALLISTER NO. C17250 REN. 2-28-2025 STATE OF CALIFORNIA

REGISTERED PROFESSIONAL ENGINEER DAVID A. WESTON No. M31220 RENEWAL DATE: 12/31/2023 MECHANICAL STATE OF CALIFORNIA

CONSULTANT:

WESTON & ASSOCIATES
MECHANICAL ENGINEERS
601 UNIVERSITY AVE, SUITE 260 | SACRAMENTO, CA 95825
WESTON & ASSOCIATES #23-007

PROJECT NAME:

BUHACH COLONY HIGH SCHOOL

1800 NORTH BUHACH ROAD, ATWATER, CA 95301

TEAM ROOMS, CONCESSIONS & RESTROOMS

MERCED UNION HIGH SCHOOL DISTRICT

MERCED COUNTY

KEY PLAN:

SHEET TITLE:

MECHANICAL TITLE 24 COMPLIANCE

JOB NUMBER:

SHEET NUMBER: **M8.1**

DATE: APR 14, 2023

REVISION:

F1B. PV BATTERY BUILDING TYPE(S)

01	02	03
Building Occupancy Type* (From Table 140.10-A/B and 170.2-U/V)	Conditioned Floor Area (ft²)	Unconditioned Floor Area (ft²)
Grocery	0	0
High-Rise Multifamily	0	0
Office, Financial Institutions, Unleased Tenant Space	180	0
Retail	0	0
School	1907	0
Warehouse	0	0
Auditorium, Convention Center, Hotel/Motel, Library, Medical Office Building/Clinic, Restaurant, Theater	0	0
None	0	0

Building Occupancy Types are defined in Section 100.1 of the Energy Code

G1. ENVELOPE GENERAL INFORMATION (conditioned spaces only)

01	02	03	04
Opaque Surfaces & Orientation	Total Gross Surface Area (ft²)	Total Fenestration Area (ft²)	Window to Wall Ratio (%)
North-Facing[1]	748	0	0
East-Facing[2]	578	37	6.4
South-Facing[3]	719	37	5.15
West-Facing[4]	598	0	0
Total	**2643**	**74**	**2.8**
Roof	2087	0	0

Notes
[1]North-Facing is oriented to within 45 degrees of true north, including 45 00'00" east of north (NE), but excluding 45 00'00" west of north (NW),
[2]East-Facing is oriented to within 45 degrees of true east, including 45 00'00" south of east (SE), but excluding 45 00'00" north of east (NE),
[3]South-Facing is oriented to within 45 degrees of true south, including 45 00'00" west of south (SW), but excluding 45 00'00" east of south (SE),
[4]West-facing is oriented to within 45 degrees of true west, including 45 00'00" north of west (NW), but excluding 45 00'00" south of west (SW),

G4. NONRESIDENTIAL AIR BARRIER

01	02
Building Story Name	Air Barrier
Com-Floor 1	No air barrier

G5. OPAQUE SURFACE ASSEMBLY SUMMARY

01	02	03	04	05	06		07	08	09	10
Surface Name	Construction Type	Area (ft²)	Framing Type	Cavity R-Value	Continuous R-Value		Units	Value	Description of Assembly Layers	Status[1]
					Interior	Exterior				
R-21 Wall9	Exterior Wall	2,643	Wood	21	N/A	N/A	U-factor	0.0691	Stucco - 7/8 in. Vapor permeable felt - 1/8 in. Composite-1 Gypsum Board - 1/2 in.	N
R-38 Roof Attic13	Roof	2,087	Wood	38	N/A	N/A	U-factor	0.0329	AsphaltShingles0_25in Vapor permeable felt - 1/8 in. Plywood - 1/2 in. Air - Cavity - Wall Roof Ceiling - 4 in. or more Composite-2 Gypsum Board - 1/2 in.	N
Slab On Grade15	Underground Floor	2,087	N/A	0	N/A	N/A	F-factor	0.73	Slab Type =Unheated slab on grade Insulation Orientation =None Insulation R-Value =none	N

[1] *Status: N - New, A - Altered, E - Existing*

G6A. OPAQUE DOOR SUMMARY (NONRESIDENTIAL)

01	02	03	04
Assembly Name	Area (ft²)	Overall U-factor	Status[1]
Insulated Door46	21	0.2	N

[1] *Status: N - New, A - Altered, E - Existing*

G7A. FENESTRATION ASSEMBLY SUMMARY (NONRESIDENTIAL)

01	02	03	04	05	06	07	08	09
Fenestration Assembly Name	Fenestration Type/ Product Type / Frame Type	Certification Method[1]	Assembly Method	Area (ft²)	Overall U-factor	Overall SHGC	Overall VT	Status[2]
Residential Cooling	Vertical fenestration Fixed window N/A	NFRC	Manufactured	74	0.3	0.23	0.5	N

[1] *Notes: Newly installed fenestration shall have a certified NFRC Label Certificate or use the CEC default tables found in Table 110.6-A and Table 110.6-B. Center of Glass (COG) values are for the glass-only, determined by the manufacturer, and are shown for ease of verification. Site-built fenestration values are calculated per Nonresidential Appendix NA6 and are used in the analysis.*
[2] *Status: N - New, A - Altered, E - Existing*

H1. DRY SYSTEM EQUIPMENT (FURNACES, AIR HANDLING UNITS, HEAT PUMPS, VRF, ECONOMIZERS ETC.)

01	02	03	04	05	06	07	08	09	10	11	12
Equipment Name	Equipment Type	Qty	Heating				Cooling			Economizer Type (if present)	Status[1]
			Total Heating Output (kBtu/h)	Supp Heat Output (kBtu/h)	Efficiency Unit	Efficiency	Total Cooling Output (kBtu/h)	Efficiency Unit	Efficiency		
VRF-H1	Variable Refrigerant Flow	1	216	N/A	COP	4.14	192	EER	13.8	N/A	N

[1] *Status: N - New, A - Altered, E - Existing*

H1. DRY SYSTEM EQUIPMENT (FURNACES, AIR HANDLING UNITS, HEAT PUMPS, VRF, ECONOMIZERS ETC.)

01	02	03	04	05	06	07	08	09	10	11	12
Equipment Name	Equipment Type	Qty	Heating				Cooling			Economizer Type (if present)	Status[1]
			Total Heating Output (kBtu/h)	Supp Heat Output (kBtu/h)	Efficiency Unit	Efficiency	Total Cooling Output (kBtu/h)	Efficiency Unit	Efficiency		
VRF-V1	Variable Refrigerant Flow	1	135	N/A	COP	4.14	120	EER	14.6	N/A	N

[1] *Status: N - New, A - Altered, E - Existing*

H3. NONRESIDENTIAL / COMMON USE AREA FAN SYSTEMS SUMMARY

01	02	03	04	05	06	07	08	09	10	11	12	13
Name or Item Tag	Qty	Design OA CFM	Supply Fan				Return / Relief Fan					Status[1]
			CFM	Power	Power Units	Control	Fan Type	CFM	Power	Power Units	Control	
2-HP-H1+H2-VRF	2	0	1,218	0.12	BHP	Constant Vol	N/A	N/A	N/A	N/A	N/A	N
3-HP-H3-VRF	1	143.5	1,112	0.12	BHP	Constant Vol	N/A	N/A	N/A	N/A	N/A	N
4-HP-H4-VRF	1	13.5	420	0.06	BHP	Constant Vol	N/A	N/A	N/A	N/A	N/A	N
5-DOAS-VRF	1	0	1,377	0.4	BHP	Constant Vol	N/A	N/A	N/A	N/A	N/A	N
6-HP-V1+V2-VRF	2	0	1,112	0.12	BHP	Constant Vol	N/A	N/A	N/A	N/A	N/A	N
7-HP-V3-VRF	1	78	742	0.06	BHP	Constant Vol	N/A	N/A	N/A	N/A	N/A	N
8-HP-V4-VRF	1	15.6	420	0.06	BHP	Constant Vol	N/A	N/A	N/A	N/A	N/A	N
9-DOAS-VRF	1	0	688	0.4	BHP	Constant Vol	N/A	N/A	N/A	N/A	N/A	N

[1] *Status: N - New, A - Altered, E - Existing*

H5. GENERAL EXHAUST FAN SUMMARY

01	02	03	04	05	06	07	08
System ID	Zone Name	Qty	CFM	Power	Power Units	Continuous Operation?	Status[1]
HP-H1+H23	1-HP-H1+H2	1	400	0.07	BHP	No	N
HP-V1+V238	5-HP-V1+V2	1	300	0.07	BHP	No	N

[1] *Status: N - New, A - Altered, E - Existing*

H8. SYSTEM SPECIAL FEATURES

01	02	03	04
System Name	Equipment Type	Interlocks per 140.4(n)[1]	Other Special Features and Controls
VRF-H1	Variable Refrigerant Flow	N/A	Heat Recovery
VRF-V1	Variable Refrigerant Flow	N/A	Heat Recovery
Home Team Bldg1 - SHW	Service Hot Water	N/A	Fixed Temperature Control
Visiting Team Bldg37 - SHW	Service Hot Water	N/A	Fixed Temperature Control

Notes: This table includes controls related to the performance path only. For projects using the prescriptive path, mandatory and prescriptive controls requirements are documented on the NRCC-MCH-E.

[1] *Yes = interlocks are provided, No = interlocks are not provided, NA means no operable openings.*

H9. NONRESIDENTIAL / COMMON USE AREA & HOTEL/MOTEL VENTILATION

01	02	03		04	05	06	07
Zone Name	Mechanical Ventilation					Conditioned Area (sf)	DCV or Occupant Sensor Controls, or Both
	Ventilation Function	# of People	# of People	Supply OA CFM	Exhaust CFM		
1-HP-H1+H2	Exhaust - Locker rooms for athletic or industrial facilities	7.3		0	400	730	N/A
2-HP-H3	Office - Breakrooms	9.57		143.5	0	287	N/A
3-HP-H4	Office - Office space	0.45		13.5	0	90	N/A

H9. NONRESIDENTIAL / COMMON USE AREA & HOTEL/MOTEL VENTILATION

01	02	03	04	05	06	07
Zone Name	Mechanical Ventilation				Conditioned Area (sf)	DCV or Occupant Sensor Controls, or Both
	Ventilation Function	# of People	Supply OA CFM	Exhaust CFM		
4-DOAS	General - Unoccupied	0.45	0	0	90	N/A
5-HP-V1+V2	Exhaust - Locker rooms for athletic or industrial facilities	5.4	0	300	540	N/A
6-HP-V3	Office - Breakrooms	5.2	78	0	156	N/A
7-HP-V4	Office - Office space	0.52	15.6	0	104	N/A
8-DOAS	General - Unoccupied	0.45	0	0	90	N/A

H11. ZONAL SYSTEM AND TERMINAL UNIT SUMMARY

01	02	03	04	05	06	07	08	09	10	11	12
System ID	System Type	Qty	Rated Capacity (kBtuh)		Airflow (cfm)			Fan			VSD
			Heating	Cooling	Design	Min.	Min. Ratio	Power	Power Units	Cycles	
2-HP-H1+H2-VRF	Variable Refrigerant Flow	2	54	48	1,218	N/A	N/A	0.12	BHP	Continuous	☐
3-HP-H3-VRF	Variable Refrigerant Flow	1	34	30	1,112	N/A	N/A	0.12	BHP	Continuous	☐
4-HP-H4-VRF	Variable Refrigerant Flow	1	8.5	7.5	420	N/A	N/A	0.06	BHP	Continuous	☐
5-DOAS-VRF	Variable Refrigerant Flow	1	54	48	1,377	N/A	N/A	0.4	BHP	Continuous	☐
6-HP-V1+V2-VRF	Variable Refrigerant Flow	2	34	30	1,112	N/A	N/A	0.12	BHP	Continuous	☐
7-HP-V3-VRF	Variable Refrigerant Flow	1	20	18	742	N/A	N/A	0.06	BHP	Continuous	☐
8-HP-V4-VRF	Variable Refrigerant Flow	1	8.5	7.5	420	N/A	N/A	0.06	BHP	Continuous	☐
9-DOAS-VRF	Variable Refrigerant Flow	1	27	24	688	N/A	N/A	0.4	BHP	Continuous	☐

I1. WATER HEATER EQUIPMENT SUMMARY

01	02	03	04	05	06	07	08	09	10	11	12	13	14
Name	Heater Element Type	Tank Type	Qty	Tank Vol (gal)	Rated Input	Rated Input Unit	Efficiency	Efficiency Unit	Tank Insulation R-value Int/Ext	Standby Loss Fraction	1st Hr. Rating or Flow Rate (gal)	Heat Pump Type	Tank Location or Ambient Condition
50 Gallon Electric2	Electricity	Storage	1	50	6	kW	kW	UEF	N/A	N/A	N/A	N/A	N/A
50 Gallon Electric2 2	Electricity	Storage	1	50	6	kW	kW	UEF	N/A	N/A	N/A	N/A	N/A

L. DECLARATION OF REQUIRED CERTIFICATES OF INSTALLATION

Selections made by Documentation Author indicate which Certificates of Installation must be submitted for the features to be recognized for compliance. These documents must be retained and provided to the building inspector during construction and can be found online

Building Component	Form/Title
Envelope	NRCI-ENV-01-E - Must be submitted for all buildings
Envelope	NRCI-ENV-E - Envelope (for all buildings)
Mechanical	NRCI-MCH-01-E - Must be submitted for all buildings
Mechanical	NRCI-MCH-E - For all buildings with Mechanical Systems
Plumbing	NRCI-PLB-01-E - Must be submitted for all buildings
Plumbing	NRCI-PLB-E - For all buildings with Plumbing Systems

M. DECLARATION OF REQUIRED CERTIFICATES OF ACCEPTANCE

Selections made by Documentation Author indicate which Certificates of Acceptance must be submitted for the features to be recognized for compliance. These documents must be provided to the building inspector during construction and must be completed through an Acceptance Test Technician Certification Provider (ATTCP).

Building Component	Form/Title
Envelope	NRCA-ENV-02-F - NRFC label verification for fenestration

N. DECLARATION OF REQUIRED CERTIFICATES OF VERIFICATION

Selections made by Documentation Author indicate which Certificates of Verification must be submitted for the features to be recognized for compliance. These documents must be retained and provided to the building inspector during construction and can be found online

There are no Certificates of Verification applicable to this project

Documentation Author's Declaration Statement

I. I certify that this Certificate of Compliance documentation is accurate and complete.

Documentation Author Name: Matt Warriner	Documentation Author Signature:
Company: Weston & Associates Mechanical Engineers, Inc.	Signature Date: 2023-05-03
Address: 601 University Avenue, Suite 260	CEA/HERS Certification Identification (if applicable):
City/State/Zip: Sacramento, CA 95825	Phone: 916-482-0820

Responsible Person's Declaration statement

I certify the following under penalty of perjury, under the laws of the State of California:

1. The information provided on this Certificate of Compliance is true and correct.
2. I am eligible under Division 3 of the Business and Professions Code to accept responsibility for the building design or system design identified on this Certificate of Compliance (responsible designer)
3. The energy features and performance specifications, materials, components, and manufactured devices for the building design or system design identified on this Certificate of Compliance conform to the requirements of Title 24, Part 1 and Part 6 of the California Code of Regulations.
4. The building design features or system design features identified on this Certificate of Compliance are consistent with the information provided on other applicable compliance documents, worksheets, calculations, plans and specifications submitted to the enforcement agency for approval with this building permit application.
5. I understand that a registered copy of this Certificate of Compliance shall be made available with the building permit(s) issued for the building, and made available to the enforcement agency for all applicable inspections, and I will take the necessary steps to accomplish this requirement.
6. I understand that a registered copy of this Certificate of Compliance is required to be included with the documentation the builder provides to the building owner at occupancy, and I will take the necessary steps to accomplish these requirements.

Responsible Designer Name: Mitchell McAllister	Responsible Designer Signature:	
Company: California Design West Architects		
Address: 2100 19th Street	Date Signed: 2023-12-06	
City/State/Zip: Sacramento, CA 95818	License #: C17250	
Phone: 916-446-2466	Title:	Scope:
Responsible Designer Name: David Weston	Responsible Designer Signature:	
Company: Weston & Associates Mechanical Engineers		
Address: 601 University Avenue, Suite 260	Date Signed: 2023-05-03	
City/State/Zip: Sacramento, CA 95825	License #: M31220	
Phone: 916-482-0820	Title:	Scope:

IDENTIFICATION STAMP
DIV. OF THE STATE ARCHITECT
APP: 02-121275 INC:
REVIEWED FOR
SS ☑ FLS ☑ ACS ☑
DATE: 12/15/2023

CALIFORNIA DESIGN
WEST ARCHITECTS, Inc.

2100 19th Street
Sacramento, CA 95818

Phone: (916) 446-2466
Fax: (916) 446-5118
Web Page: ca-dw.com

These plans and prints thereof, as instruments of service, are owned by the architect and are for the use on this project only. Reproduction and/or distribution without the prior written consent of the architect is forbidden.

Copyright California Design West Architects, Inc.

ARCHITECT: CONSULTANT:

LICENSED ARCHITECT MITCHELL A. McALLISTER NO. C17250 REN. 08-31-2025 STATE OF CALIFORNIA

REGISTERED PROFESSIONAL ENGINEER No. M31220 MECHANICAL RENEWAL DATE: 12/31/2023 STATE OF CALIFORNIA

CONSULTANT:

WESTON & ASSOCIATES MECHANICAL ENGINEERS
601 UNIVERSITY AVE, SUITE 260 | SACRAMENTO, CA 95825
WESTON & ASSOCIATES #23-007

PROJECT NAME:

BUHACH COLONY HIGH SCHOOL

1800 NORTH BUHACH ROAD,
ATWATER, CA 95301

TEAM ROOMS, CONCESSIONS & RESTROOMS

MERCED UNION HIGH SCHOOL DISTRICT

MERCED COUNTY

KEY PLAN:

SHEET TITLE:

MECHANICAL TITLE 24 COMPLIANCE

JOB NUMBER:

SHEET NUMBER:

M8.2

DATE: APR 14, 2023

REVISION:

IDENTIFICATION STAMP
DIV. OF THE STATE ARCHITECT
APP: 02-121275 INC:
REVIEWED FOR
SS ☑ FLS ☑ ACS ☑
DATE: 12/15/2023

EQUIPMENT LIST

EWH H1	ELECTRIC WATER HEATER: AO SMITH MODEL DSE-50A WATER HEATER. WATER HEATER TO BE AS FOLLOWS: · TANK SHALL BE 50 GALLON CAPACITY · HEATER SHALL BE RATED AT 6 KW., 208V, 3Ø, 60 Hz., 16.7 FLA · HEATER TO PROVIDE 35 GPH RECOVERY AT A 70°F TEMPERATURE RISE. MAXIMUM SHIPPING WEIGHT = 300. / MAXIMUM OPERATING WEIGHT = 750 LBS. SET OUTLET TEMPERATURE TO 120°F SEE DETAIL 2/P6.2 FOR MOUNTING
CP H1	DOMESTIC WATER CIRCULATING PUMP: BELL AND GOSSET MODEL NBF-12U. PUMP TO BE AS FOLLOWS: · LEAD FREE BRONZE CIRCULATING PUMP · 3/4" FLANGED CONNECTIONS · PUMP TO BE CAPABLE OF PROVIDING 5 GPM AT 7.5 FEET HEAD AND 10 GPM AT 5 FEET HEAT · 120V / 1Ø/ 60 Hz - 55W / 0.48 FLA · PROVIDE WITH COMBINATION TC-1 AUTOMATIC TIMER KIT AND AQS-3/4" AQUASTAT. OPERATING WEIGHT < 15 LBS.
ET H1	EXPANSION TANK: WATTS MODEL DETA5 LEAD FREE EXPANSION TANK. TANK TO BE AS FOLLOWS: · ASME SECTION VIII CONSTRUCTION · FDA APPROVED FIXED BUTYL BLADDER · INTEGRAL BLADDER INTEGRITY MONITOR · TANK TO BE 3.5 GALLONS WITH A 2.3 GALLON ACCEPTANCE VOLUME · 3/4" INLET CONNECTION · MAXIMUM OPERATING PRESSURE OF 150 PSIG · MAXIMUM OPERATING WEIGHT = <40 LBS SEE DETAIL 3/P6.2 FOR MOUNTING.
IWH V1	TANKLESS ELECTRIC WATER HEATER: "CHRONOMITE" C-MICRO-LOW ACTIVATION TANKLESS WATER HEATER, MODEL CM-12L/208 WITH DIGITAL MICRO PROCESSING TEMPERATURE CONTROL CAPABLE OF MAINTAINING OUTLET TEMPERATURE. HEATER TO ACTIVATE AT 0.20 GPM. WATER HEATER TO BE 2500 WATTS, 208V/1Ø. HEATER TO BE CAPABLE OF A TEMPERATURE RISE OF 49°F AT 0.35 GPM. UNIT WEIGHT = 5 LBS. SET OUTLET TEMPERATURE TO 110°F.

APPLICABLE CODES

ALL WORK PERFORMED UNDER THIS CONTRACT IS TO CONFIRM TO THE FOLLOWING CODES AND REGULATIONS:

1. CALIFORNIA CODE OF REGULATIONS - TITLE 24
2. CALIFORNIA BUILDING CODE, 2022
3. CALIFORNIA MECHANICAL CODE, 2022
4. CALIFORNIA PLUMBING CODE, 2022
5. CALIFORNIA FIRE CODE, 2022
6. CALIFORNIA ELECTRICAL CODE, 2022
7. CALIFORNIA BUILDING ENERGY EFFICIENCY STANDARDS, 2022

THE ABOVE CODES AND REGULATIONS REFER TO THE LATEST EDITION OR REVISION IF FORCE ON THE DATE OF THE CONTRACT, UNLESS OTHERWISE STATED. NOTHING ON THE DRAWINGS IS TO BE CONSTRUED AS REQUIRING OR PERMITTING WORK THAT IS CONTRARY TO THE LISTED CODES AND REGULATIONS, OR OTHER LOCAL, STATE OR FEDERAL CODES OR REGULATIONS WHICH MAY BE APPLICABLE.

ANCHORAGE / BRACING NOTES

ALL MECHANICAL AND PLUMBING COMPONENTS SHALL BE ANCHORED AND INSTALLED PER THE DETAILS ON THE DSA APPROVED CONTRACT DOCUMENTS. WHERE NO DETAIL IS INDICATED, THE FOLLOWING COMPONENTS SHALL BE ANCHORED OR BRACED TO MEET THE FORCE AND DISPLACEMENT REQUIREMENTS PRESCRIBED IN THE 2022 CBC, SECTION 1617A.1.18 THROUGH 1617A.1.26 AND ASCE 7-16, CHAPTERS 13, 26 AND 30:

1. ALL PERMANENT EQUIPMENT AND COMPONENTS.
2. TEMPORARY, MOVABLE OR MOBILE EQUIPMENT THAT IS PERMANENTLY ATTACHED (E.G. HARD WIRED) TO THE BUILDING UTILITY SERVICES SUCH AS ELECTRICITY, GAS, OR WATER. "PERMANENTLY ATTACHED" SHALL INCLUDE ALL ELECTRICAL CONNECTION EXCEPT PLUGS FOR 110/220 VOLT RECEPTACLES HAVING A FLEXIBLE CABLE.
3. TEMPORARY, MOVABLE OR MOBILE EQUIPMENT WHICH IS HEAVIER THAN 400 POUNDS OR HAS A CENTER OF MASS LOCATED 4 FEET OR MORE ABOVE THE ADJACENT FLOOR OR ROOF LEVEL THAT DIRECTLY SUPPORT THE COMPONET IS REQUIRED TO BE RESTRAINED IN A MANNER APPROVED BY DSA.

THE FOLLOWING MECHANICAL COMPONENTS SHALL BE POSITIVELY ATTACHED TO THE STRUCTURE BUT NEED NOT DEMONSTRATE DESIGN COMPLIANCE WITH THE REFERENCES NOTED ABOVE. THESE COMPONENTS SHALL HAVE FLEXIBLE CONNECTIONS PROVIDED BETWEEN THE COMPONENT AND ASSOCIATED DUCTWORK AND PIPING. FLEXIBLE CONNECTION MUST ALLOW MOVEMENT IN BOTH TRANSVERSE AND LONGITUDINAL DIRECTIONS.

A. COMPONENTS WEIGHING LESS THAN 400 POUNDS AND HAVING A CENTER OF MASS LOCATED 4 FEET OR LESS ABOVE THE ADJACENT FLOOR OR ROOF LEVEL THAT DIRECTLY SUPPORT THE COMPONENT.
B. COMPONENTS WEIGHING LESS THAN 20 POUNDS, OR IN THE CASE OF DISTRIBUTED SYSTEMS, LESS THAN 5 POUNDS PER FOOT, WHICH ARE SUSPENDED FROM A ROOF OR FLOOR OR HUNG FROM A WALL.

THE ANCHORAGE OF ALL MECHANICAL AND PLUMBING COMPONENTS SHALL BE SUBJECT TO THE APPROVAL OF THE DESIGN PROFESSIONAL IN GENERAL RESPONSIBLE CHARGE OR STRUCTURAL ENGINEER DELEGATED RESPONSIBILITY AND ACCEPTANCE BY DSA. THE PROJECT INSPECTOR WILL VERIFY THAT ALL COMPONENTS AND EQUIPMENT HAVE BEEN ANCHORED IN ACCORDANCE WITH THE ABOVE REQUIREMENTS.

PIPING AND DUCTWORK SYSTEM BRACING NOTE:
PIPING AND DUCTWORK SHALL BE BRACED TO COMPLY THE FORCE AND DISPLACEMENTS PRESCRIBED IN ASCE 7-16 SECTION 13.3 AS DEFINED IN ASCE 7-16 SECTION 13.6.5, 13.6.6, 13.6.7, 13.6.8; AND 2022 CBC, SECTIONS 1617A.1.24, 1617A.1.25, AND 1617A.1.26.

THE METHOD OF SHOWING BRACING AND ATTACHMENT TO THE STRUCTURE FOR THE IDENTIFIED DISTRIBUTION SYSTEM ARE AS NOTED BELOW. WHEN BRACING AND ATTACHMENTS ARE BASED ON A PRE APPROVED INSTALLATION GUIDE (E.G. OSHPD/ HCAi OPM FOR 2013 CBC OR LATER), COPIES OF THE BRACING SYSTEM INSTALLATION GUIDE OR MANUAL SHALL BE AVAILABLE ON THE JOBSITE PRIOR TO THE START OF AND DURING THE HANGING AND BRACING OF THE DISTRIBUTION SYSTEMS. THE STRUCTURAL ENGINEER OF RECORD SHALL VERIFY THE ADEQUACY OF THE STRUCTURE TO SUPPORT THE HANGER AND BRACE LOADS.

MECHANICAL PIPING (MP). MECHANICAL DUCTS (MD),

_ MP _ MD - OPTION 1:
DETAILED ON THE APPROVED DRAWINGS WITH PROJECT SPECIFIC NOTED AND DETAILS.

X MP X MD - OPTION 2:
SHALL COMPLY WITH THE APPLICABLE OSHPD/ HCAi PRE-APPROVAL (OPM#), MASON OPM-0043-13 SEISMIC RESTRAINT SYSTEMS GUIDELINE.

PLUMBING GENERAL NOTES

1. MECHANICAL AND PLUMBING DETAILS APPLY TO ALL BUILDINGS WHETHER REFERENCED OR NOT.
2. PLUMBING PIPING SHALL OFFSET OVER OR UNDER DUCTS. COORDINATE WITH HEATING CONTRACTOR.
3. PIPING SHALL NOT PENETRATE INTO, OVER, OR THROUGH IT CLOSETS OR ELECTRICAL ROOMS UNLESS IT SERVES THAT SPECIFIC ROOM.
4. DRAWINGS SHALL BE CONSIDERED DIAGRAMMATIC IN NATURE AND ARE NOT INTENDED TO SHOW EVERY OFFSET, FITTING, OR STRUCTURAL DIFFICULTY THAT MAY BE ENCOUNTERED DURING INSTALLATION OF WORK. THE CONTRACTORS SHALL COORDINATE LOCATION OF ALL PLUMBING PIPING WITH ALL OTHER TRADES ON THIS PROJECT. LOCATION OF ALL ITEMS NOT DEFINITELY FIXED BY DIMENSIONS ARE APPROXIMATE ONLY. EXACT LOCATIONS NECESSARY TO SECURE BEST CONDITIONS AND RESULTS MUST BE DETERMINED AT THE JOB SITE AND SHALL HAVE THE APPROVAL OF THE ARCHITECT BEFORE BEING INSTALLED.
5. ALL VALVES SHALL BE FULL LINE SIZES UNLESS NOTED OTHERWISE.
6. PROVIDE WALL CLEANOUT AT ALL SINKS, LAVATORIES, AND URINALS.
7. SMACNA HANGER DETAILS FOR GRAVITY SUPPORTS MAY BE USED FOR DUCTWORK AND PIPING NOT REQUIRING SEISMIC RESTRAINTS.
8. ALL NEW SANITARY WASTE PIPING SHALL HAVE A MINIMUM BURRY DEPTH OF 18" AND BE SLOPED AT 1/4" PER FOOT MINIMUM UNLESS OTHERWISE NOTED. PIPING SHALL BE UNIFORMLY SLOPPED BETWEEN UPPER TERMINAL OF PIPE AND THE POINT OF CONNECTION TO THE SITE PIPING (AS INDICATED ON CIVIL PLANS) TO ACHIEVE MAXIMUM SLOPE POSSIBLE.
9. ACCESS PANELS SHALL BE PROVIDED AS NECESSARY TO PROPERLY ACCESS THE PLUMBING SYSTEM INCLUDING VALVES, EQUIPMENT, HOPPER DRAINS, AND INDIRECT DRAINS IN WALLS.
10. HVAC EQUIPMENT IS SHOWN FOR THE COORDINATION OF UTILITIES ONLY. REFER TO "M" SHEETS FOR ADDITIONAL INFORMAITON.
11. PROVIDE WATER HAMMER ARRESTORS (WHA) AT ALL FIXTURES AS INDICATED IN THE SPECIFICAITONS/NOTES. WHA SHALL BE SIZED AND PER THE PLUMBING & DRAINAGE INSTITUTE (PDI). WHA SHALL BE INSTALLED IN WALLS (NOT ABOVE CEILINGS).
12. REFERENCE ARCHITECTURAL DRAWINGS FOR BUILDING DIMENSIONS, EXACT LOCATIONS OF PLUMBING FIXTURES, AND PLUMBING FIXTURE MOUNTING HEIGHTS.
13. CONCEAL ALL PIPING IN WALL FURRINGS, PARTITIONS, ABOVE CEILINGS, EXCEPT IN MECHANICAL ROOMS OR WHERE NOTED OTHERWISE.
14. PROVIDE A TRAP PRIMER AT ALL FLOOR DRAINS AND FLOOR SINKS.

PLUMBING LEGEND

ABBREVIATIONS

ABC	ABOVE CEILING	FT	FEET	POD	POINT OF DISCONNECT
AD	ACCESS DOOR	FU	FIXTURE UNITS	PRV	PRESSURE REDUCING VALVE
AFF	ABOVE FINISHED FLOOR	G	NATURAL GAS	PS	PRESSURE SWITCH
AFG	ABOVE FINISHED GRADE	GCO	GRADE CLEAN OUT	PSI	POUNDS PER SQUARE INCH
AP	ACCESS PANEL	GD	GARBAGE DISPOSER	PSIG	POUNDS PER SQUARE INCH GAUGE
AQ	AQUASTAT	GLV	GLOBE VALUE	PT	PLUGGED TEE
ARCH	ARCHITECT	GM	GAS METER	R	RISE / RISER
AV	ACID VENT	GPH	GALLONS PER HOUR	RD	ROOF DRAIN
AVTR	ACID VENT THRU ROOF	GPM	GALLONS PER MINUTE	RET	RETURN
AW	ACID WASTE	GPR	GAS PRESSURE REGULATOR	RIO	ROUGH IN ONLY
BFF	BELOW FINISHED FLOOR	GSCK	GAS COCK	RM	ROOM
BFP	BACKFLOW PREVENTER	GSV	GAS SEISMIC VALVE	RO	REVERSE OSMOSIS WATER
BFV	BUTTERFLY VALVE	GI	GREASE INTERCEPTOR	RV	RELIEF VALVE
BG	BELOW GRADE	GV	GATE VALVE	RWL	RAINWATER LEADER
BLV	BALL VALVE	GW	GREASE WASTE PIPING	SCD	SECONDARY CONDENSATE DRAIN
CA	COMPRESSED AIR	HB	HOSE BIBB	SCH	SCHEDULE
CAP	CAPACITY	HD	HOPPER DRAIN	SCW	COLD SOFT WATER
CB	CATCH BASIN	HPG	HIGH PRESSURE NATURAL GAS	SD	STORM DRAIN
CBV	CALIBRATED BALANCE VALVE	HW	DOMESTIC HOT WATER	SH	SHOWER
CD	CONDENSATE DRAIN	HWR	DOMESTIC HOT WATER RETURN	SHT	SHEET
CFH	CUBIC FEET PER HOUR	ICW	INDUSTRIAL COLD WATER	SHW	HOT SOFT WATER
CI	CAST IRON	IHW	INDUSTRIAL HOT WATER	SHWR	HOT SOFT WATER RETURN
CKV	CHECK VALUE	IHWR	INDUSTRIAL HOT WATER RETURN	SK	SINK
CL	CENTER LINE	ID	INSIDE DIAMETER	SMS	SHEET METAL SCREW
CLG	CEILING	IE	INVERT ELEVATION	SOV	SHUT OFF VALVE
CMP	CORRUGATED METAL PIPE	IW	INDIRECT WASTE	SS	STAINLESS STEEL
CO	CLEANOUT	LA	LABORATORY AIR	STD	STANDARD
CO2	CARBON DIOXIDE	LAV	LAVATORY	STR	STRAINER
COP	CAP ON END OF PIPE	LBS	POUNDS	TA	TO ABOVE
COTF	CLEANOUT TO FLOOR	LG	LABORATORY GAS	TB	TO BELOW
COTG	CLEANOUT TO GRADE	LP	LOW PRESSUE	TEMP.	TEMPERATURE
CP	CIRCULATING PUMP	LWT	LEAVING WATER TEMPERATURE	TH	THERMOMETER
CR	CONCENTRIC REDUCER	MA	MEDICAL AIR	TMV	THERMOSTATIC MIXING VALVE
CSK	CLINIC SINK	MAX	MAXIMUM	TP	TRAP PRIMER
CV	CONTROL VALVE	MFR	MANUFACTURER	TYP	TYPICAL
CW	DOMESTIC COLD WATER	MGC	MEDICAL GAS COLUMN	TW	TEMPERED WATER
D	DROP	MIN	MINIMUM	UC	UNDER COUNTER
DCW	DOMESTIC COLD WATER	MISC	MISCELLANEOUS	UF	UNDER FLOOR
DD	DECK DRAIN	MPG	MEDIUM PRESSURE NATURAL GAS	UG	UNDERGROUND
DET	DETAIL	(N)	NEW	UN	UNION OR FLANGE
DF	DRINKING FOUNTAIN	N2	NITROGEN	UNO	UNLESS NOTED OTHERWISE
DHW	DOMESTIC HOT WATER	N2O	NITROUS OXIDE	UR	URINAL
DHWR	DOMESTIC HOT WATER RETURN	NC	NORMALLY CLOSED	V	SANITARY VENT
DI	DEIONIZED WATER	NIC	NOT IN CONTRACT	VB	VALVE BOX
DN	DOWN	NO	NORMALLY OPEN	VAC	MEDICAL VACUUM
DWG	DRAWING	NTS	NOT TO SCALE	VR	VENT RISER
(E)	EXISTING	O2	OXYGEN	VTR	VENT THRU ROOF
EWH	ELECTRIC WATER HEATER	OC	ON CENTER	W	SANITARY WASTE
EWT	ENTERING WATER TEMPERATURE	OFCI	OWNER FURNISHED CONTRACTOR INSTALLED	WD	WASTE DROP
FA	FROM ABOVE	ORD	OVERFLOW ROOF DRAIN	W/	WITH
FB	FROM BELOW	ORWL	OVERFLOW RAIN WATER LEADER	W/O	WITHOUT
FC	FLEXIBLE CONNECTION	OH	OVERHEAD	WAGD DISPOSAL	WASTE ANESTHESIA GAS
FCO	FLOOR CLEAN OUT	P&TRV RELIEF	PRESSURE & TEMPERATURE VALVE PIPING	WC	WATER CLOSET
FD	FLOOR DRAIN	P/L	PROPERTY LINE	WCO	WALL CLEAN OUT
FHC	FIRE HOSE RACK & CABINET	PAN	PIPE ANCHOR	WD	WASTE DROP
FLR	FLOOR	PG	PRESSURE GAUGE	WH	WALL HYDRANT
FPM	FEET PER MINUTE	PL	PLATE	WHA	WATER HAMMER ARRESTER
FSH	FIRE SPRINKLER HEAD	PLBG	PLUMBING	WM	WATER METER
FS	FLOOR SINK	POC	POINT OF CONNECTION	WSP	WET STANDPIPE
FSP	FIRE SPRINKLER PIPE				

SYMBOLS

Symbol	Description	Symbol	Description
	DOMESTIC COLD WATER LINE		BALL VALVE
	DOMESTIC HOT WATER		BALANCE VALVE
	DOMESTIC HOT WATER RETURN		GATE VALVE
TW	TEMPERED WATER		CHECK VALVE
NPW	NON POTABLE WATER		LEVER HANDLE GAS COCK
	SOIL OR WASTE LINE BELOW GRADE		PRESSURE REDUCING VALVE
	SOIL OR WASTE LINE ABOVE GRADE		SOLENOID VALVE W/ MOTOR ACTUATOR
IW	INDIRECT WASTE LINE		STRAINER
GW	GREASE WASTE LINE		PRESSURE GAUGE
	VENT LINE		THERMOMETER
RWL	RAINWATER LEADER LINE		UNION
ORWL	OVERFLOW RAINWATER LEADER LINE	T&P	TEMP.. & PRESSURE RELIEF LINE
CD	CONDENSATE DRAIN		VALVE BOX
G	NATURAL GAS LINE (LOW PRESSURE)		CAP (END OF PIPE)
MG	MEDIUM PRESSURE NATURAL GAS LINE		CIRCULATING PUMP
F	FIRE PROTECTION LINE		ANGLE VALVE
	FLOW IN DIRECTION OF ARROW		PRESSURE OR TEMP. RELIEF VALVE
	REDUCER	Ø	DIAMETER
	RISER DOWN (ELBOW)	COTF	CLEANOUT TO FLOOR
	RISER UP (ELBOW)	COTG	CLEANOUT TO GRADE
	R, D - RISER OR DROP	CO	CLEANOUT
	ITEM TO BE REMOVED / DEMOED		FLOOR DRAIN
	ITEM TO BE ABANDONED IN PLACE		FLOOR SINK
	POINT OF CONNECTION		HOSE BIBB
	POINT OF DISCONNECTION	ROOM NAME --	ROOM NAME AND NUMBER

CALIFORNIA DESIGN WEST ARCHITECTS, Inc.

2100 19th Street
Sacramento, CA 95818

Phone: (916) 446-2466
Fax: (916) 446-5118
Web Page: ca-dw.com

These plans and prints thereof, as instruments of service, are owned by the architect and are for the use on this project only. Reproduction and/or distribution without the prior written consent of the architect is forbidden.

Copyright California Design West Architects, Inc.

ARCHITECT: CONSULTANT:

LICENSED ARCHITECT MITCHELL A McALLISTER NO. C17250 REN. 2-28-2025 STATE OF CALIFORNIA

REGISTERED PROFESSIONAL ENGINEER DAVID A. WESTON No. M31220 RENEWAL DATE: 12/31/2023 MECHANICAL STATE OF CALIFORNIA

CONSULTANT:

WESTON & ASSOCIATES
MECHANICAL ENGINEERS
601 UNIVERSITY AVE, SUITE 260 | SACRAMENTO, CA 95825
WESTON & ASSOCIATES #23-007

PROJECT NAME:

BUHACH COLONY HIGH SCHOOL

1800 NORTH BUHACH ROAD, ATWATER, CA 95301

TEAM ROOMS, CONCESSIONS & RESTROOMS

MERCED UNION HIGH SCHOOL DISTRICT

MERCED COUNTY

KEY PLAN:

SHEET TITLE:

PLUMBING SCHEDULES LEGEND & NOTES

JOB NUMBER:

DATE: APR 14, 2023

REVISION:

SHEET NUMBER: **P0.1**

PLUMBING FIXTURE SCHEDULE

FIXTURE	DESCRIPTION	FIXTURE	VALVE / FAUCET	TRIM	NOTES	FIXTURE UNITS				VENT	WASTE		COLD WATER		HOT WATER	
						WASTE	VENT	CW	HW		BRANCH	OUTLET	BRANCH	OUTLET	BRANCH	OUTLET
WC-1	ADA WATER CLOSET | STUDENT HEIGHT | FLOOR MOUNTED | TOP SPUD BOWL | HARD WIRED SENSOR OPERATED FLUSH VALVE | 1.28 GPF | ADA	AMERICAN STANDARD "MADERA" FLOOR MOUNTED WATER CLOSET, MODEL 3043.001. FIXTURE TO BE AS FOLLOWS: · ELONGATED VITREOUS CHINA BOWL - WHITE COLOR · 16-1/2" RIM HEIGHT · FIXTURE TO BE RATED FOR 1.28 GPF. · 2-1/8" FULLY GLAZED TRAP-WAY · 1-1/2" TOP SPUD INLET	ZURN AQUA SENSE AV MODEL ZEMS6000AV-HET WATER CLOSET FLUSH VALVE. VALVE TO BE AS FOLLOWS: · TOP SPUD BOWL. · 1.28 GPF · PROVIDE WITH SOILD RING PIPE SUPPORT - YK · ADA COMPLIANT · PROVIDE ZURN POWER CONVERTER P6000-HW6	PROVIDE BEMIS COMMERCIAL HEAVY-DUTY PLASTIC TOILET SEAT, MODEL 1055SSC. SEAT TO BE EQUIPPED WITH STAINLESS STEEL POSTS AND SELF SUSTAINING HINGE. (1 1/16" HEIGHT)	FLUSH VALVE TRIP LEVER TO BE ON WIDE SIDE OF ENCLOSURE. INSTALLED SEAT HEIGHT TO BE 17-1/2" AFF.	4.0	4.0	5.0	0	2"	4"	4"	1 1/4"	1"	-	-
WC-2	WATER CLOSET | STUDENT HEIGHT | FLOOR MOUNTED | TOP SPUD BOWL | HARD WIRED SENSOR OPERATED FLUSH VALVE | 1.28 GPF	AMERICAN STANDARD "MADERA" FLOOR MOUNTED WATER CLOSET, MODEL 3451.128. FIXTURE TO BE AS FOLLOWS: · ELONGATED VITREOUS CHINA BOWL - WHITE COLOR · 15" RIM HEIGHT · FIXTURE TO BE RATED FOR 1.28 GPF. · 2-1/8" FULLY GLAZED TRAPWAY · 1-1/2" TOP SPUD INLET	ZURN AQUA SENSE AV MODEL ZEMS6000AV-HET WATER CLOSET FLUSH VALVE. VALVE TO BE AS FOLLOWS: · TOP SPUD BOWL. · 1.28 GPF · PROVIDE WITH SOLID RING PIPE SUPPORT - YK · PROVIDE ZURN POWER CONVERTER P6000-HW6	PROVIDE BEMIS COMMERCIAL HEAVY-DUTY PLASTIC TOILET SEAT, MODEL 1055SSC. SEAT TO BE EQUIPPED WITH STAINLESS STEEL POSTS AND SELF SUSTAINING HINGE. (1 1/16" HEIGHT)	FLUSH VALVE TRIP LEVER TO BE ON WIDE SIDE OF ENCLOSURE. INSTALLED SEAT HEIGHT TO BE 16" AFF.	4.0	4.0	5.0	0	2"	4"	4"	1 1/4"	1"	-	-
UR-1	URINAL | WALL HUNG | ADA OR STANDARD HEIGHT (DEPENDING ON MOUNTING HEIGHT) | HARD WIRED SENSOR OPERATED FLUSH VALVE | 0.125 GPF |	AMERICAN STANDARD "WASHBROOK" WALL HUNG, HIGH-EFFICIENCY URINAL, MODEL 6590.001, FIXTURE TO BE AS FOLLOWS: · VITREOUS CHINA BOWL - WHITE COLOR · WASHOUT URINAL · 3/4" TOP SPUD · FIXTURE TO BE RATED FOR 0.125 GPF.	ZURN AQUA SENSE AV MODEL ZEMS6003AV-ULF-IS, URINAL FLUSH VALVE. VALVE TO BE AS FOLLOWS: · TOP SPUD · 0.125 GPF · ADA COMPLIANT · PROVIDE ZURN POWER CONVERTER P6000-HW6	-	MOUNT AT HEIGHT AS INDICATED ON ARCHITECTURAL DRAWINGS (BOTH FIXTURE AND FLUSH VALVE,)	2.0	2.0	4.0	0	1 1/2"	2"	2"	1"	3/4"	-	-
L-1	LAVATORY | WALL HUNG | HW & CW | HARD WIRED SENSOR FAUCET | 0.5 GPM | ADA |	AMERICAN STANDARD "LUCERNE" WALL HUNG LAVATORY, MODEL 0355.012, FIXTURE TO BE AS FOLLOWS: · VITREOUS CHINA BOWL - WHITE COLOR · CONCEALED ARM SUPPORTS · FAUCET HOLES ON 4" O.C. · 20-1/2" LONG x18-1/4" WIDE · ADA (BASED ON MOUNTING HEIGHT)	ZURN HYDRO-X DECK MOUNTED SENSOR FAUCET MODEL Z6955-XL-S, FAUCET TO BE AS FOLLOWS: · H&CW · CHROME PLATED FINISH · 0.50 GPM VANDAL PROOF SPRAY OUTLET · ADA COMPLIANT · PROVIDE WITH THERMOSTATIC MIXING VALVE · PROVIDE ZURN POWER CONVERTER P6000-HW6	PROVIDE WITH JUST MODEL J-ADA-115-FS GRID DRAIN WITH OFFSET AND P-TRAP	MOUNT AT HEIGHT AS INDICATED ON ARCHITECTURAL DRAWINGS. INSULATE EXPOSED WASTE AND WATER PER NOTE 4 BELOW.	1.0	1.0	0.75	0.75	1 1/2"	2"	2"	3/4"	1/2"	3/4"	1/2"
L-2	LAVATORY | WALL HUNG | CW ONLY | HARD WIRED SENSOR FAUCET | 0.5 GPM | ADA |	AMERICAN STANDARD "LUCERNE" WALL HUNG LAVATORY, MODEL 0355.012, FIXTURE TO BE AS FOLLOWS: · VITREOUS CHINA BOWL - WHITE COLOR · CONCEALED ARM SUPPORTS · FAUCET HOLES ON 4" O.C. · 20-1/2" LONG x18-1/4" WIDE · ADA (BASED ON MOUNTING HEIGHT)	ZURN HYDRO-X DECK MOUNTED SENSOR FAUCET MODEL Z6955-XL-S, FAUCET TO BE AS FOLLOWS: · CW ONLY · CHROME PLATED FINISH · 0.50 GPM VANDAL PROOF SPRAY OUTLET · ADA COMPLIANT · PROVIDE ZURN POWER CONVERTER P6000-HW6	PROVIDE WITH JUST MODEL J-ADA-115-FS GRID DRAIN WITH OFFSET AND P-TRAP	MOUNT AT HEIGHT AS INDICATED ON ARCHITECTURAL DRAWINGS. INSULATE EXPOSED WASTE AND WATER PER NOTE 4 BELOW.	1.0	1.0	0.75	0.75	1 1/2"	2"	2"	3/4"	1/2"	3/4"	1/2"
MS-1	MOP SINK | FLOOR MOUNT | H&CW WATER	WILLIAMS SQUARE MOP SINK, MODEL SB-900. FIXTURE TO BE AS FOLLOWS: · TERRAZZO MOP SINK WITH 3" DRAIN · 24" LONG BY 24" WIDE BY 12 " DEEP · FIXTURE TO BE PROVIDED WITH STAINLESS STEEL CAP ON ALL FOUR SIDES	CHICAGO MODEL 540-LD897SWXFCP WALL MOUNTED FAUCET. FAUCET TO BE AS FOLLOWS: · 2-3/8" LEVER HANDLES · CERAMIC 1/4 TURN OPERATING CARTRIDGES · INTEGRAL VACUUM BREAKER, PAIL HOOK AND WALL BRACE.	PROVIDE WITH MODEL T-35 - 3 FT HOSE & STAINLESS STEEL WALL BRACKET, MODEL T-40 STAINLESS STEEL MOP HANGER WITH 3 SPRING LOADED RUBBER GRIPS.	MOUNT FAUCET AT 36" AFF.	3.0	3.0	3.0	2.25	2"	3"	3"	3/4"	1/2"	3/4"	1/2"
S-1	KITCHEN HANDWASH SINK	ADVANCE TABCO HAND SINK, MODEL 7-PS-25. FIXTURE AS FOLLOWS: · STAINLESS STEEL TYPE 304 HEAVY GAUGE · 24" LONG BY 20" WIDE · PROVIDE WITH MODEL 7-PS-11 D 12" HIGH WELDED SIDE SPLASHES	ADVANCE TABCO DECK MOUNTED GOOSE NECK FAUCET, WRIST HANDLES	TAILPIECE AND P-TRAP.	DIRECT WASTE CONNECTION. CONTRACTOR TO BRING PLUMBING UTILITIES TO FIXTURE AND CONNECT. SET OUTLET TEMPERATURE OF FAUCET TO 105°F. INSULATE H&CW AND WASTE PER NOTE 6.	2.0	2.0	1.0	1.0	1 1/2"	2"	1 1/2"	3/4"	1/2"	3/4"	1/2"
S-2	KITCHEN 3-COMPARTMENT SINK	ADVANCE TABCO THREE COMPARTMENT SINK, MODEL FC-3-2424-24RL, FIXTURE TO BE AS FOLLOWS: · STAINLESS STEEL TYPE 304 16 GAUGE · 120" LONG BY 30" WIDE · (3) 24" LONG BY 24" WIDE BY 14" DEEP BOWLS · 24" BY 24" LEFT AND RIGHT DRAIN BOARDS	T&S BRASS DECK MOUNTED FAUCET MODEL B-0231 FAUCET TO BE AS FOLLOWS: · 8" O.C. WALL MOUNTED FAUCET W/ 12" SWING NOZZLE · LEVER HANDLES · 1.5 GPM FLOW REGULATOR NOTE: 2 FAUCETS AT THIS THIS FIXTURE.	FIXTURE TO BE PROVIDED WITH FLOOR SINK FOR INDIRECT WASTE CONNECTION.	INDIRECT WASTE CONNECTION - RUN INDIRECT WASTE FROM SINK AND SPILL OVER FLOOR SINK.	3.0	-	1.5	1.5	-	3" BRANCH LINE TO FLOOR SINK. SERVING THIS FIXTURE		3/4"	3/4" @ FAUCETS 1/2" @ PRE-RINSE	3/4"	3/4" @ FAUCETS 1/2" @ PRE-RINSE
DF-1	WALL MOUNTED HIGH/LOW STAINLESS STEEL DRINKING FOUNTAIN & BOTTLE FILLER | HIGH, LOW ADA MOUNTING HEIGHT	HAWS HIGH/LOW STAINLESS STEEL DRINKING FOUNTAIN & BOTTLE FILLER. DRINKING FOUNTAIN MODEL 1117L WITH MODEL 1920 BOTTLE FILLER, PROVIDE UNIT COMPLETE WITH: · VANDAL-RESISTANT CHROME PLATED BRASS BUBBLERS. · FRONT PUSH BUTTON VALVES · STAINLESS STEEL BACK PANELS · 1 1/4" INTEGRATED TRAP	NA	NA	PROVIDE WITH HAWS IN WALL MOUNTING PLATE LOCATE BOTTLE FILLER OVER LOWER DRINKING FOUNTAIN.	1.0	1.0	0.5	0	1 1/2"	2"	1 1/2"	3/4"	1/2"	-	-
RB-1	REFRIGERATOR BOX	GUY GRAY MODEL BIM 875 WATER BOX. FIXTURE TO BE AS FOLLOWS: · 20 GAUGE GALVANIZED METAL WATER BOX · 18 GAUGE FACEPLATE. · 1/2" QUARTER TURN BALL VALVE. · LEAD FREE DESIGN				-	-	-	-	-	-	-	3/4"	1/2"	-	-

NOTES:
1. USE PIPE SIZE TABLE FOR SIZING ALL BRANCH WATER, WASTE, & VENT BRANCH PIPES.
2. REFERENCE ARCHITECTURAL DRAWINGS FOR FIXTURE MOUNTING HEIGHT.
3. WATER BRANCH LINES WHERE LESS THAN 10'-0" LONG MAY BE SAME SIZE AS OUTLETS SCHEDULED ABOVE.
4. AT ALL ADA SINKS AND LAVATORIES, INSULATE HOT WATER, COLD WATER, AND AND WASTE PIPING BELOW FIXTURE WITH "TRUEBRO" LAV GUARD PROTECTIVE MOLDED CLOSED CELL VINYL PIPE COVERS, WITH VANDAL RESISTANT SNAP-CLIP FASTENERS, AND AN ASTM E-84 SMOKE TEST RATING OF 0.
5. PROVIDE WALL CLEANOUT AT ALL SINKS WITH DIRECT CONNECTIONS.
6. PROVIDE WATER HAMMER ARRESTOR FOR ON BOTH H&CW BRANCH LINES AT ALL FIXTURES PER SPECIFICATION SECTION 22 05 23
7. WHERE KITCHEN SINK SPILLS TO FLOOR SINKS, INDIRECT WASTE TO BE DWV COPPER WITH UNIONS. SLIP JOINTS SHALL NOT BE PROVIDED.
8. WHERE FIXTURES ARE NOTED AS BEING "ADA", INSTALLATION TO MEET ADA REQUIREMENTS AND CBC REQUIREMENTS.
9. ADJUST OUTLET TEMPERATURE FOR ALL TEMPERED WATER SINKS TO 105°F (UNLESS DIRECTED OTHERWISE BY OWNER).

MAX. FIXTURE UNIT LOADING FOR WASTE PIPE

NOMINAL PIPE SIZE (INCHES)	2"Ø	3"Ø	4"Ø	6"Ø
FIXTURE UNITS (VERTICAL)	16*	48	256	1,380
FIXTURE UNITS (HORIZONTAL)	8*	35	216	720

NOTES:
1. PIPE SIZES TO BE PER CALIFORNIA PLUMBING CODE, TABLE 703.2.
2. SLOPE ALL HORIZONTAL WASTE PIPE AT 1/4" PER FOOT.
   * EXCEPT SIX-UNIT TRAPS OR WATER CLOSETS.

MAX. FIXTURE UNIT LOADING FOR VENT PIPE

NOMINAL PIPE SIZE (INCHES)	1 1/2"Ø	2"Ø	2 1/2"Ø	3"Ø	4"Ø
FIXTURE UNITS (HORIZONTAL & VERTICAL)	8	24	48	84	256
*MAXIMUM PIPING LENGTH HORIZONTAL & VERTICAL (FEET)	60	120	180	212	300

NOTES:
1. PIPE SIZES TO BE PER CALIFORNIA PLUMBING CODE, TABLE 703.2.
2. SLOPE ALL HORIZONTAL WASTE PIPE AT 1/4" PER FOOT.
   *LENGTH NOT TO EXCEED 1/3 OF THE TOTAL PERMITED LENGTH OF A VENT SHALL BE INSTALLED IN A HORIZONTAL POSITION. WHERE VENTS ARE INCREASE ONE PIPE SIZE FOR THEIR ENTIRE LENGTH , THE MAX LENGTH LIMITATIONS SPECIFICED DO NOT APPLY.

MAX. FIXTURE UNIT LOADING FOR WATER PIPE

NOMINAL PIPE SIZE (INCHES)	3/4"Ø	1"Ø	1 1/4"Ø	1 1/2"Ø	2"Ø	2 1/2"Ø	3"Ø	4"Ø
FIXTURE UNITS (WITHOUT FLUSH VALVES)	6	10	21	34	127	245	431	875
FIXTURE UNITS (WITH ONE OR MORE FLUSH VALVES)	-	5	10	20	48	124	295	850

NOTES:
1. USE ABOVE DATA ONLY WHEN PIPE SIZES ARE NOT OTHERWISE SIZED ON THE DRAWINGS.
2. FIXTURE UNITS ARE AS LISTED FOR PUBLIC USE IN THE CALIFORNIA PLUMBING CODE.

IDENTIFICATION STAMP
DIV. OF THE STATE ARCHITECT
APP: 02-121275 INC:
REVIEWED FOR
SS ☑ FLS ☑ ACS ☑
DATE: 12/15/2023

CALIFORNIA DESIGN WEST ARCHITECTS, Inc.

2100 19th Street
Sacramento, CA 95818

Phone: (916) 446-2466
Fax: (916) 446-5118
Web Page: ca-dw.com

These plans and prints thereof, as instruments of service, are owned by the architect and are for the use on this project only. Reproduction and/or distribution without the prior written consent of the architect is forbidden.

Copyright California Design West Architects, Inc.

ARCHITECT: CONSULTANT:

LICENSED ARCHITECT — MITCHELL A. McALISTER — NO. C17250 — REN. 08-31-2024 — STATE OF CALIFORNIA

REGISTERED PROFESSIONAL ENGINEER — No. M31220 — RENEWAL DATE: 12/31/2023 — MECHANICAL — STATE OF CALIFORNIA

CONSULTANT:

WESTON & ASSOCIATES MECHANICAL ENGINEERS
601 UNIVERSITY AVE, SUITE 260 | SACRAMENTO, CA 95825
WESTON & ASSOCIATES #23-007

PROJECT NAME:

BUHACH COLONY HIGH SCHOOL

1800 NORTH BUHACH ROAD,
ATWATER, CA 95301

TEAM ROOMS, CONCESSIONS & RESTROOMS

MERCED UNION HIGH SCHOOL DISTRICT

MERCED COUNTY

KEY PLAN:

SHEET TITLE:

PLUMBING SCHEDULES

JOB NUMBER:

SHEET NUMBER:

P0.2

DATE: APR 14, 2023

REVISION:

SHEET NOTES

1. 3/4" CD DROP IN WALL TERMINATE AT TAIL PIECE OF LAVATORY.
2. TP IN WALL WITH ACCESS DOOR.

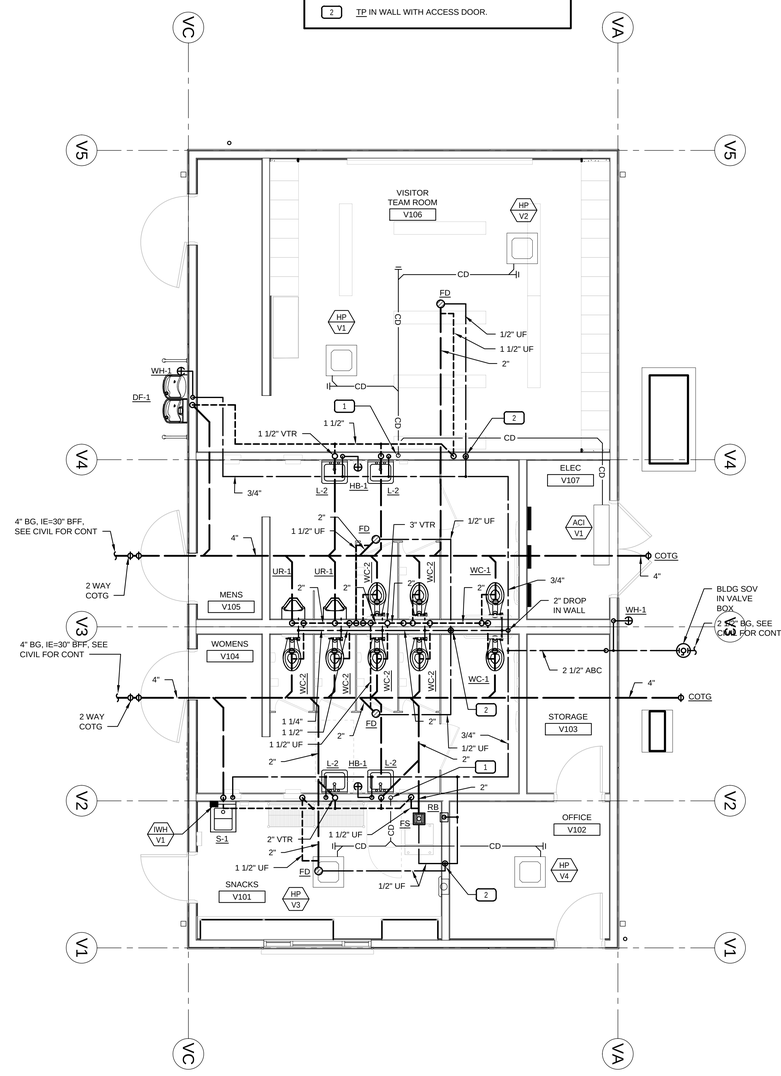

PLUMBING - VISITORS LOCKER ROOM/RESTROOM

SCALE: 1/4"=1'-0"

1 P2.1

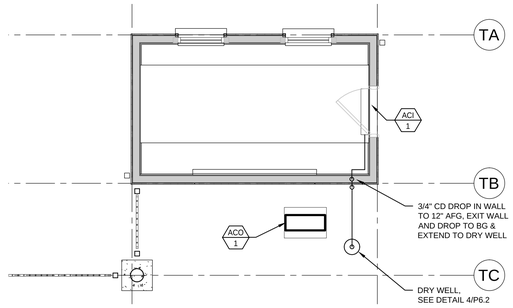

PLUMBING - TICKET BOOTH FLOOR PLAN

SCALE: 1/4"=1'-0"

2 P2.1

IDENTIFICATION STAMP
DIV. OF THE STATE ARCHITECT
APP: 02-121275 INC:
REVIEWED FOR
SS ☑ FLS ☑ ACS ☑
DATE: 12/15/2023

CALIFORNIA DESIGN WEST ARCHITECTS, Inc.

2100 19th Street
Sacramento, CA 95818

Phone: (916) 446-2466
Fax: (916) 446-5118
Web Page: ca-dw.com

These plans and prints thereof, as instruments of service, are owned by the architect and are for the use on this project only. Reproduction and/or distribution without the prior written consent of the architect is forbidden.

Copyright California Design West Architects, Inc.

ARCHITECT: CONSULTANT:

LICENSED ARCHITECT — MITCHELL A. McALISTER — NO. C17250 — REN. 08-31-2024 — STATE OF CALIFORNIA

REGISTERED PROFESSIONAL ENGINEER — No. M31220 — RENEWAL DATE: 12/31/2023 — MECHANICAL — STATE OF CALIFORNIA

CONSULTANT:

WESTON & ASSOCIATES
MECHANICAL ENGINEERS
601 UNIVERSITY AVE, SUITE 260 | SACRAMENTO, CA 95825
WESTON & ASSOCIATES #23-007

PROJECT NAME:

BUHACH COLONY HIGH SCHOOL

1800 NORTH BUHACH ROAD,
ATWATER, CA 95301

TEAM ROOMS, CONCESSIONS & RESTROOMS

MERCED UNION HIGH SCHOOL DISTRICT

MERCED COUNTY

KEY PLAN:

SHEET TITLE:

PLUMBING FLOOR PLANS

JOB NUMBER:	SHEET NUMBER:
	P2.1
DATE: APR 14, 2023	
REVISION:	

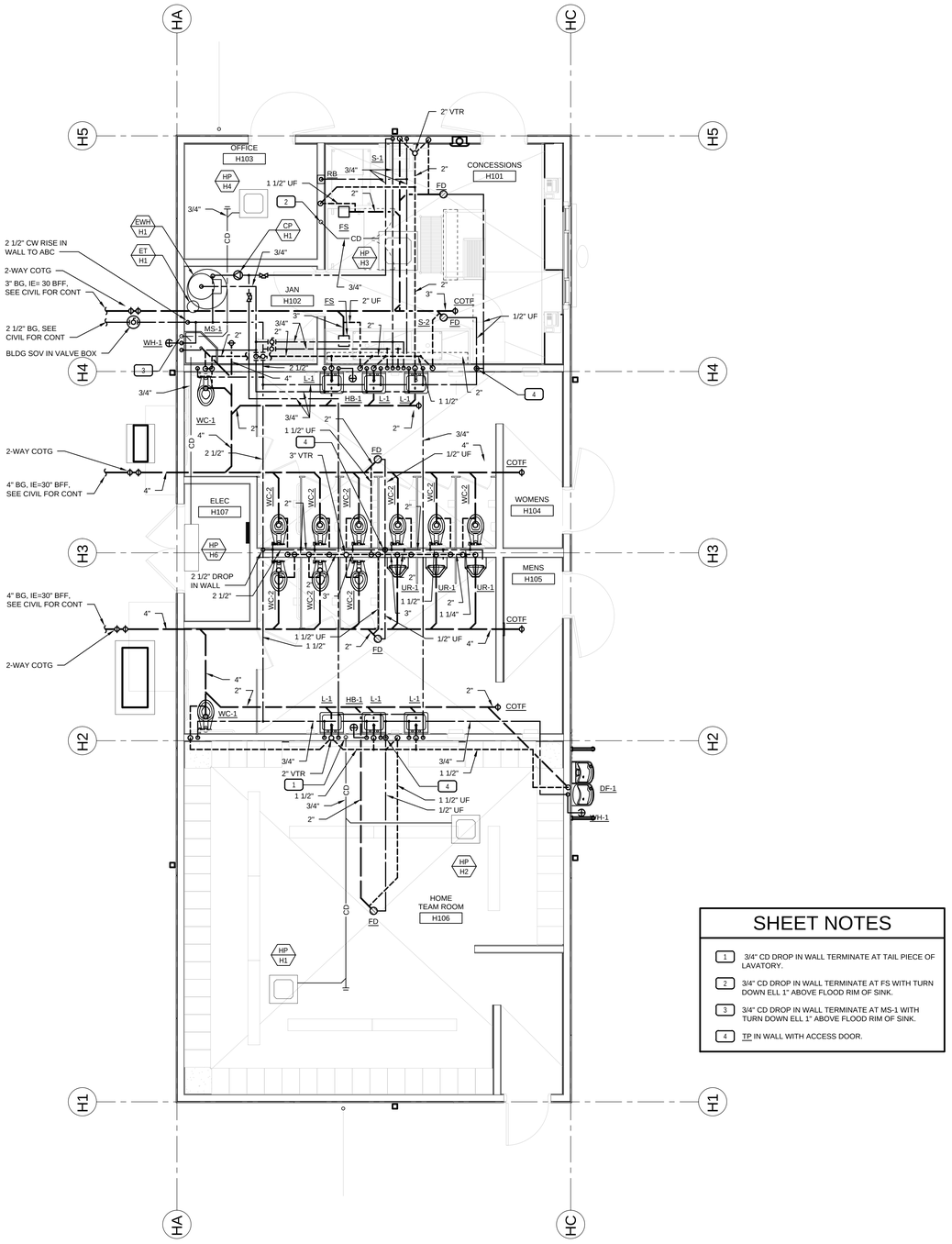

SHEET NOTES

1. 3/4" CD DROP IN WALL TERMINATE AT TAIL PIECE OF LAVATORY.
2. 3/4" CD DROP IN WALL TERMINATE AT FS WITH TURN DOWN ELL 1" ABOVE FLOOD RIM OF SINK.
3. 3/4" CD DROP IN WALL TERMINATE AT MS-1 WITH TURN DOWN ELL 1" ABOVE FLOOD RIM OF SINK.
4. TP IN WALL WITH ACCESS DOOR.

PLUMBING - HOME LOCKER ROOM/RESTROOM/ CONSESSIONS

SCALE: 1/4"=1'-0"

1 / P2.2

N

IDENTIFICATION STAMP
DIV. OF THE STATE ARCHITECT
APP: 02-121275 INC:
REVIEWED FOR
SS ☑ FLS ☑ ACS ☑
DATE: 12/15/2023

CALIFORNIA DESIGN WEST ARCHITECTS, Inc.

2100 19th Street
Sacramento, CA 95818

Phone: (916) 446-2466
Fax: (916) 446-5118
Web Page: ca-dw.com

These plans and prints thereof, as instruments of service, are owned by the architect and are for the use on this project only. Reproduction and/or distribution without the prior written consent of the architect is forbidden.

Copyright California Design West Architects, Inc.

ARCHITECT: CONSULTANT:

LICENSED ARCHITECT MITCHELL A. McALISTER NO. C17250 REN. 08-31-2024 STATE OF CALIFORNIA

REGISTERED PROFESSIONAL ENGINEER No. M31220 MECHANICAL RENEWAL DATE: 10/31/2025 STATE OF CALIFORNIA

CONSULTANT:

WESTON & ASSOCIATES
MECHANICAL ENGINEERS
601 UNIVERSITY AVE, SUITE 260 | SACRAMENTO, CA 95825
WESTON & ASSOCIATES #23-007

PROJECT NAME:

BUHACH COLONY HIGH SCHOOL

1800 NORTH BUHACH ROAD,
ATWATER, CA 95301

TEAM ROOMS, CONCESSIONS & RESTROOMS

MERCED UNION HIGH SCHOOL DISTRICT

MERCED COUNTY

KEY PLAN:

SHEET TITLE:

PLUMBING FLOOR PLANS

JOB NUMBER:

SHEET NUMBER: **P2.2**

DATE: APR 14, 2023

REVISION:

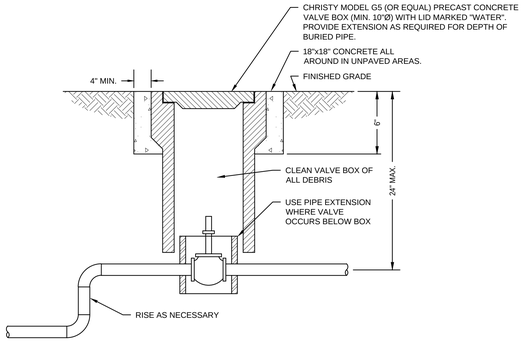

SHUT-OFF VALVE IN BOX DETAIL

NTS

5 P6.1

TYPICAL VENT PIPE THRU ROOF

NTS

4 P6.1

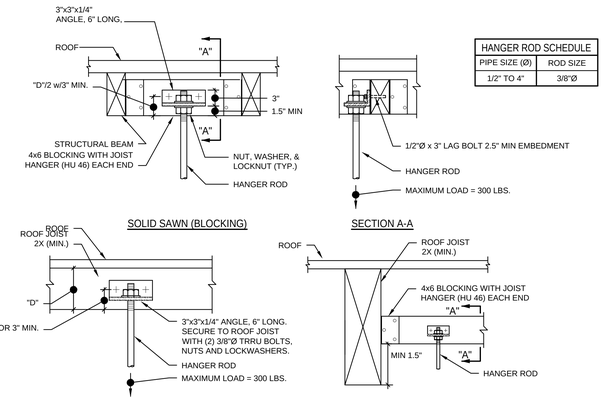

HANGER ROD SCHEDULE	
PIPE SIZE (Ø)	ROD SIZE
1/2" TO 4"	3/8"Ø

HANGER ROD SUPPORT DETAILS

NTS

2 P6.1

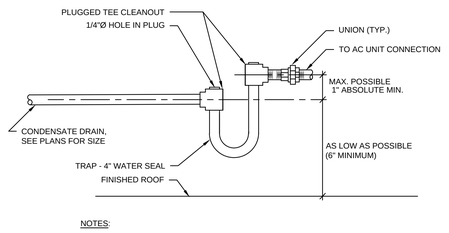

NOTES:

1. REFERENCE MECHANICAL DRAWINGS FOR CONDENSATE DRAIN PIPING.
2. FIRST SUPPORT TO BE WITHIN 12" OF TRAP.

CONDENSATE TRAP DETAIL

NTS

3 P6.1

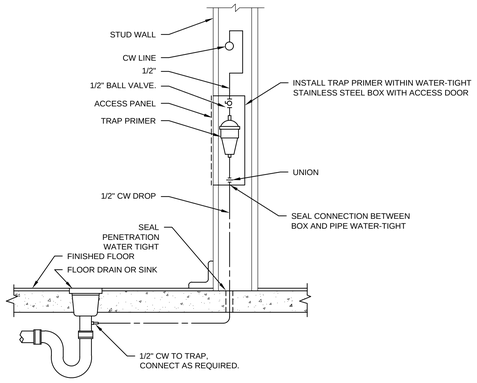

TRAP PRIMER TO SINGLE DRAIN DETAIL

TRAP PRIMER DETAILS

NTS

6 P6.1

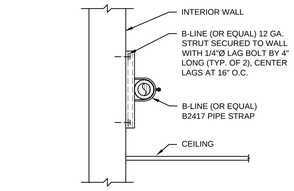

PIPE TO STUD SUPPORT

HANGER ROD SCHEDULE	
PIPE SIZE (Ø)	ROD SIZE
1/2" TO 4"	3/8"Ø

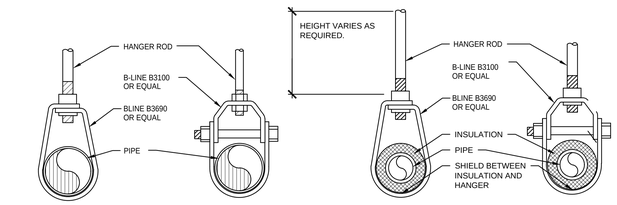

UNINSULATED COPPER PIPE | UNINSULATED PIPE | INSULATED COPPER PIPE | INSULATED PIPE

NOTES:

1. FOR HANGER ROD SUPPORT TO STRUCTURE, SEE 2 P6.1
2. SEISMIC RESTRAINTS ARE NOT REQUIRED FOR ALL PIPING 3" AND SMALLER WITH DESIGN IP OF 1.0.
3. SEISMIC RESTRAINTS ARE NOT REQUIRED FOR ALL PIPING SUSPENDED BY INDIVIDUAL HANGERS 12" OR LESS IN LENGTH FROM TOP OF PIPE TO BOTTOM OF ATTACHMENT TO STRUCTURE.
4. ALL SUSPENDED PIPING, DUCTWORK, CONDUIT AND CABLE TRAYS SHALL BE PROVIDED WITH, SEISMIC SWAY BRACES IN ACCORDANCE WITH THE MASON SEISMIC RESTRAINT GUIDELINE, OPM-0043-13.
5. PIPE SIZES AND SPACING TO BE PER THE ABOVE SEISMIC RESTRAINT GUIDELINES. CONTRACTOR TO PROVIDE COPIES OF DETAILS USED TO INSPECTOR OF RECORD (IOR) AND ARCHITECT PRIOR TO INSTALLATION.
6. TRAPEZE SUPPORTS SHALL NOT BE USED. IF TRAPEZE SUPPORTS ARE TO BE USED, CONTRACTOR IS RESPONSIBLE FOR PREPARING, SUBMITTING AND OBTAINING APPROVED DRAWINGS PER LISTED OPM-0043. ALL COST INCURRED WILL BE AT CONTRACTOR EXPENSE.

PIPE HANGER DETAILS

NTS

1 P6.1

MECHANICAL AND PLUMBING DETAILS APPLY TO ALL BUILDINGS WHETHER CORSS-REFERENCED OR NOT

IDENTIFICATION STAMP
DIV. OF THE STATE ARCHITECT
APP: 02-121275 INC:
REVIEWED FOR
SS ☑ FLS ☑ ACS ☑
DATE: 12/15/2023

CALIFORNIA DESIGN WEST ARCHITECTS, Inc.

2100 19th Street
Sacramento, CA 95818

Phone: (916) 446-2466
Fax: (916) 446-5118
Web Page: ca-dw.com

These plans and prints thereof, as instruments of service, are owned by the architect and are for the use on this project only. Reproduction and/or distribution without the prior written consent of the architect is forbidden.

Copyright California Design West Architects, Inc.

ARCHITECT: CONSULTANT:

LICENSED ARCHITECT — MITCHELL A. McALISTER — No. C17250 — REN. 08-31-2025 — STATE OF CALIFORNIA

REGISTERED PROFESSIONAL ENGINEER — No. M31220 — RENEWAL DATE: 12/31/2025 — MECHANICAL — STATE OF CALIFORNIA

CONSULTANT:

WESTON & ASSOCIATES
MECHANICAL ENGINEERS
601 UNIVERSITY AVE, SUITE 260 | SACRAMENTO, CA 95825
WESTON & ASSOCIATES #23-007

PROJECT NAME:

BUHACH COLONY HIGH SCHOOL

1800 NORTH BUHACH ROAD,
ATWATER, CA 95301

TEAM ROOMS, CONCESSIONS & RESTROOMS

MERCED UNION HIGH SCHOOL DISTRICT

MERCED COUNTY

KEY PLAN:

SHEET TITLE:

PLUMBING DETAILS

JOB NUMBER:	SHEET NUMBER:
	P6.1

DATE: APR 14, 2023

REVISION:

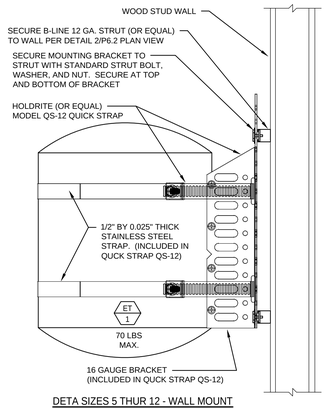

DETA SIZES 5 THUR 12 - WALL MOUNT

EXPANSION TANK MOUNTING DETAILS

NTS

3 / P6.2

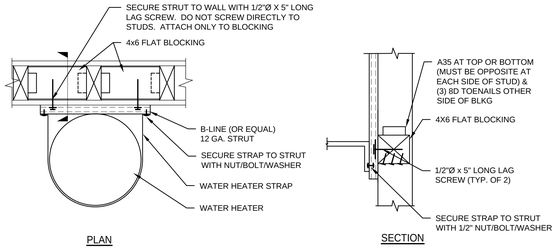

PLAN SECTION

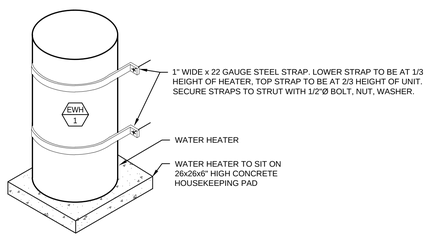

FLOOR MOUNTED WATER HEATER

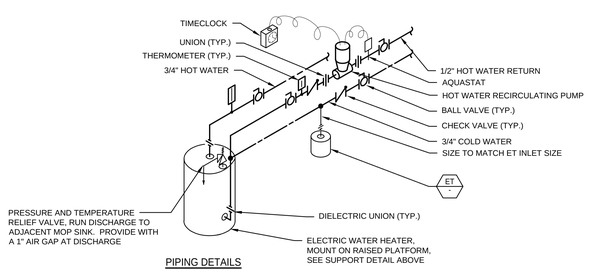

PIPING DETAILS

WATER HEATER DETAILS

NTS

2 / P6.2

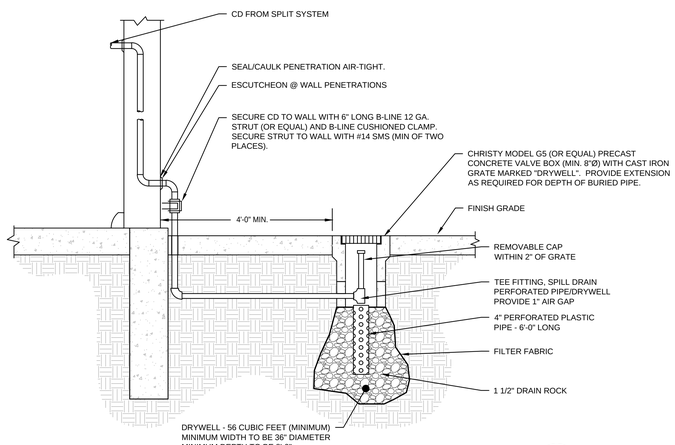

DRYWELL DETAIL

NTS

4 / P6.2

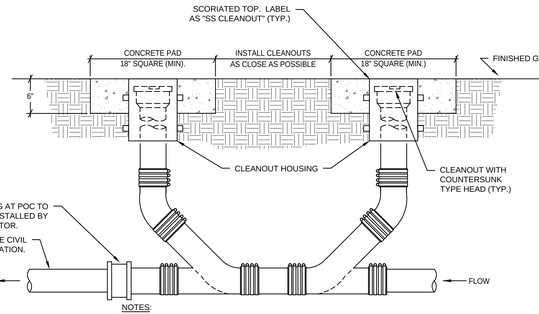

NOTES:

1. PROVIDE TWO WAY CLEANOUT AT ALL SANITARY SEWER AND STORM DRAIN POINTS OF CONNECTION WITH SITE PIPING SYSTEM.
2. PROVIDE ALL FITTINGS AND TRANSITIONS AS REQUIRED.

2-WAY CLEANOUT / DOUBLE CLEANOUT
(TO BE PROVIDED AT ALL CONNECTIONS TO SITE PIPING)

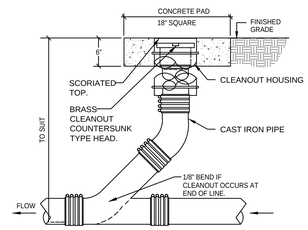

CLEANOUT TO GRADE

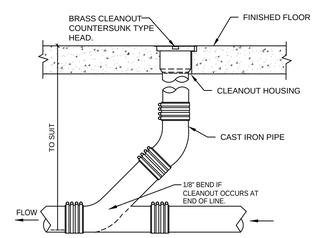

CLEANOUT TO FLOOR

CLEANOUT DETAILS

NTS

1 / P6.2

MECHANICAL AND PLUMBING DETAILS APPLY TO ALL BUILDINGS WHETHER CORSS-REFERENCED OR NOT

IDENTIFICATION STAMP
DIV. OF THE STATE ARCHITECT
APP: 02-121275 INC:
REVIEWED FOR
SS ☑ FLS ☑ ACS ☑
DATE: 12/15/2023

DESIGN WEST California

CALIFORNIA DESIGN WEST ARCHITECTS, Inc.

2100 19th Street
Sacramento, CA 95818

Phone: (916) 446-2466
Fax: (916) 446-5118
Web Page: ca-dw.com

These plans and prints thereof, as instruments of service, are owned by the architect and are for the use on this project only. Reproduction and/or distribution without the prior written consent of the architect is forbidden.

Copyright California Design West Architects, Inc.

ARCHITECT: CONSULTANT:

REGISTERED ARCHITECT — MATTHEW C. WELLER — DATE: 12/31/2024 — STATE OF CALIFORNIA

CONSULTANT:

WESTON & ASSOCIATES
MECHANICAL ENGINEERS
601 UNIVERSITY AVE, SUITE 260 | SACRAMENTO, CA 95825
WESTON & ASSOCIATES #23-007

PROJECT NAME:

BUHACH COLONY HIGH SCHOOL

1800 NORTH BUHACH ROAD, ATWATER, CA 95301

TEAM ROOMS, CONCESSIONS & RESTROOMS

MERCED UNION HIGH SCHOOL DISTRICT

MERCED COUNTY

KEY PLAN:

SHEET TITLE:

PLUMBING DETAILS

JOB NUMBER:	SHEET NUMBER:
DATE: APR 14, 2023	**P6.2**
REVISION:	

Applicable Code: 2022 CBC
MEP Component Anchorage Note
All mechanical, plumbing, and electrical components shall be anchored and installed per the details on the DSA-approved construction documents. The following components shall be anchored or braced to meet the force and displacement requirements prescribed in the 2022 CBC Sections 1617A.1.18 through 1617A.1.26 and ASCE 7-16 Chapters 13, 26, and 30:
1. All permanent equipment and components.
2. Temporary, movable or mobile equipment that is permanently attached (e.g., hard wired) to the building utility services such as electricity, gas or water. "Permanently attached" shall include all electrical connections except plugs for 110/220 volt receptacles having a flexible cable.
3. Temporary, movable or mobile equipment which is heavier than 400 pounds or has a center of mass located 4 feet or more above the adjacent floor or roof level that directly support the component is required to be restrained in a manner approved by DSA.
The following mechanical and electrical components shall be positively attached to the structure but need not demonstrate design compliance with the references noted above. These components shall have flexible connections provided between the component and associated ductwork, piping, and conduit. Flexible connections must allow movement in both transverse and longitudinal directions:
A. Components weighing less than 400 pounds and having a center of mass located 4 feet or less above the adjacent floor or roof level that directly support the component.
B. Components weighing less than 20 pounds, or in the case of distributed systems, less than 5 pounds per foot, which are suspended from a roof or floor or hung from a wall.
The anchorage of all mechanical, electrical and plumbing components shall be subject to the approval of the design professional in general responsible charge or structural engineer delegated responsibility and acceptance by DSA. The project inspector will verify that all components and equipment have been anchored in accordance with the above requirements.

Applicable Code: 2022 CBC
Piping, Ductwork, and Electrical Distribution System Bracing Note
Piping, ductwork, and electrical distribution systems shall be braced to comply with the forces and displacements prescribed in ASCE 7-16 Section 13.3 as defined in ASCE 7-16 Sections 13.6.5, 13.6.6, 13.6.7, 13.6.8; and 2022 CBC, Sections 1617A.1.24, 1617A.1.25 and 1617A.1.26.
The method of showing bracing and attachments to the structure for the identified distribution system are as noted below. When bracing and attachments are based on a preapproved installation guide (e.g., HCAi OPM for 2013 CBC or later), copies of the bracing system installation guide or manual shall be available on the jobsite prior to the start of and during the hanging and bracing of the distribution systems. The Structural Engineer of Record shall verify the adequacy of the structure to support the hanger and brace loads.
Mechanical Piping (MP), Mechanical Ducts (MD), Plumbing Piping (PP), Electrical Distribution Systems (E):
MP MD PP E Option 1: Detailed on the approved drawings with project specific notes and details.
MP MD PP E Option 2: Shall comply with HCAi (OSHPD) Preapproval (OPM #) #_____________.

LUMINAIRE SCHEDULE

TYPE	MANUFACTURER / CATALOG NO.	VOLTAGE / DESCRIPTION	LAMPS WATTAGE	LAMPS TYPE	MOUNTING	REMARK NOTE No.
A	PARAMOUNT FG4-1-L-2-4-35K-120	120 VOLT FOOD ZONE	14	LED	T-BAR TROFFER	
B	PARAMOUNT FG4-1-L-4-4-35K-120	120 VOLT FOOD ZONE	28	LED	T-BAR TROFFER	
C	WILLIAMS 76R-4-L52-90-35-	120 VOLT STORAGE/RESTROOM	33.9	LED	SURFACE	2
D	WILLIAMS AVX-4-L62-9-WPC	120 VOLT OFFICE/TICKET BOOTH	57	LED	SURFACE	
E	GARDCO SFCR-5R-48L-250-NW-G2-120-GL	120 VOLT EXTERIOR UNDER CANOPY	38	LED	SURFACE	
F	XTRALIGHT EMX	120 VOLT EXTERIOR WALL MOUNTED "EM" LIGHT	5	LED	WALL MOUNTED	1
G	VISIONAIRE - LUSSO ARRAY M-PT LSO-M-T3L-17L-4K-UNV-PTS-HDL-WSC-20	120 VOLT POLE TOP MOUNTED	202	LED	POLE TOP	1 3
G1	VISIONAIRE - LUSSO ARRAY M-PT LSO-M-T3L-17L-4K-UNV-PTS-HDL-WSC-20	120 VOLT POLE TOP MOUNTED	202	LED	POLE TOP	1 4
G2	GARDCO PUREFORM LED P26 P26-48L-500-NW-G2-AR-3-120-CS50	277 VOLT POLE ARM MOUNTED	148	LED	POLE ARM	1 4
H	WILLIAMS 50-G-S 2 4 -L33/935-S-AF12125-DIM-120	120 VOLT OFFICE	25.9	LED	T-BAR TROFFER	
I	KENALL MLHA12-24-F-LG-45L35K-DV-EL-NAT	277 VOLT UNDER BLEACHERS	45	LED	SURFACE	2

LUMINAIRE SCHEDULE REMARK NOTES:

(1) ARCHITECT TO CHOOSE COLOR
(2) REFER TO PLAN FOR "EM" FIXTURES WITH BATTERY BACKUP RUN DRIVER. PROVIDE WITH MIN. 90MINUTES BATTERY BACKUP.
(3) PROVIDE 13' HIGH, 4"Ø, POLE - SEE 1/E500.
(4) PROVIDE 20' HIGH, 4"Ø, POLE - SEE 10/E500.

PHOTOVOLATIC SYSTEM NOTES

NEW BUILDINGS IN THIS PROJECT HAVE LESS THEN 2400 SQ. FT. AND ARE LOCATED IN CLIMATE ZONE 12. REQUIRED PV SYSTEM IS LESS THAN 4kWdc, THEREFORE NEW BUILDINGS ON THIS PROJECT ARE EXEMPT FORM PHOTOVOLTAIC PRESCRIPTIVE REQUIREMENTS - DSA IR N-3, 2.1.2

ELECTRICAL SYMBOL LIST

- LUMINAIRE - CEILING SURFACE OR PENDANT MOUNTED (LETTER "a" DENOTES SWITCH FUNCTION, NUMBER "2" DENOTES CIRCUIT NUMBER - TYPICAL FOR ALL LUMINAIRES UNLESS NOTED OTHERWISE).
- LUMINAIRE - WALL MOUNTED
- ENCLOSED LUMINAIRE - SURFACE MOUNTED
- ENCLOSED LUMINAIRE - CEILING LAY-IN
- LUMINAIRE - CEILING RECESSED
- POLE TOP LUMINAIRE, WITH BASE
- ONE-ARM BRACKET LUMINAIRE, WITH POLE AND BASE
- TWO-ARM BRACKET LUMINAIRE, 90 DEGREE ANGLE, WITH POLE AND BASE
- TWO-ARM BRACKET LUMINAIRE, 180 DEGREE ANGLE, WITH POLE AND BASE
- STADIUM POLE LIGHTS
- SWITCH, +45" A.F.F. - "a,b" LETTER DENOTES MULTI-SWITCH FUNCTION, TYPICAL FOR ALL SWITCHES, MOTION SENSORS AND DAYLIGHT SENSORS UNLESS NOTED OTHERWISE. "K" DENOTES SINGLE POLE TOGGLE SWITCH.
- DIMMER, ON/OFF SWITCH - WALL MOUNTED AT +45" A.F.F. UNLESS NOTED OTHERWISE
- OCCUPANCY SENSOR SWITCH WITH MANUAL OVERRIDE - WALL MOUNTED AT +45" A.F.F. UNLESS NOTED OTHERWISE
- OS — OCCUPANCY AREA SENSOR SWITCH - CEILING MOUNTED
- J — JUNCTION BOX - SIZE AS REQUIRED BY CODE
- DUPLEX CONVENIENCE OUTLET - NEMA 5-20R +18" A.F.F. TYPICAL FOR ALL CONVENIENCE OUTLETS, UNLESS NOTED OTHERWISE (LETTER "A" SHOWN ADJACENT TO OUTLET DESIGNATES MOUNTED HORIZONTALLY ABOVE COUNTER).
- DUPLEX CONVENIENCE OUTLET - NEMA 5-20R +18" A.F.F.: (1) UNCONTROLLED RECEPTACLE, AND (1) CONTROLLED RECEPTACLE WITH A PERMANENT MARKING TO DIFFERENTIATE FROM THE UNCONTROLLED RECEPTACLES
- U — USB / DUPLEX COMBINATION 2 USB 2.0 TYPE
- GFCI DUPLEX CONVENIENCE OUTLET - NEMA 5-20R
- QUADPLEX CONVENIENCE OUTLET - NEMA 5-20R
- SPECIAL RECEPTACLE AS SHOWN ON PLANS
- (2) — DATA / PHONE OUTLET - FLUSH IN WALL +18" A.F.F. NUMBER IN PARENTHESIS INDICATES NUMBER OF JACKS. REFER TO SPECIFICATIONS FOR DATA AND PHONE OUTLET CONFIGURATION. STUB ONE 1" CONDUIT WITH BUSHING AT THE END AND PULL ROPE INTO ACCESSIBLE CEILING AREA.
- M — MICROPHONE OUTLET - XLR JACK.
- AP — WIRELESS ACCESS POINT, SEE DATA SPEC.
- X — FIRE ALARM HEAT DETECTOR - CEILING MOUNTED. "X" = "AC" - MOUNTED ABOVE SUSPENDED CEILING; "X" = "190°" - HIGH TEMPERATURE HEAT DETECTOR.
- FIRE ALARM SMOKE DETECTOR - CEILING MOUNTED. THE DEFAULT TYPE IS "PHOTOELECTRIC"
- FIRE ALARM AUDIBLE DEVICE, +90" A.F.F. UNLESS OTHERWISE NOTED. DEFAULT DEVICE IS A HORN
- YY — FIRE ALARM AUDIO / VISUAL DEVICE, +80" A.F.F. DEFAULT AUDIO DEVICE IS A HORN. "YY" INDICATES STROBE CANDELA RATING.
- EOL — END OF LINE RESISTOR
- FACP — MASTER FIRE ALARM CONTROL PANEL
- FAPS — REMOTE FIRE ALARM POWER SUPPLY
- SPEAKER - WALL MOUNTED. SEE NOTE 4. PROVIDE TO MATCH EXISTING ON SITE, OR TO BE 100% COMPATIBLE.
- EXTERIOR SPEAKER - WALL MOUNTED. SEE NOTE 4. PROVIDE TO MATCH EXISTING ON SITE, OR TO BE 100% COMPATIBLE.
- K — SECURITY SYSTEM KEYPAD AND OUTLET BOX +45" A.F.F. UNLESS NOTED. PROVIDE 3/4" CONDUIT STUB. SEE NOTE 4.
- SECURITY SYSTEM DOOR OR WINDOW CONTACT. PROVIDE 1/2" CONDUIT STUB. SEE NOTE 4.
- SECURITY SYSTEM MOTION SENSOR - PROVIDE TO MATCH EXISTING ON SITE.
- SECURITY CCTV CAMERA, SEE DATA SPEC.
- CLOCK OUTLET / CLOCK, PROVIDE TO MATCH EXISTING ON SITE, OR TO BE 100% COMPATIBLE.
- CONDUIT RUN CONCEALED IN CEILINGS OR WALLS. NUMBER OF HASH MARKS DENOTES QUANTITY OF WIRES. CURVED HASH MARK DENOTES QUANTITY OF #12 GREEN GROUND WIRES. CONDUCTORS OTHER THAN #12 ARE INDICATED ON PLANS. NO HASH MARKS DENOTES 2 #12 AWG AND 1 #12 GREEN GROUND IN 1/2" CONDUIT. TYPICAL FOR ALL CONDUITS.
- FLEXIBLE CONDUIT CONCEALED. NUMBER OF HASH MARKS DENOTES QUANTITY OF WIRES. CURVED HASH MARK DENOTES QUANTITY OF #12 GREEN GROUND WIRES. CONDUCTORS OTHER THAN #12 ARE INDICATED ON PLANS. NO HASH MARKS DENOTES 2 #12 AWG AND 1 #12 GREEN GROUND IN 1/2" MINIMUM DIAMETER CONDUIT.
- CONDUIT RUN UNDERFLOOR OR UNDERGROUND MINIMUM 1" DIAMETER.
- CONDUIT HOMERUN TO PANELBOARD, SWITCHBOARD OR TERMINAL CABINET
- CONDUIT WITH CAP
- EXISTING CONDUIT AND WIRING
- EXISTING CONDUIT TO BE REMOVED OR ABANDONED, REMOVE WIRES. COORDINATE WITH OWNER.
- PANELBOARD - SURFACE MOUNTED
- PANELBOARD - FLUSH MOUNTED
- EXISTING PANELBOARD - SURFACE MOUNTED
- EXISTING PANELBOARD - FLUSH MOUNTED
- TERMINAL CABINET
- SWITCHBOARD, DISTRIBUTION PANEL, OR MOTOR CONTROL CENTER
- EQUIPMENT DISCONNECT SWITCH - EXTERNALLY OPERATED, FUSED WITH FUSE SIZE TO MATCH EQUIPMENT NAMEPLATE
- EQUIPMENT DISCONNECT SWITCH - EXTERNALLY OPERATED, NON-FUSIBLE
- MECHANICAL EQUIPMENT DESIGNATION - SEE MECHANICAL PLANS
- 1 — DRAWING SHEET NUMBERED NOTE DESIGNATION - APPLIES TO NUMBERED NOTE ON SAME SHEET
- DRAWING PLAN OR DETAIL DESIGNATION - "1" OR "A" DENOTES PLAN OR DETAIL NUMBER, "E-1" DENOTES SHEET NUMBER

SYMBOL LIST NOTES:

1. EXISTING ELECTRICAL EQUIPMENT, OUTLETS, AND DEVICES ARE SHOWN THE SAME AS NEW, EXCEPT LIGHTLY AND ACCOMPANIED BY (E). SUCH ELECTRICAL EQUIPMENT, OUTLETS, AND DEVICES ARE TO REMAIN AS IS, UNLESS OTHERWISE NOTED ON PLAN OR SPECIFICATION.
2. ELECTRICAL OUTLET BOXES MOUNTED ON OPPOSITE SIDES OF FIRE-RATED WALLS OR PARTITIONS SHALL BE SEPARATED BY A HORIZONTAL DISTANCE OF NOT LESS THAN 24 INCHES PER CBC, WHETHER SHOWN ON THE PLANS OR NOT.
3. VERIFY ON SITE THAT ALL PANELBOARDS HAVE MINIMUM WORKING SPACES PER CODE AND THAT THE DEDICATED PANELBOARD SPACES ARE CLEAR OF ALL DUCTS, PIPING AND EQUIPMENT FOREIGN TO THE PANEL BOARDS. NOTIFY THE ENGINEER FOR CORRECTIVE ACTION IN THE EVENT THAT FOREIGN OBJECTS IMPEDE THE DEDICATED PANELBOARD AREAS.
4. WHERE CONDUIT STUB IS INDICATED, PROVIDE CONDUIT WITH BUSHING AT THE END OF CONDUIT AND PULL ROPE INTO ACCESSIBLE CEILING AREA.

ABBREVIATIONS

A	AMPERES	GND	GROUND
AC	ABOVE CEILING	IDF	INTERMEDIATE DISTRIBUTION FRAME
A.F.F.	ABOVE FINISHED FLOOR	MAX.	MAXIMUM
APPROX	APPROXIMATE	MIN.	MINIMUM
AWG	AMERICAN WIRE GAUGE	(N)	NEW
BKR	BREAKER	NEMA	NATIONAL ELECTRICAL MANUFACTURER ASSOCIATION
C.	CONDUIT	QTY	QUANTITY
C.B.	CIRCUIT BREAKER	THW	INSULATED STRAND WIRE
CKT	CIRCUIT	THHN	NYLON JACKETED WIRE
C.O.	CONDUIT ONLY, WITH PULL WIRE	UG	UNDERGROUND
(E)	EXISTING	UL	UNDERWRITERS LABORATORY
(F)	FUTURE	UON	UNLESS OTHERWISE NOTED
FA	FIRE ALARM	WP	WEATHER PROTECTED
GA.	GAUGE	XHHW	CROSS-LINKED POLYETHYLENE WIRE INSULATED

ELECTRICAL SHEET INDEX

No. OF SHEETS	DRAWING No.	DRAWING DESCRIPTIONS
1	E001	ELECTRICAL SHEET INDEX, SYMBOL LIST, ABBREVIATIONS, AND DEMOLITION GENERAL NOTES
2	E100	PARTIAL SITE PLAN - ELECTRICAL DEMOLITION
3	E110	OVERALL SITE PLAN - ELECTRICAL
4	E120	PARTIAL SITE PLAN - ELECTRICAL
5	E210	FLOOR PLANS - LIGHTING
6	E220	FLOOR PLANS - POWER
7	E230	FLOOR PLANS - SIGNAL
8	E240	FLOOR PLANS - FIRE ALARM
9	E250	BLEACHER FLOOR PLANS ELECTRICAL
10	E300	PARTIAL ONE LINE POWER DIAGRAM, PANEL SCHEDULES
11	E310	SITE SIGNAL RISER DIAGRAM, STADIUM SOUND SYSTEM DIAGRAM
12	E320	STADIUM LIGHTING RISER DIAGRAMS
13	E400	FIRE ALARM NOTES, DETAILS, OPERATION MATRIX, SCHEDULES
14	E410	FIRE ALARM RISER DIAGRAM, CALCULATIONS
15	E500	ELECTRICAL DETAILS
16	E510	ELECTRICAL DETAILS
17	E600	TITLE 24 - INDOOR LIGHTING COMPLIANCE FORMS
18	E610	TITLE 24 - OUTDOOR LIGHTING COMPLIANCE FORMS
19	E620	TITLE 24 - ELECTRICAL POWER DISTRIBUTION FORMS

IDENTIFICATION STAMP
DIV. OF THE STATE ARCHITECT
APP: 02-121275 INC:
REVIEWED FOR
SS ☑ FLS ☑ ACS ☑
DATE: 12/15/2023

CALIFORNIA DESIGN WEST ARCHITECTS, Inc.
2100 19th Street
Sacramento, CA 95818
Phone: (916) 446-2466
Fax: (916) 446-5118
Web Page: ca-dw.com

These plans and prints thereof, as instruments of service, are owned by the architect and are for the use on this project only. Reproduction and/or distribution without the prior written consent of the architect is forbidden.
Copyright California Design West Architects, Inc.

ARCHITECT: CONSULTANT:

LICENSED ARCHITECT MITCHELL A. McALLISTER NO. C 17250 REN. 2-28-2025 STATE OF CALIFORNIA
REGISTERED PROFESSIONAL ENGINEER JESSE U. BASTIAN No. E20229 Exp. 03-31-25 ELECTRICAL STATE OF CALIFORNIA
12/08/2023

CONSULTANT:
M. NEILS ENGINEERING, INC.
Electrical Engineers | Lighting Designers
100 Howe Ave., Suite 235N
Sacramento, CA 95825-8217
www.mneilsengineering.com
Tel: (916) 923-4400
PROJECT #: 23051.21
PROJECT MGR: Sinisha Glisic

PROJECT NAME:
BUHACH COLONY HIGH SCHOOL

1800 NORTH BUHACH RD
ATWATER, CA 95301

CONCESSIONS/TOILET BUILDINGS, TICKET BOOTH & STADIUM UPGRADES

MERCED UNION HIGH SCHOOL DISTRICT

MERCED COUNTY

KEY PLAN:

SHEET TITLE:
ELECTRICAL COVER SHEET

JOB NUMBER:
DATE: MARCH 28, 2023
REVISION:
SHEET NUMBER: E001

Dec 08, 2023 – 10:13am, / pivanov
UNAUTHORIZED CHANGES & USES: M. Neils Engineering, Inc. preparing these plans will not be responsible for, or liable for unauthorized changes to or uses to these plans. All changes to these plans must be in writing and must be approved by M. Neils Engineering, Inc.

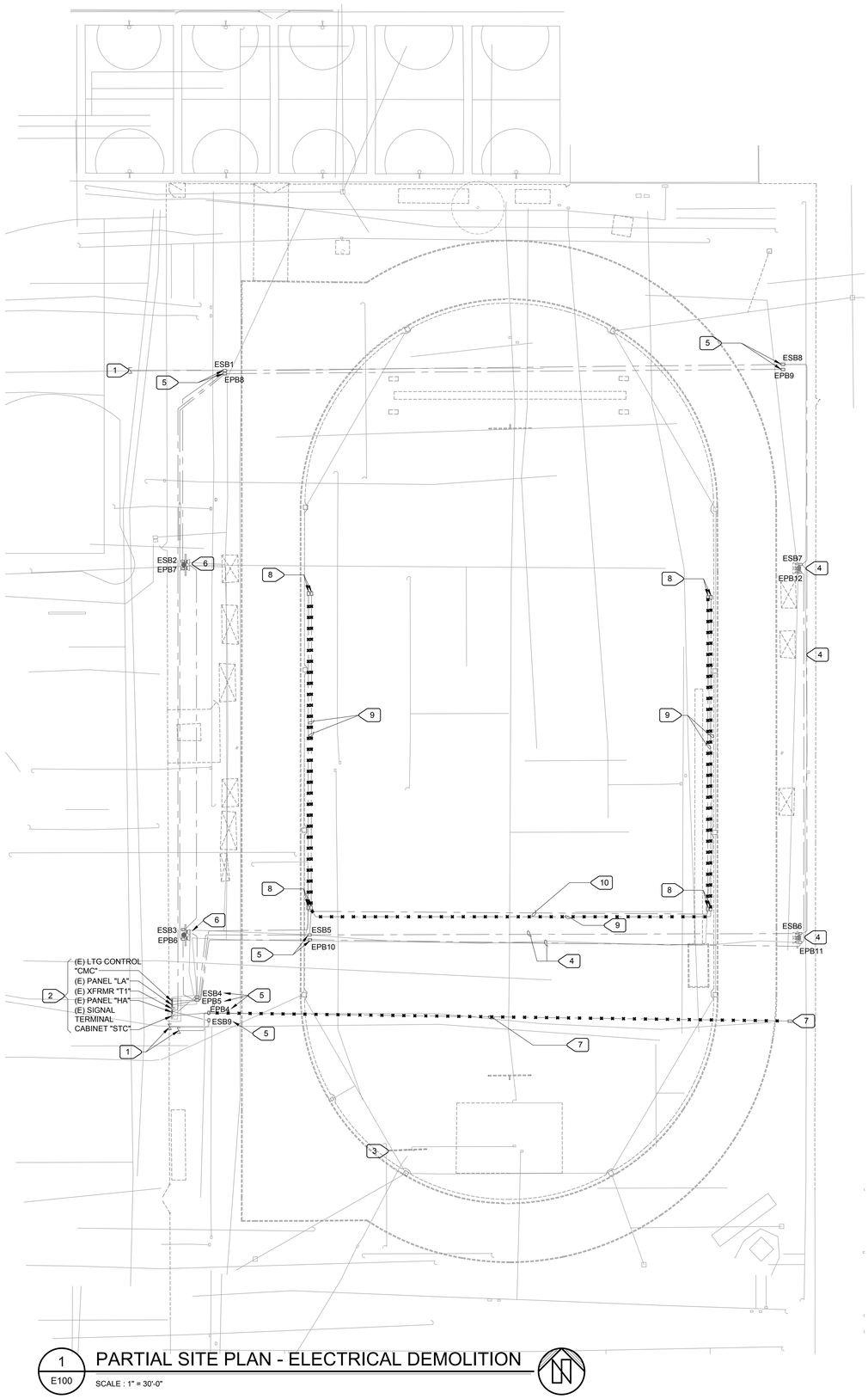

1 E100 PARTIAL SITE PLAN - ELECTRICAL DEMOLITION

SCALE : 1" = 30'-0"

GENERAL NOTES:

1. EXISTING PULLBOXES ARE SHOWN PER AS-BUILT DRAWINGS AND FIELD OBSERVATIONS. CONTRACTOR SHALL VERIFY EXISTING CONDITION BEFORE START DEMOLITION. EXISTING PULLBOXES SHALL BE KEPT IN PLACE UNLESS SHOWN TO BE REMOVED. PROTECT DURING CONSTRUCTION AND ADJUST TO BE FLUSH WITH NEW SURFACES/GRADES.
2. EXISTING PULLBOXES MAY REQUIRE RELOCATION TO FREE SPACE FOR NEW CONSTRUCTION. CONTRACTOR SHALL ADJUST EXISTING CONDUITS, OR ADD NEW CONDUITS TO ACCOMMODATE PULLBOX RELOCATION. ADJUST EXISTING WIRING TO ACCOMMODATE NEW PULLBOX LOCATION - SPLICE POWER CONDUCTORS, REPLACE LOW VOLTAGE CABLING BETWEEN TERMINATION POINT. NO SPLICING LOW VOLTAGE CABLING UNDERGROUND.
3. EXISTING U.G. CONDUITS ARE SHOWN PER AS-BUILT DRAWINGS AND LIMITED FIELD OBSERVATIONS. CONTRACTOR SHALL TRACE U.G. CONDUITS BEFORE DEMOLITION STARTS AND INFORM ENGINEER IF THIS DRAWINGS ARE NOT ACCURATE AND REQUIRE DESIGN ADJUSTMENT.
4. EXISTING CONDUITS SHALL BE KEPT IN PLACE UNLESS SHOWN OTHERWISE. PROTECT DURING CONSTRUCTION. ADJUST IF NEEDED TO ACCOMMODATE NEW CONSTRUCTION.
5. CLEAN EXISTING CONDUITS (BLOW AIR AND MANDREL) BEFORE ATTEMPT TO PULL IN NEW CONDUCTORS.

NUMBERED NOTES:

1. SEE SITE PLAN FOR CONTINUATION.
2. PROTECT DURING CONSTRUCTION.
3. (E) SCOREBOARD TO BE DEMOLISHED, DISCONNECT AND REMOVE WIRING BACK TO SOURCE. REMOVE ASSOCIATED CONDUIT.
4. (E) POLE SHALL BE MOVED (BY OTHERS) SEE ARCHITECTURAL DRAWINGS (GS099 - NOTE 22, AS101 - NOTE 6.31) FOR EXACT LOCATION. ELECTRICAL CONTRACTOR TO RELOCATE ASSOCIATED PULLBOXES AND PROVIDE (N) CONDUITS/CONDUCTORS - SEE 1/E120.
5. PROTECT (E) PULLBOX IN PLACE. PROTECT ASSOCIATED CONDUITS.
6. PROTECT (E) LIGHT POLE, PULLBOXES AT BASE OF POLE, AND ASSOCIATED CONDUITS.
7. REMOVE PULLBOX AND ASSOCIATED CONDUITS BACK TO EPB4.
8. REMOVE (E) PULLBOX.
9. REMOVE CONDUIT(S) TO EXTENT SHOWN.
10. PROTECT POWER CONDUIT BETWEEN TWO PULLBOXES TO BE REMOVED. SEE 1/E120.

IDENTIFICATION STAMP
DIV. OF THE STATE ARCHITECT
APP: 02-121275 INC:
REVIEWED FOR
SS ☑ FLS ☑ ACS ☑
DATE: 12/15/2023

CALIFORNIA DESIGN WEST ARCHITECTS, Inc.

2100 19th Street
Sacramento, CA 95818

Phone: (916) 446-2466
Fax: (916) 446-5118
Web Page: ca-dw.com

These plans and prints thereof, as instruments of service, are owned by the architect and are for the use on this project only. Reproduction and/or distribution without the prior written consent of the architect is forbidden.

Copyright California Design West Architects, Inc.

ARCHITECT: CONSULTANT:

LICENSED ARCHITECT MITCHELL A. MCALISTER No. C 17250 REN. 08-31-25 STATE OF CALIFORNIA

REGISTERED PROFESSIONAL ENGINEER JESSE U. BASTIAN No. E20229 Exp. 03-31-25 ELECTRICAL STATE OF CALIFORNIA

12/08/2023

CONSULTANT:

M. NEILS ENGINEERING, INC.
Electrical Engineers | Lighting Designers
100 Howe Ave., Suite 235N
Sacramento, CA 95825-8217
www.mneilsengineering.com
Tel: (916) 923-4400

PROJECT #: 23051.21
PROJECT MGR: Sinisha Glisic

PROJECT NAME:

BUHACH COLONY HIGH SCHOOL

1800 NORTH BUHACH RD
ATWATER, CA 95301

CONCESSIONS/TOILET BUILDINGS, TICKET BOOTH & STADIUM UPGRADES

MERCED UNION HIGH SCHOOL DISTRICT

MERCED COUNTY

KEY PLAN:

SHEET TITLE:

PARTIAL SITE PLAN - ELECTRICAL DEMOLITION

JOB NUMBER:

SHEET NUMBER: **E100**

DATE: MARCH 28, 2023

REVISION:

Dec 08, 2023 – 10:13am / pianov
UNAUTHORIZED CHANGES & USES: M. Neils Engineering, Inc. preparing these plans will not be responsible for, or liable for unauthorized changes to or uses to these plans. All changes to these plans must be in writing and must be approved by M. Neils Engineering, Inc.

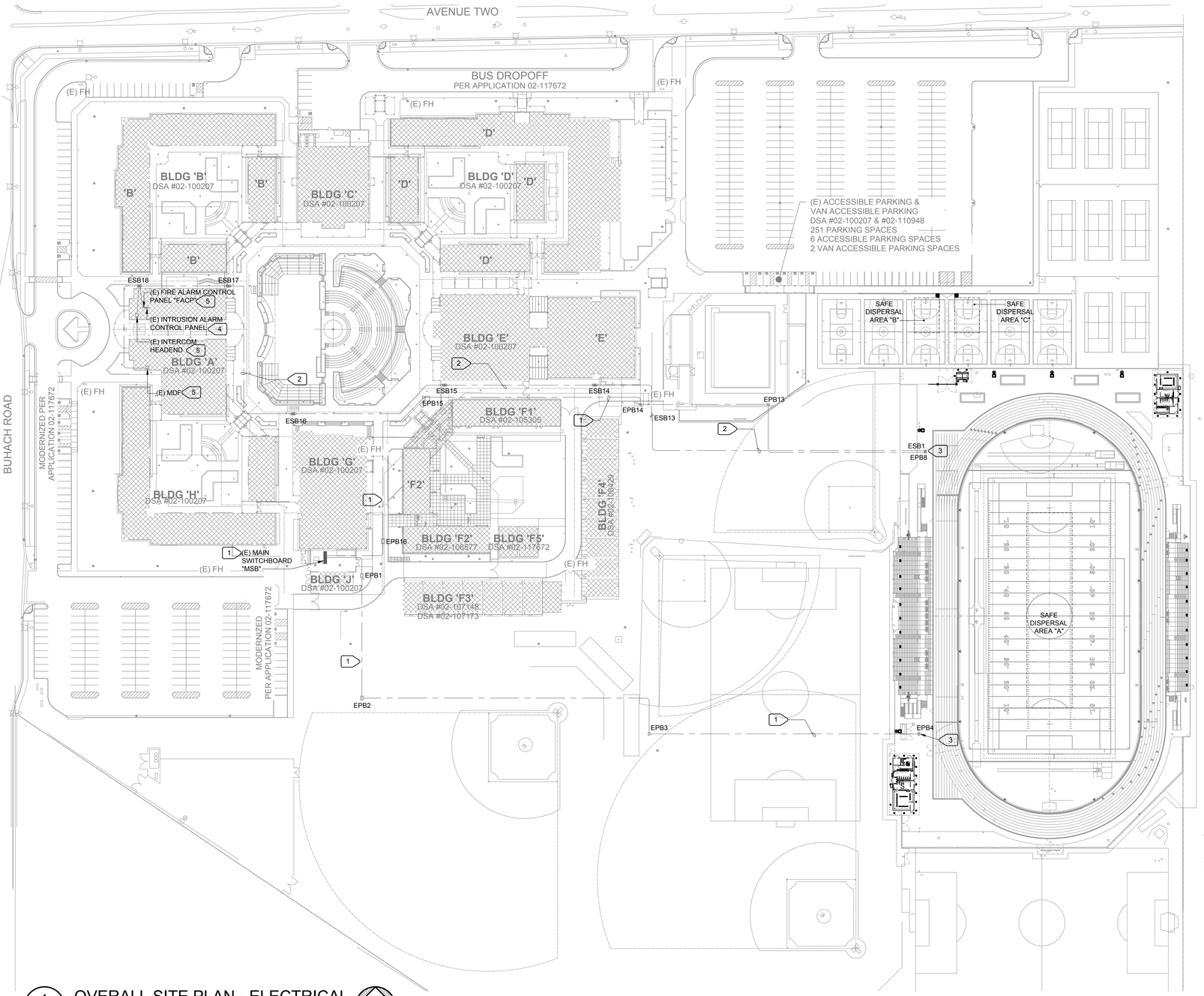

1 E110 OVERALL SITE PLAN - ELECTRICAL

SCALE : 1" = 60'-0"

NUMBERED NOTES:

1. SEE ONE LINE DIAGRAM FOR (N) CIRCUIT BREAKER, (N) WIRING THROUGH (E) CONDUITS.
2. SEE SITE SIGNAL RISER DIAGRAM AND FIRE ALARM RISER DIAGRAM FOR (N) WIRING THROUGH (E) CONDUITS.
3. SEE SHEET E120 FOR CONTINUATION.
4. PROVIDE (N) ZONE FOR INTRUSION ALARM INSTALLED IN THIS PROJECT. PROGRAM PANEL AS DIRECTED BY OWNER.
5. PROGRAM HEAD END EQUIPMENT FOR NEW DEVICES.

IDENTIFICATION STAMP
DIV. OF THE STATE ARCHITECT
APP: 02-121275 INC:
REVIEWED FOR
SS ☑ FLS ☑ ACS ☑
DATE: 12/15/2023

CALIFORNIA DESIGN WEST ARCHITECTS, Inc.

2100 19th Street
Sacramento, CA 95818

Phone: (916) 446-2466
Fax: (916) 446-5118
Web Page: ca-dw.com

These plans and prints thereof, as instruments of service, are owned by the architect and are for the use on this project only. Reproduction and/or distribution without the prior written consent of the architect is forbidden.

Copyright California Design West Architects, Inc.

ARCHITECT: CONSULTANT:

LICENSED ARCHITECT MITCHELL A. McALLISTER NO. C17250 REGISTERED PROFESSIONAL ENGINEER JESSE U. BASTIAN No. E20229 Exp. 03-31-25 ELECTRICAL STATE OF CALIFORNIA

12/08/2023

CONSULTANT:

M. NEILS ENGINEERING, INC.
Electrical Engineers | Lighting Designers
100 Howe Ave., Suite 235N
Sacramento, CA 95825-8217
www.mneilsengineering.com
Tel: (916) 923-4400

PROJECT #: 23051.21
PROJECT MGR: Sinisha Glisic

PROJECT NAME:

BUHACH COLONY HIGH SCHOOL

1800 NORTH BUHACH RD
ATWATER, CA 95301

CONCESSIONS/TOILET BUILDINGS, TICKET BOOTH & STADIUM UPGRADES

MERCED UNION HIGH SCHOOL DISTRICT

MERCED COUNTY

KEY PLAN:

SHEET TITLE:

OVERALL SITE PLAN - ELECTRICAL

JOB NUMBER:

SHEET NUMBER:

DATE: MARCH 28, 2023

REVISION:

E110

Dec 08, 2023 - 10:13am, / pivanov
UNAUTHORIZED CHANGES & USES: M. Neils Engineering, Inc. preparing these plans will not be responsible for, or liable for unauthorized changes to or uses to these plans. All changes to these plans must be in writing and must be approved by M. Neils Engineering, Inc.

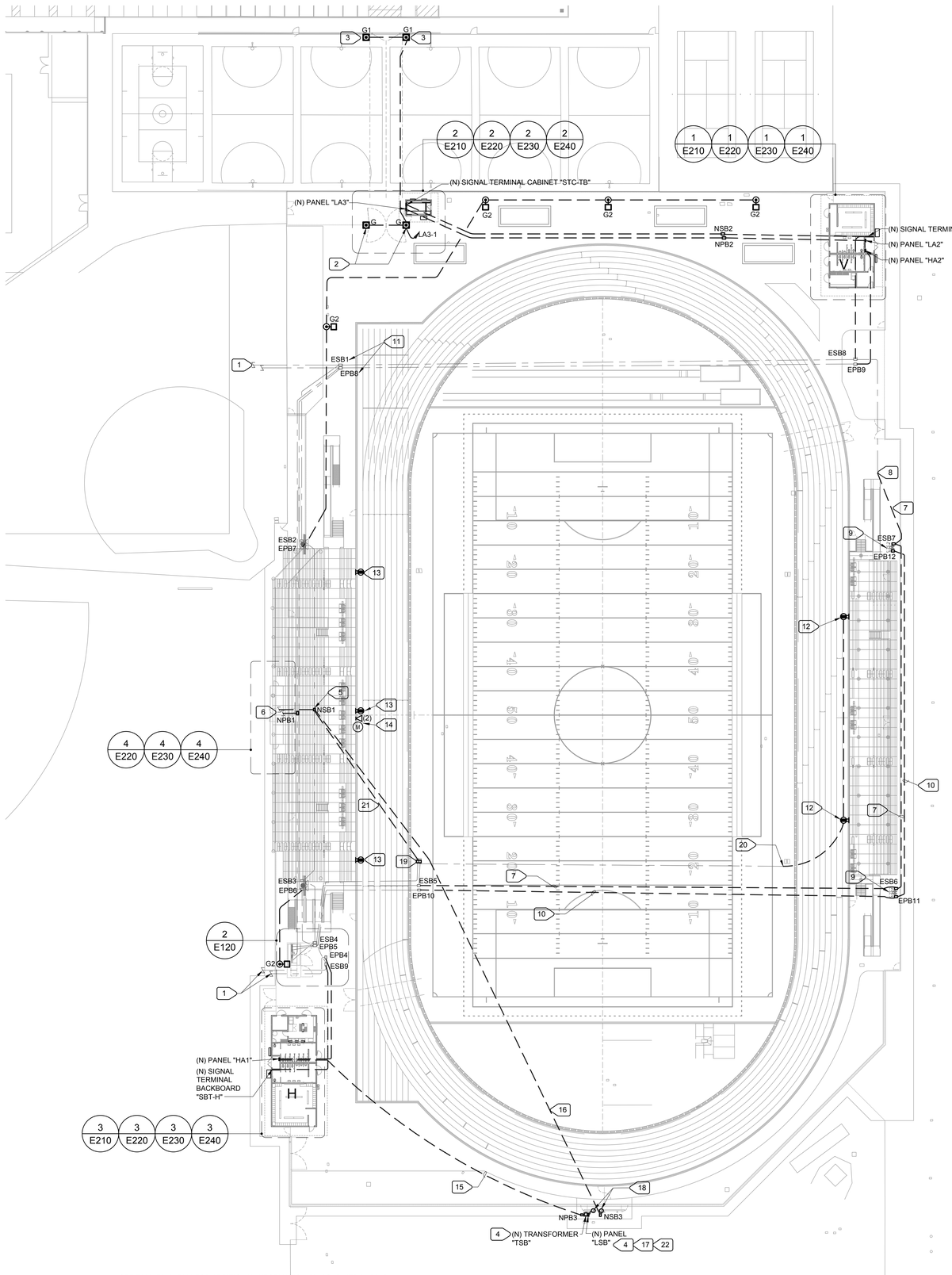

SEE E300, E310, E320 FOR ADDITIONAL INFORMATION ON CONDUITS, WIRING, PULLBOXES, TRANSFORMERS, LIGHTING, P.A. SYSTEM, ETC.

1 E120 PARTIAL SITE PLAN - ELECTRICAL

SCALE : 1" = 30'-0"

NUMBERED NOTES:

1. SEE SITE PLAN FOR CONTINUATION.
2. INSTALL FIXTURE SUCH THAT ARM IS FACING NORTH. COORDINATE WITH ARCHITECT PRIOR TO INSTALLATION.
3. INSTALL FIXTURE SUCH THAT ARM IS FACING SOUTH. COORDINATE WITH ARCHITECT PRIOR TO INSTALLATION.
4. SEE 5/E500 FOR TRANSFORMER AND PANEL INSTALLATION.
5. LOCATE (E) (2) 2" SPARE L.V. CONDUITS. PROVIDE N40 PULLBOX OVER (E) CONDUITS. ADJUST (E) CONDUITS. PROVIDE (N) CONDUITS PER SITE SIGNAL RISER DIAGRAM.
6. BRING (N) POWER AND SIGNAL CONDUITS UP TO PRESSBOX. ATTACH TO BLEACHERS STRUCTURAL COLUMNS 8/E500. SEE PRESSBOX FLOOR PLAN FOR CONTINUATION.
7. PROVIDE (1) 2"C WITH SPEAKER CABLING (SEE 2/E310) AND (1) 2"C.O. FOR FUTURE L.V. PROVIDE PULL ROPE IN SPARE CONDUIT.
8. LOCATE (E) (2) 2"C.O. AND SPLICE (N) L.V. CONDUITS TO (E) AS REQUIRED. PROVIDE PULL ROPE.
9. (E) LIGHT POLE AT NEW LOCATION - SEE ARCHITECTURAL DRAWINGS (AS101 - NOTE 6.31) FOR EXACT LOCATION. PROVIDE (N) PULLBOXES (LIGHTING AND L.V.) CLOSE TO BASE OF POLE LIGHTS. PULLBOXES TO MATCH (E) REMOVED. PROVIDE 5/8"X8' GROUND ROD IN POWER PULLBOX.
10. SEE 1/E320 FOR (N) CONDUIT/CONDUCTORS.
11. ADJUST PULLBOXES TO BE FLUSH WITH NEW CONCRETE. ADJUST ASSOCIATED CONDUITS AS REQUIRED.
12. PROVIDE FLUSH MOUNTED RECEPTACLES IN WP BOXES/LOCKABLE COVER IN RISER BOARD CLOSURE OF BLEACHERS AT +18" A.G.
13. PROVIDE FLUSH MOUNTED RECEPTACLES IN WP BOXES/LOCKABLE COVER IN RISER BOARD CLOSURE OF BLEACHERS AT +18" A.G. PROVIDE (N) 20/1 CIRCUIT BREAKER IN PANEL "PB" IN PRESSBOX AND CONNECT (N) RECEPTACLES TO THAT CIRCUIT BREAKER USING 3/4"C-2#10, 1#10G.
14. PROVIDE FLUSH MOUNTED WP ENCLOSURE WITH LOCKABLE COVER IN RISER BOARD CLOSURE OF BLEACHERS AT +18"A.G. INSTALL DATA OUTLET WITH (2) JACKS AND MIC. (XLR) OUTLET IN THAT ENCLOSURE. RUN (2) CAT6A OSP CABLES IN 1"C FROM DATA JACKS TO IDF-PB. RUN SHIELDED MICROPHONE CABLE IN 3/4"C TO MIXER IN SOUND SYSTEM LOCATED IN PRESSBOX. INSTALL ENCLOSURE ADJACENT TO POWER RECEPTACLE.
15. SEE 1/E300 FOR CONDUIT/WIRING, PULLBOX NPB3, TRANSFORMER "TSB", PANEL "LTB".
16. RUN 2"C FOR FIBERS FURNISHED BY OTHERS. FROM PULLOBX SPB3 TO PRESS BOX. STUB AS INSTRUCTED BY ARCHITECT. PROVIDE 2"C UP SCOREBOARD COLUMN AS DIRECTED BY ARCHITECT.
17. PROVIDE (8) 3/4"C FROM PANEL "LSB" UP SCOREBOARD COLUMN AND STUB AS DIRECTED BY ARCHITECT.
18. SCOREBOARD CONTRACTOR SHALL PROVIDE POWER WIRING FROM PANEL "LTB" TO SCOREBOARD THROUGH CONDUITS (SEE NOTE 17) PROVIDE BY ELECTRICAL CONTRACTOR. POWER AND FIBER CONNECTION ARE PROVIDED BY SCOREBOARD CONTRCTOR.
19. (N) COMBOX - PROVIDED BY TRACK CONTRACTOR - SEE 5/TR-4. ELECTRICAL CONTRACTOR TO PROVIDE GFCI RECEPTACLE IN POWER SECTION OF BOX AND DATA AND MICROPHONE OUTLETS IN LOW VOLTAGE SECTION OF BOX. ADJUST (E) POWER CONDUIT (SEE E100, NUMBERED NOTE 10) TO ENTER INTO POWER SECTION AND FROM POWER SECTION ADJUST (E) POWER CONDUIT TO RUN TO (N) RECEPTACLES INSTALLED AT VISITOR BLEACHERS.
20. LOCATE (E) POWER CONDUIT (SEE E100, NUMBERED NOTE 10). EXTEND TO (N) GFCI RECEPTACLE (SEE NUMBERED NOTE 12). PROVIDE (N) 1"C. RUN (N) 2#10, 1#10G THROUGH (N) AND (E) CONDUITS BACK TO (E) PANEL "LA" AND CONNECT TO SPARE 20/1 CIRCUIT BREAKER.
21. PROVIDE 2" CONDUITS FROM (N) COMBOX TO PRESSBOX. RUN (1) CAT6A OSP CABLES FROM DATA JACK TO IDF-PB; RUN SHIELDED MICROPHONE CABLE TO MIXER IN SOUND SYSTEM LOCATED IN PRESSBOX.
22. PROVIDE 125/3 DISCONNECT IN LOCKABLE NEMA 3R ENCLOSURE AND INSTALL PER 1/E300 AND 5/E500. DISCONNECT IS USED TO TURN POWER FOR SCOREBOARD. PROVIDE NAMEPLATE ON DISCONNECT TO READ: "SCOREBOARD POWER".

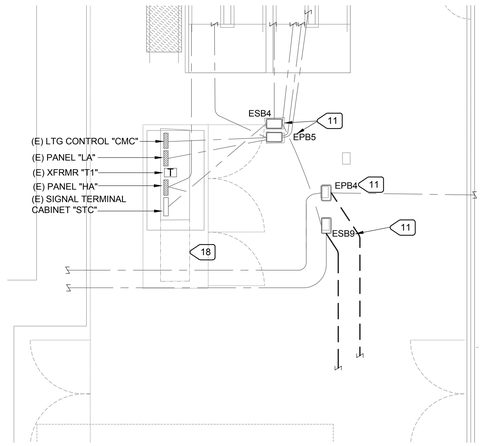

2 E120 UTILITY YARD PLAN - ELECTRICAL

SCALE : 1/8" = 1'-0"

IDENTIFICATION STAMP
DIV. OF THE STATE ARCHITECT
APP: 02-121275 INC:
REVIEWED FOR
SS ☑ FLS ☑ ACS ☑
DATE: 12/15/2023

CALIFORNIA DESIGN WEST ARCHITECTS, Inc.

2100 19th Street
Sacramento, CA 95818

Phone: (916) 446-2466
Fax: (916) 446-5118
Web Page: ca-dw.com

These plans and prints thereof, as instruments of service, are owned by the architect and are for the use on this project only. Reproduction and/or distribution without the prior written consent of the architect is forbidden.

Copyright California Design West Architects, Inc.

ARCHITECT: CONSULTANT:

LICENSED ARCHITECT MITCHELL A. MCALISTER No. C-17250 REGISTERED PROFESSIONAL ENGINEER JESSE U. BASTIAN No. E20229 Exp. 03-31-25 ELECTRICAL STATE OF CALIFORNIA

12/08/2023

CONSULTANT:

M. NEILS ENGINEERING, INC.
Electrical Engineers | Lighting Designers
100 Howe Ave., Suite 235N
Sacramento, CA 95825-8217
www.mneilsengineering.com
Tel: (916) 923-4400
PROJECT #: 23051.21
PROJECT MGR: Sinisha Glisic

PROJECT NAME:

BUHACH COLONY HIGH SCHOOL

1800 NORTH BUHACH RD
ATWATER, CA 95301

CONCESSIONS/TOILET BUILDINGS, TICKET BOOTH & STADIUM UPGRADES

MERCED UNION HIGH SCHOOL DISTRICT

MERCED COUNTY

KEY PLAN:

SHEET TITLE:

PARTIAL SITE PLAN - ELECTRICAL

JOB NUMBER:

SHEET NUMBER:

DATE: MARCH 28, 2023

REVISION:

E120

Dec 08, 2023 – 10:13am / pjensen
UNAUTHORIZED CHANGES & USES: M. Neils Engineering, Inc. preparing these plans will not be responsible for, or liable for unauthorized changes to or uses to these plans. All changes to these plans must be in writing and must be approved by M. Neils Engineering, Inc.

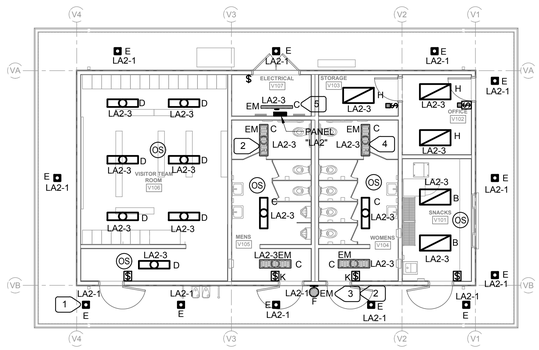

FLOOR PLAN - BUILDING V - LIGHTING

1 / E210

SCALE : 1/8" = 1'-0"

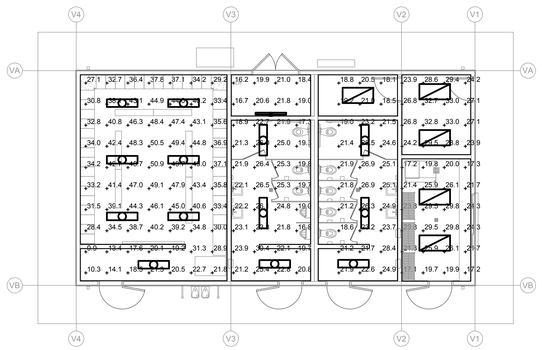

FLOOR PLAN - BUILDING V - PHOTOMETRIC

4 / E210

SCALE : 1/8" = 1'-0"

NUMBERED NOTES:

1. CONNECT EXTERIOR LIGHT VIA LIGHTING CONTROLLER. SEE LIGHTING SWITCHING DIAGRAM 7/E210. TYPICAL FOR EXTERIOR LIGHTS.
2. PROVIDE UNSWITCHED "HOT" FOR BATTERY BACKUP IN "EM" FIXTURES, TYPICAL.
3. CONNECT THIS FIXTURE TO BE TURNED OFF WHEN GRID POWER IS PRESENT, AND TO TURN ON DURING BLACKOUTS.
4. CONNECT INTERIOR "EM" FIXTURES TO SWITCH ON/OFF WITH OTHER FIXTURES IN COMMON SPACE, AND TO TURN ON DURING BLACKOUTS. TYPICAL.
5. WALL MOUNT AT 9'.

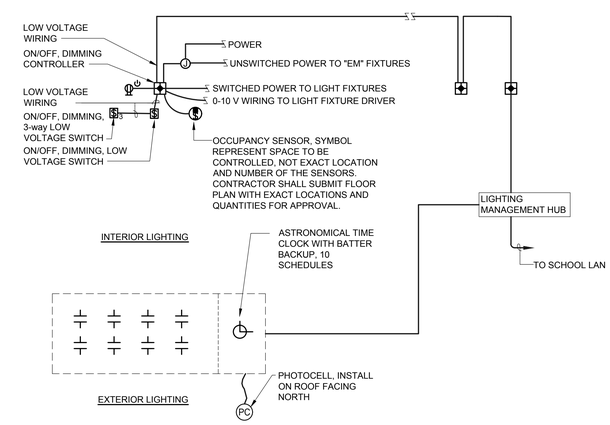

EXTERIOR LIGHTING RELAYS, TIME CLOCK, AND LIGHTING MANAGEMENT HUB TO BE INSTALLED IN COMMON ENCLOSURE. LIGHTING CONTROLLER POWERED FROM UNSWITCHE EXTERIOR LIGHTING CIRCUIT.

LIGHTING SWITCHING DIAGRAM

7 / E210

N.T.S.

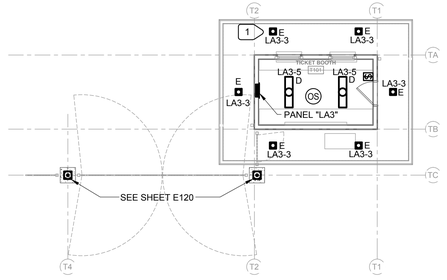

FLOOR PLAN - BUILDING T & MONUMENT ENTRY - LIGHTING

2 / E210

SCALE : 1/8" = 1'-0"

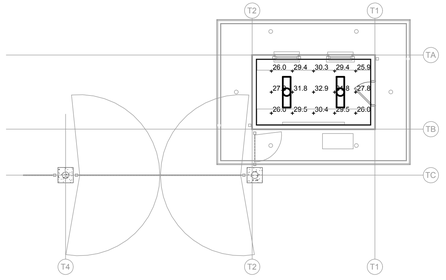

FLOOR PLAN - BUILDING T - PHOTOMETRIC

5 / E210

SCALE : 1/8" = 1'-0"

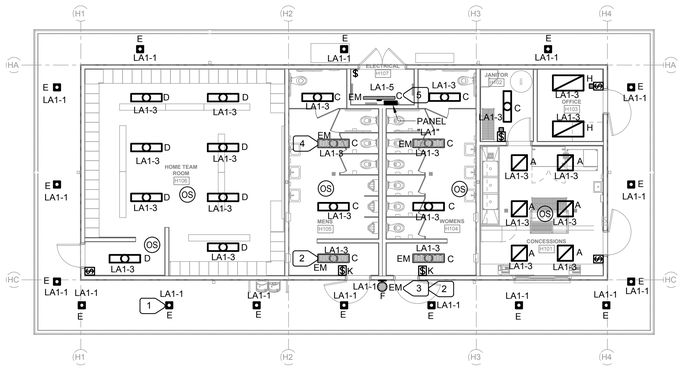

FLOOR PLAN - BUILDING H - LIGHTING

3 / E210

SCALE : 1/8" = 1'-0"

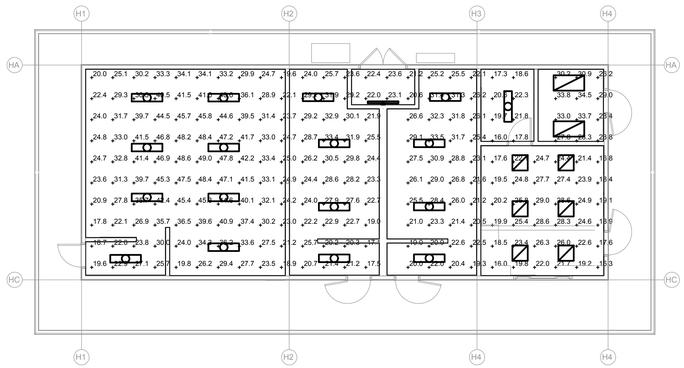

FLOOR PLAN - BUILDING H - PHOTOMETRIC

6 / E210

SCALE : 1/8" = 1'-0"

Dec 08, 2023 - 10:13am, // glorenzo
UNAUTHORIZED CHANGES & USES: M. Neils Engineering, Inc. preparing these plans will not be responsible for or liable for unauthorized changes to or uses to these plans. All changes to these plans must be in writing and must be approved by M. Neils Engineering, Inc.

IDENTIFICATION STAMP
DIV. OF THE STATE ARCHITECT
APP: 02-121275 INC:
REVIEWED FOR
SS ☑ FLS ☑ ACS ☑
DATE: 12/15/2023

CALIFORNIA DESIGN WEST ARCHITECTS, Inc.

2100 19th Street
Sacramento, CA 95818

Phone: (916) 446-2466
Fax: (916) 446-5118
Web Page: ca-dw.com

These plans and prints thereof, as instruments of service, are owned by the architect and are for the use on this project only. Reproduction and/or distribution without the prior written consent of the architect is forbidden.

Copyright California Design West Architects, Inc.

ARCHITECT: CONSULTANT:

LICENSED ARCHITECT MITCHELL A. MCALISTER NO. C 17250 REN. 08-31-25 STATE OF CALIFORNIA

REGISTERED PROFESSIONAL ENGINEER JESSE U. BASTIAN No. E20229 Exp. 03-31-25 ELECTRICAL STATE OF CALIFORNIA

12/08/2023

CONSULTANT:

M. NEILS ENGINEERING, INC.
Electrical Engineers | Lighting Designers
100 Howe Ave., Suite 235N
Sacramento, CA 95825-8217
www.mneilsengineering.com
Tel: (916) 923-4400
PROJECT #: 23051.21
PROJECT MGR: Sinisha Glisic

PROJECT NAME:

BUHACH COLONY HIGH SCHOOL

1800 NORTH BUHACH RD
ATWATER, CA 95301

CONCESSIONS/TOILET BUILDINGS, TICKET BOOTH & STADIUM UPGRADES

MERCED UNION HIGH SCHOOL DISTRICT

MERCED COUNTY

KEY PLAN:

SHEET TITLE:

FLOOR PLANS - LIGHTING

JOB NUMBER:	SHEET NUMBER:
DATE: MARCH 28, 2023	**E210**
REVISION:	

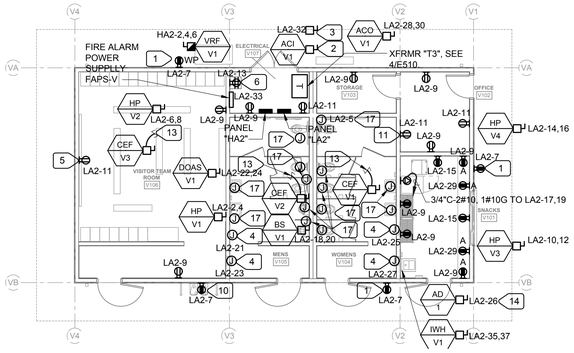

FLOOR PLAN - BUILDING V - POWER

1 / E220

SCALE : 1/8" = 1'-0"

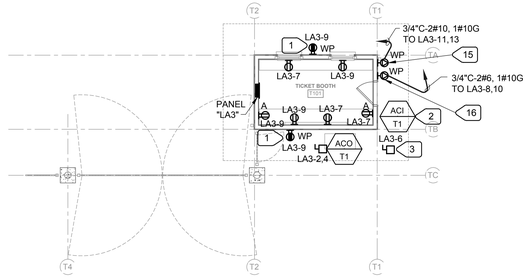

FLOOR PLAN - BUILDING T & MONUMENT ENTRY - POWER

2 / E220

SCALE : 1/8" = 1'-0"

NUMBERED NOTES:

1. PROVIDE IN METAL LOCKABLE WP ENCLOSURE W/ WILE IN USE COVER.
2. INDOOR UNIT FED FROM OUTDOOR UNIT. ELECTRICAL CONTRACTOR TO PROVIDE ALL NECESSARY APPURTENANCES PER MANUFACTURER REQUIREMENTS. COORDINATE WITH MECHANICAL BEFORE ROUGH IN.
3. PROVIDE FOR CONDENSATE PUMP. COORDINATE WITH MECHANICAL BEFORE ROUGH IN.
4. PROVIDE FOR AND CONNECT HAND DRYER. COORDINATE BEFORE ROUGH IN.
5. PROVIDE FOR PROJECTOR, COORDINATE W/ ARCHITECT BEFORE ROUGH IN.
6. INSTALL INSIDE IDF ENCLOSURE. COORDINATE BEFORE ROUGH IN.
7. CONNECT TO SPARE 20/1 CIRCUIT BREAKER IN PANEL "PB". INSTALL INSIDE IDF ENCLOSURE. COORDINATE BEFORE ROUGH IN.
8. CONNECT TO SPARE 20/1 CIRCUIT BREAKER IN PANEL "PB". INSTALL ADJACENT TO SOUND SYSTEM ENCLOSURE. COORDINATE BEFORE ROUGH IN.
9. PROVIDE (N) 20/1 CIRCUIT BREAKER FOR BLEACHERS RECEPTACLES. SEE 1/E120.
10. PROVIDE FOR DRINKING FOUNTAIN. COORDINATE BEFORE ROUGH IN.
11. PROVIDE FOR HVAC CONTROLLER. MOUNT AT 48" A.F.F. COORDINATE WITH MECHANICAL CONTRACTOR BEFORE ROUGH IN.
12. MOUNT ON SIDE OF TABLE. COORDINATE W/ ARCHITECT BEFORE ROUGH-IN.
13. CONNECT INTO LIGHTING CIRCUIT. SEE MECHANICAL PLAN 2/M5.1 FOR EXACT REQUIREMENTS.
14. AIR DOOR - SEE MECHANICAL PLANS FOR EXACT REQUIREMENTS.
15. PROVIDE 6-30R RECEPTACLE IN WP METAL LOCKABLE ENCLOSURE WITH WHILE IN USE COVER.
16. PROVIDE 6-50R RECEPTACLE IN WP METAL LOCKABLE ENCLOSURE WITH WHILE IN USE COVER.
17. CONNECT POWER FOR URINALS FLUSH VALVE AND LAVATORY FAUCET. PROVIDE ALL CONDUITS, CONNECTIONS, ETC, PER PLUMBING REQUIREMENTS.

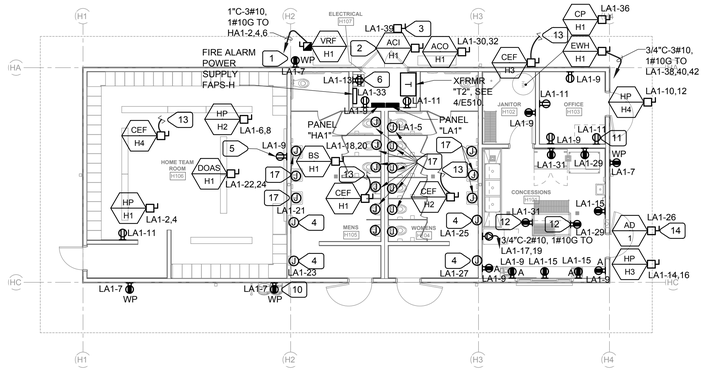

FLOOR PLAN - BUILDING H - POWER

3 / E220

SCALE : 1/8" = 1'-0"

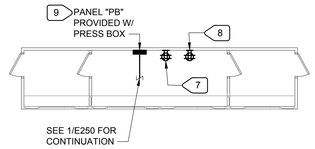

FLOOR PLAN - PRESS BOX - POWER

4 / E220

SCALE : 1/8" = 1'-0"

Dec 08, 2023 - 10:13am, / rpinew
UNAUTHORIZED CHANGES & USES: M. Neils Engineering, Inc. preparing these plans will not be responsible for or liable for unauthorized changes to or uses to these plans. All changes to these plans must be in writing and must be approved by M. Neils Engineering, Inc.

IDENTIFICATION STAMP
DIV. OF THE STATE ARCHITECT
APP: 02-121275 INC:
REVIEWED FOR
SS ☑ FLS ☑ ACS ☑
DATE: 12/15/2023

CALIFORNIA DESIGN WEST ARCHITECTS, Inc.

2100 19th Street
Sacramento, CA 95818

Phone: (916) 446-2466
Fax: (916) 446-5118
Web Page: ca-dw.com

These plans and prints thereof, as instruments of service, are owned by the architect and are for the use on this project only. Reproduction and/or distribution without the prior written consent of the architect is forbidden.

Copyright California Design West Architects, Inc.

ARCHITECT: CONSULTANT:

LICENSED ARCHITECT MITCHELL A. McALISTER No. C-17250 REN. 08-31-25 STATE OF CALIFORNIA

REGISTERED PROFESSIONAL ENGINEER JOSE U. BASTIAN No. E20229 Exp. 03-31-25 ELECTRICAL STATE OF CALIFORNIA

12/08/2023

CONSULTANT:

M. NEILS ENGINEERING, INC.
Electrical Engineers | Lighting Designers
100 Howe Ave., Suite 235N
Sacramento, CA 95825-8217
www.mneilsengineering.com
Tel: (916) 923-4400

PROJECT #: 23051.21
PROJECT MGR: Sinisha Glisic

PROJECT NAME:

BUHACH COLONY HIGH SCHOOL

1800 NORTH BUHACH RD
ATWATER, CA 95301

CONCESSIONS/TOILET BUILDINGS, TICKET BOOTH & STADIUM UPGRADES

MERCED UNION HIGH SCHOOL DISTRICT

MERCED COUNTY

KEY PLAN:

SHEET TITLE:

FLOOR PLANS - POWER

JOB NUMBER:

SHEET NUMBER:

E220

DATE: MARCH 28, 2023

REVISION:

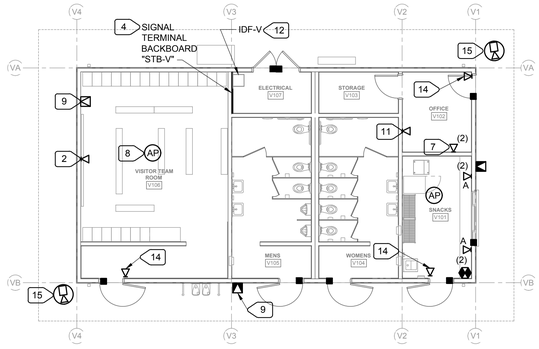

1 E230 FLOOR PLAN - BUILDING V - SIGNAL

SCALE : 1/8" = 1'-0"

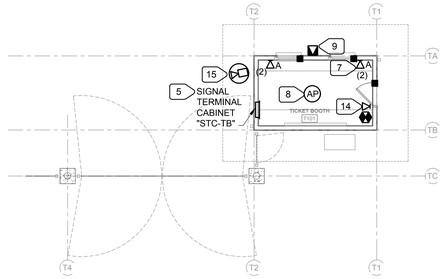

2 E230 FLOOR PLAN - BUILDING T & MONUMENT ENTRY - SIGNAL

SCALE : 1/8" = 1'-0"

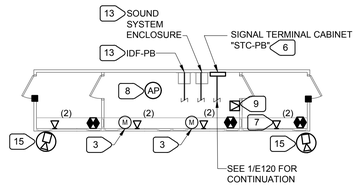

4 E230 FLOOR PLAN - PRESS BOX - SIGNAL

SCALE : 1/8" = 1'-0"

3 E230 FLOOR PLAN - BUILDING H - SIGNAL

SCALE : 1/8" = 1'-0"

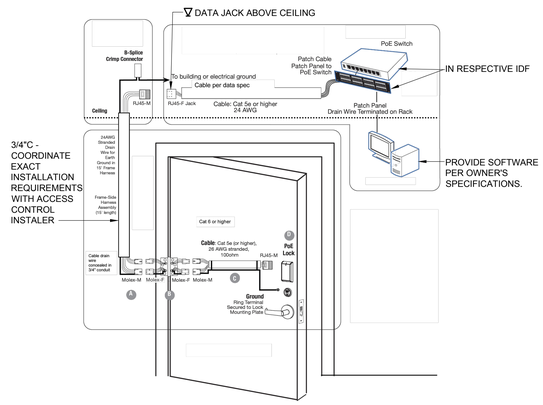

PROVIDE MIN. 12"x12" ACCESS DOOR AT HARD CEILING, BELOW DATA JACK.
SEE ARCHITECTURAL DOOR SCHEDULE FOR CARD READERS.

5 E230 PoE LOCK/CARD READER INSTALLATION

N.T.S.

NUMBERED NOTES:

1. PROVIDE 3/4" PLYWOOD BACKBOARD 7' HIGH, LENGTH AS SHOWN. PAINT W/ (3) COATS OF FIRE RETARDANT WHITE PAINT.
2. PROVIDE FOR PROJECTOR. COORDINATE W/ ARCHITECT BEFORE ROUGH IN. RUN (1) CAT6A (SEE SPECS SECTION 27 2000) CABLE FROM JACK TO IDF.
3. MICROPHONE OUTLET. CONNECT TO MIC. INPUT AT MIXER IN STADIUM SOUND SYSTEM. RUN CABLE IN WIREMOLD V700 TO ABOVE CEILING SPACE AND CONTINUE IN FREE AIR WITH J-HOOK SUPPORT TO SOUND SYSTEM RACK.
4. PROVIDE 3/4" PLYWOOD BACKBOARD, 7' HIGH, LENGTH AS SHOWN ON THE PLAN. PAINT WITH (3) COATS OF WHITE FIRE RETARDANT PAINT.
5. PROVIDE 12"X18"X4" NEMA 1 FLUSH MOUNTED ENCLOSURE WITH HINGED LOCKABLE DOOR. PROVIDE 3/4" PLYWOOD BACKBOARD INSIDE.
6. PROVIDE 12"X18"X4" NEMA 1 SURFACE MOUNTED ENCLOSURE WITH HINGED LOCKABLE DOOR. PROVIDE 3/4" PLYWOOD BACKBOARD INSIDE.
7. RUN (2) CAT6A (SEE SPECS SECTION 27 2000) CABLES FROM JACKS TO IDF. TYPICAL FOR DATA OUTLET.
8. RUN (1) CAT6A (SEE SPECS SECTION 27 2000) FROM WIRELESS ACCESS POINT TO IDF. TYPICAL FOR WIRELESS ACCESS POINTS.
9. RUN (1) CAT 6A CABLE (SEE SPECS SECTION 27 2000) FROM SPEAKER OR SPEAKER/CLOCK COMBO TO IDF. TYPICAL FOR EXTERIOR SPEAKERS AND INTERIOR SPEAKER/CLOCK COMBOS.
10. LOCATION OF INTRUSION ALARM KEYPAD SHALL BE COORDINATED BEFORE ROUGH IN.
11. PROVIDE FOR HVAC CONTROLLER. MOUNT AT 48" A.F.F. ADJACENT TO POWER OUTLET. COORDINATE WITH MECHANICAL CONTRACTOR BEFORE ROUGH IN. RUN (1) CAT6A (SEE SPECS SECTION 27 2000) CABLE FROM JACK TO IDF.
12. INSTALL PER 8/E510. PROVIDE GROUND BAR PER 7/E510.
13. INSTALL PER 8/E510.
14. INSTALL ABOVE CEILING FOR PoE DOOR LOCK/CARD READER. SEE 5/E230 DETAIL FOR ADDITIONAL INSTALLATION REQUIREMENTS. PROVIDE ACCESS DOOR IF DATA OUTLET INSTALLED ABOVE HARD LID CEILING.
15. COORDINATE EXACT LOCATION AND AIMING WITH ARCHITECT BEFORE ROUGH IN.

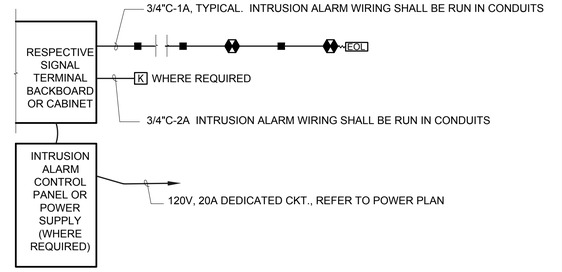

A TYPE CABLE - 4 CONDUCTORS, 18AWG, NON SHIELDED - WEST PENN 224 OR
4 CONDUCTORS, 20AWG, SHIELDED - WEST PENN 3011

INTRUSION ALARM DIAGRAM

IDENTIFICATION STAMP
DIV. OF THE STATE ARCHITECT
APP: 02-121275 INC:
REVIEWED FOR
SS ☑ FLS ☑ ACS ☑
DATE: 12/15/2023

CALIFORNIA DESIGN WEST ARCHITECTS, Inc.

2100 19th Street
Sacramento, CA 95818

Phone: (916) 446-2466
Fax: (916) 446-5118
Web Page: ca-dw.com

These plans and prints thereof, as instruments of service, are owned by the architect and are for the use on this project only. Reproduction and/or distribution without the prior written consent of the architect is forbidden.

Copyright California Design West Architects, Inc.

ARCHITECT: CONSULTANT:

LICENSED ARCHITECT MITCHELL A. MCALISTER LIC. NO. C 17250 REN. 08-31-2025 STATE OF CALIFORNIA

REGISTERED PROFESSIONAL ENGINEER JESSE U. BASTIAN No. E20229 Exp. 03-31-25 ELECTRICAL STATE OF CALIFORNIA

12/08/2023

CONSULTANT:

M. NEILS ENGINEERING, INC.
Electrical Engineers | Lighting Designers
100 Howe Ave., Suite 235N
Sacramento, CA 95825-8217
www.mneilsengineering.com
Tel: (916) 923-4400
PROJECT #: 23051.21
PROJECT MGR: Sinisha Glisic

PROJECT NAME:

BUHACH COLONY HIGH SCHOOL

1800 NORTH BUHACH RD
ATWATER, CA 95301

CONCESSIONS/TOILET BUILDINGS, TICKET BOOTH & STADIUM UPGRADES

MERCED UNION HIGH SCHOOL DISTRICT

MERCED COUNTY

KEY PLAN:

SHEET TITLE:

FLOOR PLANS - SIGNAL

JOB NUMBER:

SHEET NUMBER:

E230

DATE: MARCH 28, 2023

REVISION:

Dec 08, 2023 - 10:13am, rpanov
UNAUTHORIZED CHANGES & USES: M. Neils Engineering, Inc. preparing these plans will not be responsible for or liable for unauthorized changes to or uses to these plans. All changes to these plans must be in writing and must be approved by M. Neils Engineering, Inc.

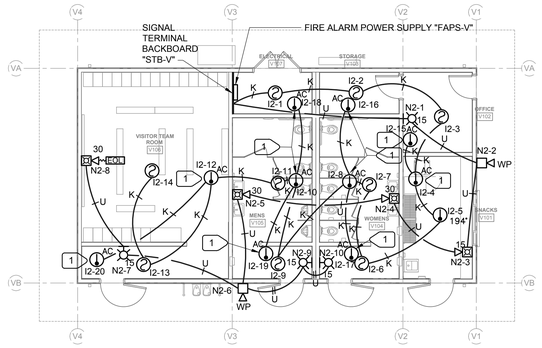

FLOOR PLAN - BUILDING V - FIRE ALARM

1 / E240

SCALE : 1/8" = 1'-0"

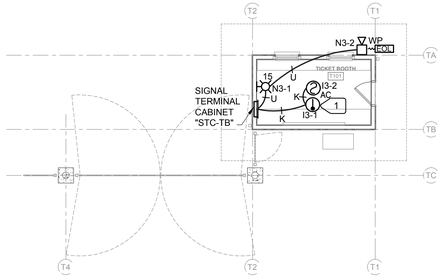

FLOOR PLAN - BUILDING T & MONUMENT ENTRY - FIRE ALARM

2 / E240

SCALE : 1/8" = 1'-0"

NUMBERED NOTES:

1. MOUNT WITHIN 3' OF HIGHEST POINT.

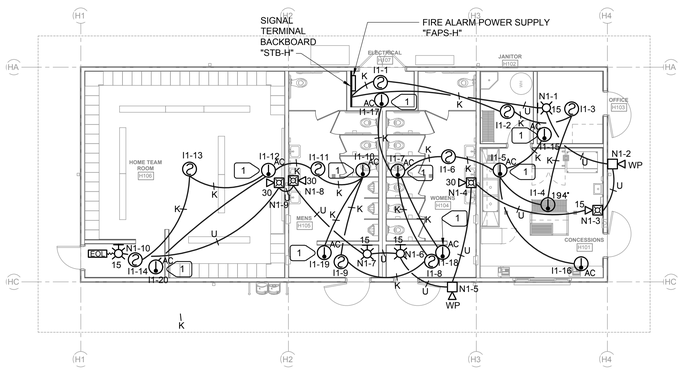

FLOOR PLAN - BUILDING H - FIRE ALARM

3 / E240

SCALE : 1/8" = 1'-0"

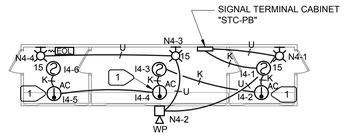

FLOOR PLAN - PRESS BOX - FIRE ALARM

4 / E240

SCALE : 1/8" = 1'-0"

IDENTIFICATION STAMP
DIV. OF THE STATE ARCHITECT
APP: 02-121275 INC:
REVIEWED FOR
SS ☑ FLS ☑ ACS ☑
DATE: 12/15/2023

CALIFORNIA DESIGN WEST ARCHITECTS, Inc.

2100 19th Street
Sacramento, CA 95818

Phone: (916) 446-2466
Fax: (916) 446-5118
Web Page: ca-dw.com

These plans and prints thereof, as instruments of service, are owned by the architect and are for the use on this project only. Reproduction and/or distribution without the prior written consent of the architect is forbidden.

Copyright California Design West Architects, Inc.

ARCHITECT: CONSULTANT:

LICENSED ARCHITECT MITCHELL A. McALISTER No. C-17250 REGISTERED PROFESSIONAL ENGINEER JESSE U. BASTIAN No. E20229 Exp. 03-31-25 ELECTRICAL STATE OF CALIFORNIA

12/08/2023

CONSULTANT:

M. NEILS ENGINEERING, INC.
Electrical Engineers | Lighting Designers
100 Howe Ave., Suite 235N
Sacramento, CA 95825-8217
www.mneilsengineering.com
Tel: (916) 923-4400

PROJECT #: 23051.21
PROJECT MGR: Sinisha Glisic

PROJECT NAME:

BUHACH COLONY HIGH SCHOOL

1800 NORTH BUHACH RD
ATWATER, CA 95301

CONCESSIONS/TOILET BUILDINGS, TICKET BOOTH & STADIUM UPGRADES

MERCED UNION HIGH SCHOOL DISTRICT

MERCED COUNTY

KEY PLAN:

SHEET TITLE:

FLOOR PLANS - FIRE ALARM

JOB NUMBER:	SHEET NUMBER:
DATE: MARCH 28, 2023	**E240**
REVISION:	

Dec 08, 2023 - 10:13am, / mjones
UNAUTHORIZED CHANGES & USES: M. Neils Engineering, Inc. preparing these plans will not be responsible for or liable for unauthorized changes to or uses to these plans. All changes to these plans must be in writing and must be approved by M. Neils Engineering, Inc.

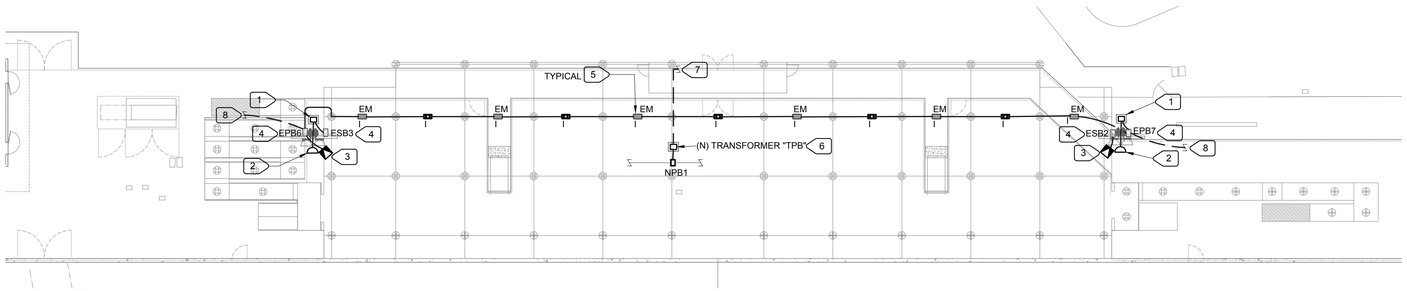

1 E250 FLOOR PLAN - HOME BLEACHERS - ELECTRICAL

SCALE : 1/16" = 1'-0"

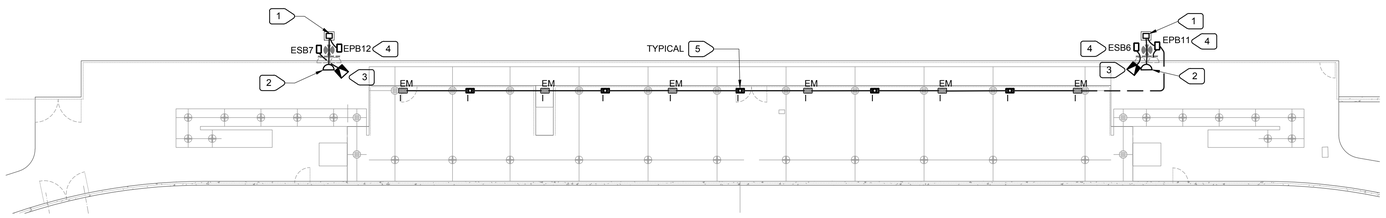

2 E250 FLOOR PLAN - VISITOR BLEACHERS - ELECTRICAL

SCALE : 1/16" = 1'-0"

NUMBERED NOTES:

1. EMERGENCY LIGHTING INVERTER. SEE 1/E320 AND 4/E500 FOR INVERTER, WIRING, PAD. LOCATE PAD/INVERTER CLOSE TO INVERTER. COORDINATE WITH ARCHITECT EXACT LOCATION BEFORE ROUGH IN.
2. NEW ADDED BLEACHER LIGHTS. SEE 1/E320 FOR CONNECTIONS. COORDINATE WITH MUSCO BEFORE ROUGH IN.
3. P.A. SPEAKER INSTALLED AT 30' A.G. THERE IS (E) HANDHLE AT 30', MUSCO TO PROVIDE SPEAKER ATTACHMENT. ELECTRICAL CONTRACTOR TO PROVIDE WIRING FROM P.A. SYSTEM AMPLIFIERS TO SPEAKER. COORDINATE WITH MUSCO BEFORE ROUGH IN.
4. SEE 1/E120 FOR SITE CONDUITS.
5. SEE 1/E320 FOR POWER AND SWITCHING FOR UNDER BLEACHER AND POLE MOUNTED "G2" LIGHTS. PROVIDE UNSWITCHED "HOT" TO EMERGENCY FIXTURES. CONNECT EMERGENCY FIXTURE TO SWITCH WITH OTHER LIGHTS WHEN GRID POWER PRESENT AND TO TURN ON DURING POWER BLACKOUTS.
6. SEE 9/E500 FOR INSTALLATION.
7. BRING U.G. CONDUIT UP BLEACHER COLUMN INTO PRESSBOX. SEE 4/E220 FOR CONTINUATION.
8. CONTINUE TO "G2" POLE LIGHTS. SEE E120 FOR CONTINUATION.

IDENTIFICATION STAMP
DIV. OF THE STATE ARCHITECT
APP: 02-121275 INC:
REVIEWED FOR
SS ☑ FLS ☑ ACS ☑
DATE: 12/15/2023

CALIFORNIA DESIGN WEST ARCHITECTS, Inc.

2100 19th Street
Sacramento, CA 95818

Phone: (916) 446-2466
Fax: (916) 446-5118
Web Page: ca-dw.com

These plans and prints thereof, as instruments of service, are owned by the architect and are for the use on this project only. Reproduction and/or distribution without the prior written consent of the architect is forbidden.

Copyright California Design West Architects, Inc.

ARCHITECT: CONSULTANT:

LICENSED ARCHITECT MITCHELL A. McALLISTER NO. C17250 EXP. 12-28-2023 STATE OF CALIFORNIA

REGISTERED PROFESSIONAL ENGINEER JESSE U. BASTIAN No. E20229 Exp. 03-31-25 ELECTRICAL STATE OF CALIFORNIA

12/08/2023

CONSULTANT:

M. NEILS ENGINEERING, INC.
Electrical Engineers | Lighting Designers
100 Howe Ave., Suite 235N
Sacramento, CA 95825-8217
www.mneilsengineering.com
Tel: (916) 923-4400

PROJECT #: 23051.21
PROJECT MGR: Sinisha Glisic

PROJECT NAME:

BUHACH COLONY HIGH SCHOOL

1800 NORTH BUHACH RD
ATWATER, CA 95301

CONCESSIONS/TOILET BUILDINGS, TICKET BOOTH & STADIUM UPGRADES

MERCED UNION HIGH SCHOOL DISTRICT

MERCED COUNTY

KEY PLAN:

SHEET TITLE:

BLEACHER FLOOR PLANS ELECTRICAL

JOB NUMBER:

SHEET NUMBER:

DATE: MARCH 28, 2023

REVISION:

E250

Dec 08, 2023 - 10:14am, / pivanov
UNAUTHORIZED CHANGES & USES: M. Neils Engineering, Inc. preparing these plans will not be responsible for, or liable for unauthorized changes to or uses to these plans. All changes to these plans must be in writing and must be approved by M. Neils Engineering, Inc.

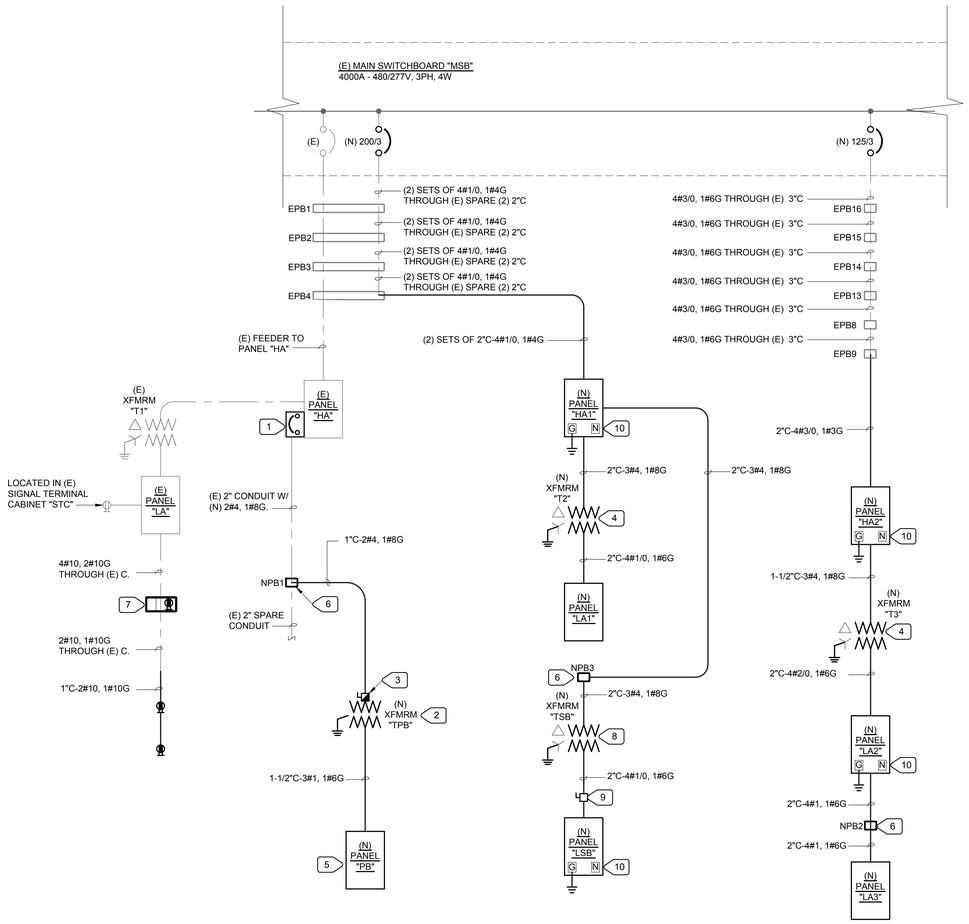

1 E300 ONE LINE DIAGRAM POWER

NOT TO SCALE

NEW PANEL "LA1" SCHEDULE

POWER SOURCE: PANEL "HA1"/XFRMR "T2" — LOCATION: SEE PLANS
SYSTEM: NORMAL BRANCH

TYPE:	BUS: 125 AMPS	MAIN BKR: 125A	VOLTAGE: 208Y/120 VOLT, 3 PHASE, 4 WIRES	MOUNTING: SURFACE PANEL TYPE NEMA 1	REMARKS: 10k AIC MIN. SYMM.

LOAD SERVED	kVA	CB	CKT	PHASE	CKT	CB	kVA	LOAD SERVED
EXTERIOR LIGHTING	0.8	20/1	1	A	2	20/2	0.2	HP-H1
INTERIOR LIGHTING	1.1	20/1	3	B	4		0.2	
PLUMBING FLUSH VLV.	0.5	20/1	5	C	6	20/2	0.2	HP-H2
EXTERIOR RECEPTACLES	0.8	20/1	7	A	8		0.2	
RECEPTACLES	0.8	20/1	9	B	10	20/2	0.2	HP-H3
RECEPTACLES	0.8	20/1	11	C	12		0.2	
IDF RECEPTACLE	1.0	20/1	13	A	14	20/2	0.2	HP-H4
KITCHEN RECEPTACLES	1.2	20/1	15	B	16		0.2	
KITCHEN EQ.	2.6	30/2	17	C	18	20/2	1	BS-H1
	2.6		19	A	20		1	
HAND DRYER	1.2	20/1	21	B	22	20/2	0.3	DOAS-H1
HAND DRYER	1.2	20/1	23	C	24		0.3	
HAND DRYER	1.2	20/1	25	A	26	20/1	0.3	AD-1
HAND DRYER	1.2	20/1	27	B	28	20/1		SPARE
KITCHEN RECEPTACLES	0.8	20/1	29	C	30	20/2	1	ACO-H1/ACI-H1
KITCHEN RECEPTACLES	0.8	20/1	31	A	32		1	
FIRE ALARM EQ.	0.5	20/1 [2]	33	B	34	20/1		SPARE
INTRUSION ALARM C.P.	0.5	20/1	35	C	36	20/1	0.5	CIRC. PUMP
SPACE		PFB	37	A	38		2	
CONDENS. PUMP	1.0	20/1	39	B	40	25/3	2	EWH-H1
SPARE GFCI		20/1 [1]	41	C	42		2	

NOTES:
[1] GFCI BREAKER
[2] PROVIDE W/ RED HANDLE AND LOCKING DEVICE

CONNECTED LOAD

PHASE A=	12.1	kVA
PHASE B=	9.9	kVA
PHASE C=	11.6	kVA
TOTAL =	33.6	kVA
TOTAL =	93.3	Amperes

NEW PANEL "LA2" SCHEDULE

POWER SOURCE: PANEL "HA2"/XFRMR "T3" — LOCATION: SEE PLANS
SYSTEM: NORMAL BRANCH

TYPE:	BUS: 225 AMPS	MAIN BKR: 150A	VOLTAGE: 208Y/120 VOLT, 3 PHASE, 4 WIRES	MOUNTING: SURFACE PANEL TYPE NEMA 1	REMARKS: 10k AIC MIN. SYMM.

LOAD SERVED	kVA	CB	CKT	PHASE	CKT	CB	kVA	LOAD SERVED
EXTERIOR LIGHTING	0.3	20/1	1	A	2	20/2	0.1	HP-V1
INTERIOR LIGHTING	0.7	20/1	3	B	4		0.1	
PLUMBING FLUSH VLV.	0.5	20/1	5	C	6	20/2	0.1	HP-V2
EXTERIOR RECEPTACLES	0.2	20/1	7	A	8		0.1	
RECEPTACLES	0.2	20/1	9	B	10	20/2	0.1	HP-V3
RECEPTACLES	0.2	20/1	11	C	12		0.1	
IDF RECEPTACLE	0.2	20/1	13	A	14	20/2	0.1	HP-V4
KITCHEN RECEPTACLES	1.0	20/1	15	B	16		0.1	
KITCHEN EQ.	1.9	30/2	17	C	18	20/2	0.7	BS-V1
	1.9		19	A	20		0.7	
HAND DRYER	1.0	20/1	21	B	22	20/2	0.2	DOAS-V1
HAND DRYER	1.0	20/1	23	C	24		0.2	
HAND DRYER	1.0	20/1	25	A	26	20/1	0.2	AD-1
HAND DRYER	1.0	20/1	27	B	28	20/2	1	ACO-V1/ACI-V1
KITCHEN RECEPTACLES	1.0	20/1	29	C	30		1	
SPARE		20/1	31	A	32	20/1	0.2	COND. PUMP
FIRE ALARM EQ.	0.5	20/1 [2]	33	B	34	PFB		SPACE
IWH -V1	1.2	20/2	35	C	36	PFB		SPACE
	1.2		37	A	38		8.8	
SPARE		20/1	39	B	40	100/3	5.6	PANEL "LA3"
SPARE GFCI		20/1 [1]	41	C	42		2.9	

NOTES:
[1] GFCI BREAKER
[2] PROVIDE W/ RED HANDLE AND LOCAKING DEVICE

CONNECTED LOAD

PHASE A=	15.0	kVA
PHASE B=	11.5	kVA
PHASE C=	10.8	kVA
TOTAL =	37.3	kVA
TOTAL =	103.6	Amperes

NEW PANEL "LSB" SCHEDULE

POWER SOURCE: PANEL "HA1"/XFRMR "TSB" — LOCATION: SEE PLANS
SYSTEM: NORMAL BRANCH

TYPE:	BUS: 125 AMPS	MAIN BKR: 125A	VOLTAGE: 208Y/120 VOLT, 3 PHASE, 4 WIRES	MOUNTING: SURFACE PANEL TYPE NEMA 3R	REMARKS: 10k AIC MIN. SYMM.

LOAD SERVED	kVA	CB	CKT	PHASE	CKT	CB	kVA	LOAD SERVED
SCOREBOARD	1.0	20/2	1	A	2	20/2	1	SCOREBOARD
	1.0		3	B	4		1	
SCOREBOARD	1.0	20/2	5	C	6	20/2	1	SCOREBOARD
	1.0		7	A	8		1	
SCOREBOARD	1.0	20/2	9	B	10	20/2	1	SCOREBOARD
	1.0		11	C	12		1	
SCOREBOARD	1.0	20/2	13	A	14	20/2	1	SCOREBOARD
	1.0		15	B	16		1	
SCOREBOARD	1.0	20/2	17	C	18	20/2	1	SCOREBOARD
	1.0		19	A	20		1	
SCOREBOARD	1.0	20/2	21	B	22	20/2	1	SCOREBOARD
	1.0		23	C	24		1	
SCOREBOARD	1.0	20/2	25	A	26	20/2	1	SCOREBOARD
	1.0		27	B	28		1	
SPARE		20/1	29	C	30	20/2	1	SCOREBOARD
SPARE		20/1	31	A	32		1	
SPARE		20/1	33	B	34	PFB		SPACE
SPARE		20/1	35	C	36	PFB		SPACE
SPARE		20/1	37	A	38	PFB		SPACE
SPARE		20/1	39	B	40	PFB		SPACE
SPARE GFCI		20/1 [1]	41	C	42	PFB		SPACE

NOTES:
[1] GFCI BREAKER

CONNECTED LOAD

PHASE A=	11.0	kVA
PHASE B=	10.0	kVA
PHASE C=	9.0	kVA
TOTAL =	30.0	kVA
TOTAL =	83.3	Amperes

NUMBERED NOTES:

1. PROVIDE 70/2 CIRCUIT BREAKER IN LOCKABLE NEMA 3R ENCLOSURE. MOUNT ON SIDE OF (E) PANEL "HA". TAP INTO PANEL BUS USING 2#4, 1#8G. PROVIDE PHENOLIC LABEL TO READ: "TRANSFORMER "TPB"".
2. PROVIDE DRY TRANSFORMER , 480V TO 120/240V, SINGLE PHASE, 3W, 25kVA. PROVIDE WITH WEATHER SHIELDS. SEE 9/E500 FOR INSTALLATION.
3. PROVIDE 70/2 CIRCUIT BREAKER IN LOCKABLE NEMA 3R ENCLOSURE. MOUNT ON PRIMARY SIDE OF TRANSFORMER. PROVIDE PHENOLIC LABEL TO READ: "TRANSFORMER PRIMARY DISCONNECT".
4. PROVIDE DRY TRANSFORMER , 480V TO 120/208V, THREE PHASE, 4W, 45kVA. SEE 4/E510 FOR INSTALLATION.
5. PANEL PROVIDED WITH PRESSBOX BUILDING.
6. PROVIDE CHRISTY N30 PULLBOX WITH (2) 10" EXTENSION AND CONCRETE LID WITH HOLD DOWN BOLTS. SEE 2/E500 FOR INSTALLATION.
7. (N) COMBOX PROVIDED BY TRACK CONTRACTOR.
8. PROVIDE DRY TRANSFORMER , 480V TO 120/208V, THREE PHASE, 4W, 45kVA WITH WEATHER SHIELDS. SEE 5/E500 FOR INSTALLATION.
9. PROVIDE DISCONNECT TO TURN ON/OFF POWER TO SCOREBOARD. SEE SHEET E120, NOTE 22 FOR ADDITIONAL INFORMATION.
10. PROVIDE UFFER GROUND AND CONNECT TO PANEL. PROVIDE ISOLATED NEUTRAL.

NEW PANEL "HA1" SCHEDULE

POWER SOURCE: MAIN SWITCHBOARD — LOCATION: SEE PLAN
SYSTEM: NORMAL BRANCH

TYPE:	BUS: 400 AMPS	MAIN BKR: 200A	VOLTAGE: 480Y/277 VOLT, 3 PHASE, 4 WIRES	MOUNTING: SURFACE PANEL TYPE NEMA 1	REMARKS: 22k AIC MIN. SYMM.

LOAD SERVED	kVA	CB	CKT	PHASE	CKT	CB	kVA	LOAD SERVED
SPARE		20/1	1	A	2		5.2	
SPARE		20/1	3	B	4	30/3	5.2	VRF-H1
SPARE		20/1	5	C	6		5.2	
	15.0		7	A	8	20/1		SPARE
TRANFORMER "T2"	15.0	70/3	9	B	10	20/1		SPARE
	15.0		11	C	12	20/1		SPARE
	15.0		13	A	14	PFB		SPACE
TRANSFORMER "TSB"	15.0	70/3	15	B	16	PFB		SPACE
	15.0		17	C	18	PFB		SPACE

NOTES:
[1]

CONNECTED LOAD

PHASE A=	35.2	kVA
PHASE B=	35.2	kVA
PHASE C=	35.2	kVA
TOTAL =	105.6	kVA
TOTAL =	127.1	Amperes

NEW PANEL "HA2" SCHEDULE

POWER SOURCE: MAIN SWITCHBOARD — LOCATION: SEE PLAN
SYSTEM: NORMAL BRANCH

TYPE:	BUS: 125 AMPS	MAIN BKR: 125A	VOLTAGE: 480Y/277 VOLT, 3 PHASE, 4 WIRES	MOUNTING: SURFACE PANEL TYPE NEMA 1	REMARKS: 22k AIC MIN. SYMM.

LOAD SERVED	kVA	CB	CKT	PHASE	CKT	CB	kVA	LOAD SERVED
SPARE		20/1	1	A	2		4.5	
SPARE		20/1	3	B	4	20/3	4.5	VRF-V1
SPARE		20/1	5	C	6		4.5	
	15.0		7	A	8	20/1		SPARE
TRANFORMER "T3"	15.0	70/3	9	B	10	20/1		SPARE
	15.0		11	C	12	20/1		SPARE
SPARE		20/1	13	A	14	PFB		SPACE
SPARE		20/1	15	B	16	PFB		SPACE
SPARE		20/2	17	C	18	PFB		SPACE

NOTES:
[1]

CONNECTED LOAD

PHASE A=	19.5	kVA
PHASE B=	19.5	kVA
PHASE C=	19.5	kVA
TOTAL =	58.5	kVA
TOTAL =	70.4	Amperes

NEW PANEL "LA3" SCHEDULE

POWER SOURCE: PANEL "LA2" — LOCATION: SEE PLANS
SYSTEM: NORMAL BRANCH

TYPE:	BUS: 125 AMPS	MAIN BKR 100A	VOLTAGE: 208Y/120 VOLT, 3 PHASE, 4 WIRES	MOUNTING: FLUSH PANEL TYPE NEMA 1	REMARKS: 10k AIC MIN. SYMM.

LOAD SERVED	kVA	CB	CKT	PHASE	CKT	CB	kVA	LOAD SERVED
EXTERIOR LIGHTING	1.2	20/1	1	A	2	20/2	0.9	ACO-T1/ACI-T1
EXTERIOR LIGHTING	0.2	20/1	3	B	4		0.9	
INTERIOR LIGHTING	0.2	20/1	5	C	6	20/1	0.5	CONDENSATE PUMP
RECEPTACLE	0.5	20/1	7	A	8	50/2	4	50AMP RECEPTACLE [1]
RECEPTACLE	0.5	20/1	9	B	10		4	
30AMP RECEPTACLE [1]	2.2	30/2	11	C	12	20/1		SPARE
	2.2		13	A	14	PFB		SPACE
SPARE		20/1	15	B	16	PFB		SPACE
SPARE [1]		20/2	17	C	18	PFB		SPACE

NOTES:
[1] GFCI BREAKER

CONNECTED LOAD

PHASE A=	8.8	kVA
PHASE B=	5.6	kVA
PHASE C=	2.9	kVA
TOTAL =	17.3	kVA
TOTAL =	48.2	Amperes

IDENTIFICATION STAMP
DIV. OF THE STATE ARCHITECT
APP: 02-121275 INC:
REVIEWED FOR
SS ☑ FLS ☑ ACS ☑
DATE: 12/15/2023

CALIFORNIA DESIGN WEST ARCHITECTS, Inc.

2100 19th Street
Sacramento, CA 95818

Phone: (916) 446-2466
Fax: (916) 446-5118
Web Page: ca-dw.com

These plans and prints thereof, as instruments of service, are owned by the architect and are for the use on this project only. Reproduction and/or distribution without the prior written consent of the architect is forbidden.

Copyright California Design West Architects, Inc.

ARCHITECT: CONSULTANT:

LICENSED ARCHITECT — MITCHELL A. MCALISTER — No. C 17250 — REGISTRATION EXPIRES: 08-31-25 — STATE OF CALIFORNIA

REGISTERED PROFESSIONAL ENGINEER — JESSE U. BASTIAN — No. E20229 Exp. 03-31-25 — ELECTRICAL — STATE OF CALIFORNIA

12/08/2023

CONSULTANT:

M. NEILS ENGINEERING, INC.
Electrical Engineers | Lighting Designers
100 Howe Ave., Suite 235N
Sacramento, CA 95825-8217
www.mneilsengineering.com
Tel: (916) 923-4400

PROJECT #: 23051.21
PROJECT MGR: Sinisha Glisic

PROJECT NAME:

BUHACH COLONY HIGH SCHOOL

1800 NORTH BUHACH RD
ATWATER, CA 95301

CONCESSIONS/TOILET BUILDINGS, TICKET BOOTH & STADIUM UPGRADES

MERCED UNION HIGH SCHOOL DISTRICT

MERCED COUNTY

KEY PLAN:

SHEET TITLE:

PARTIAL ONE LINE POWER DIAGRAM, PANEL SCHEDULES

JOB NUMBER:

SHEET NUMBER: **E300**

DATE: MARCH 28, 2023

REVISION:

Dec 08, 2023 — 10:14am — glisic
UNAUTHORIZED CHANGES & USES: M. Neils Engineering, Inc. preparing these plans will not be responsible for, or liable for unauthorized changes to or uses to these plans. All changes to these plans must be in writing and must be approved by M. Neils Engineering, Inc.

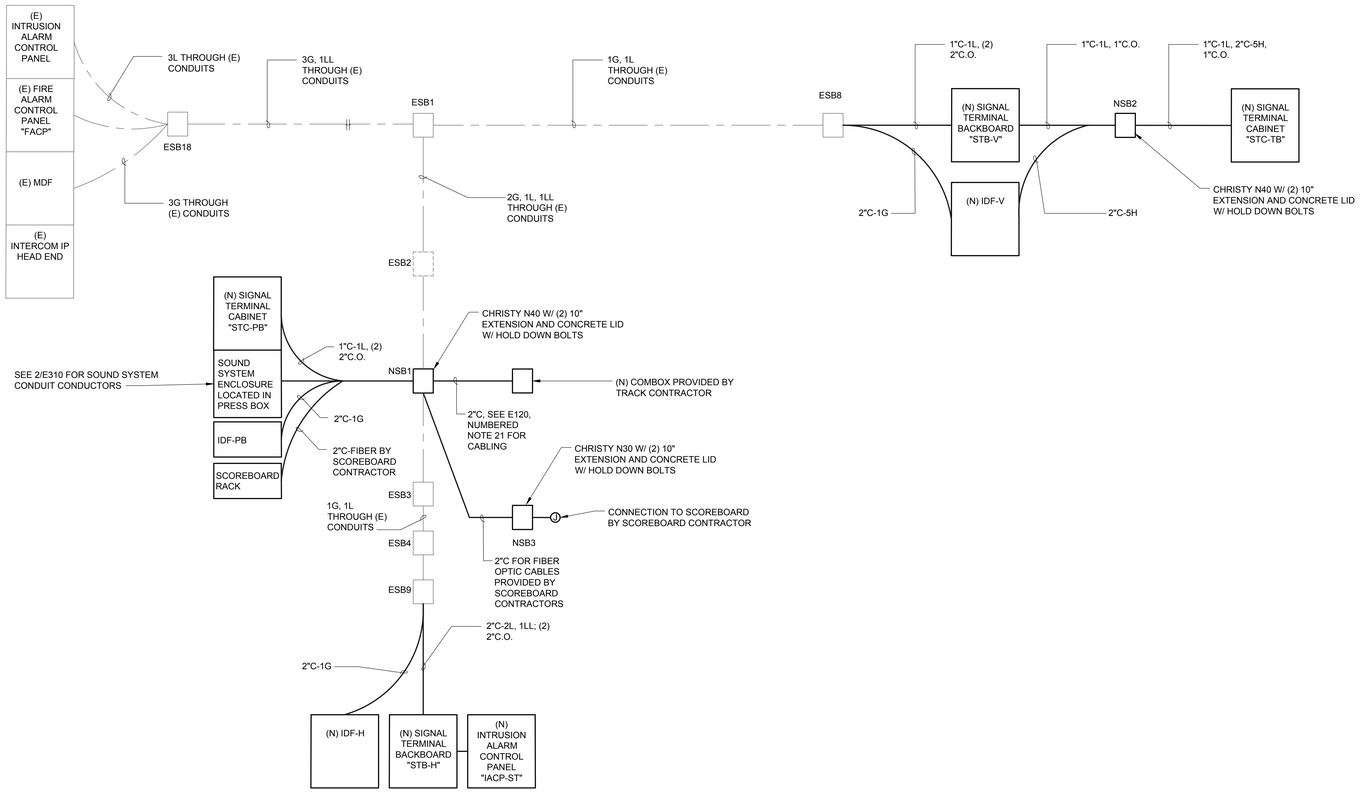

FOR FIRE ALARM CONDUIT/CABLING SEE FIRE ALARM RISER DIAGRAM

FOR STADIUM SOUND SYSTME CONDUIT/CABLING SEE SOUND SYSTEM DIAGRAM

1 SITE SIGNAL RISER DIAGRAM

E310

NOT TO SCALE

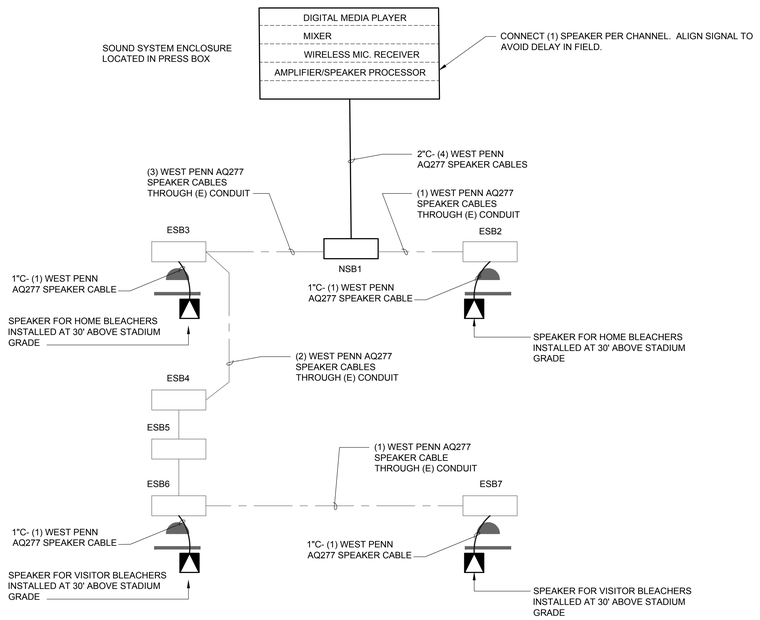

2 STADIUM SOUND SYSTEM DIAGRAM

E310

NOT TO SCALE

SIGNAL CABLE SCHEDULE

TYPE	USE	TYPE / MANUFACTURER #
G	SINGLE MODE FIBER OPTIC CABLE	REFER TO THE SPECIFICATIONS, SECTION 27 2000
H	DATA CABLE CAT6 OSP	REFER TO THE SPECIFICATIONS, SECTION 27 2000
L	INTRUSION ALARM TRUNK	4 CONDUCTORS, 14AWG, SHIELDED - WEST PENN AQ3245 4 CONDUCTORS, 14AWG, NON-SHIELDED - WEST PENN AQ226
LL	CONNECT (E) INTRUSION ALARM CONTROL PANEL AND (N) INTRUSION ALARM CONTROL PANEL	PER MANUFACTURER REQUIREMENTS

SOUND SYSTEM SCHEDULE

ITEM	TYPE / MANUFACTURER #
DIGITAL MEDIA PLAYER	MARANTZ PROFESSIONAL PMD-526C
MIXER	ALESIS MULITMIX 10 WIRELESS
WIRELESS MIC. SYSTEM	SHURE SLX-D4D DUAL CHANNEL RECEIVER W/ POWER SUPPLY AND UA844+SWB ANTENNA, (1) SLXD1 BODYPACK TRANSMITTER W/ DL4B LAVALIER MIC., (1) SLXD2 HANDHELD TRANSMITTER W/ SM58 MIC., DUAL DOCKING RECHARGING STATION FOR SB903 BATTERIES, (4) SB903 BATTERIES,
PRESSBOX MIC.	(2) PURE RESONANCE AUDIO UC1S W/ATLAS SOUND DS SERIES STAND.
AMPLIFIER	(1) COMMUNITY AMPLIFIER/CONTROLLER ALC-1604
SPEAKERS	(4) COMMUNITY R.5-96MAX
RACK ENCLOSURE	CHATSWORTH#11900-X24 - PROVIDE WITH LOW-DECIBEL DUAL FAN AND FILTER
POWER DISTRIBUTION	JUICE GOOSE #JG11-20A

INTRUSION ALARM NOTES:

1. PROVIDE (N) INTRUSION ALARM CONTROL PANEL "IACP-ST", AND CONNECT TO (E) INTRUSION ALARM CONTROL PANEL.
2. (N) INTRUSION ALARM CONTROL PANEL SHALL BE SAME BRAND AS EXISTING AND SHALL CONNECT TO EXISTING IN SUCH MANNER TO FORM INTEGRATED ALARM SYSTEM FOR ENTIRE SCHOOL CAMPUS.
3. (N) INTRUSION ALARM CONTROL PANEL SHALL BE PROGRAMMED AS SEPARATE ZONE OF SCHOOLS INTRUSION ALARM CONTROL SYSTEM.
4. (E) INTRUSION ALARM CONTROL PANEL SHALL BE MAIN CONTROL PANEL FOR ENTIRE INTRUSION ALARM CONTROL SYSTEM.
5. CONNECT (N) ACCESS CONTROLS TO INTRUSION ALARM SYSTEM AS REQUIRED; COORDINATE EXACT REQUIREMENTS WITH SCHOOL PERSONNEL.

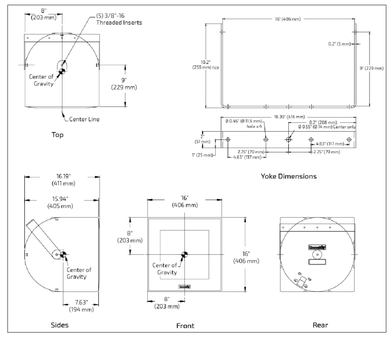

SPEAKER AND YOKE MANUFACTURER DRAWING
SPEAKER + YOKE WEIGHT = 47LB.

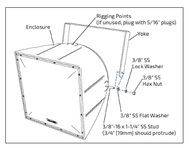

YOKE INSTALLATION TO SPEAKER

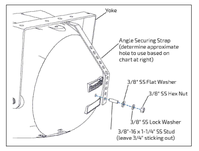

ANGLE STRAP INSTALLATION TO SPEAKER

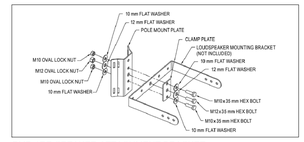

PMB-1RR SPEAKER ATTACHMENT BRACKET

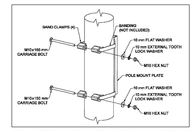

BRACKET INSTALLATION TO LIGHT POLE

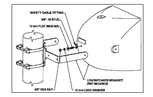

SAFETY CABLE FITTING

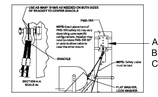

ADDITIONAL PMB-1RR BRACKET FOR SAFETY CABLE ATTACHMENT

SAFETY CABLE INSTALLATION (PROVIDE (1) CABLE, THIS MANUFACTURER DRAWING SHOW TWO SPEAKER INSTALLATION)

REFER TO MANUFACTURER INSTALLATION INSTRUCTION #113009 FROM 02/12/2018 FOR ADDITIONAL INFORMATION. ALL DRAWINGS SHOWN HERE ARE MANUFACTURER DRAWINGS.

3 SPEAKER ATTACHMENT

E310

NOT TO SCALE

Dec. 08, 2023 – 10:14am / pjensw
UNAUTHORIZED CHANGES & USES: M. Neils Engineering, Inc. preparing these plans will not be responsible for, or liable for unauthorized changes to or uses to these plans. All changes to these plans must be in writing and must be approved by M. Neils Engineering, Inc.

IDENTIFICATION STAMP
DIV. OF THE STATE ARCHITECT
APP: 02-121275 INC:
REVIEWED FOR
SS ☑ FLS ☑ ACS ☑
DATE: 12/15/2023

CALIFORNIA DESIGN WEST ARCHITECTS, Inc.

2100 19th Street
Sacramento, CA 95818

Phone: (916) 446-2466
Fax: (916) 446-5118
Web Page: ca-dw.com

These plans and prints thereof, as instruments of service, are owned by the architect and are for the use on this project only. Reproduction and/or distribution without the prior written consent of the architect is forbidden.

Copyright California Design West Architects, Inc.

ARCHITECT: CONSULTANT:

LICENSED ARCHITECT MITCHELL A. MCALISTER LIC. NO. C 17250 RENEWAL 08-31-25 STATE OF CALIFORNIA

REGISTERED PROFESSIONAL ENGINEER JESSE U. BASTIAN No. E20229 Exp. 03-31-25 ELECTRICAL STATE OF CALIFORNIA

12/08/2023

CONSULTANT:

M. NEILS ENGINEERING, INC.
Electrical Engineers | Lighting Designers
100 Howe Ave., Suite 235N
Sacramento, CA 95825-8217
www.mneilsengineering.com
Tel: (916) 923-4400
PROJECT #: 23051.21
PROJECT MGR: Sinisha Glisic

PROJECT NAME:

BUHACH COLONY HIGH SCHOOL

1800 NORTH BUHACH RD
ATWATER, CA 95301

CONCESSIONS/TOILET BUILDINGS, TICKET BOOTH & STADIUM UPGRADES

MERCED UNION HIGH SCHOOL DISTRICT

MERCED COUNTY

KEY PLAN:

SHEET TITLE:
SITE SIGNAL RISER DIAGRAM, STADIUM SOUND SYSTEM DIAGRAM

JOB NUMBER:
SHEET NUMBER: E310

DATE: MARCH 28, 2023

REVISION:

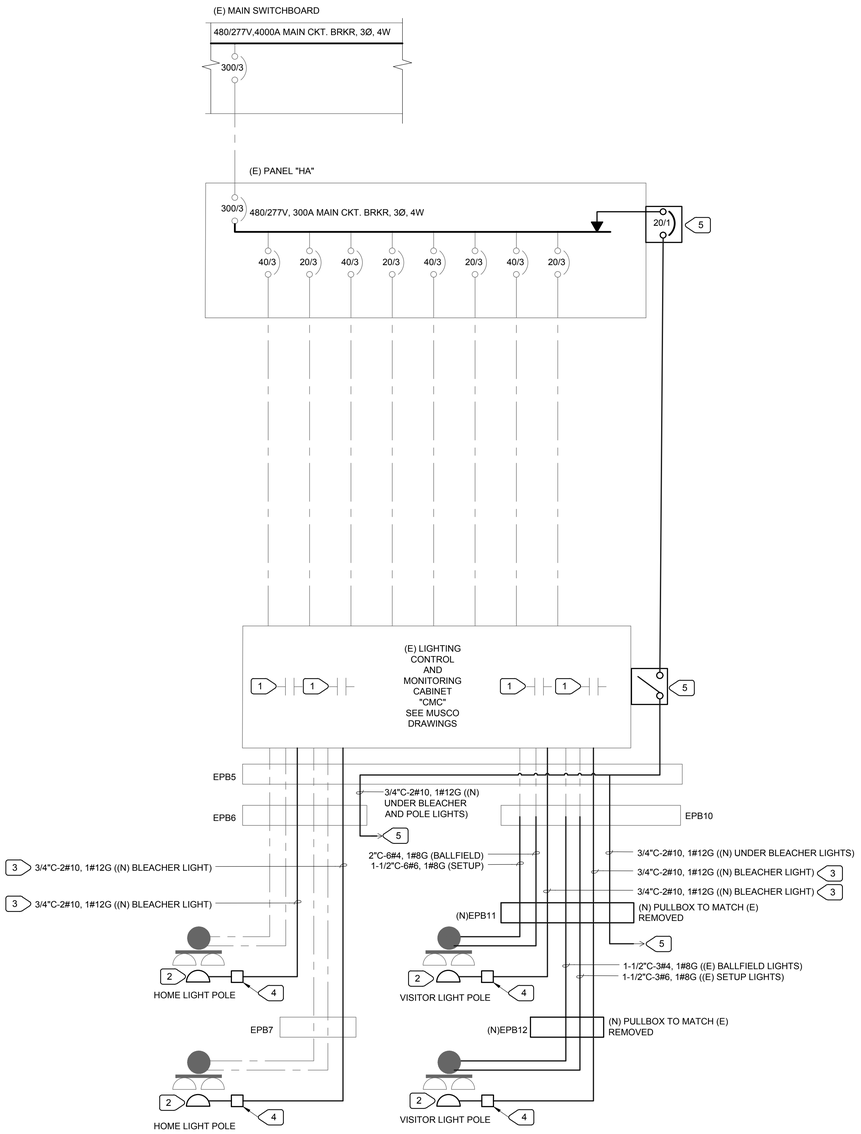

1 E320 — STADIUM LIGHTING DIAGRAM

NO SCALE

NUMBERED NOTES:

1. (E) 30/3 CONTACTOR FOR (E) SETUP LIGHTS - OPERATED BY (E) ZONE 2 SWITCH.
2. (N) BLEACHER LIGHT FIXTURE ADDED TO (E) POLE AT 70' A.G. SEE MUSCO DRAWINGS FOR ADDITIONAL REQUIREMENTS.
3. CONNECT FEEDER FOR (N) BLEACHER LIGHT INTO (E) SETUP LIGHT CONTACTOR. BRING 480V TO (N) BLEACHER LIGHT FIXTURE. COORDINATE WITH MUSCO BEFORE ROUGH IN.
4. PROVIDE EMERGENCY LIGHTING INVERTER - MYERS ILLUMINATOR SR #Z(480)-SR-4-S-F-2YWT. PROVIDE ONE UNIT WITH OPTIONAL KEYPAD/DISPLAY PANEL. INSTALL 10/2 CIRCUIT BREAKER IN NEMA 3R LOCKABLE ENCLOSURE ON SIDE OF INVERTER. RUN INCOMING FEEDER THROUGH CIRCUIT BREAKER AND THEN TO INVERTER INPUT. PROVIDE PERMANENT NAMEPLATE (SEE SPECS) ON THE ENCLOSURE TO READ: "INVERTER DISCONNECT". SEE 4/E500 FOR INVERTER INSTALLATION.
5. PROVIDE 20/1 CIRCUIT BREAKER IN NEMA 3R ENCLOSURE. MOUNT ON SIDE OF PANEL "HA". TAP INTO PANEL "HA" BUS USING 2#12, 1#12G AND CONNECT TO (N) CIRCUIT BREAKER. PROVIDE SWITCH IN NEMA 4X NON-METALLIC ENCLOSURE WITH HINGED QUICK RELEASE WINDOW COVER - B-LINE 644-4XFCHQRCW. MOUNT ON EXTERIOR OF STADIUM LIGHTING CONTROL CABINET. PROVIDE PERMANENT LABEL "UNDER BLEACHER / POLE LIGHT". TYPICAL FOR "I" TYPE LIGHTS MOUNTED UNDER BLEACHERS AND "G2" POLE MOUNTED LIGHTS.

IDENTIFICATION STAMP
DIV. OF THE STATE ARCHITECT
APP: 02-121275 INC:
REVIEWED FOR
SS ☑ FLS ☑ ACS ☑
DATE: 12/15/2023

CALIFORNIA DESIGN WEST ARCHITECTS, Inc.

2100 19th Street
Sacramento, CA 95818

Phone: (916) 446-2466
Fax: (916) 446-5118
Web Page: ca-dw.com

These plans and prints thereof, as instruments of service, are owned by the architect and are for the use on this project only. Reproduction and/or distribution without the prior written consent of the architect is forbidden.

Copyright California Design West Architects, Inc.

ARCHITECT: CONSULTANT:

LICENSED ARCHITECT — MITCHELL A. MCALISTER — LICENSE NO. C 17250 — EXPIRATION 08-31-25 — STATE OF CALIFORNIA

REGISTERED PROFESSIONAL ENGINEER — JESSE U. BASTIAN — No. E20229 Exp. 03-31-25 — ELECTRICAL — STATE OF CALIFORNIA

12/08/2023

CONSULTANT:

M. NEILS ENGINEERING, INC.
Electrical Engineers | Lighting Designers
100 Howe Ave., Suite 235N
Sacramento, CA 95825-8217
www.mneilsengineering.com
Tel: (916) 923-4400

PROJECT #: 23051.21
PROJECT MGR: Sinisha Glisic

PROJECT NAME:

BUHACH COLONY HIGH SCHOOL

1800 NORTH BUHACH RD
ATWATER, CA 95301

CONCESSIONS/TOILET BUILDINGS, TICKET BOOTH & STADIUM UPGRADES

MERCED UNION HIGH SCHOOL DISTRICT

MERCED COUNTY

KEY PLAN:

SHEET TITLE:
STADIUM LIGHTING RISER DIAGRAMS

JOB NUMBER:	SHEET NUMBER:
DATE: MARCH 28, 2023	E320
REVISION:	

Dec 08, 2023 - 10:14am, / rjones
UNAUTHORIZED CHANGES & USES: M. Neils Engineering, Inc. preparing these plans will not be responsible for or liable for unauthorized changes to or uses to these plans. All changes to these plans must be in writing and must be approved by M. Neils Engineering, Inc.

FIRE ALARM EQUIPMENT SCHEDULE

SYMBOL	CATALOG NO.	DESCRIPTION	CSFM LISTING No.
WP	SYSTEM SENSOR HRK /W WTP FLUSH MOUNTING PLATE	EXTERIOR HORN	7135-1653:0189
	SYSTEM SENSOR P2RL	HORN/STROBE	7135-1653:0503
	SYSTEM SENSOR SRL-P	STROBE, WALL MOUNTED	7125-1653:0504
AC 194°	SIMPLEX 4098-9734	HEAT DETECTOR 190°F.	7270-0026:0216
	SIMPLEX 4098-9714	SMOKE (PHOTOELECTRIC) DETECTOR	7272-0026:0218
MM	SIMPLEX 4090-9001	MONITOR MODULE	7300-0026:0223
FAPS	SIMPLEX 4009-9201	(N) FIRE ALARM POWER SUPPLY	7300-0026:0214
FACP	SIMPLEX E4100ES	(E) FIRE ALARM CONTROL PANEL	

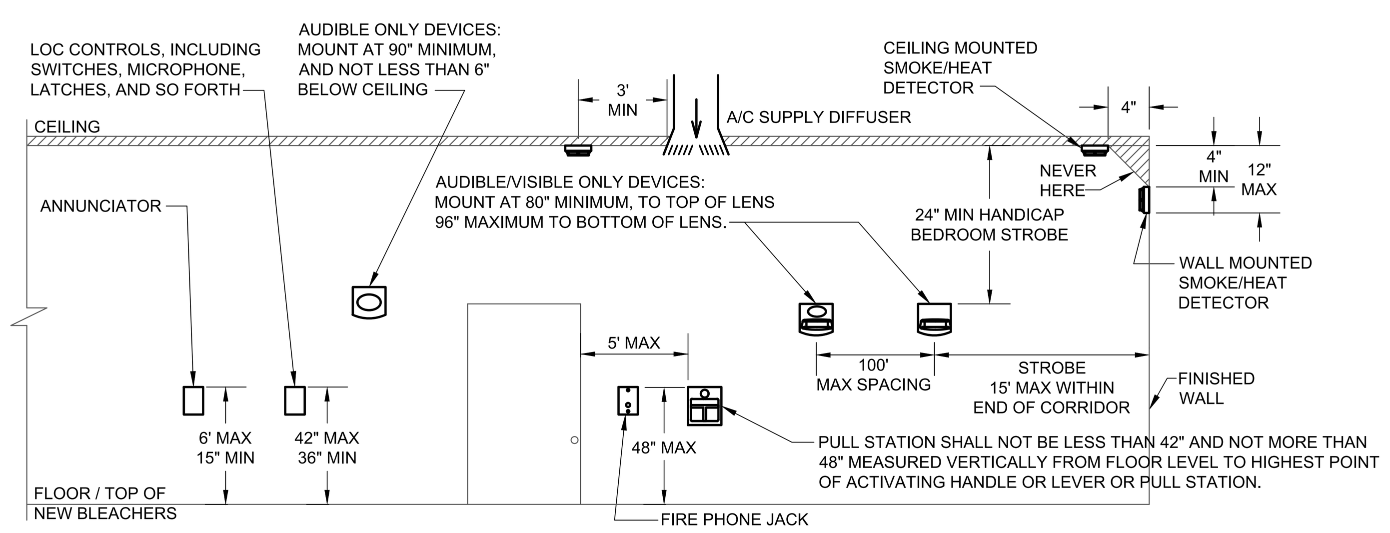

TYPICAL INITIATION AND NOTIFICATION APPLIANCE ELEVATION DETAIL

1 E400

NO SCALE

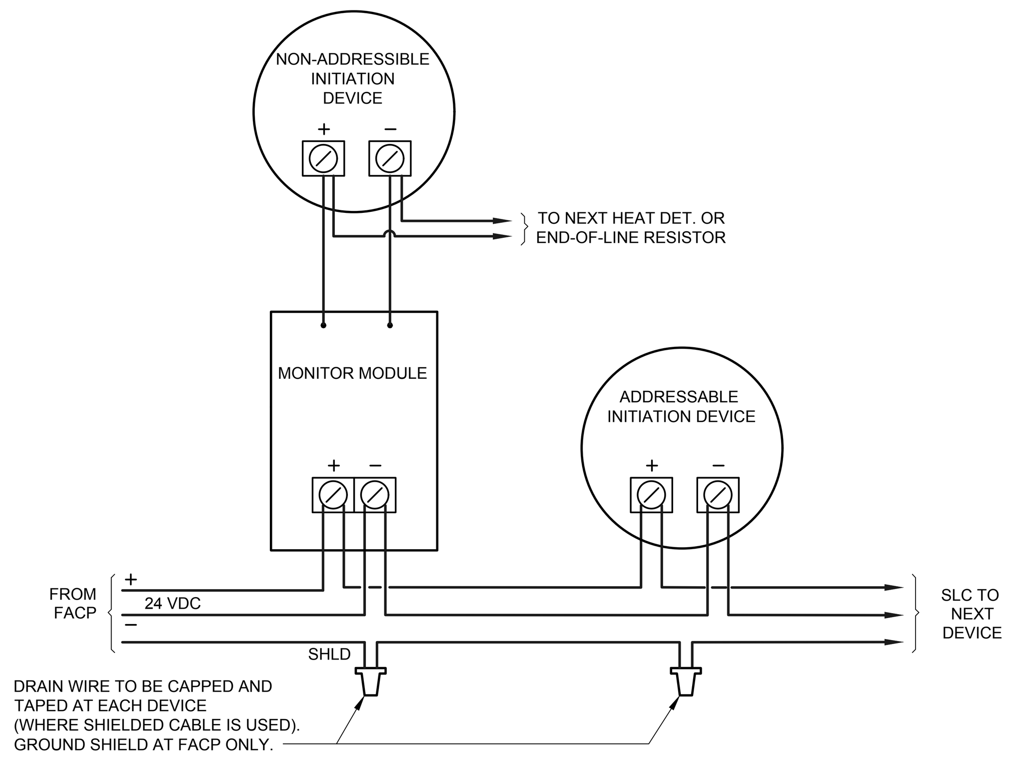

NOTE:
DIAGRAM IS GENERIC THEREFORE CONTRACTOR SHALL COORDINATE WORK FOR SPECIFIC DEVICES USED. REFER TO MANUFACTURER INFORMATION FOR TYPE OF CABLE, MAX. LENGTH, T-TAPING, GROUNDING, ETC.

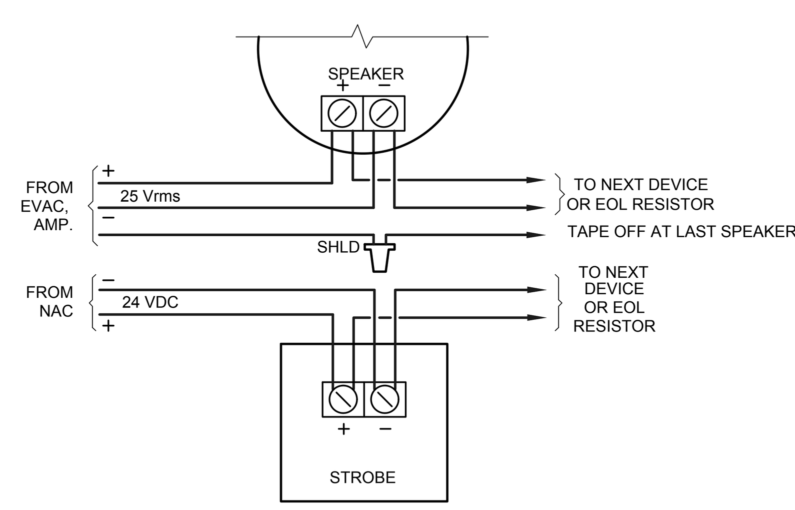

FIRE ALARM DEVICES DIAGRAM

2 E400

N.T.S.

FIRE ALARM GENERAL NOTES

1. INSTALLATION OF THE SYSTEMS SHALL NOT BE STARTED UNTIL DETAILED DESIGN DOCUMENTS AND SPECIFICATION, INCLUDING STATE FIRE MARSHAL LISTING NUMBERS FOR EACH COMPONENT OF THE SYSTEM, HAS BEEN APPROVED BY DSA.
2. UPON COMPLETION OF SYSTEM INSTALLATION, A SATISFACTORY TEST OF THE ENTIRE SYSTEM SHALL BE MADE IN THE PRESENCE OF A DSA PROJECT INSPECTOR.
3. A STAMPED SET OF APPROVED FIRE ALARM DESIGN DOCUMENTS SHALL BE ON THE JOB SITE AND USED FOR INSTALLATION.
4. ANY DISCREPANCIES BETWEEN THE DRAWINGS AND THE CODE OR RECOGNIZED STANDARDS SHALL BE BROUGHT TO THE ATTENTION OF DSA AND THE ARCHITECT/ENGINEER OF THE PROJECT.
5. DSA, ARCHITECT/ENGINEER AND OWNER SHALL BE NOTIFIED A MINIMUM OF 48 HOURS PRIOR TO THE FINAL INSPECTION AND /OR TESTING.
6. ALL PENETRATIONS THROUGH RATED ASSEMBLIES REQUIRING OPENING PROTECTION SHALL BE PROVIDED WITH A PENETRATION FIRE STOP SYSTEMS AS IDENTIFIED IN CBC CHAPTER 7, UL OR OTHER APPROVED LAB TESTING CRITERIA, APPROVED TYPES OF MATERIALS SHALL BE IDENTIFIED WITHIN THE PROJECT SPECIFICATIONS WITHIN FIRE ALARM SECTION.
7. WALL MOUNTED VISIBLE NOTIFICATION DEVICES SHALL HAVE THEIR BOTTOMS MOUNTED AT 80" MINIMUM AND THEIR TOPS 96" MAXIMUM FROM FINISHED FLOOR.
8. WALL MOUNTED AUDIBLE NOTIFICATION DEVICES SHALL HAVE THEIR TOPS MOUNTED AT 90" MINIMUM AND 100" MAXIMUM FROM FINISHED FLOOR AND NO CLOSER THEN 6" TO A HORIZONTAL STRUCTURE.
9. AUDIBLE DEVICES SHALL PROVIDE A SOUND PRESSURE LEVEL OF 15 DECIBELS (dBA) ABOVE THE AVERAGE AMBIENT SOUND LEVEL OR FIVE dBA ABOVE THE MAXIMUM SOUND LEVEL HAVING A DURATION OF AT LEAST 60 SECONDS, WHICHEVER IS GREATER, IN EVERY OCCUPIABLE SPACE WITHIN THE BUILDING. THE FIRE ALARM EVACUATION SIGNAL SHALL SOUND A THREE-PULSE TEMPORAL PATTERN PER NFPA 72 (CBC 907.5.2.1.3 AND NFPA 72 18.4.2.1).
10. THE CONTRACTOR SHALL ADJUST/INSTALL ALL DEVICES TO MAXIMIZE PERFORMANCE AND TO MINIMIZE FALSE ALARMS. DSA PROJECT SUBMITTAL GUIDELINE-2 FIRE ALARM DETECTION SYSTEMS GL 2 (rev 08/10/18) Page 4 of 7 DIVISION OF THE STATE ARCHITECT DEPARTMENT OF GENERAL SERVICES STATE OF CALIFORNIA.
11. VISIBLE DEVICES SHOULD NOT EXCEED TWO FLASHES PER SECOND AND SHOULD NOT BE SLOWER THAN ONE FLASH EVERY SECOND. THE DEVICE SHALL HAVE A PULSING LIGHT SOURCE NOT LESS THAN 15 DANDELLA. VISIBLE DEVICES WITHIN 55' FROM EACH OTHER SHALL BE SYNCHRONIZED.
12. UNDERGROUND AND EXTERIOR CONDUITS TO HAVE WATERTIGHT FITTINGS AND WIRE TO BE APPROVED FOR WET LOCATIONS.
13. ALL FIRE ALARM WIRING SHALL BE FPL OR FPLP (FIRE POWER LIMITED OR FIRE POWER LIMITED PLENUM) AS REQUIRED FOR APPLICATION. WIRING IN CONDUIT ABOVE GROUND MAY BE TYPE THHN OR THWN.
14. PER CEC STANDARDS, ALL WIRING IS TO BE PULLED THROUGH EACH JUNCTION BOX AND CONNECTED DIRECTLY TO EACH FIRE DEVICE. DO NOT SPLICE THE WIRE. ALL BOXES TO BE SIZED PER CEC.
15. SMOKE DETECTORS SHALL NOT BE ANY CLOSER THAN 3' FROM ANY SUPPLY DIFFUSER. IN AREA OF CONSTRUCTION OR POSSIBLE DAMAGE/CONTAMINATION ON NEWLY INSTALLED FIRE ALARM, DEVICES SHALL BE COVERED UNTIL THAT AREA IS READY TO BE TURNED OVER TO THE OWNER.
16. ALL FIRE ALARM CIRCUITS SHALL BE IN CONDUIT IN WALLS IN A NEAT AND PROTECTED MANOR AS INDICATED ON DESIGN DOCUMENTS.
17. FIRE ALARM PANEL, REMOTES, AND COMPONENTS SHALL BE SECURED TO MOUNTING SURFACES PER MANUFACTURERS SPECIFICATIONS. NO SINGLE DEVICE SHALL EXCEED 20 LBS. WITHOUT SPECIAL MOUNTING DETAILS.
18. A DEDICATED BRANCH CIRCUIT SHALL BE PROVIDED FOR FIRE ALARM EQUIPMENT. THIS CIRCUIT SHALL BE ENERGIZED FROM THE COMMON USE AREA PANEL AND SHALL HAVE NO OTHER OUTLETS. THE BREAKER SHALL HAVE A RED LOCKING DEVICE TO BLOCK THE HANDLE IN THE "ON" POSITION. THE CIRCUIT BREAKER SHALL BE LABELED "FIRE ALARM CIRCUIT CONTROL". CIRCUIT ID TO BE LABELED AT FIRE PANEL/EXTENDERS.
19. THE INSTALLING CONTRACTOR SHALL PROVIDE A COMPLETED "SYSTEM RECORD OF COMPLETION" PER NFPA 72, FIGURE 17.8.2.
20. MICROPHONES ASSOCIATED WITH EMERGENCY VOICE ALARM COMMUNICATION SYSTEMS (EVAC) SHALL BE ACCESSIBLE FOR USE, INSTALLED IN COMPLIANCE WITH CBC SECTIONS 11B-305 AND 11B-308.
21. THE INSTALLING CONTRACTOR SHALL PROVIDE SYSTEM PROGRAMMING FOR SUPERVISORY MONITORING PER CBC SECTION 901.6.2.
22. SUPERVISORY MONITORING SHALL BE TESTED AND VERIFIED AS SENDING CORRECT SIGNALS IN CONJUNCTION WITH FINAL ACCEPTANCE TEST. DSA PROJECT SUBMITTAL GUIDELINE-2 FIRE ALARM AND DETECTION SYSTEMS GL 2 (rev 08/10/18) Page 5 of 7 DIVISION OF THE STATE ARCHITECT DEPARTMENT OF GENERAL SERVICES STATE OF CALIFORNIA.
23. OWNER SHALL BE RESPONSIBLE FOR ESTABLISHING A FIRE SYSTEM MONITORING CONTRACT OR PROVISIONS.
24. AUTOMATIC FIRE ALARM SYSTEMS SHALL BE MONITORED AND SHALL TRANSMIT THE ALARM. SUPERVISORY, AND TROUBLE SIGNALS TO AN APPROVED SUPERVISING STATION IN ACCORDANCE WITH NFPA 72, AS AMENDED BY CFC CHAPTER 80. THE SUPERVISING STATION SHALL BE LISTED AS EITHER UUFX (CENTRAL STATION) OR UUJS (REMOTE & PROPRIETARY) BY UL OR OTHER APPROVED LISTING AND TESTING LABORATORY OR SHALL COMPLY WITH THE REQUIREMENTS OF STANDARD, FACTORY MUTUAL (FM) 3011. TERMINATION OF MONITORING SERVICES SHALL BE IN ACCORDANCE WITH CBC/CFC SECTION 907.6.6.3

PROJECT INFORMATION

1. PROVIDE ADDITION TO EXISTING AUTOMATIC FIRE ALARM SYSTEM IN NEW BUILDINGS "H", "T", "V" AND PRESS BOX AT UPGRADED STADIUM IN BUHACH COLONY HIGH SCHOOL.
2. NEW BUILDINGS ARE OCCUPANCY E.

FIRE ALARM SEQUENCE OF OPERATION MATRIX

	FACP ALARM	FACP TROUBLE	ALARM SIGNAL OFF-SITE TO LISTED CENTRAL STATION	TROUBLE SIGNAL OFF-SITE	ACTIVATE AUDIO/VISUAL THROUGHOUT	ALARM RECEIPT CAPABILITY DURING ABNORMAL CONDITIONS	ANNUNCIATE ALARM AT REMOTE ANNUNCIATOR
AREA SMOKE DETECTORS	X		X		X		X
HEAT DETECTORS	X		X		X		X
POWER FAILURE		X		X			X
NOTIFICATION CIRCUIT CLASS B							
OPEN WIRE		X		X			
GROUNDED WIRE		X		X		R	
SHORTED WIRES		X		X			
SIGNALING LINE CIRCUIT CLASS B							
OPEN WIRE		X		X			
GROUNDED WIRE		X		X		R	
WIRE TO WIRE (SHORT & OPEN)		X		X			
WIRE TO WIRE (SHORT & GROUND)		X		X			
OPEN & GROUND		X		X			
LOSS OF CARRIER		X		X			

NOTE: BLANK MEANS NOT APPLICABLE R = REQUIRED ACTION

System No.W-L-1001
June 15, 2005
F Ratings - 1, 2, 3 and 4 Hr (See Items 2 and 3)
T Ratings - 0, 1, 2, 3, and 4 Hr (See Item 3)
L Rating At Ambient - less than 1 CFM/sq ft
L Rating At 400 F - less than 1 CFM/sq ft

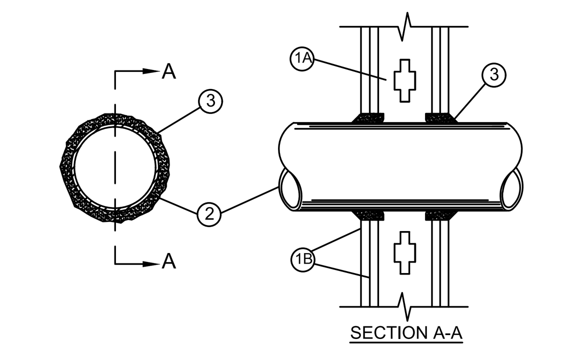

1. Wall Assembly - The 1, 2, 3 or 4 hr fire-rated gypsum wallboard/stud wall assembly shall be constructed of the materials and in the manner described in the individual U300 or U400 Series Wall or Partition Designs in the UL Fire Resistance Directory and shall include the following construction features:

A. Studs - Wall framing may consist of either wood studs (max 2 hr fire rated assemblies) or steel channel studs. Wood studs to consist of nom 2 by 4 in. (51 by 102 mm) lumber spaced 16 in. (406 mm) OC with nom 2 by 4 in. (51 by 102 mm) lumber end plates and cross braces. Steel studs to be min 3-5/8 in. (92 mm) wide by 1-3/8 in. (35 mm) deep channels spaced max 24 in. (610 mm) OC.
B. Gypsum Board* - Nom 1/2 or 5/8 in. (13 or 16 mm) thick, 4 ft. (122 cm) wide with square or tapered edges. The gypsum wallboard type, thickness, number of layers, fastener type and sheet orientation shall be as specified in the individual U300 or U400 Series Design in the UL Fire Resistance Directory. Max diam of opening is 26 in. (660 mm).

2. Through Penetrant - One metallic pipe, conduit or tubing installed either concentrically or eccentrically within the firestop system. The annular space between pipe, conduit or tubing and periphery of opening shall be min of 0 in. (0 mm) (point contact) to max 2 in. (51 mm). Pipe, conduit or tubing to be rigidly supported on both sides of wall assembly. The following types and sizes of metallic pipes, conduits or tubing may be used:
A. Steel Pipe - Nom 24 in. (610 mm) diam (or smaller) Schedule 10 (or heavier) steel pipe.
B. Iron Pipe - Nom 24 in. (610 mm) diam (or smaller) service weight (or heavier) cast iron soil pipe, nom 12 in. (305 mm) diam (or smaller) or Class 50 (or heavier) ductile iron pressure pipe.
C. Conduit - Nom 6 in. (152 mm) diam (or smaller) steel conduit or nom 4 in. (102 mm) diam (or smaller) steel electrical metallic tubing
D. Copper Tubing - Nom 6 in. (152 mm) diam (or smaller) Type L (or heavier) copper tubing
E. Copper Pipe - Nom 6 in. (152 mm) diam (or smaller) Regular (or heavier) copper pipe.
F. Through Penetrating Product* - Flexible Metal Piping - The following types of steel flexible metal gas piping may be used:

1. Nom 2 in. (51 mm) diam (or smaller) steel flexible metal gas piping. Plastic covering on piping may or may not be removed on both sides of floor or wall assembly.

OMEGA FLEX INC

2. Nom 1 in. (25 mm) diam (or smaller) steel flexible metal gas piping. Plastic covering on piping may or may not be removed on both sides of floor or wall assembly.

TITEFLEX CORP
A BUNDY CO

3. Nom 1 in. (25 mm) diam (or smaller) steel flexible metal gas piping. Plastic covering on piping may or may not be removed on both sides of floor or wall assembly.

WARD MFG INC

3. Fill,Void or Cavity Material* - Caulk or Sealant - Min 5/8. 1-1/4,1-7/8 and 2-1/2 in. (16, 32, 48 and 64 mm) thickness of caulk for 1, 2, 3 and 4 hr rated assemblies, respectively, applied within annulus, flush with both surfaces of wall. Min 1/4 in. (6 mm) diam bead of caulk applied to gypsum board/penetrant interface at point contact location on both sides of wall.
The hourly F Rating of the firestop system is dependent upon the hourly fire rating of the wall assembly in which it is installed, as shown in the following table.
The hourly T Rating of the firestop system is dependent upon the type or size of the pipe or conduit and the hourly fire rating of the wall assembly in which it is installed, as tabulated below:

Max Pipe or Conduit Diam in. (mm)	F Rating Hr	T Rating Hr
1 (25)	1 or 2	0+, 1 or 2
1 (25)	3 or 4	3 or 4
4 (102)	1 or 2	0
6 (152)	3 or 4	0
12 (305)	1 or 2	0

+When copper pipe is used, T Rating is 0 hr.

3M COMPANY - CP 25WB+ caulk or FB-3000 WT sealant,

*Bearing the UL Classification Marking

FIRE WALL PENETRATION DETAIL

3 E400

N.T.S.

IDENTIFICATION STAMP
DIV. OF THE STATE ARCHITECT
APP: 02-121275 INC:
REVIEWED FOR
SS ☑ FLS ☑ ACS ☑
DATE: 12/15/2023

CALIFORNIA DESIGN
WEST ARCHITECTS, Inc.

2100 19th Street
Sacramento, CA 95818

Phone: (916) 446-2466
Fax: (916) 446-5118
Web Page: ca-dw.com

These plans and prints thereof, as instruments of service, are owned by the architect and are for the use on this project only. Reproduction and/or distribution without the prior written consent of the architect is forbidden.

Copyright California Design West Architects, Inc.

ARCHITECT: CONSULTANT:

LICENSED ARCHITECT MITCHELL A. McALLISTER NO. C 17250 REN. 2-28-2025 STATE OF CALIFORNIA
REGISTERED PROFESSIONAL ENGINEER JESSE U. BASTIAN No. E20229 Exp. 03-31-25 ELECTRICAL STATE OF CALIFORNIA
12/08/2023

CONSULTANT:
M. NEILS ENGINEERING, INC.
Electrical Engineers | Lighting Designers
100 Howe Ave., Suite 235N
Sacramento, CA 95825-8217
www.mneilsengineering.com
Tel: (916) 923-4400
PROJECT #: 23051.21
PROJECT MGR: Sinisha Glisic

PROJECT NAME:

BUHACH COLONY HIGH SCHOOL

1800 NORTH BUHACH RD
ATWATER, CA 95301

CONCESSIONS/TOILET BUILDINGS, TICKET BOOTH & STADIUM UPGRADES

MERCED UNION HIGH SCHOOL DISTRICT

MERCED COUNTY

KEY PLAN:

SHEET TITLE:

FIRE ALARM NOTES, DETAILS, OPERATION MATRIX, SCHEDULES

JOB NUMBER: SHEET NUMBER:

DATE: MARCH 28, 2023

REVISION:

E400

Dec 08, 2023 - 10:14am, / pivanov
UNAUTHORIZED CHANGES & USES: M. Neils Engineering, Inc. preparing these plans will not be responsible for, or liable for unauthorized changes to or uses to these plans. All changes to these plans must be in writing and must be approved by M. Neils Engineering, Inc.

DEVICE LOAD IN AMPS	15cd	30cd
	0.054	0.074
WP	0.069	
	0.043	0.063
DEVICE COLOR = RED		

FIRE ALARM CABLE SCHEDULE

K	ADDRESSABLE INITIATION	2#16AWG, - WEST PENN 990
U	NOTIFICATION	2#12 AWG - WEST PENN 998
X	ADDRESSABLE INITIATION - SITE	2#14AWG,- WEST PENN AQ266
Y	NOTIFICATION - SITE	2#12 THWN

FIRE ALARM ON THIS PROJECT IS EXEMPT FROM HAVING EMERGENCY VOICE EVACUATION SYSTEM PER DSA IR 9-1, 2.4.1

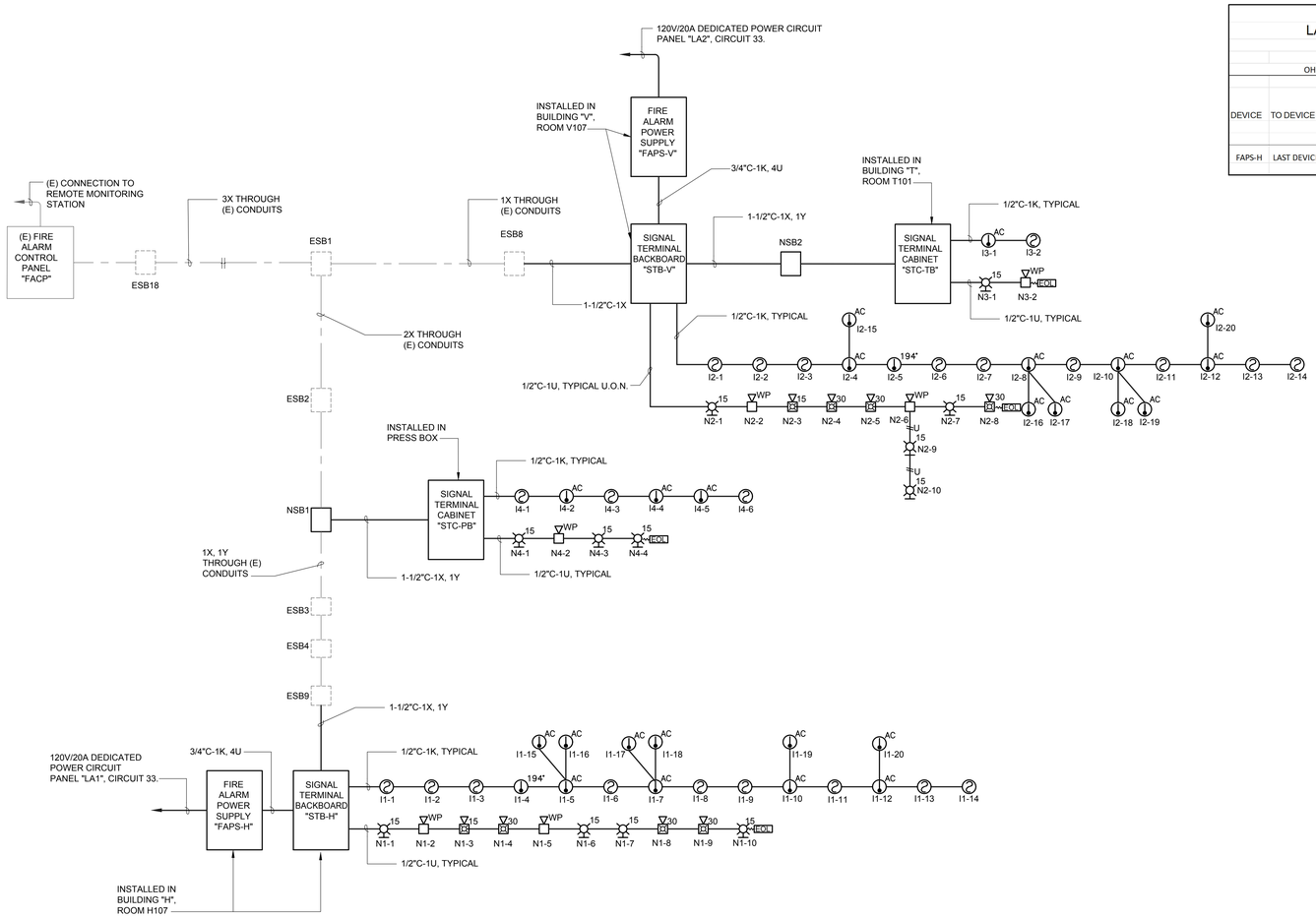

1. FIRE ALARM WIRING SHALL BE RUN IN CONDUITS, NO EXCEPTIONS.
2. NEW BATTERIES SHALL BE MARKED WITH MONTH AND YEAR OF MANUFACTURING.

1 / E410 — FIRE ALARM RISER DIAGRAM

NOT TO SCALE

BATTERY CALCULATION - FIRE ALARM POWER SUPPLY FAPS-V

DESCRIPTION	QUANTITY	STANDBY CURRENT	SUBTOTAL	ALARM CURRENT	SUBTOTAL
FAPS CPU	1	0.090	0.090 A	0.13	0.185 A
STROBE 15cd	5	0.000	0.000 A	0.043	0.215 A
STROBE/HORN 15cd	1	0.000	0.000 A	0.054	0.054 A
STROBE/HORN 30cd	3	0.000	0.000A	0.074	0.222 A
EXTERIOR HORN	3	0.000	0.000 A	0.069	0.207 A
		TOTAL	0.090 A	TOTAL	0.676 A

STANDBY	24	HOURS X	0.090 A	=	2.160	AH
ALARM	15	MIN X	0.676 A	=	0.169	AH
SPARE	20% OFF	2.329	AH	=	0.466	AH
			TOTAL	=	2.795	AH
			PROVIDED BATTERY	=	7	AH @ 24V

BATTERY CALCULATION - FIRE ALARM POWER SUPPLY FAPS-H

DESCRIPTION	QUANTITY	STANDBY CURRENT	SUBTOTAL	ALARM CURRENT	SUBTOTAL
FAPS CPU	1	0.090	0.090 A	0.13	0.185 A
STROBE 15cd	7	0.000	0.000 A	0.043	0.301 A
STROBE/HORN 15cd	1	0.000	0.000 A	0.054	0.054 A
STROBE/HORN 30cd	3	0.000	0.000A	0.074	0.222 A
EXTERIOR HORN	3	0.000	0.000 A	0.069	0.207 A
		TOTAL	0.090 A	TOTAL	0.762 A

STANDBY	24	HOURS X	0.090 A	=	2.160	AH
ALARM	15	MIN X	0.762 A	=	0.191	AH
SPARE	20% OFF	2.351	AH	=	0.470	AH
			TOTAL	=	2.821	AH
			PROVIDED BATTERY	=	7	AH @ 24V

VOLTAGE DROP CALCULATION
LAST DEVICE - WORST CASE SCENARIO

ACCEPTABLE LIMIT: NOT TO EXCEED 2.04V (10%*20.4V)

OHMS = (#14 FT * 3.07/1000 + #12 FT * 1.93/1000+ #10 FT * 1.21/1000) *2

DEVICE	TO DEVICE #	CKT. LENGTH FT	WIRE SIZE. #12	RESISTANCE OF WIRE (OHM)	LOAD TOTAL	ACCUM. VOLTAGE DROP
				(OHM)		
FAPS-V	LAST DEVICE N2-8	195	0.00193	0.753	0.586 A	0.441 V

VOLTAGE DROP CALCULATION
LAST DEVICE - WORST CASE SCENARIO

ACCEPTABLE LIMIT: NOT TO EXCEED 2.04V (10%*20.4V)

OHMS = (#14 FT * 3.07/1000 + #12 FT * 1.93/1000+ #10 FT * 1.21/1000) *2

DEVICE	TO DEVICE #	CKT. LENGTH FT	WIRE SIZE. #12	RESISTANCE OF WIRE (OHM)	LOAD TOTAL	ACCUM. VOLTAGE DROP
				(OHM)		
FAPS-H	LAST DEVICE N1-10	210	0.00193	0.811	0.623 A	0.505 V

VOLTAGE DROP CALCULATION
LAST DEVICE - WORST CASE SCENARIO

ACCEPTABLE LIMIT: NOT TO EXCEED 2.04V (10%*20.4V)

OHMS = (#14 FT * 3.07/1000 + #12 FT * 1.93/1000+ #10 FT * 1.21/1000) *2

DEVICE	TO DEVICE #	CKT. LENGTH FT	WIRE SIZE. #12	RESISTANCE OF WIRE (OHM)	LOAD TOTAL	ACCUM. VOLTAGE DROP
				(OHM)		
FAPS-H	LAST DEVICE N3-4	785	0.00193	3.030	0.198 A	0.600 V

VOLTAGE DROP CALCULATION
LAST DEVICE - WORST CASE SCENARIO

ACCEPTABLE LIMIT: NOT TO EXCEED 2.04V (10%*20.4V)

OHMS = (#14 FT * 3.07/1000 + #12 FT * 1.93/1000+ #10 FT * 1.21/1000) *2

DEVICE	TO DEVICE #	CKT. LENGTH FT	WIRE SIZE. #12	RESISTANCE OF WIRE (OHM)	LOAD TOTAL	ACCUM. VOLTAGE DROP
				(OHM)		
FAPS-V	LAST DEVICE N4-4	540	0.00193	2.084	0.198 A	0.413 V

IDENTIFICATION STAMP
DIV. OF THE STATE ARCHITECT
APP: 02-121275 INC:
REVIEWED FOR
SS ☑ FLS ☑ ACS ☑
DATE: 12/15/2023

CALIFORNIA DESIGN WEST ARCHITECTS, Inc.

2100 19th Street
Sacramento, CA 95818

Phone: (916) 446-2466
Fax: (916) 446-5118
Web Page: ca-dw.com

These plans and prints thereof, as instruments of service, are owned by the architect and are for the use on this project only. Reproduction and/or distribution without the prior written consent of the architect is forbidden.

Copyright California Design West Architects, Inc.

ARCHITECT: CONSULTANT:

LICENSED ARCHITECT MITCHELL A. MCALISTER No. C 17250 REN: 08-31-25 STATE OF CALIFORNIA

REGISTERED PROFESSIONAL ENGINEER JOSE U. BASTIAN No. E20229 Exp. 03-31-25 ELECTRICAL STATE OF CALIFORNIA

12/08/2023

CONSULTANT:

M. NEILS ENGINEERING, INC.
Electrical Engineers | Lighting Designers
100 Howe Ave., Suite 235N
Sacramento, CA 95825-8217
www.mneilsengineering.com
Tel: (916) 923-4400

PROJECT #: 23051.21
PROJECT MGR: Sinisha Glisic

PROJECT NAME:

BUHACH COLONY HIGH SCHOOL

1800 NORTH BUHACH RD
ATWATER, CA 95301

CONCESSIONS/TOILET BUILDINGS, TICKET BOOTH & STADIUM UPGRADES

MERCED UNION HIGH SCHOOL DISTRICT

MERCED COUNTY

KEY PLAN:

SHEET TITLE:

FIRE ALARM RISER DIAGRAM, FA CALCULATIONS

JOB NUMBER:	SHEET NUMBER:
DATE: MARCH 28, 2023	E410
REVISION:	

Dec 08, 2023 – 10:14am – pierrew
UNAUTHORIZED CHANGES & USES: M. Neils Engineering, Inc. preparing these plans will not be responsible for or liable for unauthorized changes to or uses to these plans. All changes to these plans must be in writing and must be approved by M. Neils Engineering, Inc.

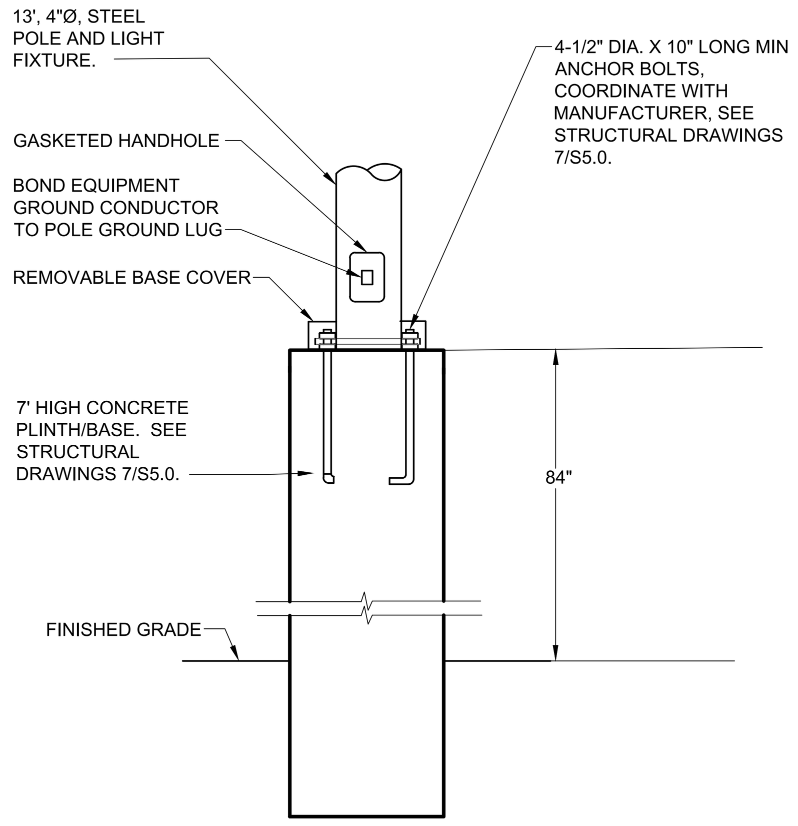

LIGHT POLES LESS THAN 35' TALL ARE EXEMPT FROM DSA STRUCTURAL SAFETY REVIEW PER DSA IR A-22.

1 E500 ENTRANCE FIXTURE POLE BASE DETAIL

NO SCALE

UNDERGROUND PULL BOX SCHEDULE

TAG	NOMINAL WIDTH	NOMINAL LENGTH	COVER DIMENSION	NOMINAL DEPTH
NPB1, NPB2, NPB3, NSB3	18"	28"	13-3/4"X23-1/4"	12" + 12" EXTENSION
NSB1, NSB2	29"	41"	24"X35-1/2"	12" + 12" EXTENSION

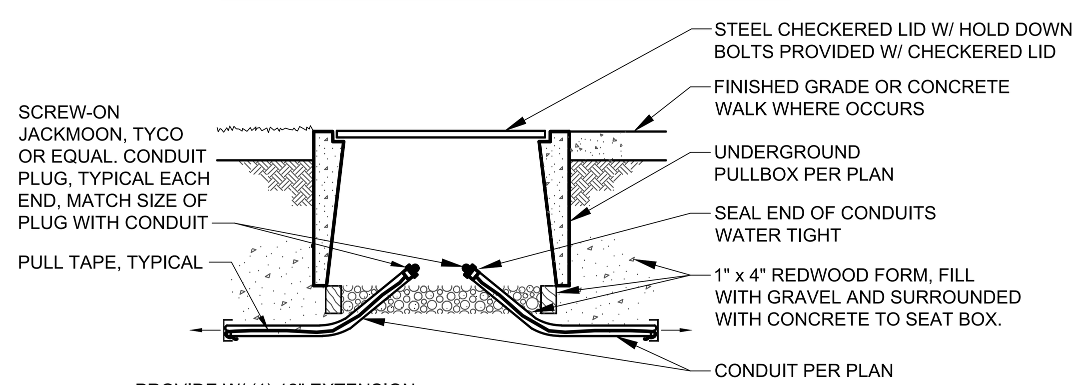

PROVIDE W/ (1) 12" EXTENSION

2 E500 UNDERGROUND PULL BOX

NO SCALE

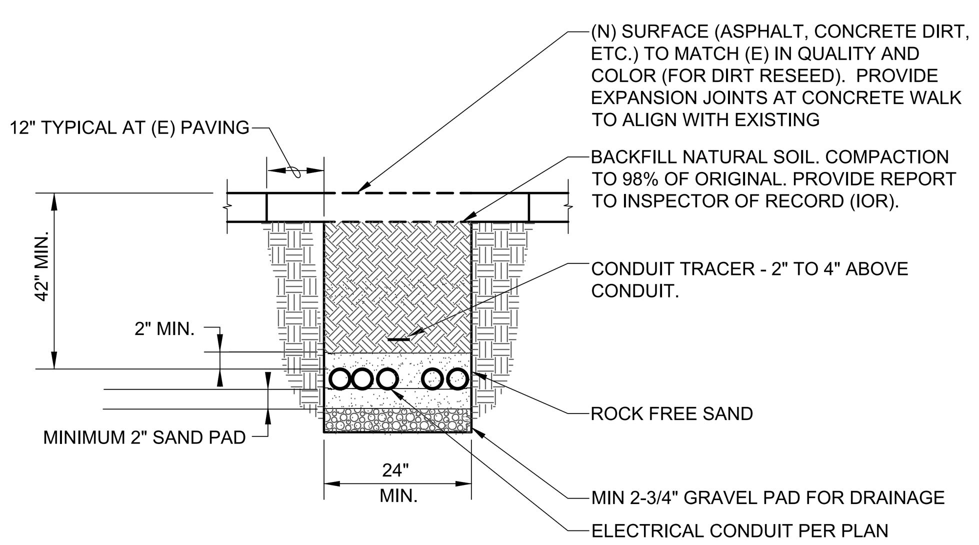

3 E500 CONDUIT TRENCHING DETAIL

NO SCALE

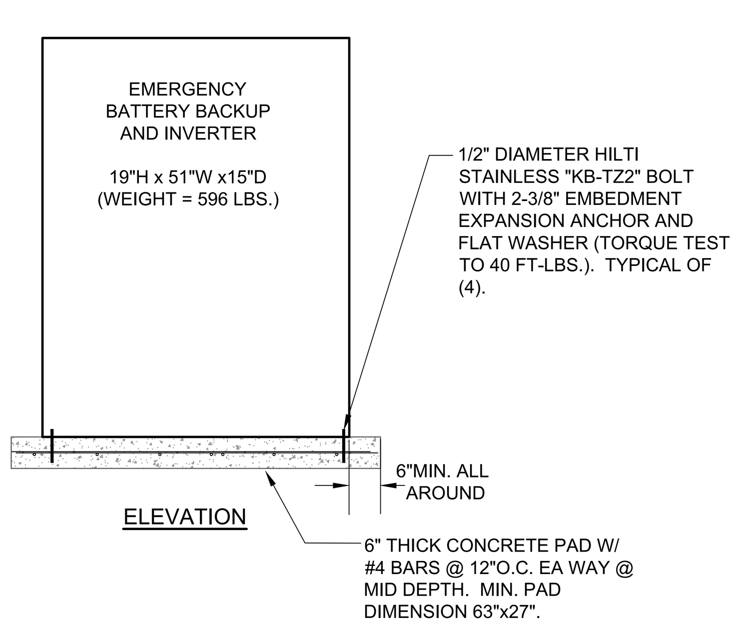

4 E500 INVERTER/BATTERY BACKUP INSALLATION

NO SCALE

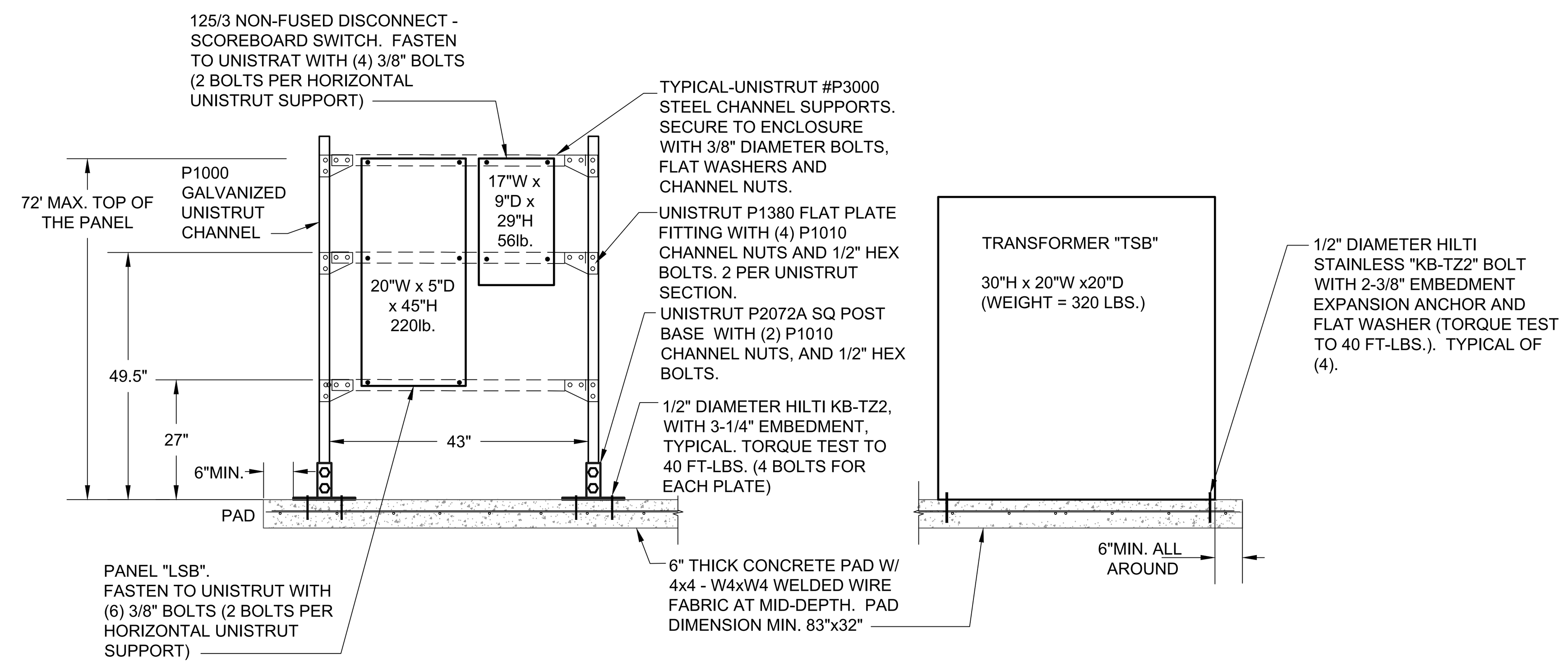

5 E500 TRANSFROMER "TSB" AND PANEL "LSB" MOUNTING

NO SCALE

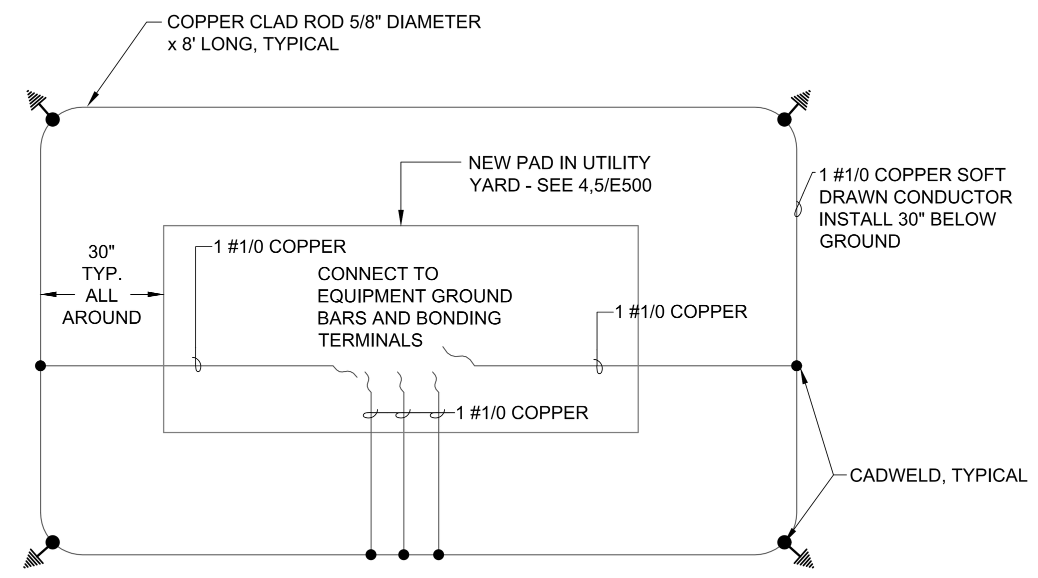

NOTES:

1. MINIMUM TURNING RADIUS ON CONDUCTORS SHALL BE 16".
2. ALL CONDUCTOR CONNECTIONS SHALL BE CADWELDED.

7 E500 GROUNDING DETAIL

NO SCALE

B2207 thru B2213
Multi-Grip Pipe Clamps for Thinwall (EMT), I.M.C., Rigid Conduit or Pipe

- Safety Factor of 5
- Add PA to suffix for pre-assembled pipe clamps
- Includes combination recess hex head machine screw and square nut
- Material: ASTM A1011 33,000 PSI min. yield
- Standard finish: ZN

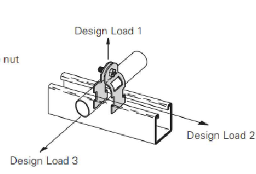

For UL installations, follow Table 9 in UL2239.

Part No.	Nominal Size In. mm	Material Thickness In. mm	O.D. Size Range In. mm	Alternate For Clamp No.'s	Design Load 1 Lbs. kN	Design Load 2 Lbs. kN	Design Load 3 Lbs. kN	Wt./C Lbs. kg
B2207	3/8" (10)	16 Ga. (1.5)	.557-.706 (14.2-17.9)	B2000, B2001, B2026	400 (1.78)	50 (.22)	50 (.22)	9 (4.1)
B2208	1/2" (15)	16 Ga. (1.5)	.701-.875 (17.8-22.2)	B2001, B2008, B2027, B2028	400 (1.78)	50 (.22)	50 (.22)	11 (5.0)
B2209	3/4" (20)	14 Ga. (1.9)	.917-1.081 (23.2-27.4)	B2002, B2009,	400 (1.78)	50 (.22)	50 (.22)	12 (5.4)
B2210	1" (25)	14 Ga. (1.9)	1.125-1.375 (28.6-34.9)	B2003, B2010, B2030, B2031,	400 (1.78)	50 (.22)	50 (.22)	13 (5.9)
B2211	1 1/4" (32)	14 Ga. (1.9)	1.500-1.691 (38.1-42.9)	B2004, B2011, B2033, B2034	400 (1.78)	50 (.22)	50 (.22)	15 (6.8)
B2212	1 1/2" (40)	12 Ga. (2.6)	1.735-1.931 (44.0-49.0)	B2005, B2012, B2035	600 (2.67)	75 (.33)	75 (.33)	23 (10.4)
B2213	2" (50)	12 Ga. (2.6)	2.192-2.400 (55.7-60.9)	B2006, B2013 B2039	600 (2.67)	75 (.33)	75 (.33)	26 (11.8)

B441-22
Beam Clamp

- Design Load 1850 Lbs. (8.23 kN) when used in pairs
- Safety Factor of 5
- 3/4" (19.0) Max. flange thickness
- For use with 13/16" (20.6) to 1 5/8" (41.3) high channel
- Recommended Torque: 150 in-lbs. (16.9 N•m)
- Sold in pieces
- Other flange thickness variations are available, contact us for sizes
- Standard finishes: ZN, HDG, SS4
- Wt./C 87 Lbs. (39.4 kg)

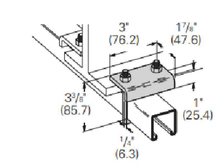

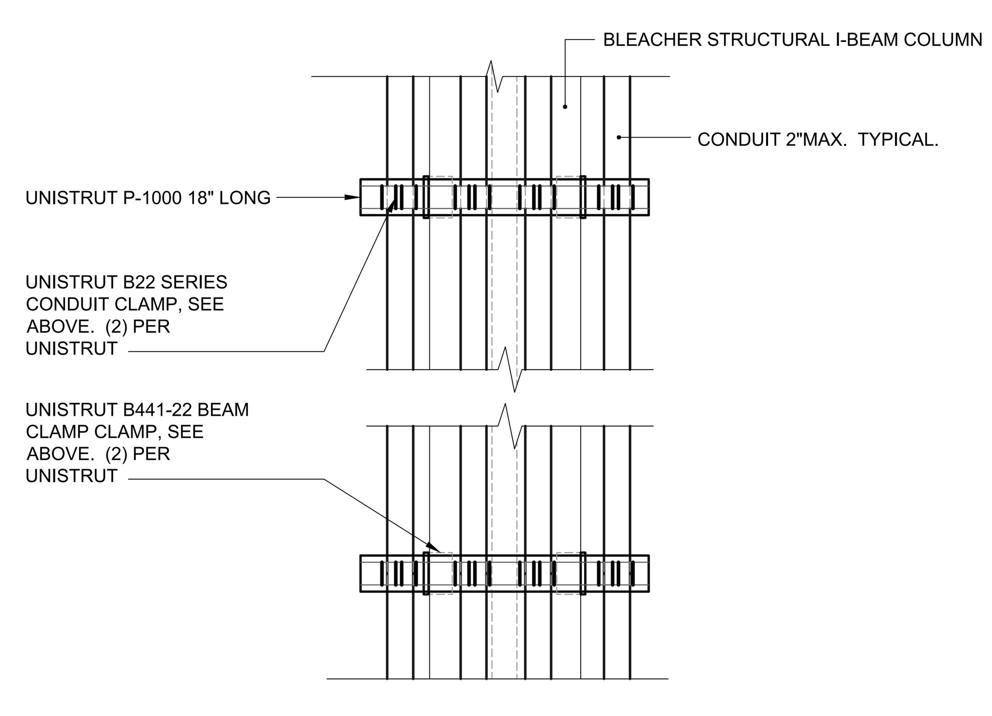

8 E500 CONDUIT SUPPORT ON BLEACHERS COLUMN

NO SCALE

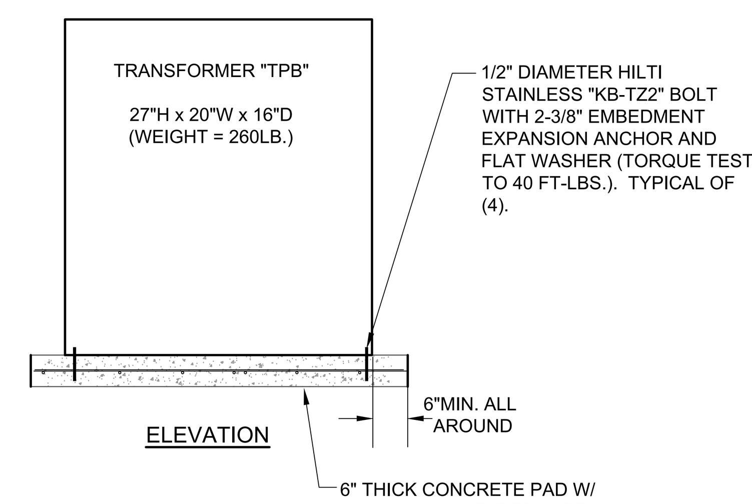

9 E500 TRANSFORMER "TPB" INSTALLATION

NO SCALE

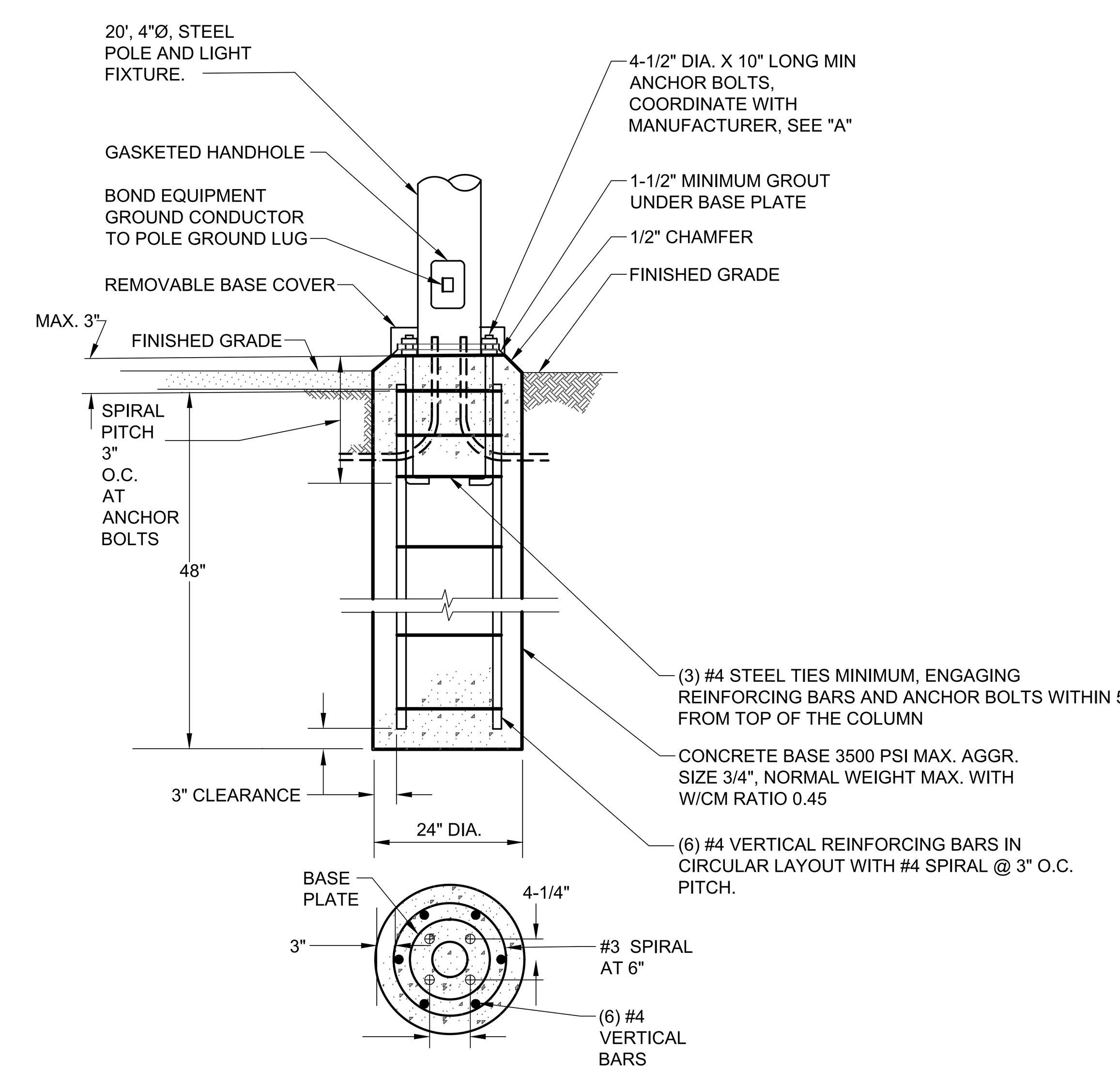

(CALCULATED DIMENSIONS AND MATERIALS BASED ON 100 MPH WIND)

LIGHT POLES LESS THAN 35' TALL ARE EXEMPT FROM DSA STRUCTURAL SAFETY REVIEW PER DSA IR A-22.

10 E500 POOL FIXTURE POLE BASE DETAIL

NO SCALE

IDENTIFICATION STAMP
DIV. OF THE STATE ARCHITECT
APP: 02-121275 INC:
REVIEWED FOR
SS ☑ FLS ☑ ACS ☑
DATE: 12/15/2023

CALIFORNIA DESIGN WEST ARCHITECTS, Inc.

2100 19th Street
Sacramento, CA 95818

Phone: (916) 446-2466
Fax: (916) 446-5118
Web Page: ca-dw.com

These plans and prints thereof, as instruments of service, are owned by the architect and are for the use on this project only. Reproduction and/or distribution without the prior written consent of the architect is forbidden.

Copyright California Design West Architects, Inc.

ARCHITECT: CONSULTANT:

LICENSED ARCHITECT MITCHELL A. McALLISTER NO. C 17250 REN. 2-28-2025 STATE OF CALIFORNIA

REGISTERED PROFESSIONAL ENGINEER JESSE U. BASTIAN No. E20229 Exp. 03-31-25 ELECTRICAL STATE OF CALIFORNIA

12/08/2023

CONSULTANT:

M. NEILS ENGINEERING, INC.
Electrical Engineers | Lighting Designers
100 Howe Ave., Suite 235N
Sacramento, CA 95825-8217
www.mneilsengineering.com
Tel: (916) 923-4400
PROJECT #: 23051.21
PROJECT MGR: Sinisha Glisic

PROJECT NAME:

BUHACH COLONY HIGH SCHOOL

1800 NORTH BUHACH RD
ATWATER, CA 95301

CONCESSIONS/TOILET BUILDINGS, TICKET BOOTH & STADIUM UPGRADES

MERCED UNION HIGH SCHOOL DISTRICT

MERCED COUNTY

KEY PLAN:

SHEET TITLE:

ELECTRICAL DETAILS

JOB NUMBER:

DATE: MARCH 28, 2023

REVISION:

SHEET NUMBER: **E500**

UNAUTHORIZED CHANGES & USES: M. Neils Engineering, Inc. preparing these plans will not be responsible for, or liable for unauthorized changes to or uses to these plans. All changes to these plans must be in writing and must be approved by M. Neils Engineering, Inc.
Dec 08, 2023 – 10:14am, / pivanov

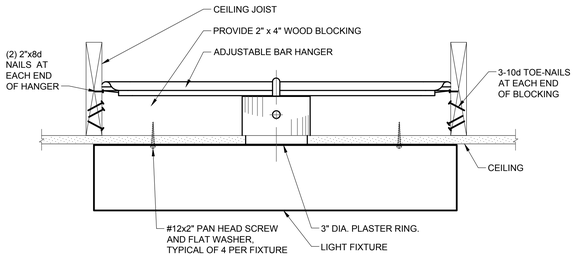

MAX. WEIGHT OF SURFACE FIXTURES < 25LB.

1 / E510 SURFACE FIXTURE MOUNTING DETAIL

NO SCALE

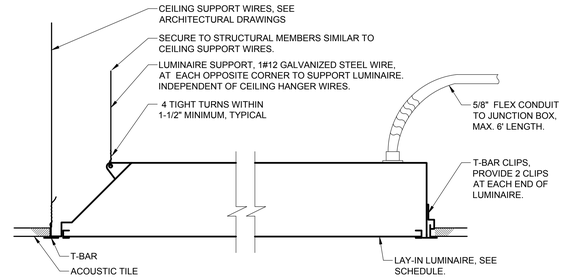

2 / E510 LAY-IN LUMINAIRE MOUNTING DETAIL

NO SCALE

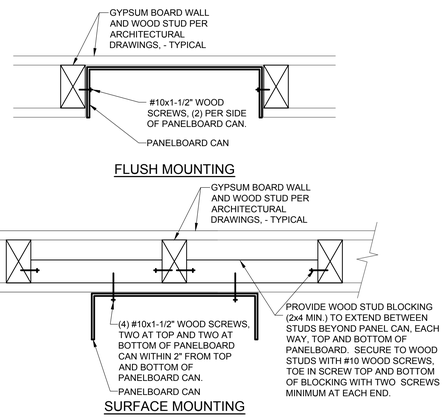

3 / E510 PANELBOARD MOUNTING DETAIL

NO SCALE

MAX. PANEL WEIGHT 150LB.

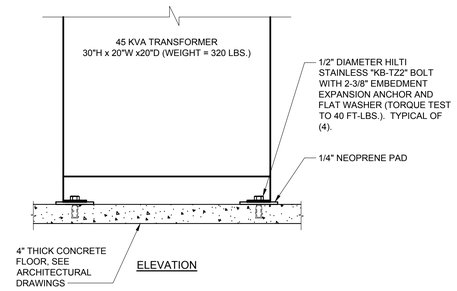

4 / E510 TRANSFORMER INSTALLATION

NO SCALE

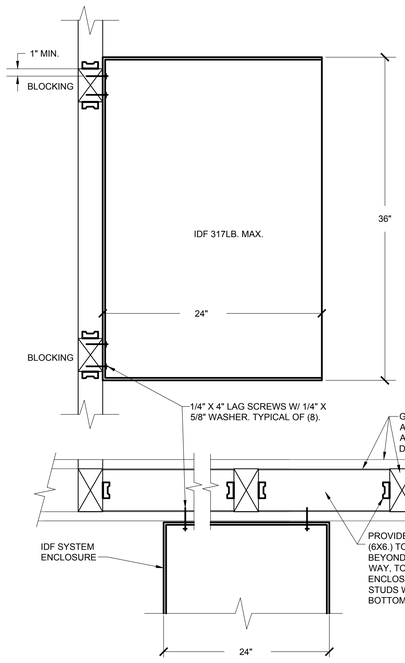

6 / E510 IDF ENCLOSURE MOUNTING - CHATSWORTH #1196-X36

NO SCALE

OSHPD OPM-0196-13

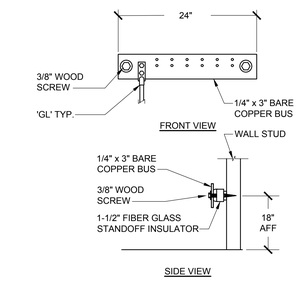

7 / E510 IDF GROUND BUS DETAIL

NO SCALE

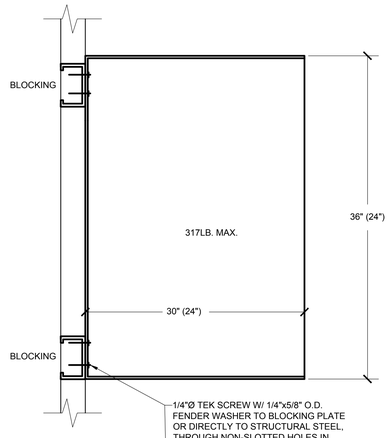

8 / E510 IDF/ SOUND SYSTEM ENCLOSURE MOUNTING IN PRESSBOX - CHATSWORTH #11996-X36 (IDF) #11900-X24 (SOUND SYSTEM)

NO SCALE

OSHPD OPM-0196-13

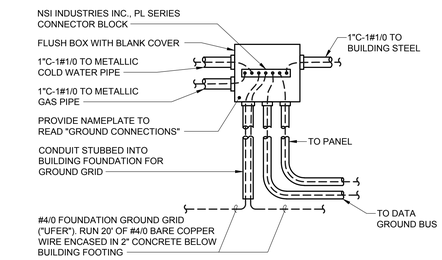

9 / E510 TYPICAL BUILDING GROUND DETAIL

NO SCALE

IDENTIFICATION STAMP
DIV. OF THE STATE ARCHITECT
APP: 02-121275 INC:
REVIEWED FOR
SS ☑ FLS ☑ ACS ☑
DATE: 12/15/2023

CALIFORNIA DESIGN WEST ARCHITECTS, Inc.

2100 19th Street
Sacramento, CA 95818

Phone: (916) 446-2466
Fax: (916) 446-5118
Web Page: ca-dw.com

These plans and prints thereof, as instruments of service, are owned by the architect and are for the use on this project only. Reproduction and/or distribution without the prior written consent of the architect is forbidden.

Copyright California Design West Architects, Inc.

ARCHITECT: CONSULTANT:

LICENSED ARCHITECT MITCHELL A. McALISTER No. C-17250 REN: 08-31-25 STATE OF CALIFORNIA

REGISTERED PROFESSIONAL ENGINEER JESSE U. BASTIAN No. E20229 Exp. 03-31-25 ELECTRICAL STATE OF CALIFORNIA

12/08/2023

CONSULTANT:

M. NEILS ENGINEERING, INC.
Electrical Engineers | Lighting Designers
100 Howe Ave., Suite 235N
Sacramento, CA 95825-8217
www.mneilsengineering.com
Tel: (916) 923-4400

PROJECT #: 23051.21
PROJECT MGR: Sinisha Glisic

PROJECT NAME:

BUHACH COLONY HIGH SCHOOL

1800 NORTH BUHACH RD
ATWATER, CA 95301

CONCESSIONS/TOILET BUILDINGS, TICKET BOOTH & STADIUM UPGRADES

MERCED UNION HIGH SCHOOL DISTRICT

MERCED COUNTY

KEY PLAN:

SHEET TITLE:

ELECTRICAL DETAILS

JOB NUMBER:

SHEET NUMBER: E510

DATE: MARCH 28, 2023

REVISION:

Dec 08, 2023 – 10:14am, / plotnav
UNAUTHORIZED CHANGES & USES: M. Neils Engineering, Inc. preparing these plans will not be responsible for, or liable for unauthorized changes to or uses to these plans. All changes to these plans must be in writing and must be approved by M. Neils Engineering, Inc.

STATE OF CALIFORNIA
Indoor Lighting CALIFORNIA ENERGY COMMISSION

CERTIFICATE OF COMPLIANCE	NRCC-LTI-E
This document is used to demonstrate compliance with requirements in 110.9, 110.12(c), 130.0, 130.1, 140.6 and 141.0(b)2 for indoor lighting scopes using the prescriptive path for nonresidential and hotel/motel occupancies. It is also used to document compliance with requirements in 160.5, 170.2(e) and 180.2(b)4 for indoor lighting scopes using the prescriptive path for multifamily occupancies. Multifamily includes dormitory and senior living facilities.	
Project Name: 23051.21 Buhach Colony HS Stadium - Visitor Side Toilets & Snack Bar	**Report Page:** (Page 1 of 8)
Project Address:	**Date Prepared:** 2023-04-18T14:50:22-04:00

A. GENERAL INFORMATION				
01	Project Location (city)	ATWATER	04 Total Conditioned Floor Area (ft²)	3,570
02	Climate Zone	12	05 Total Unconditioned Floor Area (ft²)	0
03	Occupancy Types Within Project (select all that apply):		06 # of Stories (Habitable Above Grade)	1
• School or Classroom				

B. PROJECT SCOPE

This table includes any lighting systems that are within the scope of the permit application and are demonstrating compliance using the prescriptive path outlined in 140.6 / 170.2(e) or 141.0(b)2 / 180.2(b)4 for alterations.

Scope of Work	Conditioned Spaces		Unconditioned Spaces	
01	02	03	04	05
My Project Consists of (check all that apply):	Calculation Method	Area (ft²)	Calculation Method	Area (ft²)
☒ New Lighting System	Area Category Method	3570	N/A	0
☐ New Lighting System - Parking Garage	N/A	0	N/A	0
Total Area of Work (ft²)	3570			

Registration Number: | Generated Date/Time: | Documentation Software: Energy Code Ace
CA Building Energy Efficiency Standards - 2022 Nonresidential Compliance | Report Version: 2022.0.000 Schema Version: rev 20220101 | Compliance ID: 102068-0423-0002 Report Generated: 2023-04-18 11:50:25

STATE OF CALIFORNIA
Indoor Lighting CALIFORNIA ENERGY COMMISSION

CERTIFICATE OF COMPLIANCE	NRCC-LTI-E
Project Name: 23051.21 Buhach Colony HS Stadium - Visitor Side Toilets & Snack Bar	**Report Page:** (Page 2 of 8)
	Date Prepared: 2023-04-18T14:50:22-04:00

C. COMPLIANCE RESULTS

If any cell on this table says "DOES NOT COMPLY" or "COMPLIES with Exceptional Conditions" refer to Table D. for guidance.

Lighting in conditioned and unconditioned spaces must not be combined for compliance per 140.6(b)1 / 170.2(e)	Allowed Lighting Power per 140.6(b) / 170.2(e) Watts						Adjusted Lighting Power per 140.6(a) / 170.2(e) (Watts)				Compliance Results
	01	02	03	04	05		06	07	08		09
	Complete Building 140.6(c)1	Area Category 140.6(c)2 / 170.2(e)4	Area Category Additional 140.6(c)2G / 170.2(e)4Av (+)	Tailored 140.6(c)3 / 170.2(e)4B (+)	= **Total Allowed** (Watts)	≥	Total Designed (Watts)	Adjustments PAF Lighting Control Credits 140.6(a)2 / 170.2(e)1B (-)	= **Total Adjusted** (Watts) *Includes Adjustments		**05 must be >= 08 140.6 / 170.2(e)**
	(See Table I)	(See Table I)	(See Table J)	(See Table K)			(See Table F)	(See Table P)			
Conditioned		2,281			= 2,281	≥	1,814.8		= 1814.8		COMPLIES
Unconditioned					=	≥			=		
Controls Compliance (See Table H for Details)											COMPLIES
Rated Power Reduction Compliance (See Table Q for Details)											

D. EXCEPTIONAL CONDITIONS

This table is auto-filled with uneditable comments because of selections made or data entered in tables throughout the farm.

E. ADDITIONAL REMARKS

This table includes remarks made by the permit applicant to the Authority Having Jurisdiction.

Registration Number: | Generated Date/Time: | Documentation Software: Energy Code Ace
CA Building Energy Efficiency Standards - 2022 Nonresidential Compliance | Report Version: 2022.0.000 Schema Version: rev 20220101 | Compliance ID: 102068-0423-0002 Report Generated: 2023-04-18 11:50:25

STATE OF CALIFORNIA
Indoor Lighting CALIFORNIA ENERGY COMMISSION

CERTIFICATE OF COMPLIANCE	NRCC-LTI-E
Project Name: 23051.21 Buhach Colony HS Stadium - Visitor Side Toilets & Snack Bar	**Report Page:** (Page 3 of 8)
	Date Prepared: 2023-04-18T14:50:22-04:00

F. INDOOR LIGHTING FIXTURE SCHEDULE

This table includes all planned permanent and portable lighting other than dwelling unit/ hotel/ motel room lighting. Multifamily dwelling unit and hotel/motel room lighting is documented in Table T. If using Table T to document lighting in multifamily common use areas providing shared provisions for living, eating, cooking or sanitation, those luminaires are not included here.

Designed Wattage: Conditioned Spaces

01	02	03	04	05	06	07	08	09	10	
Name or Item Tag	Complete Luminaire Description	Modular (Track) Fixture	Small Aperture & Color Change[1]	Watts per luminaire[2]	How is Wattage determined	Total Number of Luminaires	Excluded per 140.6(a)3 / 170.2(e)2C	Design Watts	Field Inspector	
									Pass	Fail
A	FOOD ZONE	No	NA	14	Mfr. Spec	6	No	84	☐	☐
B	FOOD ZONE	No	NA	28	Mfr. Spec	2	No	56	☐	☐
C	STORAGE/RESTROOM	No	NA	33.9	Mfr. Spec	17	No	576.29	☐	☐
D	OFFICE/TICKET BOOTH	No	NA	57	Mfr. Spec	17	No	969	☐	☐
H	OFFICE	No	NA	25.9	Mfr. Spec	5	No	129.5	☐	☐
							Total Designed Watts: CONDITIONED SPACES	1,814.8		

[1]*FOOTNOTE: Design Watts for small aperture and color changing luminaires which qualify per 140.6(a)4B / 170.2(e)2D is adjusted to be 75% /80% of their rated wattage. Table F automatically makes this adjustment, the permit applicant should enter full rated wattage in column 05.*

[2]*Authority Having Jurisdiction may ask for Luminaire cut sheets to confirm wattage used for compliance per 130.0(c) / 160.5(b). Wattage used must be the maximum rated for the luminaire, not the lamp.*

G. MODULAR LIGHTING SYSTEMS

This section does not apply to this project.

H. INDOOR LIGHTING CONTROLS (Not including PAFs)

This table includes lighting controls for conditioned and unconditioned spaces.

Building Level Controls

01	02	03	
		Field Inspector	
		Pass	Fail
Mandatory Demand Response 110.12(c)	Shut-off controls 130.1(c) / 160.5(b)4C		

Registration Number: | Generated Date/Time: | Documentation Software: Energy Code Ace
CA Building Energy Efficiency Standards - 2022 Nonresidential Compliance | Report Version: 2022.0.000 Schema Version: rev 20220101 | Compliance ID: 102068-0423-0002 Report Generated: 2023-04-18 11:50:25

STATE OF CALIFORNIA
Indoor Lighting CALIFORNIA ENERGY COMMISSION

CERTIFICATE OF COMPLIANCE	NRCC-LTI-E
Project Name: 23051.21 Buhach Colony HS Stadium - Visitor Side Toilets & Snack Bar	**Report Page:** (Page 4 of 8)
	Date Prepared: 2023-04-18T14:50:22-04:00

H. INDOOR LIGHTING CONTROLS (Not including PAFs)

NA < 4,000W subject to multilevel | See Area/Space Level Controls | ☐ | ☐

Area Level Controls

04	05	06	07	08	09	10	11	12	
Area Description	Complete Building or Area Category Primary Function Area	Manual Area Controls 130.1(a) / 160.5(b)4A	Multi-Level Controls 130.1(b) / 160.5(b)4B	Shut-Off Controls 130.1(c) // 160.5(b)4C	Primary/Sky lit Daylighting 130.1(d) / 160.5(b)4D	Secondary Daylighting 130.1(d) / 160.5(b)4D	Interlocked Systems 140.6(a)1/ 170.2(e)2A	Field Inspector	
								Pass	Fail
VISITOR SIDE TOILETS & SNACK BAR	Restroom	Readily Accessible	Dimmer	Occupancy Sensor	NA: General Ltg < 120W	NA: General Ltg < 120W	Yes	☐	☐
TICKET BOOTH & MONUMNET ENTRY	All Other Space Types	Readily Accessible	Dimmer	Occupancy Sensor	NA: General Ltg < 120W	NA: General Ltg < 120W	Yes	☐	☐
HOME SIDE CONCESSIONS BUILDING	Restroom	Readily Accessible	Dimmer	Occupancy Sensor	NA: General Ltg < 120W	NA: General Ltg < 120W	Yes	☐	☐
							13		
							Plan Sheet Showing Daylit Zones:		

I. LIGHTING POWER ALLOWANCE: COMPLETE BUILDING OR AREA CATEGORY METHODS

Each area complying using the Complete Building or Area Category Methods per 140.6(b) are included in this table. Column 06 indicates if additional lighting power allowances per 140.6(c) or adjustments per 140.6(a) are being used .

Conditioned Spaces

01	02	03	04	05	06	
Area Description	Complete Building or Area Category Primary Function Area	Allowed Density (W/ft²)	Area (ft²)	Allowed Wattage (Watts)	Additional Allowance / Adjustment	
					Area Category	PAF
VISITOR SIDE TOILETS & SNACK BAR	Restroom	0.65	1,476	959.4	No	No
TICKET BOOTH & MONUMNET ENTRY	All Other Space Types	0.4	158	63.2	No	No
HOME SIDE CONCESSIONS BUILDING	Restroom	0.65	1,936	1,258.4	No	No
		TOTALS:	3,570	2,281	See Tables J, or P for detail	

Registration Number: | Generated Date/Time: | Documentation Software: Energy Code Ace
CA Building Energy Efficiency Standards - 2022 Nonresidential Compliance | Report Version: 2022.0.000 Schema Version: rev 20220101 | Compliance ID: 102068-0423-0002 Report Generated: 2023-04-18 11:50:25

STATE OF CALIFORNIA
Indoor Lighting CALIFORNIA ENERGY COMMISSION

CERTIFICATE OF COMPLIANCE	NRCC-LTI-E
Project Name: 23051.21 Buhach Colony HS Stadium - Visitor Side Toilets & Snack Bar	**Report Page:** (Page 5 of 8)
	Date Prepared: 2023-04-18T14:50:22-04:00

J. ADDITIONAL ALLOWANCE: AREA CATEGORY METHOD QUALIFYING LIGHTING SYSTEM

This section does not apply to this project.

K. TAILORED METHOD GENERAL LIGHTING POWER ALLOWANCE

This section does not apply to this project.

L. ADDITIONAL LIGHTING ALLOWANCE: TAILORED WALL DISPLAY

This section does not apply to this project.

M. ADDITIONAL LIGHTING ALLOWANCE: TAILORED FLOOR AND TASK LIGHTING

This section does not apply to this project.

N. ADDITIONAL LIGHTING ALLOWANCE: TAILORED DECORATIVE /SPECIAL EFFECTS

This section does not apply to this project.

O. ADDITIONAL LIGHTING ALLOWANCE: TAILORED VERY VALUABLE MERCHANDISE

This section does not apply to this project.

P. POWER ADJUSTMENT: LIGHTING CONTROL CREDIT (POWER ADJUSTMENT FACTOR (PAF))

This section does not apply to this project.

Q. RATED POWER REDUCTION COMPLIANCE FOR ONE-FOR-ONE ALTERATIONS

This section does not apply to this project.

Registration Number: | Generated Date/Time: | Documentation Software: Energy Code Ace
CA Building Energy Efficiency Standards - 2022 Nonresidential Compliance | Report Version: 2022.0.000 Schema Version: rev 20220101 | Compliance ID: 102068-0423-0002 Report Generated: 2023-04-18 11:50:25

STATE OF CALIFORNIA
Indoor Lighting CALIFORNIA ENERGY COMMISSION

CERTIFICATE OF COMPLIANCE	NRCC-LTI-E
Project Name: 23051.21 Buhach Colony HS Stadium - Visitor Side Toilets & Snack Bar	**Report Page:** (Page 6 of 8)
	Date Prepared: 2023-04-18T14:50:22-04:00

R. 80% LIGHTING POWER FOR ALL ALTERATIONS - CONTROLS EXCEPTIONS

This section does not apply to this project.

S. DAYLIGHT DESIGN POWER ADJUSTMENT FACTOR (PAF)

This section does not apply to this project.

T. DWELLING UNIT LIGHTING

This section does not apply to this project.

U. DECLARATION OF REQUIRED CERTIFICATES OF INSTALLATION

Selections have been made based on information provided in this document. If any selections have been changed by permit applicant, an explanation should be included in Table E. Additional Remarks. These documents must be provided to the building inspector during construction and can be found online

Form/Title
NRCI-LTI-E - Must be submitted for all buildings

Registration Number: | Generated Date/Time: | Documentation Software: Energy Code Ace
CA Building Energy Efficiency Standards - 2022 Nonresidential Compliance | Report Version: 2022.0.000 Schema Version: rev 20220101 | Compliance ID: 102068-0423-0002 Report Generated: 2023-04-18 11:50:25

STATE OF CALIFORNIA
Indoor Lighting CALIFORNIA ENERGY COMMISSION

CERTIFICATE OF COMPLIANCE	NRCC-LTI-E
Project Name: 23051.21 Buhach Colony HS Stadium - Visitor Side Toilets & Snack Bar	**Report Page:** (Page 7 of 8)
	Date Prepared: 2023-04-18T14:50:22-04:00

V. DECLARATION OF REQUIRED CERTIFICATES OF ACCEPTANCE

Selections have been made based on information provided in this document. If any selections have been changed by the permit applicant, an explanation should be included in Table E. Additional Remarks. These documents must be provided to the building inspector during construction and any with ".A" in the form name must be completed through an Acceptance Test Technician Certification Provider (ATTCP). For more information visit: http://www.energy.ca.gov/title24/attcp/providers.html

Form/Title	Systems/Spaces To Be Field Verified
NRCA-LTI-02-A - Must be submitted for occupancy sensors and automatic time switch controls.	VISITOR SIDE TOILETS & SNACK BAR; TICKET BOOTH & MONUMNET ENTRY; HOME SIDE CONCESSIONS BUILDING
NRCA-LTI-04-A - Must be submitted for demand responsive lighting controls.	VISITOR SIDE TOILETS & SNACK BAR; TICKET BOOTH & MONUMNET ENTRY; HOME SIDE CONCESSIONS BUILDING

Registration Number: | Generated Date/Time: | Documentation Software: Energy Code Ace
CA Building Energy Efficiency Standards - 2022 Nonresidential Compliance | Report Version: 2022.0.000 Schema Version: rev 20220101 | Compliance ID: 102068-0423-0002 Report Generated: 2023-04-18 11:50:25

STATE OF CALIFORNIA
Indoor Lighting CALIFORNIA ENERGY COMMISSION

CERTIFICATE OF COMPLIANCE	NRCC-LTI-E
Project Name: 23051.21 Buhach Colony HS Stadium - Visitor Side Toilets & Snack Bar	**Report Page:** (Page 8 of 8)
Project Address:	**Date Prepared:** 2023-04-18T14:50:22-04:00

DOCUMENTATION AUTHOR'S DECLARATION STATEMENT

I certify that this Certificate of Compliance documentation is accurate and complete.

Documentation Author Name: Jesse Bastian	Documentation Author Signature: Jesse Bastian
Company: M. Neils Engineering	Signature Date: 12/08/2023
Address: 100 HOWE AVE, SUITE 235N	CEA/ HERS Certification Identification (If applicable):
City/State/Zip: SACRAMENTO, CA 95825	Phone: (916) 923-4400

RESPONSIBLE PERSON'S DECLARATION STATEMENT

I certify the following under penalty of perjury, under the laws of the State of California:

1. The information provided on this Certificate of Compliance is true and correct.
2. I am eligible under Division 3 of the Business and Professions Code to accept responsibility for the building design or system design identified on this Certificate of Compliance (responsible designer)
3. The energy features and performance specifications, materials, components, and manufactured devices for the building design or system design identified on this Certificate of Compliance conform to the requirements of Title 24, Part 1 and Part 6 of the California Code of Regulations.
4. The building design features or system design features identified on this Certificate of Compliance are consistent with the information provided on other applicable compliance documents, worksheets, calculations, plans and specifications submitted to the enforcement agency for approval with this building permit application.
5. I will ensure that a completed signed copy of this Certificate of Compliance shall be made available with the building permit(s) issued for the building, and made available to the enforcement agency for all applicable inspections. I understand that a completed signed copy of this Certificate of Compliance is required to be included with the documentation the builder provides to the building owner at occupancy.

Responsible Designer Name: Jesse Bastian	Responsible Designer Signature: Jesse Bastian
Company: M. Neils Engineering	Date Signed: 12/08/2023
Address: 100 HOWE AVE, SUITE 235N	License: E20229
City/State/Zip: SACRAMENTO, CA 95825	Phone: (916) 923-4400

Registration Number: | Generated Date/Time: | Documentation Software: Energy Code Ace
CA Building Energy Efficiency Standards - 2022 Nonresidential Compliance | Report Version: 2022.0.000 Schema Version: rev 20220101 | Compliance ID: 102068-0423-0002 Report Generated: 2023-04-18 11:50:25

Registration Number: | Generated Date/Time: | Documentation Software: Energy Code Ace
CA Building Energy Efficiency Standards - 2022 Nonresidential Compliance | Report Version: 2022.0.000 Schema Version: rev 20220101 | Compliance ID: 102068-0423-0002 Report Generated: 2023-04-18 11:50:25

Dec 08, 2023 - 10:14am - jgiancov
UNAUTHORIZED CHANGES & USES: M. Neils Engineering, Inc. preparing these plans will not be responsible for or liable for unauthorized changes to or uses to these plans. All changes to these plans must be in writing and must be approved by M. Neils Engineering, Inc.

IDENTIFICATION STAMP
DIV. OF THE STATE ARCHITECT
APP: 02-121275 INC:
REVIEWED FOR
SS ☑ FLS ☑ ACS ☑
DATE: 12/15/2023

DESIGN WEST California
CALIFORNIA DESIGN WEST ARCHITECTS, Inc.
2100 19th Street
Sacramento, CA 95818
Phone: (916) 446-2466
Fax: (916) 446-5118
Web Page: ca-dw.com

These plans and prints thereof, as instruments of service, are owned by the architect and are for the use on this project only. Reproduction and/or distribution without the prior written consent of the architect is forbidden.
Copyright California Design West Architects, Inc.

ARCHITECT: CONSULTANT:

LICENSED ARCHITECT MITCHELL A. MCALLISTER No. C-17250 REN: 08-31-25 STATE OF CALIFORNIA

REGISTERED PROFESSIONAL ENGINEER JESSE U. BASTIAN No. E20229 Exp. 03-31-25 ELECTRICAL STATE OF CALIFORNIA

12/08/2023

CONSULTANT:
M. NEILS ENGINEERING, INC.
Electrical Engineers | Lighting Designers
100 Howe Ave., Suite 235N
Sacramento, CA 95825-8217
www.mneilsengineering.com
Tel: (916) 923-4400
PROJECT #: 23051.21
PROJECT MGR: Sinisha Glisic

PROJECT NAME:

BUHACH COLONY HIGH SCHOOL

1800 NORTH BUHACH RD
ATWATER, CA 95301

CONCESSIONS/TOILET BUILDINGS, TICKET BOOTH & STADIUM UPGRADES

MERCED UNION HIGH SCHOOL DISTRICT

MERCED COUNTY

KEY PLAN:

SHEET TITLE:

TITLE 24 - INDOOR LIGHTING COMPLIANCE FORMS

JOB NUMBER:
SHEET NUMBER: **E600**
DATE: MARCH 28, 2023
REVISION:

STATE OF CALIFORNIA
Outdoor Lighting CALIFORNIA ENERGY COMMISSION

CERTIFICATE OF COMPLIANCE	NRCC-LTO-E
This document is used to demonstrate compliance with requirements in 110.9, 130.0, 130.2, 140.7, and 141.0(b)2L for outdoor lighting scopes using the prescriptive path for nonresidential and hotel/motel occupancies. It is also used to document compliance with requirements in 160.5, 170.2(e)6, 180.1(a) and 180.2(b)4Bv for outdoor lighting scopes using the prescriptive path for multifamily and mixed-use occupancies. Multifamily includes dormitory and senior living facilities.	
Project Name: 23051.21 Buhach Colony HS	**Report Page:** **(Page 1 of 8)**
Project Address:	**Date Prepared:** 2023-06-02T17:34:08-04:00

A. GENERAL INFORMATION

01	Project Location (city)	Atwater	04	Total Illuminated Hardscape Area (ft²)	79021
02	Climate Zone	12			
03	Outdoor Lighting Zone per Title 24 Part 1	10.114 or as designated by Authority Having Jurisdiction (AHJ):			
☐	LZ-0: Very Low - Undeveloped Parkland	☒ LZ-2: Moderate - Urban Clusters	☐ LZ-4: High - Must be reviewed by CA Energy Commission for Approval		
☐	LZ-1: Low - Rural Areas	☐ LZ-3: Moderately High - Urban Areas			
05	Occupancy Types within Project				
● Sports Arena					

B. PROJECT SCOPE

This table includes outdoor lighting systems that are within the scope of the permit application and are demonstrating compliance using the prescriptive path outlined in 140.7 / 170.2(e)6 or 141.0(b)2L / 180.2(b)4Bv for alterations.

My Project Consists of:

01	02	
☒ New Lighting System	Must Comply with Allowances from 140.7 / 170.2(e)6	
☐ Altered Lighting System	Is your alteration increasing the connected lighting load (Watts)?	○ Yes ○ No
03	04	05
% of Existing Luminaires Being Altered[1]	Sum Total of Luminaires Being Added or Altered	Calculation Method
☐ < 10% ☐ >= 10% and < 50% ☐ >= 50%		

Please proceed to Table F. Outdoor Lighting Fixture Schedule to define the project's luminaires.

[1] *FOOTNOTES: % of Existing Luminaires Being Altered = (Sum Total of Luminaires Being Added or Altered / Existing Luminaires within the Scope of the Permit Application) x 100.*

STATE OF CALIFORNIA
Outdoor Lighting CALIFORNIA ENERGY COMMISSION

CERTIFICATE OF COMPLIANCE	NRCC-LTO-E
Project Name: 23051.21 Buhach Colony HS	**Report Page:** **(Page 2 of 8)**
	Date Prepared: 2023-06-02T17:34:08-04:00

C. COMPLIANCE RESULTS

Results in this table are automatically calculated from data input and calculations in Tables F through N. Note: If any cell on this table says "COMPLIES with Exceptional Conditions" refer to Table D. Exceptional Conditions for guidance or see applicable Table referenced below.

Calculations of Total Allowed Lighting Power (Watts) 140.7 / 170.2(e)6 or 141.0(b)2L / 180.2(b)4Bv												Compliance Results			
01		02		03		04		05		06		07		08	09
General Hardscape Allowance 140.7(d)1 / 170.2(e)6 (See Table I)	+	Per Application 140.7(d)2 / 170.2(e)6 (See Table J)	+	Sales Frontage 140.7(d)2 (See Table K)	+	Ornamental 140.7(d)2 / 170.2(e)6 (See Table L)	+	Per Specific Area 140.7(d)2 / 170.2(e)6 (See Table M)	OR	Existing Power Allowance 141.0(b)2L / 180.2(b)4Bv (See Table N)	=	**Total Allowed** (Watts)	≥	**Total Actual** (Watts)	**07 must be >= 08**
2,056.6	+	---	+	---	+	---	+	---	OR	---	=	2,056.6	≥	1,798	COMPLIES
Shielding Compliance (See Table G for Details)															COMPLIES
Controls Compliance (See Table H for Details)															COMPLIES

D. EXCEPTIONAL CONDITIONS

This table is auto-filled with uneditable comments because of selections made or data entered in tables throughout the form.

E. ADDITIONAL REMARKS

This table includes remarks made by the permit applicant to the Authority Having Jurisdiction.

Generated Date/Time: Documentation Software: Energy Code Ace
CA Building Energy Efficiency Standards - 2022 Nonresidential Compliance Report Version: 2022.0.000 Schema Version: rev 20220101 Compliance ID: 112247-0623-0002 Report Generated: 2023-06-02 14:34:13

STATE OF CALIFORNIA
Outdoor Lighting CALIFORNIA ENERGY COMMISSION

CERTIFICATE OF COMPLIANCE	NRCC-LTO-E
Project Name: 23051.21 Buhach Colony HS	**Report Page:** **(Page 3 of 8)**
	Date Prepared: 2023-06-02T17:34:08-04:00

F. OUTDOOR LIGHTING FIXTURE SCHEDULE

For new or altered lighting systems demonstrating compliance with 140.7 / 170.2(e)6 all new luminaires being installed and any existing luminaires remaining or being moved within the spaces covered by the permit application are included in the Table below. For altered lighting systems using the Existing Power method per 141.0(b)2L only new luminaires being installed and replacement luminaires being installed as part of the project scope are included (ie, existing luminaires remaining or existing luminaires being moved are not included). Outdoor lighting attached to multifamily buildings and controlled from the inside of a dwelling unit are included in Table H. and are not included here. All other multifamily outdoor lighting is included here.

Designed Wattage:

01	02		03	04	05	06	07	08	09	10	
Name or Item Tag	Complete Luminaire Description		Watts per luminaire[1, 2]	How is Wattage determined	Total Number Luminaires[2]	Luminaire Status[3]	Excluded per 140.7(a) / 170.2(e)6A	Design Watts	Cutoff Req. > 6,200 initial lumen output 130.2(b) / 160.5(c)[4]	Field Inspector	
										Pass	Fail
G	POST TOP MOUNTED	☐ Linear	202	Mfr. Spec	4	New	☐	808	Provided	☐	☐
I	UNDER BLEACHERS	☐ Linear	45	Mfr. Spec	22	New	☐	990	NA: < 6200 lumens	☐	☐
							Total Design Watts:	1798			

* NOTES: Selections with a * require a note in the space below explaining how compliance is achieved.
EX: Luminaire is lighting a statue; EXCEPTION 2 to 130.2(b)

[1] *FOOTNOTES: Authority Having Jurisdiction may ask for Luminaire cut sheets to confirm wattage used for compliance per 130.0(c) / 160.5(b)*
[2] *For linear luminaires, wattage should be indicated as W/lf instead of Watts/luminaire. Total linear feet should be indicated in column 05 instead of number of luminaires.*
[3] *Select "New" for new luminaires in a new outdoor lighting project, or for added luminaires in an alteration. Select "Altered" for replacement luminaires in an alteration. Select "Existing to Remain" for existing luminaires within the project scope that are not being altered and are remaining. Select "Existing Reinstalled" for existing luminaires which are being removed and reinstalled as part of the project scope.*
[4] *Compliance with mandatory shielding requirements is required for luminaires with initial lumen output >= 6,200 unless exempted by 130.2(b)/ 160.5(c)*

Generated Date/Time: Documentation Software: Energy Code Ace
CA Building Energy Efficiency Standards - 2022 Nonresidential Compliance Report Version: 2022.0.000 Schema Version: rev 20220101 Compliance ID: 112247-0623-0002 Report Generated: 2023-06-02 14:34:13

STATE OF CALIFORNIA
Outdoor Lighting CALIFORNIA ENERGY COMMISSION

CERTIFICATE OF COMPLIANCE	NRCC-LTO-E
Project Name: 23051.21 Buhach Colony HS	**Report Page:** **(Page 4 of 8)**
	Date Prepared: 2023-06-02T17:34:08-04:00

G. SHIELDING REQUIREMENTS (BUG)

This table includes fixtures of >=6,200 initial lumens indicated on Table F as needing to comply with Shielding Requirements. Maximum lumens can be found in Title 24, Part 11, Section 5.106.8.

01	02	03	04	05	06	07	08	09	10	11	12	
Name or Item Tag	Complete Luminaire Description	Backlight Rating[2]			Uplight Rating[3]			Glare Rating (Lumens)[2]			Field Inspector	
		Mounting Height[1]	Max Allowable Backlight Rating[3]	Backlight Rating Per Design	Lighting type	Max Allowable Uplight Rating[3]	Uplight Rating Per Design	Mounting Height[1]	Max Allowable Glare Rating[3]	Glare Rating Per Design	Pass	Fail
G	POST TOP MOUNTED	2 MH from property line	No Limit	B3	Area Lighting	U0	U0	2 MH from property line	G2	G2	☐	☐

[1] *FOOTNOTES: Mounting Height is labeled MH in this table.*
[2] *Authority Having Jurisdiction may ask for Luminaire cut sheets or other documentation to confirm luminaire type, uplight ratings and glare ratings used for compliance per 130.2(b)/ 160.5(c)*
[3] *BUG ratings with a lower number than the 'Max Allowable' are compliant. Ex. If Max Allowable is Bug Rating B4, then B0, B1, B2 and B3 are all compliant.*

Generated Date/Time: Documentation Software: Energy Code Ace
CA Building Energy Efficiency Standards - 2022 Nonresidential Compliance Report Version: 2022.0.000 Schema Version: rev 20220101 Compliance ID: 112247-0623-0002 Report Generated: 2023-06-02 14:34:13

STATE OF CALIFORNIA
Outdoor Lighting CALIFORNIA ENERGY COMMISSION

CERTIFICATE OF COMPLIANCE	NRCC-LTO-E
Project Name: 23051.21 Buhach Colony HS	**Report Page:** **(Page 5 of 8)**
	Date Prepared: 2023-06-02T17:34:08-04:00

H. OUTDOOR LIGHTING CONTROLS

This table demonstrates compliance with controls requirements for all new or altered luminaires installed as part of the permit application. For alteration projects, luminaires which are existing to remain (ie untouched) and luminaires which are removed and reinstalled (wiring only) do not need to be included in this table even if they are within the spaces covered by the permit application.
Outdoor lighting for nonresidential buildings, parking garages and common service areas in multifamily buildings must be documented separately from outdoor lighting attached to multifamily buildings and controlled from the inside of a dwelling unit

Mandatory Controls for Nonresidential Occupancies, Parking Garages & Common Areas in Multifamily Buildings

01	02	03	04	05	
Area Description	Shut-Off 130.2(c)1 / 160.5(c)	Auto-Schedule 130.2(c)2 / 160.5(c)	Motion Sensor 130.2(c)3 / 160.5(c)	Field Inspector	
				Pass	Fail
GENERAL HARDSCAPE: "G"	Astronomical Timer	Provided	Provided	☐	☐
GENERAL HARDSCAPE: "I"	Astronomical Timer	Provided	Provided	☐	☐

[1] *FOOTNOTE: Text has been abbreviated, please refer to Table 160.5-A to confirm compliance with the specific light source technologies listed.*
[2] *Authority having jurisdiction may ask for cutsheets or other documentation to confirm compliance of light source.*
[3] *Recessed luminaires marked for use in fire-rated installations, and recessed luminaires installed in non-insulated ceilings are excepted from ii and iii.*

Generated Date/Time: Documentation Software: Energy Code Ace
CA Building Energy Efficiency Standards - 2022 Nonresidential Compliance Report Version: 2022.0.000 Schema Version: rev 20220101 Compliance ID: 112247-0623-0002 Report Generated: 2023-06-02 14:34:13

STATE OF CALIFORNIA
Outdoor Lighting CALIFORNIA ENERGY COMMISSION

CERTIFICATE OF COMPLIANCE	NRCC-LTO-E
Project Name: 23051.21 Buhach Colony HS	**Report Page:** **(Page 6 of 8)**
	Date Prepared: 2023-06-02T17:34:08-04:00

I. LIGHTING POWER ALLOWANCE (per 140.7 / 170.2(e))

This table includes areas using allowance calculations per 140.7 / 170.2(e). General Hardscape Allowance is per Table 140.7-A/Table 170.2-R while "Use it or lose it" Allowances are per Table 140.7-B /Table 170.2-S. Indicate which allowances are being used to expand sections for user input. Luminaires that qualify for one of the "Use it or lose it" allowances shall not qualify for another "Use it or lose it" allowance.
Outdoor lighting attached to multifamily buildings and controlled from the inside of a dwelling unit are included in Table H. and are not included here. All other multifamily outdoor lighting is included here.

	01			
	"Use it or lose it" Allowance (select all that apply) (select all that apply)			
☒ General Hardscape Allowance Table I (below)	☐ Per Application Table J	☐ Sales Frontage Table K	☐ Ornamental Table L	☐ Per Specific Area Table M

Calculated General Hardscape Lighting Power Allowance per Table 140.7-A for Nonresidential & Hotel/Motel

02	03	04	05	06	07	08	09
Area Description	Area Wattage Allowance (AWA)			Linear Wattage Allowance (LWA)			Total General AWA + LWA (Watts)
	Illuminated Area (ft²)	Allowed Density (W/ft²)	Area Allowance (Watts)	Perimeter Length (lf)	Allowed Density (W/lf)	Linear Allowance (Watts)	
GENERAL HARDSCAPE	79021	0.019	1501.4	2368	0.15	355.2	1856.6
				Initial Wattage Allowance for Entire Site (Watts):			200
				Instances of Initial Wattage Allowance (LZ 0 only)[1]			
				Total General Hardscape Allowance (Watts):			2056.6

J. LIGHTING ALLOWANCE: PER APPLICATION

This section does not apply to this project.

K. LIGHTING ALLOWANCE: SALES FRONTAGE

This section does not apply to this project.

L. LIGHTING ALLOWANCE: ORNAMENTAL

This section does not apply to this project.

Generated Date/Time: Documentation Software: Energy Code Ace
CA Building Energy Efficiency Standards - 2022 Nonresidential Compliance Report Version: 2022.0.000 Schema Version: rev 20220101 Compliance ID: 112247-0623-0002 Report Generated: 2023-06-02 14:34:13

STATE OF CALIFORNIA
Outdoor Lighting CALIFORNIA ENERGY COMMISSION

CERTIFICATE OF COMPLIANCE	NRCC-LTO-E
Project Name: 23051.21 Buhach Colony HS	**Report Page:** **(Page 7 of 8)**
Project Address:	**Date Prepared:** 2023-06-02T17:34:08-04:00

M. LIGHTING ALLOWANCE: PER SPECIFIC AREA

This section does not apply to this project.

N. EXISTING CONDITIONS POWER ALLOWANCE (alterations only)

This section does not apply to this project.

O. DECLARATION OF REQUIRED CERTIFICATES OF INSTALLATION

Selections have been made based on information provided in this document. If any selection has been changed by permit applicant, an explanation should be included in Table E. Additional Remarks. These documents must be provided to the building inspector during construction and can be found online

Form/Title
NRCI-LTO-E - Must be submitted for all buildings

P. DECLARATION OF REQUIRED CERTIFICATES OF ACCEPTANCE

Selections have been made based on information provided in this document. If any selection has been changed by permit applicant, an explanation should be included in Table E. Additional Remarks. These documents must be provided to the building inspector during construction and must be completed through an Acceptance Test Technician Certification Provider (ATTCP). For more information visit: http://www.energy.ca.gov/title24/atttcp/providers.html

Form/Title	Systems/Spaces To Be Field Verified
NRCA-LTO-02-A - Must be submitted for all outdoor lighting controls except for alterations where controls are added to <= 20 luminaires.	GENERAL HARDSCAPE: "G"; GENERAL HARDSCAPE: "I"

Generated Date/Time: Documentation Software: Energy Code Ace
CA Building Energy Efficiency Standards - 2022 Nonresidential Compliance Report Version: 2022.0.000 Schema Version: rev 20220101 Compliance ID: 112247-0623-0002 Report Generated: 2023-06-02 14:34:13

STATE OF CALIFORNIA
Outdoor Lighting CALIFORNIA ENERGY COMMISSION

CERTIFICATE OF COMPLIANCE	NRCC-LTO-E
Project Name: 23051.21 Buhach Colony HS	**Report Page:** **(Page 8 of 8)**
Project Address:	**Date Prepared:** 2023-06-02T17:34:08-04:00

DOCUMENTATION AUTHOR'S DECLARATION STATEMENT

I certify that this Certificate of Compliance documentation is accurate and complete.

Documentation Author Name: Jesse Bastian	Documentation Author Signature: Jesse Bastian
Company: M. Neils Engineering	Signature Date: 12/08/2023
Address: 100 HOWE AVE, SUITE 235N	CEA/ HERS Certification Identification (if applicable):
City/State/Zip: SACRAMENTO, CA 95825	Phone: (916) 923-4400

RESPONSIBLE PERSON'S DECLARATION STATEMENT

I certify the following under penalty of perjury, under the laws of the State of California:

1. The information provided on this Certificate of Compliance is true and correct.
2. I am eligible under Division 3 of the Business and Professions Code to accept responsibility for the building design or system design identified on this Certificate of Compliance (responsible designer)
3. The energy features and performance specifications, materials, components, and manufactured devices for the building design or system design identified on this Certificate of Compliance conform to the requirements of Title 24, Part 1 and Part 6 of the California Code of Regulations.
4. The building design features or system design features identified on this Certificate of Compliance are consistent with the information provided on other applicable compliance documents, worksheets, calculations, plans and specifications submitted to the enforcement agency for approval with this building permit application.
5. I will ensure that a completed signed copy of this Certificate of Compliance shall be made available with the building permit(s) issued for the building, and made available to the enforcement agency for all applicable inspections. I understand that a completed signed copy of this Certificate of Compliance is required to be included with the documentation the builder provides to the building owner at occupancy.

Responsible Designer Name: Jesse Bastian	Responsible Designer Signature: Jesse Bastian
Company: M. Neils Engineering	Date Signed: 12/08/2023
Address: 100 HOWE AVE, SUITE 235N	License: E20229
City/State/Zip: SACRAMENTO, CA 95825	Phone: (916) 923-4400

Generated Date/Time: Documentation Software: Energy Code Ace
CA Building Energy Efficiency Standards - 2022 Nonresidential Compliance Report Version: 2022.0.000 Schema Version: rev 20220101 Compliance ID: 112247-0623-0002 Report Generated: 2023-06-02 14:34:13

IDENTIFICATION STAMP
DIV. OF THE STATE ARCHITECT
APP: 02-121275 INC:
REVIEWED FOR
SS ☑ FLS ☑ ACS ☑
DATE: 12/15/2023

DESIGN WEST
CALIFORNIA DESIGN WEST ARCHITECTS, Inc.
2100 19th Street
Sacramento, CA 95818
Phone: (916) 446-2466
Fax: (916) 446-5118
Web Page: ca-dw.com

These plans and prints thereof, as instruments of service, are owned by the architect and are for the use on this project only. Reproduction and/or distribution without the prior written consent of the architect is forbidden.
Copyright California Design West Architects, Inc.

ARCHITECT: CONSULTANT:

LICENSED ARCHITECT MITCHELL A. MCALLISTER No. C17250 REN: 08-31-2025 STATE OF CALIFORNIA

REGISTERED PROFESSIONAL ENGINEER JESSE U. BASTIAN No. E20229 Exp. 03-31-25 ELECTRICAL STATE OF CALIFORNIA

12/08/2023

CONSULTANT:
M. NEILS ENGINEERING, INC.
Electrical Engineers | Lighting Designers
100 Howe Ave., Suite 235N
Sacramento, CA 95825-8217
www.mneilsengineering.com
Tel: (916) 923-4400
PROJECT #: 23051.21
PROJECT MGR: Sinisha Glisic

PROJECT NAME:

BUHACH COLONY HIGH SCHOOL

1800 NORTH BUHACH RD
ATWATER, CA 95301

CONCESSIONS/TOILET BUILDINGS, TICKET BOOTH & STADIUM UPGRADES

MERCED UNION HIGH SCHOOL DISTRICT

MERCED COUNTY

KEY PLAN:

SHEET TITLE:

TITLE 24 - OUTDOOR LIGHTING COMPLIANCE FORMS

JOB NUMBER:
SHEET NUMBER: **E610**
DATE: MARCH 28, 2023
REVISION:

Dec 08, 2023 - 10:14am / pjones
UNAUTHORIZED CHANGES & USES: M. Neils Engineering, Inc. preparing these plans will not be responsible for or liable for unauthorized changes to or uses to these plans. All changes to these plans must be in writing and must be approved by M. Neils Engineering, Inc.

STATE OF CALIFORNIA

Electrical Power Distribution

CALIFORNIA ENERGY COMMISSION

CERTIFICATE OF COMPLIANCE			NRCC-ELC-E
This document is used to demonstrate compliance with mandatory requirements in 130.5, for electrical systems in newly constructed nonresidential and hotel/motel occupancies and 160.6 and 160.9 for electrical systems in newly constructed multifamily occupancies. Additions and alterations to electrical service systems in nonresidential and hotel/motel occupancies will also use this document to demonstrate compliance per 141.0(a) or 141.0(b)2P for alterations. For multifamily addition or alterations compliance will be documented per 180.1(a) or 180.2 (b)4Bvii			
Project Name: Buhach Colony HS - Stadium Upgrade		**Report Page:**	**(Page 1 of 4)**
Project Address:		**Date Prepared:**	2023-06-02T18:19:11-04:00

A. GENERAL INFORMATION

01	Project Location (city)	Atwater	02	Climate Zone	12
			03	Occupancy Types Within Project:	School or ClassroomSports Arena

B. PROJECT SCOPE

This table includes electrical systems that are within the scope of the permit application.

01	02	03	04	05	06	07
Electrical Service Designation/ Description	Scope of Work[1]	Rating[2] (kVA)	Utility Provided Metering System Exception to 130.5(a)/ 160.6(a)[3]	System subject to CA Elec Code Article 517 Exception to 130.5(a)and (b)	Demand Response Controls	Provides power to dwelling units/common living areas only in multifamily occupancy
Existing 480/277v 2000amp service	Add/Alt to feeders and branch circuits only	---	☐	☐	Where required, demand response controls must be specified which are capable of receiving and automatically responding to at least one standards based messaging protocol which enables demand response after receiving a demand response signal. Sections 120.2/ 160.3, 130.1/ 160.5, and 130.3/ 160.5, and mechanical, indoor lighting, and sign lighting Certificate of Compliance documents will indicate when demand response controls are required.	☐

[1]FOOTNOTES: Adding only new feeders and branch circuits triggers Voltage Drop 130.5(c)/160.6(c), no other requirements from 130.5/160.6 are required.
[2] If common use areas in a multifamily are submetered, rating is for submeter size serving common use areas.
[3] Applicable if the utility company is providing a metering system that indicates instantaneous kW demand and kWh for a utility-defined period.

STATE OF CALIFORNIA

Electrical Power Distribution

CALIFORNIA ENERGY COMMISSION

CERTIFICATE OF COMPLIANCE			NRCC-ELC-E
Project Name: Buhach Colony HS - Stadium Upgrade		**Report Page:**	**(Page 2 of 4)**
		Date Prepared:	2023-06-02T18:19:11-04:00

C. COMPLIANCE RESULTS

Results in this table are automatically calculated from data input and calculations in Tables F through J. Note: If any cell on this table says "COMPLIES with Exceptional Conditions" refer to Table D. Exceptional Conditions for guidance or see applicable Table referenced below.

01		02		03		04	05	06
Service Electrical Metering 130.5(a)/ 160.6(a) (See Table F)	AND	Separation for Monitoring 130.5(b)/ 160.6(b) (See Table G)	AND	Voltage Drop 130.5(c)/ 160.6(c) (See Table H)	AND	Controlled Receptacles 130.5(d)/ 160.6(d) (See Table I)	Electric Ready 160.9 (See Table J)	**Compliance Results**
	AND		AND	Yes	AND			COMPLIES

D. EXCEPTIONAL CONDITIONS

This table is auto-filled with uneditable comments because of selections made or data entered in tables throughout the form.

E. ADDITIONAL REMARKS

This table includes remarks made by the permit applicant to the Authority Having Jurisdiction.

H. VOLTAGE DROP

This table includes entirely new or complete replacement electrical power distribution systems, or alterations that add, modify or replace both feeders and branch circuits to demonstrate compliance with 130.5(c)/ 160.6(c). For alterations, only the altered circuits must demonstrate compliance per 141.0(b)2Piii/ 180.2(b)4Bviic.

01	02				03	04	05	
Electrical Service Designation/Description	Combined Voltage Drop on Installed Feeder/Branch Circuit Conductors Compliance Method				Location of Voltage Drop Calculations[1]	Sheet Number for Voltage Drop Calculations in Construction Documents	Field Inspector	
							Pass	Fail
Existing 480/277v 2000amp service	☒	Voltage drop less than 5%	☐	Permitted by CA Elec Code (Exception to 130.5(c))*	Contractor Responsible		☐	☐

** NOTES: If "Permitted by CA Elec Code *" is selected under Compliance Method above, please indicate where the exception applies in the space provided below.*

[1] FOOTNOTES: Voltage drop calculations may be attached to the permit application outside the construction documents if allowed by the Authority Having Jurisdiction. Select "attached" if applicable. If calculations will be the responsibility of the installing contractor, select "Contractor Responsible".

STATE OF CALIFORNIA

Electrical Power Distribution

CALIFORNIA ENERGY COMMISSION

CERTIFICATE OF COMPLIANCE			NRCC-ELC-E
Project Name: Buhach Colony HS - Stadium Upgrade		**Report Page:**	**(Page 3 of 4)**
		Date Prepared:	2023-06-02T18:19:11-04:00

K. DECLARATION OF REQUIRED CERTIFICATES OF INSTALLATION

Selections have been made based on information provided in this document. If any selection have been changed by permit applicant, an explanation should be included in Table E. Additional Remarks. These documents must be provided to the building inspector during construction and can be found online

Form/Title
NRCI-ELC-E - Must be submitted for all buildings

L. DECLARATION OF REQUIRED CERTIFICATES OF ACCEPTANCE

There are no forms required for this project.

STATE OF CALIFORNIA

Electrical Power Distribution

CALIFORNIA ENERGY COMMISSION

CERTIFICATE OF COMPLIANCE			NRCC-ELC-E
Project Name: Buhach Colony HS - Stadium Upgrade		**Report Page:**	**(Page 4 of 4)**
Project Address:		**Date Prepared:**	2023-06-02T18:19:11-04:00

DOCUMENTATION AUTHOR'S DECLARATION STATEMENT

I certify that this Certificate of Compliance documentation is accurate and complete.

Documentation Author Name: Sinisha Glisic	Documentation Author Signature: Jesse Bastian
Company:	Signature Date: 12/08/2023
Address:	CEA/ HERS Certification Identification (if applicable):
City/State/Zip:	Phone:

RESPONSIBLE PERSON'S DECLARATION STATEMENT

I certify the following under penalty of perjury, under the laws of the State of California:

1. The information provided on this Certificate of Compliance is true and correct.
2. I am eligible under Division 3 of the Business and Professions Code to accept responsibility for the building design or system design identified on this Certificate of Compliance (responsible designer)
3. The energy features and performance specifications, materials, components, and manufactured devices for the building design or system design identified on this Certificate of Compliance conform to the requirements of Title 24, Part 1 and Part 6 of the California Code of Regulations.
4. The building design features or system design features identified on this Certificate of Compliance are consistent with the information provided on other applicable compliance documents, worksheets, calculations, plans and specifications submitted to the enforcement agency for approval with this building permit application.
5. I will ensure that a completed signed copy of this Certificate of Compliance shall be made available with the building permit(s) issued for the building, and made available to the enforcement agency for all applicable inspections. I understand that a completed signed copy of this Certificate of Compliance is required to be included with the documentation the builder provides to the building owner at occupancy.

Responsible Designer Name: Jesse U Bastiani	Responsible Designer Signature: Jesse Bastian
Company:	Date Signed: 12/08/2023
Address:	License: E20229
City/State/Zip:	Phone:

IDENTIFICATION STAMP
DIV. OF THE STATE ARCHITECT
APP: 02-121275 INC:
REVIEWED FOR
SS ☑ FLS ☑ ACS ☑
DATE: 12/15/2023

CALIFORNIA DESIGN WEST ARCHITECTS, Inc.

2100 19th Street
Sacramento, CA 95818

Phone: (916) 446-2466
Fax: (916) 446-5118
Web Page: ca-dw.com

These plans and prints thereof, as instruments of service, are owned by the architect and are for the use on this project only. Reproduction and/or distribution without the prior written consent of the architect is forbidden.

Copyright California Design West Architects, Inc.

ARCHITECT: CONSULTANT:

LICENSED ARCHITECT MITCHELL A. McALLISTER NO. C 17250 REN. 2-28-2025 STATE OF CALIFORNIA

REGISTERED PROFESSIONAL ENGINEER JESSE U. BASTIAN No. E20229 Exp. 03-31-25 ELECTRICAL STATE OF CALIFORNIA

12/08/2023

CONSULTANT:

M. NEILS ENGINEERING, INC.
Electrical Engineers | Lighting Designers
100 Howe Ave., Suite 235N
Sacramento, CA 95825-8217
www.mneilsengineering.com
Tel: (916) 923-4400
PROJECT #: 23051.21
PROJECT MGR: Sinisha Glisic

PROJECT NAME:

BUHACH COLONY HIGH SCHOOL

1800 NORTH BUHACH RD
ATWATER, CA 95301

CONCESSIONS/TOILET BUILDINGS, TICKET BOOTH & STADIUM UPGRADES

MERCED UNION HIGH SCHOOL DISTRICT

MERCED COUNTY

KEY PLAN:

SHEET TITLE:

TITLE 24 - ELECTRICAL POWER DISTRIBUTION FORMS

JOB NUMBER:	SHEET NUMBER:
DATE: MARCH 28, 2023	
REVISION:	**E620**

Dec 08, 2023 – 10:14am, / pivanov
UNAUTHORIZED CHANGES & USES: M. Neils Engineering, Inc. preparing these plans will not be responsible for, or liable for unauthorized changes to or uses to these plans. All changes to these plans must be in writing and must be approved by M. Neils Engineering, Inc.

GENERAL NOTES:

SCOPE OF WORK

Remove all existing lower attachments on poles F1–F4. Add (1) new light fixture at 70' and (1) new ballast box to poles F1–F4. Relocate steel poles F3 and F4 onto new precast concrete bases set in new concrete backfill.

APPLICABLE BUILDING CODE

All construction and workmanship shall conform to the 2022 California Building Code, California Code of Regulations – Title 24, Parts 1 & 2.

This pole and foundation standard has been designed for lateral loads on the completed structure as follows:

Wind Design Data:
- Vult = 93 MPH (Exposure C); Vasd = 72 MPH (Exposure C)
- Risk Category = II
- See Pole Foundation Schedule for maximum pole wind forces.

Seismic Design Data:
- I_e = 1.0
- Risk Category = II (Self Supporting Poles)
- S_s = 0.581
- S_1 = 0.240
- Site Class = D
- S_{DS} = 0.618
- S_{D1} = 0.485
- Seismic Design Category = D
- Basic Seismic–Force–Resisting System = Non–Building Structure, not similar to buildings
- Cs = 0.156 (STRENGTH LEVEL)
- R = 1.5
- Ω = 1.5
- Analysis Procedure = Equivalent Lateral Force Procedure
- See Pole Foundation Schedule for maximum pole seismic forces.

GENERAL CONSTRUCTION

These notes shall be used in conjunction with the plans and any discrepancies shall be brought to the attention of the Registered Design Professional (RDP) in Responsible Charge.

Contractor must check all dimensions, clearances and job conditions before starting work. The RDP in Responsible Charge shall be notified immediately of any discrepancies or possible deficiencies.

The drawings and specifications represent the finished structure. All bracing, temporary supports, shoring, etc., is the sole responsibility of the Contractor. Observation visits to the job site by the RDP in Responsible Charge do not include inspection of construction procedures. The Contractor is solely responsible for all construction methods and for safety conditions at the worksite. These visits by RDP in Responsible Charge shall not be construed as continuous and detailed inspections.

Design, material, equipment, and products other than those described below or indicated on the drawings may be considered for use, provided prior approval is obtained from the School District, the RDP in Responsible Charge, and DSA.

All changes to the approved plans after a contract for construction has been awarded, affecting structural, access or life–safety portions of the project, shall be made by means of construction change documents (CCD) approved by DSA, as required by Section 4–338, Part 1, Title 24, CCR. All CCD shall be prepared and signed by the RDP in general Responsible Charge.

Substitutions shall be considered as a CCD and shall be approved by DSA prior to fabrication or use.

A Class 2 Project Inspector employed by the School District (Owner) and approved by DSA shall provide continuous inspection of the work, the duties of the Inspector are defined In Section 4–342, Part 1, Title 24, CCR.

All Tests And Inspections shall be performed by an Independent lab employed by the School District and approved by DSA.

Reference pole location on the Architectural, Structural, and/or Electrical drawings for actual pole placement and site location. Pole shall be located 5'–0" min. from adjacent structures below 50'–0" A.G.L., unless noted otherwise.

LIGHT POLE FOUNDATIONS

Reference geotechnical report prepared by Technicon Engineering Services, Inc., Dated February 9, 2023; Project no. 220875.001.

Allowable Vertical soil Capacity – 80 * Diameter * Length^2 (lbs) (Skin Friction).

Allowable Lateral Bearing capacity: 195 PSF/FT (Values may be increased ⅓ for wind and seismic loading.

A representative of Technicon should be available at the time of the foundation installation to verify the soil design parameters and to provide assistance if any problems arise in foundation installation.

The Contractor must familiarize himself with the complete geotechnical report, and borings and contact the above firm to understand the soil conditions and the possibility of ground water pumping and excavation stabilization or bracing during the foundation installation and placement of concrete.

Soil formations that will require special design considerations or excavation procedures may exist. Pole foundations may need to be reanalyzed according to the soil conditions that exist.

If any discrepancies or inconsistencies arise, notify the RDP in Responsible Charge of such discrepancies.

All piers and concrete must bear on and against firm undisturbed soil as determined by the Geotechnical Engineer.

Place plywood collar around perimeter at the top of foundation excavation to prevent soil from entering pier.

All excavations must be free of loose soil, and debris prior to foundation installation and placement of concrete. Casing or drilling slurry may be required if caving occurs. Review and approval of the Geotechnical Engineer and DSA is required.

All excavations must be free of water or concrete shall be placed by the Tremie Method in accordance with ACI standard 336. Concrete placed by the Tremie Method shall have a minimum ultimate strength of 1,000 PSI greater than required under "Concrete Cast–In–Place' and a maximum slump of 8".

CONCRETE (CAST–IN–PLACE)

Concrete backfill without steel reinforcement shall attain a minimum ultimate compressive strength at 28 day test of 3,000 psi (2,500psi used for structural design). Batch plant inspection not required.

All concrete shall attain a minimum strength of 2,500 psi prior to steel pole erection.

Use Type II/V Portland cement or as directed by the Geotechnical Engineer.

Portland Cement ASTM C–150.

Aggregate ASTM C–33. 1" maximum aggregate size. ⅜" max agg. size acceptable where pump mixes are used at unreinforced concrete backfill.

Mix in conformance with ASTM C–94, ACI 318 SECTIONS 19.2 and 26.4.

Place concrete immediately after completion of excavation and inspection by the Geotechnical Engineer and the DSA Inspector. Under no circumstances shall piers be allowed to remain open for more than 12 hours without the approval of the Geotechnical Engineer. Excavations shall be covered and protected until filled with concrete.

Concrete shall be placed in one continuous operation (no construction joint) with special equipment to assure a maximum freefall of 5 ft and to prevent concrete from striking the sides of the excavation. Freefall of concrete is unacceptable through water or drilling slurry.

Vibrate concrete full depth, except for concrete with slump greater than 6", then vibrate only upper 10'–0". Concrete placed under water shall have a slump of 6"–8".

STEEL POLE

All miscellaneous structural steel items conform to AISC 360–16.

All weldment conforms with AWS D1.1 specification for GMAW fillet utilizing E70S–X filler metal or SAW fillet utilizing F7XX–EXXX or F8XX–EXXX filler metal.
GMAW procedure conforms to AWS A5.18.
SAW procedure conforms to AWS A5.23.

All field welding shall be in compliance with AWS D1.1 specification.

All welding shall be continously inspected by an AWS CWI certified inspector approved by DSA.

All exposed steel shall be hot dipped galvanized to ASTM A123 latest standards.

PRECAST BASE

The precast concrete base conforms to California Code of Regulations, T.24, part 2, Chapter 19A and to Building Code Requirements for Reinforced Concrete, ACI 318–19.

See detail "A" on "MS" sheet(s) for material strengths and specifications.

TESTING AND INSPECTION

Testing and inspection in accordance with Title 24, Part 1 & Part 2 & project DSA 103 form.

EXCAVATIONS & FOUNDATIONS:
Inspection of cast–in–place deep foundations – 1705A.8 & Table 1705A.8

CONCRETE MATERIALS: 1903A.1
Portland cement – 1910A.1
Concrete aggregates – 1903A.5
Prestressing steel and anchorages – 1910A.3

CONCRETE QUALITY:
Proportions of concrete – Reference ACI 318 Section 26.4.3.1 Through 26.4.4.1.
Strength tests of concrete – 1905A.1.15 and ACI 318 Section 26.12 & 26.5.3.2.

CONCRETE INSPECTION: 1705A.3 & Table 1705A.3
Job site – Reference ACI 318 Section 26.5.1,26.5.2.1(a) & (b),26.6.1.2(d), 26.11.1.1(a).
Batch Plant Inspection Not Required – 1705A.3.3.2
Prestressed concrete – 1704A.2.5, 1705A.3.4

STEEL MATERIALS:
Structural steel – 2202A.1 & 2205A.1
Cold formed steel – 2210A.1
Identification – 2202A.1

STEEL QUALITY:
Tests of structural steel & cold formed steel – 2202A.1

STRUCTURAL STEEL INSPECTIONS: Table 1705A.2.1
Shop fabrication inspection – 1704A2.5
Welding – 1705A.2.5, DSA IR 17–3 and AWS D1.1.

NOTE: Field verify existing pole conditions & repair any defects, if found. Repair procedures and details to be reviewed and approved by Structural Engineer of Record and DSA.

These plans are for construction approval. An application number and approval of these drawings by the Division of The State Architect of California must be secured to build from these plans.

INDEX OF SHEETS

MT1	NOTES, FOUNDATION DETAIL
MS1	80B POLE DETAILS

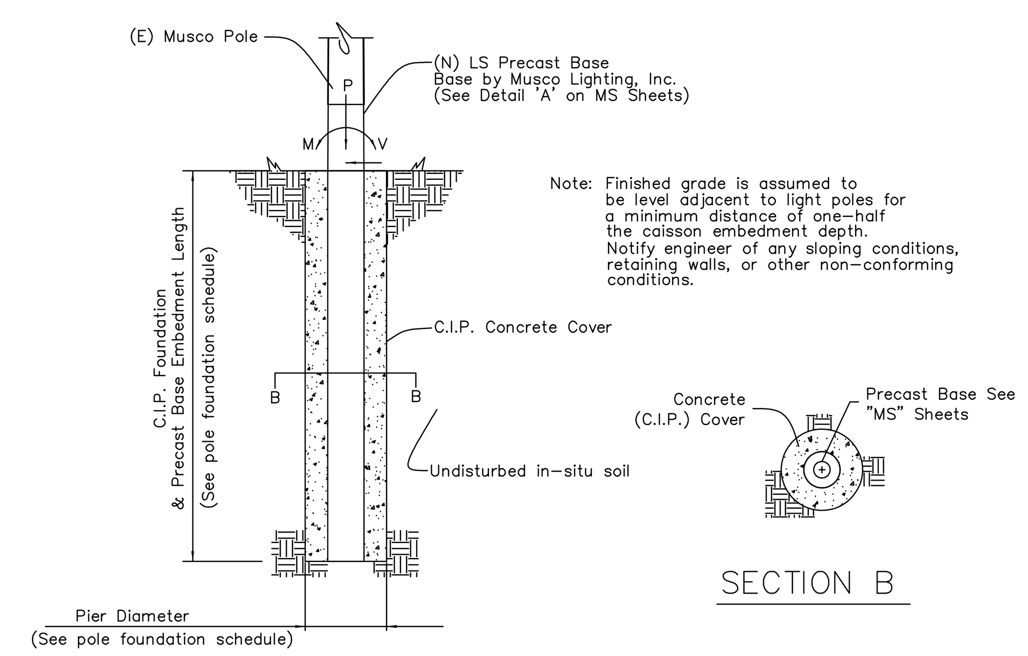

A (N) FOUNDATION DETAIL
N.T.S.

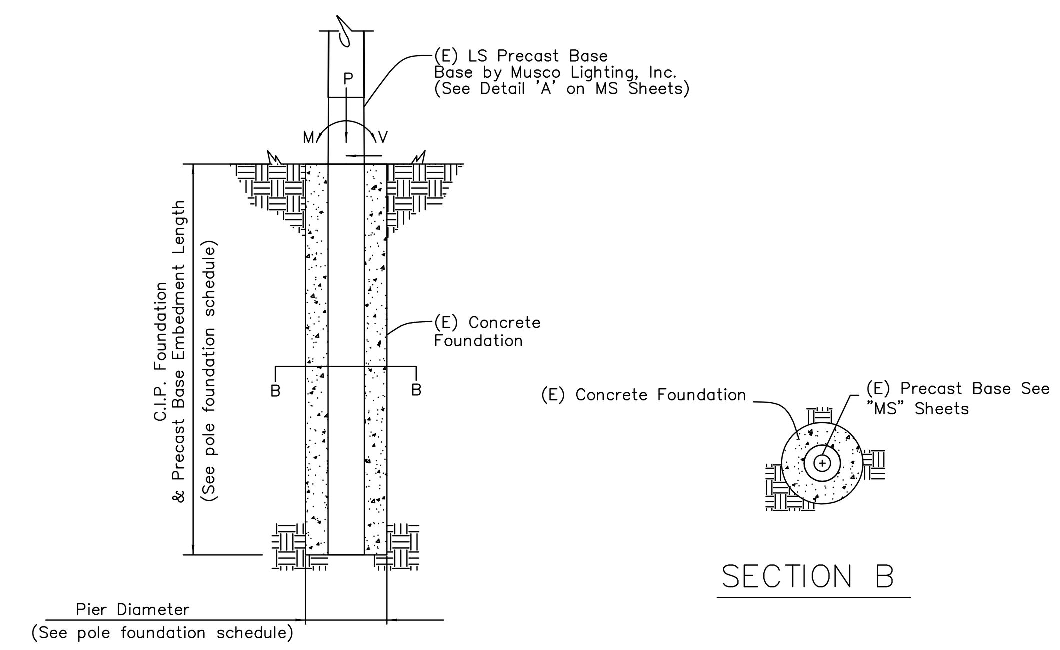

B (E) FOUNDATION DETAIL
N.T.S.

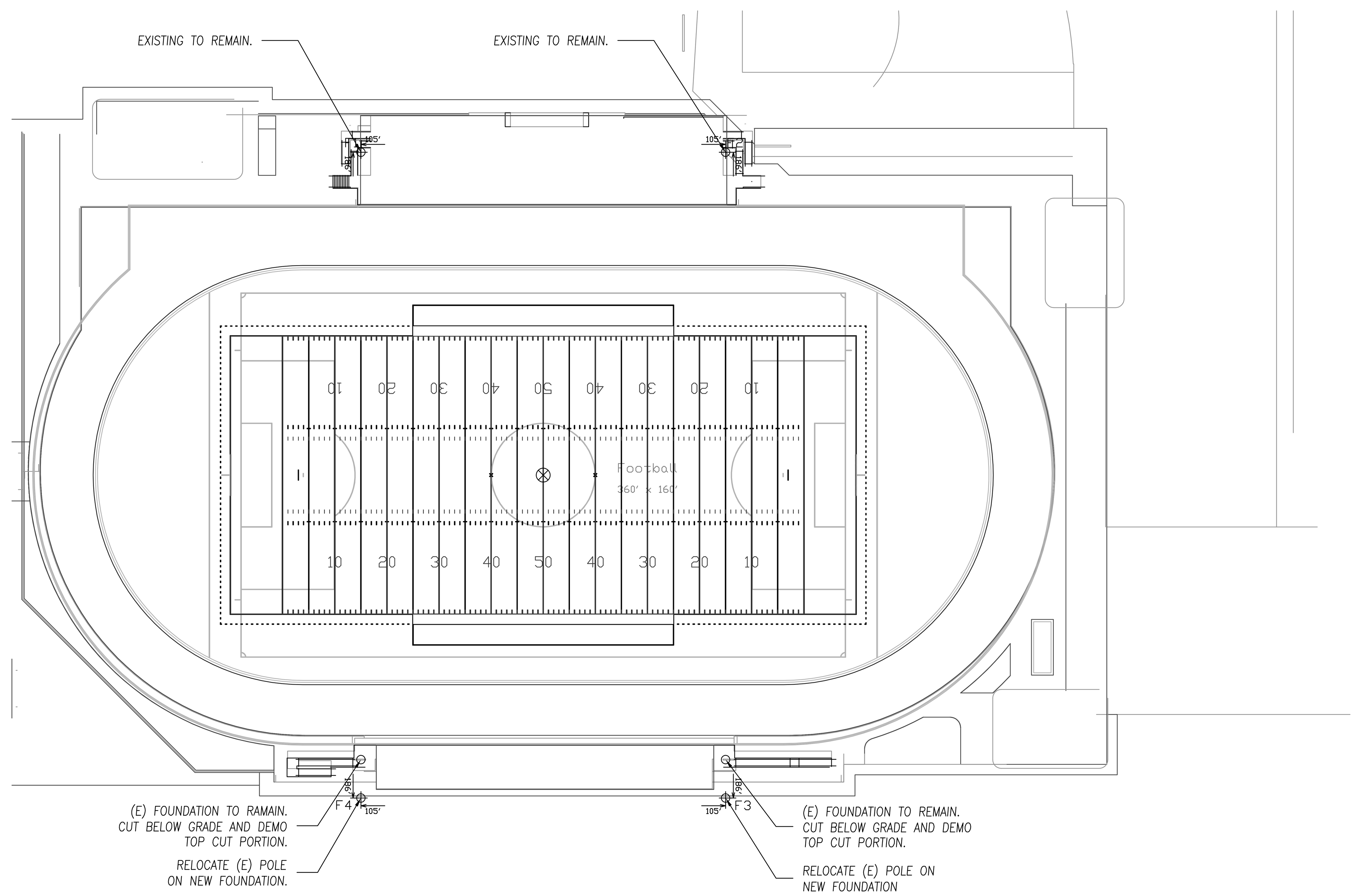

POLE ORIENTATION PLAN
N.T.S.

NOTE: THIS PLAN IS A PICTORAL REPRESENTATION OF THE SITE LAYOUT. REFERENCE APPROPRIATE ARCHITECTURAL SITE PLAN FOR ALL NECESSARY INFORMATION.

POLE FOUNDATION SCHEDULE

POLE TYPE–# OF FIXTURES (MAX) (LSS=LIGHT STRUCTURE)	MARK (SEE POLE ORIENTATION PLAN)	WIND OR SEISMIC (SEISMIC FORCE INCLUDES OVERSTRENGTH FACTOR=1.5)	ASD LEVEL FORCES (MAX) MOMENT (M) FT–LBS*	ASD LEVEL FORCES (MAX) SHEAR (V) LBS	ASD LEVEL FORCES (MAX) VERTICAL (P) LBS**	C.I.P. DEEP FOUNDATION DIAMETER INCHES	C.I.P. DEEP FOUNDATION EMBEDMENT FEET	PRECAST BASE EMBEDMENT LENGTH	FOUNDATION DETAIL
(E)LSS80B–15	F1, F2	SEISMIC	51,600	932	5,741	36"	16'–0"	16'–0"	B/MT1
		WIND	117,400	2,067	3,943				
(E)LSS80B–14	F3, F4	SEISMIC	51,300	926	5,646	36"	16'–0"	16'–0"	A/MT1
		WIND	111,000	1,979	3,848				

*Moment (M) computed below grade at Shear (V) = 0.
**Vertical (P) load includes steel pole, light fixtures, and attachments. Vertical (P) load for wind is the dressed pole weight for erection purposes. Vertical (P) load for seismic also includes weight of precast base above groundline. Reference Detail "A" on MS Sheet(s) for precast base weight.

Information contained herein is the confidential property of Musco Sports Lighting, LLC and/or its parent companies, affiliates, successors and assigns. Reproduction, distribution, or use of the information other than its limited, intended purpose without express written permission is prohibited.
Musco products referenced or shown are protected by one or more of the following patents. U.S. Patents: 4947303; 4994718; 5075828; 5134557; 5161883; 5211473; 5229681; 5377611; 5398478; 5423281; 5426577; 5600537; 5794387; 5856721; 6036338; 6203176; 6250596; 6340790; 6398392; 6681110; 6833675; 6929385; 6969034; 6988697; 7059572; D337168; D353797; D353911; D411096. Other patents pending.

DSA–TITLE1_E

Buhach HS Egress
FIELD LIGHTING
Atwater, CA

CONSULTANT
KNA STRUCTURAL ENGINEERS
9931 Muirlands Boulevard, Irvine, CA 92618
Tel (949) 462-3200 • Fax (949) 462-3201
www.KNAstructural.com
KNA JOB NO.: 463.187

CORPORATE OFFICE:
P.O. Box 808
100 1st Avenue West
Oskaloosa, Iowa 52577
800/825–6020

DRAWING TITLE: NOTES, FOUNDATION DETAIL
SCALE: SEE PLAN
REVISIONS:
REFERENCE:

PROJECT NO. 224455
DATE: 05/03/2023
DRAWN BY: Bryce Miles
DRAWING NO. MT1
1 OF 2

IDENTIFICATION STAMP
DIV. OF THE STATE ARCHITECT
APP: 02-121275 INC:
REVIEWED FOR
SS ☑ FLS ☑ ACS ☑
DATE: 12/15/2023

CALIFORNIA DESIGN WEST ARCHITECTS, Inc.
2100 19th Street
Sacramento, CA 95818
Phone: (916) 446-2466
Fax: (916) 446-5118
Web Page: ca-dw.com

These plans and prints thereof, as instruments of service, are owned by the architect and are for the use on this project only. Reproduction and/or distribution without the prior written consent of the architect is forbidden.

Copyright California Design West Architects, Inc.

ARCHITECT: CONSULTANT:

CONSULTANT:

PROJECT NAME:

BUHACH COLONY HIGH SCHOOL

1800 NORTH BUHACH RD
ATWATER, CA 95301

CONCESSIONS/TOILET BUILDINGS, TICKET BOOTH & STADIUM UPGRADES

MERCED UNION HIGH SCHOOL DISTRICT

MERCED COUNTY

KEY PLAN:

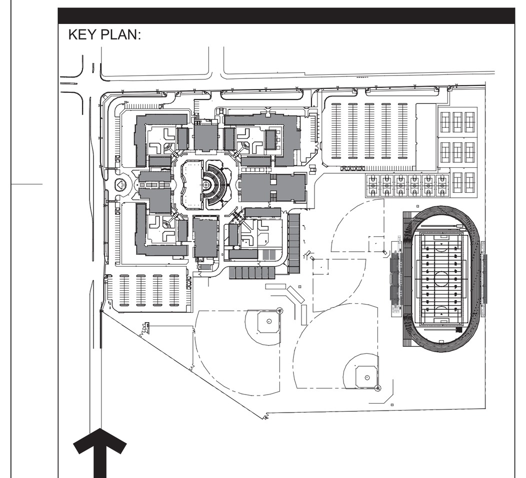

SHEET TITLE:

NOTES, FOUNDATION DETAIL

JOB NUMBER:	SHEET NUMBER:
	MT1
DATE: OCT 9, 2023	
REVISION:	

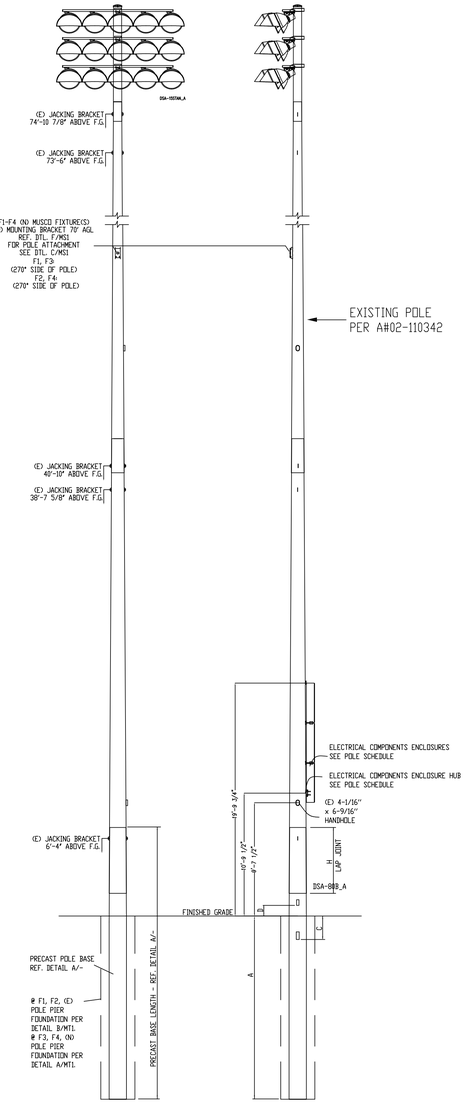

(E) LSS80B POLE FRONT VIEW (E) LSS80B POLE SIDE VIEW
N.T.S. N.T.S. DSA-80BBASE_A

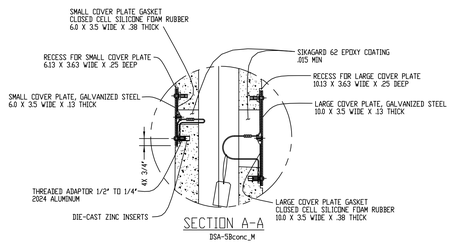

SECTION A-A
DSA-SBconc_M

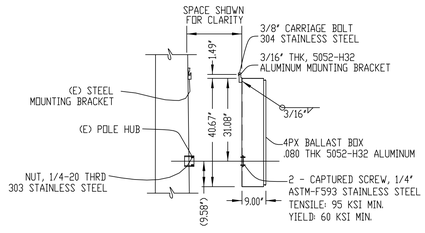

O BALLAST BOX CONNECTION DETAIL
N.T.S. STRU-4PX_E

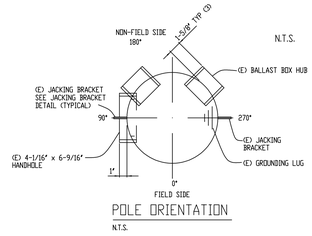

POLE ORIENTATION
N.T.S.

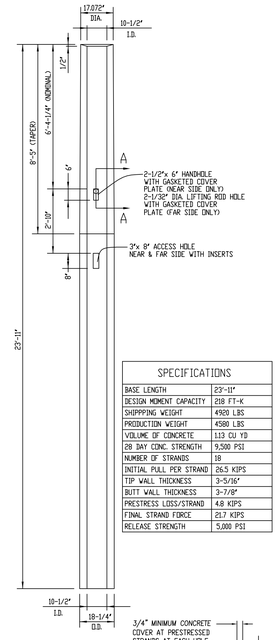

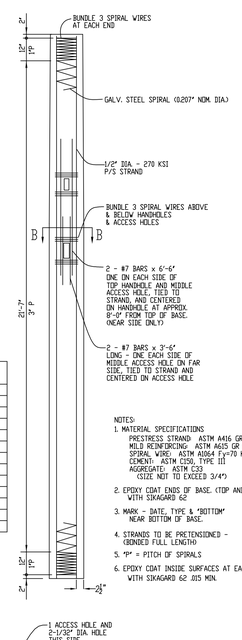

SPECIFICATIONS	
BASE LENGTH	23'-11"
DESIGN MOMENT CAPACITY	218 FT-K
SHIPPING WEIGHT	4920 LBS
PRODUCTION WEIGHT	4580 LBS
VOLUME OF CONCRETE	1.13 CU YD
28 DAY CONC. STRENGTH	9,500 PSI
NUMBER OF STRANDS	10
INITIAL PULL PER STRAND	26.5 KIPS
TIP WALL THICKNESS	3-5/16"
BUTT WALL THICKNESS	3-7/8"
PRESTRESS LOSS/STRAND	4.8 KIPS
FINAL STRAND FORCE	21.7 KIPS
RELEASE STRENGTH	5,000 PSI

NOTES:
1. MATERIAL SPECIFICATIONS
   PRESTRESS STRAND ASTM A416 GR 270 (LOW RELAXATION)
   MILD REINFORCING ASTM A615 GR 60
   SPIRAL WIRE: ASTM A1064 Fy=70 KSI
   CEMENT: ASTM C150, TYPE III
   AGGREGATE: ASTM C33 (SIZE NOT TO EXCEED 3/4")
2. EPOXY COAT ENDS OF BASE. (TOP AND BOT.)
3. MARK - DATE, TYPE & "BOTTOM" NEAR BOTTOM OF BASE.
4. STRANDS TO BE PRETENSIONED - DEBONDED FULL LENGTH
5. "P" = PITCH OF SPIRALS
6. EPOXY COAT INSIDE SURFACES AT EACH HOLE WITH SIKAGARD 62 .015 MIN.

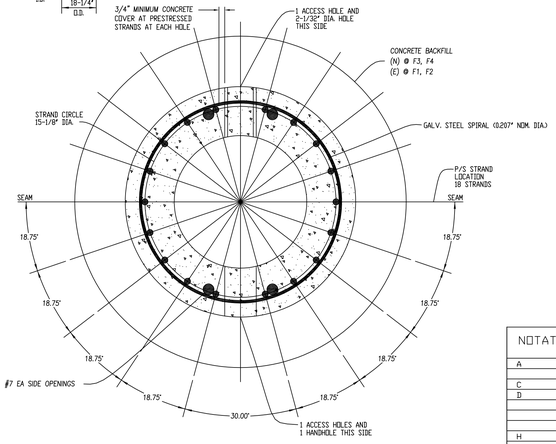

PLAN SECTION B-B

A TYPE 5B PRECAST BASE DETAIL
N.T.S. DSA-SBconc_M

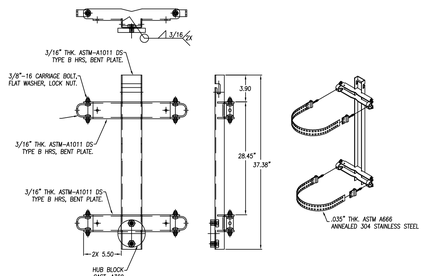

K BOTTOM BOX STRAP MOUNTING
N.T.S.

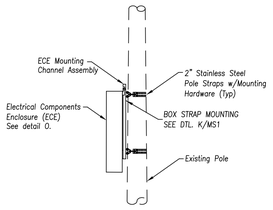

J BALLAST BOX CONNECTION DETAIL
N.T.S.

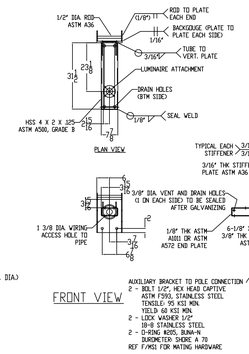

C 1 FIXTURE CONFIGURATION
N.T.S.

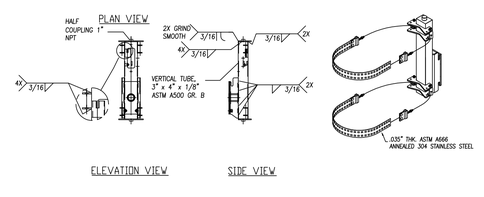

F AUX. FIXTURE MOUNTING
N.T.S.

NOTATION	DIMENSION LSS80B
A	16'-0"
C	2'-0" NOM.
D	1'-0" NOM.
H	6'-1 1/2" NOM. 5'-3 3/4" MIN.

1. CONTAINS COMBINED EPA OF LIGHT FIXTURES, CROSS ARM AND MISCELLANEOUS FIXTURE MOUNTING APPARATUS.

FIXTURE WEIGHT 40 LBS. THIS INCLUDES THE WEIGHT OF FIXTURE, CROSS ARM & MISC. MOUNTING APPARATUS. ELECTRICAL BALLAST BOX WEIGHT 50 LBS PER FIXTURE SERVICED

POLE SCHEDULE						
SITE LOCATION	POLE MARK	REFERENCE LOCATION	POLE TYPE	FIXTURE CONFIGURATION	TOTAL EPA[1]	BALLAST BOX REQUIREMENTS
SEE SITE PLAN (BY OTHERS)	F1-F4	SEE POLE ORIENTATION PLAN	(E) LSS80B	EXISTING	40.5	SEE DETAIL D/MS1

DSA-POLESCHE_C

DSA-BB_A

IDENTIFICATION STAMP
DIV. OF THE STATE ARCHITECT
APP: 02-121275 INC:
REVIEWED FOR
SS ☑ FLS ☑ ACS ☑
DATE: 12/15/2023

Buhach HS Egress
FIELD LIGHTING
Atwater,CA

DESIGN CALIFORNIA WEST

CALIFORNIA DESIGN WEST ARCHITECTS, Inc.

2100 19th Street
Sacramento, CA 95818

Phone: (916) 446-2466
Fax: (916) 446-5118
Web Page: ca-dw.com

These plans and prints thereof, as instruments of service, are owned by the architect and are for the use on this project only. Reproduction and/or distribution without the prior written consent of the architect is forbidden.

Copyright California Design West Architects, Inc.

ARCHITECT: CONSULTANT:

REGISTERED PROFESSIONAL ENGINEER JOSEPH R. KNA No. 6256 Exp. 6-30-25 STRUCTURAL STATE OF CALIFORNIA

LICENSED ARCHITECT RUSSELL A. MCALLISTER REN. 02-28-25 STATE OF CALIFORNIA

CONSULTANT
KNA STRUCTURAL ENGINEERS
9931 Mulvane Street, Suite 203
Tel (949) 462-3205 • Fax (949) 462-3201
www.knastructural.com
KNA JOB NO.: 463.187

CONSULTANT:

musco Lighting

CORPORATE OFFICE:
P.O. Box 808
100 1st Avenue West
Oskaloosa, Iowa 52577
800/825-6020

PROJECT NAME:

BUHACH COLONY HIGH SCHOOL

1800 NORTH BUHACH RD
ATWATER, CA 95301

CONCESSIONS/TOILET BUILDINGS, TICKET BOOTH & STADIUM UPGRADES

MERCED UNION HIGH SCHOOL DISTRICT

MERCED COUNTY

SCALE: SEE PLAN

DRAWING TITLE: POLE DETAIL

REVISIONS

REFERENCE:

PROJECT NO. 224455

DATE: 05/03/2023

DRAWN BY: Bryce Miles

DRAWING NO. 2 OF 2 MS1

KEY PLAN:

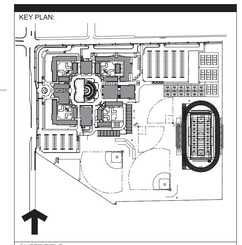

SHEET TITLE:

POLE DETAIL

JOB NUMBER:

SHEET NUMBER: MS1

DATE: OCT 9, 2023

REVISION:

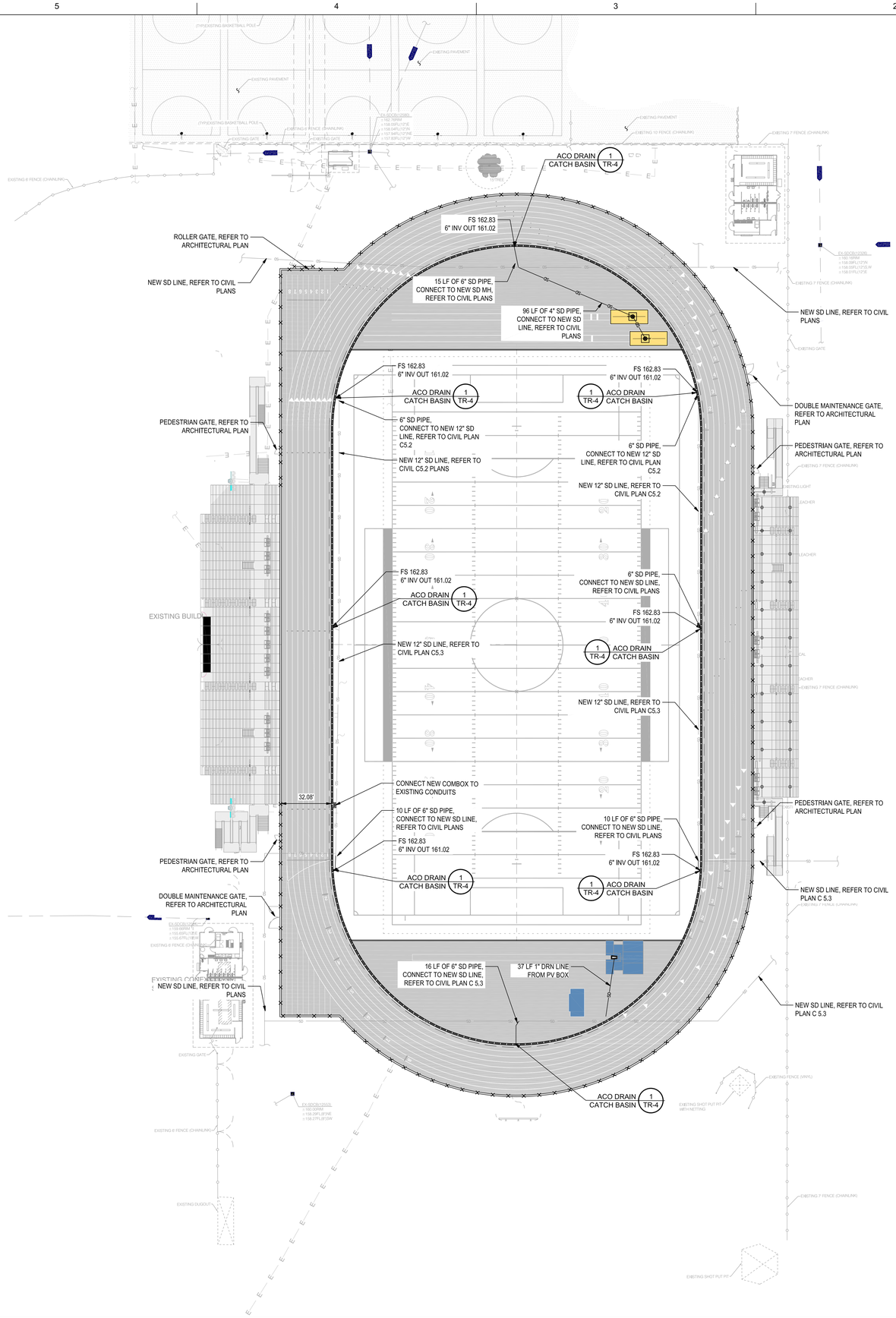

DRAINAGE NOTES

1. REMOVE ALL VEGETATION, ORGANIC MATERIAL, BUILDING MATERIAL, DEMOLITION DEBRIS, AND ALL OTHER DELETERIOUS SUBSTANCES FROM THE AREA OF THE FILL. REMOVE ALL DEBRIS FROM THE SITE AND LEGALLY DISPOSE OFFSITE.
2. PRIOR TO PLACEMENT OF BASE ROCK, CONTRACTOR SHALL, THOROUGHLY MOISTURE CONDITION AND COMPACT THE SUBGRADE TO 95% D1557 PER GEOTECH REPORT.
3. CONTRACTOR SHALL PROOF ROLL SUBGRADE WITH 20 TO 30 TON LOADED TRUCK TO LOCATE SOFT, WEAK OR EXCESSIVELY WET AREAS.
4. IF UNSTABLE MATERIAL IS OBSERVED DURING THE EVAULATION AND PROOF-ROLLING OPERATIONS , CONTRACTOR SHALL STABILIZE BY SCARIFYING, DRYING AND RE-DENSIYING MATERIAL.
5. THE EXISTING GRADES AND STRUCTURE INFORMATION ARE BASED ON INFORMATION PROVIDED BY SURVEYOR. THE CONTRACTOR SHALL VERIFY EXISTING GRADES AND STRUCTURE INFORMATION FOR ACCURACY PRIOR TO THE START OF GRADING, NOTIFY THE OWNERS REPRESENTATIVE IMMEDIATELY SHOULD CONFLICTS ARISE AND REDIRECT WORK TO AVOID DELAY.
6. THE CONTRACTOR SHALL VERIFY THE LOCATIONS OF ALL EXISTING UTILITIES, STRUCTURES AND SERVICES BEFORE COMMENCING THE WORK. THE LOCATIONS OF UTILITIES, STRUCTURES AND SERVICES SHOWN IN THE CONTRACT DOCUMENTS SHALL BE DEEMED TO BE APPROXIMATE ONLY. ALL DISCREPANCIES BETWEEN WHAT IS SHOWN AND THE ACTUAL FIELD CONDITIONS SHALL BE REPORTED TO THE OWNERS REPRESENTATIVE. CONTRACTOR SHALL RECORD ALL UTILITY MARKINGS ON A SEPARATE SET OF DRAWINGS. THIS SET OF EXISTING UTILITY DRAWINGS SHALL BE KEPT ON-SITE FOR REFERENCE FOR THE DURATION OF CONTRACT.
7. PROPOSED GRADES SHALL MEET EXISTING GRADES WITH A SMOOTH AND CONTINUOUS TRANSITION SO AS TO AVOID TRAPPING WATER. CONTRACTOR SHALL NOTIFY OWNERS REPRESENTATIVE IF PUDDLING IS SUSPECTED AND REDIRECT WORK SO AS TO AVOID DELAY WHILE AWAITING RESPONSE.
8. COORDINATE ALL SLEEVING AND UTILITY LOCATIONS AS SHOWN ON THE PLANS AND DETAILS CONTAINED WITHIN THESE CONTRACT DOCUMENTS.
9. PRIOR TO BEGINNING WORK, ALL CROSSINGS BETWEEN NEW AND EXISTING DRAINAGE AND UTILITY (INCLUDING ELECTRICAL, DATA, AND COMMUNICATION) LINE SHALL BE POTHOLED AND VERIFIED THAT NO CONFLICT WILL OCCUR. IF A CONFLICT ARISES, CONTRACTOR SHALL IMMEDIATELY INFORM THE OWNERS REPRESENTATIVE AND REDIRECT WORK IN ORDER TO AVOID DELAY.
10. CONTRACTOR SHALL TAKE CARE NOT TO DISCHARGE ANY POLLUTANTS (CHEMICALS, SEDIMITATION, CONCRETE, ET, INTO THE EXISTING SYSTEM), ANY SUCH DISCHARGE SHALL BE IMMEDIATELY CLEANED AND ADDRESSED IN ACCORDANCE WITH THE APPROVED PROJECT SWPPP.
11. INSPECTIONS SHALL BE IN ACCORDANCE WITH THE APPROVED PERMITS.

DRAINAGE LEGEND

ALL-WEATHER TRACK	1 / TR-3
PERFORATED HDPE STORM DRAIN	3 / TR-4
SOLID PVC SD LINE	
ACO 3000 TRENCH DRAIN	1 / TR-4
SAND PIT DRAIN	4 / TR-4

IDENTIFICATION STAMP
DIV. OF THE STATE ARCHITECT
APP: 02-121275 INC:
REVIEWED FOR
SS ☑ FLS ☑ ACS ☑
DATE: 12/15/2023

CALIFORNIA DESIGN WEST ARCHITECTS, Inc.
2100 19th Street
Sacramento, CA 95818

These plans and prints thereof, as instruments of service, are owned by the architect and are for the use on this project only. Reproduction and/or distribution without the prior written consent of the architect is forbidden.

Copyright California Design West Architects, Inc.

ARCHITECT:

LICENSED ARCHITECT — KELLI A. McALLISTER — REN. 02-28-25 — STATE OF CALIFORNIA

CONSULTANT:

PROJECT NAME:

BUHACH COLONY HIGH SCHOOL

1800 NORTH BUHACH RD
ATWATER, CA 95301

NEW STADIUM; FOOTBALL FIELD, ALL-WEATHER TRACK, BLEACHERS, CONCESSIONS BUILDINGS

MERCED UNION HIGH SCHOOL DISTRICT

MERCED COUNTY

KEY PLAN:

SHEET TITLE:

TRACK GRADING AND DRAINAGE PLAN

JOB NUMBER:	SHEET NUMBER:
DATE: Oct 10 2023	**TR-1**
REVISION:	

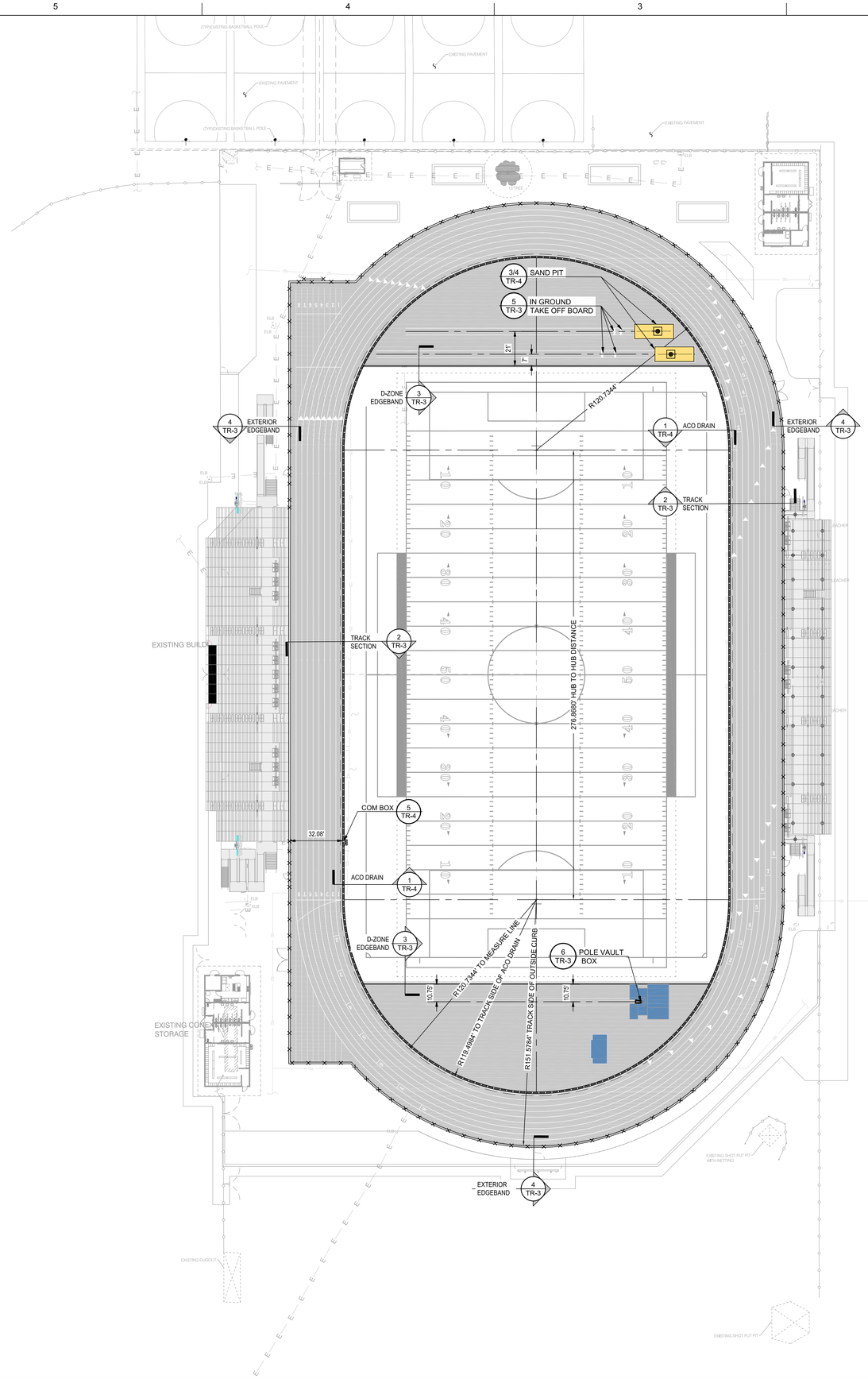

DRAINAGE NOTES

1. REMOVE ALL VEGETATION, ORGANIC MATERIAL, BUILDING MATERIAL, DEMOLITION DEBRIS, AND ALL OTHER DELETERIOUS SUBSTANCES FROM THE AREA OF THE FILL. REMOVE ALL DEBRIS FROM THE SITE AND LEGALLY DISPOSE OFFSITE.
2. PRIOR TO PLACEMENT OF BASE ROCK, CONTRACTOR SHALL, THOROUGHLY MOISTURE CONDITION AND COMPACT THE SUBGRADE TO 95% D1557 PER GEOTECH REPORT.
3. CONTRACTOR SHALL PROOF ROLL SUBGRADE WITH 20 TO 30 TON LOADED TRUCK TO LOCATE SOFT, WEAK OR EXCESSIVELY WET AREAS.
4. IF UNSTABLE MATERIAL IS OBSERVED DURING THE EVALUATION AND PROOF-ROLLING OPERATIONS , CONTRACTOR SHALL STABILIZE BY SCARIFYING, DRYING AND RE-DENSIYING MATERIAL.
5. THE EXISTING GRADES AND STRUCTURE INFORMATION ARE BASED ON INFORMATION PROVIDED BY SURVEYOR. THE CONTRACTOR SHALL VERIFY EXISTING GRADES AND STRUCTURE INFORMATION FOR ACCURACY PRIOR TO THE START OF GRADING, NOTIFY THE OWNERS REPRESENTATIVE IMMEDIATELY SHOULD CONFLICTS ARISE AND REDIRECT WORK TO AVOID DELAY.
6. THE CONTRACTOR SHALL VERIFY THE LOCATIONS OF ALL EXISTING UTILITIES, STRUCTURES AND SERVICES BEFORE COMMENCING THE WORK. THE LOCATIONS OF UTILITIES, STRUCTURES AND SERVICES SHOWN IN THE CONTRACT DOCUMENTS SHALL BE DEEMED TO BE APPROXIMATE ONLY. ALL DISCREPANCIES BETWEEN WHAT IS SHOWN AND THE ACTUAL FIELD CONDITIONS SHALL BE REPORTED TO THE OWNERS REPRESENTATIVE. CONTRACTOR SHALL RECORD ALL UTILITY MARKINGS ON A SEPARATE SET OF DRAWINGS. THIS SET OF EXISTING UTILITY DRAWINGS SHALL BE KEPT ON-SITE FOR REFERENCE FOR THE DURATION OF CONTRACT.
7. PROPOSED GRADES SHALL MEET EXISTING GRADES WITH A SMOOTH AND CONTINUOUS TRANSITION SO AS TO AVOID TRAPPING WATER. CONTRACTOR SHALL NOTIFY OWNERS REPRESENTATIVE IF PUDDLING IS SUSPECTED AND REDIRECT WORK SO AS TO AVOID DELAY WHILE AWAITING RESPONSE.
8. COORDINATE ALL SLEEVING AND UTILITY LOCATIONS AS SHOWN ON THE PLANS AND DETAILS CONTAINED WITHIN THESE CONTRACT DOCUMENTS.
9. PRIOR TO BEGINNING WORK, ALL CROSSINGS BETWEEN NEW AND EXISTING DRAINAGE AND UTILITY (INCLUDING ELECTRICAL, DATA, AND COMMUNICATION) LINE SHALL BE POTHOLED AND VERIFIED THAT NO CONFLICT WILL OCCUR. IF A CONFLICT ARISES, CONTRACTOR SHALL IMMEDIATELY INFORM THE OWNERS REPRESENTATIVE AND REDIRECT WORK IN ORDER TO AVOID DELAY.
10. CONTRACTOR SHALL TAKE CARE NOT TO DISCHARGE ANY POLLUTANTS (CHEMICALS, SEDIMITATION, CONCRETE, ET, INTO THE EXISTING SYSTEM), ANY SUCH DISCHARGE SHALL BE IMMEDIATELY CLEANED AND ADDRESSED IN ACCORDANCE WITH THE APPROVED PROJECT SWPPP.
11. INSPECTIONS SHALL BE IN ACCORDANCE WITH THE APPROVED PERMITS.

MATERIALS LEGEND

ALL-WEATHER TRACK	1 TR-3
LONG JUMP PIT SAND	2 TR-4
ACO DRAIN	1 TR-4
NEW CHAIN LINK FENCE AND CONCRETE EDGEBAND	4 TR-3
EXISTING ELECTRICAL CONDUIT	

IDENTIFICATION STAMP
DIV. OF THE STATE ARCHITECT
APP: 02-121275 INC:
REVIEWED FOR
SS ☑ FLS ☑ ACS ☑
DATE: 12/15/2023

CALIFORNIA DESIGN WEST ARCHITECTS, Inc.
2100 19th Street
Sacramento, CA 95818

These plans and prints thereof, as instruments of service, are owned by the architect and are for the use on this project only. Reproduction and/or distribution without the prior written consent of the architect is forbidden.

Copyright California Design West Architects, Inc.

ARCHITECT:

LICENSED ARCHITECT
KELLY A. MCALLISTER
REN. 02-28-25
STATE OF CALIFORNIA

CONSULTANT:

PROJECT NAME:

BUHACH COLONY HIGH SCHOOL

1800 NORTH BUHACH RD
ATWATER, CA 95301

NEW STADIUM; FOOTBALL FIELD, ALL-WEATHER TRACK, BLEACHERS, CONCESSIONS BUILDINGS

MERCED UNION HIGH SCHOOL DISTRICT

MERCED COUNTY

KEY PLAN:

SHEET TITLE:
TRACK MATERIAL PLAN

JOB NUMBER:	SHEET NUMBER:
DATE: Oct 10 2023	**TR-2**
REVISION:	

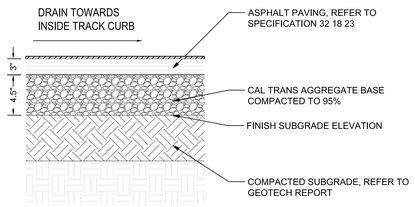

NOTE:
ASPHALT TO BE INSTALLED PER ASBA GUIDELINES
https://sportsbuilders.org/page/asphalt_guidelines

Provide Virgin Asphalt Surface Course Mix Design with:
1. Maximum particle size of ½" or less
2. Non RAP preferred, up to 15% possible by approval from design team
3. No aggregates that rust or disintegrate (iron pyrite, steel slag, or impurities)
4. Minimum of 45% sand portion (minus No. 8 sieve) in surface course mixture
5. Target laboratory air voids = 3.5%
6. Ambient Temperature should be 50-degrees and rising prior to placing.
7. Eliminate cold joints
8. Specified minimum in-place density of mat and joints = 94.0
   a. Maximum Air void content of 6%
9. Smoothness shall meet the requirements of no greater than ¼ " in 10 ft. for surface course

1 NEW ASPHALT/ ALL-WEATHER TRACK SECTION
NTS

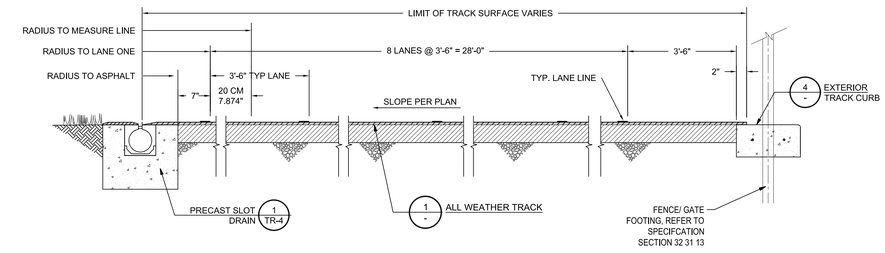

NOTE: INTERIOR AND EXTERIOR OF TRACK TO HAVE 1M SAFETY ZONE WITH NO VERTICAL IMPEDIMENTS

2 SECTION THROUGH TRACK
1"=1'-0"

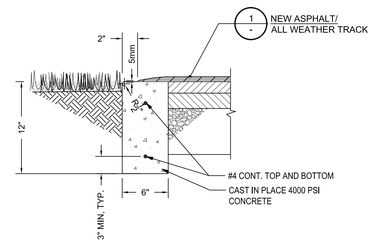

3 D-ZONE CURB
NTS

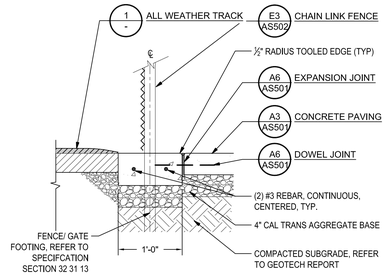

NOTES:
1. INSTALL SCORE JOINTS AT ALL CORNERS, BEGINNINGS AND ENDINGS OF RADII.
2. INSTALL SCORE JOINTS AT ALL FENCE POSTS.
3. INSTALL SCORE JOINTS AT 8' O.C. MAX.
4. CONCRETE EDGEBAND TO HAVE MEDIUM BROOM FINISH ON ALL EXPOSED SURFACES.

4 EXTERIOR TRACK CURB
NTS

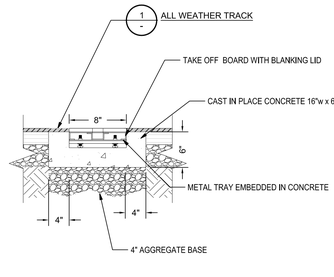

NOTES:
1. ALL DRAWINGS DEPICTING IN-GROUND EQUIPMENT ARE FOR BIDDING ONLY. PRODUCT SHOWN IS SPORTSFIELD SPECIALTIES LTJTOB8BL. REFER TO CONCRETE SPECIFICATION 32 13 13 AND SHOP DRAWINGS FOR INSTALLATION DIMENSIONS AND INSTRUCTIONS.
2. LONG JUMP PIT TO RECEIVE BOARDS AT 8'& 12'. TRIPLE JUMP TO RECEIVE BOARDS AT 24' & 32'.

5 8" TAKE OFF BOARD
NTS

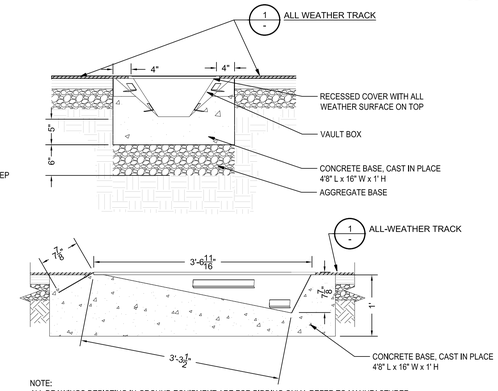

NOTE:
ALL DRAWINGS DEPICTING IN-GROUND EQUIPMENT ARE FOR BIDDING ONLY. REFER TO MANUFACTURER SHOP DRAWINGS FOR INSTALLATION DIMENSIONS AND INSTRUCTIONS

6 VAULT BOX PLAN AND SECTION
1" =1'-0"

IDENTIFICATION STAMP
DIV. OF THE STATE ARCHITECT
APP: 02-121275 INC:
REVIEWED FOR
SS ☑ FLS ☑ ACS ☑
DATE: 12/15/2023

CALIFORNIA DESIGN
WEST ARCHITECTS, Inc.

2100 19th Street
Sacramento, CA 95818

These plans and prints thereof, as instruments of service, are owned by the architect and are for the use on this project only. Reproduction and/or distribution without the prior written consent of the architect is forbidden.

Copyright California Design West Architects, Inc.

ARCHITECT:

LICENSED ARCHITECT
ESTELLA A. MCALLISTER
REN. 02-28-25
STATE OF CALIFORNIA

CONSULTANT:

PROJECT NAME:

BUHACH COLONY HIGH SCHOOL

1800 NORTH BUHACH RD
ATWATER, CA 95301

NEW STADIUM; FOOTBALL FIELD, ALL-WEATHER TRACK, BLEACHERS, CONCESSIONS BUILDINGS

MERCED UNION HIGH SCHOOL DISTRICT

MERCED COUNTY

KEY PLAN:

SHEET TITLE:
TRACK DETAIL SHEET

JOB NUMBER:

SHEET NUMBER:
TR-3

DATE:
Oct 10 2023

REVISION:

IDENTIFICATION STAMP
DIV. OF THE STATE ARCHITECT
APP: 02-121275 INC:
REVIEWED FOR
SS ☑ FLS ☑ ACS ☑
DATE: 12/15/2023

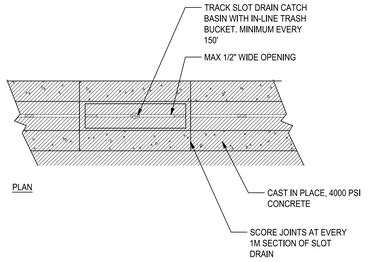

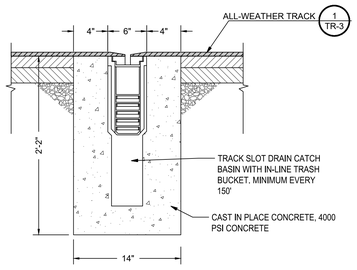

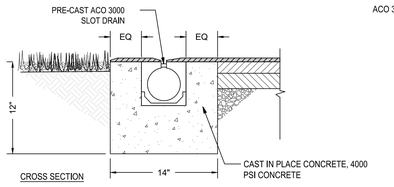

NOTES:
1. CONTRACTOR TO CONSTRUCT TOOLED ½" SCORE JOINT AT EACH DRAIN SECTION.
2. ALL CONCRETE TO RECEIVE ALL WEATHER TRACK SURFACING TO HAVE ROUGH BROOM FINISH.

ACO ADJACENT TO TURF FIELD

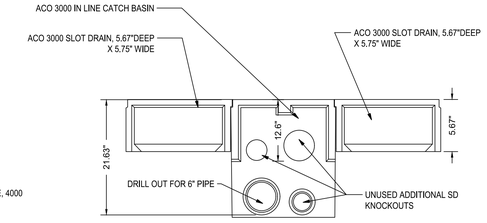

SIDE VIEW OF CATCH BASIN

1 PRECAST TRENCH DRAIN
NTS

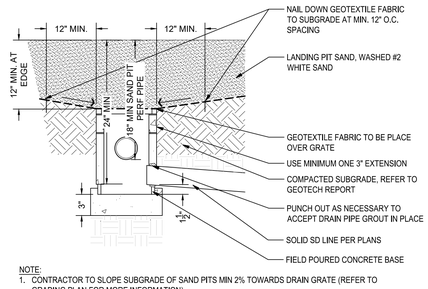

NOTE:
1. CONTRACTOR TO SLOPE SUBGRADE OF SAND PITS MIN 2% TOWARDS DRAIN GRATE (REFER TO GRADING PLAN FOR MORE INFORMATION).

4 SAND PIT DRAIN
NTS

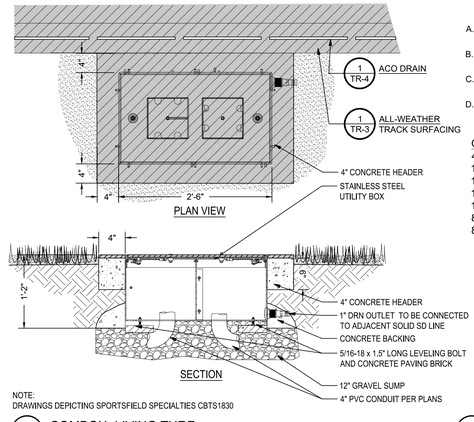

NOTE:
DRAWINGS DEPICTING SPORTSFIELD SPECIALTIES CBTS1830

5 COMBOX- LIVING TURF
NTS

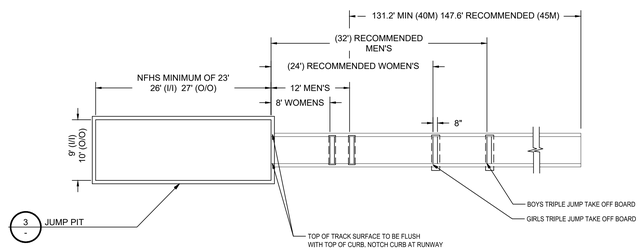

NOTES
1. DIMENSIONS TO TAKE-OFF BOARD AND LINES ARE MEASURED FROM FRONT FACE OF LANDING PIT EDGE.

2 NFHS LONG/TRIPLE JUMP RUNWAY
NTS

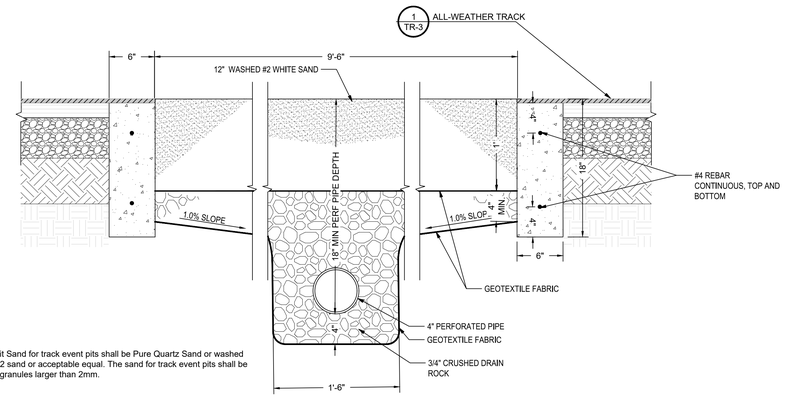

NOTE:
Landing Pit Sand for track event pits shall be Pure Quartz Sand or washed Olympia #2 sand or acceptable equal. The sand for track event pits shall be white. No granules larger than 2mm.

3 JUMP PIT
NTS

A. The contractor is responsible for coordination of the delivery, acceptance, handling and storage of all site furnishings.
B. Store and handle site furnishings as acceptable to the Owner's representative and so that work or access of others is not impeded.
C. The contractor shall protect all site furnishings from theft or damage at all times until such items have been accepted by the owner.
D. All materials, hardware and furnishings shall be new, first class condition.

QTY	SITE FURNISHING	MODEL #	MANUFACTURER
4	8" LONG JUMP/ TRIPLE JUMP TAKE OFF BOARDS	LTJT0B8BL	SPORTSFIELD SPECIALTIES
1	STAINLESS STEEL POLE VAULT BOX	PVBSS	SPORTSFIELD SPECIALTIES
1	STAINLESS STEEL POLE VAULT BOX COVER PLUG	PVBCVRSS	SPORTSFIELD SPECIALTIES
1	STAINLESS STEEL COMBOX	CBTS1830	SPORTSFIELD SPECIALTIES
1304 LF	ACO 3000 SLOT DRAIN SYSTEM	2000	
8	ACO SPORT CATCH BASIN	05620/00788	ACO
8	PLASTIC TRASH BASKET	01498	ACO

A SITE FURNISHINGS
NTS

CALIFORNIA DESIGN WEST ARCHITECTS, Inc.
2100 19th Street
Sacramento, CA 95818

These plans and prints thereof, as instruments of service, are owned by the architect and are for the use on this project only. Reproduction and/or distribution without the prior written consent of the architect is forbidden.
Copyright California Design West Architects, Inc.

ARCHITECT:

LICENSED ARCHITECT ESTELLA A. MCALLISTER REN. 02-28-25 STATE OF CALIFORNIA

CONSULTANT:

PROJECT NAME:

BUHACH COLONY HIGH SCHOOL

1800 NORTH BUHACH RD
ATWATER, CA 95301

NEW STADIUM; FOOTBALL FIELD, ALL-WEATHER TRACK, BLEACHERS, CONCESSIONS BUILDINGS

MERCED UNION HIGH SCHOOL DISTRICT

MERCED COUNTY

KEY PLAN:

SHEET TITLE:
TRACK DETAIL SHEET

JOB NUMBER:
SHEET NUMBER:
TR-4
DATE: Oct 10 2023
REVISION:

MERCED UNION HS DISTRICT
BUHACH COLONY HIGH SCHOOL
ATWATER, CALIFORNIA

SHEET TITLE	SHEET NUMBER
COVER PAGE	B1
GENERAL NOTES	B2
HOME	
FOOTING LAYOUT - HOME	B3
ENLARGED EXIT FOOTING LAYOUTS - HOME	B4
PIER DETAILS - HOME	B5
PIER DETAILS - HOME	B5.1
UNDERSTRUCTURE LAYOUT - HOME	B6
ENLARGED EXIT UNDERSTRUCTURE LAYOUTS - HOME	B7
ELEVATION VIEWS - HOME	B8
SECTION VIEW - HOME	B9
SECTION VIEWS - HOME	B10
SECTION VIEWS - HOME	B11
SECTION VIEWS - HOME	B12
SIGHT LINES - HOME	B13
SEATING LAYOUT - HOME	B14
ENLARGED EXIT LAYOUT - HOME	B15
EXITS - HOME	B16
EXITS - HOME	B17
SEAT BRACKET LAYOUT - HOME	B18
PRESS BOX LAYOUT - HOME	B19
PRESS BOX FRAMING PLAN - HOME	B20
PRESS BOX ROOF HATCH - HOME	B21
PRESS BOX DETAILS - HOME	B22
PRESS BOX DETAILS - HOME	B23
PRESS BOX CEILING DETAILS - HOME	B24
APPENEDIX "A" MATERIAL SPECS	B25

SHEET TITLE	SHEET NUMBER
VISITOR	
FOOTING LAYOUT - VISITOR	B26
ENLARGED EXIT FOOTING LAYOUTS - VISITOR	B27
PIER DETAILS - VISITOR	B28
UNDERSTRUCTURE - VISITOR	B29
ENLARGED EXIT UNDERSTRUCTURE LAYOUTS - VISITOR	B30
ELEVATION VIEWS -VISITOR	B31
SECTION VIEWS - VISITOR	B32
SIGHT LINES - VISITOR	B33
SEATING LAYOUT - VISITOR	B34
ENLARGED EXIT LAYOUTS - VISITOR	B35
EXITS - VISITOR	B36
SEAT BRACKET LAYOUT - VISITOR	B37
HOME & VISITOR	
PLANK DETAILS	B38
EXIT DETAILS	B39
EXIT DETAILS	B40
GRANDSTAND DETAILS	B41
GRANDSTAND DETAILS	B42

HOME

GENERAL INFORMATION	
RISE:	12"
TREAD:	26"
ROWS:	16/19
LENGTH:	201'-6"
SEAT COUNT:	2029

VISITOR

GENERAL INFORMATION	
RISE:	12"
TREAD:	26"
ROWS:	9
LENGTH:	193'-6"
SEAT COUNT:	978

REGISTERED PROFESSIONAL ENGINEER BRIAN T. DEAN S 6087 STRUCTURAL STATE OF CALIFORNIA
Signed 11/13/23 PRINCIPAL

AWS CWF CERTIFIED WELDING FABRICATOR® AISC CERTIFIED FABRICATOR

Southern® BLEACHER COMPANY
GRANDSTANDS ▪ BLEACHERS ▪ STADIUMS

PO Box One, Graham, Texas 76450
801 Fifth Street.
Phone: 940/549-0733 Fax: 940/549-1365

Established 1946

DATE: 05/08/2023
JOB #23023R2
MERCED UNION HS DISTRICT
BUHACH COLONY HIGH SCHOOL
ATWATER, CALIFORNIA

SHEET B1 OF B42

#23023R2 - ATWATER, CALIFORNIA

IDENTIFICATION STAMP
DIV. OF THE STATE ARCHITECT
APP: 02-121275 INC:
REVIEWED FOR
SS ☑ FLS ☑ ACS ☑
DATE: 12/15/2023

DESIGN California WEST

CALIFORNIA DESIGN
WEST ARCHITECTS, Inc.

2100 19th Street
Sacramento, CA 95818

Phone: (916) 446-2466
Fax: (916) 446-5118
Web Page: ca-dw.com

These plans and prints thereof, as instruments of service, are owned by the architect and are for the use on this project only. Reproduction and/or distribution without the prior written consent of the architect is forbidden.

Copyright California Design West Architects, Inc.

ARCHITECT: CONSULTANT:

LICENSED ARCHITECT NO. C 17258 WILLIAM A. MCALISTER STATE OF CALIFORNIA

CONSULTANT:

PROJECT NAME:
BUHACH COLONY HIGH SCHOOL

1800 NORTH BUHACH RD
ATWATER, CA 95301

CONCESSIONS/TOILET BUILDINGS, TICKET BOOTH & STADIUM UPGRADES

MERCED UNION HIGH SCHOOL DISTRICT

MERCED COUNTY

KEY PLAN:

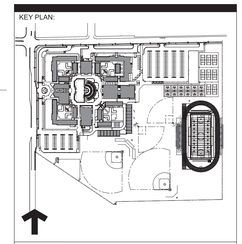

SHEET TITLE:
COVER PAGE

JOB NUMBER:
DATE: OCT 9, 2023
REVISION:
SHEET NUMBER: **B1**

IDENTIFICATION STAMP
DIV. OF THE STATE ARCHITECT
APP: 02-121275 INC:
REVIEWED FOR
SS ☑ FLS ☑ ACS ☑
DATE: 12/15/2023

GENERAL REQUIREMENTS:

1. CONFLICTS: NOTES AND DETAILS ON THE DRAWINGS TAKE PRECEDENCE OVER THE GENERAL NOTES AND TYPICAL DETAILS IN CASE OF CONFLICT.
2. CODES: ALL MATERIALS AND WORK SHALL CONFORM TO THE REQUIREMENTS OF THE CALIFORNIA CODE OF REGULATIONS, TITLE 24, PART 2, 2019 CALIFORNIA BUILDING CODE (CBC) & ICC 300.
3. SIMILAR WORK: WHERE CONSTRUCTION DETAILS ARE NOT SHOWN OR NOTED FOR ANY PART OF THE WORK, SUCH DETAILS SHALL BE THE SAME AS FOR SIMILAR WORK SHOWN ON THE DRAWINGS.
4. EXCAVATIONS: OWNER TO LOCATE AND PROTECT UNDERGROUND OR CONCEALED CONDUIT, PLUMBING OR OTHER UTILITIES WHERE NEW WORK IS BEING PERFORMED.

DESIGN CRITERIA

1. DEAD LOADS:
   - BLEACHERS (INCLUDES GIRDERS).......................... 10 PSF
2. LIVE LOADS:
   - LIVE LOAD.. 100 PSF
   - SEATS.. 120 PLF
   - FOOTBOARDS... 100 PSF
   - SWAY (PERPENDICULAR)....................................... 10 PLF
   - SWAY (PARALLEL)... 24 PLF
   - GUARDRAILS AND HANDRAILS*............................ 50 PLF
     - * OR A 200 POUND CONCENTRATED LOAD APPLIED TO RAIL AT ANY POINT IN ANY DIRECTION.

   PRESS BOX:
   - DEAD LOADS
     - FLOOR.. 15 PSF
     - ROOF.. 15 PSF
   - LIVE LOADS
     - FLOOR/ROOF....................................... 100 PSF
3. LATERAL LOADS:

A) SEISMIC - SHORT PERIOD
- SPECTRAL RESPONSE.. S_s = 0.581 g
- ONE - SECOND PERIOD
- SPECTRAL RESPONSE.. S_1 = 0.240 g
- SITE CLASSIFICATION.. D
- SITE COEFFICIENT.. F_a = 1.335
- SITE COEFFICIENT.. F_v = 2.500
- ADJUSTED SPECTRAL RESPONSE........................ S_{MS} = 0.926 g
- ADJUSTED SPECTRAL RESPONSE........................ S_{M1} = 0.728 g
- DESIGN SPECTRAL RESPONSE............................. S_{DS} = 0.618 g (2/3 Sms)
- DESIGN SPECTRAL RESPONSE............................. S_{D1} = 0.485 g (2/3 Sm1)
- RISK CATEGORY: III
- I = 1.25
- SEISMIC DESIGN CATEGORY............................... D

LATERAL SYSTEMS:

BOTH DIRECTIONS: CH. 15 ALL OTHER SELF-SUPPORTING STRUCTURES
- R = 1.25
- Rho = 1
- Cs = 0.618 (1.0E longitudinal)
- V = pCsW = 0.618W (1.0E strength)

A) WIND:
1. ULTIMATE DESIGN WIND SPEED, V_{ult} = 100mph
2. RISK CATEGORY = III
3. WIND EXPOSURE = C
4. APPLICABLE INTERNAL PRESSURE COEFFICIENT (GCpi)=0.55

FOUNDATION:

1. GEOTECHNICAL INVESTIGATION: TECHNICON ENGINEERING SERVICES, INC.
   DATED: 02/09/23
   REPORT DATA: PROJECT NO.: 220875.001
2. SOIL PRESSURES:
   - SOIL BEARING.. 2500 psf
   - COEFFICIENT OF FRICTION................................. 0.5
   - PASSIVE PRESSURE.. 455 pcf
3. SOIL REMOVAL AND RECOMPACTION: PER GEOTECHNICAL INVESTIGATION AND THE CONTRACT DOCUMENTS. SOILS WORK SHALL BE OBSERVED AND TESTED BY THE GEOTECHNICAL ENGINEER.
4. GEOTECHNICAL ENGINEER: SHALL OBSERVE FOOTINGS BEFORE PLACEMENT OF REINFORCING OR CONCRETE. FOOTING OBSERVATION AND COMPACTION REPORTS SHALL BE SENT TO THE ARCHITECT AND DSA.
5. SOIL PREPARATION: AS INDICATED IN THE GEOTECHNICAL INVESTIGATION REPORT AND AS SPECIFIED IN THE PROJECT SPECIFICATIONS. COORDINATE WITH GEOTECHNICAL ENGINEERS.
6. MANDATORY MINIMUM FORMWORK (unless fully formed).

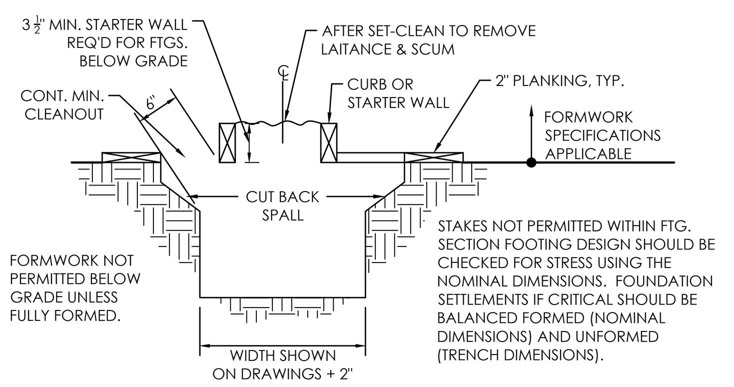

A. FOUNDATION CONCRETE MAY BE PLACED DIRECTLY INTO NEAT EXCAVATIONS PROVIDED THE FOUNDATION TRENCH WALLS ARE STABLE AS DETERMINED BY THE ARCHITECT (STRUCTURAL ENGINEER) SUBJECT TO THE APPROVAL OF THE DIVISION OF THE STATE ARCHITECT. IN SUCH CASE THE MINIMUM FORMWORK SHOWN ON THE DRAWINGS IS MANDATORY TO INSURE CLEAN EXCAVATIONS IMMEDIATELY PRIOR TO AND DURING THE PLACING OF CONCRETE.

7. FOUNDATIONS GEOTECHNICAL / GRADING REQUIREMENTS:

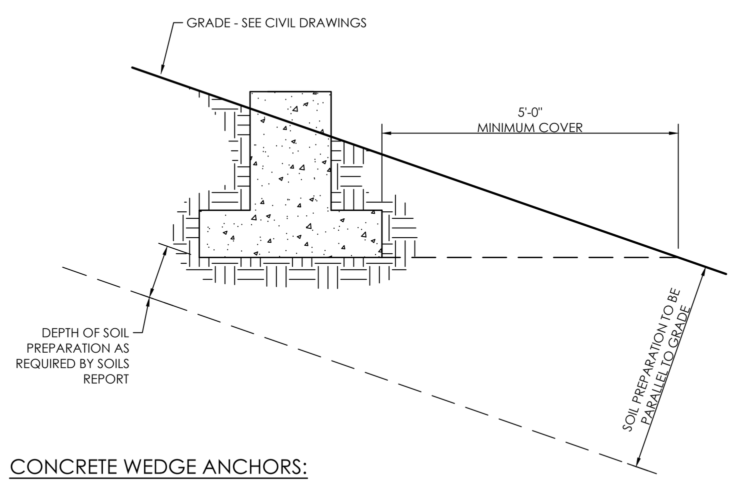

CONCRETE WEDGE ANCHORS:

1. ANCHOR DIAMETER REFERS TO THE THREAD SIZE FOR THE WEDGE ANCHOR.
2. APPLY PROOF TEST LOADS TO WEDGE ANCHORS WITHOUT REMOVING THE NUT IF POSSIBLE. IF NOT, REMOVE NUT & INSTALL A THREADED COUPLER TO THE SAME TIGHTNESS OF THE ORIGINAL NUT USING A TORQUE WRENCH & APPLY LOAD.
3. REACTION LOADS FROM TEST FIXTURES MAY BE APPLIED CLOSE TO THE ANCHOR BEING TESTED, PROVIDED THE ANCHOR IS NOT RESTRAINED FROM WITHDRAWING BY THE FIXTURE(S).
4. TEST EQUIPMENT IS TO BE CALIBRATED BY AN APPROVED TESTING LABORATORY IN ACCORDANCE WITH STANDARD RECOGNIZED PROCEDURES.
5. THE FOLLOWING CRITERIA APPLY FOR THE ACCEPTANCE OF INSTALLED ANCHORS:

   HYDRAULIC RAM METHOD:
   THE ANCHOR SHOULD HAVE NO OBSERVABLE MOVEMENT AT THE APPLICABLE TEST LOAD. FOR WEDGE ANCHORS, A PRACTICAL WAY TO DETERMINE OBSERVABLE MOVEMENT IS THAT THE WASHER UNDER THE NUT BECOMES LOOSE.

   TORQUE WRENCH METHOD:
   WEDGE TYPE:
   THE APPLICABLE TEST TORQUE MUST BE REACHED WITHIN THE FOLLOWING LIMITS:

   ONE-HALF (1/2) TURN OF THE NUT:
   ONE-QUARTER (1/4) TURN OF THE NUT FOR
   THE 3/8 IN. SLEEVE ANCHOR ONLY.
6. TESTING SHOULD OCCUR 24 HOURS MINIMUM AFTER INSTALLATION OF THE SUBJECT ANCHORS.
7. TESTING VALUES:

HILTI SS KB TZ2 ICC-ESR-4266 HARD ROCK TEST VALUES CONCRETE			
ANCHOR DIA. (IN.)	MINIMUM EMBEDMENT (NOMINAL)	TENSION TEST LOAD (LBS.)	TORQUE (FT.-LBS.)
3/8	3"	2,990	30
1/2	3 3/4"	4,433	40
5/8	4 1/2"	6,053	60
3/4	5 1/2"	7,831	125
1	6-3/8"	9660	185

CONCRETE NOTES:

1. MAXIMUM SIZE AGGREGATE SHALL BE AS FOLLOWS:
   1 1/2"Ø
   AGGREGATE FOR CONCRETE SHALL CONFORM TO ASTM C33.
   GRADING OF AGGREGATE SHALL CONFORM TO TITLE 24, PART 2 CHAPTER 19-A. CBC.
2. MINIMUM COMPRESSIVE STRENGTH OF CONCRETE AT 28 DAYS SHALL BE 3,000 PSI. SLUMP = 5" MAX. W/C RATIO IS 0.50 MAX.
3. ALL REINFORCING SHALL BE ASTM A615 GRADE 40 FOR #3, GRADE 60 FOR #4 AND LARGER.
4. ALL DIMENSIONS SHOWN FOR LOCATION OF REINFORCING STEEL ARE TO FACE OF BAR AND DENOTE CLEAR COVERAGE. UNLESS SPECIFICALLY NOTED, CONCRETE COVERAGE SHALL BE AS FOLLOWS:
   - 3" FOR CONCRETE DEPOSITED DIRECTLY AGAINST GROUND (EXCEPT SLABS)
   - 2" FOR CONCRETE EXPOSED TO GROUND OR WEATHER BUT PLACED IN FORMS.
   - PLACE REINF. AT MID-THICKNESS FOR SLABS ON GROUND.
5. CONCRETE SHALL NOT BE DROPPED THROUGH REINF. STEEL (AS IN WALL) SO TO CAUSE SEGREGATION OF AGGREGATES. IN SUCH CASES, HOPPERS AND VERTICAL CHUTES OR TRUNKS SHALL BE USED. CHUTES OR TRUNKS SHALL BE OF VARIABLE LENGTHS SO THAT FREE UNCONFINED FALL OF CONCRETE SHALL NOT EXCEED FIVE (5) FEET AND SUFFICIENT NUMBER SHALL BE USED TO INSURE THE CONCRETE BEING LEVEL AT ALL TIMES.
6. HORIZONTAL CONSTRUCTION JOINTS SHALL HAVE ENTIRE SURFACE REMOVED TO EXPOSED CLEAN AGGREGATE SOLIDLY EMBEDDED.
7. ALL STEEL COLUMN BASE PLATES AND STEEL BEAMS BEARING ON CONCRETE SHALL BEAR UPON 1" DRYPACK AND LEVELING NUTS EXCEPT AS NOTED OTHERWISE.
8. WHERE STEEL MEMBERS BEAR IN CONCRETE, GAPS BETWEEN BASE PLATE AND CONCRETE SHOULD BE DRY-PACKED WITH GROUT AFTER STEEL IS IN PLACE. GROUT SHALL BE PER CONCRETE CONTRACTOR AND SHALL BE 7 KSI MINIMUM.
9. PROVIDE MINIMUM LAP SPLICES FOR CONTINUOUS REINFORCEMENT PER THE SCHEDULE PROVIDED BELOW. PROVIDE MINIMUM DEVELOPMENT FOR HOOKED BARS PER THE SCHEDULE BELOW.

TYPICAL LAP SPLICES AND DEVELOPMENT U.N.O. PER PLAN *3000 psi Conc., 60 ksi Rebar, 2" Clr. Min.*		
Bar Size	Hook Dev. Length (Ldh)	Lap Splice
#3	6"	17"
#4	8"	23"
#5	10"	28"
#6	12"	34"
#7	14"	49"

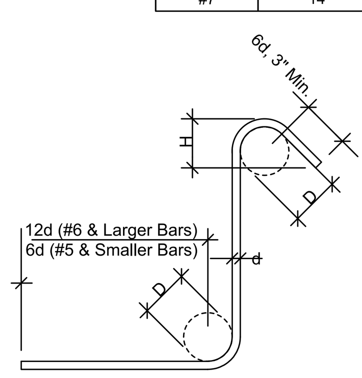

STANDARD TIES & STIRRUPS

Bar Size	D	H
#3	1 1/2"	2 1/2"
#4	2"	3"
#5	2 1/2"	3 3/4"
#6	4 1/2"	4 1/2"
#7	5 1/4"	5 1/4"
#8	6"	6"

NOTE: *All bar bend diameters and end lengths must conform to the CRSI Manual of Standard Practice.*

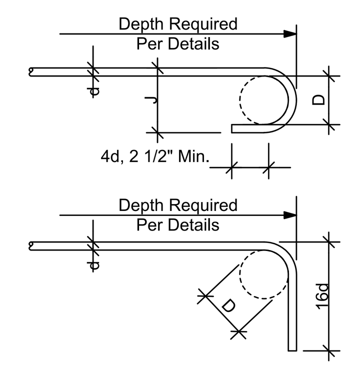

STANDARD END HOOKS

Bar Size	D	J
#3	2 1/4"	3"
#4	3"	4"
#5	3 3/4"	5"
#6	4 1/2"	6"
#7	5 1/4"	7"
#8	6"	8"
#9	9 1/2"	11 3/4"
#10	10 3/4"	13 1/4"

CONCRETE - EPOXY ANCHORED THREADED RODS:

1. MATERIALS: (ICC ESR 3187)
   HILTI HIT-HY200 EPOXY ADHESIVE
   - CONCRETE (MIN)......................... F'c = 3,000 PSI STONE AGGREGATE
   - THREADED RODS......................... ASTM F1554 Gr. 55 (Fy= 55ksi MIN.) , HDG
   - NUTS.. ASTM A-563 HEX, GRADE A, HDG
2. INSTALLATION:

A. CARBIDE-TIPPED DRILL BITS ANSI B212.15-1994.

B. HOLES DRILLED WITH HOLLOW BIT, NO CLEANING OR BRUSHING REQUIRED.

C. INSTALLATION AND ALLOWABLE LOADING:

HILTI HIT-HY200 HARD ROCK TEST VALUES CONCRETE				
ROD DIAM. (IN.)	BIT DIAM. (IN.)	MIN. EMBED. (IN.)	MIN EDGE DIST. (IN.)	TENSION TEST LOAD (LBS.)
3/8	7/16	3-3/8	5-1/4	2,213
1/2	9/16	4-1/2	6-3/8	4,276
5/8	3/4	4-1/2	7-1/2	5,123

3. CAPACITY LOADS ARE STRENGTH DESIGN LOADS.
4. DO NOT INSTALL IN CONCRETE THAT IS LESS THAN 7 DAYS OLD.
5. MINIMUM MEMBER THICKNESS TO RECEIVE ROD SHALL BE NO LESS THAN 1.5 TIMES THE ANCHOR EMBEDMENT DEPTH.
6. ANCHORS SHALL BE INSTALLED IN HAMMER DRILLED HOLES

STRUCTURAL STEEL:

1. CODES: AISC SPECIFICATION FOR STRUCTURAL STEEL FOR BUILDINGS; MANUAL OF STEEL CONSTRUCTION (15TH EDITION); STRUCTURAL WELDING CODE AWS D1.1 AND AWS D1.4. PIPES SHALL BE IDENTIFIED WITH MILL IDENTIFICATION IN ACCORDANCE WITH ASTM A-53 AND TUBE SHAPES IN ACCORDANCE WITH ASTM A-500.
2. IDENTIFICATION: ROLLED STRUCTURAL STEEL SHAPES SHALL BE IDENTIFIED WITH MILL IDENTIFICATION MARKS IN CONFORMANCE WITH ASTM A6.
3. MATERIALS:
   STRUCTURAL SHAPES
   - WIDE FLANGE.................................. ASTM A992/A572, Fy = Gr. 50 (Fy = 50 ksi Min.), UNO
   - CHANNELS AND ANGLES.............. ASTM A529, Fy = Gr. 50 (Fy = 50 ksi Min.), UNO
   - SWAYRODS..................................... ASTM A529, Fy = Gr. 50 (Fy = 50 ksi Min.), UNO
   - HSS SHAPES (TUBE COLUMNS).......... ASTM A-500 GRADE B - 46 KSI
   - PLATES 1/2" THICK OR LESS................. ASTM A36 Gr. 36 (Fy = 36 ksi Min.), UNO
   - PLATES GREATER THAN 1/2" THICK.... ASTM A572 Gr. 50 (Fy = 50 ksi Min.), UNO
   - BOLTS... ASTM A-307, A325N TYPICAL U.N.O (HOT DIP GALVANIZED)
   - NUTS... HEAVY HEX (HOT DIP GALVANIZED)
   - NON-SHRINK GROUT...................... ASTM C-1107 5,000 PSI (NON-METALLIC)
   - ANCHOR BOLTS.............................. ASTM F1554 Gr. 55 (Fy=55 ksi Min.) (HOT DIP GALVANIZED)
4. WELDING: ALL WELDING SHALL BE IN CONFORMANCE WITH AWS D1.1. WELDS ARE ALL AROUND WITH TYPE ER70S-6 WIRE MIG U.N.O.
5. ALL STEEL SHALL BE HOT DIP GALVANIZED TO CURRENT A.S.T.M. A-123.
6. ALL FIELD CONNECTIONS ARE NON-SLIP CRITICAL U.N.O. ALL CONNECTIONS ARE DESIGNED TO UTILIZE A307 BOLTS. IT IS ACCEPTABLE TO USE A325N BOLTS IN LIEU OF THE A307 BOLTS WITHOUT NEEDING THE TESTS AND SPECIAL INSPECTIONS FOR HIGH STRENGTH BOLTS. THE INSTALLATION OF THESE BOLTS ARE TO BE TIGHTENED A SNUG TIGHT CONDITION AS SPECIFIED BY AISC. BOLT HOLES IN STANDARD CONNECTIONS SHALL BE STANDARD WITH 1/16" OVER SIZING FROM BOLT DIAMETER AND 1/8" OVERSIZED FOR ANCHORAGE LOCATIONS.
7. SWAYROD THREADS SHALL BE PINGED WITH A HAMMER TO ELIMINATE REMOVAL OF NUT, AFTER FINAL TIGHTENING.

COLD FORMED MEMBERS (PRESS BOX):

MATERIALS:

STEEL PROPERTIES			
TUBE	4" SQUARE X 11 GA. TUBE	A500 GRADE B	Fy = 46ksi, MIN.
DIAGONAL ANGLE	L2 X 2 X 3/16"	A572 / A529	Fy = 50ksi, MIN.
BELLY PAN ANGLE	L2 X 2 X 1/8"	A572 / A529	Fy = 50ksi, MIN.
CEES	4 X 2 1/2 X 14 GA.	A1011 / A653	Fy = 55ksi, MIN.
FLAT STRAP	4" X 14 GA.	A1011 / A653	Fy = 55ksi, MIN.
ROOF PLATE	11GA. OR 1/8"	A1011 / A653 / A786	Fy = 27ksi, MIN.

1. CODES AND FABRICATION: STEEL STUD MANUFACTURER'S ASSOCIATION ICC ESR 3064P OR APPROVED EQUAL.
2. COLD FORMED SHAPES SHALL BE LIMITED TO A THICKNESS OF 11 GAGE OR THINNER.

ALUMINUM:

1. MATERIALS: ALUMINUM
   - SHAPES.........................ALLOY 6061-T6 OR 6005-T5 (Fy = 35 KSI)
   - PLANKING....................ALLOY 6063-T6 (Fy = 25 KSI)
2. DISSIMILAR MATERIALS: WHERE ALUMINUM SURFACES ARE IN CONTACT WITH STEEL, THE STEEL SHALL BE GALVANIZED.
3. MILL FINISHED ALUMINUM WILL BECOME DISCOLORED DUE TO OXIDATION WHICH IS A NATURAL PHENOMENON & SHOULD BE EXPECTED.
4. ANODIZED ALUMINUM HANDRAIL IS 1 1/4" PIPE SIZE.
5. ALUMINUM TO CONFORM TO 2020 ALUMINUM DESIGN MANUAL.

SPECIAL INSPECTION/INSPECTOR REQUIREMENTS REQUIREMENTS FOR SPECIAL INSPECTION:

1. PROJECT INSPECTOR: IN ACCORDANCE WITH TITLE 24, PART I, SECTIONS 4-333 AND 4-342.
2. CERTIFIED SPECIAL INSPECTOR: EMPLOYED BY THE DISTRICT AND APPROVED BY THE ARCHITECT, STRUCTURAL ENGINEER AND DSA.
3. REPORTS: PREPARED BY THE SPECIAL INSPECTOR AND SIGNED BY A CIVIL ENGINEER. SUBMITTED TO THE DSA, THE ARCHITECT, AND ENGINEER. ALL DISCREPANCIES SHALL BE BROUGHT TO THE IMMEDIATE ATTENTION OF THE CONTRACTOR FOR CORRECTION; THEN, IF NOT CORRECTED, TO THE ARCHITECT, ENGINEER AND THE DSA (CBC 1704A.2.4).
4. THE SPECIAL INSPECTION IS TO BE CONTINUOUS DURING THE PERFORMANCE OF THE WORK UNLESS OTHERWISE SPECIFIED.

SUMMARY OF STRUCTURAL CONTINUOUS AND PERIODIC SPECIAL INSPECTION:

1. RESPONSIBILITY: IT IS THE RESPONSIBILITY OF THE PROJECT INSPECTOR TO INFORM THE SPECIAL INSPECTOR OR INSPECTION AGENCY AT LEAST ONE WORKING DAY PRIOR TO PERFORMING ANY WORK THAT REQUIRES SPECIAL INSPECTION.
2. SPECIAL INSPECTIONS:

A) CONCRETE (CBC 1705A.3): DURING THE TAKING OF TEST SPECIMENS AND PLACING OF REINFORCED CONCRETE.

B) BOLTS INSTALLED IN CONCRETE (CBC 1705A.3): PRIOR TO AND DURING THE PLACEMENT OF CONCRETE AROUND BOLTS.

C) REINFORCING STEEL (CBC 1705A.3): DURING PLACING OF REINFORCING STEEL FOR ALL CONCRETE SPECIFIED TO HAVE SPECIAL INSPECTION.

D) STRUCTURAL WELDING AND FABRICATION (CBC 1705A.2, 1705A.2.5 & 1704A.2.5):
1. DURING ALL SHOP AND FIELD WELDING IN ACCORDANCE WITH AWS D1.1 DURING SHOP FABRICATION.
2. WELDING INSPECTORS ARE TO BE AWS QC-1 CERTIFIED.
3. INSPECTION SHALL BE PER AWS D1.1, D1.3 OR D1.4 AND INCLUDE VERIFICATION THAT THE WPS IS BEING FOLLOWED.
4. ALL STEEL AND WELDING MATERIALS SHALL BE IDENTIFIED AS REQUIRED BY THEIR ASTM OR AWS STANDARD.
5. ALL SUBMITTED TO THE OWNER BY THEIR WELDING INSPECTOR, NOT THE BLEACHER FABRICATOR.

E) CONCRETE ANCHORS: FOR ALL THREADED ROD AND REINFORCING STEEL ANCHORED WITH EPOXY ADHESIVE IN CONCRETE; FOR ALL EXPANSION ANCHORS IN CONCRETE. INSPECTION / TESTING SHALL BE IN CONFORMANCE WITH THE ANCHOR MANUFACTURER'S EVALUATION REPORT AND SHALL INCLUDE AS A MINIMUM VERIFICATION OF HOLE DEPTH AND DIAMETER, CLEAN OUT, ALL MATERIALS, INSTALLATION TORQUE AND PROOF LOAD TESTS.

F) YEARLY INSPECTION: AFTER THE INSTALLATION, THE OWNER SHALL CONDUCT ANNUAL INSPECTIONS AS REQUIRED BY ICC/ANSI 300, SECTION 102.2. THE OWNER WILL ALSO MAINTAIN COPIES OF ALL ANNUAL INSPECTIONS REPORTS AND MAKE THEM AVAILABLE ON SITE FOR DSA REVIEW, UPON REQUEST.

THIS DRAWING AND ALL INFORMATION THEREIN IS THE PROPERTY OF THE SOUTHERN BLEACHER COMPANY, TAYLOR & SYFAN AND IS CONFIDENTIAL AND MUST NOT BE MADE PUBLIC OR COPIED. THIS DRAWING IS LOANED SUBJECT TO RE-TURN UPON DEMAND AND, IS NOT TO BE USED DIRECTLY OR INDIRECTLY IN ANY WAY DETRIMENTAL TO OUR INTERESTS.

STRUCTURAL ENGINEERS
TAYLOR & SYFAN
CENTRAL COAST OFFICE Ph: (626) 793-7438 Fax: (626) 793-7439 Toll: (800) 579-3881
553 S. Oak Knoll Ave. Pasadena, CA 91101
http://www.taylorsyfan.com/

Southern® BLEACHER COMPANY
GRANDSTANDS • BLEACHERS • STADIUMS
PO Box One, Graham, Texas 76450
801 Fifth Street.
Phone: 940/549-0733 Fax: 940/549-1365
Established 1946

REGISTERED PROFESSIONAL ENGINEER BRIAN T. DEAN S 6087 STRUCTURAL STATE OF CALIFORNIA
Signed 11/13/23
PRINCIPAL

TYPE: GENERAL NOTES
12" RISE X 26" TREAD / 201'-6" (16/19 ROWS)
TITLE: MERCED UNION HS DISTRICT
BUHACH COLONY HIGH SCHOOL
ATWATER, CALIFORNIA

REV	BY	DATE	DESCRIPTION

DATE	DRAWN	CHECKED
05/08/2023	JOA	DMC

JOB NUMBER #23023R2

SHEET	OF
B2	B42

22" X 34" (11x17 = 1/2 indicated scale)

23023R2

CALIFORNIA DESIGN WEST ARCHITECTS, Inc.
2100 19th Street
Sacramento, CA 95818
Phone: (916) 446-2466
Fax: (916) 446-5118
Web Page: ca-dw.com

These plans and prints thereof, as instruments of service, are owned by the architect and are for the use on this project only. Reproduction and/or distribution without the prior written consent of the architect is forbidden.
Copyright California Design West Architects, Inc.

ARCHITECT: CONSULTANT:

LICENSED ARCHITECT MITCHELL A. McALLISTER NO. C 17250 REN. 2-28-2025 STATE OF CALIFORNIA

CONSULTANT:

PROJECT NAME:

BUHACH COLONY HIGH SCHOOL

1800 NORTH BUHACH RD
ATWATER, CA 95301

CONCESSIONS/TOILET BUILDINGS, TICKET BOOTH & STADIUM UPGRADES

MERCED UNION HIGH SCHOOL DISTRICT

MERCED COUNTY

KEY PLAN:

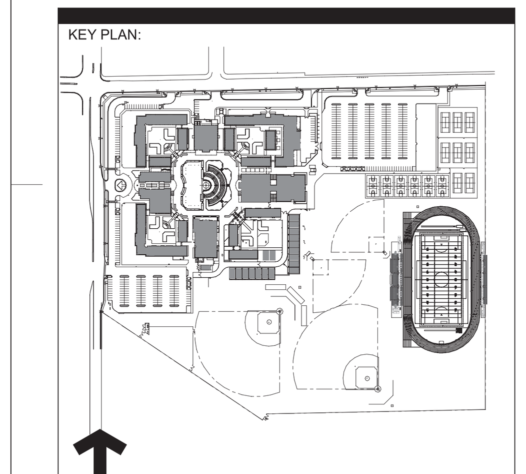

SHEET TITLE:

GENERAL NOTES

JOB NUMBER:

SHEET NUMBER: **B2**

DATE: OCT 9, 2023

REVISION:

A = GRID LETTERS

1 = GRID LINE

P1 = EXIT PAD (2 / B5)

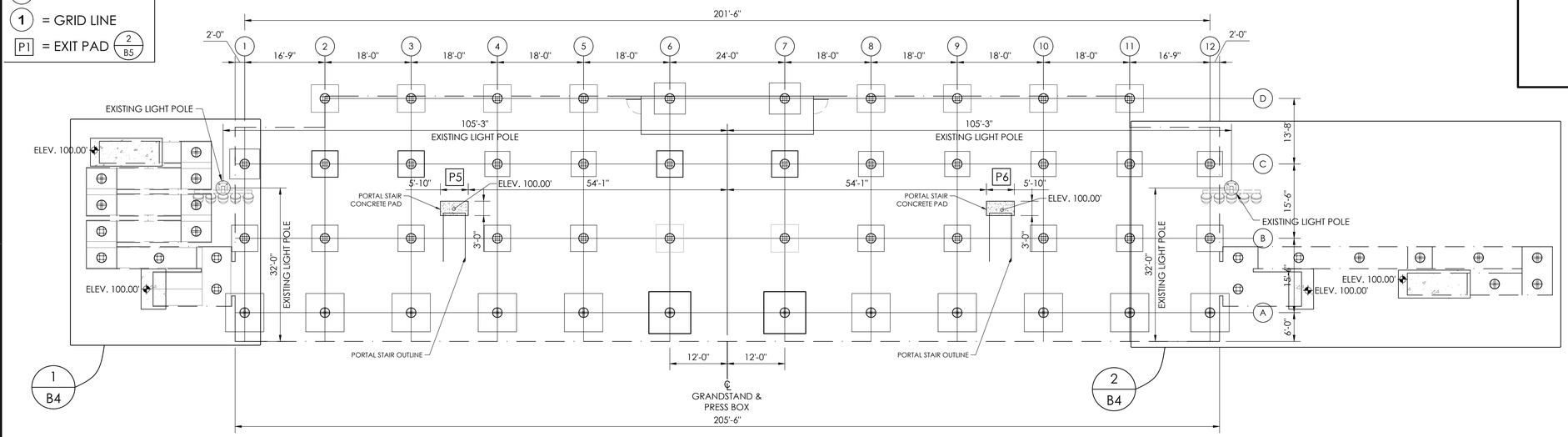

1 / B3 FOOTING LAYOUT - HOME

SCALE:3/32"=1'-0"

FOUNDATION NOTES

1. GENERAL CONTRACTOR SHALL VERIFY ALL DIMENSIONS PRIOR TO START OF CONSTRUCTION.
2. REINFORCING STEEL SHALL BE ASTM A615 GRADE 60.
3. CONCRETE SHALL HAVE A MINIMUM COMPRESSIVE STRENGTH OF 3000 PSI AT 28 DAYS.
4. MAXIMUM HORIZ. TOLERANCE OF ANCHOR BOLT PLACEMENT SHALL BE ±⅛".
5. ALL ANCHOR BOLTS SHALL HAVE A 3½" PROJECTION (±⅛") ABOVE THE TOP OF PIER ELEVATION, UNLESS SPECIFICALLY NOTED OTHERWISE.
6. THE CONCRETE FOUNDATION CONTRACTOR IS RESPONSIBLE FOR NON SHRINK GROUTING.
7. THE ELEVATION AT THE TOP OF THE CONCRETE PIER IS DESIGNED TO BE 1" BELOW THE BOTTOM OF STEEL ELEVATION. THE TOLERANCE FOR THE BOTTOM OF STEEL ELEVATION IS ±½". THE TOP OF CONCRETE ELEVATION MAY BE RAISED TO MATCH THE BOTTOM OF STEEL ELEVATION, AT THE CONCRETE CONTRACTORS DISCRETION. THE CONTRACTOR OF THE CONCRETE FOUNDATIONS IS RESPONSIBLE FOR ANY ADJUSTMENTS REQUIRED.
8. ALL UNDERGROUND UTILITIES ARE TO BE LOCATED AND MARKED DURING THE REVIEW PROCESS BY THE OWNERS REPRESENTATIVE PRIOR TO FOUNDATION EXCAVATION.
9. REMOVE/RELOCATE THE UNDERGROUND UTILITIES AS REQUIRED WHERE UNDERGROUND UTILITIES CONFLICT WITH THE NEW FOOTINGS.

THIS DRAWING AND ALL INFORMATION THEREIN IS THE PROPERTY OF THE SOUTHERN BLEACHER COMPANY. SAID SYSTEM AND DESIGN ARE NOT TO BE COPIED. THIS DRAWING IS LOANED SUBJECT TO RETURN UPON DEMAND AND, IS NOT TO BE USED DIRECTLY OR INDIRECTLY IN ANY WAY DETRIMENTAL TO OUR INTERESTS.

STRUCTURAL ENGINEERS
553 S. Oak Knoll Ave. Pasadena, CA 91101
CONTACT: Phone: (626) 793-7438
CONTACT: Fax: (626) 793-7439
CONTACT: Email: Pasadena@taylorsyfan.com
http://www.taylorsyfan.com/

TAYLOR & SYFAN

Southern BLEACHER COMPANY
GRANDSTANDS • BLEACHERS • STADIUMS
Established 1946
PO Box One, Graham, Texas 76450
801 Fifth Street
Phone: 940-549-0735 Fax: 940-549-1305

REGISTERED PROFESSIONAL ENGINEER
BRIAN T. DEAN
S 6087
STRUCTURAL
STATE OF CALIFORNIA

Signed 11/13/23 PRINCIPAL

REV	DESCRIPTION	DATE
	FOOTING LAYOUT - HOME	
	12" RISE X 26" TREAD / 201'-6" (16/19 ROWS)	

MERCED UNION HS DISTRICT
BUHACH COLONY HIGH SCHOOL
ATWATER, CALIFORNIA

DRAWN	CHECKED
05/08/2023	JOA	DMC

JOB NUMBER: #23023R2

SHEET B3 OF B42

22" X 34" (1:1 x 17" = 1/2 indicated scale)

23023R2

IDENTIFICATION STAMP
DIV. OF THE STATE ARCHITECT
APP: 02-121275 INC:
REVIEWED FOR
SS ☑ FLS ☑ ACS ☑
DATE: 12/15/2023

CALIFORNIA DESIGN WEST ARCHITECTS, Inc.

2100 19th Street
Sacramento, CA 95818

Phone: (916) 446-2466
Fax: (916) 446-5118
Web Page: ca-dw.com

These plans and prints thereof, as instruments of service, are owned by the architect and are for the use on this project only. Reproduction and/or distribution without the prior written consent of the architect is forbidden.

Copyright California Design West Architects, Inc.

ARCHITECT: CONSULTANT:

LICENSED ARCHITECT
MITCHELL A. MCALISTER
NO. C-17250
REN. 08-31-2025
STATE OF CALIFORNIA

CONSULTANT:

PROJECT NAME:

BUHACH COLONY HIGH SCHOOL

1800 NORTH BUHACH RD
ATWATER, CA 95301

CONCESSIONS/TOILET BUILDINGS, TICKET BOOTH & STADIUM UPGRADES

MERCED UNION HIGH SCHOOL DISTRICT

MERCED COUNTY

KEY PLAN:

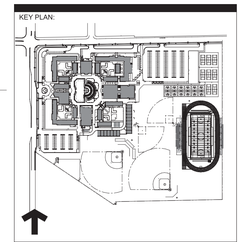

SHEET TITLE:

FOOTING LAYOUT - HOME

JOB NUMBER:

SHEET NUMBER: **B3**

DATE: OCT 9, 2023

REVISION:

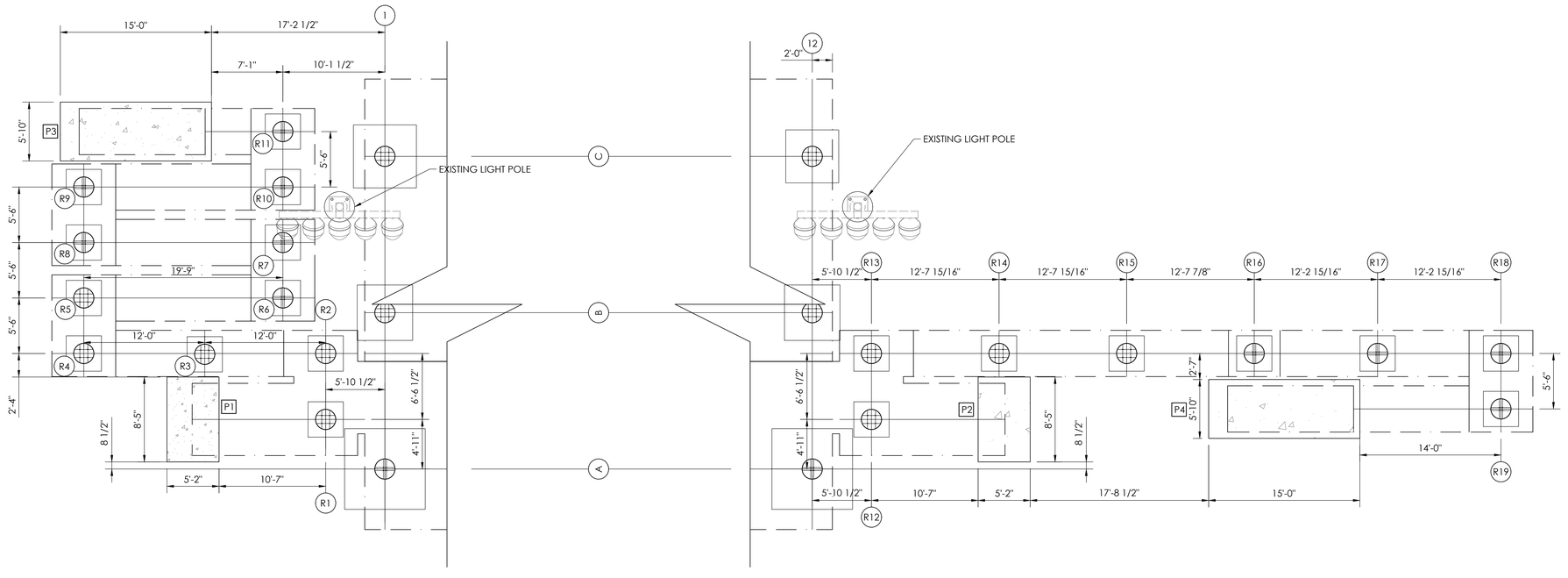

1 B4 LEFT END
ENLARGED EXIT FOOTING LAYOUT - HOME
SCALE:3/16"=1'-0"

2 B4 RIGHT END
ENLARGED EXIT FOOTING LAYOUT - HOME
SCALE:3/16"=1'-0"

THIS DRAWING AND ALL INFORMATION THEREIN IS THE PROPERTY OF THE SOUTHERN BLEACHER COMPANY. EXCEPT WITH WRITTEN PERMISSION, HEREIN NOT TO BE USED, COPIED, OR REPRODUCED. THIS DRAWING IS LOANED SUBJECT TO RETURN UPON DEMAND AND, IS NOT TO BE USED DIRECTLY OR INDIRECTLY IN ANY WAY DETRIMENTAL TO OUR INTERESTS.

STRUCTURAL ENGINEERS
COVINA (626) 252-4248
CORONA (951) 279-4434
FAX (626) 252-4244
553 S. Oak Knoll Ave. Pasadena, CA 91101
http://www.taylorandyffan.com/

TAYLOR & YFFAN

Southern BLEACHER COMPANY
GRANDSTANDS •BLEACHERS •STADIUMS
PO Box One, Graham, Texas 76450
801 Fifth Street
Phone: 940-549-0733 Fax: 940-549-1565
Established 1946

REGISTERED PROFESSIONAL ENGINEER
BRIAN T. DEAN
S 6087
STRUCTURAL
STATE OF CALIFORNIA
Signed 11/13/23
PRINCIPAL

REV	DATE	DESCRIPTION

ENLARGED EXIT FOOTING LAYOUTS - HOME
12" RISE X 26" TREAD / 201'-6" (16/19 ROWS)

MERCED UNION HS DISTRICT
BUHACH COLONY HIGH SCHOOL
ATWATER, CALIFORNIA

DATE	DRAWN	CHECKED
05/08/2023	JOA	DMC

JOB NUMBER: #23023R2

SHEET B4 OF B42

22" X 34" (1:1x1.7 = 1/2 indicated scale)

23023R2

IDENTIFICATION STAMP
DIV. OF THE STATE ARCHITECT
APP: 02-121275 INC:
REVIEWED FOR
SS ☑ FLS ☑ ACS ☑
DATE: 12/15/2023

DESIGN WEST California

CALIFORNIA DESIGN
WEST ARCHITECTS, Inc.

2100 19th Street
Sacramento, CA 95818

Phone: (916) 446-2466
Fax: (916) 446-5118
Web Page: ca-dw.com

These plans and prints thereof, as instruments of service, are owned by the architect and are for the use on this project only. Reproduction and/or distribution without the prior written consent of the architect is forbidden.

Copyright California Design West Architects, Inc.

ARCHITECT: CONSULTANT:

LICENSED ARCHITECT
NO. C17258
MITCHELL A. MCALISTER
RENEWAL 08-31-2024
STATE OF CALIFORNIA

CONSULTANT:

PROJECT NAME:

BUHACH COLONY HIGH SCHOOL

1800 NORTH BUHACH RD
ATWATER, CA 95301

CONCESSIONS/TOILET BUILDINGS, TICKET BOOTH & STADIUM UPGRADES

MERCED UNION HIGH SCHOOL DISTRICT

MERCED COUNTY

KEY PLAN:

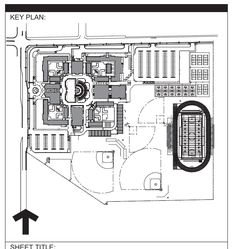

SHEET TITLE:

ENLARGED EXIT FOOTING LAYOUTS - HOME

JOB NUMBER:	SHEET NUMBER:
DATE: OCT 9, 2023	B4
REVISION:	

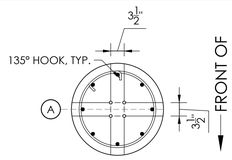

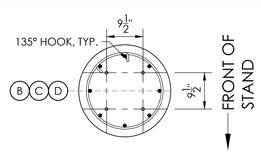

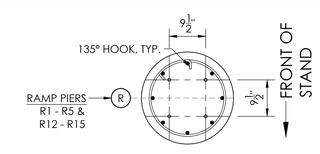

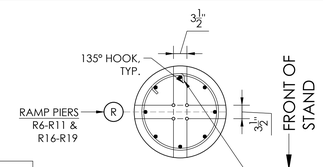

FOOTING SCHEDULE

FOOTING # (A = GRIDLINE) (R = RAMP PIER)	T.O.P. ELEV.	B.O.S. ELEV.	GROUT	"H"	"D"	"H2"	"W"	FOOTING REINFORCEMENT	PIER DIAMETER	ANCHOR BOLTS & BASE PLATE IF REQ.
A-GL 1-3 & 10-12	101.504'	101.587'	1"	14"	19"	38" MAX.	8'-0" X 8'-0"	(8) #6 EACH WAY BOTTOM #5 EACH WAY TOP 18" O.C.	24"Ø	(4)3/4"Ø X 18" HEADED ANCHOR BOLTS (NO B.P.) SEE DETAIL 8/B41
A-GL 4-5 & 8-9	101.662'	101.745'	1"	14"	19"	38" MAX.	8'-0" X 8'-0"	(8) #6 EACH WAY BOTTOM #5 EACH WAY TOP 18" O.C.	24"Ø	(4)3/4"Ø X 18" HEADED ANCHOR BOLTS (NO B.P.) SEE DETAIL 8/B41
A-GL 6 & 7	101.681'	101.764'	1"	14"	19"	38" MAX.	8'-9" X 8'-9"	(9) #6 EACH WAY BOTTOM #5 EACH WAY TOP 18" O.C.	24"Ø	(4)3/4"Ø X 18" HEADED ANCHOR BOLTS (NO B.P.) SEE DETAIL 8/B41
B-GL 1-5 & 8-12	100.417'	100.500'	1"	14"	19"	26" MAX.	5'-6" X 5'-6"	(6) #6 EACH WAY BOTTOM	24"Ø	(4)3/4"Ø X 18" HEADED ANCHOR BOLTS B.P. SEE DETAIL 6/B41
B-GL 6 & 7	100.417'	100.500'	1"	14"	19"	26" MAX.	5'-9" X 5'-9"	(6) #6 EACH WAY BOTTOM	24"Ø	(4)3/4"Ø X 18" HEADED ANCHOR BOLTS B.P. SEE DETAIL 6/B41
C-GL 1	99.500'	99.583'	1"	14"	19"	8" MAX.	6'-3" X 6'-3"	(6) #6 EACH WAY BOTTOM	24"Ø	(4)3/4"Ø X 18" HEADED ANCHOR BOLTS B.P. SEE DETAIL 6/B41
C-GL 2-3 & 6-7	99.500'	99.583'	1"	14"	19"	8" MAX.	5'-6" X 5'-6"	(6) #6 EACH WAY BOTTOM	24"Ø	(4)3/4"Ø X 18" HEADED ANCHOR BOLTS B.P. SEE DETAIL 6/B41
C-GL 4-5 & 8-12	99.500'	99.583'	1"	14"	19"	8" MAX.	5'-3" X 5'-3"	(5) #6 EACH WAY BOTTOM	24"Ø	(4)3/4"Ø X 18" HEADED ANCHOR BOLTS B.P. SEE DETAIL 6/B41
D-GL 1-5 & 8-11	99.500'	99.583'	1"	14"	19"	8" MAX.	5'-9" X 5'-9"	(6) #6 EACH WAY BOTTOM	24"Ø	(4)3/4"Ø X 18" HEADED ANCHOR BOLTS B.P. SEE DETAIL 6/B41
D-GL 6 & 7	99.500'	99.583'	1"	14"	19"	8" MAX.	6'-6" X 6'-6"	(7) #6 EACH WAY BOTTOM	24"Ø	(4)3/4"Ø X 18" HEADED ANCHOR BOLTS B.P. SEE DETAIL 6/B41
R1 - R5 & R12 - R15	100.417'	100.500'	1"	14"	19"	26" MAX.	3'-9" X 3'-9"	(4) #6 EACH WAY BOTTOM	24"Ø	(4)3/4"Ø X 18" HEADED ANCHOR BOLTS B.P. SEE DETAIL 6/B41
R6 & R7	102.547'	102.630'	1"	14"	19"	50" MAX.	3'-9" X 3'-9"	(4) #6 EACH WAY BOTTOM	24"Ø	(4)3/4"Ø X 18" HEADED ANCHOR BOLTS (NO B.P.) SEE DETAIL 24/B39
R8 & R9	101.557'	101.640'	1"	14"	19"	50" MAX.	3'-9" X 3'-9"	(4) #6 EACH WAY BOTTOM	24"Ø	(4)3/4"Ø X 18" HEADED ANCHOR BOLTS (NO B.P.) SEE DETAIL 24/B39
R10 & R11	100.484'	100.567'	1"	14"	19"	50" MAX.	3'-9" X 3'-9"	(4) #6 EACH WAY BOTTOM	24"Ø	(4)3/4"Ø X 18" HEADED ANCHOR BOLTS (NO B.P.) SEE DETAIL 24/B39
R16	102.537'	102.620'	1"	14"	19"	50" MAX.	3'-9" X 3'-9"	(4) #6 EACH WAY BOTTOM	24"Ø	(4)3/4"Ø X 18" HEADED ANCHOR BOLTS (NO B.P.) SEE DETAIL 24/B39
R17	101.766'	101.849'	1"	14"	19"	50" MAX.	3'-9" X 3'-9"	(4) #6 EACH WAY BOTTOM	24"Ø	(4)3/4"Ø X 18" HEADED ANCHOR BOLTS (NO B.P.) SEE DETAIL 24/B39
R18 & R 19	101.037'	101.120'	1"	14"	19"	50" MAX.	3'-9" X 3'-9"	(4) #6 EACH WAY BOTTOM	24"Ø	(4)3/4"Ø X 18" HEADED ANCHOR BOLTS (NO B.P.) SEE DETAIL 24/B39

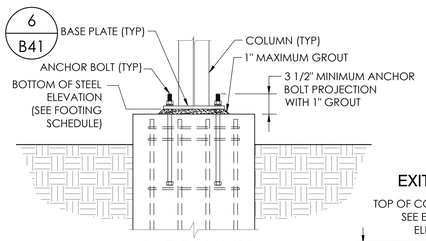

@ COLUMN

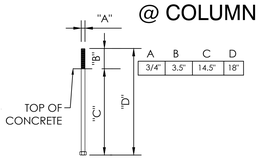

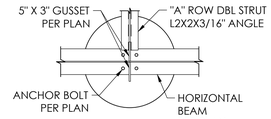

SECTION CUT "A-A"

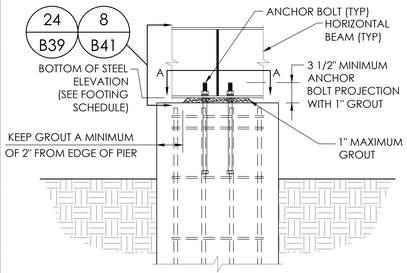

@ HORIZONTAL BEAM

1 B5 TOP OF PIER DETAIL
NOT TO SCALE

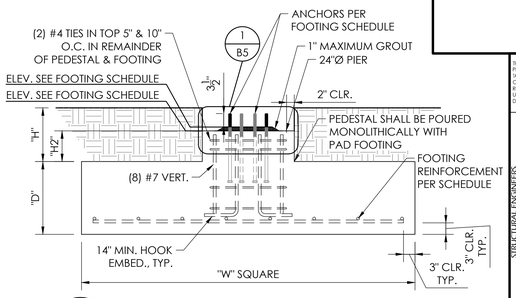

3 B5 "C" & "D" ROW FOOTING & PIER DETAIL
NOT TO SCALE

EXIT PADS TO BE FLAT AND LEVEL

2 B5 MINIMUM EXIT PAD DETAIL
NOT TO SCALE

EXIT PAD CONCRETE ELEVATION SCHEDULE

(P = CONCRETE PAD)	TOP OF CONCRETE ELEV.
P1	100.000'
P2	100.000'
P3	100.000'
P4	100.000'
P5	100.000'
P6	100.000'

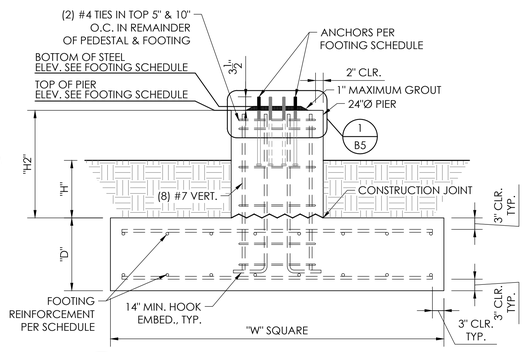

4 B5 "A" & "B" ROW FOOTING & PIER DETAIL
NOT TO SCALE

IDENTIFICATION STAMP
DIV. OF THE STATE ARCHITECT
APP: 02-121275 INC:
REVIEWED FOR
SS ☑ FLS ☑ ACS ☑
DATE: 12/15/2023

THIS DRAWING AND ALL INFORMATION THEREIN IS THE PROPERTY OF THE SOUTHERN BLEACHER COMPANY. EXCEPT FOR ANY NECESSARY CONSTRUCTION, AND MAY NOT BE MODIFIED OR COPIED. THIS DRAWING IS LOANED SUBJECT TO ITS RETURN UPON DEMAND AND, IS NOT TO BE USED DIRECTLY OR INDIRECTLY IN ANY WAY DETRIMENTAL TO OUR INTERESTS.

STRUCTURAL ENGINEERS
COVINA Ph: (626) 252-7408
Fax: (626) 252-7409
CORONA Ph: (951) 808-8778
http://www.taylorandyffan.com
553 S. Gladstone Ave. Suite 300 Glendora, CA 91101

TAYLOR & YFFAN
Southern BLEACHER COMPANY
GRANDSTANDS •BLEACHERS •STADIUMS
Established 1946
PO Box One, Graham, Texas 76450
801 Fifth Street,
Phone: 940-549-0733 Fax: 940-549-1565

REGISTERED PROFESSIONAL ENGINEER
BRIAN T. DEAN
S 6087
STRUCTURAL
STATE OF CALIFORNIA
Signed 11/13/23
PRINCIPAL

NO.	DESCRIPTION	DATE	DRAWN	CHECKED
1	REV 1	05/08/2023	JOA	DMC
2	PIER DETAILS - HOME 12" RISE X 26" TREAD / 201'-6" (16/19 ROWS)			

JOB NUMBER: #23023R2
SHEET: B5 OF B42

MERCED UNION HS DISTRICT
BUHACH COLONY HIGH SCHOOL
ATWATER, CALIFORNIA

22" X 34" (1:1x1.7 = 1/2 indicated scale)

23023R2

DESIGN California WEST
CALIFORNIA DESIGN WEST ARCHITECTS, Inc.
2100 19th Street
Sacramento, CA 95818
Phone: (916) 446-2466
Fax: (916) 446-5118
Web Page: ca-dw.com

These plans and prints thereof, as instruments of service, are owned by the architect and are for the use on this project only. Reproduction and/or distribution without the prior written consent of the architect is forbidden.
Copyright California Design West Architects, Inc.

ARCHITECT: CONSULTANT:

LICENSED ARCHITECT
NO. C 17250
MITCHELL A. MCALISTER
REGISTERED
STATE OF CALIFORNIA

CONSULTANT:

PROJECT NAME:
BUHACH COLONY HIGH SCHOOL

1800 NORTH BUHACH RD
ATWATER, CA 95301

CONCESSIONS/TOILET BUILDINGS, TICKET BOOTH & STADIUM UPGRADES

MERCED UNION HIGH SCHOOL DISTRICT

MERCED COUNTY

KEY PLAN:

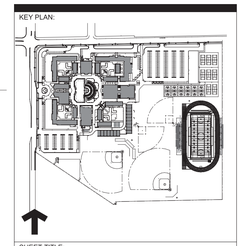

SHEET TITLE:
PIER DETAILS - HOME

JOB NUMBER:
SHEET NUMBER: **B5**
DATE: OCT 9, 2023
REVISION:

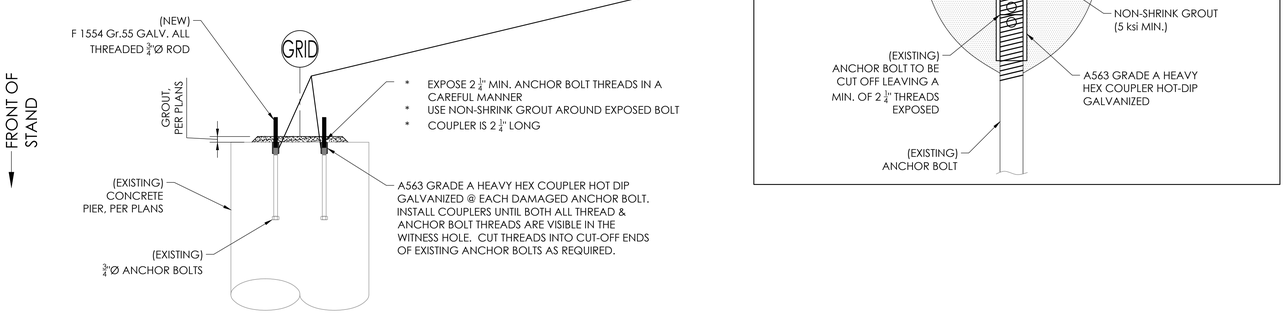

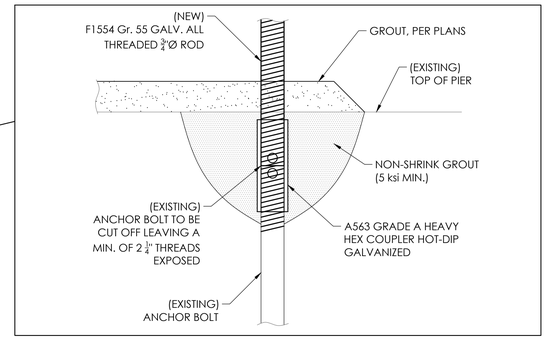

1 / B5.1 DETAIL @ DAMAGED 3/4"Ø F1554 Gr. 55 BOLTS
NOT TO SCALE

DETAIL TO BE USED IF REQUIRED

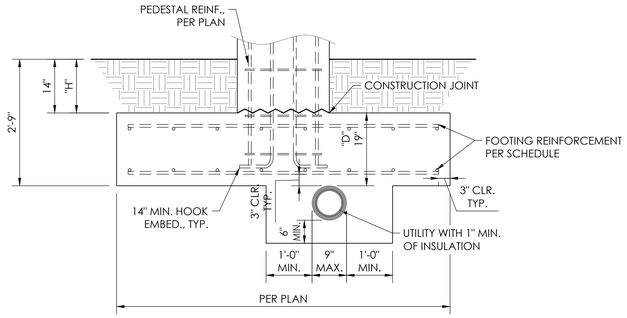

2 / B5.1 FOOTING DETAIL @ UTILITY
NOT TO SCALE

THIS DRAWING AND ALL INFORMATION THEREIN IS THE PROPERTY OF THE SOUTHERN BLEACHER COMPANY. EXCEPT FOR USE IN CONNECTION WITH BID OR WORK THEREUNDER, THIS DRAWING IS NOT TO BE COPIED. THIS DRAWING IS LOANED SUBJECT TO RETURN UPON DEMAND AND, IS NOT TO BE USED DIRECTLY OR INDIRECTLY IN ANY WAY DETRIMENTAL TO OUR INTERESTS.

STRUCTURAL ENGINEERS
5533 S. Oak Knoll Ave. Temple City, CA 91101
COVINA | Ph: (626) 252-7438
CORONA | Fax: (626) 252-7436
OAKLEY | Web: taylorandyffan.com
http://www.taylorandyffan.com/
TAYLOR & YFFAN
Southern BLEACHER COMPANY
GRANDSTANDS •BLEACHERS •STADIUMS
PO Box One, Graham, Texas 76450
801 Fifth Street,
Phone: 940-549-0733 Fax: 940-549-1565
Established 1946

REGISTERED PROFESSIONAL ENGINEER
BRIAN T. DEAN
S 6087
STRUCTURAL
STATE OF CALIFORNIA
Signed 11/13/23
PRINCIPAL

REV	DATE	DESCRIPTION

PIER DETAILS - HOME
12" RISE X 26" TREAD / 201'-6" (16/19 ROWS)

MERCED UNION HS DISTRICT
BUHACH COLONY HIGH SCHOOL
ATWATER, CALIFORNIA

DRAWN	CHECKED
05/08/2023	JOA	DMC

JOB NUMBER #23023R2

SHEET B5.1 OF B42

22" X 34" (11x17 = 1/2 indicated scale)

23023R2

IDENTIFICATION STAMP
DIV. OF THE STATE ARCHITECT
APP: 02-121275 INC:
REVIEWED FOR
SS ☑ FLS ☑ ACS ☑
DATE: 12/15/2023

CALIFORNIA DESIGN WEST ARCHITECTS, Inc.

2100 19th Street
Sacramento, CA 95818

Phone: (916) 446-2466
Fax: (916) 446-5118
Web Page: ca-dw.com

These plans and prints thereof, as instruments of service, are owned by the architect and are for the use on this project only. Reproduction and/or distribution without the prior written consent of the architect is forbidden.

Copyright California Design West Architects, Inc.

ARCHITECT: CONSULTANT:

LICENSED ARCHITECT
MITCHELL A. MCALISTER
NO. C-17250
REN. 08-31-2025
STATE OF CALIFORNIA

CONSULTANT:

PROJECT NAME:

BUHACH COLONY HIGH SCHOOL

1800 NORTH BUHACH RD
ATWATER, CA 95301

CONCESSIONS/TOILET BUILDINGS, TICKET BOOTH & STADIUM UPGRADES

MERCED UNION HIGH SCHOOL DISTRICT

MERCED COUNTY

KEY PLAN:

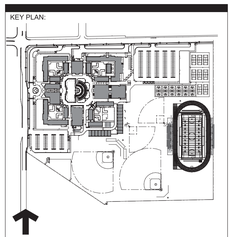

SHEET TITLE:

PIER DETAILS - HOME

JOB NUMBER:	SHEET NUMBER:
DATE: OCT 9, 2023	**B5.1**
REVISION:	

NOTE:
SEE SHEET B14 FOR SEATING LAYOUT

A = GRID LINE
1 = STRINGER NUMBERS
B1 = BEAM NUMBERS
⊣⊢ = SPLICE LOCATION

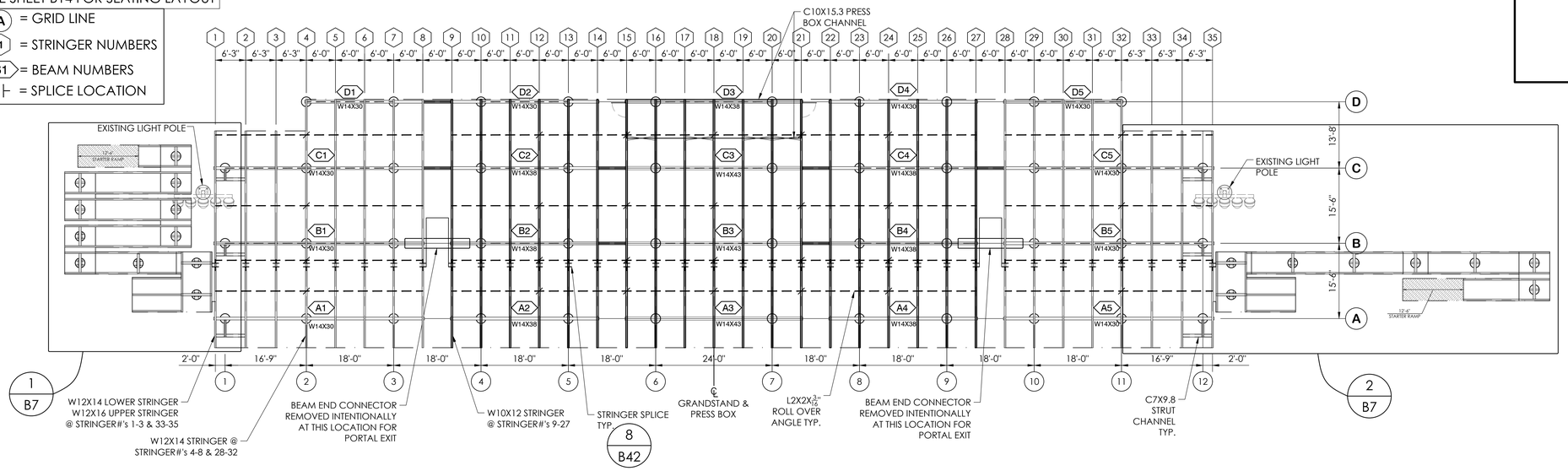

1 B6 UNDERSTRUCTURE LAYOUT - HOME
SCALE:3/32"=1'-0"

THIS DRAWING AND ALL INFORMATION THEREIN IS THE PROPERTY OF THE SOUTHERN BLEACHER COMPANY. AND/OR ETPHA WAS CONCEIVED, ADVANCED OR MADE FOR OR COPIED. THIS DRAWING IS LOANED SUBJECT TO RE-TURN UPON DEMAND AND, IS NOT TO BE USED DIRECTLY OR INDIRECTLY IN ANY WAY DETRIMENTAL TO OUR INTERESTS.

STRUCTURAL ENGINEERS
COVINA Ph: (626) 252-2438
CORONA Ph: (951) 279-4128
COVINA Ph: (626) 252-2438
553 S. Oak Knoll Ave. Pasadena, CA 91101
http://www.taylorandfan.com/

TAYLOR & FAN
Southern BLEACHER COMPANY
GRANDSTANDS •BLEACHERS •STADIUMS
PO Box One, Graham, Texas 76450 Phone: 940-549-0733
801 Fifth Street, Fax: 940-549-1565
Established 1946

REGISTERED PROFESSIONAL ENGINEER
BRIAN T. DEAN
S 6087
STRUCTURAL
STATE OF CALIFORNIA
Signed 11/13/23
PRINCIPAL

REV	DESCRIPTION	DATE	REV BY

DRAWN	CHECKED
JOA	DMC

05/08/2023
JOB NUMBER #23023R2
SHEET B6 OF B42

UNDERSTRUCTURE LAYOUT - HOME
12" RISE X 26" TREAD / 201'-6" (16/19 ROWS)

MERCED UNION HS DISTRICT
BUHACH COLONY HIGH SCHOOL
ATWATER, CALIFORNIA

22" X 34" (11x17 = 1/2 indicated scale)

23023R2

IDENTIFICATION STAMP
DIV. OF THE STATE ARCHITECT
APP: 02-121275 INC:
REVIEWED FOR
SS ☑ FLS ☑ ACS ☑
DATE: 12/15/2023

CALIFORNIA DESIGN WEST ARCHITECTS, Inc.

2100 19th Street
Sacramento, CA 95818

Phone: (916) 446-2466
Fax: (916) 446-5118
Web Page: ca-dw.com

These plans and prints thereof, as instruments of service, are owned by the architect and are for the use on this project only. Reproduction and/or distribution without the prior written consent of the architect is forbidden.

Copyright California Design West Architects, Inc.

ARCHITECT: CONSULTANT:

LICENSED ARCHITECT
MITCHELL A. MCALISTER
No. C-7250
REN. 08-31-2025
STATE OF CALIFORNIA

CONSULTANT:

PROJECT NAME:

BUHACH COLONY HIGH SCHOOL

1800 NORTH BUHACH RD
ATWATER, CA 95301

CONCESSIONS/TOILET BUILDINGS, TICKET BOOTH & STADIUM UPGRADES

MERCED UNION HIGH SCHOOL DISTRICT

MERCED COUNTY

KEY PLAN:

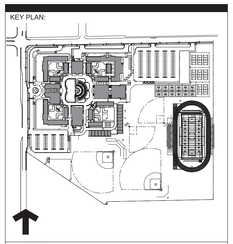

SHEET TITLE:

UNDERSTRUCTURE LAYOUT - HOME

JOB NUMBER:	SHEET NUMBER:
DATE: OCT 9, 2023	**B6**
REVISION:	

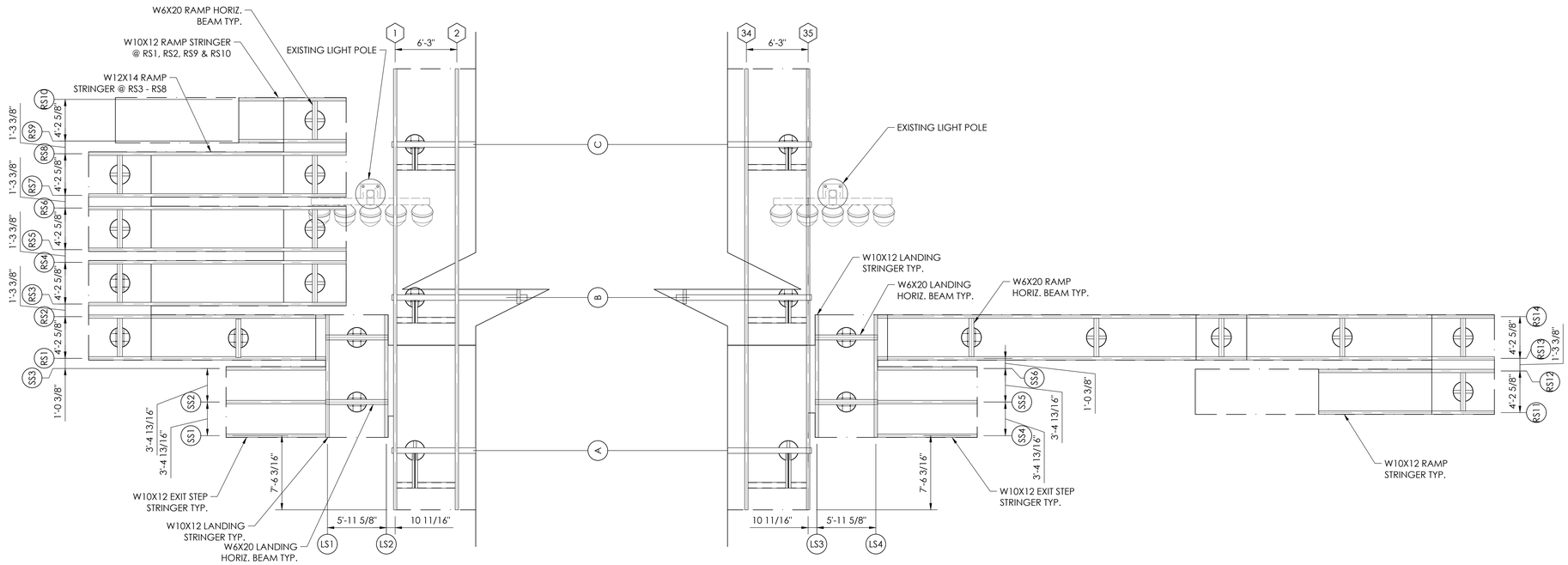

1 / B7 LEFT END
ENLARGED EXIT UNDERSTRUCTURE - HOME
SCALE:3/16"=1'-0"

2 / B7 RIGHT END
ENLARGED EXIT UNDERSTRUCTURE - HOME
SCALE:3/16"=1'-0"

THIS DRAWING AND ALL INFORMATION THEREIN IS THE PROPERTY OF THE SOUTHERN BLEACHER COMPANY. EXCEPT FOR USE IN CONNECTION WITH BID OR WORK NOT REC OR COPIED. THIS DRAWING IS LOANED SUBJECT TO BE RETURN UPON DEMAND AND, IS NOT TO BE USED DIRECTLY OR INDIRECTLY IN ANY WAY DETRIMENTAL TO OUR INTERESTS.

STRUCTURAL ENGINEERS
TAYLOR & YEAN
COVINA Ph: (626) 252-7438
CORONA Ph: (951) 279-4111
FAX: (626) 252-7439
553 S. Oak Knoll Ave. Pasadena, CA 91101
http://www.taylorandyean.com/

Southern BLEACHER COMPANY
GRANDSTANDS •BLEACHERS •STADIUMS
PO Box One, Graham, Texas 76450
801 Fifth Street,
Phone: 940-549-0733 Fax: 940-549-1565
Established 1946

REGISTERED PROFESSIONAL ENGINEER
BRIAN T. DEAN
S 6087
STRUCTURAL
STATE OF CALIFORNIA
Signed 11/13/23
PRINCIPAL

REV	DESCRIPTION:	DATE	REV BY

DATE	DRAWN	CHECKED
05/08/2023	JOA	DMC

JOB NUMBER
#23023R2

SHEET B7 OF B42

22" X 34" (1:1) x17 = 1/2 indicated scale)

ENLARGED EXIT UNDERSTRUCTURE LAYOUTS - HOME
12" RISE X 26" TREAD / 201'-6" (16/19 ROWS) / 201'-6" (16/19 ROWS)

MERCED UNION HS DISTRICT
BUHACH COLONY HIGH SCHOOL
ATWATER, CALIFORNIA

23023R2

IDENTIFICATION STAMP
DIV. OF THE STATE ARCHITECT
APP: 02-121275 INC:
REVIEWED FOR
SS ☑ FLS ☑ ACS ☑
DATE: 12/15/2023

CALIFORNIA DESIGN WEST ARCHITECTS, Inc.

2100 19th Street
Sacramento, CA 95818

Phone: (916) 446-2466
Fax: (916) 446-5118
Web Page: ca-dw.com

These plans and prints thereof, as instruments of service, are owned by the architect and are for the use on this project only. Reproduction and/or distribution without the prior written consent of the architect is forbidden.

Copyright California Design West Architects, Inc.

ARCHITECT: CONSULTANT:

LICENSED ARCHITECT
MITCHELL A. MCALISTER
No. C 17250
RENEWAL 08/31/2025
STATE OF CALIFORNIA

CONSULTANT:

PROJECT NAME:

BUHACH COLONY HIGH SCHOOL

1800 NORTH BUHACH RD
ATWATER, CA 95301

CONCESSIONS/TOILET BUILDINGS, TICKET BOOTH & STADIUM UPGRADES

MERCED UNION HIGH SCHOOL DISTRICT

MERCED COUNTY

KEY PLAN:

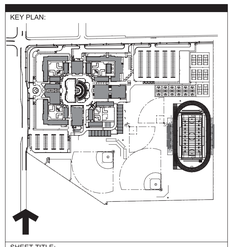

SHEET TITLE:

ENLARGED EXIT UNDERSTRUCTURE LAYOUTS - HOME

JOB NUMBER:	SHEET NUMBER:
	B7
DATE: OCT 9, 2023	
REVISION:	

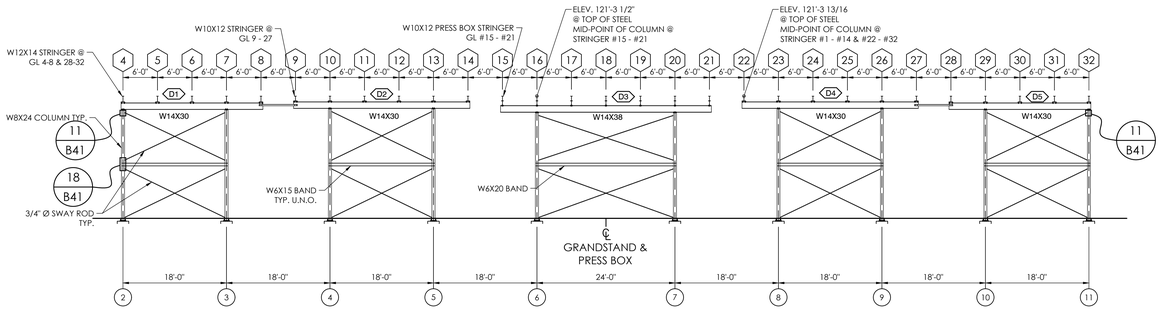

1 / B8 "D" ROW ELEVATION VIEW - HOME
SCALE:1/8"=1'-0"

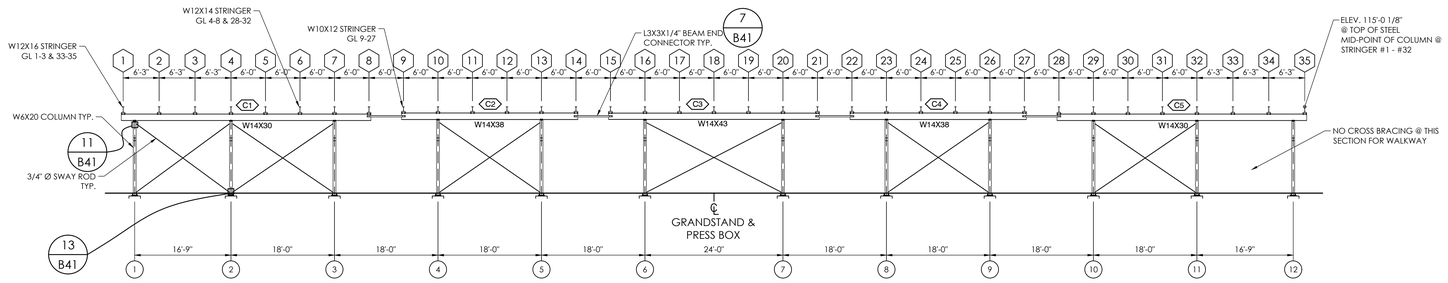

2 / B8 "C" ROW ELEVATION VIEW - HOME
SCALE:1/8"=1'-0"

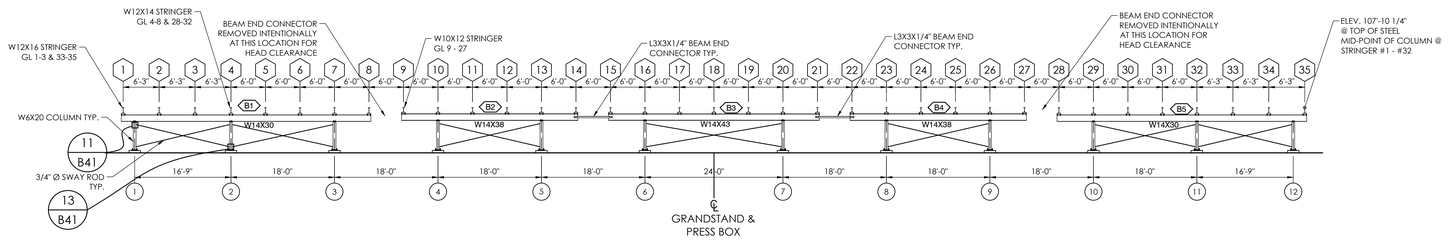

3 / B8 "B" ROW ELEVATION VIEW - HOME
SCALE:1/8"=1'-0"

THIS DRAWING AND ALL INFORMATION THEREIN IS THE PROPERTY OF THE SOUTHERN BLEACHER COMPANY. EXCEPT FOR WHICH CONVERSION, HOWEVER MODIFIED OR COPIED. THIS DRAWING IS LOANED SUBJECT TO RETURN UPON DEMAND AND, IS NOT TO BE USED DIRECTLY OR INDIRECTLY IN ANY WAY DETRIMENTAL TO OUR INTERESTS.

STRUCTURAL ENGINEERS
COVINA Ph: (626) 252-2438
CORONA Ph: (951) 279-4434
COVINA, CA 91724 Email: mail@taylorandyffan.com
5533 S. Oak Knoll Ave. http://www.taylorandyffan.com/

TAYLOR & YFFAN

Southern BLEACHER COMPANY
GRANDSTANDS •BLEACHERS •STADIUMS
PO Box One, Graham, Texas 76450 Phone: 940-549-0733
801 Fifth Street, Fax: 940-549-1565
Established 1946

REGISTERED PROFESSIONAL ENGINEER
BRIAN T. DEAN
S 6087
STRUCTURAL
STATE OF CALIFORNIA
Signed 11/13/23
PRINCIPAL

REV	DESCRIPTION	DATE	BY
	ELEVATION VIEWS - HOME		
	12" RISE X 26" TREAD / 201'-6" (16/19 ROWS)		

DRAWN: JOA
CHECKED: DMC
DATE: 05/08/2023
JOB NUMBER: #23023R2
SHEET: B8
OF: B42

MERCED UNION HS DISTRICT
BUHACH COLONY HIGH SCHOOL
ATWATER, CALIFORNIA

22" X 34" (11x17 = 1/2 indicated scale)

23023R2

IDENTIFICATION STAMP
DIV. OF THE STATE ARCHITECT
APP: 02-121275 INC:
REVIEWED FOR
SS ☑ FLS ☑ ACS ☑
DATE: 12/15/2023

CALIFORNIA DESIGN WEST ARCHITECTS, Inc.

2100 19th Street
Sacramento, CA 95818

Phone: (916) 446-2466
Fax: (916) 446-5118
Web Page: ca-dw.com

These plans and prints thereof, as instruments of service, are owned by the architect and are for the use on this project only. Reproduction and/or distribution without the prior written consent of the architect is forbidden.

Copyright California Design West Architects, Inc.

ARCHITECT: CONSULTANT:

LICENSED ARCHITECT
MITCHELL A. MCALISTER
No. C17258
RENEWAL 08/31/2025
STATE OF CALIFORNIA

CONSULTANT:

PROJECT NAME:

BUHACH COLONY HIGH SCHOOL

1800 NORTH BUHACH RD
ATWATER, CA 95301

CONCESSIONS/TOILET BUILDINGS, TICKET BOOTH & STADIUM UPGRADES

MERCED UNION HIGH SCHOOL DISTRICT

MERCED COUNTY

KEY PLAN:

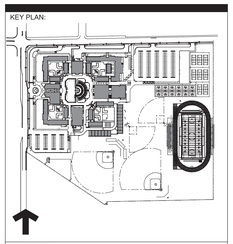

SHEET TITLE:

ELEVATION VIEWS - HOME

JOB NUMBER:	SHEET NUMBER:
DATE: OCT 9, 2023	B8
REVISION:	

ITEM DESCRIPTION

(1) W 14 X 30 (50 ksi)	(13) L 1 1/2 X 1 1/2 X 3/16 (50 ksi)
(2) W 14 X 38 (50 ksi)	(14) L 2 X 2 1/2 X 3/16 (50 ksi)
(3) W 14 X 43 (50 ksi)	(15) 12 X 12 X 5/8 PLATE
(4) W 10 X 12 (50 ksi)	(16) 6 X 8 X 3/8 PLATE
(5) W 12 X 14 (50 ksi)	(17) 3/4 X REQ'D LENGTH SWAY ROD (50 ksi)
(6) W 12 X 16 (50 ksi)	(18) 3/4 X 18 ANCHOR BOLT W/2 HEX HEAD NUTS & FLAT WASHER
(7) W 6 X 15 (50 ksi)	(19) 9 GAUGE GALV. STEEL CHAINLINK FENCE
(8) W 6 X 20 (50 ksi)	(20) ANODIZED ALUMINUM RAIL (SEE DETAIL 5/B38 & 6/B38)
(9) W 8 X 24 (50 ksi)	(21) 3 X 3/8 GUSSET PLATE (A36)
(10) L 3 X 3 X 1/4 (50 ksi)	(22) 5 X 3/8 GUSSET PLATE (A36)
(11) L 2 X 2 X 3/16 (50 ksi)	(23) 2 X 1/4 GUSSET PLATE (A36)
(12) L 2 X 1 1/2 X 3/16 (50 ksi)	(24) 8 X 8 X 3/8 PLATE

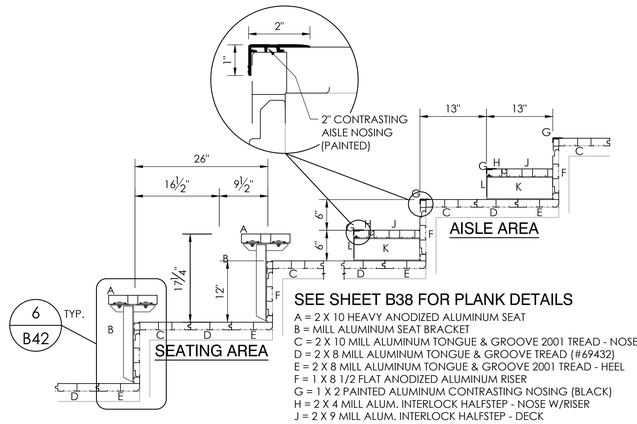

SEE SHEET B38 FOR PLANK DETAILS

A = 2 X 10 HEAVY ANODIZED ALUMINUM SEAT
B = MILL ALUMINUM SEAT BRACKET
C = 2 X 10 MILL ALUMINUM TONGUE & GROOVE 2001 TREAD - NOSE
D = 2 X 8 MILL ALUMINUM TONGUE & GROOVE TREAD (#69432)
E = 2 X 8 MILL ALUMINUM TONGUE & GROOVE 2001 TREAD - HEEL
F = 1 X 8 1/2 FLAT ANODIZED ALUMINUM RISER
G = 1 X 2 PAINTED ALUMINUM CONTRASTING NOSING (BLACK)
H = 2 X 4 MILL ALUM. INTERLOCK HALFSTEP - NOSE W/RISER
J = 2 X 9 MILL ALUM. INTERLOCK HALFSTEP - DECK
K = 4 1/2" MILL ALUMINUM HALFSTEP BRACKET
L = 4 1/2" ANODIZED ALUMINUM INTERLOCK STEP RISER

2 B9 PLANK ARRANGEMENT
NOT TO SCALE 12" X 26"

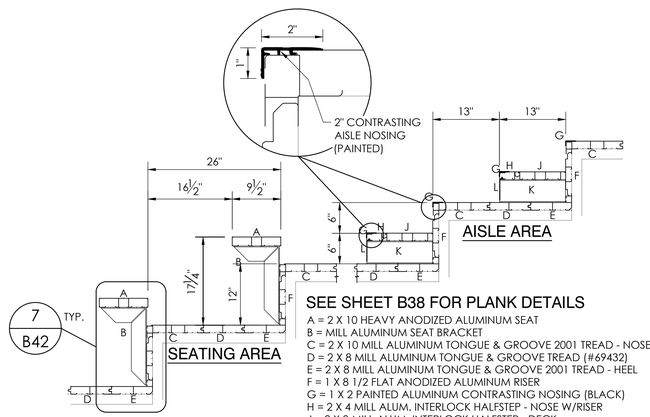

SEE SHEET B38 FOR PLANK DETAILS

A = 2 X 10 HEAVY ANODIZED ALUMINUM SEAT
B = MILL ALUMINUM SEAT BRACKET
C = 2 X 10 MILL ALUMINUM TONGUE & GROOVE 2001 TREAD - NOSE
D = 2 X 8 MILL ALUMINUM TONGUE & GROOVE TREAD (#69432)
E = 2 X 8 MILL ALUMINUM TONGUE & GROOVE 2001 TREAD - HEEL
F = 1 X 8 1/2 FLAT ANODIZED ALUMINUM RISER
G = 1 X 2 PAINTED ALUMINUM CONTRASTING NOSING (BLACK)
H = 2 X 4 MILL ALUM. INTERLOCK HALFSTEP - NOSE W/RISER
J = 2 X 9 MILL ALUM. INTERLOCK HALFSTEP - DECK
K = 4 1/2" MILL ALUMINUM HALFSTEP BRACKET
L = 4 1/2" ANODIZED ALUMINUM INTERLOCK STEP RISER

3 B9 PLANK ARRANGEMENT
NOT TO SCALE 12" X 26"

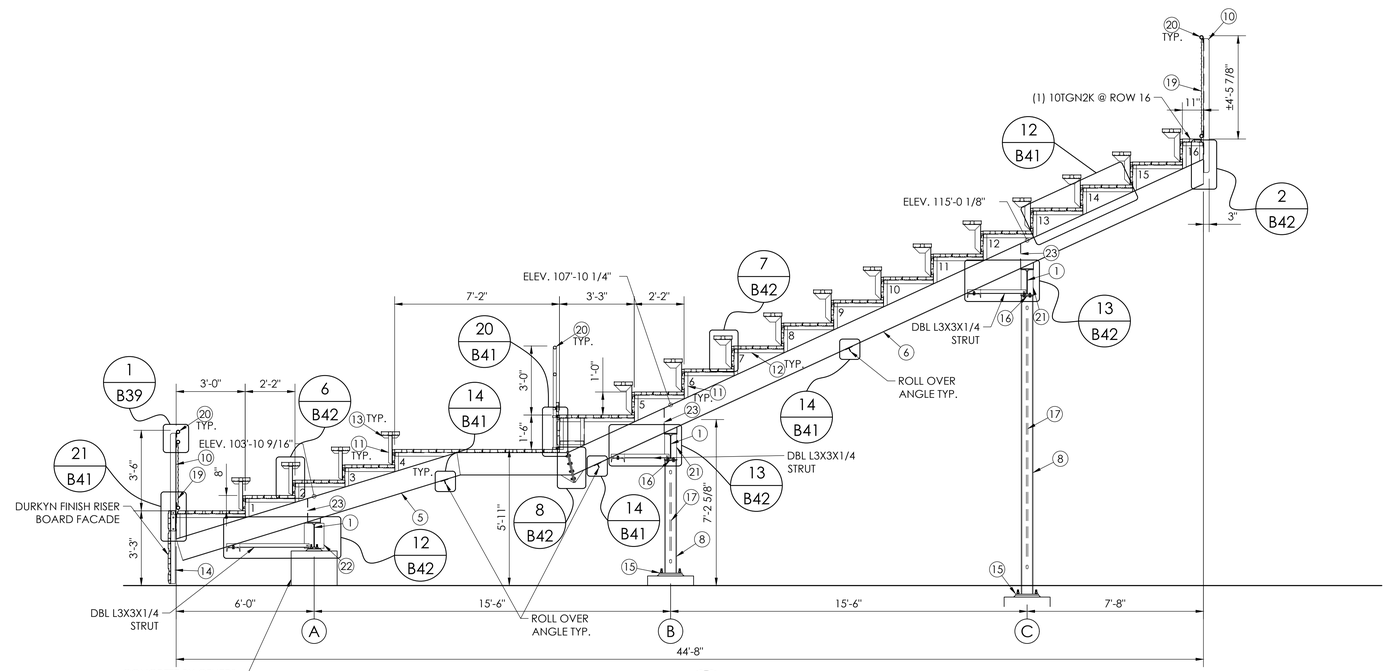

1 B9 SECTION VIEW @ STRINGER # 34
SCALE:3/8"=1'-0"

IDENTIFICATION STAMP
DIV. OF THE STATE ARCHITECT
APP: 02-121275 INC:
REVIEWED FOR
SS ☑ FLS ☑ ACS ☑
DATE: 12/15/2023

THIS DRAWING AND ALL INFORMATION THEREIN IS THE PROPERTY OF THE SOUTHERN BLEACHER COMPANY. EXCEPT FOR THE NECESSARY USE IN CONNECTION WITH THE CONTRACT FOR WHICH IT WAS PREPARED, THIS DRAWING IS LOANED SUBJECT TO RETURN UPON DEMAND AND, IS NOT TO BE USED DIRECTLY OR INDIRECTLY IN ANY WAY DETRIMENTAL TO OUR INTERESTS.

STRUCTURAL ENGINEERS
COVINA Ph: (626) 252-2438
COVINA Fax: (626) 252-2439
SAN DIEGO Ph: (858) 576-1243
http://www.taylorandyffan.com/
553 S. Oak Knoll Ave. Pasadena, CA 91101

TAYLOR & YFFAN

Southern BLEACHER COMPANY
GRANDSTANDS •BLEACHERS •STADIUMS
PO Box One, Graham, Texas 76450
801 Fifth Street,
Phone: 940-549-0733 Fax: 940-549-1565
Established 1946

REGISTERED PROFESSIONAL ENGINEER BRIAN T. DEAN S 6087 STRUCTURAL STATE OF CALIFORNIA
Signed 11/13/23 PRINCIPAL

REV	BY	DATE	DESCRIPTION

TYPE: SECTION VIEW - HOME
12" RISE X 26" TREAD / 201'-6" (16/19 ROWS)

MERCED UNION HS DISTRICT
BUHACH COLONY HIGH SCHOOL
ATWATER, CALIFORNIA

DATE	DRAWN	CHECKED
05/08/2023	JOA	DMC

JOB NUMBER #23023R2

SHEET B9 OF B42

22" X 34" (1)x17 = 1/2 indicated scale)

23023R2

CALIFORNIA DESIGN WEST ARCHITECTS, Inc.

2100 19th Street
Sacramento, CA 95818

Phone: (916) 446-2466
Fax: (916) 446-5118
Web Page: ca-dw.com

These plans and prints thereof, as instruments of service, are owned by the architect and are for the use on this project only. Reproduction and/or distribution without the prior written consent of the architect is forbidden.

Copyright California Design West Architects, Inc.

ARCHITECT: CONSULTANT:

LICENSED ARCHITECT MITCHELL A. MCALISTER RENEWAL 08/31/2025 NO. C-17250 STATE OF CALIFORNIA

CONSULTANT:

PROJECT NAME:

BUHACH COLONY HIGH SCHOOL

1800 NORTH BUHACH RD
ATWATER, CA 95301

CONCESSIONS/TOILET BUILDINGS, TICKET BOOTH & STADIUM UPGRADES

MERCED UNION HIGH SCHOOL DISTRICT

MERCED COUNTY

KEY PLAN:

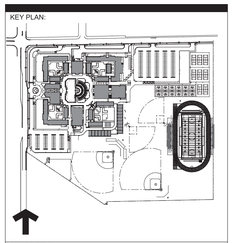

SHEET TITLE:

SECTION VIEW - HOME

JOB NUMBER:	SHEET NUMBER:
DATE: OCT 9, 2023	**B9**
REVISION:	

ITEM DESCRIPTION

1. W 14 X 30 (50 ksi)
2. W 14 X 38 (50 ksi)
3. W 14 X 43 (50 ksi)
4. W 10 X 12 (50 ksi)
5. W 12 X 14 (50 ksi)
6. W 12 X 16 (50 ksi)
7. W 6 X 15 (50 ksi)
8. W 6 X 20 (50 ksi)
9. W 8 X 24 (50 ksi)
10. L 3 X 3 X 1/4 (50 ksi)
11. L 2 X 2 X 3/16 (50 ksi)
12. L 2 X 1 1/2 X 3/16 (50 ksi)
13. L 1 1/2 X 1 1/2 X 3/16 (50 ksi)
14. L 2 X 2 1/2 X 3/16 (50 ksi)
15. 12 X 12 X 5/8 PLATE
16. 6 X 8 X 3/8 PLATE
17. 3/4 X REQ'D LENGTH SWAY ROD (50 ksi)
18. 3/4 X 18 ANCHOR BOLT W/2 HEX HEAD NUTS & FLAT WASHER
19. 9 GAUGE GALV. STEEL CHAINLINK FENCE
20. ANODIZED ALUMINUM RAIL (SEE DETAIL 5/B38 & 6/B38)
21. 3 X 3/8 GUSSET PLATE (A36)
22. 5 X 3/8 GUSSET PLATE (A36)
23. 2 X 1/4 GUSSET PLATE (A36)
24. 8 X 8 X 3/8 PLATE

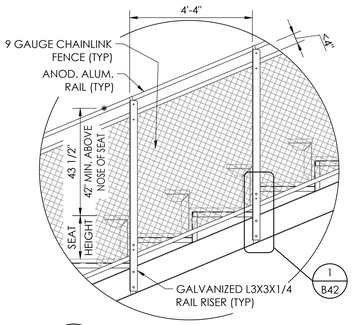

2 B10 TYPICAL SIDE RAILING
SCALE:1/2"=1'-0"

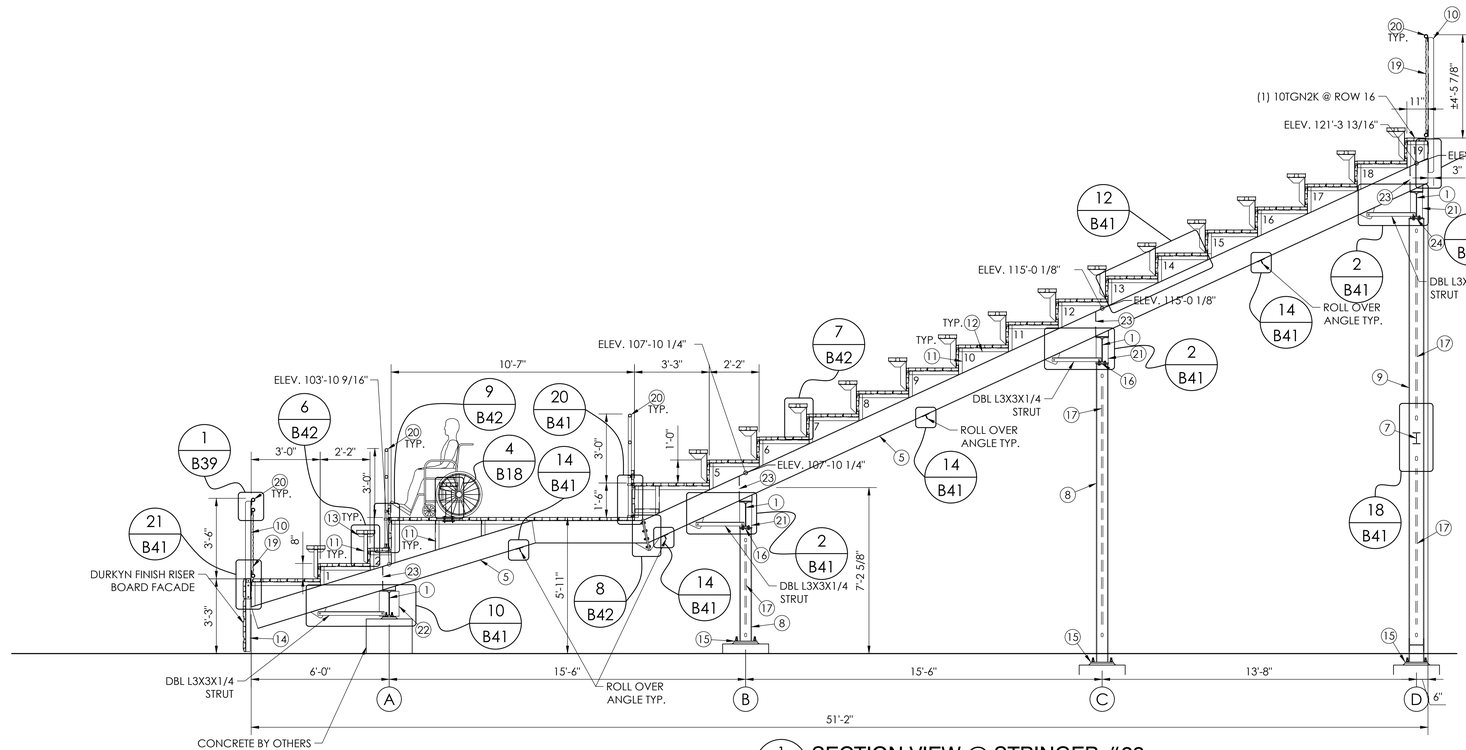

1 B10 SECTION VIEW @ STRINGER #28
SCALE:3/8"=1'-0"

THIS DRAWING AND ALL INFORMATION THEREIN IS THE PROPERTY OF THE SOUTHERN BLEACHER COMPANY. EXCEPT FOR USE IN CONVERSION, HEREWITH OR WHEN SO COPIED. THIS DRAWING IS LOANED SUBJECT TO RE-TURN UPON DEMAND AND, IS NOT TO BE USED DIRECTLY OR INDIRECTLY IN ANY WAY DETRIMENTAL TO OUR INTERESTS.

STRUCTURAL ENGINEERS
COVINA Ph: (626) 252-2438
CORONA Ph: (951) 279-1717
OAKLAND Ph: (510) 893-8181
553 S. Oak Knoll Ave. Pasadena, CA 91101
http://www.taylorandyffan.com/

TAYLOR & YFFAN

Southern BLEACHER COMPANY Established 1946
GRANDSTANDS •BLEACHERS •STADIUMS
PO Box One, Graham, Texas 76450
801 Fifth Street,
Phone: 940-549-0733 Fax: 940-549-1565

REGISTERED PROFESSIONAL ENGINEER
BRIAN T. DEAN
S 6087
STRUCTURAL
STATE OF CALIFORNIA
Signed 11/13/23 PRINCIPAL

REV	BY	DATE	DESCRIPTION

DATE	DRAWN	DESIGN
05/08/2023	JOA	DMC

JOB NUMBER #23023R2

SHEET B10 OF B42

SECTION VIEWS - HOME
12" RISE X 26" TREAD / 201'-6" (16/19 ROWS)

MERCED UNION HS DISTRICT
BUHACH COLONY HIGH SCHOOL
ATWATER, CALIFORNIA

22" X 34" (11x17 = 1/2 indicated scale)

23023R2

IDENTIFICATION STAMP
DIV. OF THE STATE ARCHITECT
APP: 02-121275 INC:
REVIEWED FOR
SS ☑ FLS ☑ ACS ☑
DATE: 12/15/2023

CALIFORNIA DESIGN WEST ARCHITECTS, Inc.

2100 19th Street
Sacramento, CA 95818

Phone: (916) 446-2466
Fax: (916) 446-5118
Web Page: ca-dw.com

These plans and prints thereof, as instruments of service, are owned by the architect and are for the use on this project only. Reproduction and/or distribution without the prior written consent of the architect is forbidden.

Copyright California Design West Architects, Inc.

ARCHITECT: CONSULTANT:

LICENSED ARCHITECT
MITCHELL A. MCALISTER
NO. C-17250
REN. 08-31-2024
STATE OF CALIFORNIA

CONSULTANT:

PROJECT NAME:

BUHACH COLONY HIGH SCHOOL

1800 NORTH BUHACH RD
ATWATER, CA 95301

CONCESSIONS/TOILET BUILDINGS, TICKET BOOTH & STADIUM UPGRADES

MERCED UNION HIGH SCHOOL DISTRICT

MERCED COUNTY

KEY PLAN:

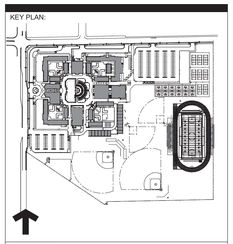

SHEET TITLE:

SECTION VIEWS - HOME

JOB NUMBER:	SHEET NUMBER:
	B10
DATE: OCT 9, 2023	
REVISION:	

ITEM DESCRIPTION

1. W 14 X 30 (50 ksi)
2. W 14 X 38 (50 ksi)
3. W 14 X 43 (50 ksi)
4. W 10 X 12 (50 ksi)
5. W 12 X 14 (50 ksi)
6. W 12 X 16 (50 ksi)
7. W 6 X 15 (50 ksi)
8. W 6 X 20 (50 ksi)
9. W 8 X 24 (50 ksi)
10. L 3 X 3 X 1/4 (50 ksi)
11. L 2 X 2 X 3/16 (50 ksi)
12. L 2 X 1 1/2 X 3/16 (50 ksi)
13. L 1 1/2 X 1 1/2 X 3/16 (50 ksi)
14. L 2 X 2 1/2 X 3/16 (50 ksi)
15. 12 X 12 X 5/8 PLATE
16. 6 X 8 X 3/8 PLATE
17. 3/4 X REQ'D LENGTH SWAY ROD (50 ksi)
18. 3/4 X 18 ANCHOR BOLT W/2 HEX HEAD NUTS & FLAT WASHER
19. 9 GAUGE GALV. STEEL CHAINLINK FENCE
20. ANODIZED ALUMINUM RAIL (SEE DETAIL 5/B38 & 6/B38)
21. 3 X 3/8 GUSSET PLATE (A36)
22. 5 X 3/8 GUSSET PLATE (A36)
23. 2 X 1/4 GUSSET PLATE (A36)
24. 8 X 8 X 3/8 PLATE

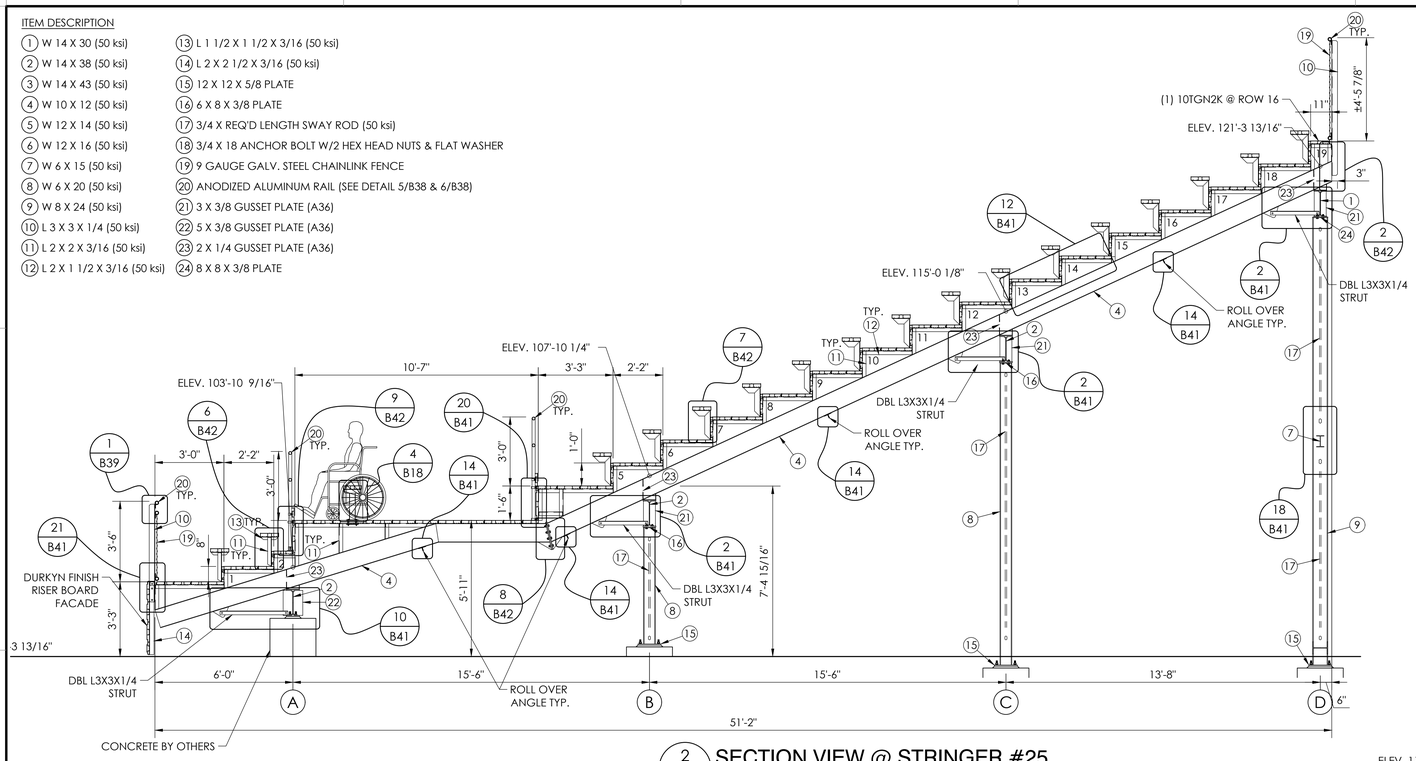

2 / B11 SECTION VIEW @ STRINGER #25
SCALE:3/8"=1'-0"

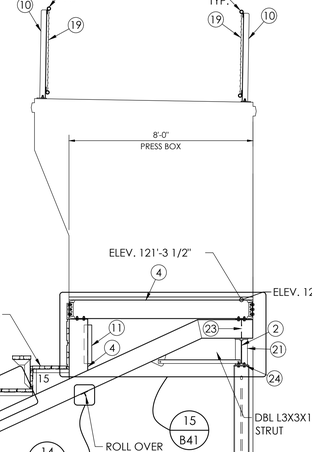

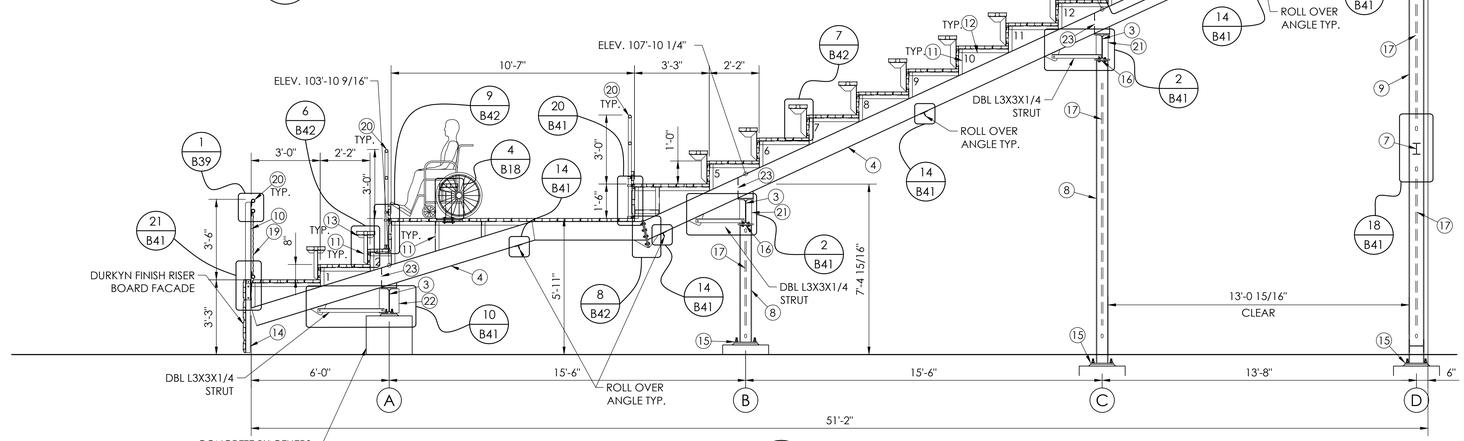

1 / B11 SECTION VIEW @ STRINGER #15
SCALE:3/8"=1'-0"

THIS DRAWING AND ALL INFORMATION THEREIN IS THE PROPERTY OF THE SOUTHERN BLEACHER COMPANY. ANY OR ETHYN WHICH CONVERSION, HIGHLIGHTED WITHOUT BEING COPIED. THIS DRAWING IS LOANED SUBJECT TO RETURN UPON DEMAND AND, IS NOT TO BE USED DIRECTLY OR INDIRECTLY IN ANY WAY DETRIMENTAL TO OUR INTERESTS.

STRUCTURAL ENGINEERS
TAYLOR & YEAN
Southern BLEACHER COMPANY
GRANDSTANDS •BLEACHERS •STADIUMS
Established 1946
553 S. Oak Knoll Ave. Pasadena, CA 91101
CONTACT: Eric Yean
PH: (626) 793-2438
FAX: (626) 793-2439
EMAIL: eric@taylorandyean.com
http://www.taylorandyean.com/
PO Box One, Graham, Texas 76450
801 Fifth Street.
Phone: 940-549-0733 Fax: 940-549-1565

REGISTERED PROFESSIONAL ENGINEER
BRIAN T. DEAN
S 6087
STRUCTURAL
STATE OF CALIFORNIA
Signed 11/13/23
PRINCIPAL

REV	BY	DATE	DESCRIPTION

SECTION VIEWS - HOME
12" RISE X 26" TREAD / 201'-6" (116/19 ROWS)

MERCED UNION HS DISTRICT
BUHACH COLONY HIGH SCHOOL
ATWATER, CALIFORNIA

DRAWN	CHECKED
JOA	DMC

05/08/2023
JOB NUMBER #23023R2
SHEET B11 OF B42

22" X 34" (1)x17
= 1/2 indicated scale)

23023R2

IDENTIFICATION STAMP
DIV. OF THE STATE ARCHITECT
APP: 02-121275 INC:
REVIEWED FOR
SS ☑ FLS ☑ ACS ☑
DATE: 12/15/2023

DESIGN California WEST
CALIFORNIA DESIGN WEST ARCHITECTS, Inc.
2100 19th Street
Sacramento, CA 95818
Phone: (916) 446-2466
Fax: (916) 446-5118
Web Page: ca-dw.com

These plans and prints thereof, as instruments of service, are owned by the architect and are for the use on this project only. Reproduction and/or distribution without the prior written consent of the architect is forbidden.
Copyright California Design West Architects, Inc.

ARCHITECT: CONSULTANT:

LICENSED ARCHITECT
MITCHELL A. MCALISTER
No. C-17250
REN. 08-31-2024
STATE OF CALIFORNIA

CONSULTANT:

PROJECT NAME:

BUHACH COLONY HIGH SCHOOL

1800 NORTH BUHACH RD
ATWATER, CA 95301

CONCESSIONS/TOILET BUILDINGS, TICKET BOOTH & STADIUM UPGRADES

MERCED UNION HIGH SCHOOL DISTRICT

MERCED COUNTY

KEY PLAN:

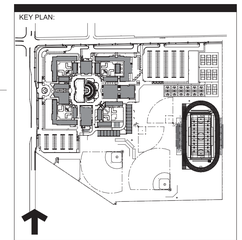

SHEET TITLE:

SECTION VIEWS - HOME

JOB NUMBER:	SHEET NUMBER:
DATE: OCT 9, 2023	**B11**
REVISION:	

ITEM DESCRIPTION

1. W 14 X 30 (50 ksi)
2. W 14 X 38 (50 ksi)
3. W 14 X 43 (50 ksi)
4. W 10 X 12 (50 ksi)
5. W 12 X 14 (50 ksi)
6. W 12 X 16 (50 ksi)
7. W 6 X 15 (50 ksi)
8. W 6 X 20 (50 ksi)
9. W 8 X 24 (50 ksi)
10. L 3 X 3 X 1/4 (50 ksi)
11. L 2 X 2 X 3/16 (50 ksi)
12. L 2 X 1 1/2 X 3/16 (50 ksi)
13. L 1 1/2 X 1 1/2 X 3/16 (50 ksi)
14. L 2 X 2 1/2 X 3/16 (50 ksi)
15. 12 X 12 X 5/8 PLATE
16. 6 X 8 X 3/8 PLATE
17. 3/4 X REQ'D LENGTH SWAY ROD (50 ksi)
18. 3/4 X 18 ANCHOR BOLT W/2 HEX HEAD NUTS & FLAT WASHER
19. 9 GAUGE GALV. STEEL CHAINLINK FENCE
20. ANODIZED ALUMINUM RAIL (SEE DETAIL 5/B38 & 6/B38)
21. 3 X 3/8 GUSSET PLATE (A36)
22. 5 X 3/8 GUSSET PLATE (A36)
23. 2 X 1/4 GUSSET PLATE (A36)
24. 8 X 8 X 3/8 PLATE

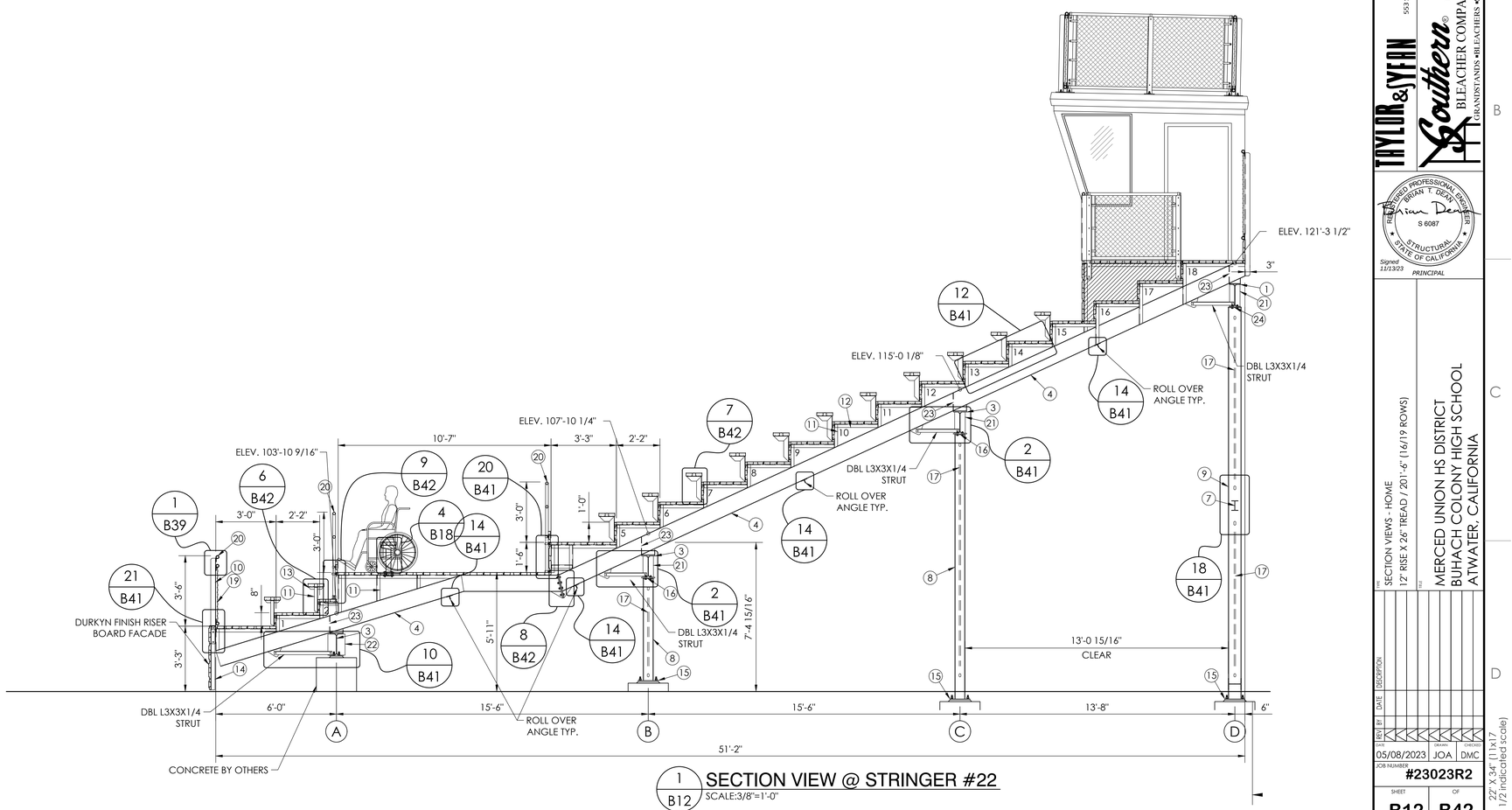

1 B12 SECTION VIEW @ STRINGER #22
SCALE:3/8"=1'-0"

THIS DRAWING AND ALL INFORMATION THEREIN IS THE PROPERTY OF THE SOUTHERN BLEACHER COMPANY, AND/OR STRYM WEISCONVISION, AND MUST NOT BE MODIFIED OR COPIED. THIS DRAWING IS LOANED SUBJECT TO RE-TURN UPON DEMAND AND, IS NOT TO BE USED DIRECTLY OR INDIRECTLY IN ANY WAY DETRIMENTAL TO OUR INTERESTS.

TAYLOR & YEAN
STRUCTURAL ENGINEERS
553 S. Oak Knoll Ave. Pasadena, CA 91101
CONTACT: Phone: (626) 793-2438
CONTACT: Fax: (626) 793-2439
CONTACT: Email: [redacted]
http://www.tayloryean.com/

Southern BLEACHER COMPANY
GRANDSTANDS •BLEACHERS •STADIUMS
PO Box One, Graham, Texas 76450
801 Fifth Street,
Phone: 940-549-0753 Fax: 940-549-1565
Established 1946

REGISTERED PROFESSIONAL ENGINEER
BRIAN T. DEAN
S 6087
STRUCTURAL
STATE OF CALIFORNIA
Signed 11/13/23
PRINCIPAL

REV	DATE	DESCRIPTION
		SECTION VIEWS - HOME
		12" RISE X 26" TREAD / 201'-6" (16/19 ROWS)

TITLE: MERCED UNION HS DISTRICT
BUHACH COLONY HIGH SCHOOL
ATWATER, CALIFORNIA

DRAWN	CHECKED
JOA	DMC

05/08/2023
JOB NUMBER #23023R2
SHEET B12 OF B42

22"X 34" (11x17 = 1/2 indicated scale)

23023R2

IDENTIFICATION STAMP
DIV. OF THE STATE ARCHITECT
APP: 02-121275 INC:
REVIEWED FOR
SS ☑ FLS ☑ ACS ☑
DATE: 12/15/2023

CALIFORNIA DESIGN WEST ARCHITECTS, Inc.

2100 19th Street
Sacramento, CA 95818

Phone: (916) 446-2466
Fax: (916) 446-5118
Web Page: ca-dw.com

These plans and prints thereof, as instruments of service, are owned by the architect and are for the use on this project only. Reproduction and/or distribution without the prior written consent of the architect is forbidden.

Copyright California Design West Architects, Inc.

ARCHITECT: CONSULTANT:

LICENSED ARCHITECT
MITCHELL A. MCALISTER
LICENSE NO. C-17258
EXPIRATION 08-31-2025
STATE OF CALIFORNIA

CONSULTANT:

PROJECT NAME:

BUHACH COLONY HIGH SCHOOL

1800 NORTH BUHACH RD
ATWATER, CA 95301

CONCESSIONS/TOILET BUILDINGS, TICKET BOOTH & STADIUM UPGRADES

MERCED UNION HIGH SCHOOL DISTRICT

MERCED COUNTY

KEY PLAN:

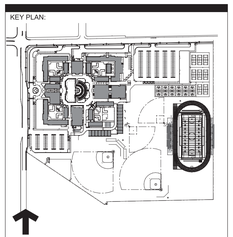

SHEET TITLE:

SECTION VIEWS - HOME

JOB NUMBER:	SHEET NUMBER:
DATE: OCT 9, 2023	**B12**
REVISION:	

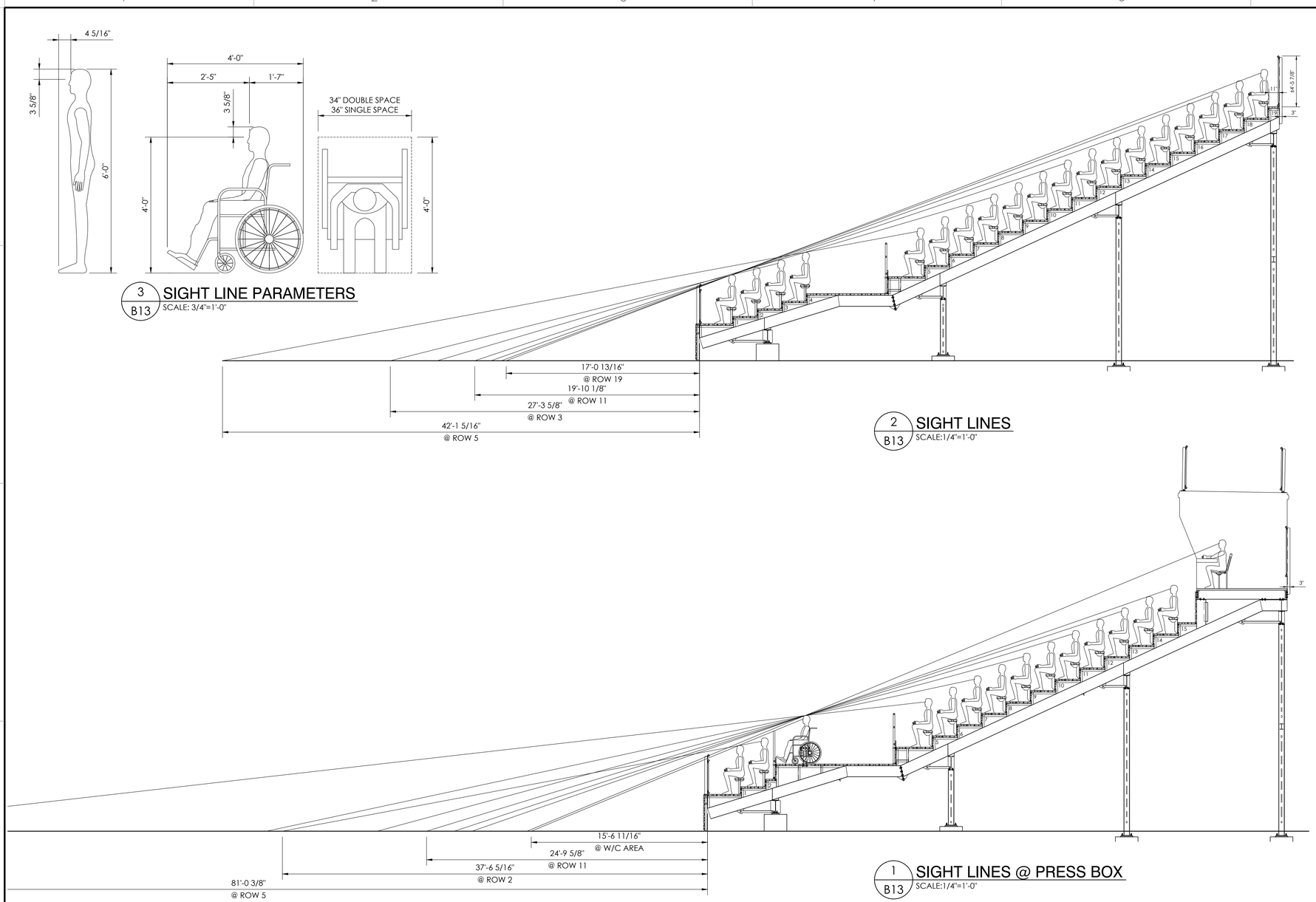

THIS DRAWING AND ALL INFORMATION THEREIN IS THE PROPERTY OF THE SOUTHERN BLEACHER COMPANY. SAVE & SPAN NO CONVERSION, REPRODUCTION OR WHOLE OR IN PART COPIED. THIS DRAWING IS LOANED SUBJECT TO RE-TURN UPON DEMAND AND, IS NOT TO BE USED DIRECTLY OR INDIRECTLY IN ANY WAY DETRIMENTAL TO OUR INTERESTS.

STRUCTURAL ENGINEERS
CENTRAL OFFICE: Ph: (626) 793-7438 Fax: (626) 793-7439
CONTACT OFFICE: Ph: (800) 279-3881
553 S. Oak Knoll Ave. Pasadena, CA 91101
http://www.taylorsyfan.com/

TAYLOR & SYFAN

Southern® BLEACHER COMPANY
GRANDSTANDS • BLEACHERS • STADIUMS
PO Box One, Graham, Texas 76450
801 Fifth Street
Phone: 940/549-0733 Fax: 940/549-1365
Established 1946

REGISTERED PROFESSIONAL ENGINEER
BRIAN T. DEAN
S 6087
STRUCTURAL
STATE OF CALIFORNIA
Signed 11/13/23
PRINCIPAL

TITLE: SIGHT LINES - HOME
12" RISE X 26" TREAD / 201'-6" (16/19 ROWS)

TITLE: MERCED UNION HS DISTRICT
BUHACH COLONY HIGH SCHOOL
ATWATER, CALIFORNIA

REV	BY	DATE	DESCRIPTION

DATE	DRAWN	CHECKED
05/08/2023	JOA	DMC

JOB NUMBER: #23023R2

SHEET B13 OF B42

22" X 34" (11x17 = 1/2 indicated scale)

23023R2

IDENTIFICATION STAMP
DIV. OF THE STATE ARCHITECT
APP: 02-121275 INC:
REVIEWED FOR
SS ☑ FLS ☑ ACS ☑
DATE: 12/15/2023

DESIGN California WEST

CALIFORNIA DESIGN
WEST ARCHITECTS, Inc.

2100 19th Street
Sacramento, CA 95818

Phone: (916) 446-2466
Fax: (916) 446-5118
Web Page: ca-dw.com

These plans and prints thereof, as instruments of service, are owned by the architect and are for the use on this project only. Reproduction and/or distribution without the prior written consent of the architect is forbidden.

Copyright California Design West Architects, Inc.

ARCHITECT: CONSULTANT:

LICENSED ARCHITECT
MITCHELL A. McALLISTER
NO. C-17250
REN. 2-28-2025
STATE OF CALIFORNIA

CONSULTANT:

PROJECT NAME:

BUHACH COLONY HIGH SCHOOL

1800 NORTH BUHACH RD
ATWATER, CA 95301

CONCESSIONS/TOILET BUILDINGS, TICKET BOOTH & STADIUM UPGRADES

MERCED UNION HIGH SCHOOL DISTRICT

MERCED COUNTY

KEY PLAN:

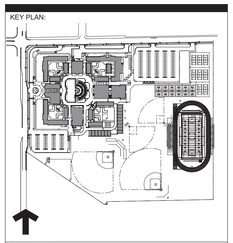

SHEET TITLE:

SIGHT LINES - HOME

JOB NUMBER:

SHEET NUMBER: **B13**

DATE: OCT 9, 2023

REVISION:

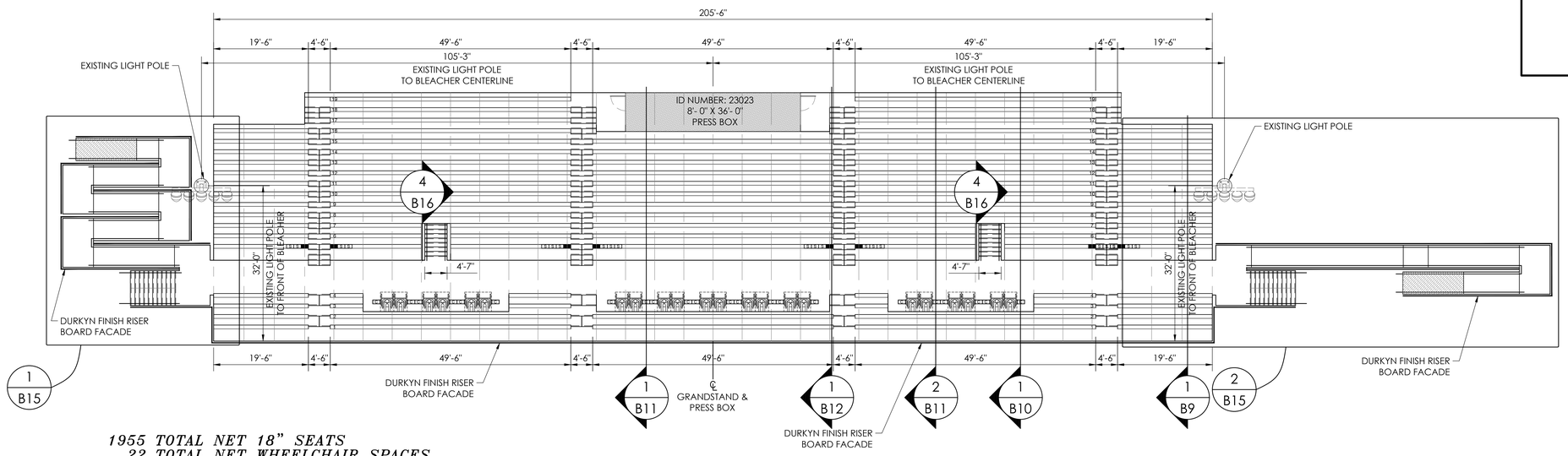

1955 TOTAL NET 18" SEATS
22 TOTAL NET WHEELCHAIR SPACES
22 TOTAL NET 18" COMPANION SEATS = C
22 TOTAL NET 18" SEMI-AMBULANT SEATS = S
8 TOTAL NET 18" AISLE SEATS = ■
2029 TOTAL SEATING CAPACITY

1 / B14 SEATING LAYOUT - HOME
SCALE:3/32"=1'-0"

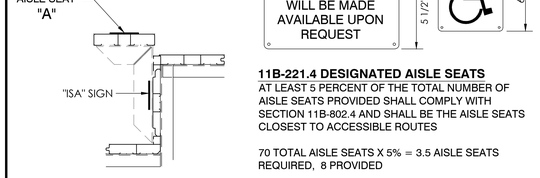

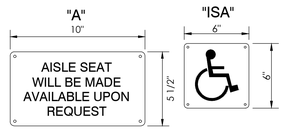

11B-221.4 DESIGNATED AISLE SEATS
AT LEAST 5 PERCENT OF THE TOTAL NUMBER OF AISLE SEATS PROVIDED SHALL COMPLY WITH SECTION 11B-802.4 AND SHALL BE THE AISLE SEATS CLOSEST TO ACCESSIBLE ROUTES

70 TOTAL AISLE SEATS X 5% = 3.5 AISLE SEATS REQUIRED, 8 PROVIDED

■ = AISLE SEATS

2 / B14 DESIGNATED AISLE SEATS
NOT TO SCALE

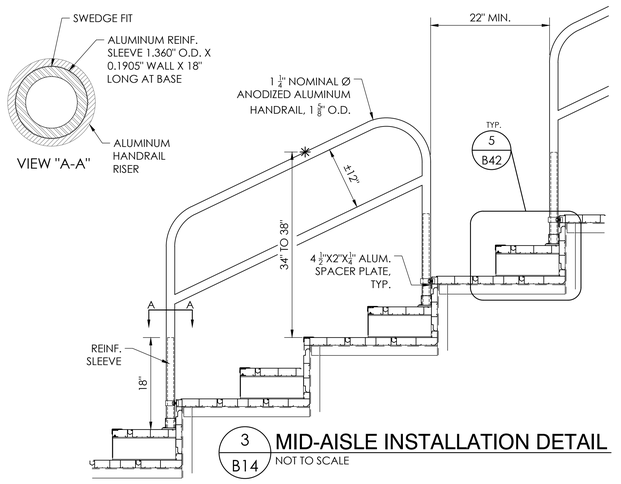

3 / B14 MID-AISLE INSTALLATION DETAIL
NOT TO SCALE

THIS DRAWING AND ALL INFORMATION THEREIN IS THE PROPERTY OF THE SOUTHERN BLEACHER COMPANY. EXCEPT FOR WHICH CONVERSION, HE HAS NOT BEEN MADE OR COPIED. THIS DRAWING IS LOANED SUBJECT TO RETURN UPON DEMAND AND, IS NOT TO BE USED DIRECTLY OR INDIRECTLY IN ANY WAY DETRIMENTAL TO OUR INTERESTS.

STRUCTURAL ENGINEERS
COVINA: Ph: (626) 252-4248 Fax: (626) 252-4298
CORONA: Ph: (951) 279-3536 Fax: (951) 279-3538
553 S. Oak Knoll Ave. Pasadena, CA 91101
http://www.taylorandyffan.com/

TAYLOR & YFFAN Southern BLEACHER COMPANY
GRANDSTANDS •BLEACHERS •STADIUMS
PO Box One, Graham, Texas 76450 Phone: 940-549-0733 Fax: 940-549-1565
801 Fifth Street, Established 1946

REGISTERED PROFESSIONAL ENGINEER BRIAN T. DEAN S 6087 STRUCTURAL STATE OF CALIFORNIA
Signed 11/13/23 PRINCIPAL

REV	DESCRIPTION	DATE	REV BY
1	SEATING LAYOUT - HOME 12" RISE X 26" TREAD / 201'-6" (16/19 ROWS)	05/08/2023	JOA

DRAWN: JOA CHECKED: DMC
JOB NUMBER #23023R2
SHEET B14 OF B42

MERCED UNION HS DISTRICT
BUHACH COLONY HIGH SCHOOL
ATWATER, CALIFORNIA

22" X 34" (11x17 = 1/2 indicated scale)

23023R2

IDENTIFICATION STAMP
DIV. OF THE STATE ARCHITECT
APP: 02-121275 INC:
REVIEWED FOR
SS ☑ FLS ☑ ACS ☑
DATE: 12/15/2023

CALIFORNIA DESIGN WEST ARCHITECTS, Inc.

2100 19th Street
Sacramento, CA 95818

Phone: (916) 446-2466
Fax: (916) 446-5118
Web Page: ca-dw.com

These plans and prints thereof, as instruments of service, are owned by the architect and are for the use on this project only. Reproduction and/or distribution without the prior written consent of the architect is forbidden.

Copyright California Design West Architects, Inc.

ARCHITECT: CONSULTANT:

LICENSED ARCHITECT MITCHELL A. MCALISTER RENEWAL 08/31/2025 STATE OF CALIFORNIA

CONSULTANT:

PROJECT NAME:

BUHACH COLONY HIGH SCHOOL

1800 NORTH BUHACH RD
ATWATER, CA 95301

CONCESSIONS/TOILET BUILDINGS, TICKET BOOTH & STADIUM UPGRADES

MERCED UNION HIGH SCHOOL DISTRICT

MERCED COUNTY

KEY PLAN:

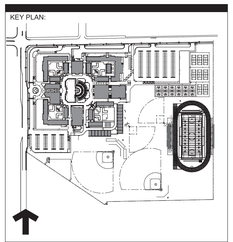

SHEET TITLE:

SEATING LAYOUT - HOME

JOB NUMBER:	SHEET NUMBER:
DATE: OCT 9, 2023	**B14**
REVISION:	

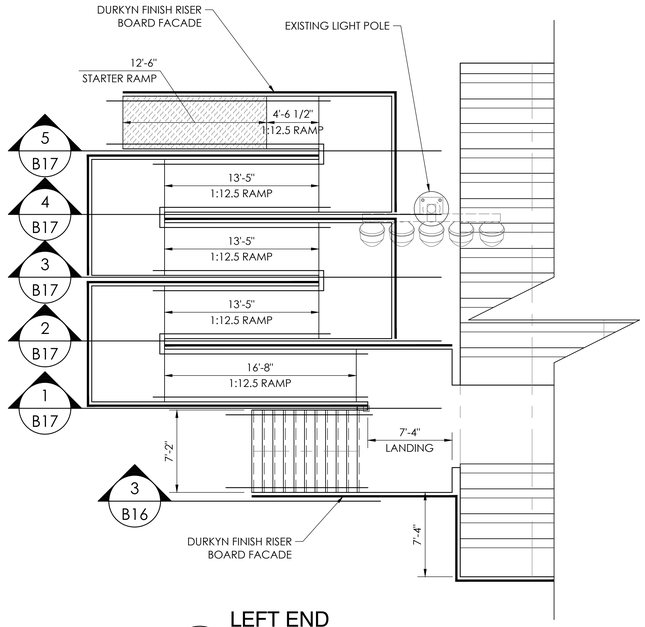

1 B15 LEFT END ENLARGED EXIT LAYOUT - HOME
SCALE:3/16"=1'-0"

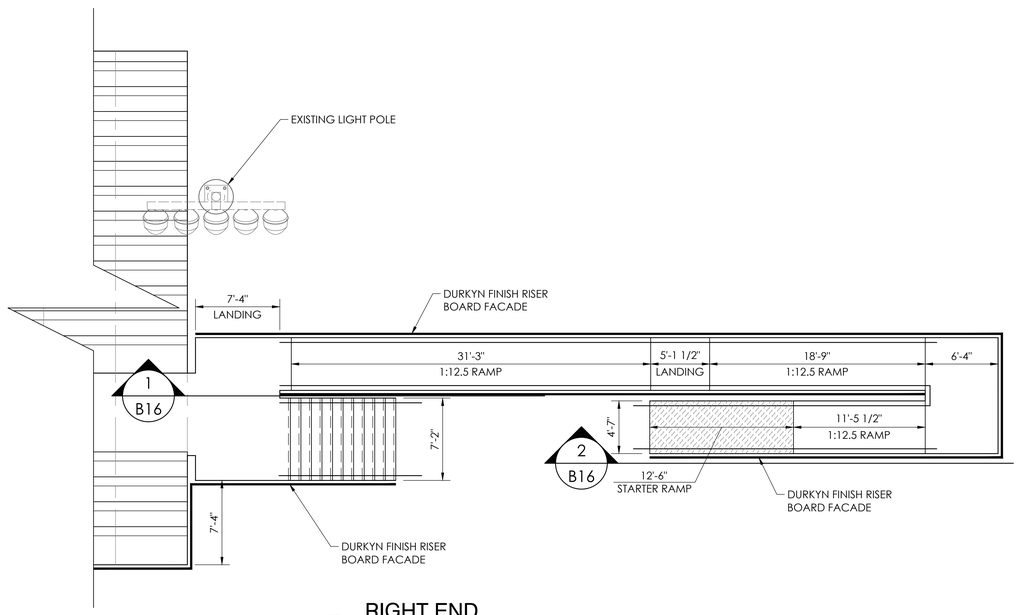

2 B15 RIGHT END ENLARGED EXIT LAYOUT - HOME
SCALE:3/16"=1'-0"

THIS DRAWING AND ALL INFORMATION THEREIN IS THE PROPERTY OF THE SOUTHERN BLEACHER COMPANY, AND IN ITS PHYSICAL FORM OR DESIGN, AS EXISTS OR IS NOT BUILT OR COPIED. THIS DRAWING IS LOANED SUBJECT TO RETURN UPON DEMAND AND, IS NOT TO BE USED DIRECTLY OR INDIRECTLY IN ANY WAY DETRIMENTAL TO OUR INTERESTS.

STRUCTURAL ENGINEERS
COVINA Ph: (626) 252-4248
CORONA Ph: (951) 279-4611
OFFICE Fax: (626) 967-0251
553 S. Oak Knoll Ave. Pasadena, CA 91101
http://www.taylorandyffan.com/

TAYLOR & YFFAN

Southern BLEACHER COMPANY Established 1946
GRANDSTANDS •BLEACHERS •STADIUMS
PO Box One, Graham, Texas 76450
801 Fifth Street,
Phone: 940-549-0753 Fax: 940-549-1565

REGISTERED PROFESSIONAL ENGINEER BRIAN T. DEAN S 6087 STRUCTURAL STATE OF CALIFORNIA
Signed 11/13/23 PRINCIPAL

REV	DATE	DESCRIPTION

DATE	DRAWN	CHECKED
05/08/2023	JOA	DMC

JOB NUMBER #23023R2

SHEET B15 OF B42

ENLARGED EXIT LAYOUT - HOME
12" RISE X 26" TREAD / 201'-6" (16/19 ROWS)

MERCED UNION HS DISTRICT
BUHACH COLONY HIGH SCHOOL
ATWATER, CALIFORNIA

22" X 34" (11 x 17 = 1/2 indicated scale)

23023R2

IDENTIFICATION STAMP
DIV. OF THE STATE ARCHITECT
APP: 02-121275 INC:
REVIEWED FOR
SS ☑ FLS ☑ ACS ☑
DATE: 12/15/2023

DESIGN WEST California

CALIFORNIA DESIGN
WEST ARCHITECTS, Inc.

2100 19th Street
Sacramento, CA 95818

Phone: (916) 446-2466
Fax: (916) 446-5118
Web Page: ca-dw.com

These plans and prints thereof, as instruments of service, are owned by the architect and are for the use on this project only. Reproduction and/or distribution without the prior written consent of the architect is forbidden.

Copyright California Design West Architects, Inc.

ARCHITECT: CONSULTANT:

LICENSED ARCHITECT MITCHELL A. MCALISTER RENEWAL 08/31/2025 NO. C-17250 STATE OF CALIFORNIA

CONSULTANT:

PROJECT NAME:

BUHACH COLONY HIGH SCHOOL

1800 NORTH BUHACH RD
ATWATER, CA 95301

CONCESSIONS/TOILET BUILDINGS, TICKET BOOTH & STADIUM UPGRADES

MERCED UNION HIGH SCHOOL DISTRICT

MERCED COUNTY

KEY PLAN:

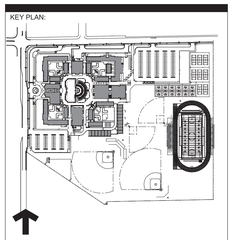

SHEET TITLE:

ENLARGED EXIT LAYOUT - HOME

JOB NUMBER:	SHEET NUMBER:
	B15
DATE: OCT 9, 2023	
REVISION:	

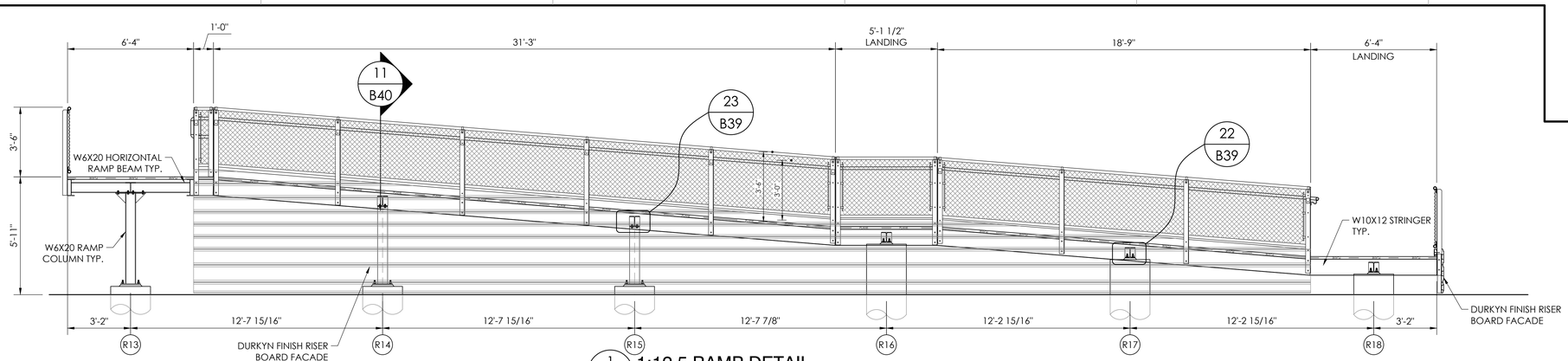

1 B16 **1:12.5 RAMP DETAIL**
SCALE:3/8"=1'-0"

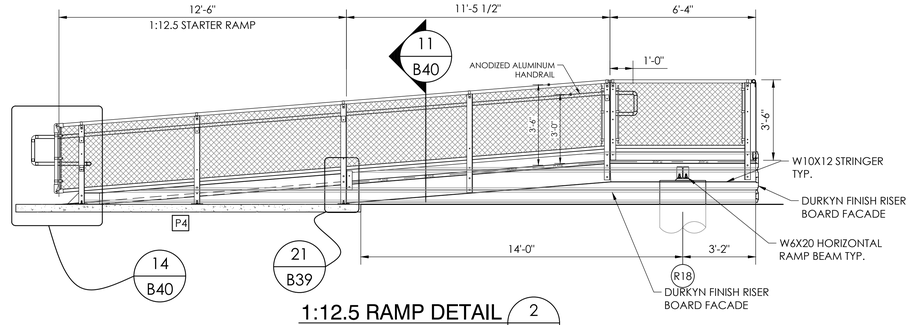

1:12.5 RAMP DETAIL 2 B16
SCALE:3/8"=1'-0"

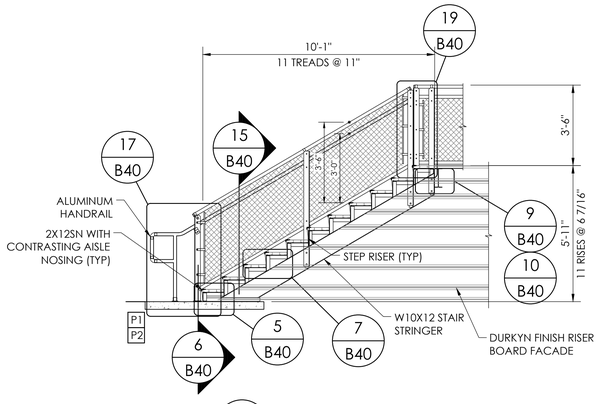

3 B16 **END EXIT STAIRS**
SCALE:3/8"=1'-0"

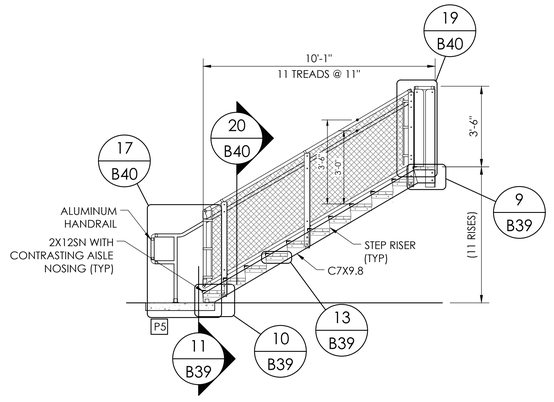

4 B16 **PORTAL EXIT STAIRS**
SCALE:3/8"=1'-0"

THIS DRAWING AND ALL INFORMATION THEREIN IS THE PROPERTY OF THE SOUTHERN BLEACHER COMPANY. AND/OR STRYKA MECHOWSKI, MCHAISTER MOTTER OR COPIED. THIS DRAWING IS LOANED SUBJECT TO RE-TURN UPON DEMAND AND, IS NOT TO BE USED DIRECTLY OR INDIRECTLY IN ANY WAY DETRIMENTAL TO OUR INTERESTS.

STRUCTURAL ENGINEERS
553 S. Oak Knoll Ave. Pasadena, CA 91101
CONTACT: Eric Strycka, P.E.
PHONE: (626) 793-2438
FAX: (626) 793-2439
EMAIL: eric@stryckaengineers.com
http://www.stryckaengineers.com/

TAYLOR & YEAHN
Southern BLEACHER COMPANY
GRANDSTANDS •BLEACHERS •STADIUMS
PO Box One, Graham, Texas 76450
801 Fifth Street
Phone: 940-549-0733 Fax: 940-549-1565
Established 1946

REGISTERED PROFESSIONAL ENGINEER
BRIAN T. DEAN
S 6087
STRUCTURAL
STATE OF CALIFORNIA
Signed 11/13/23
PRINCIPAL

REV	BY	DATE	DESCRIPTION

ITEM: EXITS - HOME 12" RISE X 26" TREAD / 201'-6" (116/19 ROWS)
FILE: MERCED UNION HS DISTRICT BUHACH COLONY HIGH SCHOOL ATWATER, CALIFORNIA

DATE	DRAWN	CHECKED
05/08/2023	JOA	DMC

JOB NUMBER: #23023R2
SHEET: B16 OF: B42
22" X 34" (1)x17 = 1/2 indicated scale)

23023R2

IDENTIFICATION STAMP
DIV. OF THE STATE ARCHITECT
APP: 02-121275 INC:
REVIEWED FOR
SS ☑ FLS ☑ ACS ☑
DATE: 12/15/2023

CALIFORNIA DESIGN
WEST ARCHITECTS, Inc.

2100 19th Street
Sacramento, CA 95818

Phone: (916) 446-2466
Fax: (916) 446-5118
Web Page: ca-dw.com

These plans and prints thereof, as instruments of service, are owned by the architect and are for the use on this project only. Reproduction and/or distribution without the prior written consent of the architect is forbidden.

Copyright California Design West Architects, Inc.

ARCHITECT: CONSULTANT:

LICENSED ARCHITECT
MITCHELL A. MCALISTER
No. C-17250
REN. 08/31/2025
STATE OF CALIFORNIA

CONSULTANT:

PROJECT NAME:

BUHACH COLONY HIGH SCHOOL

1800 NORTH BUHACH RD
ATWATER, CA 95301

CONCESSIONS/TOILET BUILDINGS, TICKET BOOTH & STADIUM UPGRADES

MERCED UNION HIGH SCHOOL DISTRICT

MERCED COUNTY

KEY PLAN:

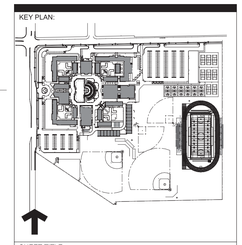

SHEET TITLE:

EXITS - HOME

JOB NUMBER:	SHEET NUMBER:
DATE: OCT 9, 2023	**B16**
REVISION:	

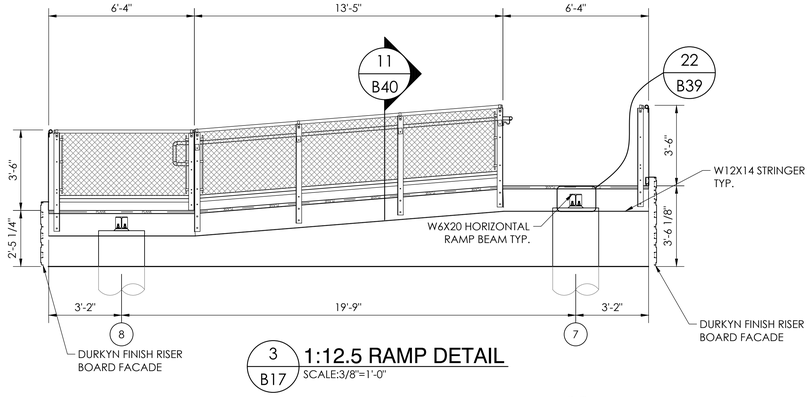

3 / B17 **1:12.5 RAMP DETAIL**
SCALE:3/8"=1'-0"

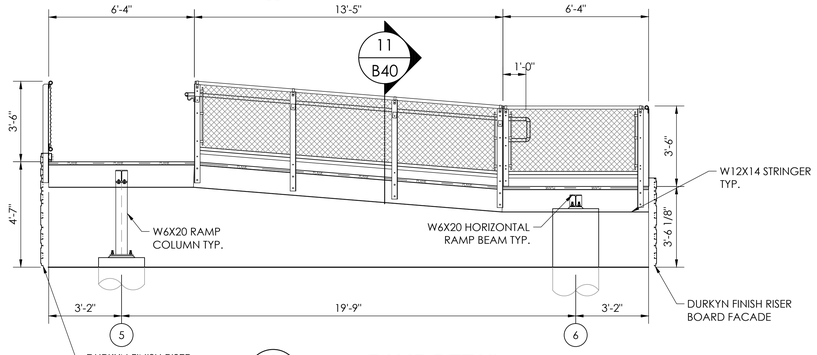

2 / B17 **1:12.5 RAMP DETAIL**
SCALE:3/8"=1'-0"

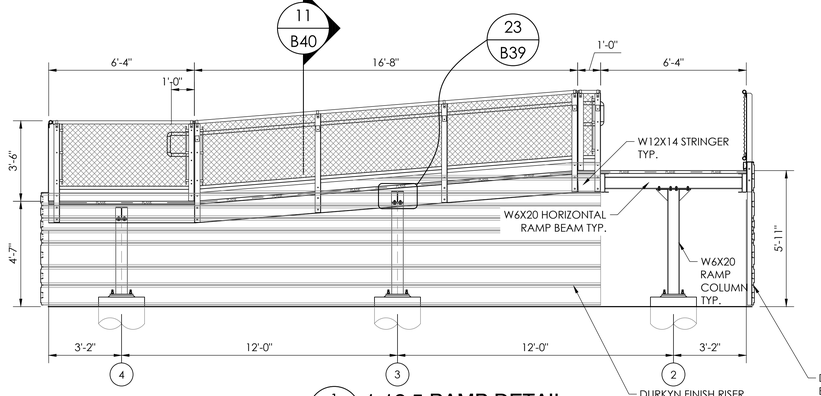

1 / B17 **1:12.5 RAMP DETAIL**
SCALE:3/8"=1'-0"

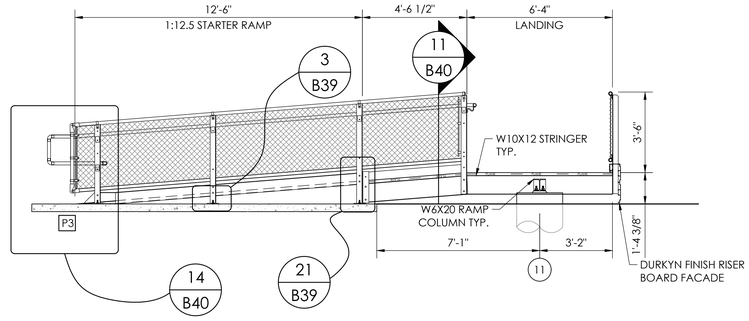

5 / B17 **1:12.5 RAMP DETAIL**
SCALE:3/8"=1'-0"

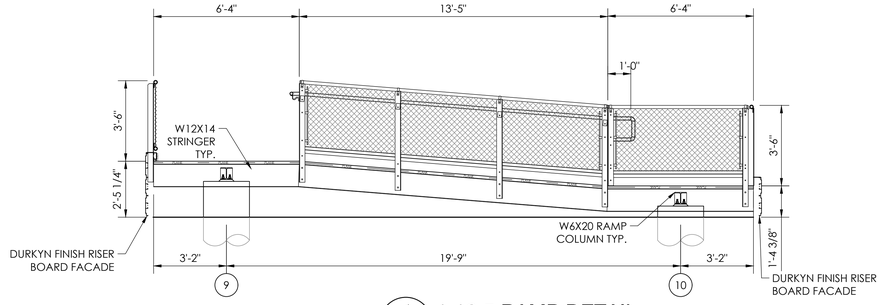

4 / B17 **1:12.5 RAMP DETAIL**
SCALE:3/8"=1'-0"

THIS DRAWING AND ALL INFORMATION THEREIN IS THE PROPERTY OF THE SOUTHERN BLEACHER COMPANY. EXCEPT FOR USE IN CONNECTION WITH WORK FOR SBC OR AS MODIFIED OR COPIED. THIS DRAWING IS LOANED SUBJECT TO RE-TURN UPON DEMAND AND, IS NOT TO BE USED DIRECTLY OR INDIRECTLY IN ANY WAY DETRIMENTAL TO OUR INTERESTS.

STRUCTURAL ENGINEERS
COVINA Ph: (626) 252-2438
COVINA Fax: (626) 252-2439
COVINA Email: TAYLOR@TAYLORSTRUCTURAL.COM
http://www.taylorstructural.com/
553 S. Oak Knoll Ave. Pasadena, CA 91101

TAYLOR & YEAN
Southern BLEACHER COMPANY
GRANDSTANDS •BLEACHERS •STADIUMS
PO Box One, Graham, Texas 76450
801 Fifth Street,
Phone: 940-549-0733 Fax: 940-549-1565
Established 1946

REGISTERED PROFESSIONAL ENGINEER
BRIAN T. DEAN
S 6087
STRUCTURAL
STATE OF CALIFORNIA
Signed 11/13/23
PRINCIPAL

EXITS - HOME
1'2" RISE X 2'6" TREAD / 201'-6" (16/19 ROWS)

REV	DATE	DESCRIPTION

DATE	DRAWN	CHECKED
05/08/2023	JOA	DMC

JOB NUMBER #23023R2

SHEET B17 OF B42

MERCED UNION HS DISTRICT
BUHACH COLONY HIGH SCHOOL
ATWATER, CALIFORNIA

22" X 34" (1:1x17 = 1/2 indicated scale)

23023R2

IDENTIFICATION STAMP
DIV. OF THE STATE ARCHITECT
APP: 02-121275 INC:
REVIEWED FOR
SS ☑ FLS ☑ ACS ☑
DATE: 12/15/2023

CALIFORNIA DESIGN WEST ARCHITECTS, Inc.

2100 19th Street
Sacramento, CA 95818

Phone: (916) 446-2466
Fax: (916) 446-5118
Web Page: ca-dw.com

These plans and prints thereof, as instruments of service, are owned by the architect and are for the use on this project only. Reproduction and/or distribution without the prior written consent of the architect is forbidden.

Copyright California Design West Architects, Inc.

ARCHITECT: CONSULTANT:

LICENSED ARCHITECT
MITCHELL A. MCALISTER
No. C-17258
REN. 08-31-2025
STATE OF CALIFORNIA

CONSULTANT:

PROJECT NAME:

BUHACH COLONY HIGH SCHOOL

1800 NORTH BUHACH RD
ATWATER, CA 95301

CONCESSIONS/TOILET BUILDINGS, TICKET BOOTH & STADIUM UPGRADES

MERCED UNION HIGH SCHOOL DISTRICT

MERCED COUNTY

KEY PLAN:

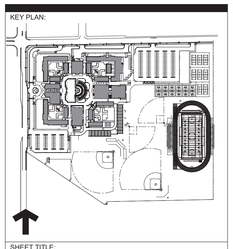

SHEET TITLE:

EXITS - HOME

JOB NUMBER:	SHEET NUMBER:
DATE: OCT 9, 2023	**B17**
REVISION:	

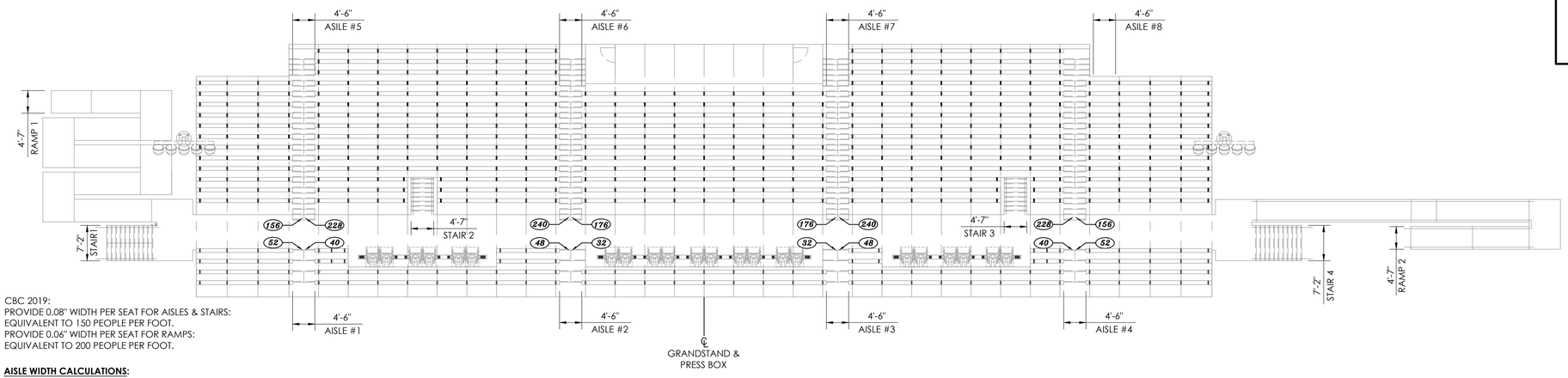

CBC 2019:
PROVIDE 0.08" WIDTH PER SEAT FOR AISLES & STAIRS:
EQUIVALENT TO 150 PEOPLE PER FOOT.
PROVIDE 0.06" WIDTH PER SEAT FOR RAMPS:
EQUIVALENT TO 200 PEOPLE PER FOOT.

AISLE WIDTH CALCULATIONS:

AISLE #1 & #4
REQUIRED AISLE WIDTH = 92 SEATS X 0.08" PER SEAT = 7.36"
<4'-0" CODE MINIMUM <4'-6" PROVIDED - OK

AISLE #2 & #3
REQUIRED AISLE WIDTH = 80 SEATS X 0.08" PER SEAT = 6.4"
<4'-0" CODE MINIMUM <4'-6" PROVIDED - OK

AISLES #5 & #8
REQUIRED AISLE WIDTH = 384 SEATS X 0.08" PER SEAT = 30.72"
<4'-0" CODE MINIMUM <4'-6" PROVIDED - OK

AISLE #6 & #7
REQUIRED AISLE WIDTH = 416 SEATS X 0.08" PER SEAT = 33.28"
<4'-0" CODE MINIMUM <4'-6" PROVIDED - OK

NOTE:
ALL AISLE SEATS QUALIFY AS DESIGNATED AISLE SEATS SINCE NO ARMRESTS OR BACKS ON ANY SEATS (SEE CBC 11B 221.4)

AISLE ACCESSWAY (SEATING EACH SIDE):
26" TREAD DEPTH
CLEAR WIDTH = DEPTH (26") LESS SEAT WIDTH (9.5") = 16.5"
21 SEATS FIRST 12" CLEAR = 21 SEATS
0.3" EACH ADDITIONAL SEAT: 16.5"-12" / 0.3" = 15 SEATS
MAXIMUM SEATS BETWEEN AISLES: 36 SEATS
MAXIMUM WIDTH BETWEEN AISLES: 36 X 1.5' / SEAT = 54'-0"
MAXIMUM ROW LENGTH SHOWN = 49'-6"

EXIT WIDTH CALCULATIONS:
STAIRS #1 & #4 @ 6'-10 3/8" = 13'-8 3/4"
STAIRS #2 & #3 @ 4'-3 3/8" = 8'-6 3/4"
22'-3 1/2" TOTAL STAIR EXIT WIDTH

RAMPS #1 & #2 @ 4'-3 3/8" = 8'-6 3/4"
8'-6 3/4" TOTAL RAMP EXIT WIDTH

STAIR EXIT CAPACITY
22'-3 1/2" X 150 PEOPLE PER FOOT = 3343 STAIR EXIT CAPACITY FURNISHED
RAMP EXIT CAPACITY
8'-6 3/4" X 200 PEOPLE PER FOOT = 1712 RAMP EXIT CAPACITY FURNISHED
5055 TOTAL EXIT CAPACITY
(ACTUAL CAPACITY 2029)

NOTE:
ALL DIMENSIONS SHOWN ON SEAT BRACKET LAYOUT ARE TO/FROM THE WELDED EDGE OF THE BRACKET

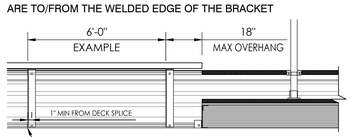

2 / B18 SEAT BRACKET SPACING
NOT TO SCALE

1 / B18 SEAT BRACKET LAYOUT - HOME
SCALE:3/32"=1'-0"

* SEATING PER SECTION
462 "L" BRACKETS (12 X 26 JIG)
28 MAVERICK BENCH LEGS
110 "T" BRACKETS (8 X 26 JIG)

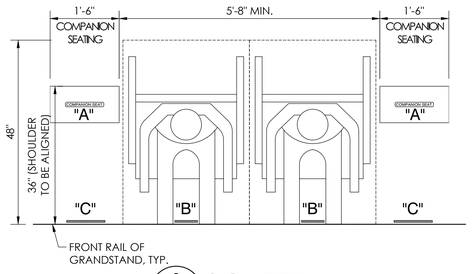

3 / B18 SIGN DETAIL
NOT TO SCALE

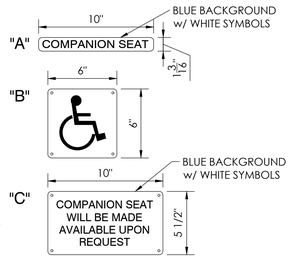

SIGNAGE TYP. @ WHEELCHAIR AREAS
A = COMPANION: 1 3/16" X 10" PLASTIC
B = ACCESSIBLE: 6" X 6" 0.040 ALUM.
C = COMPANION: 5 1/2" X 10" 0.040 ALUM.

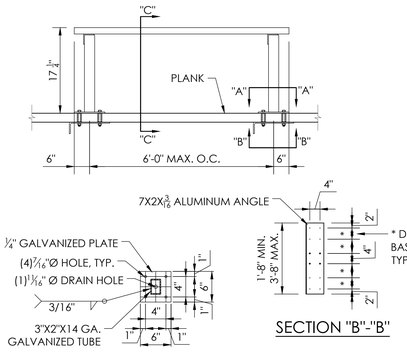

SECTION "A"-"A"

SECTION "B"-"B"

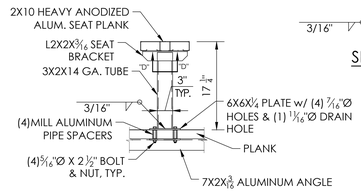

SECTION "C"-"C"

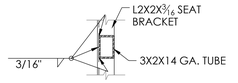

SECTION "D"-"D"

4 / B18 MAVERICK BENCH DETAIL
NOT TO SCALE

NOTE:
THIS DRAWING AND ALL INFORMATION THEREIN IS THE PROPERTY OF THE SOUTHERN BLEACHER COMPANY, SHOP STRYKER MES CONVERSION, HEXNUT ICTB WASTEC OF COPIED. THIS DRAWING IS LOANED SUBJECT TO RETURN UPON DEMAND AND, IS NOT TO BE USED DIRECTLY OR INDIRECTLY IN ANY WAY DETRIMENTAL TO OUR INTERESTS.

STRUCTURAL ENGINEERS
TAYLOR & YEAN
COVINA Ph: (626) 252-2438
CA 91723 Fax: (626) 252-2439
553 S. Oak Knoll Ave. Pasadena, CA 91101
http://www.taylorandyean.com/

Southern BLEACHER COMPANY
GRANDSTANDS •BLEACHERS •STADIUMS
PO Box One, Graham, Texas 76450
801 Fifth Street
Phone: 940-549-0733 Fax: 940-549-1565
Established 1946

REGISTERED PROFESSIONAL ENGINEER
BRIAN T. DEAN
S 6087
STRUCTURAL
STATE OF CALIFORNIA
Signed 11/13/23
PRINCIPAL

REV	DATE	DESCRIPTION
		SEAT BRACKET LAYOUT - HOME
		12" RISE X 26" TREAD / 201'-6" (16/19 ROWS)

MERCED UNION HS DISTRICT
BUHACH COLONY HIGH SCHOOL
ATWATER, CALIFORNIA

DATE	DRAWN	CHECKED
05/08/2023	JOA	DMC

JOB NUMBER #23023R2

SHEET B18 OF B42

22" X 34" (1:1x17 = 1/2" indicated scale)

23023R2

IDENTIFICATION STAMP
DIV. OF THE STATE ARCHITECT
APP: 02-121275 INC:
REVIEWED FOR
SS ☑ FLS ☑ ACS ☑
DATE: 12/15/2023

DESIGN California WEST

CALIFORNIA DESIGN WEST ARCHITECTS, Inc.

2100 19th Street
Sacramento, CA 95818

Phone: (916) 446-2466
Fax: (916) 446-5118
Web Page: ca-dw.com

These plans and prints thereof, as instruments of service, are owned by the architect and are for the use on this project only. Reproduction and/or distribution without the prior written consent of the architect is forbidden.
Copyright California Design West Architects, Inc.

ARCHITECT: CONSULTANT:

LICENSED ARCHITECT
MITCHELL A. McALISTER
LIC. NO. C-17250
STATE OF CALIFORNIA

CONSULTANT:

PROJECT NAME:

BUHACH COLONY HIGH SCHOOL

1800 NORTH BUHACH RD
ATWATER, CA 95301

CONCESSIONS/TOILET BUILDINGS, TICKET BOOTH & STADIUM UPGRADES

MERCED UNION HIGH SCHOOL DISTRICT

MERCED COUNTY

KEY PLAN:

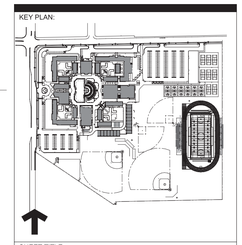

SHEET TITLE:

SEAT BRACKET LAYOUT - HOME

JOB NUMBER:	SHEET NUMBER:
DATE: OCT 9, 2023	**B18**
REVISION:	

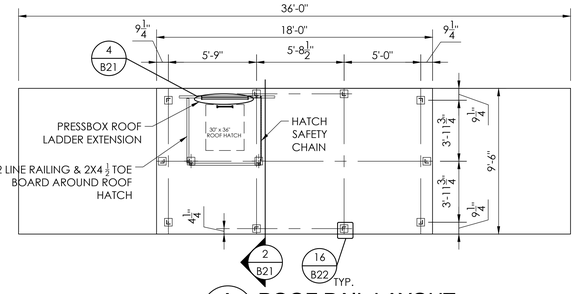

1 B19 **ROOF RAIL LAYOUT**
SCALE: 1/4"=1'-0"

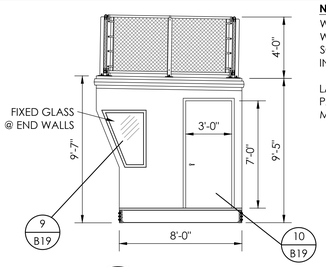

4 B19 **SIDE VIEW**
SCALE: 1/4"=1'-0"

NOTES:
WALL PANELS ARE ATTACHED: #12 TEK SCREWS, 5/16" WASHER HEAD AND SEALER.
SCREWS EACH SIDE OF HIGH RIB: 6 TOP, 6 INTERMEDIATE & 6 BOTTOM.

LAP SCREWS ARE PLACED AT EACH END OF THE PANELS, AT THE INTERMEDIATE SUPPORT AND AT THE MID POINT BETWEEN SUPPORTS (TEK #14)

ID NUMBER: 23023
8'-0" X 36'-0"
PRESS BOX

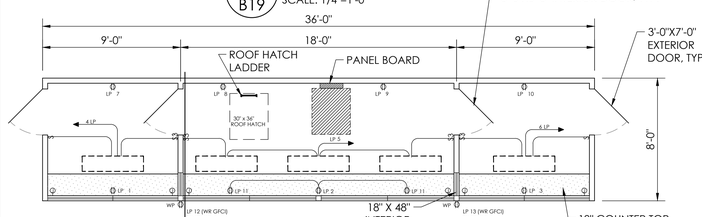

2 B19 **PLAN VIEW**
SCALE: 1/4"=1'-0"

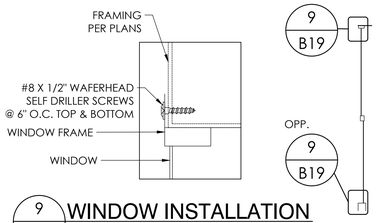

9 B19 **WINDOW INSTALLATION**
NOT TO SCALE

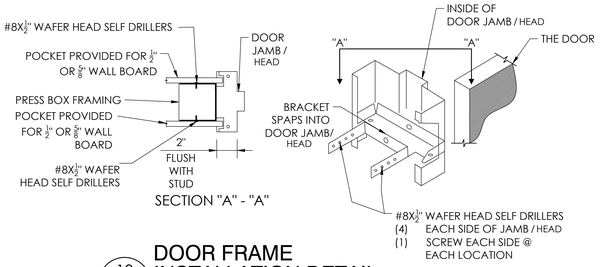

10 B19 **DOOR FRAME INSTALLATION DETAIL**
NOT TO SCALE

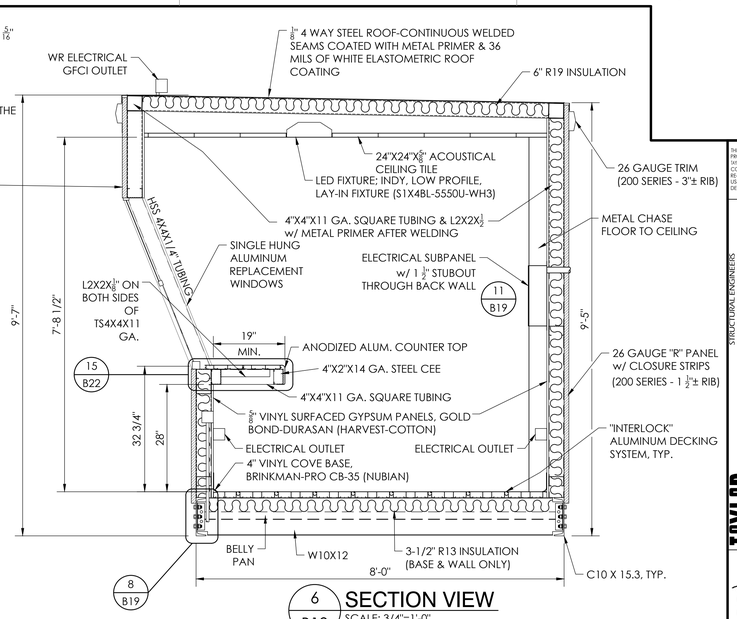

6 B19 **SECTION VIEW**
SCALE: 3/4"=1'-0"

FRONT VIEW

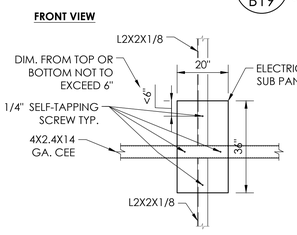

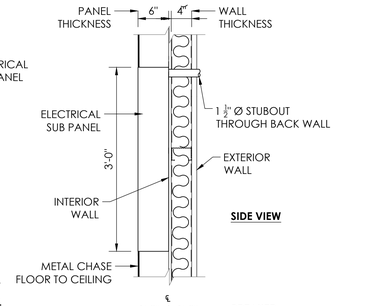

SIDE VIEW

11 B19 **ELECTRICAL SUB PANEL MOUNTING DETAIL**
NOT TO SCALE
PANEL BOARD MAX OPERATING WEIGHT: 100 LBS.

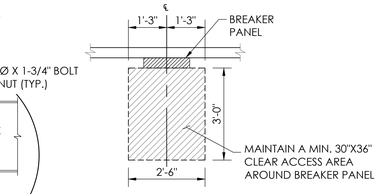

7 B19 **BREAKER PANEL ACCESS**
NOT TO SCALE

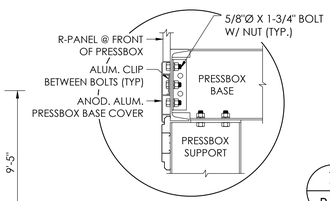

8 B19 **PRESS BOX BASE TRIM DETAIL**
NOT TO SCALE

PANEL BOARD SCHEDULE

PANEL LP — 100 AMP - 16 CIRCUIT W/ EQUIPMENT GROUND — 240/120 VOLTS — 1 PH.
MOUNTING: ☐ FLUSH ☒ SURFACE — 10,000 SYN. A.I.C. MIN. — 100 AMP MAIN BREAKER

	BREAKER SIZE	POLE	CIR. #	BUS A	BUS B	CIR. #	BREAKER SIZE	POLE	
RECPT. FRONT WALL	20	1	1	●		2	20	1	RECPT. FRONT WALL
RECPT. FRONT WALL	20	1	3		●	4	20	1	(1) LED FIXTURE
(4) LED FIXTURES	20	1	5	●		6	20	1	(1) LED FIXTURE
RECPT. BACK WALL	20	1	7		●	8	20	1	RECPT. BACK WALL
RECPT. BACK WALL	20	1	9	●		10	20	1	RECPT. BACK WALL
(2) RECPT. FRONT WALL	20	1	11		●	12	20	1	RECPT. ROOFTOP
RECPT. ROOFTOP	20	1	13	●		14	20	1	SPARE
SPARE	20	1	15		●	16			SPACE

CONDUIT WILL BE 1/2" EMT, 1/2" STEELFLEX, OR SURFACE RACEWAY UNLESS OTHERWISE NOTED

WIRING ON 20A BREAKERS WILL BE #12 = THWN - THHN

EQUIPMENT GROUND RUN IN ALL CONDUITS OR NON-METALLIC SURFACE RACEWAYS

- 20A. 125V. DUPLEX RECPT.
- $3 20A. 125V. 3 POLE SWITCH
- $ 20A. 125V. SINGLE POLE SWITCH
- J 4X4X2 1/8" JUNCTION BOX W/ 3/4"C STUBOUT
- LED FIXTURE: INDY, LOW PROFILE, LAY-IN FIXTURE (S1X4BL-5550U-WH3)

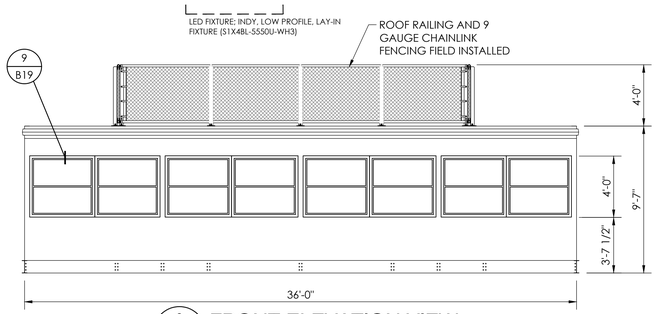

3 B19 **FRONT ELEVATION VIEW**
SCALE: 1/4"=1'-0"

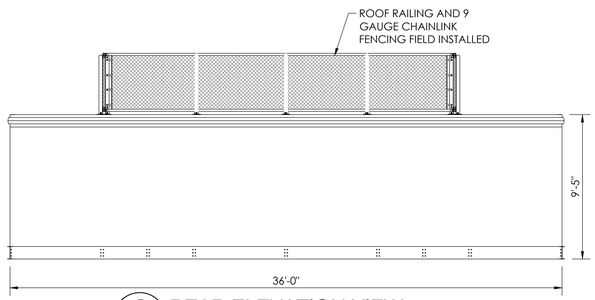

5 B19 **REAR ELEVATION VIEW**
SCALE: 1/4"=1'-0"

THIS DRAWING AND ALL INFORMATION THEREIN IS THE PROPERTY OF THE SOUTHERN BLEACHER COMPANY. EXCEPT ETPM AS HEREINAFTER, NO PART NOR ANY PART OF COPIED. THIS DRAWING IS LOANED SUBJECT TO RETURN UPON DEMAND AND, IS NOT TO BE USED DIRECTLY OR INDIRECTLY IN ANY WAY DETRIMENTAL TO OUR INTERESTS.

STRUCTURAL ENGINEERS
CA (424) 253-2438
CO/AZ (424) 253-2438
CO/AZ (303) 578-4274
http://www.taylorsyfan.com
553 S. Oak Knoll Ave. Pasadena, CA 91101

TAYLOR & YFAN

Southern BLEACHER COMPANY
GRANDSTANDS •BLEACHERS •STADIUMS
Established 1946
PO Box One, Graham, Texas 76450
801 Fifth Street,
Phone: 940-549-0733 Fax: 940-549-1565

REGISTERED PROFESSIONAL ENGINEER
BRIAN T. DEAN
S 6087
STRUCTURAL
STATE OF CALIFORNIA
Signed 11/13/23
PRINCIPAL

REV	DATE	DESCRIPTION

DATE	DRAWN	CHECKED
05/08/2023	JOA	DMC

JOB NUMBER #23023R2

SHEET B19 OF B42

PRESS BOX LAYOUT - HOME
12" RISE X 26" TREAD / 201'-6" (16/19 ROWS)

MERCED UNION HS DISTRICT
BUHACH COLONY HIGH SCHOOL
ATWATER, CALIFORNIA

22"X 34" (11x17 = 1/2 indicated scale)

IDENTIFICATION STAMP
DIV. OF THE STATE ARCHITECT
APP: 02-121275 INC:
REVIEWED FOR
SS ☑ FLS ☑ ACS ☑
DATE: 12/15/2023

DESIGN California WEST

CALIFORNIA DESIGN WEST ARCHITECTS, Inc.

2100 19th Street
Sacramento, CA 95818

Phone: (916) 446-2466
Fax: (916) 446-5118
Web Page: ca-dw.com

These plans and prints thereof, as instruments of service, are owned by the architect and are for the use on this project only. Reproduction and/or distribution without the prior written consent of the architect is forbidden.

Copyright California Design West Architects, Inc.

ARCHITECT: CONSULTANT:

LICENSED ARCHITECT MITCHELL A. MCALISTER RENEWAL 08/31/2025 OF CALIFORNIA

CONSULTANT:

PROJECT NAME:

BUHACH COLONY HIGH SCHOOL

1800 NORTH BUHACH RD
ATWATER, CA 95301

CONCESSIONS/TOILET BUILDINGS, TICKET BOOTH & STADIUM UPGRADES

MERCED UNION HIGH SCHOOL DISTRICT

MERCED COUNTY

KEY PLAN:

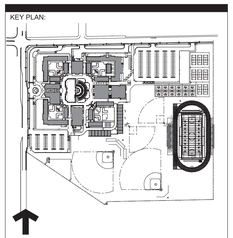

SHEET TITLE:

PRESS BOX LAYOUT - HOME

JOB NUMBER:	SHEET NUMBER:
DATE: OCT 9, 2023	**B19**
REVISION:	

23023R2

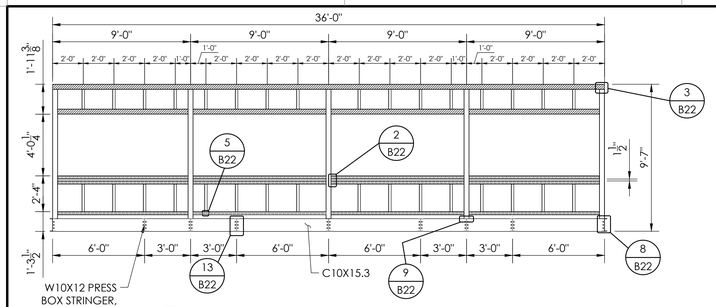

1 B20 FRONT ELEVATION FRAMING
SCALE: 1/4"=1'-0"

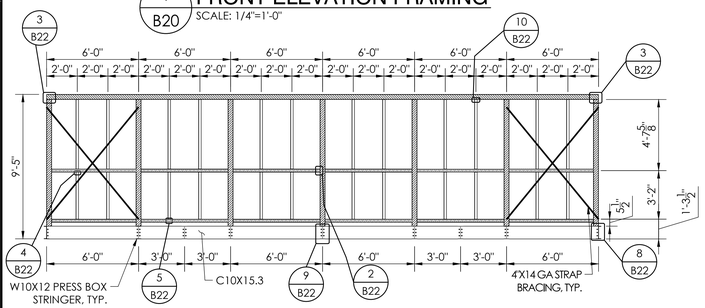

2 B20 REAR ELEVATION FRAMING
SCALE: 1/4"=1'-0"

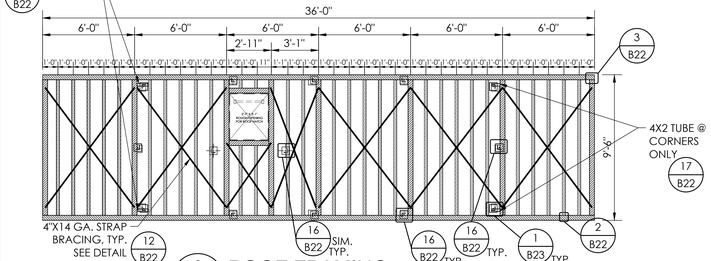

3 B20 ROOF FRAMING
SCALE: 1/4"=1'-0"

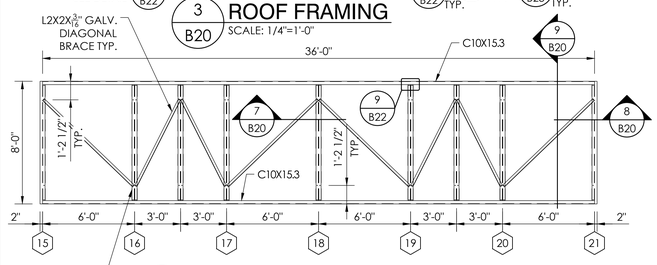

4 B20 BASE STRUCTURE FRAMING
SCALE: 1/4"=1'-0"

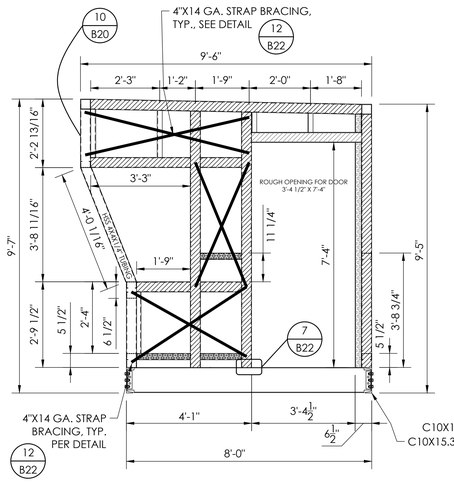

5 B20 SIDE STRUCTURAL LAYOUT
SCALE: 1/2"=1'-0" (RIGHT END)

6 B20 SIDE STRUCTURAL LAYOUT
SCALE: 1/2"=1'-0" (LEFT END)

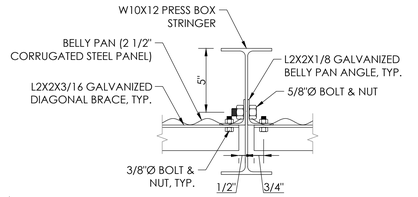

7 B20 BELLY PAN ATTACHMENT
NOT TO SCALE

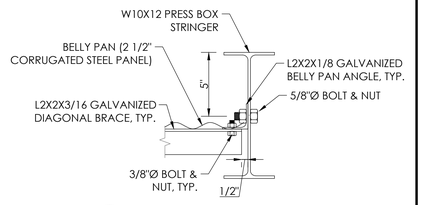

8 B20 BELLY PAN ATTACHMENT
NOT TO SCALE

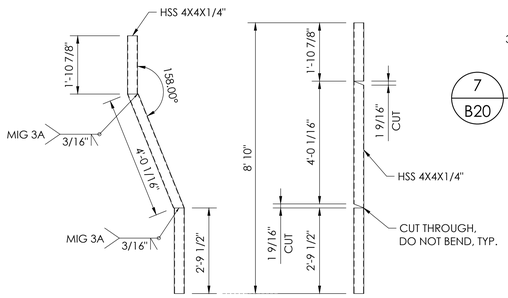

10 B20 COLUMN SPLICE DETAIL
NOT TO SCALE

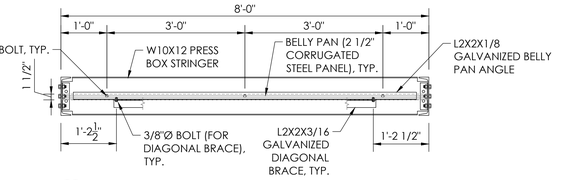

9 B20 BELLY PAN ANGLE ATTACHMENT
NOT TO SCALE

STEEL KEY	
	= 4" SQUARE X 1/4" TUBING TYP.
	= 4" SQUARE X 11 GA. TUBING TYP.
	= 4X2 1/2X14 GA. CEE
	= 2 X 2 X 1/8" ANGLE
	= 4"X14 GA. STRAP BRACING, TYP. SEE DETAIL 12 B22

STEEL PROPERTIES			
TUBE	4" SQUARE X 11 GA. TUBE	A500 GRADE B	Fy = 46ksi, MIN.
DIAGONAL ANGLE	L2 X 2 X 3/16"	A572 / A529	Fy = 50ksi, MIN.
BELLY PAN ANGLE	L2 X 2 X 1/8"	A572 / A529	Fy = 50ksi, MIN.
CEES	4 X 2 1/2 X 14 GA.	A1011 / A653	Fy = 55ksi, MIN.
FLAT STRAP	4" X 14 GA.	A1011 / A653	Fy = 55ksi, MIN.
ROOF PLATE	11GA. OR 1/8"	A1011 / A653 / A786	Fy = 27ksi, MIN.

THIS DRAWING AND ALL INFORMATION THEREIN IS THE PROPERTY OF THE SOUTHERN BLEACHER COMPANY. EXCEPT WITH WRITTEN CONSENT, HE MUST NOT BE MADE OR COPIED. THIS DRAWING IS LOANED SUBJECT TO RETURN UPON DEMAND AND, IS NOT TO BE USED DIRECTLY OR INDIRECTLY IN ANY WAY DETRIMENTAL TO OUR INTERESTS.

STRUCTURAL ENGINEERS
TAYLOR & YIP AIA
CONSULTING | Phone (626) 793-2438 | Fax (626) 793-2439
CIVIL | Phone (626) 793-2438 | Fax (626) 793-2439
COASTAL | Phone (805) 985-8161 | Fax (805) 985-8172
553 S. Oak Knoll Ave. Pasadena, CA 91101
http://www.taylorandyip.com/
Southern BLEACHER COMPANY
GRANDSTANDS •BLEACHERS •STADIUMS
Established 1946
PO Box One, Graham, Texas 76450
Phone: 940-549-0733 Fax: 940-549-1565
801 Fifth Street,
REGISTERED PROFESSIONAL ENGINEER BRIAN T. DEATON S 6087 STRUCTURAL STATE OF CALIFORNIA
Signed 11/13/23
PRINCIPAL

REV	DATE	DESCRIPTION
1		PRESS BOX FRAMING PLAN - HOME
2		12" RISE X 26" TREAD / 201"-6" (16/19 ROWS)

DATE	DRAWN	CHECKED
05/08/2023	JOA	DMC

JOB NUMBER: #23023R2

SHEET B20 OF B42

MERCED UNION HS DISTRICT
BUHACH COLONY HIGH SCHOOL
ATWATER, CALIFORNIA

22" X 34" (11x17 = 1/2 indicated scale)

23023R2

IDENTIFICATION STAMP
DIV. OF THE STATE ARCHITECT
APP: 02-121275 INC:
REVIEWED FOR
SS ☑ FLS ☑ ACS ☑
DATE: 12/15/2023

DESIGN California WEST
CALIFORNIA DESIGN WEST ARCHITECTS, Inc.
2100 19th Street
Sacramento, CA 95818
Phone: (916) 446-2466
Fax: (916) 446-5118
Web Page: ca-dw.com

These plans and prints thereof, as instruments of service, are owned by the architect and are for the use on this project only. Reproduction and/or distribution without the prior written consent of the architect is forbidden.
Copyright California Design West Architects, Inc.

ARCHITECT: CONSULTANT:

LICENSED ARCHITECT NO. C 17250 MITCHELL A. MCALISTER RENEWAL 08/31/2025 STATE OF CALIFORNIA

CONSULTANT:

PROJECT NAME:

BUHACH COLONY HIGH SCHOOL

1800 NORTH BUHACH RD
ATWATER, CA 95301

CONCESSIONS/TOILET BUILDINGS, TICKET BOOTH & STADIUM UPGRADES

MERCED UNION HIGH SCHOOL DISTRICT

MERCED COUNTY

KEY PLAN:

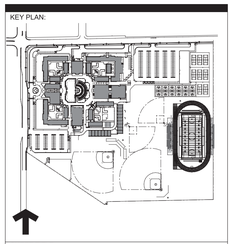

SHEET TITLE:

PRESS BOX FRAMING PLAN - HOME

JOB NUMBER:	SHEET NUMBER:
	B20
DATE: OCT 9, 2023	
REVISION:	

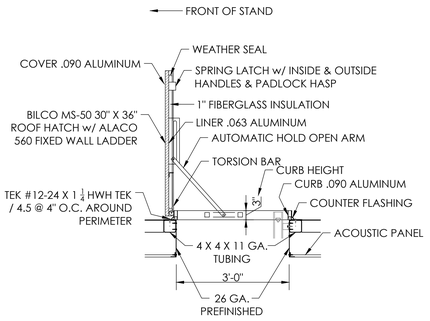

1 B21 ROOF HATCH DETAIL
NOT TO SCALE

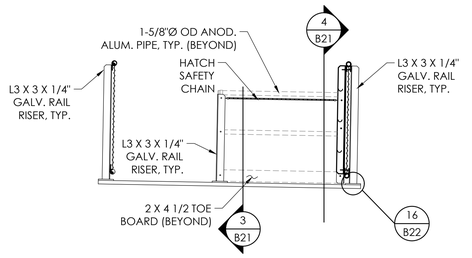

2 B21 HATCH SAFETY CHAIN & RAIL DETAIL
NOT TO SCALE

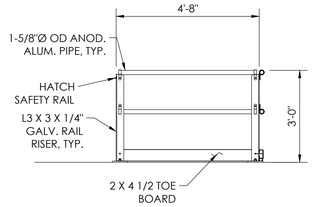

3 B21 SAFETY RAIL DETAIL
NOT TO SCALE

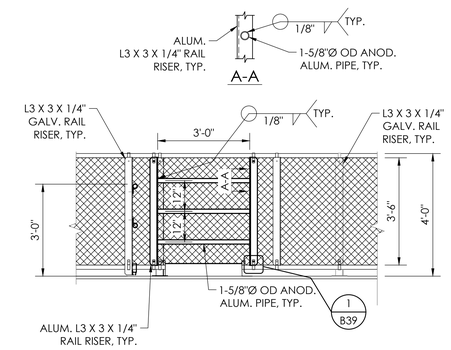

4 B21 FALL RESTRAINT / ROOF HATCH ASSIST
NOT TO SCALE

TOP OF LADDER

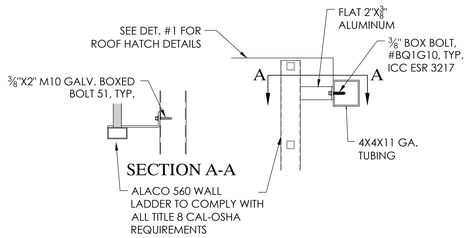

ENLARGED SIDE VIEW (AT TOP)

BOTTOM OF LADDER

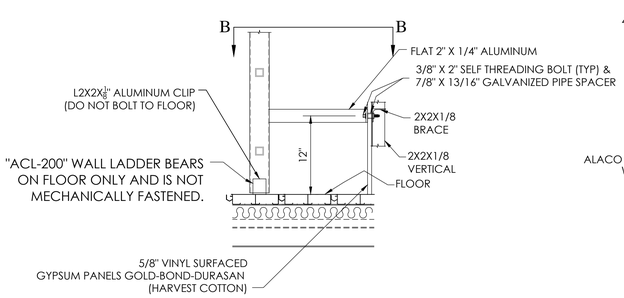

SIDE VIEW (AT BOTTOM)

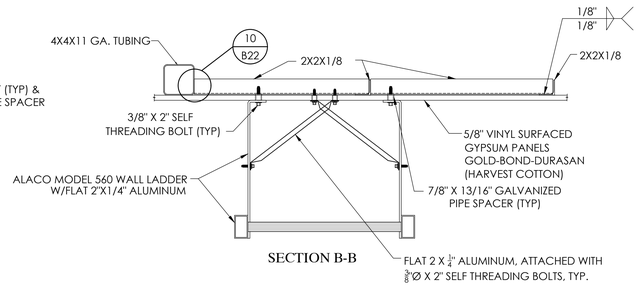

TOP VIEW (AT BOTTOM)

5 B21 LADDER CONNECTION DETAIL
NOT TO SCALE

THE DRAWING AND ALL INFORMATION THEREIN IS THE PROPERTY OF THE SOUTHERN BLEACHER COMPANY. AISCR STRYH WEICOVERSION, HEHISTICB WASTIBSC OF COPIED. THIS DRAWING IS LOANED SUBJECT TO BE RETURN UPON DEMAND AND, IS NOT TO BE USED DIRECTLY OR INDIRECTLY IN ANY WAY DETRIMENTAL TO OUR INTERESTS.

STRUCTURAL ENGINEERS
COVINA Ph: (626) 252-2438
SAN DIEGO Ph: (760) 753-7478
553 S. Oak Knoll Ave. Pasadena, CA 91101
http://www.taylorandyffan.com

TAYLOR & YFFAN
Southern BLEACHER COMPANY
GRANDSTANDS •BLEACHERS •STADIUMS
PO Box One, Graham, Texas 76450
801 Fifth Street,
Phone: 940-549-0733 Fax: 940-549-1565
Established 1946

REGISTERED PROFESSIONAL ENGINEER BRIAN T. DEAN S 6087 STRUCTURAL STATE OF CALIFORNIA
Signed 11/13/23 PRINCIPAL

REV	DESCRIPTION	DATE
1	PRESS BOX ROOF HATCH - HOME 12" RISE X 26" TREAD / 201'-6" (16/19 ROWS)	
2	MERCED UNION HS DISTRICT BUHACH COLONY HIGH SCHOOL ATWATER, CALIFORNIA	

DRAWN	CHECKED
05/08/2023	JOA DMC

JOB NUMBER #23023R2

SHEET B21 OF B42

22" X 34" (11x17 = 1/2 indicated scale)

23023R2

IDENTIFICATION STAMP
DIV. OF THE STATE ARCHITECT
APP: 02-121275 INC:
REVIEWED FOR
SS ☑ FLS ☑ ACS ☑
DATE: 12/15/2023

DESIGN California WEST

CALIFORNIA DESIGN
WEST ARCHITECTS, Inc.

2100 19th Street
Sacramento, CA 95818

Phone: (916) 446-2466
Fax: (916) 446-5118
Web Page: ca-dw.com

These plans and prints thereof, as instruments of service, are owned by the architect and are for the use on this project only. Reproduction and/or distribution without the prior written consent of the architect is forbidden.

Copyright California Design West Architects, Inc.

ARCHITECT: CONSULTANT:

LICENSED ARCHITECT MITCHELL A. MCALISTER RENEWAL 08/31/2025 STATE OF CALIFORNIA

CONSULTANT:

PROJECT NAME:

BUHACH COLONY HIGH SCHOOL

1800 NORTH BUHACH RD
ATWATER, CA 95301

CONCESSIONS/TOILET BUILDINGS, TICKET BOOTH & STADIUM UPGRADES

MERCED UNION HIGH SCHOOL DISTRICT

MERCED COUNTY

KEY PLAN:

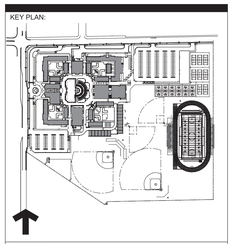

SHEET TITLE:

PRESS BOX ROOF HATCH - HOME

JOB NUMBER:	SHEET NUMBER:
DATE: OCT 9, 2023	**B21**
REVISION:	

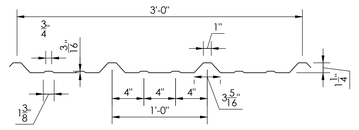

SECTION PROPERTIES								
			NEGATIVE BENDING			POSITIVE BENDING		
PANEL	Fy	WEIGHT	Ixe	Sxe	Maxo	Ixe	Sxe	Maxo
GAUGE	(KSI)	(PSF)	(IN.4/FT.)	(IN.3/FT.)	(KIP-IN.)	(IN.4/FT.)	(IN.3/FT.)	(KIP-IN.)
26	60*	0.94	0.0309	0.0449	1.8019	0.0382	0.0381	1.6759

*Fy IS 80 ksi REDUCED TO 60 ksi IN ACCORDANCE WITH THE 2016 EDITION OF THE NORTH AMERICAN SPECIFICATION FOR DESIGN OF COLD-FORMED STEEL STRUCTURAL MEMBERS. - A3.1.2

1 B22 "R" PANEL DETAIL
NOT TO SCALE

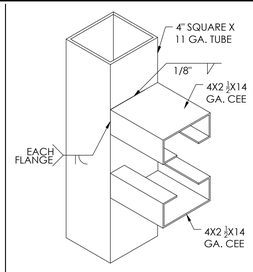

2 B22 WELD DETAIL
NOT TO SCALE

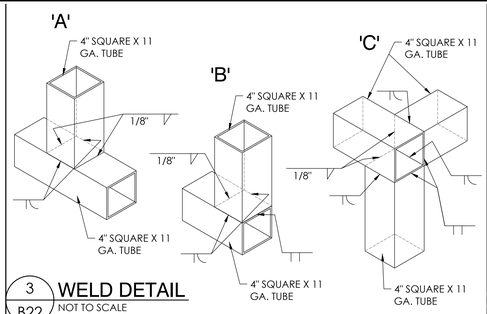

3 B22 WELD DETAIL
NOT TO SCALE

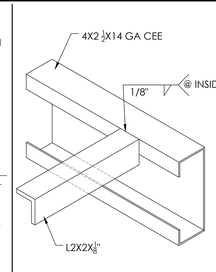

4 B22 WELD DETAIL
NOT TO SCALE

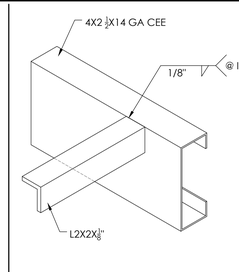

5 B22 WELD DETAIL
NOT TO SCALE

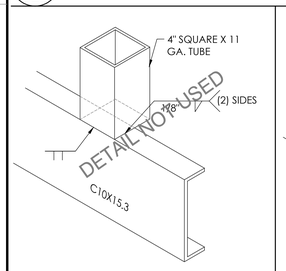

6 B22 WELD DETAIL
NOT TO SCALE

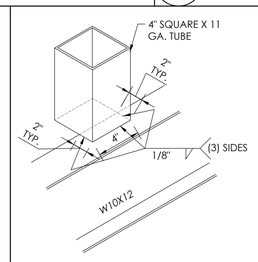

7 B22 WELD DETAIL
NOT TO SCALE

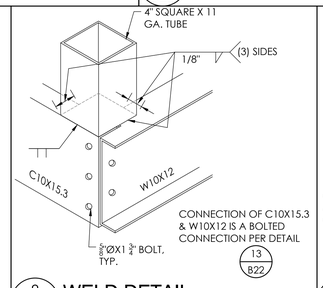

8 B22 WELD DETAIL
NOT TO SCALE

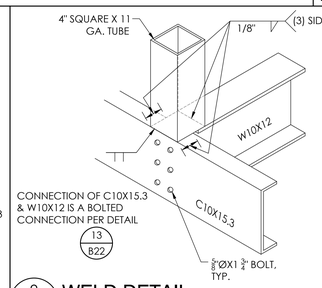

9 B22 WELD DETAIL
NOT TO SCALE

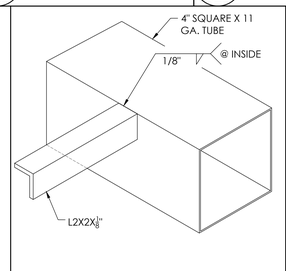

10 B22 WELD DETAIL
NOT TO SCALE

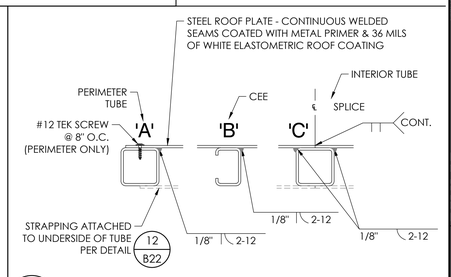

11 B22 STEEL ROOF TO TUBING
NOT TO SCALE

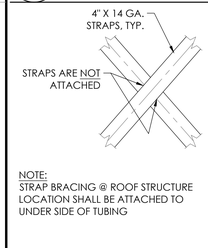

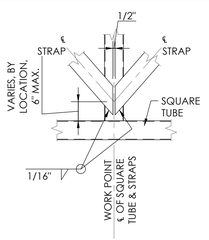

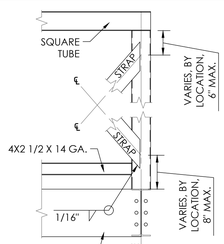

12 B22 TYP. STRAP CONN. DETAIL
NOT TO SCALE

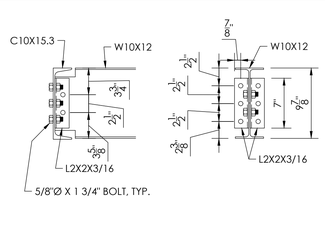

13 B22 CHANNEL CONN. DETAIL
NOT TO SCALE

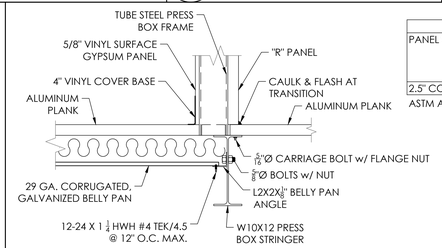

14 B22 LANDING TRANSITION DETAIL
NOT TO SCALE

SECTION PROPERTIES							
PANEL SELECTION	WIDTH in.	YIELD ksi	WEIGHT psf	TOP IN COMPRESSION		BOTTOM IN COMPRESSION	
				Ixx (IN.4/FT.)	Sxx (IN.3/FT.)	Ixx (IN.4/FT.)	Sxx (IN.3/FT.)
2.5" CORRUGATED, 29 GA. ASTM A792 GALVALUME	24	60	.62	0.0050	0.0191	0.0050	0.0185

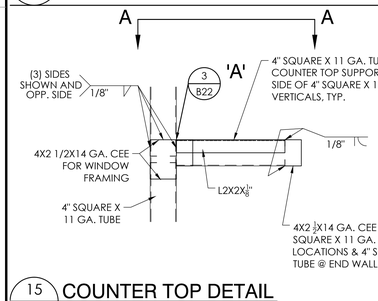

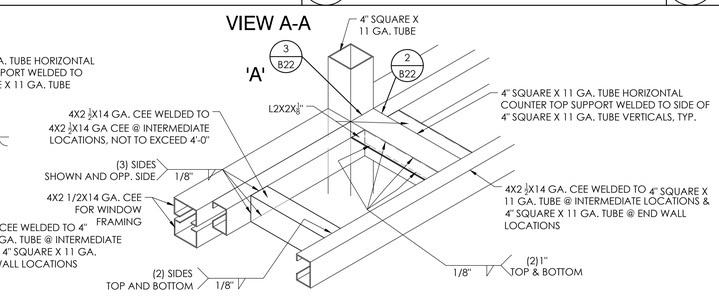

15 B22 COUNTER TOP DETAIL
NOT TO SCALE

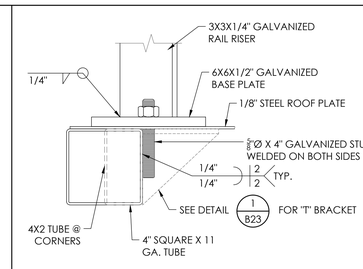

16 B22 ROOF RAIL ATTACHMENT
NOT TO SCALE

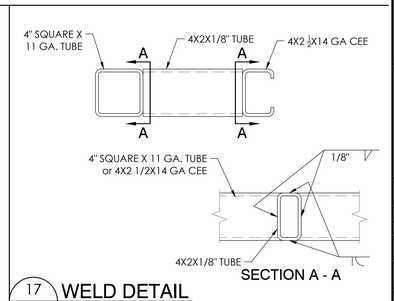

17 B22 WELD DETAIL
NOT TO SCALE

THIS DRAWING AND ALL INFORMATION THEREIN IS THE PROPERTY OF THE SOUTHERN BLEACHER COMPANY. EXCEPT FOR NEC CONDITION, HEREIT NOT BE MODIFIED OR COPIED. THIS DRAWING IS LOANED SUBJECT TO RE-TURN UPON DEMAND AND, IS NOT TO BE USED DIRECTLY OR INDIRECTLY IN ANY WAY DETRIMENTAL TO OUR INTERESTS.

STRUCTURAL ENGINEERS
TAYLOR & YFAIN
COVINA Ph: (626) 252-2438
Fax: (626) 252-2438
CORONA Ph: (951) 279-4434
Fax: (951) 279-4435
553 S. Oak Knoll Ave. Pasadena, CA 91101
http://www.tayloryfain.com/

Southern
BLEACHER COMPANY
GRANDSTANDS •BLEACHERS •STADIUMS
PO Box One, Graham, Texas 76450
801 Fifth Street,
Phone: 940-549-0733 Fax: 940-549-1565
Established 1946

REGISTERED PROFESSIONAL ENGINEER
BRIAN T. DEAN
S 6087
STRUCTURAL
STATE OF CALIFORNIA
Signed 11/13/23
PRINCIPAL

REV	BY	DATE	DESCRIPTION

JOB NUMBER: #23023R2
DATE: 05/08/2023 DRAWN: JOA CHECKED: DMC
SHEET: B22 OF: B42

22" X 34" (1"=1/2 indicated scale)

PRESS BOX DETAILS - HOME
12" RISE X 26" TREAD / 201'-6" (16/19 ROWS)

MERCED UNION HS DISTRICT
BUHACH COLONY HIGH SCHOOL
ATWATER, CALIFORNIA

23023R2

IDENTIFICATION STAMP
DIV. OF THE STATE ARCHITECT
APP: 02-121275 INC:
REVIEWED FOR
SS ☑ FLS ☑ ACS ☑
DATE: 12/15/2023

DESIGN WEST
California
CALIFORNIA DESIGN
WEST ARCHITECTS, Inc.
2100 19th Street
Sacramento, CA 95818
Phone: (916) 446-2466
Fax: (916) 446-5118
Web Page: ca-dw.com

These plans and prints thereof, as instruments of service, are owned by the architect and are for the use on this project only. Reproduction and/or distribution without the prior written consent of the architect is forbidden.
Copyright California Design West Architects, Inc.

ARCHITECT: CONSULTANT:

LICENSED ARCHITECT
No. C17258
MITCHELL A. MCALISTER
RENEWAL 08/31/2025
OF CALIFORNIA

CONSULTANT:

PROJECT NAME:

BUHACH COLONY HIGH SCHOOL

1800 NORTH BUHACH RD
ATWATER, CA 95301

CONCESSIONS/TOILET BUILDINGS, TICKET BOOTH & STADIUM UPGRADES

MERCED UNION HIGH SCHOOL DISTRICT

MERCED COUNTY

KEY PLAN:

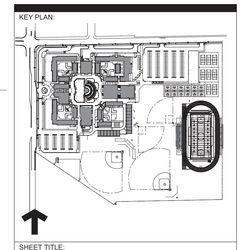

SHEET TITLE:

PRESS BOX DETAILS - HOME

JOB NUMBER:	SHEET NUMBER:
DATE: OCT 9, 2023	B22
REVISION:	

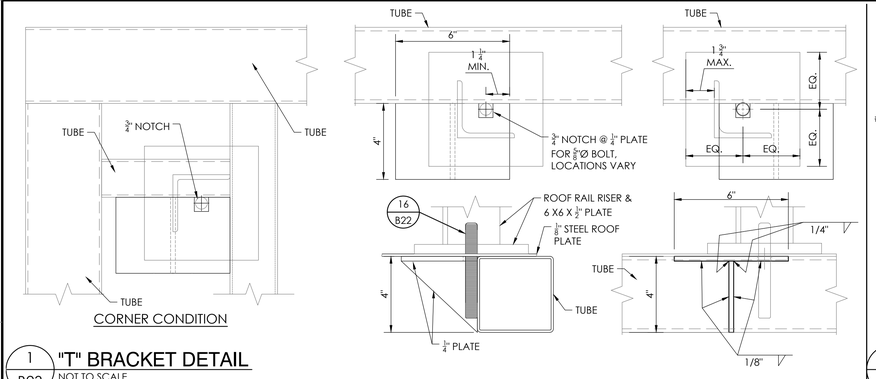

1 B23 "T" BRACKET DETAIL
NOT TO SCALE

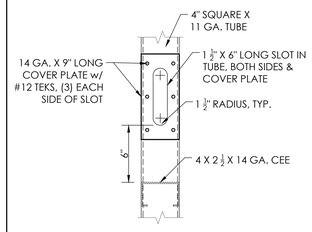

THIS DETAIL ONLY USED AS NEEDED

2 B23 CONDUIT SLOT DETAIL #1
NOT TO SCALE

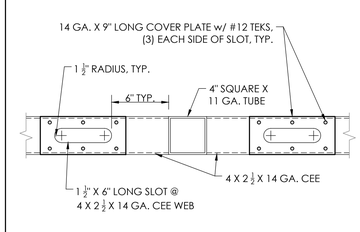

THIS DETAIL ONLY USED AS NEEDED

3 B23 CONDUIT SLOT DETAIL #2
NOT TO SCALE

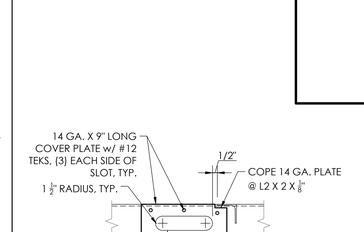

THIS DETAIL ONLY USED AS NEEDED

4 B23 CONDUIT SLOT DETAIL #3
NOT TO SCALE

SECTION PROPERTIES				
METAL STUD FRAMING / INTERIOR	3 5/8"X1 1/4"	25ga.	33ksi	ASTM C645

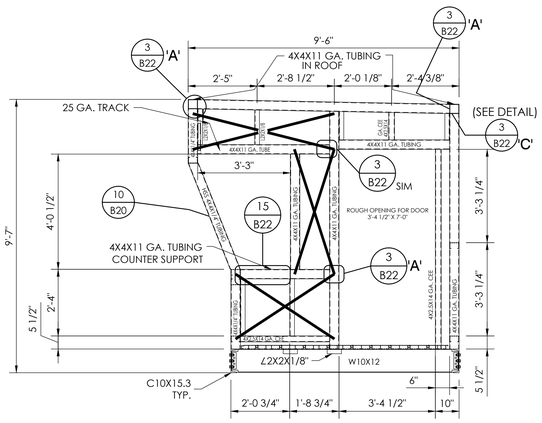

5 B23 INTERIOR WALL FRAME LAYOUT
NOT TO SCALE

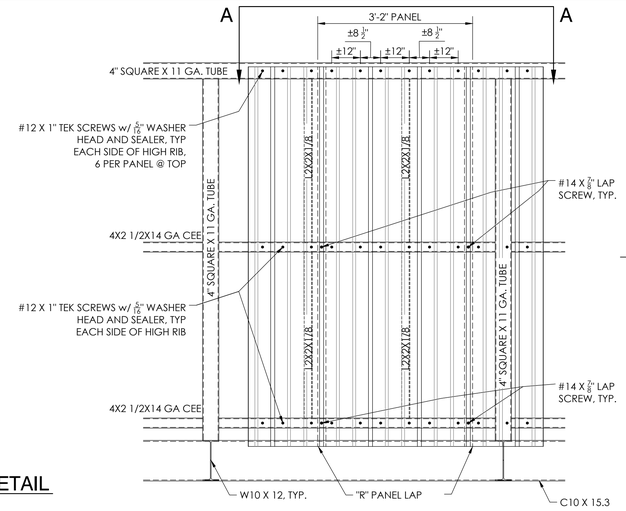

6 B23 "R" PANEL ATTACHMENT DETAIL
NOT TO SCALE

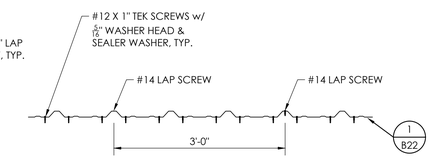

SECTION A-A

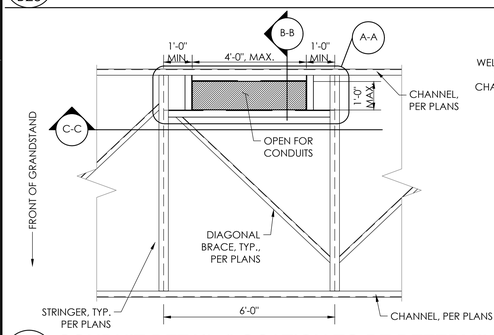

7 B23 CONDUIT DETAIL (LOCATION TO BE DETERMINED)
NOT TO SCALE

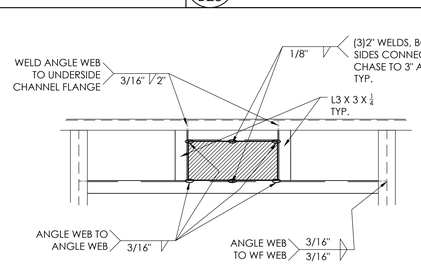

A-A WELD LOCATIONS

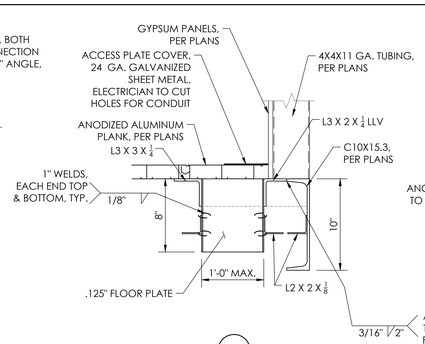

B-B SIDE VIEW

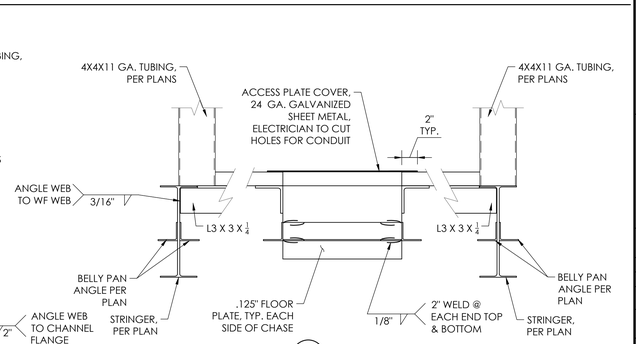

C-C FRONT VIEW

THIS DRAWING AND ALL INFORMATION THEREIN IS THE PROPERTY OF THE SOUTHERN BLEACHER COMPANY, EXCEPT WHEN NECESSARY FOR CONSTRUCTION, AND MAY NOT BE USED, COPIED, OR DISCLOSED WITHOUT WRITTEN PERMISSION OF THE SOUTHERN BLEACHER COMPANY. UPON DEMAND AND, IN ANY EVENT, UPON COMPLETION OF THE WORK, ALL DRAWINGS AND COPIES THEREOF SHALL BE RETURNED TO THE SOUTHERN BLEACHER COMPANY. THIS DRAWING IS LOANED SUBJECT TO ITS RETURN UPON DEMAND AND, IS NOT TO BE USED DIRECTLY OR INDIRECTLY IN ANY WAY DETRIMENTAL TO OUR INTERESTS.

STRUCTURAL ENGINEERS
TAYLOR & YEAH
CORONA Ph: (424) 252-2438
CORONA Fax: (424) 252-2439
CORONA Ave. Suite 200 Corona, CA 91101
http://www.taylorandyeah.com/
553 S. Oak Knoll Ave. Pasadena, CA 91101
Southern BLEACHER COMPANY
GRANDSTANDS •BLEACHERS •STADIUMS
PO Box One, Graham, Texas 76450
801 Fifth Street,
Phone: 940-549-0733 Fax: 940-549-1565
Established 1946

REGISTERED PROFESSIONAL ENGINEER
BRIAN T. DEAN
S 6087
STRUCTURAL
STATE OF CALIFORNIA
Signed 11/13/23
PRINCIPAL

NO.	DESCRIPTION	DATE	REV BY
1	PRESS BOX DETAILS - HOME 12" RISE X 26" TREAD / 201'-6" (16/19 ROWS)	05/08/2023	JOA DMC

DRAWN: JOA CHECKED: DMC
JOB NUMBER: #23023R2
SHEET B23 OF B42

MERCED UNION HS DISTRICT
BUHACH COLONY HIGH SCHOOL
ATWATER, CALIFORNIA

22" X 34" (1 1/2 indicated scale)

IDENTIFICATION STAMP
DIV. OF THE STATE ARCHITECT
APP: 02-121275 INC:
REVIEWED FOR
SS ☑ FLS ☑ ACS ☑
DATE: 12/15/2023

CALIFORNIA DESIGN WEST ARCHITECTS, Inc.
2100 19th Street
Sacramento, CA 95818
Phone: (916) 446-2466
Fax: (916) 446-5118
Web Page: ca-dw.com

These plans and prints thereof, as instruments of service, are owned by the architect and are for the use on this project only. Reproduction and/or distribution without the prior written consent of the architect is forbidden.
Copyright California Design West Architects, Inc.

ARCHITECT: CONSULTANT:

LICENSED ARCHITECT
NO. C 17250
MITCHELL A. MCALISTER
STATE OF CALIFORNIA

CONSULTANT:

PROJECT NAME:

BUHACH COLONY HIGH SCHOOL

1800 NORTH BUHACH RD
ATWATER, CA 95301

CONCESSIONS/TOILET BUILDINGS, TICKET BOOTH & STADIUM UPGRADES

MERCED UNION HIGH SCHOOL DISTRICT

MERCED COUNTY

KEY PLAN:

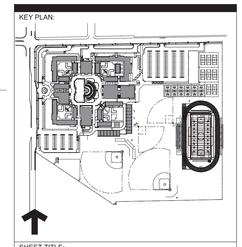

SHEET TITLE:

PRESS BOX DETAILS - HOME

JOB NUMBER:	SHEET NUMBER:
DATE: OCT 9, 2023	B23
REVISION:	

23023R2

NOTE : 7.4 OTHER DEVICES WITHIN THE CEILING
7.4.1 ALL LIGHT WEIGHT MISCELLANEOUS DEVICES, SUCH AS STROBE LIGHTS, OCCUPANCY SENSORS, SPEAKERS, EXIT SIGNS, ETC., SHALL BE ATTACHED TO THE CEILING GRID PER DETAILS #3 & #5. IN ADDITION, DEVICES WEIGHING MORE THAN 10lbs, SHALL HAVE A #12 GAGE SLACK SAFETY WIRE ANCHORED TO THE STRUCTURE ABOVE PER DETAILS #3 & #5. DEVICES WEIGHING MORE THAN 20 lbs. SHALL BE SUPPORTED FROM THE STRUCTURE ABOVE PER DETAILS #3 & #5.

COMPRESSION STRUT REQUIRED ON CEILINGS WHEN CEILING EXCEEDS 8'-0" X 12'-0" SQ. FT. AND IS ATTACHED DIRECTLY TO ROOF/CEILINGS FRAMING.
USE AS COMPRESSION STRUT TURN VERTICAL WHEN REQUIRED.
3/4x3/4x3/4x18g. COMPRESSION STRUTS;STEEL SECTION WITH L/R RATIO OF 200 MAXIMUM. ATTACH TO MAIN RUNNERS WITH 12-24X1 1/4 HWK TEK 4.5 TO 4X2.5X14ga Cee OR 4X4X11ga SQUARE TUBE WITH 12-24X1 1/4 HWK TEK 4.5 .
COMPRESSION STRUT SHALL NOT REPLACE HANGER WIRE.

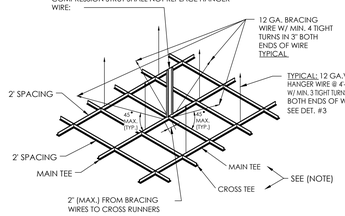

NOTE: "BRACING NOT TO BE MORE THAN 8' BY 12' ON CENTER"

(NOTE:)
(SYSTEM IS HEAVY DUTY COMPLIES WITH ASCE7.
USG TESTING REF# ICC-ES, ESR-1222
ARMSTRONG TESTING REF# ICC-ES, ESR-1308
IN REFERENCE TO DSA IR A-5.
DESIGNED IN ACCORDANCE WITH IR_25-2-19
REVISED 03/18/2022

THERE SHALL BE A BRACE ASSEMBLY A DISTANCE OF NOT MORE THAN ONE HALF OF THE ABOVE SPACING FROM EACH SURROUNDING WALL, EXPANSION JOINT AND AT THE EDGES OF ANY CEILING VERTICAL OFFSET. FOR EXAMPLE, WHERE THE BRACE SPACING IS 8'X12', THE DISTANCE SHALL BE 4 FEET IN THE DIRECTION OF THE 8 FOOT SPACING AND 6 FEET IN THE DIRECTION OF THE 12 FOOT SPACING.

2 / B24 SUSPENDED CEILING BRACING ASSEMBLY
NOT TO SCALE

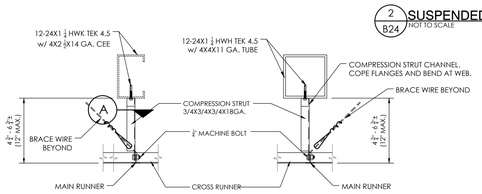

COMPRESSION STRUT ATTACHMENT DETAIL @ TOP

INSTALL COMPRESSION STRUT ON MAIN RUNNER, OFFSET 1" FROM CROSS RUNNER INTERSECTION

SECTION "A"

6 / B24 COMPRESSION STRUT DETAIL
NOT TO SCALE

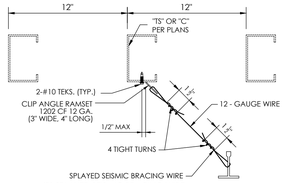

(B) SPLAYED SEISMIC BRACING WIRE ATTACHMENT

7 / B24 SPLAYED SEISMIC BRACING WIRE ATTACHMENT
NOT TO SCALE

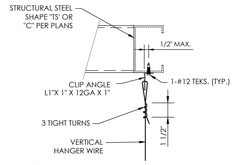

(A) VERTICAL HANGER WIRE ATTACHMENT

3 / B24 VERTICAL HANGER WIRE ATTACHMENT
NOT TO SCALE

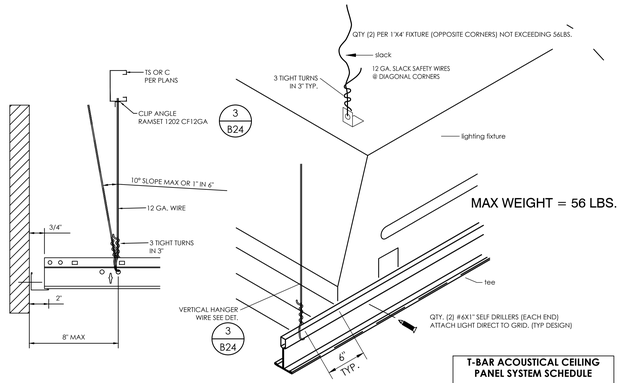

5 / B24 ISOMETRIC VIEW OF LIGHT FIXTURE @ RUNNER
NOT TO SCALE

T-BAR ACOUSTICAL CEILING PANEL SYSTEM SCHEDULE

HEAVY DUTY / ASTM CLASS / FIRE RATED

USG BRANDS: ICC-ES ESR-1222

USG - DXL-26 HD/FR (12' MAINS)
USG - DXL-424 FR (4' CROSS Ts)
USG - DXL-216 FR (2' CROSS Ts)
M7HD 12' ANGLES 7/8 (ALTERNATE)
DXF - DXF-129 (1' CROSS Ts)
2" WALL ANGLE

NOTE:
RUNNER MUST HAVE ANY INTEGRAL SPLICE JOINT WHEN JOINED WITH ADJACENT RUNNERS.

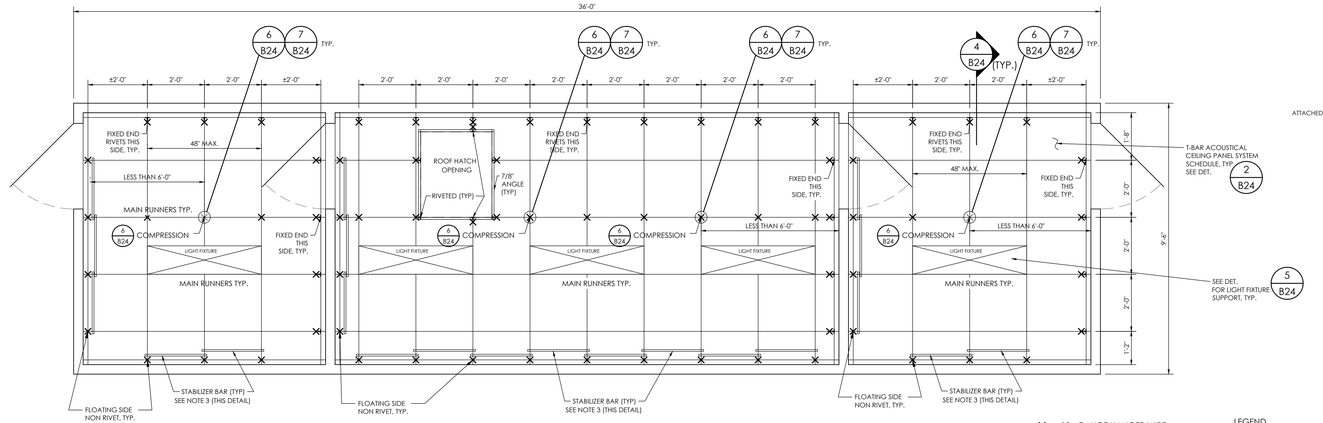

1 / B24 REFLECTED CEILING PLAN
NOT TO SCALE

TYPICAL DESIGN WHEN USING 2" ANGLE

HORIZONTAL SPREADER STRUT

SPACERS MAY BE SLOTTED ANGLES OR CHANNELS WITH "DIAMOND POINTS" OF SPRING STEEL WHICH SNAP TIGHT TO PREVENT MOVEMENT OF STRUT

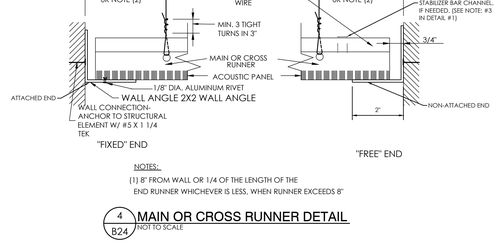

NOTES:
(1) 8" FROM WALL OR 1/4 OF THE LENGTH OF THE END RUNNER WHICHEVER IS LESS, WHEN RUNNER EXCEEDS 8"

4 / B24 MAIN OR CROSS RUNNER DETAIL
NOT TO SCALE

NOTE: ALL SUSPENSION SYSTEM WORK TO COMPLY WITH ASTM C636 AND SECTION 5.2 OF ASTM E580.

× 12 - GAUGE HANGER WIRE (SEE DET. 2/*) REF. NOTE #2

⊗ LATERAL BRACING LOCATION
(USE WHEN CEILING EXCEEDS 8'-0" X 12'-0" AND ARE DIRECTLY ATTACHED TO ROOF FRAMING)

⊥ RIVETED

LEGEND

NOTES:
(1) WALLS SHALL BE ATTACHED WITH 1/8" RIVETS ADJACENT WALL SHALL REST ON 2" WALL ANGLE OR 7/8 ANGLE WITH ADDED SEISMIC CLIP(NON-ATTACHED). 4 / B24

(2) ADDITIONAL HANGER WIRES ARE REQUIRED AT ALL WALLS. 8" MAX DISTANCE FROM WALL OR 1/4 DISTANCES THE LENGTH OF THE MEMBER. WHICHEVER IS SHORTER. WHEN GRID MEMBERS ARE 8" OR LESS, OMIT HANGER WIRE. SEE DET. 4 / B24

(3) INTERCONNECTION BETWEEN THE RUNNERS AT WALL WHEN RUNNER EXCEEDS 12" @ UNATTACHED WALLS (TYP DESIGN) SPACERS NOT REQUIRED WITH SEISMIC CLIPS.

(4) COMPRESSION STRUT AND BRACING OCCURS AT LOCATIONS NOTED IN DETAIL: AND WHERE SHOWN ON CEILING PLAN. 1 / B24

THIS DRAWING AND ALL INFORMATION THEREIN IS THE PROPERTY OF THE SOUTHERN BLEACHER COMPANY. AND/OR ITS AFFILIATES AND SHALL NOT BE USED OR COPIED. THIS DRAWING IS LOANED SUBJECT TO ITS RETURN UPON DEMAND AND, IS NOT TO BE USED DIRECTLY OR INDIRECTLY IN ANY WAY DETRIMENTAL TO OUR INTERESTS.

STRUCTURAL ENGINEERS
TAYLOR & YFAN
COVINA: Ph: (626) 252-2438
Fax: (626) 252-2438
CORONA: Ph: (951) 735-1445
Fax: (951) 735-1445
553 S. Oak Knoll Ave. Pasadena, CA 91101
http://www.taylorandyfan.com/

Southern BLEACHER COMPANY
GRANDSTANDS •BLEACHERS •STADIUMS
PO Box One, Graham, Texas 76450
801 Fifth Street,
Phone: 940-549-0733 Fax: 940-549-1565
Established 1946

REGISTERED PROFESSIONAL ENGINEER
BRIAN T. DEAN
S 6087
STRUCTURAL
STATE OF CALIFORNIA
Signed 11/13/23
PRINCIPAL

REV	DESCRIPTION	DATE
1	PRESS BOX CEILING DETAILS - HOME 12" RISE X 26" TREAD / 201'-6" (16/19 ROWS)	

DRAWN	CHECKED
05/08/2023	JOA	DMC

JOB NUMBER #23023R2

SHEET B24 OF B42

22" X 34" (11"x17" = 1/2 indicated scale)

MERCED UNION HS DISTRICT
BUHACH COLONY HIGH SCHOOL
ATWATER, CALIFORNIA

23023R2

IDENTIFICATION STAMP
DIV. OF THE STATE ARCHITECT
APP: 02-121275 INC:
REVIEWED FOR
SS ☑ FLS ☑ ACS ☑
DATE: 12/15/2023

DESIGN California WEST
CALIFORNIA DESIGN WEST ARCHITECTS, Inc.
2100 19th Street
Sacramento, CA 95818
Phone: (916) 446-2466
Fax: (916) 446-5118
Web Page: ca-dw.com

These plans and prints thereof, as instruments of service, are owned by the architect and are for the use on this project only. Reproduction and/or distribution without the prior written consent of the architect is forbidden.
Copyright California Design West Architects, Inc.

ARCHITECT: CONSULTANT:

LICENSED ARCHITECT
MITCHELL A. MCALISTER
No. C 17250
REN: 08-31-2025
STATE OF CALIFORNIA

CONSULTANT:

PROJECT NAME:

BUHACH COLONY HIGH SCHOOL

1800 NORTH BUHACH RD
ATWATER, CA 95301

CONCESSIONS/TOILET BUILDINGS, TICKET BOOTH & STADIUM UPGRADES

MERCED UNION HIGH SCHOOL DISTRICT

MERCED COUNTY

KEY PLAN:

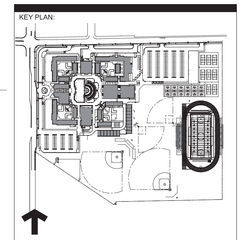

SHEET TITLE:

PRESS BOX CEILING DETAILS - HOME

JOB NUMBER:

SHEET NUMBER: **B24**

DATE: OCT 9, 2023

REVISION:

A.1 STEEL STRUCTURAL SYSTEM

	ENGINEERED PER:
4" X 4" X 1/8" (11 GA.) SQUARE TUBING	ASTM A500 GRADE 'B' 46ksi
2" X 2" X 1/8" ANGLE	ASTM A36/A36M GRADE 50
WIDE FLANGE BEAM	ASTM A992 Fy=50ksi
CHANNEL	ASTM A36/A36M GRADE 50
1/8" CHECKERED FLOOR PLATE	ASTM A786 A1011 Fy=27ksi
4" X 2" 14-GAUGE CEE	ASTM A1011 Fy=19.8ksi
PLATE UP TO 1/2" THICK	ASTM A36
3-5/8" PUNCHED CEE STUD 4" PUNCHED CEE STUD 3-5/8" UN-PUNCHED DEEP LEG TRACK 4" UN-PUNCHED DEEP LEG TRACK	25 GA. - ASTM C645-04 20 GA. CW - ASTM C645-04 20 GA. STRUCT. - ASTM C955-03 18 GA. STRUCT. - ASTM C955-03 25 GA. - ASTM C645-04 20 GA. CW - ASTM C645-04 20 GA. STRUCT. - ASTM C955-04 18 GA. STRUCT. - ASTM C955-04

A.2 SIDING/ACCESSORIES

26-GA. (0.0181") MBCI PBR PANEL	(MFG. COLOR DESIGNATION) ASTM A792-03, A924-04, AZ50, AZ55 NON-COMBUSTIBLE, CLASS A Fy=60ksi, Fu=61.5KSI
#14 X 7/8" LAP SCREWS	
SCREWS-METAL TO METAL #12 - 1" W/ 5/16" WASHER HEAD & WASHER	
PANEL CLOSURES STRIPS	(MFG. COLOR DESIGNATION)
26-GA. FLAT	ASTM A792-03, A924-04, AZ50, AZ55 NON-COMBUSTIBLE, CLASS A
SEALANT, DEGUSSA, SONOLASTIC NP1, ONE-COMPONENT ELASTOMERIC, GUN-GRADE POLYURETHANE SEALANT	UL = TYPE II / CLASS I

A.3 WINDOWS

WINDOW, SINGLE SERIES 8200 SINGLE HUNG - U FACTOR .420 THERMALLY BROKEN ALUMINUM BY DON YOUNG COMPANY TEMPERED GLASS BY CARDINAL IG, UNLIMITED IN SIZE	AAMA / NWWDA 101 / I.S.2. RATED H-C30 54X90 SGCC #2328, LAB ID #550

A.4 ELECTRICAL SPECIAL NOTE: ALL ELECTRICAL COMPONENTS SHALL BE APPROVED PER NEC AND UL /CSA LISTED.

A.4.1 BREAKER PANEL

_LUG_AMP PANEL W/ MAIN DISCONNECT	UL LISTED EQUAL TO HOMELINE, GE, WESTINGHOUSE LOAD CENTERS BEARING A UL LABEL SIZED PER DRAWINGS
FLUSH MOUNT BREAKER COVER	UL LISTED EQUAL TO HOMELINE, GE, WESTINGHOUSE LOAD CENTERS BEARING A UL LABEL SIZED PER DRAWINGS
20 AMP SINGLE POLE BREAKERS	UL LISTED EQUAL TO HOMELINE, GE, WESTINGHOUSE LOAD CENTERS BEARING A UL LABEL SIZED PER DRAWINGS
DOUBLE POLE BREAKERS	UL LISTED EQUAL TO HOMELINE, GE, WESTINGHOUSE LOAD CENTERS BEARING A UL LABEL SIZED PER DRAWINGS

A.4.2 J-BOXES

4" X 4" X 2-1/8" - 1/2 & 3/4 KO-RACO #235 OR #4SDVB-SPL-PL W/FLANGE	UL LISTED, EQUAL TO RACO, BOWERS, STEEL CITY
4" X 4" X 1-1/2" - 1/2 & 3/4 KO-RACO #196 OR #4SDVB-SPL-PL W/FLANGE	UL LISTED, EQUAL TO RACO, BOWERS, STEEL CITY
4" X 4" X 1-1/2" METAL BOXES W/ 1/2", 3/4" KO, RACO #192 OR #4S-SPL-DR	UL LISTED, EQUAL TO RACO, BOWERS, STEEL CITY
4" X 4" X 2-1/8" METAL BOXES RACO #232 OR #4SD-SPL	UL LISTED, EQUAL TO RACO, BOWERS, STEEL CITY
PLASTER RINGS, 1 GANG, RACO #768 OR #8468C	UL LISTED, EQUAL TO RACO, BOWERS, STEEL CITY
PLASTER RINGS, 2 GANG, RACO #769 OR #8470A	UL LISTED, EQUAL TO RACO, BOWERS, STEEL CITY
WEATHER TIGHT, 1 GANG BOX #21H4-2	UL LISTED, EQUAL TO RACO, BOWERS, STEEL CITY
EXTENSION RINGS, RACO #187 OR #4SSBESPL	UL LISTED, EQUAL TO RACO, BOWERS, STEEL CITY
	UL LISTED, EQUAL TO RACO, BOWERS, STEEL CITY

A.4.3 CONDUIT

EMT CONDUIT	UL LISTED, EQUAL TO RACO, ALLIED, BOWERS APPROVED PER NEC
FLEXIBLE METAL CONDUIT (FMC)	UL LISTED, EQUAL TO RACO, ALLIED, BOWERS APPROVED PER NEC

A.4.4 CONNECTORS

S.S. EMT CONNECTOR	UL LISTED, EQUAL TO RACO, BOWERS, STEEL CITY, NEER, APPROVED PER NEC
3/4" S.S. EMT CONNECTOR TC-502	UL LISTED, EQUAL TO RACO, BOWERS, STEEL CITY, NEER, APPROVED PER NEC
1/2" S.S. EMT CONNECTOR TC-501	UL LISTED, EQUAL TO RACO, BOWERS, STEEL CITY, NEER, APPROVED PER NEC
1/2" FLEX CONNECTOR SC50	UL LISTED, EQUAL TO RACO, BOWERS, STEEL CITY, NEER, APPROVED PER NEC
3/4" FLEX CONNECTOR SC75	UL LISTED, EQUAL TO RACO, BOWERS, STEEL CITY, NEER, APPROVED PER NEC
1/2" FLEX COUPLING, RACO #2272	UL LISTED, EQUAL TO RACO, BOWERS, STEEL CITY, NEER, APPROVED PER NEC
1/2" FLEX COUPLING, RACO #2273	UL LISTED, EQUAL TO RACO, BOWERS, STEEL CITY, NEER, APPROVED PER NEC
1/2" FLEX TO ½" EMT COUPLING NEE EFC-75	UL LISTED, EQUAL TO RACO, BOWERS, STEEL CITY, NEER, APPROVED PER NEC
1/2" EMT COUPLINGS	UL LISTED, EQUAL TO RACO, BOWERS, STEEL CITY, NEER, APPROVED PER NEC
1/2" EMT OFF-SET CONNECTORS, NEE #TN-50	UL LISTED, EQUAL TO RACO, BOWERS, STEEL CITY, NEER, APPROVED PER NEC

A.4.5 RECEPTACLES - SWITCHES

DUPLEX RCPT-LIGHT ALMOND 20A, 120V P&S 26352-LA 20A 5-20R	UL LISTED, APPROVED PER NEC
DUPLEX RCPT-LIGHT ALMOND-WR-GFCI, 20A, 120V P&S 2097TRWRLA GFCI	UL LISTED, APPROVED PER NEC
SINGLE POLE DECORATOR SWITCH LIGHT ALMOND P&S #TM870LA, 15A, 120V OR EQUAL	UL LISTED, APPROVED PER NEC
3-WAY DECORATOR SWITCH LIGHT ALMOND P&S #TM873LA, 15A, 120V OR EQUAL	UL LISTED, APPROVED PER NEC
OCCUPANCY SENSOR DECORATOR SWITCH - 15A, 120V, W/ MANUAL ON/OFF SINGLE POLE LIGHT ALMOND - P&S RWU600BICC4 3-WAY LIGHT ALMOND - P&S RW3U600I OR EQUAL	UL LISTED, APPROVED PER NEC

A.4.6 COVER PLATES

SWITCH COVER-LIGHT ALMOND #2132V	UL LISTED, EQUAL TO LEVITON, HUBBELL, P&S
PLUG COVER-LIGHT ALMOND #2134V	UL LISTED, EQUAL TO LEVITON, HUBBELL, P&S
BLANK METAL COVER-1 GANG.-LEV #84014	UL LISTED, EQUAL TO LEVITON, HUBBELL, P&S
PLUG COVER-SURFACE, RACO #902 OR #8365N	UL LISTED, EQUAL TO RACO, BOWERS, STEEL CITY
FLAT COVER PLATE-SURFACE, RACO #752 OR #8465	UL LISTED, EQUAL TO RACO, BOWERS, STEEL CITY APPROVED PER NEC
WEATHER TIGHT COVER-PLUGS-1GANG #2CCD	UL LISTED, EQUAL TO RED DOT

A.4.7 LIGHTS

2'X4' EDGELIT LED PANEL (WHITE) RAB LIGHTING EZPANFA2X4/D10 OR EQUAL DRIVER INFO: CONSTANT CURRENT, CLASS 2, 4 CHANNEL W/ 0-10V DIMMING. 120-277VAC 0.26A @ 120V. INPUT WATTS: 29.6W	UL LISTED & LABELED PER MANUFACTURER IESNA LM-79 AND LM-80 TESTED D.O.E. "LIGHTING FACTS" LABEL DESIGN LIGHTS CONSORTIUM (DLC) LISTED. DLC PRODUCT CODE: P76QGDBU
LED INFO: 30W-4000K-81CRI-3451 LUMENS-3745 L-70 LIFESPAN: 75,000 HR	IES LM-80 AND TM-21
ASTRALITE EEU-3-RW 7 WATT LED COMBO EXIT/EMERGENCY LIGHT 120/277V. (2) FULLY ADJUSTABLE LIGHTING HEADS 90 MIN. BATTERY BACK-UP	DAMP LOCATION LISTED U.L. 924 ETL LISTED
PROFESSIONAL GRADE VINYL ELECTRICAL TAPE SCOTCH 3M	UL LISTED 539H INSULATING TAPE FLAME RETARDANT

A.4.8 WIRE & MISC.

12 AWG-600V-THHN-THWN-COPPER/SOLID	UL LISTED, EQUAL TO GENERAL CABLE CORP.
IDEAL INDUSTRIES IN SURE PUSH-IN CONNECTORS MOD. 32/33/34	UL LISTED, CSA CERTIFIED, 105°C 600V. RATED (1000V. IN SIGNS & LIGHT FIXTURES)
IDEAL INDUSTRIES B-CAP WIRE NUTS OR EQUAL	UL LISTED, CSA CERTIFIED, 105°C 600V. RATED
REDUCING WASHERS	UL LISTED, EQUAL TO RACO, BOWERS, STEEL CITY
3/4" STRAPS FOR EMT-RACO #2083 OR #MED45	UL LISTED, EQUAL TO RACO, BOWERS, STEEL CITY
STRAPS FOR FLEX	UL LISTED, EQUAL TO RACO, BOWERS, STEEL CITY
CONDUIT BUSHINGS	
J-BOX PLUGS SNAP IN SEALS	UL LISTED EQUAL TO GB ELECTRICAL
IDS CADDY FASTENERS W/ BOLTS & NUTS	UL LISTED EQUAL TO ERICO, IDS
BAR HANGER SUPPORTS	UL LISTED EQUAL TO ERICO

A.4.9 WIREMOLD

#2300BC-BASE-COVER-8' LENGTH	UL LISTED RACEWAY, E90378, RJTX,UL5 UL94V-0, E90377, RJYT, NEC 352B
#2300WC-WIRE CLIP	UL LISTED RACEWAY, E90378, RJTX,UL5 UL94V-0, E90377, RJYT, NEC 352B
#2306-COVER CLIP	UL LISTED RACEWAY, E90378, RJTX,UL5 UL94V-0, E90377, RJYT, NEC 352B
#2310A-ENTRANCE END FITTING	UL LISTED RACEWAY, E90378, RJTX,UL5 UL94V-0, E90377, RJYT, NEC 352B
#2310B-BLANK END FITTING	UL LISTED RACEWAY, E90378, RJTX,UL5 UL94V-0, E90377, RJYT, NEC 352B
#2311-90* FLAT ELBOW	UL LISTED RACEWAY, E90378, RJTX,UL5 UL94V-0, E90377, RJYT, NEC 352B
#2315-TEE	UL LISTED RACEWAY, E90378, RJTX,UL5 UL94V-0, E90377, RJYT, NEC 352B
#2317-INTERNAL ELBOW	UL LISTED RACEWAY, E90378, RJTX,UL5 UL94V-0, E90377, RJYT, NEC 352B
#2318-EXTERNAL ELBOW	UL LISTED RACEWAY, E90378, RJTX,UL5 UL94V-0, E90377, RJYT, NEC 352B
#2347-DEVICE BOX-1 GANG	UL LISTED RACEWAY, E90378, RJTX,UL5 UL94V-0, E90377, RJYT, NEC 352B
32347-2-DEVICE BOX-2 GANG	UL LISTED RACEWAY, E90378, RJTX,UL5 UL94V-0, E90377, RJYT, NEC 352B
	UL LISTED RACEWAY, E90378, RJTX,UL5 UL94V-0, E90377, RJYT, NEC 352B

A.4.10 MISCELLANEOUS

3/4" X 4" GALVANIZED NIPPLE	
GALVANIZED FLOOR FLANGE 3/4"	ASTM C665, CLASS I UL FHC 25/50

A.5 INTERIOR FINISHES

A.5.1 CEILING

CERTAINTEED HHF-154 BIOSHIELD 2'X2'X5/8" CEILING TILE	UL LISTED CLASS I FLAME 15/SMOKE 5
WALL ANGLE - GALV. WA15-15 12'	FIREGUARD, CLASS I
MAIN TEE - CS12-12-15 MR X 12'	FIREGUARD, CLASS I
CROSS TEE - CS2-12-12 CT X 2'	FIREGUARD, CLASS I
RIVETS	
12-GA. WIRE (GALVANIZED)	
14-GA. HANGER CLIPS	UL LISTED EQUAL TO RAMSET 1202 CF

A.5.2 VINYL INTERIOR

WALLBOARDS - DURASAN VINYL COVERD GYPSUM SHEETROCK, COLOR: SANTA FE-PORCELAIN 5/8" THICK, 4' X 8'	VINYL - UL LISTED CLASS I, ASTM E84-04, C960-04, C1396-02, FLAME 25 / SMOKE 50 OR LESS
OUTSIDE CORNER - 10' OUTSIDE CORNER, DURASAN, 2-PART SNAP ON, INTERIOR-GALVANIZED STEEL, VINYL EXTERIOR, SANTA FE-PORCELAIN	CLASS A ASTM E84-04, FLAME 25 / SMOKE 50 OR LESS
INSIDE CORNER - 10' INSIDE CORNER, DURASAN, 1 PIECE, INTERIOR-GALVANIZED STEEL, VINYL EXTERIOR, SANTA FE-PORCELAIN	CLASS A ASTM E84-04, FLAME 25 / SMOKE 50 OR LESS
8' BATT STRIPS-DURASAN, 2-PART SNAP ON, INTERIOR-GALVANIZED STEEL, VINYL EXTERIOR, SANTA FE-PORCELAIN	CLASS I FLAME 25 / SMOKE 50 OR LESS
	ASTM C557
ADHESIVE, DAP - DRYWALL	

A.5.3 FLOORING & BASE

VINYL BASE-COLOR: PRO CB-35 MED. GRAY	
VINYL BASE ADHESIVE, DURABOND D-731	

A.5.4 INTERIOR DOORS

3' X 6'-8" BIRCH DOOR UNIT INTERIOR W/ 5-1/2" JAMBS W/ TRIM - HOLLOW CORE	
LATEX CAULK, EQUAL TO ACE ACRYLINK LATEX CAULK, GENERAL PURPOSE	ASTM-C-834-95
GALS EXT OIL BASE / RUST NOT METAL PAINT	NFPA CLASS II
PAINT INT. LATEX / WATER BASE	NON FLAMMABLE
PASSAGE HARDWARE / COMMERCIAL / GRADE, LIGHT DUTY SCHLAGE, ELAN COMMERCIAL PASSAGE F10 ELA 626	ADA APPROVED ANSI GRADE 2

A.5.5 COUNTER TOP

TOWER ANODIZED ALUMINUM 2 -PIECE INTERLOCKING 1" THICK COUNTERTOP	EXTRUDED ALUMINUM

A.6 HARDWARE

A.6.1 EXTERIOR DOORS

DOOR FRAME CECO, SERIES SU WELDED STEEL FRAMES, 5'-3/4" X 3' X 7'-0" WITH WOOD STUD ANCHORS, 16 GA., HEAVY DUTY, PRIMER PAINT COAT	UL LISTED 10B, EQUAL TO CECO, STEEL DOOR FRAME ANSI A250.8 -1998, ASTM A366, A620, A568 PRIMER PAINT COAT ANSI A250.10
DOOR CECO - HMD CP 18 A60 3068 F BW 1 3/4" (C1; LC1) POLYSTYRENE INSULATION PRIMER PAINT COAT R-11.1 AS CALCULATED	UL LISTED 10B, EQUAL TO CECO, STEEL DOOR ANSI A250.4 PERFORMANCE TEST, 18 AND 16 GAGE: LEVEL A (1,000,000 CYCLES) PRIMER PAINT COAT ANSI A250.10
ANCHORS WOOD & METAL STUD ANCHORS/ TYPE WS PER DOOR MANUFACTURER	UL LISTED, EQUAL TO CECO
HINGES PBB INC., FULL MORTISE TEMPLATE HINGES 4-1/2"X4" GA. 0.134 +\- .005 PB81	UL LISTED EQUAL TO PBB ANSI TEMPLATE ANSI A8133
THRESHOLD PEMKO-171 A36, MILL FINISH ALUMINUM 5"X1/2"	UL LISTED EQUAL TO HAGER ADA APPROVED
DOOR SWEEP-WEATHERSTRIP NATIONAL GUARD 101VA	
DOOR CLOSURE NORTON CLP-8501	ANSI/BHMA A1564.4 GRADE 1
1/4" FOAM WEATHER STRIPPING	
EXIT DEVICE, YALE 2100	ANSI/BHMA A156.3 GRADE 1
YALE TRIM, YALE 546F 626	ANSI/BHMA A156.3 GRADE 1

A.7 ROOFING

ADHESIVE MULE-HIDE, ACRYLIC WATER BASE BONDING	NON-FLAMMABLE, NON-TOXIC UL LISTED AS EXTERNAL FIRE EXPOSURE ONLY
ADHESIVE MULE-HIDE, BLACK SEAM ADHESIVE	AS EXTERNAL FIRE EXPOSURE ONLY
ROOF HATCH (OPTIONAL) 14 GA. GALV. STEEL, INSULATED, NON-COMBUSTIBLE 30" X 36" TYPE 'S' BILCO (LADDER) 30" X 54" TYPE 'NB' BILCO (SHIP STAIR)	COVER: 40 psf MIN. LIVE LOAD OR 20 psf WIND UPLOAD
ROOF COATING ACRYLINK G ACRYLIC ROOF COATING BY ISOPRIME ACRYLIC ROOF COATINGS, INC.	UL 790, CLASS A, ASTM E108 ASTM D 6083
ACRYCAULK	UL 790, CLASS A

A.8 INSULATION

POLY ENCAPSULATED FIBERGLASS INSULATION - JOHNS MANVILLE - JM COMFORTTHERM INSULATION R-VALUE PER PLAN	ATSM C665, TYPE II, CLASS A, CAT. 1 OR 2 IBC, ALL TYPES ATSM E84 FLAME SPREAD <25 ATSM E84 SMOKE DEVELOPMENT <50
ARMORFLECT WHITE CONTINUOUS WRAP INSULATION: R-8.7 CONT. 1/4" FIBERGLASS CORE BONDED TO REINFORCED SCRIM FACING	ATSM C518, ASTM E84, ASTM E96, ASTM C1104 FLAME SPREAD <25, SMOKE DEVELOPED <50 VAPOR RETARDER (PERMS) <0.5 WATER VAPOR SORPTION LESS THAN 5%

NOTES:

STANDARDS LISTED ARE REFERENCE TO THE MANUFACTURERS PRODUCT REFERENCE STANDARD OR IBC REFERENCE STANDARD NUMBER.

1 / B25 APPENDIX "A" - MATERIAL SPECS
NOT TO SCALE

NOT USED

DCM Inc.
DOYLES CONSTRUCTION & MFG.
624 Sixth Street
P.O. Box 451
Graham, Texas 76450
Phone: (940) 549-5517
Fax: (940) 549-9438

THIS DRAWING AND ALL INFORMATION THEREIN IS THE PROPERTY OF THE SOUTHERN BLEACHER COMPANY. TAYLOR & SYFAN AND IS CONFIDENTIAL AND MUST NOT BE MADE PUBLIC OR COPIED. THIS DRAWING IS LOANED SUBJECT TO RE-TURN UPON DEMAND AND, IS NOT TO BE USED DIRECTLY OR INDIRECTLY IN ANY WAY DETRIMENTAL TO OUR INTERESTS.

TAYLOR & SYFAN STRUCTURAL ENGINEERS
CENTRAL COAST OFFICE Ph: (626) 793-7438 Fax: (626) 793-7439 Toll: (800) 579-3881
553 S. Oak Knoll Ave. Pasadena, CA 91101 http://www.taylorsyfan.com/

Southern® BLEACHER COMPANY
GRANDSTANDS • BLEACHERS • STADIUMS
PO Box One, Graham, Texas 76450
801 Fifth Street.
Phone: 940/549-0733 Fax: 940/549-1365
Established 1946

REGISTERED PROFESSIONAL ENGINEER BRIAN T. DEAN S 6087 STRUCTURAL STATE OF CALIFORNIA
Signed 11/13/23
PRINCIPAL

TYPE: APPENDIX "A" - MATERIAL SPECS
12" RISE X 26" TREAD / 201'-6" (16/19 ROWS)

TITLE: MERCED UNION HS DISTRICT
BUHACH COLONY HIGH SCHOOL
ATWATER, CALIFORNIA

REV	BY	DATE	DESCRIPTION

DATE	DRAWN	CHECKED
05/08/2023	JOA	DMC

JOB NUMBER: #23023R2

SHEET	OF
B25	B42

23023R2

22" X 34" (11x17 = 1/2 indicated scale)

IDENTIFICATION STAMP
DIV. OF THE STATE ARCHITECT
APP: 02-121275 INC:
REVIEWED FOR
SS ☑ FLS ☑ ACS ☑
DATE: 12/15/2023

California DESIGN WEST

CALIFORNIA DESIGN WEST ARCHITECTS, Inc.

2100 19th Street
Sacramento, CA 95818

Phone: (916) 446-2466
Fax: (916) 446-5118
Web Page: ca-dw.com

These plans and prints thereof, as instruments of service, are owned by the architect and are for the use on this project only. Reproduction and/or distribution without the prior written consent of the architect is forbidden.

Copyright California Design West Architects, Inc.

ARCHITECT: CONSULTANT:

LICENSED ARCHITECT MITCHELL A. McALLISTER NO. C 17250 REN. 2-28-2023 STATE OF CALIFORNIA

CONSULTANT:

PROJECT NAME:

BUHACH COLONY HIGH SCHOOL

1800 NORTH BUHACH RD
ATWATER, CA 95301

CONCESSIONS/TOILET BUILDINGS, TICKET BOOTH & STADIUM UPGRADES

MERCED UNION HIGH SCHOOL DISTRICT

MERCED COUNTY

KEY PLAN:

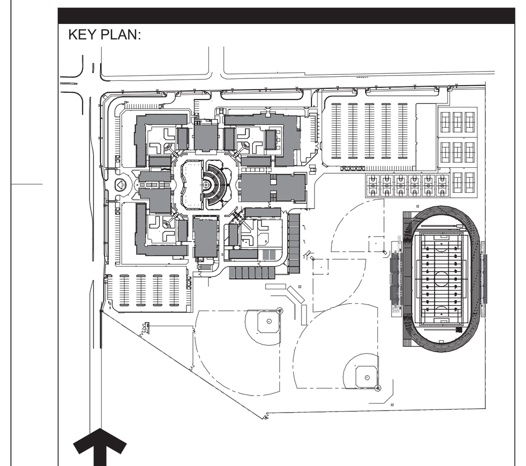

SHEET TITLE:

APPENDIX "A" - MATERIAL SPECS

JOB NUMBER:	SHEET NUMBER:
DATE: OCT 9, 2023	**B25**
REVISION:	

A = GRID LETTERS

1 = GRID LINE

P1 = EXIT PAD (2 / B28)

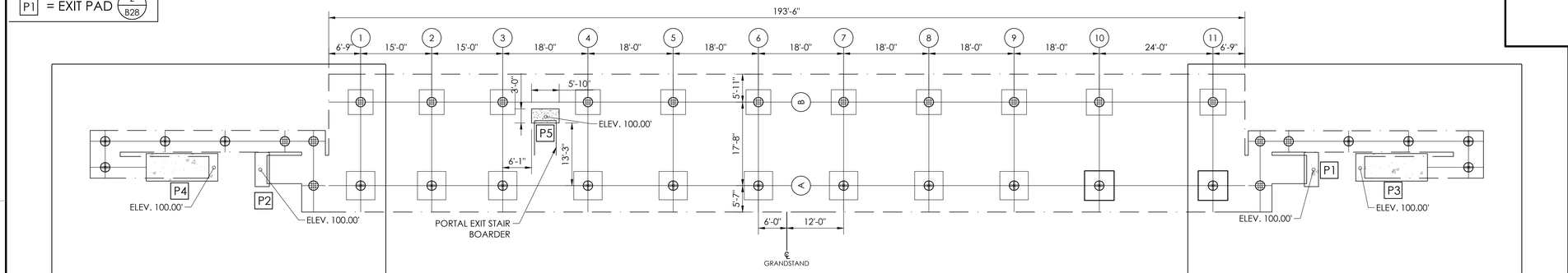

1 / B26 **FOOTING LAYOUT - VISITOR**
SCALE:3/32"=1'-0"

1 / B27

2 / B27

FOUNDATION NOTES

1. GENERAL CONTRACTOR SHALL VERIFY ALL DIMENSIONS PRIOR TO START OF CONSTRUCTION.
2. REINFORCING STEEL SHALL BE ASTM A615 GRADE 60.
3. CONCRETE SHALL HAVE A MINIMUM COMPRESSIVE STRENGTH OF 3000 PSI AT 28 DAYS.
4. MAXIMUM HORIZ. TOLERANCE OF ANCHOR BOLT PLACEMENT SHALL BE ±⅛".
5. ALL ANCHOR BOLTS SHALL HAVE A 3½" PROJECTION (±⅛") ABOVE THE TOP OF PIER ELEVATION, UNLESS SPECIFICALLY NOTED OTHERWISE.
6. THE CONCRETE FOUNDATION CONTRACTOR IS RESPONSIBLE FOR NON SHRINK GROUTING.
7. THE ELEVATION AT THE TOP OF THE CONCRETE PIER IS DESIGNED TO BE 1" BELOW THE BOTTOM OF STEEL ELEVATION. THE TOLERANCE FOR THE BOTTOM OF STEEL ELEVATION IS ±½". THE TOP OF CONCRETE ELEVATION MAY BE RAISED TO MATCH THE BOTTOM OF STEEL ELEVATION, AT THE CONCRETE CONTRACTORS DISCRETION. THE CONTRACTOR OF THE CONCRETE FOUNDATIONS IS RESPONSIBLE FOR ANY ADJUSTMENTS REQUIRED.
8. ALL UNDERGROUND UTILITIES ARE TO BE LOCATED AND MARKED DURING THE REVIEW PROCESS BY THE OWNERS REPRESENTATIVE PRIOR TO FOUNDATION EXCAVATION.
9. REMOVE/RELOCATE THE UNDERGROUND UTILITIES AS REQUIRED WHERE UNDERGROUND UTILITIES CONFLICT WITH THE NEW FOOTINGS.

THIS DRAWING AND ALL INFORMATION THEREIN IS THE PROPERTY OF THE SOUTHERN BLEACHER COMPANY. EXCEPT WITH WRITTEN PERMISSION, HEREIN NOT TO BE MODIFIED OR COPIED. THIS DRAWING IS LOANED SUBJECT TO BE RETURN UPON DEMAND AND, IS NOT TO BE USED DIRECTLY OR INDIRECTLY IN ANY WAY DETRIMENTAL TO OUR INTERESTS.

STRUCTURAL ENGINEERS
COVINA Ph: (626) 252-2438
CORONA Ph: (951) 279-4184
CA 92882 Fax: (951) 279-4186
553 S. Oak Knoll Ave. Pasadena, CA 91101
http://www.taylorsyfan.com/

TAYLOR & SYFAN

Southern BLEACHER COMPANY
GRANDSTANDS ●BLEACHERS ●STADIUMS
PO Box One, Graham, Texas 76450
801 Fifth Street,
Phone: 940-549-0733 Fax: 940-549-1565
Established 1946

REGISTERED PROFESSIONAL ENGINEER
BRIAN T. DEAN
S 6087
STRUCTURAL
STATE OF CALIFORNIA
Signed 11/13/23
PRINCIPAL

REV	DESCRIPTION	DATE	BY

DWN: 05/08/2023 JOA
CHECKED: DMC
JOB NUMBER: #23023R2
SHEET B26 OF B42

DWG: FOOTING LAYOUT - VISITOR
12" RISE X 26" TREAD / 193'-6" (9 ROWS)

PRJ: MERCED UNION HS DISTRICT
BUHACH COLONY HIGH SCHOOL
ATWATER, CALIFORNIA

22" X 34" (11x17 = 1/2 indicated scale)

23023R2

IDENTIFICATION STAMP
DIV. OF THE STATE ARCHITECT
APP: 02-121275 INC:
REVIEWED FOR
SS ☑ FLS ☑ ACS ☑
DATE: 12/15/2023

CALIFORNIA DESIGN WEST ARCHITECTS, Inc.

2100 19th Street
Sacramento, CA 95818

Phone: (916) 446-2466
Fax: (916) 446-5118
Web Page: ca-dw.com

These plans and prints thereof, as instruments of service, are owned by the architect and are for the use on this project only. Reproduction and/or distribution without the prior written consent of the architect is forbidden.

Copyright California Design West Architects, Inc.

ARCHITECT: CONSULTANT:

LICENSED ARCHITECT
MITCHELL A. MCALISTER
NO. C-17250
REN. 08-31-2025
STATE OF CALIFORNIA

CONSULTANT:

PROJECT NAME:

BUHACH COLONY HIGH SCHOOL

1800 NORTH BUHACH RD
ATWATER, CA 95301

CONCESSIONS/TOILET BUILDINGS, TICKET BOOTH & STADIUM UPGRADES

MERCED UNION HIGH SCHOOL DISTRICT

MERCED COUNTY

KEY PLAN:

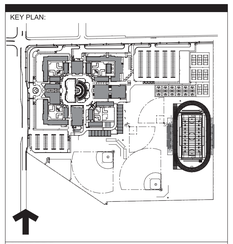

SHEET TITLE:

FOOTING LAYOUT - VISITOR

JOB NUMBER:

SHEET NUMBER: **B26**

DATE: OCT 9, 2023

REVISION:

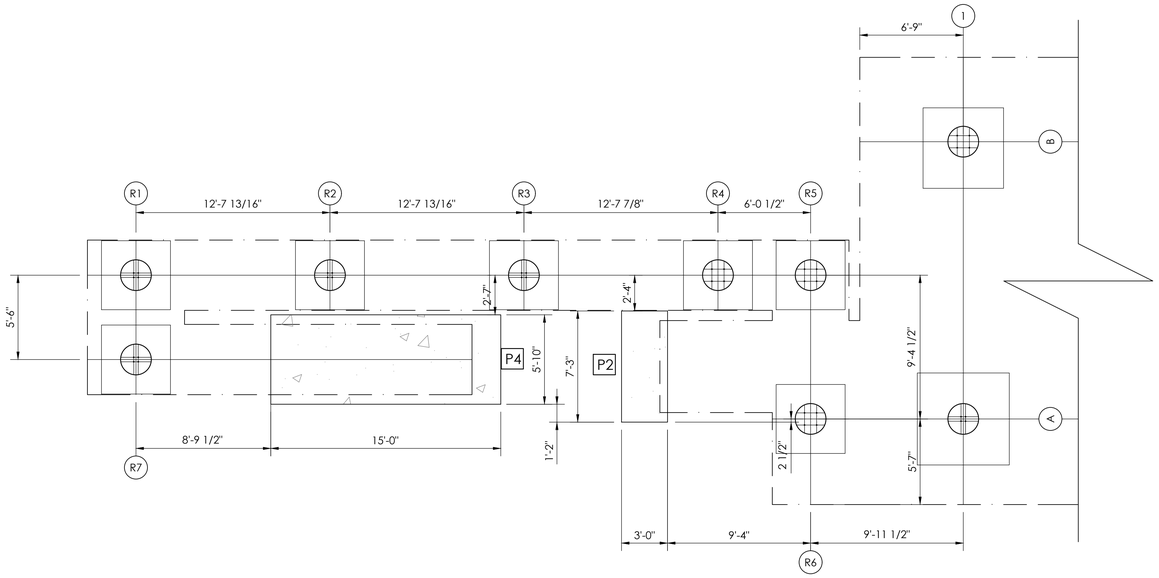

1 / B27 LEFT END
ENLARGED EXIT FOOTING LAYOUT - VISITOR
SCALE:1/4"=1'-0"

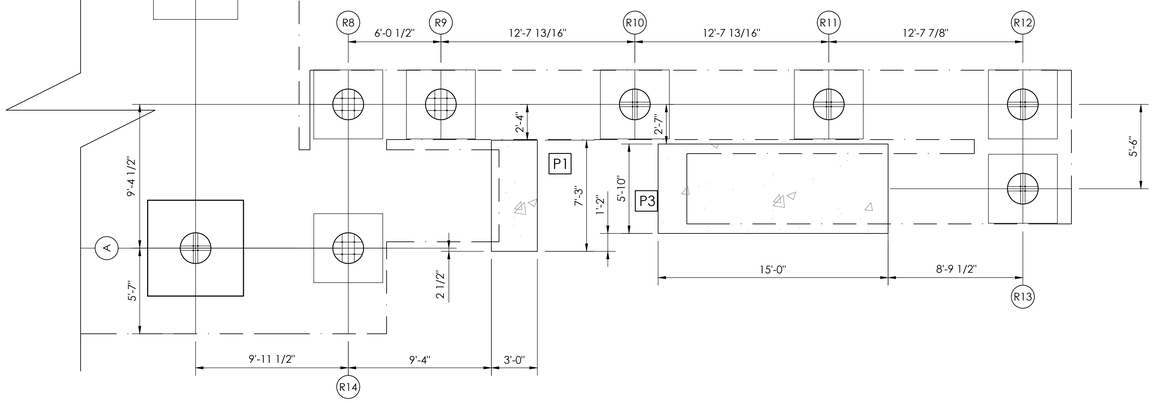

2 / B27 RIGHT END
ENLARGED EXIT FOOTING LAYOUT - VISITOR
SCALE:1/4"=1'-0"

THIS DRAWING AND ALL INFORMATION THEREIN IS THE PROPERTY OF THE SOUTHERN BLEACHER COMPANY, AND IN ITS PAN AM ECONVERSION, HEIGHT NOR IS NOT TO BE COPIED. THIS DRAWING IS LOANED SUBJECT TO RE-TURN UPON DEMAND AND, IS NOT TO BE USED DIRECTLY OR INDIRECTLY IN ANY WAY DETRIMENTAL TO OUR INTERESTS.

STRUCTURAL ENGINEERS
COVINA Ph: (626) 252-4248
CORONA Ph: (951) 734-7007
COVINA Ph: (626) 252-4248
CORONA Ph: (951) 734-7007
5533 S. Oak Knoll Ave. Anaheim, CA 91101
http://www.taylorandfan.com/

TAYLOR & FAN

Southern BLEACHER COMPANY
GRANDSTANDS •BLEACHERS •STADIUMS
Established 1946
801 Fifth Street;
PO Box One, Graham, Texas 76450
Phone: 940-549-0733 Fax: 940-549-1365

REGISTERED PROFESSIONAL ENGINEER
BRIAN T. DEAN
S 6087
STRUCTURAL
STATE OF CALIFORNIA
Signed 11/13/23
PRINCIPAL

REV	DESCRIPTION	DATE	REV BY
1	ENLARGED EXIT FOOTING LAYOUTS - VISITOR		
2	12" RISE X 26" TREAD / 193'-6" (9 ROWS)		

MERCED UNION HS DISTRICT
BUHACH COLONY HIGH SCHOOL
ATWATER, CALIFORNIA

DESIGNED	DRAWN	CHECKED
05/08/2023	JOA	DMC

JOB NUMBER #23023R2

SHEET B27 OF B42

22" X 34" (1:1x17 = 1/2 indicated scale)

23023R2

IDENTIFICATION STAMP
DIV. OF THE STATE ARCHITECT
APP: 02-121275 INC:
REVIEWED FOR
SS ☑ FLS ☑ ACS ☑
DATE: 12/15/2023

CALIFORNIA DESIGN WEST ARCHITECTS, Inc.

2100 19th Street
Sacramento, CA 95818

Phone: (916) 446-2466
Fax: (916) 446-5118
Web Page: ca-dw.com

These plans and prints thereof, as instruments of service, are owned by the architect and are for the use on this project only. Reproduction and/or distribution without the prior written consent of the architect is forbidden.

Copyright California Design West Architects, Inc.

ARCHITECT: CONSULTANT:

LICENSED ARCHITECT
MITCHELL A. MCALISTER
No. C-17250
RENEWAL 08/31/2025
STATE OF CALIFORNIA

CONSULTANT:

PROJECT NAME:

BUHACH COLONY HIGH SCHOOL

1800 NORTH BUHACH RD
ATWATER, CA 95301

CONCESSIONS/TOILET BUILDINGS, TICKET BOOTH & STADIUM UPGRADES

MERCED UNION HIGH SCHOOL DISTRICT

MERCED COUNTY

KEY PLAN:

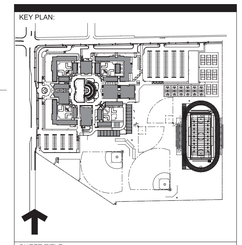

SHEET TITLE:

ENLARGED EXIT FOOTING LAYOUTS - VISITOR

JOB NUMBER:	SHEET NUMBER:
	B27
DATE: OCT 9, 2023	
REVISION:	

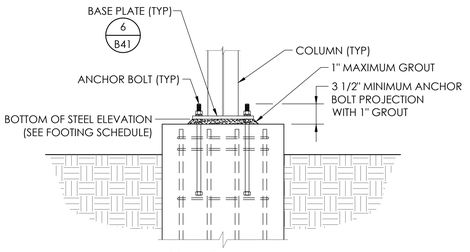

@ COLUMN

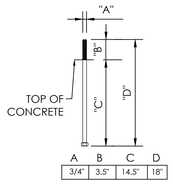

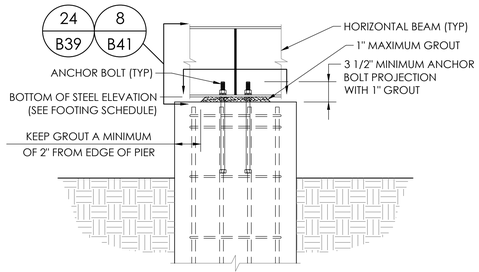

@ HORIZONTAL BEAM

1 B28 TOP OF PIER DETAIL
NOT TO SCALE

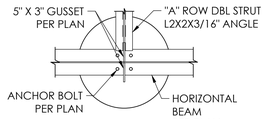

SECTION CUT "A-A"

EXIT PADS TO BE FLAT AND LEVEL

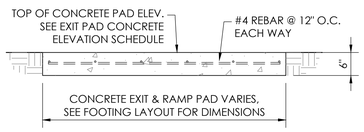

2 B28 MINIMUM EXIT PAD DETAIL
NOT TO SCALE

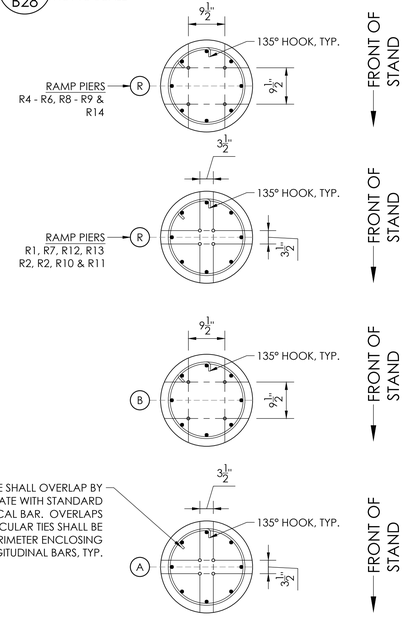

EXIT PAD CONCRETE ELEVATION SCHEDULE

(P = CONCRETE PAD)	TOP OF CONCRETE ELEV.
P1	100.000'
P2	100.000'
P3	100.000'
P4	100.000'
P5	100.000'

THE ENDS OF THE CIRCULAR TIE SHALL OVERLAP BY NOT LESS THAN 6" AND TERMINATE WITH STANDARD HOOKS THAT ENGAGE A VERTICAL BAR. OVERLAPS AT ENDS OF ADJACENT CIRCULAR TIES SHALL BE STAGGERED AROUND THE PERIMETER ENCLOSING THE LONGITUDINAL BARS, TYP.

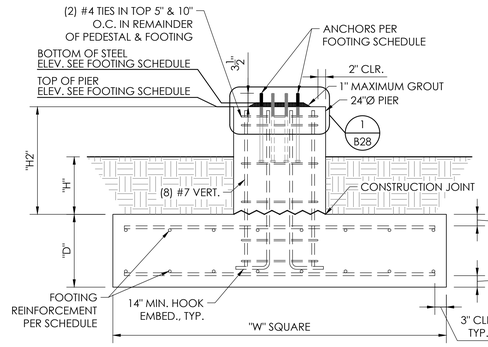

3 B28 FOOTING & PIER DETAIL
NOT TO SCALE

FOOTING SCHEDULE

FOOTING # (A = GRIDLINE) (R = RAMP PIER)	T.O.P. ELEV.	B.O.S. ELEV.	GROUT	"H"	"D"	"H2"	"W"	FOOTING REINFORCEMENT	PIER DIAMETER	ANCHOR BOLTS & BASE PLATE IF REQ.
A-GL 1-3	101.634'	101.717'	1"	14"	19"	38" MAX.	6'-0" X 6'-0"	(6) #6 EACH WAY BOTTOM #5 @ 18" O.C. TOP	24"Ø	(4)3/4"Ø X 18" HEADED ANCHOR BOLTS (NO B.P.) SEE DETAIL 8/B41
A-GL 4-9	101.623'	101.706'	1"	14"	19"	38" MAX.	6'-0" X 6'-0"	(6) #6 EACH WAY BOTTOM #5 @ 18" O.C. TOP	24"Ø	(4)3/4"Ø X 18" HEADED ANCHOR BOLTS (NO B.P.) SEE DETAIL 8/B41
A-GL 10 & 11	101.649'	101.732'	1"	14"	19"	38" MAX.	6'-3" X 6'-3"	(6) #6 EACH WAY BOTTOM #5 @ 18" O.C. TOP	24"Ø	(4)3/4"Ø X 18" HEADED ANCHOR BOLTS (NO B.P.) SEE DETAIL 8/B41
B-GL 1-9	100.417'	100.500'	1"	14"	19"	26" MAX.	5'-3" X 5'-3"	(5) #6 EACH WAY BOTTOM	24"Ø	(4)3/4"Ø X 18" HEADED ANCHOR BOLTS B.P. SEE DETAIL 6/B41
B-GL 10 & 11	100.417'	100.500'	1"	14"	19"	26" MAX.	5'-6" X 5'-6"	(6) #6 EACH WAY BOTTOM	24"Ø	(4)3/4"Ø X 18" HEADED ANCHOR BOLTS B.P. SEE DETAIL 6/B41
R1,R7,R12 & R13	100.641'	100.724'	1"	14"	19"	50" MAX.	3'-9" X 3'-9"	(4) #6 EACH WAY BOTTOM	24"Ø	(4)3/4"Ø X 18" HEADED ANCHOR BOLTS (NO B.P.) SEE DETAIL 8/B41
R2 & R11	101.125'	101.208'	1"	14"	19"	50" MAX.	3'-9" X 3'-9"	(4) #6 EACH WAY BOTTOM	24"Ø	(4)3/4"Ø X 18" HEADED ANCHOR BOLTS (NO B.P.) SEE DETAIL 8/B41
R3 & R10	102.391'	102.474'	1"	14"	19"	50" MAX.	3'-9" X 3'-9"	(4) #6 EACH WAY BOTTOM	24"Ø	(4)3/4"Ø X 18" HEADED ANCHOR BOLTS (NO B.P.) SEE DETAIL 8/B41
R4-R6,R8,R9 & R14	100.417'	100.500'	1"	14"	19"	26" MAX.	3'-9" X 3'-9"	(4) #6 EACH WAY BOTTOM	24"Ø	(4)3/4"Ø X 18" HEADED ANCHOR BOLTS B.P. SEE DETAIL 6/B41

THIS DRAWING AND ALL INFORMATION THEREIN IS THE PROPERTY OF THE SOUTHERN BLEACHER COMPANY. EXCEPT FOR A NEW CONSTRUCTION, NO HEAT NOR MAY BE USED, COPIED. THIS DRAWING IS LOANED SUBJECT TO BE FURN UPON DEMAND AND, IS NOT TO BE USED DIRECTLY OR INDIRECTLY IN ANY WAY DETRIMENTAL TO OUR INTERESTS.

STRUCTURAL ENGINEERS
TAYLOR & YEAN
COSTA: Ph: (424) 253-2438
CORONA: Ph: (951) 279-4111
553 S. Oak Knoll Ave. Pasadena, CA 91101
http://www.taylorandyean.com/
Southern
BLEACHER COMPANY
GRANDSTANDS •BLEACHERS •STADIUMS
PO Box One, Graham, Texas 76450
801 Fifth Street,
Phone: 940-549-0733 Fax: 940-549-1565
Established 1946

REGISTERED PROFESSIONAL ENGINEER BRIAN T. DEAN S 6087 STRUCTURAL STATE OF CALIFORNIA
Signed 11/13/23 PRINCIPAL

ITEM	DESCRIPTION	DATE	REV BY
	PIER DETAILS - VISITOR 12" RISE X 26" TREAD / 193'-6" (9 ROWS)		

MERCED UNION HS DISTRICT
BUHACH COLONY HIGH SCHOOL
ATWATER, CALIFORNIA

DATE	DRAWN	CHECKED
05/08/2023	JOA	DMC

JOB NUMBER #23023R2
SHEET B28 OF B42
22" X 34" (1:1) 17" = 1/2 indicated scale)
23023R2

IDENTIFICATION STAMP
DIV. OF THE STATE ARCHITECT
APP: 02-121275 INC:
REVIEWED FOR
SS ☑ FLS ☑ ACS ☑
DATE: 12/15/2023

DESIGN California WEST
CALIFORNIA DESIGN WEST ARCHITECTS, Inc.
2100 19th Street
Sacramento, CA 95818
Phone: (916) 446-2466
Fax: (916) 446-5118
Web Page: ca-dw.com

These plans and prints thereof, as instruments of service, are owned by the architect and are for the use on this project only. Reproduction and/or distribution without the prior written consent of the architect is forbidden.
Copyright California Design West Architects, Inc.

ARCHITECT: CONSULTANT:

LICENSED ARCHITECT NO. C 17250 TIMOTHY MITCHELL A. MCALISTER REGISTERED IN STATE OF CALIFORNIA

CONSULTANT:

PROJECT NAME:

BUHACH COLONY HIGH SCHOOL

1800 NORTH BUHACH RD
ATWATER, CA 95301

CONCESSIONS/TOILET BUILDINGS, TICKET BOOTH & STADIUM UPGRADES

MERCED UNION HIGH SCHOOL DISTRICT

MERCED COUNTY

KEY PLAN:

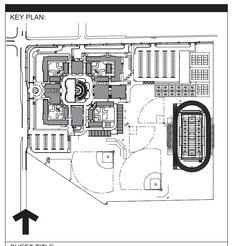

SHEET TITLE:

PIER DETAILS - VISITOR

JOB NUMBER:	SHEET NUMBER:
DATE: OCT 9, 2023	**B28**
REVISION:	

NOTE:
SEE SHEET B34 FOR SEATING LAYOUT

A = GRID LINE
1 = STRINGER NUMBERS
B1 = BEAM NUMBERS
⊣⊢ = SPLICE LOCATION

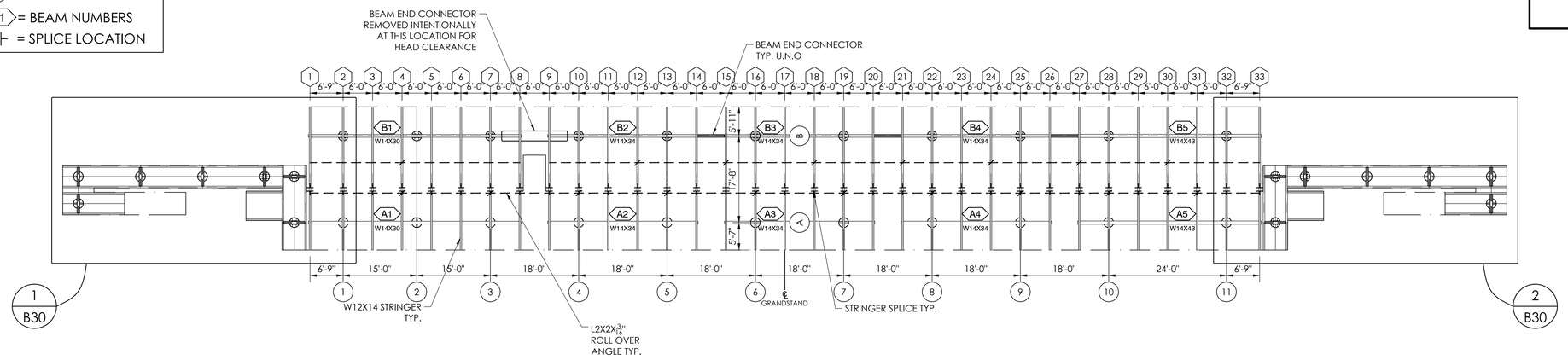

1 B29 UNDERSTRUCTURE - VISITOR
SCALE:3/32"=1'-0"

THIS DRAWING AND ALL INFORMATION THEREIN IS THE PROPERTY OF THE SOUTHERN BLEACHER COMPANY. AS OF 8 FTH WEI CVOVERSION, HO HAST NCB WASTING OF COPIED. THIS DRAWING IS LOANED SUBJECT TO RE-TURN UPON DEMAND AND, IS NOT TO BE USED DIRECTLY OR INDIRECTLY IN ANY WAY DETRIMENTAL TO OUR INTERESTS.

STRUCTURAL ENGINEERS
TAYLOR & YEH
COVINA Ph: (626) 252-2438
CA 91723 Fax: (626) 252-2438
CORP. Email: tyse@tayloryeh.com
553 S. Oak Knoll Ave. Pasadena, CA 91101
http://www.tayloryeh.com/

Southern BLEACHER COMPANY
GRANDSTANDS •BLEACHERS •STADIUMS
PO Box One, Graham, Texas 76450
801 Fifth Street,
Phone: 940-549-0733 Fax: 940-549-1565
Established 1946

REGISTERED PROFESSIONAL ENGINEER
BRIAN T. DEAN
S 6087
STRUCTURAL
STATE OF CALIFORNIA
Signed 11/13/23
PRINCIPAL

DWG	UNDERSTRUCTURE - VISITOR 12" RISE X 26" TREAD / 193'-6" (9 ROWS)
REV / BY	
DATE	
DESCRIPTION	
DESIGN	JOA
DRAWN	DMC
05/08/2023	
JOB NUMBER	#23023R2
SHEET	B29
OF	B42

MERCED UNION HS DISTRICT
BUHACH COLONY HIGH SCHOOL
ATWATER, CALIFORNIA

22" X 34" (11x17 = 1/2 indicated scale)

23023R2

IDENTIFICATION STAMP
DIV. OF THE STATE ARCHITECT
APP: 02-121275 INC:
REVIEWED FOR
SS ☑ FLS ☑ ACS ☑
DATE: 12/15/2023

CALIFORNIA DESIGN WEST ARCHITECTS, Inc.

2100 19th Street
Sacramento, CA 95818

Phone: (916) 446-2466
Fax: (916) 446-5118
Web Page: ca-dw.com

These plans and prints thereof, as instruments of service, are owned by the architect and are for the use on this project only. Reproduction and/or distribution without the prior written consent of the architect is forbidden.

Copyright California Design West Architects, Inc.

ARCHITECT: CONSULTANT:

LICENSED ARCHITECT
NO. C-17250
MITCHELL A. MCALISTER
RENEWAL 08-31-2025
STATE OF CALIFORNIA

CONSULTANT:

PROJECT NAME:

BUHACH COLONY HIGH SCHOOL

1800 NORTH BUHACH RD
ATWATER, CA 95301

CONCESSIONS/TOILET BUILDINGS, TICKET BOOTH & STADIUM UPGRADES

MERCED UNION HIGH SCHOOL DISTRICT

MERCED COUNTY

KEY PLAN:

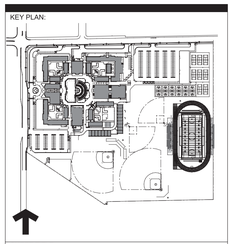

SHEET TITLE:

UNDERSTRUCTURE - VISITOR

JOB NUMBER:	SHEET NUMBER:
DATE: OCT 9, 2023	**B29**
REVISION:	

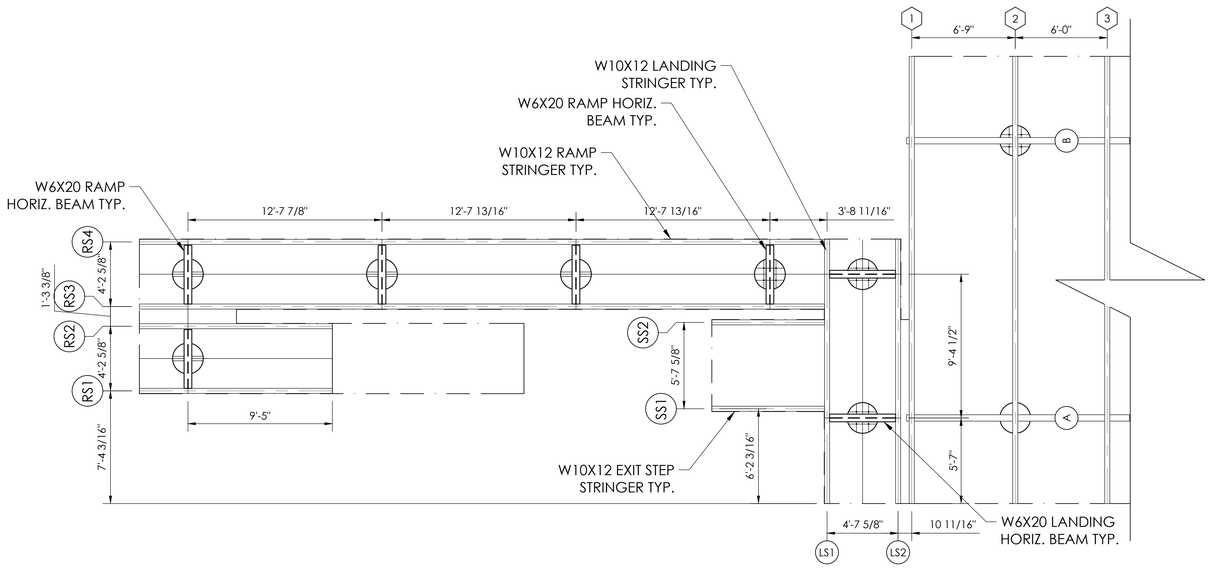

1 / B30 LEFT SIDE
ENLARGED UNDERSTRUCTURE EXIT LAYOUT - VISITOR
SCALE:1/4"=1'-0"

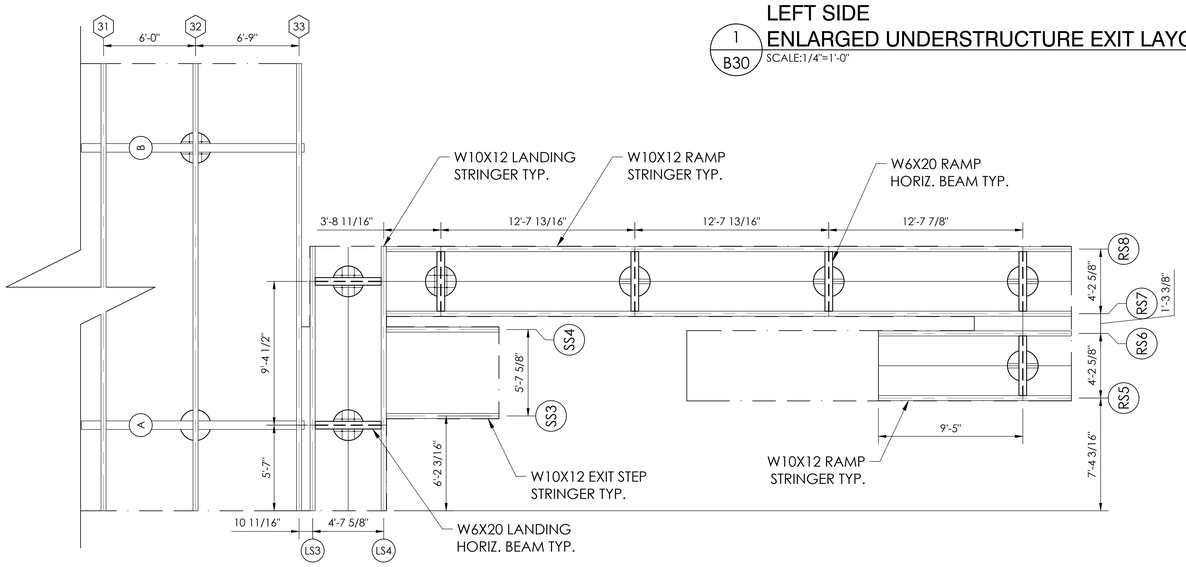

2 / B30 RIGHT SIDE
ENLARGED UNDERSTRUCTURE EXIT - VISITOR
SCALE:1/4"=1'-0"

THIS DRAWING AND ALL INFORMATION THEREIN IS THE PROPERTY OF THE SOUTHERN BLEACHER COMPANY. EXCEPT FOR USE IN CONSTRUCTION, HEREOF NOT BE MODIFIED OR COPIED. THIS DRAWING IS LOANED SUBJECT TO RETURN UPON DEMAND AND, IS NOT TO BE USED DIRECTLY OR INDIRECTLY IN ANY WAY DETRIMENTAL TO OUR INTERESTS.

STRUCTURAL ENGINEERS
TAYLOR & YIP A.N.
CONTACT: Ph: (626) 757-7338
CONTACT: Fax: (626) 757-7339
OFFICE: 553 S. Oak Knoll Ave. Pasadena, CA 91101
http://www.tayloryip.com/

Southern BLEACHER COMPANY
Established 1946
PO Box One, Graham, Texas 76450
801 Fifth Street.
Phone: 940-549-0733 Fax: 940-549-1565
GRANDSTANDS •BLEACHERS •STADIUMS

REGISTERED PROFESSIONAL ENGINEER
BRIAN T. DEAN
S 6087
STRUCTURAL
STATE OF CALIFORNIA
Signed 11/13/23
PRINCIPAL

ITEM: ENLARGED EXIT UNDERSTRUCTURE LAYOUTS - VISITOR
12" RISE X 26" TREAD / 193'-6" (9 ROWS)
PROJECT: MERCED UNION HS DISTRICT
BUHACH COLONY HIGH SCHOOL
ATWATER, CALIFORNIA

REV	BY	DATE	DESCRIPTION

DATE: 05/08/2023 | DRAWN: JOA | CHECKED: DMC
JOB NUMBER: #23023R2
SHEET: B30 | OF: B42

22" X 34" (1)x17 = 1/2 indicated scale)

23023R2

IDENTIFICATION STAMP
DIV. OF THE STATE ARCHITECT
APP: 02-121275 INC:
REVIEWED FOR
SS ☑ FLS ☑ ACS ☑
DATE: 12/15/2023

CALIFORNIA DESIGN WEST ARCHITECTS, Inc.
2100 19th Street
Sacramento, CA 95818
Phone: (916) 446-2466
Fax: (916) 446-5118
Web Page: ca-dw.com

These plans and prints thereof, as instruments of service, are owned by the architect and are for the use on this project only. Reproduction and/or distribution without the prior written consent of the architect is forbidden.
Copyright California Design West Architects, Inc.

ARCHITECT: CONSULTANT:

LICENSED ARCHITECT
No. C-7258
REN: 08/31/2025
STATE OF CALIFORNIA

CONSULTANT:

PROJECT NAME:
BUHACH COLONY HIGH SCHOOL

1800 NORTH BUHACH RD
ATWATER, CA 95301

CONCESSIONS/TOILET BUILDINGS, TICKET BOOTH & STADIUM UPGRADES

MERCED UNION HIGH SCHOOL DISTRICT

MERCED COUNTY

KEY PLAN:

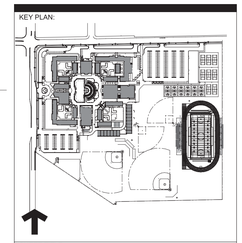

SHEET TITLE:
ENLARGED EXIT UNDERSTRUCTURE LAYOUTS - VISITOR

JOB NUMBER:	SHEET NUMBER:
DATE: OCT 9, 2023	**B30**
REVISION:	

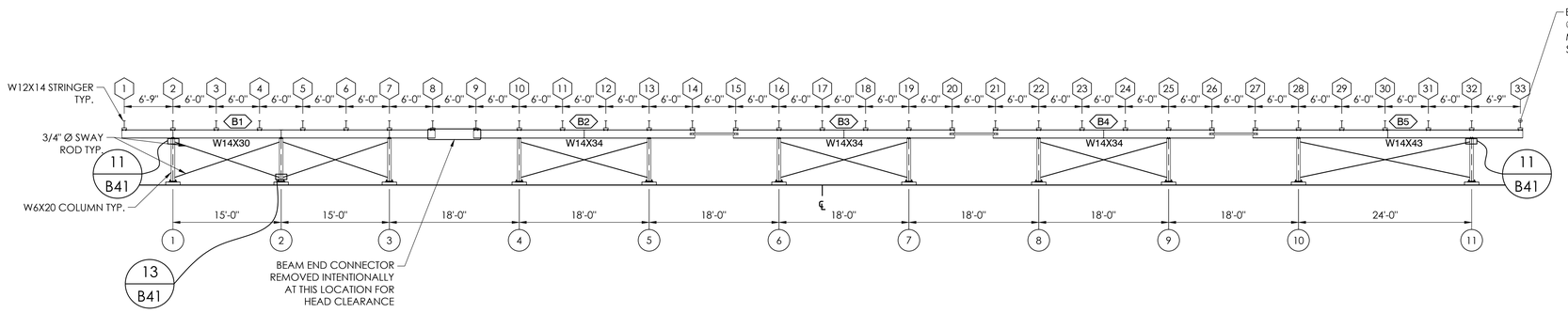

1 / B31 "B" ROW ELEVATION VIEW - VISITOR
SCALE:1/8"=1'-0"

THIS DRAWING AND ALL INFORMATION THEREIN IS THE PROPERTY OF THE SOUTHERN BLEACHER COMPANY, AND IN ITS PHYSICAL AND ELECTRONIC MEDIA FORMS, SHALL NOT BE USED, COPIED, OR REPRODUCED WITHOUT THE WRITTEN CONSENT OF THE SOUTHERN BLEACHER COMPANY. THIS DRAWING IS LOANED SUBJECT TO RETURN UPON DEMAND AND, IN ITS NON-PHYSICAL FORM, IS NOT TO BE USED DIRECTLY OR INDIRECTLY IN ANY WAY DETRIMENTAL TO OUR INTERESTS.

STRUCTURAL ENGINEERS
TAYLOR & YFAN
COSTA MESA, CA 92626 | Ph: (424) 253-2438
ONTARIO, CA 91761 | Ph: (909) 673-2438
5533 S. Oak Knoll Ave. | Ph: (626) 683-1111
http://www.taylorandyfan.com/
Southern BLEACHER COMPANY
GRANDSTANDS •BLEACHERS •STADIUMS
Established 1946
PO Box One, Graham, Texas 76450
801 Fifth Street,
Phone: 940-549-0733 Fax: 940-549-1565

REGISTERED PROFESSIONAL ENGINEER
BRIAN T. DEAN
S 6087
STRUCTURAL
STATE OF CALIFORNIA
Signed 11/13/23
PRINCIPAL

REV	DESCRIPTION	DATE	BY

ELEVATION VIEWS - VISITOR
12" RISE X 26" TREAD / 193'-6" (9 ROWS)

MERCED UNION HS DISTRICT
BUHACH COLONY HIGH SCHOOL
ATWATER, CALIFORNIA

DATE	DRAWN	CHECKED
05/08/2023	JOA	DMC

JOB NUMBER #23023R2

SHEET B31 OF B42

22" X 34" (11x17 = 1/2 indicated scale)

23023R2

IDENTIFICATION STAMP
DIV. OF THE STATE ARCHITECT
APP: 02-121275 INC:
REVIEWED FOR
SS ☑ FLS ☑ ACS ☑
DATE: 12/15/2023

DESIGN WEST California

CALIFORNIA DESIGN
WEST ARCHITECTS, Inc.

2100 19th Street
Sacramento, CA 95818

Phone: (916) 446-2466
Fax: (916) 446-5118
Web Page: ca-dw.com

These plans and prints thereof, as instruments of service, are owned by the architect and are for the use on this project only. Reproduction and/or distribution without the prior written consent of the architect is forbidden.

Copyright California Design West Architects, Inc.

ARCHITECT: CONSULTANT:

LICENSED ARCHITECT
MITCHELL A. MCALISTER
No. C-17250
REN: 08-31-2024
STATE OF CALIFORNIA

CONSULTANT:

PROJECT NAME:

BUHACH COLONY HIGH SCHOOL

1800 NORTH BUHACH RD
ATWATER, CA 95301

CONCESSIONS/TOILET BUILDINGS, TICKET BOOTH & STADIUM UPGRADES

MERCED UNION HIGH SCHOOL DISTRICT

MERCED COUNTY

KEY PLAN:

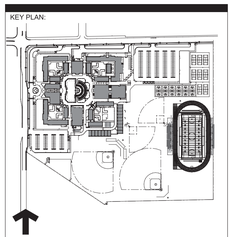

SHEET TITLE:

ELEVATION VIEWS - VISITOR

JOB NUMBER:	SHEET NUMBER:
	B31
DATE: OCT 9, 2023	
REVISION:	

ITEM DESCRIPTION

1. W 14 X 30 (50 ksi)
2. W 14 X 34 (50 ksi)
3. W 14 X 43 (50 ksi)
4. W 12 X 14 (50 ksi)
5. W 6 X 20 (50 ksi)
6. L 3 X 3 X 1/4 (50 ksi)
7. L 2 X 2 1/2 X 3/16 (50 ksi)
8. L 2 X 2 X 3/16 (50 ksi)
9. L 2 X 1 1/2 X 3/16 (50 ksi)
10. 12 X 12 X 5/8 PLATE
11. 6 X 8 X 3/8 PLATE
12. 3/4 X REQ'D LENGTH SWAY ROD (50 ksi)
13. 3/4 X 18 ANCHOR BOLT W/2 HEX HEAD NUTS & FLAT WASHER
14. 9 GAUGE GALV. STEEL CHAINLINK FENCE
15. ANODIZED ALUMINUM RAIL (SEE DETAIL 5/B38 & 6/B38)
16. 3 X 3/8 GUSSET PLATE (A36)
17. 5 X 3/8 GUSSET PLATE (A36)
18. 2 X 1/4 GUSSET PLATE (A36)

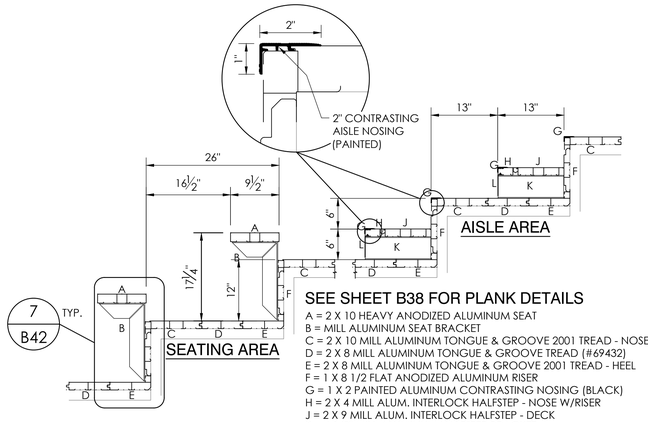

SEE SHEET B38 FOR PLANK DETAILS

A = 2 X 10 HEAVY ANODIZED ALUMINUM SEAT
B = MILL ALUMINUM SEAT BRACKET
C = 2 X 10 MILL ALUMINUM TONGUE & GROOVE 2001 TREAD - NOSE
D = 2 X 8 MILL ALUMINUM TONGUE & GROOVE TREAD (#69432)
E = 2 X 8 MILL ALUMINUM TONGUE & GROOVE 2001 TREAD - HEEL
F = 1 X 8 1/2 FLAT ANODIZED ALUMINUM RISER
G = 1 X 2 PAINTED ALUMINUM CONTRASTING NOSING (BLACK)
H = 2 X 4 MILL ALUM. INTERLOCK HALFSTEP - NOSE W/RISER
J = 2 X 9 MILL ALUM. INTERLOCK HALFSTEP - DECK
K = 4 1/2" MILL ALUMINUM HALFSTEP BRACKET
L = 4 1/2" ANODIZED ALUMINUM INTERLOCK STEP RISER

3 / B32 **PLANK ARRANGEMENT**
NOT TO SCALE 12" X 26"

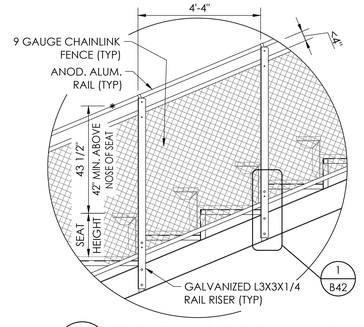

4 / B32 **TYPICAL SIDE RAILING**
SCALE:1/2"=1'-0"

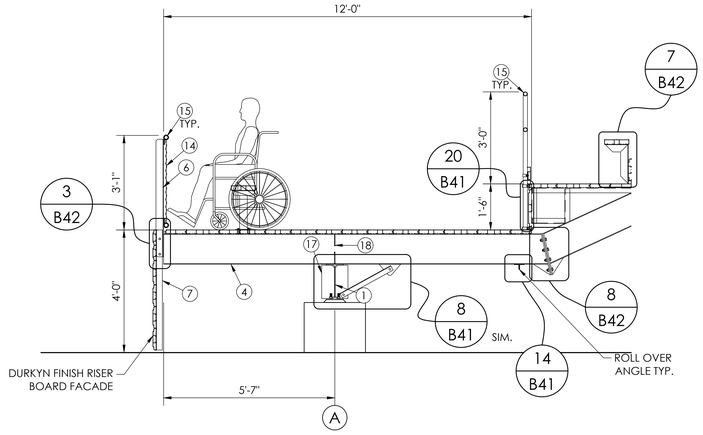

1 / B32 **SECTION VIEW @ W/C AREA - VISITOR**
SCALE:1/2"=1'-0"

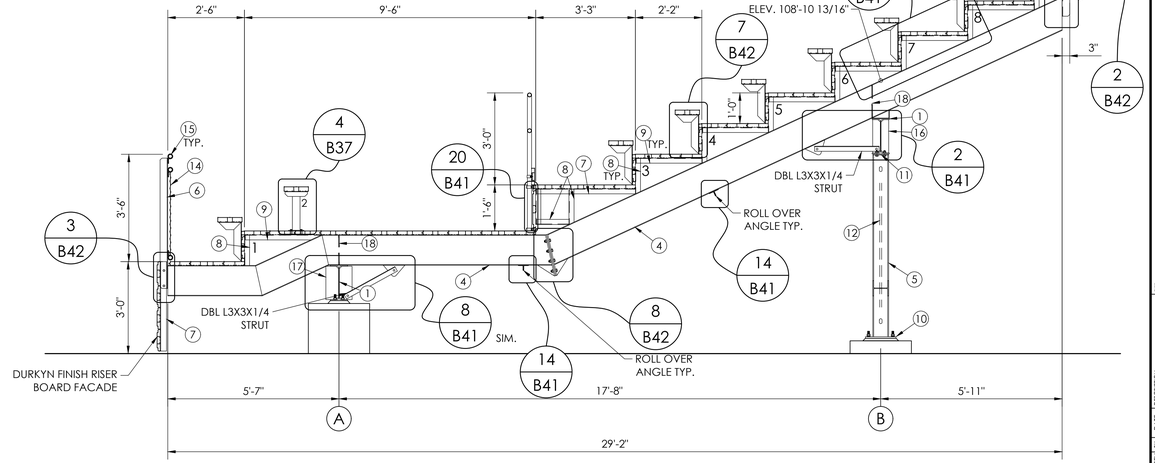

2 / B32 **SECTION VIEW - VISITOR**
SCALE:1/2"=1'-0"

THIS DRAWING AND ALL INFORMATION THEREIN IS THE PROPERTY OF THE SOUTHERN BLEACHER COMPANY. EXCEPT WITH WRITTEN CONSENT, HEREIN NOT BE MODIFIED OR COPIED. THIS DRAWING IS LOANED SUBJECT TO RETURN UPON DEMAND AND, IS NOT TO BE USED DIRECTLY OR INDIRECTLY IN ANY WAY DETRIMENTAL TO OUR INTERESTS.

STRUCTURAL ENGINEERS
TAYLOR & YEAHN CONSULTANTS
CORONA, CA (951) 737-1820 Fax: (951) 737-1826
COVINA, CA (626) 252-7488 Fax: (626) 252-7488
CERRITOS, CA (562) 809-2870 Fax: (562) 809-2878
553 S. Oak Knoll Ave. Pasadena, CA 91101
http://www.taylorandyeahn.com/

Southern BLEACHER COMPANY
GRANDSTANDS •BLEACHERS •STADIUMS
Established 1946
PO Box One, Graham, Texas 76450
801 Fifth Street
Phone: 940-549-0733 Fax: 940-549-1565

REGISTERED PROFESSIONAL ENGINEER
BRIAN T. DEAN
S 6087
STRUCTURAL
STATE OF CALIFORNIA
Signed 11/13/23
PRINCIPAL

REV	DESCRIPTION	DATE	BY
	SECTION VIEWS - VISITOR 12" RISE X 26" TREAD / 193'-6" (9 ROWS)		

MERCED UNION HS DISTRICT
BUHACH COLONY HIGH SCHOOL
ATWATER, CALIFORNIA

DRAWN	DESIGNED
JOA	DMC

05/08/2023
JOB NUMBER #23023R2
SHEET B32 OF B42

22" X 34" (11"x17" = 1/2 indicated scale)

23023R2

IDENTIFICATION STAMP
DIV. OF THE STATE ARCHITECT
APP: 02-121275 INC:
REVIEWED FOR
SS ☑ FLS ☑ ACS ☑
DATE: 12/15/2023

DESIGN California WEST

CALIFORNIA DESIGN WEST ARCHITECTS, Inc.

2100 19th Street
Sacramento, CA 95818

Phone: (916) 446-2466
Fax: (916) 446-5118
Web Page: ca-dw.com

These plans and prints thereof, as instruments of service, are owned by the architect and are for the use on this project only. Reproduction and/or distribution without the prior written consent of the architect is forbidden.

Copyright California Design West Architects, Inc.

ARCHITECT: CONSULTANT:

LICENSED ARCHITECT MITCHELL A. MCALISTER RENEWAL 08/31/2025 NO. C 17250 STATE OF CALIFORNIA

CONSULTANT:

PROJECT NAME:

BUHACH COLONY HIGH SCHOOL

1800 NORTH BUHACH RD
ATWATER, CA 95301

CONCESSIONS/TOILET BUILDINGS, TICKET BOOTH & STADIUM UPGRADES

MERCED UNION HIGH SCHOOL DISTRICT

MERCED COUNTY

KEY PLAN:

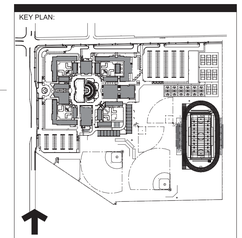

SHEET TITLE:

SECTION VIEWS - VISITOR

JOB NUMBER:	SHEET NUMBER:
DATE: OCT 9, 2023	**B32**
REVISION:	

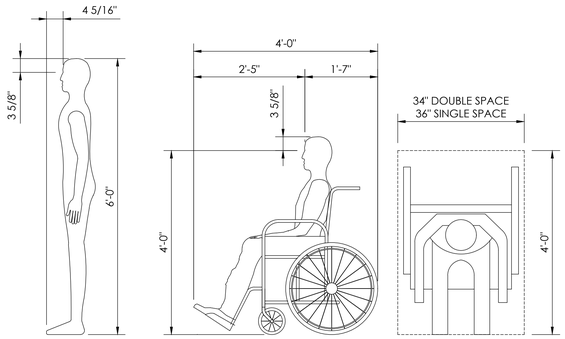

2 / B33 SIGHT LINE PARAMETERS
SCALE: 3/4"=1'-0"

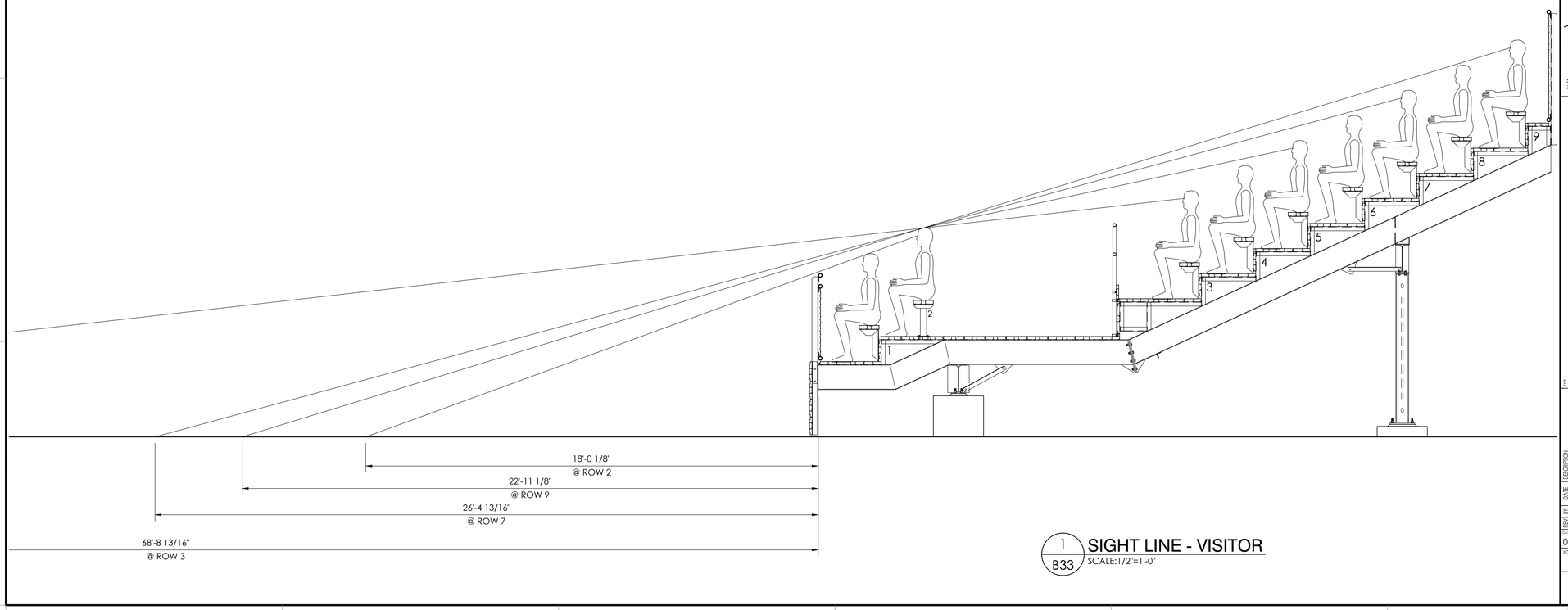

1 / B33 SIGHT LINE - VISITOR
SCALE:1/2"=1'-0"

THIS DRAWING AND ALL INFORMATION THEREIN IS THE PROPERTY OF THE SOUTHERN BLEACHER COMPANY, AND IN ITS PHYSICAL AND VERSION, AND MUST NOT BE MODIFIED OR COPIED. THIS DRAWING IS LOANED SUBJECT TO BE RETURN UPON DEMAND AND, IS NOT TO BE USED DIRECTLY OR INDIRECTLY IN ANY WAY DETRIMENTAL TO OUR INTERESTS.

STRUCTURAL ENGINEERS
COVINA: Ph: (626) 252-4248 Fax: (626) 252-4311
CORONA: Ph: (951) 279-3511 Fax: (951) 279-3512
553 S. Oak Knoll Ave. Pasadena, CA 91101
http://www.taylorandyffan.com/

TAYLOR & YFFAN

Southern BLEACHER COMPANY
GRANDSTANDS •BLEACHERS •STADIUMS
PO Box One, Graham, Texas 76450
801 Fifth Street;
Phone: 940-549-0733 Fax: 940-549-1365
Established 1946

REGISTERED PROFESSIONAL ENGINEER
BRIAN T. DEAN
S 6087
STRUCTURAL
STATE OF CALIFORNIA
Signed 11/13/23
PRINCIPAL

REV	DESCRIPTION	DATE
1	SIGHT LINES - VISITOR 12" RISE X 26" TREAD / 193'-6" (9 ROWS)	

MERCED UNION HS DISTRICT
BUHACH COLONY HIGH SCHOOL
ATWATER, CALIFORNIA

DRAWN	CHECKED
05/08/2023	JOA	DMC

JOB NUMBER #23023R2

SHEET B33 OF B42

22" X 34" (11x17 = 1/2 indicated scale)

23023R2

IDENTIFICATION STAMP
DIV. OF THE STATE ARCHITECT
APP: 02-121275 INC:
REVIEWED FOR
SS ☑ FLS ☑ ACS ☑
DATE: 12/15/2023

CALIFORNIA DESIGN WEST ARCHITECTS, Inc.

2100 19th Street
Sacramento, CA 95818

Phone: (916) 446-2466
Fax: (916) 446-5118
Web Page: ca-dw.com

These plans and prints thereof, as instruments of service, are owned by the architect and are for the use on this project only. Reproduction and/or distribution without the prior written consent of the architect is forbidden.

Copyright California Design West Architects, Inc.

ARCHITECT: CONSULTANT:

LICENSED ARCHITECT
MITCHELL A. MCALISTER
No. C-17258
REN: 08-31-2024
STATE OF CALIFORNIA

CONSULTANT:

PROJECT NAME:

BUHACH COLONY HIGH SCHOOL

1800 NORTH BUHACH RD
ATWATER, CA 95301

CONCESSIONS/TOILET BUILDINGS, TICKET BOOTH & STADIUM UPGRADES

MERCED UNION HIGH SCHOOL DISTRICT

MERCED COUNTY

KEY PLAN:

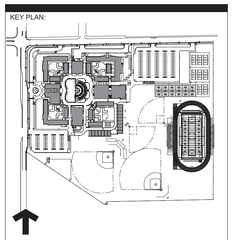

SHEET TITLE:

SIGHT LINES - VISITOR

JOB NUMBER:	SHEET NUMBER:
DATE: OCT 9, 2023	**B33**
REVISION:	

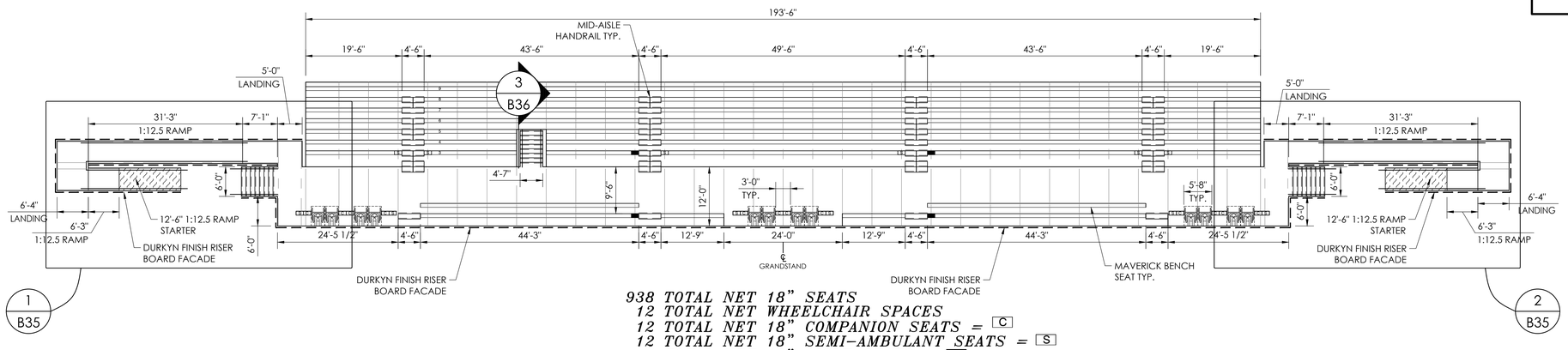

938 TOTAL NET 18" SEATS
12 TOTAL NET WHEELCHAIR SPACES
12 TOTAL NET 18" COMPANION SEATS = C
12 TOTAL NET 18" SEMI-AMBULANT SEATS = S
4 TOTAL NET 18" AISLE SEATS = ■
978 TOTAL SEATING CAPACITY

1 B34 SEATING LAYOUT - VISITOR
SCALE:3/32"=1'-0"

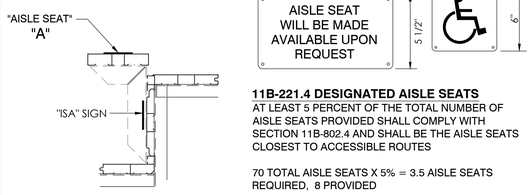

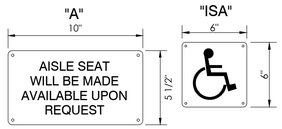

11B-221.4 DESIGNATED AISLE SEATS
AT LEAST 5 PERCENT OF THE TOTAL NUMBER OF AISLE SEATS PROVIDED SHALL COMPLY WITH SECTION 11B-802.4 AND SHALL BE THE AISLE SEATS CLOSEST TO ACCESSIBLE ROUTES

70 TOTAL AISLE SEATS X 5% = 3.5 AISLE SEATS REQUIRED, 8 PROVIDED

■ = AISLE SEATS

2 B14 DESIGNATED AISLE SEATS
NOT TO SCALE

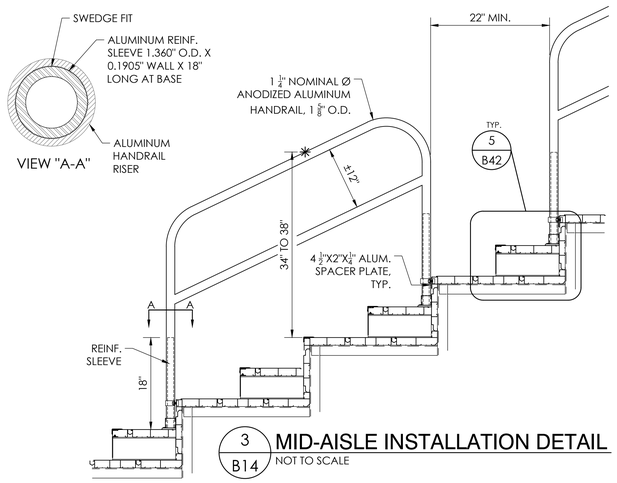

3 B14 MID-AISLE INSTALLATION DETAIL
NOT TO SCALE

THIS DRAWING AND ALL INFORMATION THEREIN IS THE PROPERTY OF THE SOUTHERN BLEACHER COMPANY. AND/OR STRYK-WEG CONVERSION, AND MAY NOT BE MODIFIED OR COPIED. THIS DRAWING IS LOANED SUBJECT TO RE-TURN UPON DEMAND AND, IS NOT TO BE USED DIRECTLY OR INDIRECTLY IN ANY WAY DETRIMENTAL TO OUR INTERESTS.

STRUCTURAL ENGINEERS
553 S. Oak Knoll Ave. Pasadena, CA 91101
CONTACT: Eric Strykowski
PH: (626) 793-2438
CELL: (626) 793-2438
FAX: (626) 793-2439
EMAIL: eric@strykowski.com
http://www.strykowski.com
PO Box One, Graham, Texas 76450
801 Fifth Street,
Phone: 940-549-0733 Fax: 940-549-1565
Established 1946
TAYLOR & YFAN
Southern BLEACHER COMPANY
GRANDSTANDS •BLEACHERS •STADIUMS

REGISTERED PROFESSIONAL ENGINEER
BRIAN T. DEAN
S 6087
STRUCTURAL
STATE OF CALIFORNIA
Signed 11/13/23
PRINCIPAL

REV	DESCRIPTION	DATE	BY
1	SEATING LAYOUT - VISITOR 12" RISE X 26" TREAD / 193'-6" (9 ROWS)		
2			

MERCED UNION HS DISTRICT
BUHACH COLONY HIGH SCHOOL
ATWATER, CALIFORNIA

DRAWN	CHECKED
05/08/2023	JOA	DMC

JOB NUMBER #23023R2

SHEET B34 OF B42

22" X 34" (11x17 = 1/2 indicated scale)

23023R2

IDENTIFICATION STAMP
DIV. OF THE STATE ARCHITECT
APP: 02-121275 INC:
REVIEWED FOR
SS ☑ FLS ☑ ACS ☑
DATE: 12/15/2023

CALIFORNIA DESIGN WEST ARCHITECTS, Inc.

2100 19th Street
Sacramento, CA 95818

Phone: (916) 446-2466
Fax: (916) 446-5118
Web Page: ca-dw.com

These plans and prints thereof, as instruments of service, are owned by the architect and are for the use on this project only. Reproduction and/or distribution without the prior written consent of the architect is forbidden.

Copyright California Design West Architects, Inc.

ARCHITECT: CONSULTANT:

LICENSED ARCHITECT
MITCHELL A. MCALISTER
No. C-17250
RENEWAL 08-31-2025
STATE OF CALIFORNIA

CONSULTANT:

PROJECT NAME:

BUHACH COLONY HIGH SCHOOL

1800 NORTH BUHACH RD
ATWATER, CA 95301

CONCESSIONS/TOILET BUILDINGS, TICKET BOOTH & STADIUM UPGRADES

MERCED UNION HIGH SCHOOL DISTRICT

MERCED COUNTY

KEY PLAN:

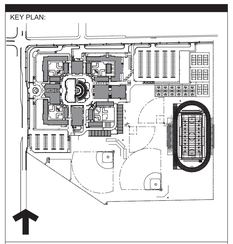

SHEET TITLE:

SEATING LAYOUT - VISITOR

JOB NUMBER:	SHEET NUMBER:
DATE: OCT 9, 2023	**B34**
REVISION:	

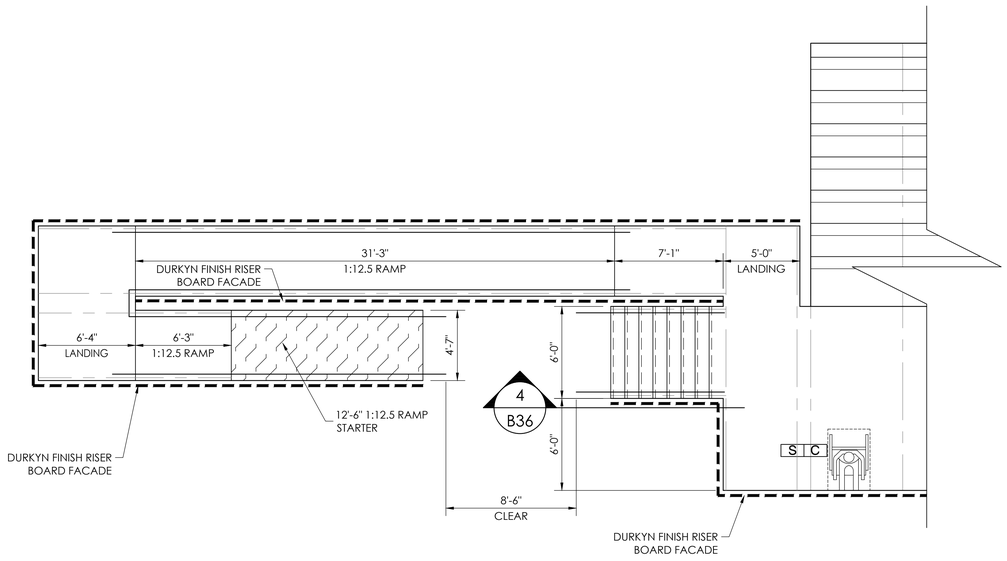

1 / B35 LEFT SIDE
ENLARGED EXIT LAYOUT - VISITOR
SCALE:1/4"=1'-0"

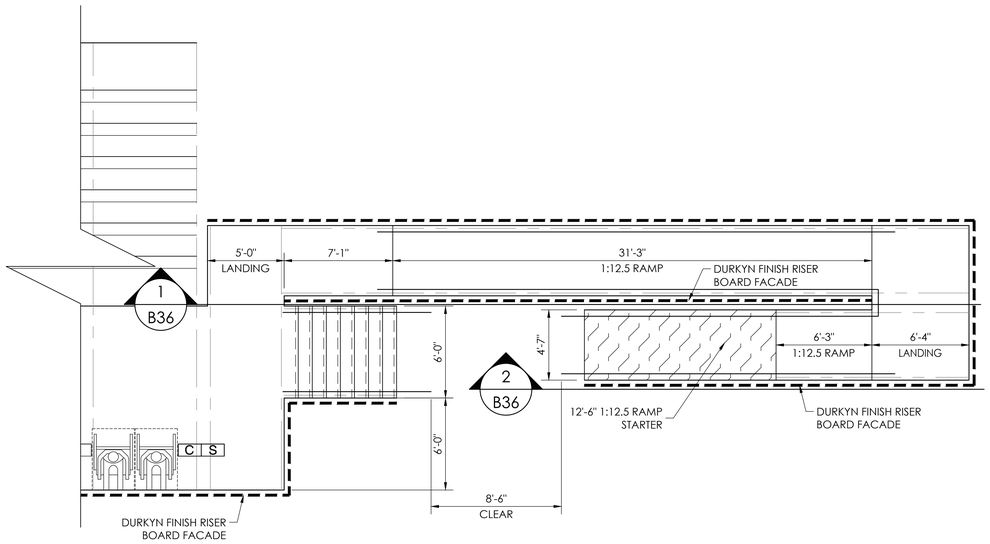

2 / B35 RIGHT SIDE
ENLARGED EXIT LAYOUT - VISITOR
SCALE:1/4"=1'-0"

THIS DRAWING AND ALL INFORMATION THEREIN IS THE PROPERTY OF THE SOUTHERN BLEACHER COMPANY, AND IN ITS PHYSICAL AND DIGITAL FORMS IS NOT TO BE COPIED. THIS DRAWING IS LOANED SUBJECT TO RETURN UPON DEMAND AND, IS NOT TO BE USED DIRECTLY OR INDIRECTLY IN ANY WAY DETRIMENTAL TO OUR INTERESTS.

STRUCTURAL ENGINEERS
553 S. Oak Knoll Ave. Pasadena, CA 91101
CONTACT: Eric Taylor
PHONE: (626) 793-7438
CELL: (626) 793-7438
FAX: (626) 793-7439
EMAIL: eric@taylorandyffan.com
http://www.taylorandyffan.com/

TAYLOR & YFFAN

Southern BLEACHER COMPANY
Established 1946
PO Box One, Graham, Texas 76450
801 Fifth Street,
Phone: 940-549-0733 Fax: 940-549-1565
GRANDSTANDS •BLEACHERS •STADIUMS

REGISTERED PROFESSIONAL ENGINEER
BRIAN T. DEAN
S 6087
STRUCTURAL
STATE OF CALIFORNIA
Signed 11/13/23
PRINCIPAL

REV	DESCRIPTION	DATE	REV BY
1	ENLARGED EXIT LAYOUTS - VISITOR 12" RISE X 26" TREAD / 193'-6" (9 ROWS)		

MERCED UNION HS DISTRICT
BUHACH COLONY HIGH SCHOOL
ATWATER, CALIFORNIA

DRAWN	CHECKED
05/08/2023	JOA	DMC

JOB NUMBER #23023R2

SHEET B35 OF B42

22" X 34" (11x17 = 1/2 indicated scale)

23023R2

IDENTIFICATION STAMP
DIV. OF THE STATE ARCHITECT
APP: 02-121275 INC:
REVIEWED FOR
SS ☑ FLS ☑ ACS ☑
DATE: 12/15/2023

CALIFORNIA DESIGN
WEST ARCHITECTS, Inc.

2100 19th Street
Sacramento, CA 95818

Phone: (916) 446-2466
Fax: (916) 446-5118
Web Page: ca-dw.com

These plans and prints thereof, as instruments of service, are owned by the architect and are for the use on this project only. Reproduction and/or distribution without the prior written consent of the architect is forbidden.

Copyright California Design West Architects, Inc.

ARCHITECT: CONSULTANT:

LICENSED ARCHITECT
MITCHELL A. MCALISTER
No. C-17250
REN. 08/31/2025
STATE OF CALIFORNIA

CONSULTANT:

PROJECT NAME:

BUHACH COLONY HIGH SCHOOL

1800 NORTH BUHACH RD
ATWATER, CA 95301

CONCESSIONS/TOILET BUILDINGS, TICKET BOOTH & STADIUM UPGRADES

MERCED UNION HIGH SCHOOL DISTRICT

MERCED COUNTY

KEY PLAN:

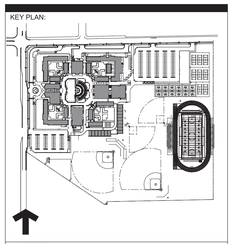

SHEET TITLE:

ENLARGED EXIT LAYOUTS - VISITOR

JOB NUMBER:	SHEET NUMBER:
DATE: OCT 9, 2023	**B35**
REVISION:	

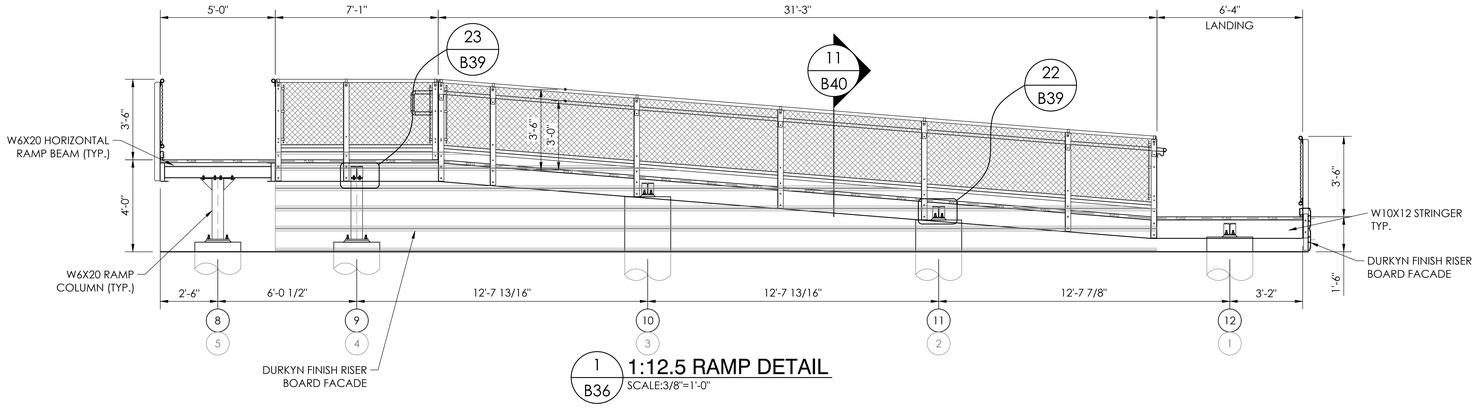

1 B36 **1:12.5 RAMP DETAIL**
SCALE:3/8"=1'-0"

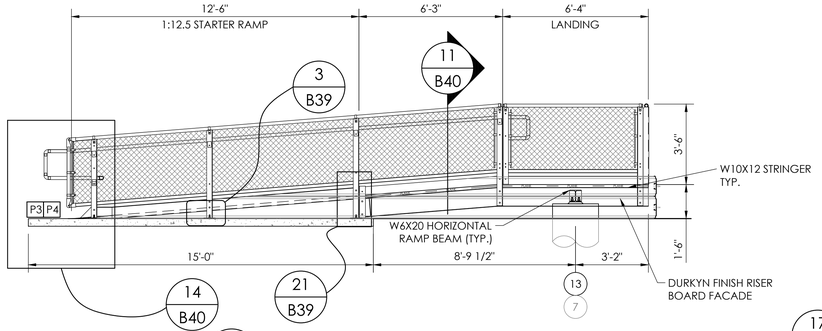

2 B36 **1:12.5 RAMP DETAIL**
SCALE:3/8"=1'-0"

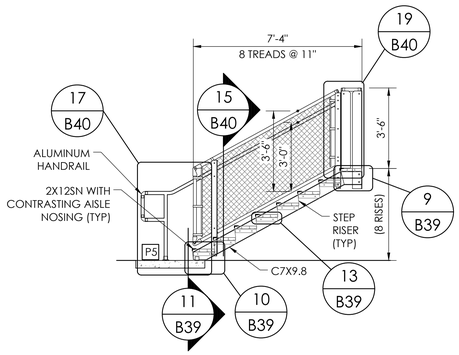

3 B36 **PORTAL EXIT STAIRS**
SCALE:3/8"=1'-0"

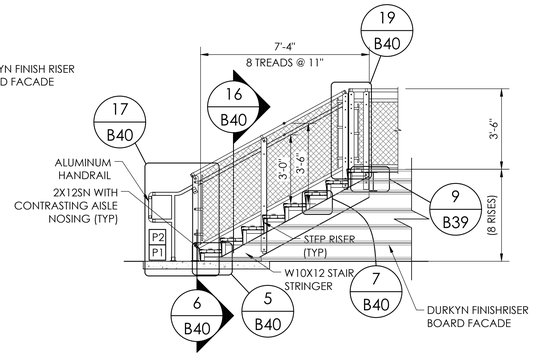

4 B36 **END EXIT STEP**
SCALE:3/8"=1'-0"

THIS DRAWING AND ALL INFORMATION THEREIN IS THE PROPERTY OF THE SOUTHERN BLEACHER COMPANY. EXCEPT WITH WRITTEN PERMISSION, HEREIN NOT BE MODIFIED OR COPIED. THIS DRAWING IS LOANED SUBJECT TO RETURN UPON DEMAND AND, IS NOT TO BE USED DIRECTLY OR INDIRECTLY IN ANY WAY DETRIMENTAL TO OUR INTERESTS.

STRUCTURAL ENGINEERS
TAYLOR & YEAN
COVINA Ph: (626) 252-7438
CORONA Ph: (951) 735-2438
CORONA Fax: (951) 735-2439
553 S. Oak Knoll Ave. Pasadena, CA 91101
http://www.taylorandyean.com/
Southern BLEACHER COMPANY
GRANDSTANDS •BLEACHERS •STADIUMS
PO Box One, Graham, Texas 76450
801 Fifth Street,
Phone: 940-549-0733 Fax: 940-549-1565
Established 1946

REGISTERED PROFESSIONAL ENGINEER
BRIAN T. DEAN
S 6087
STRUCTURAL
STATE OF CALIFORNIA
Signed 11/13/23
PRINCIPAL

REV	DATE	DESCRIPTION
		EXITS - VISITOR
		12" RISE X 26" TREAD / 193'-6" (9 ROWS)

DATE 05/08/2023 | DRAWN JOA | CHECKED DMC
JOB NUMBER #23023R2
SHEET B36 | OF B42

MERCED UNION HS DISTRICT
BUHACH COLONY HIGH SCHOOL
ATWATER, CALIFORNIA

22" X 34" (1) x17
= 1/2 indicated scale)

23023R2

IDENTIFICATION STAMP
DIV. OF THE STATE ARCHITECT
APP: 02-121275 INC:
REVIEWED FOR
SS ☑ FLS ☑ ACS ☑
DATE: 12/15/2023

CALIFORNIA DESIGN
WEST ARCHITECTS, Inc.

2100 19th Street
Sacramento, CA 95818

Phone: (916) 446-2466
Fax: (916) 446-5118
Web Page: ca-dw.com

These plans and prints thereof, as instruments of service, are owned by the architect and are for the use on this project only. Reproduction and/or distribution without the prior written consent of the architect is forbidden.

Copyright California Design West Architects, Inc.

ARCHITECT: CONSULTANT:

LICENSED ARCHITECT
MITCHELL A. MCALISTER
LIC. NO. C-17250
RENEWAL 08-31-2025
STATE OF CALIFORNIA

CONSULTANT:

PROJECT NAME:

BUHACH COLONY HIGH SCHOOL

1800 NORTH BUHACH RD
ATWATER, CA 95301

CONCESSIONS/TOILET BUILDINGS, TICKET BOOTH & STADIUM UPGRADES

MERCED UNION HIGH SCHOOL DISTRICT

MERCED COUNTY

KEY PLAN:

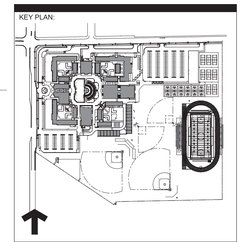

SHEET TITLE:

EXITS - VISITOR

JOB NUMBER:

SHEET NUMBER: **B36**

DATE: OCT 9, 2023

REVISION:

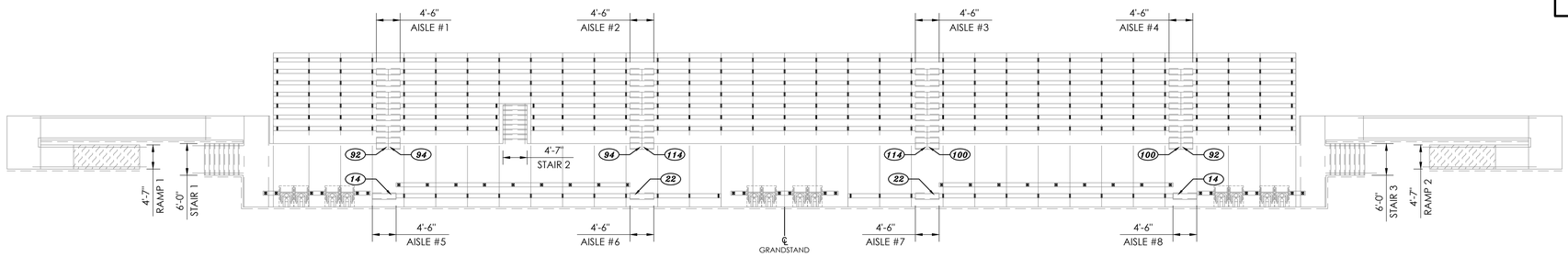

1 / B37 SEAT BRACKET LAYOUT - VISITOR

SCALE:3/32"=1'-0"

(*) *SEATING PER SECTION*

465 "L" BRACKETS (12 X 26 JIG)

28 MAVERICK BENCH LEGS

NOTE:
ALL AISLE SEATS QUALIFY AS DESIGNATED AISLE SEATS SINCE NO ARMRESTS OR BACKS ON ANY SEATS (SEE CBC 11B 221.4)

CBC 2019:
PROVIDE 0.08" WIDTH PER SEAT FOR AISLES & STAIRS:
EQUIVALENT TO 150 PEOPLE PER FOOT.
PROVIDE 0.06" WIDTH PER SEAT FOR RAMPS:
EQUIVALENT TO 200 PEOPLE PER FOOT.

AISLE WIDTH CALCULATIONS:

AISLE #1
REQUIRED AISLE WIDTH = 186 SEATS X 0.08" PER SEAT = 14.88"
<4'-0" CODE MINIMUM <4'-6" PROVIDED - OK

AISLE #2
REQUIRED AISLE WIDTH = 208 SEATS X 0.08" PER SEAT = 16.64"
<4'-0" CODE MINIMUM <4'-6" PROVIDED - OK

AISLES #3
REQUIRED AISLE WIDTH = 214 SEATS X 0.08" PER SEAT = 17.12"
<4'-0" CODE MINIMUM <4'-6" PROVIDED - OK

AISLE #4
REQUIRED AISLE WIDTH = 192 SEATS X 0.08" PER SEAT = 15.36"
<4'-0" CODE MINIMUM <4'-6" PROVIDED - OK

AISLE #5 & #8
REQUIRED AISLE WIDTH = 14 SEATS X 0.08" PER SEAT = 1.12"
<4'-0" CODE MINIMUM <4'-6" PROVIDED - OK

AISLE #6 & #7
REQUIRED AISLE WIDTH = 22 SEATS X 0.08" PER SEAT = 1.76"
<4'-0" CODE MINIMUM <4'-6" PROVIDED - OK

AISLE ACCESSWAY (SEATING EACH SIDE):
26" TREAD DEPTH
CLEAR WIDTH = DEPTH (26") LESS SEAT WIDTH (9.5") = 16.5"
21 SEATS FIRST 12" CLEAR = 21 SEATS
0.3" EACH ADDITIONAL SEAT: 16.5"-12" / 0.3" = 15 SEATS
MAXIMUM SEATS BETWEEN AISLES: 36 SEATS
MAXIMUM WIDTH BETWEEN AISLES: 36 X 1.5' / SEAT = 54'-0"
MAXIMUM ROW LENGTH SHOWN = 49'-6"

EXIT WIDTH CALCULATIONS:
STAIRS #1 & #3 @ 5'-8 3/8" = 11'-4 3/4"
STAIRS #2 @ 4'-3 3/8" = 4'-3 3/8"
15'-8 1/8" TOTAL STAIR EXIT WIDTH

RAMPS #1 & #2 @ 4'-3 3/8" = 8'-6 3/4"
8'-6 3/4" TOTAL RAMP EXIT WIDTH

STAIR EXIT CAPACITY
15'-8 1/8" X 150 PEOPLE PER FOOT = 2351 STAIR EXIT CAPACITY FURNISHED
RAMP EXIT CAPACITY
8'-6 6/4" X 200 PEOPLE PER FOOT = 1712 RAMP EXIT CAPACITY FURNISHED
4063 TOTAL EXIT CAPACITY
(ACTUAL CAPACITY 978)

NOTE:
ALL DIMENSIONS SHOWN ON SEAT BRACKET LAYOUT ARE TO/FROM THE WELDED EDGE OF THE BRACKET

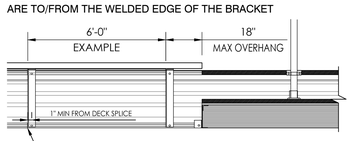

2 / B37 SEAT BRACKET SPACING

NOT TO SCALE

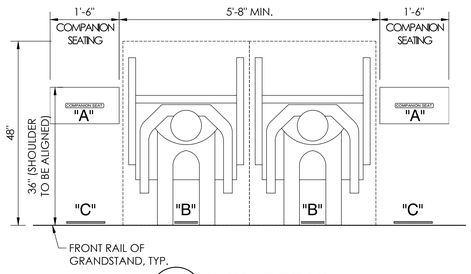

3 / B37 SIGN DETAIL

NOT TO SCALE

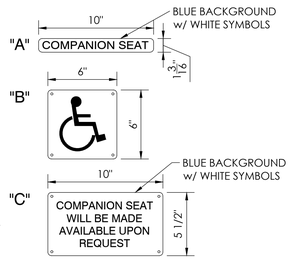

SIGNAGE TYP. @ WHEELCHAIR AREAS
A = COMPANION: 1 3/16" X 10" PLASTIC
B = ACCESSIBLE: 6" X 6" 0.040 ALUM.
C = COMPANION: 5 1/2" X 10" 0.040 ALUM.

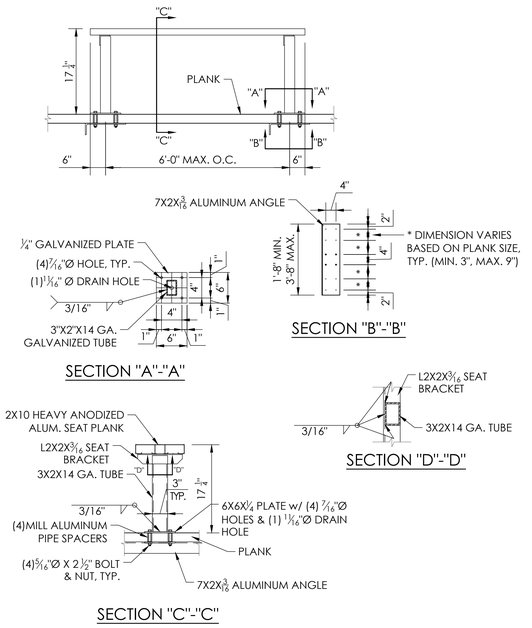

4 / B37 MAVERICK BENCH DETAIL

NOT TO SCALE

THIS DRAWING AND ALL INFORMATION THEREIN IS THE PROPERTY OF THE SOUTHERN BLEACHER COMPANY. EXCEPT FOR USE IN CONNECTION WITH SBC'S NOTED WORK, THIS DRAWING IS NOT TO BE COPIED OR REPRODUCED IN ANY FORM OR MANNER WHATSOEVER NOR SHALL ANY RIGHT OR INTEREST THEREIN BE ASSIGNED, LOANED, SOLD, OR OTHERWISE TRANSFERRED. ALL UNAUTHORIZED USES, REPRODUCTIONS OR TRANSFERS OF ANY KIND ARE PROHIBITED AND WILL BE PROSECUTED TO THE FULLEST EXTENT OF THE LAW. THIS DRAWING IS LOANED SUBJECT TO ITS RETURN UPON DEMAND AND, IS NOT TO BE USED DIRECTLY OR INDIRECTLY IN ANY WAY DETRIMENTAL TO OUR INTERESTS.

STRUCTURAL ENGINEERS
TAYLOR & YEAN
COVINA Ph: (626) 252-2438
LOS ANGELES Ph: (213) 250-1936
553 S. Oak Knoll Ave. Pasadena, CA 91101
http://www.taylorandyean.com/
Southern BLEACHER COMPANY
PO Box One, Graham, Texas 76450
801 Fifth Street
Phone: 940-549-0733 Fax: 940-549-1565
Established 1946
GRANDSTANDS ●BLEACHERS ●STADIUMS

REGISTERED PROFESSIONAL ENGINEER
BRIAN T. DEAN
S 6087
STRUCTURAL
STATE OF CALIFORNIA
Signed 11/13/23
PRINCIPAL

REV	DATE	DESCRIPTION

DRAWN: JOA | CHECKED: DMC
05/08/2023
JOB NUMBER: #23023R2
SHEET B37 OF B42

SEAT BRACKET LAYOUT - VISITOR
12" RISE X 26" TREAD / 193'-6" (9 ROWS)

MERCED UNION HS DISTRICT
BUHACH COLONY HIGH SCHOOL
ATWATER, CALIFORNIA

22" X 34" (11x17 = 1/2 indicated scale)

23023R2

IDENTIFICATION STAMP
DIV. OF THE STATE ARCHITECT
APP: 02-121275 INC:
REVIEWED FOR
SS ☑ FLS ☑ ACS ☑
DATE: 12/15/2023

DESIGN California WEST
CALIFORNIA DESIGN WEST ARCHITECTS, Inc.
2100 19th Street
Sacramento, CA 95818
Phone: (916) 446-2466
Fax: (916) 446-5118
Web Page: ca-dw.com

These plans and prints thereof, as instruments of service, are owned by the architect and are for the use on this project only. Reproduction and/or distribution without the prior written consent of the architect is forbidden.
Copyright California Design West Architects, Inc.

ARCHITECT: CONSULTANT:

LICENSED ARCHITECT
MITCHELL A. MCALISTER
No. C-17250
REN. 08/31/2025
STATE OF CALIFORNIA

CONSULTANT:

PROJECT NAME:
BUHACH COLONY HIGH SCHOOL

1800 NORTH BUHACH RD
ATWATER, CA 95301

CONCESSIONS/TOILET BUILDINGS, TICKET BOOTH & STADIUM UPGRADES

MERCED UNION HIGH SCHOOL DISTRICT

MERCED COUNTY

KEY PLAN:

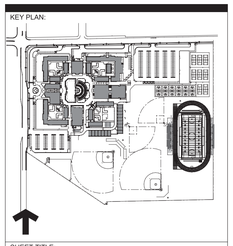

SHEET TITLE:
SEAT BRACKET LAYOUT - VISITOR

JOB NUMBER:	SHEET NUMBER:
	B37
DATE: OCT 9, 2023	
REVISION:	

IDENTIFICATION STAMP
DIV. OF THE STATE ARCHITECT
APP: 02-121275 INC:
REVIEWED FOR
SS ☑ FLS ☑ ACS ☑
DATE: 12/15/2023

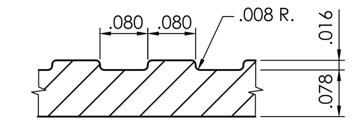

NOTE: TYPICAL FOR ALL PLANKS.

1 / B38 FLUTED SURFACE DETAIL
NOT TO SCALE

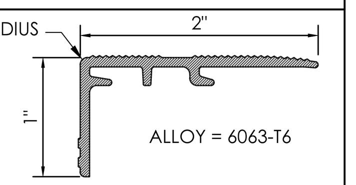

2 / B38 ALUMINUM AISLE NOSING
NOT TO SCALE

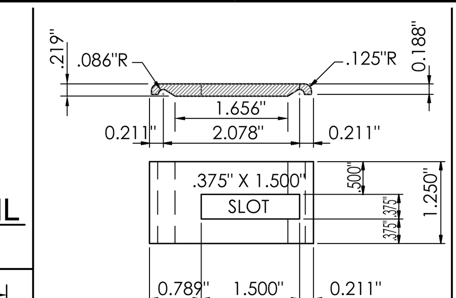

ALUMINUM ALLOY = 6063-T6
EST. AREA = .488 SQ. IN.
EST. WT/FT. = .586 LB.
EST. PERIMETER = 5.427 IN.

3 / B38 HOLD DOWN CLIP DETAIL
NOT TO SCALE

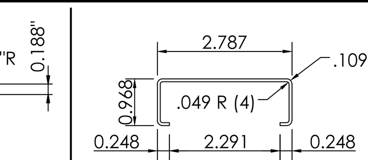

ALUMINUM JOINT SLEEVE
.060 WALL , 0.337#/FT.
1. Ix = .031 IN. e-4
2. MATERIAL - 6063 T-6
3. MIN. MAT. PROP. - 25000 PSI
4. E = 10,000,000 PSI
5. C = .699 IN.

4 / B38 ALUMINUM JOINT SLEEVE DETAIL
NOT TO SCALE

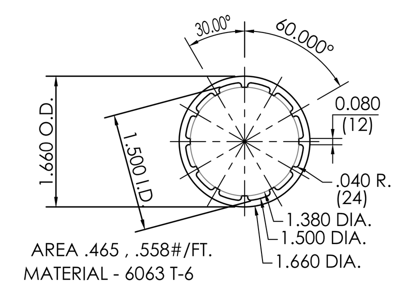

AREA .465 , .558#/FT.
MATERIAL - 6063 T-6

5 / B38 1 5/8" O.D. ALUMINUM RAIL DETAIL
NOT TO SCALE 6063 T6

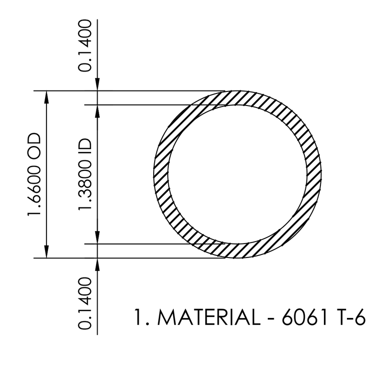

1. MATERIAL - 6061 T-6

6 / B38 SCHED. 40 ALUMINUM PIPE DETAIL
NOT TO SCALE

NOTE: PLANK SHOWN IN DETAIL IS A 2X10. ALL OTHER PLANK USED SHALL BE SIMILAR.

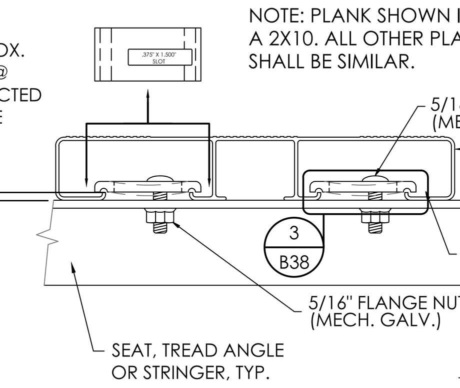

NOTE:
TIGHTEN NUTS 1 TO 1-1/2 TURNS FROM SNUG -OR- 15 FT-LB TORQUE -OR- UNTIL CLIP IS PARTIALLY DEFLECTED AND OBSERVED TO BE IN CONTACT WITH OR WITHIN 0.01" OF CONTACT WITH STRUCTURE BELOW.

7 / B38 PLANK INSTALLATION DETAIL
NOT TO SCALE

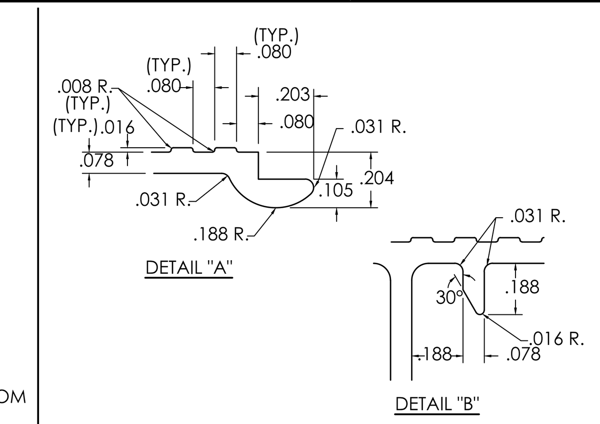

8 / B38 INTERLOCK PLANK DETAIL
NOT TO SCALE

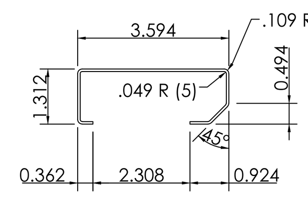

STANDARD ALUMINUM PLANK SLEEVE
.060 WALL , 0.497#/FT.
1. Ix = .097 IN. e-4
2. MATERIAL - 6063 T-6
3. MIN. MAT. PROP. - 25000 PSI
4. E = 10,000,000 PSI
5. C = .891 IN.

9 / B38 STANDARD ALUMINUM PLANK SLEEVE
NOT TO SCALE

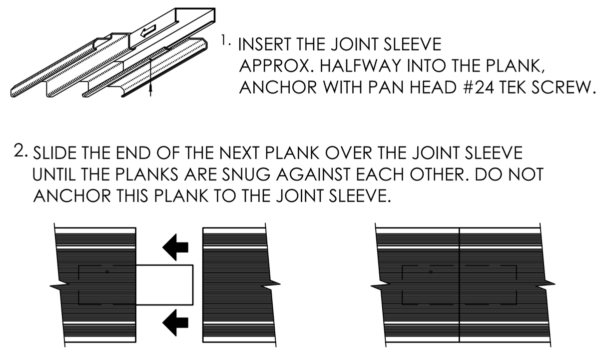

1. INSERT THE JOINT SLEEVE APPROX. HALFWAY INTO THE PLANK, ANCHOR WITH PAN HEAD #24 TEK SCREW.
2. SLIDE THE END OF THE NEXT PLANK OVER THE JOINT SLEEVE UNTIL THE PLANKS ARE SNUG AGAINST EACH OTHER. DO NOT ANCHOR THIS PLANK TO THE JOINT SLEEVE.

10 / B38 RISER JOINT SLEEVE INSTALLATION DETAIL
NOT TO SCALE

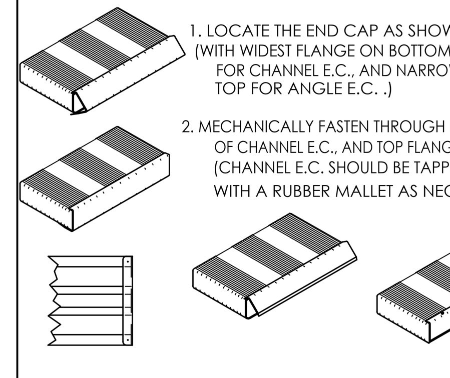

1. LOCATE THE END CAP AS SHOWN. (WITH WIDEST FLANGE ON BOTTOM FOR CHANNEL E.C., AND NARROW FLANGE ON TOP FOR ANGLE E.C. .)
2. MECHANICALLY FASTEN THROUGH BOTTOM FLANGE OF CHANNEL E.C., AND TOP FLANGE OF ANGLE E.C. (CHANNEL E.C. SHOULD BE TAPPED INTO PLACE WITH A RUBBER MALLET AS NECESSARY .)

11 / B38 ENDCAP INSTALLATION DETAIL
NOT TO SCALE

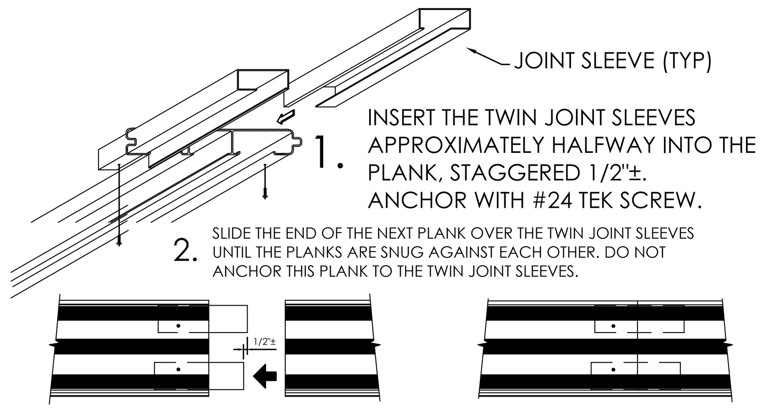

1. INSERT THE TWIN JOINT SLEEVES APPROXIMATELY HALFWAY INTO THE PLANK, STAGGERED 1/2"±. ANCHOR WITH #24 TEK SCREW.
2. SLIDE THE END OF THE NEXT PLANK OVER THE TWIN JOINT SLEEVES UNTIL THE PLANKS ARE SNUG AGAINST EACH OTHER. DO NOT ANCHOR THIS PLANK TO THE TWIN JOINT SLEEVES.

12 / B38 TONGUE & GROOVE JOINT SLEEVE INSTALLATION
NOT TO SCALE

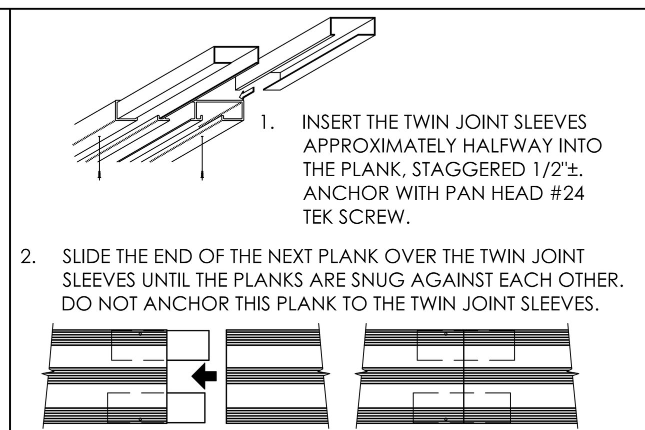

1. INSERT THE TWIN JOINT SLEEVES APPROXIMATELY HALFWAY INTO THE PLANK, STAGGERED 1/2"±. ANCHOR WITH PAN HEAD #24 TEK SCREW.
2. SLIDE THE END OF THE NEXT PLANK OVER THE TWIN JOINT SLEEVES UNTIL THE PLANKS ARE SNUG AGAINST EACH OTHER. DO NOT ANCHOR THIS PLANK TO THE TWIN JOINT SLEEVES.

13 / B38 JOINT SLEEVE INSTALLATION DETAIL
NOT TO SCALE

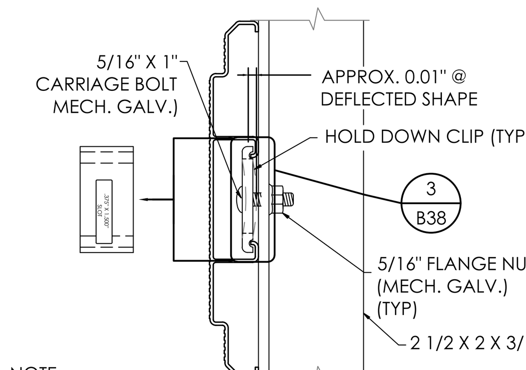

NOTE:
SNUG FLANGE NUT TO ATTACHMENT FIXTURE. TIGHTEN 1 TO 1 ½ TURNS TILL HOLDDOWN CLIP IS PARTIALLY DEFLECTED

14 / B38 RISER BOARD FACADE INSTALLATION DETAIL
NOT TO SCALE

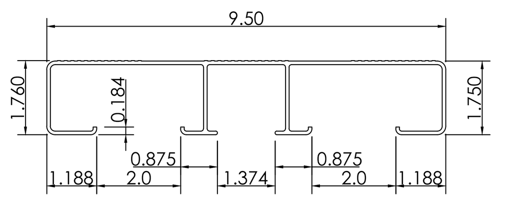

2X10 HEAVY ALUMINUM PLANK
.075 WALL , 1.769#/FT.
1. Ix = .843 IN. e-4
2. MATERIAL - 6063 T-6
3. MIN. MAT. PROP. - 25000 PSI
4. E = 10,000,000 PSI
5. C = 1.10 IN.

15 / B38 2 X 10 HEAVY ALUMINUM PLANK DETAIL
NOT TO SCALE

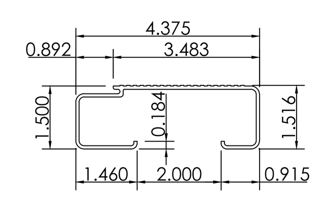

2X4 1/2 ALUMINUM STEPNOSE PLANK
.078 WALL , 0.828#/FT.
1. Ix = .231 IN. e-4
2. MATERIAL - 6063 T-6
3. MIN. MAT. PROP. - 25000 PSI
4. E = 10,000,000 PSI
5. C = .921 IN.

16 / B38 2X4 1/2 ALUMINUM STEPNOSE PLANK DETAIL
NOT TO SCALE

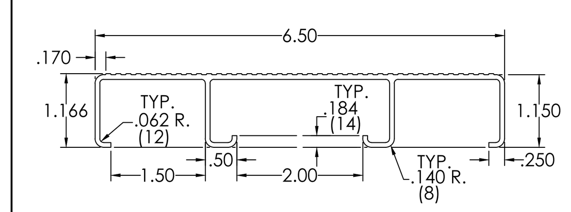

1X6 1/2 ALUMINUM TOE BOARD
.078 WALL , 1.132#/FT.
1. Ix = 0.154 in^4
2. MATERIAL - 6063 T-6
3. MIN. MAT. PROP. - 25000 PSI
4. E = 10,000,000 PSI
5. C = 0.8.22 in

17 / B38 1X6 1/2 ALUMINUM (VERT.) TOEBOARD PLANK DETAIL
NOT TO SCALE

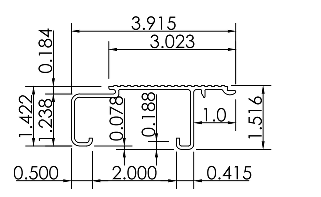

2X4 ALUMINUM INTERLOCKING NOSE W/RISER PLANK
.078 WALL , 0.781#/FT.
1. Ix = .164 IN. e-4
2. MATERIAL - 6063 T-6
3. MIN. MAT. PROP. - 25000 PSI
4. E = 10,000,000 PSI
5. C = 1.05 IN.

18 / B38 2 X 4 ALUMINUM (NOSE W/RISER) INTERLOCKING PLANK DETAIL
NOT TO SCALE

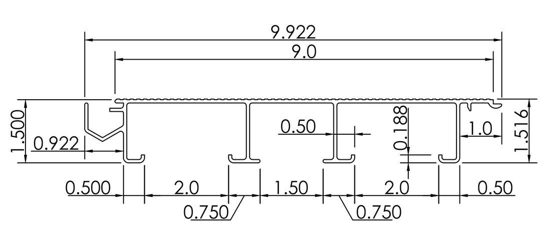

2X9 ALUMINUM INTERLOCKING DECK PLANK
.078 WALL , 1.931#/FT.
1. Ix = .465 IN. e-4
2. MATERIAL - 6063 T-6
3. MIN. MAT. PROP. - 25000 PSI
4. E = 10,000,000 PSI
5. C = 1.03 IN.

19 / B38 2 X 9 ALUMINUM (DECK) INTERLOCKING PLANK DETAIL
NOT TO SCALE

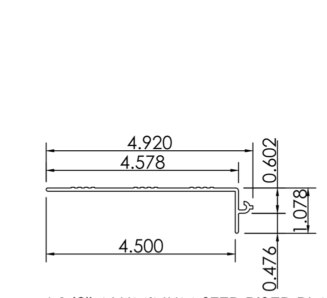

4 1/2" ALUMINUM STEP RISER PLANK
.078 WALL , 0.540#/FT.

20 / B38 4 1/2" ALUMINUM STEP RISER PLANK DETAIL
NOT TO SCALE

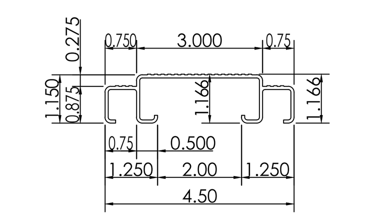

1X4 1/2 ALUMINUM FLAT RISER PLANK
.075 WALL , 0.865#/FT.
1. Ix = .116 IN. e-4
2. MATERIAL - 6063 T-6
3. MIN. MAT. PROP. - 25000 PSI
4. E = 10,000,000 PSI
5. C = .697 IN.

21 / B38 1 X 4 1/2 ALUMINUM FLAT RISER PLANK DETAIL
NOT TO SCALE

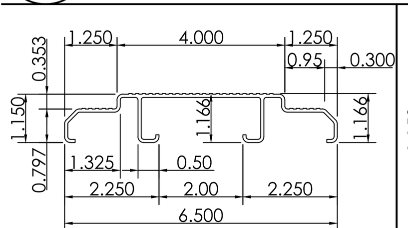

1X6 1/2 ALUMINUM FLAT RISER PLANK
.075 WALL , 1.081#/FT.
1. Ix = .131 IN. e-4
2. MATERIAL - 6063 T-6
3. MIN. MAT. PROP. - 25000 PSI
4. E = 10,000,000 PSI
5. C = .740 IN.

22 / B38 1 X 6 1/2 ALUMINUM FLAT RISER PLANK DETAIL
NOT TO SCALE

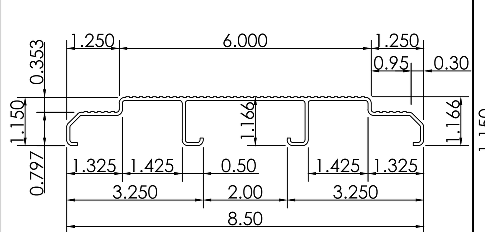

1X8 1/2 ALUMINUM FLAT RISER PLANK
.075 WALL , 1.283#/FT.
1. Ix = .151 IN. e-4
2. MATERIAL - 6063 T-6
3. MIN. MAT. PROP. - 25000 PSI
4. E = 10,000,000 PSI
5. C = .799 IN.

23 / B38 1 X 8 1/2 ALUMINUM FLAT RISER PLANK DETAIL
NOT TO SCALE

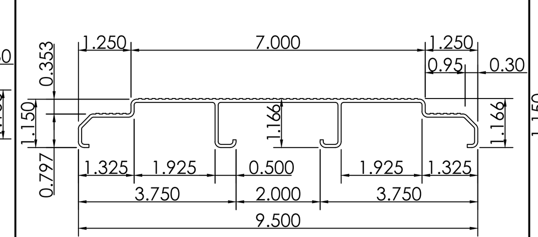

1X9 1/2 ALUMINUM FLAT RISER PLANK
.075 WALL , 1.381#/FT.
1. Ix = .159 IN. e-4
2. MATERIAL - 6063 T-6
3. MIN. MAT. PROP. - 25000 PSI
4. E = 10,000,000 PSI
5. C = .822 IN.

24 / B38 1 X 9 1/2 ALUMINUM FLAT RISER PLANK DETAIL
NOT TO SCALE

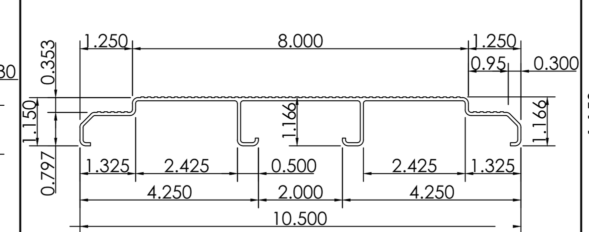

1X10 1/2 ALUMINUM FLAT RISER PLANK
.075 WALL , 1.481#/FT.
1. Ix = .165 IN. e-4
2. MATERIAL - 6063 T-6
3. MIN. MAT. PROP. - 25000 PSI
4. E = 10,000,000 PSI
5. C = .842 IN.

25 / B38 1 X 10 1/2 ALUMINUM FLAT RISER PLANK DETAIL
NOT TO SCALE

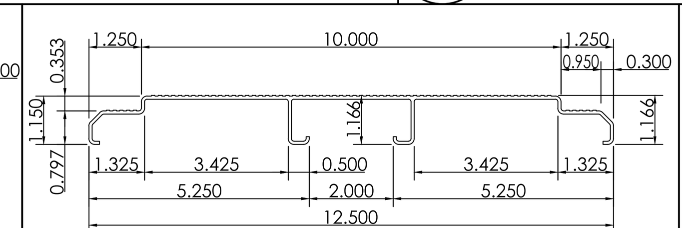

1X12 1/2 ALUMINUM FLAT RISER PLANK
.075 WALL , 1.680#/FT.
1. Ix = .177 IN. e-4
2. MATERIAL - 6063 T-6
3. MIN. MAT. PROP. - 25000 PSI
4. E = 10,000,000 PSI
5. C = .874 IN.

26 / B38 1 X 12 1/2 ALUMINUM FLAT RISER PLANK DETAIL
NOT TO SCALE

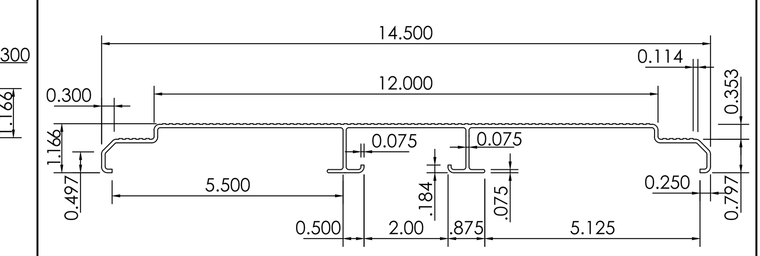

1X14 1/2 ALUMINUM FLAT RISER PLANK
.085 WALL, 1.971 #FT.
1. Ix = .2405 IN. e-4
2. MATERIAL - 6063 T-6
3. MIN. MAT. PROP. - 25000 PSI
4. E = 10,000,000 PSI
5. C = .8657 IN.
6. Sx = .2778 IN.

27 / B38 1 X 14 1/2 ALUMINUM FLAT RISER PLANK DETAIL
NOT TO SCALE

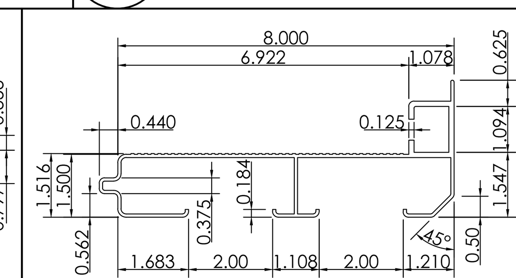

2X8 TONGUE & GROOVE HEEL PLANK
.078 WALL , 2.145#/FT.
1. Ix = 1.18 IN. e-4
2. MATERIAL - 6063 T-6
3. MIN. MAT. PROP. - 25000 PSI
4. E = 10,000,000 PSI
5. C = 1.28 IN.

28 / B38 2 X 8 TONGUE & GROOVE ALUMINUM HEEL PLANK DETAIL
NOT TO SCALE

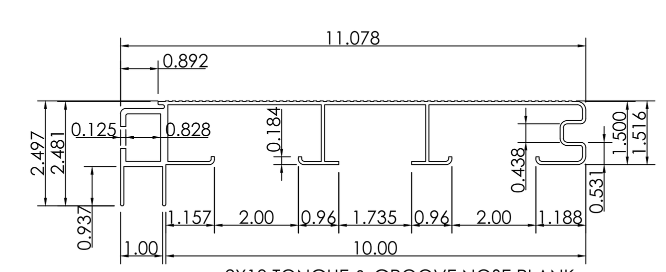

2X10 TONGUE & GROOVE NOSE PLANK
.078 WALL , 2.750#/FT.
1. Ix = 1.05 IN. e-4
2. MATERIAL - 6063 T-6
3. MIN. MAT. PROP. - 25000 PSI
4. E = 10,000,000 PSI
5. C = .813 IN.

29 / B38 2 X 10 TONGUE & GROOVE ALUMINUM NOSE PLANK DETAIL
NOT TO SCALE

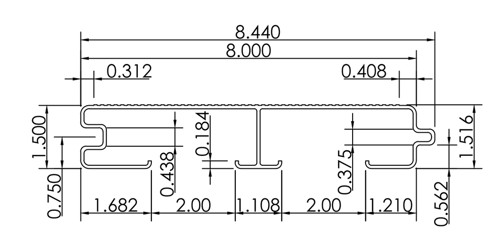

2X8 TONGUE & GROOVE PLANK
.078 WALL , 1.711#/FT.
1. Ix = .511 IN. e-4
2. MATERIAL - 6063 T-6
3. MIN. MAT. PROP. - 25000 PSI
4. E = 10,000,000 PSI
5. C = .927 IN.

30 / B38 2 X 8 ALUMINUM TONGUE & GROOVE PLANK DETAIL
NOT TO SCALE

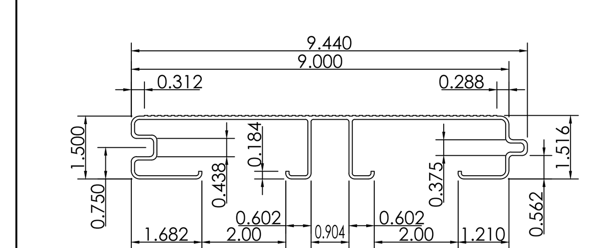

2X9 TONGUE & GROOVE PLANK
.078 WALL , 1.943#/FT.
1. Ix = .555 IN. e-4
2. MATERIAL - 6063 T-6
3. MIN. MAT. PROP. - 25000 PSI
4. E = 10,000,000 PSI
5. C = .945 IN.

31 / B38 2 X 9 ALUMINUM TONGUE & GROOVE PLANK DETAIL
NOT TO SCALE

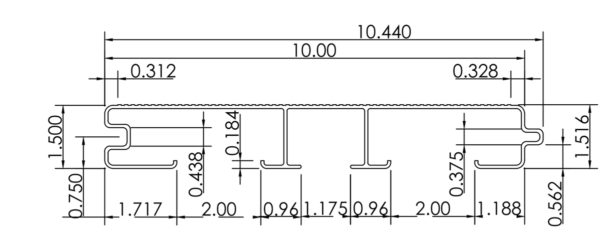

2X10 TONGUE & GROOVE PLANK
.078 WALL , 2.124#/FT.
1. Ix = .630 IN. e-4
2. MATERIAL - 6063 T-6
3. MIN. MAT. PROP. - 25000 PSI
4. E = 10,000,000 PSI
5. C = .937 IN.

32 / B38 2 X 10 ALUMINUM TONGUE & GROOVE PLANK DETAIL
NOT TO SCALE

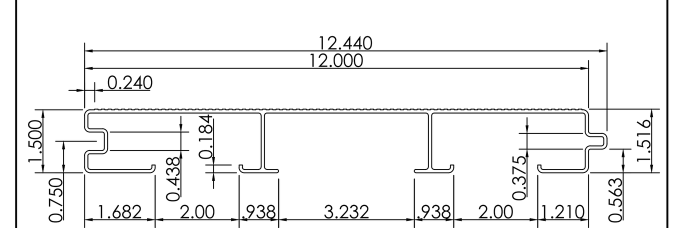

2X12 TONGUE & GROOVE PLANK
.078 WALL , 2.344#/FT.
1. Ix = .676 IN. e-4
2. MATERIAL - 6063 T-6
3. MIN. MAT. PROP. - 25000 PSI
4. E = 10,000,000 PSI
5. C = .986 IN.

33 / B38 2 X 12 ALUMINUM TONGUE & GROOVE PLANK DETAIL
NOT TO SCALE

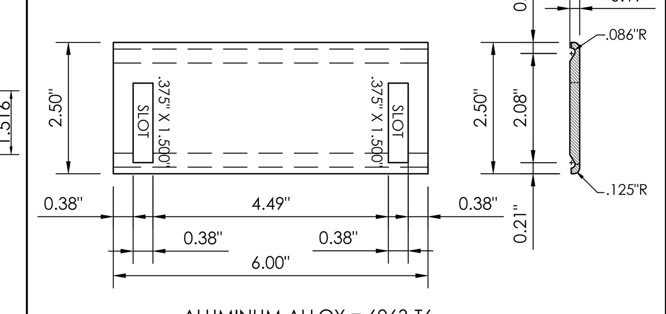

ALUMINUM ALLOY = 6063-T6

34 / B38 6" HOLD DOWN CLIP DETAIL
NOT TO SCALE

THIS DRAWING AND ALL INFORMATION THEREIN IS THE PROPERTY OF THE SOUTHERN BLEACHER COMPANY. TAYLOR & SYFAN AND IS CONFIDENTIAL AND MUST NOT BE MADE PUBLIC OR COPIED. THIS DRAWING IS LOANED SUBJECT TO RE-TURN UPON DEMAND AND, IS NOT TO BE USED DIRECTLY OR INDIRECTLY IN ANY WAY DETRIMENTAL TO OUR INTERESTS.

TAYLOR & SYFAN
STRUCTURAL ENGINEERS
CENTRAL COAST OFFICE Ph: (626) 793-7438 Fax: (626) 793-7439 Toll: (800) 579-3881
553 S. Oak Knoll Ave. Pasadena, CA 91101
http://www.taylorsyfan.com/

Southern® BLEACHER COMPANY
GRANDSTANDS • BLEACHERS • STADIUMS
PO Box One, Graham, Texas 76450
801 Fifth Street.
Phone: 940/549-0733 Fax: 940/549-1365
Established 1946

REGISTERED PROFESSIONAL ENGINEER BRIAN T. DEAN S 6087 STRUCTURAL STATE OF CALIFORNIA
Signed 11/13/23
PRINCIPAL

TYPE: PLANK DETAILS
TITLE: MERCED UNION HS DISTRICT
BUHACH COLONY HIGH SCHOOL
ATWATER, CALIFORNIA

REV	BY	DATE	DESCRIPTION

DATE	DRAWN	CHECKED
05/08/2023	JOA	DMC

JOB NUMBER #23023R2

SHEET	OF
B38	B42

23023R2

22" X 34" (11x17 = 1/2 indicated scale)

CALIFORNIA DESIGN WEST ARCHITECTS, Inc.
2100 19th Street
Sacramento, CA 95818
Phone: (916) 446-2466
Fax: (916) 446-5118
Web Page: ca-dw.com

These plans and prints thereof, as instruments of service, are owned by the architect and are for the use on this project only. Reproduction and/or distribution without the prior written consent of the architect is forbidden.
Copyright California Design West Architects, Inc.

ARCHITECT: CONSULTANT:

LICENSED ARCHITECT MITCHELL A. McALLISTER NO. C 17250 REN. 2-28-2025 STATE OF CALIFORNIA

CONSULTANT:

PROJECT NAME:

BUHACH COLONY HIGH SCHOOL

1800 NORTH BUHACH RD
ATWATER, CA 95301

CONCESSIONS/TOILET BUILDINGS, TICKET BOOTH & STADIUM UPGRADES

MERCED UNION HIGH SCHOOL DISTRICT

MERCED COUNTY

KEY PLAN:

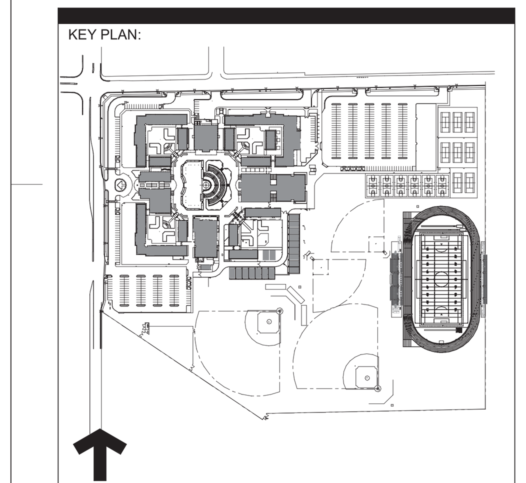

SHEET TITLE:

PLANK DETAILS

JOB NUMBER:

DATE: OCT 9, 2023

REVISION:

SHEET NUMBER: **B38**

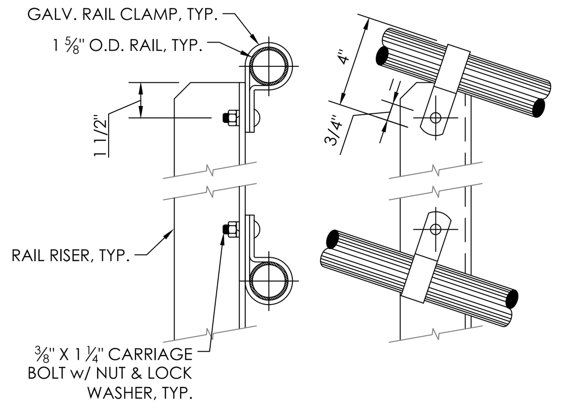

1 RAIL RISER ATTACHMENT DETAIL
B39 NOT TO SCALE

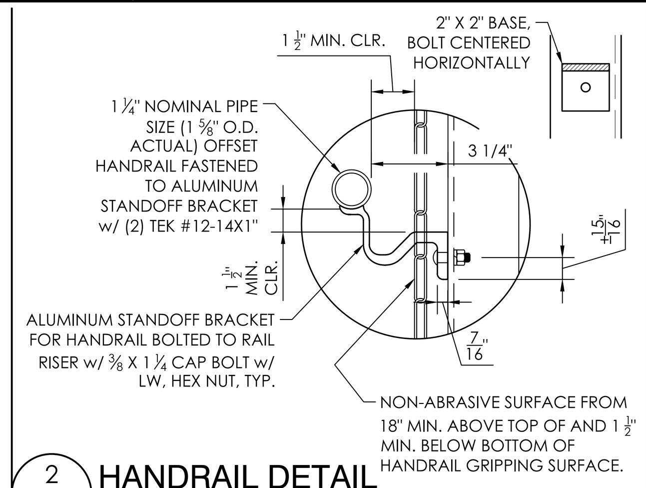

2 HANDRAIL DETAIL
B39 NOT TO SCALE

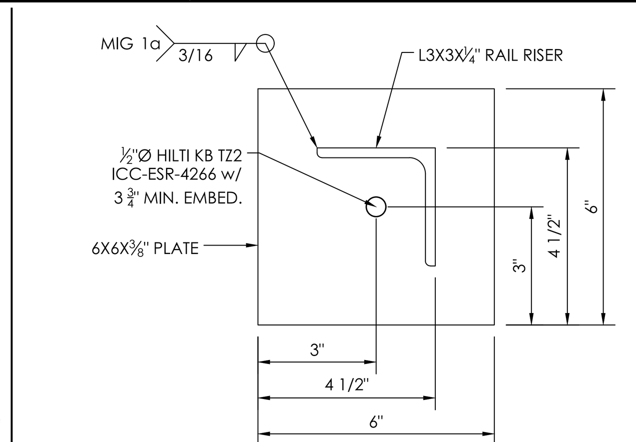

3 BASE PLATE ATTACHMENT DETAIL
B39 NOT TO SCALE

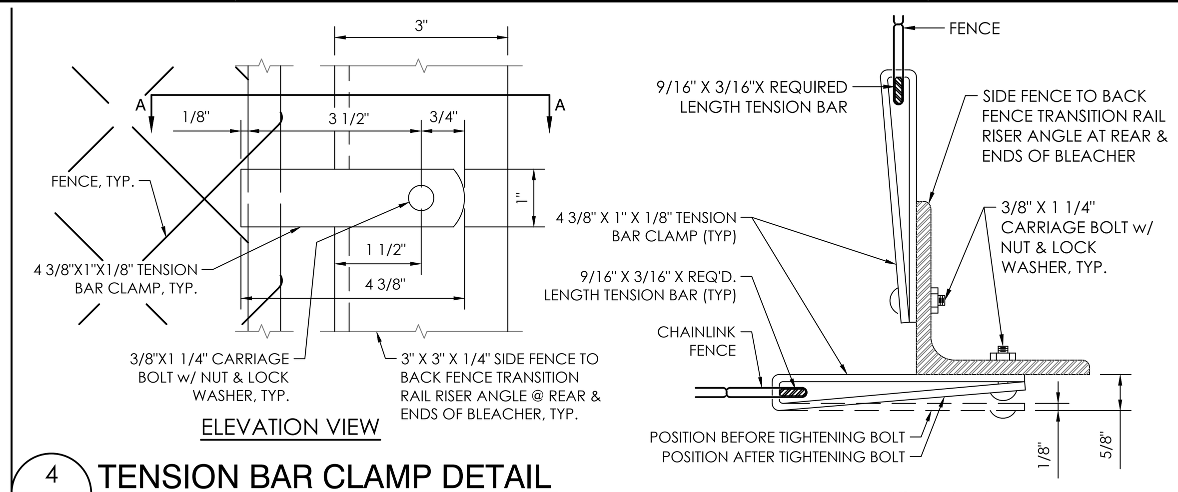

4 TENSION BAR CLAMP DETAIL
B39 NOT TO SCALE

NOT USED

5 B39 NOT TO SCALE

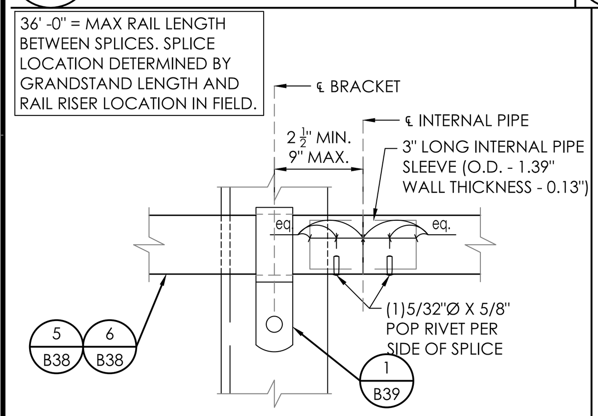

6 HANDRAIL/GUARDRAIL SPLICE DETAIL
B39 NOT TO SCALE

NOT USED

7 B39 NOT TO SCALE

NOT USED

8 CROSSBRACE DETAIL
B39 NOT TO SCALE

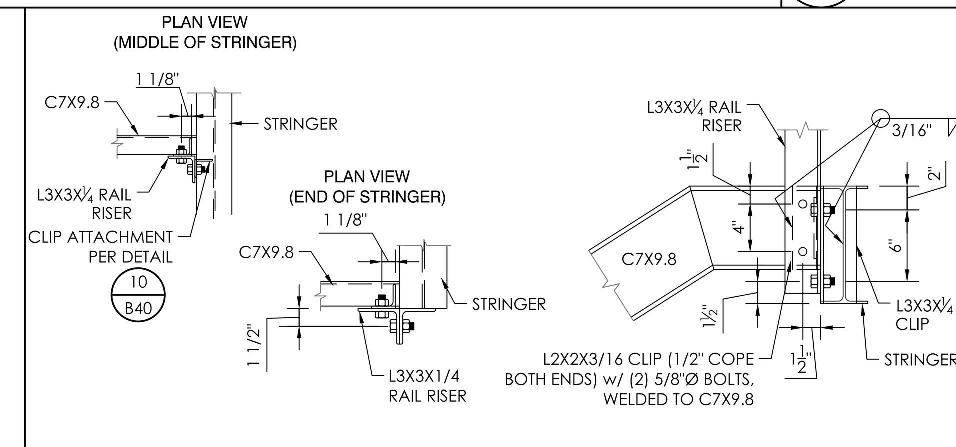

9 STAIR CONNECTION DETAIL
B39 NOT TO SCALE

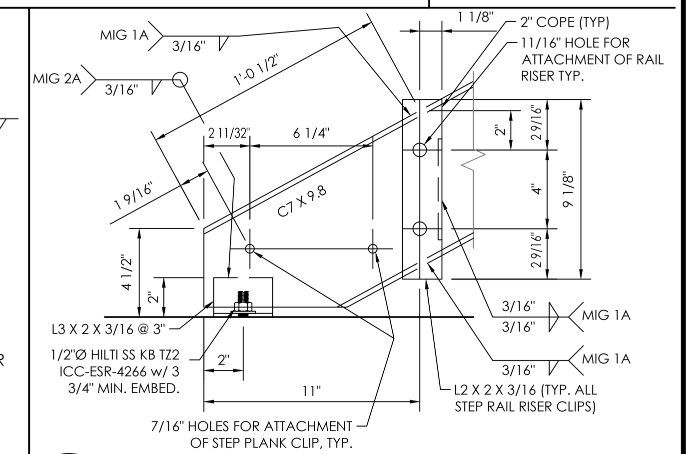

10 LOWER PART/STEP FRAME DETAIL
B39 NOT TO SCALE
(6" RISE X 11" TREAD SHOWN, OTHER RISES SIMILAR)

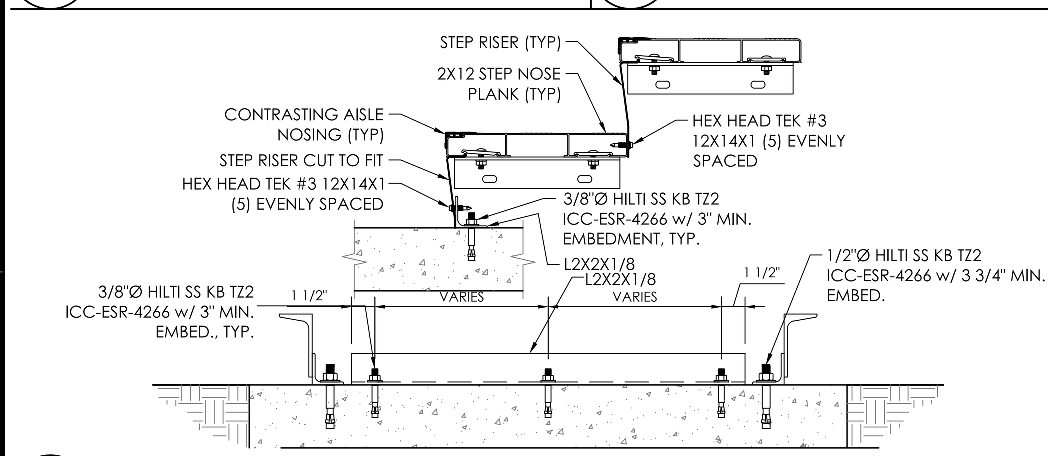

11 STEP RISERS @ BOTTOM OF EXIT STEPS
B39 NOT TO SCALE

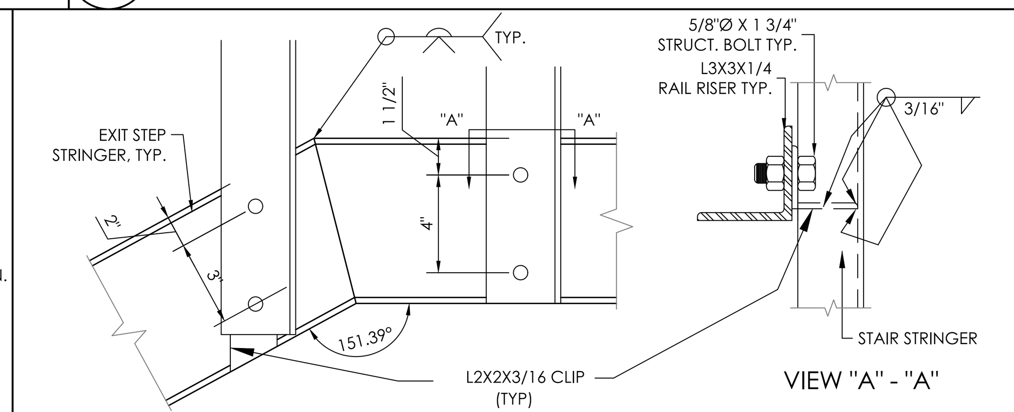

12 UPPER PART / STEP FRAME CONNECTION DETAIL
B39 NOT TO SCALE

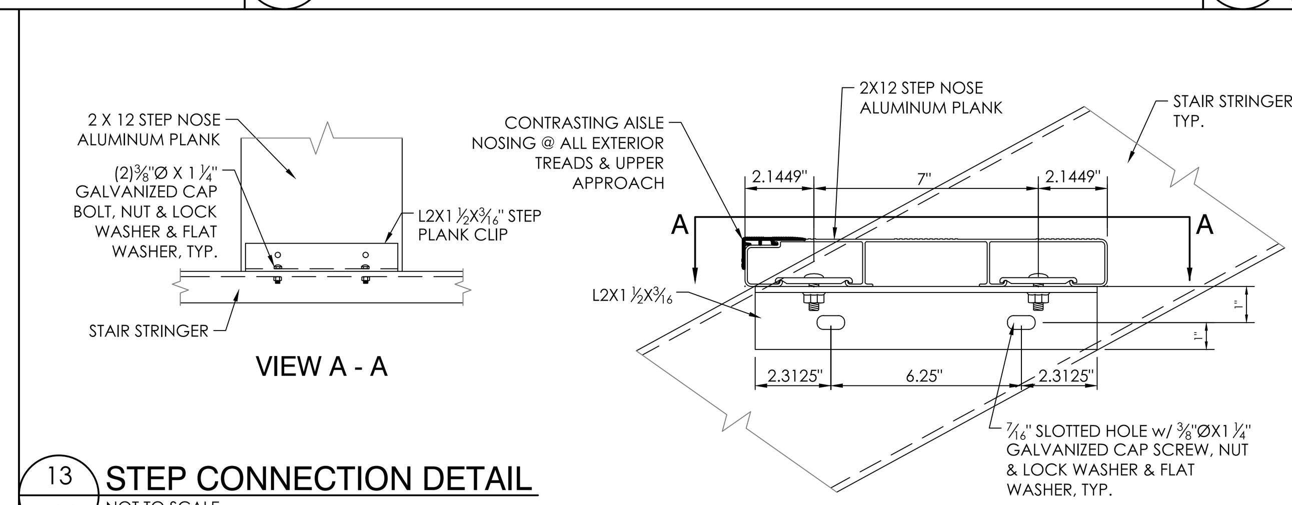

13 STEP CONNECTION DETAIL
B39 NOT TO SCALE

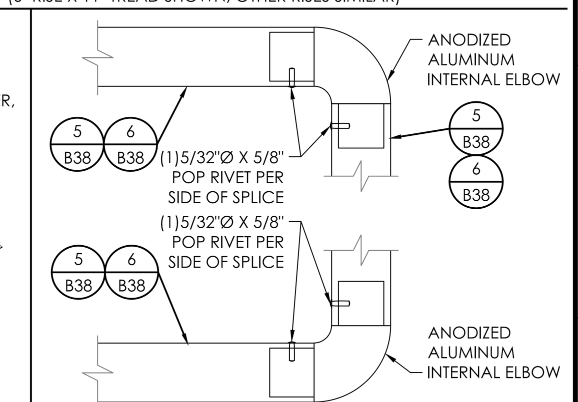

14 HANDRAIL ASSEMBLY DETAIL
B39 NOT TO SCALE

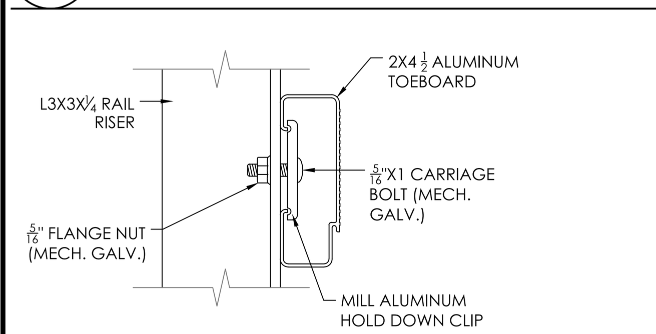

15 TOEBOARD ATTACHMENT DETAIL
B39 NOT TO SCALE

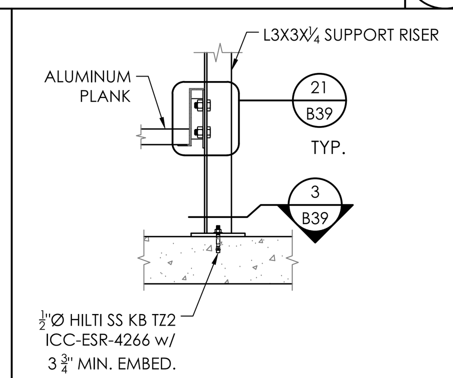

16 RAIL RISER CONNECTION DETAIL
B39 NOT TO SCALE

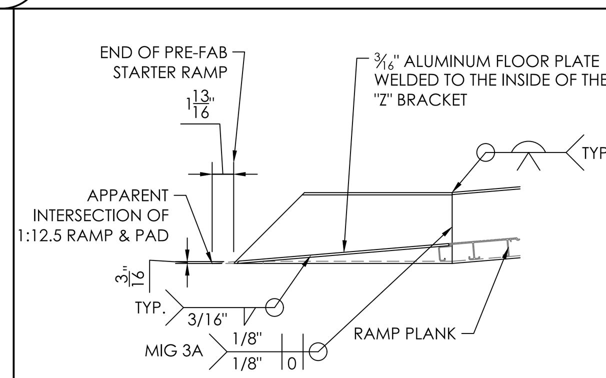

17 STARTER RAMP WELD DETAIL
B39 NOT TO SCALE

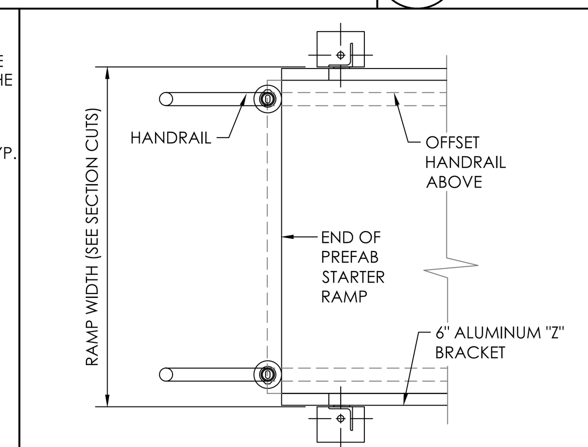

18 END OF RAMP DETAIL
B39 NOT TO SCALE

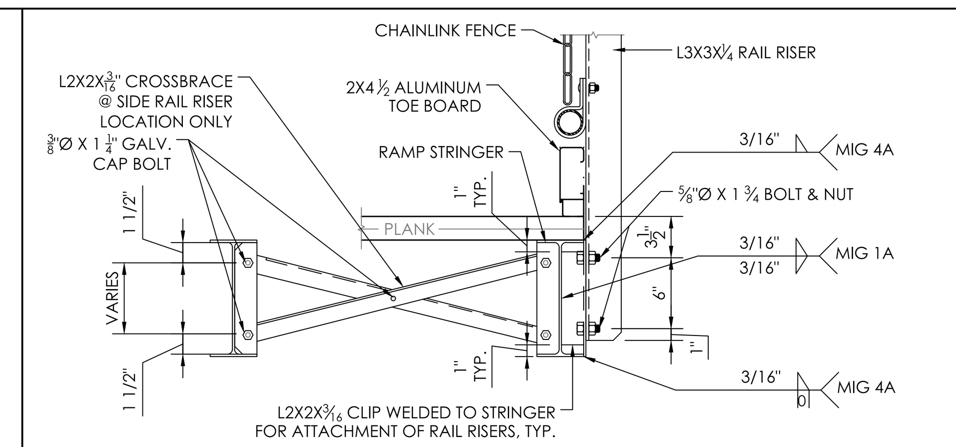

19 RAIL RISER ATTACHMENT DETAIL w/ SWAY RESTRAINT
B39 NOT TO SCALE

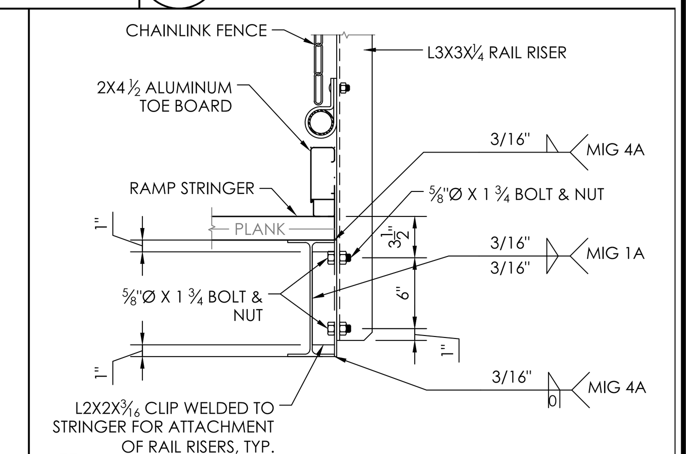

20 RAIL RISER ATTACHMENT DETAIL
B39 NOT TO SCALE

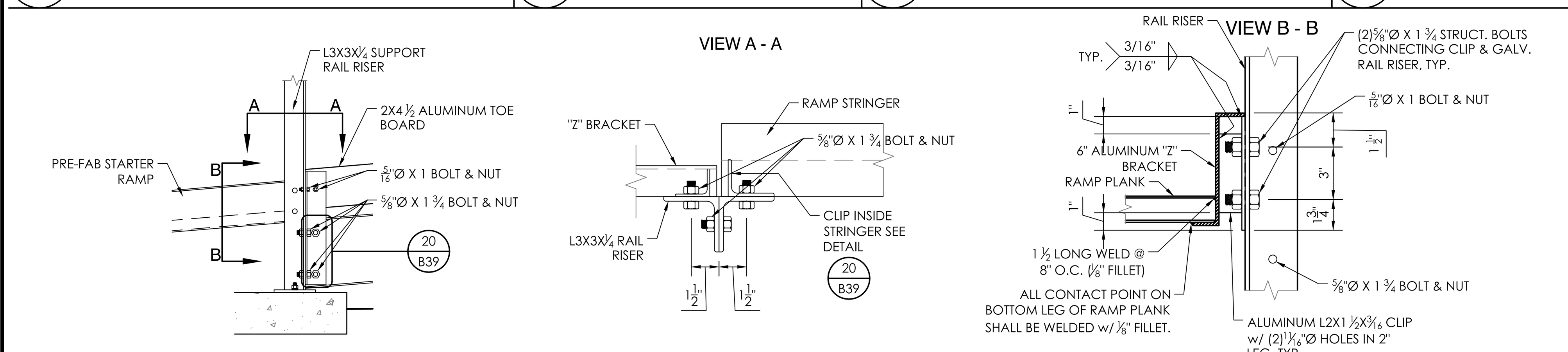

21 PRE-FAB RAMP ATTACHMENT @ WIDE FLANGE RAMP
B39 NOT TO SCALE

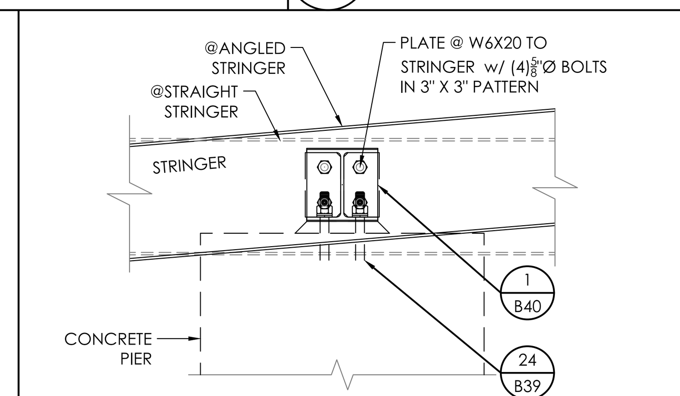

22 RAMP BEAM DETAIL @ STRINGER
B39 NOT TO SCALE

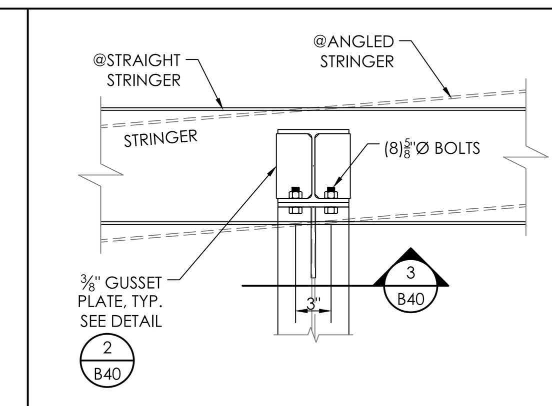

23 COLUMN @ RAMP
B39 NOT TO SCALE

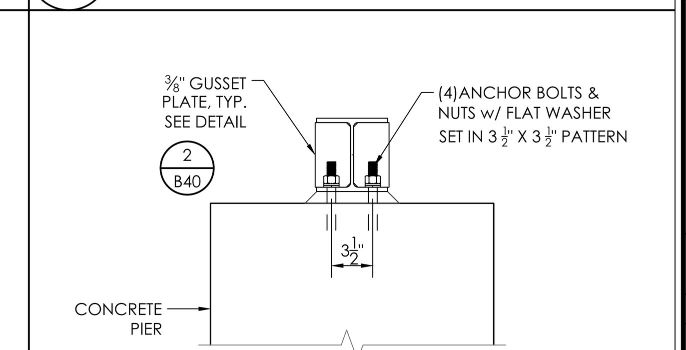

24 RAMP BEAM DETAIL @ PIER
B39 NOT TO SCALE

THIS DRAWING AND ALL INFORMATION THEREIN IS THE PROPERTY OF THE SOUTHERN BLEACHER COMPANY. TAYLOR & SYFAN AND IS CONFIDENTIAL AND MUST NOT BE MADE PUBLIC OR COPIED. THIS DRAWING IS LOANED SUBJECT TO RE-TURN UPON DEMAND AND, IS NOT TO BE USED DIRECTLY OR INDIRECTLY IN ANY WAY DETRIMENTAL TO OUR INTERESTS.

TAYLOR & SYFAN
STRUCTURAL ENGINEERS
CENTRAL COAST OFFICE Ph: (626) 793-7438 Fax: (626) 793-7439 Toll: (800) 579-3881
553 S. Oak Knoll Ave. Pasadena, CA 91101
http://www.taylorsyfan.com/

Southern® BLEACHER COMPANY
GRANDSTANDS • BLEACHERS • STADIUMS
PO Box One, Graham, Texas 76450
801 Fifth Street.
Phone: 940/549-0733 Fax: 940/549-1365
Established 1946

REGISTERED PROFESSIONAL ENGINEER BRIAN T. DEAN S 6087 STRUCTURAL STATE OF CALIFORNIA
Signed 11/13/23
PRINCIPAL

TYPE	EXIT DETAILS
TITLE	MERCED UNION HS DISTRICT BUHACH COLONY HIGH SCHOOL ATWATER, CALIFORNIA

REV	BY	DATE	DESCRIPTION

DATE	DRAWN	CHECKED
05/08/2023	JOA	DMC

JOB NUMBER #23023R2

SHEET	OF
B39	B42

22" X 34" (11x17 = 1/2 indicated scale)

23023R2

IDENTIFICATION STAMP
DIV. OF THE STATE ARCHITECT
APP: 02-121275 INC:
REVIEWED FOR
SS ☑ FLS ☑ ACS ☑
DATE: 12/15/2023

CALIFORNIA DESIGN WEST ARCHITECTS, Inc.

2100 19th Street
Sacramento, CA 95818

Phone: (916) 446-2466
Fax: (916) 446-5118
Web Page: ca-dw.com

These plans and prints thereof, as instruments of service, are owned by the architect and are for the use on this project only. Reproduction and/or distribution without the prior written consent of the architect is forbidden.

Copyright California Design West Architects, Inc.

ARCHITECT: CONSULTANT:

LICENSED ARCHITECT MITCHELL A. McALLISTER NO. C 17250 REN. 2-28-2025 STATE OF CALIFORNIA

CONSULTANT:

PROJECT NAME:

BUHACH COLONY HIGH SCHOOL

1800 NORTH BUHACH RD
ATWATER, CA 95301

CONCESSIONS/TOILET BUILDINGS, TICKET BOOTH & STADIUM UPGRADES

MERCED UNION HIGH SCHOOL DISTRICT

MERCED COUNTY

KEY PLAN:

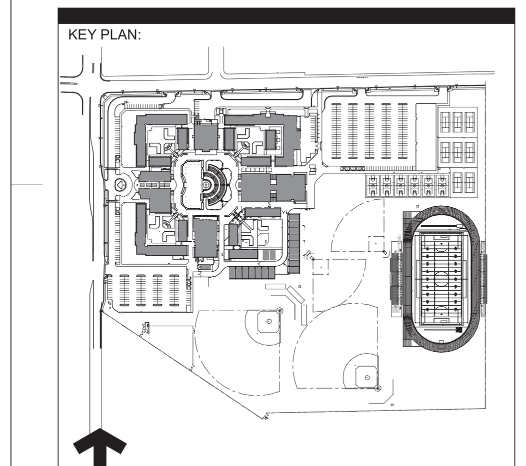

SHEET TITLE:

EXIT DETAILS

JOB NUMBER:	SHEET NUMBER:
DATE: OCT 9, 2023	**B39**
REVISION:	

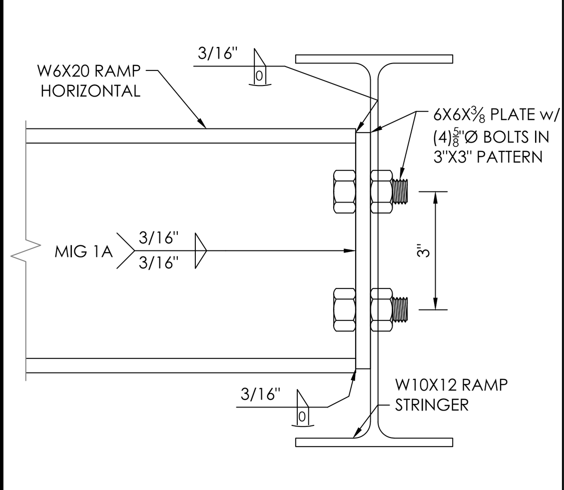

1/B40 W6X20 w/ 6X6X3/8 PLATE WELD DETAIL
NOT TO SCALE

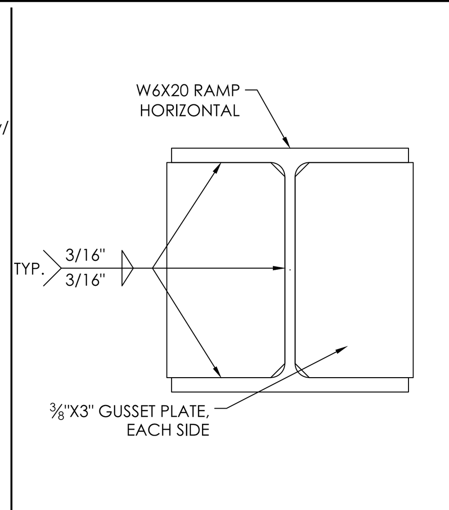

2/B40 GUSSET PLATE DETAIL
NOT TO SCALE

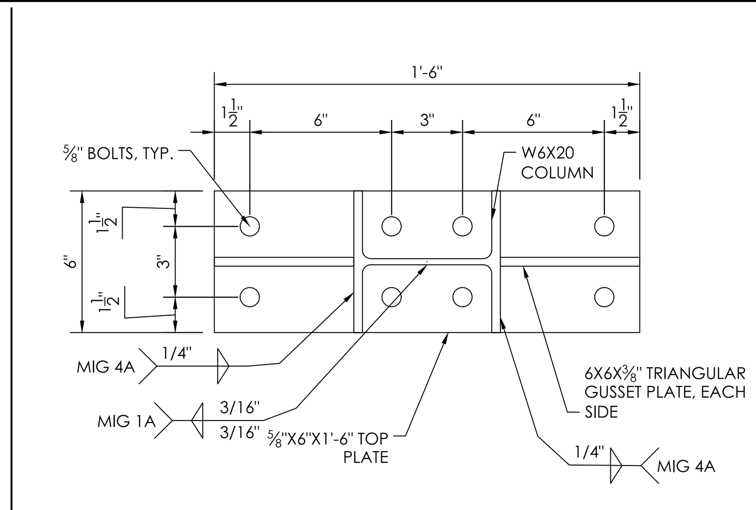

3/B40 RAMP COLUMN CONNECTION DETAIL
NOT TO SCALE

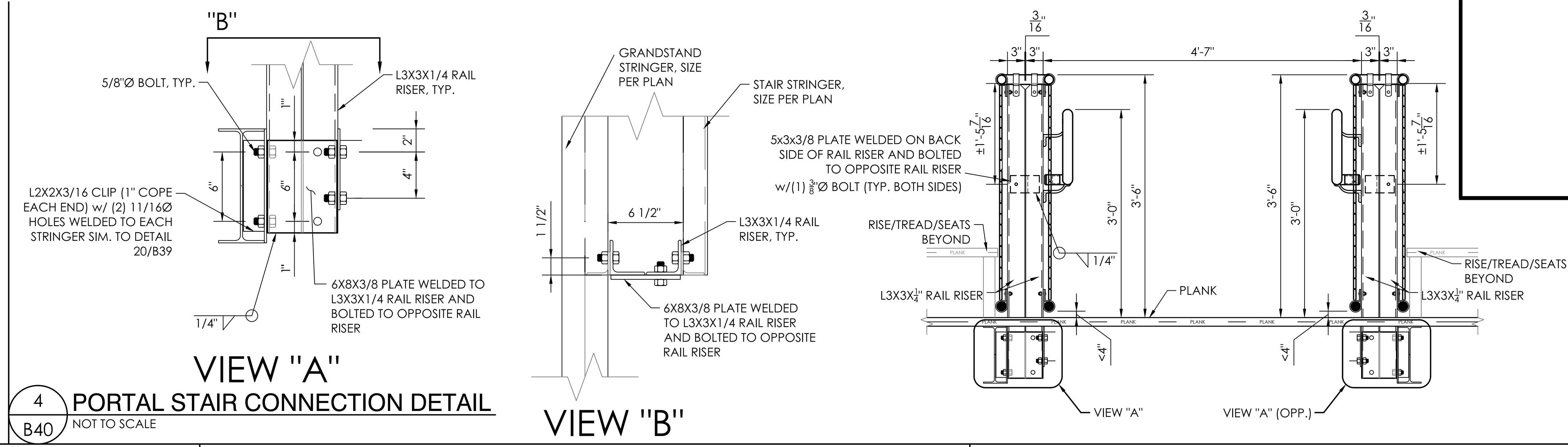

4/B40 PORTAL STAIR CONNECTION DETAIL
NOT TO SCALE

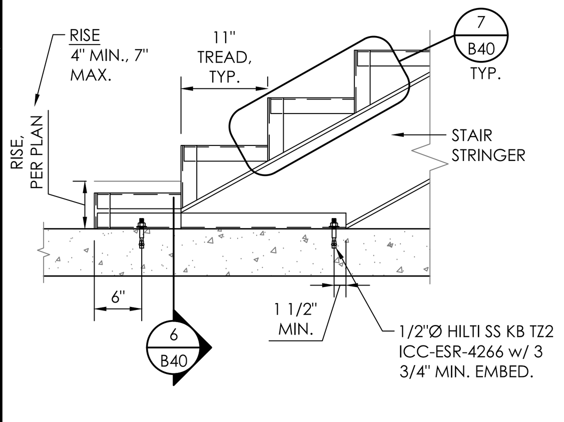

5/B40 STAIR CONNECTION DETAIL
NOT TO SCALE

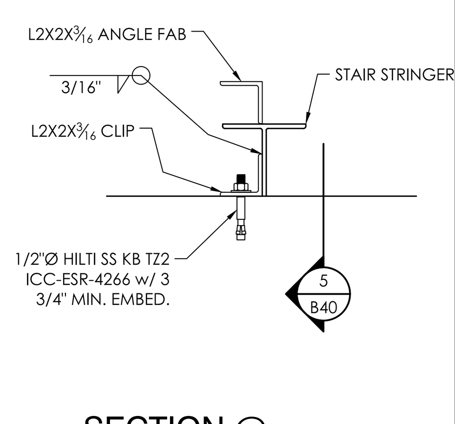

6/B40 SECTION @ STAIR CONNECTION
NOT TO SCALE

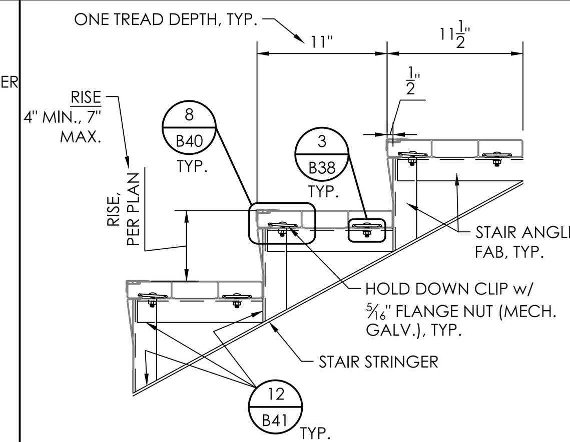

7/B40 EXIT STEP (TREAD) DETAIL
NOT TO SCALE

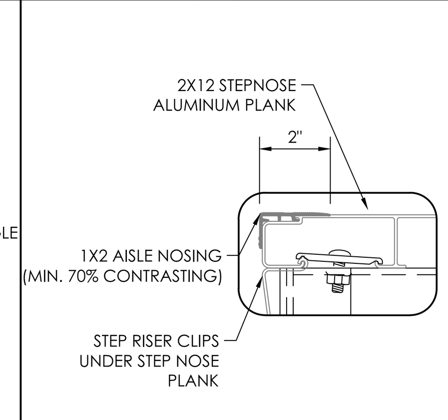

8/B40 STEP NOSE CONNECTION DETAIL
NOT TO SCALE

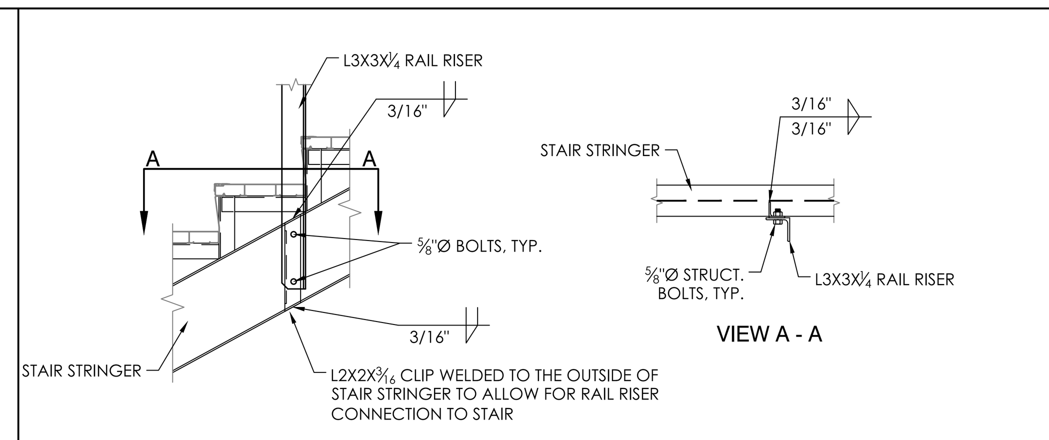

9/B40 RAIL RISER CONNECTION DETAIL
NOT TO SCALE

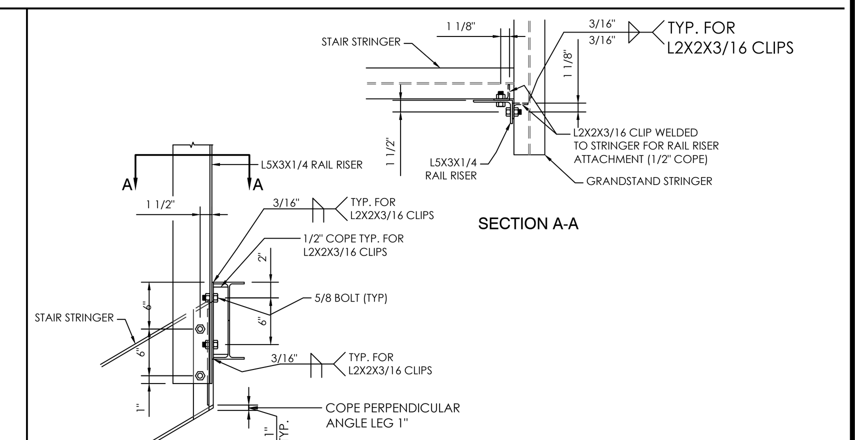

10/B40 STAIR TO GRANDSTAND CONNECTION DETAIL
NOT TO SCALE

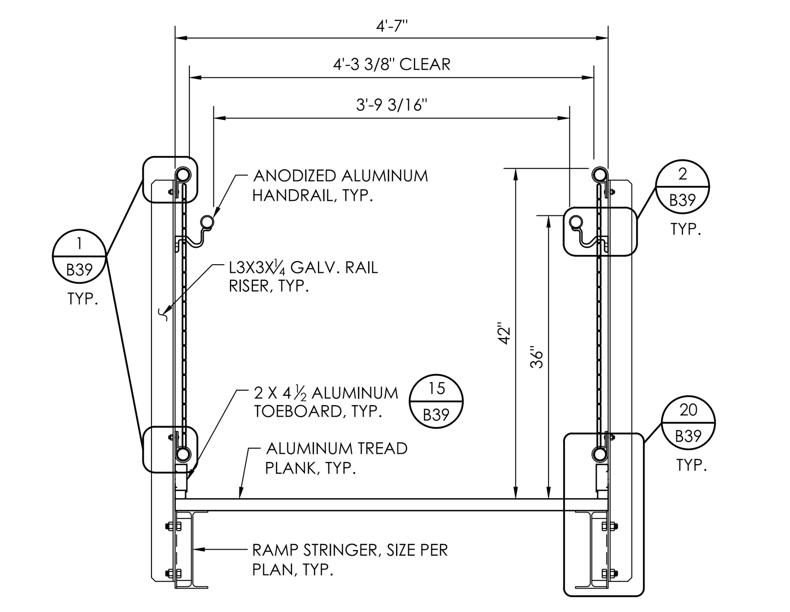

11/B40 RAMP SECTION DETAIL
NOT TO SCALE

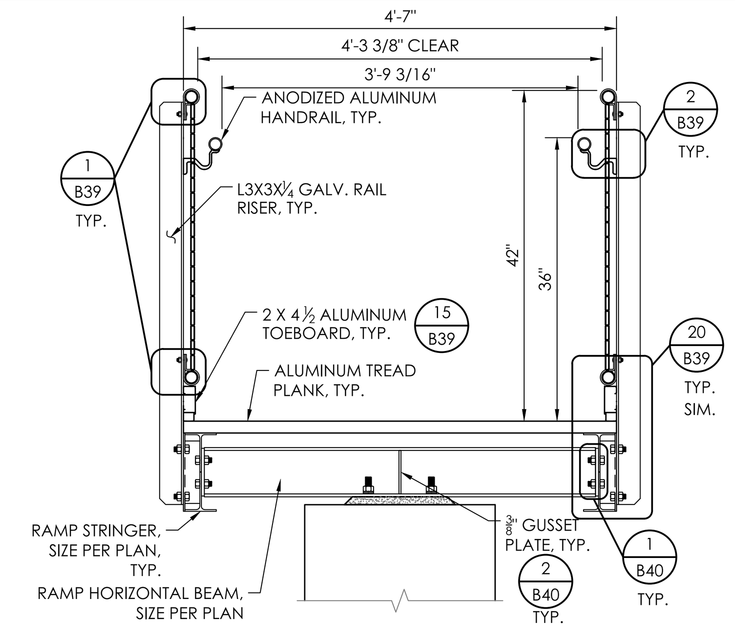

12/B40 RAMP SECTION DETAIL @ RAMP PIER
NOT TO SCALE

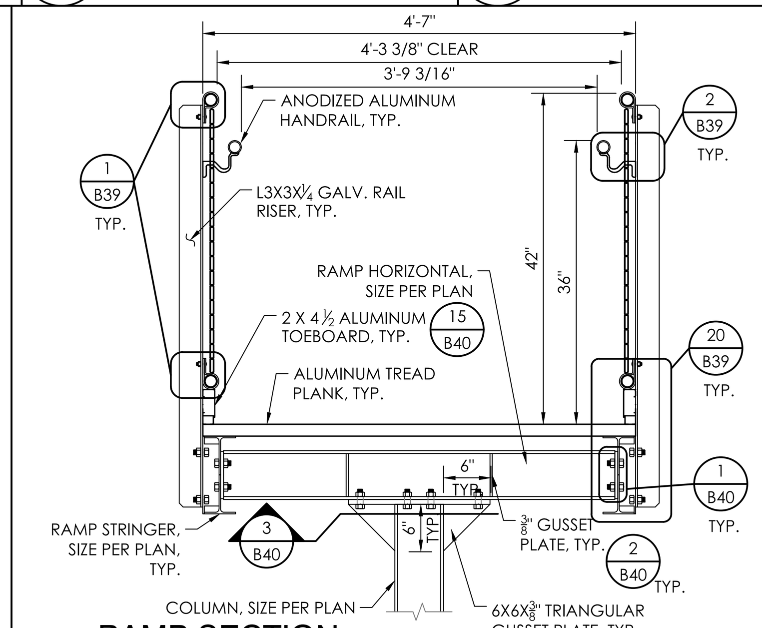

13/B40 RAMP SECTION DETAIL @ RAMP COLUMN
NOT TO SCALE

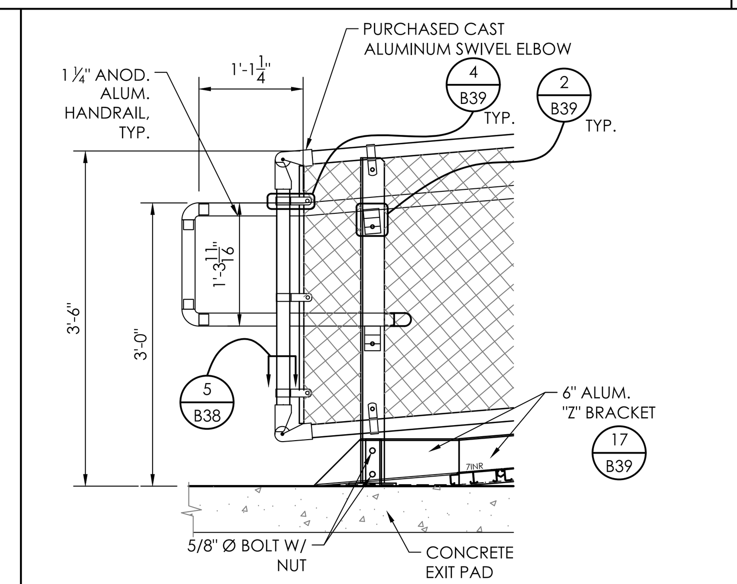

14/B40 HANDRAIL CONNECTION DETAIL @ RAMP
NOT TO SCALE

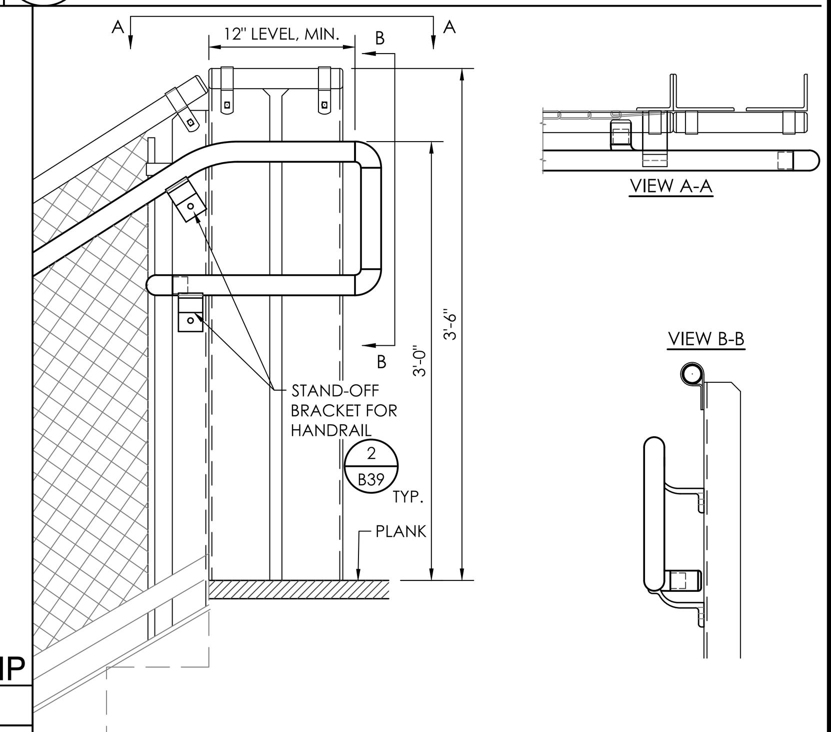

19/B40 STAIR HANDRAIL TERMINATION DETAIL
NOT TO SCALE

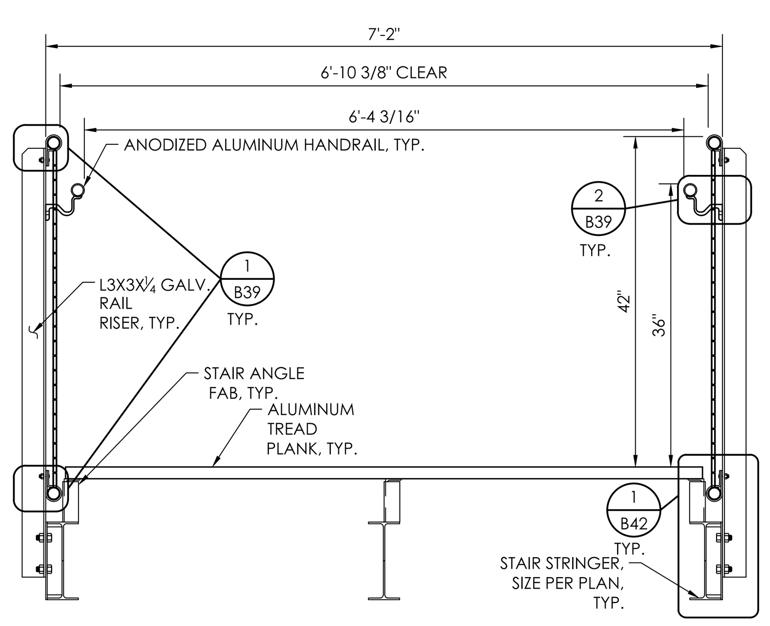

15/B40 EXIT STEP SECTION
NOT TO SCALE

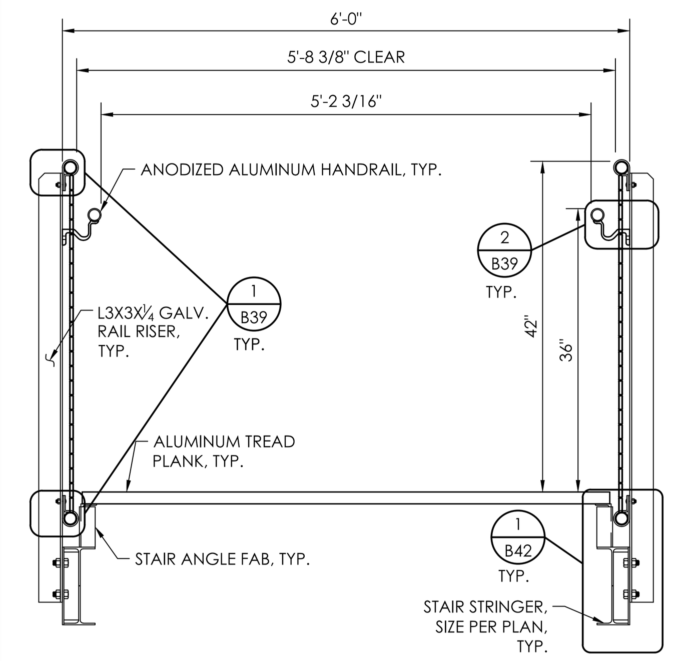

16/B40 EXIT STEP SECTION
NOT TO SCALE

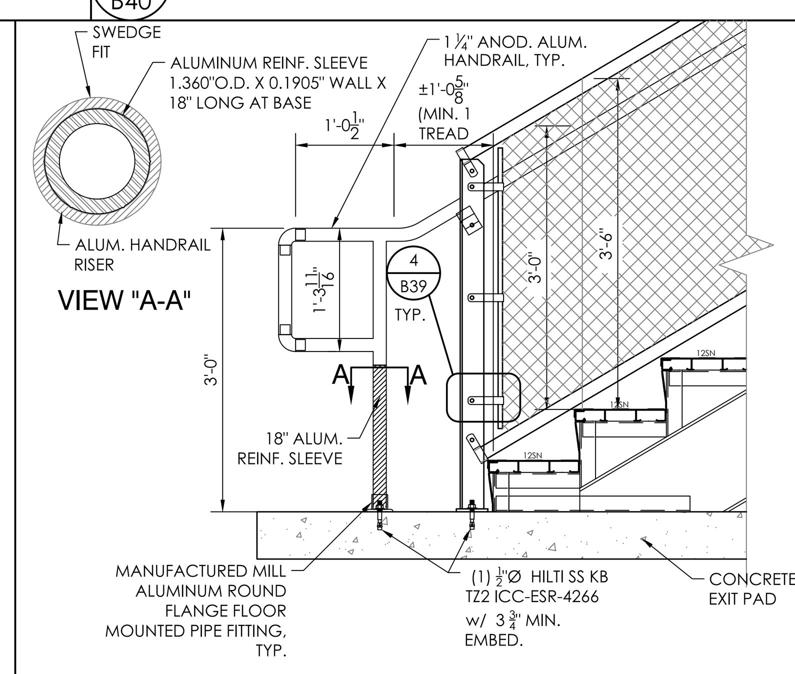

17/B40 HANDRAIL CONNECTION DETAIL @ STAIR
NOT TO SCALE

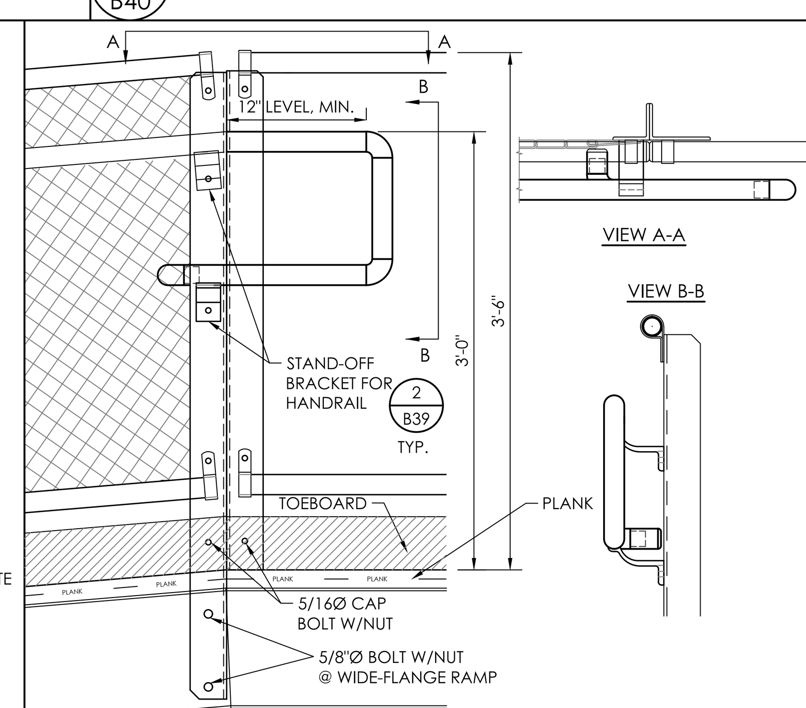

18/B40 TOP RAMP HANDRAIL TERMINATION DETAIL
NOT TO SCALE

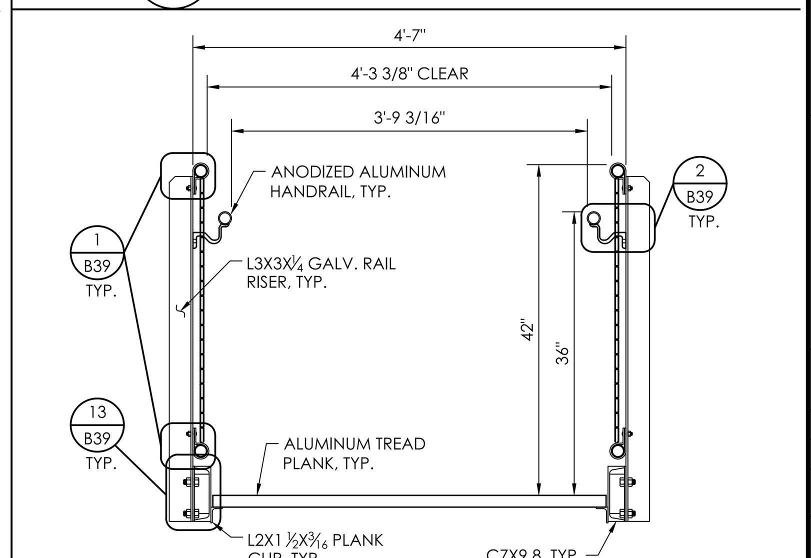

20/B40 EXIT STEP SECTION
NOT TO SCALE

THIS DRAWING AND ALL INFORMATION THEREIN IS THE PROPERTY OF THE SOUTHERN BLEACHER COMPANY, TAYLOR & SYFAN AND IS CONFIDENTIAL AND MUST NOT BE MADE PUBLIC OR COPIED. THIS DRAWING IS LOANED SUBJECT TO RE-TURN UPON DEMAND AND, IS NOT TO BE USED DIRECTLY OR INDIRECTLY IN ANY WAY DETRIMENTAL TO OUR INTERESTS.

TAYLOR & SYFAN
STRUCTURAL ENGINEERS
CENTRAL COAST OFFICE Ph: (626) 793-7438 Fax: (626) 793-7439 Toll: (800) 579-3881
553 S. Oak Knoll Ave. Pasadena, CA 91101
http://www.taylorsyfan.com/

Southern® BLEACHER COMPANY
GRANDSTANDS • BLEACHERS • STADIUMS
PO Box One, Graham, Texas 76450
801 Fifth Street.
Phone: 940/549-0733 Fax: 940/549-1365
Established 1946

REGISTERED PROFESSIONAL ENGINEER BRIAN T. DEAN S 6087 STRUCTURAL STATE OF CALIFORNIA
Signed 11/13/23
PRINCIPAL

TYPE	TITLE
EXIT DETAILS	MERCED UNION HS DISTRICT BUHACH COLONY HIGH SCHOOL ATWATER, CALIFORNIA

REV	BY	DATE	DESCRIPTION

DATE	DRAWN	CHECKED
05/08/2023	JOA	DMC

JOB NUMBER #23023R2

SHEET	OF
B40	B42

22" X 34" (11x17 = 1/2 indicated scale)

23023R2

IDENTIFICATION STAMP DIV. OF THE STATE ARCHITECT
APP: 02-121275 INC:
REVIEWED FOR
SS ☑ FLS ☑ ACS ☑
DATE: 12/15/2023

DESIGN California WEST
CALIFORNIA DESIGN WEST ARCHITECTS, Inc.
2100 19th Street
Sacramento, CA 95818
Phone: (916) 446-2466
Fax: (916) 446-5118
Web Page: ca-dw.com

These plans and prints thereof, as instruments of service, are owned by the architect and are for the use on this project only. Reproduction and/or distribution without the prior written consent of the architect is forbidden.

Copyright California Design West Architects, Inc.

ARCHITECT: CONSULTANT:

LICENSED ARCHITECT MITCHELL A. McALLISTER NO. C 17250 REN. 2-28-2025 STATE OF CALIFORNIA

CONSULTANT:

PROJECT NAME:

BUHACH COLONY HIGH SCHOOL

1800 NORTH BUHACH RD
ATWATER, CA 95301

CONCESSIONS/TOILET BUILDINGS, TICKET BOOTH & STADIUM UPGRADES

MERCED UNION HIGH SCHOOL DISTRICT

MERCED COUNTY

KEY PLAN:

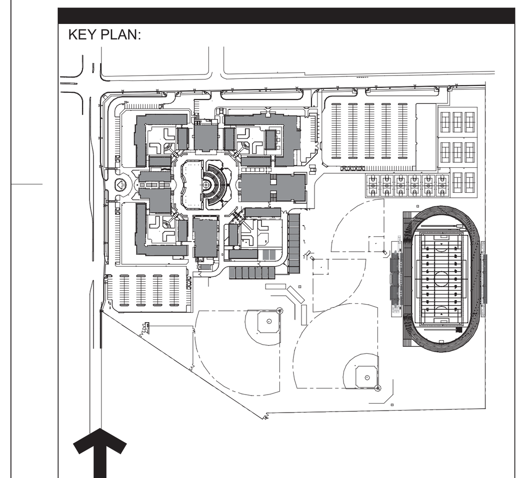

SHEET TITLE:

EXIT DETAILS

JOB NUMBER:

DATE: OCT 9, 2023

REVISION:

SHEET NUMBER: **B40**

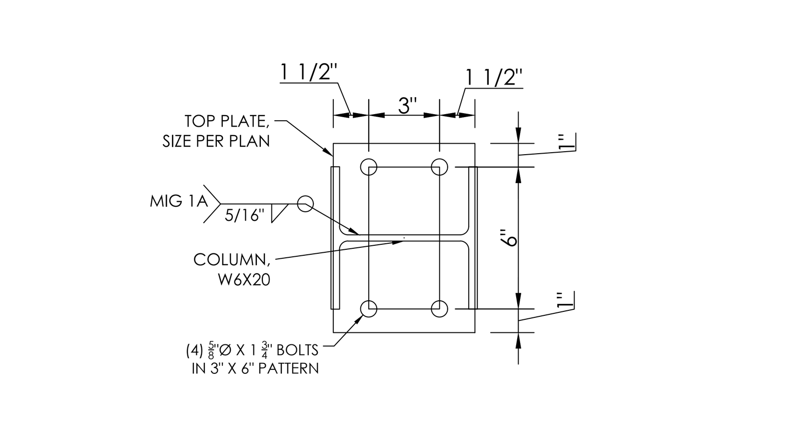

1 / B41 TOP PLATE ATTACHMENT DETAIL
NOT TO SCALE

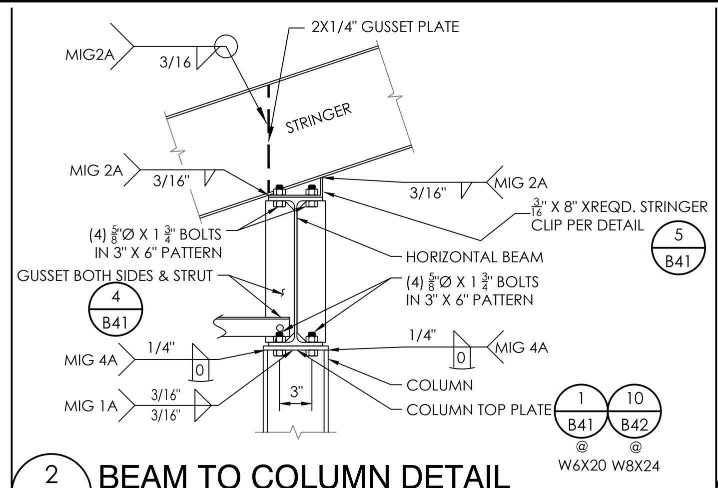

2 / B41 BEAM TO COLUMN DETAIL
NOT TO SCALE

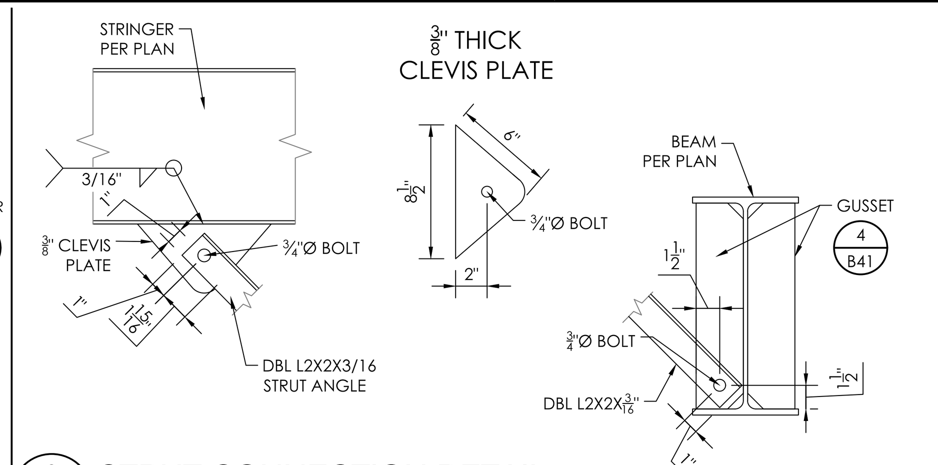

3 / B41 STRUT CONNECTION DETAIL
NOT TO SCALE

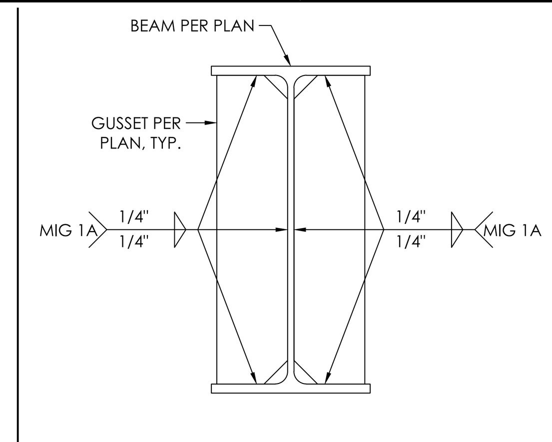

4 / B41 GUSSET DETAIL
NOT TO SCALE

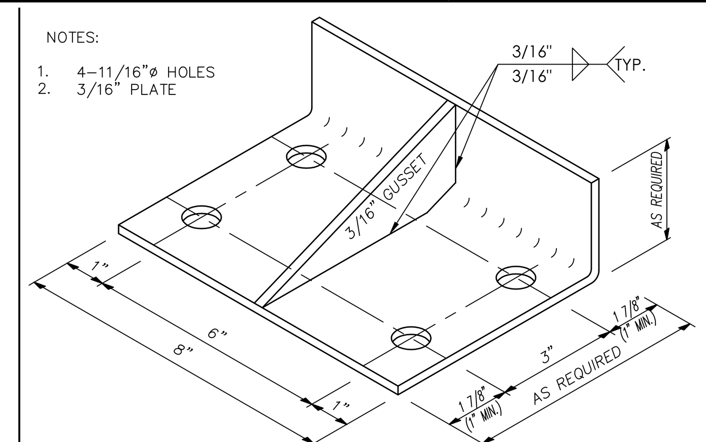

5 / B41 STRINGER CLIP DETAIL
NOT TO SCALE

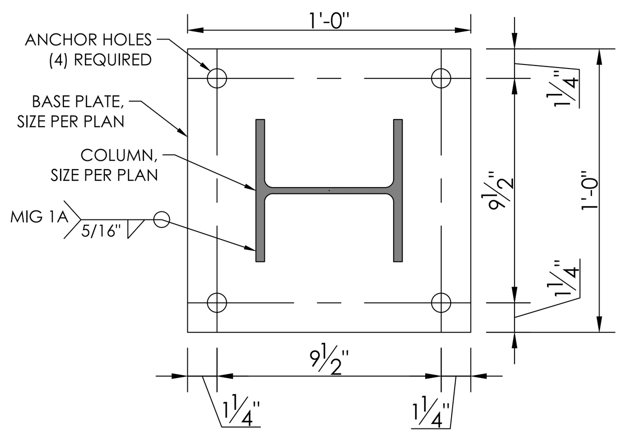

6 / B41 BASE PLATE ATTACHMENT DETAIL
NOT TO SCALE

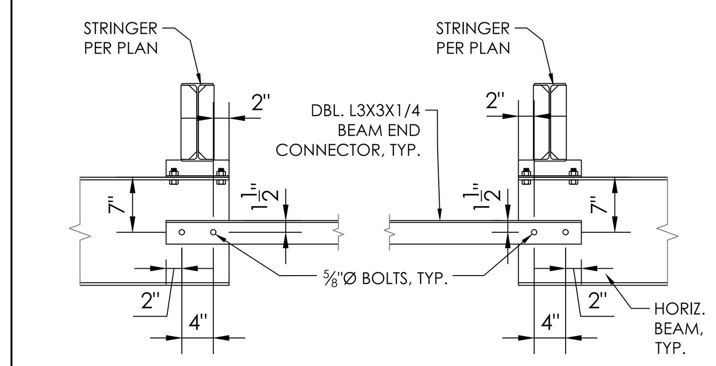

7 / B41 BEAM END CONNECTION DETAIL
NOT TO SCALE

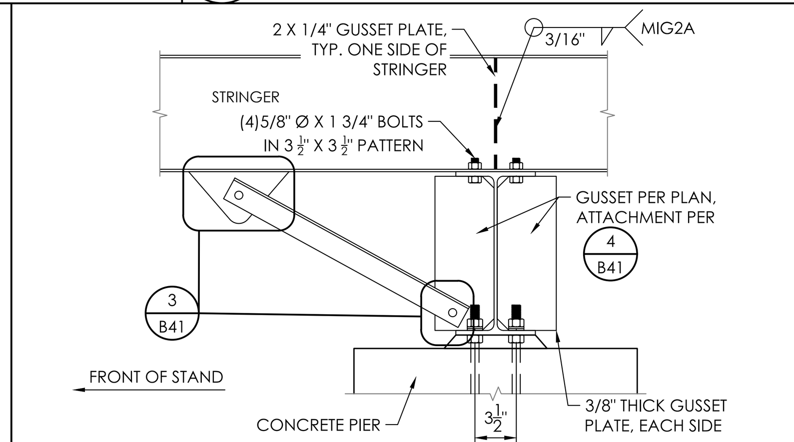

8 / B41 BEAM TO PIER DETAIL
NOT TO SCALE

NOT USED

9 / B41
NOT TO SCALE

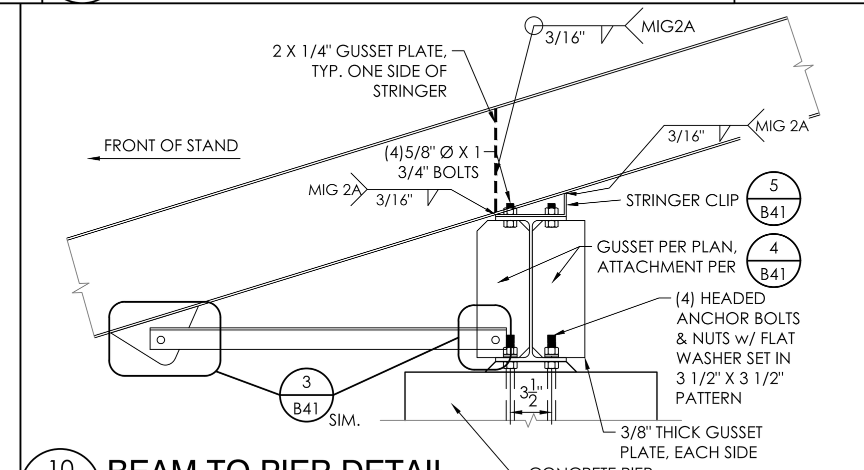

10 / B41 BEAM TO PIER DETAIL
NOT TO SCALE

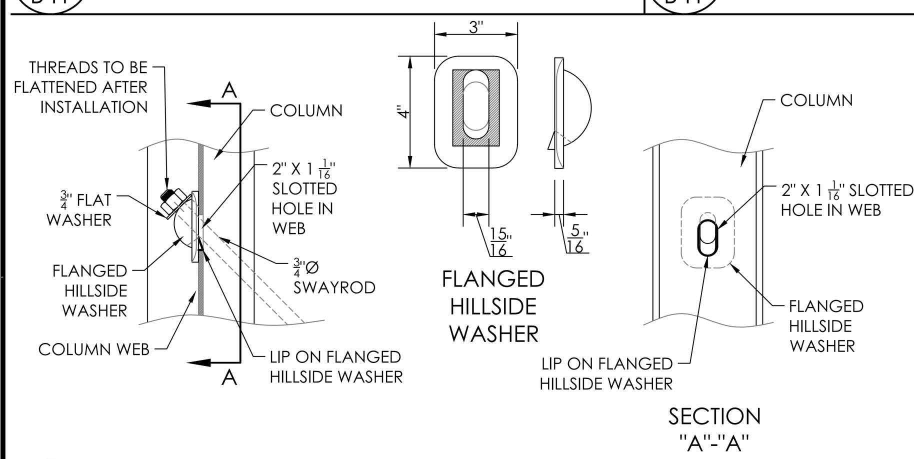

11 / B41 FLANGED HILLSIDE WASHER INST. DETAIL
NOT TO SCALE

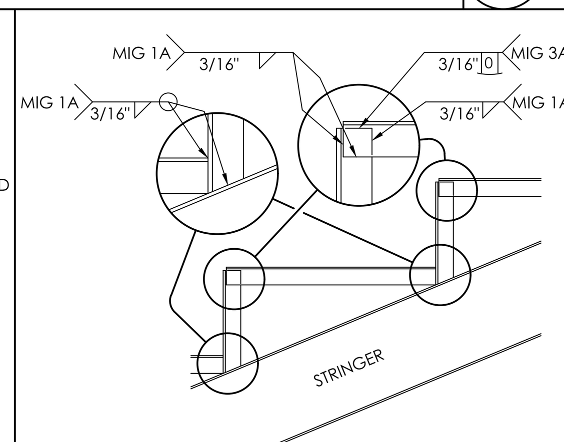

12 / B41 ANGLE FABRICATION DETAIL
NOT TO SCALE

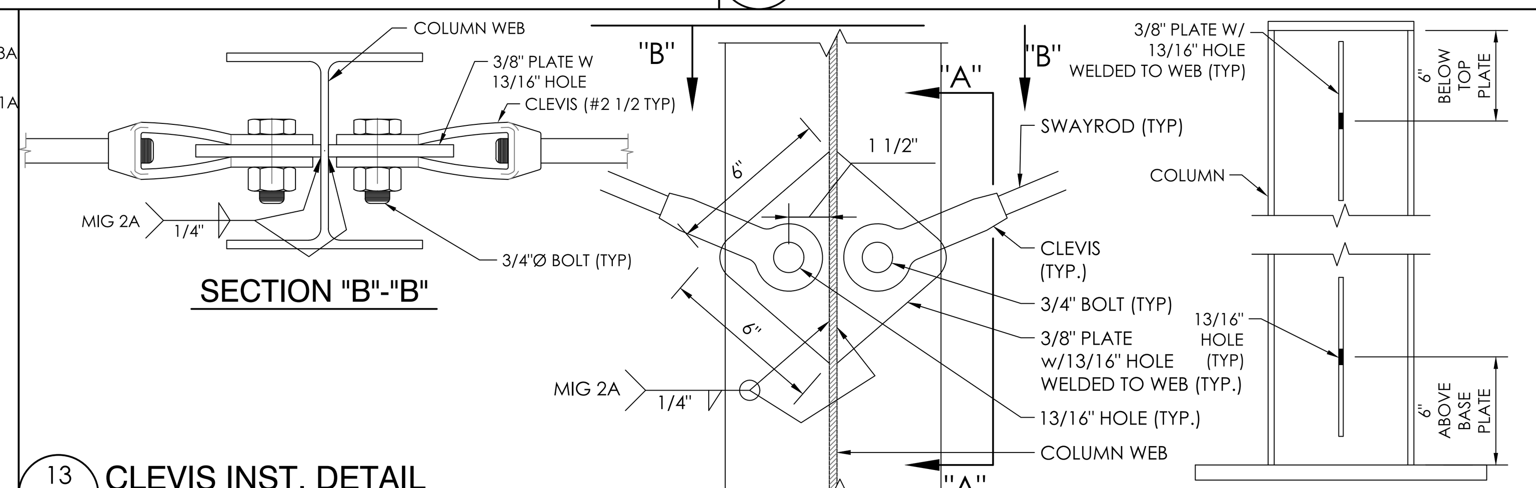

13 / B41 CLEVIS INST. DETAIL
NOT TO SCALE

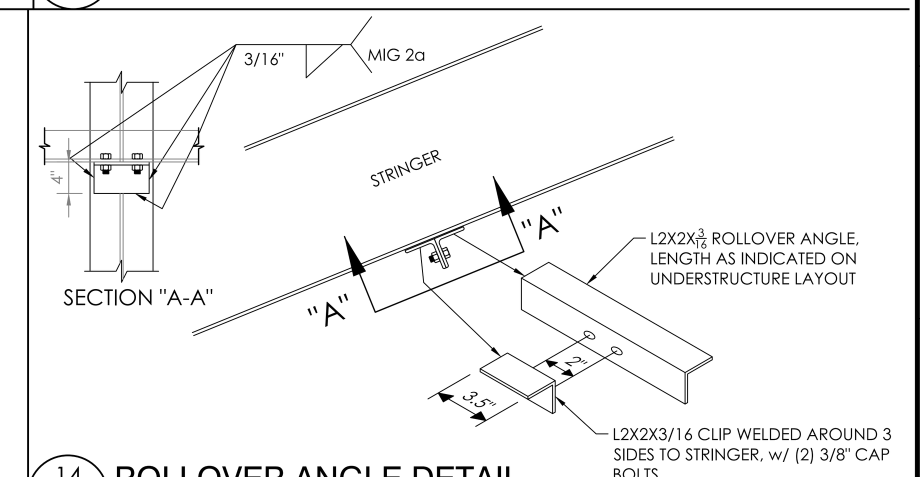

14 / B41 ROLLOVER ANGLE DETAIL
NOT TO SCALE

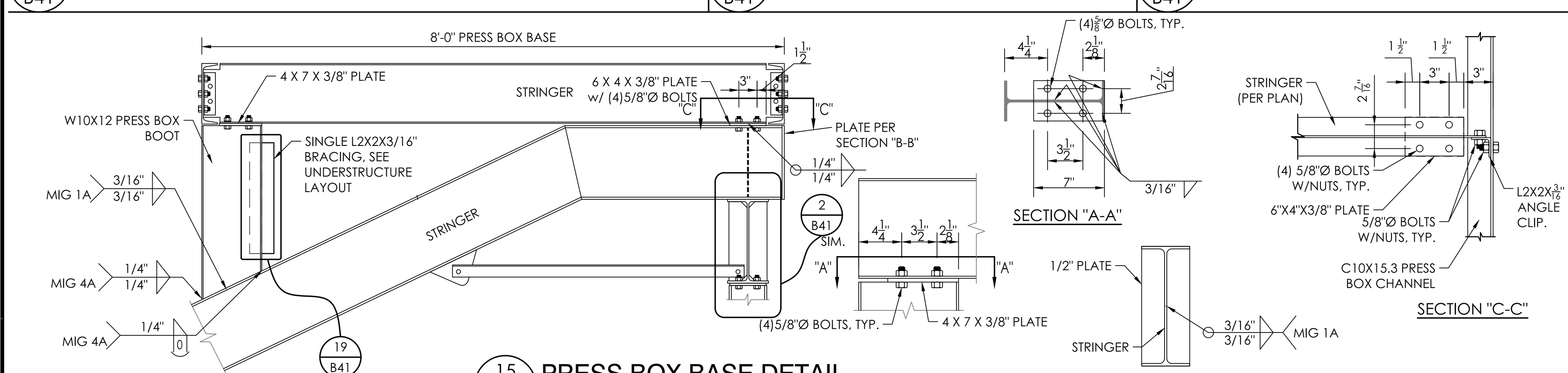

15 / B41 PRESS BOX BASE DETAIL
NOT TO SCALE

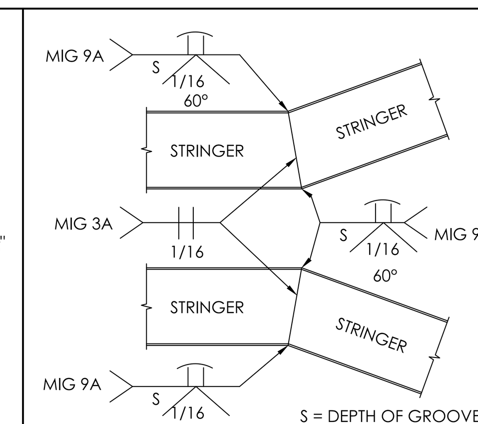

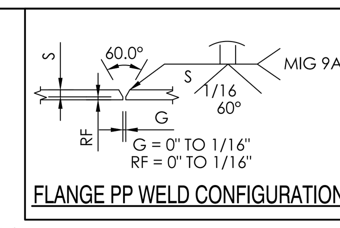

FLANGE PP WELD CONFIGURATION

16 / B41 STRINGER SNOOTER JOINT CONNECTION
NOT TO SCALE

NOT USED

17 / B41
NOT TO SCALE

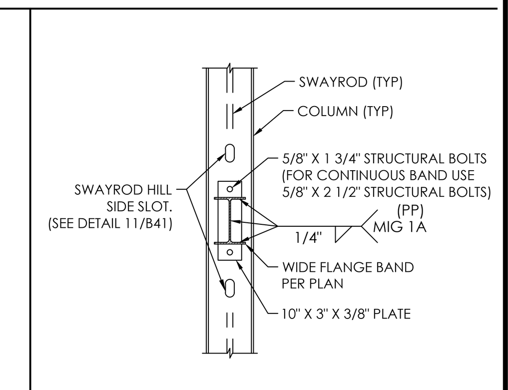

18 / B41 STIFFLEG ATTACHMENT DETAIL
NOT TO SCALE

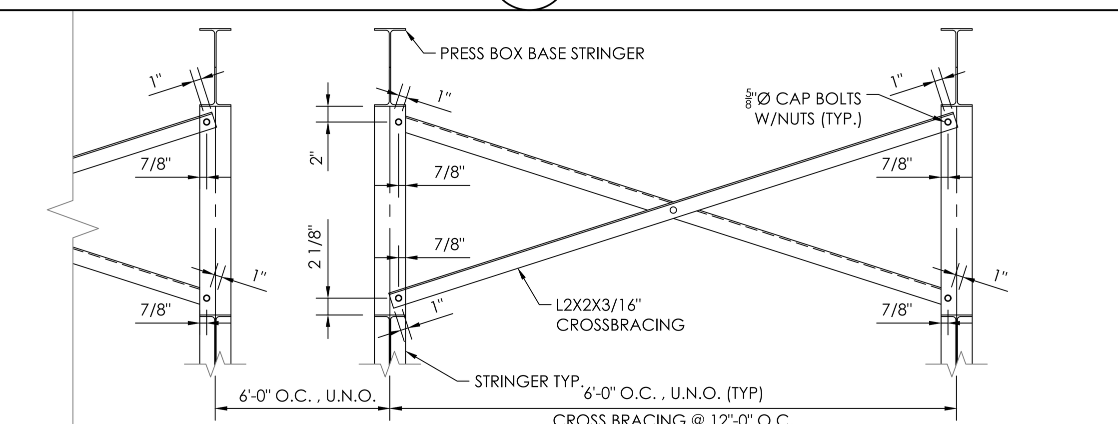

19 / B41 CROSSBRACING @ BOOT
NOT TO SCALE

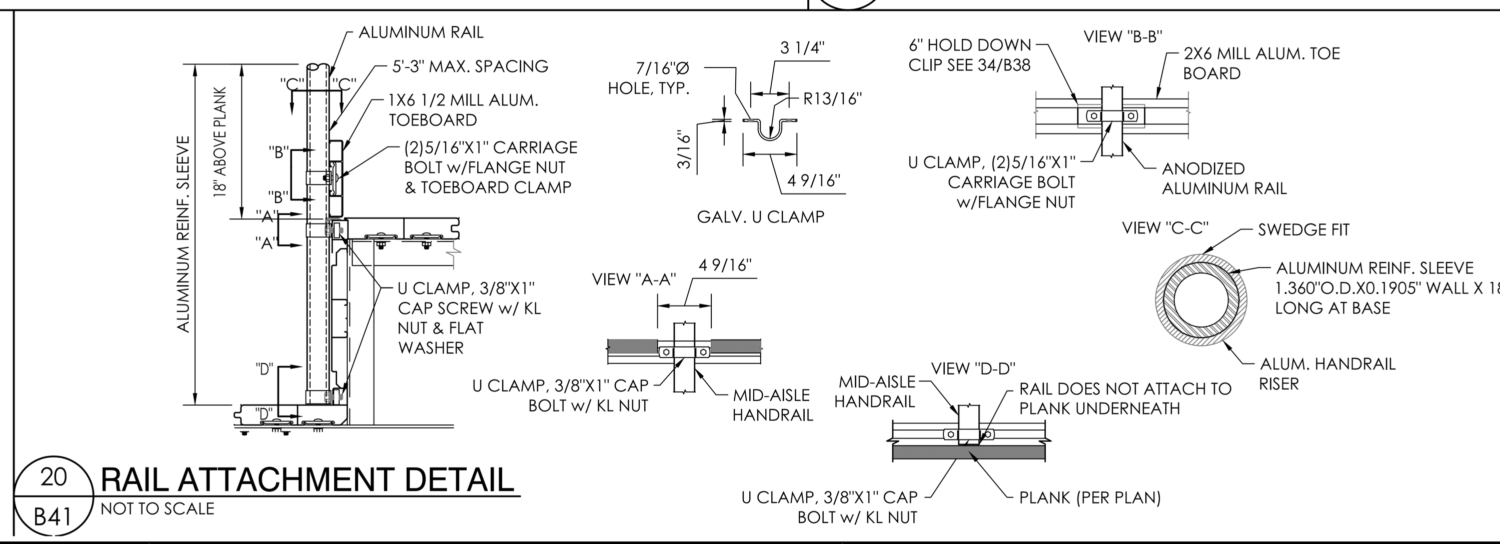

20 / B41 RAIL ATTACHMENT DETAIL
NOT TO SCALE

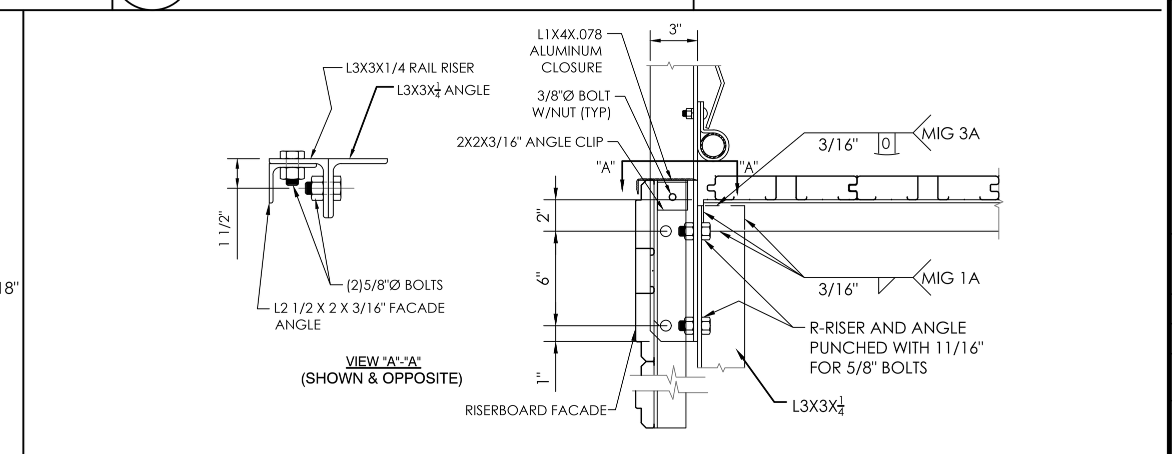

21 / B41 FRONT RAIL RISER ATTACHMENT DETAIL
NOT TO SCALE

THIS DRAWING AND ALL INFORMATION THEREIN IS THE PROPERTY OF THE SOUTHERN BLEACHER COMPANY, TAYLOR & SYFAN AND IS CONFIDENTIAL AND MUST NOT BE MADE PUBLIC OR COPIED. THIS DRAWING IS LOANED SUBJECT TO RE-TURN UPON DEMAND AND, IS NOT TO BE USED DIRECTLY OR INDIRECTLY IN ANY WAY DETRIMENTAL TO OUR INTERESTS.

TAYLOR & SYFAN STRUCTURAL ENGINEERS
CENTRAL COAST OFFICE Ph: (626) 793-7438 Fax: (626) 793-7439 Toll: (800) 579-3881
553 S. Oak Knoll Ave. Pasadena, CA 91101
http://www.taylorsyfan.com/

Southern® BLEACHER COMPANY
PO Box One, Graham, Texas 76450
801 Fifth Street.
Phone: 940/549-0733 Fax: 940/549-1365
Established 1946
GRANDSTANDS • BLEACHERS • STADIUMS

REGISTERED PROFESSIONAL ENGINEER BRIAN T. DEAN S 6087 STRUCTURAL STATE OF CALIFORNIA
Signed 11/13/23
PRINCIPAL

TYPE: GRANDSTAND DETAILS
TITLE: MERCED UNION HS DISTRICT BUHACH COLONY HIGH SCHOOL ATWATER, CALIFORNIA

REV	BY	DATE	DESCRIPTION

DATE	DRAWN	CHECKED
05/08/2023	JOA	DMC

JOB NUMBER #23023R2

SHEET	OF
B41	B42

22" X 34" (11x17 = 1/2 indicated scale)

23023R2

IDENTIFICATION STAMP DIV. OF THE STATE ARCHITECT
APP: 02-121275 INC:
REVIEWED FOR SS ☑ FLS ☑ ACS ☑
DATE: 12/15/2023

CALIFORNIA DESIGN WEST ARCHITECTS, Inc.

2100 19th Street
Sacramento, CA 95818

Phone: (916) 446-2466
Fax: (916) 446-5118
Web Page: ca-dw.com

These plans and prints thereof, as instruments of service, are owned by the architect and are for the use on this project only. Reproduction and/or distribution without the prior written consent of the architect is forbidden.

Copyright California Design West Architects, Inc.

ARCHITECT: CONSULTANT:

LICENSED ARCHITECT MITCHELL A. McALLISTER NO. C 17250 REN. 2-28-2025 STATE OF CALIFORNIA

CONSULTANT:

PROJECT NAME:

BUHACH COLONY HIGH SCHOOL

1800 NORTH BUHACH RD
ATWATER, CA 95301

CONCESSIONS/TOILET BUILDINGS, TICKET BOOTH & STADIUM UPGRADES

MERCED UNION HIGH SCHOOL DISTRICT

MERCED COUNTY

KEY PLAN:

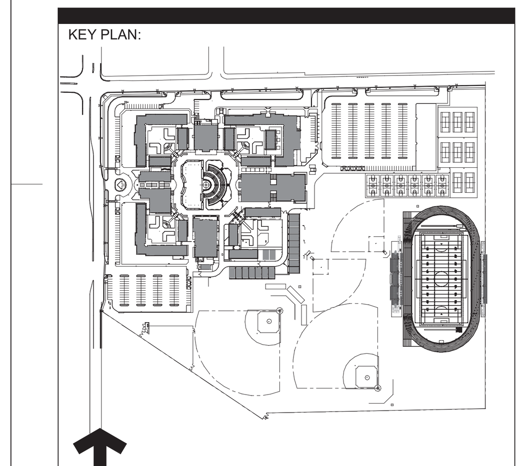

SHEET TITLE:

GRANDSTAND DETAILS

JOB NUMBER:

SHEET NUMBER: **B41**

DATE: OCT 9, 2023

REVISION:

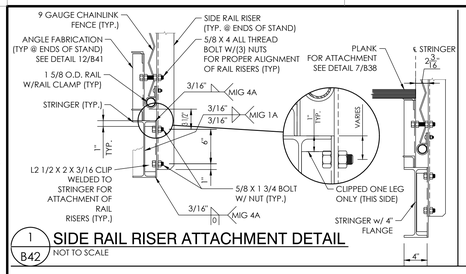

1 B42 **SIDE RAIL RISER ATTACHMENT DETAIL**
NOT TO SCALE

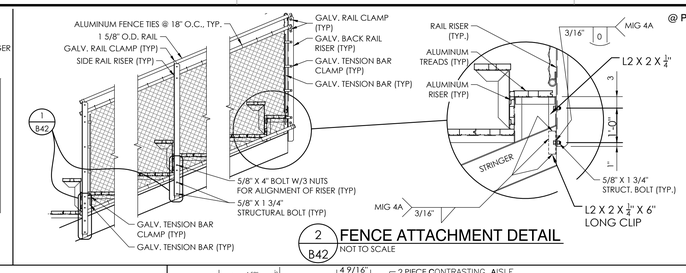

2 B42 **FENCE ATTACHMENT DETAIL**
NOT TO SCALE

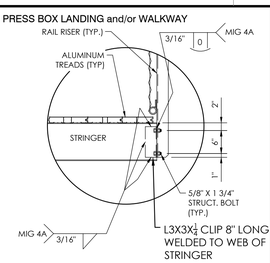

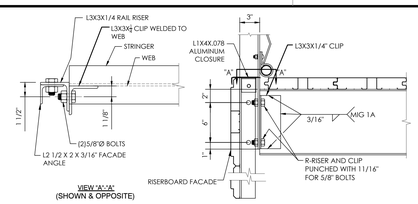

3 B42 **FRONT RAIL RISER ATTACHMENT DETAIL**
NOT TO SCALE

NOT USED

4 B42 NOT TO SCALE

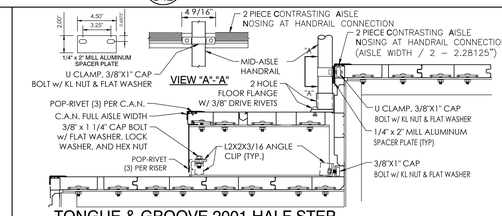

5 B42 **TONGUE & GROOVE 2001 HALF STEP & HANDRAIL ATTACHMENT DETAIL**
NOT TO SCALE

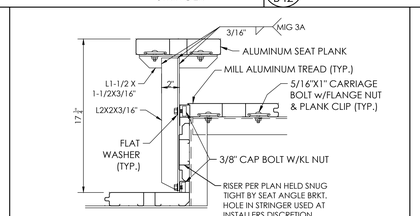

6 B42 **"T" BRACKET DETAIL**
NOT TO SCALE

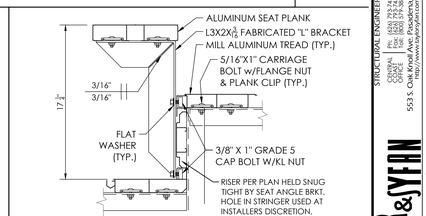

7 B42 **"L" BRACKET DETAIL**
NOT TO SCALE

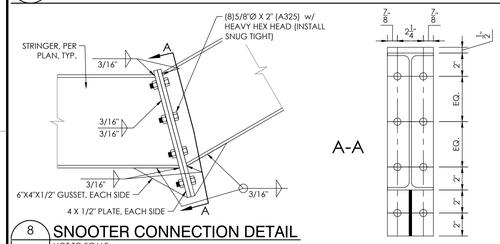

8 B42 **SNOOTER CONNECTION DETAIL**
NOT TO SCALE

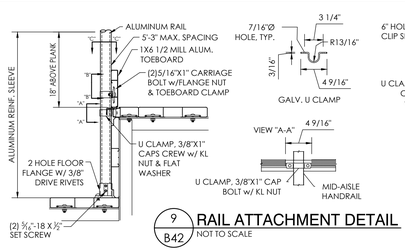

9 B42 **RAIL ATTACHMENT DETAIL**
NOT TO SCALE

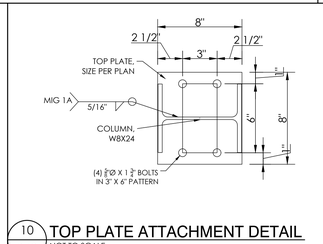

10 B42 **TOP PLATE ATTACHMENT DETAIL**
NOT TO SCALE

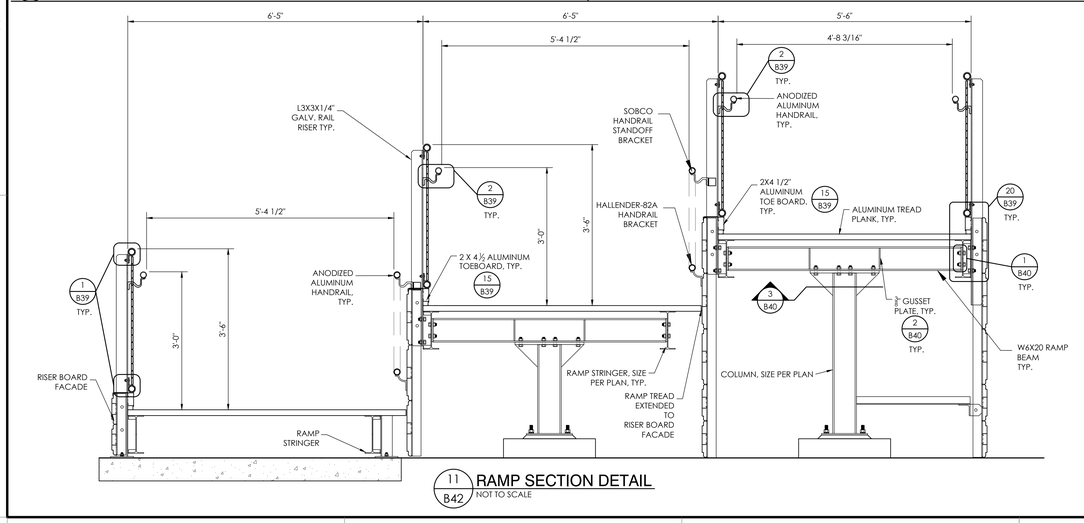

11 B42 **RAMP SECTION DETAIL**
NOT TO SCALE

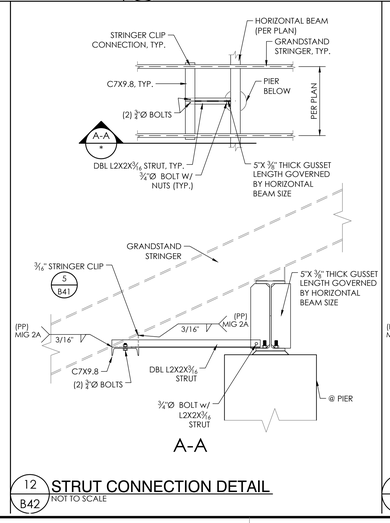

12 B42 **STRUT CONNECTION DETAIL**
NOT TO SCALE

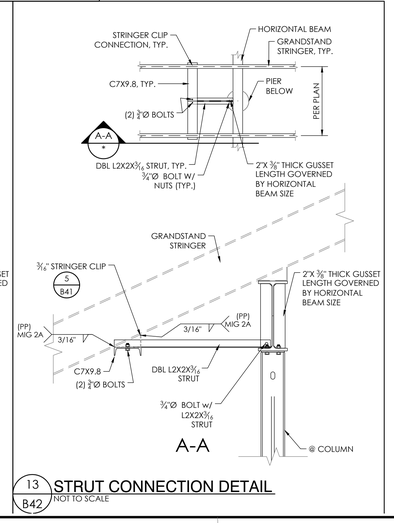

13 B42 **STRUT CONNECTION DETAIL**
NOT TO SCALE

THIS DRAWING AND ALL INFORMATION THEREIN IS THE PROPERTY OF THE SOUTHERN BLEACHER COMPANY. AND/OR ETHYN WES CONVERSION. HEWEST KEYB WASTE OF COPIED. THIS DRAWING IS LOANED SUBJECT TO RE-TURN UPON DEMAND AND, IS NOT TO BE USED DIRECTLY OR INDIRECTLY IN ANY WAY DETRIMENTAL TO OUR INTERESTS.

STRUCTURAL ENGINEERS
TAYLOR & YFAIN
COVINA Ph: (626) 252-2438
CA 91723 Fax: (626) 252-2439
CORONA Ph: (951) 817-1313
CA 92880 Fax: (951) 817-1314
553 S. Oak Knoll Ave. PASADENA, CA 91101
http://www.tayloryfain.com/

Southern BLEACHER COMPANY
GRANDSTANDS •BLEACHERS •STADIUMS
Established 1946
PO Box One, Graham, Texas 76450
801 Fifth Street,
Phone: 940-549-1565
Fax: 940-549-1345

REGISTERED PROFESSIONAL ENGINEER
BRIAN T. DEAN
S 6087
STRUCTURAL
STATE OF CALIFORNIA
Signed 11/13/23
PRINCIPAL

GRANDSTAND DETAILS

MERCED UNION HS DISTRICT
BUHACH COLONY HIGH SCHOOL
ATWATER, CALIFORNIA

REV	BY	DATE	DESCRIPTION

DATE: 05/08/2023 | DRAWN: JOA | CHECKED: DMC
JOB NUMBER: #23023R2
SHEET: B42 | OF: B42

22" X 34" (11x17 = 1/2 indicated scale)

IDENTIFICATION STAMP
DIV. OF THE STATE ARCHITECT
APP: 02-121275 INC:
REVIEWED FOR
SS ☑ FLS ☑ ACS ☑
DATE: 12/15/2023

DESIGN California WEST
CALIFORNIA DESIGN
WEST ARCHITECTS, Inc.
2100 19th Street
Sacramento, CA 95818
Phone: (916) 446-2466
Fax: (916) 446-5118
Web Page: ca-dw.com

These plans and prints thereof, as instruments of service, are owned by the architect and are for the use on this project only. Reproduction and/or distribution without the prior written consent of the architect is forbidden.
Copyright California Design West Architects, Inc.

ARCHITECT: CONSULTANT:

LICENSED ARCHITECT
MITCHELL A. MCCALL
No. C 17250
REN. 08-31-25
STATE OF CALIFORNIA

CONSULTANT:

PROJECT NAME:
BUHACH COLONY HIGH SCHOOL

1800 NORTH BUHACH RD
ATWATER, CA 95301

CONCESSIONS/TOILET BUILDINGS, TICKET BOOTH & STADIUM UPGRADES

MERCED UNION HIGH SCHOOL DISTRICT

MERCED COUNTY

KEY PLAN:

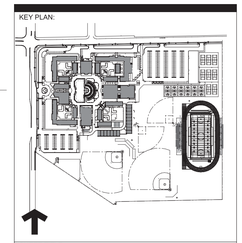

SHEET TITLE:
GRANDSTAND DETAILS

JOB NUMBER:
DATE: OCT 9, 2023
REVISION:
SHEET NUMBER: **B42**

23023R2

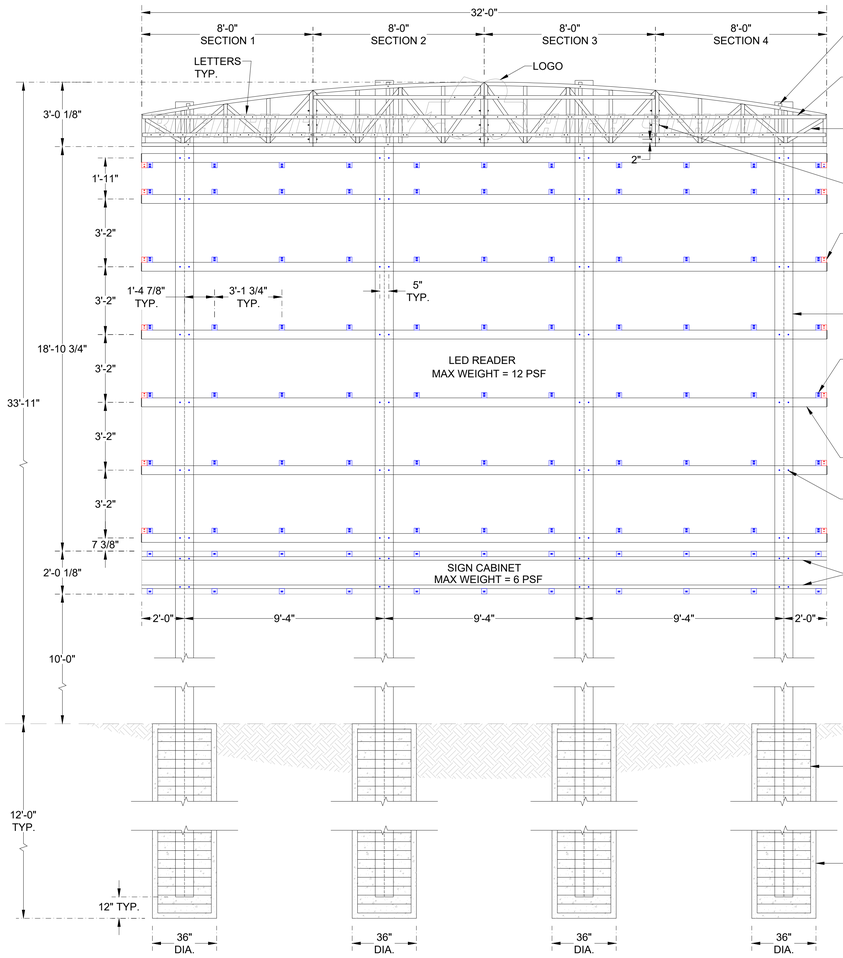

ELEVATION

N.T.S.

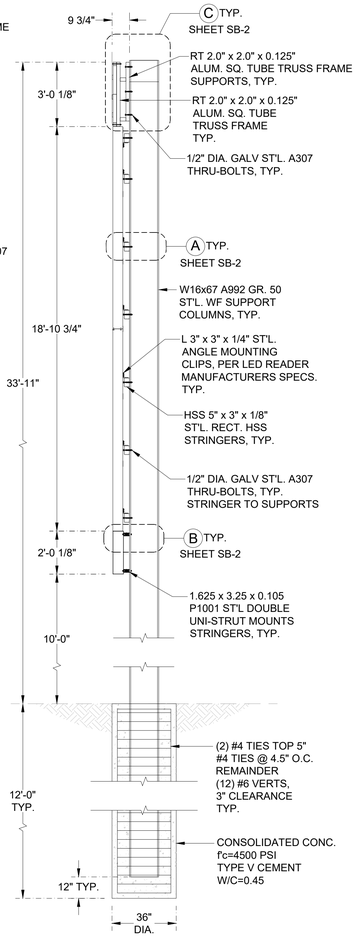

SIDE VIEW

N.T.S.

WIND LOADS BASED ON 2022 CBC		
PARAMETER		VALUE
EXPOSURE CATAGORY B,C or D		C
RISK CATEGORY		III
ULTIMATE DESIGN WIND SPEED (3 sec. gust wind)	V_{ult}	100 mph
NOMINAL DESIGN WIND SPEED	V_{asd}	78 mph
MAX. HORIZONTAL WIND PRESSURE UNFACTORED	P=	30.13 psf

SEISMIC LOADS BASED ON 2022 CBC	
PARAMETER	VALUE
RISK CATEGORY	III
IMPORTANCE FACTOR	1.25
S_1	0.240g
S_s	0.581g
SITE CLASS	D
S_{DS}	0.618g
S_{D1}	0.485g
SEISMIC DESIGN CATEGORY	D
BASIC SEISMIC FORCE-RESISTING SYSTEM	SIGNS AND BILLBOARDS
C_s	0.618
R	1.25
ANALYSIS PROCEDURE USED	EQUIVELANT LATERAL FORCE

NOTE: SPECIAL INSPECTION REQUIRED FOR f 'c = 4500 psi

REGISTERED PROFESSIONAL ENGINEER JOHN BRENT HOEBEKE NO. 2145 Exp.12/31/25 STRUCTURAL STATE OF CALIFORNIA

NOTES :

GENERAL :
- SIGN DESIGN IS BASED ON ADEQUATE EXISTING SUPPORT ELEMENTS.
- PROVIDE ISOLATION OF DISSIMILAR MATERIALS.
- COAT ALUMINUM IN CONTACT WITH CONCRETE WITH ZINC RICH PAINT.
- THERE IS NO PROTECTION ZONE AS DEFINED IN AISC 341-16.
- PROVIDE FULLY WELDED END CAPS AT EXPOSED OPEN ENDS OF STEEL / ALUM. TUBES, MATCH THICKNESS LIKE FOR LIKE.
- SLOPE TOP OF EXPOSED FOOTING AWAY FROM DIRECT BURIAL POSTS

WEATHER PROTECTION :
- STRUCTURAL STEEL SHALL COMPLY WITH ONE OF THE FOLLOWING
- HOT DIP GALVANIZED, MINIMUM ASTM A123 OR A153 CLASS D, AS APPLICABLE
- PAINTED WITH ZINC RICH PRIMER (UNDERCOAT AND FINISH COAT) OR EQUIVALENT PAINT SYSTEM.
- COLD-FORMED STEEL MEMBERS SHALL BE 55 PERCENT ALUMINUM-ZINC ALLOY COATED PET ASTM A792/A792M STANDARD IN ACCORDANCE WITH THE AMERICAN IRON AND STEEL INSTITUTE (AISI) S240 TABLE A4-1, CP 90 COATING DESIGNATION.
- ALL EXPOSED STEEL FASTENERS, INCLUDING CAST-IN-PLACE ANCHOR BOLTS/RODS, SHALL BE STAINLESS STEEL (TYPE 304 MINIMUM), HOT-DIP GALVANIZED (ASTM A153, CLASS D MINIMUM OR ASTM F2329), OR PROTECTED WITH CORROSION-PREVENTIVE COATING THAT DEMONSTRATED NO MORE THAN 2 PERCENT OF RED RUST IN MINIMUM 1,000 HOURS OF EXPOSURE IN SALT SPRAY TEST PER ASTM B117. ZINC-PLATED FASTENERS DO NOT COMPLY WITH THIS REQUIREMENT. EXAMPLE PROPRIETARY COATINGS THAT DO COMPLY WITH THE 1000-HOUR REQUIREMENT INCLUDE BUT ARE NOT NECESSARILY LIMITED TO: QUIK GUARD BY SIMPSON, KWIK-COTE BY HILTI, STALGARD BY ELCO, VISTACORR BY SFS INTEC, ETC.

STEEL :
DESIGN AND FABRICATION ACCORDING TO 2022 CBC
- PLATE, ANGLE, CHANNEL TEE: ASTM A36
- WIDE FLANGE: ASTM A992
- ROUND PIPE: ASTM A53 GRADE B OR EQUIVALENT.
- HSS ROUND, SQUARE, AND RECTANGULAR TUBE: ASTM A500 GRADE B OR EQUIVALENT.
- ALL STEEL MACHINED BOLTS SHOULD BE: ASTM A307
- ALL STAINLESS STEEL MACHINED BOLTS SHOULD BE: ASTM A276
- DEFORMED REINFORCING REBAR: ASTM A615 GRADE 60.

ALUMINUM :
DESIGN AND FABRICATION ACCORDING TO 2020 ALUM. DESIGN MANUAL PLATES, ANGLES, CHANNELS, TEE, AND SQUARE TUBING: ALUMINUM
- ALLOY 6061 - T6 WITH 0.098 LBS PER CUBIC INCH.

WELDING :
STEEL
DESIGN AND FABRICATION ACCORDING TO AWS D1.1. / D1.3
- AWS CERTIFICATION REQUIRED FOR ALL STRUCTURAL WELDERS.
- E70 XX ELECTRODE FOR SMAW PROCESS.
- E70S XX ELECTRODE FOR GMAW PROCESS.
- ER7 XX ELECTRODE FOR GTAW PROCESS.
- E70T XX ELECTRODE FOR FCAW PROCESS.

ALL WELDS SHALL BE MADE WITH A FILLER METAL THAT CAN PRODUCE WELDS THAT HAVE A MINIMUM CHARPY V-NOTCH TOUGHNESS OF 20FT-LB AT ZERO 0° AS DETERMINED BY THE APPROPRIATE AWS A5 CLASSIFICATION TEST METHOD OR MFG'S. CERTIFICATION.

ALUMINUM
DESIGN AND FABRICATION ACCORDING TO AWS D1.2. ALL WELDING IN ACCORDANCE WITH THE LATEST EDITION OF THE AWS A.5.10. FILLER ALLOYS PER TABLES M.9.1 & M.9.2 OF 2020 ALUMINUM DESIGN MANUAL.

CONCRETE :
DESIGN AND CONSTRUCTION ACCORDING TO ACI 318-19
- COMPRESSIVE STRENGTH AT 28 DAYS, f 'c= 4500 PSI MINIMUM.
- CEMENT TYPE V. W/C RATIO 0.45 BY WEIGHT FOR PIER AND CAISSON
- FOOTINGS CONCRETE MUST BE POURED AGAINST UNDISTURBED EARTH.
- MAINTAIN A MINIMUM 3" CONCRETE COVER OVER ALL EMBEDDED STEEL.

SOIL:
LATERAL SOIL BEARING PER IBC CLASS 5 TABLE 1806.2 (100 PSF/FT). MODIFIED PER SECTION 1806.3.4.

YJI ENGINEERING
www.yjiinc.com
P.O. BOX 802050
SANTA CLARITA, CA. 91380
TEL. (661)259-0700 FAX. (661)259-0900

SHEET TITLE:

BUHACH COLONY HIGH SCHOOL SCOREBOARD

DRN BY: K.S.P.	DATE LAST REVISED: Dec 14, 2023	REV. NO.	REV. DATE	REVISED BY	PROJECT JOB # : YJ__ 91623_Buhach Colony High School_Scoreboard_Buhach Rd_Atwater CA.dwg
CHK BY: T.J.	PROJ. START DATE: Apr 27, 2023	1	--/--/--	---	PROJECT LOCATION : BUHACH COLONY HIGH SCHOOL 1800 BUHACH RD. ATWATER, CA
REV BY: T.J.	SCALE: AS SHOWN	2	--/--/--	---	SHEET # SB-1
Plotted by: isaac on 12/14/2023 4:24:13 PM		3	--/--/--	---	1 OF 2

IDENTIFICATION STAMP
DIV. OF THE STATE ARCHITECT
APP: 02-121275 INC:
REVIEWED FOR
SS ☑ FLS ☑ ACS ☑
DATE: 12/15/2023

CALIFORNIA DESIGN WEST ARCHITECTS, Inc.
2100 19th Street
Sacramento, CA 95818
Phone: (916) 446-2466
Fax: (916) 446-5118
Web Page: ca-dw.com

These plans and prints thereof, as instruments of service, are owned by the architect and are for the use on this project only. Reproduction and/or distribution without the prior written consent of the architect is forbidden.
Copyright California Design West Architects, Inc.

ARCHITECT: CONSULTANT:

LICENSED ARCHITECT MITCHELL A. MCALISTER NO. C 17250 RENEWAL 08/31/2025 STATE OF CALIFORNIA

CONSULTANT:

PROJECT NAME:

BUHACH COLONY HIGH SCHOOL

1800 NORTH BUHACH RD
ATWATER, CA 95301

CONCESSIONS/TOILET BUILDINGS, TICKET BOOTH & STADIUM UPGRADES

MERCED UNION HIGH SCHOOL DISTRICT

MERCED COUNTY

KEY PLAN:

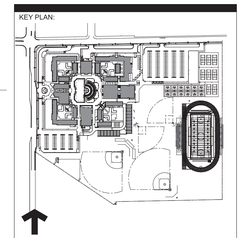

SHEET TITLE:

SCOREBOARD ELEVATIONS

JOB NUMBER:

SHEET NUMBER: SB-1

DATE: OCT 9, 2023

REVISION:

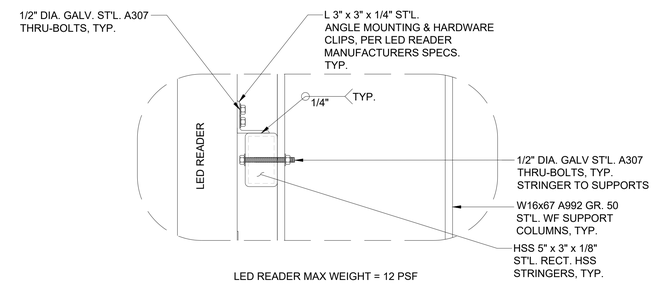

LED READER MAX WEIGHT = 12 PSF

A ENLARGED CONNECTION DETAIL

N.T.S.

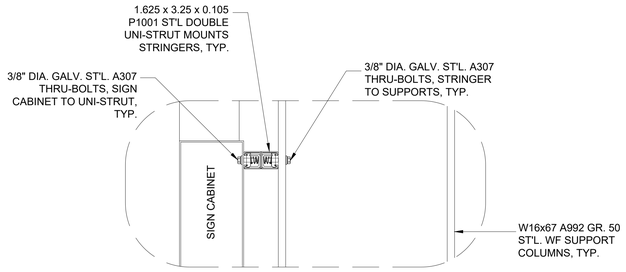

SIGN CABINET MAX WEIGHT = 6 PSF

NOTE: P1001 ST'L DOUBLE UNI-STRUT IS SOLD FROM THE MANUFACTURE AS (1) PIECE PER UNI-STRUT MANUFACTURE SPECIFICATIONS THE MEMBERS ARE JOINED WITH SPOT WELDS EVERY 3" O.C.

B ENLARGED CONNECTION DETAIL

N.T.S.

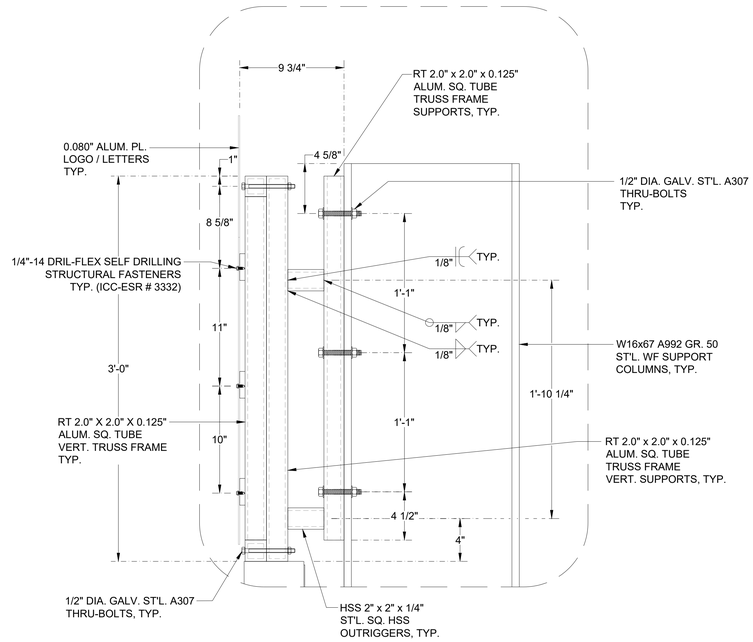

C ENLARGED CONNECTION DETAIL

N.T.S.

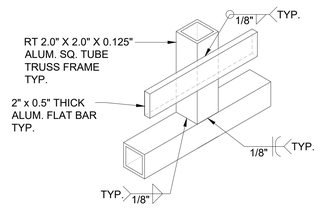

D TOP FRAME WELDING DETAIL

N.T.S.

NOTES :

GENERAL :

- SIGN DESIGN IS BASED ON ADEQUATE EXISTING SUPPORT ELEMENTS.
- PROVIDE ISOLATION OF DISSIMILAR MATERIALS.
- COAT ALUMINUM IN CONTACT WITH CONCRETE WITH ZINC RICH PAINT.
- THERE IS NO PROTECTION ZONE AS DEFINED IN AISC 341-16.
- PROVIDE FULLY WELDED END CAPS AT EXPOSED OPEN ENDS OF STEEL / ALUM. TUBES, MATCH THICKNESS LIKE FOR LIKE.
- SLOPE TOP OF EXPOSED FOOTING AWAY FROM DIRECT BURIAL POSTS

WEATHER PROTECTION :

- STRUCTURAL STEEL SHALL COMPLY WITH ONE OF THE FOLLOWING
- HOT DIP GALVANIZED, MINIMUM ASTM A123 OR A153 CLASS D, AS APPLICABLE
- PAINTED WITH ZINC RICH PRIMER (UNDERCOAT AND FINISH COAT) OR EQUIVALENT PAINT SYSTEM.
- COLD-FORMED STEEL MEMBERS SHALL BE 55 PERCENT ALUMINUM-ZINC ALLOY COATED PET ASTM A792/A792M STANDARD IN ACCORDANCE WITH THE AMERICAN IRON AND STEEL INSTITUTE (AISI) S240 TABLE A4-1, CP 90 COATING DESIGNATION.
- ALL EXPOSED STEEL FASTENERS, INCLUDING CAST-IN-PLACE ANCHOR BOLTS/RODS, SHALL BE STAINLESS STEEL (TYPE 304 MINIMUM), HOT-DIP GALVANIZED (ASTM A153, CLASS D MINIMUM OR ASTM F2329), OR PROTECTED WITH CORROSION-PREVENTIVE COATING THAT DEMONSTRATED NO MORE THAN 2 PERCENT OF RED RUST IN MINIMUM 1,000 HOURS OF EXPOSURE IN SALT SPRAY TEST PER ASTM B117. ZINC-PLATED FASTENERS DO NOT COMPLY WITH THIS REQUIREMENT. EXAMPLE PROPRIETARY COATINGS THAT DO COMPLY WITH THE 1000-HOUR REQUIREMENT INCLUDE BUT ARE NOT NECESSARILY LIMITED TO: QUIK GUARD BY SIMPSON, KWIK-COTE BY HILTI, STALGARD BY ELCO, VISTACORR BY SFS INTEC, ETC.

STEEL :

DESIGN AND FABRICATION ACCORDING TO 2022 CBC

- PLATE, ANGLE, CHANNEL TEE: ASTM A36
- WIDE FLANGE: ASTM A992
- ROUND PIPE: ASTM A53 GRADE B OR EQUIVALENT.
- HSS ROUND, SQUARE, AND RECTANGULAR TUBE: ASTM A500 GRADE B OR EQUIVALENT.
- ALL STEEL MACHINED BOLTS SHOULD BE: ASTM A307
- ALL STAINLESS STEEL MACHINED BOLTS SHOULD BE: ASTM A276
- DEFORMED REINFORCING REBAR: ASTM A615 GRADE 60.

ALUMINUM :

DESIGN AND FABRICATION ACCORDING TO 2020 ALUM. DESIGN MANUAL

PLATES, ANGLES, CHANNELS, TEE, AND SQUARE TUBING: ALUMINUM

- ALLOY 6061 - T6 WITH 0.098 LBS PER CUBIC INCH.

WELDING :

STEEL

DESIGN AND FABRICATION ACCORDING TO AWS D1.1. / D1.3

- AWS CERTIFICATION REQUIRED FOR ALL STRUCTURAL WELDERS.
- E70 XX ELECTRODE FOR SMAW PROCESS.
- E70S XX ELECTRODE FOR GMAW PROCESS.
- ER7 XX ELECTRODE FOR GTAW PROCESS.
- E70T XX ELECTRODE FOR FCAW PROCESS.

ALL WELDS SHALL BE MADE WITH A FILLER METAL THAT CAN PRODUCE WELDS THAT HAVE A MINIMUM CHARPY V-NOTCH TOUGHNESS OF 20FT-LB AT ZERO 0° AS DETERMINED BY THE APPROPRIATE AWS A5 CLASSIFICATION TEST METHOD OR MFG'S. CERTIFICATION.

ALUMINUM

DESIGN AND FABRICATION ACCORDING TO AWS D1.2. ALL WELDING IN ACCORDANCE WITH THE LATEST EDITION OF THE AWS A.5.10. FILLER ALLOYS PER TABLES M.9.1 & M.9.2 OF 2020 ALUMINUM DESIGN MANUAL.

CONCRETE :

DESIGN AND CONSTRUCTION ACCORDING TO ACI 318-19

- COMPRESSIVE STRENGTH AT 28 DAYS, f 'c= 4500 PSI MINIMUM.
- CEMENT TYPE V. W/C RATIO 0.45 BY WEIGHT FOR PIER AND CAISSON
- FOOTINGS CONCRETE MUST BE POURED AGAINST UNDISTURBED EARTH.
- MAINTAIN A MINIMUM 3" CONCRETE COVER OVER ALL EMBEDDED STEEL.

SOIL:

LATERAL SOIL BEARING PER IBC CLASS 5 TABLE 1806.2 (100 PSF/FT). MODIFIED PER SECTION 1806.3.4.

YJ INC.
www.yjinc.com
P.O. BOX 802050
SANTA CLARITA, CA. 91380
TEL. (661)259-0700 FAX. (661)259-0900

SHEET TITLE:

BUHACH COLONY HIGH SCHOOL SCOREBOARD

DRN BY: K.S.P.	DATE LAST REVISED: Dec 14, 2023	REV. NO.	REV. DATE	REVISED BY	PROJECT JOB # : YJ__91623_Buhach Colony High School_Scoreboard_Buhach Rd_Atwater CA.dwg
CHK BY: T.J.	PROJ. START DATE: Apr 27, 2023	1	--/--/--	---	PROJECT LOCATION : BUHACH COLONY HIGH SCHOOL 1800 BUHACH RD. ATWATER, CA — SHEET # SB-2
REV BY: T.J.	SCALE: AS SHOWN	2	--/--/--	---	2 OF 2
Plotted by: isaac on 12/14/2023 4:24:13 PM		3	--/--/--	---	

IDENTIFICATION STAMP
DIV. OF THE STATE ARCHITECT
APP: 02-121275 INC:
REVIEWED FOR
SS ☑ FLS ☑ ACS ☑
DATE: 12/15/2023

CALIFORNIA DESIGN WEST ARCHITECTS, Inc.

2100 19th Street
Sacramento, CA 95818

Phone: (916) 446-2466
Fax: (916) 446-5118
Web Page: ca-dw.com

These plans and prints thereof, as instruments of service, are owned by the architect and are for the use on this project only. Reproduction and/or distribution without the prior written consent of the architect is forbidden.

Copyright California Design West Architects, Inc.

ARCHITECT: CONSULTANT:

LICENSED ARCHITECT — JAMES A. MITCHELL & MCALISTER III — NO. C 17250 — EXPIRATION 08-31-2025 — STATE OF CALIFORNIA

CONSULTANT:

REGISTERED PROFESSIONAL ENGINEER — JOHN BRENT ROEMER — NO. 2145 Exp. 12/31/25 — STRUCTURAL — STATE OF CALIFORNIA

PROJECT NAME:

BUHACH COLONY HIGH SCHOOL

1800 NORTH BUHACH RD
ATWATER, CA 95301

CONCESSIONS/TOILET BUILDINGS, TICKET BOOTH & STADIUM UPGRADES

MERCED UNION HIGH SCHOOL DISTRICT

MERCED COUNTY

KEY PLAN:

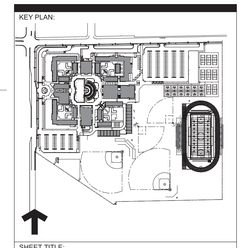

SHEET TITLE:

CONNECTION DETAIL

JOB NUMBER:

DATE: OCT 9, 2023

REVISION:

SHEET NUMBER: **SB-2**