ONTARIO FIRE DEPARTMENT ADMINISTRATION BUILDING

1420 E. FRANCIS STREET
Ontario, California

1. FUEL-EFFICIENT VEHICLE PARKING SHALL BE PROVIDED IN ACCORDANCE WITH CGBSC SECTION 5.106.3.
2. EXTERIOR LIGHT POLLUTION MUST COMPLY WITH CGBSC SECTION 5.106.8.
3. SUBMIT A CONSTRUCTION WASTE MANAGEMENT PLAN TO THE ENGINEERING DEPARTMENT OR OTHER AGENCY THAT REGULATES CONSTRUCTION WASTE MANAGEMENT IN ACCORDANCE WITH CGBSC SECTION 5.408.1.1.
4. A MINIMUM OF 65 PERCENT OF THE NON-HAZARDOUS CONSTRUCTION AND DEMOLITION DEBRIS IS TO BE RECYCLED IN ACCORDANCE WITH CGBSC SECTION 5.408.1.
5. 100 PERCENT OF TREES, STUMPS, ROCKS AND ASSOCIATED VEGETATION AND SOILS RESULTING PRIMARILY FROM LAND CLEARING SHALL BE REUSED OR RECYCLED IN ACCORDANCE WITH CGBSC SECTION 5.408.3.
6. A BUILDING "SYSTEM MANUAL" AS LISTED IN CGBSC SECTION 5.410.2.5 SHALL BE DELIVERED TO THE BUILDING OWNER OR REPRESENTATIVE AND THE FACILITIES OPERATOR. THE "SYSTEM MANUAL" SHALL CONTAIN THE REQUIRED FEATURES LISTED IN CGBSC SECTION 5.410.2.5.1.
7. A BUILDING "MAINTENANCE AND OPERATION MANUAL" AS OUTLINED IN CGBSC SECTION 5.410.4.5 SHALL BE DELIVERED TO THE BUILDING OWNER OR REPRESENTATIVE AT TIME OF FINAL BUILDING INSPECTION.
8. AT THE TIME OF ROUGH INSTALLATION, OR DURING STORAGE ON THE CONSTRUCTION SITE AND UNTIL FINAL STARTUP OF THE HEATING AND COOLING EQUIPMENT, ALL ENDS OF DUCT OPENINGS SHALL BE SEALED, AND OTHER RELATED AIR DISTRIBUTION COMPONENT OPENINGS SHALL BE COVERED IN ACCORDANCE WITH CGBSC SECTION 5.504.3.
9. VOC CONTENTS MUST COMPLY WITH THE LIMITATIONS LISTED IN CGBSC SECTION 5.504.4 AND TABLE 4.504.1, 5.504.4.1, 5.504.4.2, 5.504.4.3, AND 5.504.4.5 FOR ADHESIVES, SEALANTS, PAINTS AND COATINGS, CARPETS AND COMPOSITION WOOD PRODUCTS.
10. INSTALL HVAC, REFRIGERATION AND FIRE SUPPRESSION EQUIPMENT THAT DO NOT CONTAIN CFCs OR HALONS IN ACCORDANCE WITH CGBSC SECTION 5.508.1.1 AND 5.508.1.2.
11. PRIOR TO FINAL APPROVAL OF THE BUILDING, THE LICENSED CONTRACTOR IN RESPONSIBLE CHARGE OF THE OVERALL CONSTRUCTION MUST COMPLETE AND SIGN ANY GREEN BUILDING STANDARDS CERTIFICATION FORM AS REQUIRED BY THE BUILDING DEPARTMENT OFFICIAL.
12. A MANUAL FIRE ALARM SYSTEM IS REQUIRED PER CFC 907.2.2.
13. PORTABLE FIRE EXTINGUISHERS SHALL BE PROVIDED IN ACCORDANCE WITH THE 2019 CFC SECTION 906.

CODE COMPLIANCE NOTES 22

DEFERRED APPROVAL ITEMS:

SUBMITTAL DOCUMENTS FOR DEFERRED ITEMS SHALL BE SUBMITTED TO THE REGISTERED DESIGN PROFESSIONAL IN RESPONSIBLE CHARGE, WHO SHALL REVIEW THEM. AFTER THE REVIEW THE DOCUMENTS SHALL BE FORWARDED TO THE GENERAL CONTRACTOR TO BE SUBMITTED TO THE BUILDING OFFICIAL WITH A NOTATION INDICATING THAT THE DEFERRED DOCUMENTS HAVE BEEN REVIEWED AND THAT THEY HAVE BEEN FOUND TO BE IN GENERAL CONFORMANCE WITH THE DESIGN AND DOCUMENTS HAVE BEEN APPROVED BY THE BUILDING OFFICIAL.

INSTALLATION OF DEFERRED APPROVAL ITEMS SHALL NOT BE STARTED UNTIL DETAILED PLANS, SPECIFICATIONS, AND ENGINEERING CALCULATIONS HAVE BEEN ACCEPTED AND SIGNED BY THE ARCHITECT OR ENGINEER IN GENERAL RESPONSIBLE CHARGE OF DESIGN AND SIGNED BY A CALIFORNIA REGISTERED ARCHITECT OR PROFESSIONAL ENGINEER WHO HAS BEEN DELEGATED RESPONSIBILITY COVERING THE WORK SHOWN ON A PARTICULAR PLAN OR SPECIFICATION AND APPROVED BY THE CITY OF ONTARIO.

DEFERRED APPROVAL ITEMS SHALL BE SUBMITTED FOR REVIEW NO LATER THAN 60 DAYS AFTER THE NOTICE TO PROCEED.

DEFERRED APPROVAL ITEMS FOR THIS PROJECT ARE THE FOLLOWING ITEMS:

A. ALL WET & DRY FIRE PROTECTION SYSTEMS
B. UNDERGROUND FIRE LINE
C. FIRE ALARM SYSTEM
D. EMERGENCY GENERATOR (AQMD)
E. ABOVE GROUND STORAGE TANK (GENERATOR BELLY TANK)
F. FUEL DISPENSING TANK
H. UNDERGROUND WATER STORAGE TANK
J. CURTAIN WALL SYSTEM
K. SUNSHADE SYSTEM

STRUCTURAL DEFERRED APPROVAL ITEMS:

1. EXTERIOR BUILDING FACADE
2. ELEVATOR
3. DESIGN BUILT AWNINGS
4. NON-STRUCTURAL EQUIPMENT ANCHORAGE
5. FIRE SPRINKLER ANCHORAGE
6. DURAFUSE FRAMES
7. INTERIOR METAL STUD DESIGN
8. EXTERIOR METAL STUDS, CONNECTIONS AND DRIFT REQUIREMENT DETAILS

NOTE: ALL METAL STUDS REPRESENTED AND SHOWN IN THESE DOCUMENTS ARE A CONCEPTUAL DEFERRED APPROVAL ITEMS.

DEFERRED APPROVAL 23

2019 CALIFORNIA BUILDING STANDARDS ADMINISTRATIVE CODE CALIFORNIA CODE OF REGULATIONS (CCR) TITLE 24, PART 1	
2019 CALIFORNIA BUILDING CODE (CBC) CALIFORNIA CODE OF REGULATIONS (CCR) TITLE 24, PART 2	(2015 INTERNATIONAL BUILDING CODE (IBC) W/ CALIFORNIA AMENDMENTS)
2019 CALIFORNIA ELECTRICAL CODE (CEC) CALIFORNIA CODE OF REGULATIONS (CCR) TITLE 24, PART 3	(2017 NATIONAL ELECTRIC CODE (NEC) W/ CALIFORNIA AMENDMENTS)
2019 CALIFORNIA MECHANICAL CODE (CMC) CALIFORNIA CODE OF REGULATIONS (CCR) TITLE 24, PART 4	(2018 UNIFORM MECHANICAL CODE (UMC) W/ CALIFORNIA AMENDMENTS)
2019 CALIFORNIA PLUMBING CODE (CPC) CALIFORNIA CODE OF REGULATIONS (CCR) TITLE 24, PART 5	(2018 UNIFORM PLUMBING CODE (UPC) W/ CALIFORNIA AMENDMENTS)
2019 CALIFORNIA ENERGY CODE CALIFORNIA CODE OF REGULATIONS (CCR) TITLE 24, PART 6	
2019 CALIFORNIA FIRE CODE (CFC) CALIFORNIA CODE OF REGULATIONS (CCR) TITLE 24, PART 9	(2018 INTERNATIONAL FIRE CODE (IFC) W/ CALIFORNIA AMENDMENTS)
2019 CALIFORNIA GREEN BUILDING STANDARDS CODE (CAL GREEN) CALIFORNIA CODE OF REGULATIONS (CCR) TITLE 24, PART 11	
2019 CALIFORNIA REFERENCED STANDARDS CODE -CALIFORNIA CODE OF REGULATIONS (CCR) TITLE 24, PART 12	1990 STATE FIRE MARSHAL REGULATIONS (AS AMENDED TO DATE) CALIFORNIA CODE OF REGULATIONS (CCR) TITLE 19
2010 AMERICANS WITH DISABILITY ACT (ADA) STANDARDS FOR ACCESSIBLE DESIGN (ADAS)	

NOTE: ALL DESIGN AND PLANS BASED ON THE 2019 CBC, CMC, CEC,CPC, CGBSC AND BUILDING ENERGY CODE.

APPLICABLE NFPA , UL AND ICC STANDARDS

NFPA 13	-	AUTOMATIC SPRINKLER SYSTEMS, 2016 EDITION
NFPA 14	-	STANDPIPE SYSTEMS, 2016 EDITION
NFPA 17	-	DRY CHEMICAL EXTINGUISHING SYSTEMS, 2017 EDITION
NFPA 17A	-	WET CHEMICAL SYSTEMS, 2017 EDITION
NFPA 20	-	STATIONARY PUMPS, 2016 EDITION
NFPA 22	-	WATER TANKS FOR PRIVATE FIRE PROTECTION, 2018 EDITION
NFPA 24	-	PRIVATE FIRE MAINS, 2016 EDITION
NFPA 25	-	WATER BASED FIRE PROTECTION SYSTEMS, 2013CA EDITION
NFPA 72	-	NATIONAL FIRE ALARM CODE, 2016 EDITION
NFPA 80	-	FIRE DOORS AND OTHER OPENING PROTECTIVES, 2016 EDITION
NFPA 92	-	STANDARD FOR SMOKE CONTROL SYSTEMS, 2015 EDITION
NFPA 253	-	CRITICAL RADIANT FLUX OF FLOOR COVERINGS, 2015 EDITION
NFPA 2001	-	CLEAN AGENT FIRE EXTINGUISHING SYSTEMS, 2015 EDITION
ICC 300	-	ICC STANDARDS FOR BLEACHERS, FOLDING AND TELESCOPIC SEATING, AND GRANDSTANDS, 2012 EDITION
UL 300	-	FIRE TESTING OF FIRE EXTINGUISHING SYSTEMS FOR PROTECTION OF COMMERCIAL RESTAURANT COOKING AREAS, 2005 EDITION
UL 464	-	AUDIBLE SIGNAL APPLIANCES, 2003 EDITION
UL 521	-	HEAT DETECTORS FOR FIRE PROTECTIVE SIGNALING SYSTEMS, 1999 EDITION

NOTE: ALL NFPA STANDARDS AS LISTED ARE TO CONFORM TO THE EDITION AS LISTED WITH THE LATEST CALIFORNIA AMENDMENTS. REFERENCE THE 2016 CBC, TITLE 24, PART 2 - CHAPTER 35 FOR ADDITIONAL APPLICABLE NFPA, UL. STANDARDS AND ANY CALIFORNIA AMENDMENTS TO NFPA STANDARDS.

GOVERNING CODES 19

VICINITY MAP
NOT TO SCALE

VICINITY MAP 20

TITLE	
T-1	TITLE SHEET
T-2	TITLE SHEET AND GENERAL NOTES
T-3	CODE ANALYSIS AND GENERAL NOTES
T-4	PLANNING CONDITIONS OF APPORVAL
T-5	2019 CAL-GREEN NON-RESIDENTIAL MANDATORY REQUIREMENTS
T-6	2019 CAL-GREEN NON-RESIDENTIAL MANDATORY REQUIREMENTS
T-7	2019 CAL-GREEN NON-RESIDENTIAL MANDATORY REQUIREMENTS
CIVIL	
C1	TITLE SHEET
C2	DETAILS AND SECTIONS
C3.0	RECORD TOPOGRAPHY SURVEY MAP - NORTH
C3.1	RECORD TOPOGRAPHY SURVEY MAP - SOUTH
C4.0	DEMOLITION PLAN - NORTH
C4.1	DEMOLITION PLAN - SOUTH
C5.0	GRADING AND DRAINAGE PLAN - NORTH
C5.1	GRADING AND DRAINAGE PLAN - SOUTH
C6.0	STORM DRAIN AND UTILITY PLAN - NORTH
C6.1	STORM DRAIN AND UTILITY PLAN - SOUTH
C7.0	EROSION CONTROL PLAN - TITLE SHEET
C7.1	EROSION CONTROL PLAN - NORTH
C7.2	EROSION CONTROL PLAN - SOUTH
C8.0	WQPM SITE PLAN - NORTH
C8.1	WQPM SITE PLAN - SOUTH
C8.2	WQPM DETAIL SHEET
C9.0	REFERENCE DETAILS
C9.1	REFERENCE DETAILS
ARCHITECTURAL	
A1.1	SITE PLAN
A1.1F	FIRE ACCESS SITE PLAN
A1.2	ENLARGED SITE PLANS
A1.3	ENLARGED SITE PLAN
A1.4	SITE DETAILS
A1.5	SITE DETAILS
A2.1	FIRST FLOOR PLAN
A2.2	SECOND FLOOR PLAN
A2.3	THIRD FLOOR PLAN
A2.4	FIRST FLOOR REFLECTED CEILING PLAN
A2.5	SECOND FLOOR REFLECTED CEILING PLAN
A2.6	THIRD FLOOR REFLECTED CEILING PLAN
A2.7	ROOF PLAN
A3.1	EXTERIOR ELEVATIONS
A3.2	EXTERIOR ELEVATIONS
A4.1	BUILDING SECTIONS
A4.2	BUILDING SECTIONS
A4.3	BUILDING SECTIONS
A5.1	DOOR SCHEDULE
A5.2	WINDOW SCHEDULE
A5.3	FINISH SCHEDULE
A5.4	DOOR DETAILS
A5.5	DOOR DETAILS
A5.6	WINDOW DETAILS
A5.7	WINDOW DETAILS
A6.1	ENLARGED FLOOR PLANS
A6.2	ENLARGED FLOOR PLANS
A6.3	FIRST FLOOR FINISH PLAN
A6.4	SECOND FLOOR FINISH PLAN
A6.5	THIRD FLOOR FINISH PLAN
A7.1	INTERIOR ELEVATIONS
A7.2	INTERIOR ELEVATIONS
A7.3	INTERIOR ELEVATIONS
A7.4	INTERIOR ELEVATIONS
A7.5	INTERIOR ELEVATIONS
A7.6	INTERIOR ELEVATIONS
A8.1	SUSPENDED CEILING NOTES AND DETAILS
A8.2	INTERIOR DETAILS
A8.3	INTERIOR DETAILS
A8.4	SPECIALITY DETAILS
A8.5	SIGNAGE DETAILS
A8.6	ROOF DETAILS
A8.7	ROOF DETAILS
A8.8	EXTERIOR DETAILS
A8.9	ELEVATOR AND STAIR DETAILS

STRUCTURAL	
S001	GENERAL NOTES
S002	GENERAL MATERIAL NOTES
S011	TYPICAL FOUNDATION & SOG DETAILS
S012	TYPICAL FOUNDATION & TYPICAL DETAILS
S013	TYPICAL CONCRETE/CMU DETAILS
S014	TYPICAL CONCRETE GRADE BEAM DETAILS
S015	TYPICAL CONCRETE GRADE BEAM DETAILS
S021	ENLARGED SITE PLAN AND DETAILS
S031	TYPICAL STRUCTURAL STEEL DETAILS
S032	TYPICAL STRUCTURAL DETAILS
S035	TYPICAL STEEL STAIR DETAILS
S041	TYPICAL METAL DECK DETAILS
S042	TYPICAL COMPOSITE METAL DECK DETAILS
S044	MECHANICAL HANGER AND MISC. DETAILS
S045	MECHANICAL SUPPORT AND MISC. DETAILS
S051	TYPICAL COLD-FORMED STEEL DETAILS
S052	TYPICAL COLD-FORMED STEEL DETAILS
S053	TYPICAL COLD-FORMED STEEL DETAILS
S201	FOUNDATION PLAN
S202	SECOND FLOOR FRAMING PLAN
S203	THIRD FLOOR FRAMING PLAN
S204	ROOF FRAMING PLAN
S210	ENLARGED STAIR FRAMING PLANS
S211	ENLARGED STAIR FRAMING PLANS
S301	BUILDING SECTIONS
S302	BUILDING SECTIONS
S303	BUILDING SECTIONS
S304	BUILDING SECTIONS
S305	BUILDING SECTIONS
S306	BUILDING SECTIONS
S307	BUILDING SECTIONS
S308	BUILDING SECTIONS
S401	SMRF ELEVATIONS
S501	FRAME ELEVATIONS
S701	BUILDING ELEVATIONS
S702	BUILDING ELEVATIONS
SDF-01	DURAFUSE GENERAL NOTES
SDF-02	DURAFUSE ONE-SIDED CONNECTION DETAILS
SDF-03	DURAFUSE TWO-SIDED CONNECTION DETAILS
SDF-04	DURAFUSE BEAM AND PLATE DETAILS
SDF-05	DURAFUSE MISCELLANEOUS DETAILS
MECHANICAL	
M0.1	MECHANICAL GENERAL NOTES AND LEGEND
M0.2	MECHANICAL SCHEDULES
M0.3	MECHANICAL SCHEDULES
M2.1	MECHANICAL FIRST FLOOR PLAN
M2.1P	MECHANICAL FIRST FLOOR PIPING PLAN
M2.2	MECHANICAL SECOND FLOOR PLAN
M2.2P	MECHANICAL SECOND FLOOR PIPING PLAN
M2.3	MECHANICAL THIRD FLOOR PLAN
M2.3P	MECHANICAL THIRD FLOOR PLAN
M3.1	MECHANICAL ROOF PLAN
M5.1	MECHANICAL DETAILS
M5.2	MECHANICAL DETAILS
M5.3	MECHANICAL DETAILS
M6.1	T-24 COMPLIANCE FORMS
M6.2	T-24 COMPLIANCE FORMS
M6.3	T-24 COMPLIANCE FORMS
M6.4	T-24 COMPLIANCE FORMS
M6.5	T-24 COMPLIANCE FORMS
PLUMBING	
P0.1	PLUMBING LEGEND AND GENERAL NOTES
P0.2	PLUMBING FIXTURE SCHEDULE
P1.1	PLUMBING SITE PLAN
P2.1	PLUMBING FIRST FLOOR PLAN
P2.2	PLUMBING SECOND FLOOR PLAN
P2.3	PLUMBING THIRD FLOOR PLAN
P3.1	PLUMBING ROOF PLAN
P4.1	PLUMBING ENLARGED PLANS
P4.2	PLUMBING ENLARGED PLANS
P5.1	PLUMBING RISER DIAGRAMS
P6.1	PLUMBING DETAILS
P6.2	PLUMBING DETAILS

DRAWING INDEX 8

OWNER

CITY OF ONTARIO
303 EAST B STREET
ONTARIO, CA 91764
PH: (909) 395-2000

FIRE DEPARTMENT

ONTARIO FIRE DEPARTMENT
415 EAST B STREET
ONTARIO, CA 91764
PH: (909) 395-2539

OWNER 2

ARCHITECT

PBK ARCHITECTS, INC.
8163 ROCHESTER AVENUE, SUITE 100
RANCHO CUCAMONGA, CA 91730
(909) 987-0909 FAX (909) 980-9980

CIVIL ENGINEER

MSL ENGINEERING, INC.
402 WEST ARROW HIGHWAY, SUITE 4
SAN DIMAS, CA 91773
(909) 305-2395 FAX (909) 305-2397

STRUCTURAL ENGINEER

R.M. BYRD AND MIYAMOTO INTERNATIONAL, INC.
1047 W. SIXTH STREET, SUITE A
ONTARIO, CA 91762-1209
(909) 983-5599 FAX (909) 983-4456

MECHANICAL/ PLUMBING ENGINEER

POCOCK DESIGN SOLUTIONS
14451 CHAMBERS ROAD, SUITE 210
TUSTIN, CA 92780
(949) 417-3903 FAX (949) 419-1393

ELECTRICAL ENGINEER

A & F ENGINEERING GROUP, INC.
9320 BASELINE ROAD, SUITE C
RANCHO CUCAMONGA, CA 91701
(909) 941-3008 FAX (909) 941-8211

LANDSCAPE ARCHITECT

CORNERSTONE STUDIOS
951 E SANTA ANA BLVD.,
SANTA ANA, CA 92701
(714) 973-2200

PROJECT TEAM 3

CONSTRUCTION OF A NEW ADMINISTRATION BUILDING (32,062 S.F. 3-STORY,TYPE II-B CONSTRUCTION) ON A 4.7 ACRE LOT IN THE CITY OF ONTARIO, CA.

THE FOLLOWING ANCILLARY STRUCTURES ARE INCLUDED WITH SCOPE OF WORK, MAY REQUIRE ADDITIONAL PERMITS, VERIFY WITH CITY:

- LIGHT STANDARDS
- CMU TRASH ENCLOSURE AND PERIMETER WALLS
- EMERGENCY GENERATOR AND FUEL TANK
- FUEL DISPENSING TANK
- FLAG POLE
- BUILDING SIGN
- AUTOMATIC FIRE SPRINKLER SYSTEM
- UNDERGROUND WATER STORAGE TANK

NEW ADMINISTRATION BUILDING:

STORIES: 3
HEIGHT: 52'-0"
AREA: 32,062 SF
APN: 0113-461-10

TOTAL ACRES: 4.7 AC
NET ACRES: 1.66 AC

SCOPE OF WORK 4

1. THE CITY OF ONTARIO BUILDING DIVISION ENFORCES CBC CHAPTER 11B FOR DISABLED ACCESS COMPLIANCE AND DOES NOT REVIEW OR APPROVE PLANS FOR ADA COMPLIANCE.
2. CITY OF ONTARIO REQUIRES ALL NEW BUILDINGS AND DEMOLITION/RENOVATION/TENANT IMPROVEMENT PERMIT APPLICANT WITH PROJECT VALUATION OF $100,000.00 OR MORE TO PREPARE A CONSTRUCTION & DEMOLITION RECYCLE PLAN (CDRP). FILL OUT "FORM CDRP" AND SUBMIT TO ONTARIO MUNICIPAL UTILITIES COMPANY - SOLID WASTE DEPARTMENT FOR APPROVAL. CALL (909) 395-2664 FOR FURTHER INFORMATION AND ASSISTANCE.

CITY OF ONTARIO NOTES 5

PBK
RANCHO CUCAMONGA
8163 ROCHESTER AVENUE, SUITE 100
RANCHO CUCAMONGA, CA 91730
909-987-0909 P

ONTARIO FIRE DEPARTMENT ADMINISTRATION BUILDING
CITY OF ONTARIO
1420 E. FRANCIS STREET., ONTARIO, CA

LICENSED ARCHITECT
KEITH A. NEEDHAM
C-19064
Exp. 03/31/25
STATE OF CALIFORNIA

CONSULTANT

NO	DATE	BY	DESCRIPTION

REVISIONS

DRAWN: RMZ
CHECKED:
DATE: 07/15/2022
SCALE: NONE
PROJECT NUMBER: 2011700

TITLE SHEET

DRAWING NUMBER: T.1

BID SET 03/01/24

1. THESE DRAWINGS DO NOT CONTAIN THE NECESSARY COMPONENTS FOR CONSTRUCTION SAFETY.

2. LOCATIONS OF ALL UTILITIES SHOWN ARE APPROXIMATE AND CONTRACTOR SHALL EXERCISE EXTREME CAUTION IN EXCAVATING AND TRENCHING ON THIS SITE TO AVOID INTERCEPTING EXISTING PIPING OR CONDUITS. IT SHALL BE THE RESPONSIBILITY OF THE CONTRACTOR TO LOCATE ALL EXISTING UTILITIES WHETHER SHOWN HEREON OR NOT AND TO PROTECT THEM FROM DAMAGE. THE ARCHITECT IS NOT RESPONSIBLE FOR THE LOCATION OF UNDERGROUND UTILITIES OR STRUCTURES WHETHER OR NOT SHOWN OR DETAILED AND INSTALLED BY ANY OTHER CONTRACT. THE CONTRACTOR SHALL IMMEDIATELY NOTIFY THE ARCHITECT SHOULD ANY UNIDENTIFIED CONDITIONS BE DISCOVERED. THE CONTRACTOR SHALL BEAR ALL EXPENSE OR REPAIR OR REPLACEMENT OF UTILITIES OR OTHER PROPERTY DAMAGED BY OPERATIONS IN CONJUNCTION WITH THE EXECUTION OF THIS WORK.

3. THESE DOCUMENTS AND THE IDEAS AND DESIGNS INCORPORATED HEREIN, AS AN INSTRUMENT OF PROFESSIONAL SERVICE, ARE THE PROPERTY OF WLC ARCHITECTS, INC., AND ARE NOT TO BE USED, IN WHOLE OR IN PART, FOR ANY OTHER PROJECT WITHOUT THE WRITTEN AUTHORIZATION OF PBK ARCHITECTS, INC.

4. THE WORK SHOWN ON THESE DRAWINGS AS EXISTING CONDITIONS WAS PREPARED FROM INFORMATION FURNISHED BY THE OWNER. WHILE THIS INFORMATION IS BELIEVED TO BE RELIABLE, PBK ARCHITECTS, INC. IS NOT RESPONSIBLE FOR THE ACCURACY OR ADEQUACY OF ANY WORK SHOWN AS EXISTING NOR IS PBK ARCHITECTS, INC. RESPONSIBLE FOR ANY ERRORS OR OMISSIONS WHICH MAY HAVE BEEN INCORPORATED INTO THESE DRAWINGS AS A RESULT.

5. ALL FIRE LANES TO BE UNOBSTRUCTED DURING ALL PHASES OF CONSTRUCTION.

6. PENETRATIONS TO FIRE RATED MATERIALS OR ASSEMBLIES SHALL BE RESTORED TO EQUAL RATING. FIRE STOP SYSTEMS AS LISTED BY UNDERWRITERS LABORATORIES SHALL BE INSTALLED PER FIRE RESISTANCE DIRECTORY. FIRE STOP SYSTEMS SHALL BE AS SPECIFIED.

7. NONRESIDENTIAL ENERGY STANDARDS COMPLIANCE STATEMENT (TITLE 24, PART 6):

   THE DESIGN INDICATED HEREIN COMPLIES WITH THE REQUIREMENTS OF THE ENERGY CONSERVATION STANDARDS OF TITLE 24, PART 6, CALIFORNIA CODE OF REGULATIONS. THE PROPOSED BUILDING(S) WILL BE IN COMPLIANCE WITH THE ENERGY CONSERVATION STANDARDS PROVIDED IT (THEY) IS (ARE) BUILT ACCORDING TO THESE DRAWINGS AND SPECIFICATIONS AND PROVIDED ANY FUTURE IMPROVEMENTS ARE COMPLETED ACCORDING TO THE REQUIREMENTS OF TITLE 24, PART 6, CALIFORNIA CODE OF REGULATIONS. THESE PLANS AND SPECIFICATIONS HAVE BEEN PREPARED TO INCLUDE ALL SIGNIFICANT ENERGY CONSERVATION FEATURES REQUIRED FOR COMPLIANCE WITH THE STANDARDS. BUILDING AREAS THAT ARE UNCONDITIONED AND/OR NOT SUBJECT TO THE STANDARDS ARE INDICATED ON THE PLANS.

   ENVELOPE MANDATORY MEASURES:

   A. INSTALLED INSULATING MATERIALS SHALL HAVE BEEN CERTIFIED BY THE MANUFACTURER TO COMPLY WITH THE CALIFORNIA QUALITY STANDARDS FOR INSULATING MATERIAL.

   B. ALL INSULATING MATERIALS SHALL BE INSTALLED IN COMPLIANCE WITH THE FLAME SPREAD RATING AND SMOKE DENSITY REQUIREMENTS OF [TITLE 24, PART CALIFORNIA CODE OF REGULATIONS, SECTIONS 707 AND 2602.]

   C. ALL EXTERIOR JOINTS AND OPENINGS IN THE BUILDING ENVELOPE THAT ARE POTENTIAL AND OBSERVABLE SOURCES OF AIR LEAKAGE SHALL BE CAULKED, GASKETED, WEATHERSTRIPPED OR OTHERWISE SEALED.

   D. SITE CONSTRUCTED DOORS, WINDOWS, AND SKYLIGHTS SHALL BE CAULKED BETWEEN THE UNIT AND THE BUILDING, AND SHALL BE WEATHERSTRIPPED (EXCEPT FOR UNFRAMED GLASS DOORS AND FIRE DOORS.)

   E. MANUFACTURED DOORS AND WINDOWS INSTALLED SHALL HAVE AIR INFILTRATION RATES CERTIFIED BY THE MANUFACTURER IN ACCORDANCE WITH TITLE 24, PART 6, CALIFORNIA CODE OF REGULATIONS, SECTION 116(a)1.

   F. MANUFACTURED FENESTRATION PRODUCTS IN THE ENVELOPE OF THE BUILDING, INCLUDING, BUT NOT LIMITED TO, WINDOWS, SLIDING GLASS DOORS, FRENCH DOORS, SKYLIGHTS, CURTAIN WALLS, AND GARDEN WINDOWS MUST BE LABELED FOR U-VALUE IN ACCORDANCE WITH THE (NFRC) NATIONAL FENESTRATION RATING COUNCIL'S INTERIM U-VALUE RATING PROCEDURE.

   G. DEMISING WALL INSULATION SHALL BE INSTALLED IN ALL OPAQUE PORTIONS OF FRAMED WALLS (EXCEPT DOORS).

8. PROOF LOAD TESTS FOR EXPANSION TYPE ANCHOR BOLTS:

   A. ANCHOR DIAMETER REFERS TO THE THREAD SIZE FOR THE WEDGE CATEGORY AND TO THE ANCHOR OUTSIDE DIAMETER FOR THE SLEEVE CATEGORY.

   B. APPLY PROOF TEST LOADS TO WEDGE & SLEEVE ANCHORS WITHOUT REMOVING THE NUT IF POSSIBLE. IF NOT, REMOVE NUT AND INSTALL A THREADED COUPLER TO THE SAME TIGHTNESS OF THE ORIGINAL NUT USING A TORQUE WRENCH AND APPLY LOAD.

   C. FOR SLEEVE INTERNALLY THREADED CATEGORIES, VERIFY THAT THE ANCHOR IS NOT PREVENTED FROM WITHDRAWING BY A BASEPLATE OR OTHER FIXTURES. IF RESTRAINT IS FOUND, LOOSEN AND SHIM OR REMOVE FIXTURE(S) PRIOR TO TESTING.

   D. REACTION LOADS FROM TEST FIXTURES MAY BE APPLIED CLOSE TO THE ANCHOR BEING TESTED, PROVIDED THE ANCHOR IS NOT RESTRAINED FROM WITHDRAWING BY THE FIXTURE(S).

   E. TEST EQUIPMENT IS TO BE CALIBRATED BY AN APPROVED TESTING LABORATORY IN ACCORDANCE WITH STANDARD RECOGNIZED PROCEDURES.

   F. THE FOLLOWING CRITERIA APPLY FOR THE ACCEPTANCE OF INSTALLED ANCHORS:

      (1). HYDRAULIC RAM METHOD: THE ANCHOR SHOULD HAVE NO OBSERVABLE MOVEMENT AT THE APPLICABLE TEST LOAD. FOR WEDGE AND SLEEVE TYPE ANCHORS, A PRACTICAL WAY TO DETERMINE OBSERVABLE MOVEMENT IS THAT THE WASHER UNDER THE NUT BECOMES LOOSE.

      (2). TORQUE WRENCH METHOD: THE APPLICABLE TEST TORQUE MUST BE REACHED WITHIN THE FOLLOWING LIMITS:

      WEDGE OR SLEEVE TYPE: ONE-HALF (1/2) TURN OF THE NUT.

      ONE-QUARTER (1/4) TURN OF THE NUT FOR THE 3/8 IN. SLEEVE ANCHOR ONLY.

   G. TESTING SHOULD OCCUR 24 HOURS MINIMUM AFTER INSTALLATION OF THE SUBJECT ANCHORS.

   H. ALL ANCHOR BOLTS OF THE EXPANSION TYPE (LOADED IN EITHER PULLOUT OR SHEAR) SHALL HAVE 50 PERCENT OF THE BOLTS (ALTERNATE BOLTS IN ANY GROUP ARRANGEMENT ALLOWED BY THE TYPE OF SUBSTRATE AND DIAMETER OF BOLT LISTED BELOW UNDER TEST VALUES TABLE) PROOF TESTED IN TENSION TO TWICE THE ALLOWABLE TENSION LOAD. IF THERE ARE ANY FAILURES, THE IMMEDIATELY ADJACENT BOLTS MUST THEN ALSO BE TESTED. TESTING SHALL BE PERFORMED IN ACCORDANCE WITH TITLE 24, PART 2, SECTION 1925A.3.5.

   I. ALL BOLTS MUST HAVE ICC/ES APPROVAL.

   J. ALL ANCHOR BOLTS OF THE EXPANSION TYPE INSTALLED IN CONCRETE SHALL BE ONE OF THE FOLLOWING:

      (1). RAWLPLUG CO., INC.-RAWL BOLT-SLEEVE ANCHOR-ICC/ES NO. 5225.

      (2). ITW RAMSET/REDHEAD-WEDGE ANCHOR-ICC/ES NO. 1372

      (3). HILTI, INC.-KWIK BOLT III-WEDGE ANCHOR-ICC/ES NO. 1385
      MINIMUM TEST VALUES:
      NORMALWEIGHT OR LIGHTWEIGHT CONCRETE

ANCHOR		WEDGE		
DIA. (IN)	TENSION LOAD (LBS)	TORQUE (FT-LBS)	EMBEDMENT (IN)	TENSION LOAD (LBS)
1/4	1050	8	1-15/16	540
3/8	1740	25	3	1680
1/2	2330	55	4-1/8	2410
5/8	3290	90	5-1/8	2590
3/4	5490	175	6-5/8	2900

   K. ALL ANCHOR BOLTS OF THE EXPANSION TYPE INSTALLED IN GROUT FILLED MASONRY SHALL BE ONE OF THE FOLLOWING:

      (1). HILTI, INC.-KWIK BOLT III-WEDGE ANCHOR-ICC/ES NO. 1385

      (2). SIMPSON-WEDGE ALL-WEDGE ANCHOR-ICC/ES NO. 1396
      MINIMUM TEST VALUES:
      GROUT FILLED CONCRETE MASONRY

ANCHOR		WEDGE
DIA. (IN)	TENSION LOAD (LBS)	TORQUE (FT-LBS)
1/4	1080	4
3/8	1564	20
1/2	1810	40
5/8	2484	85
3/4	3290	150

9. POWDER DRIVEN CONCRETE FASTENERS:

   A. GENERAL: USE OF POWDER DRIVEN CONCRETE FASTENERS FOR TENSION LOADS IS LIMITED TO SUPPORT OF MINOR LOADS LIKE ACOUSTICAL CEILINGS, DUCT WORK, CONDUIT.

   B. ALLOWABLE LOADS: IN GENERAL, LOADS SHOULD BE LIMITED TO LESS THAN 100 POUNDS. HOWEVER, GREATER LOADS MAY BE PERMITTED FOR SPECIAL CASES WHEN APPROVED BY THE CHECKING SUPERVISOR OR FIELD ENGINEER.

   C. TESTING: THE OPERATOR, TOOL, AND FASTENER SHALL BE PREQUALIFIED BY THE PROJECT INSPECTOR. HE SHALL OBSERVE THE TESTING OF THE FIRST 10 FASTENER INSTALLATIONS. A TEST "PULL-OUT" LOAD OF NOT LESS THAN TWICE THE DESIGN LOAD, OR 200 POUNDS, WHICHEVER IS GREATER, SHALL BE APPLIED TO THE PIN IN SUCH A MANNER AS NOT TO RESIST THE SPALLING TENDENCY OF THE CONCRETE SURROUNDING THE PIN. THEREAFTER, RANDOM TESTS UNDER THE PROJECT INSPECTOR'S SUPERVISION SHALL BE MADE OF APPROXIMATELY 1 IN 10 PINS, EXCEPT THAT WHEN THE DESIGN LOAD EXCEEDS 100 POUNDS, ONE HALF OF THE PINS SHALL BE TESTED. SHOULD FAILURE OCCUR ON ANY PIN TESTED, ALL INSTALLATIONS MUST BE TESTED AND UNFAIR PINS REPLACED.

   D. ALL POWDER DRIVEN CONCRETE FASTENERS SHALL BE ONE OF THE FOLLOWING:

      (1). HILTI, INC.
      X-DNI PINS - WOOD PLATE - ICC/ES NO. 1290
      X-DNI PINS - STEEL TRACK - ICC/ES NO. 2388

      (2). ITW RAMSET/REDHEAD
      DRIVE PIN - WOOD PLATE - ICC/ES NO. 1147
      DRIVE PIN - STEEL TRACK - ICC/ES NO. 1639

10. GRADING PERMIT AND ROUGH GRADING APPROVAL ARE REQUIRED PRIOR TO ISSUANCE OF A BUILDING PERMIT.

11. SEPARATE PERMIT IS REQUIRED FOR EACH BUILDING STRUCTURE SUCH AS FENCE WALLS AND RETAINING WALLS, LIGHT POLES, SIGNS AND EMERGENCY GENERATOR.

12. THE OWNER SHALL EMPLOY THE ENGINEER OR ARCHITECT RESPONSIBLE FOR THE STRUCTURAL DESIGN OR PERSON DESIGNATED BY THEM TO PERFORM VISUAL STRUCTURAL OBSERVATION OF THE STRUCTURAL SYSTEM AT SIGNIFICANT CONSTRUCTION STAGES AND AT THE COMPLETION OF THE STRUCTURAL SYSTEM. OBSERVED DEFICIENCIES WILL BE REPORTED TO OWNER, CONTRACTOR, SPECIAL INSPECTOR AND BUILDING OFFICIAL IN WRITING. SEE S0.2 FOR MORE INFORMATION.

GENERAL NOTES 16

∠	Angle	OD	Outside Diameter
@	At	O.A.	Overall
℄	Centerline	OC	On Center
[	Channel	OCC.	Occupant
Ø	Diameter or Round	O.C.F.I.	Owner Furnished, Contractor Installed
¢	Penny (Nails)		
#	Pound or Number	OFF.	Office
(E)	Existing	OPP.	Opposite
(N)	New	OPER.	Operable
A/C	Air Conditioning	PART.	Partition
A.C.	Asphaltic Concrete	PL.	Plate
ACOUS.	Acoustical	P.LAM.	Plastic Laminate
A.D.	Area Drain	PLAS.	Plaster
ADJ.	Adjustable	PLYWD.	Plywood
A.F.F.	At Finish Floor	PNL.	Panel
ALT.	Alternate	PR.	Pair
ALUM.	Aluminum	PT.	Point
APPROX.	Approximate		
ARCH.	Architectural	Q.T.	Quarry Tile
BD.	Board	R	Riser
BITUM.	Bituminous	R.D.	Roof Drain
BLDG.	Building	REF.	Reference
BLK.	Block	REFR.	Refrigerator
BLKG.	Blocking	REG.	Register
B.M.	Bench Mark	REINF.	Reinforced
BM.	Beam	REQ.	Required
BOT.	Bottom	RESIL.	Resilient
		R.H.	Round Head
CAB.	Cabinet	RM.	Room
C.B.	Chalk Board	R.O.	Rough Opening
CEM.	Cement	RWD.	Redwood
CER.	Ceramic		
CERT.	Certificate	S	South
C.I.	Cast Iron	S.C.	Solid Core
C.J.	Construction Joint	SCHED.	Schedule
C.L.	Chain Link / Center Line	SECT.	Section
CLG.	Ceiling	SH.	Shelf
CLR.	Clear	SHT.	Sheet
C.M.U.	Concrete Masonry Unit	SHWR.	Shower
COL.	Column	SIM.	Similar
CONC.	Concrete	SPEC.	Specification
CONN.	Connection	SQ.	Square
CONSTR.	Construction	SST.	Stainless Steel
CONT.	Continuous	STD.	Standard
CORR.	Corridor	STL.	Steel
CPT	Carpet	STOR.	Storage
CTSK.	Countersunk	STRUCT.	Structural
CTR.	Center	SUSP.	Suspended
CW.	Cold Water	SYM.	Symmetrical
C.T.	Ceramic Tile	SYS.	System
DBL.	Double	T.B.	Towel Bar
DEPT.	Department	TEL.	Telephone
D.F.	Drinking Fountain/ Douglas Fir	TER.	Terrazzo
		THK.	Thick
DIA.	Diameter	T. & G.	Tongue & Groove
DIAG.	Diagonal	T.O.C.	Top of Curb
DIM.	Dimension	T.O.C.D.	Top of Concrete Deck
DISP.	Dispenser	T.O.M.	Top of Masonry
DN.	Down	T.O.P.	Top of Pavement/ Top of Parapet
DR.	Door		
DS.	Downspout	T.O.R.D.	Top of Roof Deck
D.S.P.	Dry Standpipe	T.O.S.	Top of Sheathing
DTL.	Detail	T.O.W.	Top of Wall
DWG.	Drawing	TRD.	Tread
DWR.	Drawer	T.S.	Tube Steel
		T.S.W.	Top of Sidewalk
E	East	T.V.	Television
EA.	Each	TYP.	Typical
E.J.	Expansion Joint		
EL.	Elevation	U.L.	Underwriters Laboratory
ELEC.	Electrical	U.N.O.	Unless Noted Otherwise
ELEV.	Elevator	U.O.N.	Unless Otherwise Noted
EMER.	Emergency		
ENCL.	Enclosure	V.C.T.	Vinyl Composition Tile
EQ.	Equal	VERT.	Vertical
EQPT.	Equipment	VEST.	Vestibule
E.W.	Each Way	V.T.R.	Vent Through Roof
EXH.	Exhaust	V.W.C.	Vinyl Wall Covering
EXP.	Expansion		
EXT.	Exterior	W	West
		W/	With
F.A.	Fire Alarm	W.C.	Water Closet
F.D.	Floor Drain	WD.	Wood
FDN.	Foundation	WDW.	Window
F.E.	Fire Extinguisher	W/O	Without
FEC	Fire Extinguisher Cabinet	W.S.	Wood Screw
F.F.	Finish Floor	WT.	Weight
F.G.	Finish Grade	W.W.F.	Welded Wire Fabric
F.H.	Flat Head		
FHC	Fire Hose Cabinet		
FIN.	Finish		
FLASH.	Flashing		
FLR.	Floor		
FLUOR.	Fluorescent		
F.O.C.	Face of Concrete		
F.O.F.	Face of Finish		
F.O.M.	Face of Masonry		
F.O.S.	Face of Studs		
FT.	Foot or Feet		
FTG.	Footing		
FURR.	Furring		
GA.	Gauge		
GALV.	Galvanized		
G.B.	Grab Bar		
GI	Galvanized Iron		
GL.	Glass		
GND.	Ground		
GR.	Grade		
GS	Galvanized Steel		
GYP.	Gypsum		
H.B.	Hose Bibb		
H.C.	Hollow Core		
HDR.	Header		
HDWD.	Hardwood		
HDWR.	Hardware		
H.M.	Hollow Metal		
HORIZ.	Horizontal		
HSS	High Strength Steel		
HT.	Height		
I.D.	Inside Diameter		
INSUL.	Insulation		
INT.	Interior		
JAN.	Janitor		
JT.	Joint		
KIT.	Kitchen		
LAB.	Laboratory		
LAM.	Laminate		
LAV.	Lavatory		
LKR.	Locker		
LT.	Light		
MAINT.	Maintenance		
MAT.	Material		
MAX.	Maximum		
M.B.	Machine Bolt		
MECH.	Mechanical		
MEMB.	Membrane		
MEZZ.	Mezzanine		
MFR.	Manufacturer		
MH.	Manhole		
MIN.	Minimum		
MIR.	Mirror		
MISC.	Miscellaneous		
M.O.	Masonry Opening		
MTD.	Mounted		
MTL.	Metal		
MUL.	Mullion		
N	North		
N.I.C.	Not In Contract		
No. or #	Number		
NOM.	Nominal		
N.T.S.	Not To Scale		

ABBREVIATIONS 8

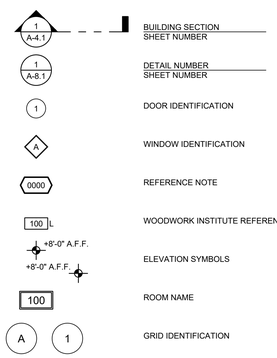

GRAPHIC SYMBOLS 8

DRAWING INDEX 4

	ELECTRICAL
E0.1	GENERAL NOTES & SYMBOLS LIST
E0.2	SINGLE LINE DIAGRAM AND LOAD SCHEDULES
E0.3	PANEL SCHEDULES
E0.4	LIGHT FIXTURE SCHEDULES
E0.5	TITLE 24 COMPLIANCE FORMS
E0.6	TITLE 24 COMPLIANCE FORMS
E0.7	TITLE 24 COMPLIANCE FORMS
E0.8	TITLE 24 COMPLIANCE FORMS
E0.9	AIC CALCULATIONS
E1.1	SITE PLAN
E1.1P	PHOTOMETRIC SITE PLAN
E2.1	FIRST FLOOR LIGHTING PLAN
E2.1P	FIRST FLOOR EGRESS PHOTOMETRIC PLAN
E2.2	FIRST FLOOR POWER PLAN
E2.3	FIRST FLOOR SIGNAL PLAN
E2.4	FIRST FLOOR MECHANICAL POWER PLAN
E2.5	SECOND FLOOR LIGHTING PLAN
E2.5P	SECOND FLOOR EGRESS PHOTOMETRIC PLAN
E2.6	SECOND FLOOR POWER PLAN
E2.7	SECOND FLOOR SIGNAL PLAN
E2.8	SECOND FLOOR MECHANICAL POWER PLAN
E2.9	THIRD FLOOR LIGHTING PLAN
E2.9P	THIRD FLOOR EGRESS PHOTOMETRIC PLAN
E2.10	THIRD FLOOR POWER PLAN
E2.11	THIRD FLOOR SIGNAL PLAN
E2.12	THIRD FLOOR MECHANICAL POWER PLAN
E2.13	ROOF PLAN
E2.14	FIRST FLOOR POWER SHADES PLAN
E2.15	SECOND FLOOR POWER SHADES PLAN
E2.16	THIRD FLOOR POWER SHADES PLAN
E3.1	ELECTRICAL DETAILS
E3.2	ELECTRICAL DETAILS
E3.3	ELECTRICAL DETAILS
E3.4	ELECTRICAL DETAILS
E3.5	ELECTRICAL DETAILS
E3.6	ELECTRICAL DETAILS
E3.7	ELECTRICAL DETAILS
E3.8	ELECTRICAL DETAILS
E3.9	ELECTRICAL DETAILS
E3.10	ELECTRICAL DETAILS
	LANDSCAPING
L1.1	IRRIGATION PLAN
L1.2	IRRIGATION PLAN
L1.3	IRRIGATION DETAILS
L2.1	LANDSCAPE PLAN
L2.2	LANDSCAPE PLAN
L2.3	LANDSCAPE DETAILS
	RUSS BASSETT FURNITURE DISPATCH, TRAINING AND EOC
RB-1	COVER SHEET
RB-2	3D VIEW 1 - DISPATCH AND TRAINING ROOM
RB-3	3D VIEW 2 - DISPATCH AND TRAINING ROOM
RB-4	PLAN VIEW 1 - DISPATCH AND TRAINING ROOM
RB-5	ELEVATION A - DISPATCH AND TRAINING ROOM
RB-6	ELEVATION B - DISPATCH AND TRAINING ROOM
RB-7	ELEVATION C - DISPATCHA AND TRAINING ROOM
RB-8	ELEVATION D - DISPATCH AND TRAINING ROOM
RB-9	ELEVATION E - DISPATCH AND TRAINING ROOM
RB-10	RENDERING 1 - DISPATCH AND TRAINING ROOM
RB-11	RENDERING 2 - DISPATCH AND TRAINING ROOM
RB-12	3D VIEW 3 - EOC
RB-13	3D VIEW 4 - EOC
RB-14	PLAN VIEW 2 - EOC
RB-15	ELEVATION F - EOC
RB-16	ELEVATION G - EOC
RB-17	ELEVATION H - EOC
RB-18	REDERING 3 - EOC
RB-19	RENDERING 4 - EOC

PBK
RANCHO CUCAMONGA
8163 ROCHESTER AVENUE, SUITE 100
RANCHO CUCAMONGA, CA 91730
909-987-0909 P

ONTARIO FIRE DEPARTMENT ADMINISTRATION BUILDING

CITY OF ONTARIO

1420 E. FRANCIS STREET., ONTARIO, CA

LICENSED ARCHITECT
KEELER NEEDHAM
C-19064
Re-ln 03/31/25
STATE OF CALIFORNIA

CONSULTANT

NO	DATE	BY	DESCRIPTION
#	REVISIONS		

DRAWN: RMZ	CHECKED:
DATE: 07/15/2022	SCALE: NONE
PROJECT NUMBER: 2011700	

TITLE SHEET AND GENERAL NOTES

DRAWING NUMBER: T.2

BID SET 03/01/24

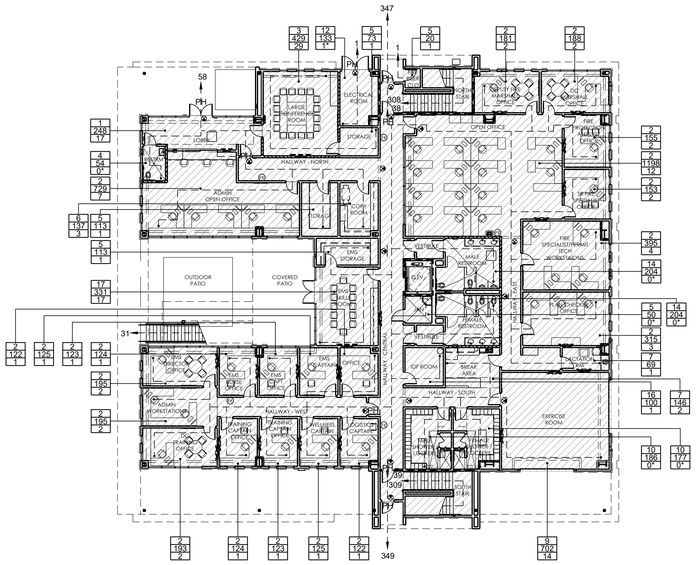

ADMINISTRATION BLDG - FIRST FLOOR
11,520 SF

1ST FLOOR OCCUPANCY:

B OCCUPANCY:	8,389 S.F.
TOTAL	8,389 S.F.

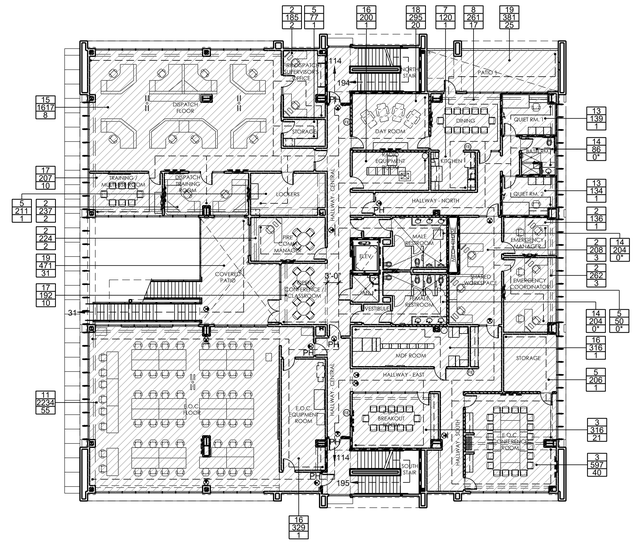

ADMINISTRATION BLDG - SECOND FLOOR
12,254 SF

2ND FLOOR OCCUPANCY:

B OCCUPANCY:	9,826 S.F.
R-2 OCCUPANCY:	273 S.F.
TOTAL	10,099 S.F.

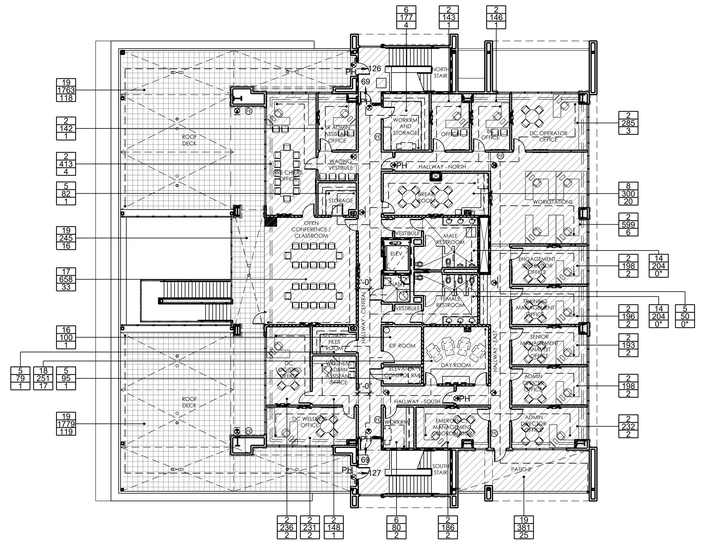

ADMINISTRATION BLDG - THIRD FLOOR
8,288 SF

3RD FLOOR OCCUPANCY:

A-3 OCCUPANCY:	0 S.F.**
B OCCUPANCY:	5,826 S.F.
TOTAL	5,826 S.F.

FLOOR PLAN ANALYSIS

1/16"=1'-0" | 2

STAIRS

RM #	OCCUPANT	EGRESS WIDTH REQUIRED [1]	EGRESS WIDTH PROVIDED
145	2ND FLR: 114 3RD FLR: 194	2ND FLR: 34.25" 3RD FLR: 58.25"	60"
146	2ND FLR: 114 3RD FLR: 195	2ND FLR: 34.25" 3RD FLR: 58.5"	60"
234	31	9.3"	56"

1. EGRESS WIDTH: 0.3 INCH PER OCCUPANT (2019 CBC, SECTION 1005.3.1)

DOORS

DOOR	OCCUPANT	EGRESS WIDTH REQUIRED [2]	EGRESS WIDTH PROVIDED
212A/C	114	22.75"	36"
336	125	25"	36"
337	126	25.25"	36"

2. EGRESS WIDTH: 0.2 INCH PER OCCUPANT (2019 CBC, SECTION 1005.3.2)

CORRIDOR

RM #	OCCUPANT	EGRESS WIDTH REQUIRED [3]	EGRESS WIDTH PROVIDED
123	77	15.3"	72"
212	228	45.6"	72"
310	138	27.6"	72"

3. EGRESS WIDTH: 0.2 INCH PER OCCUPANT (2019 CBC, SECTION 1005.3.2).
4. CORRIDOR WIDTH MIN. 44" (TABLE 1020.2)

PLUMBING FIXTURE CALCULATIONS
(BASED ON 2019 CPC 422, TABLE 422.1)

TOTAL OCCUPANT LOAD FACTOR (CPC TABLE A)

A-3: 4,987 S.F./30 S.F. = 166 OCC.
B: 23,189 S.F./200 S.F. = 116 OCC.
R-2: 273 S.F./200 S.F. = 1 OCC.

TOTAL: 283 OCC.

MEN: 283 OCC./2 = 142 OCC.
WOMEN: 283 OCC./2 = 142 OCC.

	MEN		WOMEN	
	REQUIRED	PROVIDED	REQUIRED*	PROVIDED
WATER CLOSETS	A-3: 2: 101-200 B: 3: 101-200 R-2: 1: 1 PER 10 TOTAL: 6	8	A-3: 4: 101-200 B: 8: 101-200 R-2: 1: 1 PER 8 TOTAL: 13	14
URINALS	A-3: 2: 101-200 B: 2: 101-200 R-2: 1: 1 PER 25 TOTAL: 5	6		
LAVATORIES	A-3: 1: 1-200 B: 2: 76-150 R-2: 1: 1 PER 12 TOTAL: 4	11	A-3: 2: 101-200 B: 3: 101-150 R-2: 1: 1 PER 12 TOTAL: 6	

NOTE:
1. DRINKING WATER IS PROVIDED THROUGH WATER DISPENSERS AT VARIOUS LOCATIONS. 11

ADMINISTRATION BUILDING

OCCUPANCY GROUP: A-3 (SECTION 303.4)
B (SECTION 304.1)
R-2 (SECTION 310.3)

CONSTRUCTION TYPE: TYPE IIB - SPRINKLERED (PER NFPA 13)

ALLOWABLE # OF STORIES: TABLE No. 504.4
A-3: 2 STORIES (S W/O AREA INCREASE)
B: 4 STORIES (S)
R-2: 5 STORIES (S W/O AREA INCREASE)

ALLOWABLE AREA: TABLE No. 506.2
A-3: 9,500 S.F. (SM W/HEIGHT INCREASE) **
B: 69,000 S.F. (SM)
R-2: 16,000 S.F. (SM W/HEIGHT INCREASE)*

* MOST RESTRICTIVE
** AREA NOT INCLUDED IN THE ALLOWABLE FLOOR AREA CALCULATION PER SECTION 503.1.4

METHOD OF ANALYSIS: NON-SEPARATED OCCUPANCIES (CBC 2019, SECTION 508.3)

1ST FLOOR (B OCC.): 8,389 S.F. < 69,000 S.F. - OK
2ND FLOOR (B & R-2 OCC.): 10,099 S.F. < 16,000 S.F. - OK
3RD FLOOR (B OCC.): 5,826 S.F. < 69,000 S.F. - OK

NUMBER OF EXITS/STORY : MIN. 2 EXITS PER 1-500 OCC. (TABLE 1006.3.2)
1ST FLOOR: 137 OCCUPANTS: 2 EXITS PROVIDED
2ND FLOOR: 259 OCCUPANTS: 2 EXITS PROVIDED
3RD FLOOR: 389 OCCUPANTS: 2 EXITS PROVIDED

MAX. EXIT PATH OF TRAVEL: TABLE No. 1017.2 (SPRINKLERED)
A-3 OCCUPANCY: 250 FT.
B OCCUPANCY: 300 FT.
R-2 OCCUPANCY: 250 FT.

MIXED OCCUPANCY, MULTI-STORY BUILDING: (CBC 2019, SECTION 506.2.4)

1ST FLOOR

B OCCUPANCY: 8,389 S.F./69,000 S.F. = .12 < 1

2ND FLOOR

B OCCUPANCY: 9,826 S.F./69,000 S.F. = .14 < 1
R-2 OCCUPANCY: 273 S.F./16,000 S.F. = .02 < 1
.16 < 1

3RD FLOOR

B OCCUPANCY: 5,826 S.F./69,000 S.F. = .08 < 1
TOTAL .36 < 2

THE SUM OF THE RATIO IS LESS THAN 2

ACTUAL AREA:

A-3 OCCUPANCY	0 S.F. (1ST FLOOR) +	0 S.F. (2ND FLOOR) +	0 S.F. (3RD FLOOR) **	= 0 S.F.
B OCCUPANCY	8,389 S.F. (1ST FLOOR) +	9,826 S.F. (2ND FLOOR) +	5,826 S.F. (3RD FLOOR)	= 24,041 S.F.
R-2 OCCUPANCY	0 S.F. (1ST FLOOR) +	273 S.F. (2ND FLOOR) +	0 S.F. (3RD FLOOR)	= 273 S.F.
TOTAL:	8,389 S.F. (1ST FLOOR)	10,099 S.F. (2ND FLOOR)	5,826 S.F. (3RD FLOOR)	24,314 S.F.

CODE ANALYSIS NOTES:

1. THE CODE ANALYSIS IS BASED ON A NON-SEPARATED OCCUPANCIES PER 2019 CBC, SECTION 508.3. NO SEPARATION IS REQUIRED BETWEEN OCCUPANCIES PER 2019 CBC, SECTION 508.3.3.
2. FIRE PARTITIONS ARE PROVIDED FOR THE WALLS SEPARATING SLEEPING UNITS IN THE SAME BUILDING AND WALLS SEPARATING DWELLING OR SLEEPING UNITS FROM OTHER OCCUPANCY (B) AND CONTIGUOUS TO THEM PER 2019 CBC, SECTION 420.2 AND SECTION 508.3.3 EXCEPTION 2.
3. 1/2 HOUR HORIZONTAL SEPARATIONS HAVE BEEN PROVIDED FOR THE PROPOSED ADMINISTRATION BUILDING PER 2019 CBC, SECTION 420.3. PER THE EXCEPTION LISTED UNDER 2019 CBC, SECTION 711.2.4.3, HORIZONTAL ASSEMBLY SHALL BE NOT LESS THAN 1/2 HOUR FIRE-RESISTANCE-RATED CONSTRUCTION FOR TYPE IIB CONSTRUCTION EQUIPPED THROUGHOUT WITH AN AUTOMATIC FIRE SPRINKLER SYSTEM IN ACCORDANCE WITH SECTION 903.3.1.1.
4. THE CONSTRUCTION SUPPORTING THE HORIZONTAL ASSEMBLY AT THE SEPARATIONS OF DWELLING UNITS AND SLEEPING UNITS IS NOT REQUIRED TO BE FIRE-RESISTANCE RATED FOR BUILDINGS OF TYPE IIB CONSTRUCTION PER 2019 CBC, SECTION 711.2.3 EXCEPTION 2.
5. THERE WILL BE NO HAZARDOUS MATERIALS STORED OR USED WITHIN BUILDINGS THAT EXCEED 2019 CBC, TABLES 307.1(1) AND 307.1(2)
6. INTERIOR FINISH SHALL COMPLY WITH 2019 CBC, SECTION 803.1 FLAME SPREAD PROVISIONS.
7. RATED CORRIDOR IS NOT REQUIRED FOR OCCUPANCY GROUPS R-2 WITH AUTOMATIC FIRE SPRINKLER SYSTEM. 2019 CBC, TABLE 1020.1
8. RATED CORRIDOR IS NOT REQUIRED FOR OCCUPANCY GROUPS A AND B IF EQUIPPED WITH AUTOMATIC FIRE SPRINKLER SYSTEM. 2019 CBC, TABLE 1020.1.
9. THE A-3 OCCUPANCY ON THE THIRD FLOOR IS ALLOWED DUE TO THE OCCUPANCY IS PERMITTED ON THE SECOND FLOOR PER TABLE 504.4 AND 2019 CBC, SECTION 503.1.4. HOWEVER, THE AREA IS NOT CONSIDERED AS BUILDING AREA IN THE ALLOWABLE AREA CALCULATIONS.

SPACE USE AND OCCUPANT LOAD SCHEDULE
(BASED ON 2019 CBC TABLE 1004.5)

1. LOBBY, 15 S.F./OCC.
2. OFFICE, 100 S.F./OCC.
3. CONFERENCE ROOM, 15 S.F./OCC
4. RESTROOM, 0* S.F./OCC.
5. STORAGE, 300 S.F./OCC.
6. WORK ROOM, 50 S.F./OCC.
7. KITCHEN/BREAK RM., 100 S.F./OCC.
8. DINING ROOM, 15 S.F./OCC.
9. EXERCISE ROOM, 50 S.F./OCC.
10. LOCKER ROOM, 50 S.F./OCC.
11. E.O.C. FLOOR, FIXED SEAT/OCC.
12. ELECTRICAL ROOM, 300 S.F./OCC.
13. DORMITORY, PER BED/OCC.
14. BATHROOM, 0* S.F./OCC.
15. DISPATCH FLOOR, FIXED SEAT/OCC.
16. EQUIPMENT ROOM, 300 S.F./OCC.
17. TRAINING ROOM/CLASS ROOM, 20 S.F./OCC.
18. DAY ROOM, 15 S.F./OCC.
19. PATIO, 15 S.F./OCC.

NOTE :
1. EXIT SIGNS SHALL BE ILLUMINATED AT ALL TIMES PER 2019 CBC, SECTION 1013.6.3.
2. A MANUAL FIRE ALARM SYSTEM IS REQUIRED PER 2019 CFC, SECTION 907.2.2.

SPACE USE 3

AREA IDENTITY - CODE ANALYSIS

5 / 100 / 0* — SPACE USE - REFER TO SCHEDULE; FLOOR AREA IN SQUARE FEET; OCCUPANT LOAD

NOTE:
* (ASTERISK) INDICATES DUPLICATED OCCUPANCY AND IS EXCLUDED FROM EGRESS CALCULATIONS

EXIT SIGN (CBC 2019 SECTION 1013)

3 — PATH OF EGRESS (NUMBER INDICATES OCCUPANT LOAD)

1-HR RATED WALL

NON-RATED PROTECTION (CBC SECTION 509.4.2)

PH — PANIC HARDWARE

PBK
RANCHO CUCAMONGA
8163 ROCHESTER AVENUE, SUITE 100
RANCHO CUCAMONGA, CA 91730
909-987-0909 P

ONTARIO FIRE DEPARTMENT ADMINISTRATION BUILDING
CITY OF ONTARIO
1420 E. FRANCIS STREET., ONTARIO, CA

LICENSED ARCHITECT KEVIN NEEDHAM C-19064 Exp. 03/31/24 STATE OF CALIFORNIA

CONSULTANT

NO	DATE	BY	DESCRIPTION

REVISIONS

DRAWN: RMZ | CHECKED:
DATE: 07/15/2022 | SCALE:
PROJECT NUMBER: 2011700

CODE ANALYSIS AND GENERAL NOTES

DRAWING NUMBER: T.3

BID SET 03/01/24

CITY OF ONTARIO PLANNING DEPARTMENT

LAND DEVELOPMENT DIVISION CONDITIONS OF APPROVAL

303 East B Street, Ontario, California 91764 Phone: 909.395.2036 / Fax: 909.395.2420

Date Prepared: 3/6/2023

File No: PDEV23-001

Project Description: A hearing to consider a Development Plan to facilitate the construction of a new 30,996-square-foot, 3-story Fire Department administration (office) building on 4.6 acres of land located at 1406 East Francis Street (Fire Station No. 3) within the CIV (Civic) zoning district; (APN: 0113-461-10); **submitted by City Initiated.**

Prepared By: Diane Ayala, Senior Planner
Phone: 909.395.2428 (direct)
Email: Dayala@ontarioca.gov

The Planning Department, Land Development Section, conditions of approval applicable to the above-described Project, are listed below. The Project shall comply with each condition of approval listed below:

1.0 Standard Conditions of Approval. The project shall comply with the *Standard Conditions for New Development*, adopted by City Council Resolution No. 2017-027 on April 18, 2017. A copy of the *Standard Conditions for New Development* may be obtained from the Planning Department or City Clerk/Records Management Department.

2.0 Special Conditions of Approval. In addition to the *Standard Conditions for New Development* identified in condition no. 1.0, above, the project shall comply with the following special conditions of approval:

2.1 Time Limits.

(a) Development Plan approval shall become null and void 2 years following the effective date of application approval, unless a building permit is issued and construction is commenced, and diligently pursued toward completion, or a time extension has been approved by the Planning Director. This condition does not supersede any individual time limits specified herein, or any other departmental conditions of approval applicable to the Project, for the performance of specific conditions or improvements.

2.2 General Requirements. The Project shall comply with the following general requirements:

(a) All construction documentation shall be coordinated for consistency, including, but not limited to, architectural, structural, mechanical, electrical, plumbing, landscape and irrigation, grading, utility and street improvement plans. All such plans shall be consistent with the approved entitlement plans on file with the Planning Department.

(b) The project site shall be developed in conformance with the approved plans on file with the City. Any variation from the approved plans must be reviewed and approved by the Planning Department prior to building permit issuance.

(c) The herein-listed conditions of approval from all City departments shall be included in the construction plan set for project, which shall be maintained on site during project construction.

2.3 Landscaping.

(a) The Project shall provide and continuously maintain landscaping and irrigation systems in compliance with the provisions of Ontario Development Code Division 6.05 (Landscaping).

(b) Comply with the conditions of approval of the Planning Department; Landscape Planning Division.

(c) Landscaping shall not be installed until the Landscape and Irrigation Construction Documentation Plans required by Ontario Development Code Division 6.05 (Landscaping) have been approved by the Landscape Planning Division.

(d) Changes to approved Landscape and Irrigation Construction Documentation Plans, which affect the character or quantity of the plant material or irrigation system design, shall be resubmitted for approval of the revision by the Landscape Planning Division, prior to the commencement of the changes.

(e) The north and south parking lots perimeter edge shall be fully landscaped.

2.4 Walls and Fences.

(a) All Project walls and fences shall comply with the requirements of Ontario Development Code Division 6.02 (Walls, Fences and Obstructions).

(b) All existing chain link fencing located along the Project perimeter shall be replaced with decorative masonry wall with a decorative cap or a tubular steel fence. Wall material and design to be finalized in the plan check process.

(c) Decorative pilasters shall be constructed on the Project fronting Francis Street within the north parking lot at gates, wall ends, and where CMU transitions to tubular steel fencing.

2.5 Parking, Circulation and Access.

(a) Parking spaces specifically designated and conveniently located for use by the physically disabled shall be provided pursuant to current accessibility regulations contained in State law (CCR Title 24, Part 2, Chapters 2B71, and CVC Section 22507.8).

(b) Bicycle parking facilities, including bicycle racks, lockers, and other secure facilities, shall be provided in conjunction with development projects pursuant to current

regulations contained in CALGreen (CAC Title 24, Part 11). Final design and placement of bicycle parking facilities shall be subject to Planning Department review and approval.

2.6 Outdoor Loading and Storage Areas.

(a) Areas designated for off-street parking, loading, and vehicular circulation and maneuvering, shall not be used for the outdoor storage of materials or equipment.

2.7 Site Lighting.

(a) All off-street parking facilities shall be provided with nighttime security lighting pursuant to Ontario Municipal Code Section 4-11.08 (Special Residential Building Provisions) and Section 4-11.09 (Special Commercial/Industrial Building Provisions), designed to confine emitted light to the parking areas. Parking facilities shall be lighted from sunset until sunrise, daily, and shall be operated by a photocell switch.

(b) No operation, activity, or lighting fixture shall create illumination on any adjacent property.

2.8 Mechanical and Rooftop Equipment.

(a) All exterior roof-mounted mechanical, heating and air conditioning equipment, and all appurtenances thereto, shall be completely screened from public view by parapet walls or roof screens that are architecturally treated so as to be consistent with the building architecture.

(b) All ground-mounted utility equipment and structures, such as tanks, transformers, HVAC equipment, and backflow prevention devices, shall be located out of view from a public street, or adequately screened through the use of landscaping and/or decorative low garden walls.

2.9 Security Standards. The Project shall comply with all applicable requirements of Ontario Municipal Code Title 4 (Public Safety), Chapter 11 (Security Standards for Buildings).

2.10 Signs.

(a) All Project signage shall comply with the requirements of Ontario Development Code Division 8.1 (Sign Regulations).

2.11 Sound Attenuation. The Project shall be constructed and operated in a manner so as not to exceed the maximum interior and exterior noised levels set forth in Ontario Municipal Code Title 5 (Public Welfare, Morals, and Conduct), Chapter 29 (Noise).

2.12 Environmental Requirements.

(a) If human remains are found during project grading/excavation/construction activities, the area shall not be disturbed until any required investigation is completed by the County Coroner and Native American consultation has been completed (if deemed applicable).

(b) If any archeological or paleontological resources are found during project grading/excavation/construction, the area shall not be disturbed until the significance of the resource is determined. If determined to be significant, the resource shall be recovered by a qualified archeologist or paleontologist consistent with current standards and guidelines, or other appropriate measures implemented.

2.13 Additional Fees.

(a) Within 5 days following final application approval, the Notice of Exemption ("NOE") filing fee shall be provided to the Planning Department. The fee shall be paid by check, made payable to the "Clerk of the Board of Supervisors", which shall be forwarded to the San Bernardino County Clerk of the Board of Supervisors, along with all applicable environmental forms/notices, pursuant to the requirements of the California Environmental Quality Act ("CEQA"). The filing of a NOE is voluntary; however, failure to provide said fee within the time specified will result in the extension of the statute of limitations for the filing of a CEQA lawsuit from 30 days to 180 days.

2.14 Final Occupancy. The Project Architect of record will certify that construction of each building site and the exterior elevations of each structure shall be completed in compliance with the approved plans. Any deviation to approved plans shall require a resubmittal to the Planning Department for review and approval prior to construction. The Occupancy Release Request Form/Architect Certificate of Compliance shall be provided prior to final occupancy. After the receipt of this Certification, the Planning Department will conduct a final site and exterior elevations inspection. The Owner's Representative and Contractor shall be present.

PBK
RANCHO CUCAMONGA
8163 ROCHESTER AVENUE, SUITE 100
RANCHO CUCAMONGA, CA 91730
909-987-0909 P

ONTARIO FIRE DEPARTMENT ADMINISTRATION BUILDING
CITY OF ONTARIO
1420 E. FRANCIS STREET., ONTARIO, CA

LICENSED ARCHITECT
KEVIN NEEDHAM
C-10064
Exp 03/01/24
STATE OF CALIFORNIA

CONSULTANT

NO	DATE	BY	DESCRIPTION

REVISIONS

DRAWN: RMZ	CHECKED:
DATE: 07/15/2022	SCALE:
PROJECT NUMBER: 2011700	

PLANNING CONDITIONS OF APPROVAL

DRAWING NUMBER: T.4

BID SET 03/01/24

2019 CALIFORNIA GREEN BUILDING STANDARDS CODE
NONRESIDENTIAL MANDATORY MEASURES, SHEET 1 (January 2020, Includes August 2019 Supplement)

Y = YES
N/A = NOT APPLICABLE
RESPON. PARTY = RESPONSIBLE PARTY (ie: ARCHITECT, ENGINEER, OWNER, CONTRACTOR, INSPECTOR ETC.)

Y | N/A | RESPON. PARTY

CHAPTER 3
GREEN BUILDING
SECTION 301 GENERAL

301.1 SCOPE. Buildings shall be designed to include the green building measures specified as mandatory in the application checklists contained in this code. Voluntary green building measures are also included in the application checklists and may be included in the design and construction of structures covered by this code, but are not required unless adopted by a city, county, or city and county as specified in Section 101.7.

301.3 NONRESIDENTIAL ADDITIONS AND ALTERATIONS. [BSC-CG] The provisions of individual sections of Chapter 5 apply to newly constructed buildings, building additions of 1,000 square feet or greater, and/or building alterations with a permit valuation of $200,000 or above (for occupancies within the authority of California Building Standards Commission). Code sections relevant to additions and alterations shall only apply to the portions of the building being added or altered within the scope of the permitted work.

A code section will be designated by a banner to indicate where the code section only applies to newly constructed buildings [N] or to additions and/or alterations [A]. When the code section applies to both, no banner will be used.

301.3.1 Nonresidential additions and alterations that cause updates to plumbing fixtures only:

Note: On and after January 1, 2014, certain commercial real property, as defined in Civil Code Section 1101.3, shall have its noncompliant plumbing fixtures replaced with appropriate water-conserving plumbing fixtures under specific circumstances. See Civil Code Section 1101.1 *et seq.* for definitions, types of commercial real property affected, effective dates, circumstances necessitating replacement of noncompliant plumbing fixtures, and duties and responsibilities for ensuring compliance.

301.3.2 Waste Diversion. The requirements of Section 5.408 shall be required for additions and alterations whenever a permit is required for work.

301.4 PUBLIC SCHOOLS AND COMMUNITY COLLEGES. (see GBSC)
301.5 HEALTH FACILITIES. (see GBSC)

SECTION 302 MIXED OCCUPANCY BUILDINGS

302.1 MIXED OCCUPANCY BUILDINGS. In mixed occupancy buildings, each portion of a building shall comply with the specific green building measures applicable to each specific occupancy.

SECTION 303 PHASED PROJECTS

303.1 PHASED PROJECTS. For shell buildings and others constructed for future tenant improvements, only those code measures relevant to the building components and systems considered to be new construction (or newly constructed) shall apply.

303.1.1 Initial Tenant improvements. The provisions of this code shall apply only to the initial tenant improvements to a project. Subsequent tenant improvements shall comply with the scoping provisions in Section 301.3 non-residential additions and alterations.

ABBREVIATION DEFINITIONS:

HCD	Department of Housing and Community Development
BSC	California Building Standards Commission
DSA-SS	Division of the State Architect, Structural Safety
OSHPD	Office of Statewide Health Planning and Development
LR	Low Rise
HR	High Rise
AA	Additions and Alterations
N	New

CHAPTER 5
NONRESIDENTIAL MANDATORY MEASURES

DIVISION 5.1 PLANNING AND DESIGN

SECTION 5.101 GENERAL
5.101.1 SCOPE
The provisions of this chapter outline planning, design and development methods that include environmentally responsible site selection, building design, building siting and development to protect, restore and enhance the environmental quality of the site and respect the integrity of adjacent properties.

SECTION 5.102 DEFINITIONS
5.102.1 DEFINITIONS
The following terms are defined in Chapter 2 (and are included here for reference)

CUTOFF LUMINAIRES. Luminaires whose light distribution is such that the candela per 1000 lamp lumens does not numerically exceed 25 (2.5 percent) at an angle of 90 degrees above nadir, and 100 (10 percent) at a vertical angle of 80 degrees above nadir. This applies to all lateral angles around the luminaire.

LOW-EMITTING AND FUEL EFFICIENT VEHICLES.
Eligible vehicles are limited to the following:

1. Zero emission vehicle (ZEV), including neighborhood electric vehicles (NEV), partial zero emission vehicle (PZEV), advanced technology PZEV (AT ZEV) or CNG fueled (original equipment manufacturer only) regulated under Health and Safety Code section 43800 and CCR, Title 13, Sections 1961 and 1962.
2. High-efficiency vehicles, regulated by U.S. EPA, bearing High-Occupancy Vehicle (HOV) car pool lane stickers issued by the Department of Motor Vehicles.

NEIGHBORHOOD ELECTRIC VEHICLE (NEV). A motor vehicle that meets the definition of "low-speed vehicle" either in Section 385.5 of the Vehicle Code or in 49CFR571.500 (as it existed on July 1, 2000), and is certified to zero-emission vehicle standards.

TENANT-OCCUPANTS. Building occupants who inhabit a building during its normal hours of operation as permanent occupants, such as employees, as distinguished from customers and other transient visitors.

VANPOOL VEHICLE. Eligible vehicles are limited to any motor vehicle, other than a motortruck or truck tractor, designed for carrying more than 10 but not more than 15 persons including the driver, which is maintained and used primarily for the nonprofit work-related transportation of adults for the purpose of ridesharing.

Note: Source: Vehicle Code, Division 1, Section 668

ZEV. Any vehicle certified to zero-emission standards.

SECTION 5.106 SITE DEVELOPMENT
5.106.1 STORM WATER POLLUTION PREVENTION FOR PROJECTS THAT DISTURB LESS THAN ONE ACRE OF LAND. Newly constructed projects and additions which disturb less than one acre of land, and are not part of a larger common plan of development or sale, shall prevent the pollution of storm water runoff from the construction activities through one or more of the following measures:

5.106.1.1 Local ordinance. Comply with a lawfully enacted storm water management and/or erosion control ordinance.

5.106.1.2 Best Management Practices (BMPs). Prevent the loss of soil through wind or water erosion by implementing an effective combination of erosion and sediment control and good housekeeping BMPs.

1. Soil loss BMPs that should be considered for implementation as appropriate for each project include, but are not limited to, the following:
   a. Scheduling construction activity during dry weather, when possible.
   b. Preservation of natural features, vegetation, soil, and buffers around surface waters.
   c. Drainage swales or lined ditches to control stormwater flow.
   d. Mulching or hydroseeding to stabilize disturbed soils.
   e. Erosion control to protect slopes.
   f. Protection of storm drain inlets (gravel bags or catch basin inserts).
   g. Perimeter sediment control (perimeter silt fence, fiber rolls).
   h. Sediment trap or sediment basin to retain sediment on site.
   i. Stabilized construction exits.
   j. Wind erosion control.
   k. Other soil loss BMPs acceptable to the enforcing agency.
2. Good housekeeping BMPs to manage construction equipment, materials, non-stormwater discharges and wastes that should be considered for implementation as appropriate for each project include, but are not limited to, the following:
   a. Dewatering activities.
   b. Material handling and waste management.
   c. Building materials stockpile management.
   d. Management of washout areas (concrete, paints, stucco, etc.).
   e. Control of vehicle/equipment fueling to contractor's staging area.
   f. Vehicle and equipment cleaning performed off site.
   g Spill prevention and control.
   h. Other housekeeping BMPs acceptable to the enforcing agency.

Y | N/A | RESPON. PARTY

5.106.2 STORMWATER POLLUTION PREVENTION FOR PROJECTS THAT DISTURB ONE OR MORE ACRES OF LAND. Comply with all lawfully enacted stormwater discharge regulations for projects that (1) disturb one acre or more of land, or (2) disturb less than one acre of land but are part of a larger common plan of development sale.

Note: Projects that (1) disturb one acre or more of land, or (2) disturb less than one acre of land but are part of the larger common plan of development or sale must comply with the post-construction requirements detailed in the applicable National Pollutant Discharge Elimination System (NPDES) General permit for Stormwater Discharges Associated with Construction and Land Disturbance Activities issued by the State Water Resources Control Board or the Lahontan Regional Water Quality Control Board (for projects in the Lake Tahoe Hydrologic Unit).

The NPDES permits require postconstruction runoff (post-project hydrology) to match the preconstruction runoff (pre-project hydrology) with the installation of postconstruction stormwater management measures. The NPDES permits emphasize runoff reduction through on-site stormwater use, interception, evapotranspiration, and infiltration through nonstructural controls, such as Low Impact Development (LID) practices, and conversation design measures. Stormwater volume that cannot be addressed using nonstructural practices is required to be captured in structural practices and be approved by the enforcing agency.

Refer to the current applicable permits on the State Water Resources Control Board website at: www.waterboards.ca.gov/constructionstormwater. Consideration to the stormwater runoff management measures should be given during the initial design process for appropriate integration into site development.

5.106.4 BICYCLE PARKING. For buildings within the authority of California Building Standards Commission as specified in Section 103, comply with Section 5.106.4.1. For buildings within the authority of the Division of the State Architect pursuant to Section 105, comply with Section 5.106.4.2

5.106.4.1 Bicycle parking. [BSC-CG] Comply with Sections 5.106.4.1.1 and 5.106.4.1.2; or meet the applicable local ordinance, whichever is stricter.

5.106.4.1.1 Short-term bicycle parking. If the new project or an addition or alteration is anticipated to generate visitor traffic, provide permanently anchored bicycle racks within 200 feet of the visitors' entrance, readily visible to passers-by, for 5% of new visitor motorized vehicle parking spaces being added, with a minimum of one two-bike capacity rack.
Exception: Additions or alterations which add nine or less visitor vehicular parking spaces.

5.106.4.1.2 Long-term bicycle parking. For new buildings with tenant spaces that have 10 or more tenant-occupants, provide secure bicycle parking for 5 percent of the tenant-occupant vehicular parking spaces with a minimum of one bicycle parking facility.

5.106.4.1.3 For additions or alterations that add 10 or more tenant-occupant vehicular parking spaces, provide secure bicycle parking for 5 percent of the tenant vehicular parking spaces being added, with a minimum of one bicycle parking facility.

5.106.4.1.4 For new shell buildings in phased projects provide secure bicycle parking for 5 percent of the anticipated tenant-occupant vehicular parking spaces with a minimum of one bicycle parking facility.

5.106.4.1.5 Acceptable bicycle parking facility for Sections 5.106.4.1.2, 5.106.4.1.3, and 5.106.4.1.4 shall be convenient from the street and shall meet one of the following:

1. Covered, lockable enclosures with permanently anchored racks for bicycles;
2. Lockable bicycle rooms with permanently anchored racks; or
3. Lockable, permanently anchored bicycle lockers.

Note: Additional information on recommended bicycle accommodations may be obtained from Sacramento Area Bicycle Advocates.

5.106.4.2 Bicycle parking. [DSA-SS] For public schools and community colleges, comply with Sections 5.106.4.2.1 and 5.106.4.2.2

5.106.4.2.1 Student bicycle parking. Provide permanently anchored bicycle racks conveniently accessed with a minimum of four two-bike capacity racks per new building.
5.106.4.2.2 Staff bicycle parking. Provide permanent, secure bicycle parking conveniently accessed with a minimum of two staff bicycle parking spaces per new building. Acceptable bicycle parking facilities shall be convenient from the street or staff parking area and shall meet one of the following:

1. Covered, lockable enclosures with permanently anchored racks for bicycles;
2. Lockable bicycle rooms with permanently anchored racks; or
3. Lockable, permanently anchored bicycle lockers.

5.106.5.2 DESIGNATED PARKING FOR CLEAN AIR VEHICLES. In new projects or additions or alterations that add 10 or more vehicular parking spaces, provide designated parking for any combination of low-emitting, fuel-efficient and carpool/van pool vehicles as follows:

TABLE 5.106.5.2 - PARKING

TOTAL NUMBER OF PARKING SPACES	NUMBER OF REQUIRED SPACES
0-9	0
10-25	1
26-50	3
51-75	6
76-100	8
101-150	11
151-200	16
201 AND OVER	AT LEAST 8% OF TOTAL

5.106.5.2.1 - Parking stall marking. Paint, in the paint used for stall striping, the following characters such that the lower edge of the last word aligns with the end of the stall striping and is visible beneath a parked vehicle: CLEAN AIR / VAN POOL / EV

Note: Vehicles bearing Clean Air Vehicle stickers from expired HOV lane programs may be considered eligible for designated parking spaces.

5.106.5.3 Electric vehicle (EV) charging. [N] Construction shall comply with Section 5.106.5.3.1 or Section 5.106.5.3.2 to facilitate future installation of electric vehicle supply equipment (EVSE). When EVSE(s) is/are installed, it shall be in accordance with the California Building Code, the California Electrical Code and as follows:

5.106.5.3.1 Single charging space requirements. [N] When only a single charging space is required per Table 5.106.5.3.3, a raceway is required to be installed at the time of construction and shall be installed in accordance with the California Electrical Code. Construction plans and specifications shall include, but are not limited to, the following:

1. The type and location of the EVSE.
2. A listed raceway capable of accommodating a 208/240 -volt dedicated branch circuit.
3. The raceway shall not be less than trade size 1".
4. The raceway shall originate at a service panel or a subpanel serving the area, and shall terminate in close proximity to the proposed location of the charging equipment and listed suitable cabinet, box, enclosure or equivalent.
5. The service panel or subpanel shall have sufficient capacity to accommodate a minimum 40-ampere dedicated branch circuit for the future installation of the EVSE.

5.106.5.3.2 Multiple charging space requirements. [N] When multiple charging spaces are required per Table 5.106.5.3.3 raceway(s) is/are required to be installed at the time of construction and shall be installed in accordance with the California Electrical Code. Construction plans and specifications shall include, but are not limited to, the following:

1. The type and location of the EVSE.
2. The raceway(s) shall originate at a service panel or a subpanel(s) serving the area, and shall terminate in close proximity to the proposed location of the charging equipment and into listed suitable cabinet(s), box(es), enclosure(s) or equivalent.
3. Plan design shall be based upon 40-ampere minimum branch circuits.
4. Electrical calculations shall substantiate the design of the electrical system, to include the rating of equipment and any on-site distribution transformers and have sufficient capacity to simultaneously charge all required EVs at its full rated amperage.
5. The service panel or subpanel(s) shall have sufficient capacity to accommodate the required number of dedicated branch circuit(s) for the future installation of the EVSE.

5.106.5.3.3 EV charging space calculations. [N] Table 5.106.5.3.3 shall be used to determine if single or multiple charging space requirements apply for the future installation of EVSE.

Exceptions: On a case-by-case basis where the local enforcing agency has determined EV charging and infrastructure is not feasible based upon one or more of the following conditions:

Y | N/A | RESPON. PARTY

1. Where there is insufficient electrical supply.
2. Where there is evidence suitable to the local enforcing agency substantiating that additional local utility infrastructure design requirements, directly related to the implementation of Section 5.106.5.3, may adversely impact the construction cost of the project.

TABLE 5.106.5.3.3

TOTAL NUMBER OF PARKING SPACES	NUMBER OF REQUIRED SPACES
0-9	0
10-25	1
26-50	2
51-75	4
76-100	5
101-150	7
151-200	10
201 AND OVER	6% of total'

1. Calculation for spaces shall be rounded up to the nearest whole number.

5.106.5.3.4 [N] Identification. The service panel or subpanel(s) circuit directory shall identify the reserved overcurrent protective device space(s) for future EV charging as "EV CAPABLE". The raceway termination location shall be permanently and visibly marked as "EV CAPABLE".

5.106.5.3.5 [N] Future charging spaces qualify as designated parking as described in Section 5.106.5.2 Designated parking for clean air vehicles.

5.106.8 LIGHT POLLUTION REDUCTION. [N].I Outdoor lighting systems shall be designed and installed to comply with the following:

1. The minimum requirements in the California Energy Code for Lighting Zones 0-4 as defined in Chapter 10, Section 10-114 of the California Administrative Code; and
2. Backlight (B) ratings as defined in IES TM-15-11 (shown in Table A-1 in Chapter 8);
3. Uplight and Glare ratings as defined in California Energy Code (shown in Tables 130.2-A and 130.2-B in Chapter 8) and
4. Allowable BUG ratings not exceeding those shown in Table 5.106.8, [N] or Comply with a local ordinance lawfully enacted pursuant to Section 101.7, whichever is more stringent.

Exceptions: [N]

1. Luminaires that qualify as exceptions in Section 140.7 of the California Energy Code.
2. Emergency lighting.
3. Building facade meeting the requirements in Table 140.7-B of the California Energy Code, Part 6.
4. Custom lighting features as allowed by the local enforcing agency, as permitted by Section 101.8 Alternate materials, designs and methods of construction.

Note: [N]
1. See also California Building Code, Chapter 12, Section 1205.6 for college campus lighting requirements for parking facilities and walkways.
2. Refer to Chapter 8 (Compliance Forms, Worksheets and Reference Material) for IES TM-15-11 Table A-1, California Energy Code Tables 130.2-A and 130.2-B.
3. Refer to the California Building Code for requirements for additions and alterations.

TABLE 5.106.8 [N] MAXIMUM ALLOWABLE BACKLIGHT, UPLIGHT AND GLARE (BUG) RATINGS 1,2

ALLOWABLE RATING	LIGHTING ZONE LZ0	LIGHTING ZONE LZ1	LIGHTING ZONE LZ2	LIGHTING ZONE LZ3	LIGHTING ZONE LZ4
MAXIMUM ALLOWABLE BACKLIGHT RATING 3					
Luminaire greater than 2 mounting heights (MH) from property line	N/A	No Limit	No Limit	No Limit	No Limit
Luminaire back hemisphere is 1-2 MH from property line	N/A	B2	B3	B4	B4
Luminaire back hemisphere is 0.5-1 MH from property line	N/A	B1	B2	B3	B3
Luminaire back hemisphere is less than 0.5 MH from property line	N/A	B0	B0	B1	B2
MAXIMUM ALLOWABLE UPLIGHT RATING (U)					
For area lighting 4	N/A	U0	U0	U0	U0
For all other outdoor lighting,including decorative luminaires	N/A	U1	U2	U3	UR
MAXIMUM ALLOWABLE GLARE RATING 5 (G)					
Luminaire greater than 2 MH from property line	N/A	G1	G2	G3	G4
Luminaire front hemisphere is 1-2 MH from property line	N/A	G0	G1	G1	G2
Luminaire front hemisphere is 0.5-1 MH from property line	N/A	G0	G0	G1	G1
Luminaire back hemisphere is less than 0.5 MH from property line	N/A	G0	G0	G0	G1

1. IESNA Lighting Zones 0 and 5 are not applicable; refer to Lighting Zones as defined in the California Energy Code and Chapter 10 of the California Administrative Code.

2. For property lines that abut public walkways, bikeways, plazas and parking lots, the property line may be considered to be 5 feet beyond the actual property line for purpose of determining compliance with this section. For property lines that abut public roadways and public transit corridors, the property line may be considered to be the centerline of the public roadway or public transit corridor for the purpose of determining compliance with this section.

3. If the nearest property line is less than or equal to two mounting heights from the back hemisphere of the luminaire distribution, the applicable reduced Backlight rating shall be met.

4. General lighting luminaires in areas such as outdoor parking, sales or storage lots shall meet these reduced ratings. Decorative luminaires located in these areas shall meet U-value limits for "all other outdoor lighting".

5. If the nearest property line is less than or equal to two mounting heights from the front hemisphere of the luminaire distribution, the applicable reduced Glare rating shall be met.

5.106.10 GRADING AND PAVING. Construction plans shall indicate how site grading or a drainage system will manage all surface water flows to keep water from entering buildings. Examples of methods to manage surface water include, but are not limited to, the following:

1. Swales.
2. Water collection and disposal systems.
3. French drains.
4. Water retention gardens.
5. Other water measures which keep surface water away from buildings and aid in groundwater recharge.

Exception: Additions and alterations not altering the drainage path.

Y | N/A | RESPON. PARTY

5.106.12 SHADE TREES [DSA-SS]. Shade Trees shall be planted to comply with Sections 5.106.12.1, 5.106.12.2, and 5.106.12.3. Percentages shown shall be measured at noon on the summer solstice. Landscape irrigation necessary to establish and maintain tree health shall comply with Section 5.304.6.

5.106.12.1 Surface parking areas. Shade tree plantings, minimum #10 container size or equal, shall be installed to provide shade over 50 percent of the parking area within 15 years.

Exceptions: The surface parking area covered by solar photovoltaic shade structures, or shade structures, with roofing materials that comply with Table A5.106.11.2.2 in Appendix A5, are not included in the total area calculations.

5.106.12.2 Landscape areas. Shade trees plantings, minimum #10 container size or equal shall be installed to provide shade of 20% of the landscape area within 15 years.

Exceptions: Playfields for organized sport activity are not included in the total area calculation.

5.106.12.3. Hardscape areas. Shade tree plantings, minimum #10 container size or equal shall be installed to provide shade over 20 percent of the hardscape area within 15 years.

Exceptions: Walks, hardscape areas covered by solar photovoltaic shade structures, and hardscape areas covered by shade structures with roofing materials that comply with Table A5.106.11.2.2 in Appendix A5, are not included in the total area calculation.

DIVISION 5.2 ENERGY EFFICIENCY

SECTION 5.201 GENERAL
5.201.1 Scope [BSC-CG]. California Energy Code [DSA-SS]. For the purposes of mandatory energy efficiency standards in this code, the California Energy Commission will continue to adopt mandatory building standards.

DIVISION 5.3 WATER EFFICIENCY AND CONSERVATION

SECTION 5.301 GENERAL
5.301.1 Scope. The provisions of this chapter shall establish the means of conserving water use indoors, outdoors and in wastewater conveyance.

SECTION 5.302 DEFINITIONS
5.302.1 Definitions. The following terms are defined in Chapter 2 (and are included here for reference)

EVAPOTRANSPIRATION ADJUSTMENT FACTOR (ETAF) [DSA-SS]. An adjustment factor when applied to reference evapotranspiration that adjusts for plant factors and irrigation efficiency, which ae two major influences on the amount of water that needs to be applied to the landscape.

FOOTPRINT AREA [DSA-SS]. The total area of the furthest exterior wall of the structure projected to natural grade, not including exterior areas such as stairs, covered walkways, patios and decks.

METERING FAUCET. A self-closing faucet that dispenses a specific volume of water for each actuation cycle. The volume or cycle duration can be fixed or adjustable.

GRAYWATER. Pursuant to Health and Safety Code Section 17922.12, "graywater" means untreated wastewater that has not been contaminated by any toilet discharge, has not been affected by infectious, contaminated, or unhealthy bodily wastes, and does not present a threat from contamination by unhealthful processing, manufacturing, or operating wastes. "Graywater" includes, but is not limited to wastewater from bathtubs, showers, bathroom washbasins, clothes washing machines and laundry tubs, but does not include waste water from kitchen sinks or dishwashers.

MODEL WATER EFFICIENT LANDSCAPE ORDINANCE (MWELO). The California ordinance regulating landscape design, installation and maintenance practices that will ensure commercial, multifamily and other developer installed landscapes greater than 2500 square feet meet an irrigation water budget developed based on landscaped area and climatological parameters.

MODEL WATER EFFICIENT LANDSCAPE ORDINANCE (MWELO). [HCD] The California model ordinance (California Code of Regulations, Title 23, Division 2, Chapter 2.7), regulating landscape design, installation and maintenance practices. Local agencies are required to adopt the updated MWELO, or adopt a local ordinance at least as effective as the MWELO.

POTABLE WATER. Water that is drinkable and meets the U.S. Environmental Protection Agency (EPA) Drinking Water Standards. See definition in the California Plumbing Code, Part 5.

POTABLE WATER. [HCD] Water that is satisfactory for drinking, culinary, and domestic puroses, and meets the U.S. Environmental Protection Agency (EPA) Drinking Water Standards and the requirements of the Health Authority Having Jurisdiction.

RECYCLED WATER. Water which, as a result of treatment of waste, is suitable for a direct beneficial use or a controlled use that would not otherwise occur [Water Code Section 13050 (n)]. Simply put, recycled water is water treated to remove waste matter attaining a quality that is suitable to use the water again.

SUBMETER. A meter installed subordinate to a site meter. Usually used to measure water intended for one purpose, such as landscape irrigation. For the purposes of CALGreen, a dedicated meter may be considered a submeter.

WATER BUDGET. Is the estimated total landscape irrigation water use which shall not exceed the maximum applied water allowance calculated in accordance with the Department of Water Resources Model Efficient Landscape Ordinance (MWELO).

SECTION 5.303 INDOOR WATER USE
5.303.1 METERS. Separate submeters or metering devices shall be installed for the uses described in Sections 503.1.1 and 503.1.2.

5.303.1.1 Buildings in excess of 50,000 square feet. Separate submeters shall be installed as follows:

1. For each individual leased, rented or other tenant space within the building projected to consume more than 100 gal/day (380 L/day), including, but not limited to, spaces used for laundry or cleaners, restaurant or food service, medical or dental office, laboratory, or beauty salon or barber shop.
2. Where separate submeters for individual building tenants are unfeasible, for water supplied to the following subsystems:
   a. Makeup water for cooling towers where flow through is greater than 500 gpm (30 L/s).
   b. Makeup water for evaporative coolers greater than 6 gpm (0.04 L/s).
   c. Steam and hot water boilers with energy input more than 500,000 Btu/h (147 kW).

5.303.1.2 Excess consumption. A separate submeter or metering device shall be provided for any tenant within a new building or within an addition that is projected to consume more than 1,000 gal/day.

5.303.3 WATER CONSERVING PLUMBING FIXTURES AND FITTINGS. Plumbing fixtures (water closets and urinals) and fittings (faucets and showerheads) shall comply with the following:

5.303.3.1 Water Closets. The effective flush volume of all water closets shall not exceed 1.28 gallons per flush. Tank-type water closets shall be certified to the performance criteria of the U.S. EPA WaterSense Specification for Tank-Type toilets.

Note: The effective flush volume of dual flush toilets is defined as the composite, average flush volume of two reduced flushes and one full flush.

5.303.3.2 Urinals.
5.303.3.2.1 Wall-mounted Urinals. The effective flush volume of wall-mounted urinals shall not exceed 0.125 gallons per flush.

5.303.3.2.2 Floor-mounted Urinals. The effective flush volume of floor-mounted or other urinals shall not exceed 0.5 gallons per flush.

5.303.3.3 Showerheads. [BSC-CG]
5.303.3.3.1 Single showerhead. Showerheads shall have a maximum flow rate of not more than 1.8 gallons per minute at 80 psi. Showerheads shall be certified to the performance criteria of the U.S. EPA WaterSense Specification for Showerheads.

5.303.3.3.2 Multiple showerheads serving one shower. When a shower is served by more than one showerhead, the combined flow rate of all the showerheads and/or other shower outlets controlled by a single valve shall not exceed 1.8 gallons per minute at 80 psi, or the shower shall be designed to allow only one shower outlet to be in operation at a time.
Note: A hand-held shower shall be considered a showerhead.

PBK
RANCHO CUCAMONGA
8163 ROCHESTER AVENUE, SUITE 100
RANCHO CUCAMONGA, CA 91730
909-987-0909 P

ONTARIO FIRE DEPARTMENT
ADMINISTRATION BUILDING
CITY OF ONTARIO
1420 E. FRANCIS STREET., ONTARIO, CA

LICENSED ARCHITECT
KEVIN NEEDHAM
C-19064
ie:ie 03/31/25
STATE OF CALIFORNIA

CONSULTANT

NO	DATE	BY	DESCRIPTION

REVISIONS

DRAWN: RMZ | CHECKED:
DATE: 07/15/2022 | SCALE:
PROJECT NUMBER: 2011700

2019 CAL-GREEN
NON-RESIDENTIAL
MANDATORY REQ.

DRAWING NUMBER: T.5

BID SET 03/01/24

2019 CALIFORNIA GREEN BUILDING STANDARDS CODE
NONRESIDENTIAL MANDATORY MEASURES, SHEET 1 (January 2020, Includes August 2019 Supplement)

Y = YES
N/A = NOT APPLICABLE
RESPON. PARTY = RESPONSIBLE PARTY (ie: ARCHITECT, ENGINEER, OWNER, CONTRACTOR, INSPECTOR ETC.)

Y N/A RESPON. PARTY

5.303.3.4 Faucets and fountains.

5.303.3.4.1 Nonresidential Lavatory faucets. Lavatory faucets shall have a maximum flow rate of not more than 0.5 gallons per minute at 60 psi.

5.303.3.4.2 Kitchen faucets. Kitchen faucets shall have a maximum flow rate of not more than 1.8 gallons per minute at 60 psi. Kitchen faucets may temporarily increase the flow above the maximum rate, but not to exceed 2.2 gallons per minute at 60 psi, and must default to a maximum flow rate of 1.8 gallons per minute at 60 psi.

5.303.3.4.3 Wash fountains. Wash fountains shall have a maximum flow rate of not more than1.8 gallons per minute/20 [rim space (inches) at 60 psi].

5.303.3.4.4 Metering faucets. Metering faucets shall not deliver more than 0.20 gallons per cycle.

5.303.3.4.5 Metering faucets for wash fountains. Metering faucets for wash fountains shall have a maximum flow rate of not more than 0.20 gallons per minute/20 [rim space (inches) at 60 psi].

Note: Where complying faucets are unavailable, aerators or other means may be used to achieve reduction.

☐ ☐ **5.303.4 COMMERCIAL KITCHEN EQUIPMENT.**

5.303.4.1 Food Waste Disposers. Disposers shall either modulate the use of water to no more than 1 gpm when the disposer is not in use (not actively grinding food waste/no-load) or shall automatically shut off after no more than 10 minutes of inactivity. Disposers shall use no more than 8 gpm of water.
Note: This code section does not affect local jurisdiction authority to prohibit or require disposer installation.

☐ ☐ **5.303.5 AREAS OF ADDITION OR ALTERATION.** For those occupancies within the authority of the California Building Standards Commission as specified in Section 103, the provisions of Section 5.303.3 and 5.303.4 shall apply to new fixtures in additions or areas of alteration to the building.

☐ ☐ **5.303.6 STANDARDS FOR PLUMBING FIXTURES AND FITTINGS.** Plumbing fixtures and fittings shall be installed in accordance with the California Plumbing Code, and shall meet the applicable standards referenced in Table 1701.1 of the California Plumbing Code and in Chapter 6 of this code.

SECTION 5.304 OUTDOOR WATER USE

☐ ☐ **5.304.1 OUTDOOR POTABLE WATER USE IN LANDSCAPE AREAS.** Nonresidential developments shall comply with a local water efficient landscape ordinance or the current California Department of Water Resources' Model Water Efficient Landscape Ordinance (MWELO), whichever is more stringent.

Notes:
1. The Model Water Efficient Landscape Ordinance (MWELO) is located in the California Code of Regulations, Title 23, Chapter 2.7, Division 2.
2. MWELO and supporting documents, including a water budget calculator, are available at: https://www.water.ca.gov/.

☐ ☐ **5.304.6 OUTDOOR POTABLE WATER USE IN LANDSCAPE AREAS.** For public schools and community colleges, landscape projects as described in Sections 5.304.6.1 and 5.304.6.2 shall comply with the California Department of Water Resources Model Water Efficient Landscape Ordinance (MWELO) commencing with Section 490 of Chapter 2.7, Division 2, Title 23, California Code of Regulations, except that the evapotranspiration adjustment factor (ETAF) shall be 0.65 with an additional water allowance for special landscape areas (SLA) of 0.35.

Exception: Any project with an aggregate landscape area of 2,500 square feet or less may comply with the prescriptive measures contained in Appendix D of the MWELO.

5.304.6.1 Newly constructed landscapes. New construction projects with an aggregate landscape area equal to or greater than 500 square feet.

5.304.6.2 Rehabilitated landscapes. Rehabilitated landscape projects with an aggregate landscape area equal to or greater than 1,200 square feet.

DIVISION 5.4 MATERIAL CONSERVATION AND RESOURCE EFFICIENCY

SECTION 5.401 GENERAL
5.401.1 SCOPE. The provisions of this chapter shall outline means of achieving material conservation and resource efficiency through protection of buildings from exterior moisture, construction waste diversion, employment of techniques to reduce pollution through recycling of materials, and building commissioning or testing and adjusting.

SECTION 5.402 DEFINITIONS
5.402.1 DEFINITIONS. The following terms are defined in Chapter 2 (and are included here for reference)

ADJUST. To regulate fluid flow rate and air patterns at the terminal equipment, such as to reduce fan speed or adjust a damper.

BALANCE. To proportion flows within the distribution system, including sub-mains, branches and terminals, according to design quantities.

BUILDING COMMISSIONING. A systematic quality assurance process that spans the entire design and construction process, including verifying and documenting that building systems and components are planned, designed, installed, tested, operated and maintained to meet the owner's project requirements.

ORGANIC WASTE. Food waste, green waste, landscape and pruning wste, nonhazardous wood waste, and food soiled paper waste that is mixed in with food waste.

TEST. A procedure to determine quantitative performance of a system or equipment

Y N/A RESPON. PARTY

SECTION 5.407 WATER RESISTANCE AND MOISTURE MANAGEMENT
5.407.1 WEATHER PROTECTION. Provide a weather-resistant exterior wall and foundation envelope as required by California Building Code Section 1402.2 (Weather Protection), manufacturer's installation instructions or local ordinance, whichever is more stringent.

☐ ☐ **5.407.2 MOISTURE CONTROL.** Employ moisture control measures by the following methods.

5.407.2.1 Sprinklers. Design and maintain landscape irrigation systems to prevent spray on structures.

5.407.2.2 Entries and openings. Design exterior entries and/or openings subject to foot traffic or wind-driven rain to prevent water intrusion into buildings as follows:

5.407.2.2.1 Exterior door protection. Primary exterior entries shall be covered to prevent water intrusion by using nonabsorbent floor and wall finishes within at least 2 feet around and perpendicular to such openings plus at least one of the following:

1. An installed awning at least 4 feet in depth.
2. The door is protected by a roof overhang at least 4 feet in depth.
3. The door is recessed at least 4 feet.
4. Other methods which provide equivalent protection.

5.407.2.2.2 Flashing. Install flashings integrated with a drainage plane.

SECTION 5.408 CONSTRUCTION WASTE REDUCTION, DISPOSAL AND RECYCLING
☐ ☐ **5.408.1 CONSTRUCTION WASTE MANAGEMENT.** Recycle and/or salvage for reuse a minimum of 65% of the non-hazardous construction and demolition waste in accordance with Section 5.408.1.1, 5.408.1.2 or 5.408.1.3; or meet a local construction and demolition waste management ordinance, whichever is more stringent.

5.408.1.1 Construction waste management plan. Where a local jurisdiction does not have a construction and demolition waste management ordinance, submit a construction waste management plan that:

1. Identifies the construction and demolition waste materials to be diverted from disposal by efficient usage, recycling, reuse on the project or salvage for future use or sale.
2. Determines if construction and demolition waste materials will be sorted on-site (source-separated) or bulk mixed (single stream).
3. Identifies diversion facilities where construction and demolition waste material collected will be taken.
4. Specifies that the amount of construction and demolition waste materials diverted shall be calculated by weight or volume, but not by both.

5.408.1.2 Waste Management Company. Utilize a waste management company that can provide verifiable documentation that the percentage of construction and demolition waste material diverted from the landfill complies with this section.

Note: The owner or contractor shall make the determination if the construction and demolition waste material will be diverted by a waste management company.

Exceptions to Sections 5.408.1.1 and 5.408.1.2:

1. Excavated soil and land-clearing debris.
2. Alternate waste reduction methods developed by working with local agencies if diversion or recycle facilities capable of compliance with this item do not exist.
3. Demolition waste meeting local ordinance or calculated in consideration of local recycling facilities and markets.

5.408.1.3 Waste stream reduction alternative. The combined weight of new construction disposal that does not exceed two pounds per square foot of building area may be deemed to meet the 65% minimum requirement as approved by the enforcing agency.

5.408.1.4 Documentation. Documentation shall be provided to the enforcing agency which demonstrates compliance with Sections 5.408.1.1, through 5.408.1.3. The waste management plan shall be updated as necessary and shall be accessible during construction for examination by the enforcing agency.

Notes:

1. Sample forms found in "A Guide to the California Green Building Standards Code (Nonresidential)" located at www.bsc.ca.gov/Home/CALGreen.aspx may be used to assist in documenting compliance with the waste management plan.
2. Mixed construction and demolition debris processors can be located at the California Department of Resources Recycling and Recovery (CalRecycle).

☐ ☐ **5.408.2 UNIVERSAL WASTE. [A]** Additions and alterations to a building or tenant space that meet the scoping provisions in Section 301.3 for nonresidential additions and alterations, shall require verification that Universal Waste items such as fluorescent lamps and ballast and mercury containing thermostats as well as other California prohibited Universal Waste materials are disposed of properly and are diverted from landfills. A list of prohibited Universal Waste materials shall be included in the construction documents.

Note: Refer to the Universal Waste Rule link at:
http://www.dtsc.ca.gov/LawsRegsPolicies/Regs/upload/OEAR-A_REGS_UWR_FinalText.pdf

☐ ☐ **5.408.3 EXCAVATED SOIL AND LAND CLEARING DEBRIS.** 100 percent of trees, stumps, rocks and associated vegetation and soils resulting primarily from land clearing shall be reused or recycled. For a phased project, such material may be stockpiled on site until the storage site is developed.

Exception: Reuse, either on or off-site, of vegetation or soil contaminated by disease or pest infestation.

Notes:

1. If contamination by disease or pest infestation is suspected, contact the County Agricultural Commissioner and follow its direction for recycling or disposal of the material.
2. For a map of know pest and/or disease quarantine zones, consult with the California Department of Food and Agriculture. (www.cdfa.ca.gov)

SECTION 5.410 BUILDING MAINTENANCE AND OPERATIONS
☐ ☐ **5.410.1 RECYCLING BY OCCUPANTS.** Provide readily accessible areas that serve the entire building and are identified for the depositing, storage and collection of non-hazardous materials for recycling, including (at a minimum) paper, corrugated cardboard, glass, plastics, organic waste, and metals or meet a lawfully enacted local recycling ordinance, if more restrictive.

Exception: Rural jurisdictions that meet and apply for the exemption in Public Resources Code 42649.82 (a)(2)(A) et seq. shall also be exempt from the organic waste portion of this section.

5.410.1.1 Additions. All additions conducted within a 12-month period under single or multiple permits, resulting in an increase of 30% or more in floor area, shall provide recycling areas on site.

Exception: Additions within a tenant space resulting in less than a 30% increase in the tenant space floor area.

5.410.1.2 Sample ordinance. Space allocation for recycling areas shall comply with Chapter 18, Part 3, Division 30 of the Public Resources Code. Chapter 18 is known as the California Solid Waste Reuse and Recycling Access Act of 1991 (Act).

Note: A sample ordinance for use by local agencies may be found in Appendix A of the document at the CalRecycle's web site.

Y N/A RESPON. PARTY

☐ ☐ **5.410.2 COMMISSIONING. [N]** New buildings 10,000 square feet and over. For new buildings 10,000 square feet and over, building commissioning shall be included in the design and construction processes of the building project to verify that the building systems and components meet the owner's or owner representative's project requirements. Commissioning shall be performed in accordance with this section by trained personnel with experience on projects of comparable size and complexity. For I-occupancies that are not regulated by OSHPD or for I-occupancies and L-occupancies that are not regulated y the California Energy Code Section 100.0 Scope, all requirements in Sections 5.410.2 through 5.410.2.6 shall apply.

Note: For energy-related systems under the scope (Section 100) of the California Energy Code, including heating, ventilation, air conditioning (HVAC) systems and controls, indoor lighting systems and controls, as well as water heating systems and controls, refer to California Energy Code Section 120.8 for commissioning requirements

Commissioning requirements shall include:

1. Owner's or Owner representative's project requirements.
2. Basis of design.
3. Commissioning measures shown in the construction documents.
4. Commissioning plan.
5. Functional performance testing.
6. Documentation and training.
7. Commissioning report.

Exceptions:

1. Unconditioned warehouses of any size.
2. Areas less than 10,000 square feet used for offices or other conditioned accessory spaces within unconditioned warehouses.
3. Tenant improvements less than 10,000 square feet as described in Section 303.1.1.
4. Open parking garages of any size, or open parking garage areas, of any size, within a structure.

Note: For the purposes of this section, unconditioned shall mean a building, area, or room which does not provide heating and or air conditioning.

Informational Notes:

1. IAS AC 476 is an accreditation criteria for organizations providing training and/or certification of commissioning personnel. AC 476 is available to the Authority Having Jurisdiction as a reference for qualifications of commissioning personnel. AC 476 des not certify individuals to conduct functional performance tests or to adjust and balance systems.

2. Functional performance testing for heating, ventilation, air conditioning systems and lighting controls must be performed in compliance with the California Energy Code.

5.410.2.1 Owner's or Owner Representative's Project Requirements (OPR). [N] The expectations and requirements of the building appropriate to its phase shall be documented before the design phase of the project begins. This documentation shall include the following:
1. Environmental and sustainability goals.
2. Building sustainable goals.
3. Indoor environmental quality requirements.
4. Project program, including facility functions and hours of operation, and need for after hours operation.
5. Equipment and systems expectations.
6. Building occupant and operation and maintenance (O&M) personnel expectations.

5.410.2.2 Basis of Design (BOD). [N] A written explanation of how the design of the building systems meets the OPR shall be completed at the design phase of the building project. The Basis of Design document shall cover the following systems:

1. Renewable energy systems.
2. Landscape irrigation systems.
3. Water reuse system.

5.410.2.3 Commissioning plan. [N] Prior to permit issuance a commissioning plan shall be completed to document how the project will be commissioned. The commissioning plan shall include the following:
1. General project information.
2. Commissioning goals.
3. Systems to be commissioned. Plans to test systems and components shall include:
   a. An explanation of the original design intent.
   b. Equipment and systems to be tested, including the extent of tests.
   c. Functions to be tested.
   d. Conditions under which the test shall be performed.
   e. Measurable criteria for acceptable performance.
4. Commissioning team information.
5. Commissioning process activities, schedules and responsibilities. Plans for the completion of commissioning shall be included.

5.410.2.4 Functional performance testing. [N] Functional performance tests shall demonstrate the correct installation and operation of each component, system and system-to-system interface in accordance with the approved plans and specifications. Functional performance testing reports shall contain information addressing each of the building components tested, the testing methods utilized, and include any readings and adjustments made.

5.410.2.5 Documentation and training. [N] A Systems Manual and Systems Operations Training are required, including Occupational Safety and Health Act (OSHA) requirements in California Code of Regulations (CCR), Title 8, Section 5142, and other related regulations.

5.410.2.5.1 Systems manual. [N] Documentation of the operational aspects of the building shall be completed within the systems manual and delivered to the building owner or representative. The systems manual shall include the following:
1. Site information, including facility description, history and current requirements.
2. Site contact information.
3. Basic operations and maintenance, including general site operating procedures, basic troubleshooting, recommended maintenance requirements, site events log.
4. Major systems.
5. Site equipment inventory and maintenance notes.
6. A copy of verifications required by the enforcing agency or this code.
7. Other resources and documentation, if applicable.

5.410.2.5.2 Systems operations training. [N] A program for training of the appropriate maintenance staff for each equipment type and/or system shall be developed and documented in the commissioning report and shall include the following:
1. System/equipment overview (what it is, what it does and with what other systems and/or equipment it interfaces).
2. Review and demonstration of servicing/preventive maintenance.
3. Review of the information in the Systems Manual.
4. Review of the record drawings on the system/equipment.

5.410.2.6 Commissioning report. [N] A report of commissioning process activities undertaken through the design and construction phases of the building project shall be completed and provided to the owner or representative.

☐ ☐ **5.410.4 TESTING AND ADJUSTING.** New buildings less than 10,000 square feet. Testing and adjusting of systems shall be required for new buildings less than 10,000 square feet or new systems to serve an addition or alteration subject to Section 303.1.

5.410.4.2 (Reserved)

Note: For energy-related systems under the scope (Section 100) of the California Energy Code, including heating, ventilation, air conditioning (HVAC) systems and controls, indoor lighting system and controls, as well as water heating systems and controls, refer to California Energy Code Section 120.8 for commissioning requirements and Sections Sections 120.5, 120.6, 130.4, and 140.9(b)3 for additional testing requirements of specific systems.

5.410.4.2 Systems. Develop a written plan of procedures for testing and adjusting systems. Systems to be included for testing and adjusting shall include at a minimum, as applicable to the project:

1. Renewable energy systems.
2. Landscape irrigation systems.
3. Water reuse systems.

5.410.4.3 Procedures. Perform testing and adjusting procedures in accordance with manufacturer's specifications and applicable standards on each system.

5.410.4.3.1 HVAC balancing. In addition to testing and adjusting, before a new space-conditioning system serving a building or space is operated for normal use, the system shall be balanced in accordance with the procedures defined by the Testing Adjusting and Balancing Bureau National Standards, the National Environmental Balancing Bureau Procedural Standards; Associated Air Balance Council National Standards or as approved by the enforcing agency.

Y N/A RESPON. PARTY

5.410.4.4 Reporting. After completion of testing, adjusting and balancing, provide a final report of testing signed by the individual responsible for performing these services.

5.410.4.5 Operation and maintenance (O & M) manual. Provide the building owner or representative with detailed operating and maintenance instructions and copies of guaranties/warranties for each system. O & M instructions shall be consistent with OSHA requirements in CCR, Title 8, Section 5142, and other related regulations.

5.410.4.5.1 Inspections and reports. Include a copy of all inspection verifications and reports required by the enforcing agency.

DIVISION 5.5 ENVIRONMENTAL QUALITY

SECTION 5.501 GENERAL
5.501.1 SCOPE. The provisions of this chapter shall outline means of reducing the quantity of air contaminants that are odorous, irritating, and/or harmful to the comfort and well-being of a building's installers, occupants and neighbors.

SECTION 5.502 DEFINITIONS
5.502.1 DEFINITIONS. The following terms are defined in Chapter 2 (and are included here for reference)

ARTERIAL HIGHWAY. A general term denoting a highway primarily for through traffic usually on a continuous route.

A-WEIGHTED SOUND LEVEL (dBA). The sound pressure level in decibels as measured on a sound level meter using the internationally standardized A-weighting filter or as computed from sound spectral data to which A-weighting adjustments have been made.

1 BTU/HOUR. British thermal units per hour, also referred to as Btu. The amount of heat required to raise one pound of water one degree Fahrenheit per hour, a common measure of heat transfer rate. A ton of refrigeration is 12,000 Btu, the amount of heat required to melt a ton (2,000 pounds) of ice at 32^{0} Fahrenheit.

COMMUNITY NOISE EQUIVALENT LEVEL (CNEL). A metric similar to the day-night average sound level (Ldn), except that a 5 decibel adjustment is added to the equivalent continuous sound exposure level for evening hours (7pm to 10pm) in addition to the 10 dB nighttime adjustment used in the Ldn.

COMPOSITE WOOD PRODUCTS. Composite wood products include hardwood plywood, particleboard and medium density fiberboard. "Composite wood products" does not include hardboard, structural plywood, structural panels, structural composite lumber, oriented strand board, glued laminated timber, timber, prefabricated wood I–joists or finger–jointed lumber, all as specified in California Code of Regulations (CCR), Title 17, Section 93120.1(a).

Note: See CCR, Title 17, Section 93120.1.

DAY-NIGHT AVERAGE SOUND LEVEL (Ldn). The A-weighted equivalent continuous sound exposure level for a 24-hour period with a 10 dB adjustment added to sound levels occurring during nighttime hours (10p.m. to 7 a.m.).

DECIBEL (db). A measure on a logarithmic scale of the magnitude of a particular quantity (such as sound pressure, sound power, sound intensity) with respect to a reference quantity.

ELECTRIC VEHICLE (EV). An automotive-type vehicle for on-road use, such as passenger automobiles, buses, trucks, vans, neighborhood electric vehicles, electric motorcycles, and the like, primarily powered by an electric motor that draws current from a rechargeable storage battery, fuel cell, photovoltaic array, or other source of electric current. Plug-in hybrid electric vehicles (PHEV) are considered electric vehicles. For purposes of the California Electrical Code, off-road, self-propelled electric vehicles, such as industrial trucks, hoists, lifts, transports, golf carts, airline ground support equipment, tractors, boats, and the like, are not included.

ELECTRIC VEHICLE CHARGING STATION(S) (EVCS)). One or more spaces intended for charging electric vehicles.

ELECTRIC VEHICLE SUPPLY EQUIPMENT (EVSE). The conductors, including the ungrounded, grounded, and equipment grounding conductors and the electric vehicle connectors, attachment plugs, and all other fittings, devices, power outlets, or apparatus installed specifically for the purpose of transferring energy between the premises wiring and the electric vehicle.

ENERGY EQUIVALENT (NOISE) LEVEL (Leq). The level of a steady noise which would have the same energy as the fluctuating noise level integrated over the time of period of interest.

EXPRESSWAY. An arterial highway for through traffic which may have partial control of access, but which may or may not be divided or have grade separations at intersections.

FREEWAY. A divided arterial highway with full control of access and with grade separations at intersections.

GLOBAL WARMING POTENTIAL (GWP). The radiative forcing impact of one mass-based unit of a given greenhouse gas relative to an equivalent unit of carbon dioxide over a given period of time. Carbon dioxide is the reference compound with a GWP of one.

GLOBAL WARMING POTENTIAL VALUE (GWP VALUE). A 100-year GWP value published by the Intergovevernital Panel on Climate Change (IPCC) in either its Second Assessment Report (SAR) (IPCC, 1995); or its Fourth Assessment A-3 Report (AR4) (IPCC, 2007). The SAR GWP values are found in column "SAR (100-yr)" of Table 2.14.; the AR4 GWP values are found in column "100 yr" of Table 2.14.

HIGH-GWP REFRIGERANT. A compound used as a heat transfer fluid or gas that is: (a) a chlorofluorocarbon, a hdrochlorofluorocarbon, a hydrofluorocarbon, a perfluorocarbon, or any compound or blend of compounds, with a GWP value equal to or greater than 150, or (B) any ozone depleting substance as defined in Title 40 of the Code of Federal Regulations, Part 82, sec.82.3 (as amended March 10, 2009).

LONG RADIUS ELBOW. Pipe fitting installed between two lengths of pipe or tubing to allow a change of direction, with a radius 1.5 times the pipe diameter.

LOW-GWP REFRIGERANT. A compound used as a heat transfer fluid or gas that: (A) has a GWP value less than 150, and (B) is not an ozone depleting substance as defined in Title 40 of the Code of Federal Regulations, Part 82, sec.82.3 (as amended March 10, 2009).

MERV. Filter minimum efficiency reporting value, based on ASHRAE 52.2–1999.

MAXIMUM INCREMENTAL REACTIVITY (MIR). The maximum change in weight of ozone formed by adding a compound to the "Base REactive Organic Gas (ROG) Mixture" per weight of compound added, expressed to hundreths of a gram (g O^3/g ROC).

PRODUCT-WEIGHTED MIR (PWMIR). The sum of all weighted-MIR for all ingredients in a product subject to this article. The PWMIR is the total product reactivity expressed to hundredths of a gram of ozone formed per gram of product (excluding container and packaging).

PSIG. Pounds per square inch, guage.

REACTIVE ORGANIC COMPOUND (ROC). Any compound that has the potential, once emitted, to contribute to ozone formation in the troposphere.

SCHRADER ACCESS VALVES. Access fittings with a valve core installed.

SHORT RADIUS ELBOW. Pipe fitting installed between two lengths of pipe or tubing to allow a change of direction, with a radius 1.0 times the pipe diameter.

SUPERMARKET. For the purposes of Section 5.508.2, a supermarket is any retail food facility with 8,000 square feet or more conditioned area, and that utilizes either refrigerated display cases, or walk-in coolers or freezers connected to remote compressor units or condensing units.

VOC. A volatile organic compound broadly defined as a chemical compound based on carbon chains or rings with vapor pressures greater than 0.1 millimeters of mercury at room temperature. These compounds typically contain hydrogen and may contain oxygen, nitrogen and other elements. See CCR Title 17, Section 94508(a)

Note: Where specific regulations are cited from different agencies such as SCAQMD, ARB, etc., the VOC definition included in that specific regulation is the one that prevails for the specific measure in question.

SECTION 5.503 FIREPLACES
☐ ☐ **5.503.1 FIREPLACES.** Install only a direct-vent sealed-combustion gas or sealed wood-burning fireplace, or a sealed woodstove or pellet stove, and refer to residential requirements in the California Energy Code, Title 24, Part 6, Subchapter 7, Section 150. Woodstoves, pellet stoves and fireplaces shall comply with applicable local ordinances.

5.503.1.1 Woodstoves. Woodstoves and pellet stoves shall comply with U.S. EPA New Source Performance Standards (NSPS) emission limits as applicable, and shall have a permanent label indicating they are certified to meet the emission limits.

SECTION 5.504 POLLUTANT CONTROL
☐ ☐ **5.504.1 TEMPORARY VENTILATION.** The permanent HVAC system shall only be used during construction if necessary to condition the building or areas of addition or alteration within the required temperature range for material and equipment installation. If the HVAC system is used during construction, use return air filters with a Minimum Efficiency Reporting Value (MERV) of 8, based on ASHRAE 52.2-1999, or an average efficiency of 30% based on ASHRAE 52.1-1992 Replace all filters immediately prior to occupancy, or, if the building is occupied during alteration, at the conclusion of construction.

☐ ☐ **5.504.3 Covering of duct openings and protection of mechanical equipment during construction.** At the time of rough installation and during storage on the construction site until final startup of the heating, cooling and ventilation equipment, all duct and other related air distribution component openings shall be covered with tape, plastic, sheetmetal or other methods acceptable to the enforcing agency to reduce the amount of dust, water and debris which may enter the system.

PBK
RANCHO CUCAMONGA
8163 ROCHESTER AVENUE, SUITE 100
RANCHO CUCAMONGA, CA 91730
909-987-0909 P

ONTARIO FIRE DEPARTMENT
ADMINISTRATION BUILDING
CITY OF ONTARIO
1420 E. FRANCIS STREET., ONTARIO, CA

LICENSED ARCHITECT
KEVIN NEEDHAM
C-19064
ie:ta 03/31/24
STATE OF CALIFORNIA

CONSULTANT

NO	DATE	BY	DESCRIPTION

REVISIONS

DRAWN: RMZ | CHECKED:
DATE: 07/15/2022 | SCALE:
PROJECT NUMBER: 2011700

2019 CAL-GREEN NON-RESIDENTIAL MANDATORY REQ.

DRAWING NUMBER: T.6

BID SET 03/01/24

2019 CALIFORNIA GREEN BUILDING STANDARDS CODE
NONRESIDENTIAL MANDATORY MEASURES, SHEET 1 (January 2020, Includes August 2019 Supplement)

Y = YES
N/A = NOT APPLICABLE
RESPON. PARTY = RESPONSIBLE PARTY (ie: ARCHITECT, ENGINEER, OWNER, CONTRACTOR, INSPECTOR ETC.)

Y | N/A | RESPON. PARTY

5.504.4 FINISH MATERIAL POLLUTANT CONTROL. Finish materials shall comply with Sections 5.504.4.1 through 5.504.4.6.

5.504.4.1 Adhesives, sealants and caulks. Adhesives, sealants, and caulks used on the project shall meet the requirements of the following standards:

1. Adhesives, adhesive bonding primers, adhesive primers, sealants, sealant primers and caulks shall comply with local or regional air pollution control or air quality management district rules where applicable, or SCAQMD Rule 1168 VOC limits, as shown in Tables 5.504.4.1 and 5.504.4.2. Such products also shall comply with the Rule 1168 prohibition on the use of certain toxic compounds (chloroform, ethylene dichloride, methylene chloride, perchloroethylene and trichloroethylene), except for aerosol products as specified in subsection 2, below.

2. Aerosol adhesives, and smaller unit sizes of adhesives, and sealant or caulking compounds (in units of product, less packaging, which do not weigh more than one pound and do not consist of more than 16 fluid ounces) shall comply with statewide VOC standards and other requirements, including prohibitions on use of certain toxic compounds, of California Code of Regulations, Title 17, commencing with Section 94507.

TABLE 5.504.4.1 - ADHESIVE VOC LIMIT[1,2]

Less Water and Less Exempt Compounds in Grams per Liter

ARCHITECTURAL APPLICATIONS	CURRENT VOC LIMIT
INDOOR CARPET ADHESIVES	50
CARPET PAD ADHESIVES	50
OUTDOOR CARPET ADHESIVES	150
WOOD FLOORING ADHESIVES	100
RUBBER FLOOR ADHESIVES	60
SUBFLOOR ADHESIVES	50
CERAMIC TILE ADHESIVES	65
VCT & ASPHALT TILE ADHESIVES	50
DRYWALL & PANEL ADHESIVES	50
COVE BASE ADHESIVES	50
MULTIPURPOSE CONSTRUCTION ADHESIVES	70
STRUCTURAL GLAZING ADHESIVES	100
SINGLE-PLY ROOF MEMBRANE ADHESIVES	250
OTHER ADHESIVES NOT SPECIFICALLY LISTED	50
SPECIALTY APPLICATIONS	
PVC WELDING	510
CPVC WELDING	490
ABS WELDING	325
PLASTIC CEMENT WELDING	250
ADHESIVE PRIMER FOR PLASTIC	550
CONTACT ADHESIVE	80
SPECIAL PURPOSE CONTACT ADHESIVE	250
STRUCTURAL WOOD MEMBER ADHESIVE	140
TOP & TRIM ADHESIVE	250
SUBSTRATE SPECIFIC APPLICATIONS	
METAL TO METAL	30
PLASTIC FOAMS	50
POROUS MATERIAL (EXCEPT WOOD)	50
WOOD	30
FIBERGLASS	80

1. IF AN ADHESIVE IS USED TO BOND DISSIMILAR SUBSTRATES TOGETHER, THE ADHESIVE WITH THE HIGHEST VOC CONTENT SHALL BE ALLOWED.

2. FOR ADDITIONAL INFORMATION REGARDING METHODS TO MEASURE THE VOC CONTENT SPECIFIED IN THIS TABLE, SEE SOUTH COAST AIR QUALITY MANAGEMENT DISTRICT RULE 1168, www.arb.ca.gov/DRDB/SC/CURHTML/R1168.PDF

TABLE 5.504.4.2 - SEALANT VOC LIMIT

Less Water and Less Exempt Compounds in Grams per Liter

SEALANTS	CURRENT VOC LIMIT
ARCHITECTURAL	250
MARINE DECK	760
NONMEMBRANE ROOF	300
ROADWAY	250
SINGLE-PLY ROOF MEMBRANE	450
OTHER	420
SEALANT PRIMERS	
ARCHITECTURAL	
NONPOROUS	250
POROUS	775
MODIFIED BITUMINOUS	500
MARINE DECK	760
OTHER	750

NOTE: FOR ADDITIONAL INFORMATION REGARDING METHODS TO MEASURE THE VOC CONTENT SPECIFIED IN THESE TABLES, SEE SOUTH COAST AIR QUALITY MANAGEMENT DISTRICT RULE 1168.

5.504.4.3 Paints and coatings. Architectural paints and coatings shall comply with VOC limits in Table 1 of the ARB Architectural Coatings Suggested Control Measure, as shown in Table 5.504.4.3, unless more stringent local limits apply. The VOC content limit for coatings that do not meet the definitions for the specialty coatings categories listed in Table 5.504.4.3 shall be determined by classifying the coating as a Flat, Nonflat or Nonflat-High Gloss coating, based on its gloss, as defined in Subsections 4.21, 4.36 and 4.37 of the 2007 California Air Resources Board Suggested Control Measure, and the corresponding Flat, Nonflat or Nonflat-High Gloss VOC limit in Table 5.504.4.3 shall apply.

5.504.4.3.1 Aerosol Paints and coatings. Aerosol paints and coatings shall meet the PWMIR Limits for ROC in Section 94522(a)(3) and other requirements, including prohibitions on use of certain toxic compounds and ozone depleting substances, in Sections 94522(c)(2) and (d)(2) of California Code of Regulations, Title 17, commencing with Section 94520; and in areas under the jurisdiction of the Bay Area Air Quality Management District additionally comply with the percent VOC by weight of product limits of Regulation 8 Rule 49.

Y | N/A | RESPON. PARTY

TABLE 5.504.4.3 - VOC CONTENT LIMITS FOR ARCHITECTURAL COATINGS[2,3]

GRAMS OF VOC PER LITER OF COATING, LESS WATER & LESS EXEMPT COMPOUNDS

COATING CATEGORY	CURRENT VOC LIMIT
FLAT COATINGS	50
NONFLAT COATINGS	100
NONFLAT HIGH GLOSS COATINGS	150
SPECIALTY COATINGS	
ALUMINUM ROOF COATINGS	400
BASEMENT SPECIALTY COATINGS	400
BITUMINOUS ROOF COATINGS	50
BITUMINOUS ROOF PRIMERS	350
BOND BREAKERS	350
CONCRETE CURING COMPOUNDS	350
CONCRETE/MASONRY SEALERS	100
DRIVEWAY SEALERS	50
DRY FOG COATINGS	150
FAUX FINISHING COATINGS	350
FIRE RESISTIVE COATINGS	350
FLOOR COATINGS	100
FORM-RELEASE COMPOUNDS	250
GRAPHIC ARTS COATINGS (SIGN PAINTS)	500
HIGH-TEMPERATURE COATINGS	420
INDUSTRIAL MAINTENANCE COATINGS	250
LOW SOLIDS COATINGS[1]	120
MAGNESITE CEMENT COATINGS	450
MASTIC TEXTURE COATINGS	100
METALLIC PIGMENTED COATINGS	500
MULTICOLOR COATINGS	250
PRETREATMENT WASH PRIMERS	420
PRIMERS, SEALERS, & UNDERCOATERS	100
REACTIVE PENETRATING SEALERS	350
RECYCLED COATINGS	250
ROOF COATINGS	50
RUST PREVENTATIVE COATINGS	250
SHELLACS:	
CLEAR	730
OPAQUE	550
SPECIALTY PRIMERS, SEALERS & UNDERCOATERS	100
STAINS	250
STONE CONSOLIDANTS	450
SWIMMING POOL COATINGS	340
TRAFFIC MARKING COATINGS	100
TUB & TILE REFINISH COATINGS	420
WATERPROOFING MEMBRANES	250
WOOD COATINGS	275
WOOD PRESERVATIVES	350
ZINC-RICH PRIMERS	340

1. GRAMS OF VOC PER LITER OF COATING, INCLUDING WATER & EXEMPT COMPOUNDS

2. THE SPECIFIED LIMITS REMAIN IN EFFECT UNLESS REVISED LIMITS ARE LISTED IN SUBSEQUENT COLUMNS IN THE TABLE.

3. VALUES IN THIS TABLE ARE DERIVED FROM THOSE SPECIFIED BY THE CALIFORNIA AIR RESOURCES BOARD, ARCHITECTURAL COATINGS SUGGESTED CONTROL MEASURE, FEB. 1, 2008. MORE INFORMATION IS AVAILABLE FROM THE AIR RESOURCES BOARD.

5.504.4.3.2 Verification. Verification of compliance with this section shall be provided at the request of the enforcing agency. Documentation may include, but is not limited to, the following:

1. Manufacturer's product specification
2. Field verification of on-site product containers

5.504.4.4 Carpet Systems. All carpet installed in the building interior shall meet at least one of the testing and product requirements:

1. Carpet and Rug Institute's Green Label Plus Program.
2. Compliant with the VOC-emission limits and testing requirements specified in the California Department of Public Health Standard Method for the Testing and Evaluation of Volatile Organic Chemical Emissions from Indoor Sources Using Environmental Chambers, Version 1.1, February 2010 (also known as CDPH Standard Method V1.1 or Specification 01350).
3. NSF/ANSI 140 at the Gold level or higher;
4. Scientific Certifications Systems Sustainable Choice; or
5. Compliant with the Collaborative for High Performance Schools California (2014 CA-CHPS) Criteria listed in the CHPS High Performance Product Database.

5.504.4.4.1 Carpet cushion. All carpet cushion installed in the building interior shall meet the requirements of the Carpet and Rug Institute Green Label program.

5.504.4.4.2 Carpet adhesive. All carpet adhesive shall meet the requirements of Table 5.504.4.1.

5.504.4.5 Composite wood products. Hardwood plywood, particleboard and medium density fiberboard composite wood products used on the interior or exterior of the buildings shall meet the requirements for formaldehyde as specified in ARB's Air Toxics Control Measure (ATCM) for Composite Wood (17 CCR 93120 et seq.). Those materials not exempted under the ATCM must meet the specified emission limits, as shown in Table 5.504.4.5.

5.504.4.5.3 Documentation. Verification of compliance with this section shall be provided as requested by the enforcing agency. Documentation shall include at least one of the following:

1. Product certifications and specifications.
2. Chain of custody certifications.
3. Product labeled and invoiced as meeting the Composite Wood Products regulation (see CCR, Title 17, Section 93120, et seq.).
4. Exterior grade products marked as meeting the PS-1 or PS-2 standards of the Engineered Wood Association, the Australian AS/NZS 2269 or European 636 3S standards.
5. Other methods acceptable to the enforcing agency.

Y | N/A | RESPON. PARTY

TABLE 5.504.4.5 - FORMALDEHYDE LIMITS[1]

MAXIMUM FORMALDEHYDE EMISSIONS IN PARTS PER MILLION

PRODUCT	CURRENT LIMIT
HARDWOOD PLYWOOD VENEER CORE	0.05
HARDWOOD PLYWOOD COMPOSITE CORE	0.05
PARTICLE BOARD	0.09
MEDIUM DENSITY FIBERBOARD	0.11
THIN MEDIUM DENSITY FIBERBOARD[2]	0.13

1. VALUES IN THIS TABLE ARE DERIVED FROM THOSE SPECIFIED BY THE CALIFORNIA AIR RESOURCES BOARD, AIR TOXICS CONTROL MEASURE FOR COMPOSITE WOOD AS TESTED IN ACCORDANCE WITH ASTM E 1333. FOR ADDITIONAL INFORMATION, SEE CALIFORNIA CODE OF REGULATIONS, TITLE 17, SECTIONS 93120 THROUGH 93120.12

2. THIN MEDIUM DENSITY FIBERBOARD HAS A MAXIMUM THICKNESS OF 5/16 INCHES (8 MM).

5.504.4.6 Resilient flooring systems. For 80 percent of floor area receiving resilient flooring, installed resilient flooring shall meet at least one of the following:

1. Certified under the Resilient Floor Covering Institute (RFCI) FloorScore program;
2. Compliant with the VOC-emission limits and testing requirements specified in the California Department of Public Health's 2010 Standard Method for the Testing and Evaluation Chambers, Version 1.1, February 2010;
3. Compliant with the Collaborative for High Performance Schools California (2014 CA-CHPS) Criteria and listed in the CHPS High Performance Product Database; or
4. Products certified under UL GREENGUARD Gold (formerly the Greenguard Children's & Schools Program).

5.504.4.6.1 Verification of compliance. Documentation shall be provided verifying that resilient flooring materials meet the pollutant emission limits.

5.504.5.3 Filters. In mechanically ventilated buildings, provide regularly occupied areas of the building with air filtration media for outside and return air that provides at least a Minimum Efficiency Reporting Value (MERV) of 13. MERV 13 filters shall be installed prior to occupancy, and recommendations for maintenance with filters of the same value shall be included in the operation and maintenance manual.

Exceptions: Existing mechanical equipment.

5.504.5.3.1 Labeling. Installed filters shall be clearly labeled by the manufacturer indicating the MERV rating.

5.504.7 ENVIRONMENTAL TOBACCO SMOKE (ETS) CONTROL. Where outdoor areas are provided for smoking, prohibit smoking within 25 feet of building entries, outdoor air intakes and operable windows and within the building as already prohibited by other laws or regulations; or as enforced by ordinances, regulations or policies of any city, county, city and county, California Community College, campus of the California State University, or campus of the University of California, whichever are more stringent. When ordinances, regulations or policies are not in place, post signage to inform building occupants of the prohibitions.

SECTION 5.505 INDOOR MOISTURE CONTROL

5.505.1 INDOOR MOISTURE CONTROL. Buildings shall meet or exceed the provisions of California Building Code, CCR, Title 24, Part 2, Sections 1202 (Ventilation) and Chapter 14 (Exterior Walls). For additional measures, see Section 5.407.2 of this code.

SECTION 5.506 INDOOR AIR QUALITY

5.506.1 OUTSIDE AIR DELIVERY. For mechanically or naturally ventilated spaces in buildings, meet the minimum requirements of Section 120.1 (Requirements For Ventilation) of the California Energy Code, or the applicable local code, whichever is more stringent, and Division 1, Chapter 4 of CCR, Title 8.

5.506.2 CARBON DIOXIDE (CO2) MONITORING. For buildings or additions equipped with demand control ventilation, CO2 sensors and ventilation controls shall be specified and installed in accordance with the requirements of the California Energy Code, Section 120(c)(4).

SECTION 5.507 ENVIRONMENTAL COMFORT

5.507.4 ACOUSTICAL CONTROL. Employ building assemblies and components with Sound Transmission Class (STC) values determined in accordance with ASTM E 90 and ASTM E 413, or Outdoor-Indoor Sound Transmission Class (OITC) determined in accordance with ASTM E 1332, using either the prescriptive or performance method in Section 5.507.4.1 or 5.507.4.2.

Exception: Buildings with few or no occupants or where occupants are not likely to be affected by exterior noise, as determined by the enforcement authority, such as factories, stadiums, storage, enclosed parking structures and utility buildings.

Exception: [DSA-SS] For public schools and community colleges, the requirements of this section and all subsections apply only to new construction.

5.507.4.1 Exterior noise transmission, prescriptive method. Wall and roof-ceiling assemblies exposed to the noise source making up the building or addition envelope or altered envelope shall meet a composite STC rating of at least 50 or a composite OITC rating of no less than 40, with exterior windows of a minimum STC of 40 or OITC of 30 in the following locations:

1. Within the 65 CNEL noise contour of an airport.

Exceptions:

1. Ldn or CNEL for military airports shall be determined by the facility Air Installation Compatible Land Use Zone (AICUZ) plan.
2. Ldn or CNEL for other airports and heliports for which a land use plan has not been developed shall be determined by the local general plan noise element.

2. Within the 65 CNEL or Ldn noise contour of a freeway or expressway, railroad, industrial source or fixed-guideway source as determined by the Noise Element of the General Plan.

5.507.4.1.1. Noise exposure where noise contours are not readily available. Buildings exposed to a noise level of 65 dB L_{eq} - 1-hr during any hour of operation shall have building, addition or alteration exterior wall and roof-ceiling assemblies exposed to the noise source meeting a composite STC rating of at least 45 (or OITC 35), with exterior windows of a minimum STC of 40 (or OITC 30).

5.507.4.2 Performance Method. For buildings located as defined in Section 5.507.4.1 or 5.507.4.1.1, wall and roof-ceiling assemblies exposed to the noise source making up the building or addition envelope or altered envelope shall be constructed to provide an interior noise environment attributable to exterior sources that does not exceed an hourly equivalent noise level (Leq-1Hr) of 50 dBA in occupied areas during any hour of operation.

5.507.4.2.1 Site Features. Exterior features such as sound walls or earth berms may be utilized as appropriate to the building, addition or alteration project to mitigate sound migration to the interior.

5.507.4.2.2 Documentation of Compliance. An acoustical analysis documenting complying interior sound levels shall be prepared by personnel approved by the architect or engineer of record.

5.507.4.3 Interior sound transmission. Wall and floor-ceiling assemblies separating tenant spaces and tenant spaces and public places shall have an STC of at least 40.

Note: Examples of assemblies and their various STC ratings may be found at the California Office of Noise Control: www.toolbase.org/PDF/CaseStudies/stc_icc_ratings.pdf.

SECTION 5.508 OUTDOOR AIR QUALITY

5.508.1 Ozone depletion and greenhouse gas reductions. Installations of HVAC, refrigeration and fire suppression equipment shall comply with Sections 5.508.1.1 and 5.508.1.2.

5.508.1.1 Chlorofluorocarbons (CFCs). Install HVAC, refrigeration and fire suppression equipment that do not contain CFCs.

5.508.1.2 Halons. Install HVAC, refrigeration and fire suppression equipment that do not contain Halons.

5.508.2 Supermarket refrigerant leak reduction. New commercial refrigeration systems shall comply with the provisions of this section when installed in retail food stores 8,000 square feet or more conditioned area, and that utilize either refrigerated display cases, or walk-in coolers or freezers connected to remote compressor units or condensing units. The leak reduction measures apply to refrigeration systems containing high-global-warming potential (high-GWP) refrigerants with a GWP of 150 or greater. New refrigeration systems include both new facilities and the replacement of existing refrigeration systems in existing facilities.

Exception: Refrigeration systems containing low-global warming potential (low-GWP) refrigerant with a GWP value less than 150 are not subject to this section. Low-GWP refrigerants are nonozone-depleting refrigerants that include ammonia, carbon dioxide (CO_2), and potentially other refrigerants.

Y | N/A | RESPON. PARTY

5.508.2.1 Refrigerant piping. Piping compliant with the California Mechanical Code shall be installed to be accessible for leak protection and repairs. Piping runs using threaded pipe, copper tubing with an outside diameter (OD) less than 1/4 inch, flared tubing connections and short radius elbows shall not be used in refrigerant systems except as noted below.

5.508.2.1.1 Threaded pipe. Threaded connections are permitted at the compressor rack.

5.508.2.1.2 Copper pipe. Copper tubing with an OD less than 1/4 inch may be used in systems with a refrigerant charge of 5 pounds or less.

5.508.2.1.2.1 Anchorage. One-fouth-inch OD tubing shall be securely clamped to a rigid base to keep vibration levels below 8 mils.

5.508.2.1.3 Flared tubing connections. Double-flared tubing connections may be used for pressure controls, valve pilot lines and oil.

Exception: Single-flared tubing connections may be used with a multiring seal coated with industrial sealant suitable for use with refrigerants and tightened in accordance with manufacturer's recommendations.

5.508.2.1.4 Elbows. Short radius elbows are only permitted where space limitations prohibit use of long radius elbows.

5.508.2.2 Valves. Valves Valves and fittings shall comply with the *California Mechanical Code* and as follows.

5.508.2.2.1 Pressure relief valves. For vessels containing high-GWP refrigerant, a rupture disc shall be installed between the outlet of the vessel and the inlet of the pressure relief valve.

5.508.2.2.1.1 Pressure detection. A pressure gauge, pressure transducer or other device shall be installed in the space between the rupture disc and the relief valve inlet to indicate a disc rupture or discharge of the relief valve.

5.508.2.2.2 Access valves. Only Schrader access valves with a brass or steel body are permitted for use.

5.508.2.2.2.1 Valve caps. For systems with a refrigerant charge of 5 pounds or more, valve caps shall be brass or steel and not plastic.

5.508.2.2.2.2 Seal caps. If designed for it, the cap shall have a neoprene O-ring in place.

5.508.2.2.2.2.1 Chain tethers. Chain tethers to fit ovr the stem are required for valves designed to have seal caps.

Exception: Valves with seal caps that are not removed from the valve during stem operation.

5.508.2.3 Refrigerated service cases. Refrigerated service cases holding food products containing vinegar and salt shall have evaporator coils of corrosion-resistant material, such as stainless steel; or be coated to prevent corrosion from these substances.

5.508.2.3.1 Coil coating. Consideration shall be given to the heat transfer efficiency of coil coating to maximize energy efficiency.

5.508.2.4 Refrigerant receivers. Refrigerant receivers with capacities greater than 200 pounds shall be fitted with a device tha indicates the level of refrigerant in the receiver.

5.508.2.5 Pressure testing. The system shall be pressure tested during installation prior to evacuation and charging.

5.508.2.5.1 Minimum pressure. The system shall be charged with regulated dry nitrogen and appropriate tracer gas to bring system pressure up to 300 psig minimum.

5.508.2.5.2 Leaks. Check the system for leaks, repair any leaks, and retest for pressure using the same gauge.

5.508.2.5.3 Allowable pressure change. The system shall stand, unaltered, for 24 hours with no more than a +/- one pound pressure change from 300 psig, measured with the same gauge.

5.508.2.6 Evacuation. The system shall be evacuated after pressure testing and prior to charging.

5.508.2.6.1 First vacuum. Pull a system vacuum down to at least 1000 microns (+/- 50 microns), and hold for 30 minutes.

5.508.2.6.2 Second vacuum. Pull a second system vacuum to a minimum of 500 microns and hold for 30 minutes.

5.508.2.6.3 Third vacuum. Pull a third vacuum down to a minimum of 300 microns, and hold for 24 hours with a maximum drift of 100 microns over a 24-hour period.

CHAPTER 7
INSTALLER & SPECIAL INSPECTOR QUALIFICATIONS

702 QUALIFICATIONS

702.1 INSTALLER TRAINING. HVAC system installers shall be trained and certified in the proper installation of HVAC systems including ducts and equipment by a nationally or regionally recognized training or certification program. Uncertified persons may perform HVAC installations when under the direct supervision and responsibility of a person trained and certified to install HVAC systems or contractor licensed to install HVAC systems. Examples of acceptable HVAC training and certification programs include but are not limited to the following:

1. State certified apprenticeship programs.
2. Public utility training programs.
3. Training programs sponsored by trade, labor or statewide energy consulting or verification organizations.
4. Programs sponsored by manufacturing organizations.
5. Other programs acceptable to the enforcing agency.

702.2 SPECIAL INSPECTION [HCD]. When required by the enforcing agency, the owner or the responsible entity acting as the owner's agent shall employ one or more special inspectors to provide inspection or other duties necessary to substantiate compliance with this code. Special inspectors shall demonstrate competence to the satisfaction of the enforcing agency for the particular type of inspection or task to be performed. In addition to other certifications or qualifications acceptable to the enforcing agency, the following certifications or education may be considered by the enforcing agency when evaluating the qualifications of a special inspector:

1. Certification by a national or regional green building program or standard publisher.
2. Certification by a statewide energy consulting or verification organization, such as HERS raters, building performance contractors, and home energy auditors.
3. Successful completion of a third party apprentice training program in the appropriate trade.
4. Other programs acceptable to the enforcing agency.

Notes:

1. Special inspectors shall be independent entities with no financial interest in the materials or the project they are inspecting for compliance with this code.
2. HERS raters are special inspectors certified by the California Energy Commission (CEC) to rate homes in California according to the Home Energy Rating System (HERS).

[BSC-CG] When required by the enforcing agency, the owner or the responsible entity acting as the owner's agent shall employ one or more special inspectors to provide inspection or other duties necessary to substantiate compliance with this code. Special inspectors shall demonstrate competence to the satisfaction of the enforcing agency for the particular type of inspection or task to be performed. In addition, the special inspector shall have a certification from a recognized state, national or international association, as determined by the local agency. The area of certification shall be closely related to the primary job function, as determined by the local agency.

Note: Special inspectors shall be independent entities with no financial interest in the materials or the project they are inspecting for compliance with this code.

703 VERIFICATIONS

703.1 DOCUMENTATION. Documentation used to show compliance with this code shall include but is not limited to, construction documents, plans, specifications, builder or installer certification, inspection reports, or other methods acceptable to the enforcing agency which demonstrate substantial conformance. When specific documentation or special inspection is necessary to verify compliance, that method of compliance will be specified in the appropriate section or identified applicable checklist.

PBK
RANCHO CUCAMONGA
8163 ROCHESTER AVENUE, SUITE 100
RANCHO CUCAMONGA, CA 91730
909-987-0909 P

ONTARIO FIRE DEPARTMENT
ADMINISTRATION BUILDING
CITY OF ONTARIO
1420 E. FRANCIS STREET., ONTARIO, CA

LICENSED ARCHITECT
KEELER NEEDHAM
C-15004
Exp. 03/31/25
STATE OF CALIFORNIA

CONSULTANT

NO	DATE	BY	DESCRIPTION

REVISIONS

DRAWN: RMZ
CHECKED:
DATE: 07/15/2022
SCALE:
PROJECT NUMBER: 2011700

2019 CAL-GREEN
NON-RESIDENTIAL
MANDATORY REQ.

DRAWING NUMBER: T.7

BID SET 03/01/24

Grading, Drainage, Storm Drain and Utility Plan for City of Ontario Fire Training Facilty 1420 E. Francis Street

CITY GENERAL NOTES

1. ALL WORK SHALL BE DONE IN STRICT CONFORMANCE WITH THE CURRENT CITY OF ONTARIO STANDARD SPECIFICATIONS AND STANDARD DRAWINGS AND CURRENT APWA STANDARD SPECIFICATIONS AND STANDARD DRAWINGS UNLESS OTHERWISE APPROVED BY THE CITY ENGINEER.
2. ANY CONTRACTOR PERFORMING WORK ON THIS PROJECT SHALL FAMILIARIZE HIMSELF/HERSELF WITH THE SITE AND SHALL BE SOLELY RESPONSIBLE FOR ANY DAMAGE TO EXISTING FACILITIES RESULTING DIRECTLY OR INDIRECTLY FROM HIS/HER OPERATIONS, WHETHER OR NOT THE FACILITY IS SHOWN ON THESE PLANS.
3. ALL OBSTRUCTIONS WITHIN THE AREA TO BE IMPROVED SHALL BE REMOVED AND/OR RELOCATED AT THE DIRECTION OF THE CITY ENGINEER. UTILITIES ARE TO BE RELOCATED BY THEIR RESPECTIVE OWNERS UNLESS NOTED OTHERWISE. THE CONTRACTOR IS REFERRED TO SECTION 5 OF THE STANDARD SPECIFICATIONS FOR PUBLIC WORKS CONSTRUCTION.
4. UTILITY LINE LOCATIONS WERE TAKEN FROM AVAILABLE RECORD DATA AND WERE NOT LOCATED IN THE FIELD, UNLESS OTHERWISE NOTED ON THE PLAN. THE CONTRACTOR IS REFERRED TO SECTION 5 OF THE STANDARD SPECIFICATIONS.
5. IN CASE OF ANY ACCIDENTS INVOLVING SAFETY MATTERS COVERED BY SECTION 6409(B) OF THE CALIFORNIA LABOR CODE, THE CONTRACTOR SHALL IMMEDIATELY NOTIFY THE STATE DIVISION OF INDUSTRIAL SAFETY.
6. STATE LAW (SB 3019) REQUIRES THE CONTRACTOR TO CONTACT UNDERGROUND SERVICE ALERT AND OBTAIN AN IDENTIFICATION NUMBER PRIOR TO THE ISSUANCE OF CITY'S ENCROACHMENT PERMIT. THE CONTRACTOR SHALL NOTIFY UNDERGROUND SERVICE ALERT AT 1-800-227-2600 A MINIMUM OF 48 HOURS IN ADVANCE OF ANY CONSTRUCTION ACTIVITIES.
7. PRIOR TO THE START OF ANY WORK THE CONTRACTOR SHALL OBTAIN A BUSINESS LICENSE FROM THE CITY OF ONTARIO. THE CONTRACTOR SHALL ALSO OBTAIN AN ENCROACHMENT PERMIT FROM THE ENGINEERING DEPARTMENT NO LESS THAN 48 HOURS PRIOR TO START OF ANY CONSTRUCTION WITHIN THE PUBLIC RIGHT-OF-WAY.
8. THE CONTRACTOR SHALL OBTAIN A TRAFFIC CONTROL PERMIT 48 HOURS PRIOR TO TIME OF CONSTRUCTION WITHIN THE PUBLIC RIGHT-OF-WAY. THE CONTRACTOR IS REFERRED TO SECTION 7-10.3 OF THE STANDARD SPECIFICATIONS FOR PUBLIC WORKS CONSTRUCTION.
9. THE CONTRACTOR SHALL RENEW OR REPLACE ANY EXISTING TRAFFIC STRIPING AND/OR PAVEMENT MARKINGS, WHICH DURING HIS OPERATIONS HAVE BEEN EITHER REMOVED OR THE EFFECTIVENESS OF WHICH HAS BEEN REDUCED. RENEWAL OF TRAFFIC STRIPING AND MARKINGS SHALL BE DONE USING REFLECTIVE THERMO-PLASTIC MARKINGS IN CONFORMANCE WITH SECTION 84 & 85 OF THE CALTRANS STANDARD SPECIFICATIONS AND AS DIRECTED BY THE ENGINEER. ALL REGULATORY, WARNING, AND GUIDE SIGNS SHALL HAVE 3M DIAMOND, VIP GRADE SHEETING WITH SERIES 1160 PROTECTIVE OVERLAY FILM.
10. THE LAND SURVEYORS ACT, SECTION 8771 OF THE BUSINESS & PROFESSIONAL CODE, AND SECTIONS 732.5, 1492-5, 1810-5 OF THE STREETS AND HIGHWAY GODE REQUIRE THAT SURVEY MONUMENTS SHALL BE PROTECTED AND PERPETUATED, AS FOLLOWS:

    "IT SHALL BE THE RESPONSIBILITY OF THE DEVELOPER OR OTHERS PERFORMING THE CONSTRUCTION WORK TO RETAIN A QUALIFIED REGISTERED CIVIL ENGINEER AND/OR LICENSED LAND SUIVEYOR PRIOR TO THE START OF CONSTRUCTION TO LOCATE, REFERENCE AND FILE THE NECESSAIY CORNER RECORDS WITH THE COUNTY SURVEYOR'S OFFICE FOR SURVEY CONTROL POINTSI MONUMENTS THAT EXIST AS SHOWN ON RECORDED TRACT MAPS, PARCEL MAPS, RECORDS OF SURVEYS AND HIGHWAY MAPS, AND MAY BE DISTURBED OR DAMAGED BY THE PROPOSED CONSTRUCTION.

    AFTER THE COMPLETION OF THE PROPOSED CONSTRUCTION, SAID MONUMENTS AND/OR CONTROL SURVEY POINTS SHALL BE RESET TO THE NEW SURFACE IN ACCORDANCES WITH CURRENT PROFESSIONAL LAND SURVEYING PRACTICES. CORNER RECORDS SHALL BE FILED WITH THE COUNTY SURVEYOR FOR ALL THE NEW MONUMENTS SET.
11. THE DEVELOPER SHALL PROVIDE THE CITY WITH A COMPLETED SET OF "AS BUILT", MYLAR DRAWINGS PRIOR TO THE FINAL INSPECTION.
12. A CITY ACCEPTED/APPROVED SET OF PLANS SHALL BE KEPT ON THE JOB SITE AT ALL TIMES.
13. A PRE-CONSTRUCTION MEETING SHALL OCCUR PRIOR TO CONSTRUCTION. ATTENDEES SHALL INCLUDE A CITY REPRESENTATIVE AND THE CONTRACTOR WHO WILL PERFORM THE WORK. "CUT-SHEETS" SHALL BE PROVIDED TO THE CITY AT THIS MEETING FOR ITS REVIEW.
14. CITY ACCEPTANCE OF PLANS DOES NOT RELIEVE THE CONTRACTOR FROM RESPONSIBILITY FOR THE CORRECTION OF ERROR AND OMISSION DISCOVERED DURING CONSTRUCTION. UPON REQUEST OF THE CITY INSPECTOR, THE REQUIRED PLAN REVISIONS SHALL BE PROMPTLY SUBMITTED TO THE CITY ENGINEER FOR REVIEW.
15. ANY REQUIRED RIGHT-OF-WAY OR EASEMENT SHALL BE DEDICATED TO AND ACCEPTED BY THE CITY PRIOR TO COMMENCEMENT OF CONSTRUCTION OF THE IMPROVEMENTS WITHIN THE REQUIRED RIGHT-OF-WAY OR EASEMENT.

GRADING NOTES

1. ALL PROPERTY CORNERS SHALL BE CLEARLY DELINEATED IN THE FIELD PRIOR TO COMMENCEMENT OF ANY CONSTRUCTION/GRADING AND SHOWN ON GRADING PLAN.
2. THE CONTRACTOR SHALL NOTIFY BUILDING AND SAFETY AT LEAST 24 HOURS IN ADVANCE TO REQUEST FINISHED LOT GRADE AND DRAINAGE INSPECTION. THIS INSPECTION MUST BE APPROVED PRIOR TO BUILDING PERMIT FINAL INSPECTION FOR EACH LOT.
3. DRAINAGE ACROSS THE PROPERTY LINE SHALL NOT EXCEED THAT WHICH EXISTED PRIOR TO GRADING. EXCESS OR CONCENTRATED DRAINAGE SHALL BE CONTAINED ON SITE OR DIRECTED TO AN APPROVED DRAINAGE FACILITY.
4. DURING ROUGH GRADING OPERATIONS AND PRIOR TO CONSTRUCTION OF PERMANENT DRAINAGE STRUCTURES, TEMPORARY DRAINAGE CONTROL (BEST MANAGEMENT PRACTICES, BMP'S) SHALL BE PROVIDED TO PREVENT PONDING WATER AND DAMAGE TO ADJACENT PROPERTIES.
5. A REGISTERED CIVIL ENGINEER SHALL PREPARE FINAL COMPACTION REPORT/GRADING REPORT AND IT SHALL BE SUBMITTED FOR REVIEW AND APPROVAL. THE REPORT SHALL ALSO PROVIDE BUILDING FOUNDATION DESIGN PARAMETERS INCLUDING ALLOWABLE SOIL PRESSURES, EXPANSION INDEX AND REMEDIAL MEASURES IF EI>20, WATER SOLUBLE SULFATE CONTENT, CORROSIVELY AND REMEDIAL MEASURES IF NECESSARY.
6. EXCEPT FOR NON-TRACT SINGLE RESIDENTIAL LOT GRADING, THE COMPACTION REPORT SHALL INCLUDE THE SPECIAL INSPECTION VERIFICATIONS LISTED IN TABLE 1704.7 OF THE CALIFORNIA BUILDING CODE.
7. A REGISTERED CIVIL ENGINEER SHALL SUBMIT TO BUILDING AND SAFETY WRITTEN CERTIFICATION OF COMPLETION OF GRADING IN ACCORDANCE WITH THE APPROVED GRADING PLAN PRIOR TO REQUESTING INSPECTION AND ISSUANCE OF THE BUILDING PERMIT. CERTIFICATION SHALL INCLUDE LINE GRADE, SURFACE DRAINAGE, ELEVATION, AND LOCATION OF PERMITTED GRADING ON THE LOT.

PLOTTABLE EASEMENT NOTES FROM PRELIMINARY TITLE REPORT SCHEDULE B EXCEPTIONS

REFERENCE: STEWART TITLE OF CALIFORNIA, INC. JANUARY 10, 2018 UPDATE NO. 1 – AMENDED PRELIMINARY TITLE REPORT WITH AN ORDER NUMBER OF 01180-57512 ISSUED OUT OF THEIR RIVERSIDE, CA OFFICE. TITLE OFFICER IS KATHY CRAWFORD AT (951) 276-2700 EXT. 1326; kcrawfor@stewart.com

(4) A 17.00 FOOT WIDE EASEMENT IN FAVOR OF THE THE CITY OF ONTARIO, A MUNICIPAL CORPORATION FOR RAILROAD PURPOSES PER DOCUMENT RECORDED FEBRUARY 8, 1967 IN BOOK 6769, PAGE 770 OF OFFICIAL RECORDS OF SAN BERNARDINO COUNTY.

(7) A 12.00 FOOT WIDE EASEMENT IN FAVOR OF SUNKIST GROWERS, INC. A CALIFORNIA CORPORATION FOR WASTE WATER PIPELINE AND RIGHTS INCIDENTAL THERETO PER DOCUMENT RECORDED JANUARY 4, 1972 IN BOOK 7828, PAGE 286 OF OFFICIAL RECORDS OF SAN BERNARDINO COUNTY.

(8) A 6.00 FOOT AND 8.00 FOOT WIDE EASEMENT IN FAVOR OF SOUTHERN CALIFORNIA EDISON COMPANY, A CORPORATION, FOR UNDERGROUND ELECTRICAL SUPPLY AND COMMUNICATIONS SYSTEM PUBLIC UTILITIES PURPOSES PER DOCUMENT RECORDED MARCH 23, 1972 IN BOOK 7893, PAGE 143 OF OFFICIAL RECORDS OF SAN BERNARDINO COUNTY:

ENGINEER'S ESTIMATED ONSITE EARTHWORK QUANTITIES

1. RAW CUT (INCLUDES 600 C.Y. BUILDING AND WALL FOOTING EXCAVATION, STORM DRAIN AND UTILITY SPOILS).	3,300 CU. YDS.
2. OVEREXCAVATE DOWN TO BUILDING BOTTOM OF EXCAVATED PLANE (B.E.P.) ELEVATIONS. (19,000 S.F.)	3,700 CU. YDS.
3. OVEREXCAVATE UPPER 24 INCHES UNDER THE HARDSCAPE. (54,000 S.F.)	4,000 CU. YDS.
4. TOTAL CUT	11,000 CU. YDS.
5. RAW FILL	550 CU. YDS.
6. SHRINKAGE OF RAW FILL (NO. 5 ABOVE) USING AN ASSUMED 10% SHRINKAGE LOSS	50 CU. YDS.
7. RECOMPACTION OF OVEREXCAVATED SOIL (NO'S 2 AND 3 ABOVE) USING AN ASSUMED 10% SHRINKAGE LOSS	8,500 CU. YDS.
8. TOTAL COMPACTED FILL	9,100 CU. YDS.
9. ESTIMATED AMOUNT OF SOIL TO EXPORT FROM THE SITE.	1,900 CU. YDS.

NOTE:
THE GRADING CONTRACTOR SHALL BE RESPONSIBLE FOR DETERMINING THEIR OWN EARTHWORK QUANTITIES FOR BIDDING PURPOSES. THE QUANTITIES SHOWN HEREON ARE THE ENGINEER'S ESTIMATE ONLY AND ARE FOR THE SOLE PURPOSE OF DETERMINING PLAN CHECK AND PERMIT FEES.

BASIS OF BEARINGS

THE BEARING OF N89°55'56"W OF THE CENTERLINE OF FRANCIS STREET AS SHOWN ON PARCEL MAP NO. 7943, AS PER MAP FILED AUGUST 17, 1984 IN BOOK 89, PAGES 44 AND 45 OF PARCEL MAPS, RECORDS OF SAN BERNARDINO COUNTY WAS USED AS THE BASIS OF BEARINGS FOR THIS MAP.

SOILS ENGINEER

KLEINFELDER
2280 MARKET STREET, SUITE 300
RIVERSIDE, CA 92501
951-801-3681
AUGUST 25, 2022 REPORT PROJECT NO. 20230123-003A
JEFFREY D. WALLER PE, GE, PRINCIPAL GEOTECHNICAL ENGINEER

WOMP NOTE

A WATER QUALITY MANAGEMENT PLAN (WQMP) WAS PREPARED BY PFEILER AND ASSOCIATES FOR THE CITY OF ONTARIO FOR CITY FIRE TRAINING FACILITY, CITY FILE NUMBER PDEV 14-0215. THIS WQMP WAS APPROVED BY STEVE WILSON IN THE CITY ENGINEERING DEPARTMENT ON DECEMBER 9, 2018. MSL ENGINEERING, INC. HAS PREPARED AN ADDENDUM LETTER DATED TO DOCUMENT CHANGES SHOWN ON THESE CONSTRUCTION DOCUMENTS.

LEGAL DESCRIPTION

REFERENCE: STEWART TITLE OF CALIFORNIA, INC. JANUARY 10, 2018 UPDATE NO. 1 – AMENDED PRELIMINARY TITLE REPORT WITH AN ORDER NUMBER OF 01180-57512 ISSUED OUT OF THEIR RIVERSIDE, CA OFFICE. TITLE OFFICER IS KATHY CRAWFORD AT (951) 276-2700 EXT. 1326; kcrawfor@stewart.com

LOT 28 ACCORDING TO MAP OF THE HOLDSWORTH RANCH, IN THE CITY OF ONTARIO, COUNTY OF SAN BERNARDINO, STATE OF CALIFORNIA, AS SHOWN BY MAP FILED APRIL 11, 1895 IN BOOK 12 PAGE(S) 43, OF MAPS, RECORDS OF SAN BERNARDINO COUNTY, CALIFORNIA;

EXCEPTING THEREFROM ALL URANIUM, THORIUM AND OTHER FISSIONABLE MATERIALS, ALL OIL, GAS, PETROLEUM, ASPHALTUM AND OTHER HYDROCARBON SUBSTANCES AND OTHER MINERALS AND MINERAL ORES OF EVERY KIND AND CHARACTER WHETHER SIMILAR TO THOSE HEREIN SPECIFIED OR NOT, WITHIN OR UNDERLYING, OR WHICH MAY BE PRODUCED FROM SAID LAND, WITHOUT, HOWEVER, THE RIGHT TO USE THE SURFACE AND SUBSURFACE OF SAID LAND TO A DEPTH OF 500 FEET, FOR ANY PURPOSE WHATSOEVER, AS CONVEYED IN THAT CERTAIN DEED FROM SOUTHERN CALIFORNIA EDISON COMPANY TO ASSOCIATED SOUTHERN INVESTMENT COMPANY, DATED DECEMBER 3, 1970 AND RECORDED DECEMBER 21, 1970 IN BOOK 7576, PAGE(S) 714 OF OFFICIAL RECORDS;

ALSO EXCEPTING THEREFROM THAT PORTION CONVEYED TO CHAMP CORPORATION BY CORPORATION GRANT DEED RECORDED JUNE 10, 1980 AS INSTRUMENT NO. 80-132164 OF OFFICIAL RECORDS

APN: 0113-461-10

GEOTECHNICAL ENGINEER OF RECORD

THIS PLAN HAS BEEN REVIEWED BY THE UNDERSIGNED AND IS IN GENERAL CONFORMANCE WITH THE RECOMMENDATIONS CONTAINED IN KLEINFELDER'S GEOTECHNICAL PROJECT DOCUMENT DATED AUGUST 25, 2022. WE MAKE NO REPRESENTATION TO THE ACCURACY OF DIMENSION, MEASUREMENTS, CALCULATIONS, OR ANY PORTION OF THE DESIGN.

KLEINFELDER — PREPARED BY (COMPANY NAME)

AUGUST 25, 2022 — DATE OF REPORT
PROJECT NO. 20230123.003A

REGISTERED PROFESSIONAL ENGINEER — JEFFREY D. WALLER — NO. 2947 — EXP. 9-30-24 — GEOTECHNICAL — STATE OF CALIFORNIA

JEFF WALLER, PE, GE
RCE NO. 73042, RGE NO. 2947

UTILITY STATEMENT

THE UNDERGROUND UTILITIES SHOWN ON THESE PLANS HAVE BEEN LOCATED FROM FIELD SURVEY AND AS BUILT INFORMATION FURNISHED TO THE SURVEYOR BY THE UTILITY COMPANIES. THE SURVEYOR MAKES NO GUARANTEES THAT THE UNDERGROUND UTILITIES SHOWN COMPRISE ALL SUCH UTILITIES IN THE AREA, EITHER IN SERVICE OR ABANDONED. THE SURVEYOR FURTHER DOES NOT WARRANT THAT THE UNDERGROUND UTILITIES SHOWN ARE IN THE EXACT LOCATION INDICATED ALTHOUGH HE DOES CERTIFY THAT THEY ARE LOCATED AS ACCURATELY AS POSSIBLE FROM INFORMATION AVAILABLE. THE SURVEYOR HAS NOT PHYSICALLY LOCATED THE UNDERGROUND UTILITIES.

CITY ENCROACHMENT NOTE

CONTRACTOR TO OBTAIN AN ENCROACHMENT PERMIT FROM THE CITY PRIOR TO COMMENCING WITH ANY WORK WITHIN THE ADJACENT PUBLIC STREETS OR ANY ONSITE EASEMENT.

RECORD OWNERS

CITY OF ONTARIO, A MUNICIPAL CORPORATION.

PRIVATE ENGINEER'S NOTICE TO CONTRACTORS

THE EXISTENCE AND APPROXIMATE LOCATION OF ANY UNDERGROUND UTILITIES OR STRUCTURES SHOWN ON THESE PLANS WERE OBTAINED BY A SEARCH OF AVAILABLE RECORDS. TO THE BEST OF OUR KNOWLEDGE, THERE ARE NO EXISTING UTILITIES OR STRUCTURES EXCEPT AS SHOWN ON THESE PLANS. THE ENGINEER ASSUMES NO LIABILITY AS TO THE EXACT LOCATION OF SAID LINES NOR FOR UTILITIES OR IRRIGATION LINES WHOSE LOCATIONS ARE NOT SHOWN. THE CONTRACTOR SHALL BE SOLE RESPONSIBLE FOR NOTIFYING ALL UTILITY AND IRRIGATION COMPANIES PRIOR TO WORK ON EXCAVATION TO DETERMINE EXACT LOCATION OF ALL LINES AFFECTING THIS WORK, WHETHER OR NOT SHOWN HEREON, AND FOR ANY DAMAGE OR PROTECTION OF THESE LINES.

CONTRACTOR AGREES THAT HE SHALL ASSUME SOLE AND COMPLETE RESPONSIBILITY FOR JOB SITE CONDITIONS DURING THE COURSE OF CONSTRUCTION OF THIS PROJECT, INCLUDING SAFETY OF ALL PERSONS AND PROPERTY; THAT THIS REQUIREMENT SHALL APPLY CONTINUOUSLY AND NOT BE LIMITED TO NORMAL WORKING HOURS; AND THAT THE CONTRACTOR SHALL DEFEND, INDEMNIFY AND HOLD THE CITY, THE OWNER AND THE ENGINEER HARMLESS FROM ANY AND ALL LIABILITY, REAL OR ALLEGED, IN CONNECTION WITH THE PERFORMANCE OF WORK ON THIS PROJECT, EXCEPTING FOR LIABILITY ARISING FROM THE SOLE NEGLIGENCE OF THE OWNER OR THE ENGINEER.

CONSTRUCTION STAKING NOTE

ALL PROPOSED UNDERGROUND AND SURFACE SITE IMPROVEMENTS AND STRUCTURES SHALL HAVE CONSTRUCTION STAKES SET BY A CALIFORNIA LICENSED LAND SURVEYOR PROVIDING HORIZONTAL AND VERTICAL CONTROL FOR THE GENERAL CONTRACTOR TO BUILD FROM.

CITY EXCAVATION AND FILL NOTES

- THE PERSON MAKING OR CAUSING AN EXCAVATION TO BE MADE SHALL PROVIDE WRITTEN NOTICE TO THE OWNERS OF ADJOINING BUILDINGS ADVISING THEM THAT THE EXCAVATION IS TO BE MADE AND THAT THE ADJOINING BUILDING SHOULD BE PROTECTED. SAID NOTIFICATION SHALL BE DELIVERED NOT LESS THAN 10-0 DAYS PRIOR TO THE SCHEDULED STARTING DATE OF THE EXCAVATION. [CBC 3307.1]
- EXCAVATIONS FOR ANY PURPOSE SHALL NOT REDUCE LATERAL SUPPORT FROM ANY FOUNDATION WITHOUT FIST UNDERPINNING OR PROTECTING THE FOUNDATION AGAINST DETRIMENTAL LATERAL OR VERTICAL MOVEMENT, OR BOTH. [CBC 1804.1]
- THE EXCAVATION OUTSIDE THE FOUNDATION SHALL BE BACKFILLED WITH SOIL THAT IS FREE OF ORGANIC MATERIAL, CONSTRUCTION DEBRIS, COBBLES AND BOULDERS, OR A CONTROLLED LOW-STRENGTH MATERIAL (CLSM) [CBC 1804.3]. FOR CLSM REQUIREMENTS SEE ITS DEFINITION IN CHAPTER 2 AND THE PROVISIONS. [CBC 1803.5.9]
- THE FILL MATERIAL SHALL NOT INCLUDE ORGANIC OR OTHER DELETERIOUS MATERIALS. [CBC J107.4]
- NO ROCK OR SIMILAR IRREDUCIBLE MATERIAL GREATER THAN 12", OR AS INDICATED IN THE SOIL REPORT, (WHICHEVER IS SMALLER), IN ANY DIMENSION SHALL BE INCLUDED IN FILLS. [CBC J107.4]
- ALL FILL MATERIAL SHALL BE COMPACTED TO 90% OF MAXIMUM DENSITY AS DETERMINED BY ASTM D1557, MODIFIED PROCTOR, IN LIFTS NOT EXCEEDING 12" IN DEPTH, OR AS INDICATED IN THE SOIL REPORT, WHICHEVER IS MORE CONSERVATIVE. [CBC J 107.5]
- THE GROUND SURFACE SHALL BE PREPARED TO RECEIVE FILL BY REMOVING VEGETATION, TOPSOIL, AND OTHER UNSUITABLE MATERIALS, AND SCARIFYING THE GROUND TO PROVIDE A BOND WITH THE FILL MATERIAL. [CBC J107.2]
- PROVIDE BENCHING WHERE EXISTING GRADE IS AT A SLOPE STEEPER THAN 5 HORIZONTAL TO 1 VERTICAL (20%) AND THE DEPTH OF THE FILL EXCEEDS 5', AND MUST BE IN ACCORDANCE WITH CBC FIGURE J107.3. A KEY SHALL BE PROVIDED THAT IS AT LEAST 10 FEET IN WIDTH AND 2 FEET IN DEPTH. [CBC J107.3]
- THE REQUIRED PERMANENT EROSION CONTROL DEVICES AND/OR METHODS SHALL BE INSTALLED AS SOON AS PRACTICABLE AND PRIOR TO CALLING FOR FINAL INSPECTIONS [CBC J 110.1]

BOUNDARY MONUMENTS AND SURVEY CONTROL POINTS

(A) SET SCRIBED "+" ON TOP OF CONCRETE PARKWAY DRAIN.
(B) FOUND SCRIBED "+" ON CONCRETE PAVEMENT SET PREVIOUSLY.
(C) FOUND MAG NAIL AND FLAGGING IN AC PAVEMENT SET PREVIOUSLY.
(D) FOUND SPIKE AND WASHER STAMPED "LS 4430" PER PARCEL MAP NO. 15007, PMB 183/26-27.
(E) SET SCRIBED CROSS ON TOP OF CONCRETE CURB.
(F) FOUND FOUR PK NAIL AND WASHER STAMPED "LS 6924" 5' STRADDLERS PER CITY OF ONTARIO CENTERLINE TIE NO. 5781.
(G) FOUND PK NAIL FLUSH IN ASPHALT PAVEMENT IN LIEU OF 1" I.P. TAGGED RCE 22877 PER CITY OF ONTARIO CENTERLINE TIE NO. 3553.
(H) SET SCRIBED CROSS ON TOP OF CONCRETE PAVEMENT.
(I) SET PK NAIL AND FLAGGING IN ASPHALT PAVEMENT.

UTILITY CONTACTS

NATURAL GAS
SOUTHERN CALIFORNIA GAS COMPANY
1981 W. LUGONIA AVENUE
REDLANDS, CA 92374
SOLO ANCHONDO
PIPELINE PLANNING ASSISTANT, INLAND REGION
(909) 335-7550
sanchondo@semprautilities.com

DOMESTIC WATER
CITY OF ONTARIO
303 EAST "B" STREET
ONTARIO, CA 91764
SUSAN HUNT
(909) 305-2025
shunt@ci.ontario.ca.us

SEWER
CITY OF ONTARIO
303 EAST "B" STREET
ONTARIO, CA 91764
SUSAN HUNT
(909) 305-2025
shunt@ci.ontario.ca.us

STORM DRAIN
CITY OF ONTARIO
303 EAST "B" STREET
ONTARIO, CA 91764
SUSAN HUNT
(909) 305-2025
shunt@ci.ontario.ca.us

ELECTRICAL
SOUTHERN CALIFORNIA EDISON
1351 E. FRANCIS STREET
ONTARIO, CA 91761
SCE PLANNING SUPERVISOR
(909) 930-8431

TELEPHONE
FRONTIER COMMUNICATIONS
1400 E. PHILLIPS BOULEVARD
POMONA, CA 91766
KRISTINA DIMON
(909) 469-6346
kristina.dimon@ftr.com

CABLE TELEVISION
SPECTRUM
1500 AUTO CENTER DRIVE
ONTARIO, CA 91761
JAMES MOCK
CONSTRUCTION MANAGER – ZONE 9
(909) 634-3224
james.mock@charter.com

NOTICE TO CONTRACTORS

CONSTRUCTION CONTRACTOR AGREES THAT IN ACCORDANCE WITH GENERALLY ACCEPTED CONSTRUCTION PRACTICES, CONSTRUCTION CONTRACTOR WILL BE REQUIRED TO ASSUME SOLE RESPONSIBILITY FOR JOB SITE CONDITIONS DURING THE COURSE OF CONSTRUCTION OF THE PROJECT, INCLUDING SAFETY OF ALL PERSONS AND PROPERTY; THAT THIS REQUIREMENT SHALL BE MADE TO APPLY CONTINUOUSLY AND NOT BE LIMITED TO NORMAL WORKING HOURS, AND CONSTRUCTION CONTRACTOR FURTHER AGREES TO DEFEND, INDEMNIFY AND HOLD DESIGN PROFESSIONAL HARMLESS FROM ANY AND ALL LIABILITY, REAL OR ALLEGED, IN CONNECTION WITH THE PERFORMANCE OF WORK ON THIS PROJECT, EXCEPTING LIABILITY ARISING FROM THE SOLE NEGLIGENCE OF DESIGN PROFESSIONAL. ALL CONTRACTORS AND SUBCONTRACTORS PERFORMING WORK SHOWN ON OR RELATED TO THESE PLANS SHALL CONDUCT THEIR OPERATIONS SO THAT EMPLOYEES ARE PROVIDED A SAFE PLACE TO WORK AND THE PUBLIC IS PROTECTED. ALL CONTRACTORS AND SUBCONTRACTORS SHALL COMPLY WITH THE "OCCUPATIONAL SAFETY AND HEALTH REGULATIONS" OF THE U.S. DEPARTMENT OF INDUSTRIAL RELATIONS "CONSTRUCTION SAFETY ORDERS." THE CIVIL ENGINEER SHALL NOT BE RESPONSIBLE IN ANY WAY FOR THE CONTRACTOR OR SUBCONTRACTORS' COMPLIANCE WITH SAID REGULATIONS AND ORDERS.

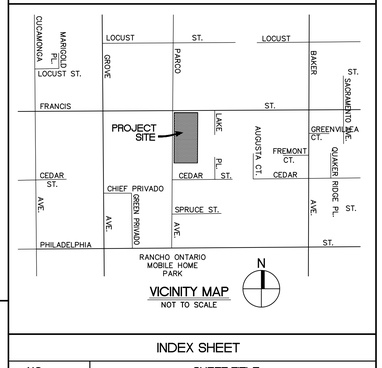

VICINITY MAP
NOT TO SCALE

INDEX SHEET

NO.	SHEET TITLE
(C1) 1 of 18	TITLE SHEET
(C2) 2 of 18	DETAILS AND SECTIONS
(C3.0) 3 of 18	RECORD TOPOGRAPHY SURVEY MAP-NORTH
(C3.1) 4 of 18	RECORD TOPOGRAPHY SURVEY MAP-SOUTH
(C4.0) 5 of 18	DEMOLITION PLAN-NORTH
(C4.1) 6 of 18	DEMOLITION PLAN-SOUTH
(C5.0) 7 of 18	GRADING AND DRAINAGE PLAN-NORTH
(C5.1) 8 of 18	GRADING AND DRAINAGE PLAN-SOUTH
(C6.0) 9 of 18	STORM DRAIN AND UTILITY PLAN-NORTH
(C6.1) 10 of 18	STORM DRAIN AND UTILITY PLAN-SOUTH
(C7.0) 11 of 18	EROSION CONTROL PLAN TITLE SHEET
(C7.1) 12 of 18	EROSION CONTROL PLAN-NORTH
(C7.2) 13 of 18	EROSION CONTROL PLAN-SOUTH
(C8.0) 14 of 18	WQMP SITE PLAN-NORTH
(C8.1) 15 of 18	WQMP SITE PLAN-SOUTH
(C8.2) 16 of 18	WQMP DETAIL SHEET
(C9.0) 17 of 18	REFERENCE DETAILS
(C9.1) 18 of 18	REFERENCE DETAILS

LEGEND

TC	TOP OF CONCRETE CURB
FS	FINISHED CONCRETE SURFACE
AC	ASPHALTIC CEMENT PAVEMENT
FL	FLOW LINE
FG	FINISHED GRADE OF DIRT
FF	FINISHED FLOOR OF BUILDING
BS	BACK OF SIDEWALK
EG	EDGE OF GUTTER
INV.	INVERT
GB	GRADE BREAK
HP	HIGH POINT
TB	TOP OF BERM
EP	EDGE OF A.C. PAVEMENT
ℙ	PROPERTY LINE
℄	CENTER LINE
TW	TOP OF WALL
TRW	TOP OF RETAINING WALL
TF	TOP OF FOOTING
TOG	TOP OF DRAIN BOX GRATE
	EDGE OF A.C. PAVEMENT
	CONCENTRATED FLOW LINE
	SHEET FLOW DRAINAGE
T/HDWL.	TOP OF HEADWALL
(02.20)	EXISTING ELEVATION
—(02)—	EXISTING CONTOUR ELEVATION
02.20	PROPOSED ELEVATION
—02—	PROPOSED CONTOUR ELEVATION
—R—	RIDGE LINE
ID	INSIDE DIAMETER
OD	OUTSIDE DIAMETER
—G—	GAS MAIN
—W—	WATER MAIN
—S—	SANITARY SEWER
—E—	UNDERGROUND ELECTRICAL CONDUIT
—T—	UNDERGROUND TELEPHONE CONDUIT
—SD—	STORM DRAIN
—CTV—	UNDERGROUND CABLE TELEVISION CONDUIT
—TSC—	TRAFFIC SIGNAL CONDUIT
—SLC—	STREET LIGHT CONDUIT
WV	WATER VALVE
WM	WATER METER
FH	FIRE HYDRANT
GM	GAS METER
SMH	SANITARY SEWER MANHOLE
PP	POWER POLE
SL	STREET LIGHT
SCO	SEWER CLEANOUT
SDCO	STORM DRAIN CLEANOUT
IP	IRON PIPE
LP	LIGHT POLE
SDMH	STORM DRAIN MANHOLE
RCP	REINFORCED CONCRETE PIPE
CLF	CHAIN LINK FENCE
ICV	IRRIGATION CONTROL VALVE
ICB	IRRIGATION CONTROL BOX
GP	GUARD POST
WIF	WROUGHT IRON FENCE
ROH	BUILDING ROOF OVERHANG
TSP	TRAFFIC SIGNAL POLE
PB	PULL BOX
EPB	ELECTRICAL PULL BOX
PM	ELECTRIC PAD MOUNT TRANSFORMER
TPB	TELEPHONE PULL BOX
TMH	TELEPHONE MANHOLE
TSPB	TRAFFIC SIGNAL PULL BOX
TS PED.	TRAFFIC SIGNAL PEDESTAL
PA	LANDSCAPED PLANTER AREA
BFD	BACKFLOW PREVENTION DEVICE
TE	TRASH ENCLOSURE
CB	CATCH BASIN
RD	ROOF DRAIN
PRS	PARKING REGULATION SIGN
SLS	SPEED LIMIT SIGN
DS	DIRECTIONAL SIGN
FO	FIBEROPTICS
TR	PORTABLE TRASH RECEPTACLE
FSR	FIRE SPRINKLER RISER
CP	CONTAINMENT PIPE
MW	MONITORING WELL
RW	RECLAIMED WATER
RWM	RECLAIMED WATER METER
TS	TOP OF SIGN
DG	DECOMPOSED GRANITE

Underground Service Alert
Call: Toll Free
811
TWO WORKING DAYS BEFORE YOU DIG

REVISIONS

MARK	DATE	BY	APPROVED/RCE NO.

DESIGNED BY ____ DATE ____
DRAWN BY ____ DATE ____
REVIEWED BY ____ DATE ____

CITY OF ONTARIO

BENCH MARK NO. P-22-1 ELEV. 876.791 FEET
LOCATION: DATUM: N.A.V.D. 88, 2017 ADJUSTMENT 2.5 INCH BRASS DISC STAMPED "CITY OF ONTARIO P-22-1" SET ON CONCRETE SLAB OF BACKFLOW DEVICE FOR AIRPORT SUPER STORAGE AT 1728 GROVE AVENUE.

MSL ENGINEERING, INC.
CIVIL ENGINEERS AND LAND SURVEYORS SPECIALIZING IN SITE DEVELOPMENT
301 NORTH SAN DIMAS AVE., SAN DIMAS, CA. 91773
(909) 305-2395 FAX (909) 305-2397
MARK S. LAMOUREUX R.C.E. 38382 08-10-23 DATE
REGISTERED PROFESSIONAL ENGINEER — MARK S. LAMOUREUX — No. 38382 — CIVIL — STATE OF CALIFORNIA

ONTARIO FIRE DEPARTMENT ADMINISTRATION BUILDING
TITLE SHEET
PDEV23-001 - E202207973 – PC1 NCP (B202207973 ADMIN BLD)

SHEET 1 OF 18
CONTRACT ____
ACCOUNT ____
DWG. NO. ____

JN 2023-2023 Clgdpls

SHEET 1 OF 18

PBK
RANCHO CUCAMONGA
8163 ROCHESTER AVENUE, SUITE 100
RANCHO CUCAMONGA, CA 91730
909-987-0909 P

ONTARIO FIRE DEPARTMENT ADMINISTRATION BUILDING
CITY OF ONTARIO
1420 E. FRANCIS STREET., ONTARIO, CA

LICENSED

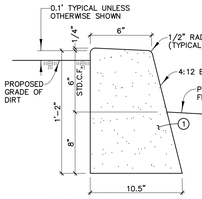

NOTE: CONTROL JOINTS TO BE A MINIMUM 1/4" BITUMINOUS FELT AT 24' O.C. MAXIMUM AND AT BEGINNING AND END OF CURVES PER ARCHITECTURAL LAYOUT.

NOTE: WEAKENED PLANE JOINTS AT 10 FOOT INTERVALS AND MAY BE SAWCUT

DETAIL "A" (1)(2)(3)
6" PLANTER CURB
NOT TO SCALE

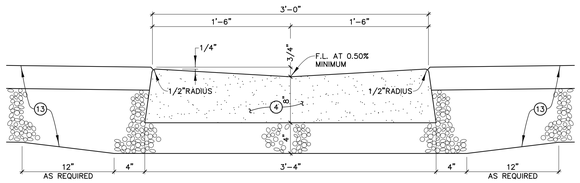

NOTE: CONTROL JOINTS TO BE A MINIMUM 1/4" BITUMINOUS FELT AT 24' O.C. MAXIMUM AND AT BEGINNING AND END OF CURVES PER DETAIL ARCHITECTURAL LAYOUT.

NOTE: WEAKENED PLANE JOINTS AT 10 FOOT INTERVALS AND MAY BE SAWCUT

DETAIL "C" (4)
3FT. WIDE DRAINAGE SWALE
NOT TO SCALE

1. INSTALL 4" DIAMETER STAINLESS STEEL ENVIROMARKER DISC, MANUFACTURED BY ALMETEK INDUSTRIES, INC. (908-850-9700), OR EQUIVALENT.
2. APPLY MARKER PER MANUFACTURER'S THEFT PROOF SUB-SURFACE MOUNT INSTALLATION RECOMMENDATIONS, WITH RIVET FASTENER.
3. LOGO AND COLOR OF DISC TO BE PRE-APPROVED BY OWNER PRIOR TO ORDERING.

DETAIL "F" (12)
STORM DRAIN SIGNAGE
NOT TO SCALE

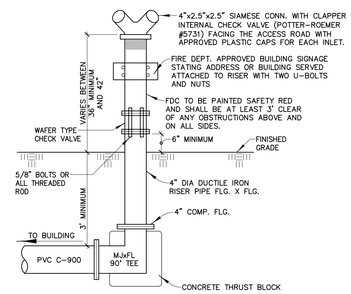

DETAIL "J" (55)
FIRE DEPT. CONNECTION DETAIL

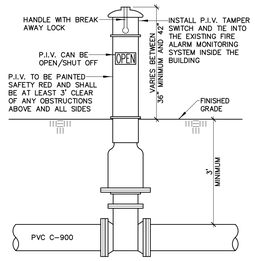

NOTE: PIV SHALL BE LOCATED NOT LESS THAN 40 FEET FROM THE BUILDING

DETAIL "K" (56)
POST INDICATOR VALVE DETAIL
NOT TO SCALE

Part # GISB-24-24-12

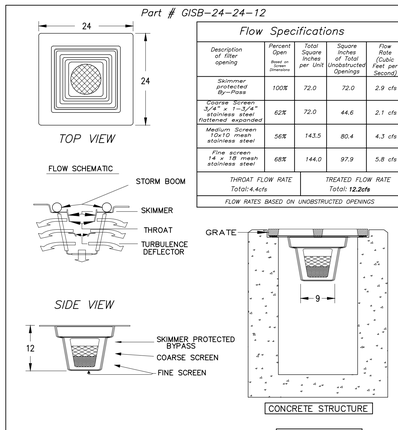

Flow Specifications				
Description of filter opening	Percent Open (Based on Screen Dimensions)	Total Square Inches per Unit	Square Inches of Total Unobstructed Openings	Flow Rate (Cubic Feet per Second)
Skimmer protected By-Pass	100%	72.0	72.0	2.9 cfs
Coarse Screen 3/4" x 1-3/4" stainless steel flattened expanded	62%	72.0	44.6	2.1 cfs
Medium Screen 10x10 mesh stainless steel	56%	143.5	80.4	4.3 cfs
Fine screen 14 x 18 mesh stainless steel	68%	144.0	97.9	5.8 cfs
THROAT FLOW RATE Total: 4.4cfs		TREATED FLOW RATE Total: 12.2cfs		
FLOW RATES BASED ON UNOBSTRUCTED OPENINGS				

BOX MANUFACTURED FROM MARINE GRADE FIBERGLASS & GEL COATED FOR UV PROTECTION

5 YEAR MANUFACTURERS WARRANTY

PATENTED

ALL FILTER SCREENS ARE STAINLESS STEEL

REMOVE GRATE INSERT GISB REINSTALL GRATE

EXCLUSIVE CALIFORNIA DISTRIBUTOR: BIO CLEAN ENVIRONMENTAL SERVICE 5935 DARWIN COURT, CARLSBAD, CA 92009 TEL: 760-433-7640 FAX: 760-433-3176 Email: info@biocleanenvironmental.net

SUNTREE QUALITY PRODUCTS ARE BUILT FOR EASY CLEANING AND ARE DESIGNED TO BE PERMANENT INFRASTRUCTURE AND SHOULD LAST FOR DECADES.

SUNTREE TECHNOLOGIES 798 CLEARLAKE RD. SUITE #2 COCOA, FL 32922 TEL: 321-637-7552 FAX 321-637-7554

GRATE INLET SKIMMER BOX GSB-24-24-12

DATE: 10/4/12 SCALE: SF = 15 DRAFTER: N.R.B. UNITS =INCHES

DETAIL "E" (11)
BIOCLEAN DRAIN BOX FILTER
NOT TO SCALE

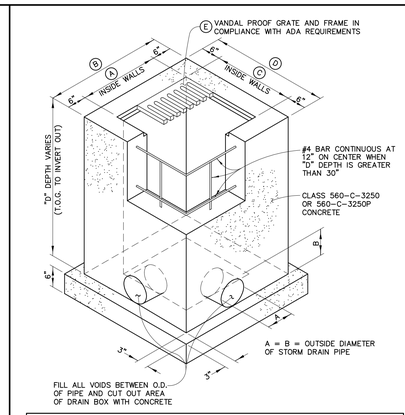

DRAIN BOX NOTES					
BOX SIZE	(A)	(B)	(C)	(D)	(E)
24"-INCH BY 24"-INCH (10)	22"	34"	22"	34"	ALHAMBRA FOUNDRY CO., LTD. OR EQUAL [NARROW SLOT, 0.5" WIDE (MAX.) OPENINGS] 24"x24" GALVANIZED CAST IRON GRATE AND FRAME AND RATED FOR TRAFFIC CONDITIONS. SECURE GRATE AGAINST THEFT.
24"-INCH BY 36"-INCH (17)	22"	34"	34"	46"	ALHAMBRA FOUNDRY CO., LTD. OR EQUAL [NARROW SLOT, 0.5" WIDE (MAX.) OPENINGS] 24"x36" GALVANIZED CAST IRON GRATE AND FRAME AND RATED FOR TRAFFIC CONDITIONS. SECURE GRATE AGAINST THEFT.

DETAIL "D" (10)(17)
CONCRETE DRAIN BOX
NOT TO SCALE

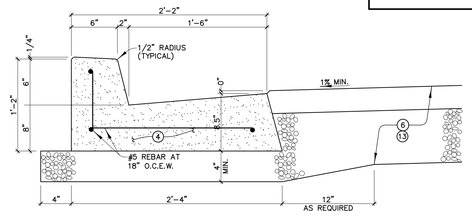

NOTE: CONTROL JOINTS TO BE A MINIMUM 1/4" BITUMINOUS FELT AT 24' O.C. MAXIMUM AND AT BEGINNING AND END OF CURVES

NOTE: WEAKENED PLANE JOINTS AT 10 FOOT INTERVALS AND MAY BE SAWCUT

NOTE: INSTALL REBAR AND DOWELS AS DESCRIBED IN CONSTRUCTION NOTE (6) SHOWN ON SHEET 6

DETAIL "B" (4)
6" CURB WITH 18" GUTTER
NOT TO SCALE

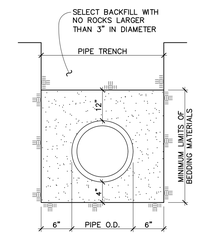

NOTES:

(1) FOR TRENCHES DEEPER THAN 4 FEET, FOLLOW THE REQUIREMENTS OF THE EARTHWORK SPECIFICATIONS.

(2) BEDDING MATERIAL SHALL CONSIST OF SAND, GRAVEL, CRUSHED AGGREGATE OR NATIVE FREE-DRAINING GRANULAR MATERIAL HAVING A SAND EQUIVALENT NOT LESS THAN 30 AND A MAXIMUM GRAVEL SIZE OF 1/4."

(3) NEW FIRE SERVICE LINES SHALL HAVE A MINIMUM COVER OF 30" IN NON-TRAFFIC AREAS AND A MINIMUM COVER OF 36" IN TRAFFIC AREAS PER N.F.P.A. 24 SECTION 8.1

(4) ALL EXISTING SURFACES OF PAVING, CURBS, SIDEWALK AND SOFTSCAPE SHALL BE REPAVED OR RESTORED TO A CONDITION WHICH EXISTED PRIOR TO DEMOLITION AS REQUIRED FOR NEW UTILITY CONSTRUCION.

(5) EXISTING SOILS ARE CONSIDERED TO BE MILDLY CORROSIVE TO BURIED FERROUS-BASED METAL PIPE. FOLLOW RECOMMENDATIONS IN THE JOB SPECIFICATIONS FOR THE INSTALLATION OF PROTECTIVE COATINGS ON METAL PIPES.

DETAIL "G"
STORM DRAIN/UTILITY TRENCH DETAIL
NOT TO SCALE

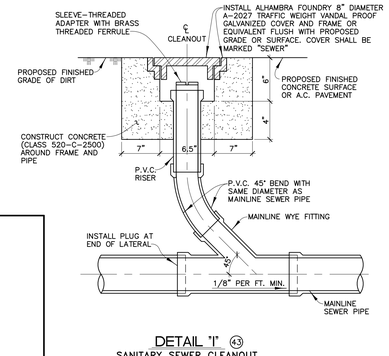

DETAIL "I" (43)
SANITARY SEWER CLEANOUT
NOT TO SCALE

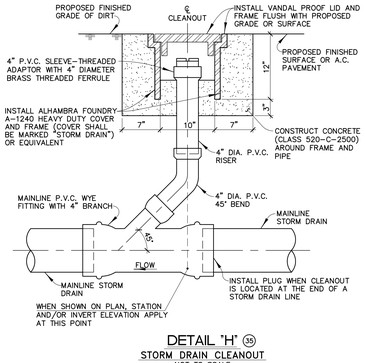

DETAIL "H" (55)
STORM DRAIN CLEANOUT
NOT TO SCALE

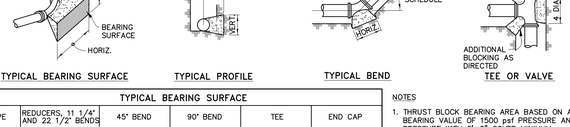

TYPICAL BEARING SURFACE | TYPICAL PROFILE | TYPICAL BEND | TEE OR VALVE

TYPICAL BEARING SURFACE										
PIPE	REDUCERS, 11 1/4° AND 22 1/2° BENDS		45° BEND		90° BEND		TEE		END CAP	
SIZE	HORIZ.	VERT.	HORIZ.	VERT.	HORIZ.	VERT.	HORIZ.	VERT.	HORIZ.	VERT.
3" AND 4"	1'-6"	0'-9"	1'-6"	1'-0"	2'-3"	1'-3"	1'-6"	1'-0"	1'-6"	1'-6"
6"	2'-6"	1'-0"	3'-6"	1'-6"	4'-6"	2'-3"	4'-0"	2'-0"	2'-0"	2'-0"
8"	3'-0"	1'-6"	4'-3"	2'-3"	5'-6"	3'-0"	5'-0"	2'-6"	4'-6"	1'-6"

NOTES

1. THRUST BLOCK BEARING AREA BASED ON ALLOWABLE SOIL BEARING VALUE OF 1500 psf PRESSURE AND 225 psi LINE PRESSURE WITH 3'-0" COVER MINIMUM.
   FOR BEARING = 1000 psf, 1.5 x AREA SHOWN
   FOR BEARING = 500 psf, 3.0 x AREA SHOWN
2. ALL THRUST BLOCKS SHALL BE CLASS "B" CONCRETE AND PLACED AGAINST UNDISTURBED SOIL.
3. PRIVATE ON-SITE THRUST BLOCKS WITH MINIMUM REQUIREMENTS AS OUTLINED IN N.F.P.A. 24.

DETAIL "L" (61)
ONSITE THRUST BLOCK
(WHEN LOCAL STANDARD IS NOT AVAILABLE)
NOT TO SCALE

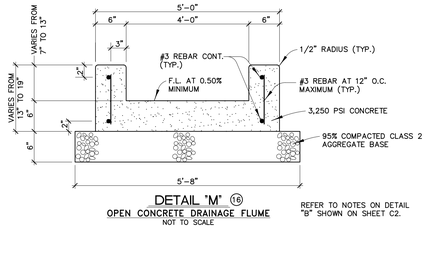

DETAIL "M" (16)
OPEN CONCRETE DRAINAGE FLUME
NOT TO SCALE

REFER TO NOTES ON DETAIL "B" SHOWN ON SHEET C2.

WDID# N/A, REGION 8 MS4 CIP

REVISIONS			
MARK	DATE	BY	APPROVED/RCE NO.

DESIGNED BY ____ DATE ____
DRAWN BY ____ DATE ____
REVIEWED BY ____ DATE ____

CITY OF ONTARIO

BENCH MARK NO. P-22-1 ELEV. 876.791 FEET
LOCATION: DATUM: N.A.V.D. 88, 2017 ADJUSTMENT
2.5 INCH BRASS DISC STAMPED "CITY OF ONTARIO P-22-1" SET ON CONCRETE SLAB OF BACKFLOW DEVICE FOR AIRPORT SUPER STORAGE AT 1728 GROVE AVENUE.

MSL ENGINEERING, INC.
CIVIL ENGINEERS AND LAND SURVEYORS SPECIALIZING IN SITE DEVELOPMENT
301 NORTH SAN DIMAS AVE., SAN DIMAS, CA. 91773
(909) 305-2395 FAX (909) 305-2397
MARK S. LAMOUREUX R.C.E. 38382 01-29-24 DATE

REGISTERED PROFESSIONAL ENGINEER MARK S. LAMOUREUX No. 38382 CIVIL STATE OF CALIFORNIA

ONTARIO FIRE DEPARTMENT ADMINISTRATION BUILDING
DETAILS AND SECTIONS

PDEV23-001 - E202207973 – PC1 NCP (B202207973 ADMIN BLD)

SHEET 2 OF 18
CONTRACT ____
ACCOUNT ____
DWG. NO. ____

JN 2023-2023 C2das

Underground Service Alert
DIG ALERT
Call: Toll Free
811
TWO WORKING DAYS BEFORE YOU DIG

SHEET 2 OF 18

PBK
RANCHO CUCAMONGA
8163 ROCHESTER AVENUE, SUITE 100
RANCHO CUCAMONGA, CA 91730
909-987-0909 P

ONTARIO FIRE DEPARTMENT ADMINISTRATION BUILDING
CITY OF ONTARIO
1420 E. FRANCIS STREET., ONTARIO, CA

LICENSED ARCHITECT KELLEY NEEDHAM C-19064 No.Exp 03/31/25 STATE OF CALIFORNIA

REGISTERED PROFESSIONAL ENGINEER MARK S. LAMOUREUX No. 38382 CIVIL STATE OF CALIFORNIA

CONSULTANT
MSL ENGINEERING, INC.
CIVIL ENGINEERS AND LAND SURVEYORS
SPECIALIZING IN SITE DEVELOPMENT
301 N. SAN DIMAS AVENUE
SAN DIMAS, CA. 91773
(909) 305-2395 FAX (909) 305-2397
MARK S. LAMOUREUX (R.C.E. 38382) 01-29-24 DATE

NO	DATE	BY	DESCRIPTION

REVISIONS

DRAWN: T.B.P.	CHECKED: M.S.L.
DATE: 01-29-24	SCALE: 1"=20'
PROJECT NUMBER: 2011701	

DETAILS AND SECTIONS

DRAWING NUMBER: C2

JN 2023-2023 C2das
BID SET 03/01/24

U:\2011\2011 C3 2011 PM\ MSL ENGINEERING, INC.\ CAL

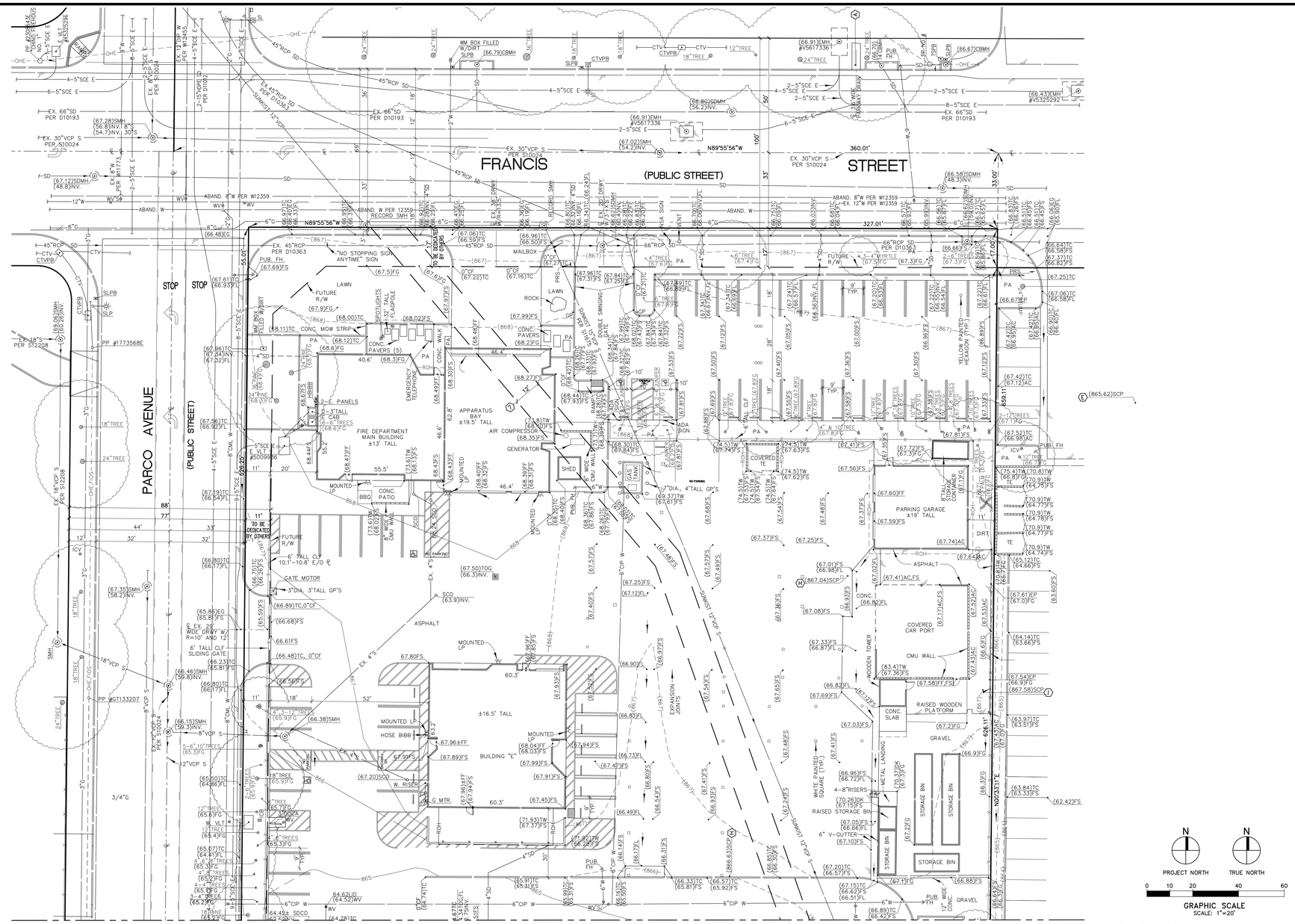

LEGEND

TC	TOP OF CONCRETE CURB
FS	FINISHED CONCRETE SURFACE
AC	ASPHALTIC CEMENT PAVEMENT
FL	FLOW LINE
FG	FINISHED GRADE OF DIRT
FF	FINISHED FLOOR OF BUILDING
BS	BACK OF SIDEWALK
EG	EDGE OF GUTTER
INV.	INVERT
GB	GRADE BREAK
HP	HIGH POINT
TB	TOP OF BERM
EP	EDGE OF A.C. PAVEMENT
℄	PROPERTY LINE
℄	CENTER LINE
TW	TOP OF WALL
TRW	TOP OF RETAINING WALL
TF	TOP OF FOOTING
TOG	TOP OF DRAIN BOX GRATE
	EDGE OF A.C. PAVEMENT
	CONCENTRATED FLOW LINE
	SHEET FLOW DRAINAGE
T/HDWL.	TOP OF HEADWALL
(02.20)	EXISTING ELEVATION
(-02)-	EXISTING CONTOUR ELEVATION
02.20	PROPOSED ELEVATION
—02—	PROPOSED CONTOUR ELEVATION
— R —	RIDGE LINE
ID	INSIDE DIAMETER
OD	OUTSIDE DIAMETER
—G—	GAS MAIN
—W—	WATER MAIN
—S—	SANITARY SEWER
—E—	UNDERGROUND ELECTRICAL CONDUIT
—T—	UNDERGROUND TELEPHONE CONDUIT
—SD—	STORM DRAIN
—CTV—	UNDERGROUND CABLE TELEVISION CONDUIT
—TSC—	TRAFFIC SIGNAL CONDUIT
—SLC—	STREET LIGHT CONDUIT
WV	WATER VALVE
WM	WATER METER
FH	FIRE HYDRANT
GM	GAS METER
SMH	SANITARY SEWER MANHOLE
PP	POWER POLE
SL	STREET LIGHT
SCO	SEWER CLEANOUT
SDCO	STORM DRAIN CLEANOUT
IP	IRON PIPE
LP	LIGHT POLE
SDMH	STORM DRAIN MANHOLE
RCP	REINFORCED CONCRETE PIPE
CLF	CHAIN LINK FENCE
ICV	IRRIGATION CONTROL VALVE
ICB	IRRIGATION CONTROL BOX
GP	GUARD POST
WF	WROUGHT IRON FENCE
ROH	BUILDING ROOF OVERHANG
TSP	TRAFFIC SIGNAL POLE
PB	PULL BOX
EPB	ELECTRICAL PULL BOX
PM	ELECTRIC PAD MOUNT TRANSFORMER
TPB	TELEPHONE PULL BOX
TMH	TELEPHONE MANHOLE
TSPB	TRAFFIC SIGNAL PULL BOX
TS PED.	TRAFFIC SIGNAL PEDESTAL
PA	LANDSCAPED PLANTER AREA
BFD	BACKFLOW PREVENTION DEVICE
TE	TRASH ENCLOSURE
CB	CATCH BASIN
RD	ROOF DRAIN
PRS	PARKING REGULATION SIGN
SLS	SPEED LIMIT SIGN
DS	DIRECTIONAL SIGN
FO	FIBEROPTICS
TR	PORTABLE TRASH RECEPTACLE
FSR	FIRE SPRINKLER RISER
CP	CONTAINMENT PIPE
MW	MONITORING WELL
RW	RECLAIMED WATER
RWM	RECLAIMED WATER METER
TS	TOP OF SIGN
DG	DECOMPOSED GRANITE

N — PROJECT NORTH
N — TRUE NORTH

0 10 20 40 60
GRAPHIC SCALE
SCALE: 1"=20'

Underground Service Alert
Call: Toll Free
811
TWO WORKING DAYS BEFORE YOU DIG

WDID# N/A, REGION 8 MS4 CIP

REVISIONS			
MARK	DATE	BY	APPROVED/RCE NO.

DESIGNED BY ____ DATE ____
DRAWN BY ____ DATE ____
REVIEWED BY ____ DATE ____

CITY OF ONTARIO

BENCH MARK NO. P-22-1 ELEV. 876.791 FEET
LOCATION: DATUM: N.A.V.D. 88, 2017 ADJUSTMENT
2.5 INCH BRASS DISC STAMPED "CITY OF ONTARIO P-22-1" SET ON CONCRETE SLAB OF BACKFLOW DEVICE FOR AIRPORT SUPER STORAGE AT 1728 GROVE AVENUE.

MSL ENGINEERING, INC.
CIVIL ENGINEERS AND LAND SURVEYORS SPECIALIZING IN SITE DEVELOPMENT
301 NORTH SAN DIMAS AVE., SAN DIMAS, CA. 91773
(909) 305-2395 FAX (909) 305-2397
MARK S. LAMOUREUX R.C.E. 38382 01-29-24 DATE

REGISTERED PROFESSIONAL ENGINEER MARK S. LAMOUREUX No. 38382 CIVIL STATE OF CALIFORNIA

ONTARIO FIRE DEPARTMENT ADMINISTRATION BUILDING
RECORD TOPOGRAPHY SURVEY MAP-NORTH
PDEV23-001 - E202207973 – PC1 NCP (B202207973 ADMIN BLD)

SHEET 3 OF 18
CONTRACT ____
ACCOUNT ____
DWG. NO. ____

JN 2023-2023 C3.0-C3.1rtem

PBK
RANCHO CUCAMONGA
8163 ROCHESTER AVENUE, SUITE 100
RANCHO CUCAMONGA, CA 91730
909-987-0909 P

ONTARIO FIRE DEPARTMENT ADMINISTRATION BUILDING
CITY OF ONTARIO
1420 E. FRANCIS STREET., ONTARIO, CA

LICENSED ARCHITECT KELLEY NEEDHAM C-19064 Re-Int 03/31/23 STATE OF CALIFORNIA

REGISTERED PROFESSIONAL ENGINEER MARK S. LAMOUREUX No. 38382 CIVIL STATE OF CALIFORNIA

CONSULTANT
MSL ENGINEERING, INC.
CIVIL ENGINEERS AND LAND SURVEYORS
SPECIALIZING IN SITE DEVELOPMENT
301 N. SAN DIMAS AVENUE
SAN DIMAS, CA. 91773
(909) 305-2395 FAX (909) 305-2397
MARK S. LAMOUREUX (R.C.E. 38382) 01-29-24 DATE

NO	DATE	BY	DESCRIPTION

REVISIONS

DRAWN: T.B.P.	CHECKED: M.S.L.
DATE: 01-29-24	SCALE: 1"=20'
PROJECT NUMBER: 2011701	

RECORD TOPOGRAPHY SURVEY MAP-NORTH

DRAWING NUMBER: C3.0

JN 2023-2023 C3.0-C3.1rtem
BID SET 03/01/24

PBK
RANCHO CUCAMONGA
8163 ROCHESTER AVENUE, SUITE 100
RANCHO CUCAMONGA, CA 91730
909-987-0909 P

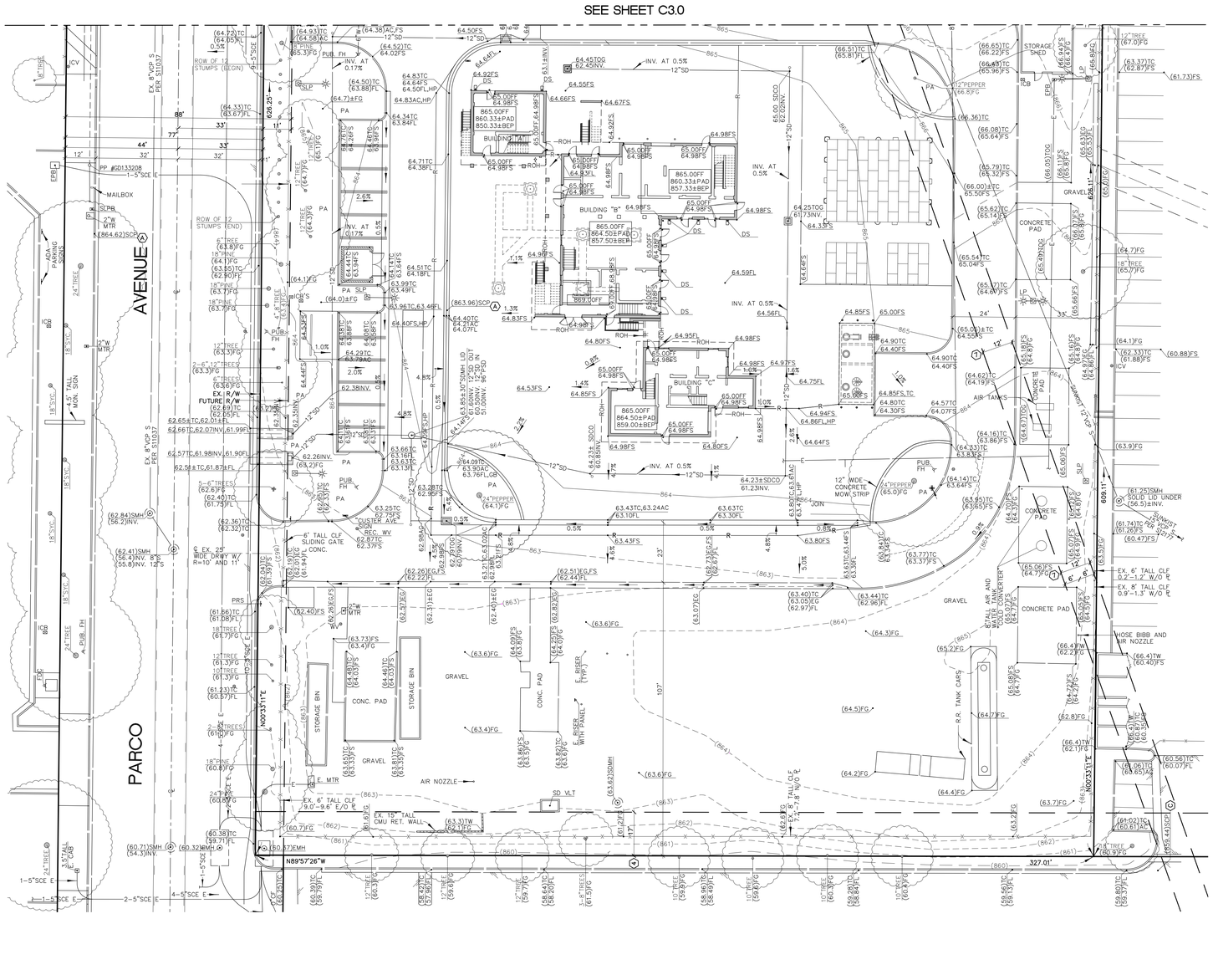

LEGEND

TC	TOP OF CONCRETE CURB
FS	FINISHED CONCRETE SURFACE
AC	ASPHALTIC CEMENT PAVEMENT
FL	FLOW LINE
FG	FINISHED GRADE OF DIRT
FF	FINISHED FLOOR OF BUILDING
BS	BACK OF SIDEWALK
EG	EDGE OF GUTTER
INV.	INVERT
GB	GRADE BREAK
HP	HIGH POINT
TB	TOP OF BERM
EP	EDGE OF A.C. PAVEMENT
PL	PROPERTY LINE
℄	CENTER LINE
TW	TOP OF WALL
TRW	TOP OF RETAINING WALL
TF	TOP OF FOOTING
TOG	TOP OF DRAIN BOX GRATE
	EDGE OF A.C. PAVEMENT
	CONCENTRATED FLOW LINE
	SHEET FLOW DRAINAGE
T/HDWL.	TOP OF HEADWALL
(02.20)	EXISTING ELEVATION
—(02)—	EXISTING CONTOUR ELEVATION
02.20	PROPOSED ELEVATION
—02—	PROPOSED CONTOUR ELEVATION
— R —	RIDGE LINE
ID	INSIDE DIAMETER
OD	OUTSIDE DIAMETER
—G—	GAS MAIN
—W—	WATER MAIN
—S—	SANITARY SEWER
—E—	UNDERGROUND ELECTRICAL CONDUIT
—T—	UNDERGROUND TELEPHONE CONDUIT
—SD—	STORM DRAIN
—CTV—	UNDERGROUND CABLE TELEVISION CONDUIT
—TSC—	TRAFFIC SIGNAL CONDUIT
—SLC—	STREET LIGHT CONDUIT
WV	WATER VALVE
WM	WATER METER
FH	FIRE HYDRANT
GM	GAS METER
SMH	SANITARY SEWER MANHOLE
PP	POWER POLE
SL	STREET LIGHT
SCO	SEWER CLEANOUT
SDCO	STORM DRAIN CLEANOUT
IP	IRON PIPE
LP	LIGHT POLE
SDMH	STORM DRAIN MANHOLE
RCP	REINFORCED CONCRETE PIPE
CLF	CHAIN LINK FENCE
ICV	IRRIGATION CONTROL VALVE
ICB	IRRIGATION CONTROL BOX
GP	GUARD POST
WIF	WROUGHT IRON FENCE
ROH	BUILDING ROOF OVERHANG
TSP	TRAFFIC SIGNAL POLE
PB	PULL BOX
EPB	ELECTRICAL PULL BOX
PM	ELECTRIC PAD MOUNT TRANSFORMER
TPB	TELEPHONE PULL BOX
TMH	TELEPHONE MANHOLE
TSPB	TRAFFIC SIGNAL PULL BOX
TS PED.	TRAFFIC SIGNAL PEDESTAL
PA	LANDSCAPED PLANTER AREA
BFD	BACKFLOW PREVENTION DEVICE
TE	TRASH ENCLOSURE
CB	CATCH BASIN
RD	ROOF DRAIN
PRS	PARKING REGULATION SIGN
SLS	SPEED LIMIT SIGN
DS	DIRECTIONAL SIGN
FO	FIBEROPTICS
TR	PORTABLE TRASH RECEPTACLE
FSR	FIRE SPRINKLER RISER
CP	CONTAINMENT PIPE
MW	MONITORING WELL
RW	RECLAIMED WATER
RWM	RECLAIMED WATER METER
TS	TOP OF SIGN
DG	DECOMPOSED GRANITE

N — PROJECT NORTH
N — TRUE NORTH

0 10 20 40 60
GRAPHIC SCALE
SCALE: 1"=20'

Underground Service Alert
Call: Toll Free
811
TWO WORKING DAYS BEFORE YOU DIG

WDID# N/A, REGION 8 MS4 CIP

REVISIONS			
MARK	DATE	BY	APPROVED/RCE NO.

DESIGNED BY ____ DATE ____
DRAWN BY ____ DATE ____
REVIEWED BY ____ DATE ____

CITY OF ONTARIO

BENCH MARK NO. P-22-1 ELEV. 876.791 FEET
LOCATION: DATUM: N.A.V.D. 88, 2017 ADJUSTMENT
2.5 INCH BRASS DISC STAMPED "CITY OF ONTARIO P-22-1" SET ON CONCRETE SLAB OF BACKFLOW DEVICE FOR AIRPORT SUPER STORAGE AT 1728 GROVE AVENUE.

MSL ENGINEERING, INC.
CIVIL ENGINEERS AND LAND SURVEYORS SPECIALIZING IN SITE DEVELOPMENT
301 NORTH SAN DIMAS AVE. SAN DIMAS, CA. 91773
(909) 305-2395 FAX (909) 305-2397
MARK S. LAMOUREUX R.C.E. 38382 DATE 01-29-24

ONTARIO FIRE DEPARTMENT ADMINISTRATION BUILDING
RECORD TOPOGRAPHY SURVEY MAP-SOUTH

PDEV23-001 - E202207973 – PC1 NCP (B202207973 ADMIN BLD)

SHEET 4 OF 18
CONTRACT ____
ACCOUNT ____
DWG. NO. ____

JN 2023-2023 C3.0-C3.1rlsm

ONTARIO FIRE DEPARTMENT ADMINISTRATION BUILDING
CITY OF ONTARIO
1420 E. FRANCIS STREET., ONTARIO, CA

LICENSED ARCHITECT — KELLEY NEEDHAM C-19064 Exp. 03/31/21 — STATE OF CALIFORNIA
REGISTERED PROFESSIONAL ENGINEER — MARK S. LAMOUREUX No. 38382 CIVIL — STATE OF CALIFORNIA

CONSULTANT
MSL ENGINEERING, INC.
CIVIL ENGINEERS AND LAND SURVEYORS
SPECIALIZING IN SITE DEVELOPMENT
301 N. SAN DIMAS AVENUE
SAN DIMAS, CA. 91773
(909) 305-2395 FAX (909) 305-2397
MARK S. LAMOUREUX (R.C.E. 38382) 01-29-24 DATE

NO	DATE	BY	DESCRIPTION

REVISIONS

DRAWN: T.B.P.	CHECKED: M.S.L.
DATE: 01-29-24	SCALE: 1"=20'
PROJECT NUMBER: 2011701	

RECORD TOPOGRAPHY SURVEY MAP-SOUTH

DRAWING NUMBER: C3.1

JN 2023-2023 C3.0-C3.1rlsm
BID SET 03/01/24

12/20/2024 1:37:15 PM, MSL ENGINEERING, INC., CA4

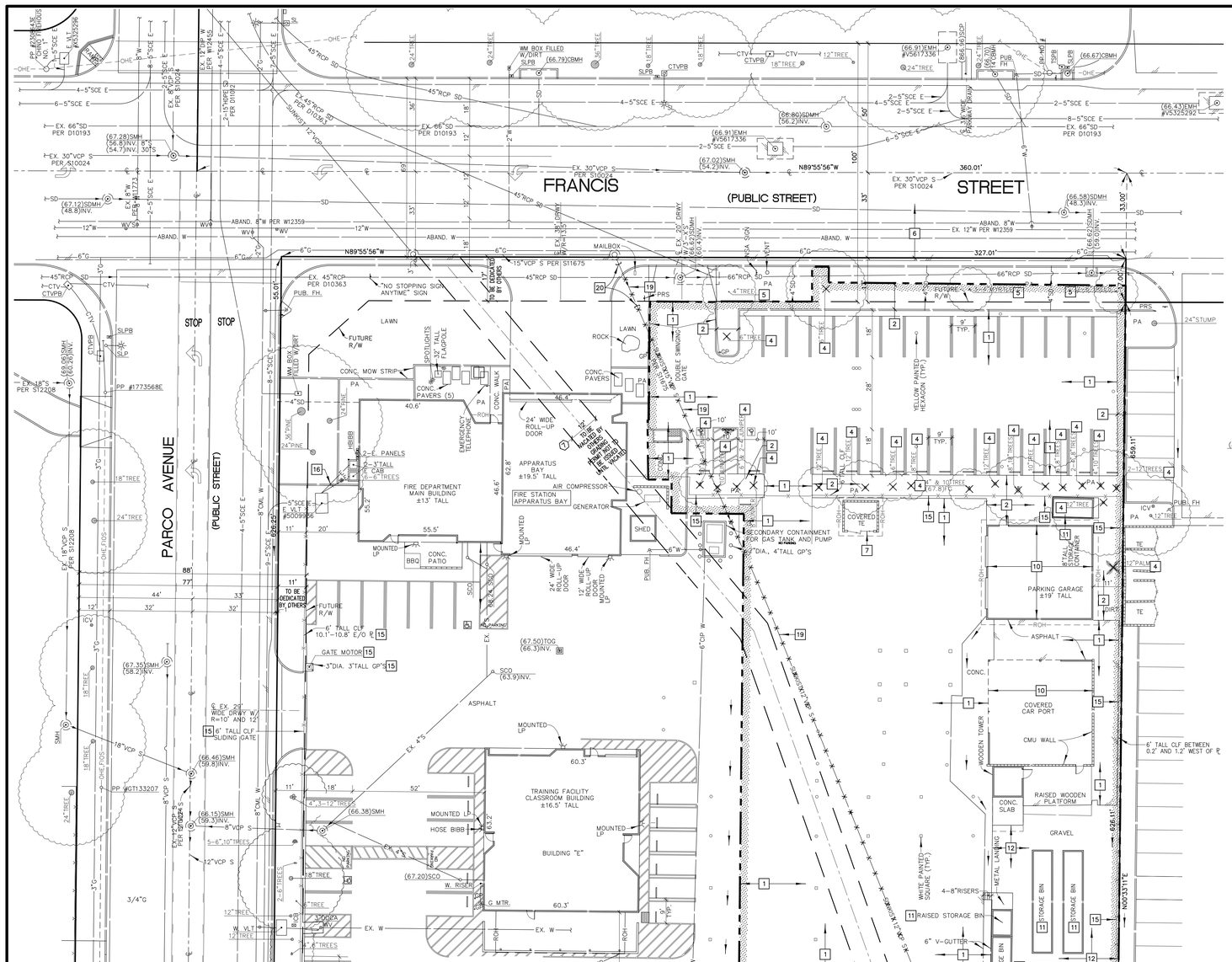

GENERAL DEMOLITION NOTES

1. THE HOURS OF ONSITE DEMOLITION SHALL BE REGULATED BY THE CITY OF ONTARIO.
2. ALL DEMOLITION WORK SHALL BE IN ACCORDANCE WITH THE ORDINANCES, REGULATIONS AND APPLICABLE CODES OF THE CITY OF ONTARIO AND WITH THE LATEST EDITION OF THE STANDARD SPECIFICATIONS FOR PUBLIC WORKS CONSTRUCTION.
3. ANY CONTRACTOR PERFORMING WORK ON THIS PROJECT SHALL FAMILIARIZE HIMSELF WITH THE SITE AND SHALL BE SOLELY RESPONSIBLE FOR ANY DAMAGE TO EXISTING IMPROVEMENTS (WHICH ARE TO REMAIN IN PLACE) RESULTING DIRECTLY OR INDIRECTLY FROM HIS OPERATIONS, WHETHER OR NOT THOSE EXISTING IMPROVEMENTS ARE SHOWN ON THIS PLAN.
4. IF ANY UNKNOWN SUB-SURFACE STRUCTURE IS ENCOUNTERED DURING DEMOLITION, IT SHOULD BE BROUGHT TO THE ATTENTION OF THE SUPERVISING CIVIL ENGINEER, ARCHITECT, AND THE PROJECT MANAGER FOR THE OWNER PRIOR TO PROCEEDING WITH THE WORK.
5. DUST SHALL BE CONTROLLED BY WATERING.
6. PRIOR TO COMMENCING ANY DEMOLITION WORK, THE CONTRACTOR SHALL OBTAIN A FIRE HYDRANT WATER METER FROM THE WATER DISTRICT AND THE METER SHALL BE USED AT ALL TIMES WHEN WATER IS BEING OBTAINED FROM A WATER DISTRICT FIRE HYDRANT.
7. THE LOCATION AND PROTECTION OF ALL UTILITIES AND SURVEY MONUMENTS OF EVERY NATURE, WHETHER OR NOT THEY ARE SHOWN ON THESE DRAWINGS, ARE THE RESPONSIBILITY OF THE CONTRACTOR. THE CONTRACTOR WILL BEAR THE TOTAL EXPENSE OF REPAIR OR REPLACEMENT OF UTILITIES AND SURVEY MONUMENTS THAT HAVE BEEN DAMAGED OR DESTROYED DURING DEMOLITION.
8. ALL ONSITE IMPROVEMENTS WHICH ARE TO BE REMOVED OFFSITE SHALL BE PROPERLY HANDLED AND DISPOSED OF IN COMPLIANCE WITH EXISTING CITY, COUNTY, STATE AND FEDERAL GUIDELINES AND REGULATIONS.
9. CONTRACTOR SHALL CONTACT THE UNDERGROUND SERVICE ALERT, 811, 48 HOURS IN ADVANCE OF COMMENCEMENT OF CONSTRUCTION, FOR EXISTING UTILITY LOCATIONS. THE CONTRACTOR IS REQUIRED TO TAKE DUE PRECAUTIONARY MEASURES TO PROTECT THE UTILITY LINES SHOWN AND ANY OTHER LINES OF RECORD NOT SHOWN ON THIS DRAWING.
10. ADEQUATE BARRICADES, LIGHTS, FLAGMEN, SIGNS AND OTHER SAFETY DEVICES SHALL BE PROVIDED AS SPECIFIED IN THE TRAFFIC MANUAL PUBLISHED BY THE STATE OF CALIFORNIA DEPARTMENT OF TRANSPORTATION LATEST EDITION AND THE CITY OF ONTARIO.
11. EXISTING CITY STREETS SHALL BE KEPT CLEAN OF ALL MATERIALS RESULTING FROM THE DEMOLITION OPERATIONS. THE STREET RIGHT OF WAY SHALL BE CLEANED UP DAILY, AS NECESSARY, TO MAINTAIN SAFE PEDESTRIAN AND VEHICULAR PASSAGE AT ALL TIMES.
12. ANY MODIFICATIONS OF OR CHANGES IN APPROVED DEMOLITION PLANS MUST BE APPROVED BY THE SUPERVISING ENGINEER AND OWNER.
13. A COPY OF THE DEMOLITION PERMIT AND APPROVED DEMOLITION PLAN MUST BE IN THE POSSESSION OF A RESPONSIBLE PERSON AND AVAILABLE AT THE SITE AT ALL TIMES.
14. CLEAN ADJACENT STRUCTURES AND IMPROVEMENTS OF DUST, DIRT AND DEBRIS CAUSED BY DEMOLITION OPERATIONS, AS DIRECTED BY THE SUPERVISING ENGINEER, OR GOVERNING AUTHORITIES. RETURN ADJACENT AREAS TO THE CONDITION EXISTING PRIOR TO START OF WORK.
15. CONTRACTOR IS REQUIRED TO OBTAIN A DEMOLITION PERMIT AND UTILITY DISCONNECTION PERMITS FROM THE CITY OF ONTARIO AND UTILITY COMPANIES AS REQUIRED PRIOR TO COMMENCING ANY DEMOLITION WORK.

DEMOLITION PLAN CONSTRUCTION NOTES

1. SAWCUT AND REMOVE ONSITE HARDSCAPE IMPROVEMENTS INCLUDING BUT NOT LIMITED TO A.C. PAVEMENT (ASSUME 4" THICK), CONCRETE PAVEMENT (ASSUME 6" THICK), AND AGGREGATE BASE (ASSUME 8" THICK), CONCRETE CURB, CONCRETE CURB AND GUTTER AND CONCRETE SIDEWALK FROM THE SITE AND HAVE IT RECYCLED OFFSITE. SMOOTH OUT DIRT TO A UNIFORM CONDITION AFTER DEMOLITION WORK IS COMPLETED. SITE IS TO BE LEFT CLEAN.
2. REMOVE FROM THE SITE ALL DEBRIS, VEGETATION, TREES, MAJOR ROOT SYSTEMS, RUBBISH AND OTHER MATERIALS RESULTING FROM THE DEMOLITION WORK AND SITE CLEARING OPERATIONS AND DISPOSE OF IN A LEGAL MANNER. SMOOTH OUT DIRT TO A UNIFORM CONDITION AFTER DEMOLITION WORK IS COMPLETED. SITE IS TO BE LEFT CLEAN.
3. REMOVE FROM THE SITE ALL UNDERGROUND AND ABOVE GRADE UTILITY AND STORM DRAIN LINES AND IMPROVEMENTS IN CONFLICT WITH THE PROPOSED GRADES OR IMPROVEMENTS. ABANDON ALL OTHER EXISTING UTILITIES AND STORM DRAIN LINES IN PLACE. STORM UTILITY IMPROVEMENTS TO INCLUDE BUT NOT BE LIMITED TO POWER, LIGHT POLES, TELEPHONE, NATURAL GAS, DRAIN PIPES, SANITARY SEWER, WATER, IRRIGATION, AND CABLE TELEVISION TO A POINT 2' FROM THE PERIMETER PROPERTY LINE OR AS SHOWN HEREON. ALL WORK TO BE DONE IN CONFORMANCE WITH CITY, COUNTY AND UTILITY COMPANY REQUIREMENTS. RECORDED DEPTH AND LOCATION OF CAPPED-OFF UTILITIES FOR FUTURE USE BY THE OWNER, SHALL BE PROVIDED TO THE ARCHITECT AND VERIFIED BY THE ARCHITECT, PRIOR TO ANY BACKFILLING OF UTILITY CAPS. OBTAIN APPROVAL FROM UTILITY PROVIDER PRIOR TO REMOVAL OF EXISTING UTILITIES.
4. REMOVE TREE AND ITS ROOT SYSTEM.
5. PROTECT IN PLACE TREE, ITS ROOT SYSTEM AND LIMBS DURING ALL PHASES OF SITE DEMOLITION, REMEDIAL GRADING AND NEW CONSTRUCTION.
6. PROTECT IN PLACE PUBLIC OFFSITE IMPROVEMENTS.
7. REMOVE FROM SITE COVERED TRASH ENCLOSURE AND CONCRETE FOOTING.
9. PROTECT IN PLACE UTILITY AND STORM DRAIN IMPROVEMENTS.
10. DEMOLISH AND REMOVE EXISTING PARKING GARAGE STRUCTURE, COVERED CARPORT, CONCRETE PAVEMENT, AND CONCRETE FOOTINGS. COORDINATE WITH OWNER TO DETERMINE IF ANY PORTION OF STRUCTURE SHALL BE SALVAGED AND RE-USED ONSITE.
11. REMOVE FROM SITE STORAGE BINS.
12. REMOVE FROM SITE SURFACE GRAVEL.
15. REMOVE FROM SITE 6' TALL CHAIN LINK FENCE, POSTS AND CONCRETE FOOTINGS.
16. PROTECT IN PLACE 6' TO 8' TALL CHAIN LINK FENCE.
19. REMOVE THE PORTION OF EXISTING 12" AND 15" DIAMETER VCP SEWER PIPE IN CONFLICT WITH THE PROPOSED IMPROVEMENTS AND ABANDON THE REMAINDER IN PLACE BY CUTTING AND CAPPING THE PIPE END AT THE MANHOLE WITH A CONCRETE BULKHEAD AND REMOVE UNUSED MANHOLES. ALL WORK IS TO BE DONE IN CONFORMANCE WITH THE CITY REQUIREMENTS. RECORD DEPTH AND LOCATION OF CAPPED-OFF UTILITIES.
20. REMOVE THE PORTION OF EXISTING 15" DIAMETER VCP SEWER PIPE WITHIN THE CITY RIGHT-OF-WAY FROM THE BULKHEAD CAPPED STUB 2 FEET FROM THE MANHOLE TO A DISTANCE 2 FEET WITHIN THE FUTURE PROPOSED RIGHT-OF-WAY LINE PER DETAIL "A" SHOWN ON SHEET C4.1.

PARTIAL LEGEND

LIMITS OF ONSITE (72,531 S.F. OR 1.7 ACRES) DEMOLITION.

EXISTING TREE, ROOTS AND LIMBS TO BE REMOVED.

X CATV X E X G X / X T X SD X W X S X — ABANDON IN PLACE EXISTING UNDERGROUND UTILITY AND STORM DRAIN PIPE WHICH ARE NOT IN CONFLICT WITH THE NEW SITE IMPROVEMENTS OR REMEDIAL GRADING.

LANDSCAPE/ IRRIGATION NOTES

1. ALL IRRIGATION EQUIPMENT TO BE SALVAGED AND RETURNED TO ONTARIO PARKS AND MAINTENANCE DIVISION 909-395-2627.
2. CONTRACTOR TO REFERENCE CITY STANDARD PROTECTION NOTES AT HTTP://WWW.ONTARIO.GOV/LANDSCAPE-PLANNING/STANDARDS. CONTRACTOR TO CONTACT CITY CONSULTING ARBORIST, JM BORER AT 909-997-7020 FOR DIRECTION AND INSPECTION IF TREE ROOTS OR BRANCHES ARE TO BE CUT FOR THE PROJECT CONSTRUCTION.

PROJECT NORTH — TRUE NORTH

GRAPHIC SCALE
SCALE: 1"=20'

Underground Service Alert
Call: Toll Free
811
TWO WORKING DAYS BEFORE YOU DIG

WDID# N/A, REGION 8 MS4 CIP

REVISIONS			
MARK	DATE	BY	APPROVED/RCE NO.

DESIGNED BY ____ DATE ____
DRAWN BY ____ DATE ____
REVIEWED BY ____ DATE ____

CITY OF ONTARIO

BENCH MARK NO. P-22-1 ELEV. 876.791 FEET
LOCATION: DATUM: N.A.V.D. 88, 2017 ADJUSTMENT 2.5 INCH BRASS DISC STAMPED "CITY OF ONTARIO P-22-1" SET ON CONCRETE SLAB OF BACKFLOW DEVICE FOR AIRPORT SUPER STORAGE AT 1728 GROVE AVENUE.

MSL ENGINEERING, INC.
CIVIL ENGINEERS AND LAND SURVEYORS SPECIALIZING IN SITE DEVELOPMENT
301 NORTH SAN DIMAS AVE., SAN DIMAS, CA. 91773
(909) 305-2395 FAX (909) 305-2397
MARK S. LAMOUREUX R.C.E. 38382 01-29-24 DATE

ONTARIO FIRE DEPARTMENT ADMINISTRATION BUILDING

DEMOLITION PLAN- NORTH

PDEV23-001 - E202207973 – PC1 NCP (B202207973 ADMIN BLD)

SHEET 5 OF 18
CONTRACT ____
ACCOUNT ____
DWG. NO. ____

JN 21023-21023 C4.0-C4.tdmo

PBK
RANCHO CUCAMONGA
8163 ROCHESTER AVENUE, SUITE 100
RANCHO CUCAMONGA, CA 91730
909-987-0909 P

ONTARIO FIRE DEPARTMENT ADMINISTRATION BUILDING
CITY OF ONTARIO
1420 E. FRANCIS STREET., ONTARIO, CA

LICENSED ARCHITECT — KELLEY NEEDHAM C-19064 — STATE OF CALIFORNIA
REGISTERED PROFESSIONAL ENGINEER — MARK S. LAMOUREUX No. 38382 CIVIL — STATE OF CALIFORNIA

CONSULTANT
MSL ENGINEERING, INC.
CIVIL ENGINEERS AND LAND SURVEYORS
SPECIALIZING IN SITE DEVELOPMENT
301 N. SAN DIMAS AVENUE
SAN DIMAS, CA. 91773
(909) 305-2395 FAX (909) 305-2397
MARK S. LAMOUREUX (R.C.E. 38382) 01-29-24 DATE

NO	DATE	BY	DESCRIPTION

REVISIONS

DRAWN: T.B.P.	CHECKED: M.S.L.
DATE: 01-29-24	SCALE: 1"=20'
PROJECT NUMBER: 2011701	

DEMOLITION PLAN- NORTH

DRAWING NUMBER: C4.0

JN 21023-21023 C4.0-C4.tdmo
BID SET 03/01/24

SHEET 5 OF 18

PBK
RANCHO CUCAMONGA
8163 ROCHESTER AVENUE, SUITE 100
RANCHO CUCAMONGA, CA 91730
909-987-0909 P

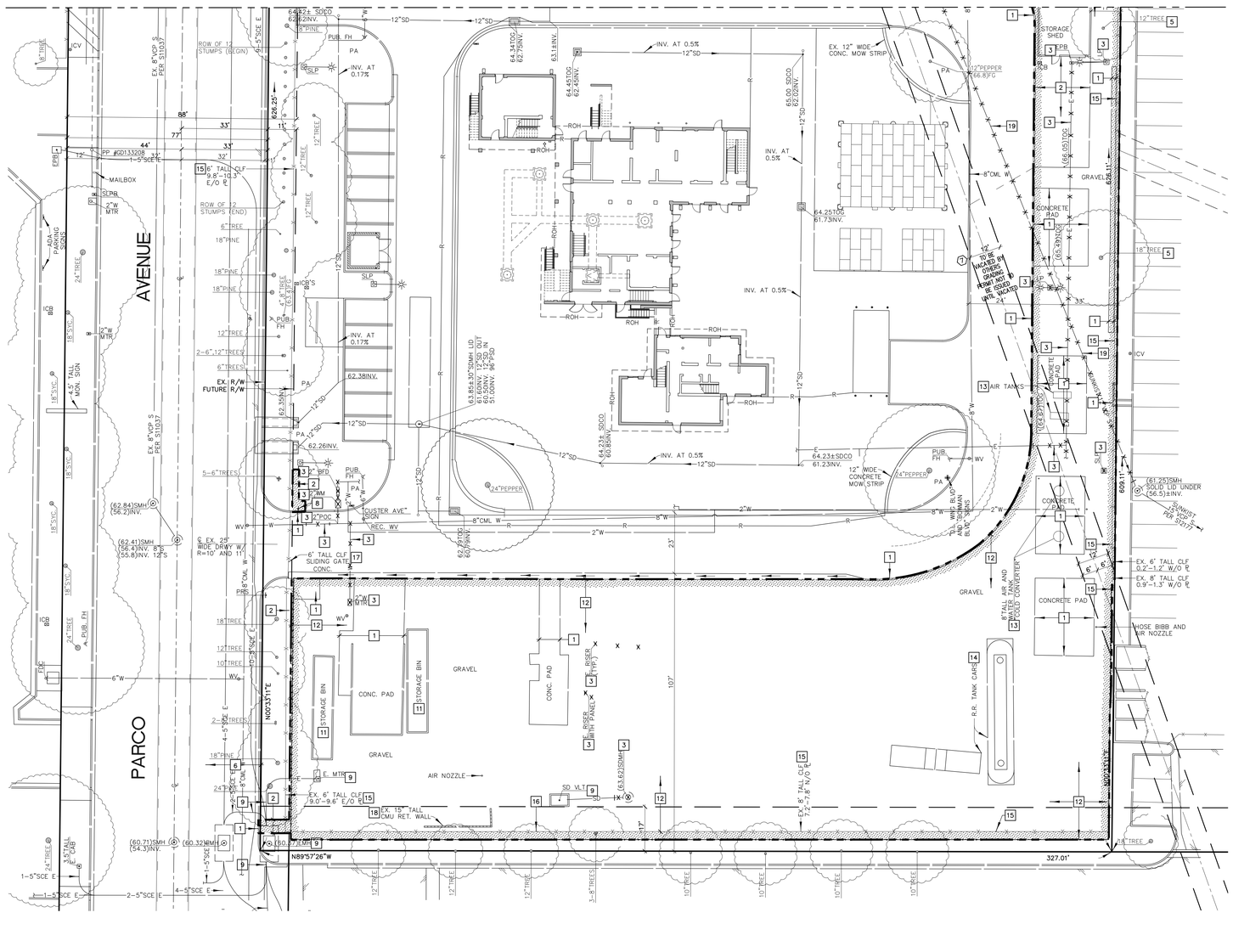

DEMOLITION PLAN CONSTRUCTION NOTES

1. SAWCUT AND REMOVE ONSITE HARDSCAPE IMPROVEMENTS INCLUDING BUT NOT LIMITED TO A.C. PAVEMENT (ASSUME 4" THICK), CONCRETE PAVEMENT (ASSUME 6" THICK), AND AGGREGATE BASE (ASSUME 8" THICK). CONCRETE CURB, CONCRETE CURB AND GUTTER AND CONCRETE SIDEWALK FROM THE SITE AND HAVE IT RECYCLED OFFSITE. SMOOTH OUT DIRT TO A UNIFORM CONDITION AFTER DEMOLITION WORK IS COMPLETED. SITE IS TO BE LEFT CLEAN.
2. REMOVE FROM THE SITE ALL DEBRIS, VEGETATION, TREES, MAJOR ROOT SYSTEMS, RUBBISH AND OTHER MATERIALS RESULTING FROM THE DEMOLITION WORK AND SITE CLEARING OPERATIONS AND DISPOSE OF IN A LEGAL MANNER. SMOOTH OUT DIRT TO A UNIFORM CONDITION AFTER DEMOLITION WORK IS COMPLETED. SITE IS TO BE LEFT CLEAN.
3. REMOVE FROM THE SITE ALL UNDERGROUND AND ABOVE GRADE UTILITY AND STORM DRAIN LINES AND IMPROVEMENTS IN CONFLICT WITH THE PROPOSED GRADES OR IMPROVEMENTS. ABANDON ALL OTHER EXISTING UTILITIES AND STORM DRAIN LINES IN PLACE. STORM UTILITY IMPROVEMENTS TO INCLUDE BUT NOT BE LIMITED TO POWER, LIGHT POLES, TELEPHONE, NATURAL GAS, DRAIN PIPES, SANITARY SEWER, WATER, IRRIGATION, AND CABLE TELEVISION TO A POINT 2' FROM THE PERIMETER PROPERTY LINE OR AS SHOWN HEREON. ALL WORK TO BE DONE IN CONFORMANCE WITH CITY, COUNTY AND UTILITY COMPANY REQUIREMENTS. RECORDED DEPTH AND LOCATION OF CAPPED-OFF UTILITIES FOR FUTURE USE BY THE OWNER, SHALL BE PROVIDED TO THE ARCHITECT AND VERIFIED BY THE ARCHITECT, PRIOR TO ANY BACKFILLING OF UTILITY CAPS. OBTAIN APPROVAL FROM UTILITY PROVIDER PRIOR TO REMOVAL OF EXISTING UTILITIES.
5. PROTECT IN PLACE TREE, ITS ROOT SYSTEM AND LIMBS DURING ALL PHASES OF SITE DEMOLITION, REMEDIAL GRADING AND NEW CONSTRUCTION.
6. PROTECT IN PLACE PUBLIC OFFSITE IMPROVEMENTS.
8. REMOVE FROM SITE SIGN, POLE AND ITS FOOTING.
9. PROTECT IN PLACE UTILITY AND STORM DRAIN IMPROVEMENTS.
11. REMOVE FROM SITE STORAGE BINS.
12. REMOVE FROM SITE SURFACE GRAVEL.
13. REMOVE FROM SITE AIR AND WATER TANKS.
14. REMOVE FROM SITE RAIL ROAD TRAIN CARS.
15. REMOVE FROM SITE 6' TALL CHAIN LINK FENCE, POSTS AND CONCRETE FOOTINGS.
17. REMOVE FROM SITE 6' TALL CLF SLIDING GATE AS REQUIRED FOR CONSTRUCTION OF PROPOSED AUTOMATIC SLIDING GATE.
18. REMOVE FROM THE SITE CMU RETAINING WALL AND CONCRETE FOOTING.
19. REMOVE THE PORTION OF EXISTING 12" AND 15" DIAMETER VCP SEWER PIPE IN CONFLICT WITH THE PROPOSED IMPROVEMENTS AND ABANDON THE REMAINDER IN PLACE BY CUTTING AND CAPPING THE PIPE END AT THE MANHOLE WITH A CONCRETE BULKHEAD AND REMOVE UNUSED MANHOLES. ALL WORK IS TO BE DONE IN CONFORMANCE WITH THE CITY REQUIREMENTS. RECORD DEPTH AND LOCATION OF CAPPED-OFF UTILITIES.

PARTIAL LEGEND

LIMITS OF ONSITE (83,130 S.F. OR 1.7 ACRES) DEMOLITION.

EXISTING TREE, ROOTS AND LIMBS TO BE REMOVED.

X CATV X E X G X ABANDON IN PLACE EXISTING UNDERGROUND UTILITY AND STORM DRAIN PIPE WHICH ARE NOT IN
X T X SD X W X S X CONFLICT WITH THE NEW SITE IMPROVEMENTS OR REMEDIAL GRADING.

LANDSCAPE/ IRRIGATION NOTES

1. ALL IRRIGATION EQUIPMENT TO BE SALVAGED AND RETURNED TO ONTARIO PARKS AND MAINTENANCE DIVISION 909-395-2627.
2. CONTRACTOR TO REFERENCE CITY STANDARD PROTECTION NOTES AT HTTP://WWW.ONTARIO.GOV/LANDSCAPE-PLANNING/STANDARDS. CONTRACTOR TO CONTACT CITY CONSULTING ARBORIST, JIM BORER AT 909-997-7020 FOR DIRECTION AND INSPECTION IF TREE ROOTS OR BRANCHES ARE TO BE CUT FOR THE PROJECT CONSTRUCTION.

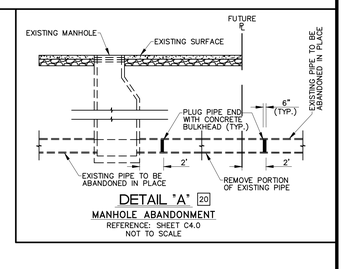

DETAIL "A" 20
MANHOLE ABANDONMENT
REFERENCE: SHEET C4.0
NOT TO SCALE

PROJECT NORTH — TRUE NORTH

0 10 20 40 60
GRAPHIC SCALE
SCALE: 1"=20'

Underground Service Alert
Call: Toll Free
811
TWO WORKING DAYS BEFORE YOU DIG

WDID# N/A, REGION 8 MS4 CIP

REVISIONS			
MARK	DATE	BY	APPROVED/RCE NO.

DESIGNED BY ____ DATE ____
DRAWN BY ____ DATE ____
REVIEWED BY ____ DATE ____

CITY OF ONTARIO

BENCH MARK NO. P-22-1 ELEV. 876.791 FEET
LOCATION: DATUM: N.A.V.D. 88, 2017 ADJUSTMENT 2.5 INCH BRASS DISC STAMPED "CITY OF ONTARIO P-22-1" SET ON CONCRETE SLAB OF BACKFLOW DEVICE FOR AIRPORT SUPER STORAGE AT 1728 GROVE AVENUE.

MSL ENGINEERING, INC.
CIVIL ENGINEERS AND LAND SURVEYORS SPECIALIZING IN SITE DEVELOPMENT
301 NORTH SAN DIMAS AVE. SAN DIMAS, CA. 91773
(909) 305-2395 FAX (909) 305-2397
MARK S. LAMOUREUX R.C.E. 38382 01-29-24 DATE

ONTARIO FIRE DEPARTMENT ADMINISTRATION BUILDING
DEMOLITION PLAN- SOUTH
PDEV23-001 - E202207973 – PC1 NCP (B202207973 ADMIN BLD)

SHEET 6 OF 18
CONTRACT ____
ACCOUNT ____
DWG. NO. ____

JN 2023-2023 C4.0-C4.1dmo

ONTARIO FIRE DEPARTMENT ADMINISTRATION BUILDING
CITY OF ONTARIO
1420 E. FRANCIS STREET., ONTARIO, CA

LICENSED ARCHITECT — KELLEY NEEDHAM C-19064 Exp. 03/31/23 — STATE OF CALIFORNIA
REGISTERED PROFESSIONAL ENGINEER — MARK S. LAMOUREUX No. 38382 CIVIL — STATE OF CALIFORNIA

CONSULTANT
MSL ENGINEERING, INC
CIVIL ENGINEERS AND LAND SURVEYORS
SPECIALIZING IN SITE DEVELOPMENT
301 N. SAN DIMAS AVENUE
SAN DIMAS, CA. 91773
(909) 305-2395 FAX (909) 305-2397
MARK S. LAMOUREUX (R.C.E. 38382) 01-29-24 DATE

NO	DATE	BY	DESCRIPTION

REVISIONS

DRAWN: T.B.P. CHECKED: M.S.L.
DATE: 01-29-24 SCALE: 1"=20'
PROJECT NUMBER: 2011701

DEMOLITION PLAN- SOUTH

DRAWING NUMBER: C4.1

JN 2023-2023 C4.0-C4.1dmo
BID SET 03/01/24

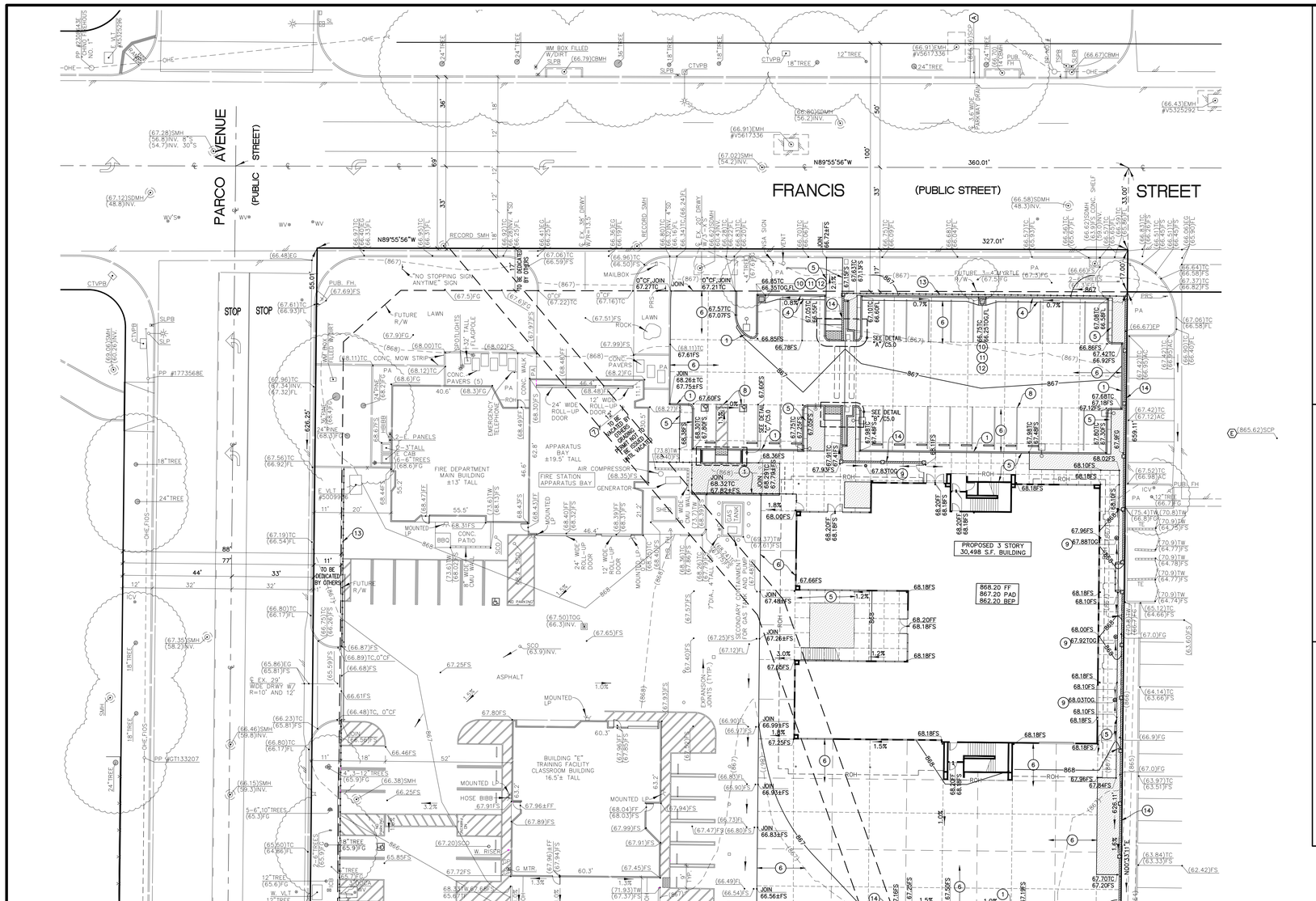

SEE SHEET C5.1

WDID# N/A, REGION 8 MS4 CIP

GRADING AND DRAINAGE PLAN CONSTRUCTION NOTES

1. CONSTRUCT 6" CONCRETE CURB PER DETAIL "A" SHOWN ON SHEET C2.
2. CONSTRUCT VARYING HEIGHT CURB FACE TRANSITION PER DETAIL "A" SHOWN ON SHEET C2.
3. CONSTRUCT 0" CONCRETE CURB PER DETAIL "A" SHOWN ON SHEET C2.
4. CONSTRUCT 4,000 PSI 6" CONCRETE CURB AND 18" GUTTER OVER 6" MINIMUM THICK CLASS 2 AGGREGATE BASE COMPACTED TO AT LEAST 95% OF ITS MAXIMUM DENSITY OVER 12" MINIMUM THICK SUBGRADE SOIL MOISTURE CONDITIONED TO NEAR OPTIMUM MOISTURE CONTENT AND COMPACTED TO AT LEAST 95% OF ITS MAXIMUM DENSITY OVER 12" MINIMUM THICK 90% COMPACTED SUBGRADE SOIL MOISTURE CONDITIONED TO NEAR OPTIMUM MOISTURE CONTENT OVER 8" MINIMUM THICK SCARIFIED 90% COMPACTED NATIVE SOIL AT NEAR OPTIMUM MOISTURE CONTENT PER DETAIL "B" SHOWN ON SHEET C2.
5. CONSTRUCT 4.5" THICK 4,000 PSI REINFORCED CONCRETE SIDEWALK OVER 4" THICK CLASS 2 AGGREGATE BASE COMPACTED TO AT LEAST 95% OF ITS MAXIMUM DENSITY OVER 12" MINIMUM THICK SUBGRADE SOIL MOISTURE CONDITIONED TO NEAR OPTIMUM MOISTURE CONTENT AND COMPACTED TO AT LEAST 95% OF ITS MAXIMUM DENSITY OVER 12" MINIMUM THICK 90% COMPACTED SUBGRADE SOIL MOISTURE CONDITIONED TO NEAR OPTIMUM MOISTURE CONTENT OVER 8" MINIMUM THICK SCARIFIED 90% COMPACTED NATIVE SOIL AT NEAR OPTIMUM MOISTURE CONTENT. REFER TO ARCHITECTURAL DRAWINGS FOR LOCATION OF CONSTRUCTION JOINTS, THICKENED EDGES, COLOR, DOWELS, REINFORCEMENT AND TEXTURE.
6. CONSTRUCT 8" THICK 4,000 PSI REINFORCED CONCRETE PAVEMENT OVER 4" THICK CLASS 2 AGGREGATE BASE COMPACTED TO AT LEAST 95% OF ITS MAXIMUM DENSITY OVER 12" MINIMUM THICK SUBGRADE SOIL MOISTURE CONDITIONED TO NEAR OPTIMUM MOISTURE CONTENT AND COMPACTED TO AT LEAST 95% OF ITS MAXIMUM DENSITY OVER 12" MINIMUM THICK 90% COMPACTED SUBGRADE SOIL MOISTURE CONDITIONED TO NEAR OPTIMUM MOISTURE CONTENT OVER 8" MINIMUM THICK SCARIFIED 90% COMPACTED NATIVE SOIL AT NEAR OPTIMUM MOISTURE CONTENT. REFER TO ARCHITECTURAL DRAWINGS FOR LOCATION OF CONSTRUCTION JOINTS, THICKENED EDGES, COLOR, DOWELS, REINFORCEMENT AND TEXTURE.
8. PAINT PARKING LOT SPACE AND ADA STRIPING ON TOP OF THE NEW PAVEMENT PER DETAILS SHOWN ON ARCHITECTURAL DRAWINGS.
9. INSTALL A 6" DIAMETER ROUND BRASS GRATE PER NDS MODEL NUMBER 918B OR EQUIVALENT.
10. CONSTRUCT A 24"X24" CONCRETE DRAIN BOX, GRATE AND FRAME PER DETAIL "D" SHOWN ON SHEET C2.
11. INSTALL BIO CLEAN ENVIRONMENTAL SERVICE INSERT IN DRAIN BOX TO PRE-TREAT URBAN STORM WATER RUNOFF PER DETAIL "E" SHOWN ON SHEET C2.
12. INSTALL "NO DUMPING—ONLY RAIN IN THE DRAIN" SIGNAGE ON TOP OF THE DRAIN BOX WALL PER DETAIL "F" SHOWN ON SHEET C2.
13. INSTALL 6" HIGH TUBE STEEL FENCE PER DETAILS SHOWN ON ARCHITECTURAL DRAWINGS.
14. CONSTRUCT SITE WALL PER DETAILS SHOWN ON ARCHITECTURAL AND STRUCTURAL DRAWINGS AND PER THE ELEVATIONS SHOWN HEREON. CONTRACTOR TO OBTAIN A SEPARATE PERMIT FROM THE CITY BUILDING AND SAFETY DEPARTMENT.

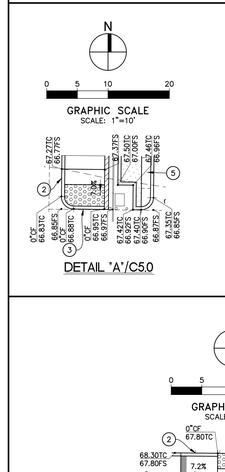

DETAIL "A"/C5.0

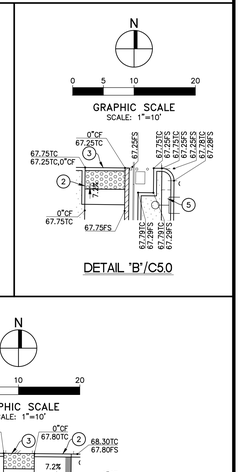

DETAIL "B"/C5.0

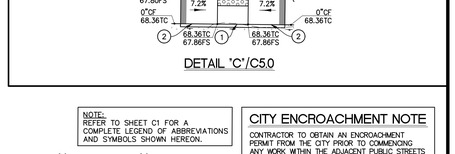

DETAIL "C"/C5.0

NOTE:
REFER TO SHEET C1 FOR A COMPLETE LEGEND OF ABBREVIATIONS AND SYMBOLS SHOWN HEREON.

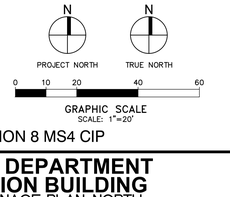

CITY ENCROACHMENT NOTE

CONTRACTOR TO OBTAIN AN ENCROACHMENT PERMIT FROM THE CITY PRIOR TO COMMENCING ANY WORK WITHIN THE ADJACENT PUBLIC STREETS OR ANY ONSITE CITY EASEMENT.

Underground Service Alert
Call: Toll Free
811
TWO WORKING DAYS BEFORE YOU DIG

REVISIONS			
MARK	DATE	BY	APPROVED/RCE NO.

DESIGNED BY ____ DATE ____
DRAWN BY ____ DATE ____
REVIEWED BY ____ DATE ____

CITY OF ONTARIO

BENCH MARK NO. P-22-1 ELEV. 876.791 FEET

LOCATION: DATUM: N.A.V.D. 88, 2017 ADJUSTMENT
2.5 INCH BRASS DISC STAMPED "CITY OF ONTARIO P-22-1" SET ON CONCRETE SLAB OF BACKFLOW DEVICE FOR AIRPORT SUPER STORAGE AT 1728 GROVE AVENUE.

MSL ENGINEERING, INC.
CIVIL ENGINEERS AND LAND SURVEYORS SPECIALIZING IN SITE DEVELOPMENT
301 NORTH SAN DIMAS AVE. SAN DIMAS, CA. 91773
(909) 305-2395 FAX (909) 305-2397

MARK S. LAMOUREUX R.C.E. 38382 DATE 01-29-24

REGISTERED PROFESSIONAL ENGINEER MARK S. LAMOUREUX No. 38382 CIVIL STATE OF CALIFORNIA

ONTARIO FIRE DEPARTMENT ADMINISTRATION BUILDING

GRADING AND DRAINAGE PLAN-NORTH

PDEV23-001 - E202207973 – PC1 NCP (B202207973 ADMIN BLD)

SHEET 7 OF 18
CONTRACT ____
ACCOUNT ____
DWG. NO. ____

JN 21023-21023 C5.0-C5.1gdp

PBK
RANCHO CUCAMONGA
8163 ROCHESTER AVENUE, SUITE 100
RANCHO CUCAMONGA, CA 91730
909-987-0909 P

ONTARIO FIRE DEPARTMENT ADMINISTRATION BUILDING

CITY OF ONTARIO
1420 E. FRANCIS STREET., ONTARIO, CA

LICENSED ARCHITECT KELLEY NEEDHAM C-19064 Re-Det 03/31/23 STATE OF CALIFORNIA

REGISTERED PROFESSIONAL ENGINEER MARK S. LAMOUREUX No. 38382 CIVIL STATE OF CALIFORNIA

CONSULTANT
MSL ENGINEERING, INC.
CIVIL ENGINEERS AND LAND SURVEYORS
SPECIALIZING IN SITE DEVELOPMENT
301 N. SAN DIMAS AVENUE
SAN DIMAS, CA. 91773
(909) 305-2395 FAX (909) 305-2397
MARK S. LAMOUREUX (R.C.E. 38382) DATE 01-29-24

NO	DATE	BY	DESCRIPTION

REVISIONS

DRAWN: T.B.P.	CHECKED: M.S.L.
DATE: 01-29-24	SCALE: 1"=20'
PROJECT NUMBER: 2011701	

GRADING AND DRAINAGE PLAN-NORTH

DRAWING NUMBER: C5.0

JN 21023-21023 C5.0-C5.1gdp
BID SET 03/01/24

SHEET 7 OF 18

PBK
RANCHO CUCAMONGA
8163 ROCHESTER AVENUE, SUITE 100
RANCHO CUCAMONGA, CA 91730
909-987-0909 P

ONTARIO FIRE DEPARTMENT ADMINISTRATION BUILDING

CITY OF ONTARIO

1420 E. FRANCIS STREET., ONTARIO, CA

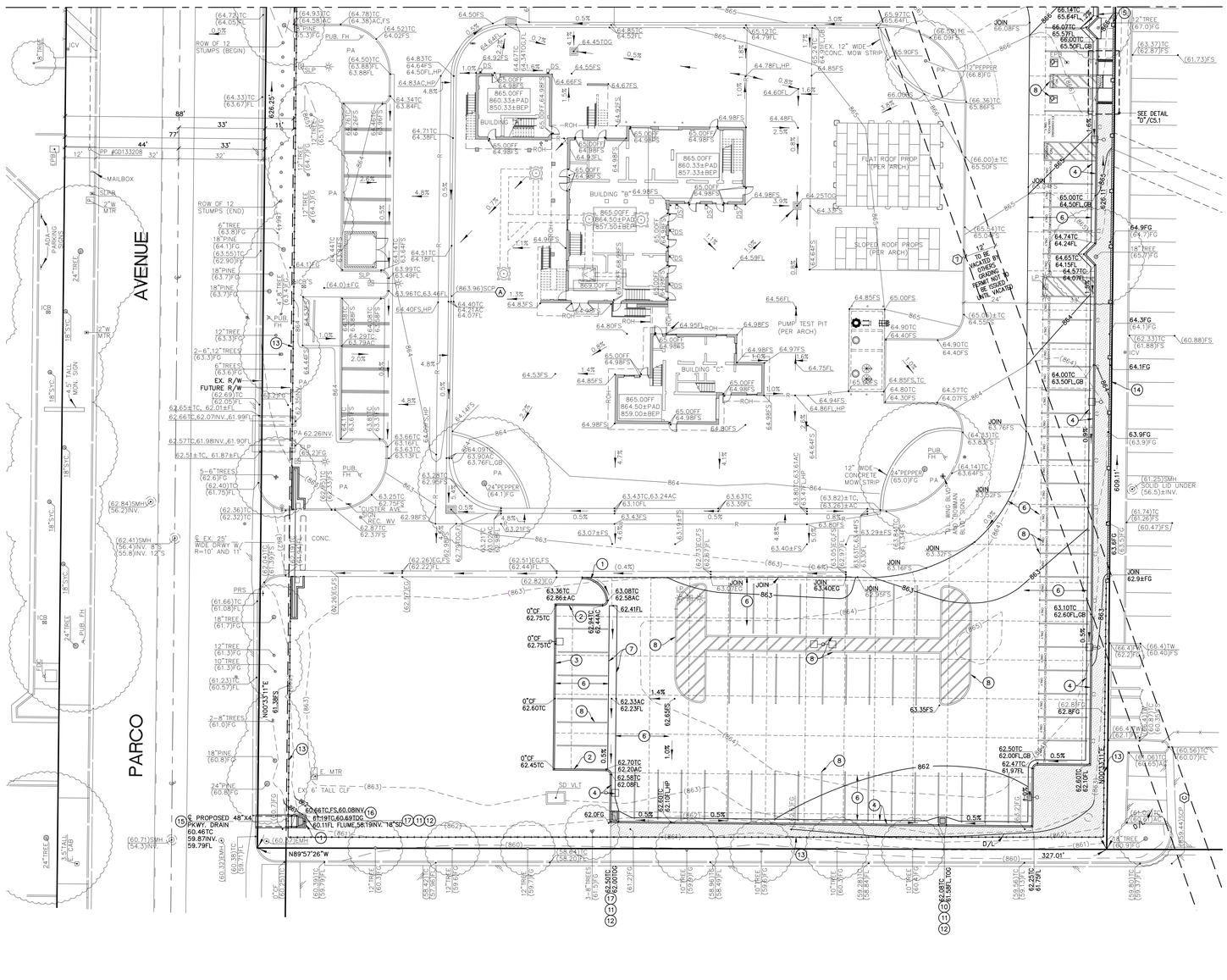

GRADING AND DRAINAGE PLAN CONSTRUCTION NOTES

1. CONSTRUCT 6" CONCRETE CURB PER DETAIL "A" SHOWN ON SHEET C2.
2. CONSTRUCT VARYING HEIGHT CURB FACE TRANSITION PER DETAIL "A" SHOWN ON SHEET C2.
3. CONSTRUCT 0" CONCRETE CURB PER DETAIL "A" SHOWN ON SHEET C2.
4. CONSTRUCT 4,000 PSI 6" CONCRETE CURB AND 18" GUTTER OVER 6" MINIMUM THICK CLASS 2 AGGREGATE BASE COMPACTED TO AT LEAST 95% OF ITS MAXIMUM DENSITY OVER 12" MINIMUM THICK SUBGRADE SOIL MOISTURE CONDITIONED TO NEAR OPTIMUM MOISTURE CONTENT AND COMPACTED TO AT LEAST 95% OF ITS MAXIMUM DENSITY OVER 12" MINIMUM THICK 90% COMPACTED SUBGRADE SOIL MOISTURE CONDITIONED TO NEAR OPTIMUM MOISTURE CONTENT OVER 8" MINIMUM THICK SCARIFIED 90% COMPACTED NATIVE SOIL AT NEAR OPTIMUM MOISTURE CONTENT PER DETAIL "B" SHOWN ON SHEET C2.
5. CONSTRUCT 4.5" THICK 4,000 PSI REINFORCED CONCRETE SIDEWALK OVER 4" THICK CLASS 2 AGGREGATE BASE COMPACTED TO AT LEAST 95% OF ITS MAXIMUM DENSITY OVER 12" MINIMUM THICK SUBGRADE SOIL MOISTURE CONDITIONED TO NEAR OPTIMUM MOISTURE CONTENT AND COMPACTED TO AT LEAST 95% OF ITS MAXIMUM DENSITY OVER 12" MINIMUM THICK 90% COMPACTED SUBGRADE SOIL MOISTURE CONDITIONED TO NEAR OPTIMUM MOISTURE CONTENT OVER 8" MINIMUM THICK SCARIFIED 90% COMPACTED NATIVE SOIL AT NEAR OPTIMUM MOISTURE CONTENT. REFER TO ARCHITECTURAL DRAWINGS FOR LOCATION OF CONSTRUCTION JOINTS, THICKENED EDGES, COLOR, DOWELS, REINFORCEMENT AND TEXTURE.
6. CONSTRUCT 8" THICK 4,000 PSI REINFORCED CONCRETE PAVEMENT OVER 4" THICK CLASS 2 AGGREGATE BASE COMPACTED TO AT LEAST 95% OF ITS MAXIMUM DENSITY OVER 12" MINIMUM THICK SUBGRADE SOIL MOISTURE CONDITIONED TO NEAR OPTIMUM MOISTURE CONTENT AND COMPACTED TO AT LEAST 95% OF ITS MAXIMUM DENSITY OVER 12" MINIMUM THICK 90% COMPACTED SUBGRADE SOIL MOISTURE CONDITIONED TO NEAR OPTIMUM MOISTURE CONTENT OVER 8" MINIMUM THICK SCARIFIED 90% COMPACTED NATIVE SOIL AT NEAR OPTIMUM MOISTURE CONTENT. REFER TO ARCHITECTURAL DRAWINGS FOR LOCATION OF CONSTRUCTION JOINTS, THICKENED EDGES, COLOR, DOWELS, REINFORCEMENT AND TEXTURE.
7. CONSTRUCT 3' WIDE 8" THICK 4,000 PSI REINFORCED CONCRETE DRAINAGE SWALE OVER 4" THICK CLASS 2 AGGREGATE BASE COMPACTED TO AT LEAST 95% OF ITS MAXIMUM DENSITY OVER 12" MINIMUM THICK SUBGRADE SOIL MOISTURE CONDITIONED TO NEAR OPTIMUM MOISTURE CONTENT AND COMPACTED TO AT LEAST 95% OF ITS MAXIMUM DENSITY OVER 12" MINIMUM THICK 90% COMPACTED SUBGRADE SOIL MOISTURE CONDITIONED TO NEAR OPTIMUM MOISTURE CONTENT OVER 8" MINIMUM THICK SCARIFIED 90% COMPACTED NATIVE SOIL PER DETAIL "C" SHOWN ON SHEET C2.
8. PAINT PARKING LOT SPACE AND ADA STRIPING ON TOP OF THE NEW PAVEMENT PER DETAILS SHOWN ON ARCHITECTURAL DRAWINGS.
10. CONSTRUCT A 24"X24" CONCRETE DRAIN BOX, GRATE AND FRAME PER DETAIL "D" SHOWN ON SHEET C2.
11. INSTALL BIO CLEAN ENVIRONMENTAL SERVICE INSERT IN DRAIN BOX TO PRE-TREAT URBAN STORM WATER RUNOFF PER DETAIL "E" SHOWN ON SHEET C2.
12. INSTALL "NO DUMPING—ONLY RAIN IN THE DRAIN" SIGNAGE ON TOP OF THE DRAIN BOX WALL PER DETAIL "F" SHOWN ON SHEET C2.
13. INSTALL 6" HIGH TUBE STEEL FENCE PER DETAILS SHOWN ON ARCHITECTURAL DRAWINGS.
14. CONSTRUCT SITE WALL PER DETAILS SHOWN ON ARCHITECTURAL AND STRUCTURAL DRAWINGS AND PER THE ELEVATIONS SHOWN HEREON. CONTRACTOR TO OBTAIN A SEPARATE PERMIT FROM THE CITY BUILDING AND SAFETY DEPARTMENT.
15. CONSTRUCT OFFSITE STREET 4" TALL BY 48" WIDE UNDERSIDEWALK CONCRETE PARKWAY DRAIN NO. 1 PER CITY STD. DWG. NO. 3013 SHOWN ON SHEET C9.0, INLET TYPE 1.
16. CONSTRUCT OPEN CONCRETE DRAINAGE FLUME OVER 4" THICK 95% COMPACTED CLASS 2 AGGREGATE BASE OVER 12" MINIMUM THICK SUBGRADE SOIL MOISTURE CONDITIONED NEAR OPTIMUM MOISTURE CONTENT AND COMPACTED TO AT LEAST 95% OF ITS MAXIMUM DENSITY OVER 12" MINIMUM THICK 90% COMPACTED SUBGRADE SOIL MOISTURE CONDITIONED TO NEAR OPTIMUM MOISTURE CONTENT OVER 8" THICK SCARIFIED 90% COMPACTED NATIVE SOIL AT NEAR OPTIMUM MOISTURE CONTENT PER DETAIL "M" SHOWN ON SHEET C2.
17. CONSTRUCT A 24"X36" CONCRETE DRAIN BOX, GRATE AND FRAME PER DETAIL "D" SHOWN ON SHEET C2.

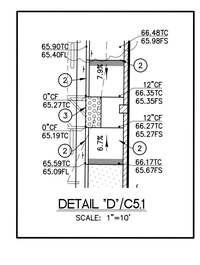

DETAIL 'D'/C5.1
SCALE: 1"=10'

TYPE	CONTINUOUS SPECIAL INSPECTION	PERIODIC SPECIAL INSPECTION
1. Verify materials below shallow foundations are adequate to achieve the design bearing capacity.	—	X
2. Verify excavations are extended to proper depth and have reached proper material.	—	X
3. Perform classification and testing of compacted fill materials.	—	X
4. Verify use of proper materials, densities and lift thicknesses during placement and compaction of compacted fill.	X	—
5. Prior to placement of compacted fill, inspect subgrade and verify that site has been prepared properly.	—	X

NOTE:
REFER TO SHEET C1 FOR A COMPLETE LEGEND OF ABBREVIATIONS AND SYMBOLS SHOWN HEREON.

CITY ENCROACHMENT NOTE

CONTRACTOR TO OBTAIN AN ENCROACHMENT PERMIT FROM THE CITY PRIOR TO COMMENCING ANY WORK WITHIN THE ADJACENT PUBLIC STREETS OR ANY ONSITE CITY EASEMENT.

N — PROJECT NORTH
N — TRUE NORTH

0 10 20 40 60
GRAPHIC SCALE
SCALE: 1"=20'

Underground Service Alert
Call: Toll Free
811
TWO WORKING DAYS BEFORE YOU DIG

WDID# N/A, REGION 8 MS4 CIP

REVISIONS			
MARK	DATE	BY	APPROVED/RCE NO.

DESIGNED BY
DATE
DRAWN BY
DATE
REVIEWED BY
DATE

CITY OF ONTARIO

BENCH MARK NO. P-22-1 ELEV. 876.791 FEET
LOCATION: DATUM: N.A.V.D. 88, 2017 ADJUSTMENT
2.5 INCH BRASS DISC STAMPED "CITY OF ONTARIO P-22-1" SET ON CONCRETE SLAB OF BACKFLOW DEVICE FOR AIRPORT SUPER STORAGE AT 1728 GROVE AVENUE.

MSL ENGINEERING, INC.
CIVIL ENGINEERS AND LAND SURVEYORS SPECIALIZING IN SITE DEVELOPMENT
301 NORTH SAN DIMAS AVE. SAN DIMAS, CA. 91773
(909) 305-2395 FAX (909) 305-2397
MARK S. LAMOUREUX R.C.E. 38382 01-29-24 DATE

REGISTERED PROFESSIONAL ENGINEER MARK S. LAMOUREUX No. 38382 CIVIL STATE OF CALIFORNIA

ONTARIO FIRE DEPARTMENT ADMINISTRATION BUILDING
GRADING AND DRAINAGE PLAN-SOUTH

PDEV23-001 - E202207973 – PC1 NCP (B202207973 ADMIN BLD)

SHEET 8 OF 18
CONTRACT
ACCOUNT
DWG. NO.

JN 2023-2023 C5.0-C5.1gdp

LICENSED ARCHITECT KELLEY NEEDHAM C-19064 Exp. 03/31/25 STATE OF CALIFORNIA

REGISTERED PROFESSIONAL ENGINEER MARK S. LAMOUREUX No. 38382 CIVIL STATE OF CALIFORNIA

CONSULTANT
MSL ENGINEERING, INC.
CIVIL ENGINEERS AND LAND SURVEYORS
SPECIALIZING IN SITE DEVELOPMENT
301 N. SAN DIMAS AVENUE
SAN DIMAS, CA. 91773
(909) 305-2395 FAX (909) 305-2397
MARK S. LAMOUREUX (R.C.E. 38382) 01-29-24 DATE

NO	DATE	BY	DESCRIPTION

REVISIONS

DRAWN: T.B.P. CHECKED: M.S.L.
DATE: 01-29-24 SCALE: 1"=20'
PROJECT NUMBER: 2011701

GRADING AND DRAINAGE PLAN-SOUTH

DRAWING NUMBER: C5.1

JN 2023-2023 C5.0-C5.1gdp
BID SET 03/01/24

SHEET 8 OF 18

1/29/2024 1:18:51 PM-MSL ENGINEERING, INC.-CAD

PBK
RANCHO CUCAMONGA
8163 ROCHESTER AVENUE, SUITE 100
RANCHO CUCAMONGA, CA 91730
909-987-0909 P

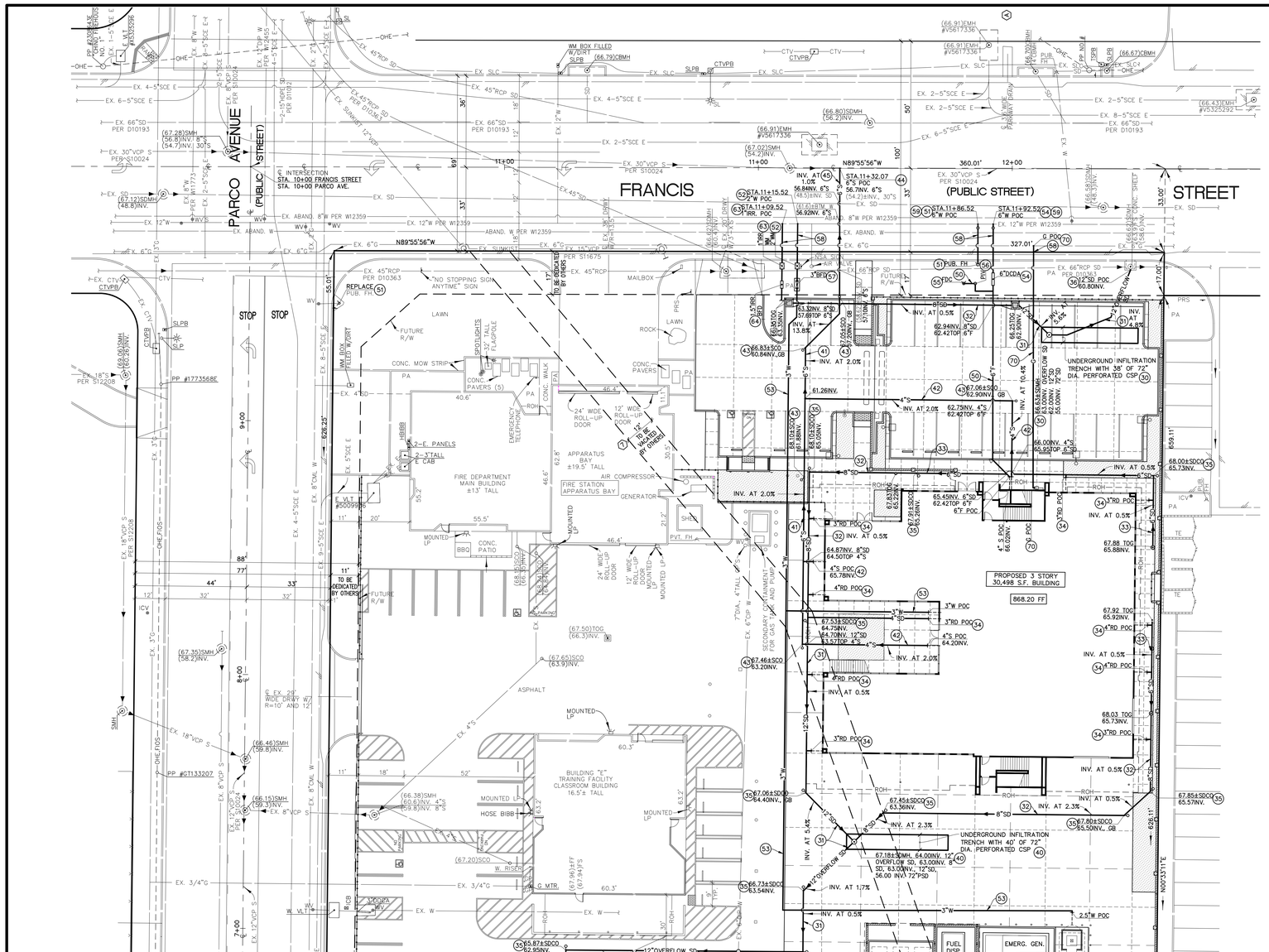

WDID# N/A, REGION 8 MS4 CIP

STORM DRAIN CONSTRUCTION NOTES

30. INSTALL AN UNDERGROUND 10'x42' INFILTRATION BASIN WITH A 38' LONG 72" DIAMETER PERFORATED CORRUGATED STEEL STORM DRAIN PIPE SURROUNDED BY 2' OF STONE ON ALL 4 SIDES AND 2' ON THE BOTTOM, AND A 30" DIAMETER RISER PIPE, FRAME AND ACCESS COVERS PER DETAIL "A" SHOWN ON SHEET C8.2.
31. INSTALL 12" DIAMETER HDPE STORM DRAIN PIPE AND FITTINGS. CONSTRUCT TRENCH PER DETAIL "G" SHOWN ON SHEET C2.
32. INSTALL 8" DIAMETER HDPE STORM DRAIN PIPE AND FITTINGS. CONSTRUCT TRENCH PER DETAIL "G" SHOWN ON SHEET C2.
33. INSTALL 6" DIAMETER HDPE STORM DRAIN PIPE AND FITTINGS. CONSTRUCT TRENCH PER DETAIL "G" SHOWN ON SHEET C2.
34. INSTALL 4" DIAMETER SDR 35 P.V.C. OR HDPE STORM DRAIN PIPE AND FITTINGS. CONSTRUCT TRENCH PER DETAIL "G" SHOWN ON SHEET C2.
35. INSTALL STORM DRAIN CLEANOUT ASSEMBLY TO GRADE PER DETAIL "H" SHOWN ON SHEET C2.
36. CONNECT 12" HDPE STORM DRAIN PIPE TO EXISTING 66" DIAMETER RCP STORM DRAIN PIPE WITH JUNCTION STRUCTURE NO. 1 CASE 1 PER CITY STD. DWG. NO. 3010. CONTRACTOR TO VERIFY THE POINT OF CONNECTION LOCATION, ELEVATION AND TYPE OF MATERIAL PRIOR TO INSTALLING ANY NEW PIPE.
40. INSTALL AN UNDERGROUND 10'x44' INFILTRATION BASIN WITH A 40' LONG 72" DIAMETER PERFORATED CORRUGATED STEEL STORM DRAIN PIPE SURROUNDED BY 2' OF STONE ON ALL 4 SIDES AND 2' ON THE BOTTOM, AND A 30" DIAMETER RISER PIPE, FRAME AND ACCESS COVERS PER DETAIL "A" SHOWN ON SHEET C8.2.

SANITARY SEWER CONSTRUCTION NOTES

41. INSTALL 6" DIAMETER SDR 35 P.V.C. ONSITE SEWER PIPE AND FITTINGS. CONSTRUCT TRENCH PER DETAIL "G" SHOWN ON SHEET C2.
42. INSTALL 4" DIAMETER SDR 35 P.V.C. ONSITE SEWER PIPE AND FITTINGS. CONSTRUCT TRENCH PER DETAIL "G" SHOWN ON SHEET C2.
43. INSTALL SEWER CLEANOUT ASSEMBLY TO GRADE PER DETAIL "I" SHOWN ON SHEET C2.
44. CONNECT TO STREET 30" DIAMETER VCP SEWER LINE WITH A CUT IN WYE AND SADDLE PER CITY STD. DWG. NO. 2005.
45. INSTALL OFFSITE 6" DIAMETER VCP SEWER LATERAL AND CLEANOUT WITH TRENCH EXCAVATION/BACKFILL AND PAVING PER CITY STD. DWG. NO. 1306 AND 2003.

WATER/FIRE LINE CONSTRUCTION NOTES

50. INSTALL PRIVATE 6" DIAMETER C-900 CLASS 200 (DR-14) P.V.C. WATER FIRE LINE AND DUCTILE IRON FITTINGS WITH CONCRETE THRUST BLOCKS PER CITY STD. DWG. NO. 4004 AND PER LOCAL FIRE DEPARTMENT STANDARDS. MEGALUG RESTRAINT FITTINGS CAN BE SUBSTITUTED FOR THE CONCRETE THRUST BLOCKS WITH PRE-APPROVAL FROM THE LOCAL FIRE DEPARTMENT PER CITY STD. DWG. NO. 4010. CONSTRUCT TRENCH PER DETAIL "G" SHOWN ON SHEET C2. MINIMUM PIPE COVER SHALL BE 30" IN NON-TRAFFIC AREAS AND 36" IN TRAFFIC AREAS PER N.F.P.A. 24 SECTION 8.1.
51. INSTALL STREET PUBLIC FIRE HYDRANT WITH BREAK-OFF CHECK VALVE, MARKER AND GATE VALVE PER CITY STD. DWG. NO. 4101, 4005 AND 4302.
52. INSTALL 2" WATER SERVICE WITH A 2" METER PER CITY STD. DWG. NO. 4202.
53. INSTALL 3" DIAMETER TYPE "K" COPPER WATER PIPE BETWEEN THE WATER METER AND THE NEW BUILDING. CONSTRUCT TRENCH PER DETAIL "G" SHOWN ON SHEET C2.
54. INSTALL A 6" DIAMETER FIRE SERVICE WITH DOUBLE CHECK DETECTOR ASSEMBLY, AND A 6" THICK REINFORCED CONCRETE SLAB PER CITY STD. DWG. NO. 4208.
55. INSTALL AN ABOVE GRADE PRIVATE FIRE DEPARTMENT CONNECTION PER DETAIL "J" SHOWN ON SHEET C2 PER LOCAL FIRE DISTRICT STANDARDS AND PER N.F.P.A. 24 STANDARDS AND SPECIFICATIONS.
56. INSTALL A POST INDICATOR VALVE PER DETAIL "K" SHOWN ON SHEET C2 PER LOCAL FIRE DISTRICT STANDARDS AND PER N.F.P.A. 13 AND N.F.P.A. 24 STANDARDS AND SPECIFICATIONS.
57. INSTALL 3" DIAMETER ABOVE GRADE BACKFLOW PREVENTION ASSEMBLY, REDUCED PRESSURE DEVICE ON A CONCRETE SLAB PER CITY STD. DWG. NO. 4207.
58. CONSTRUCT STREET TRENCH EXCAVATION/BACKFILL AND PAVING PER CITY STD. DWG. NO. 1306.
59. HOT TAP INTO STREET 12" DIAMETER WATER MAIN PER CITY STD. DWG. NO. 4106.
63. INSTALL 1" WATER SERVICE WITH A 1" METER PER CITY STD. DWG. NO. 4201.
64. INSTALL 1.5" DIAMETER ABOVE GRADE BACKFLOW PREVENTION ASSEMBLY, REDUCED PRESSURE DEVICE ON A CONCRETE SLAB PER CITY STD. DWG. 4206.

*THESE NOTES ARE "FOR REFERENCE ONLY". SEPARATE DETAILED PLANS PREPARED BY THE CONTRACTOR ARE TO BY SUBMITTED TO, AND BE APPROVED BY, THE FIRE DEPARTMENT FOR ALL FIRE PROTECTION SYSTEMS

WATER/FIRE LINE CONSTRUCTION NOTES

70. CONNECT TO GAS MAIN IN STREET AND INSTALL GAS LATERAL PIPING TO THE GAS METER AT THE BUILDING PER THE GAS COMPANY STANDARDS AND THE PLUMBING SITE PLAN.

UNDERGROUND UTILITIES NOTE:

CONTRACTOR IS RESPONSIBLE FOR LOCATING UNDERGROUND UTILITIES AND STORMDRAIN IN THE AREAS OF NEW CONSTRUCTION PRIOR TO THEIR START OF WORK. UNDERGROUND UTILITIES SHOWN ON THIS MAP IS APPROXIMATE ONLY AND IS FOR GENERAL REFERENCE.

NOTE:
REFER TO SHEET C1 FOR A COMPLETE LEGEND OF ABBREVIATIONS AND SYMBOLS SHOWN HEREON.

N — PROJECT NORTH
N — TRUE NORTH

0 10 20 40 60
GRAPHIC SCALE
SCALE: 1"=20'

CITY ENCROACHMENT NOTE

CONTRACTOR TO OBTAIN AN ENCROACHMENT PERMIT FROM THE CITY PRIOR TO COMMENCING ANY WORK WITHIN THE ADJACENT PUBLIC STREETS OR ANY ONSITE CITY EASEMENT.

Underground Service Alert
Call: Toll Free
811
TWO WORKING DAYS BEFORE YOU DIG

REVISIONS			
MARK	DATE	BY	APPROVED/RCE NO.

DESIGNED BY ____ DATE ____
DRAWN BY ____ DATE ____
REVIEWED BY ____ DATE ____

CITY OF ONTARIO

BENCH MARK NO. P-22-1 ELEV. 876.791 FEET
LOCATION: DATUM: N.A.V.D. 88, 2017 ADJUSTMENT 2.5 INCH BRASS DISC STAMPED "CITY OF ONTARIO P-22-1" SET ON CONCRETE SLAB OF BACKFLOW DEVICE FOR AIRPORT SUPER STORAGE AT 1728 GROVE AVENUE.

MSL ENGINEERING, INC.
CIVIL ENGINEERS AND LAND SURVEYORS SPECIALIZING IN SITE DEVELOPMENT
301 NORTH SAN DIMAS AVE. SAN DIMAS, CA. 91773
(909) 305-2395 FAX (909) 305-2397
MARK S. LAMOUREUX R.C.E. 38382 DATE 01-29-24

REGISTERED PROFESSIONAL ENGINEER MARK S. LAMOUREUX No. 38382 CIVIL STATE OF CALIFORNIA

ONTARIO FIRE DEPARTMENT ADMINISTRATION BUILDING

STORM DRAIN AND UTILITY PLAN-NORTH

PDEV23-001 - E202207973 – PC1 NCP (B202207973 ADMIN BLD)

SHEET 9 OF 18
CONTRACT ____
ACCOUNT ____
DWG. NO. ____

JN 2023-2023 C6.0-C6.ull

ONTARIO FIRE DEPARTMENT ADMINISTRATION BUILDING

CITY OF ONTARIO
1420 E. FRANCIS STREET., ONTARIO, CA

LICENSED ARCHITECT KELLEY NEEDHAM C-19064 Expires 03/31/23 STATE OF CALIFORNIA

REGISTERED PROFESSIONAL ENGINEER MARK S. LAMOUREUX No. 38382 CIVIL STATE OF CALIFORNIA

CONSULTANT
MSL ENGINEERING INC
CIVIL ENGINEERS AND LAND SURVEYORS
SPECIALIZING IN SITE DEVELOPMENT
301 N. SAN DIMAS AVENUE
SAN DIMAS, CA. 91773
(909) 305-2395 FAX (909) 305-2397
MARK S. LAMOUREUX (R.C.E. 38382) DATE 01-29-24

NO	DATE	BY	DESCRIPTION

REVISIONS

DRAWN: T.B.P. CHECKED: M.S.L.
DATE: 01-29-24 SCALE: 1"=20'
PROJECT NUMBER: 2011701

STORM DRAIN AND UTILITY PLAN-NORTH

DRAWING NUMBER: C6.0

JN 2023-2023 C6.0-C6.ull
BID SET 03/01/24

PBK
RANCHO CUCAMONGA
8163 ROCHESTER AVENUE, SUITE 100
RANCHO CUCAMONGA, CA 91730
909-987-0909 P

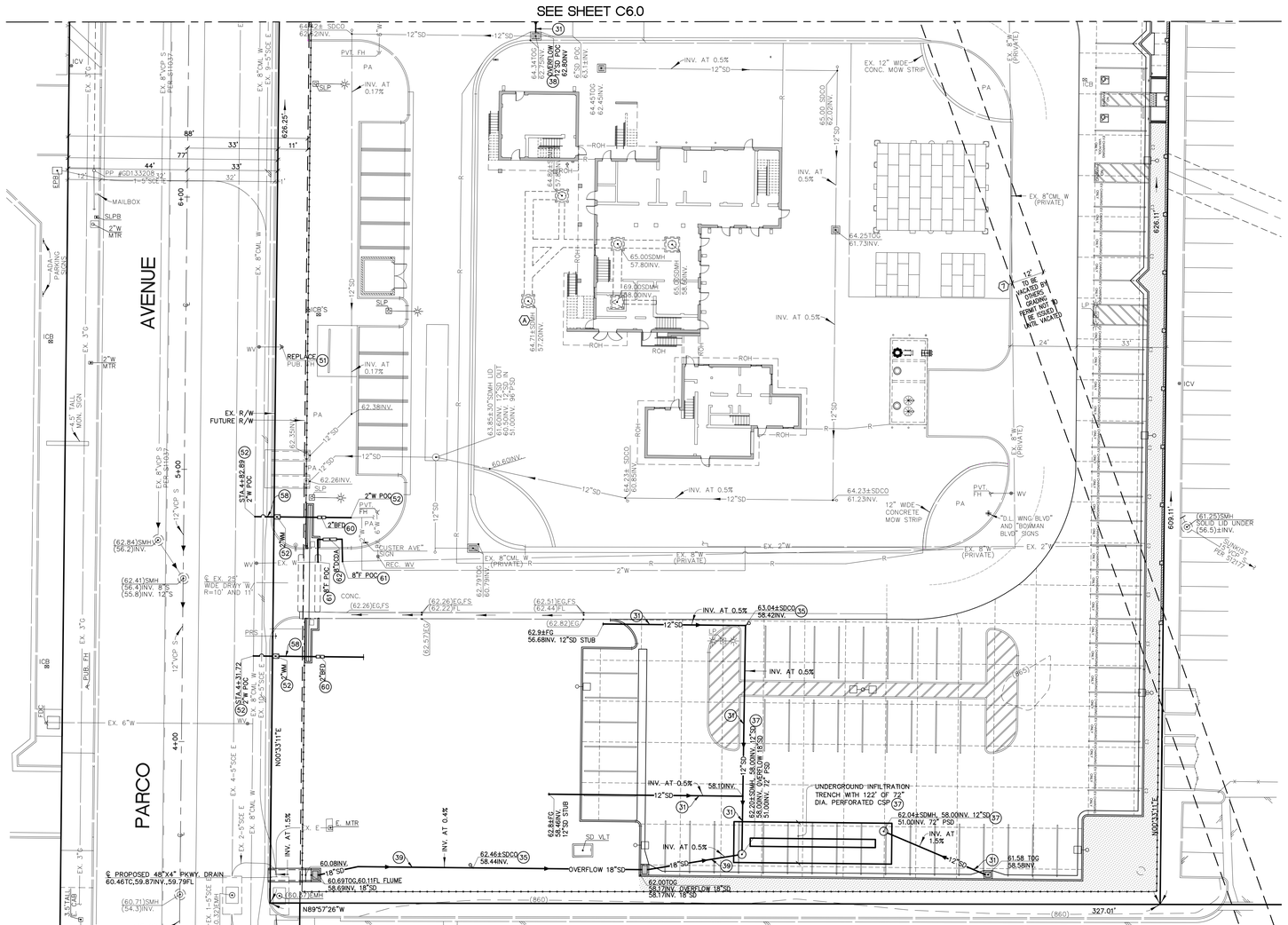

STORM DRAIN CONSTRUCTION NOTES

31 INSTALL 12" DIAMETER HDPE STORM DRAIN PIPE AND FITTINGS. CONSTRUCT TRENCH PER DETAIL "G" SHOWN ON SHEET C2.

35 INSTALL STORM DRAIN CLEANOUT ASSEMBLY TO GRADE PER DETAIL "H" SHOWN ON SHEET C2.

37 INSTALL AN UNDERGROUND 21'x64' INFILTRATION BASIN WITH A 122' LONG 72" DIAMETER PERFORATED CORRUGATED STEEL STORM DRAIN PIPE SURROUNDED BY 3' OF STONE ON ALL 4 SIDES AND 2' ON THE BOTTOM, AND TWO 30" DIAMETER RISER PIPE, FRAME AND ACCESS COVERS PER DETAIL "A" SHOWN ON SHEET C8.2.

38 CORE DRILL THROUGH CONCRETE DRAIN BOX WALL AND INSTALL 12" DIAMETER STORM DRAIN PIPE WITH A TIGHT SEAL.

39 INSTALL 18" DIAMETER HDPE STORM DRAIN PIPE AND FITTINGS. CONSTRUCT TRENCH PER DETAIL "G" SHOWN ON SHEET C2.

WATER/FIRE LINE CONSTRUCTION NOTES

51 INSTALL STREET PUBLIC FIRE HYDRANT WITH BREAK-OFF CHECK VALVE, MARKER AND GATE VALVE PER CITY STD. DWG. NO. 4101, 4005 AND 4302.

52 INSTALL 2" WATER SERVICE WITH A 2" METER PER CITY STD. DWG. NO. 4202.

58 CONSTRUCT STREET TRENCH EXCAVATION/BACKFILL AND PAVING PER CITY STD. DWG. NO. 1306.

60 INSTALL 2" DIAMETER ABOVE GRADE REDUCED PRESSURE PRINCIPLE BACKFLOW PREVENTION DEVICE ON A CONCRETE SLAB PER CITY STD. DWG. NO. 4206.

61 * INSTALL PRIVATE 8" DIAMETER C-900 CLASS 200 (DR-14) P.V.C. WATER FIRE LINE AND DUCTILE IRON FITTINGS WITH CONCRETE THRUST BLOCKS PER DETAIL "L" SHOWN ON SHEET C2 AND PER LOCAL FIRE DEPARTMENT STANDARDS. MEGALUG RESTRAINT FITTINGS CAN BE SUBSTITUTED FOR THE CONCRETE THRUST BLOCKS WITH PRE-APPROVAL FROM THE LOCAL FIRE DEPARTMENT. CONSTRUCT TRENCH PER DETAIL "G" SHOWN ON SHEET C2. MINIMUM PIPE COVER SHALL BE 36" PER N.F.P.A 24 SECTION 8.1.

62 * INSTALL AN 8" DIAMETER FIRE SERVICE WITH DOUBLE CHECK DETECTOR ASSEMBLY, AND A 6" THICK REINFORCED CONCRETE SLAB PER CITY STD. DWG. NO. 4208.

*THESE NOTES ARE "FOR REFERENCE ONLY". SEPARATE DETAILED PLANS PREPARED BY THE CONTRACTOR ARE TO BY SUBMITTED TO, AND BE APPROVED BY, THE FIRE DEPARTMENT FOR ALL FIRE PROTECTION SYSTEMS

UNDERGROUND UTILITIES NOTE:

CONTRACTOR IS RESPONSIBLE FOR LOCATING UNDERGROUND UTILITIES AND STORMDRAIN IN THE AREAS OF NEW CONSTRUCTION PRIOR TO THEIR START OF WORK. UNDERGROUND UTILITIES SHOWN ON THIS MAP IS APPROXIMATE ONLY AND IS FOR GENERAL REFERENCE.

NOTE:
REFER TO SHEET C1 FOR A COMPLETE LEGEND OF ABBREVIATIONS AND SYMBOLS SHOWN HEREON.

CITY ENCROACHMENT NOTE

CONTRACTOR TO OBTAIN AN ENCROACHMENT PERMIT FROM THE CITY PRIOR TO COMMENCING ANY WORK WITHIN THE ADJACENT PUBLIC STREETS OR ANY ONSITE CITY EASEMENT.

N — PROJECT NORTH
N — TRUE NORTH

0 10 20 40 60
GRAPHIC SCALE
SCALE: 1"=20'

Underground Service Alert
Call: Toll Free
811
TWO WORKING DAYS BEFORE YOU DIG

WDID# N/A, REGION 8 MS4 CIP

REVISIONS			
MARK	DATE	BY	APPROVED/RCE NO.

DESIGNED BY ____ DATE ____
DRAWN BY ____ DATE ____
REVIEWED BY ____ DATE ____

CITY OF ONTARIO

BENCH MARK NO. P-22-1 ELEV. 876.791 FEET
LOCATION: DATUM: N.A.V.D. 88, 2017 ADJUSTMENT 2.5 INCH BRASS DISC STAMPED "CITY OF ONTARIO P-22-1" SET ON CONCRETE SLAB OF BACKFLOW DEVICE FOR AIRPORT SUPER STORAGE AT 1728 GROVE AVENUE.

MSL ENGINEERING, INC.
CIVIL ENGINEERS AND LAND SURVEYORS SPECIALIZING IN SITE DEVELOPMENT
301 NORTH SAN DIMAS AVE. SAN DIMAS, CA. 91773
(909) 305-2395 FAX (909) 305-2397
MARK S. LAMOUREUX R.C.E. 38382 DATE 01-29-24

ONTARIO FIRE DEPARTMENT ADMINISTRATION BUILDING
STORM DRAIN AND UTILITY PLAN-SOUTH
PDEV23-001 - E202207973 – PC1 NCP (B202207973 ADMIN BLD)

SHEET 10 OF 18
CONTRACT ____
ACCOUNT ____
DWG. NO. ____

JN 2023-2023 C6.0-C6.ul

ONTARIO FIRE DEPARTMENT ADMINISTRATION BUILDING
CITY OF ONTARIO
1420 E. FRANCIS STREET., ONTARIO, CA

LICENSED ARCHITECT — KELLEY NEEDHAM C-19064 Re-Cert 03/31/23 — STATE OF CALIFORNIA
REGISTERED PROFESSIONAL ENGINEER — MARK S. LAMOUREUX No. 38382 CIVIL — STATE OF CALIFORNIA

CONSULTANT
MSL ENGINEERING INC
CIVIL ENGINEERS AND LAND SURVEYORS
SPECIALIZING IN SITE DEVELOPMENT
301 N. SAN DIMAS AVENUE
SAN DIMAS, CA. 91773
(909) 305-2395 FAX (909) 305-2397
MARK S. LAMOUREUX (R.C.E. 38382) DATE 01-29-24

NO	DATE	BY	DESCRIPTION

REVISIONS

DRAWN: T.B.P. CHECKED: M.S.L.
DATE: 01-29-24 SCALE: 1"=20'
PROJECT NUMBER: 2011701

STORM DRAIN AND UTILITY PLAN-SOUTH

DRAWING NUMBER: C6.1

JN 2023-2023 C6.0-C6.ul
BID SET 03/01/24

PRIVATE CIVIL ENGINEER'S EROSION CONTROL PLAN GENERAL NOTES

1. THIS EROSION CONTROL PLAN WAS PREPARED AT THE REQUEST OF CITY OF ONTARIO, OWNER OF THE PROPERTY BEING DEVELOPED AT 1408 E. FRANCIS STREET, IN THE CITY OF ONTARIO, CALIFORNIA. THE PROPOSED CONSTRUCTION ACTIVITY INCLUDES CONSTRUCTION OF NEW FIRE DEPARTMENT ADMINISTRATION BUILDING AND NEW PAVEMENT WITH A TOTAL OF 1.7 ACRES OF TOTAL AREA CONSTRUCTED/GRADED ONSITE.
2. THE EROSION CONTROL PLAN AND THE STORMWATER POLLUTION PREVENTION PLAN (SWPPP) SHALL BE KEPT ON SITE DURING CONSTRUCTION ACTIVITY. THE APPLICABLE BMP'S (BEST MANAGEMENT PRACTICE) LISTED ON THIS PLAN AND WITHIN THE SWPPP SHALL BE IMPLEMENTED AS SOON AS POSSIBLE TO CONTROL STORM WATER POLLUTION DURING CONSTRUCTION.
3. THROUGHOUT THE DURATION OF CONSTRUCTION, THE CONTRACTOR SHALL HAVE A STATE CERTIFIED QUALIFIED SWPPP DEVELOPER (QSD) ASSIGNED TO THE PROJECT IN ACCORDANCE WITH SECTION VII OF THE NATIONAL POLLUTANT DISCHARGE ELIMINATION SYSTEM (NPDES) GENERAL PERMIT FOR STORM WATER DISCHARGES ASSOCIATED WITH CONSTRUCTION AND LAND DISTURBANCE ACTIVITY (CONSTRUCTION GENERAL PERMIT). THE QSD IS RESPONSIBLE FOR ALL CHANGES TO THE PROJECT SWPPP AND EROSION CONTROL PLAN.
4. THROUGHOUT THE DURATION OF CONSTRUCTION, THE CONTRACTOR SHALL HAVE A STATE CERTIFIED QUALIFIED SWPPP PRACTITIONER (QSP) ASSIGNED TO THE PROJECT IN ACCORDANCE WITH SECTION VII OF THE CONSTRUCTION GENERAL PERMIT (CGP). THE QSP IS RESPONSIBLE FOR IMPLEMENTATION OF ALL ASPECTS OF THE EROSION CONTROL PLAN, THE STORMWATER POLLUTION PREVENTION PLAN (SWPPP) AND THE SWPPP SPECIFICATIONS.
5. THE QSP OR PERSONNEL TRAINED BY THE QSP ARE RESPONSIBLE FOR PROVIDING WEEKLY, QUARTERLY, PRE-STORM, DURING STORM AND POST STORM BMP INSPECTIONS IN ACCORDANCE TO THE SWPPP. ALL INSPECTION RECORDS SHALL BE KEPT ONSITE FOR THE DURATION OF THE PROJECT.
6. ALL CONTRACTORS AND THEIR PERSONNEL WHOSE WORK CAN CONTRIBUTE TO OR CAUSE STORM WATER POLLUTION SHOULD BE MADE FAMILIAR WITH THIS PLAN AND THE SWPPP. ADEQUATE TRAINING FOR THE IMPLEMENTATION OF THE MEASURES PRESENTED HEREIN SHALL BE PROVIDED BY THE CONTRACTORS FOR THEIR PERSONNEL.
7. CHANGES IN CONSTRUCTION OR IN CONDITIONS WHICH ARE NOT COVERED BY THIS PLAN SHOULD BE BROUGHT TO THE ATTENTION OF THE QSD, IF NECESSARY THIS PLAN WILL BE REVISED TO REFLECT THE CHANGES.
8. ALL PREVENTION AND CLEAN UP MEASURES SHALL BE CONDUCTED IN ACCORDANCE WITH COUNTY ORDINANCES, AS WELL AS STATE, AND FEDERAL REGULATIONS. WASTE MATERIALS SHOULD BE DISPOSED OF IN A LEGAL MANNER.
9. ONLY STORM WATER FROM THE PROJECT SITE SHALL BE ALLOWED TO FLOW INTO THE PUBLIC STORM DRAIN SYSTEM. REGULAR INSPECTION OF THE STRUCTURAL AND NON-STRUCTURAL BEST MANAGEMENT PRACTICES USED ON THIS PROJECT SHALL BE PERFORMED IN CONFORMANCE WITH THE SWPPP TO INSURE PROPER OPERATION.
10. ON A DAILY BASIS, AS-NECESSARY, AND AFTER CONSTRUCTION HAS BEEN COMPLETED, THE SITE HARDSCAPE AND ADJOINING STREETS AND SIDEWALKS SHALL BE SWEPT CLEAN. ALL WASTE AND LEFTOVER MATERIALS SHALL BE REMOVED FROM THE SITE. ALL LANDSCAPING AND PLANTING AREAS SHALL BE WELL MAINTAINED TO PREVENT EROSION. AVOID OVERWATERING.
11. DISTURBED SOILS SHALL BE WATERED AS OFTEN AS NECESSARY TO KEEP SOIL VISIBLY DAMP DURING GRADING AND CONSTRUCTION TO MINIMIZE DUST GENERATION. COMPLY WITH AQMD RULE 403 TO INSURE THE CLEANUP OF CONSTRUCTION RELATED DIRT ON APPROACH ROUTES TO THE SITE.
12. AFTER A RAINSTORM, ALL SILT AND DEBRIS SHALL BE REMOVED FROM GRAVEL BAG BARRIERS.
13. _____, CITY DEVELOPMENT MANAGER (UNTIL A QSP HIRED BY THE GENERAL CONTRACTOR HAS BEEN ASSIGNED) SHALL BE NOTIFIED AT (909) 395- IN AN EMERGENCY.
14. THE QSP SHALL PREPARE AN ANNUAL REPORT FOR EACH REPORTING PERIOD FROM JULY 1st TO JUNE 30th. THE ANNUAL REPORT SHALL INCLUDE STORMWATER MONITORING INFORMATION AND DOCUMENTATION OF ALL TRAINING AND BMP INSPECTIONS.
15. WITHIN 90 DAYS OF THE FINAL COMPLETION OF CONSTRUCTION THE QSP SHALL ELECTRONICALLY FILE A NOTICE OF TERMINATION (NOT) THROUGH SMARTS AND UPLOAD A FINAL SITE MAP AND PHOTOS. ADDITIONALLY THE QSP SHALL UPLOAD THE FINAL ANNUAL REPORT.
16. I DO HEREBY CERTIFY UNDER PENALTY OF LAW THAT THIS DOCUMENT AND ALL ATTACHMENTS WILL BE CARRIED OUT UNDER MY DIRECTION AND SUPERVISION. I UNDERSTAND THAT AT THE CONCLUSION OF THIS PROJECT, I WILL BE REQUIRED TO SUBMIT CERTIFICATION THAT ALL ELEMENTS OF THIS PROJECT WERE CARRIED OUT IN ACCORDANCE WITH THIS EROSION CONTROL PLAN AND ALL OF ITS ATTACHMENTS.

DAN BEERS, CITY DESIGN AND CONSTRUCTION PRINCIPAL PROJECT MANAGER — 01-29-2024
NAME — DATE

PROJECT N.P.D.E.S. COORDINATOR — (909) 395-2806
TITLE — TELEPHONE NUMBER

BMP LEGEND

INSTALL SLOPECARD 3 WEIGHTED EXCELSIOR FIBER ROLL PER BMP SE-5 SUPPLIED BY KRISTAR ENTERPRISES INC. AT 800-579-8819 OR EQUIVALENT. CONTACT DRAINAGE PROTECTION SYSTEMS AT (888) 950-8826 FOR THE LOCAL SERVICE INSTALLATION AND MAINTENANCE COMPANY. SLOPECARD 3 IS SUPPLIED IN 8" DIAMETER BY 6' LENGTHS COVERED IN A "SAFETY ORANGE" OUTER NETTING WITH A WEIGHT OF APPROXIMATELY 10 POUNDS PER FOOT. REFER TO CONSTRUCTION NOTE (101) SHOWN HEREON.

INSTALL GRAVEL BAG BERM PER SE-6 AND PER DETAIL "X" SHOWN HEREON.

FENCED AREA TO BE USED FOR VEHICLE STAGING, STORAGE, CLEANING, FUELING AND MAINTENANCE PER BMP's NS-8, NS-9 AND NS-10; CONSTRUCTION MATERIAL DELIVERY AND STORAGE PER BMP's WM-1, WM-2 AND WM-4; AND WASTE MANAGEMENT PER BMP'S WM-5, WM-8 AND WM-9.

TEMPORARY ROCK AT A STABILIZED CONSTRUCTION ENTRANCE/EXIT WITH CORRUGATED STEEL PANELS PER BMP TC-1.

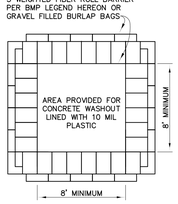

DETAIL "W"
CONCRETE WASHOUT AREA
NOT TO SCALE

LIST OF BEST MANAGEMENT PRACTICES (BMP's)-USE AS APPLICABLE

(REFERENCE: CALIFORNIA STORM WATER BEST MANAGEMENT PRACTICE HANDBOOK FOR CONSTRUCTION ACTIVITY)

EROSION AND SEDIMENT CONTROL BMP's
SE-5 FIBER ROLLS
SE-6 GRAVEL BAG BERM
SE-7 STREET SWEEPING AND VACUUMING

WIND EROSION CONTROL
WE-1 WIND EROSION CONTROL

EQUIPMENT TRACKING CONTROL
TC-1 STABILIZED CONSTRUCTION ENTRANCE/EXIT

NON-STORMWATER MANAGEMENT AND MATERIAL MANAGEMENT (BMP's)
NS-8 VEHICLE AND EQUIPMENT CLEANING
NS-9 VEHICLE AND EQUIPMENT FUELING
NS-10 VEHICLE AND EQUIPMENT MAINTENANCE

WASTE MANAGEMENT AND MATERIAL POLLUTION CONTROL
WM-1 MATERIAL DELIVERY AND STORAGE
WM-2 MATERIAL USE
WM-4 SPILL PREVENTION AND CONTROL
WM-5 SOLID WASTE MANAGEMENT
WM-8 CONCRETE WASTE MANAGEMENT
WM-9 SANITARY/SEPTIC WASTE MANAGEMENT

LIST OF MAJOR CONSTRUCTION MATERIALS, WASTE AND ACTIVITIES AT THE PROJECT SITE

1. CONCRETE PAVEMENT.
2. CONCRETE CURBS AND WALKS.
3. ENCLOSURES.
4. UTILITY SERVICES TO PROPOSED BUILDING.
5. PARKING LOT LIGHTS.
6. LANDSCAPING AND IRRIGATION.
7. CONSTRUCTION OF A NEW BUILDING.
8. CONCRETE BLOCK WALLS AND FENCES.
9. EARTHWORK MOVED AND GRADED.
10. STORM DRAIN.

EMERGENCY CONTACT
NAME: DAN BEERS
TELEPHONE NO.: (909) 395-2806

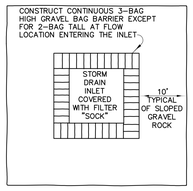

DRAINAGE INLET AREA

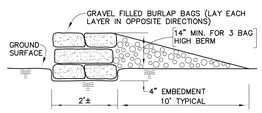

GRAVEL BAG BARRIER

DETAIL "X" (100)
STORM INLET GRAVEL BAG
PROTECTION DETAIL AND BARRIER DETAIL OPTION
NOT TO SCALE

Underground Service Alert
Call: Toll Free
811
TWO WORKING DAYS BEFORE YOU DIG

EROSION CONTROL PLAN CONSTRUCTION NOTES

(100) INSTALL GRAVEL BAG BARRIER PER DETAIL "X" SHOWN ON SHEET C7 AND PER BMP SE-6. WHEN THIS BARRIER IS INSTALLED AROUND A DRAIN BOX, STORM DRAIN, OR CATCH BASIN INLET, INSTALL A PERMEABLE FILTER FABRIC ON TOP OF THE INLET TO PREVENT SILT FROM ENTERING THE INLET.

(101) INSTALL BMP SE-5 STRAW WATTLES FIBER ROLL BARRIER PER DETAIL "Y" SHOWN ON SHEET C7 AS AN ACCEPTABLE SUBSTITUTION TO THE SLOPEGARD MATERIAL CALLED OUT TO INSTALL ON THIS PLAN.

(102) INSTALL A STABILIZED CONSTRUCTION ENTRANCE/EXIT AS SHOWN HEREON AND PER BMP TC-1 DETAIL SHOWN ON SHEET C7.

(103) STREET SWEEPING AND VACUUMING TO BE PERFORMED WHEN THERE IS NOTICEABLE SEDIMENT ACCUMULATION ON ROADWAYS ADJACENT TO THE CONSTRUCTION SITE PER BMP SE-7.

Stabilized Construction Entrance/Exit TC-1

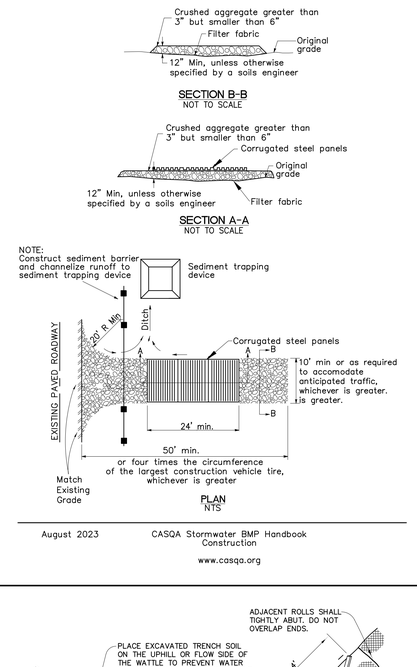

August 2023 — CASQA Stormwater BMP Handbook Construction — www.casqa.org

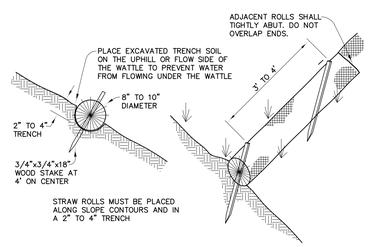

SPECIFICATION:
STRAW WATTLES SHALL BE MANUFACTURED FROM RICE STRAW AND SHALL BE WRAPPED IN A TUBULAR BLACK PLASTIC NETTING. THE NETTING SHALL HAVE A STRAND THICKNESS OF 0.30 INCH, A KNOT THICKNESS OF 0.055, AND A WEIGHT OF 0.35 OUNCE PER FOOT (EACH PLUS/ MINUS 10%) AND SHALL BE MADE FROM 85% HIGH DENSITY POLYETHYLENE, 14% ETHYL VINYL ACETATE AND 1% COLOR FOR UV INHIBITION. STRAW WATTLES SHALL BE NINE INCHES IN DIAMETER (PLUS OR MINUS ONE INCH), TWENTY-FIVE FEET LONG (PLUS OR MINUS 0.5 FEET) AND WEIGH 35 LBS. (PLUS OR MINUS 10%).

HYDRO-SCAPE CUSTOMER SERVICE
(800) 395-4477

DETAIL "Y" (101)
STRAW WATTLES BARRIER DETAIL OPTION
NOT TO SCALE

CITY OF ONTARIO EROSION AND SEDIMENT CONTROL AND CONTRACTOR ACTIVITY NOTES

1. THE CONTRACTOR SHALL MAINTAIN THE CONSTRUCTION SITE BY IMPLEMENTATION OF BEST MANAGEMENT PRACTICES (BMPS), TO THE MAXIMUM EXTENT PRACTICABLE, SO THAT POLLUTANTS (INCLUDING SOIL PARTICLES, BUILDING MATERIALS, WASTE AND SPILLED MATERIALS) ARE PREVENTED FROM DISCHARGE INTO THE MUNICIPAL STORMWATER SYSTEM.
2. THE CONTRACTOR SHALL PREPARE THE CONSTRUCTION SITE PRIOR TO THE ONSET OF ANY STORM AND SHALL HAVE ALL EROSION AND SEDIMENT CONTROL MEASURES IN PLACE FOR THE RAINY SEASON, PRIOR TO OCTOBER 1.
3. THE CONTRACTOR SHALL CONSIDER THE FULL RANGE OF EROSION CONTROL BEST MANAGEMENT PRACTICES FOR ALL DISTURBED SURFACES SUCH AS: BUFFER STRIPS, HYDROSEEDING, MULCHING, TRACK WALKING OR IMPRINTING, GEOTEXTILES AND MATS, SOIL STABILIZERS AND BINDERS, EARTHEN DIKES, TEMPORARY DRAINS AND SWALES FOR DIVERSION OF OFF-SITE RUNOFF, TEMPORARY SLOPE DRAINS, STORM OUTLET PROTECTION, CHECK DAMS AND SLOPE ROUGHENING AND TERRACING.
4. ALL EROSION AND SEDIMENT CONTROL BMPS SHALL BE INSTALLED ACCORDING TO THE SPECIFICATIONS IN SECTION 3 OF THE CALIFORNIA STORMWATER QUALITY ASSOCIATION BMP HANDBOOK (JANUARY 2019) FOR CONSTRUCTION ACTIVITY OR EQUIVALENT.
5. DUST CONTROL BMPS SHALL BE USED TO STABILIZE SOIL FROM WIND EROSION, AND REDUCE DUST GENERATED BY CONSTRUCTION ACTIVITIES AND MAY INCLUDE STABILIZATION OF UNPAVED CONSTRUCTION ROADS AND PARKING AND STAGING AREAS; WATER SPRAYING; CHEMICAL STABILIZATION; MULCHING, COVERING STOCKPILES WITH TARPS; RAPID CLEANUP OF SEDIMENTS DEPOSITED ON PAVED ROADS AND STABILIZATION OF CONSTRUCTION ENTRY/EXIT POINTS WITH GRAVEL.
6. THE CONTRACTOR SHALL INSTALL A 6 FOOT HIGH SCREENING FABRIC FENCE AROUND THE PERIMETER OF THE CONSTRUCTION SITE PRIOR TO THE START OF CONSTRUCTION.
7. THE CONTRACTOR SHALL CONSTRUCT SEDIMENT CONTROLS SUCH AS FIBER ROLLS, SILT FENCES, STRAW BALE BARRIERS, GRAVEL-FILLED BAG BARRIERS, BRUSH OR ROCK FILTERS, SEDIMENT BASINS AND STORM DRAIN INLET PROTECTION.
8. ALL SEDIMENT CONTROL STRUCTURES SHALL BE CONSTRUCTED PURSUANT TO THE SPECIFICATIONS IN SECTION 3 OF THE CALIFORNIA STORMWATER QUALITY ASSOCIATION BMP HANDBOOK FOR CONSTRUCTION ACTIVITY OR EQUIVALENT, UNLESS OTHERWISE REQUIRED IN THE CITY'S STANDARD CONSTRUCTION NOTES.
9. THE CONTRACTOR SHALL PROTECT ALL STORM DRAIN INLETS WHICH MAY RECEIVE STORM WATER RUNOFF FROM THE CONSTRUCTION ACTIVITIES WITH A COMBINATION OF FIBER ROLLS AND GRAVEL BAGS. FIBER ROLLS MUST BE PLACED ACROSS THE OPENING OF ALL OFF-SITE AND ON-SITE CURB-INLET CATCH BASINS WITH GRAVEL BAGS PLACED OVER THE ENDS OF THE FIBER ROLL AND OVER THE TOP OF THE ROLL, AT 3 FT INTERVALS. ALL DROP INLETS MUST BE SURROUNDED BY FIBER ROLL BARRIERS, WITH GRAVEL BAGS PLACED OVER THE ENDS OF THE ROLLS AND OVER THE TOP OF ROLL, AT 3 FOOT INTERVALS. AFTER EACH STORM EVENT, ALL FIBER ROLL/GRAVEL BAG BARRIERS MUST BE REMOVED AND CLEANED OF ALL SEDIMENT BUILDUP.
10. STRUCTURAL BMP INSTALLATION IS TO BE MONITORED BY THE MANUFACTURER OR APPROVED QUALIFIED INSTALLER TO ENSURE MANUFACTURERS SPECIFICATIONS ARE MET DURING CONSTRUCTION.
11. DURING THE RAINY SEASON, ALL GRADED SITES SHALL INSTALL AND MAINTAIN TEMPORARY SEDIMENT BASINS PURSUANT TO THE SPECIFICATIONS OF BMP FACTSHEET #SE-2 OF THE CASQA STORMWATER HANDBOOK FOR CONSTRUCTION ACTIVITIES.
12. ALL EROSION AND SEDIMENT CONTROL MEASURES SHALL BE CHECKED BEFORE AND AFTER ALL STORMS TO ENSURE MEASURES ARE FUNCTIONING PROPERLY. QUALIFIED PERSONNEL SHALL CONDUCT INSPECTIONS OF THE CONSTRUCTION SITE PRIOR TO ANTICIPATED STORM EVENTS, DURING EXTENDED STORM EVENTS AND AFTER ACTUAL STORM EVENTS TO IDENTIFY AREAS CONTRIBUTING TO A DISCHARGE OF STORM WATER ASSOCIATED WITH CONSTRUCTION ACTIVITY. PRE-STORM INSPECTIONS ARE TO ENSURE THAT THE BMPS LISTED ABOVE ARE PROPERLY INSTALLED AND MAINTAINED; POST-STORM INSPECTIONS ARE TO ASSURE THAT THE BMPS HAVE FUNCTIONED ADEQUATELY. DURING EXTENDED STORM EVENTS, INSPECTIONS SHALL BE MADE DURING EACH 24-HOUR PERIOD. EQUIPMENT, MATERIALS, AND MANPOWER MUST BE MADE AVAILABLE FOR RAPID RESPONSE TO FAILURES AND EMERGENCIES. ALL CORRECTIVE MAINTENANCE TO BMPS SHALL BE PERFORMED AS SOON AS POSSIBLE, DEPENDING UPON WORKER SAFETY.
13. THE CONTRACTOR SHALL MAINTAIN A LOG AT THE CONSTRUCTION SITE OF ALL INSPECTIONS AND BMP MAINTENANCE PERFORMED. THE LOG SHALL ALSO INCLUDE ANY CORRECTIVE CHANGES TO THE BMPS OR THE EROSION AND SEDIMENT CONTROL PLAN, THE INSPECTION DATE, AND THE NAME OF THE PERSON INSPECTING THE SITE OR PERFORMING THE MAINTENANCE.
14. THE CONTRACTOR SHALL INSTALL STABILIZED CONSTRUCTION ENTRANCE(S)/EXIT(S) MEASURING A MINIMUM OF 50 FEET LONG AND 30 FEET WIDE AND CONSISTING OF A 6 INCH LAYER OF 1-3 INCH STONES PRIOR TO COMMENCEMENT OF GRADING. THE LOCATION OF THE ENTRANCES MAY BE ADJUSTED BY THE CONTRACTOR TO FACILITATE GRADING OPERATIONS. ALL CONSTRUCTION TRAFFIC ENTERING OR LEAVING A CONSTRUCTION SITE, TO OR FROM A PUBLIC RIGHT-OF-WAY, STREET, ALLEY, SIDEWALK, OR PARKING AREA, MUST CROSS THE STABILIZED CONSTRUCTION ENTRANCE(S). THE STABILIZED CONSTRUCTION ENTRANCE(S) SHALL REMAIN IN PLACE UNTIL THE ROAD BASE ROCK COURSE IS COMPLETED. WHEEL WASH OVER A WASH RACK IS RECOMMENDED FOR CLAY SOILS.
15. ALL SEDIMENT DEPOSITED ON PAVED ROADWAYS SHALL BE SWEPT AT THE END OF EACH WORKING DAY. WASHING OF ACCUMULATED SEDIMENT INTO THE STORM DRAIN IS PROHIBITED.
16. IN ALL AREAS WHERE BARE SOIL IS EXPOSED TO WATER OR WIND EROSION, ACCEPTABLE SOIL STABILIZATION MATERIALS ARE REQUIRED TO BE APPLIED.
17. ALL EROSION AND SEDIMENT CONTROL MEASURES SHALL BE MAINTAINED UNTIL ALL DISTURBED AREAS ARE STABILIZED. THE ADEQUACY OF POST CONSTRUCTION SOIL STABILIZATION SHALL BE SUBJECT TO THE REVIEW AND APPROVAL OF THE CITY ENGINEERING DEPARTMENT. ADDITIONAL EROSION AND SEDIMENT CONTROL BMPS THAT ARE OVER AND ABOVE THE BMPS SHOWN ON THE APPROVED EROSION AND SEDIMENT CONTROL PLAN SHEET AND THE SWPPP, MAY BE REQUIRED TO BE IMPLEMENTED IN ORDER TO MEET FIELD CONDITIONS. IT IS THE RESPONSIBILITY OF THE CONSTRUCTION SUPERINTENDENT TO DETERMINE WHAT ADDITIONAL MEASURES ARE NECESSARY AND TO INSTALL THOSE ADDITIONAL BMPS AS NECESSARY.
18. THE CONTRACTOR SHALL REPORT THE FOLLOWING INCIDENTS:
    A. IF THERE IS AN ACCIDENTAL DISCHARGE OF NON-STORM WATER OR STORM WATER CONTAINING POLLUTANTS THAT HAS THE POTENTIAL TO ENTER OR ENTERS A CITY STORM DRAIN OR A FLOOD CONTROL CHANNEL, THE CONTRACTOR SHALL NOTIFY THE CITY'S STORM WATER COORDINATOR AS SOON AS POSSIBLE AT (909) 395-2389 OR AT (909) 395- 2143. IF THE DISCHARGE OCCURS AFTER BUSINESS HOURS, THE FIRE DEPARTMENT SHALL BE NOTIFIED AT 911.
    B. IF THERE IS A RELEASE OR THREATENED RELEASE OF A HAZARDOUS MATERIAL, THE CONTRACTOR SHALL ALSO NOTIFY THE FIRE DEPARTMENT AT 911, THE SAN BERNARDINO COUNTY FIRE DEPARTMENT HAZARDOUS MATERIALS DIVISION AT (800) 33-TOXIC OR (909) 387-3044, THE STATE OF CALIFORNIA OFFICE OF EMERGENCY SERVICES AT (800) 852-7550 AND, FOR A REPORTABLE QUANTITY, THE NATIONAL RESPONSE CENTER AT (800) 424-8802.
    C. IF THERE WILL BE A DISCHARGE OF WATER FROM WATER LINE OR TANK FLUSHING OR TESTING INTO THE STORM DRAIN SYSTEM, THE CITY REQUIRES THE CONTRACTOR TO FAX A NON-STORM WATER DISCHARGE NOTIFICATION FORM (AVAILABLE FROM THE CITY OF ONTARIO'S ENGINEERING COUNTER) TO THE ENGINEERING DEPARTMENT AT (909) 395-2122, FIVE DAYS PRIOR TO A PLANNED DISCHARGE OR AS SOON AS POSSIBLE FOR UNPLANNED DISCHARGES. SAMPLING DURING THE FIRST 30 MINUTES IS REQUIRED. CHLORINATED WATER MUST BE DE-CHLORINATED TO <0.1 PPM AND SUSPENDED SOLIDS MUST BE REDUCED TO <75 PPM PRIOR TO DISCHARGE TO THE STORM DRAIN SYSTEM.
    D. THE REGIONAL WATER QUALITY CONTROL BOARD SHALL BE NOTIFIED BY TELEPHONE AS SOON AS POSSIBLE, BUT NO LATER THAN 48 HOURS, AFTER IT IS DETERMINED THAT STORM WATER DISCHARGES AND/OR AUTHORIZED NON- STORM WATER DISCHARGES ARE CAUSING OR CONTRIBUTING TO AN EXCEEDANCE OF AN APPLICABLE WATER QUALITY STANDARD AT (909) 782-4130. THE NOTIFICATION SHALL BE FOLLOWED BY A REPORT WITHIN 14-CALENDER DAYS DESCRIBING: (1) THE NATURE AND CAUSE OF THE WATER QUALITY EXCEEDANCE; (2) THE BMPS CURRENTLY BEING IMPLEMENTED; (3) ANY ADDITIONAL BMPS WHICH WILL BE IMPLEMENTED TO PREVENT OR REDUCE POLLUTANTS THAT ARE CAUSING OR CONTRIBUTING TO THE WATER QUALITY EXCEEDANCE AND A SCHEDULE FOR THEIR IMPLEMENTATION; AND (4) ANY MAINTENANCE OR REPAIR OF BMPS.
19. ALL CONTRACTOR ACTIVITY BMPS SHALL BE IMPLEMENTED ACCORDING TO THE SPECIFICATIONS IN CHAPTER 4 OF THE CALIFORNIA BMP HANDBOOK FOR CONSTRUCTION ACTIVITY OR EQUIVALENT. AT A MINIMUM, THE CONTRACTOR SHALL IMPLEMENT THE FOLLOWING CONTRACTOR ACTIVITY BMPS:

A. PROVIDE EMPLOYEE/SUBCONTRACTOR TRAINING IN CONSTRUCTION BMPS:

OBTAIN APPROPRIATE CONSTRUCTION BEST MANAGEMENT PRACTICE FACT SHEETS FROM THE 'CALIFORNIA STORM WATER BMP HANDBOOK FOR CONSTRUCTION' OR EQUIVALENT AND PROVIDE COPIES AND TRAINING ON THESE BMPS TO EMPLOYEES AND SUBCONTRACTORS PRIOR TO THE BEGINNING OF WORK.

B. LIQUID AND SOLID WASTE MANAGEMENT:

PROVIDE A SUFFICIENT NUMBER OF DESIGNATED WASTE COLLECTION AREAS, PHYSICALLY SEPARATED FROM POTENTIAL STORM WATER RUN-OFF, WITH LIDDED CONTAINERS. ARRANGE FOR THEIR REGULAR REMOVAL AND DISPOSAL IN ACCORDANCE WITH LOCAL, STATE, AND FEDERAL REQUIREMENTS. CLEAR SITE OF TRASH, INCLUDING ORGANIC DEBRIS, PACKAGING MATERIALS, SCRAP OR SURPLUS BUILDING MATERIALS AND DOMESTIC WASTE DAILY.

C. CHEMICAL AND MATERIAL DELIVERY AND STORAGE:

PROVIDE A DESIGNATED CHEMICALS STORAGE AREA, LOCATED NEAR THE CONSTRUCTION ENTRANCES, AWAY FROM DRAINAGE COURSES, WHICH HAS A TEMPORARY SECONDARY SPILL CONTAINMENT SYSTEM. STORE ALL CHEMICALS IN SEALED AND LABELED CONTAINERS. PROVIDE A SPILL CLEANUP KIT AND TARPS FOR COVERING STOCKPILED MATERIALS WHEN RAIN IS PREDICTED. RELOCATE CHEMICAL STORAGE AREA INTO A TRAILER OR BUILDING SHELL WHEN POSSIBLE. INSPECT AREA WEEKLY FOR LEAKS AND SPILLS.

D. CONCRETE WASTE:

CONDUCT CONCRETE WASHOUT OFF-SITE OR PROVIDE A DESIGNATED AREA FOR A TEMPORARY PIT TO BE USED FOR CONCRETE TRUCK WASH OUT THAT IS AT LEAST 50 FEET FROM ANY STORM DRAIN OR DRAINAGE CHANNEL. REQUIRE DISPOSAL OF HARDENED CONCRETE OFFSITE. AT NO TIME SHALL A CONCRETE TRUCK DUMP ITS WASTE AND CLEAN ITS TRUCK INTO THE CITY STORM DRAINS VIA CURB AND GUTTER. INSPECT DAILY TO CONTROL RUNOFF, AND WEEKLY FOR REMOVAL OF HARDENED CONCRETE.

E. PAINTING AND DRYWALL WORK:

PROVIDE INSTRUCTION TO EMPLOYEES AND SUBCONTRACTORS BEFORE THEY START WORK, REGARDING REDUCTION OF POLLUTANTS, INCLUDING MATERIAL STORAGE, USE, AND CLEAN UP. DRYWALL EQUIPMENT, PAINTBRUSHES, AND ROLLERS CANNOT BE WASHED INTO THE STREET OR STORM DRAIN SYSTEM.

F. VEHICLE FUELING, MAINTENANCE AND CLEANING:

IF FUELING MUST OCCUR ON-SITE, PROVIDE A DESIGNATED FUELING AREA, LOCATED AWAY FROM DRAINAGE COURSES, WITH SECONDARY SPILL CONTAINMENT. ENSURE THAT THE FUEL TANK AND NOZZLES ARE KEPT INSIDE OF THE CONTAINMENT AREA. DO NOT ALLOW MOBILE FUELING OF EQUIPMENT. INSPECT FUELING AREA WEEKLY FOR LEAKS OR SPILLS. PROVIDE DROP PANS FOR LEAKING EQUIPMENT OR EMERGENCY EQUIPMENT MAINTENANCE. RESTRICT ONSITE MAINTENANCE OF EQUIPMENT TO A MINIMUM. DO NOT ALLOW WASHING OF VEHICLES OR EQUIPMENT INTO THE STREET OR STORM DRAIN SYSTEM.

G. ASPHALT, SAWCUTTING, CORING, AND GRINDING ACTIVITIES:

INFORM EMPLOYEES AND SUBCONTRACTORS TO PROTECT CATCH BASINS WHEN APPLYING ASPHALT SEAL COAT, SLURRY SEAL OR FOG SEAL, AND TO PREVENT SAWCUTTING SLURRIES, CORING OR AC GRINDING WASTES FROM ENTERING THE STORM DRAIN SYSTEM.

H. BUILDING BLASTING AND CLEANING:

PROVIDE INSTRUCTION TO EMPLOYEES AND SUBCONTRACTORS, BEFORE THEY START A JOB, TO ENSURE THAT BLAST RESIDUE FROM HIGH-PRESSURE WASHING OF BUILDINGS IS NOT ALLOWED TO ENTER THE STORM DRAIN SYSTEM. IF PAINT REMOVAL INVOLVES HAZARDOUS SUBSTANCES SUCH AS LEAD AND MERCURY, THE WASTE MUST BE PREVENTED FROM PERCOLATING INTO THE GROUND AND MUST BE HAULED OFF- SITE AS A HAZARDOUS WASTE.

I. CEMENT, GROUT AND MORTAR WORK, AND CLEAN UP:

ENSURE THAT EMPLOYEES AND SUBCONTRACTORS PREVENT CEMENT, GROUT AND MORTAR SOLIDS, AND CLEAN UP WATER FROM ENTERING THE STORM DRAIN SYSTEM.

J. SANITARY AND SEPTIC WASTES:

SEWAGE IS PROHIBITED IN THE STORM DRAIN SYSTEM. ENSURE THAT THE SEPTIC TANK SERVICE COMPANY IS INFORMED THAT SEWAGE AND WASTEWATER GENERATED FROM THE DISINFECTION AND WASH DOWN OF SEPTIC TANKS CANNOT BE DISCHARGED TO THE STORM DRAIN SYSTEM.

K. WATER LINE DISINFECTION, FLUSHING, DEWATERING, AND OTHER NON-STORM WATER DISCHARGES:

UNLESS EXEMPTED OR AUTHORIZED BY AN NPDES PERMIT, ALL NON-STORM WATER DISCHARGES REQUIRE PRIOR APPROVAL BY THE CITY OR THE REGIONAL WATER QUALITY CONTROL BOARD. THE DEVELOPER OR CONTRACTOR SHALL NOTIFY THE CITY'S STORM WATER COORDINATOR AT (909) 395-2389 OR (909) 395-2143, OR THE REGIONAL WATER QUALITY CONTROL BOARD AT (909)782-4379, A MINIMUM OF FIVE DAYS PRIOR TO ANY DISCHARGE TO THE STORM DRAIN SYSTEM FOR PLANNED DISCHARGES, OR AS SOON AS POSSIBLE, FOR UNPLANNED DISCHARGES. DEWATERING OF CONTAMINATED GROUNDWATER, OR DISCHARGING CONTAMINATED SOILS VIA SURFACE EROSION IS PROHIBITED. IF POSSIBLE, ATTEMPT TO CONTAIN ALL WATER LINE FLUSHING WASTES IN A TEMPORARY PIT, ON SITE.

L. HAZARDOUS WASTE MANAGEMENT:

PROVIDE A DESIGNATED HAZARDOUS WASTE STORAGE AREA SUCH AS A TRAILER OR TEMPORARY SECONDARY CONTAINMENT AREA THAT IS PHYSICALLY SEPARATED FROM STORM WATER DRAINAGE CHANNELS. STORE HAZARDOUS WASTE IN SEALED AND LABELLED CONTAINERS. PROVIDE A SPILL CLEAN UP KIT AND TARPS FOR COVERING STOCKPILED MATERIALS WHEN RAIN IS PREDICTED. RELOCATE STORAGE AREA INTO TRAILER OR BUILDING SHELL WHEN POSSIB

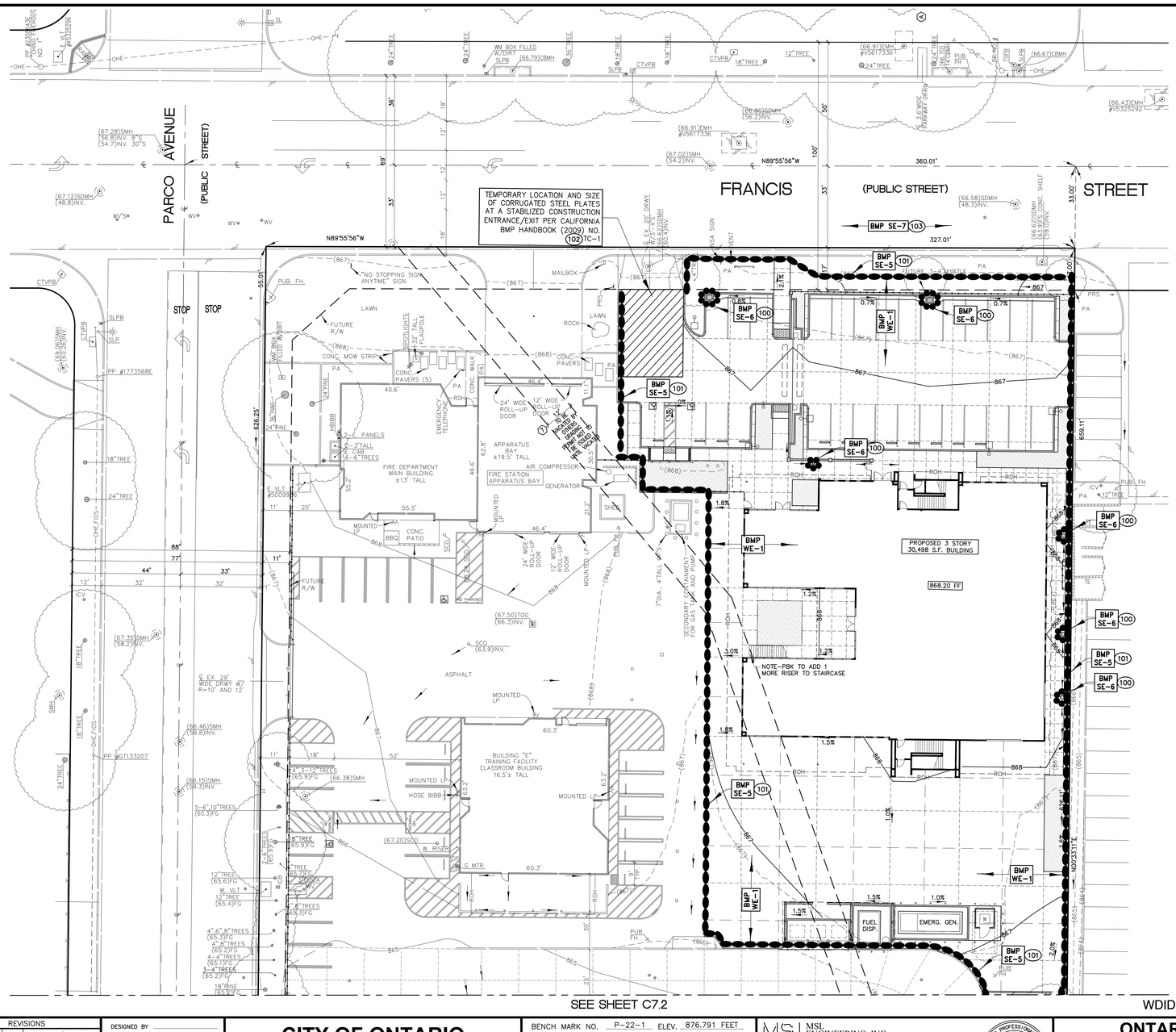

EROSION CONTROL PLAN CONSTRUCTION NOTES

(100) INSTALL GRAVEL BAG BARRIER PER DETAIL "X" SHOWN ON SHEET C7 AND PER BMP SE-6. WHEN THIS BARRIER IS INSTALLED AROUND A DRAIN BOX, STORM DRAIN, OR CATCH BASIN INLET, INSTALL A PERMEABLE FILTER FABRIC ON TOP OF THE INLET TO PREVENT SILT FROM ENTERING THE INLET.

(101) INSTALL BMP SE-5 STRAW WATTLES FIBER ROLL BARRIER PER DETAIL "Y" SHOWN ON SHEET C7 AS AN ACCEPTABLE SUBSTITUTION TO THE SLOPEGARD MATERIAL CALLED OUT TO INSTALL ON THIS PLAN.

(102) INSTALL A STABILIZED CONSTRUCTION ENTRANCE/EXIT AS SHOWN HEREON AND PER BMP TC-1 DETAIL SHOWN ON SHEET C7.

(103) STREET SWEEPING AND VACUUMING TO BE PERFORMED WHEN THERE IS NOTICEABLE SEDIMENT ACCUMULATION ON ROADWAYS ADJACENT TO THE CONSTRUCTION SITE PER BMP SE-7.

PROJECT NORTH — TRUE NORTH

GRAPHIC SCALE
SCALE: 1"=20'

Underground Service Alert
Call: Toll Free
811
TWO WORKING DAYS BEFORE YOU DIG

WDID# N/A, REGION 8 MS4 CIP

REVISIONS			
MARK	DATE	BY	APPROVED/RCE NO.

DESIGNED BY ____ DATE ____
DRAWN BY ____ DATE ____
REVIEWED BY ____ DATE ____

CITY OF ONTARIO

BENCH MARK NO. P-22-1 ELEV. 876.791 FEET
LOCATION: DATUM: N.A.V.D. 88, 2017 ADJUSTMENT 2.5 INCH BRASS DISC STAMPED "CITY OF ONTARIO P-22-1" SET ON CONCRETE SLAB OF BACKFLOW DEVICE FOR AIRPORT SUPER STORAGE AT 1728 GROVE AVENUE.

MSL ENGINEERING, INC.
CIVIL ENGINEERS AND LAND SURVEYORS SPECIALIZING IN SITE DEVELOPMENT
301 NORTH SAN DIMAS AVE. SAN DIMAS, CA. 91773
(909) 305-2395 FAX (909) 305-2397
MARK S. LAMOUREUX R.C.E. 38382 DATE 01-29-24

ONTARIO FIRE DEPARTMENT ADMINISTRATION BUILDING
EROSION CONTROL PLAN-NORTH
PDEV23-001 - E202207973 – PC1 NCP (B202207973 ADMIN BLD)

SHEET 12 OF 18
CONTRACT ____
ACCOUNT ____
DWG. NO. ____

JN 2023-2023 C7.0-C7.1-C7.2acp

PBK
RANCHO CUCAMONGA
8163 ROCHESTER AVENUE, SUITE 100
RANCHO CUCAMONGA, CA 91730
909-987-0909 P

ONTARIO FIRE DEPARTMENT ADMINISTRATION BUILDING
CITY OF ONTARIO
1420 E. FRANCIS STREET., ONTARIO, CA

LICENSED ARCHITECT — KELLEY NEEDHAM C-19064 Exp. 03/31/21 — STATE OF CALIFORNIA
REGISTERED PROFESSIONAL ENGINEER — MARK S. LAMOUREUX No. 38382 CIVIL — STATE OF CALIFORNIA

CONSULTANT
MSL ENGINEERING, INC.
CIVIL ENGINEERS AND LAND SURVEYORS
SPECIALIZING IN SITE DEVELOPMENT
301 N. SAN DIMAS AVENUE
SAN DIMAS, CA. 91773
(909) 305-2395 FAX (909) 305-2397
MARK S. LAMOUREUX (R.C.E. 38382) DATE 01-29-24

NO	DATE	BY	DESCRIPTION

REVISIONS

DRAWN: T.B.P.	CHECKED: M.S.L.
DATE: 01-29-24	SCALE: 1"=20'
PROJECT NUMBER: 2011701	

EROSION CONTROL PLAN-NORTH

DRAWING NUMBER: C7.1

JN 2023-2023 C7.0-C7.1-C7.2acp
BID SET 03/01/24

PBK
RANCHO CUCAMONGA
8163 ROCHESTER AVENUE, SUITE 100
RANCHO CUCAMONGA, CA 91730
909-987-0909 P

EROSION CONTROL PLAN CONSTRUCTION NOTES

(100) INSTALL GRAVEL BAG BARRIER PER DETAIL "X" SHOWN ON SHEET C7 AND PER BMP SE-6. WHEN THIS BARRIER IS INSTALLED AROUND A DRAIN BOX, STORM DRAIN, OR CATCH BASIN INLET, INSTALL A PERMEABLE FILTER FABRIC ON TOP OF THE INLET TO PREVENT SILT FROM ENTERING THE INLET.

(101) INSTALL BMP SE-5 STRAW WATTLES FIBER ROLL BARRIER PER DETAIL "Y" SHOWN ON SHEET C7 AS AN ACCEPTABLE SUBSTITUTION TO THE SLOPEGARD MATERIAL CALLED OUT TO INSTALL ON THIS PLAN.

(102) INSTALL A STABILIZED CONSTRUCTION ENTRANCE/EXIT AS SHOWN HEREON AND PER BMP TC-1 DETAIL SHOWN ON SHEET C7.

(103) STREET SWEEPING AND VACUUMING TO BE PERFORMED WHEN THERE IS NOTICEABLE SEDIMENT ACCUMULATION ON ROADWAYS ADJACENT TO THE CONSTRUCTION SITE PER BMP SE-7.

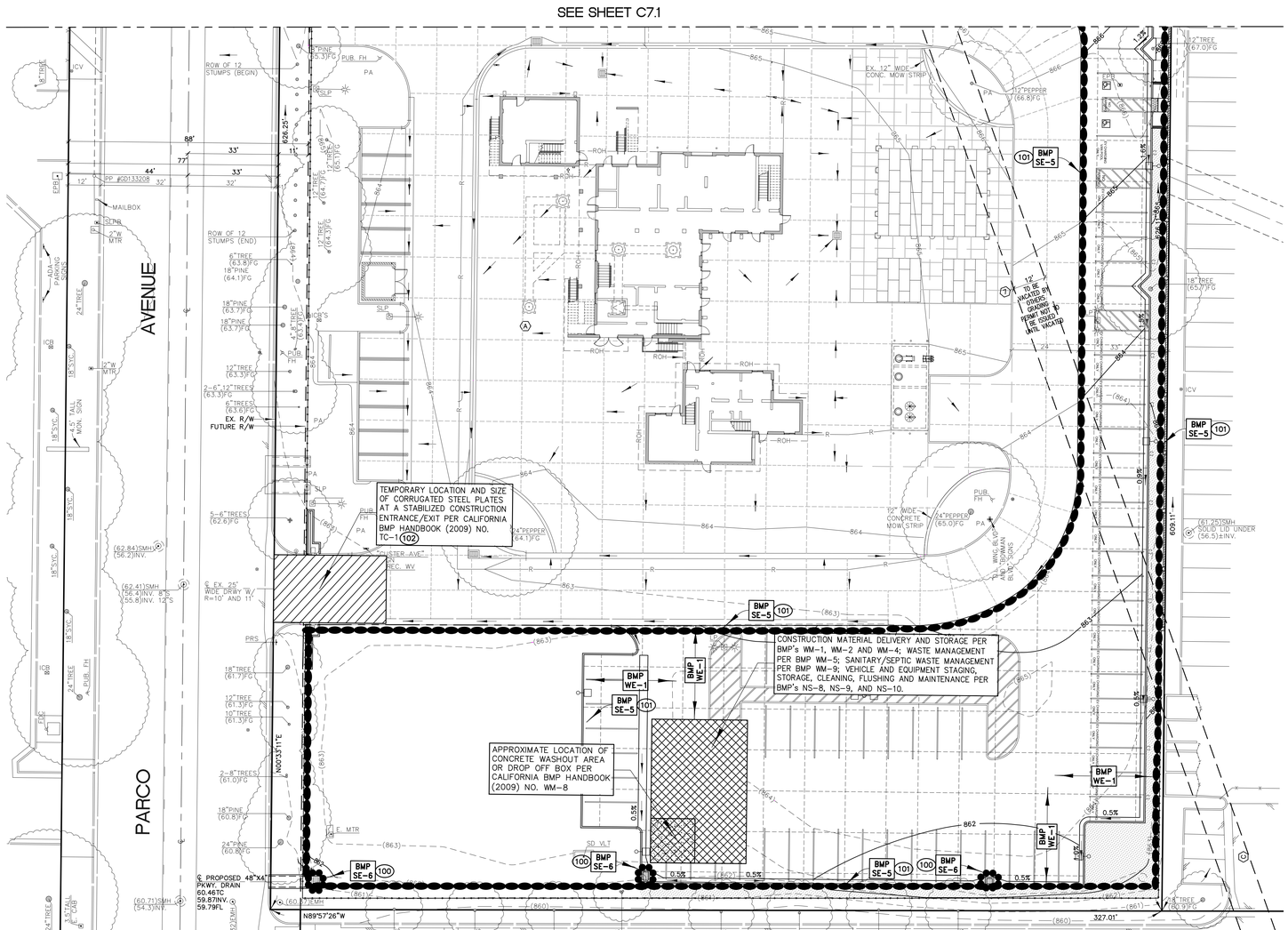

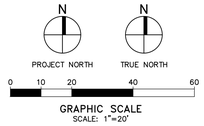

Underground Service Alert
Call: Toll Free
811
TWO WORKING DAYS BEFORE YOU DIG

WDID# N/A, REGION 8 MS4 CIP

REVISIONS			
MARK	DATE	BY	APPROVED/RCE NO.

DESIGNED BY ____ DATE ____
DRAWN BY ____ DATE ____
REVIEWED BY ____ DATE ____

CITY OF ONTARIO

BENCH MARK NO. P-22-1 ELEV. 876.791 FEET
LOCATION: DATUM: N.A.V.D. 88, 2017 ADJUSTMENT 2.5 INCH BRASS DISC STAMPED "CITY OF ONTARIO P-22-1" SET ON CONCRETE SLAB OF BACKFLOW DEVICE FOR AIRPORT SUPER STORAGE AT 1728 GROVE AVENUE.

MSL ENGINEERING, INC.
CIVIL ENGINEERS AND LAND SURVEYORS SPECIALIZING IN SITE DEVELOPMENT
301 NORTH SAN DIMAS AVE., SAN DIMAS, CA. 91773
(909) 305-2395 FAX (909) 305-2397
MARK S. LAMOUREUX R.C.E. 38382 01-29-24 DATE

ONTARIO FIRE DEPARTMENT ADMINISTRATION BUILDING
EROSION CONTROL PLAN-SOUTH
PDEV23-001 - E202207973 – PC1 NCP (B202207973 ADMIN BLD)

SHEET 13 OF 18
CONTRACT ____
ACCOUNT ____
DWG. NO. ____

JN 21023-21023 C7.0-C7.1-C7.2ecp

ONTARIO FIRE DEPARTMENT ADMINISTRATION BUILDING
CITY OF ONTARIO
1420 E. FRANCIS STREET., ONTARIO, CA

LICENSED ARCHITECT KELLEY NEEDHAM C-19064 Sun 03/31/25 STATE OF CALIFORNIA
REGISTERED PROFESSIONAL ENGINEER MARK S. LAMOUREUX No. 38382 CIVIL STATE OF CALIFORNIA

CONSULTANT
MSL ENGINEERING, INC.
CIVIL ENGINEERS AND LAND SURVEYORS
SPECIALIZING IN SITE DEVELOPMENT
301 N. SAN DIMAS AVENUE
SAN DIMAS, CA. 91773
(909) 305-2395 FAX (909) 305-2397
MARK S. LAMOUREUX (R.C.E. 38382) 01-29-24 DATE

NO	DATE	BY	DESCRIPTION

REVISIONS

DRAWN: T.B.P.	CHECKED: M.S.L.
DATE: 01-29-24	SCALE: 1"=20'
PROJECT NUMBER: 2011701	

EROSION CONTROL PLAN-SOUTH

DRAWING NUMBER: C7.2

JN 21023-21023 C7.0-C7.1-C7.2ecp
BID SET 02/01/24

SHEET 13 OF 18

1/26/2024 1:38:37 PM, MSL ENGINEERING, INC., SAI

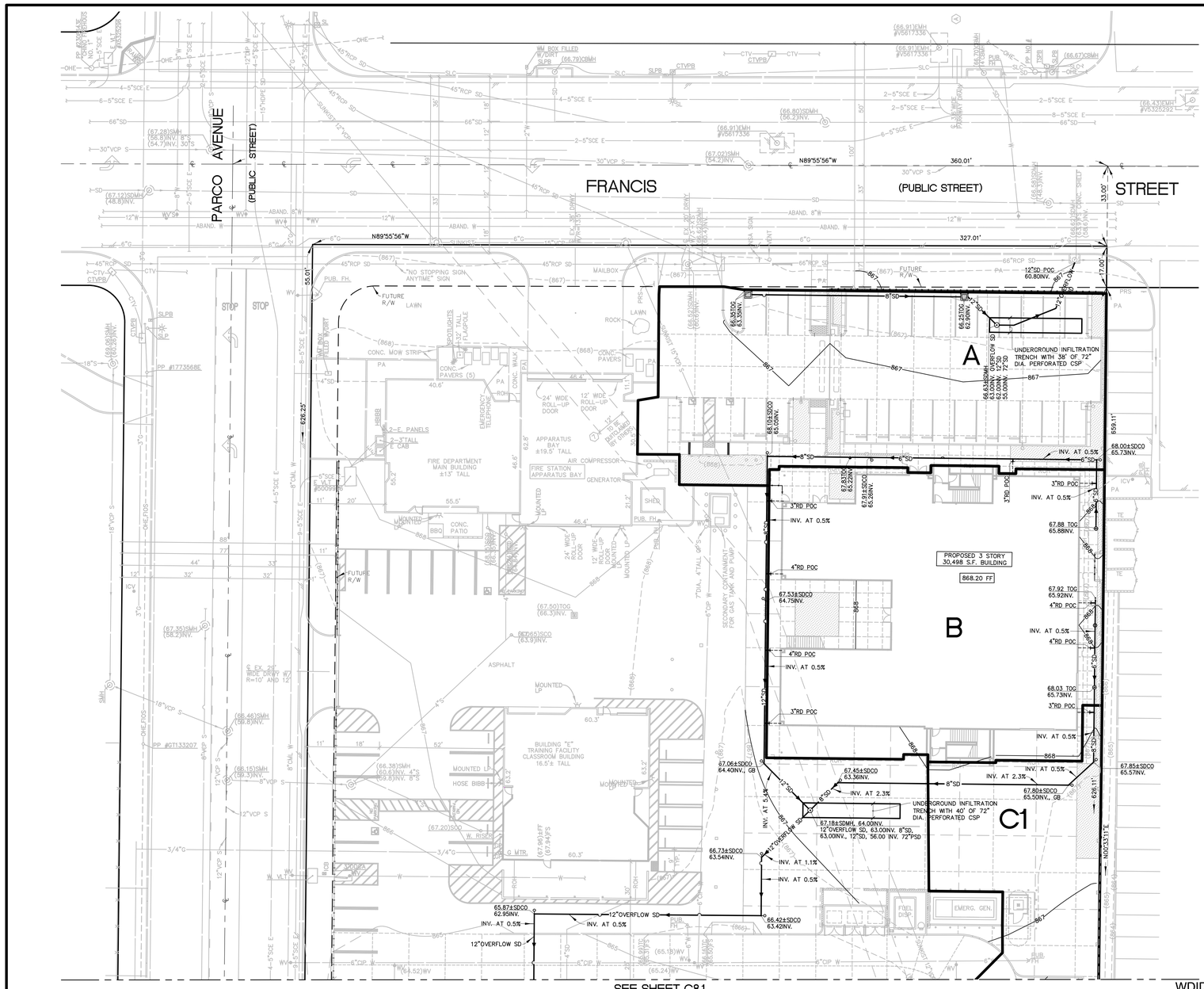

SEE SHEET C8.1

WDID# N/A, REGION 8 MS4 CIP

BMP LEGEND

- DRAINAGE AREA BOUNDARY
- FLOW DIRECTION
- SD DIRECTION

NOTE

CONTRACTOR TO CONFIRM/VERIFY INFILTRATION RATES WITH SOILS ENGINEER AFTER THE GRADING OPERATION AND PRIOR TO INSTALLATION OF THE UNDERGROUND CHAMBERS. THE CITY SHALL BE NOTIFIED IF THE INFILTRATION RATES DEVIATE FROM THE ORIGINAL INFILTRATION REPORT.

UNDERGROUND INFILTRATION SYSTEM NOTES

WQMP SYSTEM LAYOUT MUST MATCH LAYOUT SHOWN ON STORM DRAIN AND UTILITY PLAN.

THE CONTRACTOR IS TO CONFIRM/VERIFY INFILTRATION RATES WITH SOILS ENGINEER AFTER GRADING OPERATION AND BEFORE THE INSTALLATION OF THE UNDERGROUND CHAMBERS. THE CITY SHALL BE NOTIFIED IF THE INFILTRATION RATES DEVIATE FROM THE ORIGINAL INFILTRATION REPORT.

WQMP BASIN INFORMATION FOR DRAINAGE AREA A:
THE DESIGN INFILTRATION RATE = 1.3 IN/HR
REQUIRED STORAGE (DCV) IN CF = 1,636
UNDERGROUND STORAGE & INFILTRATION IN CF= 1,989
TOTAL SYSTEM VOLUME IN CF = 1,989
BOTTOM AREA IN SF = 420
TOTAL TIME TO EMPTY THE SYSTEM IN HR = 43.7
TOP & BOTTOM OF CHAMBER = 61.00 TOP AND 55.00 BOTTOM
TOP & BOTTOM OF ROCK = 61.00 TOP AND 53.00 BOTTOM

WQMP BASIN INFORMATION FOR DRAINAGE AREA B:
THE DESIGN INFILTRATION RATE = 1.3 IN/HR
REQUIRED STORAGE (DCV) IN CF = 2,001
UNDERGROUND STORAGE & INFILTRATION IN CF= 2,086
TOTAL SYSTEM VOLUME IN CF = 2,086
BOTTOM AREA IN SF = 440
TOTAL TIME TO EMPTY THE SYSTEM IN HR = 43.7
TOP & BOTTOM OF CHAMBER = 62.00 TOP AND 56.00 BOTTOM
TOP & BOTTOM OF ROCK = 62.00 TOP AND 54.00 BOTTOM

DRAINAGE AREAS

ID	AREA (SF)	IMPERVIOUS (SF/%)*	PERVIOUS (SF/%)
A	13,837	13,113/94.8%	724/5.2%
B	16,374	15,784/96.4%	590/3.6%
C1	42,462	38,121/89.9%	4,341/10.1%
C2	13,301	13,301/100.0%	0/00.0%
C	55,763	51,422/92.2%	4,341/7.8%
TOTAL	85,974	80,319/93.4%	5,655/6.6%

N PROJECT NORTH — N TRUE NORTH

0 10 20 40 60
GRAPHIC SCALE
SCALE: 1"=20'

Underground Service Alert
Call: Toll Free
811
TWO WORKING DAYS BEFORE YOU DIG

REVISIONS			
MARK	DATE	BY	APPROVED/RCE NO.

DESIGNED BY ____ DATE ____
DRAWN BY ____ DATE ____
REVIEWED BY ____ DATE ____

CITY OF ONTARIO

BENCH MARK NO. P-22-1 ELEV. 876.791 FEET
LOCATION: DATUM: N.A.V.D. 88, 2017 ADJUSTMENT 2.5 INCH BRASS DISC STAMPED "CITY OF ONTARIO P-22-1" SET ON CONCRETE SLAB OF BACKFLOW DEVICE FOR AIRPORT SUPER STORAGE AT 1728 GROVE AVENUE.

MSL ENGINEERING, INC.
CIVIL ENGINEERS AND LAND SURVEYORS SPECIALIZING IN SITE DEVELOPMENT
301 NORTH SAN DIMAS AVE., SAN DIMAS, CA. 91773
(909) 305-2395 FAX (909) 305-2397
MARK S. LAMOUREUX R.C.E. 38382 01-29-24 DATE

ONTARIO FIRE DEPARTMENT ADMINISTRATION BUILDING

WQMP SITE PLAN-NORTH

PDEV23-001 - E202207973 – PC1 NCP (B202207973 ADMIN BLD)

SHEET 14 OF 18
CONTRACT ____
ACCOUNT ____
DWG. NO. ____

JN 2023-2023 C8.0-C8.1-C8.2wqmp

PBK
RANCHO CUCAMONGA
8163 ROCHESTER AVENUE, SUITE 100
RANCHO CUCAMONGA, CA 91730
909-987-0909 P

ONTARIO FIRE DEPARTMENT ADMINISTRATION BUILDING

CITY OF ONTARIO
1420 E. FRANCIS STREET., ONTARIO, CA

LICENSED ARCHITECT — KELLEY NEEDHAM C-19064 Re-Lic 03/31/23 — STATE OF CALIFORNIA
REGISTERED PROFESSIONAL ENGINEER — MARK S. LAMOUREUX No. 38382 CIVIL — STATE OF CALIFORNIA

CONSULTANT
MSL ENGINEERING INC
CIVIL ENGINEERS AND LAND SURVEYORS
SPECIALIZING IN SITE DEVELOPMENT
301 N. SAN DIMAS AVENUE
SAN DIMAS, CA. 91773
(909) 305-2395 FAX (909) 305-2397
MARK S. LAMOUREUX (R.C.E. 38382) 01-29-24 DATE

NO	DATE	BY	DESCRIPTION

REVISIONS

DRAWN: T.B.P.	CHECKED: M.S.L.
DATE: 01-29-24	SCALE: 1"=20'
PROJECT NUMBER: 2011701	

WQMP SITE PLAN-NORTH

DRAWING NUMBER: C8.0

JN 2023-2023 C8.0-C8.1-C8.2wqmp
BID SET 03/01/24

PBK
RANCHO CUCAMONGA
8163 ROCHESTER AVENUE, SUITE 100
RANCHO CUCAMONGA, CA 91730
909-987-0909 P

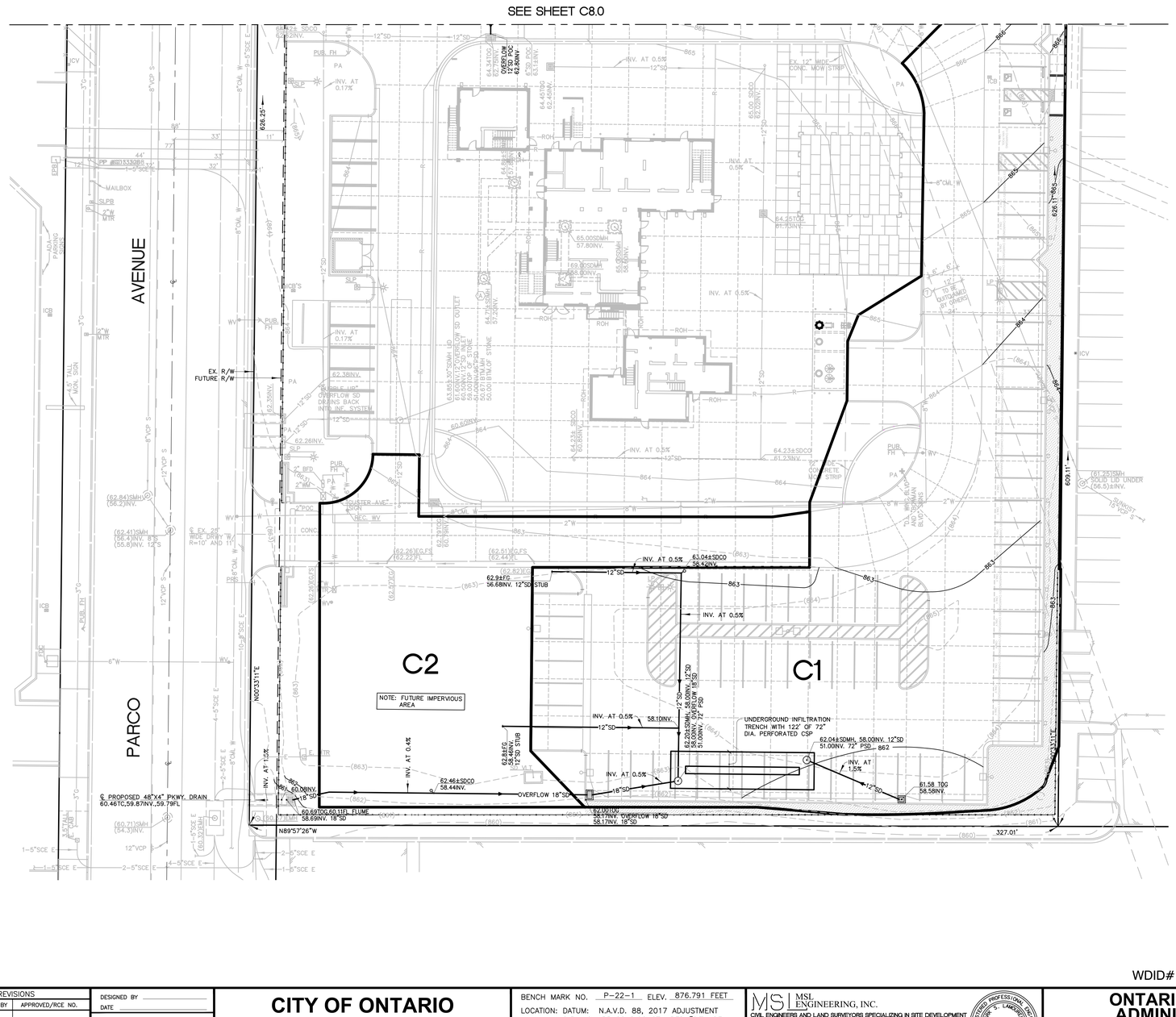

BMP LEGEND

- DRAINAGE AREA BOUNDARY
- FLOW DIRECTION
- SD DIRECTION

NOTE

CONTRACTOR TO CONFIRM/VERIFY INFILTRATION RATES WITH SOILS ENGINEER AFTER THE GRADING OPERATION AND PRIOR TO INSTALLATION OF THE UNDERGROUND CHAMBERS. THE CITY SHALL BE NOTIFIED IF THE INFILTRATION RATES DEVIATE FROM THE ORIGINAL INFILTRATION REPORT.

UNDERGROUND INFILTRATION SYSTEM NOTES

WQMP SYSTEM LAYOUT MUST MATCH LAYOUT SHOWN ON STORM DRAIN AND UTILITY PLAN.

THE CONTRACTOR IS TO CONFIRM/VERIFY INFILTRATION RATES WITH SOILS ENGINEER AFTER GRADING OPERATION AND BEFORE THE INSTALLATION OF THE UNDERGROUND CHAMBERS. THE CITY SHALL BE NOTIFIED IF THE INFILTRATION RATES DEVIATE FROM THE ORIGINAL INFILTRATION REPORT.

WQMP BASIN INFORMATION FOR DRAINAGE AREA C:
THE DESIGN INFILTRATION RATE = 1.3 IN/HR
REQUIRED STORAGE (DCV) IN CF = 6,239
UNDERGROUND STORAGE & INFILTRATION IN CF= 6,371
TOTAL SYSTEM VOLUME IN CF = 6,371
BOTTOM AREA IN SF = 1,344
TOTAL TIME TO EMPTY THE SYSTEM IN HR = 43.8
TOP & BOTTOM OF CHAMBER = 57.00 TOP AND 51.00 BOTTOM
TOP & BOTTOM OF ROCK = 57.00 TOP AND 49.00 BOTTOM

DRAINAGE AREAS

ID	AREA (SF)	IMPERVIOUS (SF/%)*	PERVIOUS (SF/%)
A	13,837	13,113/94.8%	724/5.2%
B	16,374	15,784/96.4%	590/3.6%
C1	42,462	38,121/89.9%	4,341/10.1%
C2	13,301	13,301/100.0%	0/00.0%
C	55,763	51,422/92.2%	4,341/7.8%
TOTAL	85,974	80,319/93.4%	5,655/6.6%

PROJECT NORTH — TRUE NORTH

GRAPHIC SCALE
SCALE: 1"=20'

Underground Service Alert
Call: Toll Free
811
TWO WORKING DAYS BEFORE YOU DIG

WDID# N/A, REGION 8 MS4 CIP

REVISIONS			
MARK	DATE	BY	APPROVED/RCE NO.

DESIGNED BY ____ DATE ____
DRAWN BY ____ DATE ____
REVIEWED BY ____ DATE ____

CITY OF ONTARIO

BENCH MARK NO. P-22-1 ELEV. 876.791 FEET
LOCATION: DATUM: N.A.V.D. 88, 2017 ADJUSTMENT 2.5 INCH BRASS DISC STAMPED "CITY OF ONTARIO P-22-1" SET ON CONCRETE SLAB OF BACKFLOW DEVICE FOR AIRPORT SUPER STORAGE AT 1728 GROVE AVENUE.

MSL ENGINEERING, INC.
CIVIL ENGINEERS AND LAND SURVEYORS SPECIALIZING IN SITE DEVELOPMENT
301 NORTH SAN DIMAS AVE. SAN DIMAS, CA. 91773
(909) 305-2395 FAX (909) 305-2397
MARK S. LAMOUREUX R.C.E. 38382 01-29-24 DATE

ONTARIO FIRE DEPARTMENT ADMINISTRATION BUILDING
WQMP SITE PLAN-SOUTH
PDEV23-001 - E202207973 – PC1 NCP (B202207973 ADMIN BLD)

SHEET 15 OF 18
CONTRACT ____
ACCOUNT ____
DWG. NO. ____

JN 2023-2023 C8.0-C8.1-C8.2wqmp

ONTARIO FIRE DEPARTMENT ADMINISTRATION BUILDING
CITY OF ONTARIO
1420 E. FRANCIS STREET., ONTARIO, CA

LICENSED ARCHITECT — KELLEY NEEDHAM C-19064 Exp. 03/31/21 — STATE OF CALIFORNIA
REGISTERED PROFESSIONAL ENGINEER — MARK S. LAMOUREUX No. 38382 CIVIL — STATE OF CALIFORNIA

CONSULTANT
MSL ENGINEERING, INC.
CIVIL ENGINEERS AND LAND SURVEYORS
SPECIALIZING IN SITE DEVELOPMENT
301 N. SAN DIMAS AVENUE
SAN DIMAS, CA. 91773
(909) 305-2395 FAX (909) 305-2397
MARK S. LAMOUREUX (R.C.E. 38382) 01-29-24 DATE

NO	DATE	BY	DESCRIPTION

REVISIONS

DRAWN: T.B.P.	CHECKED: M.S.L.
DATE: 01-29-24	SCALE: 1"=20'
PROJECT NUMBER: 2011701	

WQMP SITE PLAN-SOUTH

DRAWING NUMBER: C8.1

JN 2023-2023 C8.0-C8.1-C8.2wqmp
BID SET 03/01/24

PBK
RANCHO CUCAMONGA
8163 ROCHESTER AVENUE, SUITE 100
RANCHO CUCAMONGA, CA 91730
909-987-0909 P

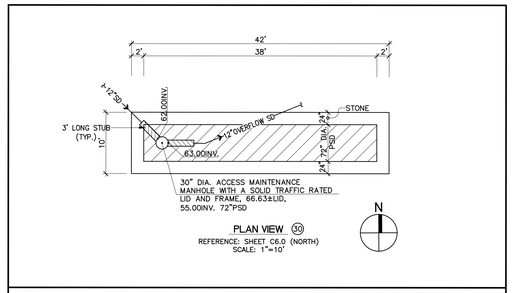

PLAN VIEW 30
REFERENCE: SHEET C6.0 (NORTH)
SCALE: 1"=10'

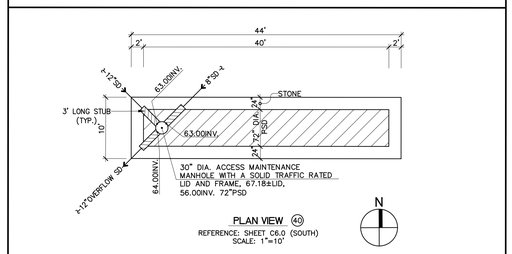

PLAN VIEW 40
REFERENCE: SHEET C6.0 (SOUTH)
SCALE: 1"=10'

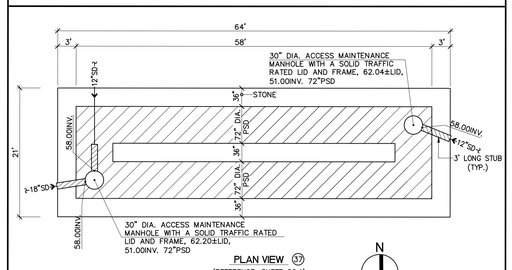

PLAN VIEW 37
(REFERENCE: SHEET C6.1)
SCALE: 1"=10'

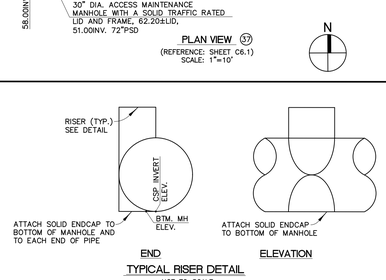

END ELEVATION
TYPICAL RISER DETAIL
NOT TO SCALE

1. CONCRETE PAVEMENT.
2. FREE-DRAINING ANGULAR WASHED STONE 3/4" TO 2" AS SHOWN.
3. 72" DIAMETER, 2 2/3" X 1/2" CSP (PSD), 16 GAGE.
4. CONTECH C-40 NON-WOVEN GEOTEXTILE , MIRAFI 140NC 45 MIL THICK PERMEABLE FILTER FABRIC OR EQUIVALENT. WRAPPING TRENCH AND 5 SIDES OF STONE BACKFILL LEAVING THE BOTTOM OPEN.
5. PROVIDE (7) 1/2" DIAMETER PERFORATIONS (HOLES) IN THE BOTTOM HALF OF THE PIPE AT 30 DEGREES APART EVERY 18" ALONG THE LONGITUDINAL LENGTH OF THE PROPOSED 48" DIAMETER PERFORATED CORRUGATED ALUMINIZED TYPE 2 STEEL PIPE FOR CAPTURED STORM WATER RUNOFF TO PERCOLATE INTO THE NATURAL SOIL.

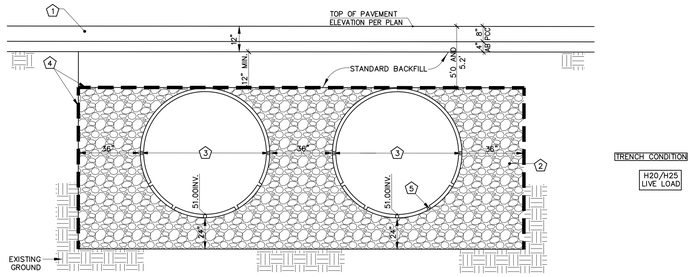

BACKFILL DETAIL
REFERENCE – SHEET C6.1
NOT TO SCALE

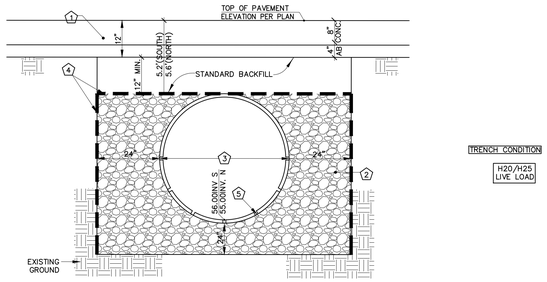

BACKFILL DETAIL
REFERENCE – SHEET C6.0
NOT TO SCALE

UNDERGROUND INFILTRATION SYSTEM NOTES

WQMP SYSTEM LAYOUT MUST MATCH LAYOUT SHOWN ON STORM DRAIN AND UTILITY PLAN.

THE CONTRACTOR IS TO CONFIRM/VERIFY INFILTRATION RATES WITH SOILS ENGINEER AFTER GRADING OPERATION AND BEFORE THE INSTALLATION OF THE UNDERGROUND CHAMBERS. THE CITY SHALL BE NOTIFIED IF THE INFILTRATION RATES DEVIATE FROM THE ORIGINAL INFILTRATION REPORT.

WQMP BASIN INFORMATION FOR DRAINAGE AREA A:
THE DESIGN INFILTRATION RATE = 1.3 IN/HR
REQUIRED STORAGE (DCV) IN CF = 1,636
UNDERGROUND STORAGE & INFILTRATION IN CF= 1,989
TOTAL SYSTEM VOLUME IN CF = 1,989
BOTTOM AREA IN SF = 420
TOTAL TIME TO EMPTY THE SYSTEM IN HR = 43.7
TOP & BOTTOM OF CHAMBER = 61.00 TOP AND 55.00 BOTTOM
TOP & BOTTOM OF ROCK = 61.00 TOP AND 53.00 BOTTOM

WQMP BASIN INFORMATION FOR DRAINAGE AREA B:
THE DESIGN INFILTRATION RATE = 1.3 IN/HR
REQUIRED STORAGE (DCV) IN CF = 2,001
UNDERGROUND STORAGE & INFILTRATION IN CF= 2,086
TOTAL SYSTEM VOLUME IN CF = 2,086
BOTTOM AREA IN SF = 440
TOTAL TIME TO EMPTY THE SYSTEM IN HR = 43.7
TOP & BOTTOM OF CHAMBER = 62.00 TOP AND 56.00 BOTTOM
TOP & BOTTOM OF ROCK = 62.00 TOP AND 54.00 BOTTOM

WQMP BASIN INFORMATION FOR DRAINAGE AREA C:
THE DESIGN INFILTRATION RATE = 1.3 IN/HR
REQUIRED STORAGE (DCV) IN CF = 6,239
UNDERGROUND STORAGE & INFILTRATION IN CF= 6,371
TOTAL SYSTEM VOLUME IN CF = 6,371
BOTTOM AREA IN SF = 1,344
TOTAL TIME TO EMPTY THE SYSTEM IN HR = 43.8
TOP & BOTTOM OF CHAMBER = 57.00 TOP AND 51.00 BOTTOM
TOP & BOTTOM OF ROCK = 57.00 TOP AND 49.00 BOTTOM

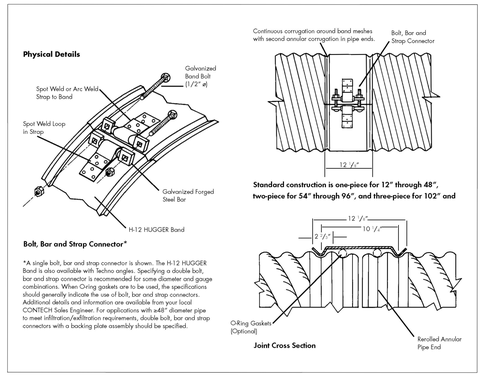

CONTECH HUGGER BAND DETAIL

FABRICATION NOTE
ALL HUGGER BAND JOINT FITTINGS, BARRELS, HEADERS, RISERS, PIPE PERFORATIONS AND OTHER DETENTION SYSTEM RELATED IMPROVEMENTS SHALL BE ORDERED AND FABRICATED OFFSITE TO MINIMIZE INSTALLATION TIME ONSITE. ONSITE FIELD FABRICATION SHALL BE AVOIDED. INSTALLATION SHALL BE PERFORMED PER THE STANDARDS OF THE PIPE SUPPLIER.

CONSTRUCTION LOADING NOTE
PROVIDE A 42 INCH MINIMUM TEMPORARY SOIL COVER OVER THE UNDERGROUND DETENTION PIPE BEFORE ANY HEAVY CONSTRUCTION EQUIPMENT IS ALLOWED TO BE OVER THE PIPE.

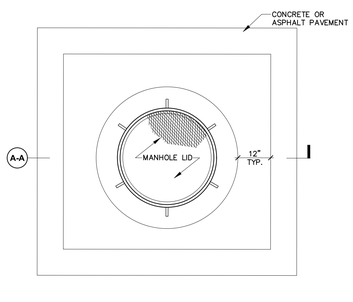

NOTES:
1. THE FLEXIBLE JOINT MATERIAL (RECYCLED VINYL OR EQ.) TO BE STIFF ENOUGH SO THAT THE CONCRETE CAN NEVER ENGAGE WITH THE RISER PIPE WALL.

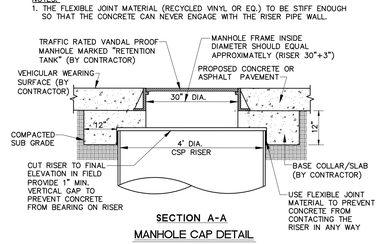

SECTION A-A
MANHOLE CAP DETAIL
NOT TO SCALE

CONTECH PIPE GENERAL NOTES

1. ALL RISERS AND STUBS ARE 2-2/3"X1/2" CORRUGATION AND 16 GAGE UNLESS OTHERWISE NOTED.

CONTECH FOUNDATION BEDDING PREPARATION NOTE
PRIOR TO PLACING THE BEDDING, THE FOUNDATION MUST BE CONSTRUCTED TO A UNIFORM AND STABLE GRADE. IN THE EVENT THAT UNSTABLE FOUNDATION MATERIALS ARE ENCOUNTERED DURING EXCAVATION, THEY SHALL BE REMOVED BY CONTRACTOR. ONCE THE FOUNDATION PREPARATION IS COMPLETE, A MINIMUM OF 4 INCHES OF A WELL-GRADED GRANULAR MATERIAL SHALL BE PLACED AS THE BEDDING.

CONTECH BACKFILL NOTE
WHEN PLACING THE FIRST LIFTS OF BACKFILL IT IS IMPORTANT TO MAKE SURE THAT THE BACKFILL IS PROPERLY COMPACTED UNDER AND AROUND THE PIPE HAUNCHES. BACKFILL SHALL BE PLACED SUCH THAT THERE IS NO MORE THAN A TWO LIFT (18") DIFFERENTIAL BETWEEN ANY OF THE PIPES AT ANY TIME DURING THE BACKFILL PROCESS. THE BACKFILL SHALL BE ADVANCED ALONG THE LENGTH OF THE DETENTION AND/OR TREATMENT SYSTEM AT THE SAME RATE TO AVOID DIFFERENTIAL LOADING ON THE PIPE.

CONTECH SPECIFICATION FOR CORRUGATED STEEL PIPE-ALUMINIZED TYPE 2 STEEL NOTES

1. SCOPE
   THIS SPECIFICATION COVERS THE MANUFACTURE AND INSTALLATION OF THE CORRUGATED STEEL PIPE (CSP) DETAILED IN THE PROJECT PLANS.
2. MATERIAL
   THE ALUMINIZED TYPE 2 STEEL COILS SHALL CONFORM TO THE APPLICABLE REQUIREMENTS OF AASHTO M274 OR ASTM A929.
3. PIPE
   THE CSP SHALL BE MANUFACTURED IN ACCORDANCE WITH THE APPLICABLE REQUIREMENTS OF AASHTO M36 OR ASTM A760. THE PIPE SIZES, GAGES AND CORRUGATIONS SHALL BE AS SHOWN ON THE PROJECT PLANS.

   ALL FABRICATION OF THE PRODUCT SHALL OCCUR WITHIN THE UNITED STATES.
4. HANDLING AND ASSEMBLY
   SHALL BE IN ACCORDANCE WITH RECOMMENDATIONS OF THE NATIONAL CORRUGATED STEEL PIPE ASSOCIATION (NCSPA).
5. INSTALLATION
   SHALL BE IN ACCORDANCE WITH AASHTO STANDARD SPECIFICATIONS FOR HIGHWAY BRIDGES, SECTION 26, DIVISION 8 OR ASTM A798 AND IN CONFORMANCE WITH THE PROJECT PLANS AND SPECIFICATIONS. IF THERE ARE ANY INCONSISTENCIES OR CONFLICTS, THE CONTRACTOR SHOULD DISCUSS AND RESOLVE WITH THE SITE ENGINEER.

   IT IS ALWAYS THE RESPONSIBILITY OF THE CONTRACTOR TO FOLLOW OSHA GUIDE LINES FOR SAFE PRACTICES.

DETAIL "A"
UNDERGROUND INFILTRATION SYSTEM DETAIL
NOT TO SCALE

WDID# N/A, REGION 8 MS4 CIP

REVISIONS			
MARK	DATE	BY	APPROVED/RCE NO.

DESIGNED BY ____ DATE ____
DRAWN BY ____ DATE ____
REVIEWED BY ____ DATE ____

CITY OF ONTARIO

BENCH MARK NO. P-22-1 ELEV. 876.791 FEET
LOCATION: DATUM: N.A.V.D. 88, 2017 ADJUSTMENT 2.5 INCH BRASS DISC STAMPED "CITY OF ONTARIO P-22-1" SET ON CONCRETE SLAB OF BACKFLOW DEVICE FOR AIRPORT SUPER STORAGE AT 1728 GROVE AVENUE.

MSL ENGINEERING, INC.
CIVIL ENGINEERS AND LAND SURVEYORS SPECIALIZING IN SITE DEVELOPMENT
301 NORTH SAN DIMAS AVE., SAN DIMAS, CA. 91773
(909) 305-2395 FAX (909) 305-2397
MARK S. LAMOUREUX R.C.E. 38382 01-29-24 DATE

ONTARIO FIRE DEPARTMENT ADMINISTRATION BUILDING
WQMP DETAIL SHEET
PDEV23-001 - E202207973 – PC1 NCP (B202207973 ADMIN BLD)

SHEET 16 OF 18
CONTRACT ____
ACCOUNT ____
DWG. NO. ____

JN 20223-20223 C8.0-C8.1-C8.2wqmp

ONTARIO FIRE DEPARTMENT ADMINISTRATION BUILDING
CITY OF ONTARIO
1420 E. FRANCIS STREET., ONTARIO, CA

LICENSED ARCHITECT KELLEY NEEDHAM C-19064 Ne'Ge 03/31/23 STATE OF CALIFORNIA
REGISTERED PROFESSIONAL ENGINEER MARK S. LAMOUREUX No. 38382 CIVIL STATE OF CALIFORNIA

CONSULTANT
MSL ENGINEERING, INC.
CIVIL ENGINEERS AND LAND SURVEYORS
SPECIALIZING IN SITE DEVELOPMENT
301 N. SAN DIMAS AVENUE
SAN DIMAS, CA. 91773
(909) 305-2395 FAX (909) 305-2397
MARK S. LAMOUREUX (R.C.E. 38382) 01-29-24 DATE

NO	DATE	BY	DESCRIPTION

REVISIONS

DRAWN: T.B.P.	CHECKED: M.S.L.
DATE: 01-29-24	SCALE: 1"=20'
PROJECT NUMBER: 2011701	

WQMP DETAIL SHEET

DRAWING NUMBER: C8.2

JN 20223-20223 C8.0-C8.1-C8.2wqmp
BID SET 03/01/24

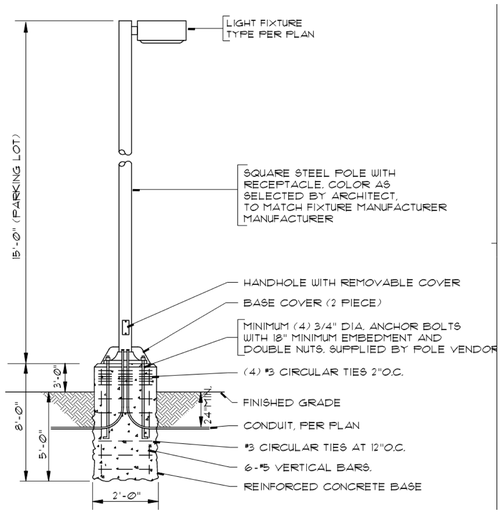

DETAIL 15/E3.2
PARKING LOT FIXTURE DETAIL
REFERENCE ELECTRICAL DRAWINGS
NOT TO SCALE

WDID# N/A, REGION 8 MS4 CIP

REVISIONS			
MARK	DATE	BY	APPROVED/RCE NO.

DESIGNED BY
DATE
DRAWN BY
DATE
REVIEWED BY
DATE

CITY OF ONTARIO

BENCH MARK NO. P-22-1 ELEV. 876.791 FEET
LOCATION: DATUM: N.A.V.D. 88, 2017 ADJUSTMENT
2.5 INCH BRASS DISC STAMPED "CITY OF ONTARIO P-22-1" SET ON CONCRETE SLAB OF BACKFLOW DEVICE FOR AIRPORT SUPER STORAGE AT 1728 GROVE AVENUE.

MSL ENGINEERING, INC.
CIVIL ENGINEERS AND LAND SURVEYORS SPECIALIZING IN SITE DEVELOPMENT
301 NORTH SAN DIMAS AVE., SAN DIMAS, CA. 91773
(909) 305-2395 FAX (909) 305-2397
MARK S. LAMOUREUX R.C.E. 38382 01-29-24 DATE

REGISTERED PROFESSIONAL ENGINEER MARK S. LAMOUREUX No. 38382 CIVIL STATE OF CALIFORNIA

ONTARIO FIRE DEPARTMENT ADMINISTRATION BUILDING
REFERENCE DETAILS
PDEV23-001 - E202207973 – PC1 NCP (B202207973 ADMIN BLD)

SHEET 17 OF 18
CONTRACT
ACCOUNT
DWG. NO.

JN 21023-21023 C9.0-9.1r.d

Underground Service Alert
Call: Toll Free
811
TWO WORKING DAYS BEFORE YOU DIG

SHEET 17 OF 18

PBK
RANCHO CUCAMONGA
8163 ROCHESTER AVENUE, SUITE 100
RANCHO CUCAMONGA, CA 91730
909-987-0909 P

ONTARIO FIRE DEPARTMENT ADMINISTRATION BUILDING
CITY OF ONTARIO
1420 E. FRANCIS STREET., ONTARIO, CA

LICENSED ARCHITECT KELLEY NEEDHAM C-19064 Sc.Dn 03/31/22 STATE OF CALIFORNIA

REGISTERED PROFESSIONAL ENGINEER MARK S. LAMOUREUX No. 38382 CIVIL STATE OF CALIFORNIA

CONSULTANT
MSL ENGINEERING, INC.
CIVIL ENGINEERS AND LAND SURVEYORS
SPECIALIZING IN SITE DEVELOPMENT
301 N. SAN DIMAS AVENUE
SAN DIMAS, CA. 91773
(909) 305-2395 FAX (909) 305-2397
MARK S. LAMOUREUX (R.C.E. 38382) 01-29-24 DATE

NO	DATE	BY	DESCRIPTION

REVISIONS

DRAWN: T.B.P.	CHECKED: M.S.L.
DATE: 01-29-24	SCALE: 1"=20'
PROJECT NUMBER: 2011701	

REFERENCE DETAILS

DRAWING NUMBER: C9.0

JN 21023-21023 C9.0-9.1r.d
BID SET 03/01/24

1/29/2024 1:18:58 PM, MSL ENGINEERING INC. (34)

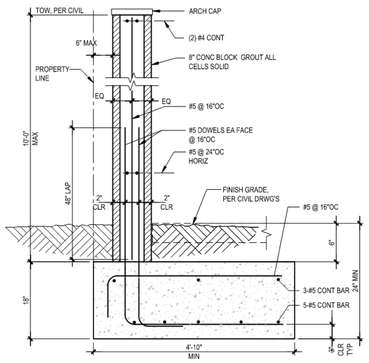

10 CMU SITE WALL AT PROPERTY LINE
NTS

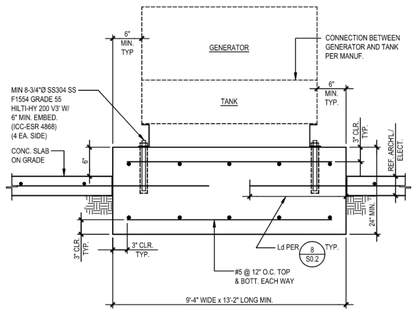

11 GENERATOR CONCRETE PAD
NTS

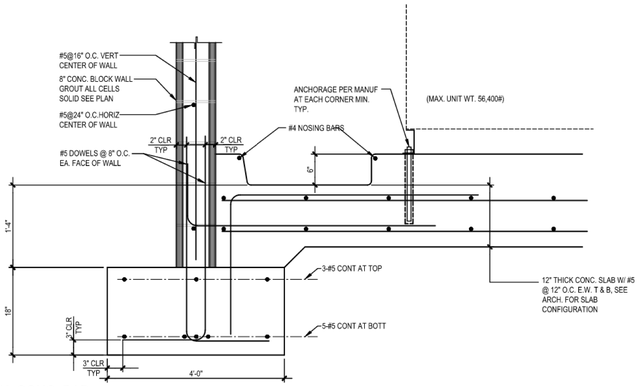

16 FUEL TANK CONC. PAD
NTS

DETAILS PER SHEET S013
TYPICAL CONCRETE DETAILS
REFERENCE STRUCTURAL DRAWINGS
NOT TO SCALE

WDID# N/A, REGION 8 MS4 CIP

REVISIONS			
MARK	DATE	BY	APPROVED/RCE NO.

DESIGNED BY
DATE
DRAWN BY
DATE
REVIEWED BY
DATE

CITY OF ONTARIO

BENCH MARK NO. P-22-1 ELEV. 876.791 FEET
LOCATION: DATUM: N.A.V.D. 88, 2017 ADJUSTMENT
2.5 INCH BRASS DISC STAMPED "CITY OF ONTARIO P-22-1" SET ON CONCRETE SLAB OF BACKFLOW DEVICE FOR AIRPORT SUPER STORAGE AT 1728 GROVE AVENUE.

MSL ENGINEERING, INC.
CIVIL ENGINEERS AND LAND SURVEYORS SPECIALIZING IN SITE DEVELOPMENT
301 NORTH SAN DIMAS AVE., SAN DIMAS, CA. 91773
(909) 305-2395 FAX (909) 305-2397
MARK S. LAMOUREUX R.C.E. 38382 01-29-24 DATE

ONTARIO FIRE DEPARTMENT ADMINISTRATION BUILDING
REFERENCE DETAILS
PDEV23-001 - E202207973 – PC1 NCP (B202207973 ADMIN BLD)

SHEET 18 OF 18
CONTRACT
ACCOUNT
DWG. NO.

JN 21023-21023 C9.0-9.1r.d

Underground Service Alert
Call: Toll Free
811
TWO WORKING DAYS BEFORE YOU DIG

SHEET 18 OF 18

PBK
RANCHO CUCAMONGA
8163 ROCHESTER AVENUE, SUITE 100
RANCHO CUCAMONGA, CA 91730
909-987-0909 P

ONTARIO FIRE DEPARTMENT ADMINISTRATION BUILDING
CITY OF ONTARIO
1420 E. FRANCIS STREET., ONTARIO, CA

LICENSED ARCHITECT KELLEY NEEDHAM C-19064 Sc.Dn 03/31/22 STATE OF CALIFORNIA
REGISTERED PROFESSIONAL ENGINEER MARK S. LAMOUREUX No. 38382 CIVIL STATE OF CALIFORNIA

CONSULTANT
MSL ENGINEERING, INC.
CIVIL ENGINEERS AND LAND SURVEYORS
SPECIALIZING IN SITE DEVELOPMENT
301 N. SAN DIMAS AVENUE
SAN DIMAS, CA. 91773
(909) 305-2395 FAX (909) 305-2397
MARK S. LAMOUREUX (R.C.E. 38382) 01-29-24 DATE

NO	DATE	BY	DESCRIPTION

REVISIONS

DRAWN: T.B.P.	CHECKED: M.S.L.
DATE: 01-29-24	SCALE: 1"=20'
PROJECT NUMBER: 2011701	

REFERENCE DETAILS

DRAWING NUMBER: C9.1

JN 21023-21023 C9.0-9.1r.d
BID SET 03/01/24

1/29/2024 1:19:55 PM, MSL ENGINEERING, INC., CAD

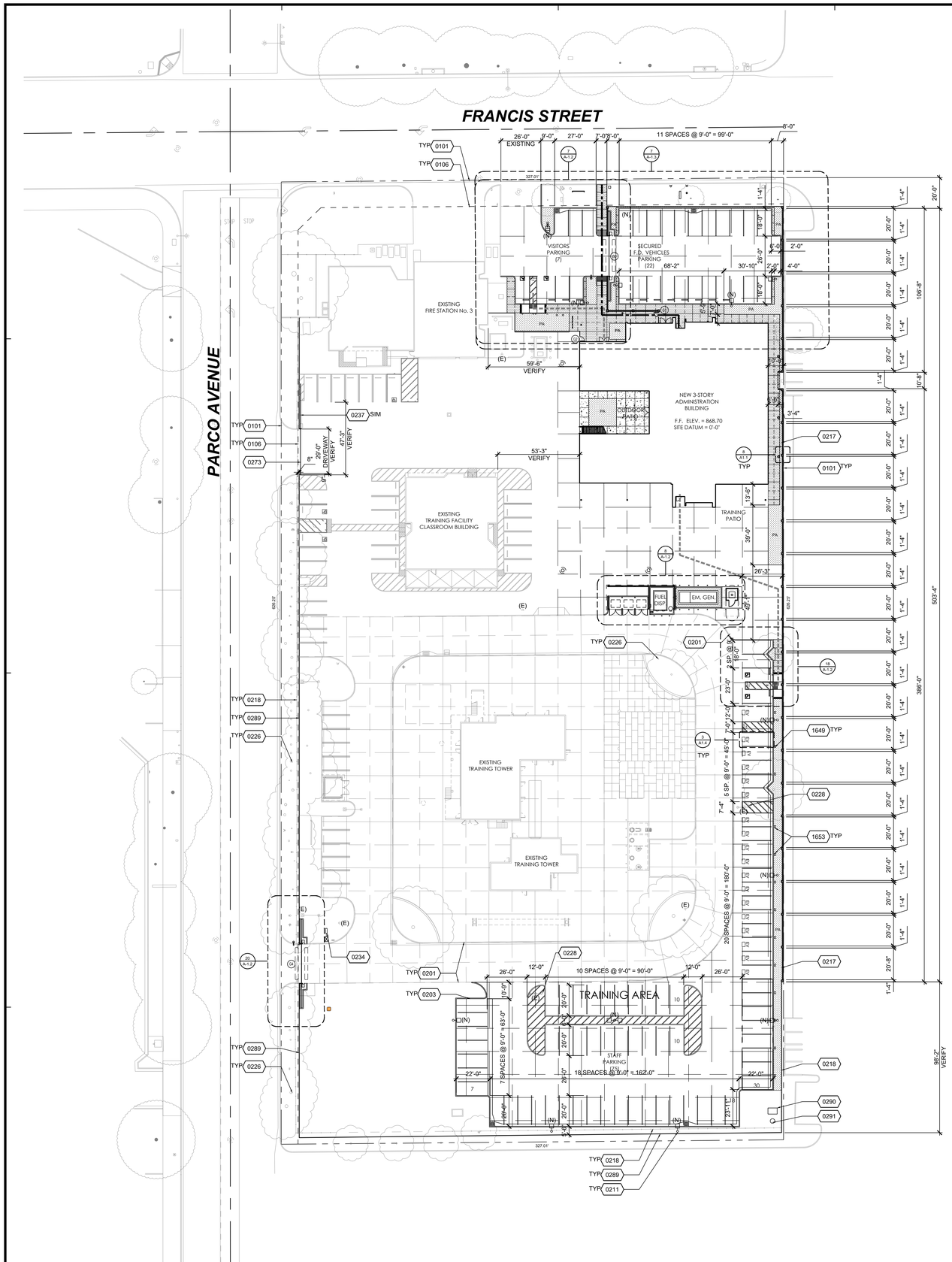

0101	PROPERTY LINE, SEE CIVIL DWGS
0106	LINE OF FUTURE RIGHT OF WAY. SEE CIVIL DWGS
0201	EXISTING CONCRETE CURB
0203	CONCRETE CURB, TYPICAL, SEE CIVIL DRAWINGS
0211	SITE LIGHT STANDARD, TYPICAL, SEE ELECTRICAL DRAWINGS
0217	MASONRY SITE WALL, TYPICAL U.N.O.
0218	EXISTING CHAIN LINK FENCE TO BE REMOVED
0226	PROTECT IN PLACE EXISTING TREE
0228	EXISTING SITE LIGHT STANDARD, SEE CIVIL DRAWINGS
0234	EXISTING BACKFLOW PREVENTION DEVICE, SEE CIVIL DRAWINGS
0237	ROLLING GATE, SEE 5/A1.5
0273	ROLLING GATE TRACK
0289	TUBE STEEL FENCE
0290	4'x6' CONCRETE PAD FOR AMI ANTENNA
0291	AMI ANTENNA POLE, BY OTHERS
1649	EV CHARGING STATION, SEE ELECTRICAL DRAWING
1653	PULL BOX FOR FUTURE EV CHARGING STATION, SEE ELECTRICAL

CONCRETE PAVING, 4,000 PSI, 8" THICK WITH #4 REBAR @ 18" O.C. EACH WAY
CONTROL JOINT CJ1, SEE 5/A1.4
CONSTRUCTION JOINT CJ2, SEE 5/A1.4

CONCRETE SIDEWALK, 4,000 PSI, 4.5" THICK WITH #3 REBAR @ 18" O.C. EACH WAY, SEE 6/A1.4
SAW CUT JOINT TJ1, SEE 5/A1.4
EXPANSION JOINT EJ1, SEE 5/A1.4

PORCELAIN PAVERS

FUTURE EV PARKING SPACES

NEW 16" SQ., 8' HIGH CONCRETE MASONRY PILASTER WITH PRE-CAST CONCRETE CAP
NEW 6' HIGH CONCRETE MASONRY RETAINING OR ENCLOSURE WALL WITH PRE-CAST CONCRETE CAP. SEE 1,2/A1.5
NEW 6' HIGH TUBE STEEL FENCE. SEE 6/A1.5

PA	PLANTER AREA. SEE LANDSCAPE DRAWINGS
(E)	EXISTING SITE LIGHTING
(N)	NEW SITE LIGHTING. SEE ELECTRICAL DRAWINGS
(E) F.H.	EXISTING FIRE HYDRANT
(N) F.H.	NEW FIRE HYDRANT
	PROPERTY LINE
	ACCESSIBLE PATH OF TRAVEL: NO ABRUPT CHANGES IN ELEVATION ALONG PATH OF TRAVEL
	EXIT DISCHARGE PATH OF TRAVEL

1. SEE CIVIL, MECHANICAL, PLUMBING, ELECTRICAL AND LANDSCAPE SITE PLANS FOR LOCATION OF ADDITIONAL SITE ITEMS.
2. EXTEND CONCRETE PAVING INTO TRASH ENCLOSURE, EMERGENCY GENERATOR ENCLOSURE AND BENEATH ABOVE-GRADE FUEL TANK.

MATERIAL LEGEND 2

ASSESOR PARCEL NUMBER

0113-461-10

LEGAL DESCRIPTION

REFERENCE: STEWART TITLE OF CALIFORNIA, INC. JANUARY 10, 2018 UPDATE NO. 1- AMENDED PRELIMINARY TITLE REPORT WITH AN ORDER NUMBER OF 01180-57512 ISSUED OUT OF THEIR RIVERSIDE, CA OFFICE. TITLE OFFICER IS KATHY CRAWFORD AT (951) 276-2700 EXT. 1326.

LOT 28 ACCORDING TO MAP OF THE HOLDSWORTH RANCH, IN THE CITY OF ONTARIO, COUNTY OF SAN BERNARDINO, STATE OF CALIFORNIA, AS SHOWN BY MAP FILE APRIL 11, 1895 IN BOOK 12 PAGE(S) 43, OF MAPS, RECORDS OF SAN BERNARDINO COUNTY, CALIFORNIA.

GROSS ACREAGE

204,790 S.F. OR 4.7 ACRES

NET ACREAGE

1.6 ACRES

BUILDING FLOOR AREA

FIRST FLOOR:	11,520 S.F.
SECOND FLOOR:	12,254 S.F.
THIRD FLOOR:	8,288 S.F.
GROSS BUILDING FLOOR AREA:	32,062 S.F.
LOT COVERAGE RATIO:	12.5%
FLOOR AREA RATIO:	15.1%
LANDSCAPE COVERAGE RATIO:	15.4%
NUMBER OF STORIES:	3

NOTE: SITE PLAN SHALL MEET ALL ENGINEERING & NPDES REQUIREMENTS.

REFERENCE NOTES 7

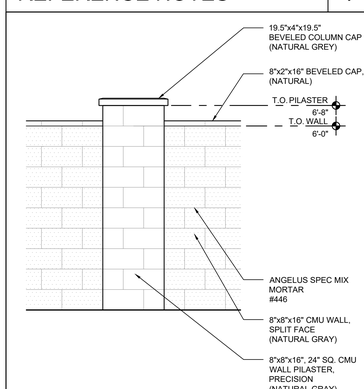

FILE/CSI NUMBER: XD03-001 REVISION DATE: 03/01/2023 JOB NUMBER: W2100100AR

SITE INFORMATION 3

PARKING SUMMARY:

PARKING:

VISITOR:	**7 SPACES**
FIRE DEPT. VEHICLES:	**22 SPACES**
STAFF:	**75 SPACES**
TOTAL PARKING SPACES	104 SPACES
- ACCESSIBLE (REQUIRED)	4 (4)
- VAN ACCESSIBLE (REQUIRED)	1 (1)
- EV STALLS PROVIDED (REQUIRED)	18 (18)
- EV INFRASTRUCTURE (REQUIRED)	13 (13)

BICYCLE PARKING:

- SHORT TERM BICYCLE (REQUIRED)	5 (1)

PARKING SUMMARY 4

SITE PLAN 1" = 30'-0" 12

CMU WALL ELEVATION, TYP. 1/2" = 1'-0" 8

PBK
RANCHO CUCAMONGA
8163 ROCHESTER AVENUE, SUITE 100
RANCHO CUCAMONGA, CA 91730
909-987-0909 P

ONTARIO FIRE DEPARTMENT ADMINISTRATION BUILDING

CITY OF ONTARIO

1420 E. FRANCIS STREET., ONTARIO, CA

LICENSED ARCHITECT
KEVIN NEEDHAM
C-19064
Ex.Dt: 03/31/25
STATE OF CALIFORNIA

CONSULTANT

NO	DATE	BY	DESCRIPTION

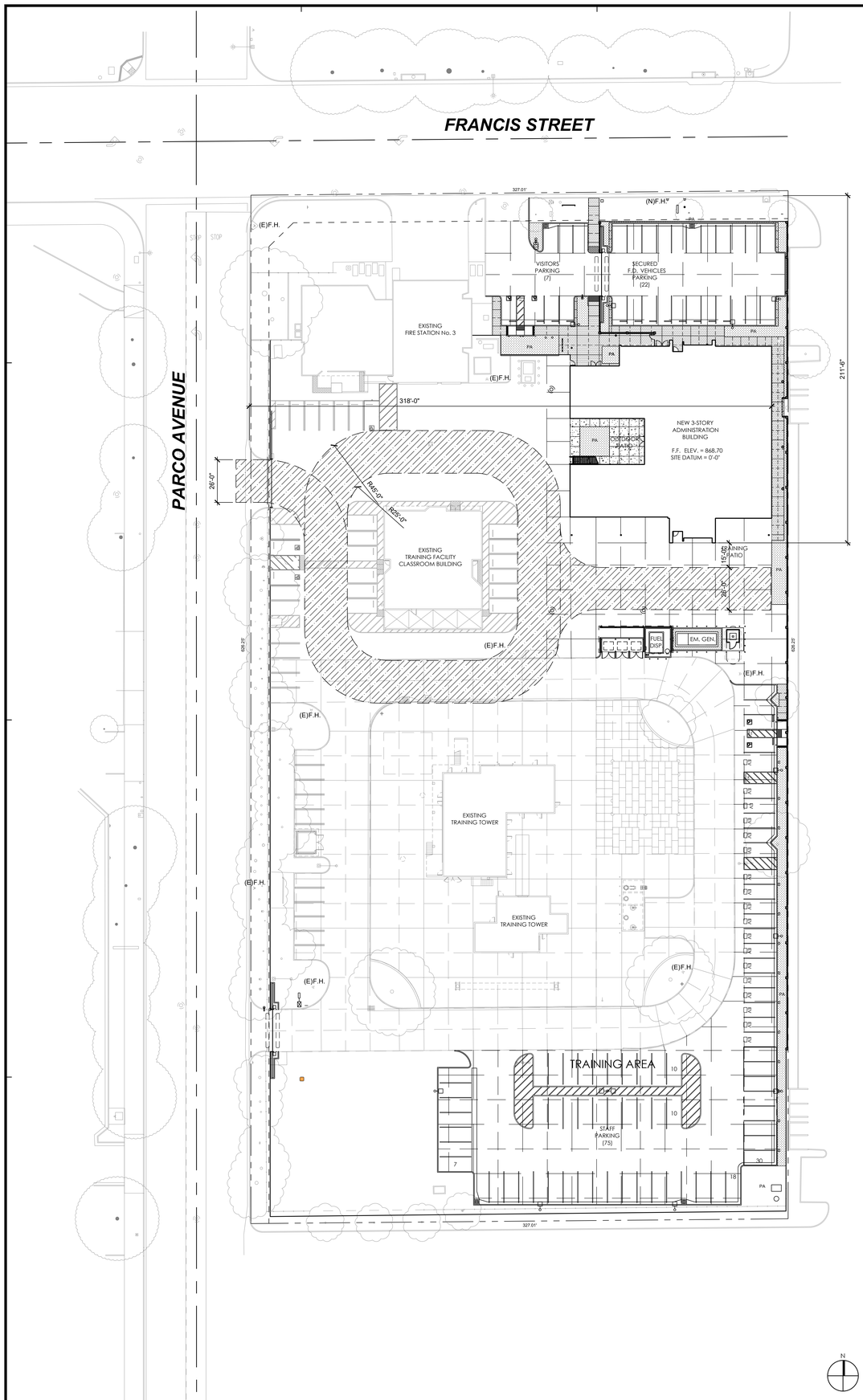

FIRE ACCESS SITE PLAN | 1" = 30'-0" | 16

CITY OF ONTARIO
ONTARIO MUNICIPAL UTILITIES COMPANY
UTILITIES ENGINEERING DIVISION
1425 S. Bon View Avenue, Ontario, CA 91761
Phone: (909) 395-2600 FAX: (909) 395-2608

RECORD OF FIRE FLOW TEST # FM-23-0119 1420 E FRANCIS ST

Date: 5/9/2023
Model Operator: J. Yang
Reviewed By: J. Krizek
Approved By: E. Woosley
Remarks:

Project Information

Request Number: **FM-23-0119**
Project Name (if applicable):
Project Number(if applicable):
Location: **1420 E FRANCIS ST**

Pressure Zone (Max Reservoir HGL): 1074 PZ Land Use (GP, TOP): PF

Allowable Design Criteria
Expected Potable Water System Performance

Fire Hydrant #1 Flow Results		Main Direct Connection Flow Results	
Fire Hydrant Asset #:	N16FH117	Main Size	8-inch
Fire Hydrant Model Node #:	N16FH117	Main Model Node #:	N16FIT170
Hydrant elevation:	870 feet	in S PARCO AV	
Static Pressure:	66 psi	Static Pressure:	66 psi
Flow Test. Residual Pressure:	49 psi	Flow Test. Residual Pressure:	57 psi
Flow Test Observed Flow:	3,000 gpm	Flow Test Observed Flow:	3,000 gpm
Expected Flow at 20 psi	**4,975 gpm**	Expected System Flow at 20 psi	**7,447 gpm**
Potential Peak High Water Pressure*:	88 psi	Maximum Flow Pumped from Main**:	**1,747 gpm**

*Potential Peak High Water Pressure is based on Pressure Zone HGL and Hydrant Elevation.
**Maximum allowable Flow to be safely pumped from the main by a Pump System.

Notes

For Information on using Fire Flow Results contact the Fire Prevention Bureau at 909-395-2029.
For Details on how the Fire Flow Results were prepared, contact: *UtilityFireFlows@ontarioca.gov*

Disclaimer

The allowable design criteria shown above represents projected future maximum day water system conditions at the location of the test as determined by the City of Ontario's hydraulic water system computer model. This allowable design criteria does not constitute a guarantee by the City of the present or future conditions and availability, pursuant to City Resolution 85-85.

Actual water pressure will, in instances, exceed or fall below allowable design criteria due to seasonal and daily pressure variation within the City's water system. The designer is encouraged to provide an allowance in the fire protection system design to maintain adequate protection during such variations in system pressure.

The results are valid for a period of 12 months from the date of the test release unless extended in writing by the Ontario Fire Department.
These Fire Flow Results cannot be used to create Boundary Controls for use in Hydraulic Modeling.

APPROVED HYDRANT FLOW REPORT | 6

CONCRETE PAVING, 4,000 PSI, 8" THICK WITH #4 REBAR @ 18" O.C. EACH WAY
CONTROL JOINT CJ1, SEE 5/A-1.5
CONSTRUCTION JOINT CJ2, SEE 5/A-1.5
CONCRETE SIDEWALK, 4,000 PSI, 4.5" THICK WITH #3 REBAR @ 18" O.C. EACH WAY, SEE 6/A1.5
SAW CUT JOINT TJ1, SEE 5/A-1.5
EXPANSION JOINT EJ1, SEE 5/A-1.5
FUTURE EV PARKING SPACES
NEW CONCRETE MASONRY RETAINING OR ENCLOSURE WALL, TYP. SEE 1,2/A1.6, U.N.O.
(E) EXISTING SITE LIGHTING
(N) NEW SITE LIGHTING
(E) F.H. EXISTING FIRE HYDRANT
(N) F.H. NEW FIRE HYDRANT
PROPERTY LINE
FIRE ACCESS ROAD

ASSESSOR PARCEL NUMBER
0113-461-10

GROSS ACREAGE
4.7 GROSS ACRES. 1.6 NET ACRES

BUILDING FLOOR AREA
32,062 S.F.

CONSTRUCTION TYPE: IIB (SPRINKLERED)

REQUIRED FIRE FLOW: 3,750 GPM FOR 3-HOURS (2019 CFC, APPENDIX B, TABLE B105.1)

AUTOMATIC FIRE SPRINKLER SYSTEM REDUCTION: 50% (ONTARIO ORDINANCE 3147, SECTION 4-4.26)

REQUIRED FIRE FLOW AFTER REDUCTION: 1,875 GPM FOR 1.5-HOURS

GENERAL NOTES:

1. THE FIRE ACCESS ROADS SHALL BE DESIGNED TO SUPPORT THE LOAD OF 75,000 POUNDS.
2. GATES INTENDED FOR AUTOMATIC OPERATION SHALL BE DESIGNED, CONSTRUCTED AND INSTALLED TO COMPLY WITH THE REQUIREMENTS OF ASTM F2200.

MATERIAL LEGEND AND NOTES | 2

3.0 WATER SUPPLY

☒ 3.1 The required fire flow per Fire Department standards, based on the 2019 California Fire Code, Appendix B, is 2000 gallons per minute (g.p.m.) for 3 hours at a minimum of 20 pounds per square inch (p.s.i.) residual operating pressure.

☒ 3.4 The water supply, including water mains and fire hydrants, shall be tested and approved by the Engineering Department and Fire Department prior to combustible construction to assure availability and reliability for firefighting purposes.

4.0 FIRE PROTECTION SYSTEMS

☒ 4.2 Underground fire mains which cross property lines shall be provided with CC & R, easements, or reciprocating agreements, and shall be recorded on the titles of affected properties, and copies of same shall be provided at the time of fire department plan check. The shared use of private fire mains or fire pumps is allowable only between immediately adjacent properties and shall not cross any public street.

☒ 4.3 An automatic fire sprinkler system is required. The system design shall be in accordance with National Fire Protection Association (NFPA) Standard 13. All new fire sprinkler systems, except those in single family dwellings, which contain twenty (20) sprinkler heads or more shall be monitored by an approved listed supervising station. An application along with detailed plans shall be submitted, and a construction permit shall be issued by the Fire Department, prior to any work being done.

☒ 4.4 Wood frame buildings that are to be sprinkled shall have these systems in service (but not necessarily finaled) before the building is enclosed.

☒ 4.5 Fire Department Connections (FDC) shall be located on the address side of the building within one hundred fifty feet (150') of a public fire hydrant on the same side of the street. Provide identification for all fire sprinkler control valves and fire department connections per Standard #I2-007. Raised curbs adjacent to Fire Department connection(s) shall be painted red, five feet either side, per City standards.

☒ 4.6 A fire alarm system is required. The system design shall be in accordance with National Fire Protection Association (NFPA) Standard 72. An application along with detailed plans shall be submitted, and a construction permit shall be issued by the Fire Department, prior to any work being done.

☒ 4.7 Portable fire extinguishers are required to be installed prior to occupancy per Standard #C-001. Please contact the Fire Prevention Bureau to determine the exact number, type and placement required.

5.0 BUILDING CONSTRUCTION FEATURES

☒ 5.1 The developer/general contractor is to be responsible for reasonable periodic cleanup of the development during construction to avoid hazardous accumulations of combustible trash and debris both on and off the site.

☒ 5.2 Approved numbers or addresses shall be placed on all new and existing buildings in such a position as to be plainly visible and legible from the street or road fronting the property. Multi-tenant or building projects shall have addresses and/or suite numbers provided on the rear of the building. Address numbers shall contrast with their background. See Section 9-1.6.06 of the Ontario Municipal Code and Standards #H-003 and #H-002.

☒ 5.6 Knox ® brand key-box(es) shall be installed in location(s) acceptable to the Fire Department. All Knox boxes shall be monitored for tamper by the building fire alarm system. See Standard #H-001 for specific requirements.

6.0 OTHER SPECIAL USES

☒ 6.1 The storage, use, dispensing, or handling of any hazardous materials shall be approved by the Fire Department, and adequate fire protection features shall be required. If hazardous materials are proposed, a Fire Department Hazardous Materials Information Packet, including Disclosure Form and Information Worksheet, shall be completed and submitted with Material Safety Data Sheets to the Fire Department along with building construction plans.

CITY OF ONTARIO
MEMORANDUM

TO: **Diane Ayala, Senior Planner**
Planning Department

FROM: **Paul Ehrman, Sr. Deputy Fire Chief/Fire Marshal**
Fire Department

DATE: **February 6, 2023**

SUBJECT: **PDEV23-001 – A Development Plan to construct one three-story commercial building totaling 30,996 square feet on 4.6 acres of land located at 1406 East Francis Ave at the Southeast corner of Francis Avenue and Parco Avenue, within the CIV (Civic) zoning district (APN(s): 0113-461-10-0000).**

☒ The plan **does** adequately address Fire Department requirements at this time.
☒ Standard Conditions of Approval apply, as stated below.

SITE AND BUILDING FEATURES:

A. 2019 CBC Type of Construction: Type II-B
B. Type of Roof Materials: Ordinary
C. Ground Floor Area(s): 11,293 Sq. Ft.
D. Number of Stories: 3
E. Total Square Footage: 30,996 Sq. Ft.
F. 2019 CBC Occupancy Classification(s): B

CONDITIONS OF APPROVAL:

1.0 GENERAL

☒ 1.1 The following are the Ontario Fire Department ("Fire Department") requirements for this development project, based on the current edition of the California Fire Code (CFC), and the current versions of the Fire Prevention Standards ("Standards.") It is recommended that the applicant or developer transmit a copy of these requirements to the on-site contractor(s) and that all questions or concerns be directed to the Bureau of Fire Prevention, at (909) 395-2029. For copies of Ontario Fire Department Standards please access the City of Ontario web site at www.ontarioca.gov/Fire/Prevention.

☒ 1.2 These Fire Department conditions of approval are to be included on any and all construction drawings.

2.0 FIRE DEPARTMENT ACCESS

☒ 2.1 Fire Department vehicle access roadways shall be provided to within 150 ft. of all portions of the exterior walls of the first story of any building, unless specifically approved. Roadways shall be paved with an all-weather surface and shall be a minimum of twenty-four (24) ft. wide. See Standard #B-004.

☒ 2.2 In order to allow for adequate turning radius for emergency fire apparatus, all turns shall be designed to meet the minimum twenty five feet (25') inside and forty-five feet (45') outside turning radius per Standard #B-005.

☒ 2.3 Fire Department access roadways that exceed one hundred and fifty feet (150') in length shall have an approved turn-around per Standard #B-002.

☒ 2.4 Access drive aisles which cross property lines shall be provided with CC&Rs, access easements, or reciprocating agreements, and shall be recorded on the titles of affected properties, and copies of same shall be provided at the time of building plan check.

☒ 2.5 "No Parking-Fire Lane" signs and /or red painted curbs with lettering are required to be installed in interior access roadways, in locations where vehicle parking would obstruct the minimum clear width requirement. Installation shall be per Standard #B-001.

☒ 2.6 Security gates or other barriers on fire access roadways shall be provided with a Knox brand key switch or padlock to allow Fire Department access. See Standards #B-003, B-004 and H-001.

☒ 2.7 Any time PRIOR to on-site combustible construction and/or storage, a minimum twenty-four (24) ft. wide circulating all weather access roads shall be provided to within 150 ft. of all portions of the exterior walls of the first story of any building, unless specifically approved by fire department and other emergency services.

FIRE DEPARTMENT - CONDITION OF APPROVAL | 4

PBK
RANCHO CUCAMONGA
8163 ROCHESTER AVENUE, SUITE 100
RANCHO CUCAMONGA, CA 91730
909-987-0909 P

ONTARIO FIRE DEPARTMENT ADMINISTRATION BUILDING
CITY OF ONTARIO
1420 E. FRANCIS STREET., ONTARIO, CA

LICENSED ARCHITECT
KEVIN MEEDHAM
C-19064
exp 03/31/25
STATE OF CALIFORNIA

CONSULTANT

NO	DATE	BY	DESCRIPTION

REVISIONS

DRAWN: RMZ	CHECKED: KN
DATE: 07/15/2022	SCALE: AS NOTED
PROJECT NUMBER: 2011700	

FIRE ACCESS SITE PLAN

DRAWING NUMBER: A1.1F

BID SET 03/01/24

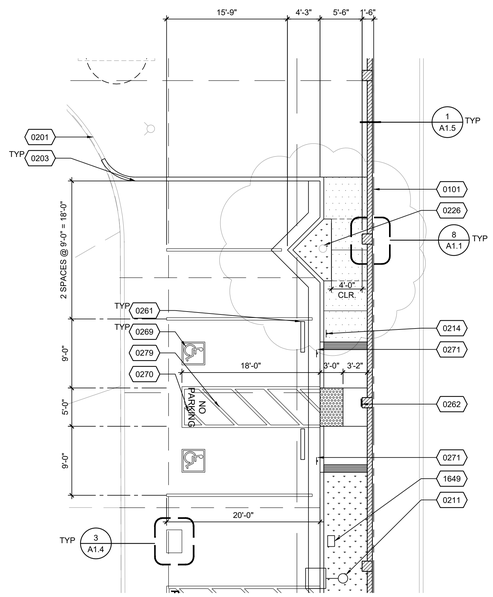

ENLARGED SITE PLAN | 1/8" = 1'-0" | 18

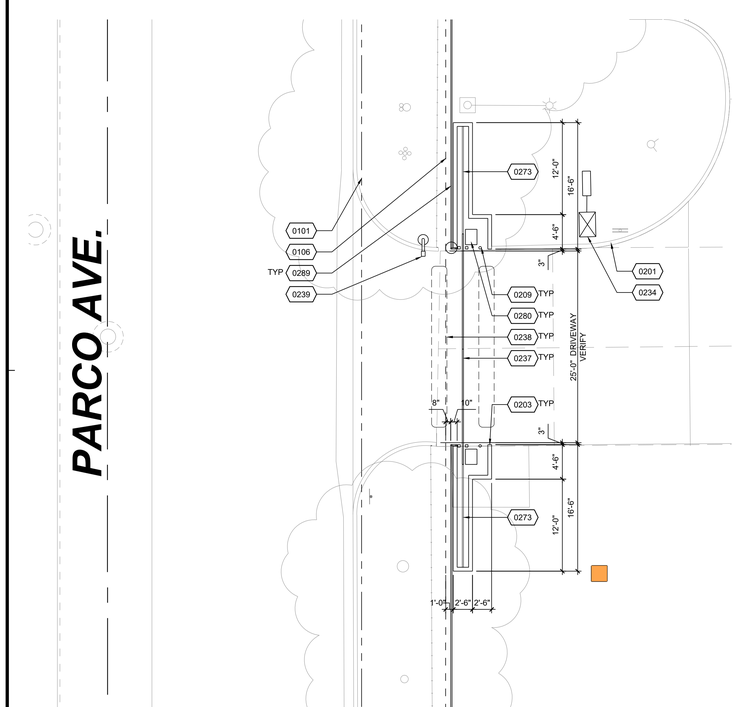

ENLARGED SITE PLAN | 1/8" = 1'-0" | 20

FRANCIS STREET

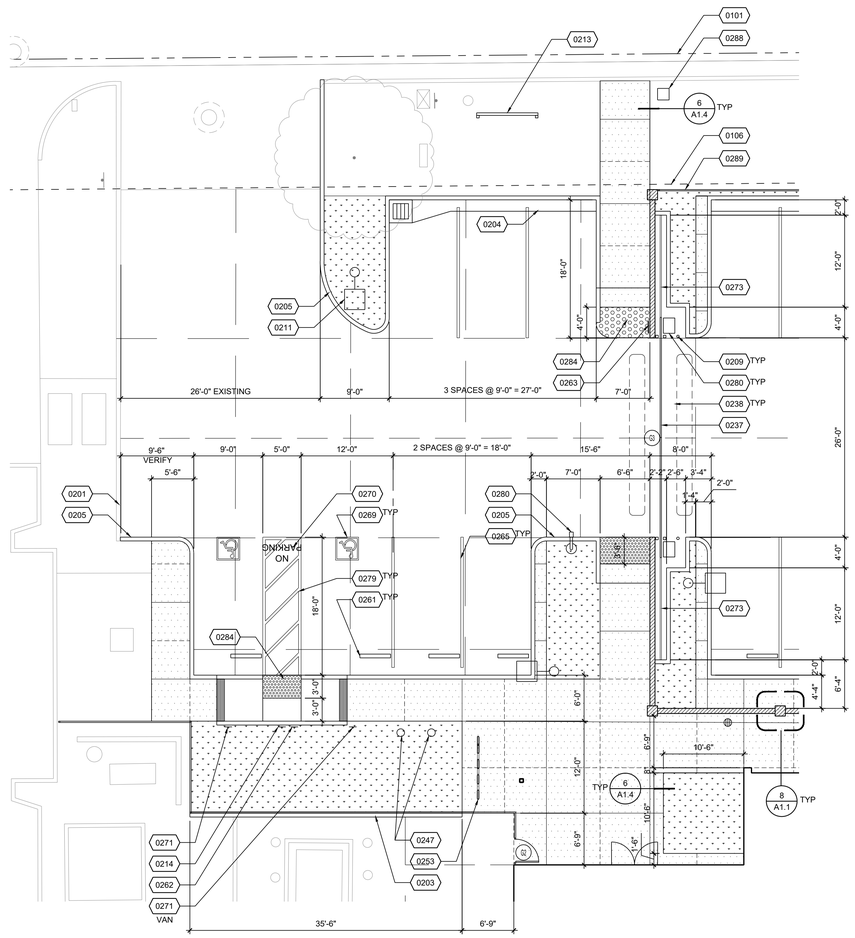

ENLARGED SITE PLAN | 1/8" = 1'-0" | 7

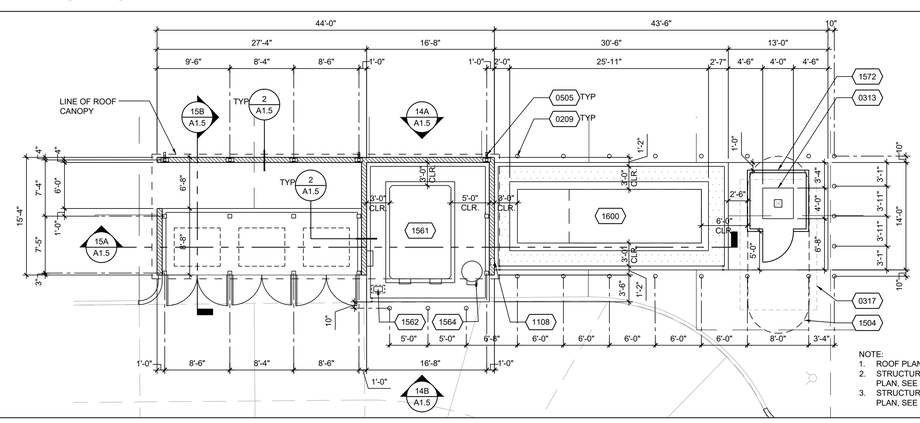

NOTE:
1. ROOF PLAN, SEE 13/A1.5.
2. STRUCTURAL FOUNDATION PLAN, SEE 2/S0.21.
3. STRUCTURAL ROOF FRAMING PLAN, SEE 1/S0.21.

ENLARGED SITE PLAN | 1/8" = 1'-0" | 8

0101	PROPERTY LINE, SEE CIVIL DWGS
0106	LINE OF FUTURE RIGHT OF WAY. SEE CIVIL DWGS
0201	EXISTING CONCRETE CURB
0203	CONCRETE CURB, TYPICAL, SEE CIVIL DRAWINGS
0204	CONCRETE CURB AND GUTTER, TYPICAL, SEE CIVIL DRAWINGS
0205	CONCRETE CURB WITH RED PAINT, SEE 8/A1.4
0209	PIPE BOLLARDS,TYPICAL, SEE 9/A1.4
0211	SITE LIGHT STANDARD, TYPICAL, SEE ELECTRICAL DRAWINGS
0213	PROJECT CONSTRUCTION SIGN, SEE 1/A1.4
0214	TOW AWAY SIGN, SEE 14/A1.4
0226	PROTECT IN PLACE EXISTING TREE
0234	EXISTING BACKFLOW PREVENTION DEVICE, SEE CIVIL DRAWINGS
0237	ROLLING GATE, SEE 5/A1.5
0238	CONC. ENCASED GATE SAFETY LOOPS, SEE ELECT. DWGS.
0239	POST MOUNTED KEYPAD FOR GATE CONTROL,SEE 20/A1.4
0247	FLAG POLE, SEE 16/A1.4. ADDITIONAL PERMIT REQ'D
0253	BICYCLE RACK, SEE 10/A1.4
0261	CONCRETE WHEEL STOP, SEE 7/A1.4
0262	ACCESSIBLE DIRECTIONAL SIGN, SEE 12/A1.4
0263	DO NOT ENTER SIGN, SEE 17/A-1.4
0265	4" WIDE PARKING STRIPING, PAINTED WHITE
0269	INTERNATIONAL SYMBOL OF ACCESSIBILITY, SEE DETAIL 2/A-1.4
0270	12" HIGH LETTERS, WHITE PAINT
0271	ACCESSIBLE PARKING SIGN, SEE DETAIL 15/A1.4
0273	ROLLING GATE TRACK
0279	4" WIDE STRIPING, PAINTED BLUE
0280	GATE OPERATOR
0284	TRUNCATED DOMES, SEE 4/A1.4
0288	MAILBOX, SEE 11/A1.4
0289	TUBE STEEL FENCE
0313	6" HIGH CONC HOUSING PAD, SEE PLUMB. DWGS. FOR SIZE OF OPENING
0317	8" THK CONCRETE FOOTING BELOW GRADE. SEE STRUCT. DWGS.
0505	METAL DOWNSPOUT
1108	FIRE EXTINGUISHER IN RECESSED CABINET, SEE AND 17/A8.2
1504	UNDERGROUND WATER STORAGE TANK, SEE PLUMBING DWGS
1561	3,000 GAL SPLIT FUEL STORAGE TANK, SEE PLUMBING DRAWINGS
1562	FUEL MANAGEMENT SYSTEM "FUELMASTER 2500 PLUS"
1564	DEF TANK AND DISPENSE SYSTEM WITH HOSE REEL
1572	PRE-FAB FIBERGLASS PUMP EQUIPMENT SHELTER
1600	EMERGENCY GENERATOR, SEE ELECTRICAL DRAWINGS
1649	EV CHARGING STATION, SEE ELECTRICAL DRAWING

REFERENCE NOTES | 3

GENERAL NOTES | 4

PBK
RANCHO CUCAMONGA
8163 ROCHESTER AVENUE, SUITE 100
RANCHO CUCAMONGA, CA 91730
909-987-0909 P

ONTARIO FIRE DEPARTMENT ADMINISTRATION BUILDING

CITY OF ONTARIO

1420 E. FRANCIS STREET., ONTARIO, CA

LICENSED ARCHITECT
KEVIN NEEDHAM
C-19064
Exp. 03/31/23
STATE OF CALIFORNIA

CONSULTANT

NO	DATE	BY	DESCRIPTION

REVISIONS

DRAWN: RMZ	CHECKED: KN
DATE: 07/15/2022	SCALE: AS NOTED
PROJECT NUMBER: 2011700	

ENLARGED SITE PLAN

DRAWING NUMBER: A1.2

BID SET 03/01/24

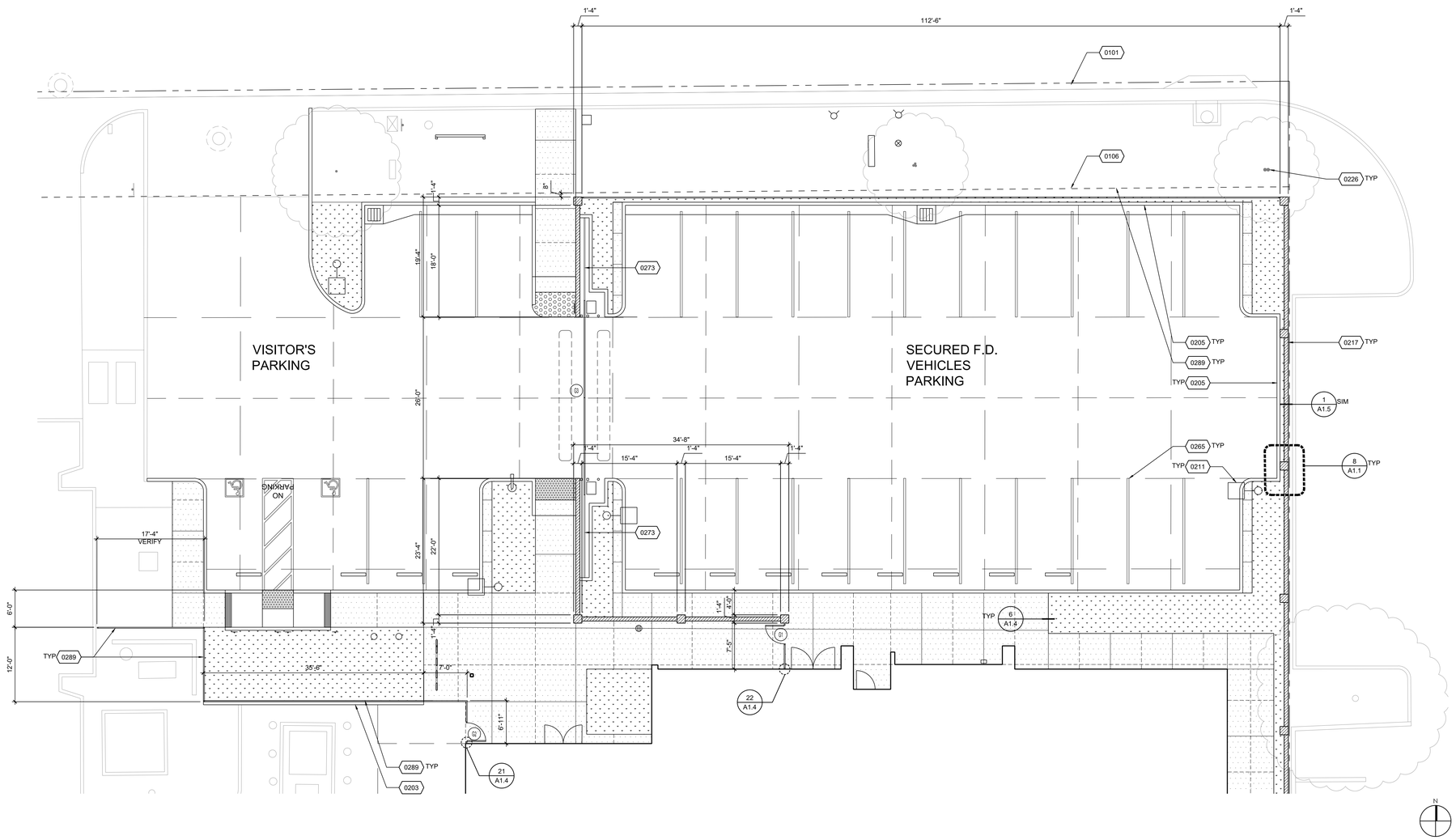

ENLARGED SITE WALL PLAN (NORTH) | 1/8" = 1'-0" | 7

0101	PROPERTY LINE, SEE CIVIL DWGS
0106	LINE OF FUTURE RIGHT OF WAY. SEE CIVIL DWGS
0203	CONCRETE CURB, TYPICAL, SEE CIVIL DRAWINGS
0205	CONCRETE CURB WITH RED PAINT, SEE 8/A1.4
0211	SITE LIGHT STANDARD, TYPICAL, SEE ELECTRICAL DRAWINGS
0217	MASONRY SITE WALL, TYPICAL U.N.O.
0226	PROTECT IN PLACE EXISTING TREE
0265	4" WIDE PARKING STRIPING, PAINTED WHITE
0273	ROLLING GATE TRACK
0289	TUBE STEEL FENCE

REFERENCE NOTES | 2

24 | 20 | 16 | 12 | 8 | GENERAL NOTES | 4

PBK
RANCHO CUCAMONGA
8163 ROCHESTER AVENUE, SUITE 100
RANCHO CUCAMONGA, CA 91730
909-987-0909 P

ONTARIO FIRE DEPARTMENT ADMINISTRATION BUILDING

CITY OF ONTARIO

1420 E. FRANCIS STREET., ONTARIO, CA

LICENSED ARCHITECT
KEVIN NEEDHAM
C-19064
Exp 03/31/25
STATE OF CALIFORNIA

CONSULTANT

NO	DATE	BY	DESCRIPTION

REVISIONS

DRAWN: RMZ	CHECKED: KN
DATE: 07/15/2022	SCALE: AS NOTED
PROJECT NUMBER: 2011700	

ENLARGED SITE PLAN

DRAWING NUMBER: A1.3

BID SET 03/01/24

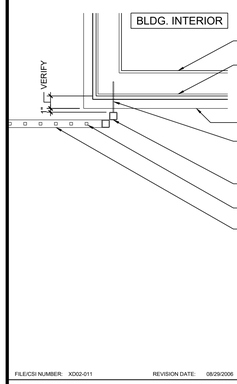

FILE/CSI NUMBER: XD02-011 REVISION DATE: 08/29/2006 JOB NUMBER: 0520100

SITE FENCE CONNECT. @ BUILDING — 3/4"=1'-0" — 21

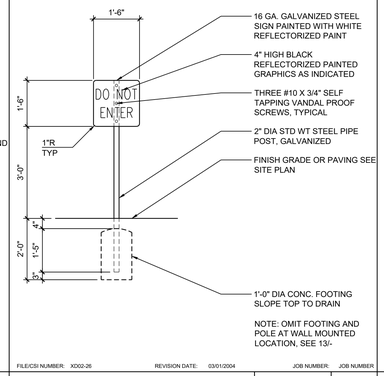

FILE/CSI NUMBER: XD02-26 REVISION DATE: 03/01/2004 JOB NUMBER: JOB NUMBER

DO NOT ENTER SIGN — 1/2"=1'-0" — 17

13

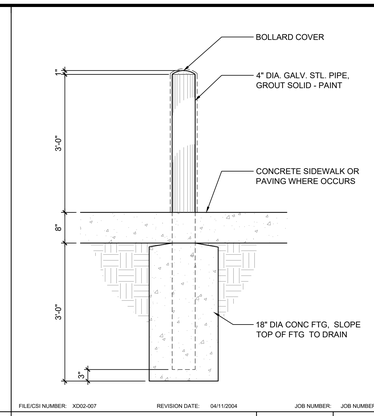

FILE/CSI NUMBER: XD02-007 REVISION DATE: 04/11/2004 JOB NUMBER: JOB NUMBER

BOLLARD — 3/4"=1'-0" — 9

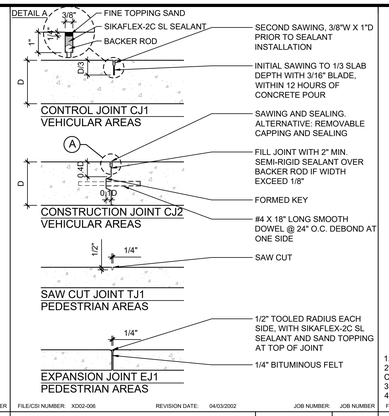

FILE/CSI NUMBER: XD02-006 REVISION DATE: 04/03/2002 JOB NUMBER: JOB NUMBER

CONCRETE JOINTS — 1"=1'-0" — 5

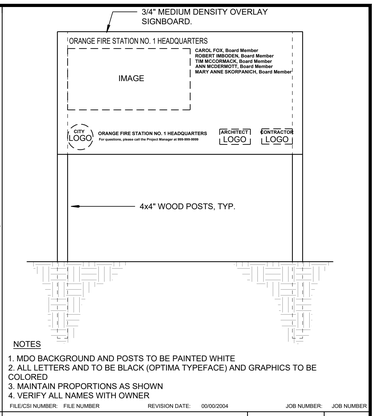

FILE/CSI NUMBER: FILE NUMBER REVISION DATE: 00/00/2004 JOB NUMBER: JOB NUMBER

CONSTRUCTION SIGN — 1/2"=1'-0" — 1

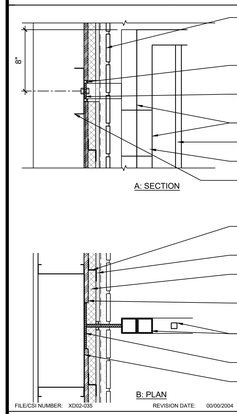

FILE/CSI NUMBER: XD02-035 REVISION DATE: 00/00/2004 JOB NUMBER: JOB NUMBER

TS FENCE @ FRAMED WALL — 1 1/2"=1'-0" — 22

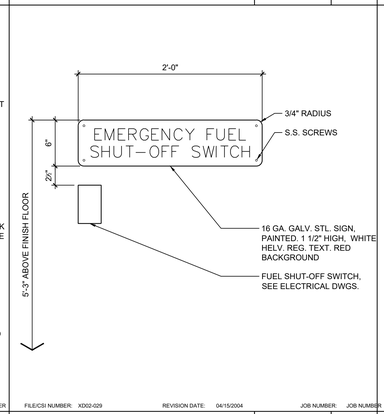

FILE/CSI NUMBER: XD02-029 REVISION DATE: 04/15/2004 JOB NUMBER: JOB NUMBER

FUEL SHUT-OFF SIGNAGE — 1 1/2"=1'-0" — 18

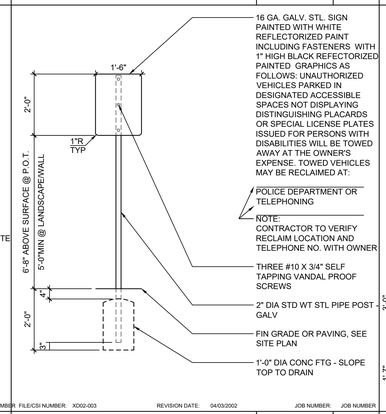

FILE/CSI NUMBER: XD02-003 REVISION DATE: 04/03/2002 JOB NUMBER: JOB NUMBER

TOW AWAY SIGN — 1/2"=1'-0" — 14

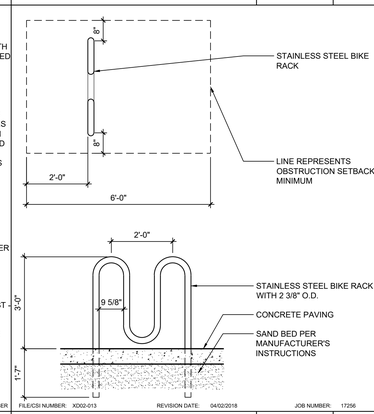

FILE/CSI NUMBER: XD02-013 REVISION DATE: 04/02/2018 JOB NUMBER: 17256

STAINLESS STEEL BICYCLE RACK — 1/2"=1'-0" — 10

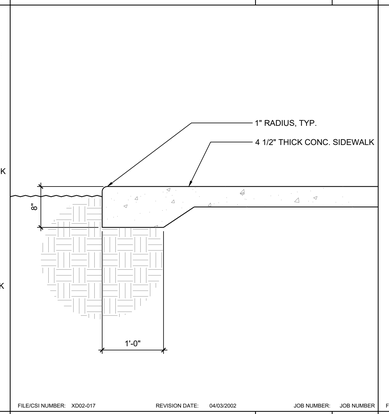

FILE/CSI NUMBER: XD02-017 REVISION DATE: 04/03/2002 JOB NUMBER: JOB NUMBER

EDGE CONDITION AT CONC. SIDEWALK — 1"=1'-0" — 6

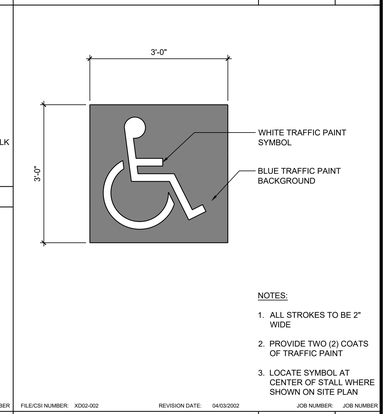

FILE/CSI NUMBER: XD02-002 REVISION DATE: 04/03/2002 JOB NUMBER: JOB NUMBER

ACCESS SYMBOL — N.T.S. — 2

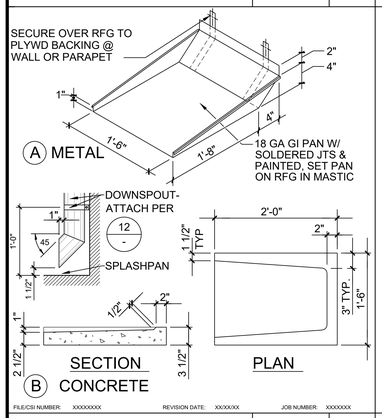

FILE/CSI NUMBER: XXXXXXXX REVISION DATE: XX/XX/XX JOB NUMBER: XXXXXXX

SPLASH PAN/BLOCK — 1" = 1'-0" — 23

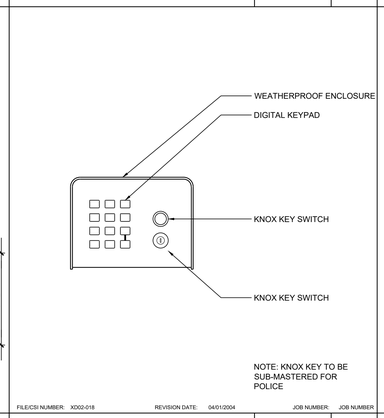

FILE/CSI NUMBER: XD02-018 REVISION DATE: 04/01/2004 JOB NUMBER: JOB NUMBER

KEYPAD ELEVATION — 3"=1'-0" — 19

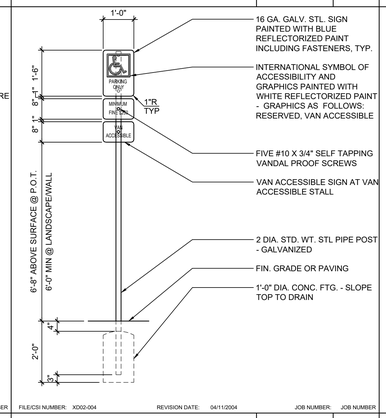

FILE/CSI NUMBER: XD02-004 REVISION DATE: 04/11/2004 JOB NUMBER: JOB NUMBER

PARKING SIGN — 1/2"=1'-0" — 15

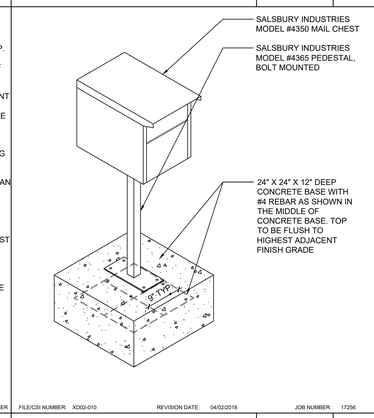

FILE/CSI NUMBER: XD02-010 REVISION DATE: 04/02/2018 JOB NUMBER: 17256

MAIL BOX — 3/4"=1'-0" — 11

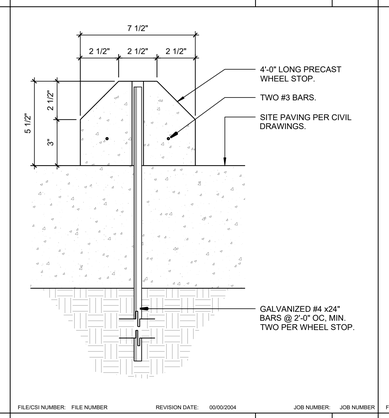

FILE/CSI NUMBER: FILE NUMBER REVISION DATE: 00/00/2004 JOB NUMBER: JOB NUMBER

WHEEL STOP — 3"=1'-0" — 7

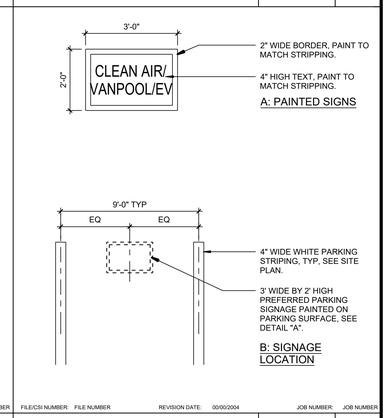

FILE/CSI NUMBER: FILE NUMBER REVISION DATE: 00/00/2004 JOB NUMBER: JOB NUMBER

PREFERRED PARKING SIGN — 1/2"=1'-0" — 3

24

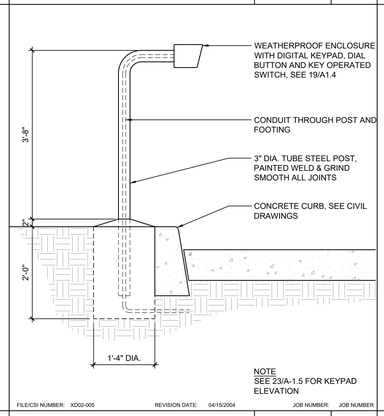

FILE/CSI NUMBER: XD02-005 REVISION DATE: 04/15/2004 JOB NUMBER: JOB NUMBER

KEYPAD — 3/4"=1'-0" — 20

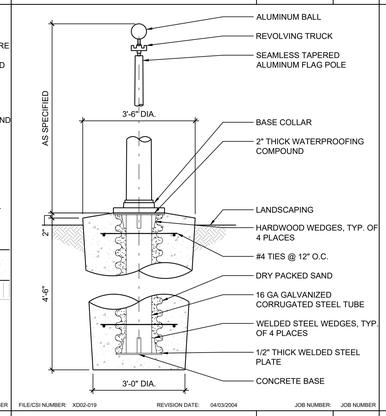

FILE/CSI NUMBER: XD02-019 REVISION DATE: 04/03/2004 JOB NUMBER: JOB NUMBER

FLAG POLE — 1/2"=1'-0" — 16

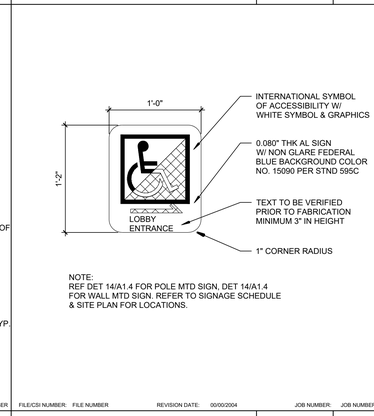

FILE/CSI NUMBER: FILE NUMBER REVISION DATE: 00/00/2004 JOB NUMBER: JOB NUMBER

DIRECTIONAL ACCESS SIGN — 1 1/2"=1'-0" — 12

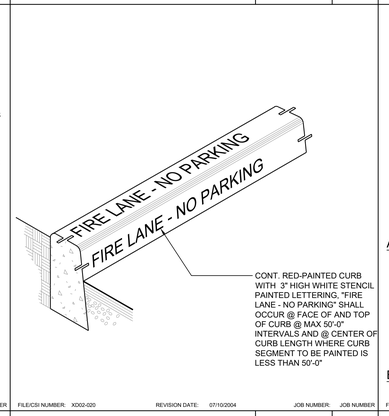

FILE/CSI NUMBER: XD02-020 REVISION DATE: 07/10/2004 JOB NUMBER: JOB NUMBER

FIRE LANE CURB — 1 1/2"=1'-0" — 8

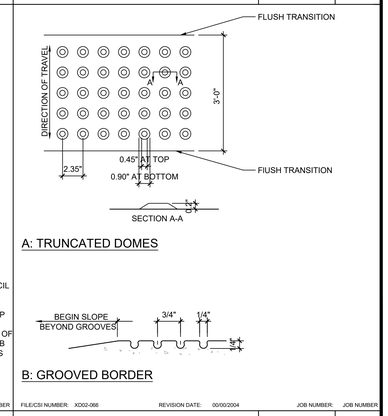

FILE/CSI NUMBER: XD02-066 REVISION DATE: 00/00/2004 JOB NUMBER: JOB NUMBER

TRUNCATED DOMES AND GROOVED BORDER — NTS — 4

PBK
RANCHO CUCAMONGA
8163 ROCHESTER AVENUE, SUITE 100
RANCHO CUCAMONGA, CA 91730
909-987-0909 P

ONTARIO FIRE DEPARTMENT ADMINISTRATION BUILDING

CITY OF ONTARIO

1420 E. FRANCIS STREET., ONTARIO, CA

LICENSED ARCHITECT — KEVIN E. NEEDHAM C-19064 — Exp. 03/31/25 — STATE OF CALIFORNIA

CONSULTANT

NO	DATE	BY	DESCRIPTION

REVISIONS

DRAWN: RMZ CHECKED:

DATE: 07/15/2022 SCALE:

PROJECT NUMBER: 2011700

SITE DETAILS

DRAWING NUMBER: A1.4

BID SET 03/01/24

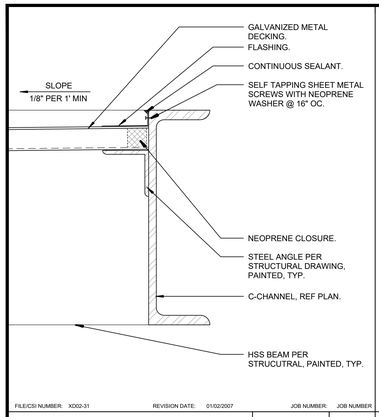

FILE/CSI NUMBER: XD02-31 REVISION DATE: 01/02/2007 JOB NUMBER: JOB NUMBER

CANOPY EAVE DETAIL | 3"=1'-0" | 17

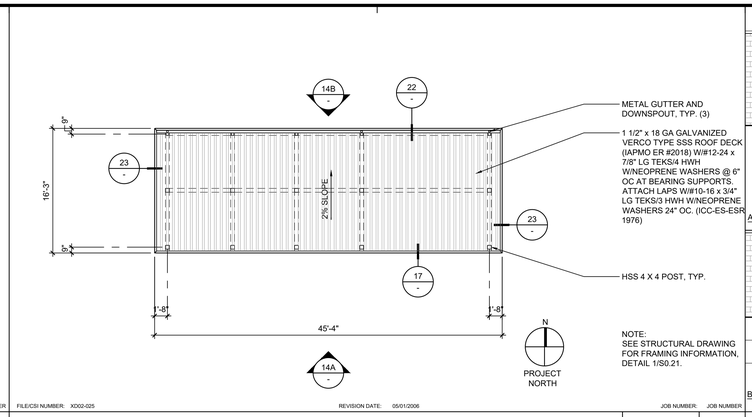

FILE/CSI NUMBER: XD02-025 REVISION DATE: 05/01/2006 JOB NUMBER: JOB NUMBER

TRASH/FUEL TANK ENCLOSURE ROOF PLAN | 1/8"=1'-0" | 13

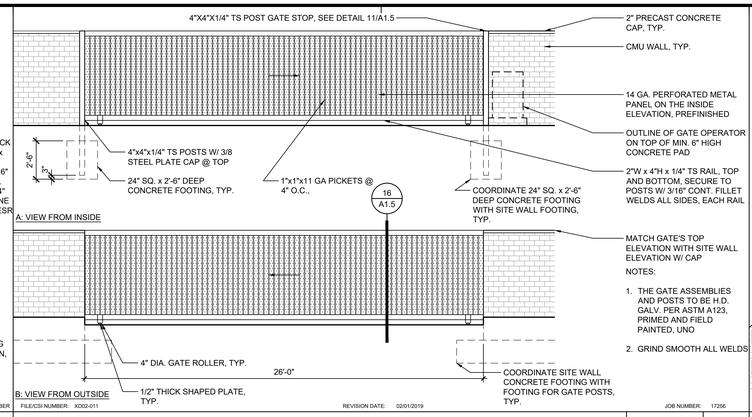

FILE/CSI NUMBER: XD02-011 REVISION DATE: 02/01/2019 JOB NUMBER: 17256

SLIDING SECURITY GATE ELEVATIONS (G3,G4) | 1/4"=1'-0" | 5

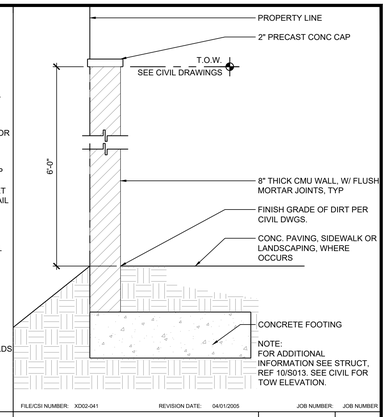

FILE/CSI NUMBER: XD02-041 REVISION DATE: 04/01/2005 JOB NUMBER: JOB NUMBER

SITE WALL | 3/4"=1'-0" | 1

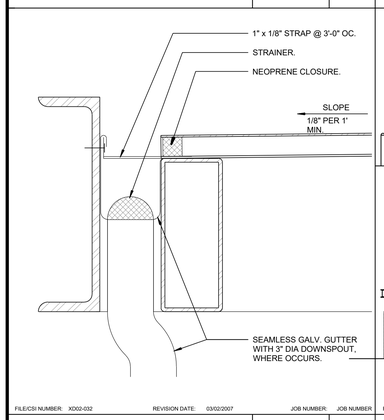

FILE/CSI NUMBER: XD02-032 REVISION DATE: 03/02/2007 JOB NUMBER: JOB NUMBER

CANOPY GUTTER DETAIL | 3"=1'-0" | 22

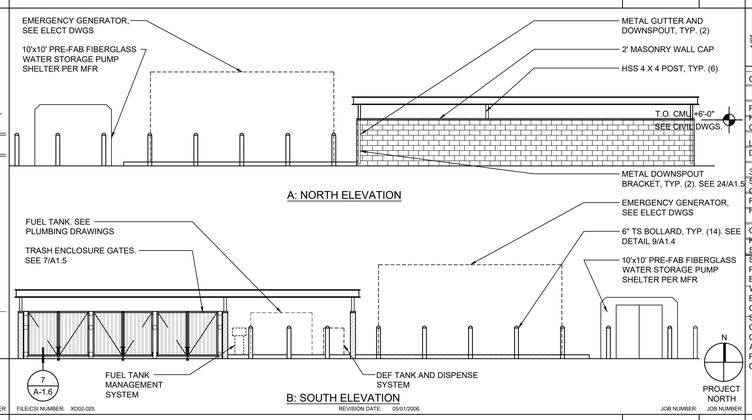

FILE/CSI NUMBER: XD02-025 REVISION DATE: 05/01/2006 JOB NUMBER: JOB NUMBER

TRASH/FUEL TANK ENCLOSURE ELEVATIONS | 1/8"=1'-0" | 14

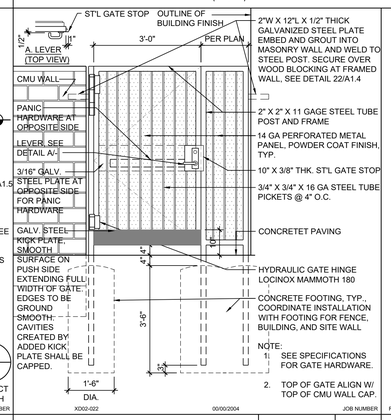

XD02-022 00/00/2004 JOB NUMBER

MAN GATE (G1, G2) | 1/2"=1'-0" | 10

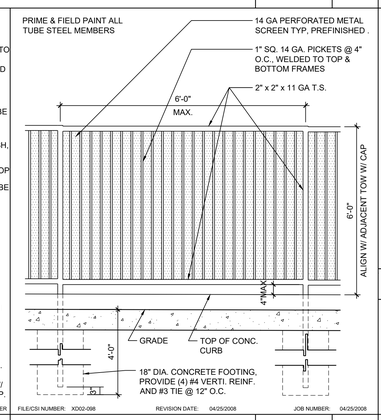

FILE/CSI NUMBER: XD02-098 REVISION DATE: 04/25/2008 JOB NUMBER: 04/25/2008

TUBE STEEL FENCE | 1/2"=1'-0" | 6

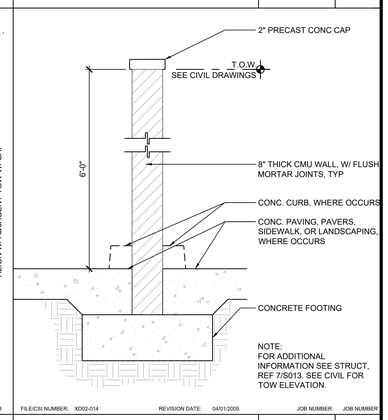

FILE/CSI NUMBER: XD02-014 REVISION DATE: 04/01/2005 JOB NUMBER: JOB NUMBER

SITE WALL | 3/4"=1'-0" | 2

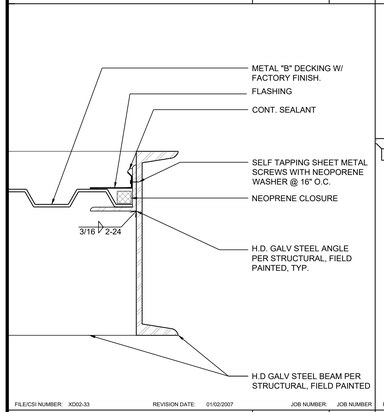

FILE/CSI NUMBER: XD02-33 REVISION DATE: 01/02/2007 JOB NUMBER: JOB NUMBER

CANOPY RAKE | 3"=1'-0" | 23

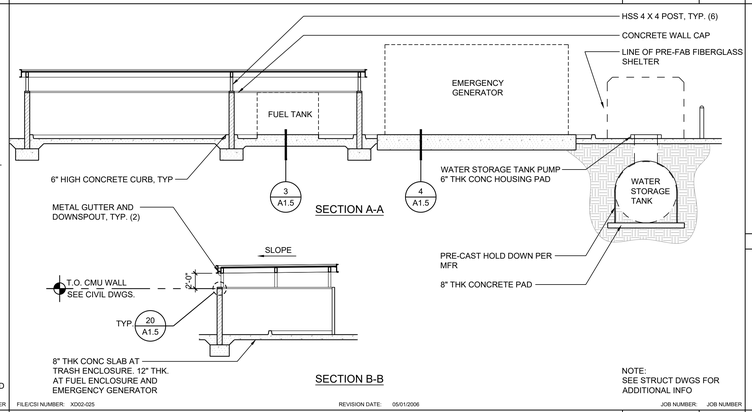

FILE/CSI NUMBER: XD02-026 REVISION DATE: 05/01/2006 JOB NUMBER: JOB NUMBER

TRASH/FUEL TANK ENCLOSURE SECTIONS | 1/8"=1'-0" | 15

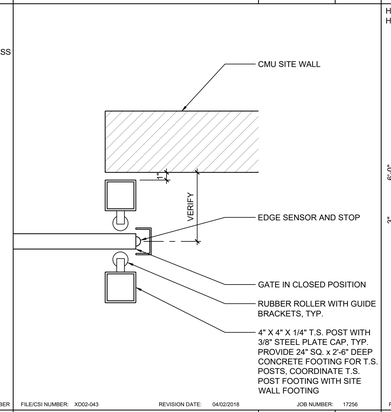

FILE/CSI NUMBER: XD02-043 REVISION DATE: 04/02/2018 JOB NUMBER: 17256

GATE STOP | 1 1/2"=1'-0" | 11

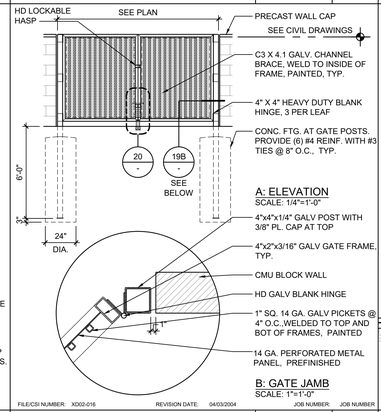

FILE/CSI NUMBER: XD02-016 REVISION DATE: 04/03/2004 JOB NUMBER: JOB NUMBER

ENCLOSURE GATE | AS NOTED | 7

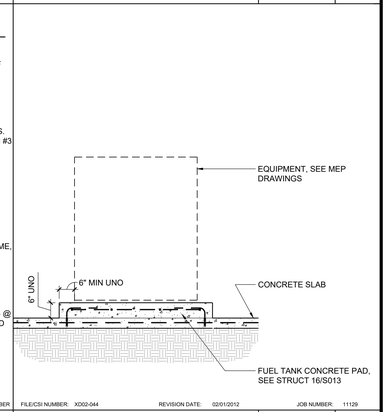

FILE/CSI NUMBER: XD02-044 REVISION DATE: 02/01/2012 JOB NUMBER: 11129

TYPICAL EQUIPMENT PAD | 1/2"=1'-0" | 3

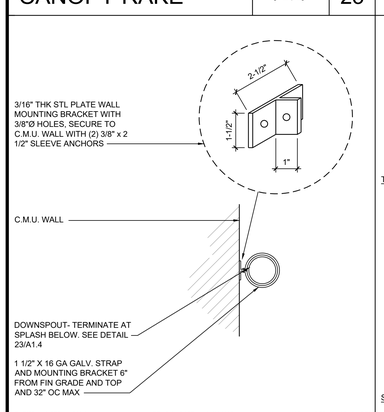

FILE/CSI NUMBER: XD02-34 REVISION DATE: 01/02/2007 JOB NUMBER: JOB NUMBER

DOWNSPOUT BRACKET | 1 1/2"=1'-0" | 24

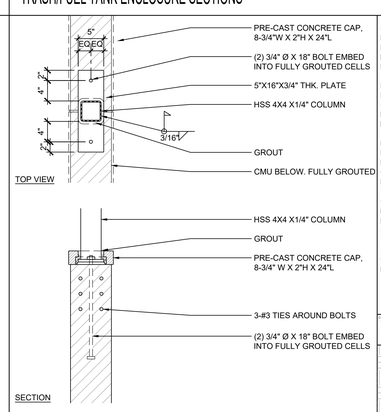

FILE/CSI NUMBER: XD07-079 REVISION DATE: 00/00/2004 JOB NUMBER: JOB NUMBER

HSS COLUMN TO CMU | 1"=1'-0" | 20

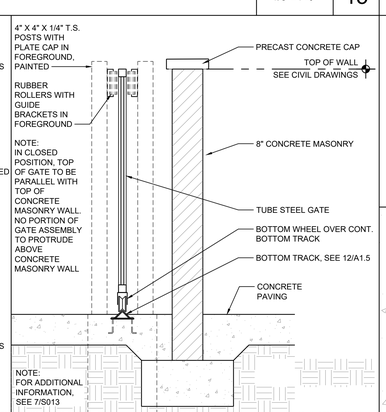

FILE/CSI NUMBER: XD02-013 REVISION DATE: 04/01/2005 JOB NUMBER: 0522700

WALL AT GATE | 3/4"=1'-0" | 16

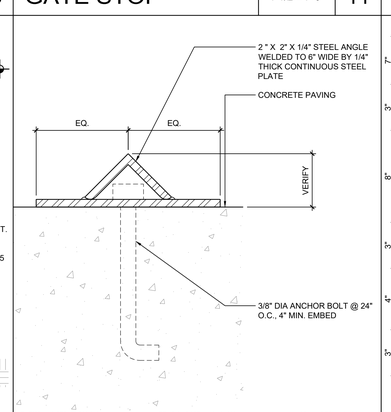

FILE/CSI NUMBER: XD02-036 REVISION DATE: 04/01/2004 JOB NUMBER: 04142

ROLLING GATE TRACK | HALF | 12

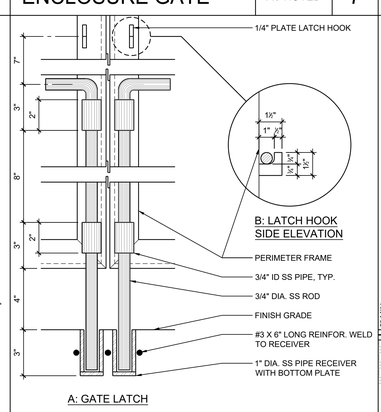

FILE/CSI NUMBER: XD02-021 REVISION DATE: 09/30/2004 JOB NUMBER: JOB NUMBER

GATE LATCH | 3"=1'-0" | 8

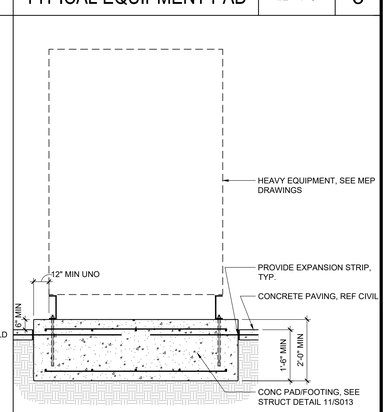

FILE/CSI NUMBER: XD02-037 REVISION DATE: 02/01/2012 JOB NUMBER: 11129

HEAVY EQUIPMENT PAD | 1/2"=1'-0" | 4

PBK
RANCHO CUCAMONGA
8163 ROCHESTER AVENUE, SUITE 100
RANCHO CUCAMONGA, CA 91730
909-987-0909 P

ONTARIO FIRE DEPARTMENT ADMINISTRATION BUILDING

CITY OF ONTARIO

1420 E. FRANCIS STREET., ONTARIO, CA

LICENSED ARCHITECT
KEVIN MCCLEEDHAM
C-19064
Expir. 03/31/25
STATE OF CALIFORNIA

CONSULTANT

NO	DATE	BY	DESCRIPTION

REVISIONS

DRAWN: RMZ	CHECKED:
DATE: 07/15/2022	SCALE:
PROJECT NUMBER: 2011700	

SITE DETAILS

DRAWING NUMBER: A1.5

BID SET 03/01/24

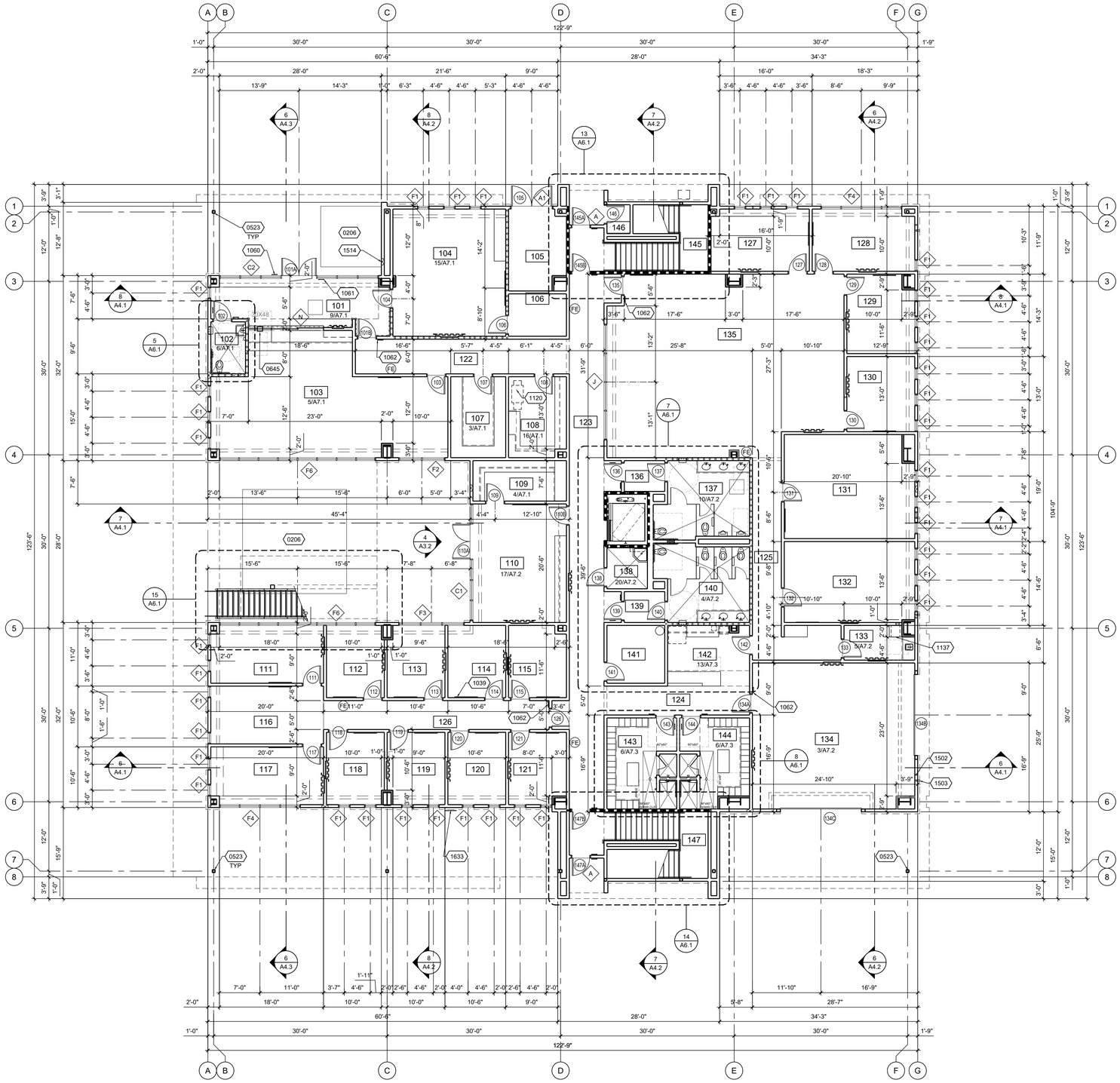

ROOM #	ROOM NAME	ROOM #	ROOM NAME
101	LOBBY	126	HALLWAY - WEST
102	PUBLIC RESTROOM	127	DEPUTY FIRE MARSHALL
103	ADMIN OPEN OFFICE	128	DC FIRE MARSHALL
104	LARGE CONFERENCE RM	129	FIRE PROTECT ANALYST
105	ELECTRICAL ROOM	130	SR FIRE SPC OFFICE
106	STORAGE	131	FIRE SPC/PERMIT TECH
107	STORAGE	132	PLAN CHECKER OFFICE
108	COPY ROOM	133	LACTATION ROOM
109	EMS STORAGE	134	EXERCISE ROOM
110	EMS SKILLS ROOM	135	OPEN OFFICE
111	EMS DIRECTOR'S OFFICE	136	VESTIBULE
112	EMS NURSE OFFICE	137	MALE RESTROOM
113	EMS NURSE OFFICE	138	JANITOR'S CLOSET
114	EMS CAPTAIN OFFICE	139	VESTIBULE
115	OFFICE	140	FEMALE RESTROOM
116	EMS ADMIN WORKSTA.	141	IDF ROOM
117	DC OFFICE	142	BREAK AREA
118	TRAINING CAPT OFFICE	143	MALE SHOWER / LOCKER
119	TRAINING CAPT OFFICE	144	FEMALE SHWR / LOCKER
120	WELLNESS CAPT OFFICE	145	STAIR - NORTH
121	LOGISTICS CAPT OFFICE	146	FIRE RISER CLOSET
122	HALLWAY - NORTH	147	STAIR - SOUTH
123	HALLWAY - CENTRAL		
124	HALLWAY - SOUTH		
125	HALLWAY - EAST		

ROOM LEGEND 1

6" METAL STUDS @ 16" O.C., TYP. FULL HEIGHT TO FLOOR DECK/ROOF DECK ABOVE. PROVIDE ONE LAYER OF 5/8" GYPSUM BOARD EACH SIDE AT INTERIOR LOCATIONS U.N.O. EXTERIOR LOCATIONS PROVIDE ONE LAYER OF 5/8" GYPSUM BOARD AT INTERIOR SIDE AND PLASTER, BRICK VENEER, CEMENT PANEL OR METAL SIDING ON EXTERIOR SIDE WHERE OCCURS.

DASHED LINE INDICATES FULL HEIGHT EXTERIOR MATERIAL WHERE OCCURS.

4" METAL STUDS @ 16" O.C. AT INTERIOR LOCATIONS, TYP. FULL HEIGHT TO FLOOR DECK/ROOF DECK ABOVE. PROVIDE ONE LAYER OF 5/8" GYPSUM BOARD AT INTERIOR LOCATION

NON FIRE-RESISTANCE RATED ACOUSTIC WALL:
6" METAL STUDS @ 16" O.C. WITH ONE LAYER OF 5/8" ACOUSTIC ENHANCED GYPSUM BOARD AND TYPE X GYPSUM BOARD ON EACH SIDE OF WALL FROM FINISHED FLOOR TO UNDERSIDE OF FLOOR DECK/ROOF DECK ABOVE. STC-55 MIN.

1-HR RATED WALL:
6" METAL STUDS @ 16" O.C., TYP. FULL HEIGHT TO FLOOR DECK/ROOF DECK ABOVE, WITH ONE LAYER OF 5/8" TYPE X GYPSUM BOARD ON EACH SIDE (EXCEPT FOR RESTROOM SIDE WHERE TYPE X TILE BACKER BOARD SHALL BE USED).

SEE DETAIL 2, 3, 8/A8.3 FOR RATED WALL ASSEMBLY.

SEE DETAIL 3, 4, 5, 6, 7/A8.3 FOR RATED SHAFT WALL AT SHAFT ENCLOSURES.

SEE DETAIL 5/A8.3 FOR WALL HEAD CONDITION. FIRE CAULK ALL GAPS AND PENETRATIONS. SEE DETAILS 14, 15/A8.3 FOR PENETRATION PROTECTIONS.

FE — FIRE EXTINGUISHER. SEE DETAIL 17/A8.2.

WALL RECESS TV BRACKET. SEE DETAIL 1/A8.4

BULLET RESISTANT WALL:
6" METAL STUDS @ 16" O.C., TYP. FULL HEIGHT TO FLOOR DECK/ROOF DECK ABOVE. PROVIDE ONE LAYER OF BULLET RESISTANT FIBERGLASS PANEL. PROVIDE GYPSUM BOARD EACH SIDE, U.N.O.

SEE DETAIL 22/A8.4 FOR WALL ASSEMBLY.

INDICATES FULL CEILING HEIGHT BULLET RESISTANT FIBERGLASS PANEL AT PUBLIC SIDE

NOTES:

1. SEE STRUCTURAL, MECHANICAL, PLUMBING AND ELECTRICAL DRAWINGS FOR ADDITIONAL RECESSED OR SURFACE MOUNTED EQUIPMENT.
2. STC 55 WALL: PROVIDE RC-1 RESILIENT CHANNEL 24" O.C. ATTACHED AT RIGHT ANGLES TO ONE SIDE OF 6" METAL STUDS. (UL U465-1 HOUR). SEE 8/A8.3 FOR WALL ASSEMBLY. SEE 14/A8.3 AND 15/A8.3 FOR SOUND TRANSMISSION CONTROL.
3. SLOPE CONCRETE SLAB 2% MAX. AT SHOWER AND 1% AT ALL OTHER FLOOR FLOOR DRAINS.
4. SEE DETAIL 2/A8.5 FOR SIGNAGE SCHEDULE.
5. ELEVATOR SHAFT AND ELEVATOR MACHINE ROOM TO BE PROVIDED WITH FIRE SPRINKLERS.

WALL LEGEND 2

0206	LANDSCAPING, SEE LANDSCAPE DRAWING
0523	BUILDING STRUCTURAL STEEL COLUMN, SEE STRUCTURAL
0645	S.S. RECESSED DEAL TRAY
1039	48"x48" GLASS MARKER BOARD, SEE DETAIL 4/A8.4
1060	ACCESSIBLE ENTRY SIGN, SEE DETAIL 18/A8.5
1061	TACTILE EXIT SIGN, SEE DETAIL 24A/A8.5
1062	TACTILE EXIT ROUTE SIGN, SEE DETAIL 24B/A8.5
1120	PHOTOCOPY MACHINE, N.I.C.
1137	UNDER COUNTER REFRIGERATOR
1502	ROOF DRAIN THRU SLAB, SEE PLUMBING DRAWINGS
1503	OVERFLOW DRAIN THROUGH WALL, SEE 21/A8.5 AND PLUMBING DWGS
1514	RECESSED HOSE BIB, SEE PLUMBING DRAWINGS
1633	EMERGENCY FUEL SHUT-OFF VALVE AND SIGN, SEE DETAIL 18/A1.4

REFERENCE NOTES 4

FIRST FLOOR PLAN — 1/8" = 1'-0" — 8

PBK
RANCHO CUCAMONGA
8163 ROCHESTER AVENUE, SUITE 100
RANCHO CUCAMONGA, CA 91730
909-987-0909 P

ONTARIO FIRE DEPARTMENT ADMINISTRATION BUILDING

CITY OF ONTARIO

1420 E. FRANCIS STREET., ONTARIO, CA

LICENSED ARCHITECT — KRISTEN NEEDHAM C-19064 — Exp. 03/31/24 — STATE OF CALIFORNIA

CONSULTANT

NO	DATE	BY	DESCRIPTION

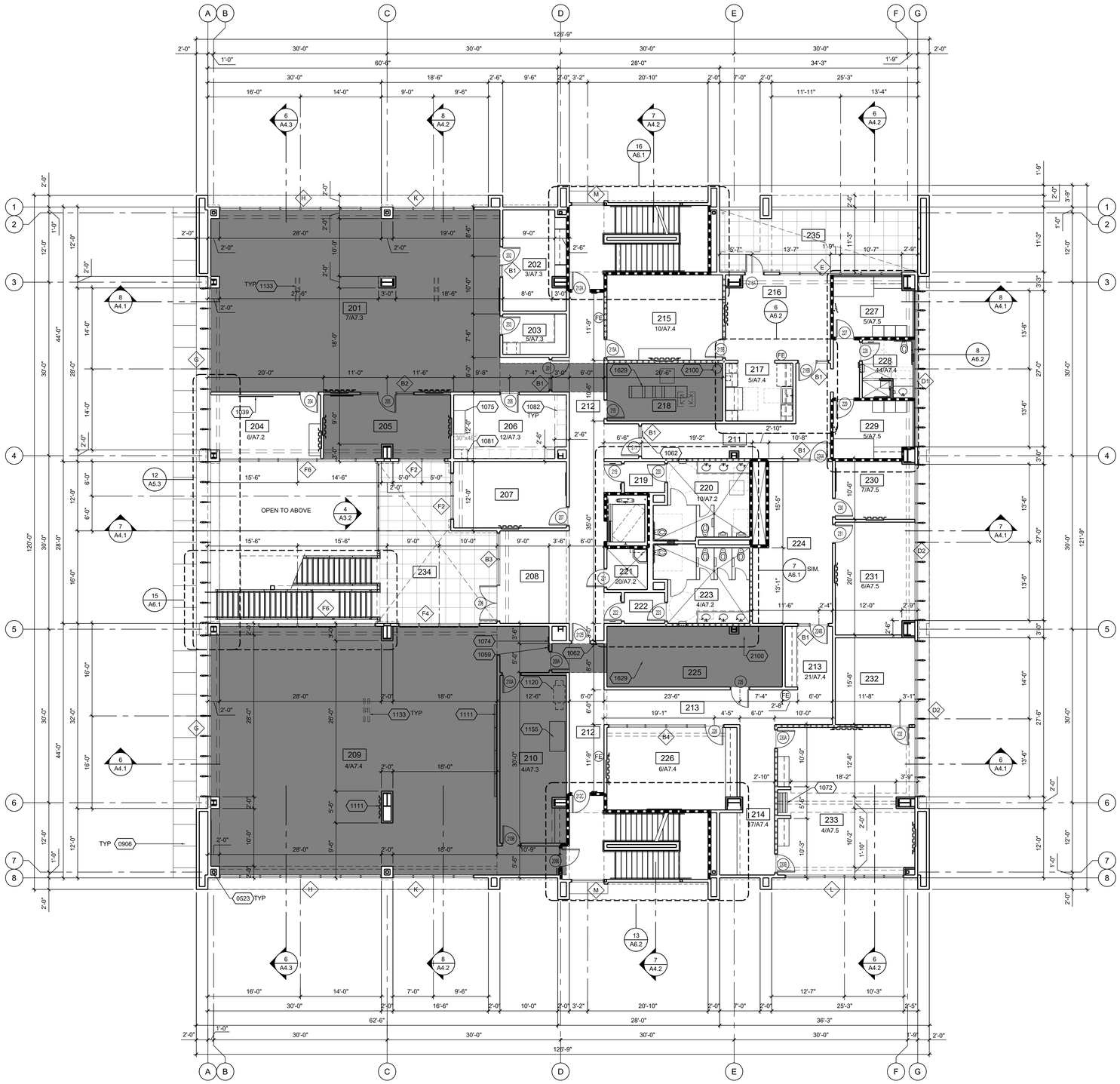

ROOM #	ROOM NAME	ROOM #	ROOM NAME
201	DISPATCH FLOOR	226	E.O.C. BREAKOUT ROOM
202	FIRE DISPATCH SUPVR.	227	QUIET ROOM 1
203	STORAGE	228	BATHROOM
204	TRAINING/MULTI-USE RM.	229	QUIET ROOM 2
205	DISPATCH TRAINING RM.	230	EMERGENCY MGR
206	LOCKERS	231	EMERGENCY COORD
207	FIRE COMM. MANAGER	232	STORAGE
208	OPEN CONF./CLASS RM.	233	E.O.C. CONFERENCE RM.
209	E.O.C. FLOOR	234	COVERED PATIO
210	E.O.C. EQUIPMENT ROOM	235	PATIO 1
211	HALLWAY - NORTH		
212	HALLWAY - CENTRAL		
213	HALLWAY - EAST		
214	HALLWAY - SOUTH		
215	DAY ROOM		
216	DINING		
217	KITCHEN		
218	RADIO EQUIPMENT RM.		
219	VESTIBULE		
220	MALE RESTROOM		
221	JANITOR'S CLOSET		
222	VESTIBULE		
223	FEMALE RESTROOM		
224	SHARED WORKSPACE		
225	MDF ROOM		

ROOM LEGEND 1

6" METAL STUDS @ 16" O.C., TYP. FULL HEIGHT TO FLOOR DECK/ROOF DECK ABOVE. PROVIDE ONE LAYER OF 5/8" GYPSUM BOARD EACH SIDE AT INTERIOR LOCATIONS U.N.O. EXTERIOR LOCATIONS PROVIDE ONE LAYER OF 5/8" GYPSUM BOARD AT INTERIOR SIDE AND PLASTER, BRICK VENEER, CEMENT PANEL OR METAL SIDING ON EXTERIOR SIDE WHERE OCCURS.

DASHED LINE INDICATES FULL HEIGHT EXTERIOR MATERIAL WHERE OCCURS.

4" METAL STUDS @ 16" O.C. AT INTERIOR LOCATIONS, TYP. FULL HEIGHT TO FLOOR DECK/ROOF DECK ABOVE. PROVIDE ONE LAYER OF 5/8" GYPSUM BOARD AT INTERIOR LOCATION

NON FIRE-RESISTANCE RATED ACOUSTIC WALL:
6" METAL STUDS @ 16" O.C. WITH ONE LAYER OF 5/8" ACOUSTIC ENHANCED GYPSUM BOARD AND TYPE X GYPSUM BOARD ON EACH SIDE OF WALL FROM FINISHED FLOOR TO UNDERSIDE OF FLOOR DECK/ROOF DECK ABOVE. STC-55 MIN.

1-HR RATED WALL:
6" METAL STUDS @ 16" O.C., TYP. FULL HEIGHT TO FLOOR DECK/ROOF DECK ABOVE, WITH ONE LAYER OF 5/8" TYPE X GYPSUM BOARD ON EACH SIDE (EXCEPT FOR RESTROOM SIDE WHERE TYPE X TILE BACKER BOARD SHALL BE USED).

SEE DETAIL 2, 3, 8/A8.3 FOR RATED WALL ASSEMBLY.

SEE DETAIL 3, 4, 5, 6, 7/A8.3 FOR RATED SHAFT WALL AT SHAFT ENCLOSURES.

SEE DETAIL 5/A8.3 FOR WALL HEAD CONDITION. FIRE CAULK ALL GAPS AND PENETRATIONS. SEE DETAILS 14, 15/A8.3 FOR PENETRATION PROTECTIONS.

FE — FIRE EXTINGUISHER. SEE DETAIL 17/A8.2.

WALL RECESS TV BRACKET. SEE DETAIL 1/A8.4

RECESSED FLOOR FOR CABLE MANAGEMENT SYSTEM. SEE STRUCTURAL DRAWING SHEET S202.

NOTES:

1. SEE STRUCTURAL, MECHANICAL, PLUMBING AND ELECTRICAL DRAWINGS FOR ADDITIONAL RECESSED OR SURFACE MOUNTED EQUIPMENT.
2. STC 55 WALL: PROVIDE RC-1 RESILIENT CHANNEL 24" O.C. ATTACHED AT RIGHT ANGLES TO ONE SIDE OF 6" METAL STUDS. (UL U465-1 HOUR). SEE 8/A8.3 FOR WALL ASSEMBLY. SEE 14/A8.3 AND 15/A8.3 FOR SOUND TRANSMISSION CONTROL.
3. SLOPE CONCRETE SLAB 2% MAX. AT SHOWER AND 1% AT ALL OTHER FLOOR FLOOR DRAINS.
4. SEE DETAIL 2/A8.5 FOR SIGNAGE SCHEDULE.
5. ELEVATOR SHAFT AND ELEVATOR MACHINE ROOM TO BE PROVIDED WITH FIRE SPRINKLERS.

WALL LEGEND 2

0523	BUILDING STRUCTURAL STEEL COLUMN, SEE STRUCTURAL
0906	EXTERIOR ALUMINUM BREAK METAL PANEL
1039	48"x48" GLASS MARKER BOARD, SEE DETAIL 4/A8.4
1059	ROOM CAPACITY SIGN, SEE DETAIL 19/A8.5
1062	TACTILE EXIT ROUTE SIGN, SEE DETAIL 24B/A8.5
1072	OPERABLE WALL PARTITION
1074	LIVE LOAD SIGN, SEE 24/A8.4
1075	ADA COMPLIANT LOCKER ROOM BENCH, 24" X 48"
1081	ADA LOCKER
1082	LOCKERS, N.I.C.
1111	WALL MOUNTED TV BRACKET
1120	PHOTOCOPY MACHINE, N.I.C.
1133	CEILING MOUNTED TELEVISION BRACKET
1155	PLOTTER, N.I.C.
1629	ELECTRICAL EQUIPMENT, SEE ELECTRICAL DRAWINGS
2100	CLEAN AGENT CANISTER

SECOND FLOOR PLAN | 1/8" = 1'-0" | 8 | REFERENCE NOTES | 4

PBK
RANCHO CUCAMONGA
8163 ROCHESTER AVENUE, SUITE 100
RANCHO CUCAMONGA, CA 91730
909-987-0909 P

ONTARIO FIRE DEPARTMENT ADMINISTRATION BUILDING

CITY OF ONTARIO

1420 E. FRANCIS STREET., ONTARIO, CA

LICENSED ARCHITECT
KEVIN MEEDHAM
C-19064
Exp 30 03/31/25
STATE OF CALIFORNIA

CONSULTANT

NO	DATE	BY	DESCRIPTION

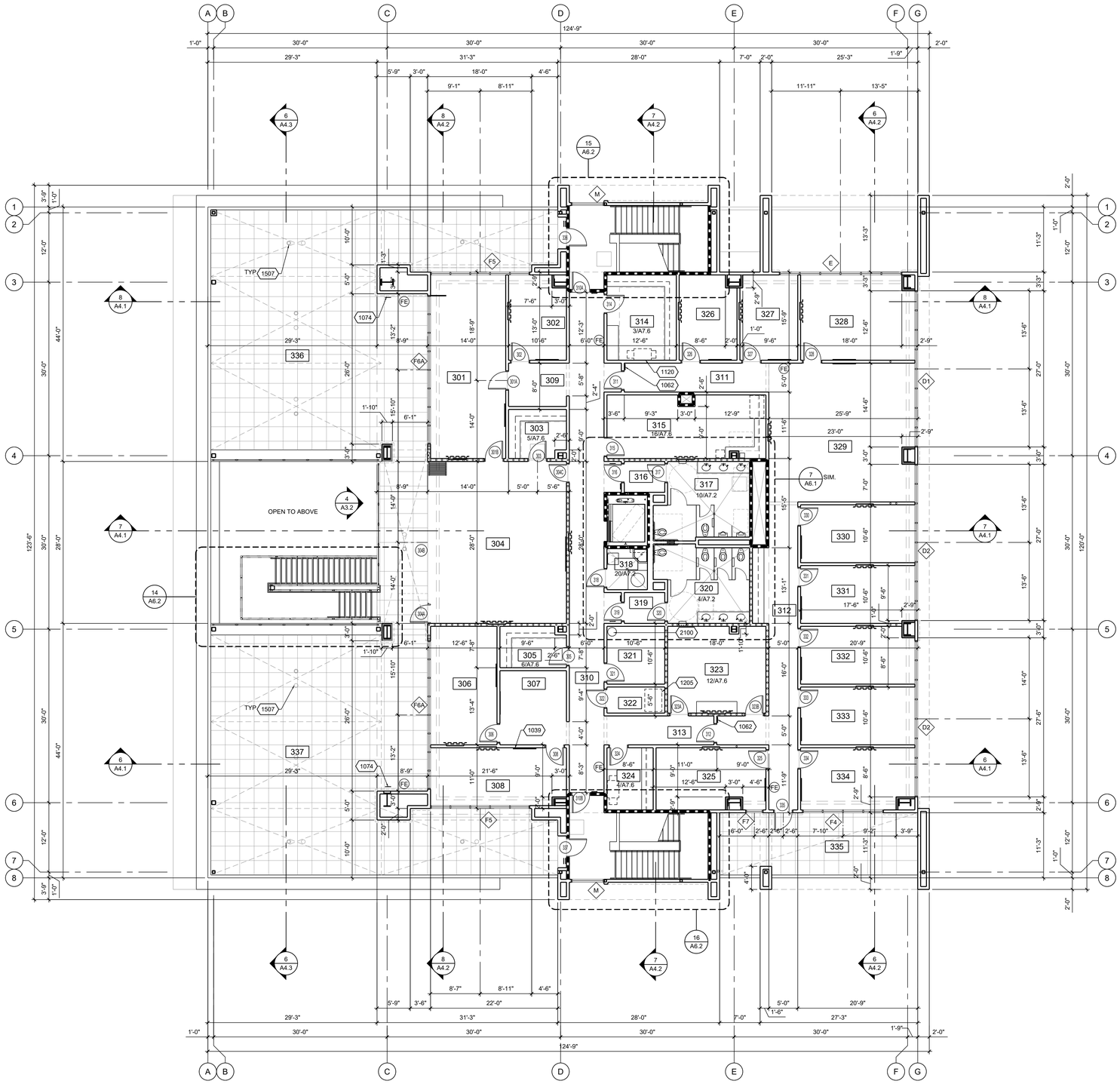

ROOM #	ROOM NAME	ROOM #	ROOM NAME
301	FIRE CHIEF OFFICE	326	OFFICE
302	SR. ADMIN. ASSIST. OFC	327	BC OFFICE
303	STORAGE	328	DC OPERATIONS OFFICE
304	OPEN CONF./CLASSRM.	329	OPEN WORK STATIONS
305	SECURED FILES ROOM	330	ENGAGEMENT SUPER
306	DC LOGISTICS OFFICE	331	TRAINING MGMT ANALYST
307	WELLNESS ADMIN ASSIST	332	SR MGMT ANALYST
308	DC WELLNESS OFFICE	333	ADMIN OFFICER OFFICE
309	WAITING VESTIBULE	334	ADMIN DIRECTOR OFFICE
310	HALLWAY - CENTRAL	335	PATIO 2
311	HALLWAY - NORTH	336	ROOF DECK - NORTH
312	HALLWAY - EAST	337	ROOF DECK - SOUTH
313	HALLWAY - SOUTH		
314	WORKRM. AND STORAGE		
315	BREAK ROOM		
316	VESTIBULE		
317	MALE RESTROOM		
318	JANITOR		
319	VESTIBULE		
320	FEMALE RESTROOM		
321	IDF ROOM		
322	ELEVATOR CONTROL RM.		
323	DAY ROOM		
324	WORKROOM		
325	OFFICE		

ROOM LEGEND 1

6" METAL STUDS @ 16" O.C., TYP. FULL HEIGHT TO FLOOR DECK/ROOF DECK ABOVE. PROVIDE ONE LAYER OF 5/8" GYPSUM BOARD EACH SIDE AT INTERIOR LOCATIONS U.N.O. EXTERIOR LOCATIONS PROVIDE ONE LAYER OF 5/8" GYPSUM BOARD AT INTERIOR SIDE AND PLASTER, BRICK VENEER, CEMENT PANEL OR METAL SIDING ON EXTERIOR SIDE WHERE OCCURS.

DASHED LINE INDICATES FULL HEIGHT EXTERIOR MATERIAL WHERE OCCURS.

4" METAL STUDS @ 16" O.C. AT INTERIOR LOCATIONS, TYP. FULL HEIGHT TO FLOOR DECK/ROOF DECK ABOVE. PROVIDE ONE LAYER OF 5/8" GYPSUM BOARD AT INTERIOR LOCATION

NON FIRE-RESISTANCE RATED ACOUSTIC WALL:
6" METAL STUDS @ 16" O.C. WITH ONE LAYER OF 5/8" ACOUSTIC ENHANCED GYPSUM BOARD AND TYPE X GYPSUM BOARD ON EACH SIDE OF WALL FROM FINISHED FLOOR TO UNDERSIDE OF FLOOR DECK/ROOF DECK ABOVE. STC-55 MIN.

1-HR RATED WALL:
6" METAL STUDS @ 16" O.C., TYP. FULL HEIGHT TO FLOOR DECK/ROOF DECK ABOVE, WITH ONE LAYER OF 5/8" TYPE X GYPSUM BOARD ON EACH SIDE (EXCEPT FOR RESTROOM SIDE WHERE TYPE X TILE BACKER BOARD SHALL BE USED).

SEE DETAIL 2, 3, 8/A8.3 FOR RATED WALL ASSEMBLY.

SEE DETAIL 3, 4, 5, 6, 7/A8.3 FOR RATED SHAFT WALL AT SHAFT ENCLOSURES.

SEE DETAIL 5/A8.3 FOR WALL HEAD CONDITION. FIRE CAULK ALL GAPS AND PENETRATIONS. SEE DETAILS 14, 15/A8.3 FOR PENETRATION PROTECTIONS.

FE — FIRE EXTINGUISHER. SEE DETAIL 17/A8.2.

WALL RECESS TV BRACKET. SEE DETAIL 1/A8.4

NOTES:

1. SEE STRUCTURAL, MECHANICAL, PLUMBING AND ELECTRICAL DRAWINGS FOR ADDITIONAL RECESSED OR SURFACE MOUNTED EQUIPMENT.
2. STC 55 WALL: PROVIDE RC-1 RESILIENT CHANNEL 24" O.C. ATTACHED AT RIGHT ANGLES TO ONE SIDE OF 6" METAL STUDS. (UL U465-1 HOUR). SEE 8/A8.3 FOR WALL ASSEMBLY. SEE 14/A8.3 AND 15/A8.3 FOR SOUND TRANSMISSION CONTROL.
3. SLOPE CONCRETE SLAB 2% MAX. AT SHOWER AND 1% AT ALL OTHER FLOOR FLOOR DRAINS.
4. SEE DETAIL 2/A8.5 FOR SIGNAGE SCHEDULE.
5. ELEVATOR SHAFT AND ELEVATOR MACHINE ROOM TO BE PROVIDED WITH FIRE SPRINKLERS.

WALL LEGEND 2

1039	48"x48" GLASS MARKER BOARD, SEE DETAIL 4/A8.4
1062	TACTILE EXIT ROUTE SIGN, SEE DETAIL 24B/A8.5
1074	LIVE LOAD SIGN, SEE 24/A8.4
1120	PHOTOCOPY MACHINE, N.I.C.
1205	ELEVATOR CONTROL EQUIPMENT
1507	ROOF DRAIN AND OVERFLOW DRAIN, SEE PLUMBING DWGS.
2100	CLEAN AGENT CANISTER

THIRD FLOOR PLAN | 1/8" = 1'-0" | 8 | REFERENCE NOTES | 4

PBK
RANCHO CUCAMONGA
8163 ROCHESTER AVENUE, SUITE 100
RANCHO CUCAMONGA, CA 91730
909-987-0909 P

ONTARIO FIRE DEPARTMENT ADMINISTRATION BUILDING

CITY OF ONTARIO

1420 E. FRANCIS STREET., ONTARIO, CA

LICENSED ARCHITECT
KEVIN NEEDHAM
C-19064
Exp. Date 03/31/23
STATE OF CALIFORNIA

CONSULTANT

NO	DATE	BY	DESCRIPTION

REVISIONS

DRAWN: RMZ	CHECKED: KN
DATE: 07/15/2022	SCALE: AS NOTED
PROJECT NUMBER: 2011700	

THIRD FLOOR PLAN

DRAWING NUMBER: A2.3

BID SET 03/01/24

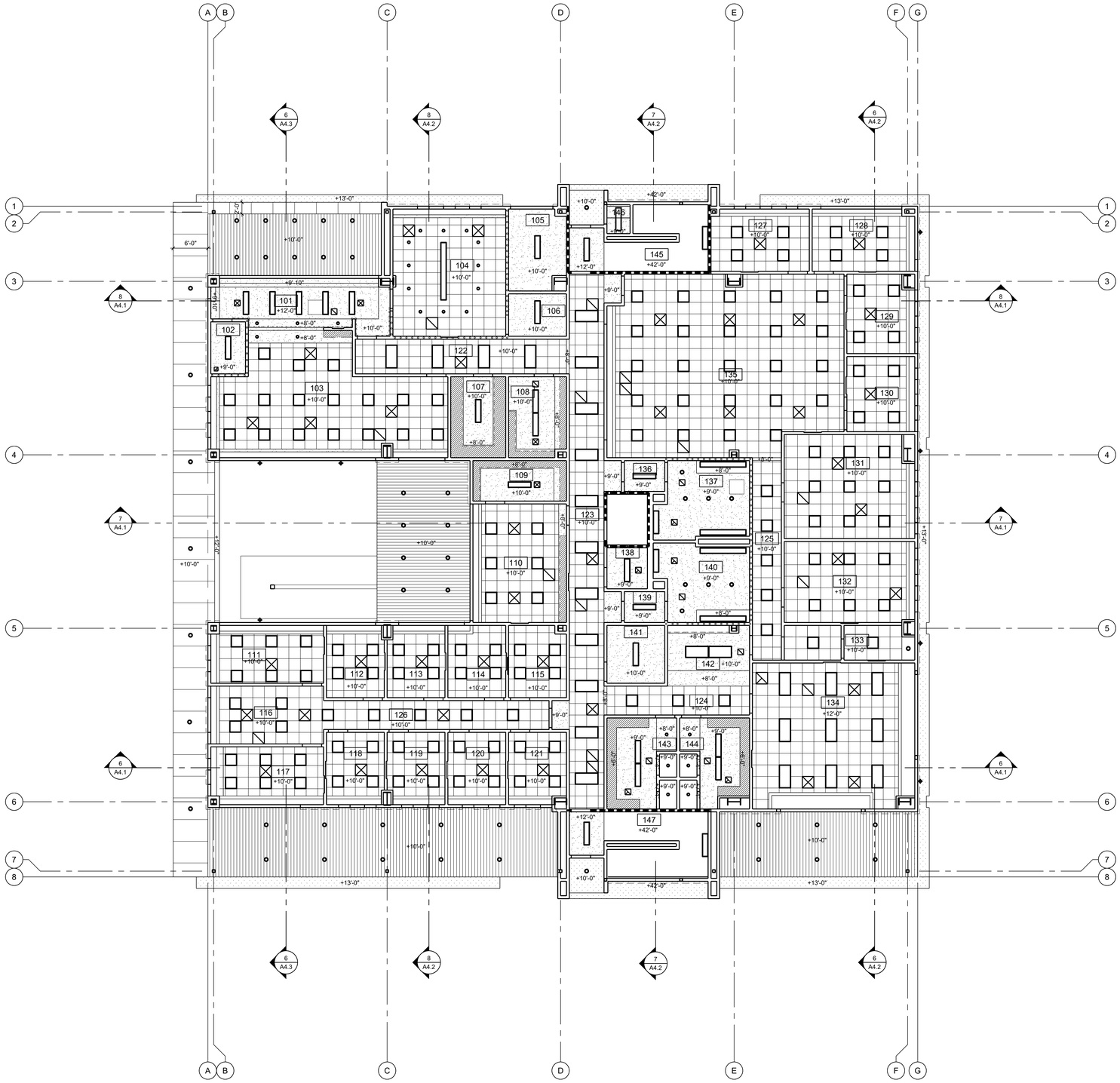

ROOM #	ROOM NAME	ROOM #	ROOM NAME
101	LOBBY	126	HALLWAY - WEST
102	PUBLIC RESTROOM	127	DEPUTY FIRE MARSHALL
103	ADMIN OPEN OFFICE	128	DC FIRE MARSHALL
104	LARGE CONFERENCE RM	129	FIRE PROTECT ANALYST
105	ELECTRICAL ROOM	130	SR FIRE SPC OFFICE
106	STORAGE	131	FIRE SPC/PERMIT TECH
107	STORAGE	132	PLAN CHECKER OFFICE
108	COPY ROOM	133	LACTATION ROOM
109	EMS STORAGE	134	EXERCISE ROOM
110	EMS SKILLS ROOM	135	OPEN OFFICE
111	EMS DIRECTOR'S OFFICE	136	VESTIBULE
112	EMS NURSE OFFICE	137	MALE RESTROOM
113	EMS NURSE OFFICE	138	JANITOR'S CLOSET
114	EMS CAPTAIN OFFICE	139	VESTIBULE
115	OFFICE	140	FEMALE RESTROOM
116	EMS ADMIN WORKSTA.	141	IDF ROOM
117	DC OFFICE	142	BREAK AREA
118	TRAINING CAPT OFFICE	143	MALE SHOWER / LOCKER
119	TRAINING CAPT OFFICE	144	FEMALE SHWR / LOCKER
120	WELLNESS CAPT OFFICE	145	STAIR - NORTH
121	LOGISTICS CAPT OFFICE	146	FIRE RISER CLOSET
122	HALLWAY - NORTH	147	STAIR - SOUTH
123	HALLWAY - CENTRAL		
124	HALLWAY - SOUTH		
125	HALLWAY - EAST		

ROOM LEGEND 1

- 5/8" GYPSUM BOARD CEILING, SOFFIT, OR CASED OPENING
- LINE OF CASEWORK OR FRAME, WHERE OCCURS
- 2' X 2' SUSPENDED ACOUSTICAL CEILING TILE
- SOFFIT FOR MOTORIZED SUNSHADE, WHERE OCCURS
- EXTERIOR PLASTER
- METAL SOFFIT PANEL
- CANOPY METAL PANEL
- LIGHTING. SEE ELECTRICAL DRAWINGS
- BREAK METAL JOINT
- MECHANICAL EQUIPMENT, SEE MECHANICAL DRAWING FOR ADDITIONAL INFORMATION
- ELECTRICAL EQUIPMENT, SEE ELECTRICAL DRAWINGS FOR ADDITIONAL INFORMATION
- ROOF ACCESS DOOR, 24"X36"
- CEILING ACCESS PANEL, 36"X36"

MATERIAL LEGEND 2

NOTES:

1. SEE STRUCTURAL, MECHANICAL, PLUMBING AND ELECTRICAL DRAWINGS FOR ADDITIONAL RECESSED OR SURFACE MOUNTED EQUIPMENT.
2. STC 55 WALL: PROVIDE RC-1 RESILIENT CHANNEL 24" O.C. ATTACHED AT RIGHT ANGLES TO ONE SIDE OF 2X6 STUDS. (UL U 309, GA WP 3243). SEE 21/A8.3 FOR WALL ASSEMBLY. SEE 23/A8.3 AND 6/A8.5 FOR SOUND TRANSMISSION CONTROL.

REFERENCE NOTES 4

FIRST FLOOR REFLECTED CEILING PLAN | 1/8" = 1'-0" | 8

PBK
RANCHO CUCAMONGA
8163 ROCHESTER AVENUE, SUITE 100
RANCHO CUCAMONGA, CA 91730
909-987-0909 P

ONTARIO FIRE DEPARTMENT ADMINISTRATION BUILDING

CITY OF ONTARIO

1420 E. FRANCIS STREET., ONTARIO, CA

LICENSED ARCHITECT
KEVIN NEEDHAM
C-19064
exp 03/31/25
STATE OF CALIFORNIA

CONSULTANT

NO	DATE	BY	DESCRIPTION

REVISIONS

DRAWN: RMZ	CHECKED: KN
DATE: 07/15/2022	SCALE: AS NOTED
PROJECT NUMBER: 2011700	

FIRST FLOOR REFLECTED CEILING PLAN

DRAWING NUMBER: A2.4

BID SET 03/01/24

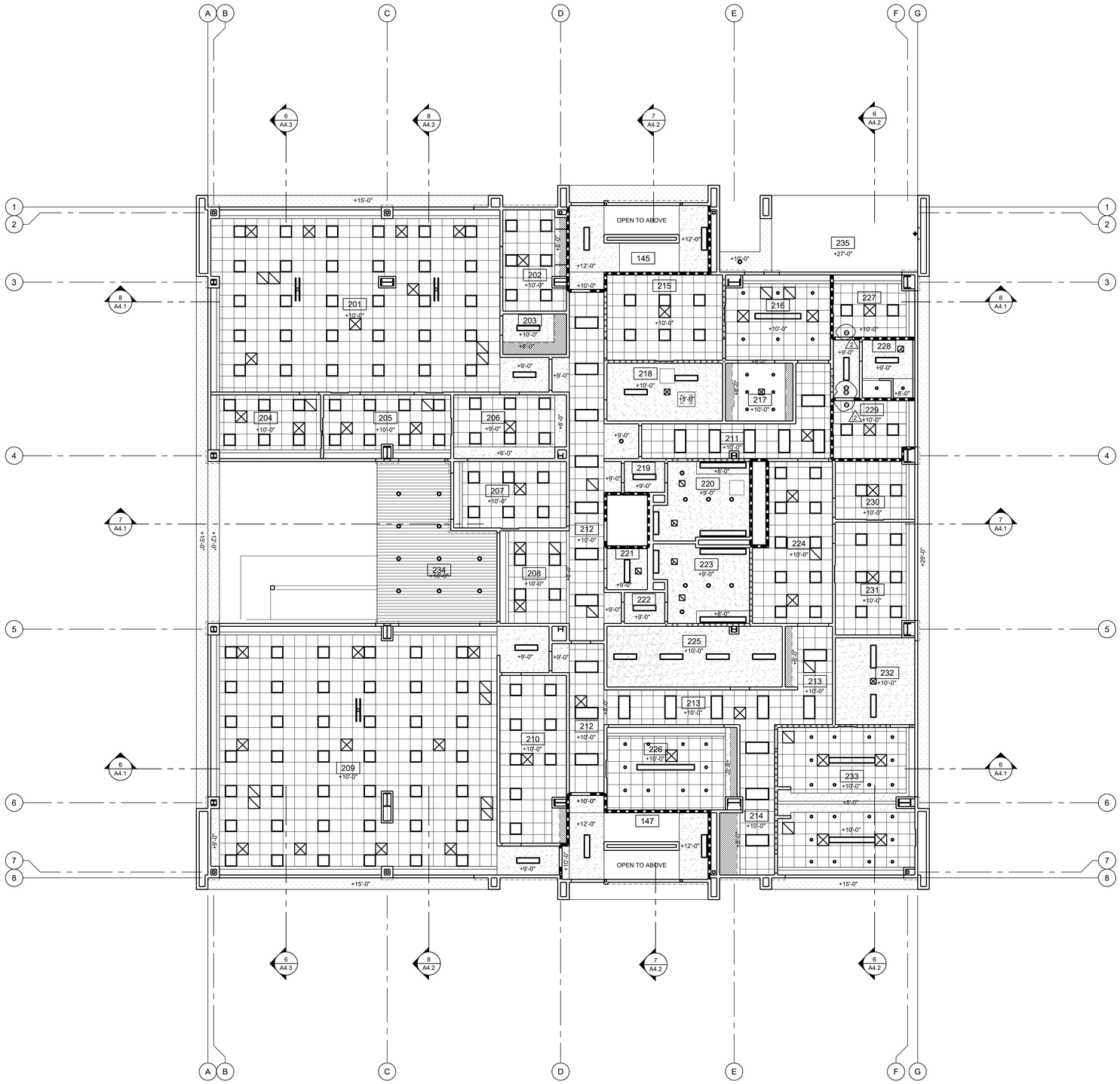

ROOM #	ROOM NAME	ROOM #	ROOM NAME
201	DISPATCH FLOOR	226	E.O.C. BREAKOUT ROOM
202	FIRE DISPATCH SUPVR.	227	QUIET ROOM 1
203	STORAGE	228	BATHROOM
204	TRAINING/MULTI-USE RM.	229	QUIET ROOM 2
205	DISPATCH TRAINING RM.	230	EMERGENCY MGR
206	LOCKERS.	231	EMERGENCY COORD
207	FIRE COMM. MANAGER	232	STORAGE
208	OPEN CONF./CLASS RM.	233	E.O.C. CONFERENCE RM.
209	E.O.C. FLOOR	234	COVERED PATIO
210	E.O.C. EQUIPMENT ROOM	235	PATIO 1
211	HALLWAY - CENTRAL		
212	HALLWAY - CENT. SOUTH		
213	HALLWAY - EAST		
214	HALLWAY - SOUTH EAST		
215	DAY ROOM		
216	DINING		
217	KITCHEN		
218	RADIO EQUIPMENT RM.		
219	VESTIBULE		
220	MALE RESTROOM		
221	JANITOR'S CLOSET		
222	VESTIBULE		
223	FEMALE RESTROOM		
224	SHARED WORKSPACE		
225	MDF ROOM		

ROOM LEGEND 1

- 5/8" GYPSUM BOARD CEILING, SOFFIT, OR CASED OPENING
- LINE OF CASEWORK OR FRAME, WHERE OCCURS
- 2' X 2' SUSPENDED ACOUSTICAL CEILING TILE
- SOFFIT FOR MOTORIZED SUNSHADE, WHERE OCCURS
- EXTERIOR PLASTER
- METAL SOFFIT PANEL
- CANOPY METAL PANEL
- LIGHTING. SEE ELECTRICAL DRAWINGS
- BREAK METAL JOINT
- MECHANICAL EQUIPMENT, SEE MECHANICAL DRAWING FOR ADDITIONAL INFORMATION
- ELECTRICAL EQUIPMENT, SEE ELECTRICAL DRAWINGS FOR ADDITIONAL INFORMATION
- ROOF ACCESS DOOR, 24"X36"
- CEILING ACCESS PANEL, 36"X36"

MATERIAL LEGEND 2

NOTES:

1. SEE STRUCTURAL, MECHANICAL, PLUMBING AND ELECTRICAL DRAWINGS FOR ADDITIONAL RECESSED OR SURFACE MOUNTED EQUIPMENT.
2. STC 55 WALL: PROVIDE RC-1 RESILIENT CHANNEL 24" O.C. ATTACHED AT RIGHT ANGLES TO ONE SIDE OF 2X6 STUDS. (UL U 309, GA WP 3243). SEE 21/A8.3 FOR WALL ASSEMBLY. SEE 23/A8.3 AND 6/A8.5 FOR SOUND TRANSMISSION CONTROL.

REFERENCE NOTES 4

SECOND FLOOR REFLECTED CEILING PLAN | 1/8" = 1'-0" | 8

PBK
RANCHO CUCAMONGA
8163 ROCHESTER AVENUE, SUITE 100
RANCHO CUCAMONGA, CA 91730
909-987-0909 P

ONTARIO FIRE DEPARTMENT ADMINISTRATION BUILDING

CITY OF ONTARIO

1420 E. FRANCIS STREET., ONTARIO, CA

LICENSED ARCHITECT
KEVIN S. NEEDHAM
C-19064
Ex.Dt: 03/31/25
STATE OF CALIFORNIA

CONSULTANT

NO	DATE	BY	DESCRIPTION
2	11/20/23		FIRE COMMENTS

REVISIONS

DRAWN: RMZ	CHECKED: KN
DATE: 07/15/2022	SCALE: AS NOTED
PROJECT NUMBER: 2011700	

SECOND FLOOR REFLECTED CEILING PLAN

DRAWING NUMBER: A2.5

BID SET 03/01/24

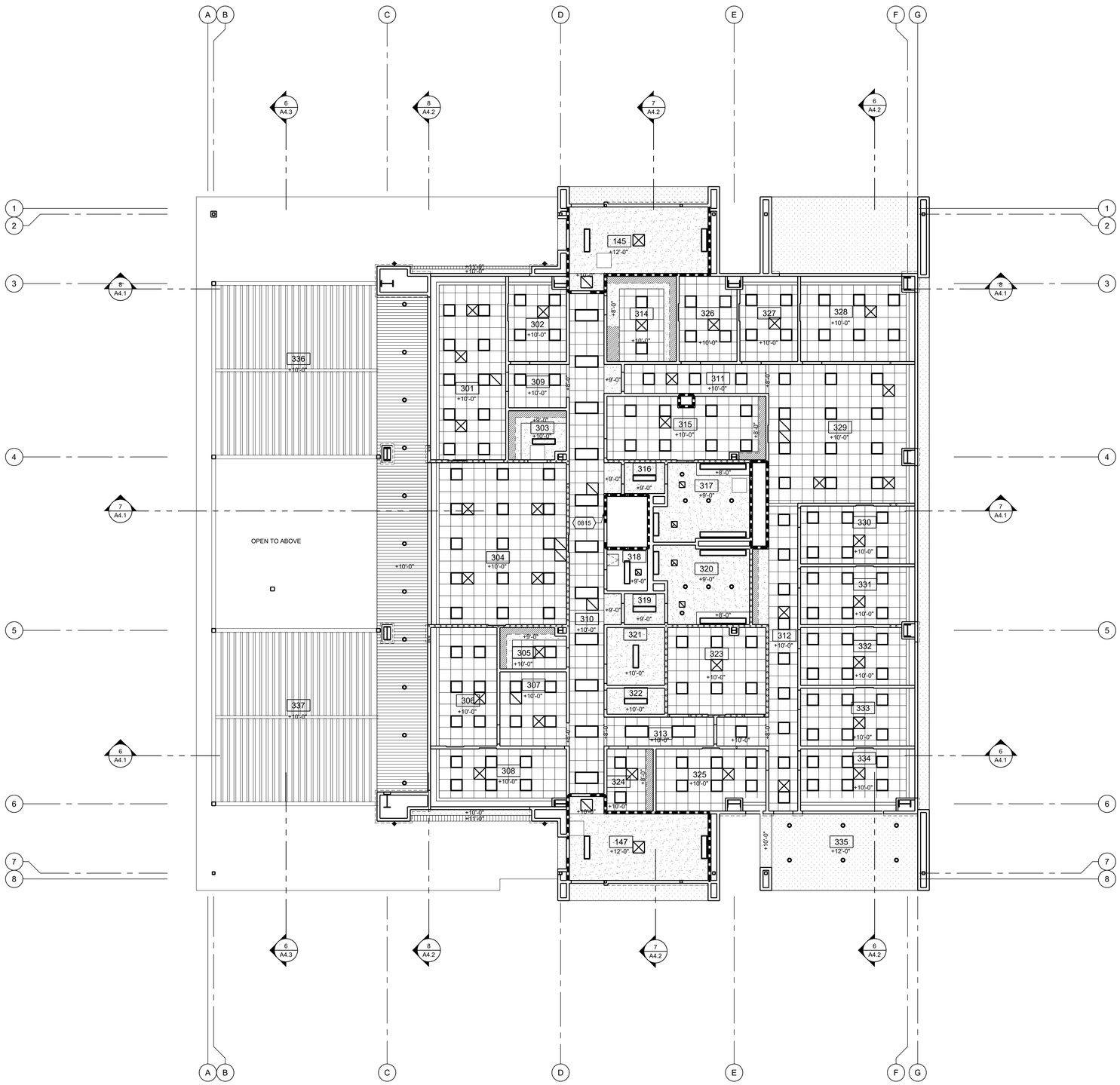

ROOM #	ROOM NAME	ROOM #	ROOM NAME
301	FIRE CHIEF OFFICE	326	OFFICE
302	SR. ADMIN. ASSIST. OFC	327	BC OFFICE
303	STORAGE	328	DC OPERATIONS OFFICE
304	OPEN CONF./CLASSRM.	329	OPEN WORK STATIONS
305	SECURED FILES ROOM	330	ENGAGEMENT SUPER
306	DC LOGISTICS OFFICE	331	TRAINING MGMT ANALYST
307	WELLNESS ADMIN ASSIST	332	SR MGMT ANALYST
308	DC WELLNESS OFFICE	333	ADMIN OFFICER OFFICE
309	WAITING VESTIBULE	334	ADMIN DIRECTOR OFFICE
310	HALLWAY - CENTRAL	335	PATIO 2
311	HALLWAY - NORTH	336	ROOF DECK - NORTH
312	HALLWAY - EAST	337	ROOF DECK - SOUTH
313	HALLWAY - SOUTH		
314	WORKRM. AND STORAGE		
315	BREAK ROOM		
316	VESTIBULE		
317	MALE RESTROOM		
318	JANITOR		
319	VESTIBULE		
320	FEMALE RESTROOM		
321	IDF ROOM		
322	ELEVATOR CONTROL RM.		
323	DAY ROOM		
324	WORKROOM		
325	OFFICE		

ROOM LEGEND 1

- 5/8" GYPSUM BOARD CEILING, SOFFIT, OR CASED OPENING
- LINE OF CASEWORK OR FRAME, WHERE OCCURS
- 2' X 2' SUSPENDED ACOUSTICAL CEILING TILE
- SOFFIT FOR MOTORIZED SUNSHADE, WHERE OCCURS
- EXTERIOR PLASTER
- METAL SOFFIT PANEL
- CANOPY METAL PANEL
- LIGHTING. SEE ELECTRICAL DRAWINGS
- BREAK METAL JOINT
- MECHANICAL EQUIPMENT, SEE MECHANICAL DRAWING FOR ADDITIONAL INFORMATION
- ELECTRICAL EQUIPMENT, SEE ELECTRICAL DRAWINGS FOR ADDITIONAL INFORMATION
- ROOF ACCESS DOOR, 24"X36"
- CEILING ACCESS PANEL, 36"X36"

MATERIAL LEGEND 2

0815 ACCESS DOOR, 24" X 24", 1-HR RATED

NOTES:

1. SEE STRUCTURAL, MECHANICAL, PLUMBING AND ELECTRICAL DRAWINGS FOR ADDITIONAL RECESSED OR SURFACE MOUNTED EQUIPMENT.
2. STC 55 WALL: PROVIDE RC-1 RESILIENT CHANNEL 24" O.C. ATTACHED AT RIGHT ANGLES TO ONE SIDE OF 2X6 STUDS. (UL U 309, GA WP 3243). SEE 21/A8.3 FOR WALL ASSEMBLY. SEE 23/A8.3 AND 6/A8.5 FOR SOUND TRANSMISSION CONTROL.

THIRD FLOOR REFLECTED CEILING PLAN | 1/8" = 1'-0" | 8 | REFERENCE NOTES | 4

PBK
RANCHO CUCAMONGA
8163 ROCHESTER AVENUE, SUITE 100
RANCHO CUCAMONGA, CA 91730
909-987-0909 P

ONTARIO FIRE DEPARTMENT ADMINISTRATION BUILDING

CITY OF ONTARIO

1420 E. FRANCIS STREET., ONTARIO, CA

LICENSED ARCHITECT KEVIN MEEDHAM C-19064 Ex 3/31/25 STATE OF CALIFORNIA

CONSULTANT

NO	DATE	BY	DESCRIPTION

REVISIONS

DRAWN: RMZ	CHECKED: KN
DATE: 07/15/2022	SCALE: AS NOTED
PROJECT NUMBER: 2011700	

THIRD FLOOR REFLECTED CEILING PLAN

DRAWING NUMBER: A2.6

BID SET 03/01/24

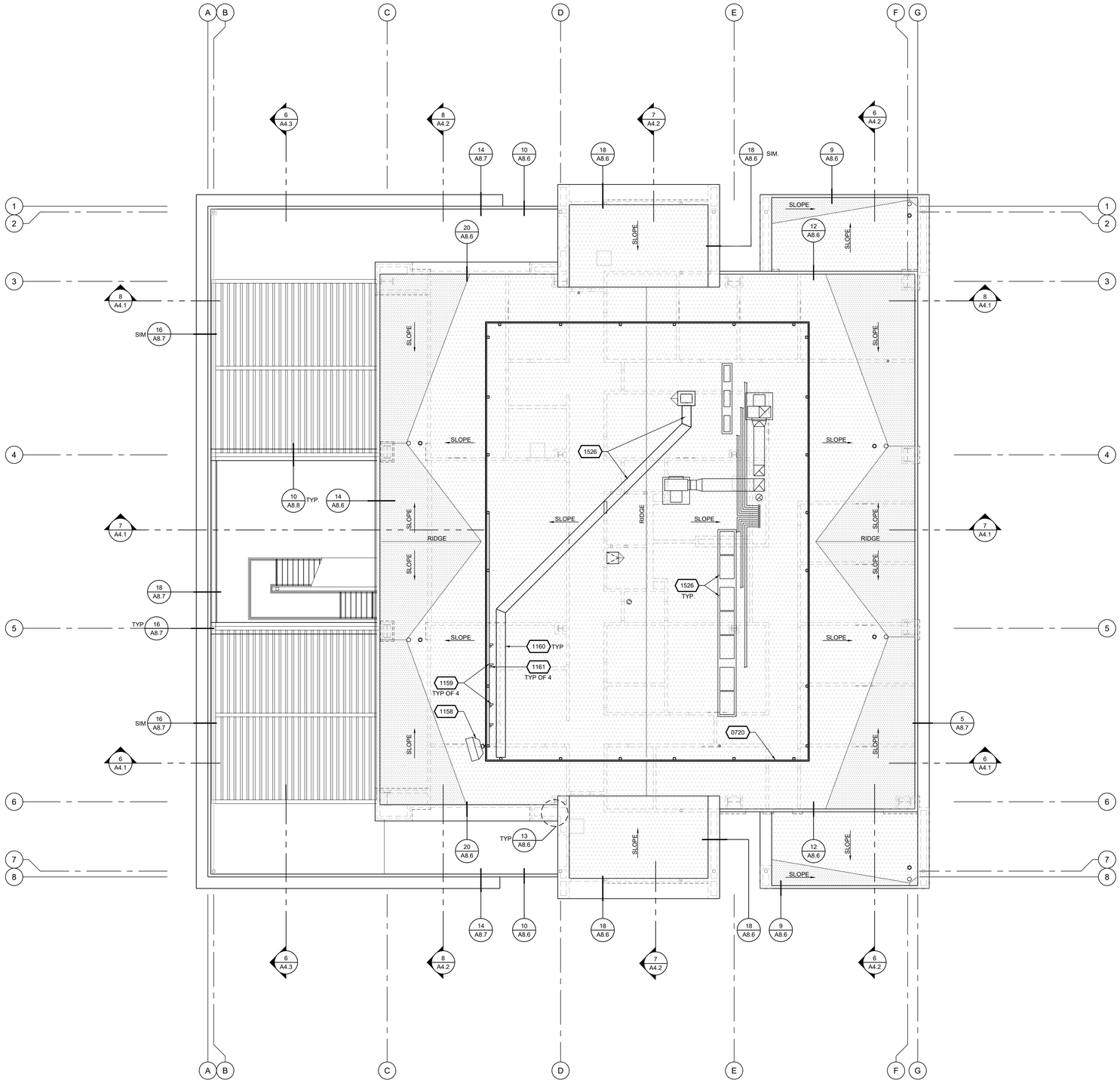

T.O.C.	TOP OF PLYWOOD CRICKET
T.O.P.	TOP OF PARAPET
T.O.S.	TOP OF PLYWOOD SHEATHING
	MODIFIED BITUMINOUS MEMBRANE ROOFING - MEMBRANE MANUFACTURER: JOHNS MANVILLE CORP. - SYSTEM: 3CND - FIRE HAZARD CLASSIFICATION: UL CLASS A - ACRYLIC TOP COAT MANUFACTURER: NATIONAL COATING - SYSTEM: ACRYSHIELD A420, CCRC 0626-0004 - REFLECTANCE = 0.83
	CRICKET, SEE DETAILS 1, 4/A-8.5
SLOPE	ROOF SLOPE, PROVIDE MINIMUM 1/4" PER FOOT
	ROOF AND OVERFLOW DRAIN, SEE DETAIL 2/A8.6 AND PLUMBING DRAWINGS
	ROOF ACCESS HATCH, SEE DETAIL 7/A8.6
	MECHANICAL UNITS, SEE MECHANICAL DRAWINGS.

NOTES:

1. ALL HEIGHTS ARE REFERENCED FROM FINISH FLOOR ELEVATION = 0'-0". REFER TO PLANS AND SECTIONS FOR ADDITIONAL INFORMATION.
2. FOR ADDITIONAL CONDUIT AND PIPING PENETRATIONS AT ROOF AREAS, SEE STRUCTURAL, MECHANICAL, PLUMBING AND ELECTRICAL DRAWINGS.
3.
4. FOR CONDUIT AND VENT PIPE PENETRATIONS, SEE DETAIL 3, 16/A8.6.
4. PROVIDE CRICKET FOR ALL ROOF TOP EQUIPMENT AND HATCHES PER DETAILS 1,4/A-8.6.
5. FOR MECHANICAL PLATFORM, SEE DETAILS 5, 6/A8.6.
6. SEE STRUCTURAL, MECHANICAL, PLUMBING, AND ELECTRICAL DRAWINGS FOR MORE INFORMATION.
7. ATTIC TO BE UNVENTED. SEE DETAIL 1/A8.7 FOR ASSEMBLY

MATERIAL LEGEND 2

0720	MECHANICAL SCREEN @ ROOF
1158	MICROWAVE DISH ANTENNA, N.I.C.
1159	DIRECTIONAL ANTENNA, N.I.C.
1160	ANTENNA CABLE MANAGEMENT TROUGH
1161	ANTENNA POST. SEE 16/A8.6
1526	MECHANICAL EQUIPMENT, TYP. SEE MECHANICAL & PLUMBING DWGS.

PBK
RANCHO CUCAMONGA
8163 ROCHESTER AVENUE, SUITE 100
RANCHO CUCAMONGA, CA 91730
909-987-0909 P

ONTARIO FIRE DEPARTMENT ADMINISTRATION BUILDING

CITY OF ONTARIO

1420 E. FRANCIS STREET., ONTARIO, CA

LICENSED ARCHITECT
KEVIN KENNEDHAM
C-19064
exp 03/31/25
STATE OF CALIFORNIA

CONSULTANT

NO	DATE	BY	DESCRIPTION

REVISIONS

DRAWN: RMZ	CHECKED: KN
DATE: 07/15/2022	SCALE: AS NOTED
PROJECT NUMBER: 2011700	

ROOF PLAN

DRAWING NUMBER: A2.7

BID SET 03/01/24

ROOF PLAN | 1/8" = 1'-0" | 8 | REFERENCE NOTES | 4

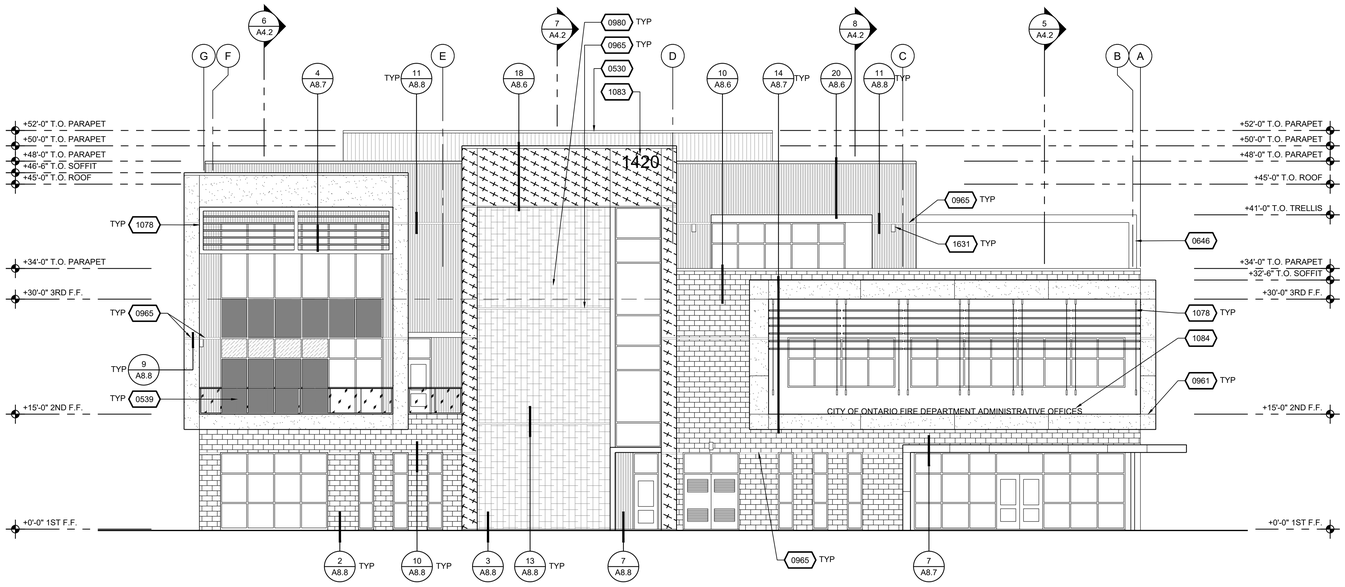

NORTH ELEVATIONS | 1/8" = 1'-0" | 6

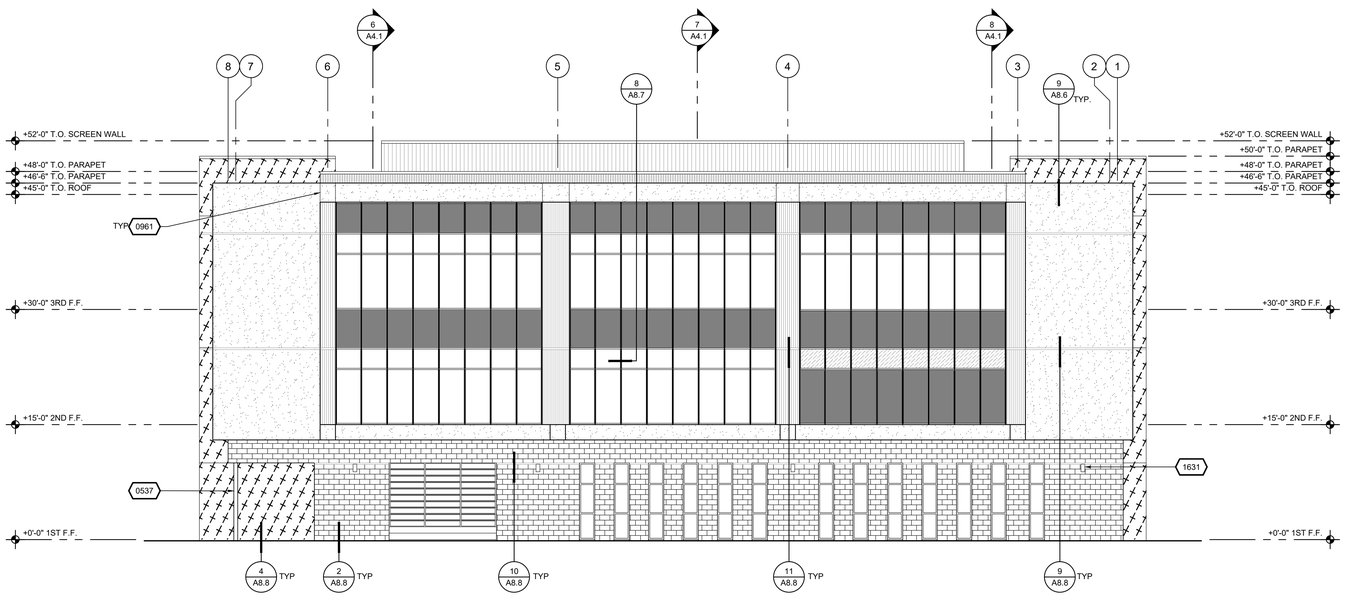

EAST ELEVATIONS | 1/8" = 1'-0" | 8

EXTERIOR Brick Veneer
NORMAN VELOUR- 11-5/8" X 2-1/4"

EXTERIOR Plaster
COLOR:
DUNN EDWARDS- "PRECIOUS PEARLS" DEW386

EXTERIOR Plaster
COLOR:
DUNN EDWARDS- "VINTAGE RED" DET427

EXTERIOR Corrugated Metal Panel 1
COLOR:
ATAS- "DOVE GREY" 13

EXTERIOR Corrugated Metal Panel 2
COLOR:
ATAS- "CHARCOAL GREY" 62

EXTERIOR Fiber Cement Wood Panel
NICHIHA AWP 3030
VINTAGEWOOD- "ASH"

EXTERIOR Precast Concrete Veneer
SEE 17/A8.4

EXTERIOR Spandrel Glazing

EXTERIOR Glazing Tint #1

NOTE:
SEE STRUCTURAL DRAWINGS FOR DRIFT JOINT LOCATIONS

MATERIAL LEGEND | 1/8" = 1'-0" | 2

- 0530 MTL. CORRUGATED SIDING MECHANICAL SCREEN WALL
- 0537 HSS COLUMN, SEE STRUCTURAL DRAWINGS
- 0539 S.S. GUARDRAIL WITH GLASS INFILL
- 0646 METAL TRELLIS, SEE STRUCTURAL DRAWINGS
- 0961 PLASTER CONTROL JOINT. SEE 14/A8.8
- 0965 DRIFT JOINT. SEE STRUCT DWGS
- 0980 PRECAST CONCRETE VENEER, SEE 17,21/A8.4
- 1078 HORIZ ALUMINUM AIRFOIL SUN CONTROL DEVICE
- 1083 20" HIGH CAST METAL LETTERS
- 1084 9" HIGH CAST METAL LETTERS
- 1631 WALL MOUNTED LIGHT FIXTURE, SEE ELECTRICAL DRAWINGS

REFERENCE NOTES | 4

PBK
RANCHO CUCAMONGA
8163 ROCHESTER AVENUE, SUITE 100
RANCHO CUCAMONGA, CA 91730
909-987-0909 P

ONTARIO FIRE DEPARTMENT ADMINISTRATION BUILDING

CITY OF ONTARIO
1420 E. FRANCIS STREET., ONTARIO, CA

LICENSED ARCHITECT
KEVIN NEEDHAM
C-19064
Exp. 03/31/25
STATE OF CALIFORNIA

CONSULTANT

NO	DATE	BY	DESCRIPTION

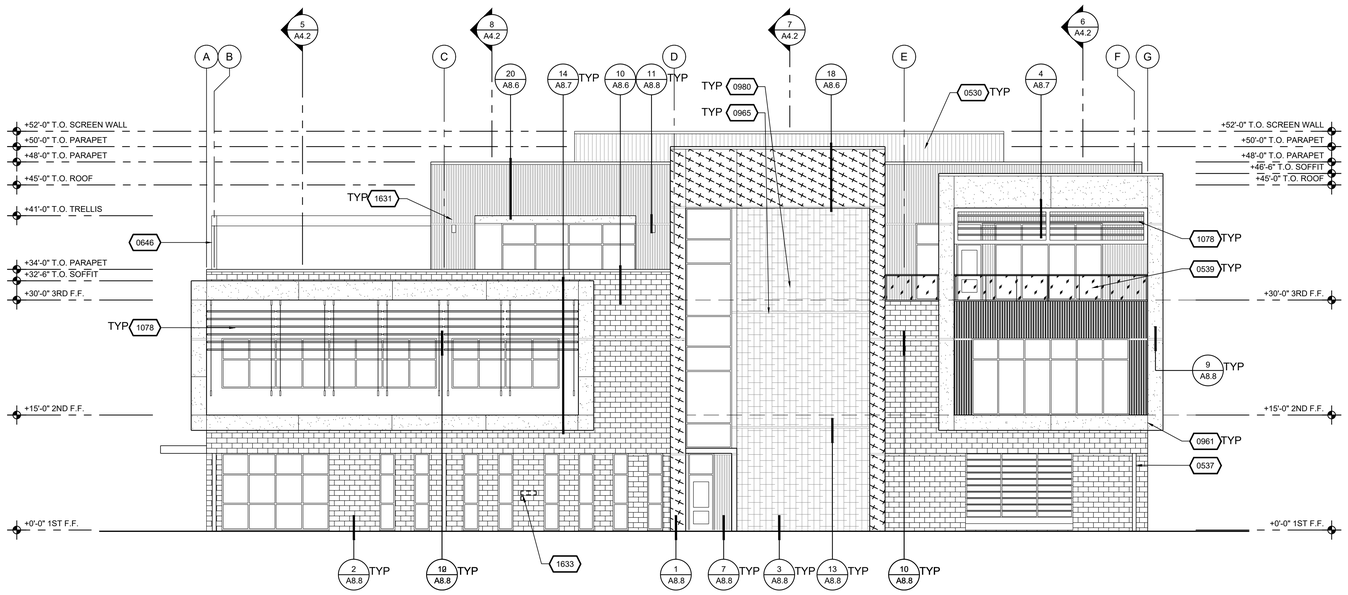

NOTE:
SEE STRUCTURAL DRAWINGS FOR DRIFT JOINT LOCATIONS

SOUTH ELEVATIONS | 1/8" = 1'-0" | 2

EXTERIOR Brick Veneer
NORMAN VELOUR- 11-5/8" X 2-1/4"

EXTERIOR Plaster
COLOR:
DUNN EDWARDS- "PRECIOUS PEARLS" DEW386

EXTERIOR Plaster
COLOR:
DUNN EDWARDS- "VINTAGE RED" DET427

EXTERIOR Corrugated Metal Panel 1
COLOR:
ATAS- "DOVE GREY" 13

EXTERIOR Corrugated Metal Panel 2
COLOR:
ATAS- "CHARCOAL GREY" 62

EXTERIOR Fiber Cement Wood Panel
NICHIHA AWP 3030
VINTAGEWOOD- "ASH"

EXTERIOR Precast Concrete Veneer
SEE 17/A8.4

EXTERIOR Spandrel Glazing

EXTERIOR Glazing Tint #1

NOTE:
SEE STRUCTURAL DRAWINGS FOR DRIFT JOINT LOCATIONS

MATERIAL LEGEND | 2

0530	MTL. CORRUGATED SIDING MECHANICAL SCREEN WALL
0537	HSS COLUMN, SEE STRUCTURAL DRAWINGS
0539	S.S. GUARDRAIL WITH GLASS INFILL
0646	METAL TRELLIS, SEE STRUCTURAL DRAWINGS
0961	PLASTER CONTROL JOINT. SEE 14/A8.8
0965	DRIFT JOINT. SEE STRUCT DWGS
0980	PRECAST CONCRETE VENEER, SEE 17,21/A8.4
1071	CUSTOM FIRE DEPARTMENT ARTWORK, LED BACKLIT. SEE 5/A8.4
1076	FIRE DEPARTMENT ARTWORK. SEE 13/A8.4
1077	ALUMINUM AIRFOIL SUN CONTROL DEVICE. VERTICAL
1078	HORIZ ALUMINUM AIRFOIL SUN CONTROL DEVICE, SEE 18/A8.8
1158	MICROWAVE DISH ANTENNA, N.I.C.
1159	DIRECTIONAL ANTENNA, N.I.C.
1631	WALL MOUNTED LIGHT FIXTURE, SEE ELECTRICAL DRAWINGS
1633	EMERGENCY FUEL SHUT-OFF VALVE AND SIGN, SEE DETAIL 18/A1.4

REFENCE NOTES | 2

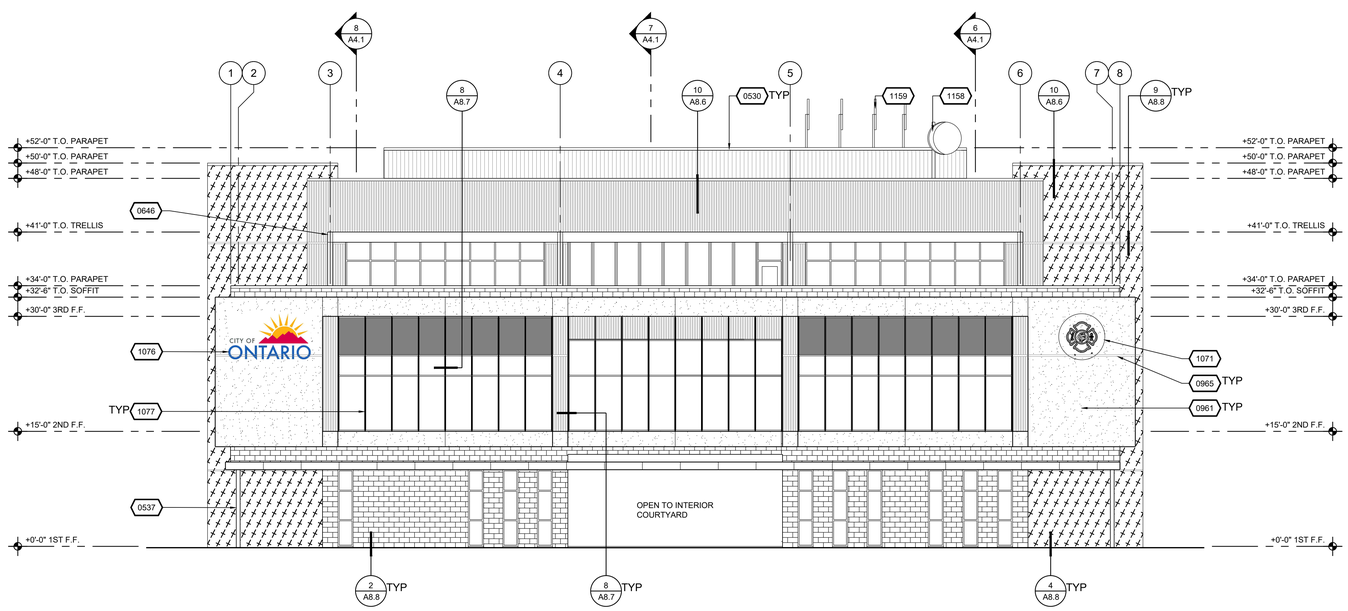

WEST ELEVATIONS | 1/8" = 1'-0" | 8

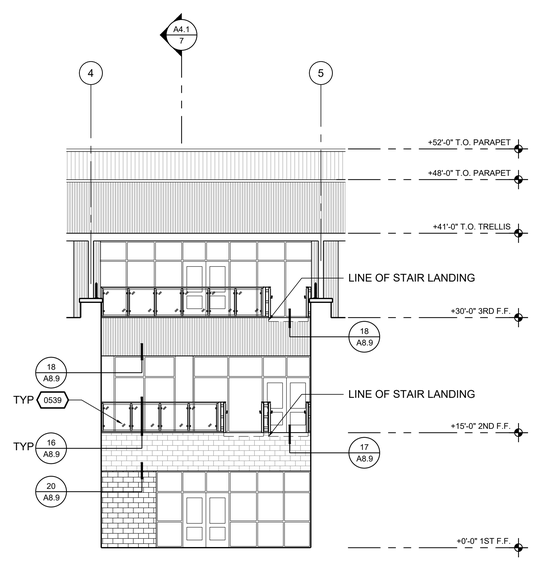

COURTYARD WEST ELEVATION | 1/8" = 1'-0" | 4

PBK
RANCHO CUCAMONGA
8163 ROCHESTER AVENUE, SUITE 100
RANCHO CUCAMONGA, CA 91730
909-987-0909 P

ONTARIO FIRE DEPARTMENT ADMINISTRATION BUILDING

CITY OF ONTARIO
1420 E. FRANCIS STREET., ONTARIO, CA

LICENSED ARCHITECT
KEVIN NEEDHAM
C-19064
Exp. Date 03/31/25
STATE OF CALIFORNIA

CONSULTANT

NO	DATE	BY	DESCRIPTION

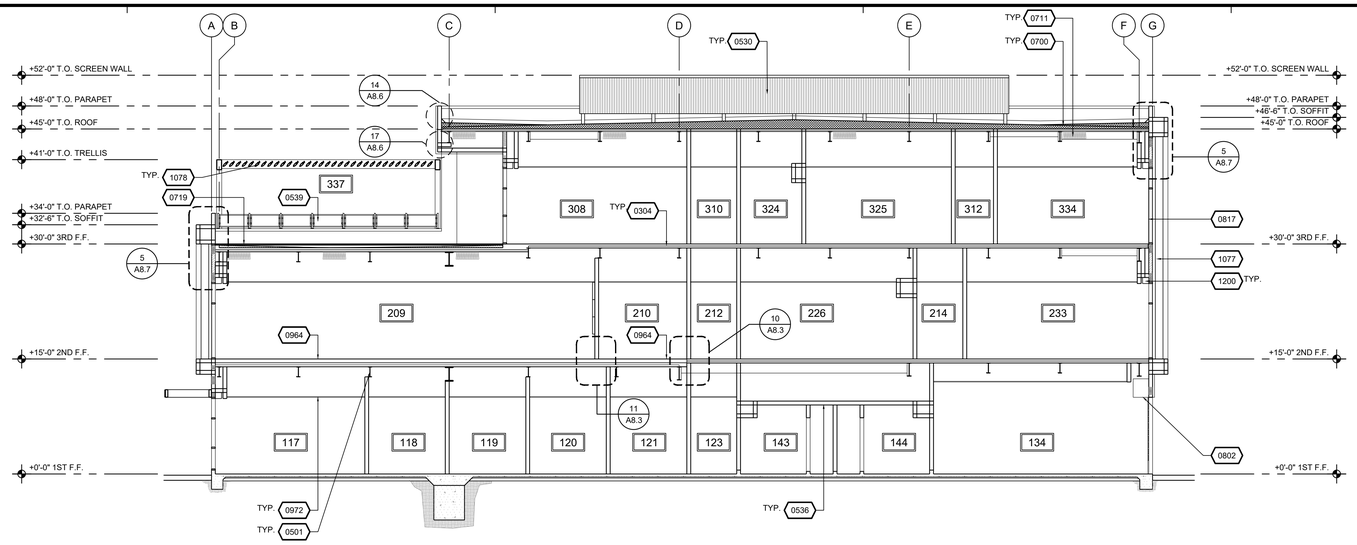

BUILDING SECTION 1/8" = 1'-0" 6

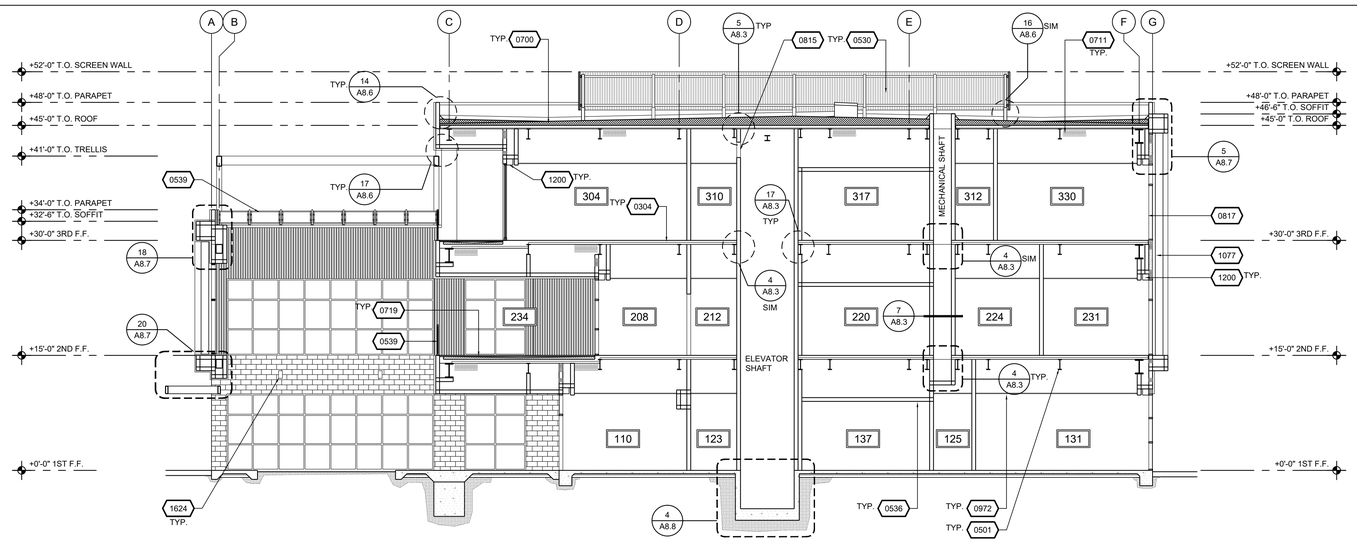

BUILDING SECTION 1/8" = 1'-0" 7

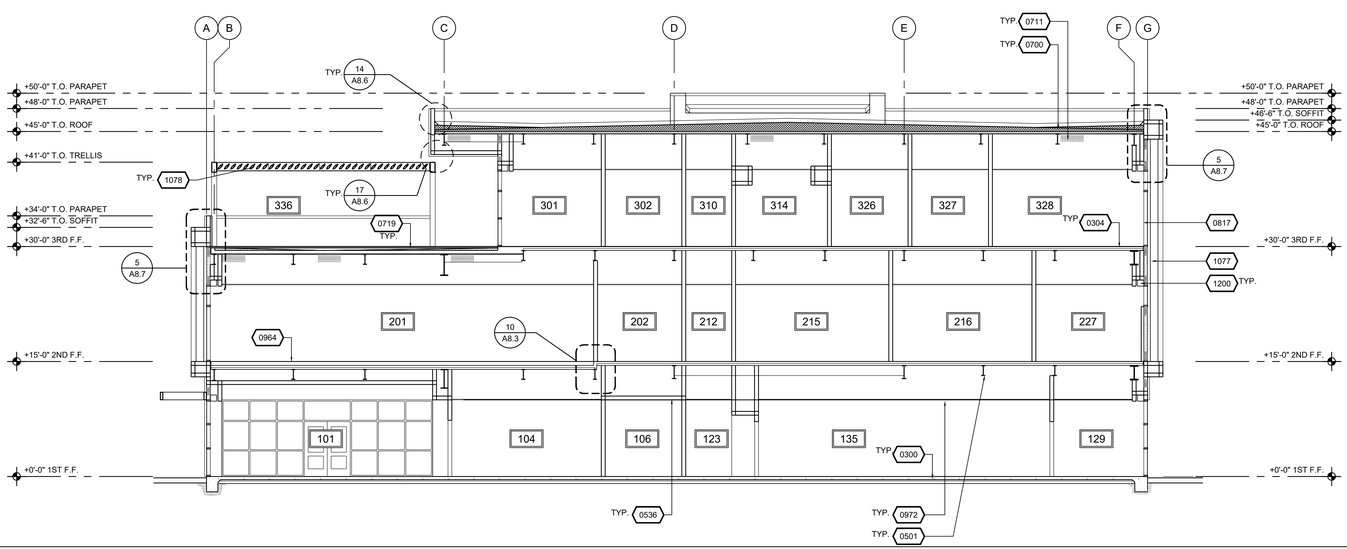

BUILDING SECTION 1/8" = 1'-0" 8

0300	CONCRETE SLAB
0304	LIGHT WEIGHT CONC. FILL OVER STEEL DECK. SEE STRUCT. DWGS.
0501	HORIZONTAL STEEL SUPPORT, SEE STRUCTURAL DRAWINGS
0530	MTL. CORRUGATED SIDING MECHANICAL SCREEN WALL
0536	MTL CEILING JOISTS. SEE STRUCTURAL DRAWINGS
0539	S.S. GUARDRAIL WITH GLASS INFILL
0700	MODIFIED BITUMINOUS MEMBRANE ROOFING
0711	BATT INSULATION, TYPICAL
0719	PEDESTAL PAVER SYSTEM
0802	VERTI-STACK DOOR HOUSING AND MOTOR OPERATOR
0815	ACCESS DOOR, 24" X 24", 1-HR RATED
0817	CURTAIN WALL SYSTEM
0904	EXTERIOR PLASTER, TYPICAL
0964	CABLE MANAGEMENT ACCESS FLOOR SYSTEM
0972	SUSPENDED ACOUSTIC GYPSUM CEILING TILE
1077	ALUMINUM SUN CONTROL BLADE. VERTICAL
1078	ALUMINUM SUN CONTROL BLADE. HORIZONTAL
1200	MOTORIZED DOUBLE ROLLER SHADE IN SHADE POCKET, SEE 9/A8.1
1624	LIGHT FIXTURE, TYPICAL, SEE ELECTRICAL DRAWINGS

REFERENCE NOTES 4

PBK
RANCHO CUCAMONGA
8163 ROCHESTER AVENUE, SUITE 100
RANCHO CUCAMONGA, CA 91730
909-987-0909 P

ONTARIO FIRE DEPARTMENT ADMINISTRATION BUILDING

CITY OF ONTARIO

1420 E. FRANCIS STREET., ONTARIO, CA

LICENSED ARCHITECT
KEVIN NEEDHAM
C-19064
Exp. 03/31/25
STATE OF CALIFORNIA

CONSULTANT

NO	DATE	BY	DESCRIPTION
4			

REVISIONS

DRAWN: RMZ	CHECKED: KN
DATE: 07/15/2022	SCALE: AS NOTED
PROJECT NUMBER: 2011700	

BUILDING SECTIONS

DRAWING NUMBER: A4.1

BID SET 03/01/24

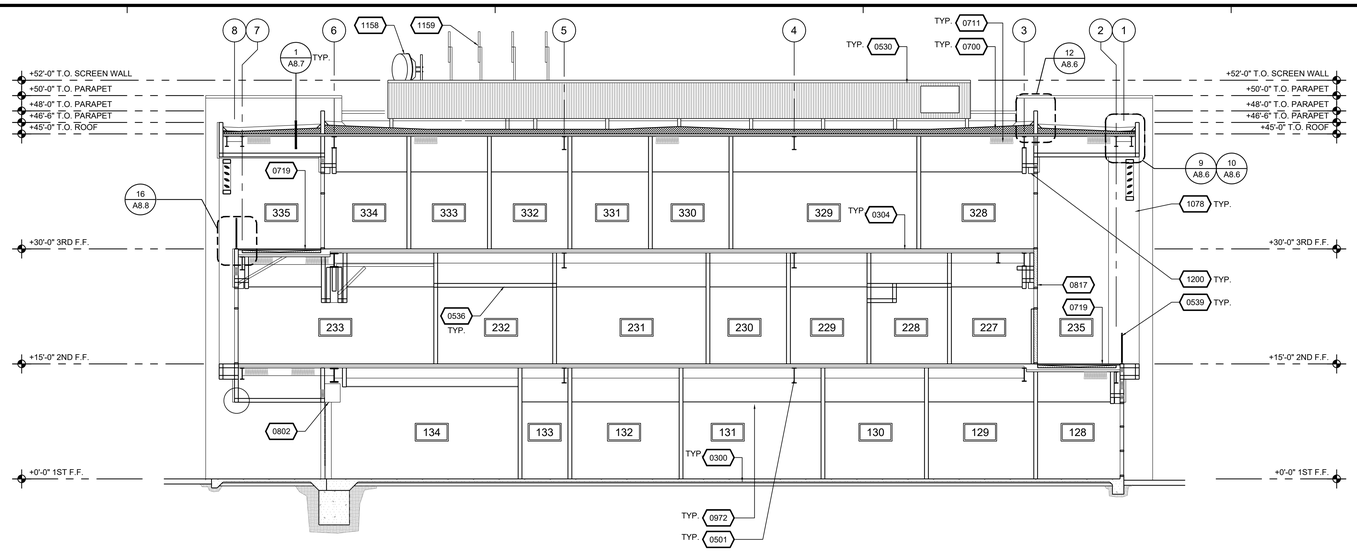

BUILDING SECTION | 1/8" = 1'-0" | 6

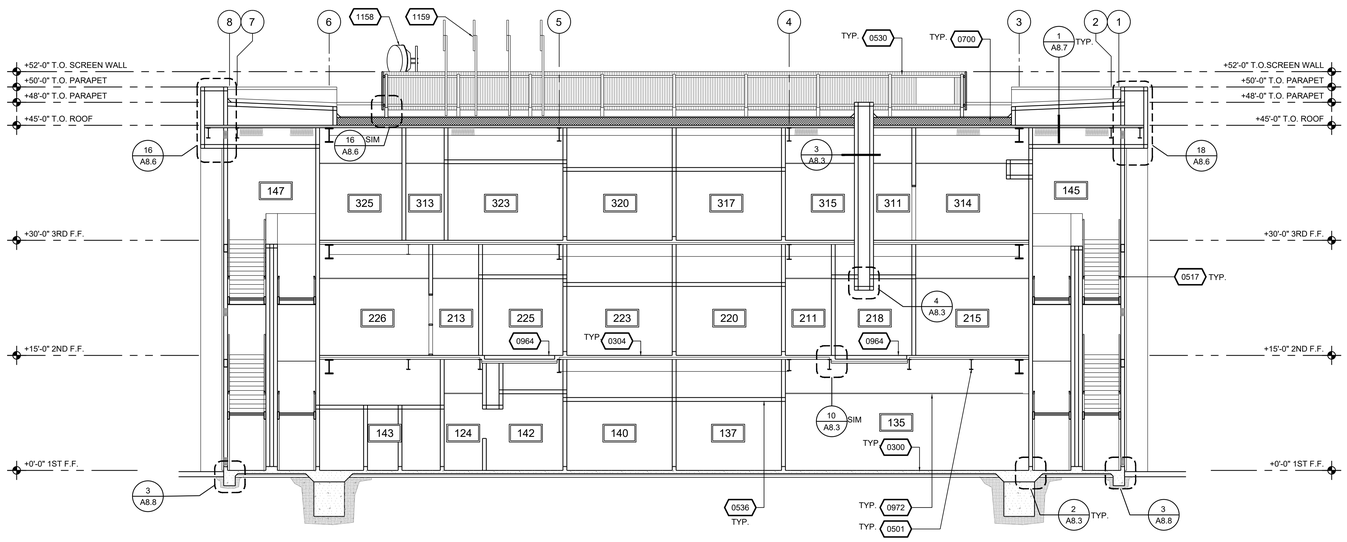

BUILDING SECTION | 1/8" = 1'-0" | 7

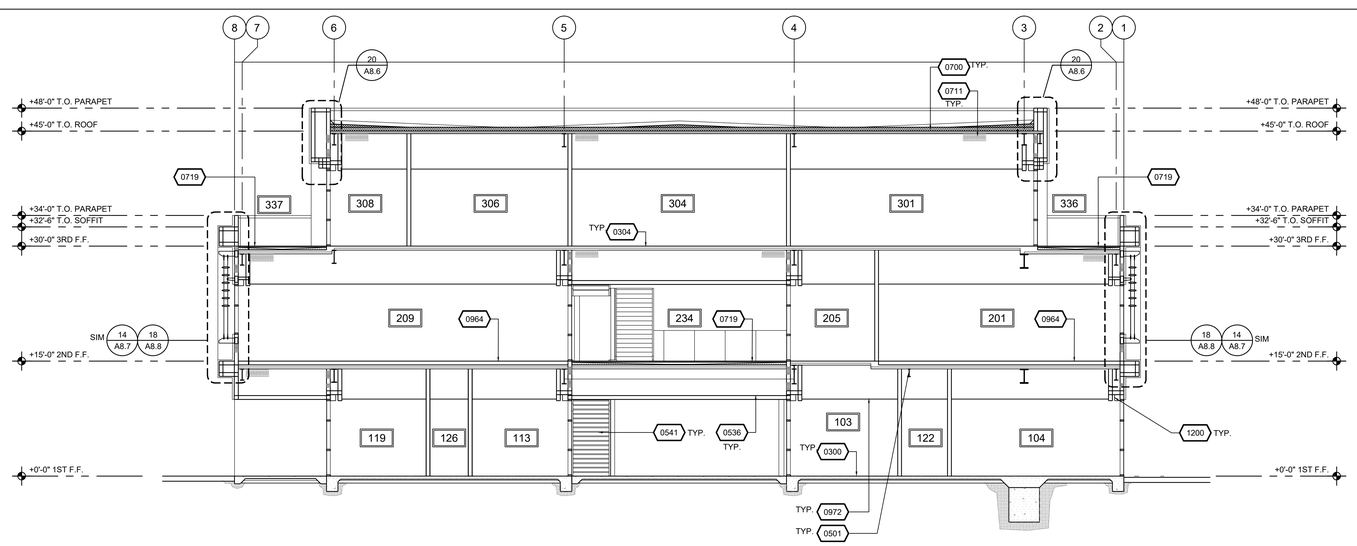

BUILDING SECTION | 1/8" = 1'-0" | 8

0300	CONCRETE SLAB
0304	LIGHT WEIGHT CONC. FILL OVER STEEL DECK. SEE STRUCT. DWGS.
0501	HORIZONTAL STEEL SUPPORT, SEE STRUCTURAL DRAWINGS
0517	S.S. HANDRAIL @ STAIRS, SEE 10/A8.8
0530	MTL. CORRUGATED SIDING MECHANICAL SCREEN WALL
0536	MTL CEILING JOISTS. SEE STRUCTURAL DRAWINGS
0539	S.S. GUARDRAIL WITH GLASS INFILL
0541	EXTERIOR STEEL STAIR. SEE 12,13/A8.8
0700	MODIFIED BITUMINOUS MEMBRANE ROOFING
0711	BATT INSULATION, TYPICAL
0719	PEDESTAL PAVER SYSTEM
0802	VERTI-STACK DOOR HOUSING AND MOTOR OPERATOR
0817	CURTAIN WALL SYSTEM
0964	CABLE MANAGEMENT ACCESS FLOOR SYSTEM
0972	SUSPENDED ACOUSTIC GYPSUM CEILING TILE
1078	ALUMINUM SUN CONTROL BLADE. HORIZONTAL
1158	MICROWAVE DISH ANTENNA, N.I.C.
1159	DIRECTIONAL ANTENNA, N.I.C.
1200	MOTORIZED DOUBLE ROLLER SHADE IN SHADE POCKET, SEE 9/A8.1

REFERENCE NOTES | 4

PBK
RANCHO CUCAMONGA
8163 ROCHESTER AVENUE, SUITE 100
RANCHO CUCAMONGA, CA 91730
909-987-0909 P

ONTARIO FIRE DEPARTMENT ADMINISTRATION BUILDING

CITY OF ONTARIO

1420 E. FRANCIS STREET., ONTARIO, CA

LICENSED ARCHITECT
KEVIN NEEDHAM
C-19064
Exp. 03/31/25
STATE OF CALIFORNIA

CONSULTANT

NO	DATE	BY	DESCRIPTION

REVISIONS

DRAWN: RMZ	CHECKED: KN
DATE: 07/15/2022	SCALE: AS NOTED
PROJECT NUMBER: 2011700	

BUILDING SECTIONS

DRAWING NUMBER: A4.2

BID SET 03/01/24

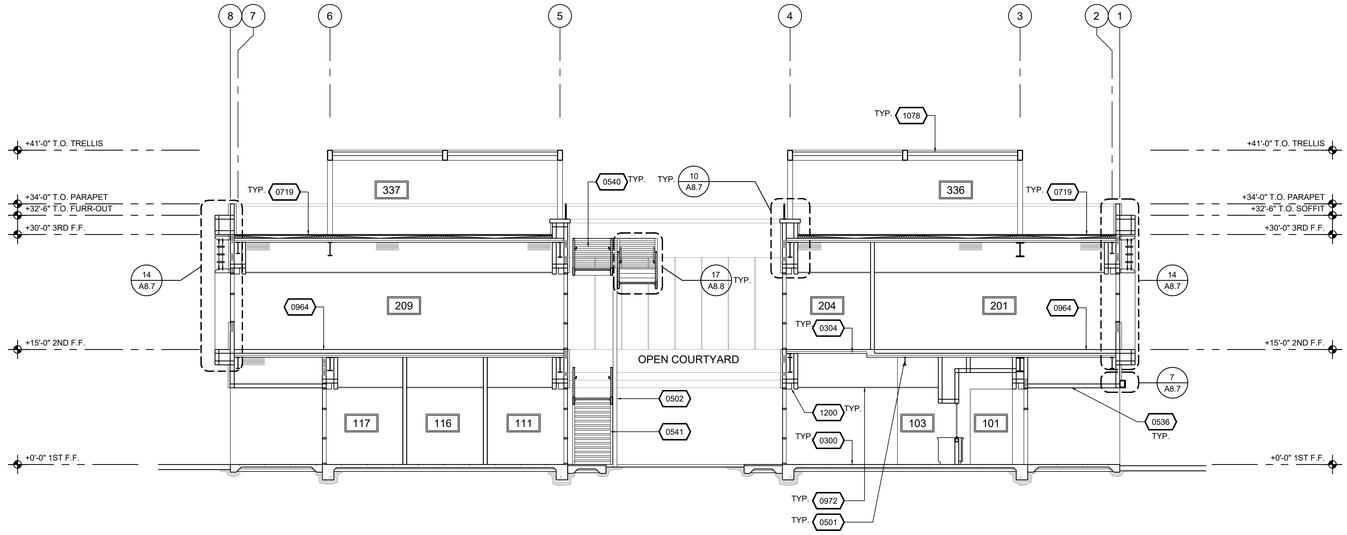

BUILDING SECTION | 1/8" = 1'-0" | 6

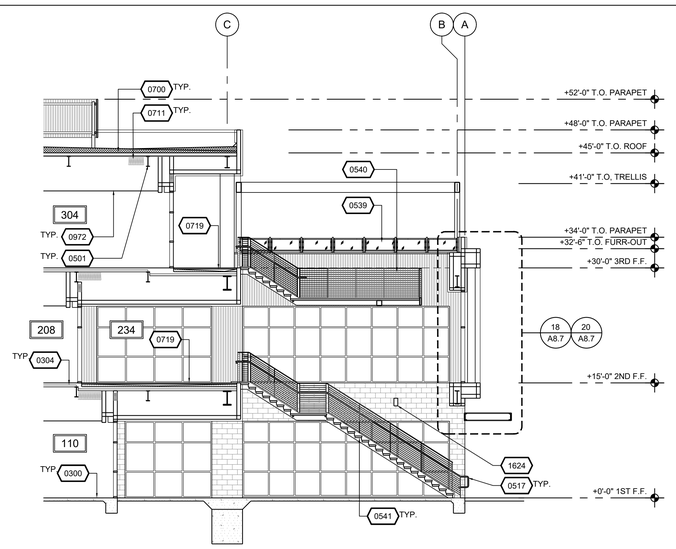

PARTIAL EXTERIOR STAIR SECTION | 1/8" = 1'-0" | 15

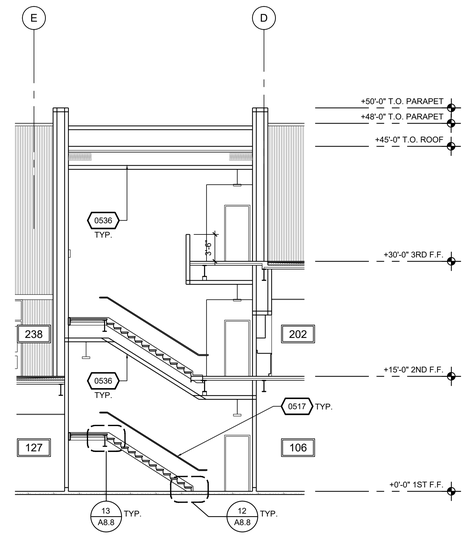

PARTIAL INTERIOR STAIR SECTION - NORTH (SOUTH SIM.) | 1/8" = 1'-0" | 7

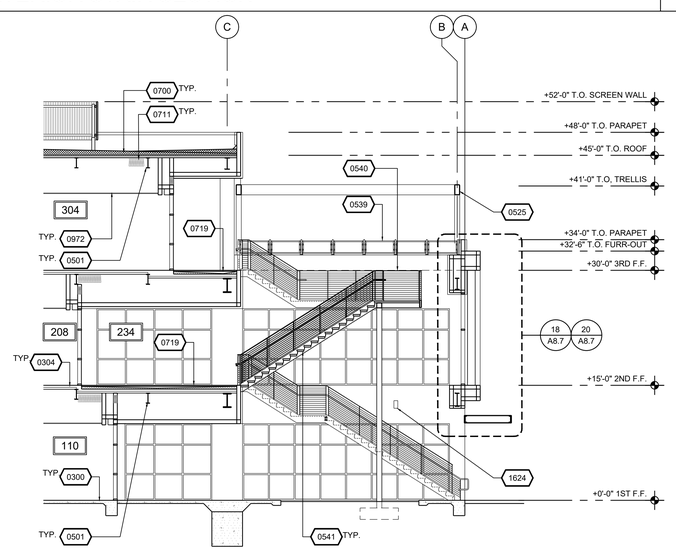

PARTIAL EXTERIOR STAIR SECTION | 1/8" = 1'-0" | 16

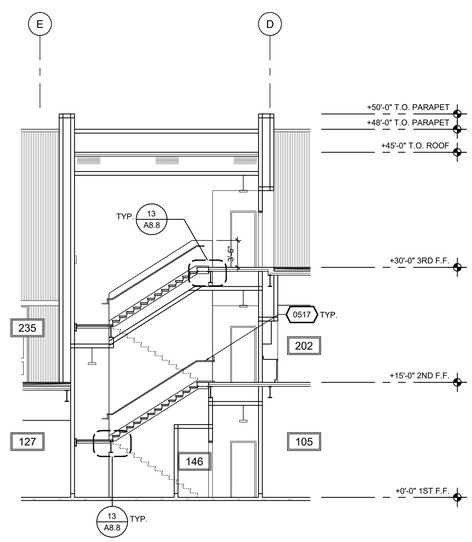

PARTIAL INTERIOR STAIR SECTION - NORTH (SOUTH SIM.) | 1/8" = 1'-0" | 8

0300	CONCRETE SLAB
0304	LIGHT WEIGHT CONC. FILL OVER STEEL DECK. SEE STRUCT. DWGS.
0501	HORIZONTAL STEEL SUPPORT, SEE STRUCTURAL DRAWINGS
0502	VERTICAL STEEL SUPPORT, SEE STRUCTURAL DRAWINGS
0517	S.S. HANDRAIL @ STAIRS, SEE 10/A8.8
0525	METAL TRELLIS
0536	MTL CEILING JOISTS. SEE STRUCTURAL DRAWINGS
0539	S.S. GUARDRAIL WITH GLASS INFILL
0540	S.S. GUARDRAIL WITH CABLE INFILL
0541	EXTERIOR STEEL STAIR. SEE 12,13/A8.8
0700	MODIFIED BITUMINOUS MEMBRANE ROOFING
0711	BATT INSULATION, TYPICAL
0719	PEDESTAL PAVER SYSTEM
0964	CABLE MANAGEMENT ACCESS FLOOR SYSTEM
0972	SUSPENDED ACOUSTIC GYPSUM CEILING TILE
1078	ALUMINUM SUN CONTROL BLADE. HORIZONTAL
1200	MOTORIZED DOUBLE ROLLER SHADE IN SHADE POCKET, SEE 9/A8.1
1624	LIGHT FIXTURE, TYPICAL, SEE ELECTRICAL DRAWINGS

REFERENCE NOTES | 4

PBK
RANCHO CUCAMONGA
8163 ROCHESTER AVENUE, SUITE 100
RANCHO CUCAMONGA, CA 91730
909-987-0909 P

ONTARIO FIRE DEPARTMENT ADMINISTRATION BUILDING

CITY OF ONTARIO

1420 E. FRANCIS STREET., ONTARIO, CA

LICENSED ARCHITECT
KEVIN NEEDHAM
C-19064
Exp. 03/31/25
STATE OF CALIFORNIA

CONSULTANT

NO	DATE	BY	DESCRIPTION

REVISIONS

DRAWN: RMZ	CHECKED: KN
DATE: 07/15/2022	SCALE: AS NOTED
PROJECT NUMBER: 2011700	

BUILDING SECTIONS

DRAWING NUMBER: A4.3

BID SET 03/01/24

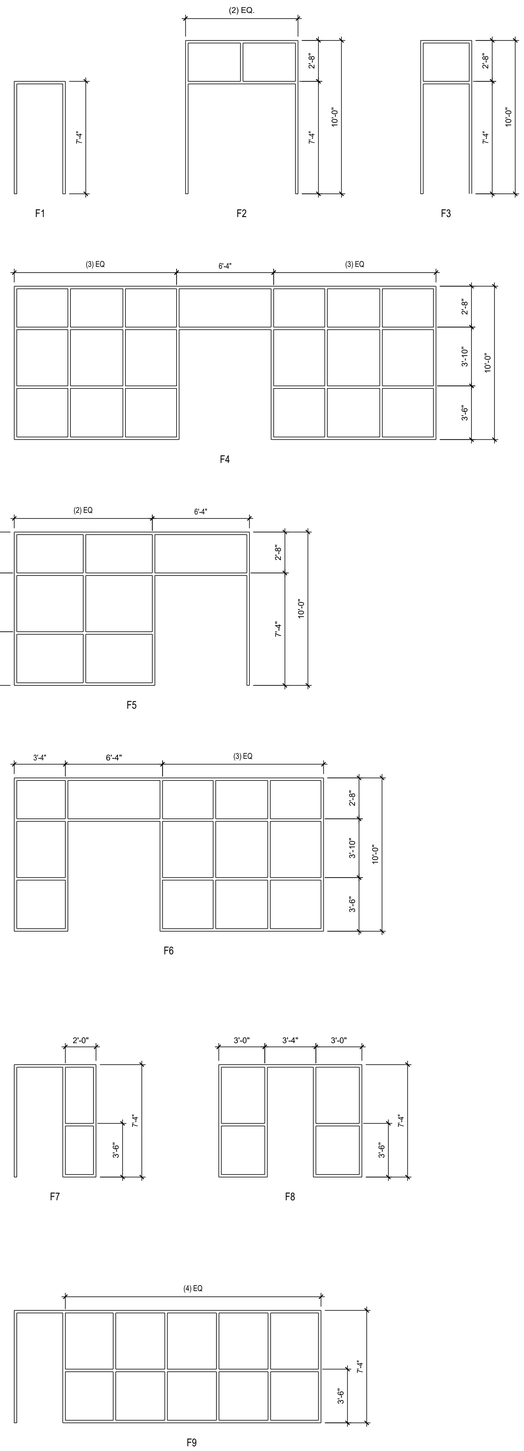

DOOR FRAME

#	DOOR SIZE	FEATURE TYPE	FEATURE THICKNESS	FEATURE LABEL (MIN.)	HARDWARE GROUP	HARDWARE SELF CLOSING	HARDWARE PANIC HARDWARE	HARDWARE LEVER L(V), PUSH/PULL (PP)	MAT'L DOOR	MAT'L FRAME	FINISH DOOR	FINISH FRAME	DETAILS (SEE SHEET A-5.2 U.N.O.) HEAD	JAMB	JAMB	SILL	GLAZING TYPE	REMARKS
317	3'-0" X 7'-2"	B/F1	1 3/4"	-	16	Y	-	-	WS	HM	PL	P	13	14	17	24F	-	-
318	3'-0" X 7'-2"	B/F1	1 3/4"	-	17	Y	-	-	WS	HM	PL	P	13	13	18	24C	-	-
319	3'-0" X 7'-2"	B/F1	1 3/4"	-	15	Y	-	-	WS	HM	PL	P	13	13	17	-	-	-
320	3'-0" X 7'-2"	B/F1	1 3/4"	-	16	Y	-	-	WS	HM	PL	P	13	14	17	24F	-	-
321	3'-0" X 7'-2"	B/F1	1 3/4"	-	4	Y	-	-	WS	HM	PL	P	19	19	19	24A	-	CARD ACCESS, BOTTOM SEAL
322	3'-0" X 7'-2"	B/1	1 3/4"	-	17	Y	-	-	WS	HM	P	P	13	13	13	24C	-	-
323A	3'-0" X 7'-2"	B/F1	1 3/4"	-	5	Y	-	-	WS	HM	PL	P	13	13	13	24B	-	-
323B	3'-0" X 7'-2"	B/F1	1 3/4"	-	27	Y	-	-	WS	HM	PL	P	13	13	18	24B	-	-
324	3'-0" X 7'-2"	C/F1	1 3/4"	-	5	Y	-	-	WS	HM	PL	P	13	13	18	24E	C	-
325	3'-0" X 7'-2"	E/F1	1 3/4"	-	5	Y	-	-	WS	HM	PL	P	13	13	18	24E	C	-
326	3'-0" X 7'-2"	E/F1	1 3/4"	-	5	Y	-	-	WS	HM	PL	P	13	13	13	24E	C	-
327	3'-0" X 7'-2"	E/F1	1 3/4"	-	5	Y	-	-	WS	HM	PL	P	13	13	13	24E	C	-
328	3'-0" X 7'-2"	E/F1	1 3/4"	-	5	Y	-	-	WS	HM	PL	P	13	13	13	24E	C	-
330	3'-0" X 7'-2"	E/F1	1 3/4"	-	5	Y	-	-	WS	HM	PL	P	13	13	18	24E	C	-
331	3'-0" X 7'-2"	E/F1	1 3/4"	-	5	Y	-	-	WS	HM	PL	P	13	13	13	24E	C	-
332	3'-0" X 7'-2"	E/F1	1 3/4"	-	5	Y	-	-	WS	HM	PL	P	13	13	13	24E	C	-
333	3'-0" X 7'-2"	E/F1	1 3/4"	-	5	Y	-	-	WS	HM	PL	P	13	13	13	24E	C	-
334	3'-0" X 7'-2"	E/F1	1 3/4"	-	5	Y	-	-	WS	HM	PL	P	13	13	18	24E	C	-
335	3'-0" X 7'-2"	D/F3	1 3/4"	-	28	Y	-	-	HM	HM	FF	FF	13	13	13	24E	A	-
336	3'-0" X 7'-2"	B/F1	1 3/4"	60	36	Y	Y	-	HM	HM	FF	FF	4	4	4	3/A5.5	-	EXTERIOR; CARD ACCESS
337	3'-0" X 7'-2"	B/F1	1 3/4"	60	36	Y	Y	-	HM	HM	FF	FF	4	4	4	3/A5.5	-	EXTERIOR; CARD ACCESS
G1	3'-0" X T.O.W.	SG1	1 3/4"	-	SG1	Y	Y	-	HM	HM	P	P	-	-	-	-	-	SEE DETAIL 10/A1.5
G2	3'-0" X T.O.W.	SG2	1 3/4"	-	SG2	Y	Y	-	HM	HM	P	P	-	-	-	-	-	SEE DETAIL 10/A1.5
G3	32'-0" X T.O.W.	SG3	1 3/4"	-	SG3	-	-	-	HM	HM	P	P	-	-	-	-	-	SEE DETAIL 5/A1.5
G4	30'-0" X T.O.W.	SG3	1 3/4"	-	SG3	-	-	-	HM	HM	P	P	-	-	-	-	-	SEE DETAIL 5/A1.5

AL = ALUMINUM
AN = ANODIZED
FF = FACTORY FINISH
HM = HOLLOW METAL
P = PAINTED FINISH
PL = PLASTIC LAMINATE
SG = SITE GATE
ST = STEEL
TG = TEMPERED GLAZING
WV = WOOD, VENEER
WS = WOOD, SOLID CORE
Y = YES

DOOR NOTES:

1. FIRE RATED GLAZING FOR FIRE RATED DOORS TO BE IN ACCORDANCE WITH CBC 2019, SECTION 716.2.5 AND TABLE 716.1(2).
2. ALL LOUVERS TO HAVE 50% FREE AREA AND SHALL BE EQUIPPED WITH BUG SCREEN.
3. REF ELECTRICAL DRAWINGS FOR ADDITION INFORMATION ON CARD READERS.
4. FOR PUSH PLATE AND KICK PLATE, SEE DETAIL 21/A5.4.

ACCESSIBILITY NOTES:

1. HANDLES, PULLS, LATCHES, AND OTHER OPERABLE PARTS ON DOORS AND GATES THAT ARE IN A PATH OF TRAVEL SHALL BE OPERABLE WITH ONE HAND AND SHALL NOT REQUIRE TIGHT GRASPING, PINCHING, OR TWISTING OF THE WRIST. OPERABLE PARTS OF SUCH HARDWARE SHALL BE 34" A MINIMUM AND 44" MAXIMUM ABOVE THE FINISH FLOOR OR GROUND.
2. MAXIMUM FORCE FOR PUSHING OR PULLING OPEN, EXTERIOR OR INTERIOR HINGED DOORS, WITH CLOSERS AND SLIDING OR FOLDING DOORS SHALL NOT EXCEED FIVE POUNDS. MINIMUM ALLOWABLE OPENING FORCE, FOR FIRE DOORS, NOT TO EXCEED 15 POUNDS.
3. DOORS, WHEN FULLY OPENED, SHALL NOT REDUCE THE REQUIRED WIDTH BY MORE THAN 7 INCHES PER SECTION 1005.7.1.

GLAZING TYPES:
TYPE A: INSULATED, 1" THICK, TINTED TEMPERED OUTER PANE, CLEAR TEMPERED INNER PANE, LOW E COATING. VITRO SOLARBAN 90(2) SOLEXIA + CLEAR. U-VALUE = 0.29. SHGC = 0.22
TYPE B: TEMPERED, TINTED, 1/4" THICK, U.N.O.
TYPE C: TEMPERED, CLEAR, 1/4" THICK
TYPE D: FIRE RATED SAFETY GLAZING
TYPE E: LEVEL 1 BULLET RESISTANT, NON-RATED, CLEAR GLASS

DOOR SCHEDULE AND NOTES

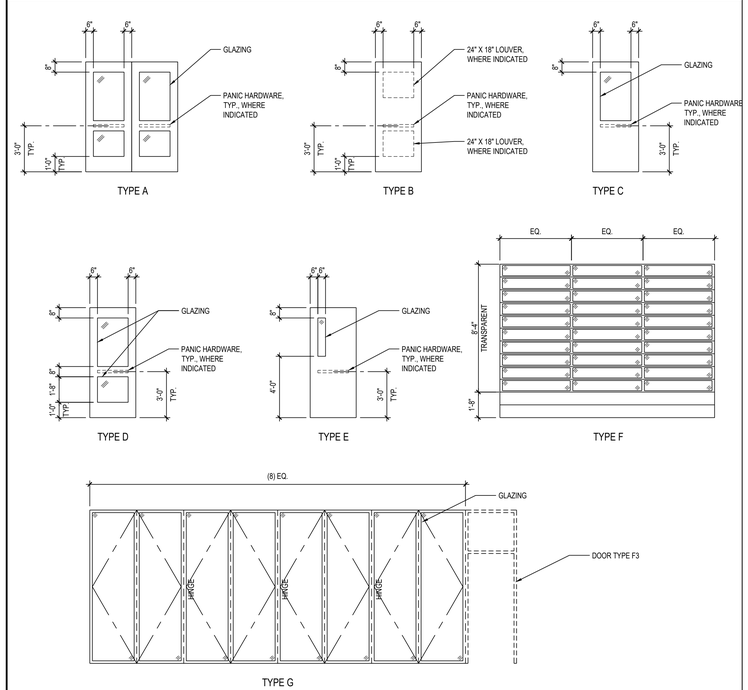

DOOR TYPES

#	DOOR SIZE	FEATURE TYPE	FEATURE THICKNESS	FEATURE LABEL (MIN.)	HARDWARE GROUP	HARDWARE SELF CLOSING	HARDWARE PANIC HARDWARE	HARDWARE LEVER L(V), PUSH/PULL (PP)	MAT'L DOOR	MAT'L FRAME	FINISH DOOR	FINISH FRAME	DETAILS (SEE SHEET A5.4 & A5.5, U.N.O.) HEAD	JAMB	JAMB	SILL	GLAZING TYPE	REMARKS
101A	6'-0" X 7'-2"	A/F4	1 3/4"	-	1	Y	Y	-	AL	AL	FF	FF	1	1	1	22	A	EXTERIOR; CARD ACCESS
101B	3'-0" X 7'-2"	B/F1	1 3/4"	-	2	Y	Y	-	WS	HM	PL	P	13	13	13	24C	-	CARD ACCESS
102	3'-0" X 7'-2"	B/F1	1 3/4"	-	3	Y	-	-	WS	HM	PL	P	13	14	14	24F	-	-
103	3'-0" X 7'-2"	C/F1	1 3/4"	-	4	Y	-	-	WS	HM	PL	P	13	13	13	24B	C	CARD ACCESS
104	3'-0" X 7'-2"	B/F1	1 3/4"	-	6	Y	-	-	WS	HM	PL	P	13	13	13	24B	-	-
105	7'-0" X 7'-2"	B/F2	1 3/4"	-	7	Y	Y	-	HM	HM	P	P	2	3	3	22	-	LOUVERS 24"X18" T & B, EXT. CARD ACCESS
106	3'-0" X 7'-2"	B/F1	1 3/4"	-	8	-	-	-	WS	HM	PL	P	13	13	13	24B	-	-
107	3'-0" X 7'-2"	B/F1	1 3/4"	-	9	Y	-	-	WS	HM	PL	P	13	13	13	24A	-	-
108	3'-0" X 7'-2"	C/F1	1 3/4"	-	9	Y	-	-	WS	HM	PL	P	13	13	13	24A	C	-
109	3'-0" X 7'-2"	B/F1	1 3/4"	-	10	-	-	-	WS	HM	PL	P	13	13	13	-	-	-
110A	6'-0" X 7'-2"	A/F6	1 3/4"	-	11	Y	Y	-	AL	AL	FF	FF	1	1	1	22	A	EXTERIOR; CARD ACCESS
110B	3'-0" X 7'-2"	B/F1	1 3/4"	-	5	Y	-	-	WS	HM	PL	P	13	13	13	24B	-	-
111	3'-0" X 7'-2"	E/F1	1 3/4"	-	5	Y	-	-	WS	HM	PL	P	13	13	13	-	C	-
112	3'-0" X 7'-2"	E/F1	1 3/4"	-	5	Y	-	-	WS	HM	PL	P	13	13	13	-	C	-
113	3'-0" X 7'-2"	E/F1	1 3/4"	-	5	Y	-	-	WS	HM	PL	P	13	13	13	-	C	-
114	3'-0" X 7'-2"	E/F1	1 3/4"	-	5	Y	-	-	WS	HM	PL	P	13	13	13	-	C	-
115	3'-0" X 7'-2"	E/F1	1 3/4"	-	5	Y	-	-	WS	HM	PL	P	13	13	13	-	C	-
117	3'-0" X 7'-2"	E/F1	1 3/4"	-	5	Y	-	-	WS	HM	PL	P	13	13	13	-	C	-
118	3'-0" X 7'-2"	E/F1	1 3/4"	-	5	Y	-	-	WS	HM	PL	P	13	13	13	-	C	-
119	3'-0" X 7'-2"	E/F1	1 3/4"	-	5	Y	-	-	WS	HM	PL	P	13	13	13	-	C	-
120	3'-0" X 7'-2"	E/F1	1 3/4"	-	5	Y	-	-	WS	HM	PL	P	13	13	13	-	C	-
121	3'-0" X 7'-2"	E/F1	1 3/4"	-	5	Y	-	-	WS	HM	PL	P	13	13	13	-	C	-
126	3'-0" X 7'-2"	D/F1	1 3/4"	-	12	Y	Y	-	WS	HM	PL	P	13	13	13	24B	C	-
127	3'-0" X 7'-2"	E/F1	1 3/4"	-	5	Y	-	-	WS	HM	PL	P	13	13	13	-	C	-
128	3'-0" X 7'-2"	E/F1	1 3/4"	-	5	Y	-	-	WS	HM	PL	P	13	13	13	-	C	-
129	3'-0" X 7'-2"	E/F1	1 3/4"	-	5	Y	-	-	WS	HM	PL	P	13	13	13	-	C	-
130	3'-0" X 7'-2"	E/F1	1 3/4"	-	5	Y	-	-	WS	HM	PL	P	13	13	13	-	C	-
131	3'-0" X 7'-2"	E/F1	1 3/4"	-	9	Y	-	-	WS	HM	PL	P	13	13	13	24B	C	-
132	3'-0" X 7'-2"	E/F1	1 3/4"	-	9	Y	-	-	WS	HM	PL	P	13	13	13	24B	-	-
133	3'-0" X 7'-2"	B/F1	1 3/4"	-	34	Y	-	-	WS	HM	PL	P	13	13	13	24D	C	-
134A	3'-0" X 7'-2"	D/F1	1 3/4"	-	13	Y	-	-	WS	HM	PL	P	13	13	13	-	C	-
134B	14'-0" X 10'-0"	F	-	-	14	-	-	-	ST	ST	FF	FF	9	8	8	-	-	SECTIONAL OVERHEAD
134C	14'-0" X 10'-0"	F	-	-	14	-	-	-	ST	ST	FF	FF	9	8	8	-	-	SECTIONAL OVERHEAD
135	3'-0" X 7'-2"	D/F1	1 3/4"	-	12	Y	Y	-	WS	HM	FF	FF	13	13	13	25B	C	-
136	3'-0" X 7'-2"	B/F1	1 3/4"	-	15	Y	-	-	WS	HM	FF	FF	13	13	13	-	-	-
137	3'-0" X 7'-2"	B/F1	1 3/4"	-	16	Y	-	-	WS	HM	PL	P	13	14	14	24F	-	-
138	3'-0" X 7'-2"	B/F1	1 3/4"	-	17	Y	-	-	WS	HM	PL	P	13	13	13	24C	-	-
139	3'-0" X 7'-2"	B/F1	1 3/4"	-	15	Y	-	-	WS	HM	PL	P	13	13	13	-	-	-
140	3'-0" X 7'-2"	B/F1	1 3/4"	-	16	Y	-	-	WS	HM	PL	P	13	14	14	24F	-	-
141	3'-0" X 7'-2"	B/F1	1 3/4"	-	4	Y	-	-	WS	HM	PL	P	19	19	19	24A	-	CARD ACCESS, BOTTOM SEAL
142	3'-0" X 7'-2"	C/F1	1 3/4"	-	18	Y	-	-	WS	HM	PL	P	13	13	13	24A	C	-
143	3'-0" X 7'-2"	B/F1	1 3/4"	-	19	Y	-	-	WS	HM	PL	P	13	13	13	24F	-	-
144	3'-0" X 7'-2"	B/F1	1 3/4"	-	19	Y	-	-	WS	HM	PL	P	13	13	13	24F	-	-
145A	3'-0" X 7'-2"	D/F3	1 3/4"	-	20	Y	Y	-	HM	HM	FF	FF	2	10	11	22	A	EXTERIOR; CARD ACCESS
145B	3'-0" X 7'-2"	B/F1	1 3/4"	60	21	Y	Y	-	WS	HM	PL	P	13	13	13	24A	-	-
146	3'-0" X 7'-2"	B/F1	1 3/4"	-	22	-	-	-	HM	HM	FF	FF	4	4	10	22	-	-
147A	3'-0" X 7'-2"	D/F3	1 3/4"	-	20	Y	Y	-	HM	HM	FF	FF	2	10	11	22	A	EXTERIOR; CARD ACCESS
147B	3'-0" X 7'-2"	B/F1	1 3/4"	60	21	Y	Y	-	WS	HM	PL	P	13	13	13-	24A	-	-
201	3'-0" X 7'-2"	D/F7	1 3/4"	-	23	Y	-	-	WS	HM	PL	P	13	2	2	24B	C	CARD ACCESS
202	3'-0" X 7'-2"	C/F7	1 3/4"	-	9	Y	-	-	WS	HM	PL	P	13	2	2	-	C	-
203	3'-0" X 7'-2"	B/F1	1 3/4"	-	8	-	-	-	WS	HM	PL	P	13	13	13	24B	-	-
204	3'-0" X 7'-2"	C/F1	1 3/4"	-	5	Y	-	-	WS	HM	PL	P	13	13	13	-	C	-
205	3'-0" X 7'-2"	D/F1	1 3/4"	-	9	Y	-	-	WS	HM	PL	P	13	2	2	-	C	-
206	3'-0" X 7'-2"	B/F1	1 3/4"	-	9	Y	-	-	WS	HM	PL	P	13	13	13	24B	-	-
207	3'-0" X 7'-2"	E/F1	1 3/4"	-	5	Y	-	-	WS	HM	PL	P	13	13	13	24B	C	-
208	6'-0" X 7'-2"	A/F5	1 3/4"	-	11	Y	Y	-	AL	AL	FF	FF	1	1	1/A5.5	3/A5.5	A	EXTERIOR; CARD ACCESS
209A	3'-0" X 7'-2"	C/F1	1 3/4"	-	2	Y	Y	-	HM	HM	FF	FF	13	13	17	24B	C	CARD ACCESS
209B	3'-0" X 7'-2"	B/F1	1 3/4"	60	26	Y	Y	-	WS	HM	PL	P	13	13	17	24B	-	CARD ACCESS
210A	3'-0" X 7'-2"	E/F1	1 3/4"	-	4	Y	-	-	WS	HM	PL	P	13	13	17	24B	C	CARD ACCESS
210B	3'-0" X 7'-2"	E/F1	1 3/4"	-	4	Y	-	-	WS	HM	PL	P	13	13	17	24B	C	CARD ACCESS
211	3'-0" X 7'-2"	D/F7	1 3/4"	-	12	Y	Y	-	HM	HM	FF	FF	13	2	17	-	C	-
212A	3'-0" X 7'-2"	B/F1	1 3/4"	60	21	Y	Y	-	WS	HM	PL	P	13	13	17	-	-	-
212B	3'-0" X 7'-2"	D/F1	1 3/4"	-	12	Y	Y	-	WS	HM	PL	P	13	13	13	-	C	-
212C	3'-0" X 7'-2"	B/F1	1 3/4"	60	21	Y	Y	-	WS	HM	PL	P	13	13	17	-	-	-
215A	3'-0" X 7'-2"	B/F1	1 3/4"	-	5	Y	-	-	WS	HM	PL	P	13	13	13	24B	-	-
215B	3'-0" X 7'-2"	B/F1	1 3/4"	-	27	Y	-	-	WS	HM	PL	P	13	13	17	24B	-	-
216A	3'-0" X 7'-2"	D/F3	1 3/4"	-	28	Y	-	-	HM	HM	FF	FF	2	11	11	3/A5.5	A	-
216B	3'-0" X 7'-2"	D/F7	1 3/4"	-	29	Y	-	-	WS	HM	PL	P	13	2	18	-	C	-
218	3'-0" X 7'-2"	B/F1	1 3/4"	-	4	Y	-	-	WS	HM	PL	P	19	19	19	20	-	CARD ACCESS, BOTTOM SEAL
219	3'-0" X 7'-2"	B/F1	1 3/4"	-	15	Y	-	-	WS	HM	PL	P	13	13	17	-	-	-
220	3'-0" X 7'-2"	B/F1	1 3/4"	-	16	Y	-	-	WS	HM	PL	P	13	14	14	24F	-	-
221	3'-0" X 7'-2"	B/F1	1 3/4"	-	17	Y	-	-	WS	HM	PL	P	13	13	13	24C	-	-
222	3'-0" X 7'-2"	B/F1	1 3/4"	-	15	Y	-	-	WS	HM	PL	P	13	13	17	-	-	-
223	3'-0" X 7'-2"	B/F1	1 3/4"	-	16	Y	-	-	WS	HM	PL	P	13	14	17	24F	-	-
224A	3'-0" X 7'-2"	D/F7	1 3/4"	-	6	Y	-	-	WS	HM	PL	P	13	2	17	24B	C	-
224B	3'-0" X 7'-2"	D/F7	1 3/4"	-	6	Y	-	-	WS	HM	PL	P	13	2	17	24B	C	-
225	3'-0" X 7'-2"	B/F1	1 3/4"	-	30	Y	-	-	WS	HM	PL	FF	19	19	19	20	-	CARD ACCESS, BOTTOM SEAL
226	3'-0" X 7'-2"	D/F9	1 3/4"	-	31	Y	-	-	AL	AL	FF	FF	15	1	15	24B	-	CARD ACCESS
227	3'-0" X 7'-2"	B/F1	1 3/4"	45	32	Y	-	-	WS	HM	PL	P	13	13	17	24B	-	-
228	3'-0" X 7'-2"	B/F1	1 3/4"	-	33	Y	-	-	WS	HM	PL	P	13	14	14	24F	-	-
229	3'-0" X 7'-2"	B/F1	1 3/4"	45	32	Y	-	-	WS	HM	PL	P	13	13	17	24B	-	-
230	3'-0" X 7'-2"	E/F1	1 3/4"	-	5	Y	-	-	WS	HM	PL	P	13	16	17	-	-	-
231	3'-0" X 7'-2"	E/F1	1 3/4"	-	5	Y	-	-	WS	HM	PL	P	13	13	16	-	C	-
232	3'-0" X 7'-2"	B/F1	1 3/4"	-	6	Y	-	-	WS	HM	PL	P	13	13	13	6,7/A5.7	-	-
233A	3'-0" X 7'-2"	E/F1	1 3/4"	-	5	Y	-	-	WS	HM	PL	P	13	13	18	24E	C	-
233B	3'-0" X 7'-2"	E/F1	1 3/4"	-	5	Y	-	-	WS	HM	PL	P	13	13	17	24E	C	-
301A	3'-0" X 7'-2"	E/F1	1 3/4"	-	9	Y	-	-	WS	HM	PL	P	13	13	13	24B	C	-
301B	3'-0" X 7'-2"	B/F1	1 3/4"	-	5	Y	-	-	WS	HM	PL	P	13	13	13	-	-	-
302	3'-0" X 7'-2"	E/F1	1 3/4"	-	5	Y	-	-	WS	HM	PL	P	13	13	17	24B	C	-
303	3'-0" X 7'-2"	B/F1	1 3/4"	-	24	-	-	-	WS	HM	PL	P	13	13	13	24B	C	-
304A	3'-0" X 7'-2"	D/F3	1 3/4"	-	25	Y	Y	-	AL	AL	FF	FF	1	-	-	3/A5.5	A	EXTERIOR, CARD ACCESS
304B	24'-8" X 10'-0"	G	1 3/4"	-	14	-	-	-	AL	AL	FF	FF	5	7	7	6	A	SEVEN FOLD
304C	3'-0" X 7'-2"	E/F1	1 3/4"	-	5	Y	-	-	WS	HM	PL	P	13	13	13	24B	C	-
305	3'-0" X 7'-2"	B/F1	1 3/4"	-	4	Y	-	-	WS	HM	PL	P	13	13	13	24B	-	CARD ACCESS
306	3'-0" X 7'-2"	E/F1	1 3/4"	-	5	Y	-	-	WS	HM	PL	P	13	13	17	-	C	-
308	3'-0" X 7'-2"	E/F1	1 3/4"	-	5	Y	-	-	WS	HM	P	P	13	13	18	-	C	-
310A	3'-0" X 7'-2"	B/F1	1 3/4"	60	35	Y	Y	-	WS	HM	PL	P	13	13	17	-	-	CARD ACCESS
310B	3'-0" X 7'-2"	B/F1	1 3/4"	60	35	Y	Y	-	WS	HM	PL	P	13	13	17	-	-	CARD ACCESS
311	3'-0" X 7'-2"	D/F1	1 3/4"	-	12	Y	Y	-	WS	HM	PL	P	13	13	17	-	C	-
312	3'-0" X 7'-2"	D/F1	1 3/4"	-	12	Y	Y	-	WS	HM	PL	P	13	13	17	-	C	-
314	3'-0" X 7'-2"	C/F1	1 3/4"	-	9	Y	-	-	WS	HM	PL	P	13	13	13	24B	C	-
315	3'-0" X 7'-2"	D/F1	1 3/4"	-	27	Y	-	-	WS	HM	PL	P	13	13	18	-	C	-
316	3'-0" X 7'-2"	B/F1	1 3/4"	-	15	Y	-	-	WS	HM	PL	P	13	13	17	-	-	-

AL = ALUMINUM
AN = ANODIZED
FF = FACTORY FINISH
HM = HOLLOW METAL
P = PAINTED FINISH
PL = PLASTIC LAMINATE
SG = SITE GATE
ST = STEEL
TG = TEMPERED GLAZING
WV = WOOD, VENEER
WS = WOOD, SOLID CORE GLAD
Y = YES

DOOR SCHEDULE AND NOTES

PBK
RANCHO CUCAMONGA
8163 ROCHESTER AVENUE, SUITE 100
RANCHO CUCAMONGA, CA 91730
909-987-0909 P

ONTARIO FIRE DEPARTMENT ADMINISTRATION BUILDING

CITY OF ONTARIO
1420 E. FRANCIS STREET., ONTARIO, CA

LICENSED ARCHITECT
KEVIN MEEDHAM
C-19064
Exp 03/31/25
STATE OF CALIFORNIA

CONSULTANT

NO	DATE	BY	DESCRIPTION

REVISIONS

DRAWN: RMZ
CHECKED:
DATE: 07/15/2022
SCALE:
PROJECT NUMBER: 2011700

DOOR SCHEDULE

DRAWING NUMBER: A5.1

BID SET 03/01/24

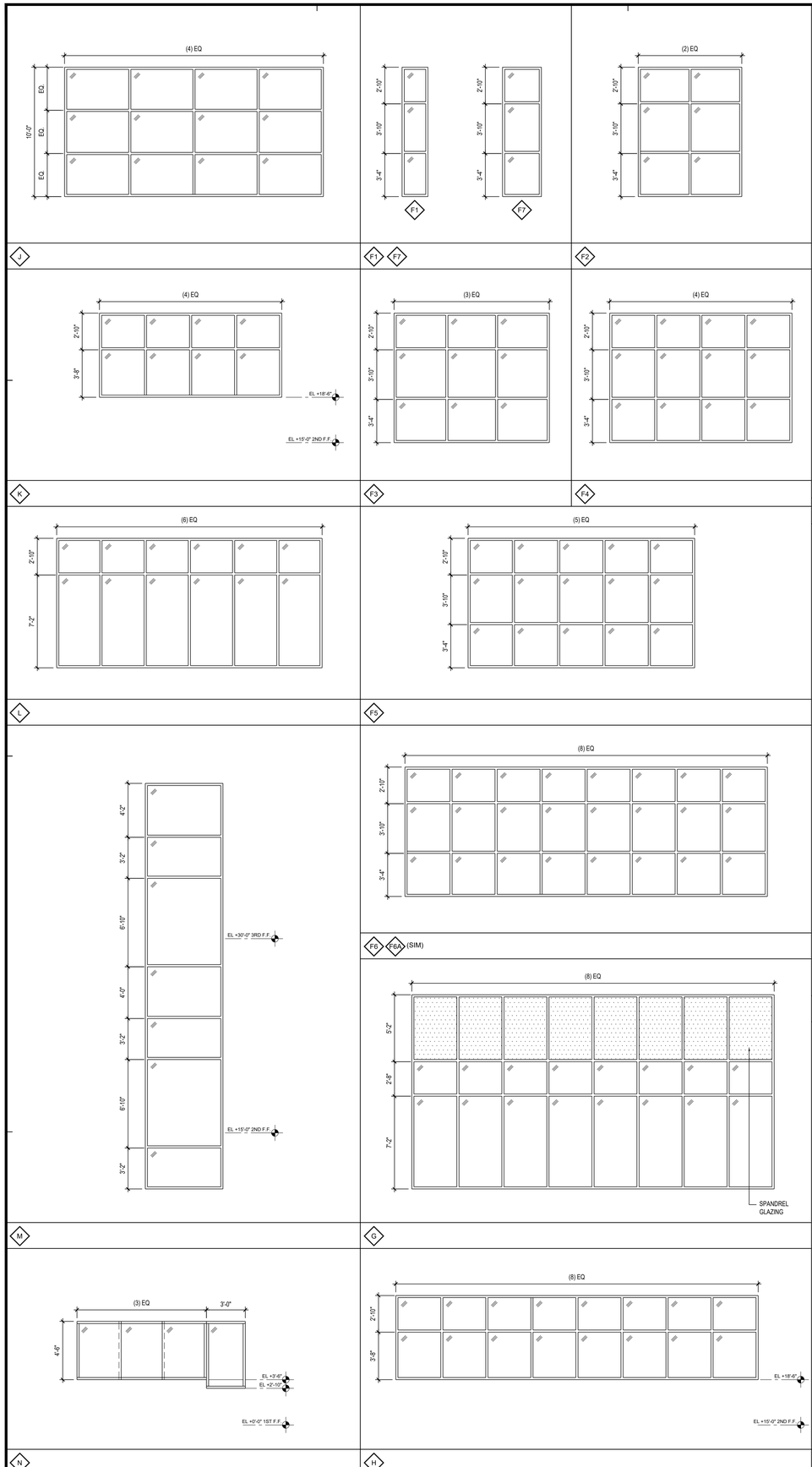

#	WINDOW SIZE	LABEL (MIN.)	GLAZING TYPE	GLAZING THICKNESS	FRAME MATERIAL	FRAME FINISH	DETAILS (SEE SHEET A5.6 & A5.7, U.N.O.) HEAD	JAMB	SILL	OTHER	ROLLER SHADE TYPES	REMARKS
A	3'-4" X 2'-10"	-	A	1"	HM	FF	4	5,6	-	-	-	TRANSOM
A1	7'-4" X 2'-10"	-	A	1"	HM	FF	3	3	-	-	-	TRANSOM
B1	5'-4" X 7'-2"	-	C	1/4"	HM	FF	3/A5.7	3/A5.7	4,8/A5.7	-	-	INTERIOR
B2	9'-4" X 7'-2"	-	C	1/4"	HM	FF	1/A5.7	1/A5.7	12/A5.7	-	-	INTERIOR
B3	15'-4" X 10'-0"	-	A	1"	AL	FF	1	20	8	-	4	-
B4	20'-0" X 10'-0"	-	C	1/4"	AL	FF	1/A5.7	1/A5.7	2/A5.7	-	3	INTERIOR
C1	20'-2" X 10'-0"	-	A	1"	AL	FF	1	2,19	7	-	3	-
C2	27'-6" X 10'-0"	-	A	1"	AL	FF	1	2,21	7	-	3	-
D1	27'-0" X 29'-0"	-	A	1"	AL	FF	9	10	11,23	6,7/A5.7	4	CURTAIN WALL SYSTEM. SPANDREL WHERE OCCURS
D2	27'-0" X 29'-0"	-	A	1"	AL	FF	9	10	11,23	6,7/A5.7	4	CURTAIN WALL SYSTEM. SPANDREL WHERE OCCURS
E	21'-2" X 25'-0"	-	A	1"	AL	FF	9	10	8,21,23	6,7/A5.7	4	CURTAIN WALL SYSTEM. SPANDREL WHERE OCCURS
F1	2'-0" X 10'-0"	-	A	1"	AL	FF	2	2	7	-	4	-
F2	8'-0" X 10'-0"	-	A	1"	AL	FF	1	2	7,8	-	4	-
F3	11'-4" X 10'-0"	-	A	1"	AL	FF	1	2	7	6,7/A5.7	4	-
F4	14'-0" X 10'-0"	-	A,F	1"	AL	FF	X	13	7,8	-	4	-
F5	17'-2" X 10'-0"	-	A	1"	AL	FF	21	15,20	8	-	4	-
F6	27'-0" X 10'-0"	-	A,F	1"	AL	FF	2,12	2,13	7,8,14	-	4	-
F6A	25'-8" X 10'-0"	-	A	1"	AL	FF	12	13,20	8	6,7/A5.7	4	-
F7	3'-0" X 10'-0"	-	A	1"	AL	FF	12	13	8	-	4	-
G	28'-0" X 15'-0"	-	A	1"	AL	FF	9	10	11,23	6,7/A5.7	4	CURTAIN WALL SYSTEM. SPANDREL WHERE OCCURS
H	28'-0" X 6'-6"	-	A	1"	AL	FF	15	15	16	-	4	-
J	20'-0" X 10'-0"	-	C	1/4"	AL	FF	1/A5.7	1/A5.7	4/A5.7	-	3	INTERIOR
K	14'-0" X 6'-6"	-	A	1"	AL	FF	15	15	16	-	4	-
L	20'-6" X 10'-0"	-	A	1"	AL	FF	12	13	11	-	4	-
M	5'-8" X 31'-4"	-	A	1"	AL	FF	9	17,18	11,23	-	-	CURTAIN WALL SYSTEM. SPANDREL WHERE OCCURS
N	13'-0" X 5'-2"	-	E	-	AL	FF	11/A5.7	9/A5.7	10,11/A5.7	-	-	-

MATERIAL/FINISH ABBREVIATIONS

AL	=	ALUMINUM
AN	=	ANODIZED
FF	=	FACTORY FINISH
HM	=	HOLLOW METAL
P	=	PAINTED FINISH
PL	=	PLASTIC LAMINATE
ST	=	STEEL
TG	=	TEMPERED GLAZING
WV	=	WOOD, VENEER
WS	=	WOOD, SOLID CORE
Y	=	YES

GLAZING TYPES:

TYPE A: INSULATED, 1" THICK, TINTED TEMPERED OUTER PANE, CLEAR TEMPERED INNER PANE, LOW E COATING VITRO SOLARBAN 90(2) SOLEXIA + CLEAR. U-VALUE = 0.29. SHGC = 0.22

TYPE B: TEMPERED, TINTED, 1/4" THICK, U.N.O.

TYPE C: TEMPERED, CLEAR, 1/4" THICK

TYPE D: FIRE RATED SAFETY GLAZING

TYPE E: LEVEL 3 BULLET RESISTANT, NON-RATED, CLEAR GLASS, POLISHED EDGES

TYPE F: GAUZY LIQUID CRYSTAL, 1" THICK, TINTED TEMPERED OUTER PANE, CLEAR TEMPERED INNER PANE, LOW IRON/ULTRA CLEAR. U-VALUE = 0.2, SHGC = 1.31

NOTE: REFERENCE MANUFACTURER INSTALLATION DETAILS.

ROLLER SHADE TYPES:

TYPE 1: MANUAL SINGLE SHADE

TYPE 2: MANUAL DOUBLE SHADE

TYPE 3: MOTORIZED SINGLE SHADE

TYPE 4: MOTORIZED DOUBLE SHADE

NOTE: ROLLER SHADE SHALL COVER ALL GLAZING AREAS

WINDOW SCHEDULE AND NOTES

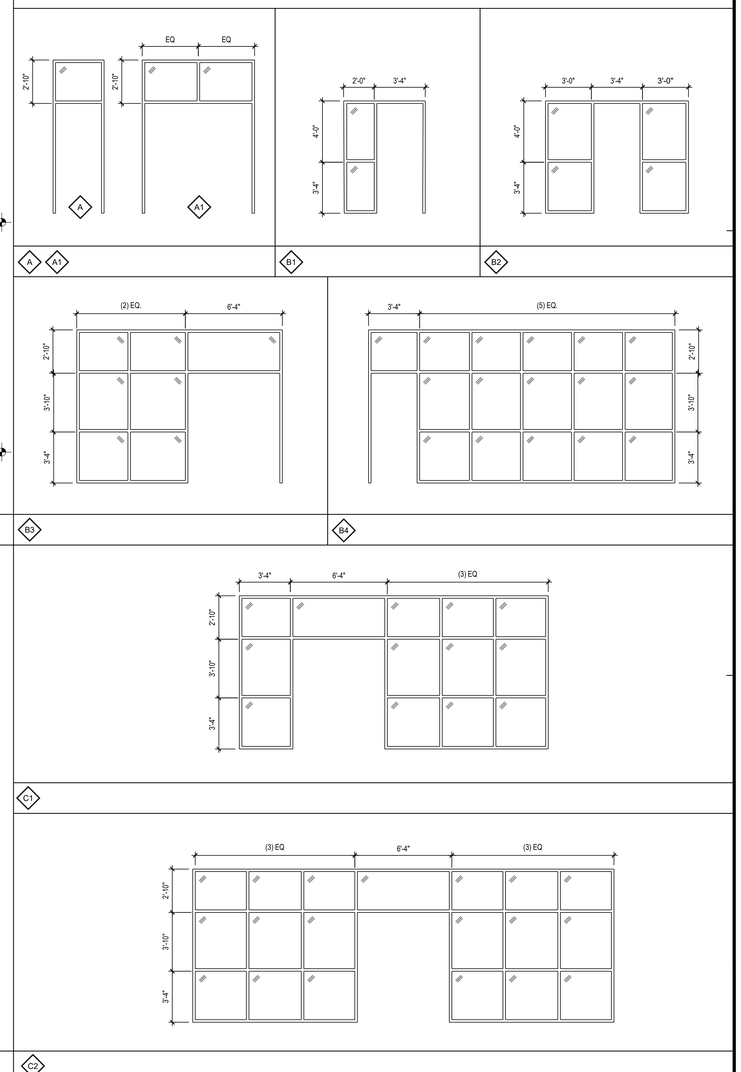

WINDOW TYPES

PBK
RANCHO CUCAMONGA
8163 ROCHESTER AVENUE, SUITE 100
RANCHO CUCAMONGA, CA 91730
909-987-0909 P

ONTARIO FIRE DEPARTMENT ADMINISTRATION BUILDING

CITY OF ONTARIO

1420 E. FRANCIS STREET., ONTARIO, CA

LICENSED ARCHITECT
KEVIN NEEDHAM
C-18064
exp 03/31/23
STATE OF CALIFORNIA

CONSULTANT

NO	DATE	BY	DESCRIPTION

REVISIONS

DRAWN: RMZ
CHECKED:
DATE: 07/15/2022
SCALE:
PROJECT NUMBER: 2011700

WINDOW SCHEDULE

DRAWING NUMBER: A5.2

BID SET 03/01/24

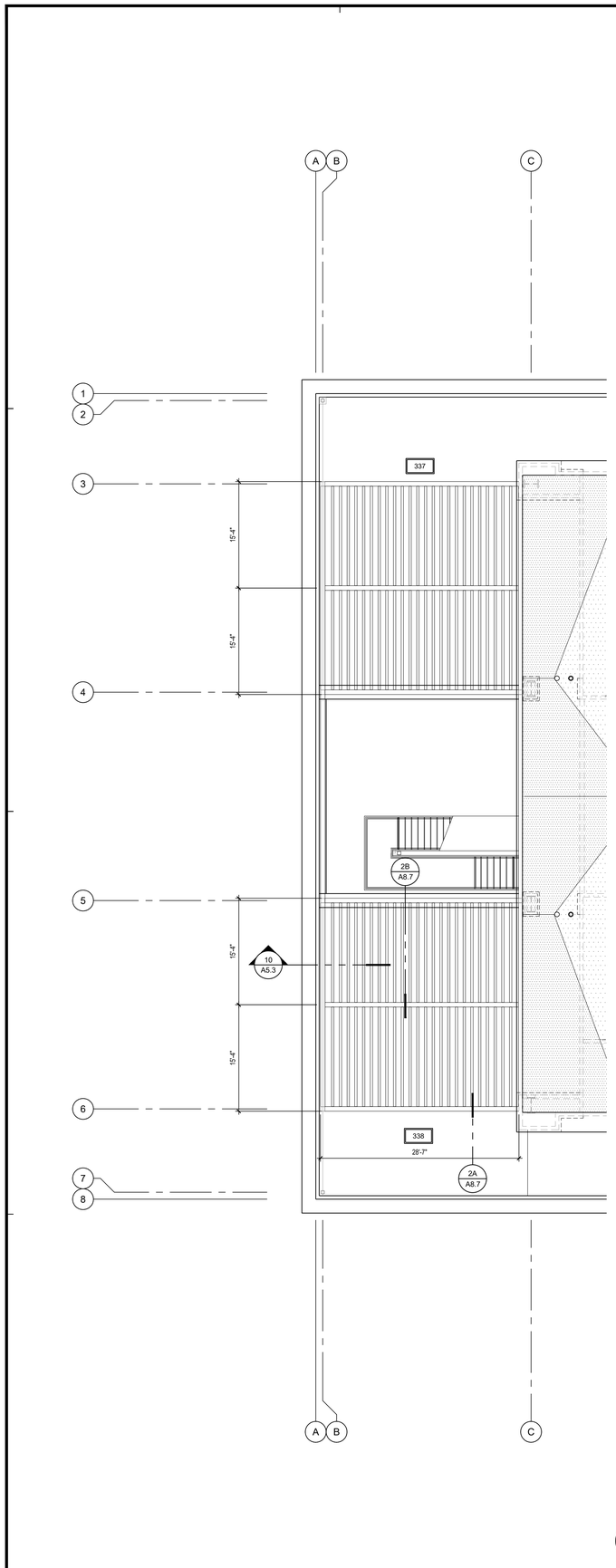

PARTIAL ENLARGED TRELLIS PLAN 1/8" = 1'-0" 20

#	ROOM NAME	BASE	FLOOR	WAINSCOT NORTH	WAINSCOT EAST	WAINSCOT SOUTH	WAINSCOT WEST	WALLS NORTH	WALLS EAST	WALLS SOUTH	WALLS WEST	INTERIOR ELEVATION SHEET	REMARKS
321	IDF OFFICE	RES	BT	-	-	-	-	GYP	GYP	GYP	GYP	-	
322	ELEVATOR CONTROL RM	RES	BT	-	-	-	-	GYP	GYP	GYP	GYP	-	
323	DAY ROOM	RES	CPT	-	-	-	-	GYP	GYP	GYP	GYP	12/A7.6	
324	WORKROOM	RES	BT	-	-	-	-	GYP	GYP	GYP	GYP	4/A7.6	
325	EMER MGMT COORD	RES	CPT	-	-	-	-	GYP	GYP	GYP	GYP	-	
326	OFFICE	RES	CPT	-	-	-	-	GYP	GYP	GYP	GYP	-	
327	BC OFFICE	RES	CPT	-	-	-	-	GYP	GYP	GYP	GYP	-	
328	DC OPERATIONS OFFICE	RES	CPT	"	"	"	"	GYP	GYP	GYP	GYP	"	
329	OPEN WORK STATIONS	RES	CPT	-	-	-	-	GYP	GYP	GYP	GYP	-	
330	ENGAGEMENT SUPER	RES	CPT	-	-	-	-	GYP	GYP	GYP	GYP	-	
331	TRAINING MGMT ANALYST	RES	CPT	-	-	-	-	GYP	GYP	GYP	GYP	-	
332	SR MGMT ANALYST	RES	CPT	-	-	-	-	GYP	GYP	GYP	GYP	-	
333	ADMIN OFFICER OFFICE	RES	CPT	-	-	-	-	GYP	GYP	GYP	GYP	-	
334	ADMIN DIRECTOR OFFICE	RES	CPT	-	-	-	-	GYP	GYP	GYP	GYP	-	
335	PATIO 2	RES	PED	-	-	-	-	GYP	GYP	GYP	GYP	-	
336	ROOF DECK NORTH	EXP	PED	-	-	-	-						
337	ROOF DECK SOUTH	EXP	PED	-	-	-	-						
338	STAIR - NORTH	RES	RES	-	-	-	-	GYP	GYP	GYP	GYP	-	
339	STAIR - SOUTH	RES	RES	-	-	-	-	GYP	GYP	GYP	GYP	-	

FINISH SCHEDULE

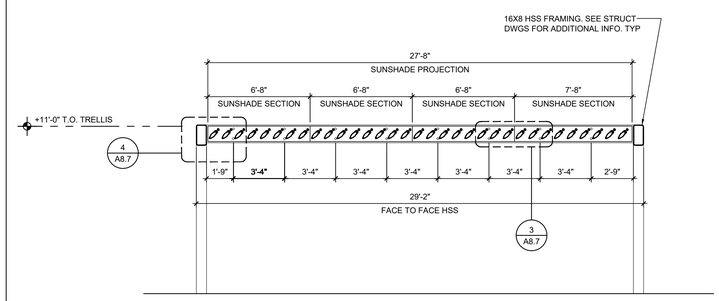

TRELLIS SECTION 1/4" = 1'-0" 10

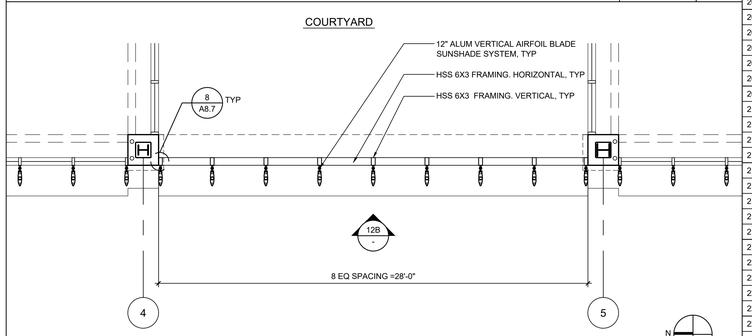

A PARTIAL FLOOR PLAN

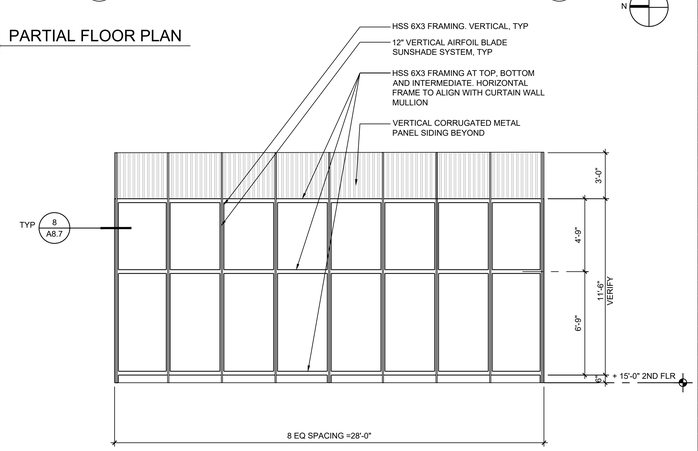

B WEST ELEVATION

NOTE:
SEE STRUCTURAL DRAWINGS FOR ADDITIONAL HSS FRAMING INFORMATION

VERTICAL SUNSHADE AT COURTYARD OPENING 1/4" = 1'-0" 12

#	ROOM NAME	BASE	FLOOR	WAINSCOT NORTH	WAINSCOT EAST	WAINSCOT SOUTH	WAINSCOT WEST	WALLS NORTH	WALLS EAST	WALLS SOUTH	WALLS WEST	INTERIOR ELEVATION SHEET	REMARKS
101	LOBBY	RES	BT	-	-	-	-	GYP	GYP	GYP	GYP	9/A-7.1	
102	PUBLIC RESTROOM	POR	POR	-	-	-	-	POR	POR	POR	POR	6/A-7.1	
103	ADMIN OPEN OFFICE	RES	CPT	-	-	-	-	GYP	GYP	GYP	GYP	5/A7.1	
104	LARGE CONFERENCE RM.	RES	CPT	-	-	-	-	GYP	GYP	GYP	GYP	15/A7.1	
105	ELECTRICAL ROOM	RES	CONC	-	-	-	-	GYP	GYP	GYP	GYP	-	-
106	STORAGE	RES	CONCP	-	-	-	-	GYP	GYP	GYP	GYP	-	-
107	STORAGE	RES	CONCP	-	-	-	-	GYP	GYP	GYP	GYP	3/A7.1	-
108	COPY ROOM	RES	CONCP	-	-	-	-	GYP	GYP	GYP	GYP	16/A7.1	-
109	EMS STORAGE ROOM	RES	CONCP	-	-	-	-	GYP	GYP	GYP	GYP	4/A7.1	
110	EMS SKILLS ROOM	RES	CPT	-	-	-	-	GYP	GYP	GYP	GYP	17/A7.2	
111	EMS DIRECTOR'S OFFICE	RES	CPT	-	-	-	-	GYP	GYP	GYP	GYP	-	
112	EMS NURSE'S OFFICE	RES	CPT	-	-	-	-	GYP	GYP	GYP	GYP	-	
113	EMS NURSE'S OFFICE	RES	CPT	-	-	-	-	GYP	GYP	GYP	GYP	-	
114	EMS CAPTAIN'S OFFICE	RES	CPT	-	-	-	-	GYP	GYP	GYP	GYP	-	
115	OFFICE	RES	CPT	-	-	-	-	GYP	GYP	GYP	GYP	-	
116	EMS ADMIN WORKSTA.	RES	CPT	-	-	-	-	GYP	GYP	GYP	GYP	-	
117	DC OFFICE	RES	CPT	-	-	-	-	GYP	GYP	GYP	GYP	-	
118	TRAINING CAPT. OFFICE	RES	CPT	-	-	-	-	GYP	GYP	GYP	GYP	-	
119	TRAINING CAPT. OFFICE	RES	CPT	-	-	-	-	GYP	GYP	GYP	GYP	-	
120	WELLNESS CAPT OFFICE	RES	CPT	-	-	-	-	GYP	GYP	GYP	GYP	-	
121	LOGISTICS CAPT OFFICE	RES	CPT	-	-	-	-	GYP	GYP	GYP	GYP	-	
122	HALLWAY - NORTH	SS	CONCP	-	-	-	-	GYP	GYP	GYP	GYP	-	
123	HALLWAY - CENTRAL	SS	CONCP	-	-	-	-	GYP	GYP	GYP	GYP	-	
124	HALLWAY - SOUTH	SS	CONCP	-	-	-	-	GYP	GYP	GYP	GYP	-	
125	HALLWAY - EAST	SS	CONCP	-	-	-	-	GYP	GYP	GYP	GYP	-	
126	HALLWAY - WEST	SS	CONCP	-	-	-	-	GYP	GYP	GYP	GYP	-	
127	DFM OFFICE	RES	CPT	-	-	-	-	GYP	GYP	GYP	GYP	-	
128	DC FIRE MARSHALL	RES	CPT	-	-	-	-	GYP	GYP	GYP	GYP	-	
129	FIRE PROTECT ANALYST	RES	CPT	-	-	-	-	GYP	GYP	GYP	GYP	-	
130	SR. FIRE SPC OFFICE	RES	CPT	-	-	-	-	GYP	GYP	GYP	GYP	-	
131	FIRE SPC/PERMIT TECH	RES	CPT	-	-	-	-	GYP	GYP	GYP	GYP	-	
132	PLAN CHECKER OFFICE	RES	CPT	-	-	-	-	GYP	GYP	GYP	GYP	-	
133	LACTATION ROOM	RES	CPT	-	-	-	-	GYP	GYP	GYP	GYP	5/A7.2	
134	EXERCISE ROOM	RES	ATL	-	-	-	-	GYP	GYP	GYP	GYP	3/A7.2	
135	OPEN OFFICE	RES	CPT	-	-	-	-	GYP	GYP	GYP	GYP	-	
136	VESTIBULE	RES	CONCP	-	-	-	-	GYP	GYP	GYP	GYP	-	
137	MALE RESTROOM	POR	POR	-	-	-	-	POR/GYP	POR	GYP	GYP	10/A7.2	
138	JANITOR'S CLOSET	RES	CONC	-	-	-	-	GYP	GYP	GYP	GYP	20/A7.2	
139	VESTIBULE	RES	CONCP	-	-	-	-	GYP	GYP	GYP	GYP	-	
140	FEMALE RESTROOM	POR	POR	-	-	-	-	GYP	GYP	GYP	GYP	4/A7.2	
141	IDF ROOM	RES	CONCP	-	-	-	-	GYP	GYP	GYP	GYP	-	
142	BREAK ROOM	RES	CONCP	-	-	-	-	GYP	GYP	GYP	GYP	13/A7.3	
143	MALE SHWRS/LOCKERS	POR	POR	-	-	-	-	POR	POR	POR	POR	10/A7.3	
144	FEMALE SHWRS/LOCKERS	POR	POR	-	-	-	-	POR	POR	POR	POR	10/A7.3	
145	STAIR - NORTH	CONCP	RES	-	-	-	-	GYP	GYP	GYP	GYP	-	
146	FIRE RISER CLOSET	CONC	CONC	-	-	-	-	GYP	GYP	GYP	GYP	-	
147	STAIR - SOUTH	CONCP	RES	-	-	-	-	GYP	GYP	GYP	GYP	-	
201	DISPATCH FLOOR	RES	ASC	-	-	-	-	GYP	GYP	GYP	GYP	7/A7.3	
202	FIRE DISPATCH SUPRV	RES	CPT	-	-	-	-	GYP	GYP	GYP	GYP	3/A7.3	
203	STORAGE	RES	LVT	-	-	-	-	GYP	GYP	GYP	GYP	5/A7.3	
204	TRAINING/MULTI-USE RM.	RES	CPT	-	-	-	-	GYP	GYP	GYP	GYP	6/A7.3	
205	DISPATCH TRAINING RM.	RES	ASC	-	-	-	-	GYP	GYP	GYP	GYP	-	
206	LOCKERS	RES	LVT	-	-	-	-	GYP	GYP	GYP	GYP	12/A7.3	
207	FIRE COMM. MANAGER	RES	CPT	-	-	-	-	GYP	GYP	GYP	GYP	-	
208	OPEN CONF./CLASS RM.	RES	BT	-	-	-	-	GYP	GYP	GYP	GYP	-	
209	E.O.C. FLOOR	RES	ASC	-	-	-	-	GYP	GYP	GYP	GYP	4/A7.4	
210	E.O.C. EQUIPMENT ROOM	RES	ASC	-	-	-	-	GYP	GYP	GYP	GYP	-	
211	HALLWAY - NORTH	SS	BT	-	-	-	-	GYP	GYP	GYP	GYP	-	
212	HALLWAY - CENTRAL	SS	BT	-	-	-	-	GYP	GYP	GYP	GYP	-	
213	HALLWAY - EAST	SS	BT	-	-	-	-	GYP	GYP	GYP	GYP	21/A7.4	
214	HALLWAY - SOUTH	SS	BT	-	-	-	-	GYP	GYP	GYP	GYP	17/A7.4	
215	DAY ROOM	RES	CPT	-	-	-	-	GYP	GYP	GYP	GYP	10/A7.4	
216	DINING	RES	BT	-	-	-	-	GYP	GYP	GYP	GYP	-	
217	KITCHEN	RES	BT	-	-	-	-	GYP	GYP	GYP	GYP	5/A7.4	
218	RADIO EQUIPMENT RM.	RES	LVT	-	-	-	-	GYP	GYP	GYP	GYP	-	
219	VESTIBULE	RES	BT	-	-	-	-	GYP	GYP	GYP	GYP	-	
220	MALE RESTROOM	POR	POR	-	-	-	-	POR	POR	POR	POR	10/A7.2	
221	JANITOR'S CLOSET	POR	BT	-	-	-	-	POR/GYP	POR	GYP	GYP	20/A7.2	
222	VESTIBULE	RES	BT	-	-	-	-	GYP	GYP	GYP	GYP	-	
223	FEMALE RESTROOM	POR	POR	-	-	-	-	POR	POR	POR	POR	4/A7.2	
224	SHARED WORKSPACE	RES	CPT	-	-	-	-	GYP	GYP	GYP	GYP	-	
225	MDF ROOM	RES	LVT	-	-	-	-	GYP	GYP	GYP	GYP	-	
226	E.O.C. BREAKOUT ROOM	RES	CPT	-	-	-	-	GYP	GYP	GYP	GYP	6/A7.4	
227	QUIET ROOM 1	RES	CPT	-	-	-	-	GYP	GYP	GYP	GYP	5/A7.5	
228	BATHROOM	POR	POR	-	-	-	-	GYP	GYP	GYP	GYP	14/A7.4	
229	QUIET ROOM 2	RES	CPT					GYP	GYP	GYP	GYP	5/A7.4	
230	EMERGENCY MGR	RES	CPT	-	-	-	-	GYP	GYP	GYP	GYP	7/A7.5	
231	EMERGENCY COORD	RES	CPT	-	-	-	-	GYP	GYP	GYP	GYP	6/A7.5	
232	STORAGE	RES	LVT	-	-	-	-	GYP	GYP	GYP	GYP	-	
233	E.O.C. CONFERENCE RM.	RES	CPT	-	-	-	-	GYP	GYP	GYP	GYP	4/A7.5	
234	COVERED PATIO	TRF	PED	-	-	-	-						
235	PATIO 1	EXP	PED	-	-	-	-						
236	STAIR - NORTH	RES	RES	-	-	-	-	GYP	GYP	GYP	GYP	-	
237	STAIR - SOUTH	RES	RES	-	-	-	-	GYP	GYP	GYP	GYP	-	
301	FIRE CHIEF OFFICE	RES	CPT	-	-	-	-	GYP	GYP	GYP	GYP	-	
302	SR. ADMIN. ASSIST. OFC	RES	CPT	-	-	-	-	GYP	GYP	GYP	GYP	-	
303	STORAGE	RES	LVT	-	-	-	-	GYP	GYP	GYP	GYP	5/A7.6	
304	OPEN CONF./CLASSRM.	RES	CPT	-	-	-	-	GYP	GYP	GYP	GYP	-	
305	SECURED FILES ROOM	RES	LVT	-	-	-	-	GYP	GYP	GYP	GYP	6/A7.6	
306	DC LOGISTICS OFFICE	RES	CPT	-	-	-	-	GYP	GYP	GYP	GYP	-	
307	WELLNESS ADMIN ASSIST	RES	CPT	-	-	-	-	GYP	GYP	GYP	GYP	-	
308	DC WELLNESS OFFICE	RES	CPT	-	-	-	-	GYP	GYP	GYP	GYP	-	
309	WAITING VESTIBULE	RES	BT	-	-	-	-	GYP	GYP	GYP	GYP	-	
310	HALLWAY - CENTRAL	SS	BT	-	-	-	-	GYP	GYP	GYP	GYP	-	
311	HALLWAY - NORTH	SS	BT	-	-	-	-	GYP	GYP	GYP	GYP	-	
312	HALLWAY - EAST	SS	BT	-	-	-	-	GYP	GYP	GYP	GYP	-	
313	HALLWAY - SOUTH	SS	BT	-	-	-	-	GYP	GYP	GYP	GYP	-	
314	WORKRM. AND STORAGE	RES	LVT	-	-	-	-	GYP	GYP	GYP	GYP	3/A7.6	
315	BREAK ROOM	RES	BT	-	-	-	-	GYP	GYP	GYP	GYP	16/A7.6	
316	VESTIBULE	RES	BT	-	-	-	-	GYP	GYP	GYP	GYP	-	
317	MALE RESTROOM	POR	POR	-	-	-	-	POR	POR	POR	POR	10/A7.2	
318	JANITOR'S CLOSET	POR	BT	-	-	-	-	POR/GYP	POR	GYP	GYP	20/A7.2	
319	VESTIBULE	RES	BT	-	-	-	-	GYP	GYP	GYP	GYP	-	
320	FEMALE RESTROOM	POR	POR	-	-	-	-	POR	POR	POR	POR	4/A7.2	

FINISH SCHEDULE 1/4" = 1'-0" 12

MATERIAL/FINISH ABBREVIATIONS

ATL	=	ATHLETIC FLOORING
ASC	=	ANTI STATIC CARPET TILE
CER	=	CERAMIC TILE
CONC	=	EXPOSED CONCRETE WITH CHEMICAL HARDENER
CONCP	=	EXPOSED CONCRETE POLISHED
CPT	=	CARPET TILE
BT	=	BIOPILYMER TERRAZZO
LVT	=	LUXURY VINYL TILE
PED	=	PEDESTAL PAVER
TRF	=	TRAFFIC COATING
MRG	=	MOISTURE RESISTANT GYPSUM BOARD
GYP	=	GYPSUM BOARD, PAINTED
POR	=	PORCELAIN TILE
RES	=	RESILIENT BASE, RESILIENT FLOORING
EXP	=	EXTERIOR PLASTER
SS	=	STAINLESS STEEL

PBK
RANCHO CUCAMONGA
8163 ROCHESTER AVENUE, SUITE 100
RANCHO CUCAMONGA, CA 91730
909-987-0909 P

ONTARIO FIRE DEPARTMENT ADMINISTRATION BUILDING

CITY OF ONTARIO

1420 E. FRANCIS STREET., ONTARIO, CA

LICENSED ARCHITECT
KEVIN NEEDHAM
C-19064
Exp. 03/31/24
STATE OF CALIFORNIA

CONSULTANT

NO	DATE	BY	DESCRIPTION

REVISIONS

DRAWN: RMZ
CHECKED:
DATE: 07/15/2022
SCALE:
PROJECT NUMBER: 2011700

FINISHES SCHEDULE

DRAWING NUMBER: A5.3

BID SET 03/01/24

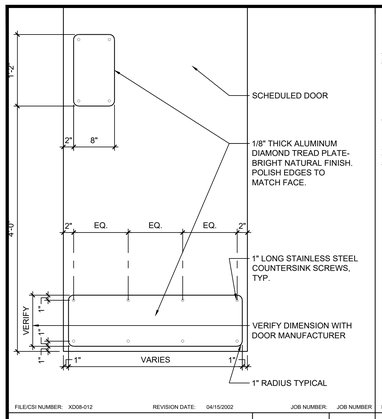

FILE/CSI NUMBER: XD08-012 REVISION DATE: 04/15/2002 JOB NUMBER: JOB NUMBER

KICK / PUSH PLATES 1"=1'-0" 21

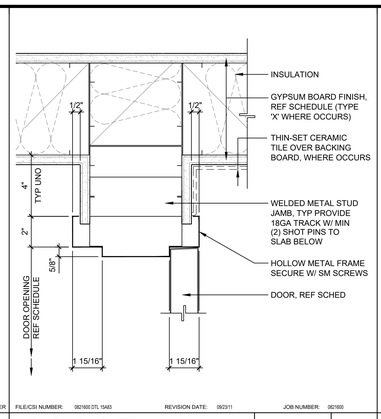

FILE/CSI NUMBER: 082160 DTL 1&4B REVISION DATE: 09/23/11 JOB NUMBER: 082160

JAMB 3" = 1'-0" 17

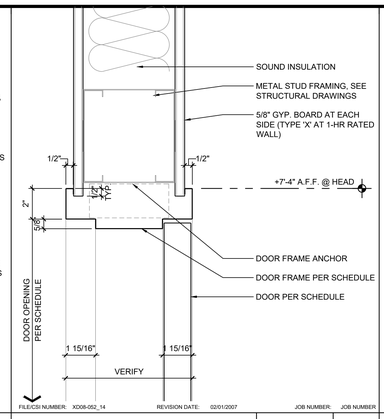

FILE/CSI NUMBER: XD08-052_14 REVISION DATE: 02/01/2007 JOB NUMBER: JOB NUMBER

INT HEAD/JAMB SIM. 3"=1'-0" 13

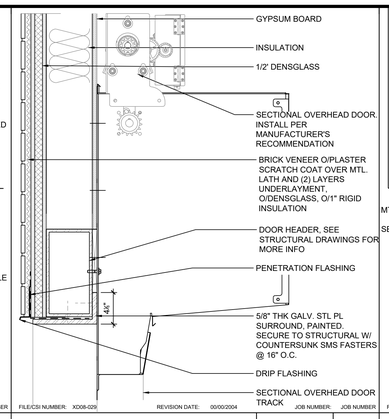

FILE/CSI NUMBER: XD08-029 REVISION DATE: 00/00/2004 JOB NUMBER: JOB NUMBER

SECTIONAL OVERHEAD DOOR HEAD 1 1/2"=1'-0" 9

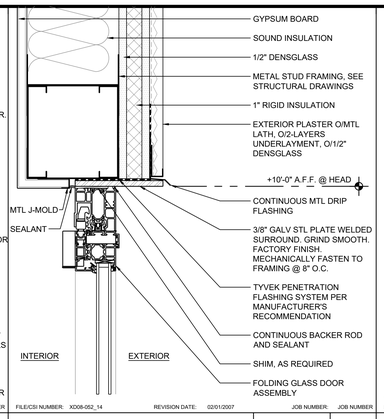

FILE/CSI NUMBER: XD08-052_14 REVISION DATE: 02/01/2007 JOB NUMBER: JOB NUMBER

FOLDING DOOR HEAD 3"=1'-0" 5

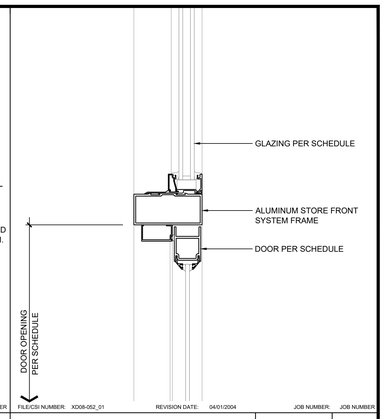

FILE/CSI NUMBER: XD08-052_01 REVISION DATE: 04/01/2004 JOB NUMBER: JOB NUMBER

HEAD/JAMB SIM. 3"=1'-0" 1

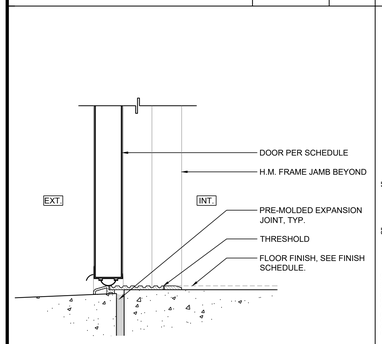

FILE/CSI NUMBER: XD08-052_18 REVISION DATE: 02/01/2007 JOB NUMBER: JOB NUMBER

EXTERIOR THRESHOLD 3"=1'-0" 22

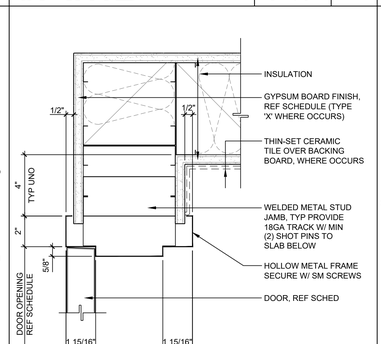

FILE/CSI NUMBER: 082160 DTL 1&4B REVISION DATE: 09/23/11 JOB NUMBER: 082160

JAMB 3" = 1'-0" 18

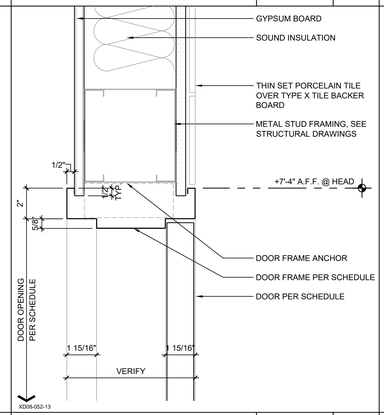

XD08-052-13

INT DOOR HEAD/JAMB SIM 3"=1'-0" 14

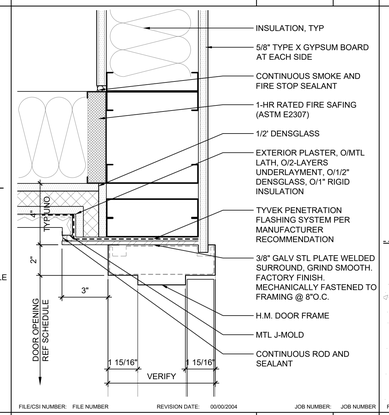

FILE/CSI NUMBER: FILE NUMBER REVISION DATE: 00/00/2004 JOB NUMBER: JOB NUMBER

JAMB 3"=1'-0" 10

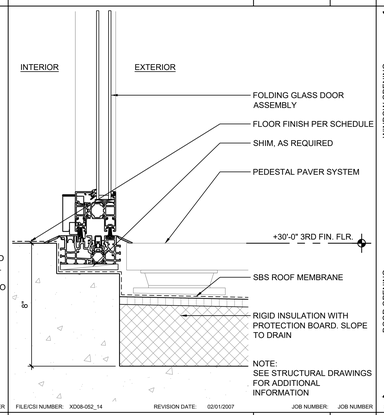

FILE/CSI NUMBER: XD08-052_14 REVISION DATE: 02/01/2007 JOB NUMBER: JOB NUMBER

FOLDING DR THRESH 3"=1'-0" 6

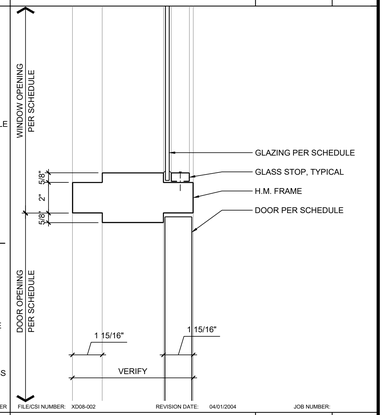

FILE/CSI NUMBER: XD08-002 REVISION DATE: 04/01/2004 JOB NUMBER:

HM HEAD/JAMB 3"=1'-0" 2

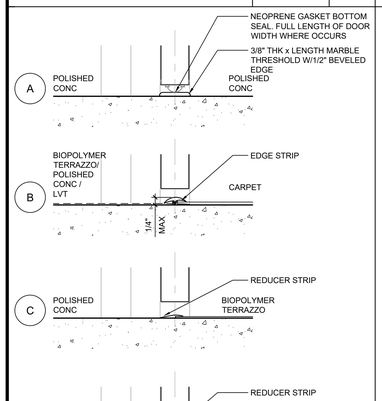

NOTE:
FIRE RATED DOORS CLEARANCES BETWEEN BOTTOM OF DOOR AND TOP OF THRESHOLD:
- SINGLE DOOR = 3/8"
- DOUBLE DOORS = 1/4"

FILE/CSI NUMBER: XD08-052_020 REVISION DATE: 02/01/2007 JOB NUMBER: JOB NUMBER

INTERIOR THRESHOLDS 3"=1'-0" 24

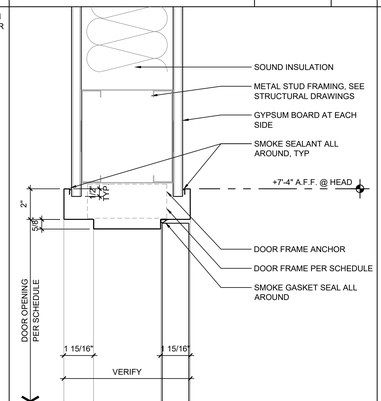

FILE/CSI NUMBER: XD08-052_14 REVISION DATE: 02/01/2007 JOB NUMBER: JOB NUMBER

INT HEAD/JAMB SIM. 3"=1'-0" 19

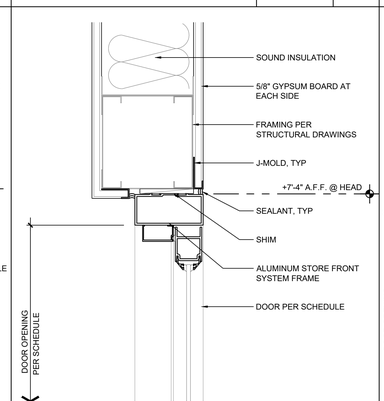

FILE/CSI NUMBER: XD08-052_01 REVISION DATE: 04/01/2004 JOB NUMBER: JOB NUMBER

INT HEAD/JAMB SIM. 3"=1'-0" 15

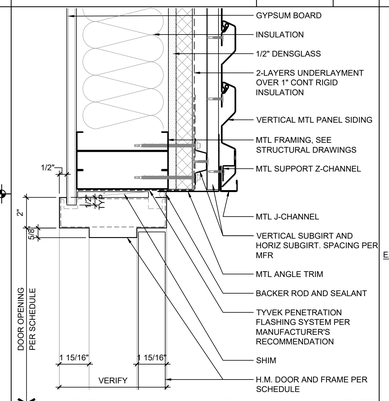

FILE/CSI NUMBER: REVISION DATE: JOB NUMBER: JOB NUMBER

JAMB 3"=1'-0" 11

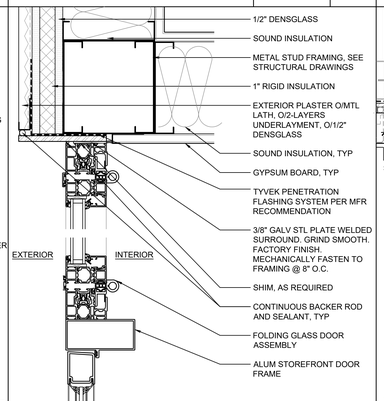

FILE/CSI NUMBER: XD08-052_14 REVISION DATE: 02/01/2007 JOB NUMBER: JOB NUMBER

FOLDING DOOR JAMB 3"=1'-0" 7

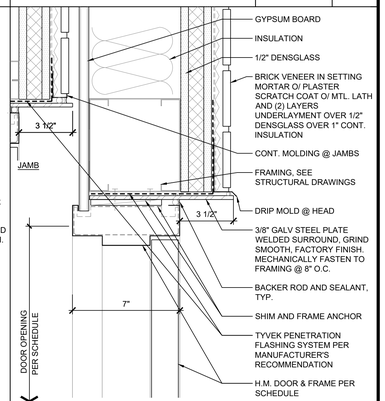

FILE/CSI NUMBER: XD08-052_06 REVISION DATE: 04/01/2004 JOB NUMBER: JOB NUMBER

HEAD/JAMB 3"=1'-0" 3

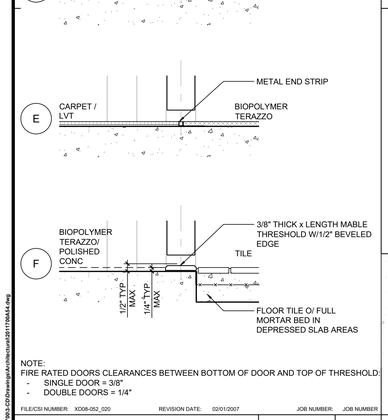

FILE/CSI NUMBER: XD08-052_18 REVISION DATE: 02/01/2007 JOB NUMBER: JOB NUMBER

THRESHOLD 3"=1'-0" 20

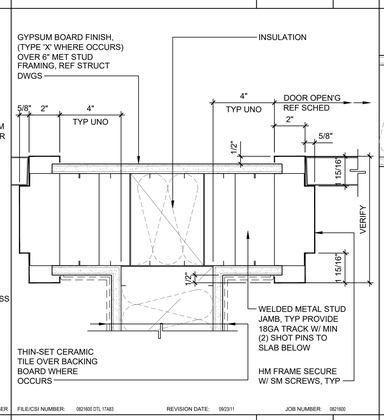

FILE/CSI NUMBER: 082160 DTL 1&4B REVISION DATE: 09/23/11 JOB NUMBER: 082160

JAMB 3" = 1'-0" 16

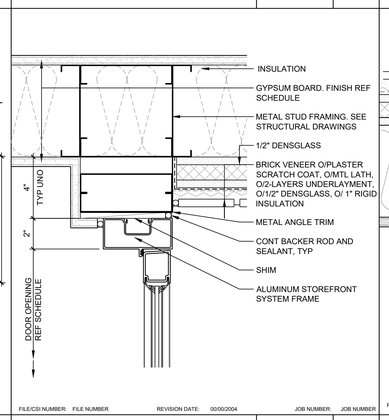

FILE/CSI NUMBER: FILE NUMBER REVISION DATE: 00/00/2004 JOB NUMBER: JOB NUMBER

JAMB 3"=1'-0" 12

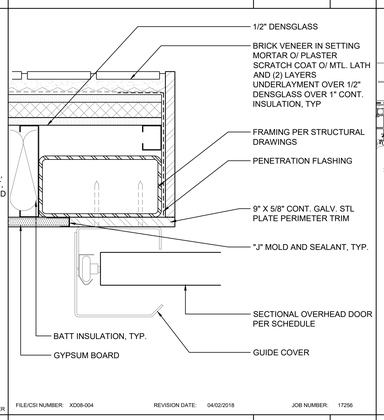

FILE/CSI NUMBER: XD08-004 REVISION DATE: 04/02/2018 JOB NUMBER: 17256

JAMB 3"=1'-0" 8

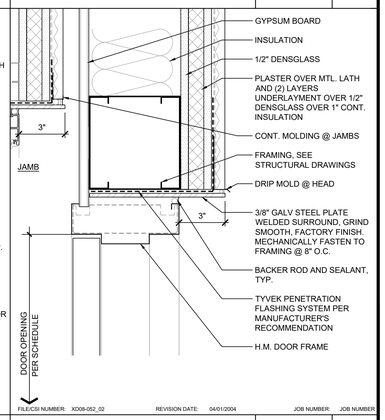

FILE/CSI NUMBER: XD08-052_02 REVISION DATE: 04/01/2004 JOB NUMBER: JOB NUMBER

HEAD/JAMB 3"=1'-0" 4

PBK
RANCHO CUCAMONGA
8163 ROCHESTER AVENUE, SUITE 100
RANCHO CUCAMONGA, CA 91730
909-987-0909 P

ONTARIO FIRE DEPARTMENT ADMINISTRATION BUILDING

CITY OF ONTARIO

1420 E. FRANCIS STREET., ONTARIO, CA

LICENSED ARCHITECT
KEVIN NEEDHAM
C-19064
Exp. 03/31/24
STATE OF CALIFORNIA

CONSULTANT

NO	DATE	BY	DESCRIPTION

REVISIONS

DRAWN: RMZ CHECKED:

DATE: 07/15/2022 SCALE:

PROJECT NUMBER: 2011700

DOOR DETAILS

DRAWING NUMBER: A5.4

BID SET 03/01/24

2/19/2024
U:\2020\2011700-5-CD\Drawings\Architectural\2011700A44.dwg

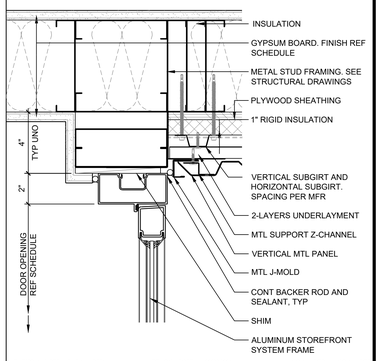

21 17 13 9 5 JAMB 3"=1'-0" 1

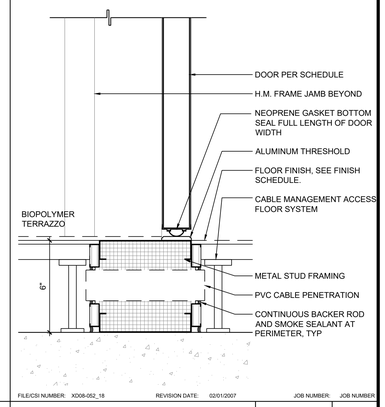

22 18 14 10 6 THRESHOLD 3"=1'-0" 2

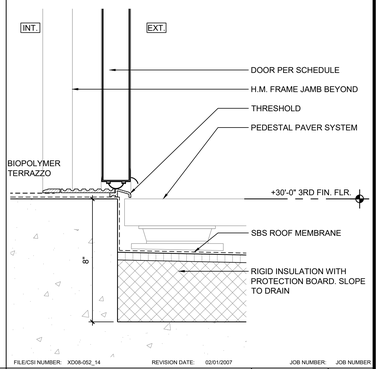

21 19 15 11 7 THRESHOLD 3"=1'-0" 3

24 20 16 12 8 4

PBK
RANCHO CUCAMONGA
8163 ROCHESTER AVENUE, SUITE 100
RANCHO CUCAMONGA, CA 91730
909-987-0909 P

ONTARIO FIRE DEPARTMENT ADMINISTRATION BUILDING

CITY OF ONTARIO

1420 E. FRANCIS STREET., ONTARIO, CA

LICENSED ARCHITECT
KEVIN NEEDHAM
C-19064
Exp. 03/31/25
STATE OF CALIFORNIA

CONSULTANT

NO	DATE	BY	DESCRIPTION

REVISIONS

DRAWN: RMZ	CHECKED:
DATE: 07/15/2022	SCALE:
PROJECT NUMBER: 2011700	

DOOR DETAILS

DRAWING NUMBER: A5.5

BID SET 03/01/24

2/28/2024
U:\2020\2011700\3-CD\Drawings\Architecture\A2011700A55.dwg

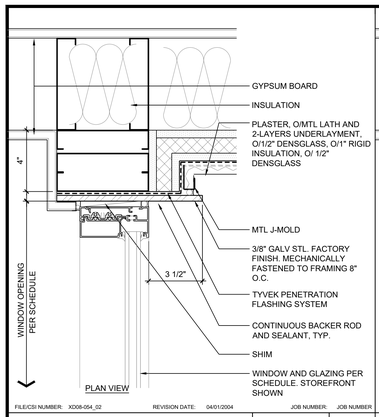

FILE/CSI NUMBER: XD08-054_02 REVISION DATE: 04/01/2004 JOB NUMBER: JOB NUMBER

JAMB @ INSIDE CORNER-PLASTER	3"=1'-0"	21

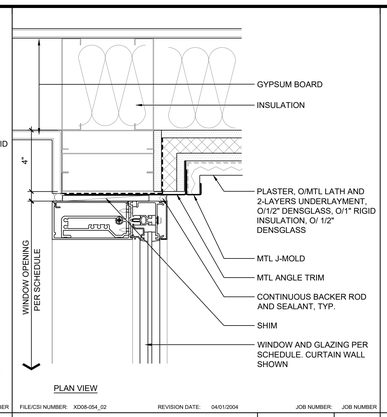

FILE/CSI NUMBER: XD08-054_02 REVISION DATE: 04/01/2004 JOB NUMBER: JOB NUMBER

JAMB @ INSIDE CORNER-PLASTER	3"=1'-0"	17

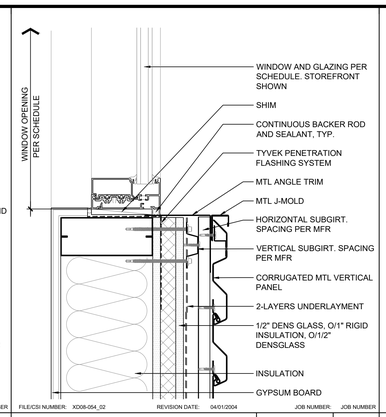

FILE/CSI NUMBER: XD08-054_02 REVISION DATE: 04/01/2004 JOB NUMBER: JOB NUMBER

JAMB	3"=1'-0"	13

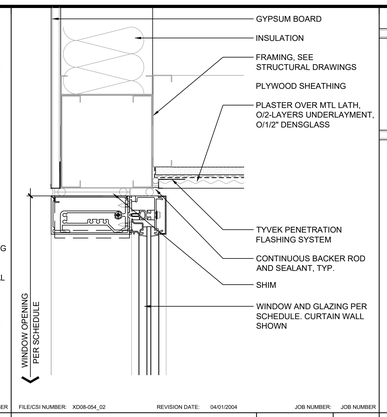

FILE/CSI NUMBER: XD08-054_02 REVISION DATE: 04/01/2004 JOB NUMBER: JOB NUMBER

HEAD/JAMB	3"=1'-0"	9

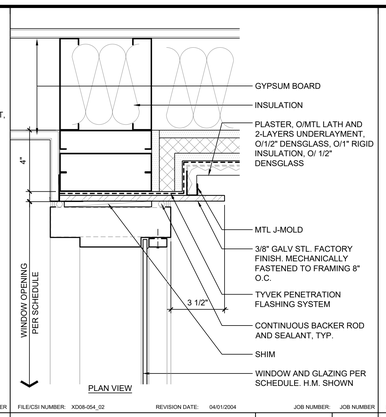

FILE/CSI NUMBER: XD08-054_02 REVISION DATE: 04/01/2004 JOB NUMBER: JOB NUMBER

JAMB @ INSIDE CORNER-PLASTER	3"=1'-0"	5

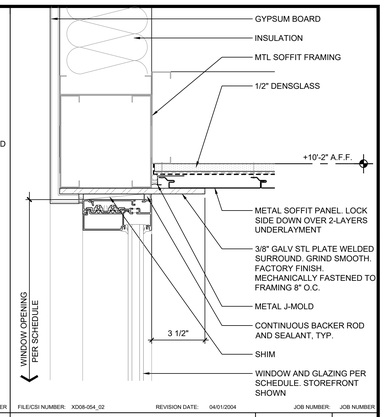

FILE/CSI NUMBER: XD08-054_02 REVISION DATE: 04/01/2004 JOB NUMBER: JOB NUMBER

HEAD AT SOFFIT	3"=1'-0"	1

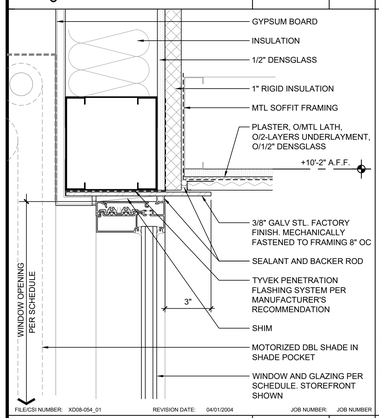

FILE/CSI NUMBER: XD08-054_01 REVISION DATE: 04/01/2004 JOB NUMBER: JOB NUMBER

HEAD AT SOFFIT	3"=1'-0"	22

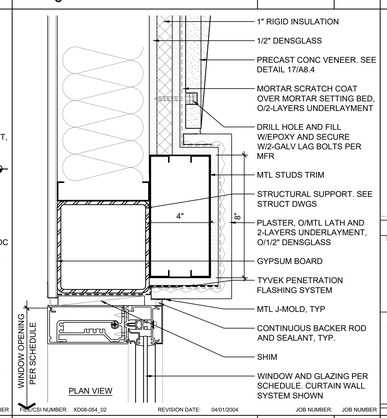

FILE/CSI NUMBER: XD08-054_02 REVISION DATE: 04/01/2004 JOB NUMBER: JOB NUMBER

JAMB	3"=1'-0"	18

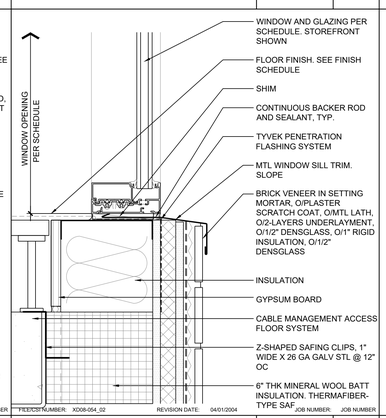

FILE/CSI NUMBER: XD08-054_02 REVISION DATE: 04/01/2004 JOB NUMBER: JOB NUMBER

SILL	3"=1'-0"	14

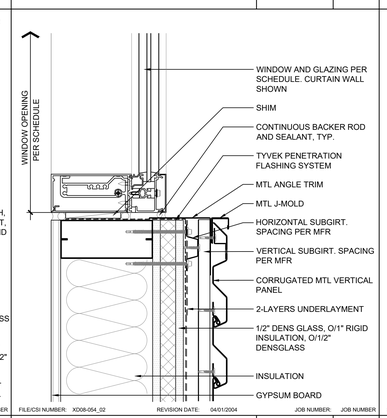

FILE/CSI NUMBER: XD08-054_02 REVISION DATE: 04/01/2004 JOB NUMBER: JOB NUMBER

JAMB	3"=1'-0"	10

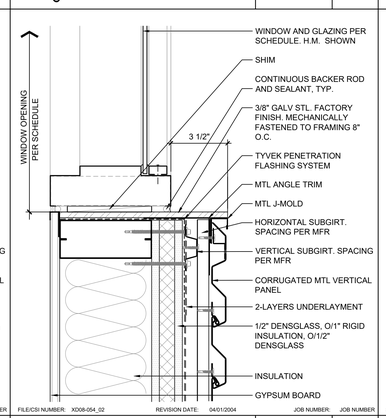

FILE/CSI NUMBER: XD08-054_02 REVISION DATE: 04/01/2004 JOB NUMBER: JOB NUMBER

JAMB	3"=1'-0"	6

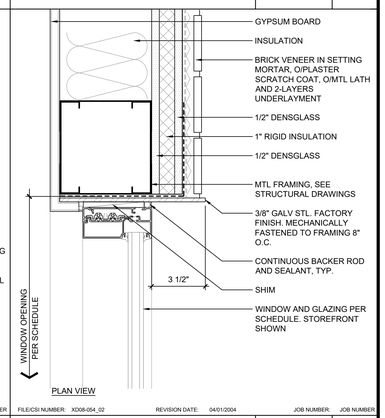

FILE/CSI NUMBER: XD08-054_02 REVISION DATE: 04/01/2004 JOB NUMBER: JOB NUMBER

HEAD/JAMB AT BRICK VENEER	3"=1'-0"	2

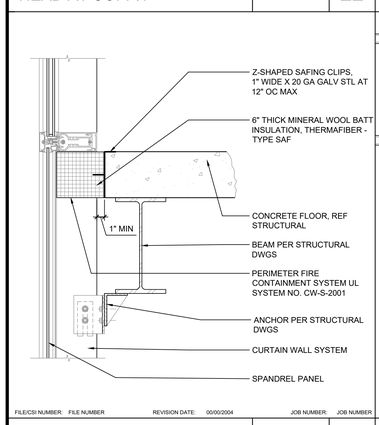

FILE/CSI NUMBER: FILE NUMBER REVISION DATE: 00/00/2004 JOB NUMBER: JOB NUMBER

CURTAIN WALL @ FLOOR	1 1/2"=1'-0"	23

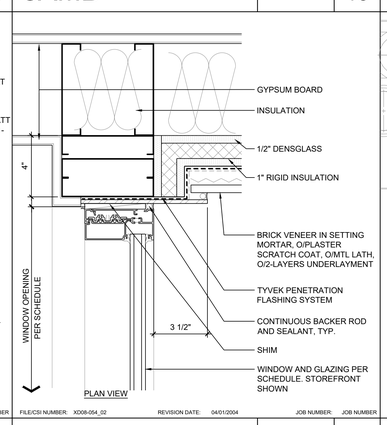

FILE/CSI NUMBER: XD08-054_02 REVISION DATE: 04/01/2004 JOB NUMBER: JOB NUMBER

JAMB @ INSIDE CORNER-BRICK VENEER	3"=1'-0"	19

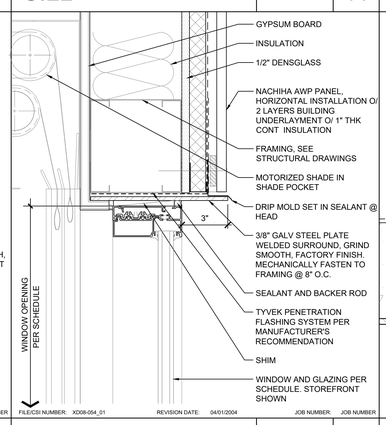

FILE/CSI NUMBER: XD08-054_01 REVISION DATE: 04/01/2004 JOB NUMBER: JOB NUMBER

HEAD/JAMB	3"=1'-0"	15

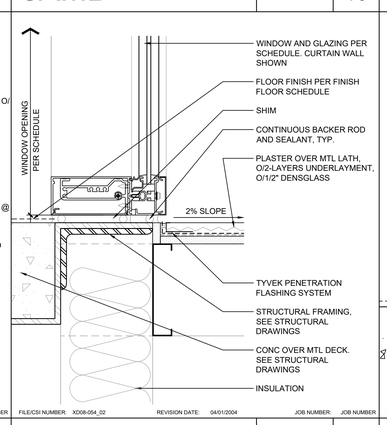

FILE/CSI NUMBER: XD08-054_02 REVISION DATE: 04/01/2004 JOB NUMBER: JOB NUMBER

SILL	3"=1'-0"	11

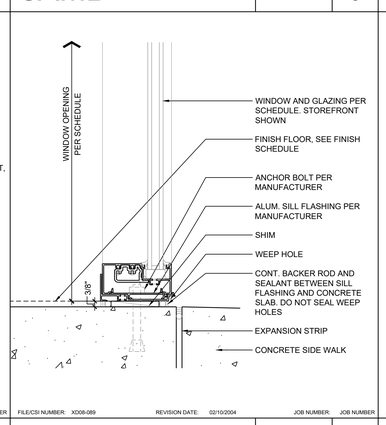

FILE/CSI NUMBER: XD08-089 REVISION DATE: 02/10/2004 JOB NUMBER: JOB NUMBER

SILL	3"=1'-0"	7

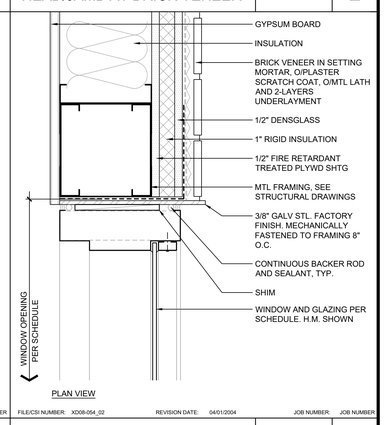

FILE/CSI NUMBER: XD08-054_02 REVISION DATE: 04/01/2004 JOB NUMBER: JOB NUMBER

HEAD/JAMB AT BRICK VENEER	3"=1'-0"	3

24	JAMB @ INSIDE CORNER-MTL PANEL	3"=1'-0" 20

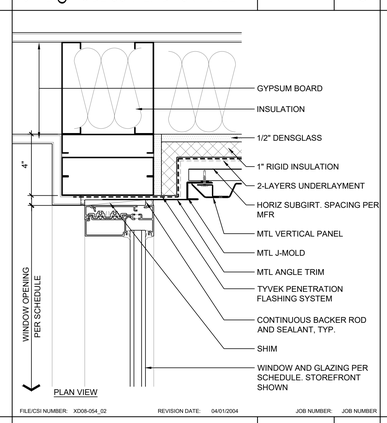

FILE/CSI NUMBER: XD08-054_02 REVISION DATE: 04/01/2004 JOB NUMBER: JOB NUMBER

SILL	3"=1'-0"	16

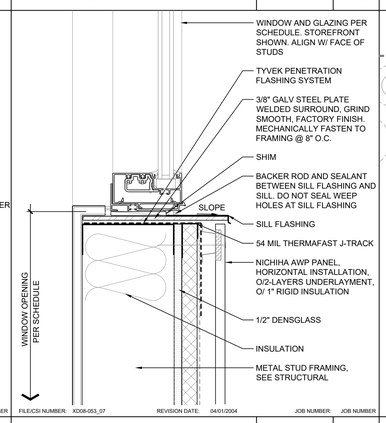

FILE/CSI NUMBER: XD08-053_07 REVISION DATE: 04/01/2004 JOB NUMBER: JOB NUMBER

HEAD	3"=1'-0"	12

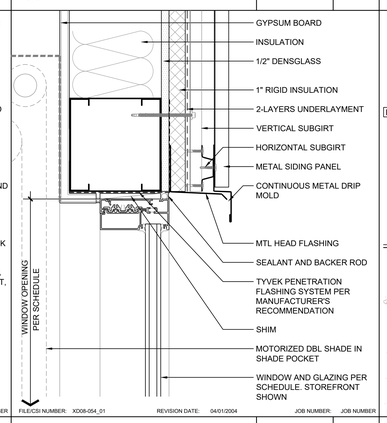

FILE/CSI NUMBER: XD08-054_01 REVISION DATE: 04/01/2004 JOB NUMBER: JOB NUMBER

SILL	3"=1'-0"	8

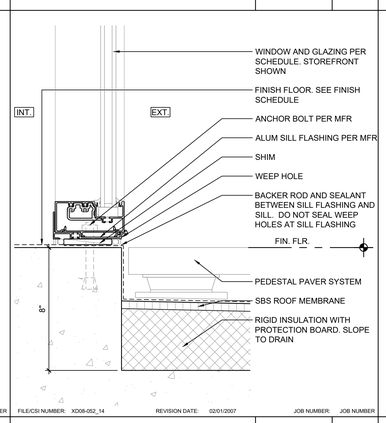

FILE/CSI NUMBER: XD08-052_14 REVISION DATE: 02/01/2007 JOB NUMBER: JOB NUMBER

HEAD AT SOFFIT	3"=1'-0"	4

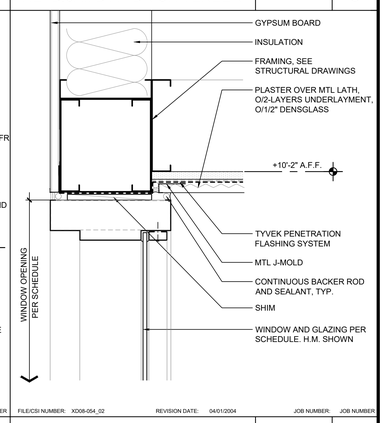

FILE/CSI NUMBER: XD08-054_02 REVISION DATE: 04/01/2004 JOB NUMBER: JOB NUMBER

HEAD AT SOFFIT	3"=1'-0"	4

PBK
RANCHO CUCAMONGA
8163 ROCHESTER AVENUE, SUITE 100
RANCHO CUCAMONGA, CA 91730
909-987-0909 P

ONTARIO FIRE DEPARTMENT ADMINISTRATION BUILDING

CITY OF ONTARIO

1420 E. FRANCIS STREET., ONTARIO, CA

LICENSED ARCHITECT
KEVIN NEEDHAM
C-19064
Exp. 03/31/24
STATE OF CALIFORNIA

CONSULTANT

NO	DATE	BY	DESCRIPTION

REVISIONS

DRAWN: RMZ	CHECKED: KN
DATE: 07/15/2022	SCALE: AS NOTED
PROJECT NUMBER: 2011700	

WINDOW DETAILS

DRAWING NUMBER: A5.6

BID SET 03/01/24

2/18/2024
L:\2020\2011700-3-OC\Drawings\Architectural\011700A15.dwg

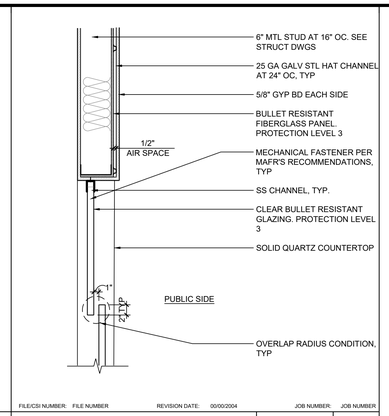

21 | 17 | 13 | TYPICAL BALLISTIC GLASS SPACING | 1"=1'-0"

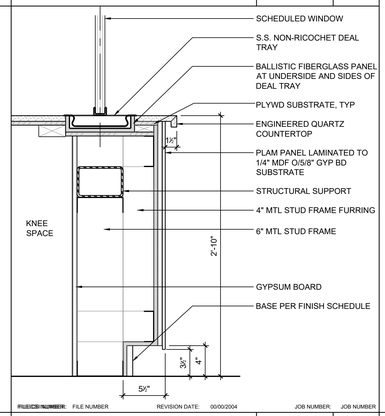

22 | 18 | 14 | LOBBY ADA COUNTER | 1 1/2"=1'-0" | 10

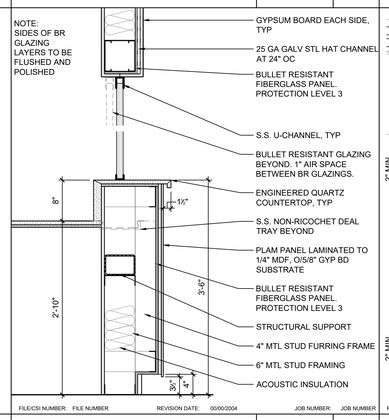

23 | 19 | 15 | BR GLAZING MOUNTING | 1"=1'-0" | 11

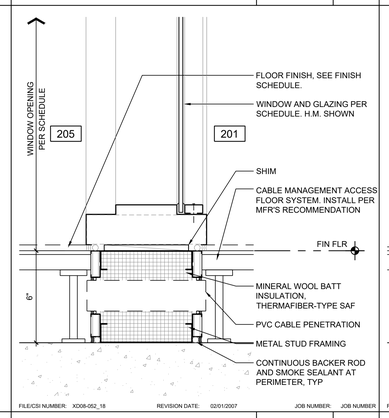

24 | 20 | 16 | INTERIOR SILL | 3"=1'-0" | 12

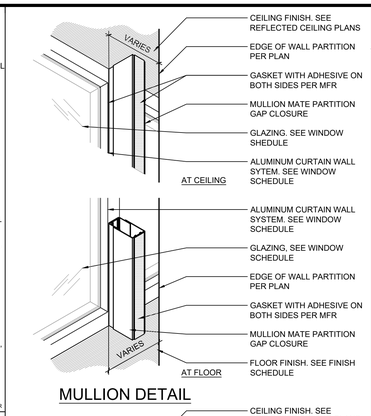

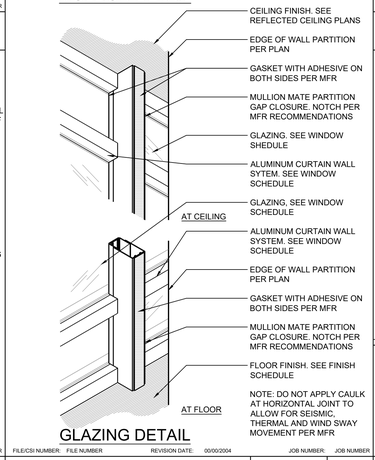

INT PARTITION GAP CLOSURE | 3"=1'-0" | 6

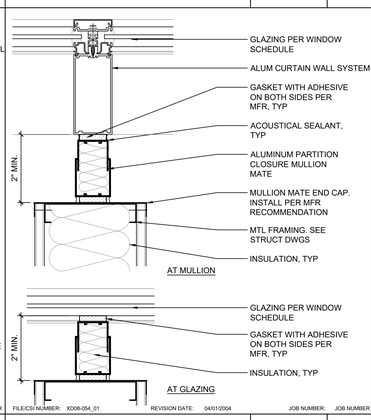

INT PARTITION GAP CLOSURE | 3"=1'-0" | 7

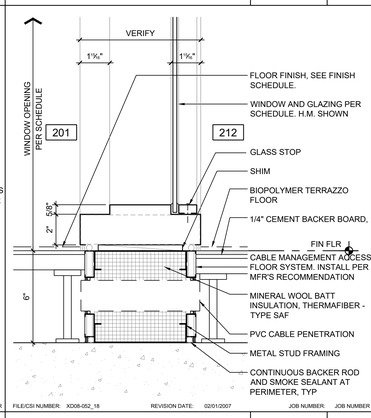

INT PARTITION GAP CLOSURE | 3"=1'-0" | 8

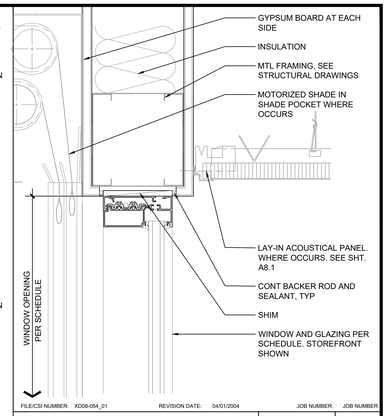

INTERIOR HEAD/JAMB | 3"=1'-0" | 1

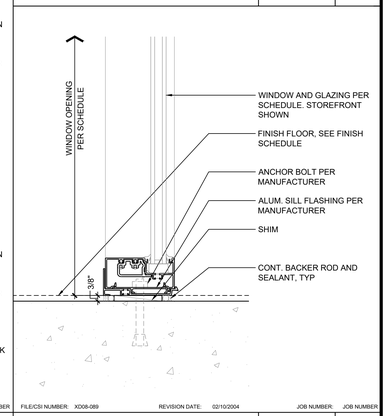

INTERIOR SILL | 3"=1'-0" | 2

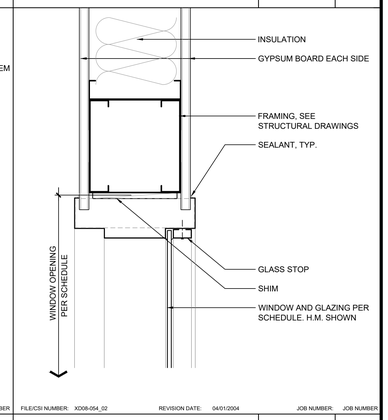

INTERIOR HEAD/JAMB | 3"=1'-0" | 3

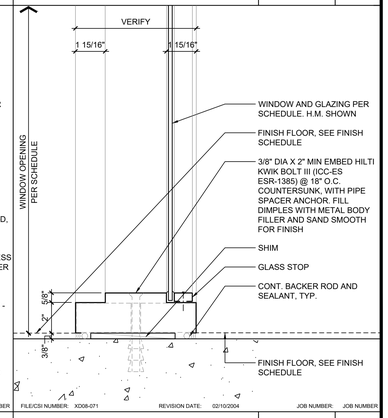

INTERIOR SILL | 3"=1'-0" | 4

PBK
RANCHO CUCAMONGA
8163 ROCHESTER AVENUE, SUITE 100
RANCHO CUCAMONGA, CA 91730
909-987-0909 P

ONTARIO FIRE DEPARTMENT ADMINISTRATION BUILDING

CITY OF ONTARIO

1420 E. FRANCIS STREET., ONTARIO, CA

LICENSED ARCHITECT
KEVIN NEEDHAM
C-19064
Exp. 03/31/24
STATE OF CALIFORNIA

CONSULTANT

NO	DATE	BY	DESCRIPTION

REVISIONS

DRAWN: RMZ	CHECKED: KN
DATE: 07/15/2022	SCALE: AS NOTED
PROJECT NUMBER: 2011700	

WINDOW DETAILS

DRAWING NUMBER: A5.7

BID SET 03/01/24

2/19/2024
L:\2020\2011700-3-CD\Drawings\Architectural\2011700A17.dwg

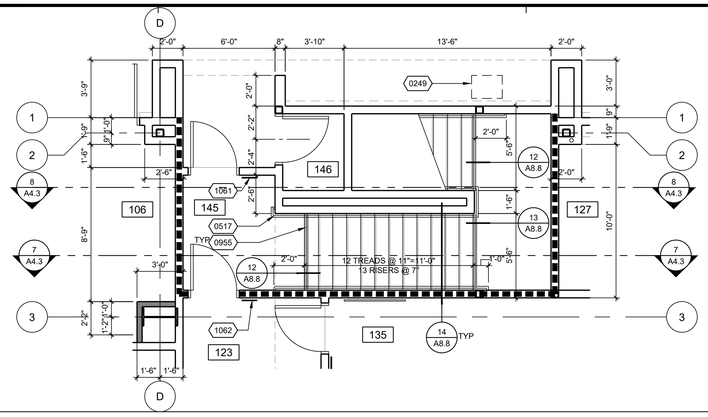

FIRST FLOOR STAIR (NORTH) - RM. 145 & 146 | 1/4" = 1'-0" | 13

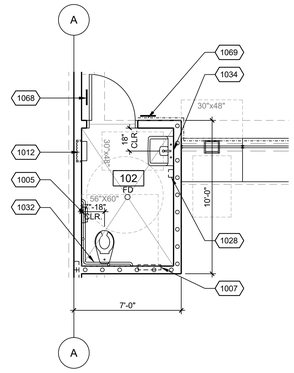

PUBLIC RESTROOM - RM. 102 | 1/4" = 1'-0" | 5

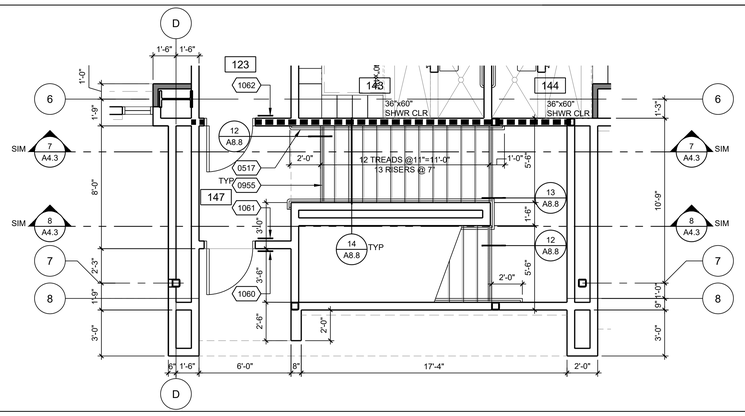

FIRST FLOOR STAIR (SOUTH) - RM. 147 | 1/4" = 1'-0" | 14

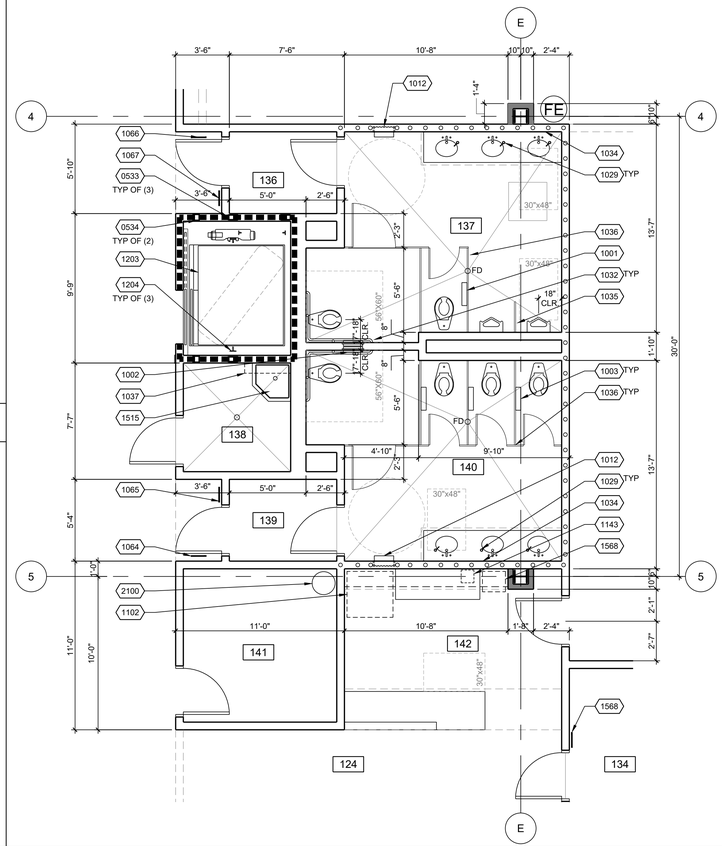

TYP. RESTROOMS - RM. 136, 137, 138, 139, 140, 141, 142 | 1/4" = 1'-0" | 7

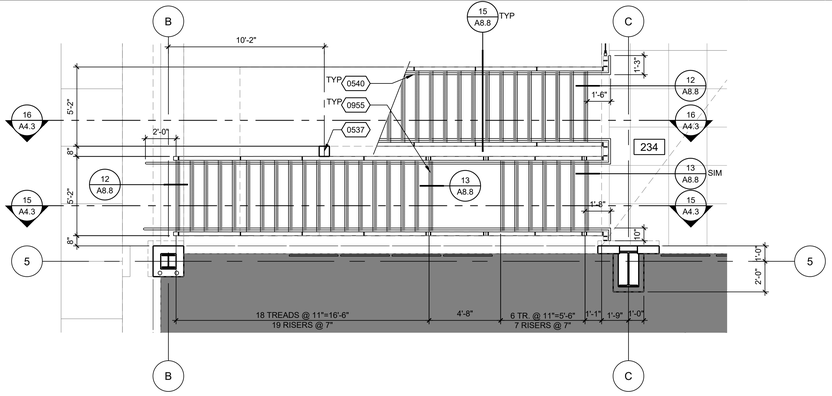

FIRST AND SECOND FLOOR EXTERIOR STAIR | 1/4" = 1'-0" | 15

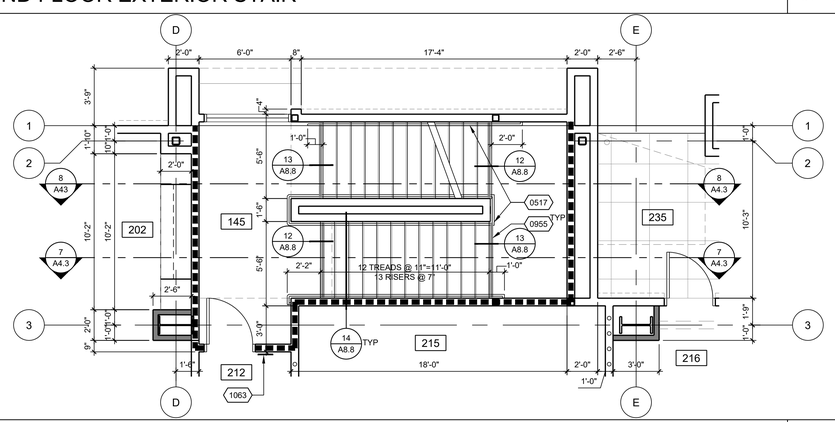

SECOND FLOOR STAIR (NORTH) - RM. 145 | 1/4" = 1'-0" | 16

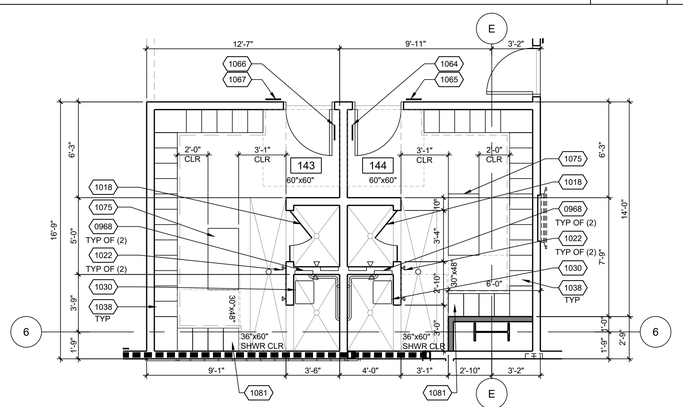

FIRST FLOOR LOCKER ROOMS - RM. 143 & 144 | 1/4" = 1'-0" | 8

REFERENCE NOTES | 3

0249	GAS METER, SEE PLUMBING DRAWINGS
0517	S.S. HANDRAIL @ STAIRS, SEE 10/A8.8
0533	HSS POST FOR ELEVATOR GUIDE RAIL AND HOIST BEAM
0534	HSS POST FOR ELEVATOR LIFELINE BEAM
0537	HSS COLUMN, SEE STRUCTURAL DRAWINGS
0540	S.S. GUARDRAIL WITH CABLE INFILL
0955	2" WIDE CONTRASTING COLOR WARNING STRIP
0968	SHOWER NICHE, 14"X18" CLEAR, SEE 18/A8.3
1001	SURFACE MOUNTED SEAT COVER/TOILET TISSUE DISPENSER
1002	RECESSED SEAT COVER/TOILET TISSUE DISPENSER W/ NAPKIN DISPOSAL
1003	SURFACE MOUNTED SEAT COVER/TOILET TISSUE DISPENSER AND NAPKIN DISPOSAL
1005	SURFACE MOUNTED TOILET TISSUE DISPENSER
1007	SURFACE MOUNTED SEAT COVER DISPENSER
1012	RECESSED WASTE RECEPTACLE/TOWEL DISPENSER, LARGE
1018	SHOWER DOOR/PANEL, 1/2" THK. TEMPERED FROST GLASS
1022	ROBE HOOK
1028	SURFACE MOUNTED SOAP DISPENSER
1029	COUNTER-MOUNTED SOAP DISPENSER
1030	FOLDING SHOWER SEAT, BOBRICK B-5191
1032	TWO WALL, 42 X 54 INCH GRAB BAR, SEE 18/A8.2
1034	MIRROR WITH STAINLESS STEEL PERIMETER FRAME
1035	URINAL SCREEN
1036	STAINLESS STEEL TOILET PARTITION
1037	CUSTODIANS UTILITY SHELF
1038	SOLID PHENOLIC LOCKERS ON 6" CONC PAD
1060	ACCESSIBLE ENTRY SIGN, SEE DETAIL 18/A8.5
1061	TACTILE EXIT SIGN, SEE DETAIL 24A/A8.5
1062	TACTILE EXIT ROUTE SIGN, SEE DETAIL 24B/A8.5
1063	TACTILE EXIT STAIR DOWN SIGN, SEE 24C/A8.5
1064	RESTROOM SYMBOL-WOMEN, SEE DETAIL 3/A8.5
1065	RESTROOM SIGN-WOMEN, SEE 4/A8.5
1066	RESTROOM SYMBOL-MEN, SEE DETAIL 7/A8.5
1067	RESTROOM SIGN-MEN, SEE 8/A8.5
1068	RESTROOM SYMBOL-UNISEX, SEE DETAIL 11/A8.5
1069	RESTROOM SIGN-UNISEX, SEE 12/A8.5
1075	ADA COMPLIANT LOCKER/SHOWER ROOM BENCH WITH BACK SUPPORT, 24"x48"
1080	42" LONG GRAB BAR, COORDINATE WITH FLUSH VALVE
1081	ADA COMPLIANT LOCKER
1102	REFRIGERATOR
1143	COFFEE MAKER
1203	ELEVATOR
1204	ELEVATOR GUIDE RAIL. COORDINATE EXACT LOCATION W/ MFR.
1514	RECESSED HOSE BIB, SEE PLUMBING DRAWINGS
1515	CUSTODIAL FLOOR SINK, SEE PLUMBING DRAWINGS
1568	FLOWATER MACHINE, NIC
2100	CLEAN AGENT CANISTER

GENERAL NOTES | 4

1. FOR FIXTURE MOUNTING HEIGHT SCHEDULE, SEE DETAIL 8/A8.2
2. SEE INTERIOR ELEVATIONS FOR ADDITIONAL MOUNTING HEIGHTS AND DIMENSIONS NOT INDICATED
3. FOR COUNTERTOP DETAILS, SEE 6/A8.2
4. FOR ELEVATOR, SEE DRAWING A8.8 FOR MORE INFORMATION.
5. FOR TYPICAL WALL TILE PATTERN, SEE DETAIL 2/A8.4. FOR TILE WALL CORNERS AND TRANSITION, SEE 3/A8.4.
6. FOR TYPICAL SHOWER ELEVATIONS , SEE 18/A8.3. FOR SHOWER SECTIONS, SEE DETAILS 20, 24/A8.3, U.N.O.
7. ALL ADA DIMENSIONED CLEARANCE ARE TO BE FROM TOILET FIXTURES TO FACE OF WALL FINISH.

PBK
RANCHO CUCAMONGA
8163 ROCHESTER AVENUE, SUITE 100
RANCHO CUCAMONGA, CA 91730
909-987-0909 P

ONTARIO FIRE DEPARTMENT ADMINISTRATION BUILDING

CITY OF ONTARIO

1420 E. FRANCIS STREET., ONTARIO, CA

LICENSED ARCHITECT
KEVIN NEEDHAM
C-19064
Exp. 03/31/25
STATE OF CALIFORNIA

CONSULTANT

NO	DATE	BY	DESCRIPTION

REVISIONS

DRAWN: RMZ	CHECKED: KN
DATE: 07/15/2022	SCALE: AS NOTED
PROJECT NUMBER: 2011700	

ENLARGED FLOOR PLANS

DRAWING NUMBER: A6.1

BID SET 03/01/24

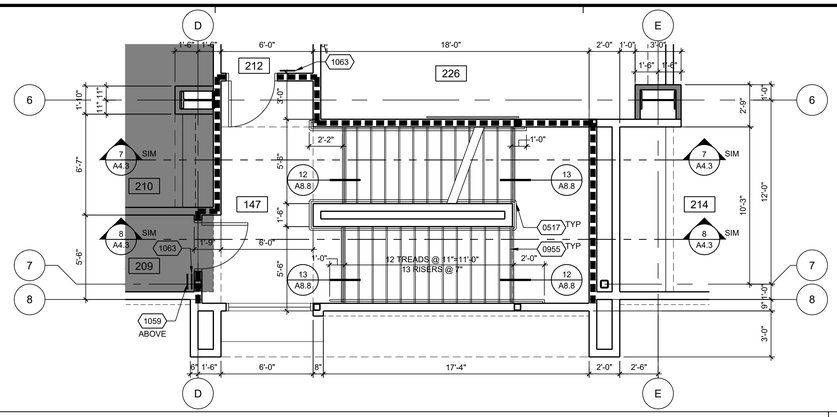

SECOND FLOOR STAIR (SOUTH) - RM. 147 | 1/4" = 1'-0" | 13

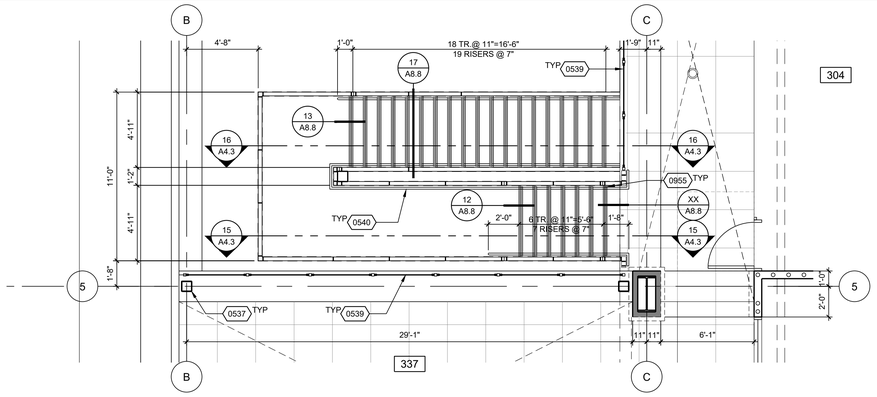

THIRD FLOOR EXTERIOR STAIR | 1/4" = 1'-0" | 14

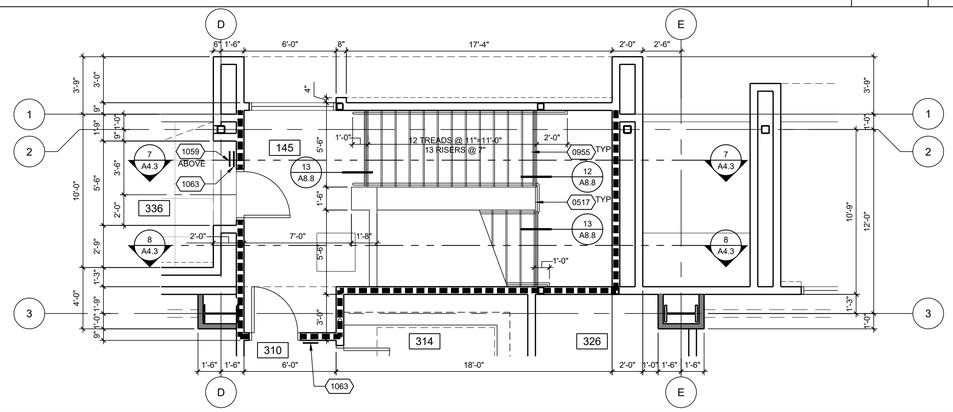

THIRD FLOOR STAIR (NORTH) - RM. 145 | 1/4" = 1'-0" | 15

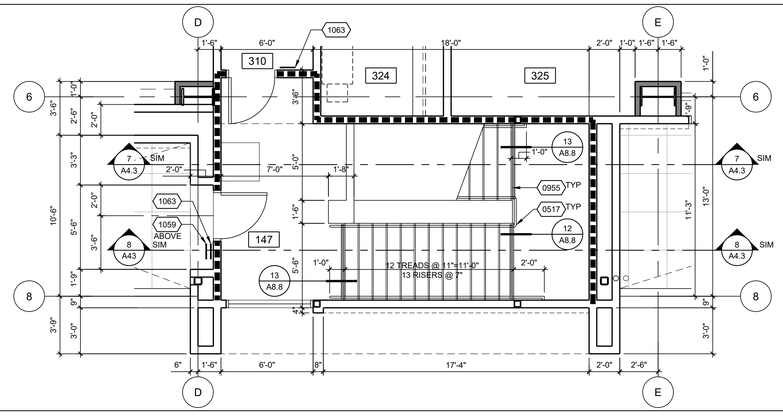

THIRD FLOOR STAIRS (SOUTH) - RM. 147 | 1/4" = 1'-0" | 16

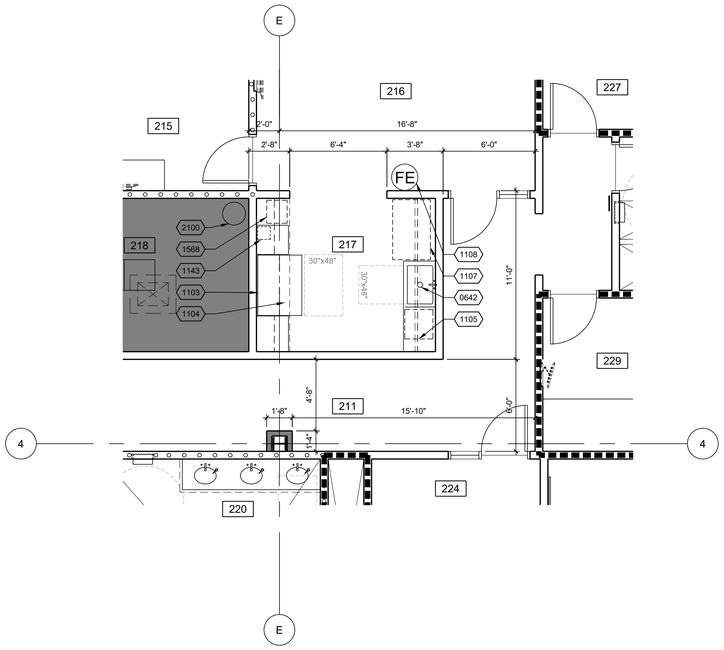

KITCHEN - RM. 217 | 1/4" = 1'-0" | 6

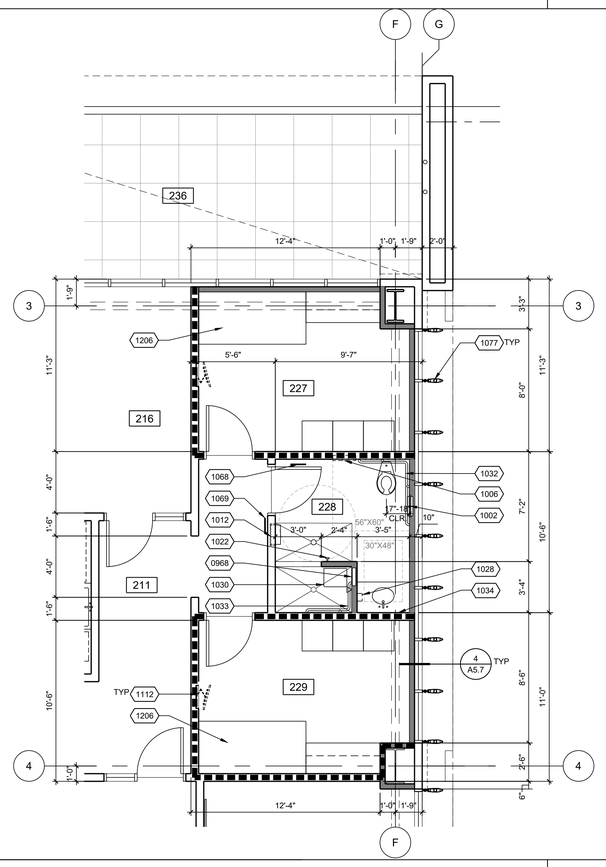

TYPICAL QUIET RM. AND RESTROOM - RM. 227, 228 & 229 | 1/4" = 1'-0" | 8

0517	S.S. HANDRAIL @ STAIRS, SEE 10/A8.8
0537	HSS COLUMN, SEE STRUCTURAL DRAWINGS
0539	S.S. GUARDRAIL WITH GLASS INFILL
0540	S.S. GUARDRAIL WITH CABLE INFILL
0642	INTEGRAL STAINLESS STEEL SINK, ADA, 33"X22"X6", SEE 20/A8.2
0955	2" WIDE CONTRASTING COLOR WARNING STRIP
0968	SHOWER NICHE, 14"X18" CLEAR, SEE 18/A8.3
1002	RECESSED SEAT COVER/TOILET TISSUE DISPENSER W/ NAPKIN DISPOSAL
1006	RECESSED SEAT COVER DISPENSER
1012	RECESSED WASTE RECEPTACLE/TOWEL DISPENSER, LARGE
1022	ROBE HOOK
1028	SURFACE MOUNTED SOAP DISPENSER
1030	FOLDING SHOWER SEAT, BOBRICK B-5191
1032	TWO WALL, 42 X 54 INCH GRAB BAR, SEE 18/A8.2
1033	TWO WALL, 24 X 36 INCH GRAB BAR, SEE 18/A8.2
1034	MIRROR WITH STAINLESS STEEL PERIMETER FRAME
1059	ROOM CAPACITY SIGN, SEE DETAIL 19/A8.5
1063	TACTILE EXIT STAIR DOWN SIGN, SEE 24C/A8.5
1068	RESTROOM SYMBOL-UNISEX, SEE DETAIL 11/A8.5
1069	RESTROOM SIGN-UNISEX, SEE 12/A8.5
1077	ALUMINUM AIRFOIL SUN CONTROL DEVICE. VERTICAL
1103	RANGE
1104	RANGE HOOD
1105	DISHWASHER
1107	REFRIGERATOR-FREEZER COMBO UNIT
1108	FIRE EXTINGUISHER IN RECESSED CABINET, SEE AND 17/A8.2
1112	WALL RECESS FOR TV BRACKET, SEE 1/A8.4
1143	COFFEE MAKER
1206	DAY BED, SEE 21,22/A8.2
1568	FLOWATER MACHINE, NIC
2100	CLEAN AGENT CANISTER

REFERENCE NOTES | 3

1. FOR FIXTURE MOUNTING HEIGHT SCHEDULE, SEE DETAIL 8/A8.2
2. SEE INTERIOR ELEVATIONS FOR ADDITIONAL MOUNTING HEIGHTS AND DIMENSIONS NOT INDICATED
3. FOR COUNTERTOP DETAILS, SEE 6/A8.2
4. FOR ELEVATOR, SEE DRAWING A8.8 FOR MORE INFORMATION.
5. FOR TYPICAL WALL TILE PATTERN, SEE DETAIL 2/A8.4. FOR TILE WALL CORNERS AND TRANSITION, SEE 3/A8.4.
6. FOR TYPICAL SHOWER ELEVATIONS , SEE 18/A8.3. FOR SHOWER SECTIONS, SEE DETAILS 20, 24/A8.3, U.N.O.
7. ALL ADA DIMENSIONED CLEARANCE ARE TO BE FROM TOILET FIXTURES TO FACE OF WALL FINISH.

GENERAL NOTES | 4

PBK
RANCHO CUCAMONGA
8163 ROCHESTER AVENUE, SUITE 100
RANCHO CUCAMONGA, CA 91730
909-987-0909 P

ONTARIO FIRE DEPARTMENT ADMINISTRATION BUILDING

CITY OF ONTARIO

1420 E. FRANCIS STREET., ONTARIO, CA

LICENSED ARCHITECT
KEVIN NEEDHAM
C-19064
Exp. 03/31/24
STATE OF CALIFORNIA

CONSULTANT

NO	DATE	BY	DESCRIPTION

REVISIONS

DRAWN: RMZ	CHECKED: KN
DATE: 07/15/2022	SCALE: AS NOTED
PROJECT NUMBER: 2011700	

ENLARGED FLOOR PLANS

DRAWING NUMBER: A6.2

BID SET 03/01/24

ROOM #	ROOM NAME	ROOM #	ROOM NAME
101	LOBBY	126	HALLWAY - WEST
102	PUBLIC RESTROOM	127	DEPUTY FIRE MARSHALL
103	ADMIN OPEN OFFICE	128	DC FIRE MARSHALL
104	LARGE CONFERENCE RM	129	FIRE PROTECT ANALYST
105	ELECTRICAL ROOM	130	SR FIRE SPC OFFICE
106	STORAGE	131	FIRE SPC/PERMIT TECH
107	STORAGE	132	PLAN CHECKER OFFICE
108	COPY ROOM	133	LACTATION ROOM
109	EMS STORAGE	134	EXERCISE ROOM
110	EMS SKILLS ROOM	135	OPEN OFFICE
111	EMS DIRECTOR'S OFFICE	136	VESTIBULE
112	EMS NURSE OFFICE	137	MALE RESTROOM
113	EMS NURSE OFFICE	138	JANITOR'S CLOSET
114	EMS CAPTAIN OFFICE	139	VESTIBULE
115	OFFICE	140	FEMALE RESTROOM
116	EMS ADMIN WORKSTA.	141	IDF ROOM
117	DC OFFICE	142	BREAK AREA
118	TRAINING CAPT OFFICE	143	MALE SHOWER / LOCKER
119	TRAINING CAPT OFFICE	144	FEMALE SHWR / LOCKER
120	WELLNESS CAPT OFFICE	145	STAIR - NORTH
121	LOGISTICS CAPT OFFICE	146	FIRE RISER CLOSET
122	HALLWAY - NORTH	147	STAIR - SOUTH
123	HALLWAY - CENTRAL		
124	HALLWAY - SOUTH		
125	HALLWAY - EAST		

ROOM LEGEND 1

6" METAL STUDS @ 16" O.C., TYP. FULL HEIGHT TO FLOOR DECK/ROOF DECK ABOVE. PROVIDE ONE LAYER OF 5/8" GYPSUM BOARD EACH SIDE AT INTERIOR LOCATIONS U.N.O. EXTERIOR LOCATIONS PROVIDE ONE LAYER OF 5/8" GYPSUM BOARD AT INTERIOR SIDE AND PLASTER, BRICK VENEER, CEMENT PANEL OR METAL SIDING ON EXTERIOR SIDE WHERE OCCURS.

DASHED LINE INDICATES FULL HEIGHT EXTERIOR MATERIAL WHERE OCCURS.

4" METAL STUDS @ 16" O.C. AT INTERIOR LOCATIONS, TYP. FULL HEIGHT TO FLOOR DECK/ROOF DECK ABOVE. PROVIDE ONE LAYER OF 5/8" GYPSUM BOARD AT INTERIOR LOCATION

NON FIRE-RESISTANCE RATED ACOUSTIC WALL:
6" METAL STUDS @ 16" O.C. WITH ONE LAYER OF 5/8" ACOUSTIC ENHANCED GYPSUM BOARD AND TYPE X GYPSUM BOARD ON EACH SIDE OF WALL FROM FINISHED FLOOR TO UNDERSIDE OF FLOOR DECK/ROOF DECK ABOVE. STC-55 MIN.

1-HR RATED WALL:
6" METAL STUDS @ 16" O.C., TYP. FULL HEIGHT TO FLOOR DECK/ROOF DECK ABOVE, WITH ONE LAYER OF 5/8" TYPE X GYPSUM BOARD ON EACH SIDE (EXCEPT FOR RESTROOM SIDE WHERE TYPE X TILE BACKER BOARD SHALL BE USED).

SEE DETAIL 2, 3, 8/A8.3 FOR RATED WALL ASSEMBLY.

SEE DETAIL 3, 4, 5, 6, 7/A8.3 FOR RATED SHAFT WALL AT SHAFT ENCLOSURES.

SEE DETAIL 5/A8.3 FOR WALL HEAD CONDITION. FIRE CAULK ALL GAPS AND PENETRATIONS. SEE DETAILS 14, 15/A8.3 FOR PENETRATION PROTECTIONS.

WALL LEGEND 2

EXTERIOR PORCELAIN PAVER

BIOPOLYMER TERRAZZO FLOOR

POLISHED CONCRETE

SEALED CONCRETE

CARPET TILE

PORCELAIN TILE - COLOR 1

RESILIENT FLOORING - RUBBER FLOOR

RESILIENT FLOORING - LVT

ATHLETIC FLOORING

CABLE ACCESS FLOOR SYSTEM. FLOOR FINISH PER:

1). RM. 201 - DISPATCH FLOOR: ANTI-STATIC CARPET TILE
2). RM. 205 - DISPATCH TRAINING RM.: ANTI-STATIC CARPET TILE
3). RM. 209 - E.O.C. FLOOR: ANTI-STATIC CARPET TILE
4). RM. 210 - E.O.C. EQUIPMENT RM.: LVT
5). RM. 212 - HALLWAY SOUTH - BIOPOLYMER TERRAZZO FLOOR
6). RM. 218 - RADIO EQUIPMENT RM.: BIOPOLYMER TERRAZZO FLOOR
7). RM. 225 - MDF ROOM: BIOPOLYMER TERRAZZO FLOOR

WOOD DECK ON PLASTIC STRUCTURAL ASSEMBLIES (PEDESTAL PAVER)

N

NOTE: ALL INTERIOR WALLS ENCLOSING QUIET ROOMS SHALL HAVE MIN. STC 51 (NOAL 18-0747)

FIRST FLOOR PLAN | 1/8" = 1'-0" | 8

MATERIAL LEGEND | 4

PBK
RANCHO CUCAMONGA
8163 ROCHESTER AVENUE, SUITE 100
RANCHO CUCAMONGA, CA 91730
909-987-0909 P

ONTARIO FIRE DEPARTMENT ADMINISTRATION BUILDING

CITY OF ONTARIO

1420 E. FRANCIS STREET., ONTARIO, CA

LICENSED ARCHITECT
KEVIN NEEDHAM
C-19064
Re-lic 03/31/25
STATE OF CALIFORNIA

CONSULTANT

NO	DATE	BY	DESCRIPTION

REVISIONS

DRAWN: RMZ	CHECKED: KN
DATE: 07/15/2022	SCALE: AS NOTED
PROJECT NUMBER: 2011700	

FIRST FLOOR FINISH PLAN

DRAWING NUMBER: A6.3

BID SET 03/01/24

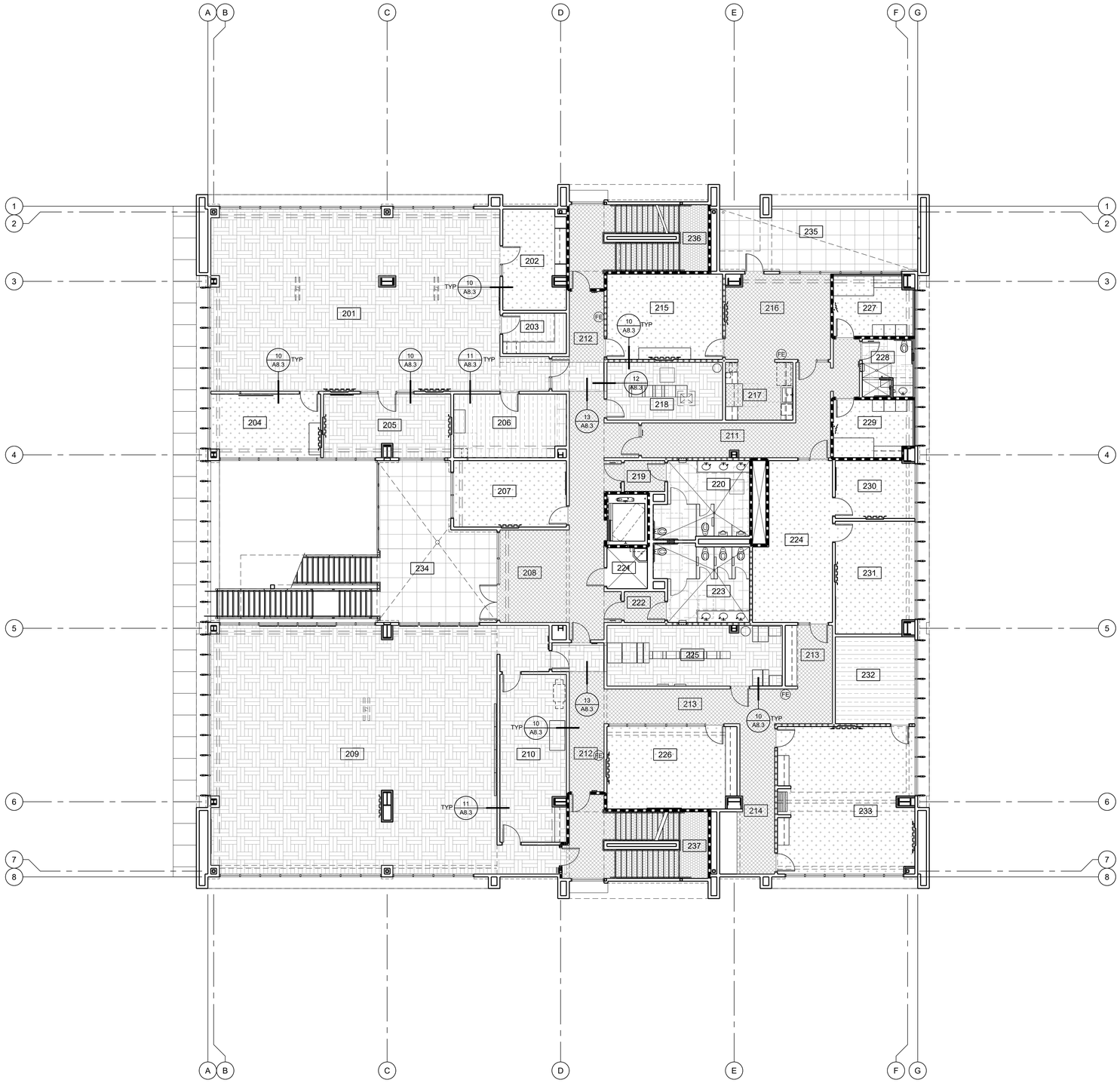

ROOM #	ROOM NAME	ROOM #	ROOM NAME
201	DISPATCH FLOOR	226	E.O.C. BREAKOUT ROOM
202	FIRE DISPATCH SUPVR.	227	QUIET ROOM 1
203	STORAGE	228	BATHROOM
204	TRAINING/MULTI-USE RM.	229	QUIET ROOM 2
205	DISPATCH TRAINING RM.	230	EMERGENCY MGR
206	LOCKERS	231	EMERGENCY COORD
207	FIRE COMM. MANAGER	232	STORAGE
208	OPEN CONF./CLASS RM.	233	E.O.C. CONFERENCE RM.
209	E.O.C. FLOOR	234	COVERED PATIO
210	E.O.C. EQUIPMENT ROOM	235	PATIO 1
211	HALLWAY - NORTH		
212	HALLWAY - CENTRAL		
213	HALLWAY - EAST		
214	HALLWAY - SOUTH		
215	DAY ROOM		
216	DINING		
217	KITCHEN		
218	RADIO EQUIPMENT RM.		
219	VESTIBULE		
220	MALE RESTROOM		
221	JANITOR'S CLOSET		
222	VESTIBULE		
223	FEMALE RESTROOM		
224	SHARED WORKSPACE		
225	MDF ROOM		

ROOM LEGEND 1

6" METAL STUDS @ 16" O.C., TYP. FULL HEIGHT TO FLOOR DECK/ROOF DECK ABOVE. PROVIDE ONE LAYER OF 5/8" GYPSUM BOARD EACH SIDE AT INTERIOR LOCATIONS U.N.O. EXTERIOR LOCATIONS PROVIDE ONE LAYER OF 5/8" GYPSUM BOARD AT INTERIOR SIDE AND PLASTER, BRICK VENEER, CEMENT PANEL OR METAL SIDING ON EXTERIOR SIDE WHERE OCCURS.

DASHED LINE INDICATES FULL HEIGHT EXTERIOR MATERIAL WHERE OCCURS.

4" METAL STUDS @ 16" O.C. AT INTERIOR LOCATIONS, TYP. FULL HEIGHT TO FLOOR DECK/ROOF DECK ABOVE. PROVIDE ONE LAYER OF 5/8" GYPSUM BOARD AT INTERIOR LOCATION

NON FIRE-RESISTANCE RATED ACOUSTIC WALL:
6" METAL STUDS @ 16" O.C. WITH ONE LAYER OF 5/8" ACOUSTIC ENHANCED GYPSUM BOARD AND TYPE X GYPSUM BOARD ON EACH SIDE OF WALL FROM FINISHED FLOOR TO UNDERSIDE OF FLOOR DECK/ROOF DECK ABOVE. STC-55 MIN.

1-HR RATED WALL:
6" METAL STUDS @ 16" O.C., TYP. FULL HEIGHT TO FLOOR DECK/ROOF DECK ABOVE, WITH ONE LAYER OF 5/8" TYPE X GYPSUM BOARD ON EACH SIDE (EXCEPT FOR RESTROOM SIDE WHERE TYPE X TILE BACKER BOARD SHALL BE USED).

SEE DETAIL 2, 3, 8/A8.3 FOR RATED WALL ASSEMBLY.

SEE DETAIL 3, 4, 5, 6, 7/A8.3 FOR RATED SHAFT WALL AT SHAFT ENCLOSURES.

SEE DETAIL 5/A8.3 FOR WALL HEAD CONDITION. FIRE CAULK ALL GAPS AND PENETRATIONS. SEE DETAILS 14, 15/A8.3 FOR PENETRATION PROTECTIONS.

WALL LEGEND 2

EXTERIOR PORCELAIN PAVER

BIOPOLYMER TERRAZZO FLOOR

POLISHED CONCRETE

SEALED CONCRETE

CARPET TILE

PORCELAIN TILE - COLOR 1

RESILIENT FLOORING - RUBBER FLOOR

RESILIENT FLOORING - LVT

ATHLETIC FLOORING

CABLE ACCESS FLOOR SYSTEM. FLOOR FINISH PER:

1). RM. 201 - DISPATCH FLOOR: ANTI-STATIC CARPET TILE
2). RM. 205 - DISPATCH TRAINING RM.: ANTI-STATIC CARPET TILE
3). RM. 209 - E.O.C. FLOOR: ANTI-STATIC CARPET TILE
4). RM. 210 - E.O.C. EQUIPMENT RM.: LVT
5). RM. 212 - HALLWAY SOUTH - BIOPOLYMER TERRAZZO FLOOR
6). RM. 218 - RADIO EQUIPMENT RM.: BIOPOLYMER TERRAZZO FLOOR
7). RM. 225 - MDF ROOM: BIOPOLYMER TERRAZZO FLOOR

WOOD DECK ON PLASTIC STRUCTURAL ASSEMBLIES (PEDESTAL PAVER)

NOTE: ALL INTERIOR WALLS ENCLOSING QUIET ROOMS SHALL HAVE MIN. STC 51 (NOAL 18-0747)

SECOND FLOOR PLAN | 1/8" = 1'-0" | 8

MATERIAL LEGEND | 4

PBK
RANCHO CUCAMONGA
8163 ROCHESTER AVENUE, SUITE 100
RANCHO CUCAMONGA, CA 91730
909-987-0909 P

ONTARIO FIRE DEPARTMENT ADMINISTRATION BUILDING

CITY OF ONTARIO

1420 E. FRANCIS STREET., ONTARIO, CA

LICENSED ARCHITECT
KEVIN NEEDHAM
C-19064
Exp. Date 03/31/25
STATE OF CALIFORNIA

CONSULTANT

NO	DATE	BY	DESCRIPTION

REVISIONS

DRAWN: RMZ	CHECKED: KN
DATE: 07/15/2022	SCALE: AS NOTED
PROJECT NUMBER: 2011700	

SECOND FLOOR FINISH PLAN

DRAWING NUMBER: A6.4

BID SET 03/01/24

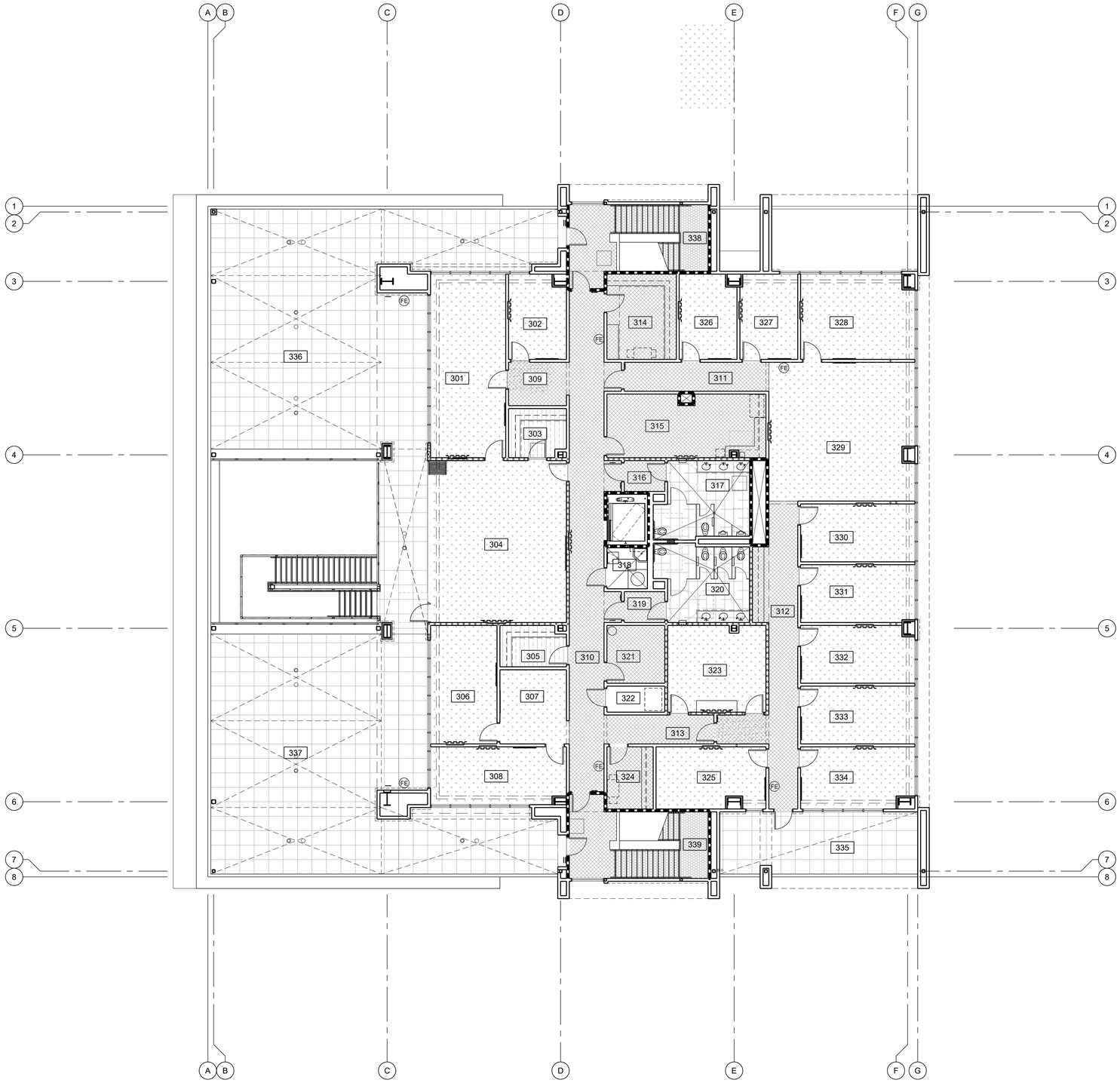

ROOM #	ROOM NAME	ROOM #	ROOM NAME
301	FIRE CHIEF OFFICE	326	OFFICE
302	SR. ADMIN. ASSIST. OFC	327	BC OFFICE
303	STORAGE	328	DC OPERATIONS OFFICE
304	OPEN CONF./CLASSRM.	329	OPEN WORK STATIONS
305	SECURED FILES ROOM	330	ENGAGEMENT SUPER
306	DC LOGISTICS OFFICE	331	TRAINING MGMT ANALYST
307	WELLNESS ADMIN ASSIST	332	SR MGMT ANALYST
308	DC WELLNESS OFFICE	333	ADMIN OFFICER OFFICE
309	WAITING VESTIBULE	334	ADMIN DIRECTOR OFFICE
310	HALLWAY - CENTRAL	335	PATIO 2
311	HALLWAY - NORTH	336	ROOF DECK - NORTH
312	HALLWAY - EAST	337	ROOF DECK - SOUTH
313	HALLWAY - SOUTH		
314	WORKRM. AND STORAGE		
315	BREAK ROOM		
316	VESTIBULE		
317	MALE RESTROOM		
318	JANITOR		
319	VESTIBULE		
320	FEMALE RESTROOM		
321	IDF ROOM		
322	ELEVATOR CONTROL RM.		
323	DAY ROOM		
324	WORKROOM		
325	OFFICE		

ROOM LEGEND 1

6" METAL STUDS @ 16" O.C., TYP. FULL HEIGHT TO FLOOR DECK/ROOF DECK ABOVE. PROVIDE ONE LAYER OF 5/8" GYPSUM BOARD EACH SIDE AT INTERIOR LOCATIONS U.N.O. EXTERIOR LOCATIONS PROVIDE ONE LAYER OF 5/8" GYPSUM BOARD AT INTERIOR SIDE AND PLASTER, BRICK VENEER, CEMENT PANEL OR METAL SIDING ON EXTERIOR SIDE WHERE OCCURS.

DASHED LINE INDICATES FULL HEIGHT EXTERIOR MATERIAL WHERE OCCURS.

4" METAL STUDS @ 16" O.C. AT INTERIOR LOCATIONS, TYP. FULL HEIGHT TO FLOOR DECK/ROOF DECK ABOVE. PROVIDE ONE LAYER OF 5/8" GYPSUM BOARD AT INTERIOR LOCATION

NON FIRE-RESISTANCE RATED ACOUSTIC WALL:
6" METAL STUDS @ 16" O.C. WITH ONE LAYER OF 5/8" ACOUSTIC ENHANCED GYPSUM BOARD AND TYPE X GYPSUM BOARD ON EACH SIDE OF WALL FROM FINISHED FLOOR TO UNDERSIDE OF FLOOR DECK/ROOF DECK ABOVE. STC-55 MIN.

1-HR RATED WALL:
6" METAL STUDS @ 16" O.C., TYP. FULL HEIGHT TO FLOOR DECK/ROOF DECK ABOVE, WITH ONE LAYER OF 5/8" TYPE X GYPSUM BOARD ON EACH SIDE (EXCEPT FOR RESTROOM SIDE WHERE TYPE X TILE BACKER BOARD SHALL BE USED).

SEE DETAIL 2, 3, 8/A8.3 FOR RATED WALL ASSEMBLY.

SEE DETAIL 3, 4, 5, 6, 7/A8.3 FOR RATED SHAFT WALL AT SHAFT ENCLOSURES.

SEE DETAIL 5/A8.3 FOR WALL HEAD CONDITION. FIRE CAULK ALL GAPS AND PENETRATIONS. SEE DETAILS 14, 15/A8.3 FOR PENETRATION PROTECTIONS.

WALL LEGEND 2

EXTERIOR PORCELAIN PAVER

BIOPOLYMER TERRAZZO FLOOR

POLISHED CONCRETE

SEALED CONCRETE

CARPET TILE

PORCELAIN TILE - COLOR 1

RESILIENT FLOORING - RUBBER FLOOR

RESILIENT FLOORING - LVT

ATHLETIC FLOORING

CABLE ACCESS FLOOR SYSTEM. FLOOR FINISH PER:

1). RM. 201 - DISPATCH FLOOR: ANTI-STATIC CARPET TILE
2). RM. 205 - DISPATCH TRAINING RM.: ANTI-STATIC CARPET TILE
3). RM. 209 - E.O.C. FLOOR: ANTI-STATIC CARPET TILE
4). RM. 210 - E.O.C. EQUIPMENT RM.: LVT
5). RM. 212 - HALLWAY SOUTH - BIOPOLYMER TERRAZZO FLOOR
6). RM. 218 - RADIO EQUIPMENT RM.: BIOPOLYMER TERRAZZO FLOOR
7). RM. 225 - MDF ROOM: BIOPOLYMER TERRAZZO FLOOR

WOOD DECK ON PLASTIC STRUCTURAL ASSEMBLIES (PEDESTAL PAVER)

NOTE: ALL INTERIOR WALLS ENCLOSING QUIET ROOMS SHALL HAVE MIN. STC 51 (NOAL 18-0747)

THIRD FLOOR PLAN | 1/8" = 1'-0" | 8

MATERIAL LEGEND | 4

PBK
RANCHO CUCAMONGA
8163 ROCHESTER AVENUE, SUITE 100
RANCHO CUCAMONGA, CA 91730
909-987-0909 P

ONTARIO FIRE DEPARTMENT ADMINISTRATION BUILDING

CITY OF ONTARIO

1420 E. FRANCIS STREET., ONTARIO, CA

LICENSED ARCHITECT
KEVIN NEEDHAM
C-19064
Exp. Date 03/31/25
STATE OF CALIFORNIA

CONSULTANT

NO	DATE	BY	DESCRIPTION

REVISIONS

DRAWN: RMZ	CHECKED: KN
DATE: 07/15/2022	SCALE: AS NOTED
PROJECT NUMBER: 2011700	

THIRD FLOOR FINISH PLAN

DRAWING NUMBER: A6.5

BID SET 03/01/24

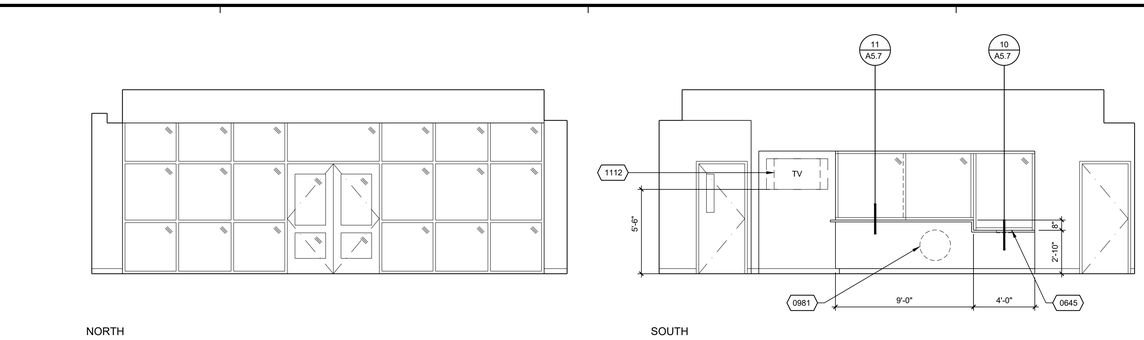

ROOM 101 - LOBBY | 1/4" = 1'-0" | 9

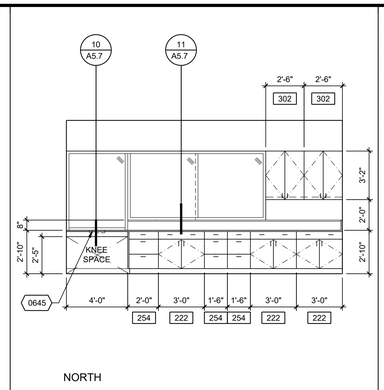

RM 103 - ADMIN OFF. | 1/4" = 1'-0" | 5

0645	S.S. RECESSED DEAL TRAY
0981	CITY LOGO
1004	RECESSED TOILET TISSUE DISPENSER
1006	RECESSED SEAT COVER DISPENSER
1013	SURFACE MOUNTED WASTE RECEPTACLE/TOWEL DISPENSER, LARGE
1028	SURFACE MOUNTED SOAP DISPENSER
1032	TWO WALL, 42 X 54 INCH GRAB BAR, SEE 18/A8.2
1034	MIRROR WITH STAINLESS STEEL PERIMETER FRAME
1039	48"x48" GLASS MARKER BOARD, SEE DETAIL 4/A8.4
1112	WALL RECESS FOR TV BRACKET, SEE 1/A8.4
1120	PHOTOCOPY MACHINE, N.I.C.

18

14

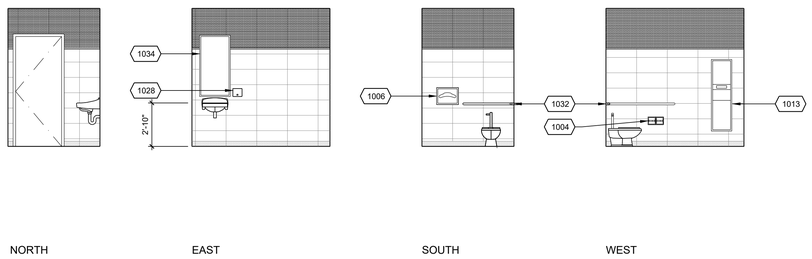

ROOM 102 - RESTROOM | 1/4" = 1'-0" | 6

NOTES:

1. FOR CASEWORK ANCHORAGE DETAIL, SEE 4/A-8.2
2. FOR CASEWORK FACE PANEL DETAIL, SEE 5/A-8.2
3. FOR COUNTERTOP DETAILS, SEE 6/A-8.2
4. FOR FIXTURE HEIGHT SCHEDULE, SEE 8/A-8.2
5. FOR LAVATORY COUNTERTOP, SEE 10/A-8.2
6. FOR UNDERCABINET LIGHT FIXTURE, SEE 9/A-8.2
7. FOR QUIET ROOM DESK, SEE 12/A-8.5

REFERENCE NOTES | 2

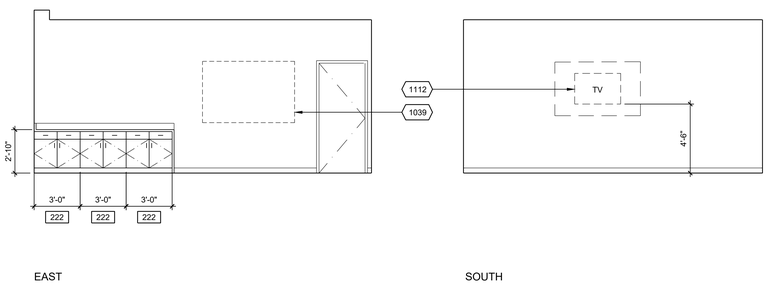

ROOM 104 - LARGE CONFERENCE ROOM | 1/4" = 1'-0" | 15

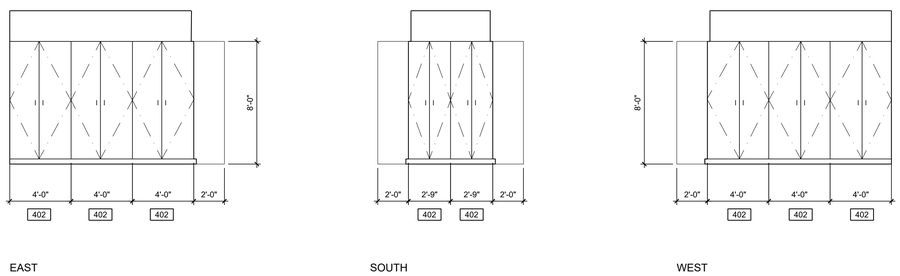

ROOM 107 - STORAGE | 1/4" = 1'-0" | 3

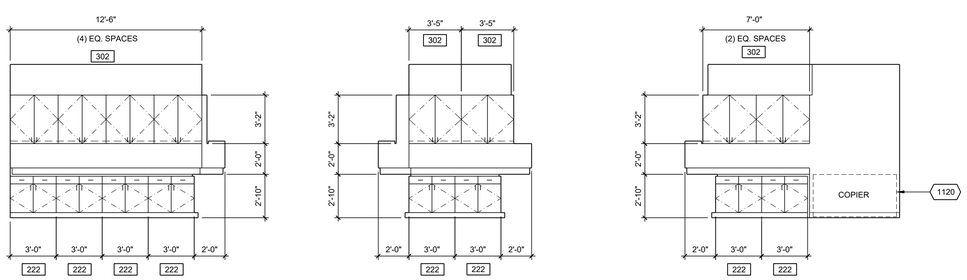

ROOM 108 - COPY ROOM | 1/4" = 1'-0" | 16

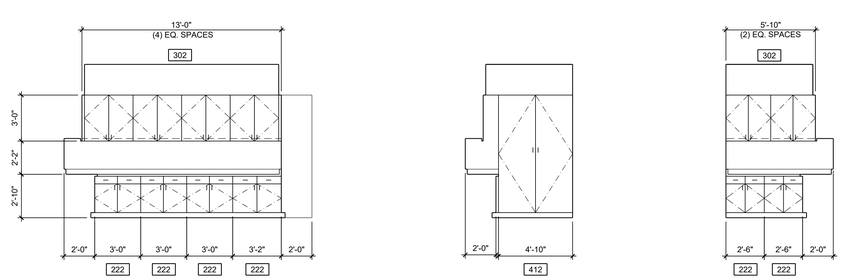

ROOM 109- EMS STORAGE | 1/4" = 1'-0" | 4

PBK
RANCHO CUCAMONGA
8163 ROCHESTER AVENUE, SUITE 100
RANCHO CUCAMONGA, CA 91730
909-987-0909 P

ONTARIO FIRE DEPARTMENT ADMINISTRATION BUILDING

CITY OF ONTARIO

1420 E. FRANCIS STREET., ONTARIO, CA

LICENSED ARCHITECT
KEVIN NEEDHAM
C-19064
Exp. Date 03/31/25
STATE OF CALIFORNIA

CONSULTANT

NO	DATE	BY	DESCRIPTION

REVISIONS

DRAWN: RMG	CHECKED: KN
DATE: 07/15/2022	SCALE: AS NOTED
PROJECT NUMBER: 2011700	

INTERIOR ELEVATIONS

DRAWING NUMBER: A7.1

BID SET 03/01/24

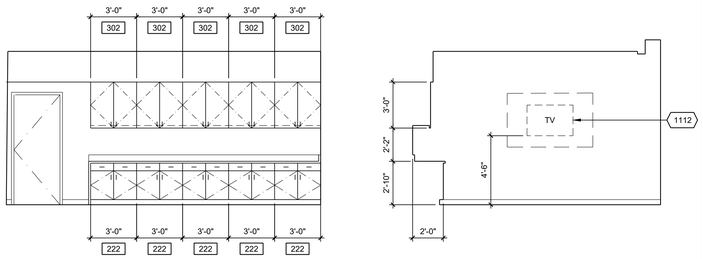

EAST SOUTH

ROOM 110 - EMS SKILLS ROOM | 1/4" = 1'-0" | 17

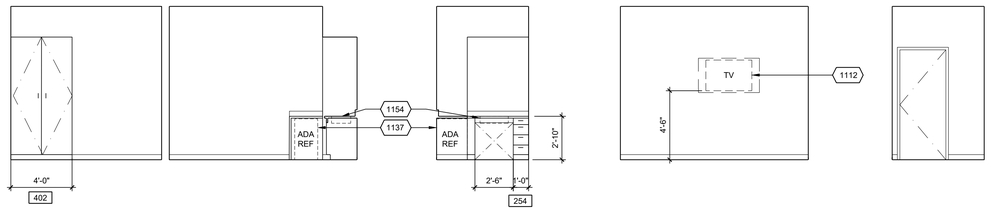

NORTH EAST SOUTH WEST

ROOM 133 - LACTATION RM. | 1/4" = 1'-0" | 5

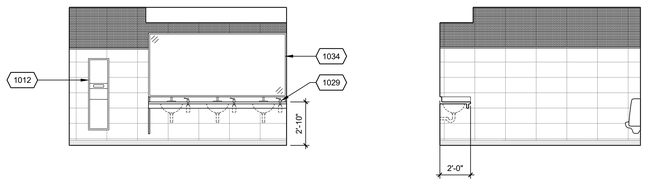

NORTH EAST

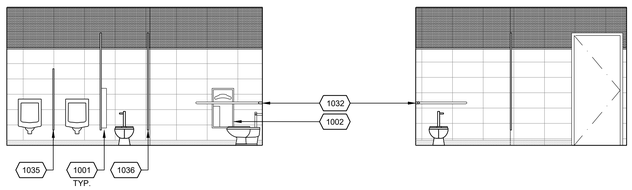

SOUTH WEST

ROOM 137, 220 AND 317 - MALE RESTROOM | 1/4" = 1'-0" | 10

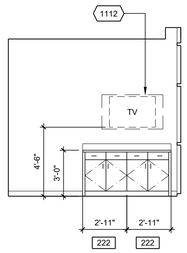

EAST

ROOM 204 - TRAIN. RM | 6

0966	ATHLETIC FLOORING AT BASE, ALL WALLS
1001	SURFACE MOUNTED SEAT COVER/TOILET TISSUE DISPENSER
1002	RECESSED SEAT COVER/TOILET TISSUE DISPENSER W/ NAPKIN DISPOSAL
1003	SURFACE MOUNTED SEAT COVER/TOILET TISSUE DISPENSER AND NAPKIN DISPOSAL
1012	RECESSED WASTE RECEPTACLE/TOWEL DISPENSER, LARGE
1029	COUNTER-MOUNTED SOAP DISPENSER
1032	TWO WALL, 42 X 54 INCH GRAB BAR
1034	MIRROR WITH STAINLESS STEEL PERIMETER FRAME
1035	URINAL SCREEN
1036	STAINLESS STEEL TOILET PARTITION
1037	CUSTODIANS UTILITY SHELF
1112	WALL RECESS FOR TV BRACKET, SEE 1/A8.4
1137	ADA UNDER COUNTER REFRIGERATOR
1511	WATER HEATER WHERE OCCURS, SEE PLUMBING. PROVIDE 4" CONCRETE PAD
1524	FLOOR SINK, SEE PLUMBING DRAWINGS

NOTES:

1. FOR CASEWORK ANCHORAGE DETAIL, SEE 4/A-8.2
2. FOR CASEWORK FACE PANEL DETAIL, SEE 5/A-8.2
3. FOR COUNTERTOP DETAILS, SEE 6/A-8.2
4. FOR FIXTURE HEIGHT SCHEDULE, SEE 8/A-8.2
5. FOR LAVATORY COUNTERTOP, SEE 10/A-8.2
6. FOR UNDERCABINET LIGHT FIXTURE, SEE 9/A-8.2
7. FOR QUIET ROOM DESK, SEE 12/A-8.5

REFERENCE NOTES | 2

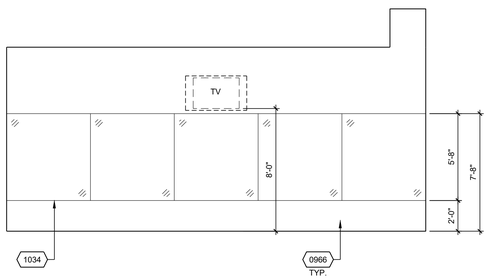

NORTH

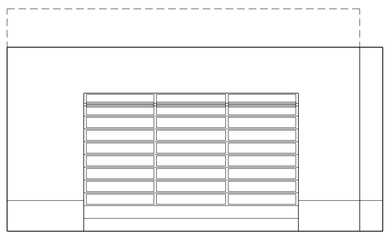

EAST

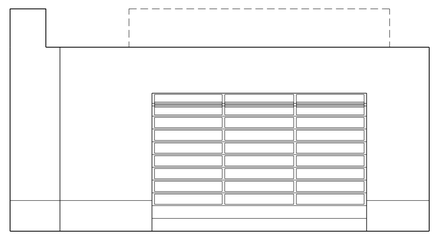

SOUTH

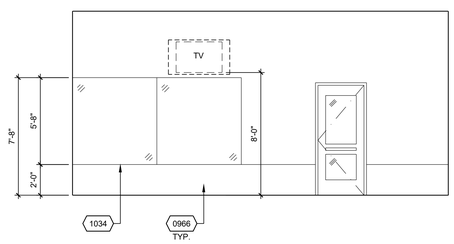

WEST

ROOM 134 - EXERCISE ROOM | 1/4" = 1'-0" | 3

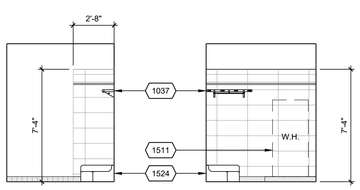

NORTH EAST

NOTE:
W.H. AT RM 318. SEE PLUMBING DRAWINGS FOR ADDITIONAL INFORMATION

ROOM 138, 221, 318 - JANITOR'S CLOSET | 1/4" = 1'-0" | 20

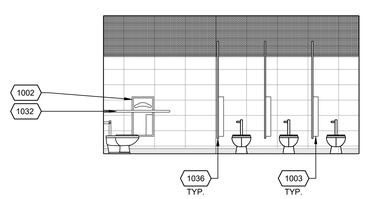

NORTH

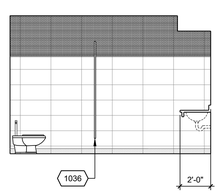

EAST

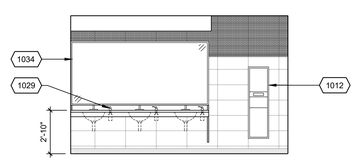

SOUTH

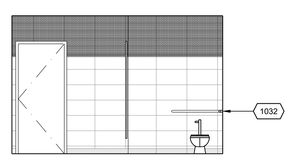

WEST

ROOM 140, 223 AND 320 - FEMALE RESTROOM | 1/4" = 1'-0" | 4

PBK
RANCHO CUCAMONGA
8163 ROCHESTER AVENUE, SUITE 100
RANCHO CUCAMONGA, CA 91730
909-987-0909 P

ONTARIO FIRE DEPARTMENT ADMINISTRATION BUILDING

CITY OF ONTARIO

1420 E. FRANCIS STREET., ONTARIO, CA

LICENSED ARCHITECT
KEVIN NEEDHAM
C-19064
Exp. Date 03/31/25
STATE OF CALIFORNIA

CONSULTANT

NO	DATE	BY	DESCRIPTION

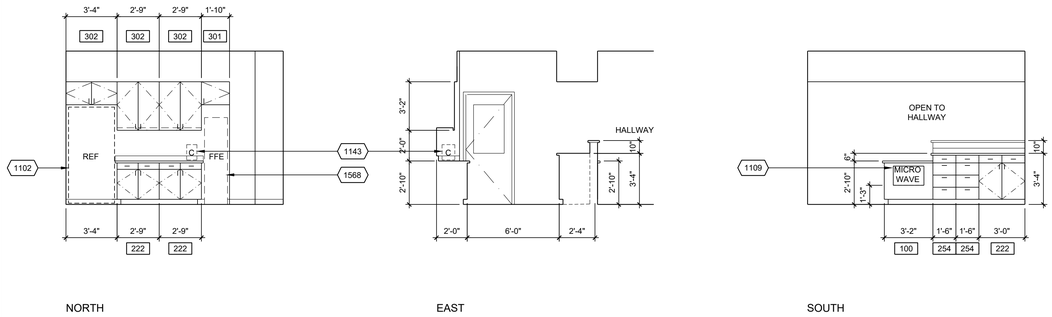

NORTH EAST SOUTH

ROOM 142 - BREAK AREA | 1/4" = 1'-0" | 13

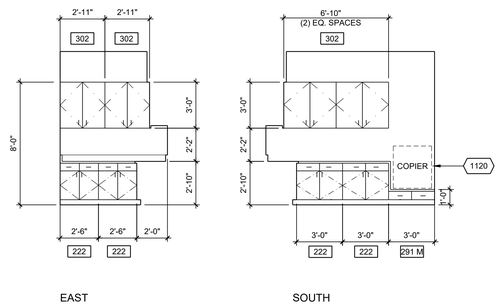

EAST SOUTH

ROOM 203 - STORAGE | 1/4" = 1'-0" | 5

1018	SHOWER DOOR/PANEL, 1/2" THK. TEMPERED FROST GLASS
1019	SHOWER CURTAIN ROD
1022	ROBE HOOK
1032	TWO WALL, 42 X 54 INCH GRAB BAR, SEE 18/A8.2
1038	SOLID PHENOLIC LOCKERS ON 6" CONC PAD
1039	48"x48" GLASS MARKER BOARD, SEE DETAIL 4/A8.4
1075	ADA COMPLIANT LOCKER/SHOWER ROOM BENCH WITH BACK SUPPORT, 24"x48"
1081	ADA COMPLIANT LOCKER
1082	LOCKERS, N.I.C.
1102	REFRIGERATOR
1109	BUILT-IN MICROWAVE
1112	WALL RECESS FOR TV BRACKET, SEE 1/A8.4
1120	PHOTOCOPY MACHINE, N.I.C.
1143	COFFEE MAKER
1155	PLOTTER, N.I.C.
1568	FLOWATER MACHINE, N.I.C.

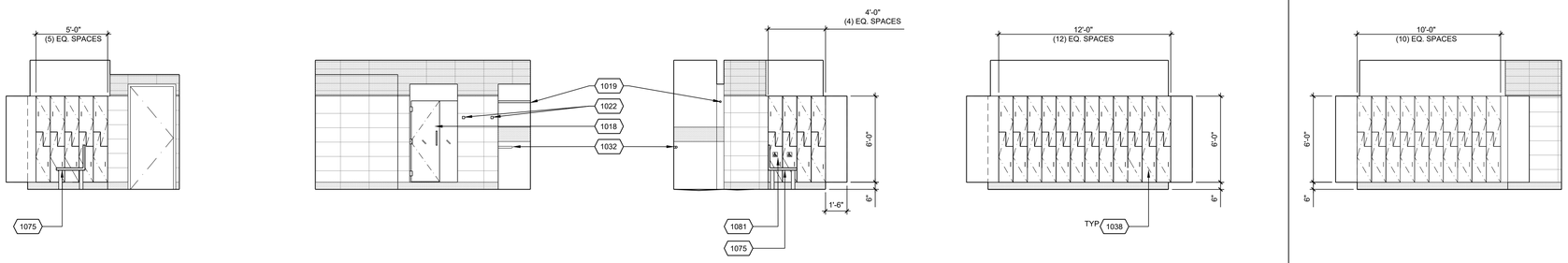

NORTH EAST SOUTH WEST MALE SHOWER/ LOCKER RM WEST FEMALE SHOWER/ LOCKER RM

ROOM 143, 144 - MALE SHOWER/LOCKER AND FEMALE SHOWER/LOCKER (SIM.) | 1/4" = 1'-0" | 10

1/4" = 1'-0" | 6

NOTES:

1. FOR CASEWORK ANCHORAGE DETAIL, SEE 4/A-8.2
2. FOR CASEWORK FACE PANEL DETAIL, SEE 5/A-8.2
3. FOR COUNTERTOP DETAILS, SEE 6/A-8.2
4. FOR FIXTURE HEIGHT SCHEDULE, SEE 8/A-8.2
5. FOR LAVATORY COUNTERTOP, SEE 10/A-8.2
6. FOR UNDERCABINET LIGHT FIXTURE, SEE 9/A-8.2
7. FOR QUIET ROOM DESK, SEE 12/A-8.5

REFERENCE NOTES | 2

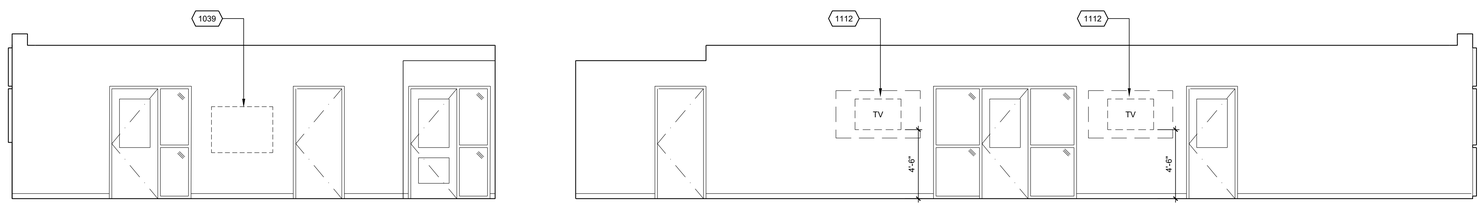

EAST SOUTH

ROOM 201 - DISPATCH FLOOR | 1/4" = 1'-0" | 7

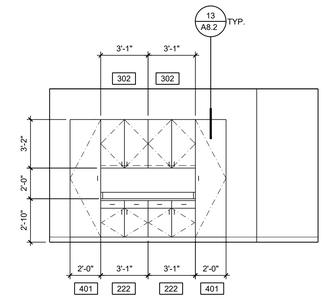

EAST

RM 202-FIRE DISP SUP | 1/4" = 1'-0" | 3

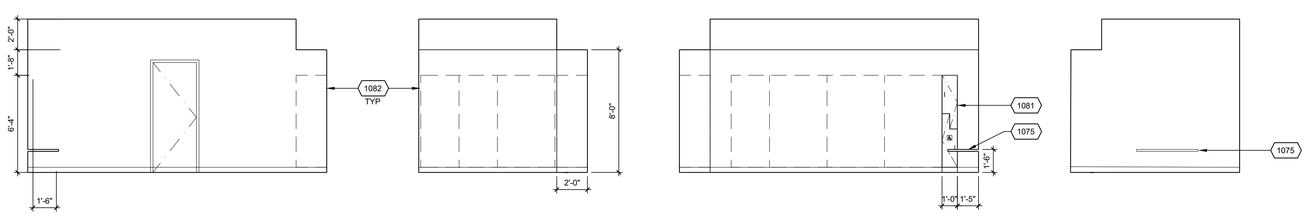

ROOM 206 - LOCKERS | 1/4" = 1'-0" | 12

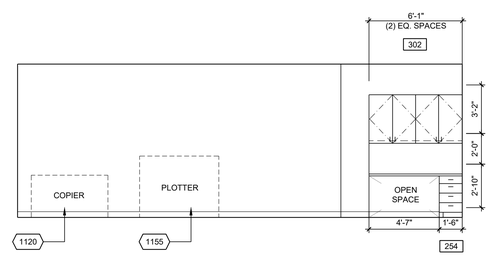

EAST

ROOM 210 -E.O.C. EQUIPMENT ROOM | 1/4" = 1'-0" | 4

PBK
RANCHO CUCAMONGA
8163 ROCHESTER AVENUE, SUITE 100
RANCHO CUCAMONGA, CA 91730
909-987-0909 P

ONTARIO FIRE DEPARTMENT ADMINISTRATION BUILDING

CITY OF ONTARIO

1420 E. FRANCIS STREET., ONTARIO, CA

LICENSED ARCHITECT
KEVIN NEEDHAM
C-19064
Exp. 03/31/25
STATE OF CALIFORNIA

CONSULTANT

NO	DATE	BY	DESCRIPTION

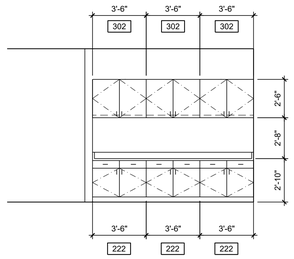

WEST

ROOM 213 - HALLWAY | 1/4" = 1'-0" | 21

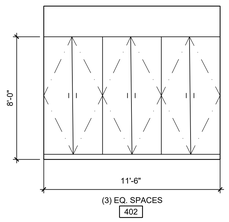

WEST

ROOM 214 - HALLWAY | 1/4" = 1'-0" | 17

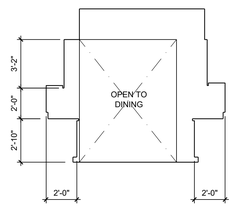

NORTH

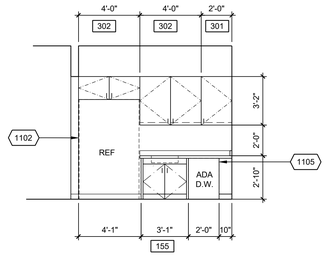

EAST

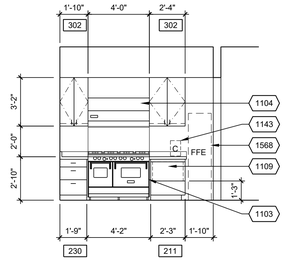

WEST

ROOM 217 -KITCHEN | 1/4" = 1'-0" | 5

0818	GAUZY LIQUID CRYSTAL SMART GLASS
1002	RECESSED SEAT COVER/TOILET TISSUE DISPENSER W/ NAPKIN DISPOSAL
1012	RECESSED WASTE RECEPTACLE/TOWEL DISPENSER, LARGE
1019	SHOWER CURTAIN ROD
1022	ROBE HOOK
1028	SURFACE MOUNTED SOAP DISPENSER
1031	FOLDING SHOWER SEAT, BOBRICK B-5181
1032	TWO WALL, 42 X 54 INCH GRAB BAR, SEE 18/A8.2
1034	MIRROR WITH STAINLESS STEEL PERIMETER FRAME
1039	48"x48" GLASS MARKER BOARD, SEE DETAIL 4/A8.4
1041	48"x72" GLASS MARKER BOARD, SEE DETAIL 4/A8.4
1102	REFRIGERATOR
1103	RANGE
1104	RANGE HOOD
1105	ADA DISHWASHER
1109	BUILT-IN MICROWAVE
1112	WALL RECESS FOR TV BRACKET, SEE 1/A8.4
1143	COFFEE MAKER
1568	FLOWATER MACHINE, N.I.C.

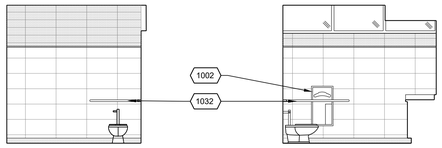

NORTH EAST

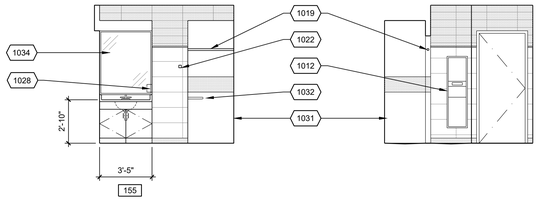

SOUTH WEST

ROOM 228 - BATHROOM | 1/4" = 1'-0" | 14

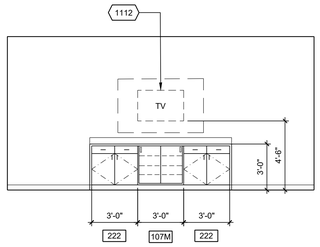

SOUTH

ROOM 215 - DAY RM | 1/4" = 1'-0" | 10

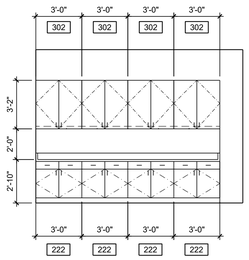

EAST

RM 226 - E.O.C. BREAKOUT | 1/4" = 1'-0" | 6

NOTES:

1. FOR CASEWORK ANCHORAGE DETAIL, SEE 4/A-8.2
2. FOR CASEWORK FACE PANEL DETAIL, SEE 5/A-8.2
3. FOR COUNTERTOP DETAILS, SEE 6/A-8.2
4. FOR FIXTURE HEIGHT SCHEDULE, SEE 8/A-8.2
5. FOR LAVATORY COUNTERTOP, SEE 10/A-8.2
6. FOR UNDERCABINET LIGHT FIXTURE, SEE 9/A-8.2
7. FOR QUIET ROOM DESK, SEE 12/A-8.5

REFERENCE NOTES | 2

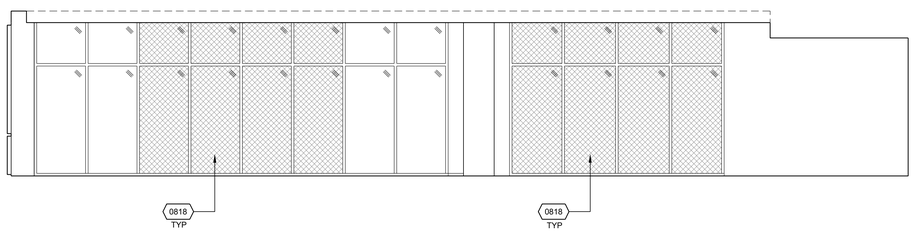

NORTH

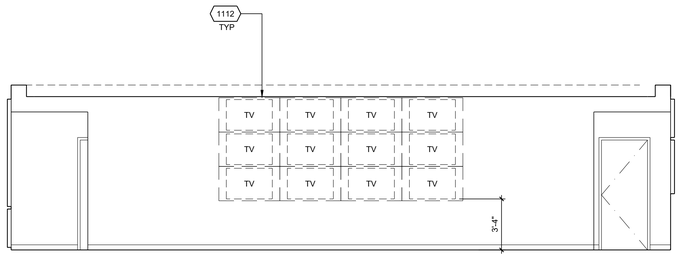

EAST

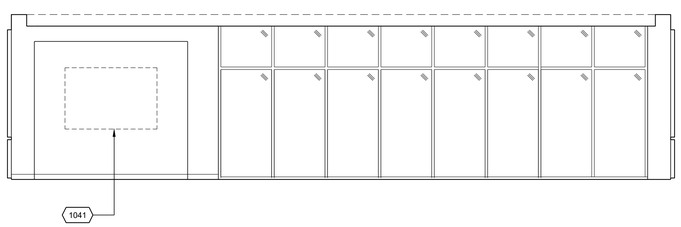

WEST

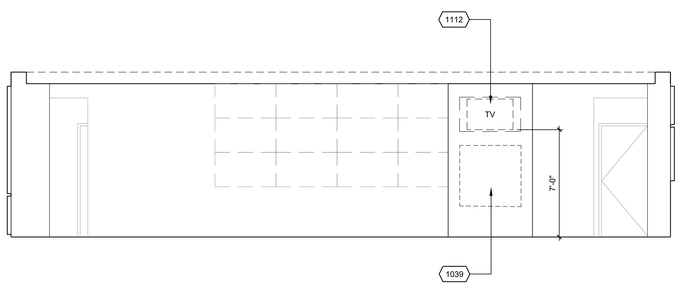

EAST @ COLUMN

ROOM 209 - E.O.C. FLOOR | 1/4" = 1'-0" | 4

PBK
RANCHO CUCAMONGA
8163 ROCHESTER AVENUE, SUITE 100
RANCHO CUCAMONGA, CA 91730
909-987-0909 P

ONTARIO FIRE DEPARTMENT ADMINISTRATION BUILDING

CITY OF ONTARIO

1420 E. FRANCIS STREET., ONTARIO, CA

LICENSED ARCHITECT
KEVIN NEEDHAM
C-19064
Exp. 03/31/25
STATE OF CALIFORNIA

CONSULTANT

NO	DATE	BY	DESCRIPTION

REVISIONS

DRAWN: RMG	CHECKED: KN
DATE: 07/15/2022	SCALE: AS NOTED
PROJECT NUMBER: 2011700	

INTERIOR ELEVATIONS

DRAWING NUMBER: A7.4

BID SET 03/01/24

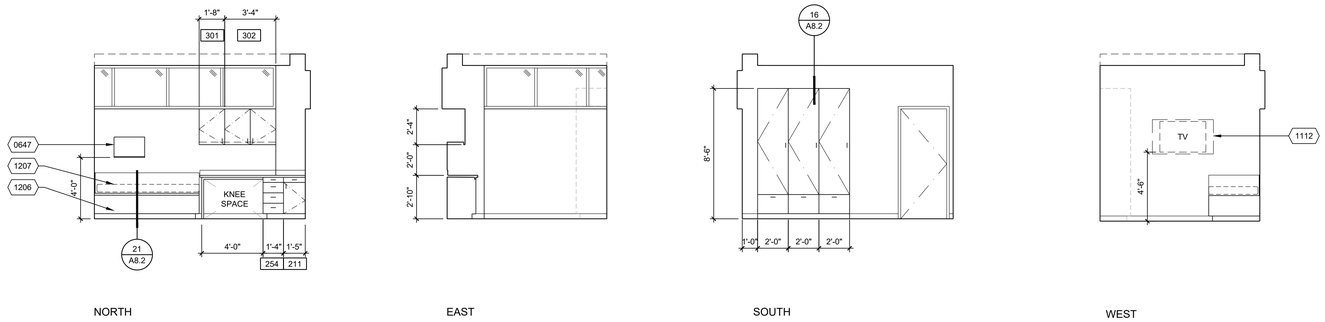

ROOM 227 - QUIET ROOM 1 (ROOM 229 - QUIET ROOM 2, SIM.) | 1/4" = 1'-0" | 5

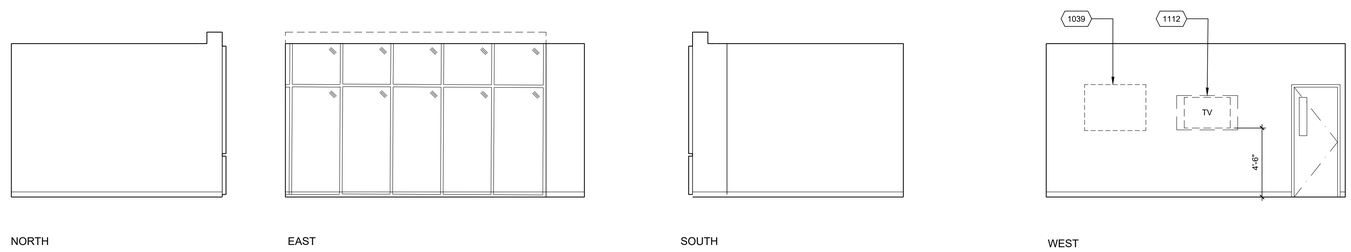

ROOM 231 - EMERGENCY COORDINATOR | 1/4" = 1'-0" | 6

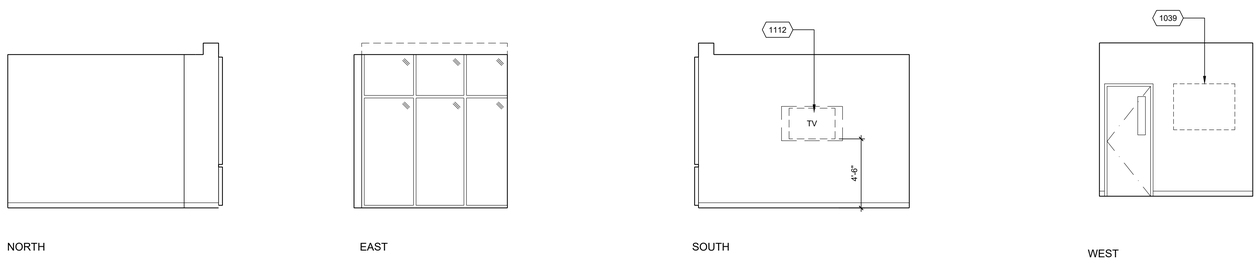

ROOM 230 - EMERGENCY MANAGER | 1/4" = 1'-0" | 7

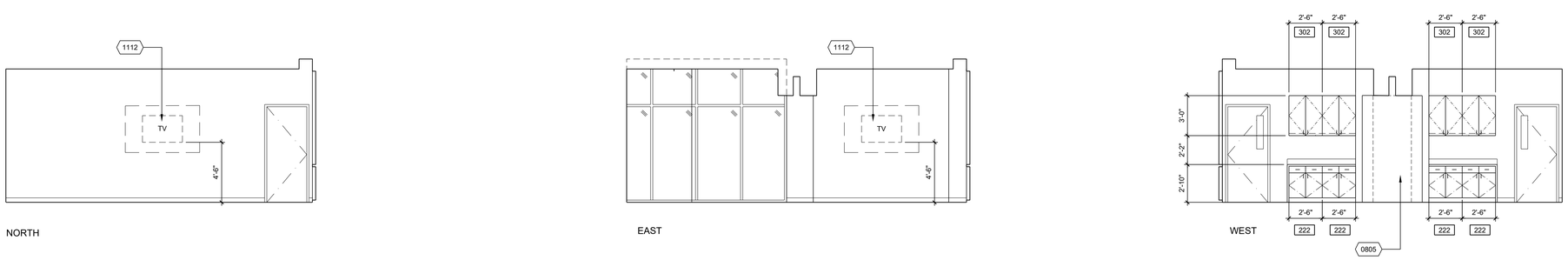

ROOM 233 - E.O.C. CONFERENCE ROOM | 1/4" = 1'-0" | 4

0624	WALL MOUNTED MAP BOARD, SEE 12/A8.2
0629	SOLID POLYMAR
0647	PERSONAL ELECTRONIC NICHE, SEE 18/A-8.2
0805	COIL UP DOOR HOUSING
0922	DIGITAL WALL COVERING
0925	PORCELAIN WALL TILE 24" X 12"
0926	PORCELAIN WALL TILE 6" X 3"
0927	PORCELAIN WALL BASE TILE
0964	CABLE MANAGEMENT ACCESS FLOOR SYSTEM
0965	DRIFT JOINT. SEE STRUCT DWGS
0966	ATHLETIC FLOORING AT BASE, ALL WALLS
1005	SURFACE MOUNTED TOILET TISSUE DISPENSER
1007	SURFACE MOUNTED SEAT COVER DISPENSER
1012	RECESSED WASTE RECEPTACLE/TOWEL DISPENSER, LARGE
1028	SURFACE MOUNTED SOAP DISPENSER
1032	TWO WALL, 42 X 54 INCH GRAB BAR, SEE 18/A8.2
1034	MIRROR WITH STAINLESS STEEL PERIMETER FRAME
1039	48"x48" GLASS MARKER BOARD, SEE DETAIL 4/A8.4
1043	WALL MOUNTED TV BRACKET
1112	WALL RECESS FOR TV BRACKET, SEE 1/A8.4
1144	ROLLER SHADE WITH ENCLOSURE, SURFACE MOUNTED
1206	DAY BED, SEE 21,22/A8.2
1207	MATTRESS, N.I.C.
1609	WALL MOUNTED CLOCK, SEE ELECTRICAL DRAWINGS
1630	UNDER CABINET LIGHTING, SEE 19/A8.2
1642	RECEPTACLE, SEE ELECTRICAL DRAWINGS

NOTES:

1. FOR CASEWORK ANCHORAGE DETAIL, SEE 4/A-8.2
2. FOR CASEWORK FACE PANEL DETAIL, SEE 5/A-8.2
3. FOR COUNTERTOP DETAILS, SEE 6/A-8.2
4. FOR FIXTURE HEIGHT SCHEDULE, SEE 8/A-8.2
5. FOR LAVATORY COUNTERTOP, SEE 10/A-8.2
6. FOR UNDERCABINET LIGHT FIXTURE, SEE 9/A-8.2
7. FOR QUIET ROOM DESK, SEE 12/A-8.5

REFERENCE NOTES | 2

PBK
RANCHO CUCAMONGA
8163 ROCHESTER AVENUE, SUITE 100
RANCHO CUCAMONGA, CA 91730
909-987-0909 P

ONTARIO FIRE DEPARTMENT ADMINISTRATION BUILDING

CITY OF ONTARIO

1420 E. FRANCIS STREET., ONTARIO, CA

LICENSED ARCHITECT
KEVIN NEEDHAM
C-19064
Exp. 03/31/25
STATE OF CALIFORNIA

CONSULTANT

NO	DATE	BY	DESCRIPTION

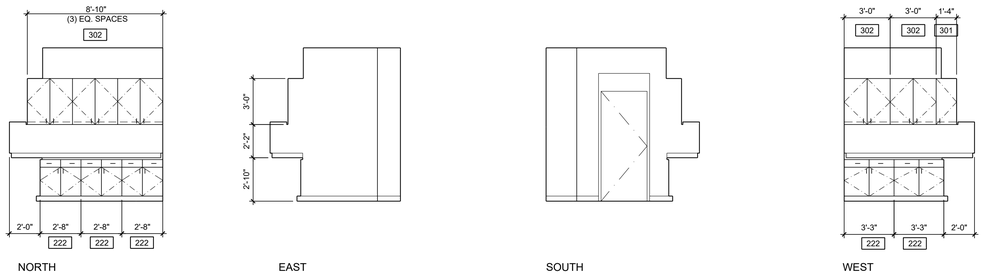

21 | 17 | ROOM 303 - STORAGE | 1/4" = 1'-0" | 5

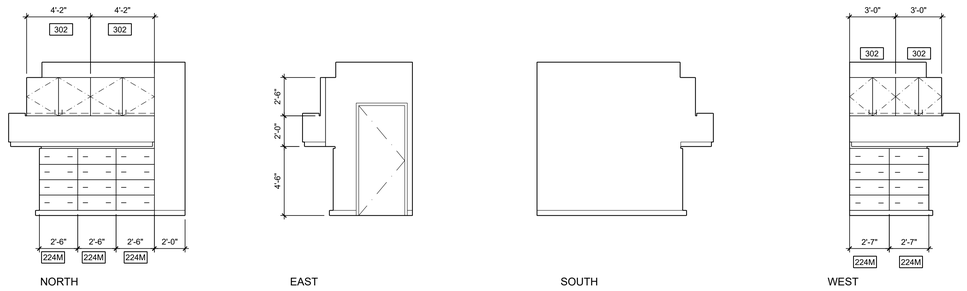

22 | 18 | ROOM 305 - SECURED FILES ROOM | 1/4" = 1'-0" | 6

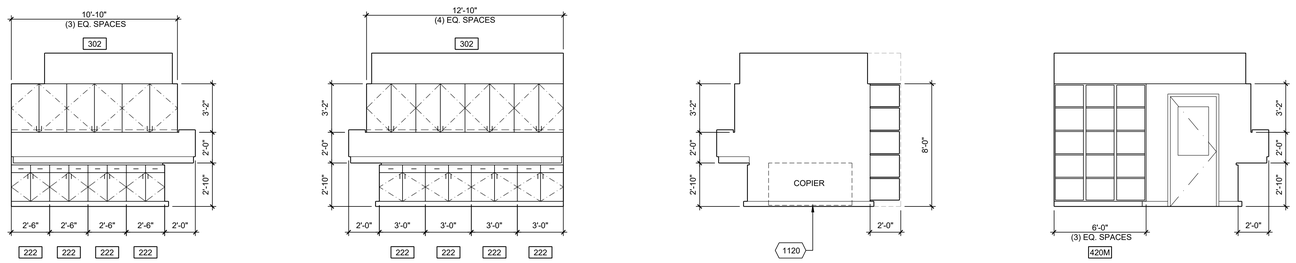

23 | 19 | ROOM 314 - WORKROOM AND STORAGE | 1/4" = 1'-0" | 3

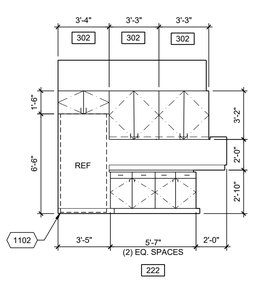

ROOM 315 - BREAKROOM | 1/4" = 1'-0" | 16

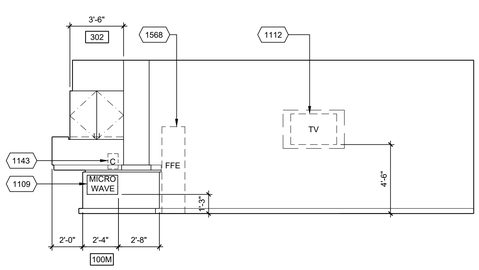

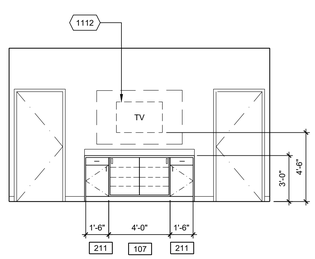

ROOM 323 - DAY RM | 1/4" = 1'-0" | 12

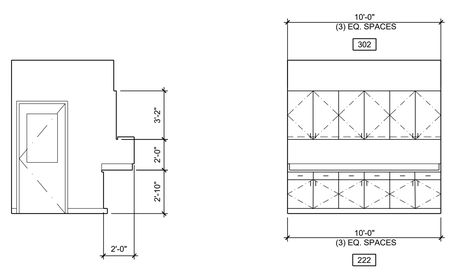

ROOM 324 - WORKROOM | 1/4" = 1'-0" | 4

1102	REFRIGERATOR
1109	BUILT-IN MICROWAVE
1112	WALL RECESS FOR TV BRACKET, SEE 1/A8.4
1120	PHOTOCOPY MACHINE, N.I.C.
1143	COFFEE MAKER
1568	FLOWATER MACHINE, N.I.C.

NOTES:

1. FOR CASEWORK ANCHORAGE DETAIL, SEE 4/A-8.2
2. FOR CASEWORK FACE PANEL DETAIL, SEE 5/A-8.2
3. FOR COUNTERTOP DETAILS, SEE 6/A-8.2
4. FOR FIXTURE HEIGHT SCHEDULE, SEE 8/A-8.2
5. FOR LAVATORY COUNTERTOP, SEE 10/A-8.2
6. FOR UNDERCABINET LIGHT FIXTURE, SEE 9/A-8.2
7. FOR QUIET ROOM DESK, SEE 12/A-8.5

REFERENCE NOTES | 2

PBK
RANCHO CUCAMONGA
8163 ROCHESTER AVENUE, SUITE 100
RANCHO CUCAMONGA, CA 91730
909-987-0909 P

ONTARIO FIRE DEPARTMENT ADMINISTRATION BUILDING

CITY OF ONTARIO

1420 E. FRANCIS STREET., ONTARIO, CA

LICENSED ARCHITECT
KEVIN NEEDHAM
C-19064
Exp. Date 03/31/25
STATE OF CALIFORNIA

CONSULTANT

NO	DATE	BY	DESCRIPTION

REVISIONS

DRAWN: RMG	CHECKED: KN
DATE: 07/15/2022	SCALE: AS NOTED
PROJECT NUMBER: 2011700	

INTERIOR ELEVATIONS

DRAWING NUMBER: A7.6

BID SET 03/01/24

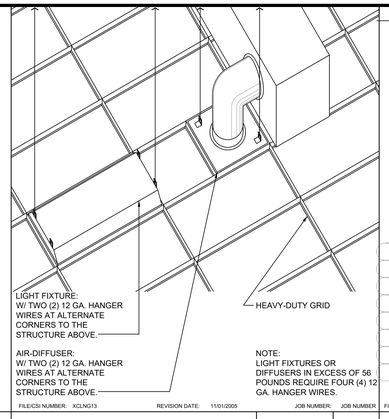

21 — 17 — FIXTURE BRACING — 1/2"=1'-0" — 13

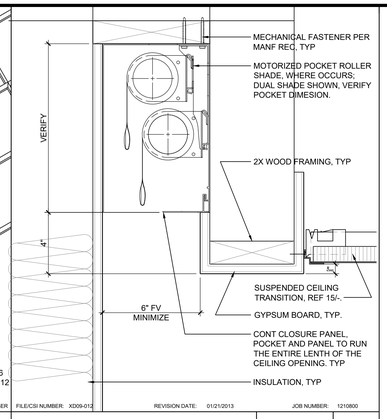

PERIMETER POCKET @ TBAR CEILING — 3"=1'-0" — 9

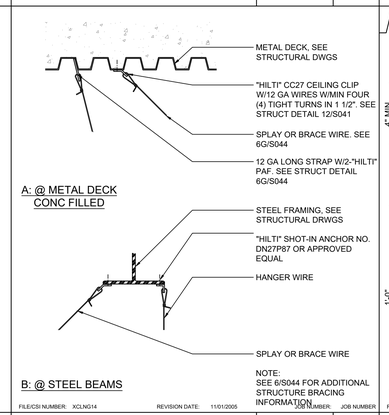

22 — 18 — HANGER / SPLAY WIRE — 1 1/2"=1'-0" — 14

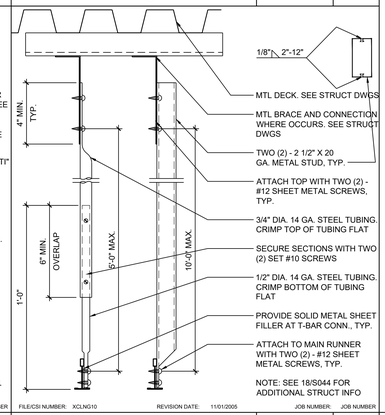

COMPRESSION STRUT — 3"=1'-0" — 10

SUSPENDED CEILING NOTES — 2

METAL SUSPENSION SYSTEMS FOR LAY IN PANEL CEILINGS.

1. 12 GA. (MIN.) hanger wires may be used for up to and including 4 ft. x 4 ft. grid spacing along main runners.

2. Provide 12 ga. hanger wires at the ends of all main and cross runners within 8" from the support or within 1/4 of the length of the end tee, whichever is least, for the perimeter of the ceiling area.

3. Provide trapeze or other supplementary support members at obstructions to main hanger spacings. Provide additional hangers, struts or braces as required at all ceiling breaks, soffits, or discontinuous areas. Hanger wires that are more than 1 in 6 out of plumb are to have counter-sloping wires.

4. Ceiling grid members may be attached to not more than two adjacent walls. Ceiling grid members should be at least 1/2 inch free of other walls. If walls run diagonally to ceiling grid system runners, one end of main and cross runner should be free and a minimum of 1/2 inch clear of wall.

5. At the perimeter of the ceiling area where main or cross runners are not connected to the adjacent wall, provide interconnection between runners at the free end to prevent lateral spreading. A metal strut or a 16 ga. wire with a positive mechanical connection to the runner may be used. Where the perpendicular distance from the wall to the first parallel runner is 12" or less, this interlock is not required.

6. Provide sets of four 12 ga. splayed bracing wires oriented 90 degrees from each other at not more than 8 feet by 12 feet on center.

   Provide bracing wires at locations not more than 6 feet from each perimeter wall and at the edge of vertical ceiling offsets.

   The slope of these wires should not exceed 45 degrees from the plane of the ceiling and should be taut without causing the ceiling to lift. Splices in bracing wires are not to be permitted without special Building Department approval.

7. Fasten hanger wires with not less than 3 tight turns. Fasten bracing wires with 4 tight turns. Make all tight turns within a distance of 1-1/2 inches. Hanger or bracing wire anchors to the structure should be installed in such a manner that the direction of the wire aligns as closely as possible with the direction of the forces acting on the wire.

   (Note: Wire turns made by machine where both strands have been deformed or bent in wrapping can waive the 1 1/2" requirement, but the number of turns should be maintained, and be as tight as possible.)

8. Separate all ceiling hanging and bracing wires at least 6 inches from all unbraced ducts, pipes, conduit, etc. It is acceptable to attach lightweight items, such as single electrical conduit not exceeding 3/4" nominal diameter, to hanger wires using connectors acceptable to Building Department.

   HAVC ductwork, electrical distribution, telephone services, computer cable distribution, and other services normally found in a ceiling space, shall be independently supported and appropriately braced to eliminate any lateral force on the ceiling membrane or bracing elements.

9. When drilled-in concrete anchors or shot-in anchors are used in reinforced concrete for hanger wires, 1 out of 10 must be field tested for 200 pounds of tension. When drilled-in concrete anchors are used for bracing wires, 1 out of 2 must be field tested for 440 pounds of tension. Shot-in anchors in concrete are not permitted for bracing wires. If any shot-in or drilled-in anchor fails, all adjacent anchors must be tested. Drilled-in or slot-in anchors must be tested. Drilled-in or slot-in anchors require special Building Department approval when used in prestressed concrete.

10. Attach all light fixtures to the ceiling grid runners to resist a horizontal force equal to the weight of the fixtures.

    All recessed lighting fixtures having a nominal end dimension of 24 inches or greater, shall be positively attached to the ceiling grid runner(s) at the end of the fixture with two #8 self-tapping Tek screws. Each screw shall be located within 3" of the side of the fixture and attached through the bulb of the ceiling grid runner(s). Light fixtures having less than a nominal 24" end dimension shall be attached with one #8 self tapping Tek screw at the center of each end of the fixture, attached to the bulb of the ceiling grid runner(s). All attachments shall be capable of laterally supporting the weight of the fixture. All fixtures, regardless of weight or size, shall have interlocking ceiling grid runner(s) on all 4 sides of the fixture.

11. Ceiling mounted air terminals or services shall be positively attached to the ceiling suspension main runners or to cross runners with the same carrying capacity as the main runner.

    Air terminals with a nominal dimension of 24" or less shall be positively attached to the ceiling grid runner(s) on at least two opposing sides with one #8 self tapping Tek screw on each side. Each screw shall be located in the center of the air terminal and shall be attached through the bulb of the ceiling grid runner(s). Air terminals in excess of 24" in length shall be attached with two #8 self tapping Tek screws on each end of diffuser attached to the bulb of the ceiling grid runner(s). All attachments shall be capable of laterally supporting the weight of the air terminal. All air terminals regardless of weight or size shall have interlocking ceiling grid runner(s) on all 4 sides of the air terminal.

12. Flush or recessed light fixtures and air terminals or services weighing less than 56 pounds may be supported directly on the runners of a heavy duty grid system but, in addition, they must have a minimum of two 12 ga. slack safety wires attached to the fixture at diagonal corners and anchored to the structure above. All 4 ft. x 4 ft. light fixtures must have slack safety wires at each corner.

    All flush or recessed light fixtures and air terminals or services weighing 56 pounds or more must be independently supported by not less than 4 taut 12 ga. wires each attached to the fixture and to the structure above regardless of the type of ceiling grid system used.

    The 4 taut 12 ga. wires including their attachment to the structure above may be capable of supporting four times the weight of the unit.

13. Penetrations through ceiling for sprinkler heads and other similar devices that are not integrally tied to the ceiling system shall have a 2" oversized ring or sleeve through the ceiling tile to allow 1" movement in all horizontal directions.

14. Support surface mounted light fixtures by at least two positive devices which surround the ceiling runner and which are each supported from the structure above by a 12 ga. wire. Spring clips or clamps that connect only to the runner are not acceptable.

    Provide additional supports when light fixtures are 8 feet or longer.

15. Support pendant mounted light fixtures directly from the structure above with hanger wires or cables passing through each pendant hanger and capable of supporting 4 times the weight of the fixture. Special details are necessary for this condition at the ceiling grid.

16. Classification of the ceiling grid is heavy duty. Components shall comply with the following Schedule:

MANUFACTURER	MAIN	CROSS	ICC-ES REPORT NO.
ARMSTRONG	7301	7340 (1)	ESR-1308
CHICAGO METALLIC	200	1204 (2)	ER-2631
DONN CORPORATION	DX26	DX424 (3)	ESR-1222
CERTAINTEED	C12-12-20	CS4-12-5(4)	NA

    Footnotes:
    (1) FOR 2' X 2' GRID USE 7328
    (2) FOR 2' X 2' GRID USE 1226
    (3) FOR 2' X 2' GRID USE DX216
    (4) FOR 2' X 2' GRID USE CS2-12-08

17. Anchors for wall angles:

    A. At wood stud wall: 8D common nail @ 16" O.C.

    B. At metal stud wall: 1 1/8" type "S" Bugle Head drywall screw at 16" O.C.

    C. At masonry wall: 1/4" dia. x 1 3/4" long Tapcon anchor screw @ 16" O.C. ICC/ES No. 1671

18. Suspended acoustical ceiling system shall be installed in accordance with the provisions of ASTM C635 and ASTM C636.

19. Suspended acoustical ceiling system shall comply with ASCE 7-16 Section 13.5.6.

20. Suspended acoustical ceiling system shall be subject to the special inspection requirements of Section 11.A.1.3.0 of ASCE Standard.

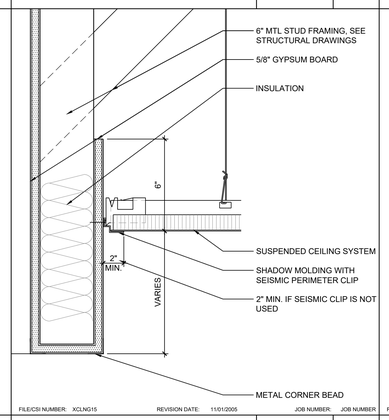

23 — 19 — CEILING TRANSITION — 3"=1'-0" — 15

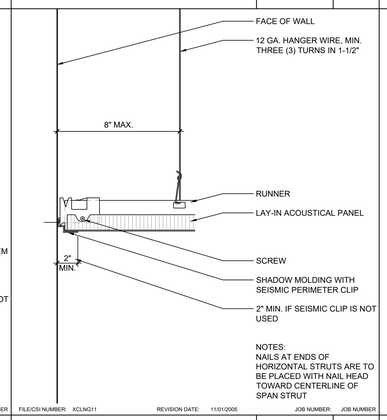

CEILING PERIMETER — 3"=1'-0" — 11

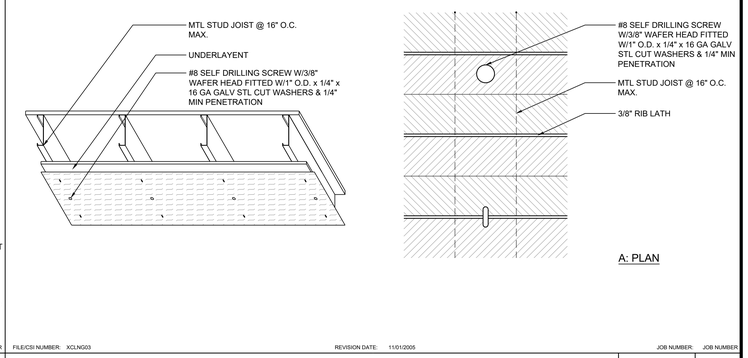

HORIZONTAL LATH ATTACHMENT — N.T.S. — 3

24 — 20 — 16

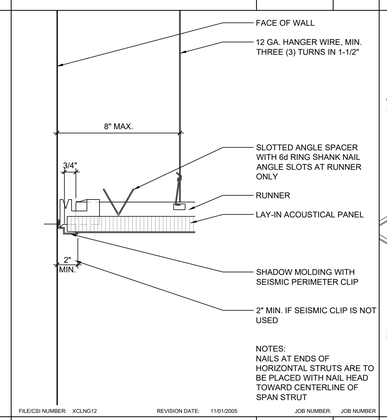

CEILING PERIMETER — 3"=1'-0" — 12

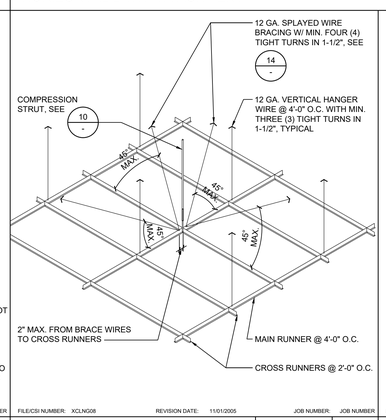

GRID LAYOUT — 3/8"=1'-0" — 8

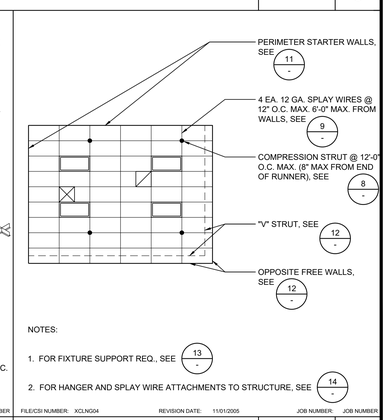

CEILING DETAIL — 1/8"=1'-0" — 4

PBK
RANCHO CUCAMONGA
8163 ROCHESTER AVENUE, SUITE 100
RANCHO CUCAMONGA, CA 91730
909-987-0909 P

ONTARIO FIRE DEPARTMENT ADMINISTRATION BUILDING

CITY OF ONTARIO

1420 E. FRANCIS STREET., ONTARIO, CA

LICENSED ARCHITECT — KEVIN NEEDHAM C-19064 — Exp. 03/31/25 — STATE OF CALIFORNIA

CONSULTANT

NO	DATE	BY	DESCRIPTION

REVISIONS

DRAWN: RMZ — CHECKED:
DATE: 07/15/2022 — SCALE:
PROJECT NUMBER: 2011700

SUSPENDED CEILING NOTES AND DETAILS

DRAWING NUMBER: A8.1

BID SET 03/01/24

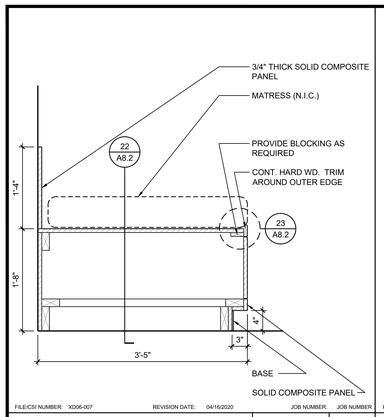

FILE/CSI NUMBER: XD06-007 REVISION DATE: 04/16/2020 JOB NUMBER: JOB NUMBER

DAYBED PLATFORM | 1"=1'-0" | 21

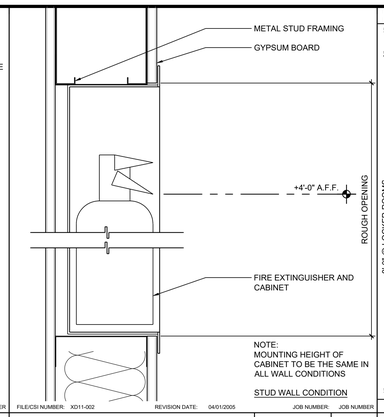

FILE/CSI NUMBER: XD11-002 REVISION DATE: 04/01/2005 JOB NUMBER: JOB NUMBER

FIRE EXTINGUISHER CABINET | N.T.S. | 17

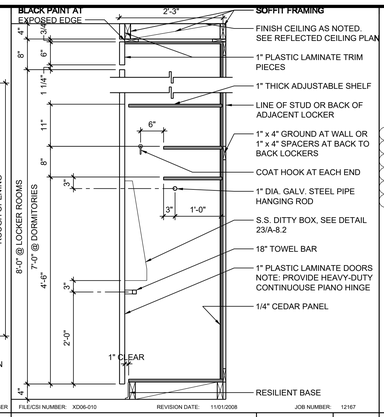

FILE/CSI NUMBER: XD06-010 REVISION DATE: 11/01/2008 JOB NUMBER: 12167

CLOTHING LOCKER | 3/4"=1'-0" | 13

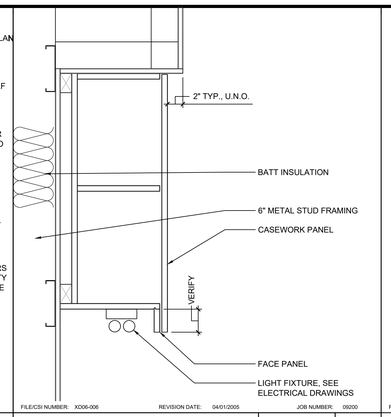

FILE/CSI NUMBER: XD06-006 REVISION DATE: 04/01/2005 JOB NUMBER: 09200

LIGHT FIXTURE | 1 1/2"=1'-0" | 9

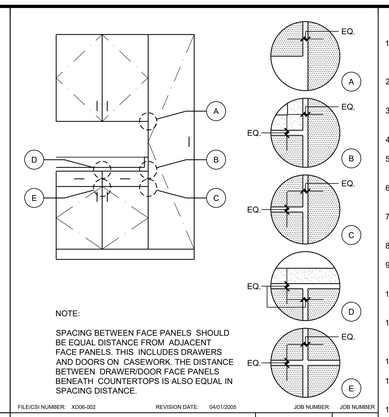

FILE/CSI NUMBER: XD06-002 REVISION DATE: 04/01/2005 JOB NUMBER: JOB NUMBER

CASEWORK | N.T.S. | 5

GENERAL NOTES:

1. ALL CASEWORK SHOWN ON SCHEDULE ARE NOT NECESSARILY USED. ONLY THOSE CASEWORK ITEMS CALLED OUT ON INTERIOR ELEVATIONS AND/OR FLOOR PLANS SHALL BE USED.
2. CASEWORK NUMBERS SHOWN ON SCHEDULE ARE THOSE OF THE WOODWORK INSTITUTE (WI) DESIGN NUMBERING SYSTEM.
3. ALL CABINET DIMENSIONS INDICATED IN SCHEDULE ARE NOMINAL OUTSIDE DIMENSIONS.
4. ALL DIMENSIONS NOTED ON SCHEDULE ARE IN INCHES.
5. FILLER STRIPS ARE REQUIRED AT ENDS OF CABINETS WHERE CABINETS ARE ADJACENT TO WALLS.
6. ALL FILLER STRIPS AT ALL TALL AND WALL CABINETS TO HAVE TOP AND BOTTOM RETURNS.
7. HEIGHT DIMENSIONS OF BASE CABINETS INCLUDE FINISHED TOP THICKNESS OF 1 1/2" & SUBBASE HEIGHT OF 4", U.N.O.
8. HEIGHT DIMESIONS OF APRONS INCLUDE FINISHED TOP THICKNESS OF 1 1/2", U.N.O.
9. HEIGHT DIMENSIONS OF TOPS WITH APRONS FROM FINISHED FLOOR LINE SHALL MATCH HEIGHT LINE SHALL MATCH HEIGHT OF ADJACENT BASE CABINETS U.N.O.
10. ALL PLAN DIMENSIONS OF CASEWORK ARE CABINET DIMENSIONS ONLY & DO NOT INCLUDE TOPS.
11. PROVIDE FINISHED END PANELS FOR SUPPORT OF COUNTERTOPS AT UNDER-COUNTER EQUIPMENTOR KNEE SPACES WHERE THERE IS NO ADJACENT WALL OR CABINET THAT CAN BE USED FOR SUPPORT.
12. FINISH ALL EXPOSED PORTIONS OF CASEWORK AND COUNTERTOPS.
13. ALL UNITS INCLUDING OPEN UNITS SHALL HAVE CASEWORK MANUFACTURER'S STANDARD CABINET LINER, U.N.O.
14. ALL TOE SPACES SHALL BE 4" IN HEIGHT AND 3" IN DEPTH AND SHALL RETURN TO WALL WHERE ENDS OF CABINETS ARE EXPOSED, U.N.O.
15. ALL SHELVING SHALL BE ADJUSTABLE, U.N.O.
16. PROVIDE DUST CLOSURE PANELS TO CEILING OR DROPPED SOFFIT AS INDICATED ON ELEVATIONS OR PLAN.
17. ALL COUNTERTOPS SHALL BE OF DEPTHS AS DETAILED AND SHALL BE OF MAXIMUM PRACTICAL LENGTHS REQUIRED TO CONFORM TO OVERALL BASE CABINET DIMENSIONS.
18. PROVIDE BACKSPLASH RETURN AT ENDS OF COUNTERTOPS WHERE ADJACENT TO WALL OR OTHER FULL HEIGHT CASEWORK.
19. ALL SINKS, SINK TRIM & ELECTRICAL ITEMS SHALL BE FURNISHED BY OTHER THAN THE CASEWORK MANUFACTURER, U.N.O.
20. ALL COUNTERTOPS SHALL BE PLASTIC LAMINATE, U.N.O.

CASEWORK ANCHORAGE LOCATIONS

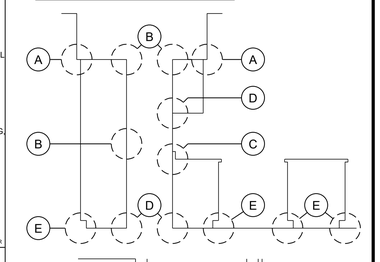

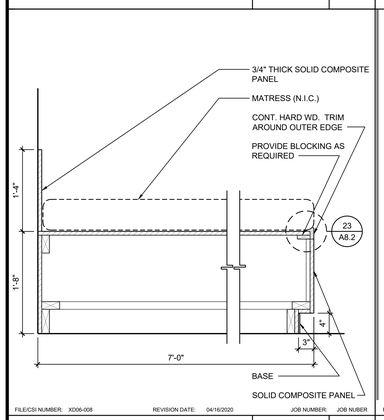

FILE/CSI NUMBER: XD06-008 REVISION DATE: 04/16/2020 JOB NUMBER: JOB NUBER

DAYBED PLATFORM | 1"=1'-0" | 22

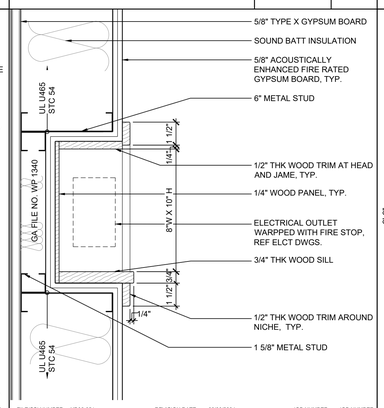

FILE/CSI NUMBER: XD06-051 REVISION DATE: 00/00/2004 JOB NUMBER: JOB NUMBER

WALL NICHE @ RATED WALL | 3"=1'-0" | 18

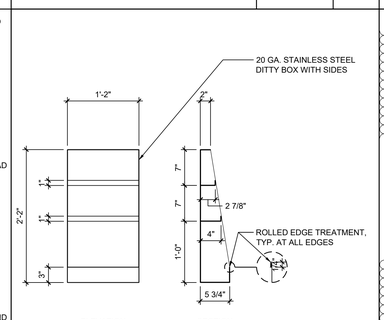

FILE/CSI NUMBER: XD05-002 REVISION DATE: 11/01/2008 JOB NUMBER: 12167

DITTY BOX | 1"=1'-0" | 14

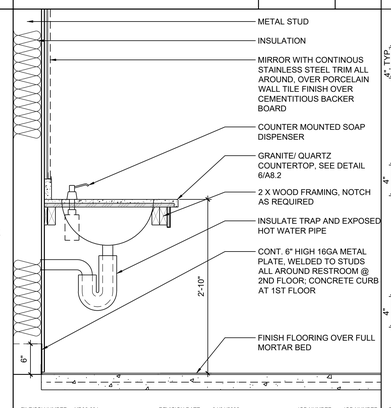

FILE/CSI NUMBER: XD06-004 REVISION DATE: 04/01/2005 JOB NUMBER: JOB NUMBER

LAVATORY COUNTERTOP | 1"=1'-0" | 10

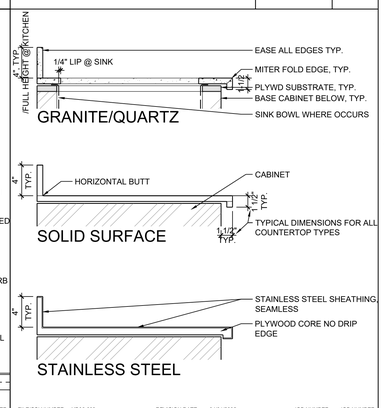

FILE/CSI NUMBER: XD06-003 REVISION DATE: 04/01/2005 JOB NUMBER: JOB NUMBER

COUNTERTOPS | 1 1/2"=1'-0" | 6

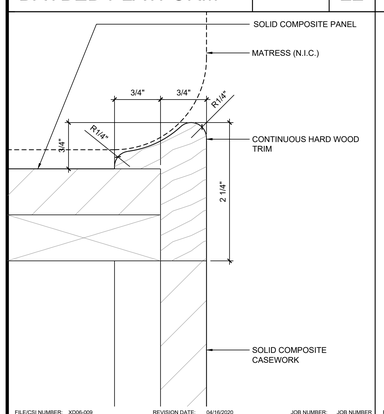

FILE/CSI NUMBER: XD06-009 REVISION DATE: 04/16/2020 JOB NUMBER: JOB NUMBER

DAYBED PLATFORM | FULL | 23

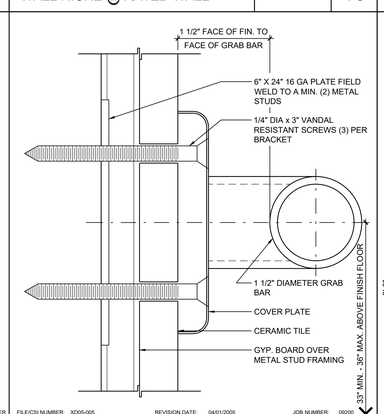

FILE/CSI NUMBER: XD05-005 REVISION DATE: 04/01/2005 JOB NUMBER: 09200

GRAB BAR | FULL | 19

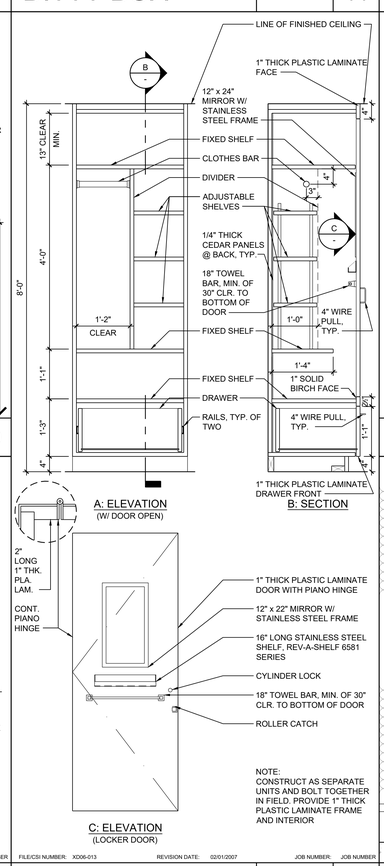

FILE/CSI NUMBER: XD06-013 REVISION DATE: 02/01/2007 JOB NUMBER: JOB NUMBER

QUIET ROOM LOCKER | 3/4"=1'-0" | 16

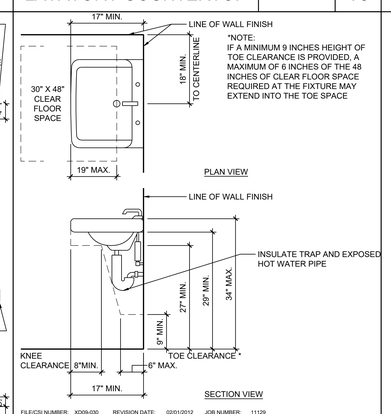

FILE/CSI NUMBER: XD09-030 REVISION DATE: 02/01/2012 JOB NUMBER: 11129

KNEE CLEARANCE | 3/4"=1'-0" | 11

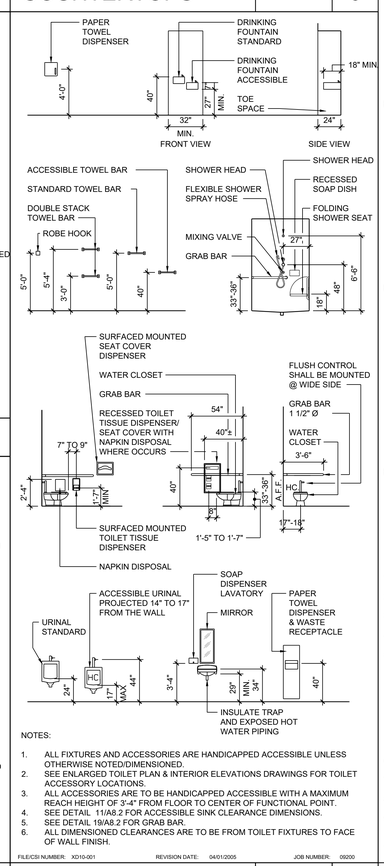

NOTES:

1. ALL FIXTURES AND ACCESSORIES ARE HANDICAPPED ACCESSIBLE UNLESS OTHERWISE NOTED/DIMENSIONED.
2. SEE ENLARGED TOILET PLAN & INTERIOR ELEVATIONS DRAWINGS FOR TOILET ACCESSORY LOCATIONS.
3. ALL ACCESSORIES ARE TO BE HANDICAPPED ACCESSIBLE WITH A MAXIMUM REACH HEIGHT OF 3'-4" FROM FLOOR TO CENTER OF FUNCTIONAL POINT.
4. SEE DETAIL 11/A8.2 FOR ACCESSIBLE SINK CLEARANCE DIMENSIONS.
5. SEE DETAIL 19/A8.2 FOR GRAB BAR.
6. ALL DIMENSIONED CLEARANCES ARE TO BE FROM TOILET FIXTURES TO FACE OF WALL FINISH.

FILE/CSI NUMBER: XD10-001 REVISION DATE: 04/01/2005 JOB NUMBER: 09200

FIXTURE HEIGHT SCHEDULE | 3/16"=1'-0" | 8

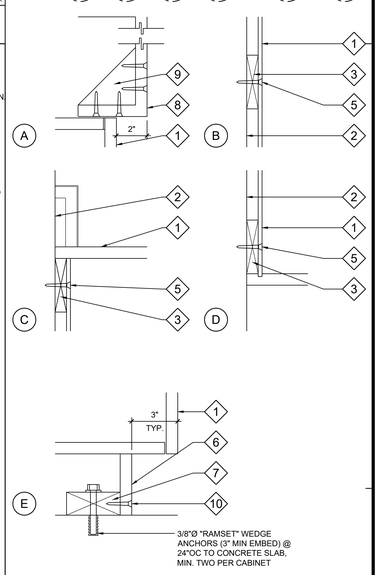

CASEWORK ANCHORAGE NOTES

1. CASEWORK (FRONT) (BACK) (TOP) (BOTTOM)
2. FACE OF WALL
3. 1 x 4 CONTINUOUS WOOD CLEAT
4. 1 x 2 CONTINUOUS WOOD CLEAT
5. ANCHORAGE TYPE VARIES BASE UPON WALL CONSTRUCTION AS FOLLOWS:

   WOOD STUD FRAMING - #10 x 3 1/2" FHWS @ 16"O.C., 2" MAXIMUM FROM EACH END. MIN. 2 PER CABINET W/ 3 X 4 WOOD BLOCKING WITH A34 TOP AND BOTTOM,
   OR
   METAL STUD FRAMING - #8 x 2 1/2" FHMS @ 16"O.C., 2" MAXIMUM FROM EACH END. MIN. 2 PER CABINET W/ CONT 16 GA x 4" STEEL PLATE x CABINET LENGTH
   OR
   MASONRY OR CONCRETE - 3/8"Ø "RAMSET" DYNABOLT SLEEVE ANCHORS (2" MIN EMBEDMENT) @ 24"OC, MINIMUM 2 PER CABINET
6. 3/4" PARTICLE BOARD SKIRT
7. 2 x 4 PLATE
8. FASCIA
9. 2 x 6 GUSSET @ 48"O.C. - #10 x 2" LONG FHWS (6" FROM EACH END), SET 2x IN GLUE WHERE FASTENERS ARE PARALLEL TO 2x GRAIN, NO EXPOSED SCREW HEADS
10. #10 x 3" FLAT HEAD WOOD SCREWS @ 24" OC

FILE/CSI NUMBER: XD06-001 REVISION DATE: 03/08/2005 JOB NUMBER: JOB NUMBER

CASEWORK ANCHORAGE | N.T.S. | 4

24 | S.S. KITCHEN SINK | 3/4"=1'-0" | 20

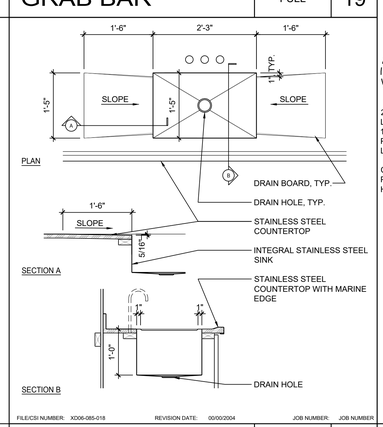

FILE/CSI NUMBER: XD06-085-018 REVISION DATE: 00/00/2004 JOB NUMBER: JOB NUMBER

QUIET ROOM DESK | 1"=1'-0" | 12

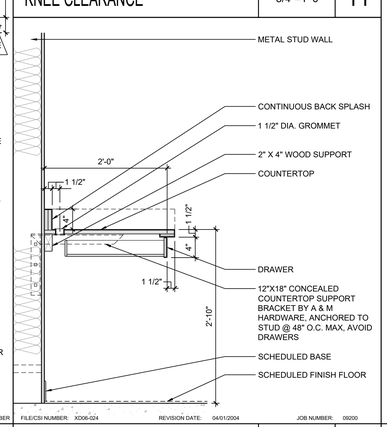

FILE/CSI NUMBER: XD06-024 REVISION DATE: 04/01/2004 JOB NUMBER: 09200

PBK
RANCHO CUCAMONGA
8163 ROCHESTER AVENUE, SUITE 100
RANCHO CUCAMONGA, CA 91730
909-987-0909 P

ONTARIO FIRE DEPARTMENT ADMINISTRATION BUILDING

CITY OF ONTARIO

1420 E. FRANCIS STREET., ONTARIO, CA

LICENSED ARCHITECT
KEVIN NEEDHAM
C-19064
Exp. 03/31/25
STATE OF CALIFORNIA

CONSULTANT

NO	DATE	BY	DESCRIPTION

REVISIONS

DRAWN: RMZ | CHECKED:

DATE: 07/15/2022 | SCALE:

PROJECT NUMBER: 2011700

INTERIOR DETAILS

DRAWING NUMBER: A8.2

BID SET 03/01/24

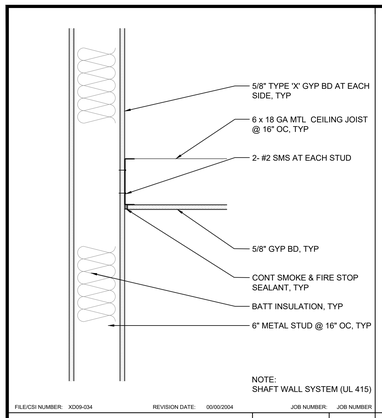

FILE/CSI NUMBER: XD09-034 REVISION DATE: 00/00/2004 JOB NUMBER: JOB NUMBER

1-HR FIRE RATED WALL AT CEILING	1 1/2"=1'-0"	21

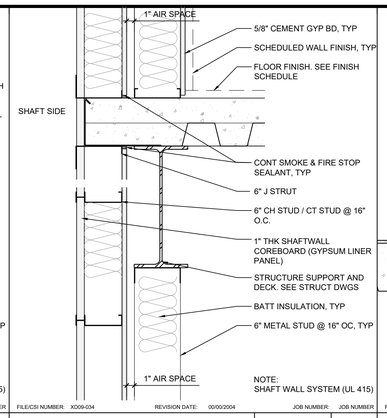

FILE/CSI NUMBER: XD09-034 REVISION DATE: 00/00/2004 JOB NUMBER: JOB NUMBER

SHAFT WALL @ DBL WALL - 1 HR	1 1/2"=1'-0"	17

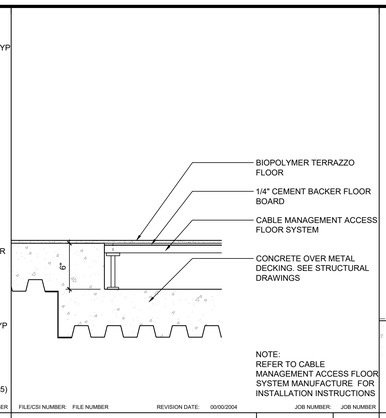

FILE/CSI NUMBER: FILE NUMBER REVISION DATE: 00/00/2004 JOB NUMBER: JOB NUMBER

FLOOR AT CABLE ACCESS	1 1/2"=1'-0"	13

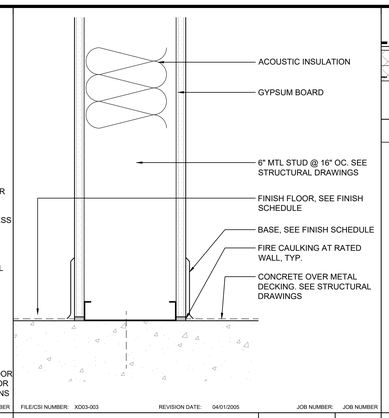

FILE/CSI NUMBER: XD03-003 REVISION DATE: 04/01/2005 JOB NUMBER: JOB NUMBER

BASE	3" = 1'-0"	9

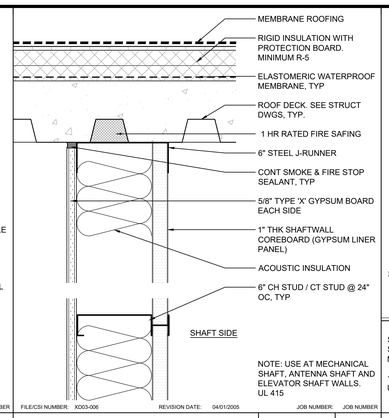

FILE/CSI NUMBER: XD03-006 REVISION DATE: 04/01/2005 JOB NUMBER: JOB NUMBER

SHAFT WALL HEAD-1 HR	3"=1'-0"	5

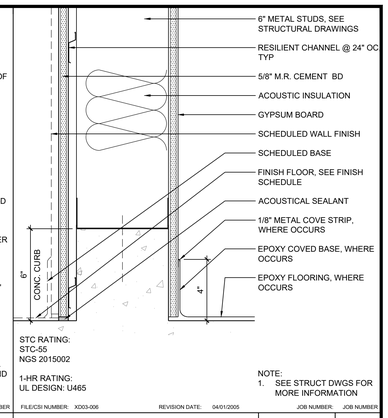

FILE/CSI NUMBER: XD03-006 REVISION DATE: 04/01/2005 JOB NUMBER: JOB NUMBER

CURB STC-55	3"=1'-0"	1

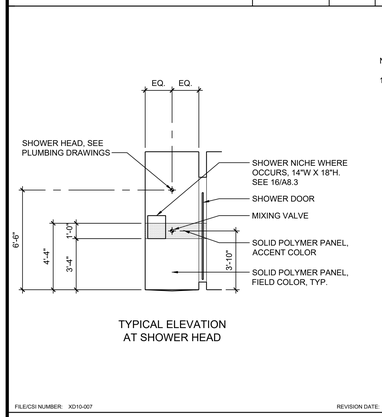

NOTES:

1. FOR SECTION THROUGH SHOWER, SEE 20/- 24/-

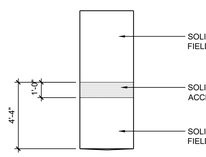

FILE/CSI NUMBER: XD10-007 REVISION DATE: 04/01/2005 JOB NUMBER: JOB NUMBER

SHOWER ELEVATIONS	1/4"=1'-0"	18

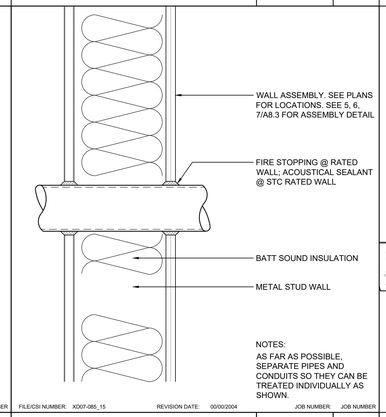

FILE/CSI NUMBER: XD07-085_15 REVISION DATE: 00/00/2004 JOB NUMBER: JOB NUMBER

PIPE PENETRATION AT RATED OR STC WALL	3"=1'-0"	14

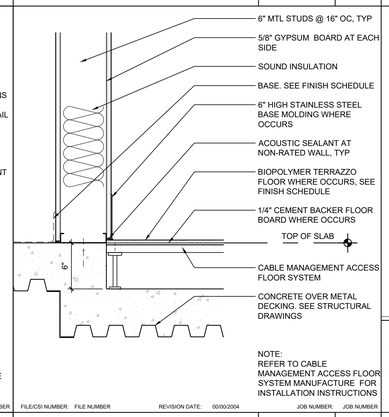

FILE/CSI NUMBER: FILE NUMBER REVISION DATE: 00/00/2004 JOB NUMBER: JOB NUMBER

BASE @ FLOOR CABLE ACCESS	1 1/2"=1'-0"	10

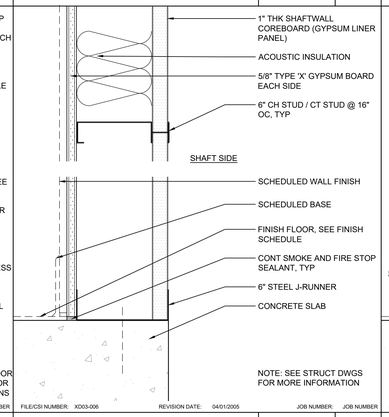

FILE/CSI NUMBER: XD03-006 REVISION DATE: 04/01/2005 JOB NUMBER: JOB NUMBER

SHAFT WALL BASE-1 HR	3"=1'-0"	6

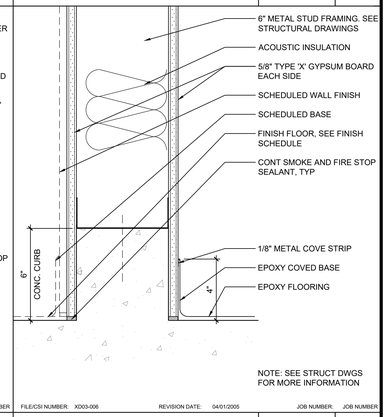

FILE/CSI NUMBER: XD03-006 REVISION DATE: 04/01/2005 JOB NUMBER: JOB NUMBER

1-HR FIRE RATED CURB	3"=1'-0"	2

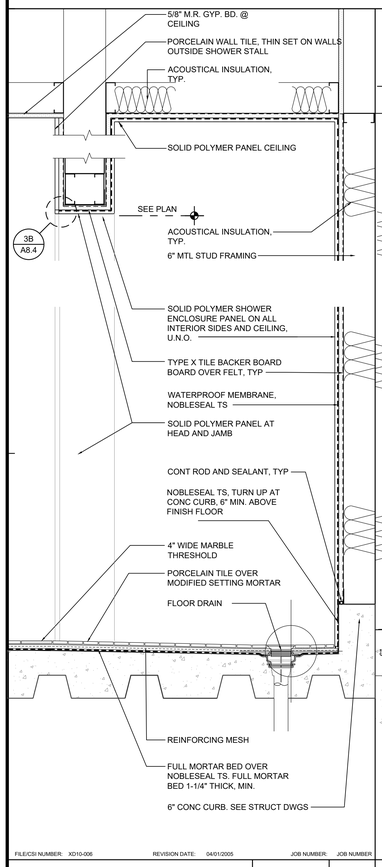

FILE/CSI NUMBER: XD10-006 REVISION DATE: 04/01/2005 JOB NUMBER: JOB NUMBER

ACCESSIBLE SHOWER SECTION	1 1/2"=1'-0"	24

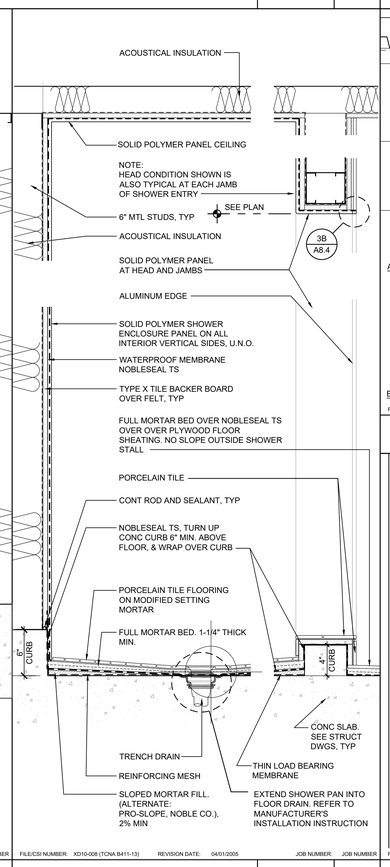

FILE/CSI NUMBER: XD10-008 (TCNA B411-13) REVISION DATE: 04/01/2005 JOB NUMBER: JOB NUMBER

SHOWER SECTION	1 1/2"=1'-0"	20

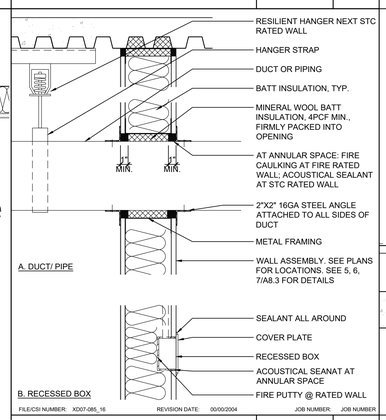

FILE/CSI NUMBER: XD07-085_16 REVISION DATE: 00/00/2004 JOB NUMBER: JOB NUMBER

SOUND CONTROL AND FIRE WALL PENETRATIONS	1 1/2"=1'-0"	15

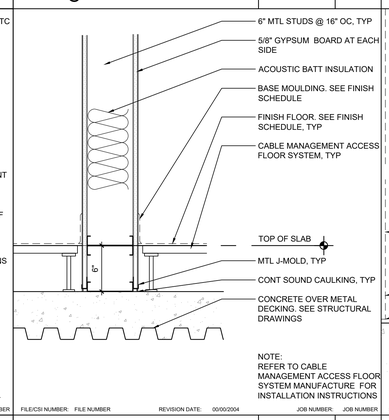

FILE/CSI NUMBER: FILE NUMBER REVISION DATE: 00/00/2004 JOB NUMBER: JOB NUMBER

BASE @ FLOOR CABLE ACCESS	1 1/2"=1'-0"	11

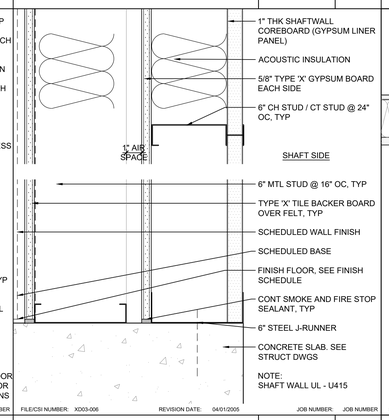

FILE/CSI NUMBER: XD03-006 REVISION DATE: 04/01/2005 JOB NUMBER: JOB NUMBER

SHAFT WALL BASE-1 HR	3"=1'-0"	7

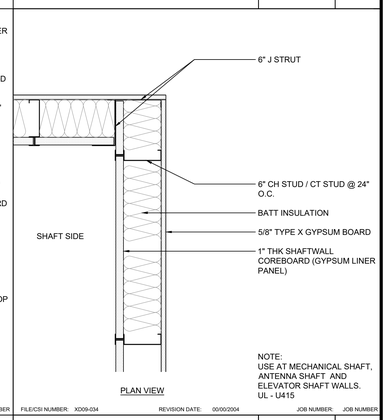

FILE/CSI NUMBER: XD09-034 REVISION DATE: 00/00/2004 JOB NUMBER: JOB NUMBER

SHAFT WALL - 1 HR	1 1/2"=1'-0"	3

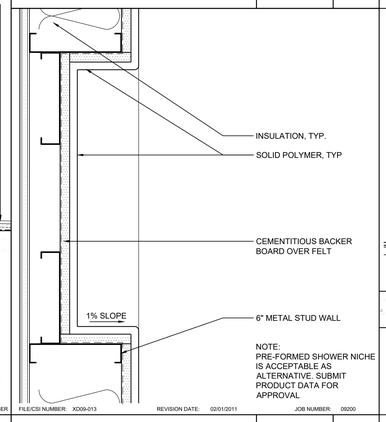

FILE/CSI NUMBER: XD09-013 REVISION DATE: 02/01/2011 JOB NUMBER: 09200

BUILT-IN SHOWER NICHE	3"=1'-0"	16

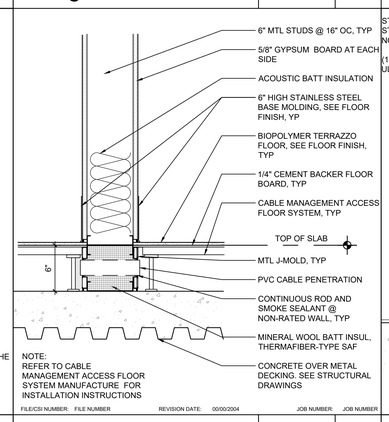

FILE/CSI NUMBER: FILE NUMBER REVISION DATE: 00/00/2004 JOB NUMBER: JOB NUMBER

BASE @ FLOOR CABLE ACCESS	1 1/2"=1'-0"	12

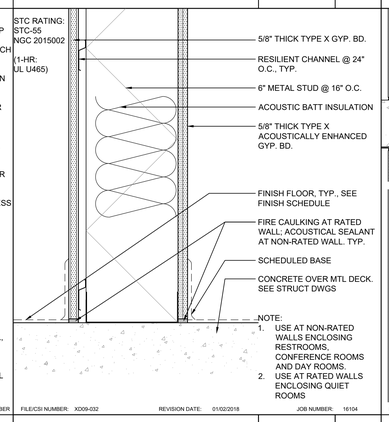

FILE/CSI NUMBER: XD09-032 REVISION DATE: 01/02/2018 JOB NUMBER: 16104

WALL ASSEMBLY, STC 55	3"=1'-0"	8

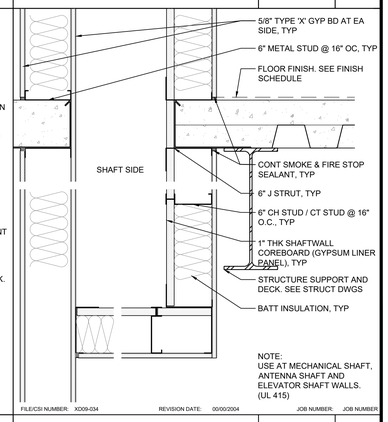

FILE/CSI NUMBER: XD09-034 REVISION DATE: 00/00/2004 JOB NUMBER: JOB NUMBER

SHAFT WALL - 1 HR	1 1/2"=1'-0"	4

PBK
RANCHO CUCAMONGA
8163 ROCHESTER AVENUE, SUITE 100
RANCHO CUCAMONGA, CA 91730
909-987-0909 P

ONTARIO FIRE DEPARTMENT ADMINISTRATION BUILDING

CITY OF ONTARIO

1420 E. FRANCIS STREET., ONTARIO, CA

LICENSED ARCHITECT
KEVIN NEEDHAM
C-19064
Date 03/31/24
STATE OF CALIFORNIA

CONSULTANT

NO	DATE	BY	DESCRIPTION

REVISIONS

DRAWN: RMZ CHECKED:

DATE: 07/15/2022 SCALE:

PROJECT NUMBER: 2011700

INTERIOR DETAILS

DRAWING NUMBER: A8.3

BID SET 03/01/24

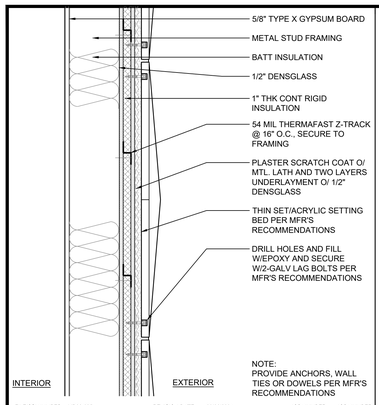

FILE/CSI NUMBER: XD09-085 REVISION DATE: 00/00/2004 JOB NUMBER: JOB NUMBER

PRE-CAST VENEER ATTACHMENT	1 1/2"=1'-0"	21

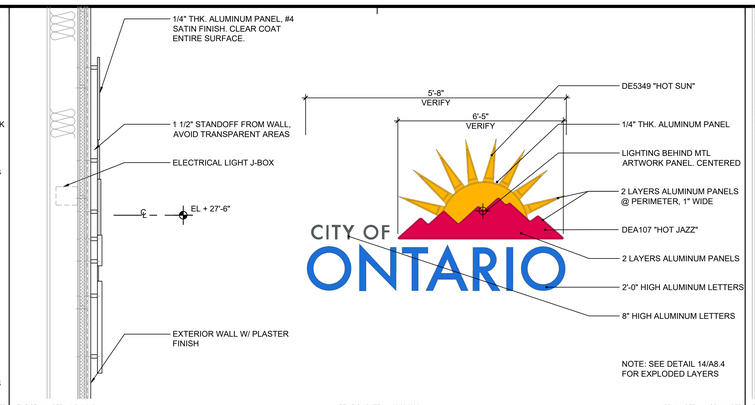

FILE/CSI NUMBER: XD10-045 REVISION DATE: 00/00/2005 JOB NUMBER: JOB NUMBER

EXTERIOR FIRE DEPARTMENT ARTWORK	3/4"=1'-0"	13

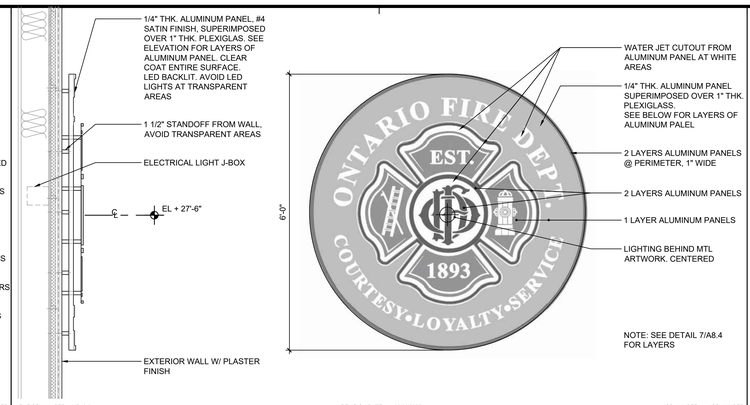

FILE/CSI NUMBER: XD10-041 REVISION DATE: 00/00/2005 JOB NUMBER: JOB NUMBER

EXTERIOR FIRE DEPARTMENT ARTWORK	3/4"=1'-0"	5

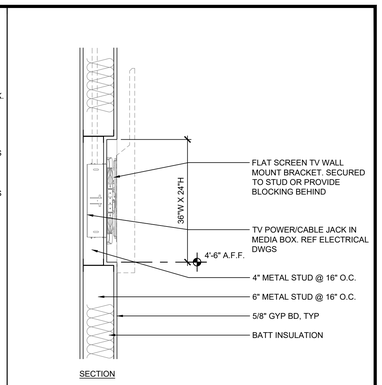

FILE/CSI NUMBER: XD10-019 REVISION DATE: 00/00/2004 JOB NUMBER: JOB NUMBER

RECESS AT TV BRACKET	1"=1'-0"	1

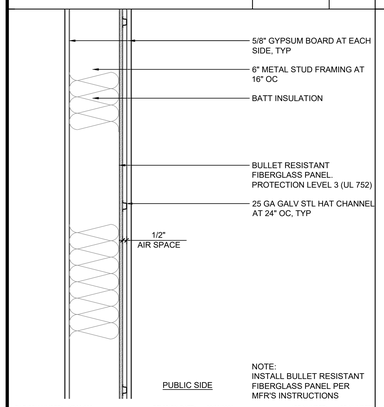

FILE/CSI NUMBER: XD09-085 REVISION DATE: 00/00/2004 JOB NUMBER: JOB NUMBER

BULLET RESISTANT WALL	1 1/2"=1'-0"	22

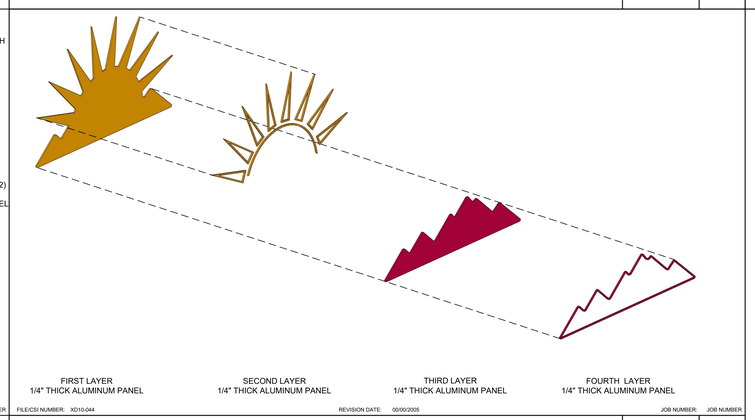

FILE/CSI NUMBER: XD10-044 REVISION DATE: 00/00/2005 JOB NUMBER: JOB NUMBER

EXTERIOR FIRE DEPARTMENT ARTWORK- EXPLODED VIEW	NTS	14

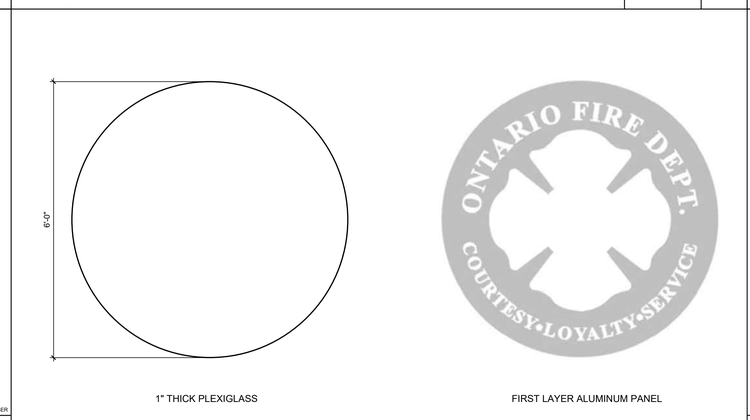

FILE/CSI NUMBER: XD10-042 REVISION DATE: 00/00/2005 JOB NUMBER: JOB NUMBER

EXTERIOR FIRE DEPARTMENT ARTWORK	3/4"=1'-0"	7

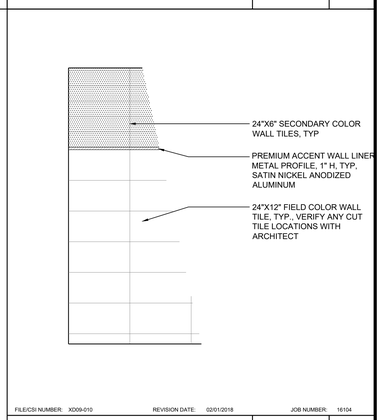

FILE/CSI NUMBER: XD09-010 REVISION DATE: 02/01/2018 JOB NUMBER: 16104

TYPICAL WALL TILE	1/2"=1'-0"	2

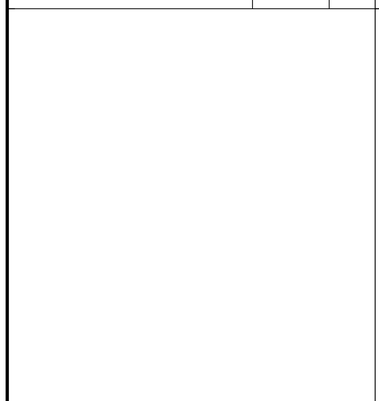

FILE/CSI NUMBER: XD09-003 REVISION DATE: 00/00/2005 JOB NUMBER: JOB NUMBER

		23
PRECAST CONCRETE VENEER	1"=1'-0"	17

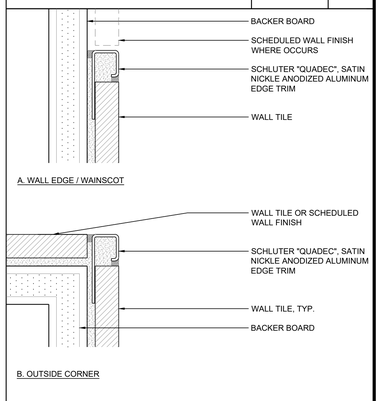

FILE/CSI NUMBER: XD09-065 REVISION DATE: 08/05/2013 JOB NUMBER: 1113400

TILE WALL AND OUTSIDE CORNER	FULL	3

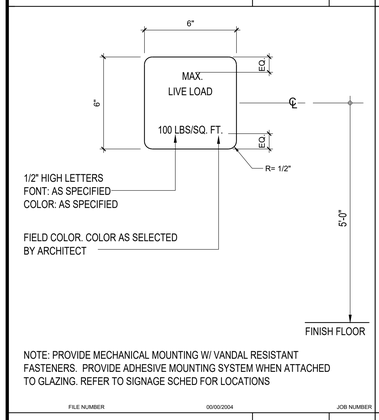

FILE NUMBER 00/00/2004 JOB NUMBER

LIVE LOAD SIGN	3"=1'-0"	24

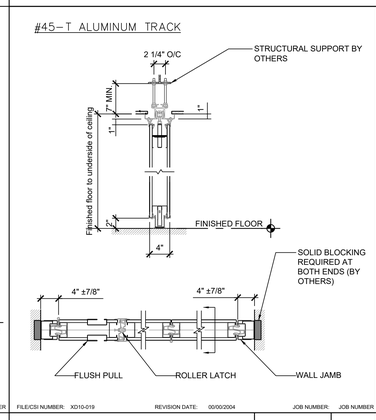

FILE/CSI NUMBER: XD10-019 REVISION DATE: 00/00/2004 JOB NUMBER: JOB NUMBER

WALL PARTITION	1"=1'-0"	20

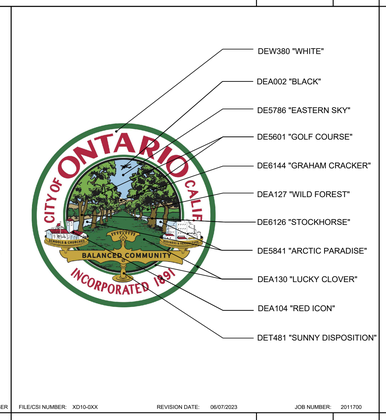

FILE/CSI NUMBER: XD10-0XX REVISION DATE: 06/07/2023 JOB NUMBER: 2011700

TERRAZZO FLOOR SIGN COLORS	3/4"=1'-0"	16

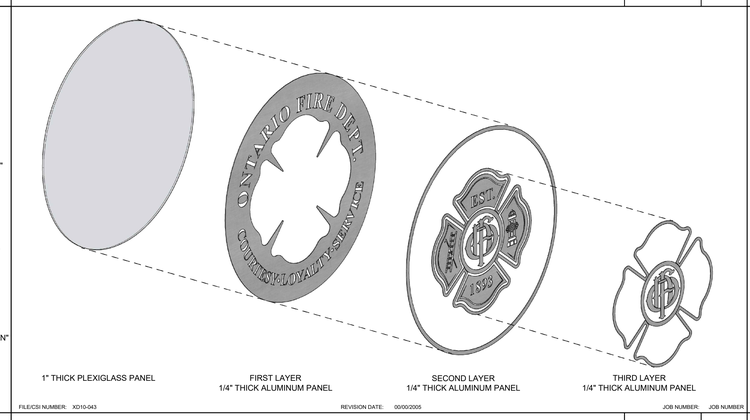

FILE/CSI NUMBER: XD10-043 REVISION DATE: 00/00/2005 JOB NUMBER: JOB NUMBER

EXTERIOR FIRE DEPARTMENT ARTWORK- EXPLODED VIEW	NTS	8

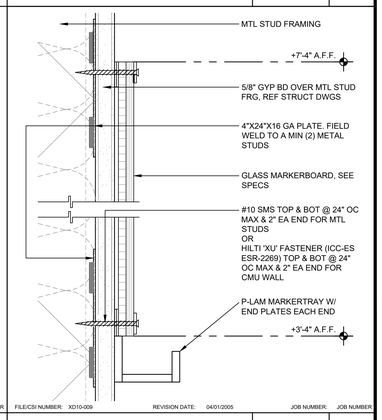

FILE/CSI NUMBER: XD10-009 REVISION DATE: 04/01/2005 JOB NUMBER: JOB NUMBER

GLASS MARKER BOARD	HALF	4

PBK
RANCHO CUCAMONGA
8163 ROCHESTER AVENUE, SUITE 100
RANCHO CUCAMONGA, CA 91730
909-987-0909 P

ONTARIO FIRE DEPARTMENT ADMINISTRATION BUILDING

CITY OF ONTARIO

1420 E. FRANCIS STREET., ONTARIO, CA

LICENSED ARCHITECT
KEVIN NEEDHAM
C-19064
Exp. Date 03/31/24
STATE OF CALIFORNIA

CONSULTANT

NO	DATE	BY	DESCRIPTION

REVISIONS

DRAWN: RMZ	CHECKED:
DATE: 07/15/2022	SCALE:
PROJECT NUMBER: 2011700	

SPECIALTY DETAILS

DRAWING NUMBER: A8.4

BID SET 03/01/24

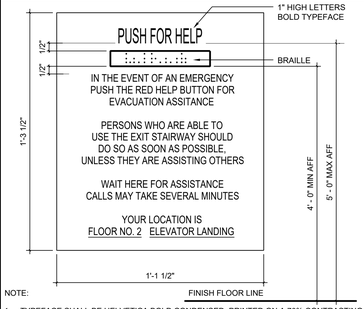

NOTE:

1. TYPEFACE SHALL BE HELVETICA BOLD CONDENSED, PRINTED ON A 70% CONTRASTING BACKGROUND IN LETTERS NOT LESS THAN 5/8" HIGH.
2. EXCEPT AT THE MAIN ENTRANCE LEVEL OF ELEVATORS, A RESCUE ASSISTANT SIGN SHALL BE POSTED ADJACENT TO EACH ELEVATOR CALL STATION AT EACH LANDING.
3. BRAILLE FONT: CALIFORNIA ROUND TOP CONTRACTED 2 BRAILLE DOTS. 1/10" OC 2/10" BETWEEN CELLS. RAISED MIN 1/40" ABOVE BACKGROUND.

FILE/CSI NUMBER: XD14-006 REVISION DATE: 00/00/2004 JOB NUMBER: JOB NUMBER

RESCUE SIGN | 3"=1'-0" | 21

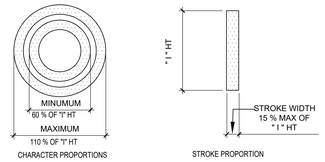

WIDTH TO HEIGHT PROPORTION TEMPLATE

BRAILLE AND TEXT TEMPLATE PER (CBC) CALIFORNIA BUILDING CODE AND (CCR) CALIFORNIA CODE OF REGULATIONS, TITLE 24, PART 2

2/10" SPACE BETWEEN CELLS (LETTERS)

CALIFORNIA GRADE 2 BRAILLE SHALL BE USED WHERE EVER BRAILLE IS REQUIRED. INDIVIDUAL BRAILLE DOTS SHALL EACH BE DISTINCT AND SEPARATE. EACH DOT SHALL BE ROUNDED OR DOMED IN LIEU OF SQUARE SIDED AND FLAT TOPPED PER CBC SECTION 11B-703.3

PROPORTIONS: CHARACTERS SHALL HAVE A FONT WHERE THE WIDTH OF THE UPPER CASE "O" AND THE THICKNESS OF THE UPPERCASE "I" ARE AS INDICATED ABOVE AND ARE PER CBC SECTION 11B-703.5.4.
TACTILE FONT: SHALL ALL BE UPPER CASE AND SHALL BE RAISED A MINIMUM OF 1/32".
COPY HT: SHALL BE " I" IN HEIGHT.
CHARACTER SPACING: MINIMUM OF 1/8"AND MAXIMUM OF 4 TIMES CHARACTER STROKE WIDTH.
MEASURED BETWEEN CLOSETS POINTS OF ADJACENT LETTERS.
LINE SPACING: MINIMUM OF 135% AND MAXIMUM OF 170% OF THE UPPERCASE " I " HEIGHT MEASURED BASELINE TO BASELINE OF CHARACTERS.
TEXT SHALL BE NON-GLARE AND CONTRAST WITH BACKGROUND PER CBC 11B-703.5.1

FILE/CSI NUMBER: FILE NUMBER REVISION DATE: 00/00/2004 JOB NUMBER: JOB NUMBER

SIGNAGE TEMPLATES | FULL | 17

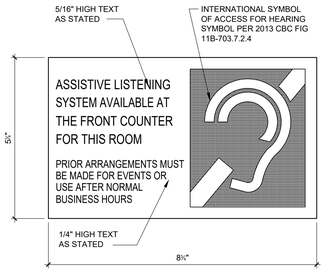

NOTE: PROVIDE MECHANICAL MOUNTING W/VANDAL RESISTANT COUNTERSUNK FASTENERS AND ADHESIVE REFER TO SIGNAGE SCHED FOR LOCATIONS.

FILE/CSI NUMBER: FILE NUMBER REVISION DATE: 00/00/2004 JOB NUMBER: JOB NUMBER

ASSISTIVE LISTENING DEVICE SIGN | HALF | 13

NOTE:
AT ALL DOUBLE DOORS LOCATE SIGNAGE ADJACENT TO JAMB OF INACTIVE LEAF OF DOOR PAIR. PROVIDE 90 DEGREE INHIBITOR TYPE CLOSER ON INACTIVE DOOR.

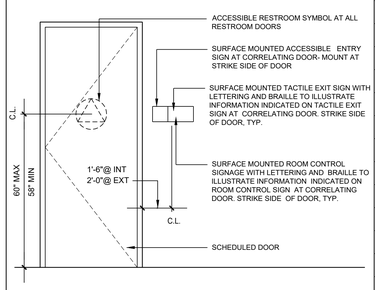

FILE/CSI NUMBER: XD10-017 REVISION DATE: 02/23/2009 JOB NUMBER: 0518000

SIGN MOUNTING DETAIL | 1/2"=1'-0" | 9

SIGNAGE SCHEDULE

ITEM DESCRIPTION	DETAIL	LOCATION	REMARKS
FEMALE RESTROOM DOOR SYMBOL	3/-	ALL FEMALE RESTROOM DOORS	-
MALE RESTROOM DOOR SYMBOL	7/-	ALL MALE RESTROOM DOORS	-
RESTROOM DOOR SYMBOL	11/-	ALL SINGLE USE RESTROOM DOORS	-
FEMALE RESTROOM WALL SIGN	4/-	ALL FEMALE RESTROOMS	-
MALE RESTROOM WALL SIGN	8/-	ALL MALE RESTROOMS	-
RESTROOM WALL SIGN	12/-	ALL SINGLE USE RESTROOMS	-
ACCESSIBLE ENTRY SIGN	18/-	ALL MAIN EXTERIOR BUILDING ENTRIES	-
TACTILE EXIT SIGN (EXIT)	24/-	ALL EXTERIOR EXIT DOORS	-
TACTILE EXIT SIGN (EXIT ROUTE)	24/-	ALL CORRIDOR AND HALLWAY EXIT DOORS	-
TACTILE EXIT SIGN (TO EXIT)	24/-	AT HORIZONTAL EXIT DOORS	-
TACTILE EXIT SIGN (STAIR)	24/-	AT STAIRS	-
ROOM CONTROL SIGNAGE	14/-	ALL INTERIOR & EXTERIOR ROOMS	-
ASSISTIVE LISTENING SIGN	13/-	ALL CONFERENCE ROOMS & ASSEMBLY SPACES	-
ROOM CAPACITY SIGN	19/-	REFER TO DETAIL FOR ROOM LOCATIONS	-
DEDICATION PLAQUE	15/-	FRONT ENTRY VERIFY EXACT LOCATION WITH DISTRICT	-
FIRE RISER	14/-	FIRE RISER ROOM DOOR 146	-
LIVE LOAD SIGN	24/A8.4	3RD FLOOR ROOF DECKS	-
ACCESSIBLE DIRECTIONAL SIGN	12/A1.4	REFER TO SITE PLAN FOR LOCATIONS	-
ACCESSIBLE PARKING SIGN	15/A1.4	ALL ACCESSIBLE AUTO PARKING STALLS	-
ACCESSIBLE VAN PARKING SIGN	15A1.4	ALL ACCESSIBLE VAN PARKING STALLS	-
TOW-AWAY SIGN	14/A1.4	VISITOR'S PARKING LOT ENTRY	-
DO NOT ENTER SIGN	17/A1.4	NORTH SLIDING SECURITY GATE	-
EMERGENCY SHUT-OFF	18/A1.4	ADMINISTRATION BUILDING SOUTH WALL	REFER TO FIRST FLOOR PLAN FOR LOCATION
ACCESSIBLE SYMBOL	2/A1.4	ALL ACCESSIBLE PARKING STALLS	-
CLEAN AIR/VANPOOL/EV SYMBOL	3/A1.4	CLEAN AIR/VANPOOL/EV PARKING STALLS	-
FIRE LANE SYMBOL	8/A1.4	AT CURBS ALONG FIRE LANE	-
-	-	-	-

REMARKS

1. REF DET 9/- AND 10/- FOR MOUNTING
2. REF DET 17/- FOR BRAILLE TEMPLATE
3. AT GLAZING WHERE BACKING WILL BE EXPOSED ON THE REVERSE SIDE, PROVIDE AN OPAQUE STICKER TO THE GLAZING BEFORE MOUNTING WITH ADHESIVE.

NOTE:

1. TYPEFACE SHALL BE HELVETICA BOLD CONDENSED, PRINTED ON A 70% CONTRASTING BACKGROUND IN LETTERS NOT LESS THAN 1/2" HIGH.
2. EXCEPT AT THE MAIN ENTRANCE LEVEL OF ALL ELEVATORS, AN APPROVED PICTORIAL SIGN SHALL BE POSTED ADJACENT TO EACH ELEVATOR CALL STATION AT EACH LANDING.

FILE/CSI NUMBER: XD14-007 REVISION DATE: 00/00/2004 JOB NUMBER: JOB NUMBER

EMERGENCY EXIT SIGN | HALF | 22

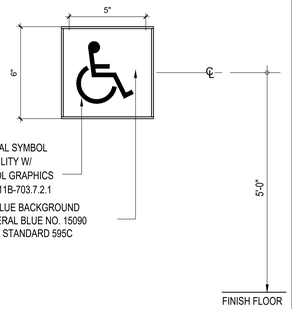

NOTE: PROVIDE MECHANICAL MOUNTING W/ VANDAL RESISTANT FASTENERS. PROVIDE ADHESIVE MOUNTING SYSTEM WHEN ATTACHED TO GLAZING. REFER TO SIGNAGE SCHED FOR LOCATIONS

FILE/CSI NUMBER: FILE NUMBER REVISION DATE: 00/00/2004 JOB NUMBER: JOB NUMBER

ACCESSIBLE ENTRY SIGN | 3"=1'-0" | 18

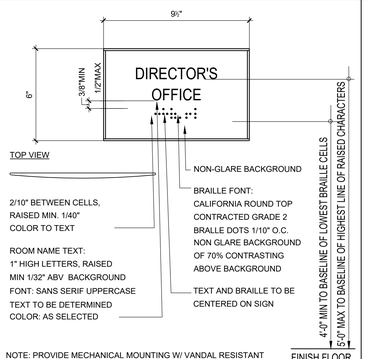

NOTE: PROVIDE MECHANICAL MOUNTING W/ VANDAL RESISTANT FASTENERS. PROVIDE ADHESIVE MOUNTING SYSTEM WHEN ATTACHED TO GLAZING. REFER TO SIGNAGE SCHED FOR LOCATIONS

FILE/CSI NUMBER: FILE NUMBER REVISION DATE: 00/00/2004 JOB NUMBER: JOB NUMBER

ROOM CONTROL SIGNAGE | 3"=1'-0" | 14

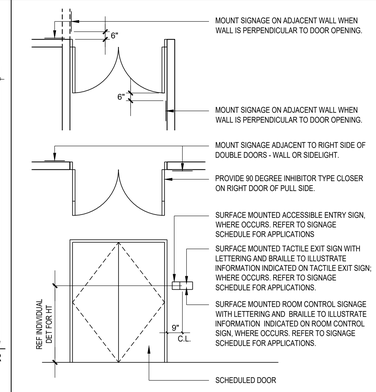

FILE/CSI NUMBER: FILE NUMBER REVISION DATE: 00/00/2004 JOB NUMBER: JOB NUMBER

SIGNAGE MOUNTING DETAIL | 1/4"=1'-0" | 10

SIGNAGE SCHEDULE | N.T.S | 2

REF CBC TABLE 11B-703.3.1 BRAILLE DIMENSIONS

MEASUREMENT RANGE	MINIMUM AND MAXIMUM IN INCHES
BASE DOT DIAMETER	0.059 TO 0.063
DISTANCE BETWEEN 2 DOTS IN THE SAME CELL *	0.100
DISTANCE BETWEEN CORRESPONDING DOTS IN ADJACENT CELLS *	0.300
DOT HEIGHT	0.025 TO 0.037
DISTANCE BETWEEN CORRESPONDING DOTS FROM 1 CELL DIRECTLY BELOW *	0.395 TO 0.400

* MEASUREMENT IS CENTER TO CENTER OF DOT

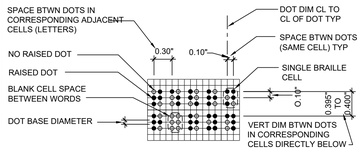

GENERAL NOTE:

1. CALIFORNIA CONTRACTED GRADE 2 BRAILLE SHALL BE USED WHERE EVER BRAILLE IS REQUIRED. INDIVIDUAL BRAILLE DOTS SHALL EACH BE DISTINCT AND SEPARATE. EACH DOT SHALL BE ROUNDED OR DOMED IN LIEU OF SQUARE SIDED AND FLAT TOPPED. DOT SHALL BE 0.059" TO 0.063" DIA. X 0.025" TO 0.037" HIGH. REF CBC 11B-703.3, 11B-703.3.1 & 11B-703.4.

FILE/CSI NUMBER: XD10-036 REVISION DATE: 00/00/2004 JOB NUMBER: JOB NUMBER

BRAILLE TEMPLATE | FULL | 23

AS REQUIRED

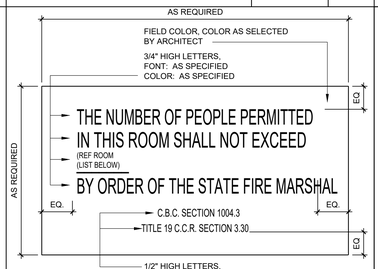

ROOM TITLE	ROOM NUMBER	MAX. OCCUPANT LOAD
E.O.C.	209	55
DECK	336	118
DECK	337	119

NOTE:

1. PROVIDE ONE SIGN IN EACH ROOM WITH AN OCCUPANT LOAD OF 50 OR MORE.
2. LOCATE SIGN ADJACENT TO MAIN EXIT DOOR OF ROOM.

FILE/CSI NUMBER: FILE NUMBER REVISION DATE: 00/00/2004 JOB NUMBER: JOB NUMBER

ROOM CAPACITY SIGN | HALF | 19

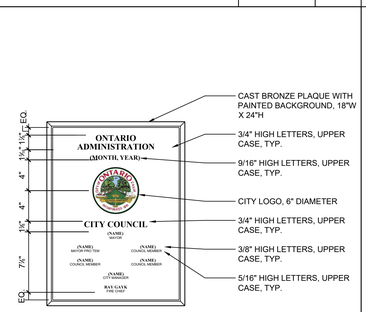

DEDICATION PLAQUE | 1 1/2"=1'-0" | 15

NOTE:
ATTACH SIGN USING FLATHEAD VANDAL RESISTANT COUNTERSUNK SCREWS AND ADHESIVE. SIGNS SHALL BE CENTERED ON THE DOOR AND MOUNTED 5'-0" ABOVE FIN FLOOR LINE TO CENTER OF SIGN. SEE ALSO DETAIL 13/A-8.3.

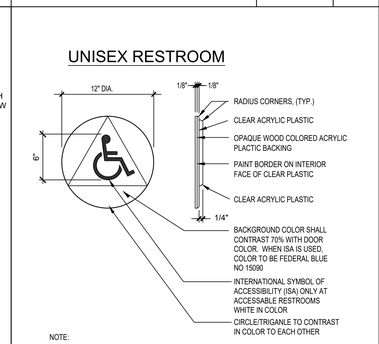

NOTE:
ATTACH SIGN USING FLATHEAD VANDAL RESISTANT COUNTERSUNK SCREWS AND ADHESIVE. SIGNS SHALL BE CENTERED ON THE DOOR AND MOUNTED 5'-0" ABOVE FIN FLOOR LINE TO CENTER OF SIGN. SEE ALSO DETAIL 13/A-8.3.

FILE/CSI NUMBER: XD10-015 REVISION DATE: 02/23/2009 JOB NUMBER: JOB NUMBER

RESTROOM SYMBOL | 1 1/2"=1'-0" | 11

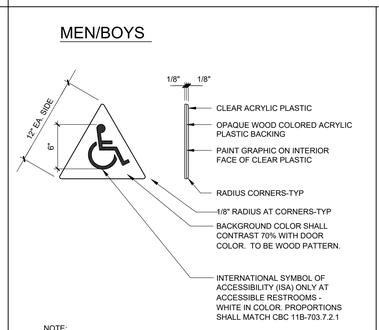

NOTE:
ATTACH SIGNS USING THREE FLATHEAD VANDAL RESISTANT COUNTERSUNK SCREWS AND ADHESIVE. SIGNS SHALL BE CENTERED ON THE DOOR AND MOUNTED 5'-0" ABOVE FIN FLOOR LINE TO CENTER OF SIGN. REFER TO SIGNAGE SCHED FOR LOCATIONS.

FILE/CSI NUMBER: FILE NUMBER REVISION DATE: 00/00/2004 JOB NUMBER: JOB NUMBER

RESTROOM SYMBOL | 1 1/2"=1'-0" | 7

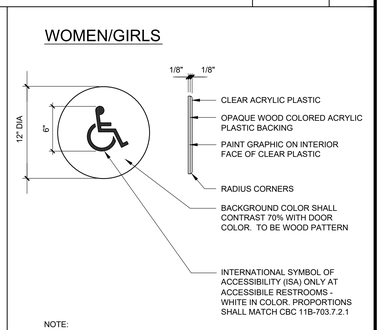

NOTE:
ATTACH SIGNS USING THREE FLATHEAD VANDAL RESISTANT COUNTERSUNK SCREWS AND ADHESIVE. SIGNS SHALL BE CENTERED ON THE DOOR AND MOUNTED 5'-0" ABOVE FIN FLOOR LINE TO CENTER OF SIGN. REFER TO SIGNAGE SCHED FOR LOCATIONS.

FILE/CSI NUMBER: FILE NUMBER REVISION DATE: 00/00/2004 JOB NUMBER: JOB NUMBER

RESTROOM SYMBOL | 1 1/2"=1'-0" | 3

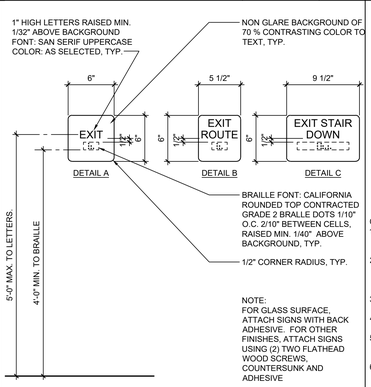

NOTE:
FOR GLASS SURFACE, ATTACH SIGNS WITH BACK ADHESIVE. FOR OTHER FINISHES, ATTACH SIGNS USING (2) TWO FLATHEAD WOOD SCREWS, COUNTERSUNK AND ADHESIVE

FILE/CSI NUMBER: XD10-023 REVISION DATE: 02/01/2009 JOB NUMBER: 16104

EXIT SIGNAGE | 1 1/2"=1'-0" | 24

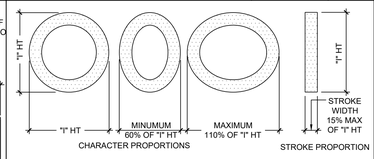

WIDTH TO HEIGHT PROPORTION TEMPLATE

TACTILE TEXT TEMPLATE PER (CBC) CALIFORNIA BUILDING CODE AND (CCR) CALIFORNIA CODE OF REGULATIONS, TITLE 24, PART 2, SECTION 11B-703

GENERAL NOTES:

1. FINISH AND CONTRAST: CHARACTERS AND THEIR FINISH SHALL BE NON GLARE. CHARACTERS SHALL CONTRAST WITH THEIR BACKGROUND WITH EITHER LIGHT CHARACTERS ON A DARK BACKGROUND OR DARK CHARACTERS ON A LIGHT BACKGROUND. REF CBC 11B-703.5.1.
2. PROPORTIONS: CHARACTERS SHALL HAVE A FONT WHERE THE WIDTH OF THE UPPER CASE LETTER "O" IS 60% MINIMUM AND 110% MAXIMUM OF THE UPPER CASE LETTER " I ". STROKE THICKNESS SHALL BE 15% MAXIMUM OF THE THICKNESS OF THE UPPERCASE "I" AS INDICATED ABOVE. REF CBC SECTION 11B-703.2.4 AND 11B-703.2.6.
3. TACTILE FONT: SHALL BE UPPER CASE SAN SERIF & BE RAISED A MINIMUM OF 1/32". FONT SHALL BE DUPLICATED IN BRAILLE. REF CBC 11B-703.2.3.
4. HEIGHT: FONT SHALL BE 5/8 " MINIMUM AND 2" MAXIMUM BASED UPON HEIGHT OF THE UPPERCASE " I ". REF CBC 11B-703.2.5 AND TABLE 11B-703.5.5.
5. CHARACTER SPACING: MIN OF 1/8"AND MAX OF 4 TIMES CHARACTER STROKE WIDTH MEASURED BETWEEN CLOSETS POINTS OF ADJACENT LETTERS AND SHALL BE SEPARATED FROM RAISED BORDERS AND DECORATIVE ELEMENTS 3/8 " MINIMUM. REF CBC SECTION 11B-703.2.7.
6. LINE SPACING: MIN OF 135% AND MAX OF 170% OF THE UPPERCASE " I " HEIGHT MEASURED BASELINE TO BASELINE OF CHARACTERS. TEXT SHALL BE HORIZONTAL FORMAT. REF CBC 11B-703.2.8

FILE/CSI NUMBER: XD10-035 REVISION DATE: 00/00/2004 JOB NUMBER: JOB NUMBER

SIGNAGE TEMPLATE | FULL | 20

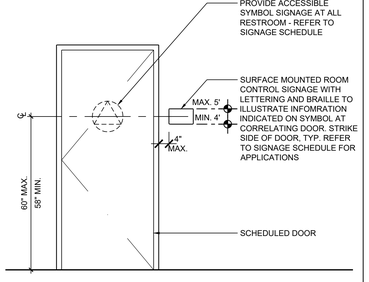

FILE/CSI NUMBER: XD10-030 REVISION DATE: 02/01/2009 JOB NUMBER: 16104

SIGN MOUNTING DETAIL | 1/2"=1'-0" | 16

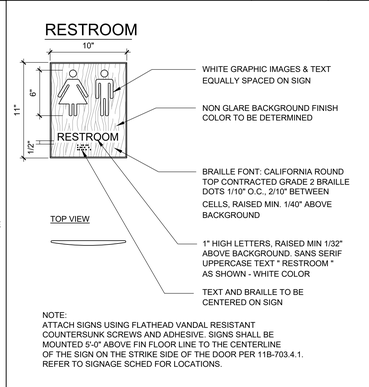

NOTE:
ATTACH SIGNS USING FLATHEAD VANDAL RESISTANT COUNTERSUNK SCREWS AND ADHESIVE. SIGNS SHALL BE MOUNTED 5'-0" ABOVE FIN FLOOR LINE TO THE CENTERLINE OF THE SIGN ON THE STRIKE SIDE OF THE DOOR PER 11B-703.4.1. REFER TO SIGNAGE SCHED FOR LOCATIONS.

FILE/CSI NUMBER: FILE NUMBER REVISION DATE: 00/00/2004 JOB NUMBER: JOB NUMBER

WALL MTD RESTRM SIGN | 1 1/2"=1'-0" | 12

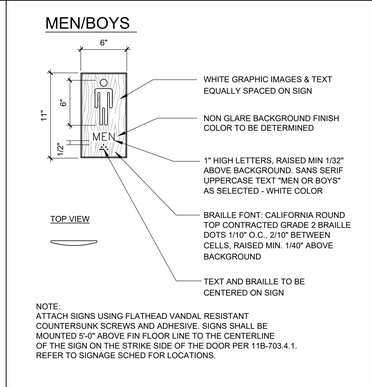

NOTE:
ATTACH SIGNS USING FLATHEAD VANDAL RESISTANT COUNTERSUNK SCREWS AND ADHESIVE. SIGNS SHALL BE MOUNTED 5'-0" ABOVE FIN FLOOR LINE TO THE CENTERLINE OF THE SIGN ON THE STRIKE SIDE OF THE DOOR PER 11B-703.4.1. REFER TO SIGNAGE SCHED FOR LOCATIONS.

FILE/CSI NUMBER: FILE NUMBER REVISION DATE: 00/00/2004 JOB NUMBER: JOB NUMBER

WALL MTD RESTRM SIGN | 1 1/2"=1'-0" | 8

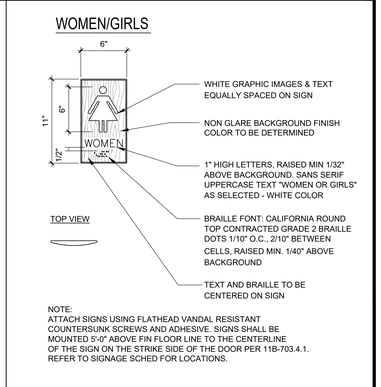

NOTE:
ATTACH SIGNS USING FLATHEAD VANDAL RESISTANT COUNTERSUNK SCREWS AND ADHESIVE. SIGNS SHALL BE MOUNTED 5'-0" ABOVE FIN FLOOR LINE TO THE CENTERLINE OF THE SIGN ON THE STRIKE SIDE OF THE DOOR PER 11B-703.4.1. REFER TO SIGNAGE SCHED FOR LOCATIONS.

FILE/CSI NUMBER: FILE NUMBER REVISION DATE: 00/00/2004 JOB NUMBER: JOB NUMBER

WALL MTD RESTRM SIGN | 1 1/2"=1'-0" | 4

PBK
RANCHO CUCAMONGA
8163 ROCHESTER AVENUE, SUITE 100
RANCHO CUCAMONGA, CA 91730
909-987-0909 P

ONTARIO FIRE DEPARTMENT ADMINISTRATION BUILDING

CITY OF ONTARIO

1420 E. FRANCIS STREET., ONTARIO, CA

LICENSED ARCHITECT
KEVIN C. NEEDHAM
C-19064
Exp. 03/31/24
STATE OF CALIFORNIA

CONSULTANT

NO	DATE	BY	DESCRIPTION

REVISIONS

DRAWN: RMZ CHECKED:

DATE: 07/15/2022 SCALE:

PROJECT NUMBER: 2011700

SIGNAGE DETAILS

DRAWING NUMBER: A8.5

BID SET 03/01/24

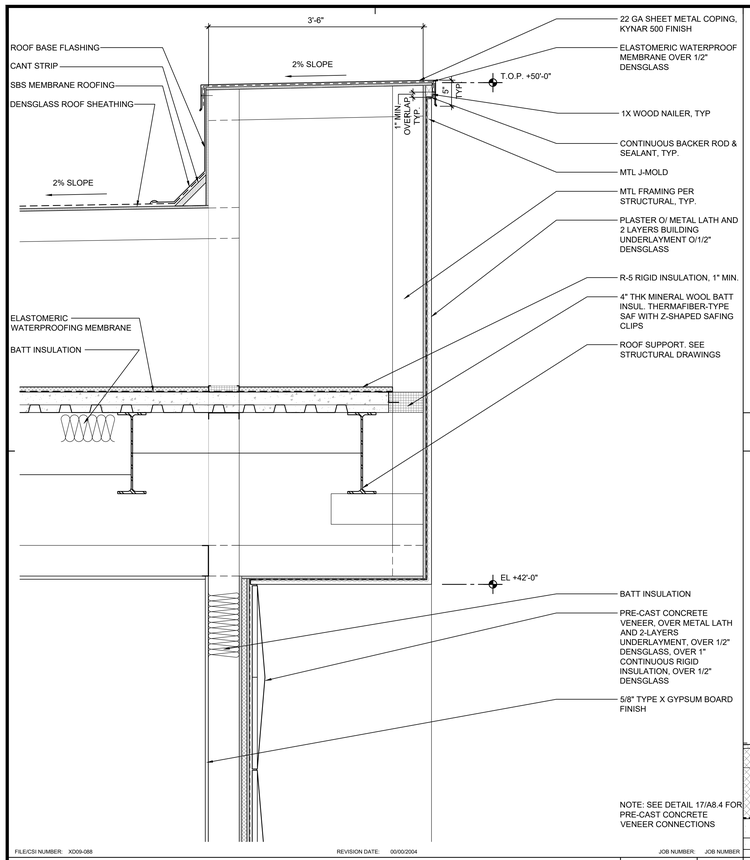

FILE/CSI NUMBER: XD09-088 REVISION DATE: 00/00/2004 JOB NUMBER: JOB NUMBER

PARAPET AND SOFFIT DETAIL — 1"=1'-0" — 18

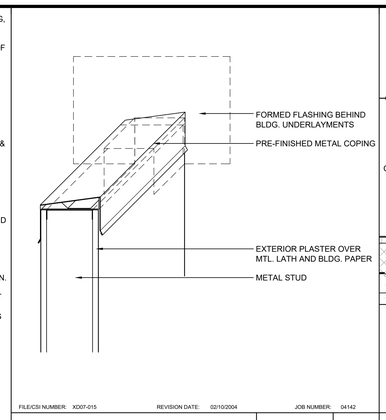

FILE/CSI NUMBER: XD07-015 REVISION DATE: 02/10/2004 JOB NUMBER: 04142

FLASHING AT INTERSECTING WALLS — 1 1/2"=1'-0" — 13

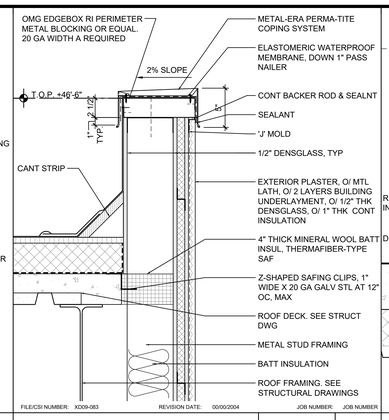

FILE/CSI NUMBER: XD09-083 REVISION DATE: 00/00/2004 JOB NUMBER: JOB NUMBER

PARAPET WALL-PLASTER — 1 1/2"=1'-0" — 9

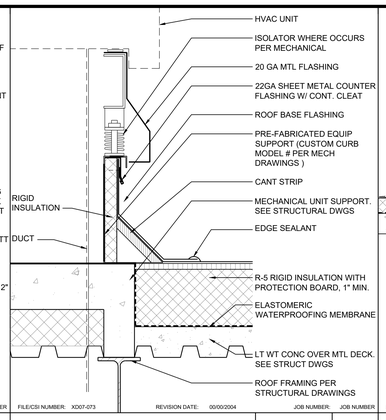

FILE/CSI NUMBER: XD07-073 REVISION DATE: 00/00/2004 JOB NUMBER: JOB NUMBER

MECH UNIT CURB — 1 1/2"=1'-0" — 5

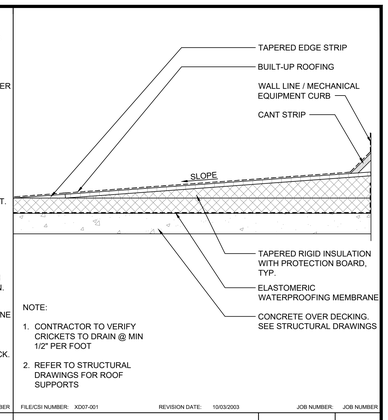

FILE/CSI NUMBER: XD07-001 REVISION DATE: 10/03/2003 JOB NUMBER: JOB NUMBER

CRICKET — 1"=1'-0" — 1

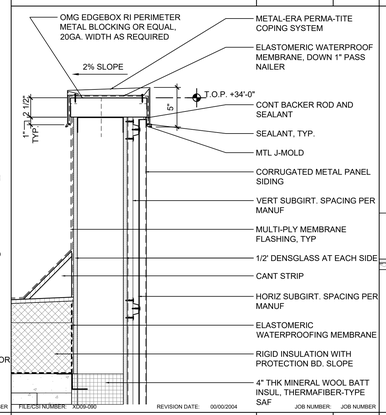

FILE/CSI NUMBER: XD09-090 REVISION DATE: 00/00/2004 JOB NUMBER: JOB NUMBER

CORR MTL - PARAPET — 1 1/2"=1'-0" — 14

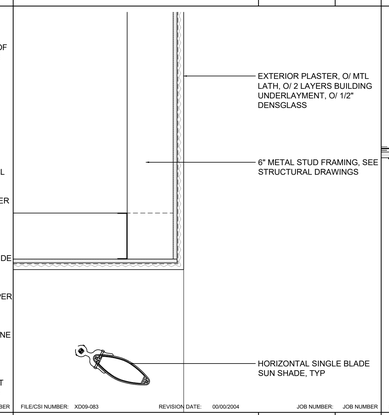

FILE/CSI NUMBER: XD09-083 REVISION DATE: 00/00/2004 JOB NUMBER: JOB NUMBER

SOFFIT - PLASTER — 1 1/2"=1'-0" — 10

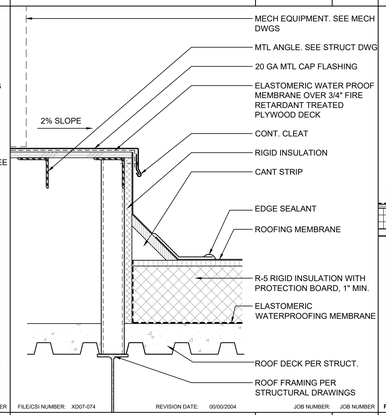

FILE/CSI NUMBER: XD07-074 REVISION DATE: 00/00/2004 JOB NUMBER: JOB NUMBER

ROOF MECH PLATFORM — 1 1/2"=1'-0" — 6

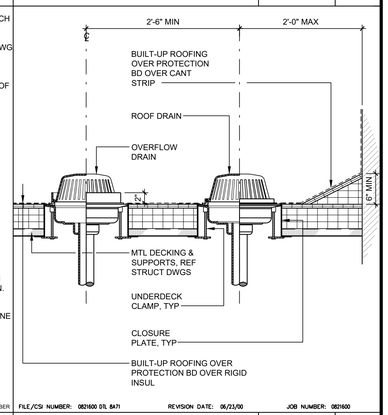

FILE/CSI NUMBER: 082600 D/L BA71 REVISION DATE: 06/23/00 JOB NUMBER: 082600

ROOF/ OVERFLOW DRAIN — 1" = 1'-0" — 2

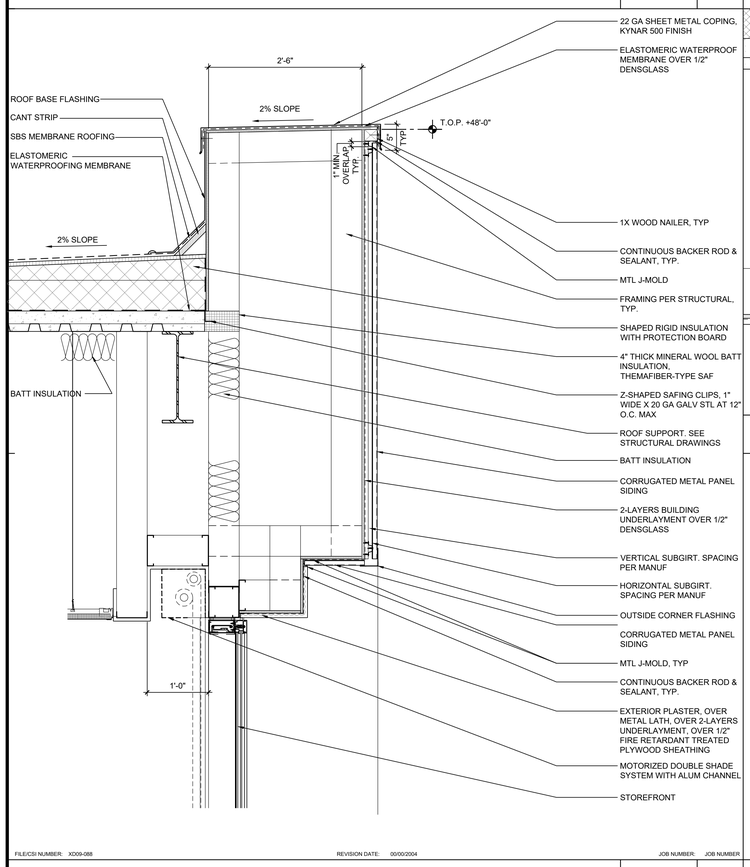

FILE/CSI NUMBER: XD09-088 REVISION DATE: 00/00/2004 JOB NUMBER: JOB NUMBER

PARAPET AND SOFFIT DETAIL — 1"=1'-0" — 20

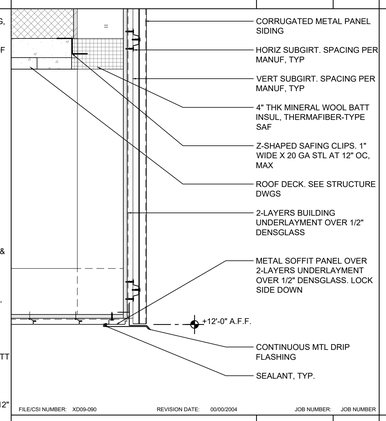

FILE/CSI NUMBER: XD09-090 REVISION DATE: 00/00/2004 JOB NUMBER: JOB NUMBER

CORR MTL - SOFFIT — 1 1/2"=1'-0" — 17

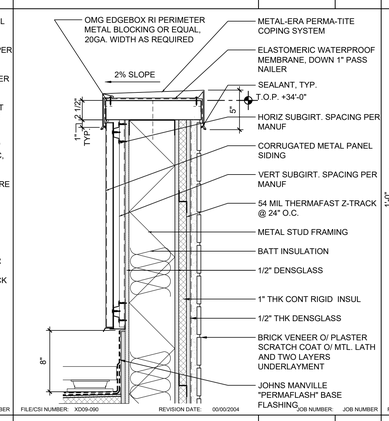

FILE/CSI NUMBER: XD09-090 REVISION DATE: 00/00/2004 JOB NUMBER: JOB NUMBER

BRICK VENEER - PARAPET — 1 1/2"=1'-0" — 11

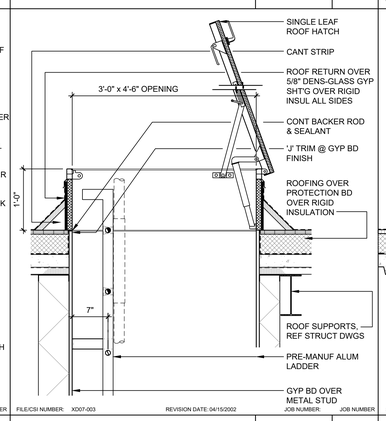

FILE/CSI NUMBER: XD07-003 REVISION DATE: 04/15/2002 JOB NUMBER: JOB NUMBER

ROOF HATCH — 1"=1'-0" — 7

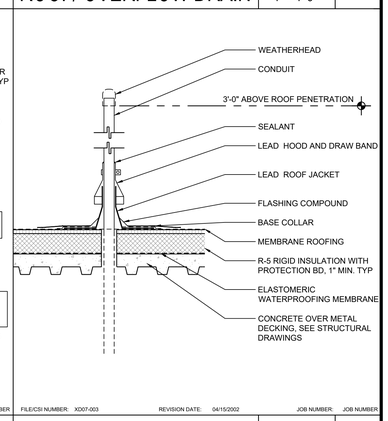

FILE/CSI NUMBER: XD07-003 REVISION DATE: 04/15/2002 JOB NUMBER: JOB NUMBER

CONDUIT AT ROOF — 1"=1'-0" — 3

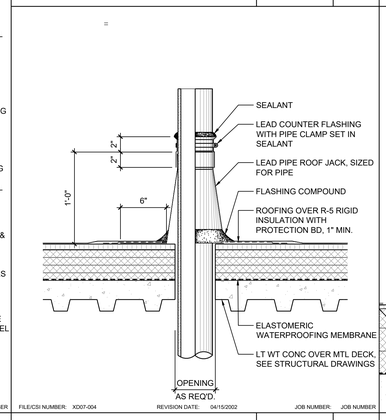

FILE/CSI NUMBER: XD07-004 REVISION DATE: 04/15/2002 JOB NUMBER: JOB NUMBER

PIPE ROOF VENT — 1 1/2"=1'-0" — 16

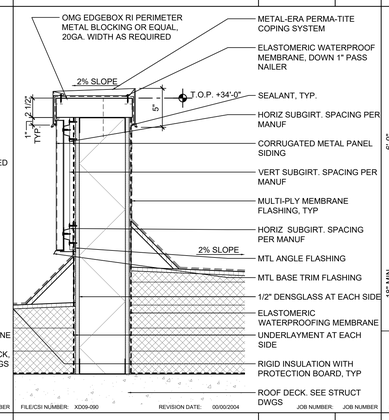

FILE/CSI NUMBER: XD09-090 REVISION DATE: 00/00/2004 JOB NUMBER: JOB NUMBER

CORR MTL - PARAPET — 1 1/2"=1'-0" — 12

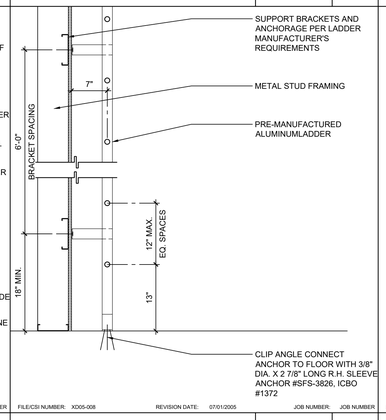

FILE/CSI NUMBER: XD05-008 REVISION DATE: 07/01/2005 JOB NUMBER: JOB NUMBER

ACCESS LADDER — 1"=1'-0" — 8

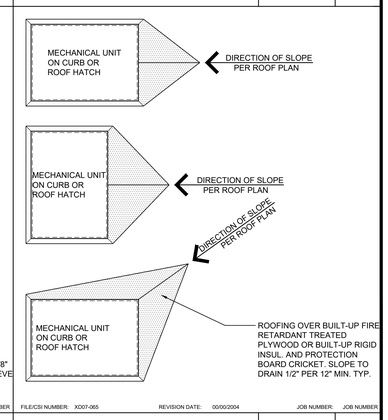

FILE/CSI NUMBER: XD07-065 REVISION DATE: 00/00/2004 JOB NUMBER: JOB NUMBER

TYP. ROOF EQUIPMENT CRICKET — 1/4"=1'-0" — 4

PBK
RANCHO CUCAMONGA
8163 ROCHESTER AVENUE, SUITE 100
RANCHO CUCAMONGA, CA 91730
909-987-0909 P

ONTARIO FIRE DEPARTMENT ADMINISTRATION BUILDING

CITY OF ONTARIO

1420 E. FRANCIS STREET., ONTARIO, CA

LICENSED ARCHITECT — KEVIN J. NEEDHAM C-19064 — Exp. 03/31/24 — STATE OF CALIFORNIA

CONSULTANT

NO	DATE	BY	DESCRIPTION

REVISIONS

DRAWN: RMZ CHECKED:

DATE: 07/15/2022 SCALE:

PROJECT NUMBER: 2011700

ROOF DETAILS

DRAWING NUMBER: A8.6

BID SET 03/01/24

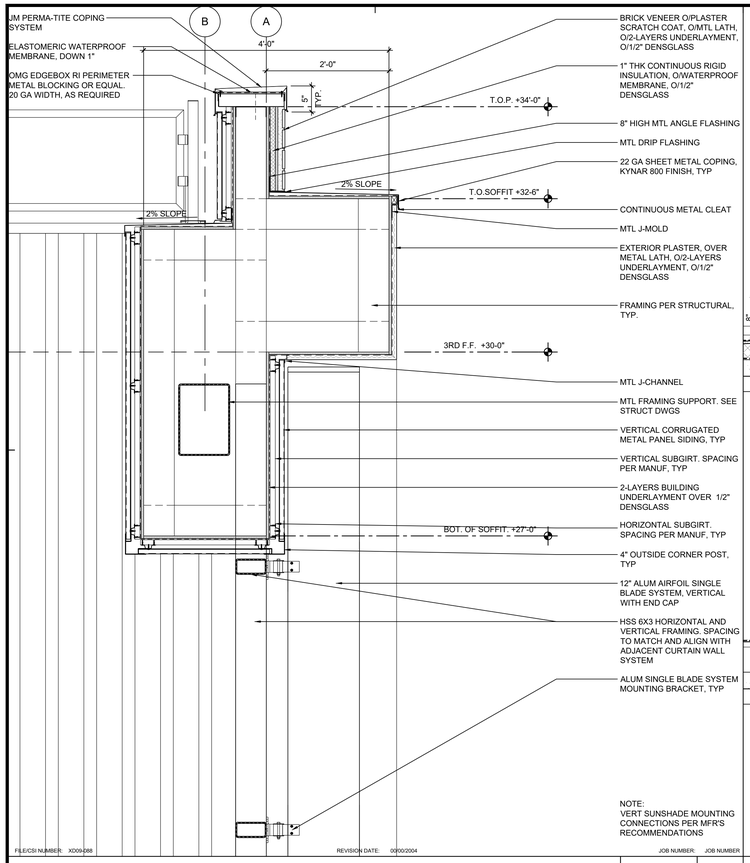

PARAPET AND SOFFIT DETAIL | 1"=1'-0" | 18

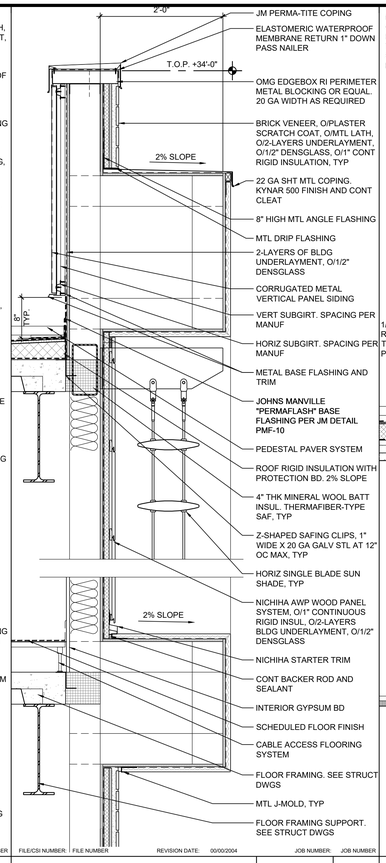

CORR MTL AT DECK | 1"=1'-0" | 14

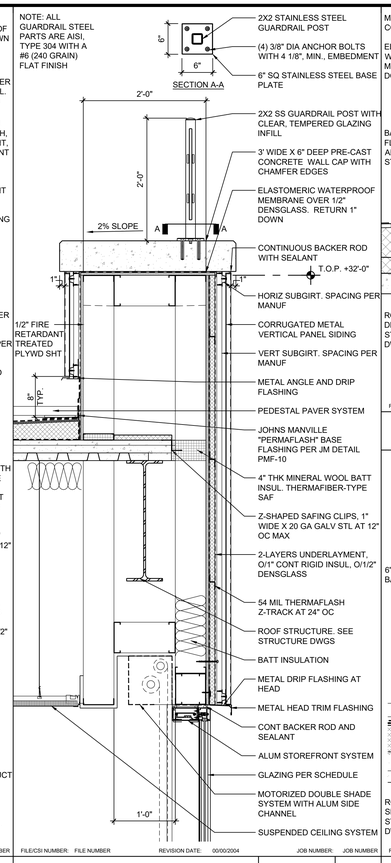

CORR MTL AT DECK | 1"=1'-0" | 10

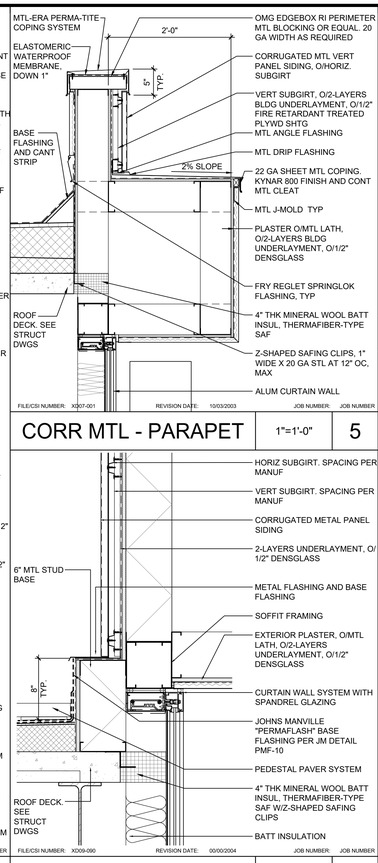

CORR MTL - PARAPET | 1"=1'-0" | 5

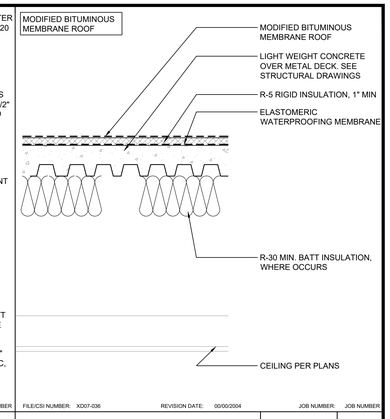

ROOF INSULATION FOR UNVENTED ATTIC | 1 1/2"=1'-0" | 1

CORR MTL - BASE | 1 1/2"=1'-0" | 6

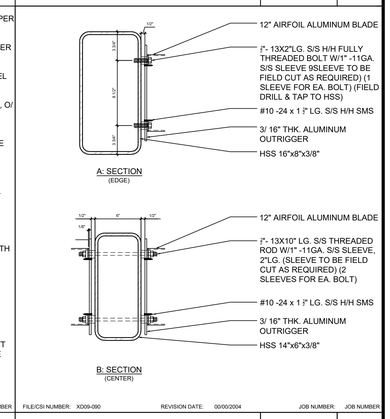

TRELLIS CONNECTION | 1 1/2"=1'-0" | 2

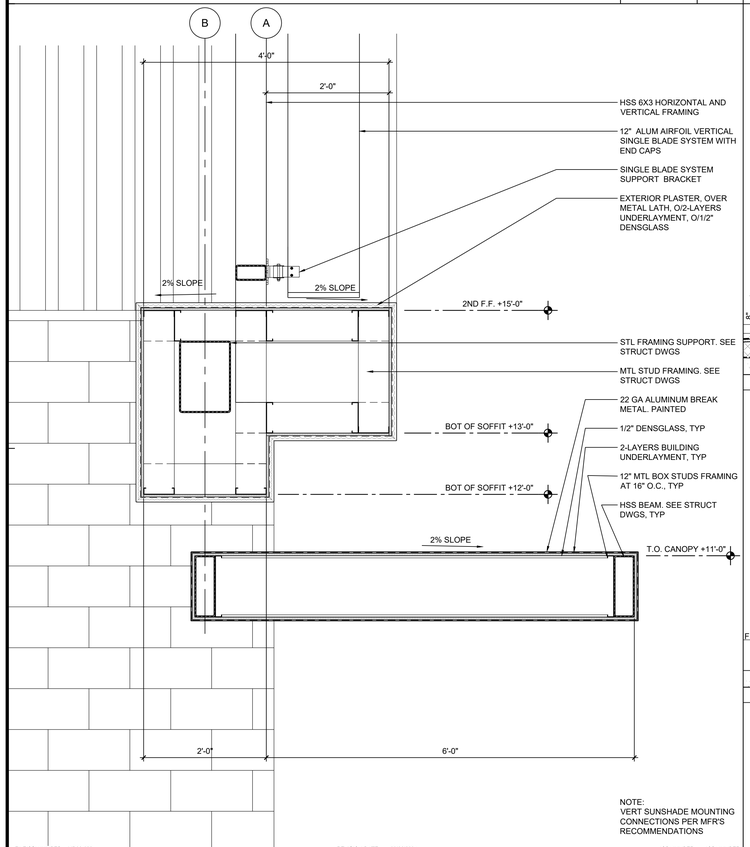

SOFFIT AND CANOPY AT OPEN COURTARD | 1"=1'-0" | 20

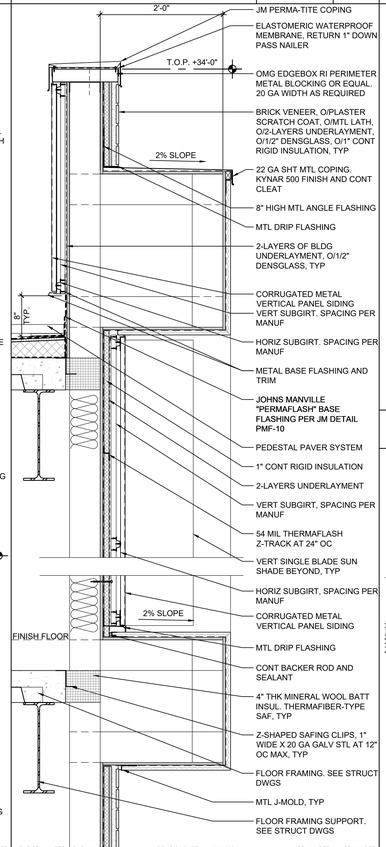

CORR MTL AT FURR-OUT | 1"=1'-0" | 16

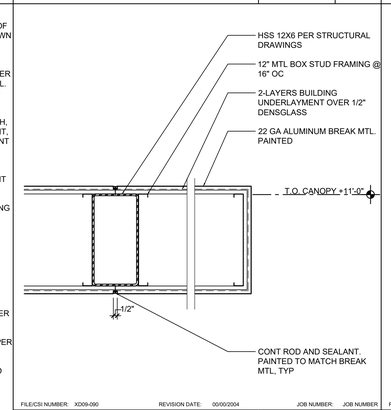

CANOPY | 1 1/2"=1'-0" | 11

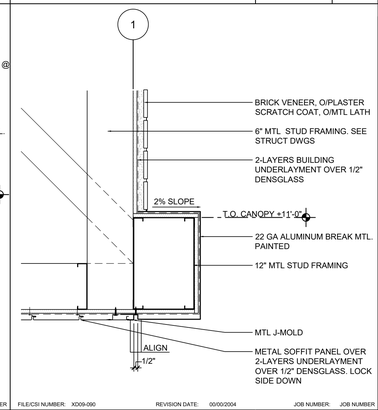

TRANSITION AT SOFFIT | 1 1/2"=1'-0" | 7

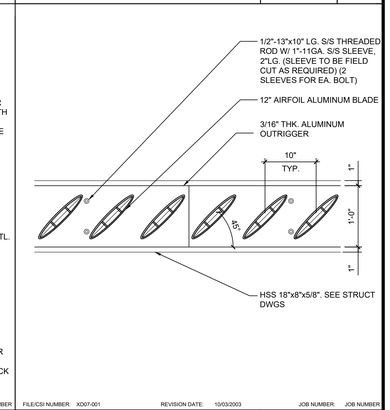

TRELLIS CONNECTION SECTION | 1"=1'-0" | 3

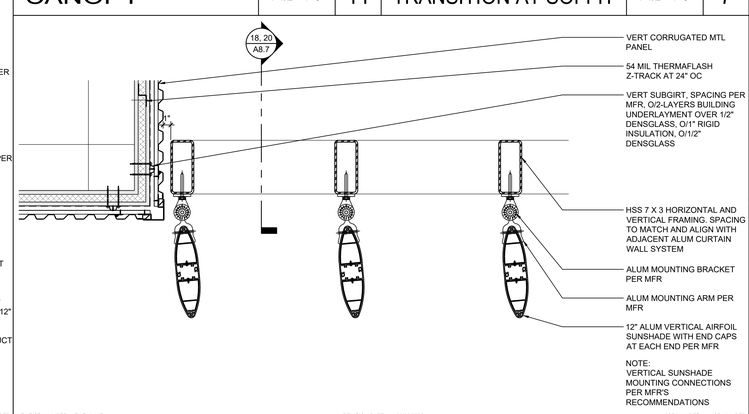

VERTICAL SUNSHADE AT COURTYARD | 1 1/2"=1'-0" | 8

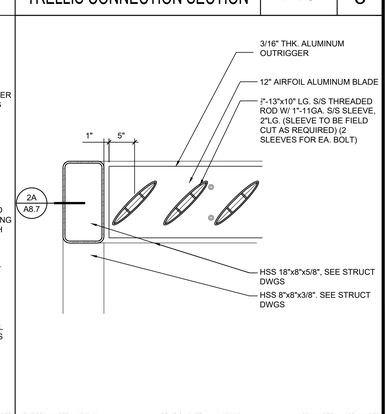

TRELLIS CONNECTION SECTION | 1"=1'-0" | 4

PBK
RANCHO CUCAMONGA
8163 ROCHESTER AVENUE, SUITE 100
RANCHO CUCAMONGA, CA 91730
909-987-0909 P

ONTARIO FIRE DEPARTMENT ADMINISTRATION BUILDING

CITY OF ONTARIO

1420 E. FRANCIS STREET., ONTARIO, CA

LICENSED ARCHITECT
KEVIN NEEDHAM
C-19064
Exp. 03/31/25
STATE OF CALIFORNIA

CONSULTANT

NO	DATE	BY	DESCRIPTION

REVISIONS

DRAWN: RMZ | CHECKED:
DATE: 07/15/2022 | SCALE:
PROJECT NUMBER: 2011700

ROOF DETAILS

DRAWING NUMBER: A8.7

BID SET 03/01/24

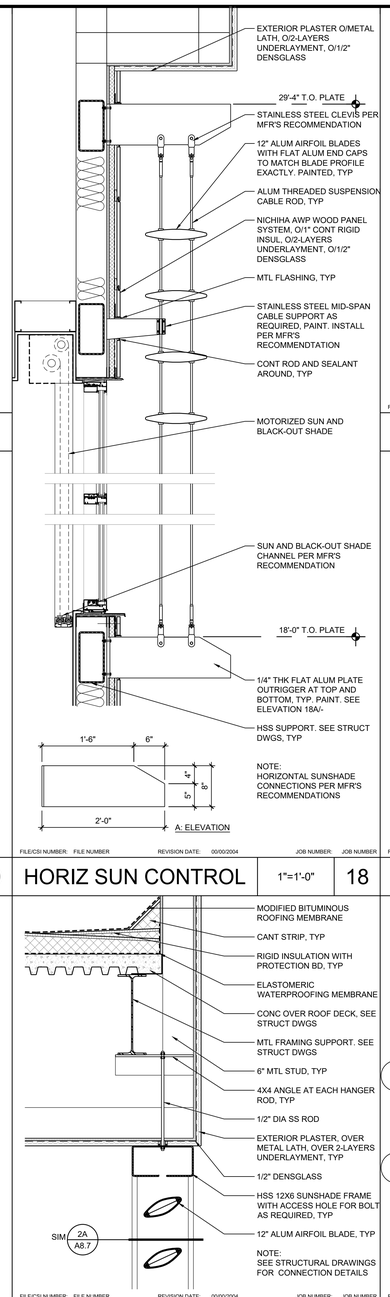

FILE/CSI NUMBER: FILE NUMBER REVISION DATE: 00/00/2004 JOB NUMBER: JOB NUMBER

21			

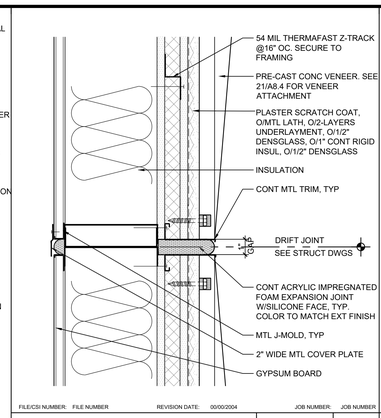

FILE/CSI NUMBER: FILE NUMBER REVISION DATE: 00/00/2004 JOB NUMBER: JOB NUMBER

EXPANSION JOINT - PRECAST CONC VENEER	3"=1'-0"	13	

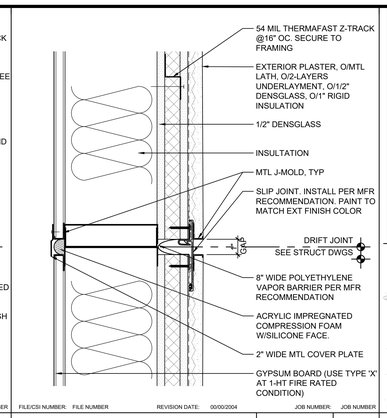

FILE/CSI NUMBER: FILE NUMBER REVISION DATE: 00/00/2004 JOB NUMBER: JOB NUMBER

EXPANSION JOINT - PLASTER	3"=1'-0"	9	

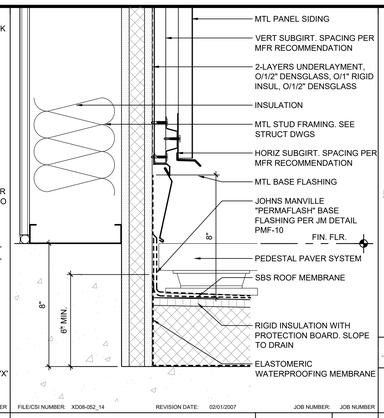

FILE/CSI NUMBER: XD08-052_14 REVISION DATE: 02/01/2007 JOB NUMBER: JOB NUMBER

WALL BASE AT DECK	3"=1'-0"	5	

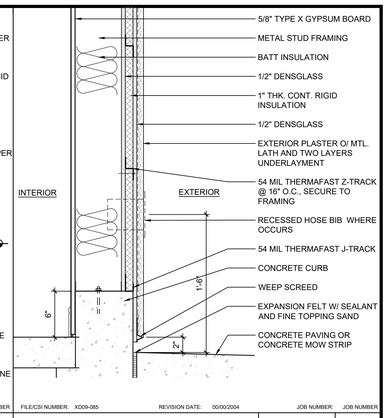

FILE/CSI NUMBER: XD09-085 REVISION DATE: 00/00/2004 JOB NUMBER: JOB NUMBER

WALL BASE @ PLASTER	1 1/2"=1'-0"	1	

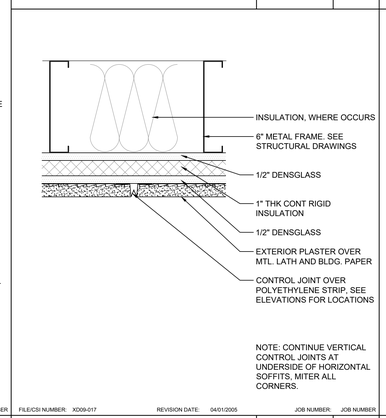

FILE/CSI NUMBER: XD09-017 REVISION DATE: 04/01/2005 JOB NUMBER: JOB NUMBER

CONTROL JOINT	3"=1'-0"	14	

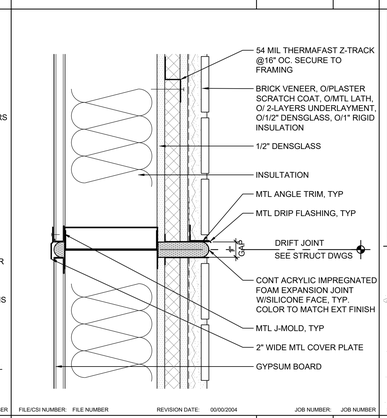

FILE/CSI NUMBER: FILE NUMBER REVISION DATE: 00/00/2004 JOB NUMBER: JOB NUMBER

EXPANSION JOINT - BRICK VENEER	3"=1'-0"	10	

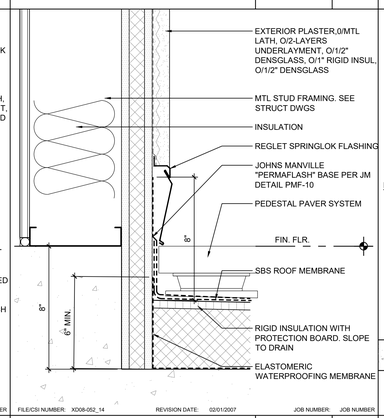

FILE/CSI NUMBER: XD08-052_14 REVISION DATE: 02/01/2007 JOB NUMBER: JOB NUMBER

WALL BASE AT DECK	3"=1'-0"	6	

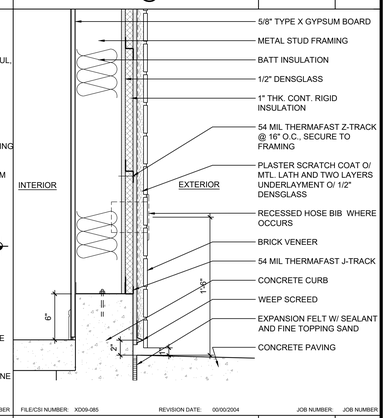

FILE/CSI NUMBER: XD09-085 REVISION DATE: 00/00/2004 JOB NUMBER: JOB NUMBER

WALL BASE @ BRICK VENEER	1 1/2"=1'-0"	2	

FILE/CSI NUMBER: FILE NUMBER REVISION DATE: 00/00/2004 JOB NUMBER: JOB NUMBER

23	HORIZ SUNSHADE - HEAD	1"=1'-0"	19

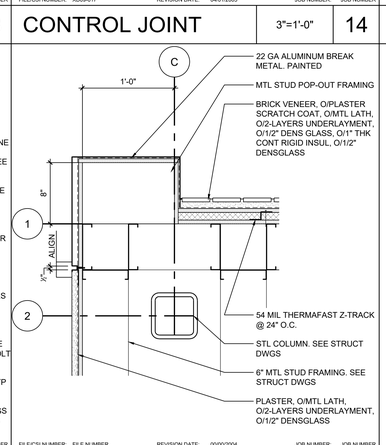

FILE/CSI NUMBER: FILE NUMBER REVISION DATE: 00/00/2004 JOB NUMBER: JOB NUMBER

POP-OUT AT WALL	1 1/2"=1'-0"	17	

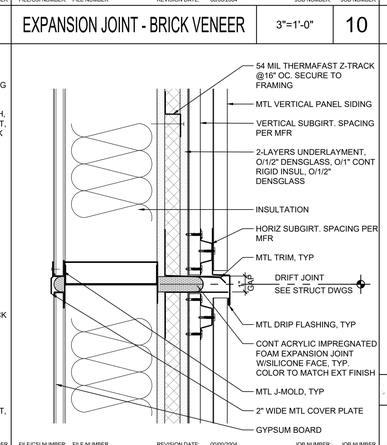

FILE/CSI NUMBER: FILE NUMBER REVISION DATE: 00/00/2004 JOB NUMBER: JOB NUMBER

EXPANSION JOINT - MTL SIDING	3"=1'-0"	11	

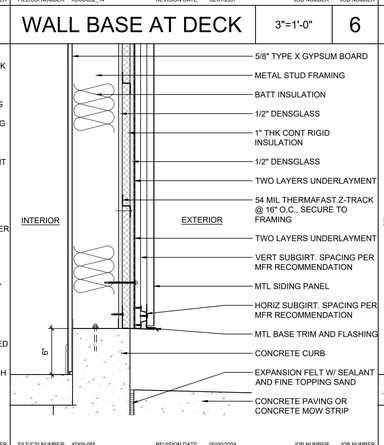

FILE/CSI NUMBER: XD09-085 REVISION DATE: 00/00/2004 JOB NUMBER: JOB NUMBER

WALL BASE @ MTL SIDING	1 1/2"=1'-0"	7	

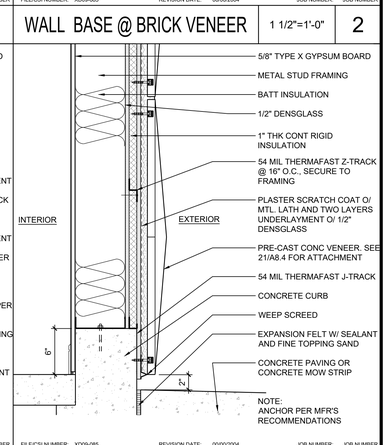

FILE/CSI NUMBER: XD09-085 REVISION DATE: 00/00/2004 JOB NUMBER: JOB NUMBER

WALL BASE @ PRE-CAST VENEER	1 1/2"=1'-0"	3	

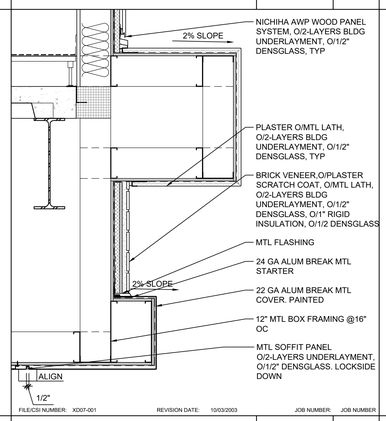

FILE/CSI NUMBER: XD07-001 REVISION DATE: 10/03/2003 JOB NUMBER: JOB NUMBER

24	SOFFIT - CANOPY	1"=1'-0"	16

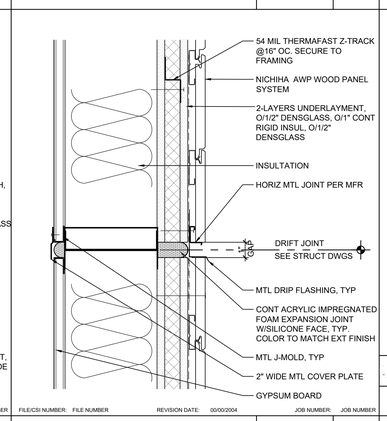

FILE/CSI NUMBER: FILE NUMBER REVISION DATE: 00/00/2004 JOB NUMBER: JOB NUMBER

EXPANSION JOINT - AWP PANEL	3"=1'-0"	12	

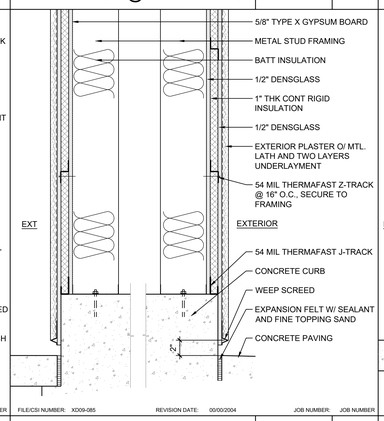

FILE/CSI NUMBER: XD09-085 REVISION DATE: 00/00/2004 JOB NUMBER: JOB NUMBER

WALL BASE @ PLASTER	1 1/2"=1'-0"	8	

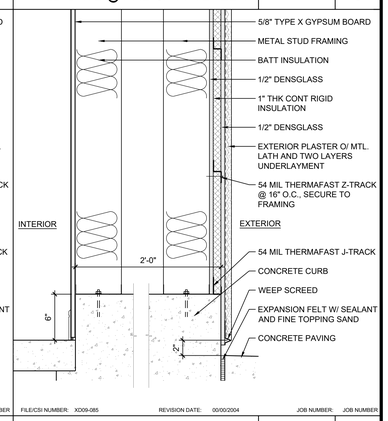

FILE/CSI NUMBER: XD09-085 REVISION DATE: 00/00/2004 JOB NUMBER: JOB NUMBER

WALL BASE @ PLASTER	1 1/2"=1'-0"	4	

PBK
RANCHO CUCAMONGA
8163 ROCHESTER AVENUE, SUITE 100
RANCHO CUCAMONGA, CA 91730
909-987-0909 P

ONTARIO FIRE DEPARTMENT ADMINISTRATION BUILDING

CITY OF ONTARIO

1420 E. FRANCIS STREET., ONTARIO, CA

LICENSED ARCHITECT
KEVIN NEEDHAM
C-19064
Exp. 03/31/24
STATE OF CALIFORNIA

CONSULTANT

NO	DATE	BY	DESCRIPTION

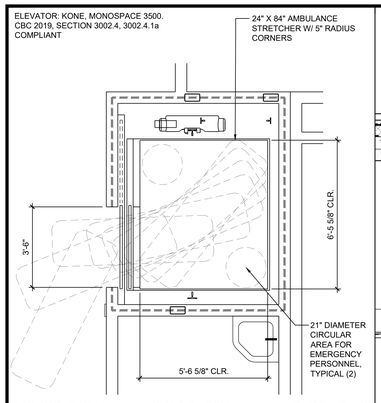

FILE/CSI NUMBER: XD14-009_Gurney REVISION DATE: 00/00/2004 JOB NUMBER: JOB NUMBER

ELEVATOR CAR STRETCHER COMPLIANCE | 3/8"=1'-0" | 21

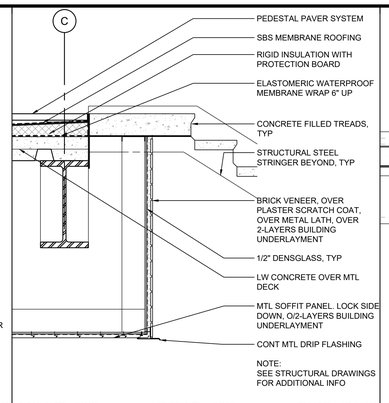

FILE/CSI NUMBER: XD05-083 REVISION DATE: 00/00/2004 JOB NUMBER: JOB NUMBER

EXTERIOR STAIR @ LANDING | 3/4"=1'-0" | 17

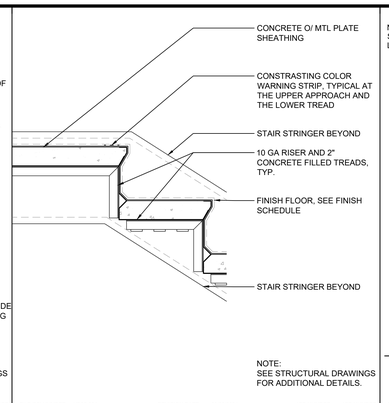

FILE/CSI NUMBER: XD05-084 REVISION DATE: 00/00/2004 JOB NUMBER: JOB NUMBER

INTERIOR STAIR @ LANDING | 1 1/2"=1'-0" | 13

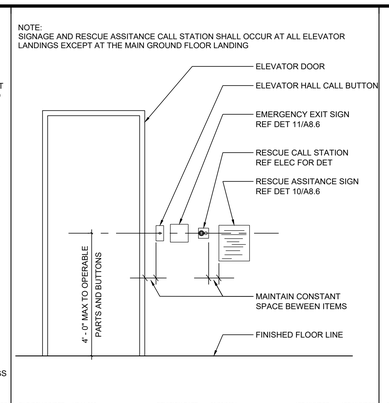

FILE/CSI NUMBER: XD14-005 REVISION DATE: 00/00/2004 JOB NUMBER: JOB NUMBER

ELEVATOR SIGNAGE | 1/2"=1'-0" | 9

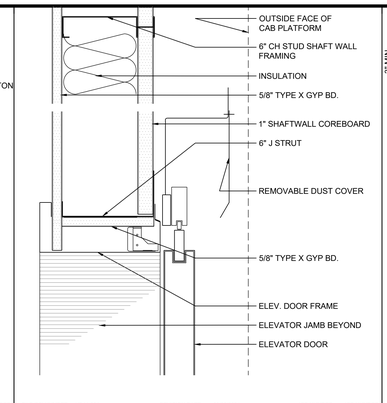

FILE/CSI NUMBER: XD14-004 REVISION DATE: 00/00/2004 JOB NUMBER: JOB NUMBER

ELEVATOR HEAD | 3"=1'-0" | 5

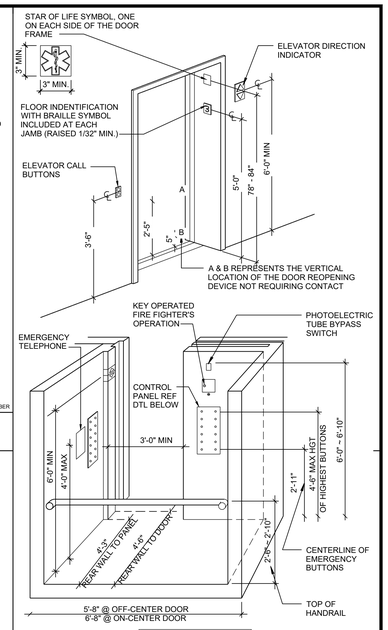

FILE/CSI NUMBER: XD14-001 REVISION DATE: 00/00/2004 JOB NUMBER: JOB NUMBER

ELEVATOR DETAILS | 1/2"=1'-0" | 2

22

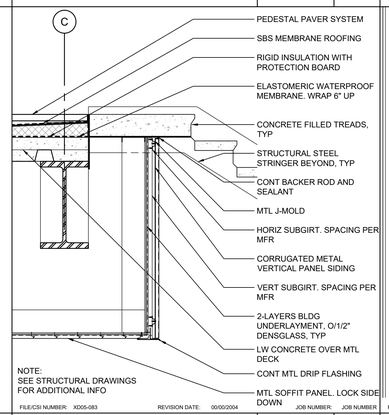

FILE/CSI NUMBER: XD05-083 REVISION DATE: 00/00/2004 JOB NUMBER: JOB NUMBER

EXTERIOR STAIR @ LANDING | 3/4"=1'-0" | 18

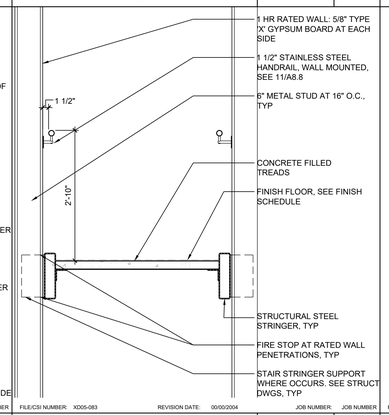

FILE/CSI NUMBER: XD05-083 REVISION DATE: 00/00/2004 JOB NUMBER: JOB NUMBER

INTERIOR STAIR SECTION | 3/4"=1'-0" | 14

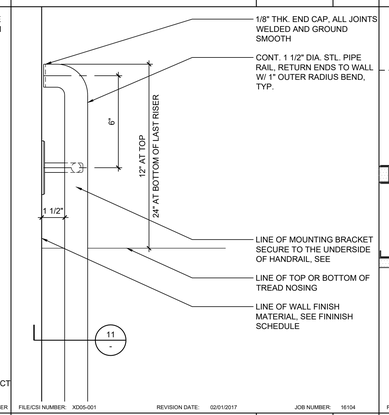

FILE/CSI NUMBER: XD05-001 REVISION DATE: 02/01/2017 JOB NUMBER: 16104

HANDRAIL | 3"=1'-0" | 10

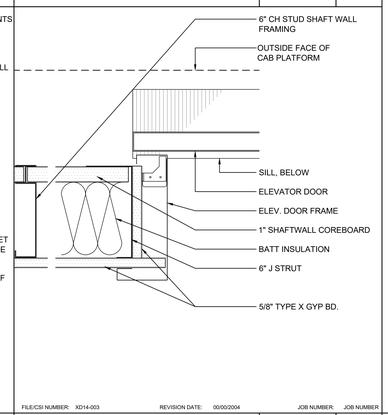

FILE/CSI NUMBER: XD14-003 REVISION DATE: 00/00/2004 JOB NUMBER: JOB NUMBER

ELEVATOR JAMB | 3"=1'-0" | 6

23

19

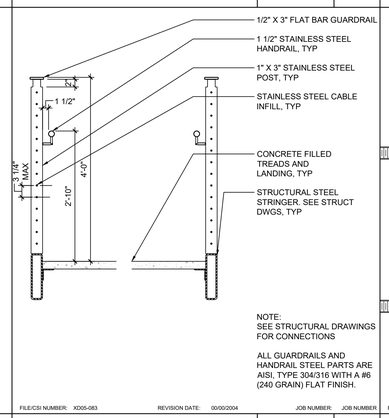

FILE/CSI NUMBER: XD05-083 REVISION DATE: 00/00/2004 JOB NUMBER: JOB NUMBER

EXTERIOR STAIR SECTION | 3/4"=1'-0" | 17

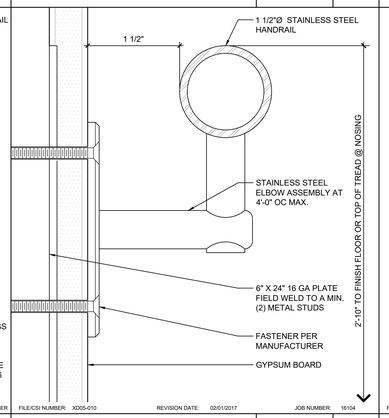

FILE/CSI NUMBER: XD05-010 REVISION DATE: 02/01/2017 JOB NUMBER: 16104

HANDRAIL @ STUD WALL | FULL | 11

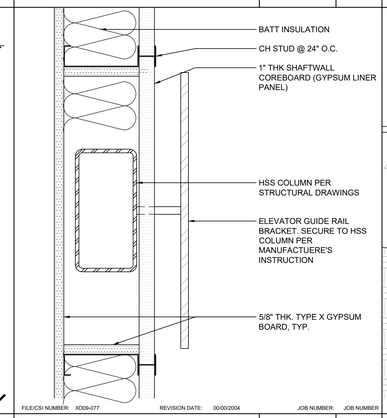

FILE/CSI NUMBER: XD09-077 REVISION DATE: 00/00/2004 JOB NUMBER: JOB NUMBER

COLUMN/GUIDE RAIL BRACKET | 3"=1'-0" | 7

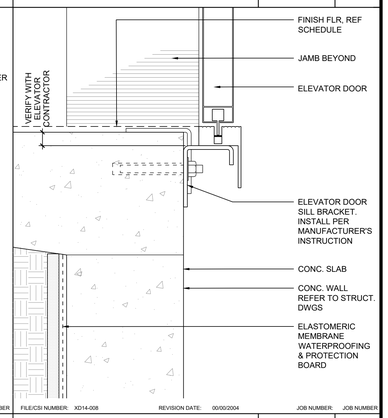

FILE/CSI NUMBER: XD14-008 REVISION DATE: 00/00/2004 JOB NUMBER: JOB NUMBER

ELEVATOR DOOR SILL | 3"=1'-0" | 3

24

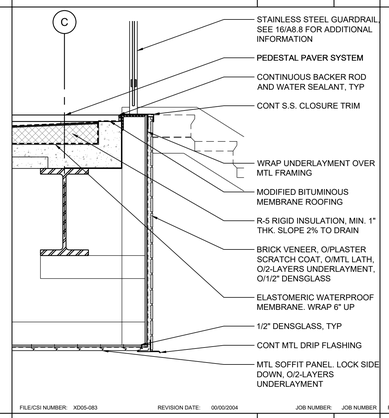

FILE/CSI NUMBER: XD05-083 REVISION DATE: 00/00/2004 JOB NUMBER: JOB NUMBER

SOFFIT @ BRICK VENEER | 3/4"=1'-0" | 20

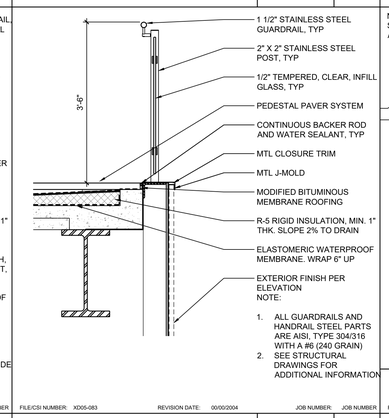

FILE/CSI NUMBER: XD05-083 REVISION DATE: 00/00/2004 JOB NUMBER: JOB NUMBER

EXT S.S. GUARDRAIL | 3/4"=1'-0" | 16

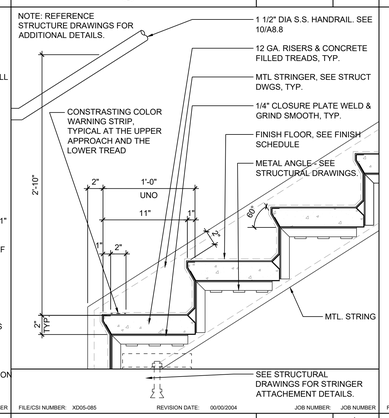

FILE/CSI NUMBER: XD05-085 REVISION DATE: 00/00/2004 JOB NUMBER: JOB NUMBER

INTERIOR STAIR BASE | 1 1/2"=1'-0" | 12

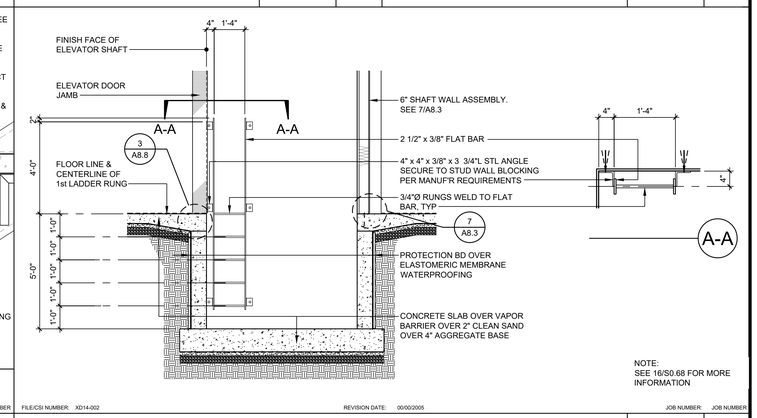

FILE/CSI NUMBER: XD14-002 REVISION DATE: 00/00/2005 JOB NUMBER: JOB NUMBER

ELEVATOR PIT/ LADDER | 3/8"=1'-0" | 4

PBK
RANCHO CUCAMONGA
8163 ROCHESTER AVENUE, SUITE 100
RANCHO CUCAMONGA, CA 91730
909-987-0909 P

ONTARIO FIRE DEPARTMENT ADMINISTRATION BUILDING

CITY OF ONTARIO

1420 E. FRANCIS STREET., ONTARIO, CA

LICENSED ARCHITECT
KEVIN D. MEEDHAM
C-19064
Ve.lat 03/31/25
STATE OF CALIFORNIA

CONSULTANT

NO	DATE	BY	DESCRIPTION

REVISIONS

DRAWN: RMZ | CHECKED:

DATE: 07/15/2022 | SCALE:

PROJECT NUMBER: 2011700

ELEVATOR AND STAIR DETAILS

DRAWING NUMBER: A8.9

BID SET 03/01/24

EXTERIOR BUILDING FACADE

0970000-0001

1. THE ITEM(S) INCLUDED IN THIS SECTION ARE DESIGN-BUILD AND/OR BIDDER-DESIGNED.
2. EXTERIOR BUILDING FACADE INCLUDES, BUT IS NOT NECESSARILY LIMITED TO, THE FOLLOWING SYSTEMS.
   a. NON-BEARING METAL STUD WALLS
   b. STOREFRONTS
   c. WINDOW WALLS
   d. CURTAIN WALLS
   e. ARCHITECTURAL PRECAST ELEMENTS
3. CONTRACT DOCUMENTS INDICATE INFORMATION SUFFICIENT TO CONVEY DESIGN INTENT. AT SOME LOCATIONS THERE MAY BE INDICATIONS OF SUPPORTS AND FASTENINGS. AT OTHER LOCATIONS THERE MAY NOT BE SUCH INDICATIONS. IN BOTH INSTANCES IT IS NOT INTENDED BY ARCHITECT (SEOR) TO SUPPLY CONTRACTOR WITH STRUCTURAL DESIGN CRITERIA, BUT RATHER TO SHOW WHERE SUPPORTS AND FASTENINGS APPEAR IN A GENERAL LOCATION ONLY. IF AREAS ARE SO LOCATED ARE INADEQUATE, AND IF ADDITIONAL SUPPORTS, FASTENINGS, BRACES, AND OTHER STRUCTURAL ELEMENTS AND FEATURES ARE REQUIRED FOR THE WORK, PROVIDE THEM AT NO ADDITIONAL COST TO OWNER AND ADVISE ARCHITECT OR SEOR OF THE NEED THEREOF.
4. AT CONNECTIONS TO STRUCTURE, PROVIDE STABILIZING ELEMENTS SUCH AS BRACES, STIFFENER PLATES, ETC, SO AS NOT TO IMPOSE ECCENTRIC LOADING, TWISTING, OR WARPING TO STRUCTURAL MEMBERS, PROVIDE MATERIAL AND INSTALL STABILIZING ELEMENTS AT NO ADDITIONAL COST TO OWNER.
5. DESIGN MEMBERS AND CONNECTIONS (INCLUDING THOSE TO STRUCTURAL FRAMING) AND PROVIDE FOR LATERAL RESTRAINT COMPLYING WITH BUILDING CODE AND CONTRACT DOCUMENTS.
6. PROVIDE ADEQUATE EXPANSION, CONTRACTION AND SEISMIC SEPARATION BETWEEN SUPPORTING STRUCTURE AND SKIN ELEMENTS.
7. SUBMIT DRAWINGS AND STRUCTURAL CALCULATIONS SIGNED BY AND BEARING THE SEAL OF A LICENSED ENGINEER FOR REVIEW BY THE SEOR AND APPROVAL BY THE AUTHORITY HAVING JURISDICTION.
8. UNLESS NOTED OTHERWISE, SLAB EDGES ARE NOT DESIGNED TO STRUCTURALLY SUPPORT SKIN ELEMENT CONNECTIONS. ANY CONNECTION TO SLAB EDGE SHALL BE ENGINEERED AND DETAILED BY SKIN CONTRACTOR.
9. UNLESS NOTED OTHERWISE IN THE CONTRACT DOCUMENTS, WALLS SHALL ACCOMMODATE THE FOLLOWING (±) VERTICAL DISPLACEMENT(S):
   a. FLOORS: GREATER OF L/360 AND 1"
   b. ROOF: GREATER OF L/240 AND 1"
10. UNLESS NOTED OTHERWISE, METAL STUD CONNECTIONS SHALL BE DESIGNED AS FOLLOWS:
    a. LATERAL LOADS (WIND AND SEISMIC) SHALL BE SUPPORTED AT EACH FLOOR / ROOF LEVEL.
    b. VERTICAL LOADS (GRAVITY) SHALL BE SUPPORTED AT EVERY OTHER FLOOR, AS A MINIMUM.
11. UNLESS NOTED OTHERWISE, THE FACADE SYSTEM SHALL BE DESIGNED TO ACCOMMODATE THE MAXIMUM STORY DRIFT AT EACH LEVEL, AS SPECIFIED IN DESIGN CRITERIA NOTE 4.

ELEVATORS

1420000-0000

1. THE ITEM(S) INCLUDED IN THIS SECTION ARE DESIGN-BUILD AND/OR BIDDER-DESIGNED.
2. GENERAL CONTRACTOR TO COORDINATE WITH ELEVATOR MANUFACTURER TO PROVIDE RAILS TO SPAN BETWEEN EACH LEVEL.
3. ELEVATOR MANUFACTURER TO PROVIDE CONNECTIONS AT EACH LEVEL. IF ECCENTRIC LOAD IS APPLIED AT BEAMS, PROVIDE BRACES AS REQUIRED TO ELIMINATE TORSION.
4. SUBMIT DRAWINGS AND STRUCTURAL CALCULATIONS SIGNED BY AND BEARING THE SEAL OF A LICENSED ENGINEER FOR REVIEW BY THE SEOR AND APPROVAL BY THE AUTHORITY HAVING JURISDICTION.

DESIGN-BUILD AWNINGS

0107131-0000

1. THE ITEM(S) INCLUDED IN THIS SECTION ARE DESIGN-BUILD AND/OR BIDDER-DESIGNED.
2. CONTRACTOR SHALL PROVIDE CALCULATIONS, DETAILS AND PLANS OF ALL AWNINGS.
3. SEE ARCH FOR ALL DETAILS AND DIMENSIONS.
4. SUBMIT DRAWINGS AND STRUCTURAL CALCULATIONS SIGNED BY AND BEARING THE SEAL OF A LICENSED ENGINEER FOR REVIEW BY THE SEOR AND APPROVAL BY THE AUTHORITY HAVING JURISDICTION.

NONSTRUCTURAL EQUIPMENT ANCHORAGE

2300000-0001

1. THE ITEM(S) INCLUDED IN THIS SECTION ARE DESIGN-BUILD AND/OR BIDDER-DESIGNED.
2. ALL MECHANICAL AND ELECTRICAL EQUIPMENT AND ARCHITECTURAL COMPONENTS SHALL BE ANCHORED OR BRACED TO MEET THE HORIZONTAL AND VERTICAL FORCES PRESCRIBED IN CBC AND ASCE 7-16 CHAPTER 13.
3. SUBMIT DRAWINGS AND STRUCTURAL CALCULATIONS SIGNED BY AND BEARING THE SEAL OF A LICENSED ENGINEER FOR REVIEW BY THE SEOR AND APPROVAL BY THE AUTHORITY HAVING JURISDICTION.
4. ANCHORAGE OF ALL EQUIPMENT TO BE INSTALLED AS A PART OF THIS PROJECT SHALL BE DETAILED EXCEPT FOR THE FOLLOWING:
   a. EQUIPMENT WEIGHING LESS THAN 400 POUNDS SUPPORTED DIRECTLY ON THE FLOOR OR ROOF AND HAVING A CENTER OF MASS LOCATED 4 FEET OR LESS ABOVE THE ADJACENT FLOOR OR ROOF LEVEL
   b. FURNITURE (NON-FIXED AND MOVABLE)
   c. TEMPORARY OR MOVABLE EQUIPMENT
   d. ITEMS EXEMPTED BY CBC SECTIONS 1617.11.15 AND 1616A.1.18
   e. EQUIPMENT WEIGHING LESS THAN 20 POUNDS SUPPORTED BY VIBRATION ISOLATORS
   f. EQUIPMENT WEIGHING LESS THAN 20 POUNDS SUSPENDED FROM A ROOF OR FLOOR OR MOUNTED TO A WALL
5. PERMANENT EQUIPMENT ITEMS a. e AND f MUST BE SUPPORTED AN ANCHORED TO RESIST THE FORCES PRESCRIBED BY CHAPTER 13 OF ASCE 7 AS MODIFIED BY THE CBC AND THE ANCHORAGE SHALL BE APPROVED BY THE APPROPRIATE DESIGN PROFESSIONAL OF RECORD AND THE AUTHORITY HAVING JURISDICTION AS A PART OF FIELD REVIEWS/OBSERVATIONS. THE INSPECTOR OF RECORD SHALL ASSURE THAT THE ABOVE REQUIREMENTS ARE ENFORCED.

FIRE SPRINKLER ANCHORAGE

2300000-0001

1. THE ITEM(S) INCLUDED IN THIS SECTION ARE DESIGN/BUILD AND/OR BIDDER-DESIGNED.
2. FIRE SPRINKLER CONTRACTOR SHALL PROVIDE CALCULATIONS, DETAILS AND PLANS OF ALL FIRE SPRINKLER ANCHORAGE. VERTICAL LOADS ARE PER BUILDING CODE AND LATERAL LOADS ARE PER NFPA 13.
3. FIRE SPRINKLER CONTRACTOR SHALL COORDINATE HANGER AND BRACING ANCHORAGE LOCATIONS WITH THE STRUCTURAL DRAWINGS AND ROOF AND FLOOR FRAMING SYSTEMS BY OTHERS.
4. SUBMIT DRAWINGS AND STRUCTURAL CALCULATIONS SIGNED BY AND BEARING THE SEAL OF A LICENSED ENGINEER FOR REVIEW BY THE SEOR AND APPROVAL BY THE AUTHORITY HAVING JURISDICTION.

STRUCTURAL SUBMITTALS

0100000-0006

1. REVIEW OF SHOP DRAWINGS AND SUBMITTALS BY THE EOR IS FOR GENERAL CONFORMANCE WITH THE CONTRACT DOCUMENTS.
2. SHOP DRAWINGS SHALL BE SUBMITTED TO THE EOR (ALLOW FOR A REVIEW DURATION OF 10 BUSINESS DAYS), AND SHALL CONSIST OF ELECTRONIC FILES.
3. REPRODUCTION OF STRUCTURAL PLANS AND DETAILS FOR SHOP DRAWINGS IS PROHIBITED. SUBCONTRACTOR/FABRICATOR IS TO PROVIDE INDEPENDENTLY CREATED DRAWINGS BASED ON THE STRUCTURAL PLANS AND DETAILS. SHOP DRAWINGS THAT ARE REPRODUCTIONS OF STRUCTURAL DRAWINGS WILL NOT BE REVIEWED.
4. EACH CONTRACTOR RESPONSIBLE FOR THE CONSTRUCTION OF A MAIN WIND- OR SEISMIC-FORCE-RESISTING SYSTEM, DESIGNATED SEISMIC SYSTEM OR A WIND- OR SEISMIC-RESISTING COMPONENT LISTED IN THE STATEMENT OF SPECIAL INSPECTIONS SHALL SUBMIT A WRITTEN STATEMENT OF RESPONSIBILITY TO THE BUILDING OFFICIAL AND THE OWNER PRIOR TO THE COMMENCEMENT OF WORK ON THE SYSTEM OR COMPONENT. THE CONTRACTOR'S STATEMENT OF RESPONSIBILITY SHALL CONTAIN ACKNOWLEDGEMENT OF AWARENESS OF THE SPECIAL REQUIREMENTS CONTAINED IN THE STATEMENT OF SPECIAL INSPECTION.
5. THE FOLLOWING LIST SUMMARIZES REQUIRED STRUCTURAL SUBMITTALS FOR THIS PROJECT. REFER TO THE SPECIFICATIONS FOR A COMPLETE LIST AND ADDITIONAL REQUIREMENTS.

GENERAL
- QUALIFICATION DATA FOR APPROVED INSTALLERS AND FABRICATORS
- CERTIFICATES OF CONFORMANCE FOR PREFABRICATED MEMBERS
- SEISMIC JOINT AND EXPANSION JOINT COVER PRODUCT DATA

CONCRETE REINFORCEMENT
- MANUFACTURER'S PRODUCT DATA, SPECIFICATIONS AND INSTALLATION PROCEDURES FOR PROPRIETARY MATERIALS AND REINFORCEMENT
- STEEL PRODUCER'S CERTIFICATES OF MILL ANALYSIS, TENSILE AND BEND TESTS
- SHOP DRAWINGS FOR FABRICATION, BENDING AND PLACEMENT

CAST-IN-PLACE CONCRETE
- DESIGN MIX FOR EACH CONCRETE MIX
- MATERIAL TEST REPORTS
- MATERIAL CERTIFICATES FOR CEMENT, AGGREGATES AND ADMIXTURES
- SHOP DRAWINGS FOR PROPOSED LOCATIONS OF ADDITIONAL CONSTRUCTION OR CONTROL JOINTS NOT SHOWN ON THE STRUCTURAL PLANS
- MINUTES FROM PREINSTALLATION CONFERENCE

STRUCTURAL STEEL
- MANUFACTURER'S MILL CERTIFICATES
- MILL TEST REPORTS
- SHOP DRAWINGS FOR FABRICATION AND ASSEMBLY OF MEMBERS
- ERECTION PLAN SEQUENCE AND PROCEDURES
- WELDING PROCEDURE SPECIFICATIONS (WPS)
- CERTIFICATES FOR ALL WELDERS VERIFYING CURRENT AWS QUALIFICATIONS
- TEST REPORTS FOR SHOP AND FIELD WELDED AND BOLTED CONNECTIONS
- DURAFUSE SHOP DRAWINGS

STEEL DECK
- SHOP DRAWINGS INDICATING TYPE, LAYOUT, DETAILS, AND OPENINGS LARGER THAN 1'-0"

DEFERRED APPROVALS

0100000-0000

WHERE DEFERRED APPROVAL ITEMS ARE DESIGN-BUILD (OR BIDDER-DESIGNED), THE CONTRACTOR SHALL SUBMIT DRAWINGS AND CALCULATIONS STAMPED AND SIGNED BY A CIVIL ENGINEER LICENSED IN THE STATE OF CALIFORNIA RESPONSIBLE FOR THE DESIGN OF THE DEFERRED SUBMITTAL ITEMS. SHALL STAMP AND SIGN THOSE DRAWINGS AND CALCULATIONS FOR WITCH THEY ARE RESPONSIBLE.

THE FOLLOWING DEFERRED APPROVAL OF EACH DEFERRED ITEM SHALL FIRST BE SUBMITTED TO THE REGISTERED DESIGN PROFESSIONAL IN RESPONSIBLE CHARGE, WHO WILL REVIEW AND FORWARD THEM TO THE BUILDING OFFICIAL WITH NOTIFICATION INDICATING THAT THE SUBMITTALS CONFORM TO THE DESIGN OF THE BUILDING. A SHOP DRAWINGS STAMPED MARKED 'NO EXCEPTION TAKEN' OR SEPARATE MEMORANDUM IS ACCEPTABLE. THEN APPROVED BY THE BUILDING OFFICIAL PRIOR TO INSTALLATION:

1. EXTERIOR BUILDING FACADE
2. ELEVATORS
3. DESIGN BUILT AWNINGS
4. NONSTRUCTURAL EQUIPMENT ANCHORAGE
5. FIRE SPRINKLER ANCHORAGE
6. DURAFUSE FRAMES
7. INTERIOR METAL STUD DESIGN
8. EXTERIOR METAL STUDS, CONNECTIONS AND DRIFT REQUIREMENT DETAILS.

NOTE: ALL METAL STUDS REPRESENTED AND SHOWN IN THESE DOCUMENTS ARE A CONCEPTUAL DEFERRED APPROVAL ITEMS.

STRUCTURAL SHEET INDEX

0001115-0000

SHEET NUMBER	SHEET NAME
S001	GENERAL NOTES
S002	GENERAL MATERIAL NOTES
S011	TYPICAL FOUNDATION & SOG DETAILS
S012	TYPICAL FOUNDATION & TYPICAL DETAILS
S013	TYPICAL CONCRETE DETAILS
S014	TYPICAL CONCRETE GRADE BEAM DETAILS
S015	TYPICAL CONCRETE GRADE BEAM DETAILS
S031	TYPICAL STRUCTURAL STEEL DETAILS
S032	TYPICAL STRUCTURAL DETAILS
S035	TYPICAL STEEL STAIR DETAILS
S041	TYPICAL METAL DECK DETAILS
S042	TYPICAL COMPOSITE METAL DECK DETAILS
S044	MECHANICAL HANGER AND MISC. DETAILS
S045	MECHANICAL SUPPORT AND MISC. DETAILS
S051	TYPICAL COLD-FORMED STEEL DETAILS
S052	TYPICAL COLD-FORMED STEEL DETAILS
S053	TYPICAL COLD-FORMED STEEL DETAILS
S201	FOUNDATION PLAN
S202	SECOND FLOOR FRAMING PLAN
S203	THIRD FLOOR FRAMING PLAN
S204	ROOF FRAMING PLAN
S210	ENLARGED STAIR FRAMING PLANS
S211	ENLARGED STAIR FRAMING PLANS
S301	BUILDING SECTIONS
S302	BUILDING SECTIONS
S303	BUILDING SECTIONS
S304	BUILDING SECTIONS
S305	BUILDING SECTIONS
S306	BUILDING SECTIONS
S307	BUILDING SECTIONS
S401	SMRF ELEVATIONS
S701	BUILDING ELEVATIONS
S702	BUILDING ELEVATIONS
SDF-01	GENERAL NOTES
SDF-02	ONE SIDED CONNECTION DETAILS
SDF-03	TWO SIDED CONNECTION DETAILS
SDF-04	BEAM AND PLATE DETAILS
SDF-05	MISCELLANEOUS DETAILS

ABBREVIATIONS AND LEGEND

0100000-0002

AB	ANCHOR BOLT	I.F.	INSIDE FACE
ABV	ABOVE	IN	INCH
ADDL	ADDITIONAL	INT	INTERIOR
ADJ	ADJACENT	IOR	INSPECTOR OF RECORD
AFF	ABOVE FINISH FLOOR	JST	JOIST
ALT	ALTERNATE	JT	JOINT
ARCH	ARCHITECT(URAL)	KLF	KIPS PER LINEAR FOOT
BLDG	BUILDING	KSF	KIPS PER SQUARE FOOT
BLK	BLOCK	KSI	KIPS PER SQUARE INCH
BLKG	BLOCKING	L	ANGLE
BLW	BELOW	LD	DEVELOPMENT LENGTH
BM	BEAM	LDH	HOOK DEVELOPMENT LENGTH
BN	BOUNDARY NAILING	LFRS	LATERAL FORCE RESISTING SYSTEM
B.O.	BOTTOM OF	LLH	LONG LEG HORIZONTAL
BOTT	BOTTOM	LLV	LONG LEG VERTICAL
BRB	BUCKLING-RESTRAINED BRACE	LONG	LONGITUDINAL
BRG	BEARING	LP	LOW POINT
BS	BOTH SIDES	LS	LAP SPLICE
BTWN	BETWEEN	LWC	LIGHTWEIGHT CONCRETE
C	CAMBER	MAX	MAXIMUM
CG	CENTER OF GRAVITY	MB	MACHINE BOLT
CIP	CAST IN PLACE	MECH	MECHANICAL
CJ	CONTROL/CONSTRUCTION JOINT	MFR	MANUFACTURER
CJP	COMPLETE JOINT PENETRATION	MIN	MINIMUM
CL	CENTERLINE	MTL	METAL
CLG	CEILING	(N)	NEW
CLR	CLEAR	NA	NEUTRAL AXIS
CMU	CONCRETE MASONRY UNIT	NS	NEAR SIDE OR NON-SHRINK
COL	COLUMN	NTS	NOT TO SCALE
CONC	CONCRETE	NWC	NORMALWEIGHT CONCRETE
CONN	CONNECTION	OC	ON CENTER
CONT	CONTINUOUS	OD	OUTSIDE DIAMETER
CSK	COUNTERSINK, COUNTERSUNK	O.F.	OUTSIDE FACE
CT(R(D)	CENTER(ED)	OH	OPPOSITE HAND
D_b, DB	BAR OR BOLT DIAMETER	OPNG	OPENING
DBL	DOUBLE	PDF	POWDER/POWDER DRIVEN FASTENER
DEMO	DEMOLITION	PJ	PANEL JOINT
DET	DETAIL	PJP	PARTIAL JOINT PENETRATION
DIA, Ø	DIAMETER	PL	PLATE
DIAG	DIAGONAL	PLC(S)	PLACE(S)
DIM	DIMENSION	PLF	POUNDS PER LINEAR FOOT
DIR	DIRECTION	PLYWD	PLYWOOD
DO	DITTO	PREFAB	PREFABRICATED
DWG	DRAWING	PSF	POUNDS PER SQUARE FOOT
(E)	EXISTING	PSI	POUNDS PER SQUARE INCH
EA	EACH	PT	PRESSURE TREATED OR
EF	EACH FACE		POST TENSION
EJ	EXPANSION JOINT	QTY	QUANTITY
EMBED	EMBEDMENT	RAD, R	RADIUS
ELEC	ELECTRICAL	REF	REFERENCE
ELEV	ELEVATION OR ELEVATOR	REINF	REINFORCING
EN	EDGE NAILING	REQD	REQUIRED
E.O.	EDGE OF	(S)	"SIMPSON" STRONG TIE CO. OR "USP"
EOD	EDGE OF DECK		W/ EQUIVALENT THIRD PARTY
EQ	EQUAL		EVALUATION VALUES
EQUIP	EQUIPMENT	SB	SILL BOLT
ES	EACH SIDE OR EDGE SCREW	SC	SAW CUT OR SLIP-CRITICAL
EW	EACH WAY	SCHED	SCHEDULE
EXP	EXPANSION	SEOR	STRUCTURAL ENGINEER OF RECORD
EXT	EXTERIOR	SHTG	SHEATHING
FIN	FINISH	SIM	SIMILAR
FLG	FLANGE	SMS	SHEET METAL SCREW
FLR	FLOOR	SN	SILL NAIL
FN	FIELD NAILING	SOG	SLAB ON GRADE
FND	FOUNDATION	SQ	SQUARE
F.O.	FACE OF	SS	STAINLESS STEEL
FS	FAR SIDE OR FIELD SCREW	STD	STANDARD
FRMG	FRAMING	STGRD	STAGGERED
FRP	FIBER REINFORCED POLYMER	STIFF	STIFFENER
FT	FOOT OR FEET	STL	STEEL
FTG	FOOTING	STRUCT	STRUCTURAL
Fy	YIELD STRESS	T&B	TOP & BOTTOM
GA	GAGE	T&G	TONGUE AND GROOVE
GALV	GALVANIZED	THK	THICK
GB	GRADE BEAM	THRD	THREADED
GC	GENERAL CONTRACTOR	T.O.	TOP OF
GLB	GLUED-LAMINATED BEAM	TRANS	TRANSVERSE
HAB	HEADED ANCHOR BOLT	TYP	TYPICAL
HD	HOLDOWN	UNO	UNLESS NOTED OTHERWISE
HDG	HOT-DIPPED GALVANIZED	VERT	VERTICAL
HDR	HEADER	VIF	VERIFY IN FIELD
HGR	HANGER	W/	WITH
HK	HOOK	W/O	WITHOUT
HORIZ	HORIZONTAL	WF, W	WIDE FLANGE
HP	HIGH POINT	WHS	WELDED HEADED STUD
HS	HIGH-STRENGTH	WLD	WELDED
HSB	HIGH-STRENGTH BOLT	WO	WHERE OCCURS
HSS	HOLLOW STRUCTURAL STEEL	WP	WORK POINT
HT	HEIGHT	WT	WEIGHT
ID	INSIDE DIAMETER	WWF	WELDED WIRE FABRIC

= REFERENCE ELEVATION OR WORK POINT

LFRS [LFRS] — INDICATES THAT A DETAIL OR PORTION OF FRAMING IS A PART OF THE LATERAL FORCE RESISTING SYSTEM AND IS SUBJECT TO ADDITIONAL REQUIREMENTS OUTLINED IN THE GENERAL NOTES AND SPECIFICATIONS

TYPICAL HATCH PATTERNS USED (UNLESS NOTED OTHERWISE):

CONCRETE | STEEL | SOIL/ EARTH | MASONRY | GROUT/SAND | PLYWOOD/SHEATHING

EXISTING ELEMENTS ARE SHOWN AS HALFTONE, NEW ELEMENTS ARE SHOWN AS FULL TONE UNO; EXAMPLE:

INDICATES A NEW ELEMENT — INDICATES AN EXISTING ELEMENT

SAWN LUMBER:

CONTINUOUS — BLOCKING — END OF MEMBER

REFERENCE OF SECTIONS, DETAILS & SYMBOLS

0100000-0004

DETAIL REFERENCE SHOWN THUS*: 2 / S5.01 **
DETAIL NOTED IS SHOWN ON SHEET S5.01, DETAIL 2

BUILDING SECTION INDICATION SHOWN THUS: 2 / S5.01 **
CUT IS SHOWN ON SHEET S5.01, DETAIL 2

ELEVATION INDICATION SHOWN THUS: 2 / S5.01 **
ELEVATION IS SHOWN ON SHEET S5.01, DETAIL 2

* (ADDITIONAL INDICATORS MAY BE USED TO SHOW LOCATION OF DETAIL CUTS)
** (SHEET NUMBER MAY BE REPLACED BY A HYPHEN (-) WHEN THE REFERENCED DETAIL APPEARS ON THE SAME SHEET AS THE CALL-OUT)

DETAIL TITLE SHOWN THUS:

2 DETAIL TITLE
SCALE

INDICATES THE TITLE, SCALE, AND DETAIL NUMBER ON SHEET

STRUCTURAL OBSERVATIONS

0100000-0007

1. VISUAL OBSERVATIONS WILL BE PERFORMED AT THE DISCRETION OF THE OWNER, ARCHITECT, SEOR, AND AS REQUIRED BY THE BUILDING OFFICIAL IN ACCORDANCE WITH THE BUILDING CODE. VISUAL OBSERVATIONS SHALL NOT BE CONSIDERED AS A SUBSTITUTE FOR THE SPECIAL INSPECTION REQUIREMENTS.
2. IT IS THE RESPONSIBILITY OF THE GENERAL CONTRACTOR TO NOTIFY THE SEOR AS TO WHEN EACH MAJOR PHASE OF CONSTRUCTION IS READY FOR OBSERVATION A MINIMUM OF FIVE BUSINESS DAYS IN ADVANCE.
3. THE FOLLOWING MAJOR PHASES OF CONSTRUCTION REQUIRE A SITE VISIT AND STRUCTURAL OBSERVATION REPORT FROM THE SEOR PER CBC 1704.6.1 ITEM 1:
   a. FOUNDATION REINFORCING AND ANCHORS - PRIOR TO FIRST POUR OF CONCRETE
   b. STRUCTURAL STEEL FRAMING - AFTER ERECTION AND PRIOR TO CLOSING IN
   c. RAISED FLOOR SLABS AND REBAR - PRIOR TO FIRST POUR OF CONCRETE
   d. EXTERIOR METAL STUDS
   e. METAL DECK ATTACHMENT
   f. COMPLETION OF THE STRUCTURAL SYSTEM
4. THE CONTRACTOR SHALL BE RESPONSIBLE FOR ENSURING THAT NAILING, REINFORCEMENT, WELDS, CONNECTIONS, ETC. ARE ACCESSIBLE FOR OBSERVATION WHEN THE SEOR IS ONSITE AND FOR ANY SCHEDULING DELAYS DUE TO NONCOMPLIANT ITEMS FOUND DURING THE OBSERVATION.
5. AT THE CONCLUSION OF THE WORK INCLUDED IN THE PERMIT, THE STRUCTURAL OBSERVER SHALL SUBMIT TO THE BUILDING OFFICIAL A WRITTEN STATEMENT THAT THE SITE VISITS HAVE BEEN MADE AND IDENTIFY ANY REPORTED DEFICIENCIES THAT, TO THE BEST OF THE STRUCTURAL OBSERVERS' KNOWLEDGE, HAVE NOT BEEN RESOLVED.

PRODUCT REPORTS

0100000-0006

1. FOR ALL ITEMS IN THE CONSTRUCTION DOCUMENTS NOT NOTED WITH A SPECIFIC PRODUCT NAME OR MANUFACTURER, THE CONTRACTOR SHALL PROVIDE A PRODUCT SPECIFIED IN THE TABLE BELOW.
2. THE FOLLOWING PRODUCTS SHALL BE INSTALLED PER THE REQUIREMENTS OF THE REFERENCED PRODUCT REPORTS, UNO.
3. A PRODUCT MAY BE SUBSTITUTED FOR AN EQUIVALENT PRODUCT PER THE SCHEDULE BELOW IF APPROVED BY THE EOR AND THE BUILDING OFFICIAL.
4. PRODUCTS SPECIFIED BY TYPE ONLY MAY USE ANY PRODUCT FROM THE SCHEDULE BELOW.

TYPE	PRODUCT	ICC#	IAPMO#	LARR#
EXPANSION ANCHOR TO CONCRETE	HILTI KWIK BOLT TZ	ESR-1917	-	25701
	HILTI KWIK BOLT TZ2	ESR-4266	-	-
	HILTI KWIK BOLT 1	-	678	-
	MKT SZ	ESR-3173	-	-
	SIMPSON STRONG-BOLT 2	ESR-3037	-	25891
	DEWALT / POWER STUD+ SD1	ESR-2818	-	25787
	DEWALT / POWER STUD+ SD2/SD4/SD6	ESR-2502	-	25831
ADHESIVE ANCHOR TO CONCRETE	HILTI HIT-HY 200	ESR-3187	-	25964
	HILTI HIT-RE 500 V3	ESR-3814	-	26028
	HILTI HIT-RE 100	ESR-3829	-	26027
	HILTI HIT-HY-100	ESR 3572	-	25744
	SIMPSON SET-3G	ESR-4057	-	-
	SIMPSON SET-XP	ESR-2508	-	-
	SIMPSON AT-XP	-	0263	-
	DEWALT / PE1000+	ESR-2583	-	25849
	DEWALT AC200+	ESR-4027	-	-
	DEWALT / PURE 110+	ESR-3298	-	26035
SCREW ANCHOR TO CONCRETE	HILTI KWIK HUS-EZ	ESR-3027	-	25897
	SIMPSON SS TITEN HD	ESR-2713	-	-
	SIMPSON SS TITEN SCREW	-	0493	26125
	DEWALT SCREWBOLT+	ESR-3889	-	-
DROP-IN ANCHOR TO CONCRETE	DEWALT / SNAKE+	ESR-2272	-	25810
CAST-IN INTERNALLY THREADED	HILTI HCI-HCI/HCI-WF	ESR-3713	-	26024
	SIMPSON BLUE BANGER HANGER	ESR-3707	-	26030
	DEWALT / BANG-IT I WOOD KNOCKER	ESR-3657	-	-
CONCRETE SCREW	SIMPSON SS TITEN 2	-	0449	-
	ITW BUILDEX TAPCON	ESR-2202	-	-
	DEWALT ULTRACON+	ESR-3068	-	-
SHOTPIN (POWER DRIVEN FASTENER) ***	HILTI LOW-VELOCITY	ESR-2269	-	25675
	ITW / RAMSET POWER-DRIVEN	ESR-1799	-	22668
	SIMPSON POWER-ACTUATED	ESR-2138	-	25469
	DEWALT TRACK-IT C5	ESR-3275	-	25920
	DEWALT POWER-DRIVEN	ESR-2024	-	25304
CONCRETE REINFORCING HEADED END*	HRC 555 HEADED BARS	ESR-2935	0177	25815
	LENTON TERMINATOR D14	-	0188	25893
	BAR SPLICE BUTTON HEAD	-	0331	25996
	DEXTRA BARTEC	ESR-2166	-	25884
ADHESIVE ANCHOR TO BRICK	HILTI HIT-HY 270	ESR-4144	-	-
	SIMPSON SET	ESR-1772	-	25279
	DEWALT AC100+ GOLD	ESR-4105	-	-
WELDED STUD	NELSON STUDS	ESR-2856	-	02725
	STUD WELDING ASSOCIATES SHEAR CONNECTOR STUDS	ESR-1094	-	-
	TRU-WELD HEADED STUD ANCHORS	ESR-2577	-	24330
WELDED BAR ANCHORS	NELSON DEFORMED BAR ANCHORS	ESR-2907	-	25860
	TRU-WELD DEFORMED BAR ANCHORS	ESR-2823	-	25887
METAL DECK	VERCO DECK	-	0217	23789
	ASC STEEL ROOF DECK	ESR-1414	-	23783
	ASC STEEL FLOOR DECK	ESR-2408	-	23783
	EPIC METALS EPICORE	ESR-2047	-	25487
	CONSOLIDATED SYSTEMS ROOF DECK	ESR-2657	-	25758
		ESR-2839	-	-

FOOTNOTES:
* ANY CONCRETE REINFORCING HEADED END COMPLYING WITH ASTM A970 MAY BE USED.
** ANY SHEET METAL SCREW COMPLYING WITH ASTM C1513, SELF-DRILLING AND TAPPING TYPE, WITH HEAD TYPE APPROPRIATE TO THE APPLICATION, MAY BE USED.
*** AT TREATED LUMBER, PROVIDE GALVANIZED FASTENERS IN ACCORDANCE WITH PRODUCT REPORTS.

STATEMENT OF SPECIAL INSPECTIONS

0100000-0003

1. THE OWNER SHALL EMPLOY ONE OR MORE SPECIAL INSPECTORS TO PROVIDE INSPECTIONS DURING CONSTRUCTION. THE SPECIAL INSPECTOR SHALL BE A QUALIFIED PERSON WHO SHALL DEMONSTRATE COMPETENCE, TO THE SATISFACTION OF THE BUILDING OFFICIAL, FOR INSPECTION OF THE PARTICULAR TYPE OF CONSTRUCTION OR OPERATION REQUIRING SPECIAL INSPECTION.
2. SPECIAL INSPECTIONS ARE NOT REQUIRED WHERE THE WORK IS DONE ON THE PREMISES OF A FABRICATOR REGISTERED AND APPROVED TO PERFORM SUCH WORK WITHOUT SPECIAL INSPECTION. APPROVED FABRICATORS MUST SUBMIT A CERTIFICATE OF COMPLIANCE FOR OFFSITE FABRICATIONS SUCH AS STRUCTURAL STEEL, PRECAST CONCRETE, GLUED LAMINATED TIMBER, ETC.
3. ALL INSPECTIONS SHALL BE PERFORMED BY INDEPENDENT SPECIAL INSPECTORS. JOB SITE VISITS BY THE STRUCTURAL ENGINEER OR BUILDING OFFICIAL DO NOT CONSTITUTE AND ARE NOT A SUBSTITUTE FOR INSPECTIONS BY A SPECIAL INSPECTOR.
4. ALL INSPECTION REPORTS SHALL BE SUBMITTED TO THE BUILDING OFFICIAL AND EOR. THE FINAL REPORTS BY THE SPECIAL INSPECTOR(S) MUST CERTIFY THAT THE STRUCTURAL SYSTEM COMPLIES WITH THE APPROVED PLANS AND SPECIFICATIONS.
5. IT IS SOLELY THE CONTRACTOR'S RESPONSIBILITY TO SEE THAT THESE INSPECTIONS ARE PERFORMED.
6. WORK REQUIRING SPECIAL INSPECTION SHALL BE INSPECTED BY THE SPECIAL INSPECTOR WHO IS PRESENT IN THE AREA WHERE THE WORK IS PERFORMED AND AT THE COMPLETION OF WORK. CONTINUOUS (CONT) INSPECTION CONSISTS OF FULL-TIME INSPECTION. PERIODIC INSPECTION CONSISTS OF PART-TIME OR INTERMITTENT INSPECTION.
7. AT A MINIMUM, ALL SPECIAL INSPECTIONS REQUIRED BY THE BUILDING CODE SHALL BE PROVIDED. THE FOLLOWING SPECIAL INSPECTIONS ARE IN ADDITION TO INSPECTIONS BY THE BUILDING OFFICIAL. THIS LIST IS NOT INTENDED TO BE ALL INCLUSIVE.
8. ALL INSPECTIONS REQUIRED SHALL BE IN COMPLIANCE WITH THE CBC 1704.3.

SOILS SUPPORTING FOUNDATIONS CBC 1705.6.
PERIODIC: VERIFY MATERIALS BELOW FOOTINGS ARE ADEQUATE TO ACHIEVE THE DESIGN BEARING CAPACITY
PERIODIC: VERIFY EXCAVATIONS ARE EXTENDED TO PROPER DEPTH AND HAVE REACHED PROPER MATERIAL
PERIODIC: PERFORM CLASSIFICATION AND TESTING OF CONTROLLED FILL MATERIALS
CONT: VERIFY USE OF PROPER MATERIALS, DENSITIES AND LIFT THICKNESSES DURING PLACEMENT AND COMPACTION OF CONTROLLED FILLS
PERIODIC: PRIOR TO PLACEMENT OF CONTROLLED FILL, INSPECT SUBGRADE AND VERIFY THAT SITE HAS BEEN PREPARED PROPERLY

STRUCTURAL CONCRETE CBC 1705.3
PERIODIC: INSPECTION OF REINFORCING STEEL AND PLACEMENT
CONT: INSPECT BOLTS TO BE INSTALLED IN CONCRETE PRIOR TO AND DURING PLACEMENT OF CONCRETE
PERIODIC: VERIFY USE OF REQUIRED DESIGN MIX
CONT: SAMPLING FRESH CONCRETE AND PERFORMING SLUMP

ESSENTIAL FACILITIES - RISK CATEGORY IV STRUCTURES

0000000-0000

CBC 2019 PART 1
PROVISIONS OF CHAPTER 4
ALL PARTIES SHALL INCORPORATE THE REQUIREMENTS OF ARTICLE 1 AND 3, AS DEFINED IN THE APPLICABLE CODE SECTIONS

ARTICLE 1

DELEGATION OF RESPONSIBILITIES 4-209
DELEGATION OF RESPONSIBLE CHARGE FOR WORK OF RESPECTIVE DISCIPLINES SHALL BE IN ACCORDANCE WITH SECTION **4-209 (A)** AND **(B).** EVIDENCE OF RESPONSIBILITY IS IN ACCORDANCE WITH SECTION **4-209 (C)**

OBSERVATION AND INSPECTION OF CONSTRUCTION
OBSERVATION AND INSPECTION OF CONSTRUCTION BY THE ARCHITECT AND REGISTERED ENGINEERS SHALL BE IN ACCORDANCE WITH **4-211 (A)**
A PROJECT INSPECTOR EMPLOYED BY THE OWNER SHALL PROVIDE ADEQUATE AND CONTINUOUS INSPECTION IN ACCORDANCE WITH **2-211 (B)** AND SHEET S002
SPECIAL INSPECTORS, EMPLOYED BY THE OWNER SHALL PROVIDE SPECIAL INSPECTIONS PER SECTION **4-211 (C)** AND SHEET S002
SUPERVISION OF CONSTRUCTION BY THE ENFORCEMENT AGENCY SHALL BE IN ACCORDANCE WITH **4-212**

TESTING AND VERIFICATION OF TESTING
TESTING SHALL BE IN ACCORDANCE WITH SECTION **4-213**
TEST SAMPLING **4-213 (B)**
TEST REPORTS **4-213 (C)**
VERIFICATION OF TEST REPORTS **4-213 (D)**
AS WORK OF CONSTRUCTION PROGRESSES, VERIFIED REPORTS SHALL BE SUBMITTED IN ACCORDANCE WITH **4-214**

DUTIES OF THE ARCHITECTS AND ENGINEERS
DUTIES OF THE ARCHITECTS AND ENGINEERS ARE DEFINED IN SECTION **4-217**
DUTIES OF THE MECHANICAL AND ELECTRICAL ENGINEERS ARE DEFINED IN SECTION **4-218**

DUTIES OF THE INSPECTOR
DUTIES OF THE INSPECTOR ARE DEFINED **4-219 (ALL SECTIONS)**

DUTIES OF THE CONTRACTOR
DUTIES OF THE CONTRACTOR ARE DEFINED IN SECTION **4-220**

ARTICLE 3

SECTIONS OF ARTICLE 3 OF CBC PART 1 CHAPTER 4 ARE APPLICABLE TO LOCAL OWNED BUILDINGS

GENERAL AND ADMINISTRATIVE PROCEDURES SECTION **4-243**
APPROVAL OF DRAWINGS AD SPECIFICATIONS SECTION **4-244**
VOIDANCE OF APPLICATION , TIME OF CONSTRUCTION, NOTICE OF START OF CONSTRUCTION SECTIONS **4-245 THROUGH 4-247**
APPROVAL OF INSPECTORS SECTION **4-248**
VERIFIED REPORTS **4-249**

STEEL LATERAL FORCE RESISTING SYSTEM

051200-0007

1. HIGH-STRENGTH SLIP-CRITICAL BOLTS SHALL BE USED FOR ALL "LATERAL FORCE RESISTING SYSTEM" (LFRS) MEMBER STEEL TO STEEL CONNECTIONS, UNO.
2. ALL WELDS WITHIN MEMBERS DESIGNATED AS PART OF THE LATERAL FORCE RESISTING SYSTEM (LFRS) SHALL CONFORM TO THE DETAILING, MATERIALS, WORKMANSHIP, TESTING, AND INSPECTION REQUIREMENTS OF AWS D1.8 AND AISC 341, AND SHALL USE A FILLER METAL WITH A CHARPY V-NOTCH (CVN) TOUGHNESS OF 20 FT-LB AT 0°F.
3. WHERE WELDS ARE DESIGNATED AS DEMAND CRITICAL, THEY SHALL BE MADE WITH A FILLER METAL CAPABLE OF PROVIDING A MINIMUM CVN TOUGHNESS OF 20 FT-LB AT -20°F AND 40 FT-LB AT 70°F. SEE AWS D1.8, SECTION 6.3.6, FOR CVN TEST CRITERIA. "DC" INDICATES A DEMAND CRITICAL WELD.
4. WELDERS PERFORMING WELDING WITHIN THE "LFRS" SHALL BE QUALIFIED IN ACCORDANCE WITH AWS D1.8 CHAPTER 5.
5. (INTERMEDIATE MOMENT FRAMES AND SPECIAL MOMENT FRAMES) WELDS FOR COLUMN SPLICES AND COLUMN TO BASEPLATE CONNECTIONS SHALL BE DEMAND CRITICAL WELDS.
6. WHERE A PORTION OF A STRUCTURAL STEEL MEMBER IS DESIGNATED AS A PROTECTED ZONE, IT SHALL CONFORM TO THE FOLLOWING REQUIREMENTS:
   a. TACK WELDS, AIR-ARC GOUGING, THERMAL CUTTING, AND OTHER DISCONTINUITIES CREATED BY FABRICATION OR ERECTION OPERATIONS, SHALL BE REPAIRED AS REQUIRED BY EOR.
   b. WELDED SHEAR STUDS AND DECKING ATTACHMENTS THAT PENETRATE THE BEAM FLANGE SHALL NOT BE PLACED ON BEAM FLANGES. ARC SPOT WELDS AS REQUIRED TO SECURE METAL DECK ARE PERMITTED.
   c. WELDED, BOLTED, SCREWED, OR SHOT-IN ATTACHMENTS FOR PERIMETER EDGE ANGLES, EXTERIOR FACADES, PARTITIONS, DUCT WORK, PIPING, OR OTHER CONSTRUCTION ARE PROHIBITED.
   d. SEE AISC 341 FOR ADDITIONAL REQUIREMENTS.
7. THE PROPOSED SMRF CONNECTION, DURAFUSE SHALL BE PER IAPMO ER U610, WITH THE 2019 CBC SUPPLEMENT.

METAL DECK

053000-0000

1. SEE TYPICAL DETAILS FOR REINFORCING OF DECK AROUND OPENINGS. CONTRACTOR SHALL COORDINATE SIZE AND LOCATIONS OF OPENINGS WITH THE VARIOUS TRADES. NO LOADS SHALL BE HUNG FROM DECK WITHOUT APPROVAL OF SEOR.
2. FLOOR AND ROOF DECK IS DESIGNED FOR UNSHORED CONSTRUCTION, UNO. MAINTAIN 3 SPAN CONDITION WHEREVER POSSIBLE (2 SPAN MIN) EXCEPT AT STAIR LANDING AND WHERE NOTED OTHERWISE ON PLANS.
3. PROVIDE 2" MINIMUM BEARING AT ALL SUPPORTS. END LAPS OF METAL DECK SHALL BE A MINIMUM OF 2" AND SHALL OCCUR ONLY OVER SUPPORTS. DECK SHALL BE LAID OUT SO THAT A LOW FLUTE FALLS ON EACH PARALLEL SUPPORT.
4. SUBMIT SHOP DRAWINGS FOR REVIEW PRIOR TO FABRICATION. SHOP DRAWINGS SHALL SHOW TYPE OF DECK, LAYOUT OF DECK, THE SIZE AND LOCATION OF ANY OPENINGS OF WIDTH GREATER THAN 1'-0", AND ATTACHMENT METHOD.
5. ALTERNATES TO TYPE OF DECK AND FASTENING MAY BE USED WITH THE APPROVAL OF THE SEOR. DECK PROPERTIES SHALL BE EQUAL TO OR GREATER THAN THOSE SHOWN ON THE PLAN. ANY DECK OR METHOD OF FASTENING SHALL HAVE AN EVALUATION REPORT APPROVING THE DECK FOR THE APPLICATION.
6. METAL DECK WITH CONCRETE FILL SHALL HAVE POSITIVE VENTING. DO NOT EMBED PIPES, SLEEVES, CONDUIT, ETC IN CONCRETE TOPPING, UNO.
7. WELDING OF METAL DECK SHALL BE IN ACCORDANCE WITH AMERICAN WELDING SOCIETY (AWS) D1.3.
8. PLACE CONCRETE FIRST OVER BEAMS AND GIRDERS RATHER THAN AT MIDSPAN OF DECK. DO NOT PILE CONCRETE HIGHER THAN THE FINISHED DEPTH OF THE SLAB.

CONCRETE MASONRY

042200-0000

1. CONCRETE MASONRY UNITS (CMU) SHALL DEVELOP THE FOLLOWING MINIMUM 28 DAY PRISM COMPRESSIVE STRENGTHS:

LOCATION	f'm	CONCRETE MASONRY UNITS	GROUT
ALL CMU UNO	2000 PSI	2000 PSI	2000 PSI

2. CONCRETE BLOCK SHALL CONFORM TO ASTM C90 MEDIUMWEIGHT. USE OF LIGHTWEIGHT BLOCK REQUIRES PRIOR WRITTEN APPROVAL BY THE SEOR.
3. MORTAR SHALL BE TYPE S MORTAR.
4. VERTICAL REINFORCING SHALL BE FULL HEIGHT OF WALL AND SHALL BE BRACED AT 6'-8" MAXIMUM TO PREVENT MOVEMENT WHILE GROUTING.
5. HORIZONTAL REINFORCING SHALL BE IN BOND BEAM UNITS AND TIED SECURELY TO VERTICAL REINFORCING.
6. DOWELS, ANCHORS, AND OTHER EMBEDDED ITEMS SHALL BE TIED SECURELY IN PLACE TO PREVENT MOVEMENT WHILE GROUTING. WET SETTING OR STABBING IS NOT ALLOWED.
7. LAYOUT OF MASONRY BLOCK UNITS SHALL BE PER ARCHITECTURAL DRAWINGS. BLOCK MODULES / MORTAR JOINTS SHOWN ON THESE DRAWINGS ARE FOR PRESENTATION PURPOSES ONLY, AND NOT INTENDED TO SUPERCEDE ARCHITECTURAL DESIGN REQUIREMENTS. BLOCK SHALL BE PLACED IN RUNNING BOND AND SHALL BE 8x8x16 NOMINAL UNITS, UNO. WHERE BLOCK IS REQUIRED TO BE PLACED IN STACK BOND (SEE ARCH), OPEN-ENDED UNITS (I.E., "SPEED BLOCK") SHALL BE USED.
8. THE CONTRACTOR IS RESPONSIBLE FOR DETERMINING THE SAFETY OF LIFT HEIGHT FOR OPEN-ENDED OR FIELD MODIFIED BLOCKS.
9. REINFORCING 8" BLOCK:

TYPICAL VERTICAL REINFORCING	#5 @ 16"OC, CENTERED, UNO
TYPICAL HORIZONTAL REINFORCING	#4 @ 24"OC, UNO

10. PROVIDE VERTICAL CONTROL JOINTS IN CMU WALLS AS SHOWN ON PLAN. UNLESS NOTED OTHERWISE, VERTICAL CONTROL JOINTS SHALL OCCUR AT:
    a. 25'-0"OC MAXIMUM ALONG LENGTH OF WALL
    b. A SPACING NOT EXCEEDING 1.5 TIMES THE WALL HEIGHT
    c. CHANGES IN WALL HEIGHT
    d. CHANGES IN WALL THICKNESS
    e. FLOOR AND ROOF JOINTS
    f. 24" PAST ONE SIDE OF OPENINGS LESS THAN 6'-0" WIDE
    g. 24" PAST BOTH SIDES OF OPENINGS GREATER THAN OR EQUAL TO 6'-0" WIDE
    h. CORNERS AND INTERSECTIONS, WITHIN A DISTANCE EQUAL TO HALF THE CONTROL JOINT SPACING
11. FILL ALL CELLS WITH GROUT. MAXIMUM GROUT LIFTS SHALL NOT EXCEED 8'-0" AND CLEANOUTS AT THE BOTTOM OF ALL CELLS SHALL BE USED UNLESS THE LIFT IS 4'-0" OR LESS. GROUT FOR EACH POUR SHALL BE STOPPED 1 1/2" BELOW THE TOP OF A BLOCK COURSE EXCEPT AT THE FINAL COURSE. ALL GROUT SHALL BE THOROUGHLY CONSOLIDATED BY VIBRATING IMMEDIATELY AFTER PLACING. SHAKING OR RODDING REBAR IS NOT ALLOWED. HORIZONTAL REINFORCING SHALL BE FULLY EMBEDDED IN GROUT IN AN UNINTERRUPTED POUR.

STRUCTURAL STEEL

051200-0000

1. DESIGN, FABRICATION AND ERECTION OF STRUCTURAL STEEL SHALL CONFORM TO THE SPECIFICATIONS AND STANDARDS OF THE AMERICAN INSTITUTE OF STEEL CONSTRUCTION (AISC) AS CONTAINED IN THE "AISC MANUAL OF STEEL CONSTRUCTION". ALL WORK SHALL BE IN CONFORMANCE WITH THE TESTING, INSPECTION, QUALIFICATION, AND QUALITY ASSURANCE PROVISIONS AS REQUIRED BY THE BUILDING CODE AND ANY APPLICABLE STANDARDS. THESE STANDARDS INCLUDE, BUT ARE NOT LIMITED TO, THE FOLLOWING: AISC 360 "SPECIFICATION FOR STRUCTURAL STEEL BUILDINGS", AISC 303 "CODE OF STANDARD PRACTICE FOR STEEL BUILDINGS AND BRIDGES", AISC 341 "SEISMIC PROVISIONS FOR STRUCTURAL STEEL BUILDINGS", AWS D1.1 "STRUCTURAL WELDING CODE - STEEL", AWS D1.8 "STRUCTURAL WELDING CODE - SEISMIC SUPPLEMENT", AND RCSC "SPECIFICATION FOR STRUCTURAL JOINTS USING HIGH-STRENGTH BOLTS". CONFORMANCE TO SUPPLEMENTS TO THESE STANDARDS, IF PUBLISHED ON OR BEFORE THE DATE OF PERMIT ISSUANCE, IS ALSO REQUIRED. ALTHOUGH THESE CONTRACT DOCUMENTS INCLUDE GENERAL REFERENCES TO CODES AND STANDARDS, AND REFERENCES TO OR INCLUSIONS OF SPECIFIED PROVISIONS, OMISSIONS OF ANY APPLICABLE CODE, STANDARD, OR PROVISION DOES NOT RELIEVE THE GENERAL CONTRACTOR FROM COMPLIANCE TO THE APPLICABLE REQUIREMENTS. COORDINATION OF QUALITY CONTROL AND QUALITY ASSURANCE IS THE RESPONSIBILITY OF THE GENERAL CONTRACTOR.
2. ALL STRUCTURAL STEEL SHALL BE ERECTED PLUMB AND TRUE TO LINE. TEMPORARY BRACING SHALL BE INSTALLED AND SHALL BE LEFT IN PLACE UNTIL OTHER MEANS IS PROVIDED TO ADEQUATELY BRACE THE STRUCTURE.
3. STRUCTURAL STEEL MATERIALS/GRADES, UNO:

SHAPE	MATERIAL/GRADE
WIDE FLANGE & TEES	ASTM A992
PLATES, ANGLES, CHANNELS, THREADED RODS (UNO)	ASTM A36
HIGH-STRENGTH PLATE	ASTM A572, GRADE 50
SQUARE OR RECTANGULAR HOLLOW STRUCTURAL SECTIONS (HSS)	ASTM A500, GRADE C (Fy = 50 KSI) OR ASTM A1085
ROUND HOLLOW STRUCTURAL SECTIONS (HSS)	ASTM A500, GRADE C (Fy = 46 KSI) OR ASTM A1085
PIPES	ASTM A53 TYPE E OR S, GRADE B (Fy = 35 KSI)
MACHINE BOLTS (MB)	ASTM A307
WELDED HEADED STUDS	ASTM A29
THREADED RODS FOR ANCHOR BOLTS	ASTM F1554, GRADE 55

   a. EXCEPT AS OTHERWISE NOTED, ALL BOLTS SHALL BE HIGH-STRENGTH BOLTS.
   b. WHERE WELDING TO GRADE 55 THREADED ANCHOR RODS IS REQUIRED, USE ASTM F1554 GRADE 55 WITH SUPPLEMENT S1.
4. ALL CONNECTIONS NOT SHOWN SHALL CONFORM TO THE "AISC MANUAL OF STEEL CONSTRUCTION" AND SHALL BE SUBMITTED ON SHOP DRAWINGS FOR REVIEW BY SEOR PRIOR TO FABRICATION.
5. ALL WELDED HEADED STUDS, THREADED STUDS, AND DEFORMED BARS SHALL BE NELSON, OR EQUIVALENT, AND WELDED IN ACCORDANCE WITH MANUFACTURER'S RECOMMENDATIONS BY CERTIFIED WELDERS SO AS TO FULLY DEVELOP THE TENSILE CAPACITY OF THE CONNECTOR.
6. BOLTS WITH UPSET THREADS ARE NOT ALLOWED. USE THE APPROPRIATE NUT AND WASHER TYPE FOR THE SPECIFIED BOLT.
7. ALL STEEL FABRICATION SHALL BE PERFORMED BY A LICENSED FABRICATOR.
8. BEAMS NOT SPECIFIED WITH CAMBER SHALL HAVE MILL CAMBER PLACED IN UPWARD POSITION.
9. ALL STRUCTURAL STEEL AND MISCELLANEOUS STEEL PERMANENTLY EXPOSED TO THE ELEMENTS SHALL BE HOT DIP GALVANIZED AFTER FABRICATION UNLESS A WEATHERPROOF COATING IS SPECIFIED BY THE ARCHITECT, UNO. STAINLESS AND WEATHERING STEELS, WHERE SPECIFIED, ARE EXEMPT FROM THIS REQUIREMENT. GALVANIZED SURFACES SHALL BE PROTECTED DURING CONSTRUCTION AND SHALL BE REPAIRED AS NECESSARY. ALL ARCHITECTURALLY EXPOSED STRUCTURAL STEEL (AESS) SHALL COMPLY WITH AISC CODE OF STANDARD PRACTICE, SECTION 10.
10. SEE ARCHITECTURAL DRAWINGS FOR NAILER HOLES, WELDED STUDS OR OTHER ITEMS NOT SHOWN IN THESE DRAWINGS.
11. WHERE STEEL IS EMBEDDED IN CONCRETE OR MASONRY, PROVIDE HOLES AS REQUIRED FOR PASSAGE OF CONTINUOUS REINFORCING BARS WHERE INDICATED ON DRAWINGS.
12. DO NOT CUT HOLES IN STRUCTURAL STEEL WITHOUT APPROVAL OF THE SEOR.
13. PLACE NON-SHRINK OR DRYPACK GROUT UNDER ALL BASEPLATES AND ALLOW TO CURE UNTIL SPECIFIED STRENGTH IS REACHED BEFORE APPLYING LOADS.
14. WHERE AN HSS OR PIPE SECTION IS INSTALLED IN AN EXTERIOR CONDITION, PROVIDE CAP PLATE EACH END WITH SEAL WELD ALL AROUND.

HIGH-STRENGTH BOLTS

051200-0005

1. JOINT ASSEMBLIES USING HIGH-STRENGTH BOLTS SHALL BE IN ACCORDANCE WITH THE CURRENT EDITION OF THE "AISC (RCSC) SPECIFICATION FOR STRUCTURAL JOINTS USING HIGH-STRENGTH BOLTS".
2. ALL HIGH-STRENGTH BOLTS SHALL CONFORM TO ASTM F3125 GRADE A325 OR A490, OR GRADE F1852, TYPE 1, W/ THREADS INCLUDED (N).
3. NUTS SHALL CONFORM TO ASTM A563 AND WASHERS SHALL CONFORM TO ASTM F436.
4. PAINT IS PROHIBITED ON CONTACT SURFACES UNLESS NOTED OTHERWISE. CONTACT SURFACES OF BOLTED PARTS SHALL BE DESCALED AND FREE OF DIRT, OIL, BURRS, PITS, AND OTHER DEFECTS WHICH PREVENT SOLID SEATING OF PARTS.
5. ALL HIGH-STRENGTH BOLTS SHALL BE TIGHTENED TO THE AISC SNUG TIGHT CONDITION UNLESS SPECIFIED AS SLIP-CRITICAL
6. BOLTS IN "X" CONNECTIONS SHALL HAVE THE THREADS EXCLUDED FROM THE SHEAR PLANE. BOLTS IN "N" CONNECTIONS MAY HAVE THE THREADS INCLUDED IN THE SHEAR PLANE. CONNECTION TYPES ARE INDICATED AFTER THE BOLT GRADE (A325X FOR EXAMPLE).HIGH-STRENGTH BOLTS ARE "N" BEARING CONNECTIONS, UNLESS NOTED OTHERWISE.
7. SLIP-CRITICAL BOLTS SHALL HAVE CLASS "A" FAYING SURFACES. SLIP-CRITICAL JOINT ASSEMBLIES SHALL BE FULLY PRE-TENSIONED BY TURN-OF-NUT TIGHTENING, TENSION CONTROL CALIBRATED WRENCH TIGHTENING, TWIST-OFF BOLTS CONFORMING TO ASTM F3125 GRADE F1852, OR BY DIRECT TENSION INDICATOR TIGHTENING CONFORMING TO ASTM F959.

WELDING

051200-0006

1. WELDING PROCEDURES, ELECTRODES AND WELDER QUALIFICATIONS SHALL CONFORM TO AWS AND AISC REQUIREMENTS.
2. ALL WELDERS SHALL HAVE EVIDENCE OF PASSING THE AWS STANDARD QUALIFICATION TESTS, AND SHALL BE CERTIFIED FOR THE WORK THEY ARE PERFORMING.
3. PROJECT WELDING SHALL BE PERFORMED ONLY IN ACCORDANCE WITH WELDING PROCEDURE SPECIFICATIONS (WPS) SUBMITTED BY THE CONTRACTOR AND REVIEWED BY THE EOR AND PROJECT WELDING INSPECTOR. THE WPS SHALL BE IN ACCORDANCE WITH THE APPLICABLE AWS.
4. WELDING OF STRUCTURAL STEEL SHALL BE PERFORMED PER AWS D1.1 USING E70XX ELECTRODES UNLESS OTHERWISE NOTED.
5. ALL FULL PENETRATION WELDS SHALL BE ULTRA-SONIC TESTED PER AWS D1.1 AND D1.8 REQUIREMENTS AS APPLICABLE.
6. ALL GROOVE OR BUTT WELDS SHALL BE COMPLETE PENETRATION WELDS, UNO. ALL EXPOSED BUTT WELDS SHALL BE GROUND SMOOTH.
7. ALL EXPOSED WELDS ON ARCHITECTURALLY EXPOSED STRUCTURAL STEEL (AESS) SHALL COMPLY WITH AISC CODE OF STANDARD PRACTICE, SECTION 10.
8. FIELD WELDS HAVE BEEN INDICATED WHERE THEY ARE EXPECTED TO OCCUR. THE CONTRACTOR SHALL DETERMINE THE ACTUAL FIELD WELDING NECESSARY TO COMPLETE THE PROJECT AND INCLUDE ALL ASSOCIATED COSTS WITHIN THE BASE BID.
9. ALL SPECIFIED FILLET WELD SIZES ARE MINIMUM SIZES. INCREASE WELDS TO AISC MINIMUM SIZES BASED ON THICKNESSES OF MATERIALS JOINED.

STRUCTURAL CONCRETE

031100-0000

1. CONCRETE SHALL BE MIXED, PLACED AND CURED IN ACCORDANCE WITH ACI 318 AND ACI 301 AND PROJECT SPECIFICATIONS.
2. CONCRETE SHALL NOT BE DROPPED THROUGH REINFORCING STEEL (AS IN WALLS) SO AS TO CAUSE SEGREGATION OF AGGREGATES. IN SUCH CASES, HOPPERS AND VERTICAL CHUTES OR TRUNKS SHALL BE USED. CHUTES OR TRUNKS SHALL BE OF VARIABLE LENGTHS SO THAT FREE UNCONFINED FALL OF CONCRETE DOES NOT EXCEED SIX FEET. A SUFFICIENT NUMBER OF CHUTES OR TRUNKS SHALL BE USED TO ENSURE THE CONCRETE IS KEPT LEVEL AT ALL TIMES.
3. CONSTRUCTION JOINTS SHALL BE CLEANED AND ROUGHENED BY REMOVING THE ENTIRE SURFACE TO EXPOSE CLEAN AGGREGATE SOLIDLY EMBEDDED IN THE MORTAR MATRIX. LOCATIONS OF CONSTRUCTION JOINTS NOT SHOWN ON THESE PLANS SHALL BE SUBMITTED FOR APPROVAL TO THE SEOR PRIOR TO PLACING ANY CONCRETE.
4. STRUCTURAL CONCRETE SHALL MEET THE FOLLOWING DESIGN CRITERIA:

LOCATION	MIN 28-DAY COMP STRENGTH	CONC TYPE	MAX AGGREGATE SIZE	MAX W/C RATIO
FOUNDATION	3000 PSI	NWC	1 1/2"	0.55
INTERIOR SLAB ON GRADE NOT EXPOSED TO WEATHER OR RECEIVING ADHERED FLOORING FINISH	4000 PSI	NWC	1"	0.50
FILL OVER METAL DECK	3000 PSI	LWC	1"	0.50
ALL OTHER STRUCTURAL CONCRETE NOT NOTED ABOVE	3000 PSI	NWC	1"	0.50

   a. MAXIMUM AIR DRY UNIT WEIGHT OF LIGHTWEIGHT CONCRETE SHALL NOT EXCEED 115 PCF, UNLESS APPROVED BY SEOR.
   b. WHEN THE USE OF PLASTICIZER (ASTM C1017, TYPE I OR II) OR WATER REDUCER (ASTM C494, TYPE F OR G) IS USED, MAXIMUM SLUMP SHALL BE 4" PRIOR TO ADMIXTURE AND 8" INCLUDING ADMIXTURE AT THE POINT OF DELIVERY. IN THE ABSENCE OF PLASTICIZER AND WATER REDUCER, SLUMP AT THE POINT OF DELIVERY SHALL NOT EXCEED 4".
   c. W/C RATIO INDICATES WATER TO CEMENTITIOUS MATERIALS RATIO.
   d. FOR INTERIOR SLABS ON GRADE AND ALL OTHER SLABS RECEIVING ADHERED FLOORING FINISHES THE MAXIMUM W/C RATIO SHALL NOT EXCEED 0.46. CURING COMPOUNDS USED ON CONCRETE THAT IS TO RECEIVE FINISHES SHALL BE COMPATIBLE WITH TILE AND ADHESIVES OR GROUTS IN ACCORDANCE WITH MANUFACTURER'S DATA AND BE APPROVED BEFORE USE.
   e. SLABS ON GRADE, TOPPING SLABS, AND ELEVATED CONCRETE FLOORS SHALL HAVE A MAXIMUM SHRINKAGE RATE OF 0.04% AT 28 DAYS PER ASTM C157 (CURING TEST SPECIMENS TO BE CONSISTENT WITH FIELD CONDITIONS), OR USING EMBEDDED VIBRATING WIRE STRAIN GAUGES. RESULTS OF TESTING SHALL BE SUBMITTED TO ENGINEER.
   f. SEE ACI 318 FOR ADDITIONAL REQUIREMENTS REGARDING MAXIMUM AGGREGATE SIZE. AGGREGATE GRADATION OF 3/8" MAXIMUM (PEA GRAVEL) SHALL NOT BE USED WHERE FINISHED CONCRETE SURFACE IS EXPOSED TO VIEW.
5. CONCRETE MIX DESIGN AND TESTING SHALL MEET THE REQUIREMENTS OF THE BUILDING CODE AND SPECIFICATIONS. ALL CONCRETE MIXES SHALL BE DESIGNED PER ACI 318 BY A RECOGNIZED TESTING LAB STAMPED AND SIGNED BY A LICENSED ENGINEER AND SUBMITTED TO THE SEOR FOR REVIEW PRIOR TO CONCRETE PLACEMENT.
6. AGGREGATES IN NORMALWEIGHT CONCRETE SHALL CONFORM TO ASTM C33 (HARDROCK). AGGREGATES IN LIGHTWEIGHT CONCRETE SHALL CONFORM TO ASTM C330.
7. COMPRESSIVE STRENGTH TEST REPORTS SHALL BE SUBMITTED TO THE BUILDING DEPARTMENT AND THE SEOR.
8. PORTLAND CEMENT SHALL BE TYPE II AND SHALL CONFORM TO ASTM C150, LOW ALKALI. MILL TESTS WITH CERTIFICATES OF COMPLIANCE SHALL BE SUBMITTED.
9. FLY ASH OR OTHER POZZOLANS CONFORMING TO ASTM C618 CLASS F MAY BE USED AS A PARTIAL SUBSTITUTION FOR PORTLAND CEMENT UP TO A MAXIMUM OF 25%. TOTAL CEMENTITIOUS MATERIALS BY WEIGHT IF THE MIX DESIGN IS PROPORTIONED BY FIELD EXPERIENCE OR TRIAL MIXTURES.
10. CONCRETE MIXING OPERATIONS, ETC. SHALL CONFORM TO ASTM C94.
11. LEAN CONCRETE, WHERE SPECIFICALLY INDICATED, SHALL CONTAIN 2 SACKS OF CEMENT PER CUBIC YARD OF CONCRETE.
12. DRYPACK OR NONSHRINK GROUT SHALL HAVE A MINIMUM 28 DAY COMPRESSIVE STRENGTH OF 5000 PSI, AND CONSIST OF MASTERFLOW 713, EUCON NS GROUT, SIKA GROUT 212, OR APPROVED EQUAL. FOR THICK GROUT LAYERS FOLLOW MANUFACTURER'S GUIDELINES TO ATTAIN THE REQUIRED STRENGTH, WHICH MAY INCLUDE THE ADDITION OF PEA GRAVEL FOR BASE PLATES LARGER THAN 6 SQUARE FEET, USE Hi-FLOW GROUT OR MASTERFLOW 928.
13. DO NOT USE ANY CONCRETE OR GROUT CONTAINING CHLORIDES.
14. WATER USED IN MIX SHALL BE CLEAN AND POTABLE.
15. PRIOR TO ERECTING ANY ELEMENTS THAT LOAD THE FOUNDATION, CONCRETE MUST REACH AN UNCONFINED COMPRESSIVE STRENGTH OF 2000 PSI MINIMUM AS DETERMINED BY TESTING OR PREVIOUSLY DOCUMENTED DATA FOR THE MIX DESIGN USED UNDER SIMILAR CONDITIONS, AND MUST CURE FOR A MINIMUM OF 3 DAYS.
16. MAINTAIN CONCRETE ABOVE 50 DEGREES FAHRENHEIT AND IN A MOIST CONDITION FOR A MINIMUM OF 7 DAYS AFTER PLACEMENT UNLESS OTHERWISE ACCEPTED BY SEOR.
17. SEE ARCHITECTURAL DRAWINGS FOR WALL OPENINGS, WALL OFFSETS, CHAMFERS, KERFS, DRIPS AND FOR EXTENT OF DEPRESSIONS, RAMPS, ETC.
18. PROVIDE SLEEVES FOR ALL PIPES THROUGH CONCRETE WALLS AND FOOTINGS SHOWN ON THESE DRAWINGS. CORING IS NOT PERMITTED WITHOUT PRIOR APPROVAL BY THE SEOR.
19. EXPOSED CORNERS OF SLABS, BEAMS, WALLS, COLUMNS, ETC. SHALL BE FORMED WITH 3/4" CHAMFER OR 1/2" RADIUS TOOLED EDGE, UNO.
20. BEAM LONGITUDINAL BARS SHALL BE ON INSIDE FACE OF COLUMN VERTICAL BARS.

POST-INSTALLED ANCHORS AND DOWELS

055000-0000

UNLESS OTHERWISE NOTED ON THE DRAWINGS, THE FOLLOWING APPLIES TO ALL POST-INSTALLED ANCHORS INTO HARDENED CONCRETE OR MASONRY, WHICH INCLUDES TYPES SUCH AS EXPANSION, WEDGE, SLEEVE, ADHESIVE/EPOXY, SHOT-PIN, SCREW AND UNDERCUT.

1. INSTALL PER THE MANUFACTURER'S PRINTED INSTALLATION INSTRUCTIONS (MPII) EXCEPT AS OTHERWISE STATED IN THE SPECIFIED PRODUCT REPORTS. USE INSTALLATION PROCEDURES FOR CRACKED CONCRETE CONDITIONS. DO NOT USE CORE DRILL BITS FOR ANCHOR HOLES WITHOUT PRIOR SEOR APPROVAL. COPIES OF INSTALLATION INSTRUCTIONS SHALL BE MAINTAINED ON SITE.
2. CLEAN OUT ANCHOR HOLES AND SET ANCHORS PER THE PRODUCT'S THIRD PARTY EVALUATION REPORT FOR THE APPROPRIATE CONDITIONS. INSTALL UNDER SUPERVISION OF THE SPECIAL INSPECTOR WHERE REQUIRED.
3. PROVIDE CARBON STEEL ANCHORS AT DRY INTERIOR LOCATIONS AND STAINLESS STEEL TYPE 304 OR 316 AT EXTERIOR LOCATIONS AND DAMP INTERIOR LOCATIONS.
4. REINFORCING BARS TO RECEIVE CONCRETE COVER MAY BE UNCOATED.
5. ANCHORS SHALL BE CLEAN AND FREE OF DEBONDING SUBSTANCES.
6. EMBEDMENT REFERS TO THE FINAL INSTALLED EFFECTIVE DEPTH "Hef" AS DEFINED IN THE PRODUCT REPORT. REQUIRED ANCHOR HOLE DEPTH FOR INSTALLATION MAY BE DEEPER.
7. EXISTING REINFORCING SHALL BE AVOIDED WHERE DRILLING FOR POST-INSTALLED ANCHORS OR CONCRETE DOWELS.
8. MAINTAIN A MINIMUM OF 2 INCHES FROM EXISTING CONDUIT AND POST-TENSIONING (WHERE OCCURS) PRIOR TO DRILLING, CORING, OR SHOOTING PINS INTO EXISTING CONCRETE OR MASONRY. USE NONDESTRUCTIVE TESTING TO LOCATE SUCH ITEMS.
9. WHERE THE FULL ANCHOR EMBEDMENT DEPTH, SPACING OR EDGE DISTANCE CANNOT BE ACHIEVED, NOTIFY THE SEOR AND IOR.
10. FILL ABANDONED HOLES WITH NON-SHRINK GROUT OR EPOXY. CLEAR DISTANCE BETWEEN NEW HOLES AND ABANDONED HOLES SHALL BE 2" OR TWO ANCHOR DIAMETERS, WHICHEVER IS GREATER, UNLESS OTHERWISE SPECIFIED BY SEOR. ANCHORS PENETRATING THROUGH WATERPROOFING OR VAPOR MEMBRANES SHALL BE SEALED OR FLASHED.
11. INSTALL IN DRY CONCRETE OR MASONRY HAVING A MINIMUM AGE OF 21 DAYS.
12. RE-USE OF SCREW ANCHORS AND SCREW ANCHOR HOLES IS NOT PERMITTED.
13. AN ACI-CRSI CERTIFIED ADHESIVE ANCHOR INSTALLER IS REQUIRED FOR THE INSTALLATION OF ADHESIVE ANCHORS IN HORIZONTAL AND OVERHEAD CONDITIONS.

FOUNDATIONS AND SLABS ON GRADE

031100-0001

1. GEOTECHNICAL REPORT INFORMATION AND DESIGN CRITERIA:

GEOTECHNICAL REPORT	
AUTHOR	KLEINFELDER
REPORT NUMBER	20230123.003A
DATE	AUGUST, 25, 2022
GEOTECHNICAL DESIGN CRITERIA	
MINIMUM WIDTH OF FOOTINGS	18 INCHES
MINIMUM EMBEDMENT OF FOOTINGS	24 INCHES
ALLOWABLE SOIL PRESSURE, DEAD LOAD + LIVE LOAD	3000 PSF
ALLOWABLE SOIL PRESSURE, DEAD LOAD + LIVE LOAD + LATERAL LOAD	ONE THIRD INCREMENT OF ALLOWABLE SOIL PRESSURE
DESIGN COEFFICIENT OF FRICTION FOR SLIDING	0.35

2. THE CONTRACTOR SHALL CONFORM TO ALL RECOMMENDATIONS AND CONDITIONS INDICATED IN THE GEOTECHNICAL REPORT. THE GEOTECHNICAL ENGINEER SHALL OBSERVE ALL FOOTING EXCAVATIONS PRIOR TO PLACING CONCRETE.
3. FOOTINGS ARE CENTERED UNDER WALLS AND COLUMNS, UNO.
4. ALL TRENCHES SHALL COMPLY WITH APPLICABLE OSHA REQUIREMENTS.
5. ALL EXCAVATIONS SHALL BE PROPERLY BACKFILLED BUT NOT BEHIND RETAINING WALLS BEFORE CONCRETE OR MASONRY ATTAINS ITS FULL DESIGN STRENGTH.
6. THE DESIGN OF ALL RETAINING WALLS AND SUBTERRANEAN BUILDING WALLS INDICATED ON THESE DRAWINGS IS BASED ON DRAINED SOILS.
7. CONSTRUCTION JOINTS (CJ) AND SAWCUT (SC) JOINTS IN SLABS SHALL OCCUR WHERE SPECIFIED IN CONSTRUCTION DOCUMENTS. CONTRACTOR SHALL SUBMIT SLAB JOINT LAYOUT TO SEOR FOR REVIEW PRIOR TO PLACING CONCRETE. CJ'S SHALL HAVE FORMED POUR STOPS. CONSTRUCTION JOINTS IN WALLS AND FOOTINGS NEED NOT OCCUR AT THE SAME LOCATION, UNO.
8. SEE ARCHITECTURAL DRAWINGS FOR LOCATIONS OF SLAB SLOPES, DEPRESSIONS, CURBS, DRAINS, NON-STRUCTURAL PARTITIONS AND OTHER EMBEDDED

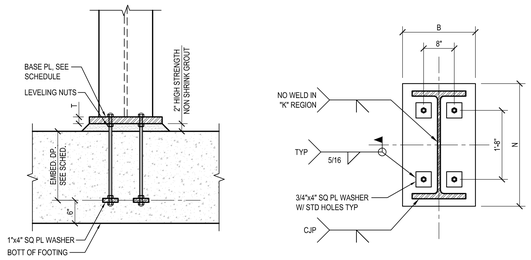

MOMENT FRAME BASE PLATE SCHEDULE		
MARK	BASE PLATE SIZE (TxBxN)	ANCHOR BOLTS
A	1 1/2"x22"x2'-8" A572 GR 50	1 1/2" DIA F1554 GR 55 W/ 22" MIN EMBED.

17 MOMENT FRAME BASE PLATE DETAILS (LSRF)
3/4"=1'-0"

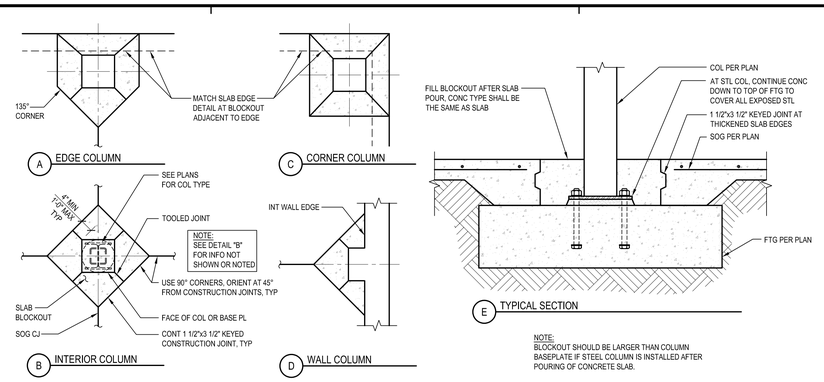

NOTE:
BLOCKOUT SHOULD BE LARGER THAN COLUMN BASEPLATE IF STEEL COLUMN IS INSTALLED AFTER POURING OF CONCRETE SLAB.

9 SLAB BLOCKOUT AT COLUMNS
NTS
033100_03A-0101

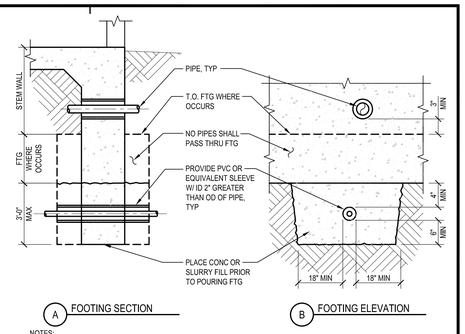

NOTES:
1. PIPES GREATER THAN 8" IN DIAMETER, AND BUNDLES OR BANKS NOT SPECIFICALLY SHOWN ON THE STRUCTURAL PLANS ARE NOT ALLOWED TO BE PLACED WITHOUT OBTAINING SEOR APPROVAL.
2. CONTRACTOR SHALL COORDINATE ALL PIPE LOCATIONS WITH BUILDING FOUNDATION REQUIREMENTS.
3. IF REQUIREMENTS AS SHOWN CANNOT BE MET, STEP FOOTING PER TYPICAL "STEPPED FOOTING" DETAIL.

1 PIPE THROUGH STEM WALL OR BELOW FOOTING
NTS
033100_00A-0101

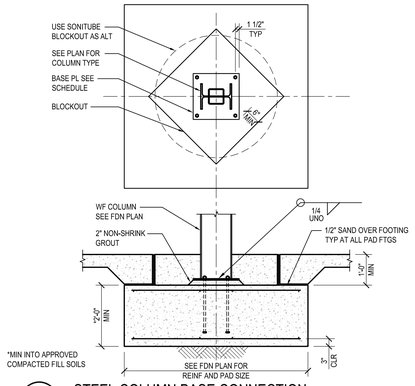

11 STEEL COLUMN BASE CONNECTION
1/2"=1'-0"

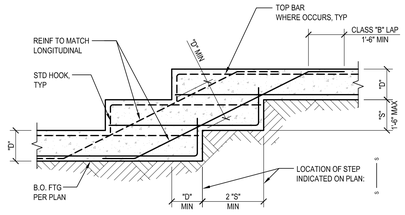

NOTES:
1. FOR FOOTING REINFORCING, SEE PLANS AND DETAILS.
2. TRANSVERSE STEEL NOT SHOWN FOR CLARITY.
3. TWO STEPS ARE SHOWN, DETAIL FOR SINGLE STEP OR ADDITIONAL STEPS IS SIMILAR.

6 STEPPED FOOTING
NTS
033100_01-0100

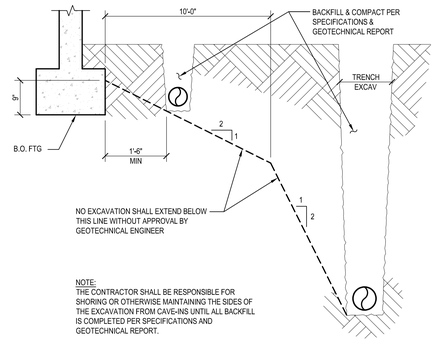

NOTE:
THE CONTRACTOR SHALL BE RESPONSIBLE FOR SHORING OR OTHERWISE MAINTAINING THE SIDES OF THE EXCAVATION FROM CAVE-INS UNTIL ALL BACKFILL IS COMPLETED PER SPECIFICATIONS AND GEOTECHNICAL REPORT.

2 EXCAVATION PARALLEL TO FOOTINGS
NTS
033100_00-0102

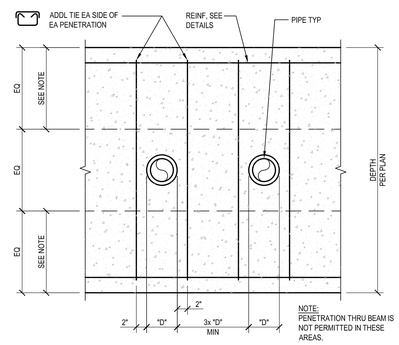

NOTE:
PENETRATION THRU BEAM IS NOT PERMITTED IN THESE AREAS.

11 PIPING & CONDUIT THRU GRADE BEAM
NTS
033100_06A-0103

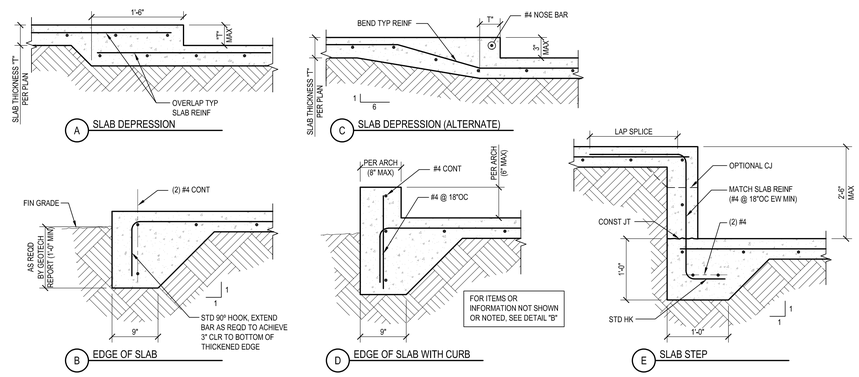

7 SLAB ON GRADE DETAILS
NTS
033100_03-0100

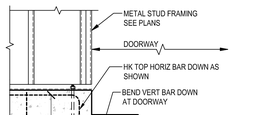

SHOWING END OF TOP HORIZONTAL BAR

12 CURB ELEVATION AT DOOR/WINDOW
1"=1'-0"
S011

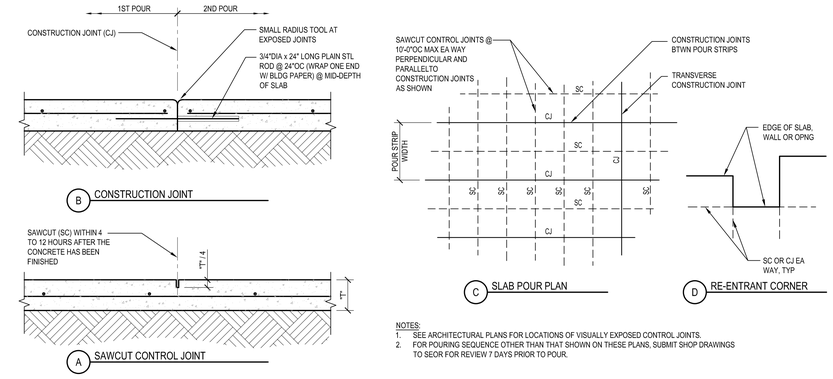

NOTES:
1. SEE ARCHITECTURAL PLANS FOR LOCATIONS OF VISUALLY EXPOSED CONTROL JOINTS.
2. FOR POURING SEQUENCE OTHER THAN THAT SHOWN ON THESE PLANS, SUBMIT SHOP DRAWINGS TO SEOR FOR REVIEW 7 DAYS PRIOR TO POUR.

8 SLAB ON GRADE CONTROL JOINTS
NTS
033100_03-0102

PBK
RANCHO CUCAMONGA
8163 ROCHESTER AVENUE, SUITE 100
RANCHO CUCAMONGA, CA 91730
909-987-0909 P

ONTARIO FIRE DEPARTMENT ADMINISTRATION BUILDING
CITY OF ONTARIO
1420 E. FRANCIS STREET., ONTARIO, CA

LICENSED ARCHITECT — KELLEY NEEDHAM C-19064 Inactive 03/31/25 — STATE OF CALIFORNIA
REGISTERED PROFESSIONAL ENGINEER — Rick Bond No. 53460 Exp. 3/31/24 — STRUCTURAL — STATE OF CALIFORNIA

CONSULTANT

miyamoto.
1047 West Sixth Street, Suite A
Ontario, CA 91762
M022280036.00
T: (833) 270-6846
miyamotointernational.com

NO	DATE	BY	DESCRIPTION

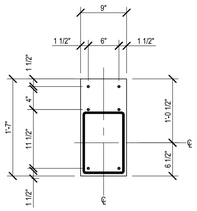

A PLT @ END WALL

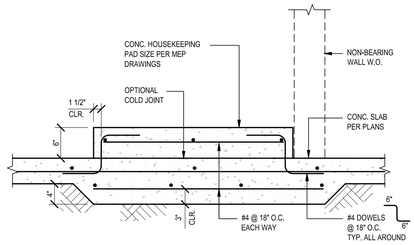

13 TYP - HOUSE KEEPING PAD DETAIL
1"=1'-0" S012

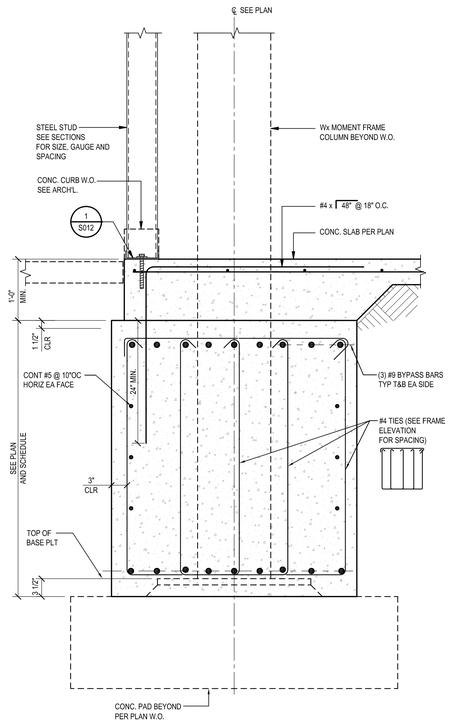

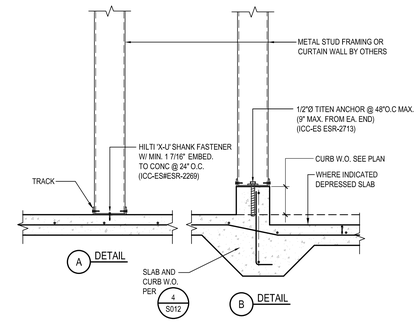

5 TYP - NON BEARING WALL TO SLAB
1"=1'-0" S012

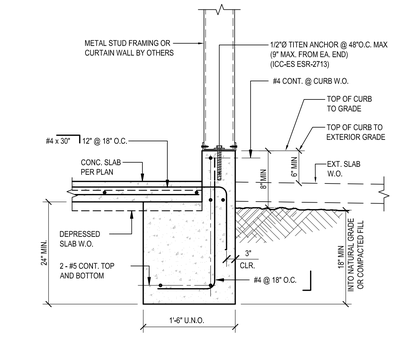

1 TYP - EXT. METAL STUD TO FOUNDATION
1"=1'-0" S012

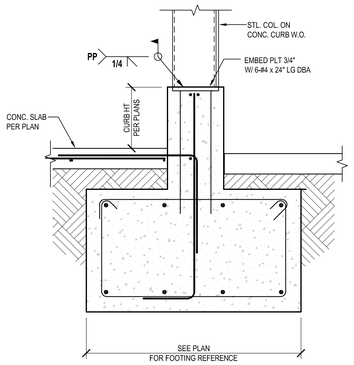

18 TYP COLUMN IN WALL TO CONC CURB
1"=1'-0" S012

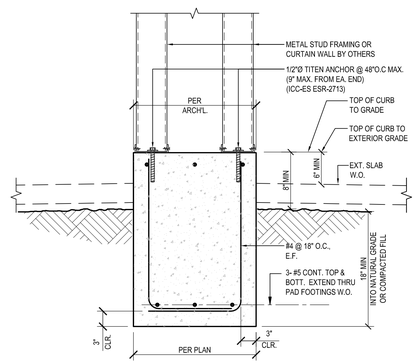

14 TYP - EXTERIOR DOUBLE WALL DETAIL
1"=1'-0" S012

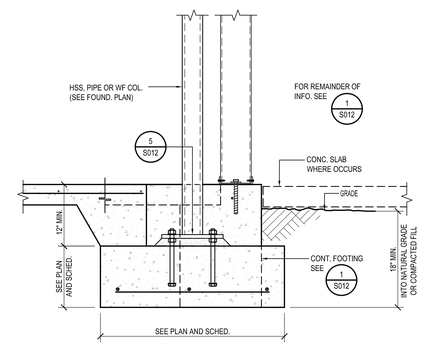

6 STEEL COLUMN ADJACENT TO METAL STUD WALL
1"=1'-0" S012

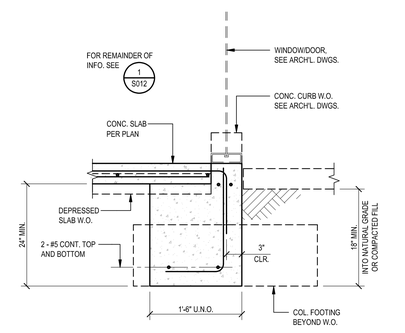

2 TYP - SLAB DETAIL AT WINDOW - DOOR OPENING
1"=1'-0" S012

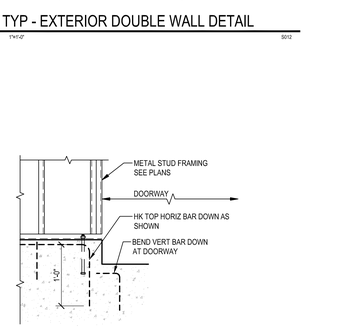

SHOWING END OF TOP HORIZONTAL BAR

15 CURB ELEVATION AT DOOR/WINDOW
1"=1'-0" S012

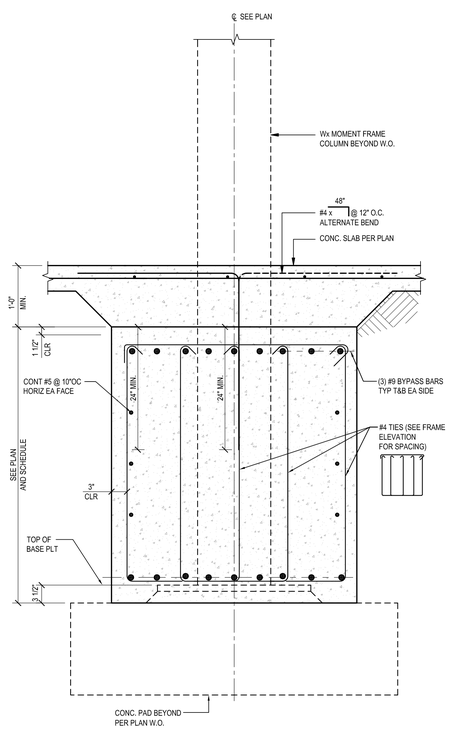

12 TYP - INTERIOR GRADE BEAM DETAIL
1"=1'-0" S012

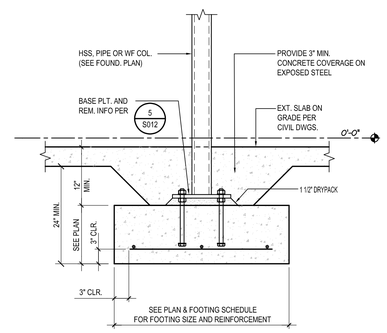

7 TYPICAL EXTERIOR COLUMN TO PAD FOOTING
1"=1'-0" S012

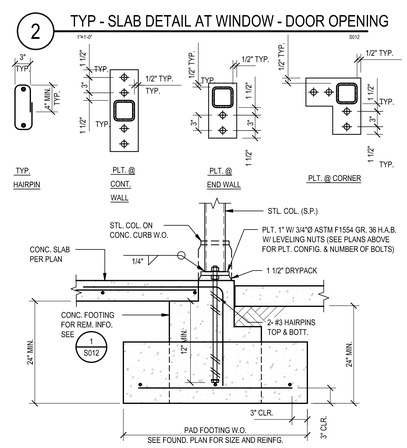

3 TYP - COLUMN IN WALL TO FTG
1"=1'-0" S012

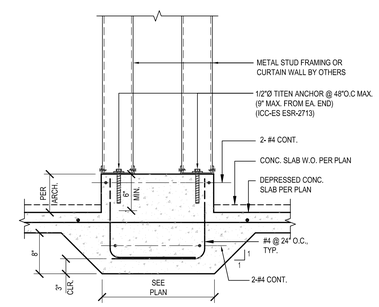

8 TYP - PLUMBING WALL TO CONC CURB
1"=1'-0" S012

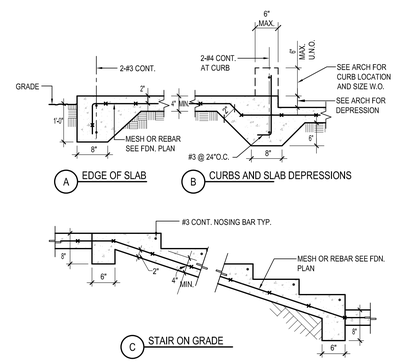

4 TYP - SLAB ON GRADE DETAILS
1"=1'-0" S012

PBK
RANCHO CUCAMONGA
8163 ROCHESTER AVENUE, SUITE 100
RANCHO CUCAMONGA, CA 91730
909-987-0909 P

ONTARIO FIRE DEPARTMENT ADMINISTRATION BUILDING

CITY OF ONTARIO

1420 E. FRANCIS STREET., ONTARIO, CA

LICENSED ARCHITECT KELLEY NEEDHAM C-19064 Ex.Date 03/31/25 STATE OF CALIFORNIA

REGISTERED PROFESSIONAL ENGINEER Rick Ray Dorf No. 53360 Exp. 12/31/24 STRUCTURAL STATE OF CALIFORNIA

CONSULTANT

miyamoto.
10447 West Sixth Street, Suite A
Ontario, CA 91762
MI22280036.00
T: (833) 270-4848
miyamotointernational.com

NO	DATE	BY	DESCRIPTION

REVISIONS

DRAWN: AR	CHECKED: RB
DATE: 02/16/2024	SCALE: AS NOTED
PROJECT NUMBER: 2011700	

TYPICAL FOUNDATION & TYPICAL DETAILS

DRAWING NUMBER: S012

BID SET 03/01/24

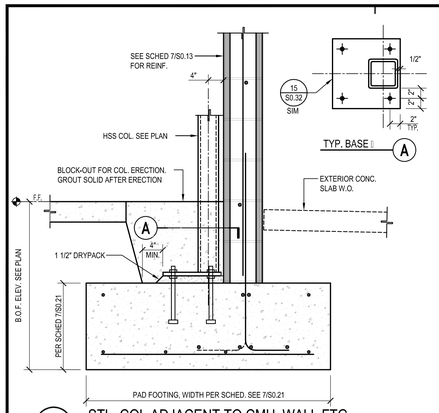

17 STL. COL ADJACENT TO CMU. WALL FTG.
NTS

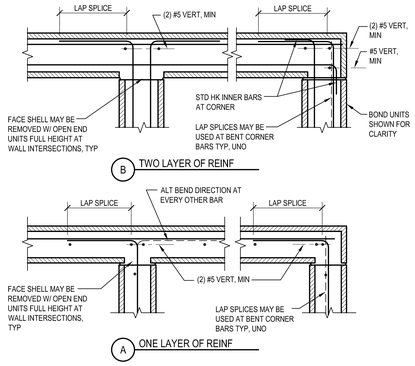

13 CMU WALL INTERSECTIONS
NTS
042200-0107

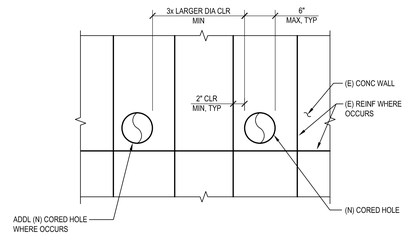

NOTES:

1. ALL CORED HOLE LOCATIONS SHALL BE REVIEWED AND APPROVED BY THE SEOR PRIOR TO CORING.
2. PROVIDE NONDESTRUCTIVE TESTING TO DETERMINE THE LOCATION OF (E) REINFORCING BARS PRIOR TO THE CORING OF (N) HOLES. LOCATE THE (N) CORED HOLES IN SUCH A MANNER TO AVOID CONTACT WITH (E) REINFORCING.

9 NEW CORED HOLES IN EXISTING CONC
NTS
030000-0101

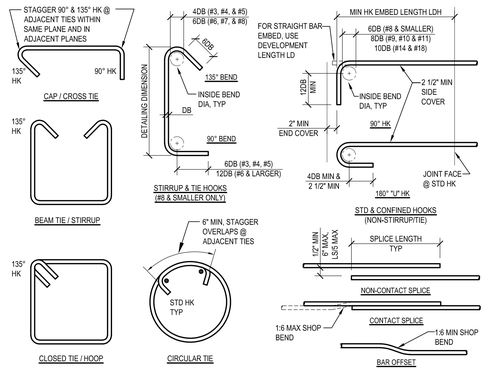

HOOKS, LAPS & DEVELOPMENT LENGTHS						
	BAR SIZE	STD HOOK DEVELOPMENT LENGTH 'LDH' (IN)	CLASS B LAP SPLICE 'LS' (IN)		DEVELOPMENT LENGTH 'LD' (IN)	
			BOTT	TOP	BOTT	TOP
3000 PSI NWC	#3	6	22	28	17	22
	#4	8	29	37	22	29
	#5	10	36	47	28	36
	#6	12	43	56	33	43
	#7	14	63	81	48	63
	#8	16	72	93	55	72
	#9	18	81	105	62	81
	#10	20	91	118	70	91
	#11	22	101	131	78	101
4000 PSI NWC	#3	6	19	24	15	19
	#4	7	25	32	19	25
	#5	9	31	40	24	31
	#6	10	37	48	29	37
	#7	12	54	70	42	54
	#8	14	62	80	48	62
	#9	15	70	91	54	70
	#10	17	79	102	61	79
	#11	19	87	113	67	87
5000 PSI NWC	#3	6	17	22	13	17
	#4	6	22	29	17	22
	#5	8	28	36	22	28
	#6	9	33	43	26	33
	#7	11	49	63	37	49
	#8	12	55	72	43	55
	#9	14	63	81	48	63
	#10	15	70	91	54	70
	#11	17	78	101	60	78

NOTES:

1. SEE BUILDING CODE AND ACI FOR ALL REQUIREMENTS NOT NOTED.
2. FOR LIGHTWEIGHT CONCRETE. MULTIPLY LDH, LS AND LD VALUES BY 1.33.
3. "TOP" BARS ARE HORIZONTAL BARS WITH MORE THAN 12" OF FRESH CONCRETE CAST BELOW BARS. ALL OTHER BARS ARE "BOTT" BARS.
4. WHERE REQUIRED LS CANNOT BE OBTAINED WITH STRAIGHT BARS, EXTEND REINFORCING AS FAR AS POSSIBLE (LDH MINIMUM) AND PROVIDE STANDARD HOOK. WHERE LDH CANNOT BE OBTAINED, CONTACT THE SEOR.
5. VALUES ARE FOR GRADE 60 (FY=60 KSI) REINFORCEMENT.
6. SPLICE LENGTHS ARE FOR CLEAR SPACING NOT LESS THAN 2DB AND CONCRETE COVER NOT LESS THAN DB.
7. FOR EPOXY-COATED AND/OR BUNDLED REINFORCEMENT, CONTACT THE SEOR.
8. WHERE BARS OF DIFFERENT SIZES ARE LAP SPLICED IN TENSION, SPLICE LENGTH SHALL BE THE LARGER OF LD OF THE LARGER BAR AND LS OF THE SMALLER BAR.
9. WHERE CLASS "A" LAP SPLICES ARE SPECIFICALLY INDICATED, USE 'LD'.

5 CONCRETE REINFORCEMENT DETAILS & DEVELOPMENT LENGTHS
NTS
032000-0100

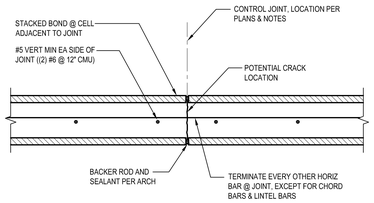

14 CMU WALL CONTROL JOINT
NTS
042200-0103

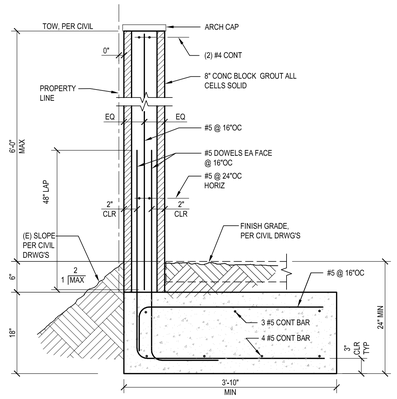

10 CMU SITE WALL AT PROPERTY LINE
NTS

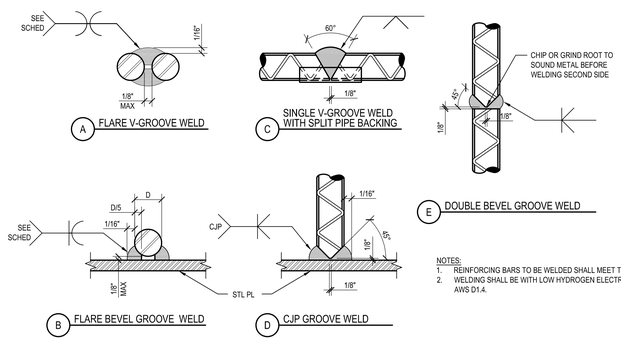

WELD SCHEDULE	
BAR SIZE	MIN WELD LENGTH
#3	3"
#4	3"
#5	3"
#6	4"
#7	5"
#8	5"
#9	6"
#10	6"

NOTES:

1. REINFORCING BARS TO BE WELDED SHALL MEET THE REQUIREMENTS OF ASTM A706.
2. WELDING SHALL BE WITH LOW HYDROGEN ELECTRODES E80XX AND SHALL CONFORM TO AWS D1.4.

6 REINFORCING BAR WELDING
NTS
032000-0101

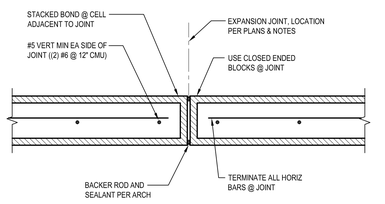

NOTE:
DO NOT SUBSTITUTE EXPANSION JOINTS FOR CONTROL JOINTS. USE ONLY WHERE SPECIFICALLY NOTED.

15 CMU WALL EXPANSION JOINT
NTS
042200-0104

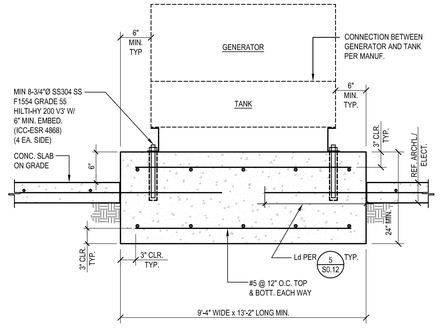

11 GENERATOR CONCRETE PAD
NTS

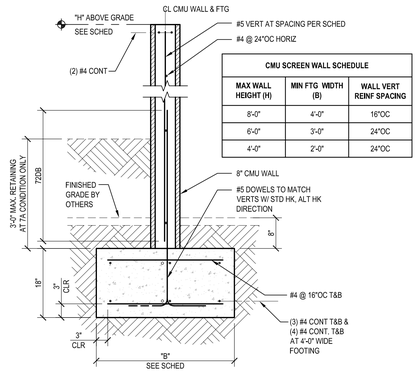

CMU SCREEN WALL SCHEDULE		
MAX WALL HEIGHT (H)	MIN FTG WIDTH (B)	WALL VERT REINF SPACING
8'-0"	4'-0"	16"OC
6'-0"	3'-0"	24"OC
4'-0"	2'-0"	24"OC

7 CMU SCREEN WALL
NTS
323000-0101

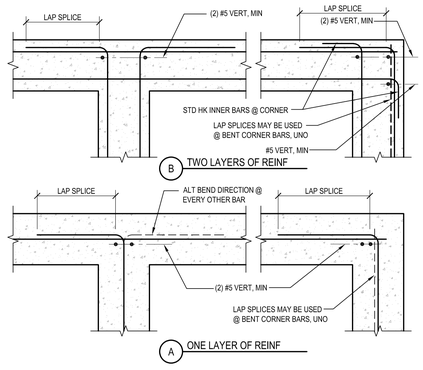

3 CONCRETE WALL & FTG INTERSECTIONS
NTS
032000-0102

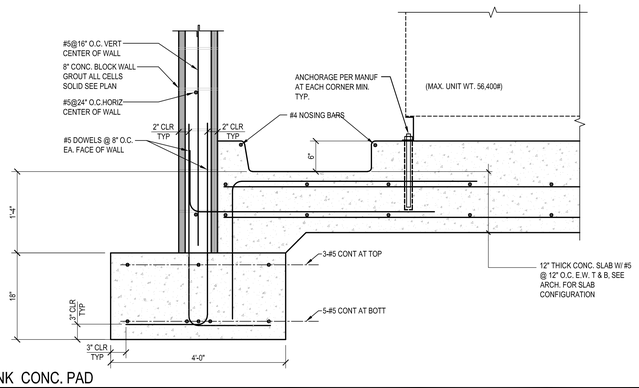

16 FUEL TANK CONC. PAD
NTS

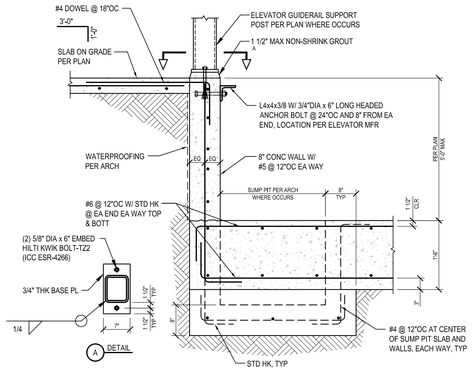

8 ELEVATOR PIT
NTS
142000-0100

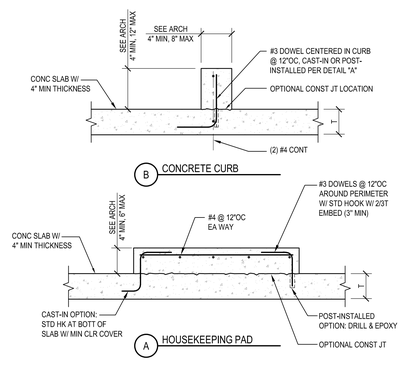

4 CONCRETE PAD & CURB
NTS
033053_0101100

PBK
RANCHO CUCAMONGA
8163 ROCHESTER AVENUE, SUITE 100
RANCHO CUCAMONGA, CA 91730
909-987-0909 P

ONTARIO FIRE DEPARTMENT ADMINISTRATION BUILDING
CITY OF ONTARIO
1420 E. FRANCIS STREET., ONTARIO, CA

LICENSED ARCHITECT
KELLEY NEEDHAM
C-19064
Ex.Date 03/31/25
STATE OF CALIFORNIA

REGISTERED PROFESSIONAL ENGINEER
Rob Bond
No. S3450
Exp. 3/31/24
STRUCTURAL
STATE OF CALIFORNIA

CONSULTANT

miyamoto.
1047 West Sixth Street, Suite A
Ontario, CA 91762
T: (833) 2/10-miyo
miyamotointernational.com
M022#036.00

NO	DATE	BY	DESCRIPTION

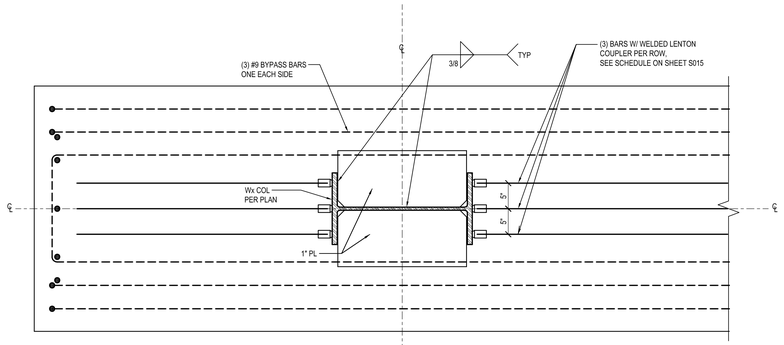

A PLAN VIEW

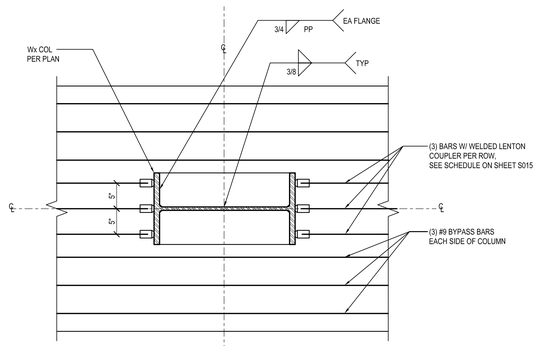

A PLAN VIEW

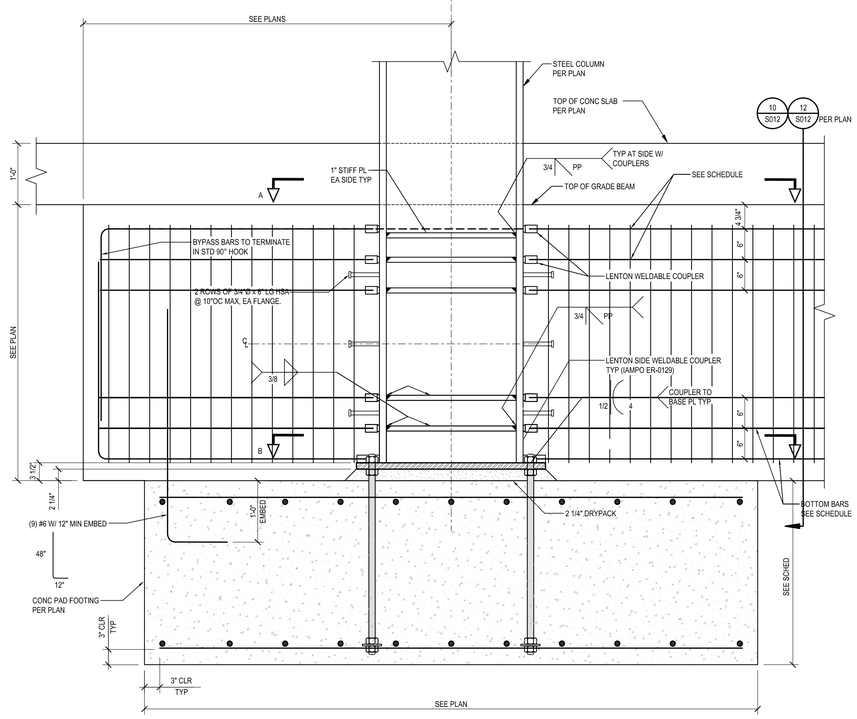

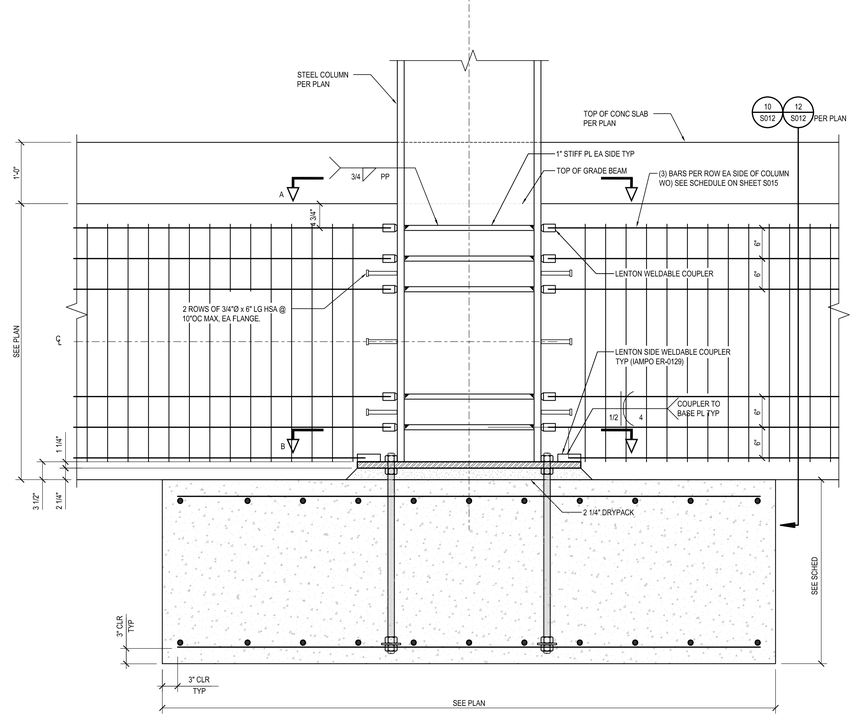

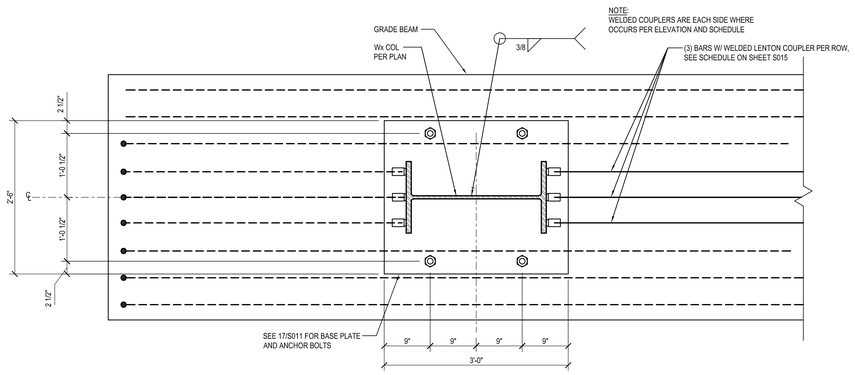

B PLAN VIEW

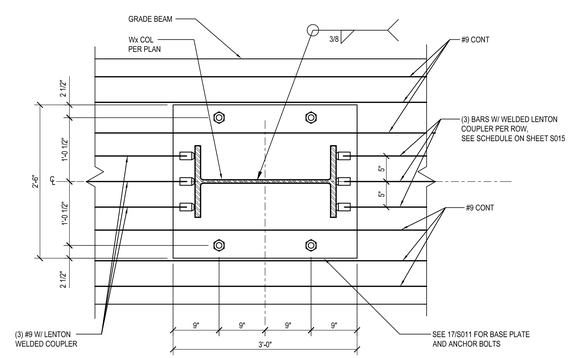

B PLAN VIEW

16 MOMENT FRAME AT END COLUMN
1"=1'-0" S014

8 MOMENT FRAME AT MID COLUMN
1"=1'-0" S014

PBK
RANCHO CUCAMONGA
8163 ROCHESTER AVENUE, SUITE 100
RANCHO CUCAMONGA, CA 91730
909-987-0909 P

ONTARIO FIRE DEPARTMENT ADMINISTRATION BUILDING

CITY OF ONTARIO

1420 E. FRANCIS STREET., ONTARIO, CA

LICENSED ARCHITECT
KELLEY NEEDHAM
C-190064
Ex.Dt: 03/31/25
STATE OF CALIFORNIA

REGISTERED PROFESSIONAL ENGINEER
Rick Ray Boyd
No. 53360
Exp. 12/31/24
CIVIL
STATE OF CALIFORNIA

CONSULTANT

miyamoto.
10447 West Sixth Street, Suite A
Ontario, CA 91762
MI22280/36.00
T: (833) 270-6846
miyamotointernational.com

NO	DATE	BY	DESCRIPTION

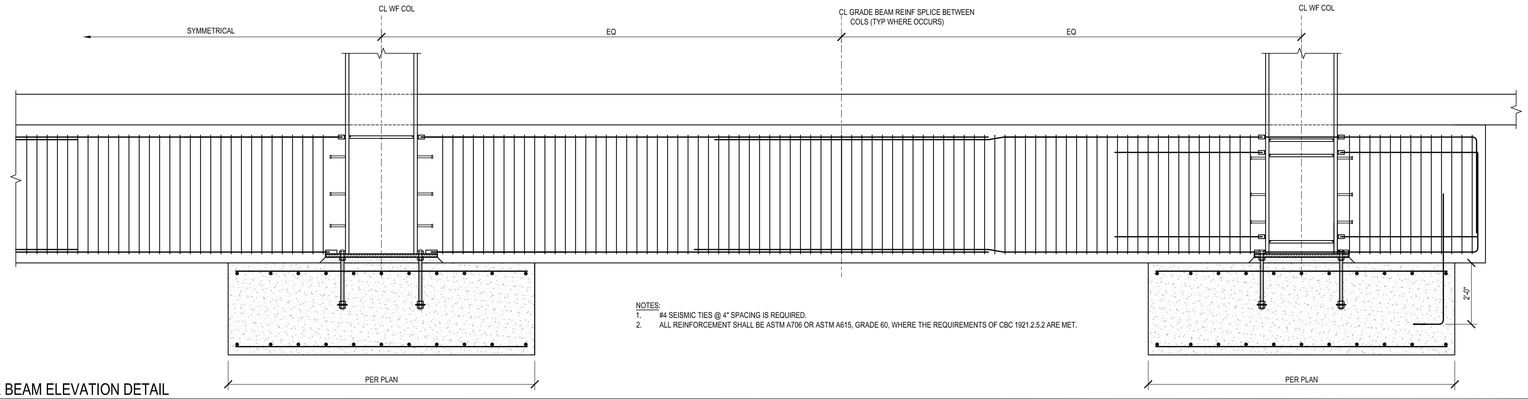

NOTES:
1. #4 SEISMIC TIES @ 4" SPACING IS REQUIRED.
2. ALL REINFORCEMENT SHALL BE ASTM A706 OR ASTM A615, GRADE 60, WHERE THE REQUIREMENTS OF CBC 1921.2.5.2 ARE MET.

13 GRADE BEAM ELEVATION DETAIL
1/2"=1'-0"

REINFORCING STEEL DOWEL TO STEEL COLUMN SCHEDULE

	GRID	TOTAL TOP DOWELS	TOTAL BOTTOM DOWELS	ROWS	DETAIL
FRAME ON GRID 3	3C	6-#9		2	16/S014
			6-#9	2	16/S014
	3D	9-#9		3	8/S014
			9-#9	3	8/S014
	3E	6-#9		2	16/S014
			6-#9	2	16/S014
FRAME ON GRID 6	6D	6-#9		2	16/S014
			6-#9	2	16/S014
	6E	9-#9		3	8/S014
			9-#9	3	8/S014
	6E	6-#9		2	16/S014
			6-#9	2	16/S014
FRAME ON GRID C	C4	9-#9		3	16/S014
			9-#9	3	16/S014
	C5	9-#10		3	8/S014
			9-#10	3	8/S014
	C6	9-#9		3	16/S014
			9-#9	3	16/S014
FRAME ON GRID F	F3	6-#9		2	16/S014
			6-#9	2	16/S014
	F4	9-#9		3	8/S014
			9-#9	3	8/S014
	F5	6-#9		2	16/S014
			6-#9	2	16/S014

3 REINFORCING DOWEL TO COLUMN SCHEDULE
1/2"=1'-0"

PBK
RANCHO CUCAMONGA
8163 ROCHESTER AVENUE, SUITE 100
RANCHO CUCAMONGA, CA 91730
909-987-0909 P

ONTARIO FIRE DEPARTMENT ADMINISTRATION BUILDING
CITY OF ONTARIO
1420 E. FRANCIS STREET., ONTARIO, CA

LICENSED ARCHITECT
KELLEY NEEDHAM
C-19064
Exp. Date 03/31/25
STATE OF CALIFORNIA

REGISTERED PROFESSIONAL ENGINEER
Rick W. Byrd
No. 53260
Exp. 3/31/24
STRUCTURAL
STATE OF CALIFORNIA

CONSULTANT

miyamoto.
1047 West Sixth Street, Suite A
Ontario, CA, 91762
M02280036.00
T: (833) 270-6846
miyamotointernational.com

NO	DATE	BY	DESCRIPTION

REVISIONS

DRAWN: AR	CHECKED: RB
DATE: 02/16/2024	SCALE: AS NOTED
PROJECT NUMBER: 2011700	

TYPICAL CONC. GRADE BEAM DETAILS

DRAWING NUMBER: S015

BID SET 03/01/24

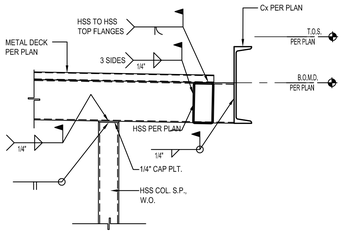

13 CANOPY FRAMING DETAIL
NTS 053113-0105

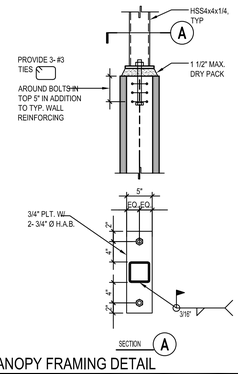

9 CANOPY FRAMING DETAIL
NTS 053113-0105

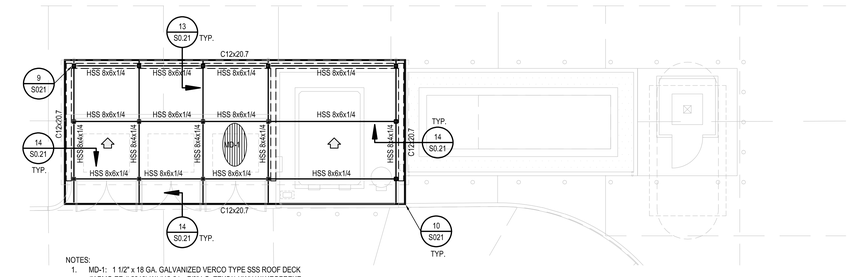

1 ROOF FRAMING PLAN
1/8" = 1'-0"

north

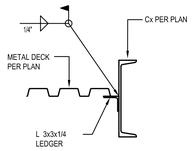

14 CANOPY FRAMING DETAIL
NTS 053113-0105

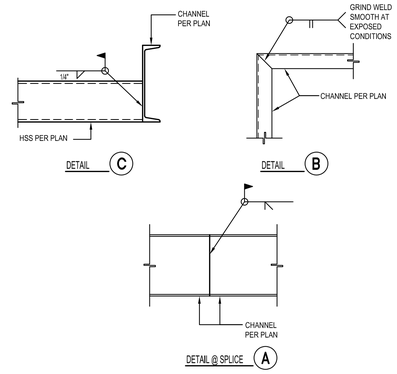

10 CANOPY FRAMING DETAIL
NTS 053113-0105

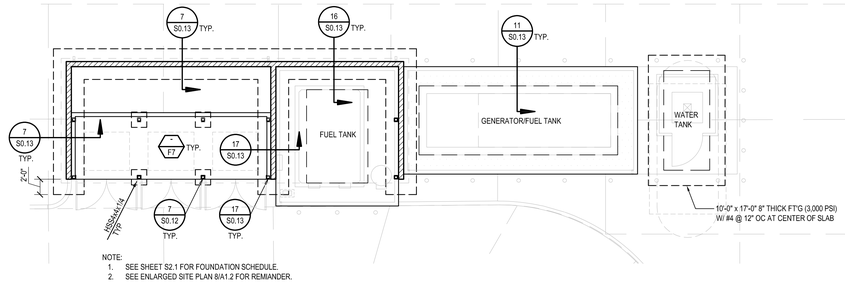

2 FOUNDATION PLAN
1/8" = 1'-0"

north

PBK
RANCHO CUCAMONGA
8163 ROCHESTER AVENUE, SUITE 100
RANCHO CUCAMONGA, CA 91730
909-987-0909 P

ONTARIO FIRE DEPARTMENT ADMINISTRATION BUILDING

CITY OF ONTARIO

1420 E. FRANCIS STREET., ONTARIO, CA

LICENSED ARCHITECT
KELLEY NEEDHAM
C-19064
Ex.Date 03/31/25
STATE OF CALIFORNIA

REGISTERED PROFESSIONAL ENGINEER
Rick Bond
No. 53450
Exp. 3/31/24
STRUCTURAL
STATE OF CALIFORNIA

CONSULTANT

miyamoto.
1047 West Sixth Street, Suite A
Ontario, CA 91762
MI2228036.00
T: (833) 270-6846
miyamotointernational.com

NO	DATE	BY	DESCRIPTION

REVISIONS

DRAWN: AR	CHECKED: RB
DATE: 02/16/2024	SCALE: AS NOTED
PROJECT NUMBER: 2011700	

ENLARGED
SITE PLAN
AND DETAILS

DRAWING NUMBER: S021

BID SET 03/01/24

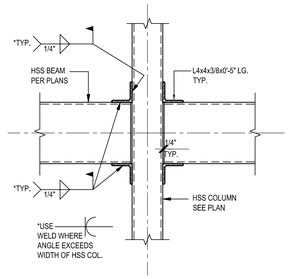

17 TYP - HSS BEAM TO HSS COL. DETAIL
NTS

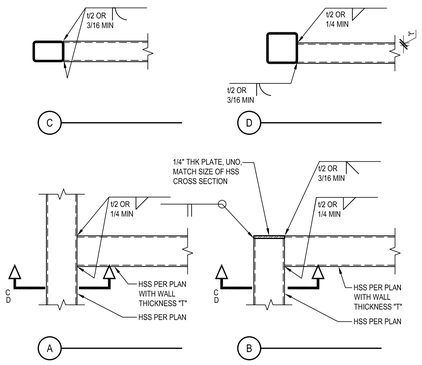

13 HSS TO HSS CONNECTIONS
NTS
051200_S1-0108

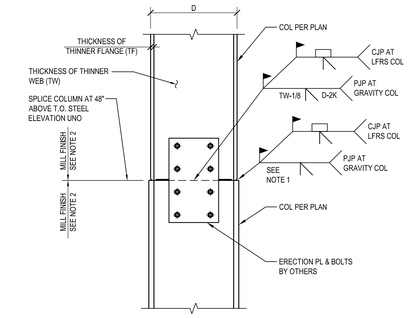

NOTES:
1. MINIMUM WELD SIZE = TF/2 +1/8" FOR TF < 1 1/4", TF/2 +1/4" FOR TF ≥ 1 1/4", UNO.
2. FOR FINISH SURFACES AT COLUMN ENDS, SEE AISC "CODE OF STANDARD PRACTICE" SECTION 6.2.2.

9 WIDE FLANGE COLUMN SPLICE
NTS
051200_S1-0106

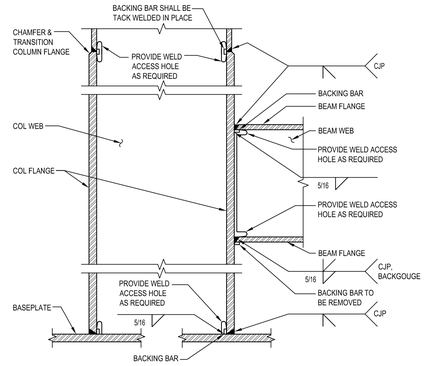

5 BACKING BAR WELDING
NTS
051200_S04-0109

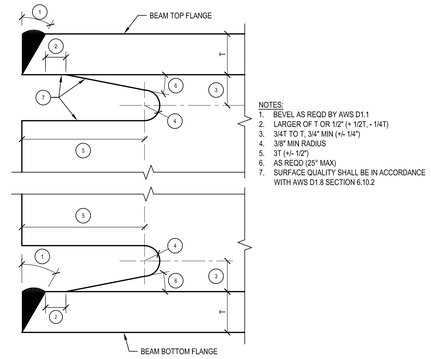

NOTES:
1. BEVEL AS REQD BY AWS D1.1
2. LARGER OF T OR 1/2" (+ 1/2T, - 1/4T)
3. 3/4T TO T, 3/4" MIN (+/- 1/4")
4. 3/8" MIN RADIUS
5. 3T (+/- 1/2")
6. AS REQD (25° MAX)
7. SURFACE QUALITY SHALL BE IN ACCORDANCE WITH AWS D1.8 SECTION 6.10.2

1 WELD ACCESS HOLE
NTS
051200_S04-0101

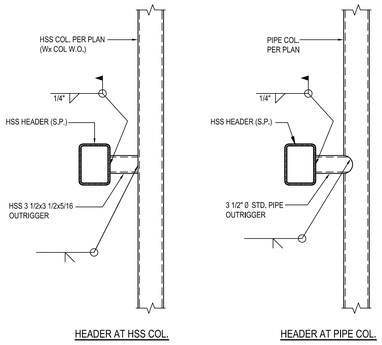

18 TYP - HEADER SUPPORT AT STEEL COLUMN
NTS

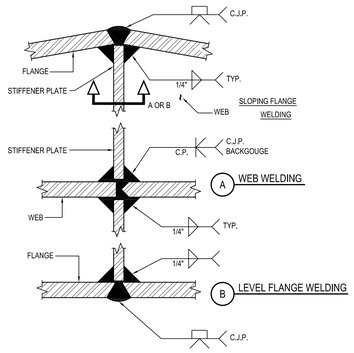

14 TYP - BENT BEAM WELDING
NTS

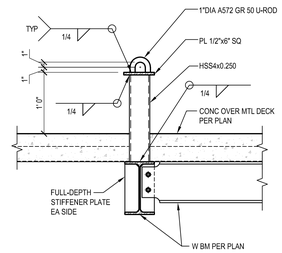

NOTE:
1. SEE ARCH FOR LOCATIONS.
2. DESIGN LOAD = 5000 LBS (LRFD)

10 ROOF TIE BACK
NTS
051200_S9-0100

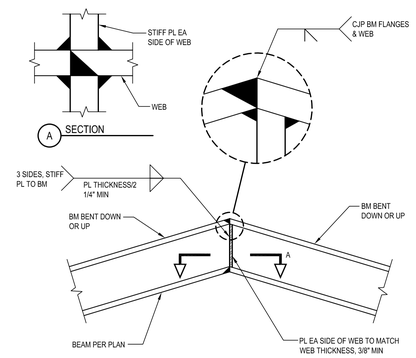

6 BENT BEAM
NTS
051200_S2-0107

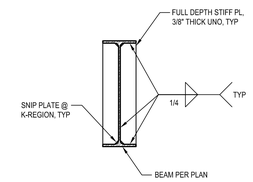

2 WEB STIFFENER
NTS
051200_S04-0103

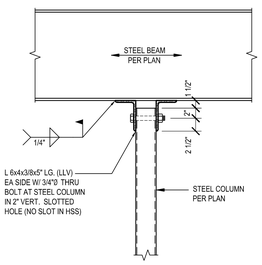

19 TYP - NON BEARING COL. TO BEAM ABOVE
NTS

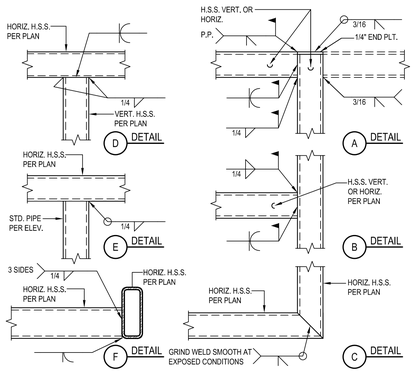

15 TYP - HSS TO HSS CONNECTION DETAILS
NTS

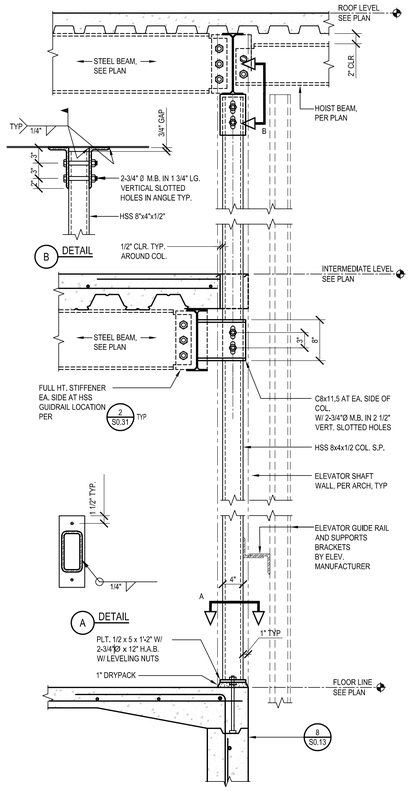

12 TYP - ELEVATOR GUIDE RAIL SUPPORT DETAIL
1"=1'-0"
S031

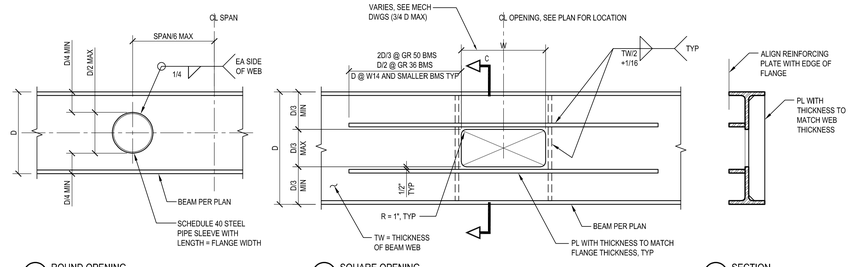

A ROUND OPENING
B SQUARE OPENING
C SECTION

NOTES:
1. THIS DETAIL MAY NOT BE USED WITHOUT PRIOR WRITTEN APPROVAL OF SEOR.
2. CONTINUITY PLATES AND STIFFENER PLATES SHALL BE 1/2 FLANGE WIDTH WITH GRADE TO MATCH GRADE OF BEAM.
3. REINFORCING NOT REQD FOR 4" MAX SQ HOLES IN W12 OR DEEPER.
4. REINFORCING NOT REQD FOR ROUND OPENINGS WITH MAX DIA OF D/6.

7 HOLE THROUGH STEEL BEAM WEB
NTS
051200_S2-0103

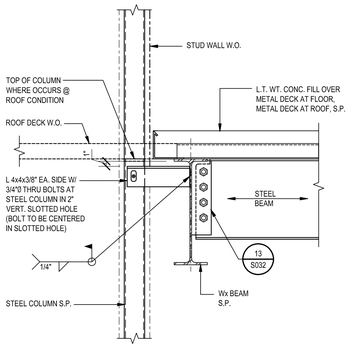

20 TYP - HSS COL BRACE AT FLOOR
NTS

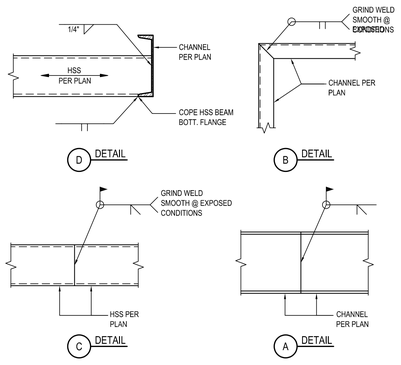

16 TYP - CHANNEL DETAILS
NTS

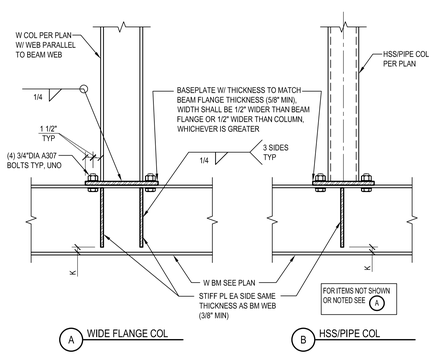

A WIDE FLANGE COL
B HSS/PIPE COL

8 COLUMN SUPPORTED BY BEAM
NTS
051200_S1-0104

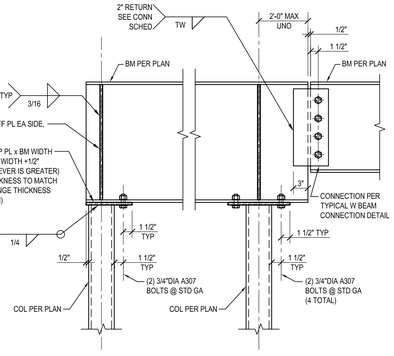

4 BEAM TO TOP OF COLUMN
NTS
051200_S2-0104

PBK
RANCHO CUCAMONGA
8163 ROCHESTER AVENUE, SUITE 100
RANCHO CUCAMONGA, CA 91730
909-987-0909 P

ONTARIO FIRE DEPARTMENT ADMINISTRATION BUILDING
CITY OF ONTARIO
1420 E. FRANCIS STREET., ONTARIO, CA

LICENSED ARCHITECT — KELLEY NEEDHAM, C-19064, Ex.Dt 03/31/25, STATE OF CALIFORNIA
REGISTERED PROFESSIONAL ENGINEER — Rick Dorf, No. S3450, Exp. 3/31/24, STRUCTURAL, STATE OF CALIFORNIA

CONSULTANT

miyamoto.
1047 West Sixth Street, Suite A
Ontario, CA 91762
T: (833) 270-6846
miyamotointernational.com
MI2280036.00

NO	DATE	BY	DESCRIPTION

REVISIONS

DRAWN: AR	CHECKED: RB
DATE: 02/16/2024	SCALE: AS NOTED
PROJECT NUMBER: 2011700	

TYPICAL STRUCTURAL STEEL DETAILS

DRAWING NUMBER: S031

BID SET 03/01/24

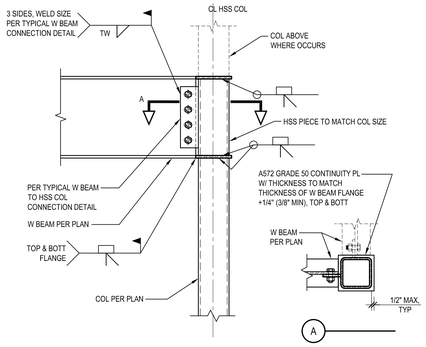

17 W BEAM TO HSS COL MOMENT CONNECTION

NTS

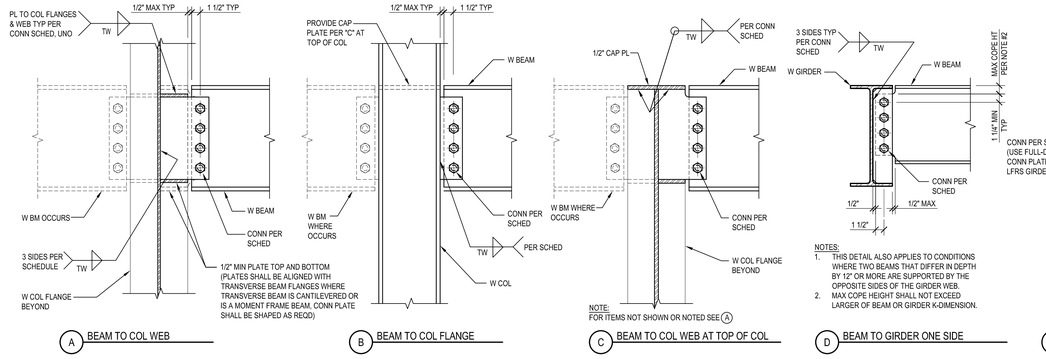

NOTE:
FOR ITEMS NOT SHOWN OR NOTED SEE A

NOTE:
FOR ITEMS NOT SHOWN OR NOTED SEE D

NOTES:
1. THIS DETAIL ALSO APPLIES TO CONDITIONS WHERE TWO BEAMS THAT DIFFER IN DEPTH BY 12" OR MORE ARE SUPPORTED BY THE OPPOSITE SIDES OF THE GIRDER WEB.
2. MAX COPE HEIGHT SHALL NOT EXCEED LARGER OF BEAM OR GIRDER K-DIMENSION.

13 W BEAM TO W COL & GIRDER CONNECTIONS

NTS

051200_S2-0102

CONNECTION SCHEDULE

BEAM/GIRDER SIZE	(N) A325N BOLTS, UNO ***	(L) MIN PL AND WELD LENGTH	(TP) MIN PL THICKNESS **	(TW) MIN WELD THICKNESS *
W8	(2) 3/4"DIA	5 1/2"	3/8"	1/4"
W10	(2) 3/4"DIA	6 1/2"	3/8"	1/4"
W12	(3) 1"DIA	9 1/2"	3/8"	1/4"
W14	(3) 1"DIA	9 1/2"	3/8"	1/4"
W16	(4) 1"DIA	12 1/2"	3/8"	1/4"
W18	(5) 1"DIA	15 1/2"	3/8"	1/4"
W21	(6) 1"DIA	18 1/2"	3/8"	1/4"
W24	(6) 1"DIA	18 1/2"	1/2"	5/16"
W27	(7) 1"DIA	21 1/2"	1/2"	5/16"
W30	(8) 1"DIA	24 1/2"	1/2"	5/16"
W33	(9) 1"DIA	27 1/2"	1/2"	5/16"
W36	(10) 1"DIA	30 1/2"	1/2"	5/16"
W40	(11) 1"DIA	33 1/2"	1/2"	5/16"
W44	(12) 1"DIA	36 1/2"	1/2"	5/16"

NOTE: USE STANDARD BOLT HOLES IN BEAM/GIRDER WEB.

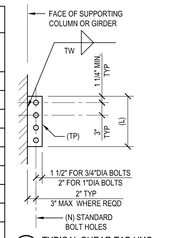

NOTES:
* 5/16" MIN FOR COLUMN FLANGES GREATER THAN 3/4" THICK
** PL 1/2" & THICKER SHALL BE GAS OR SAW CUT
*** SEE STEEL LATERAL FORCE RESISTING SYSTEM NOTES FOR BOLT TYPE AT LFRS MEMBER CONNECTIONS, WHERE OCCURS

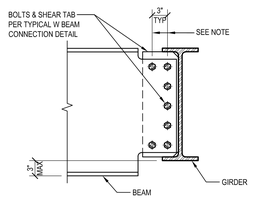

NOTE:
WHERE NUMBER OF REQUIRED BOLTS PER PLAN OR SCHEDULE IS MORE THAN NUMBER OF BOLTS THAT FIT IN ONE ROW, USE MAXIMUM BOLTS IN FIRST ROW & BALANCE IN SECOND ROW (2 BOLTS MIN IN SECOND ROW)

18 GIRDER SHALLOWER THAN BEAM

NTS

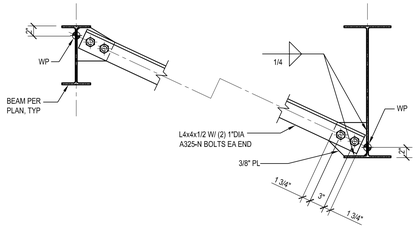

NOTES:
1. SEE PLAN FOR LOCATION, — — —> ARROW INDICATES LOW END OF ANGLE.
2. WHERE SPACING IS NOT INDICATED ON PLAN, SPACE BRACING EQUALLY ALONG BEAM SPAN.

14 BOTTOM FLANGE KICKER (— — —>)

NTS

051200_S2-0105

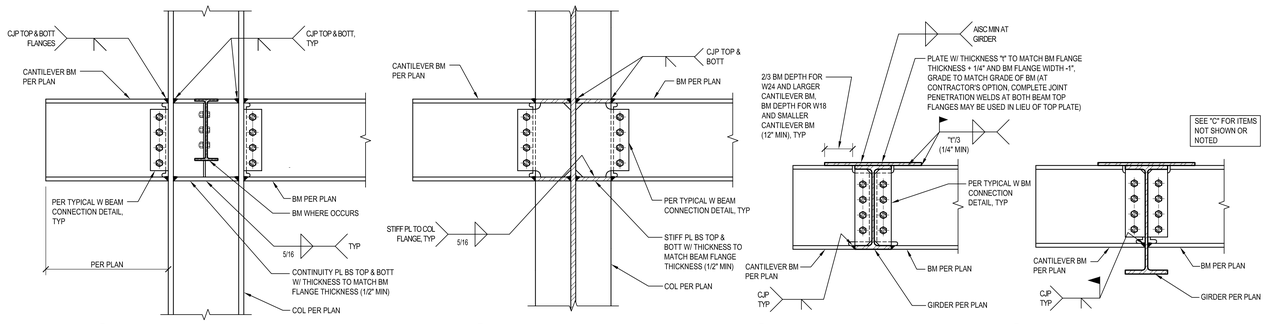

10 CANTILEVER CONNECTIONS (——◁)

NTS

051200_S2-0109

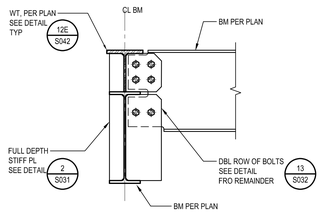

19 BEAM TO BEAM WITH WT AT 8" DEPRESSION

NTS

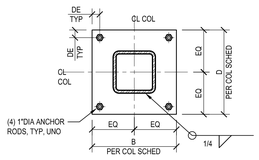

A HSS & PIPE GRAVITY COLUMNS

HOLE, EDGE DISTANCE & WASHER SCHEDULE

BOLT DIAMETER	DE	HOLE DIAMETER	MIN WASHER SIZE	MIN WASHER THICKNESS
3/4"	1 1/4"	1 5/16"	2"	1/4"
7/8"	1 7/16"	1 9/16"	2 1/2"	5/16"
1"	1 5/8"	1 13/16"	3"	3/8"
1 1/4"	2"	2 1/16"	3"	1/2"

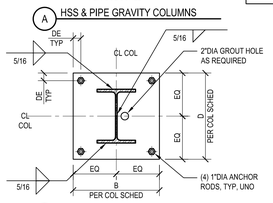

B W GRAVITY COLUMNS

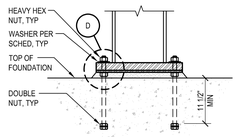

C ANCHOR BOLT SECTION

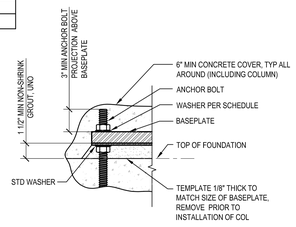

D ANCHOR BOLT PROJECTION

15 GRAVITY COLUMN BASE PLATE DETAIL

NTS

051200_S1-0101

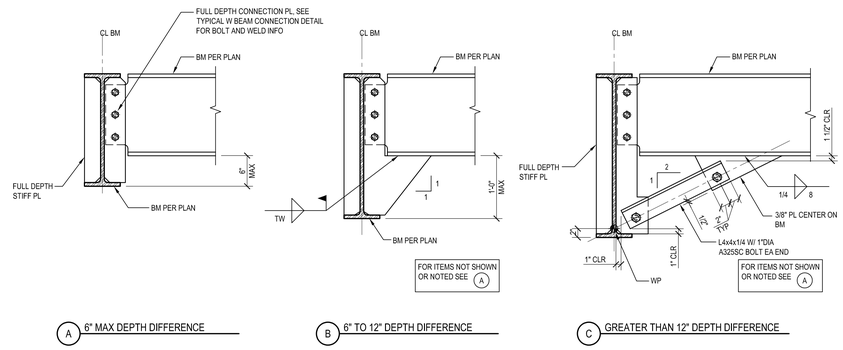

7 BOTTOM FLANGE BRACE (——◆)

NTS

051200_S2-0108

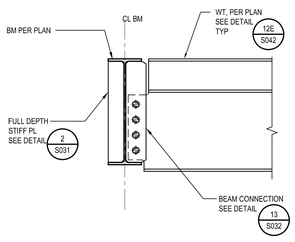

20 BEAM TO BEAM WITH WT AT 6" DEPRESSION

NTS

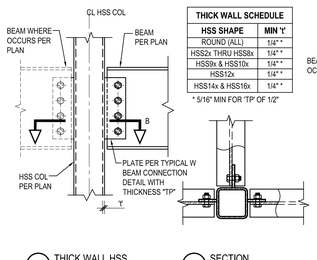

THICK WALL SCHEDULE

HSS SHAPE	MIN 'Y'
ROUND (ALL)	1/4" *
HSS2x THRU HSS8x	1/4" *
HSS9x & HSS10x	1/4" *
HSS12x	1/4" *
HSS14x & HSS16x	1/4" *

* 5/16" MIN FOR 'TP' OF 1/2"

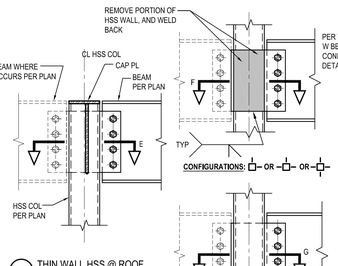

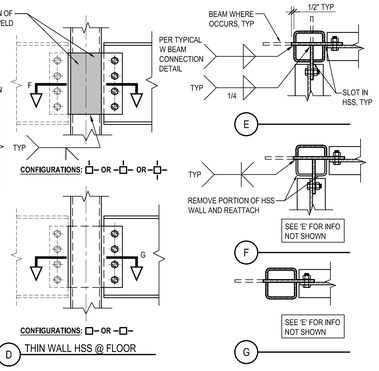

A THICK WALL HSS
B SECTION
C THIN WALL HSS @ ROOF
D THIN WALL HSS @ FLOOR

NOTES:
1. DETAIL "A" SHALL ONLY BE USED FOR THE SHAPES INDICATED IN THE "THICK WALL SCHEDULE".
2. FOR COLLECTOR CONNECTIONS (INDICATED BY "LFRS" OR ——● ON PLAN), USE DETAILS "C" OR "D".

16 BEAM TO HSS COLUMN CONNECTION

NTS

051200_S1-0102

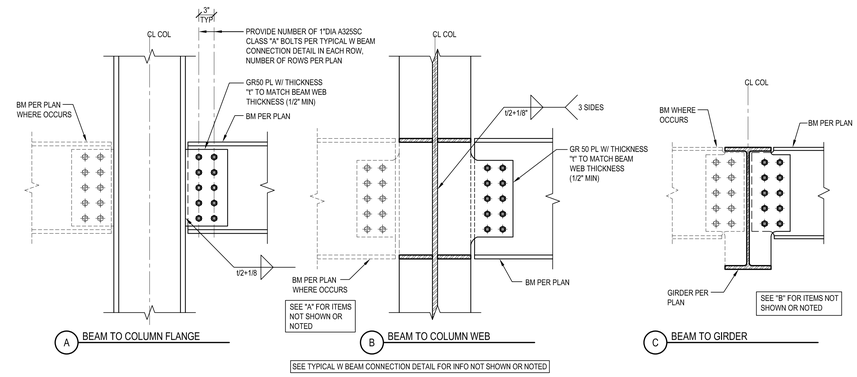

8 BEAM CONNECTION WITH SLIP CRITICAL BOLTS (——●)

NTS

051200_S6-0100

PBK
RANCHO CUCAMONGA
8163 ROCHESTER AVENUE, SUITE 100
RANCHO CUCAMONGA, CA 91730
909-987-0909 P

ONTARIO FIRE DEPARTMENT ADMINISTRATION BUILDING

CITY OF ONTARIO

1420 E. FRANCIS STREET., ONTARIO, CA

LICENSED ARCHITECT — KELLEY NEEDHAM C-19064 — Ex.Date 03/31/25 — STATE OF CALIFORNIA

REGISTERED PROFESSIONAL ENGINEER — Rick Dorf No. S3450 — Exp. 3/31/24 — STRUCTURAL — STATE OF CALIFORNIA

CONSULTANT

miyamoto.
1047 West Sixth Street, Suite A
Ontario, CA 91762
T: (833) 270-6846
miyamotointernational.com
MI2280036.00

NO	DATE	BY	DESCRIPTION

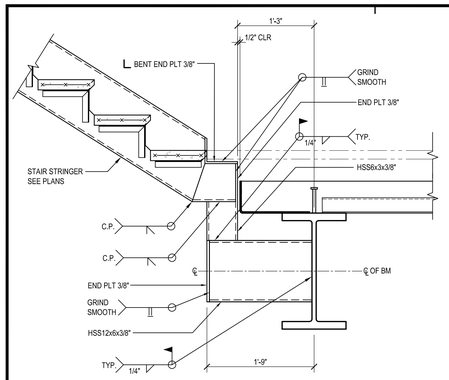

17 STAIR STRINGER TO SUPPORT TO BEAM
NTS

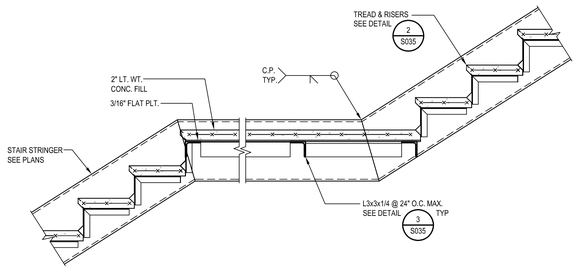

13 STAIR STRINGER DETAIL AT MID LANDING
NTS

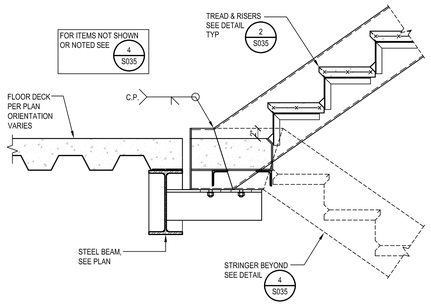

5 INSIDE UP STAIR STRINGER @ FLOOR
NTS

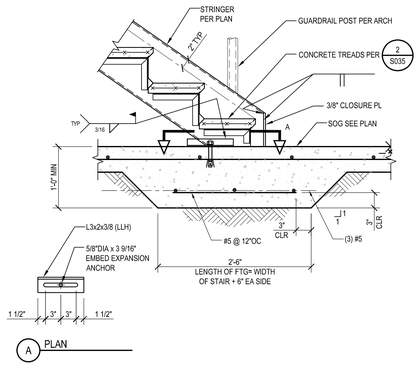

1 STAIR STRINGER FOOTING
NTS

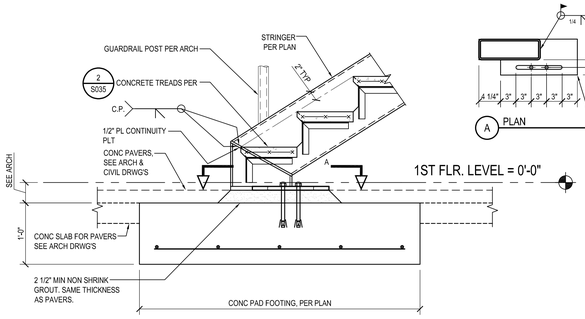

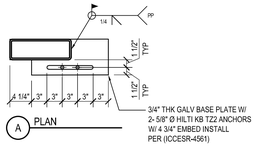

18 STAIR STRINGER FOOTING
NTS

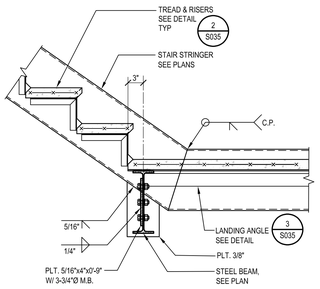

10 OUTSIDE UP STAIR STRINGER @ LANDING
NTS

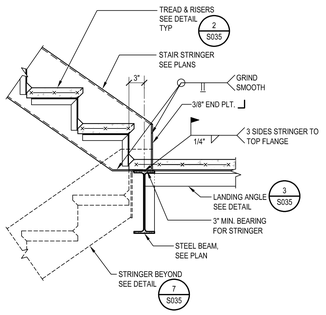

6 INSIDE UP STAIR STRINGER AT LANDING
NTS

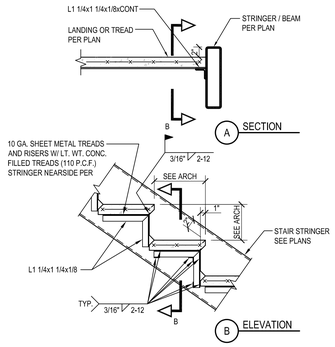

2 TYPICAL TREAD AND RISER DETAIL
NTS

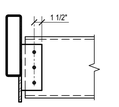

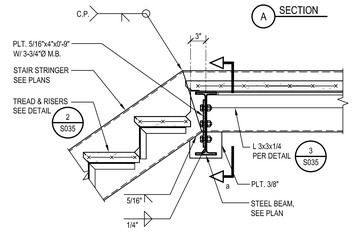

11 OUTSIDE DOWN STAIR STRINGER AT LANDING
NTS

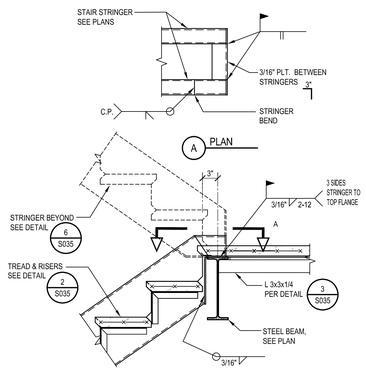

7 INSIDE DOWN STAIR STRINGER AT LANDING
NTS

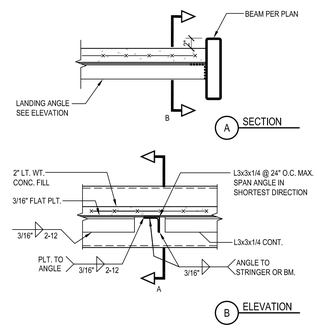

3 LANDING ANGLE CONNECTION
NTS

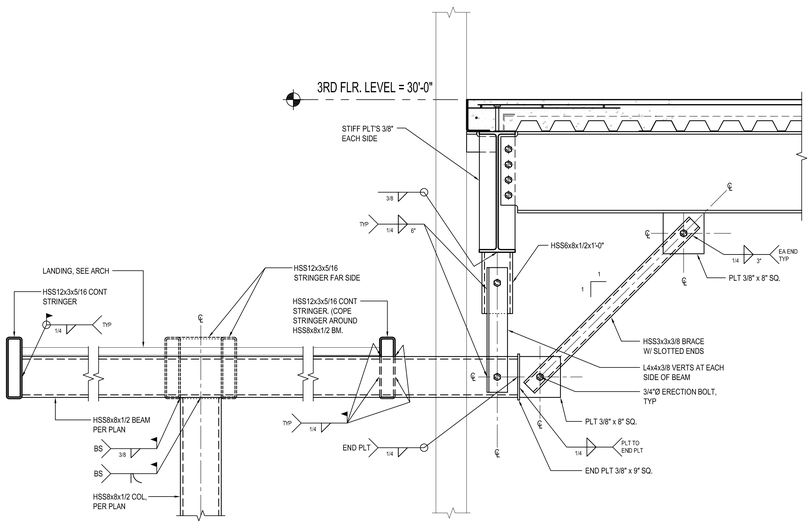

20 STAIR LANDING FRAMING DETAIL
NTS

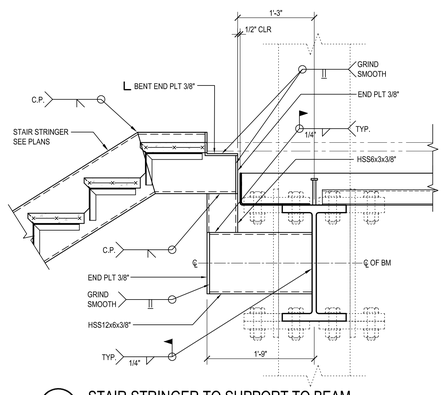

12 STAIR STRINGER TO SUPPORT TO BEAM
NTS

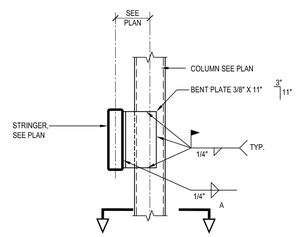

8 STAIR STRINGER TO SUPPORT COLUMNM
NTS

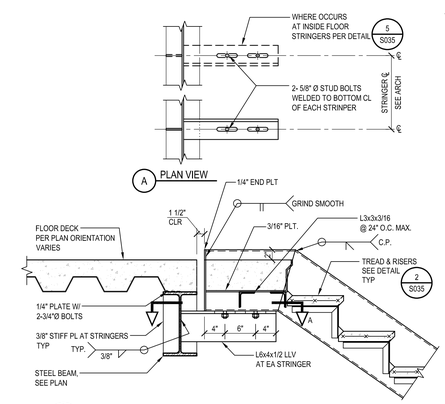

4 DOWN STAIR STRINGER AT FLOOR
NTS

PBK
RANCHO CUCAMONGA
8163 ROCHESTER AVENUE, SUITE 100
RANCHO CUCAMONGA, CA 91730
909-987-0909 P

ONTARIO FIRE DEPARTMENT ADMINISTRATION BUILDING

CITY OF ONTARIO

1420 E. FRANCIS STREET., ONTARIO, CA

LICENSED ARCHITECT — KELLEY NEEDHAM C-19064 — Ex.Date 03/31/25 — STATE OF CALIFORNIA

REGISTERED PROFESSIONAL ENGINEER — Rick Dorf No. S3450 — Exp. 3/31/24 — STRUCTURAL — STATE OF CALIFORNIA

CONSULTANT

miyamoto.
1047 West Sixth Street, Suite A
Ontario, CA 91762
MI22280036.00
T: (833) 270-6846
miyamotointernational.com

NO	DATE	BY	DESCRIPTION

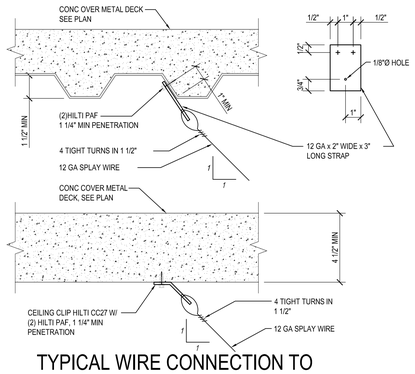

12 TYPICAL WIRE CONNECTION TO CONCRETE METAL DECK

NTS

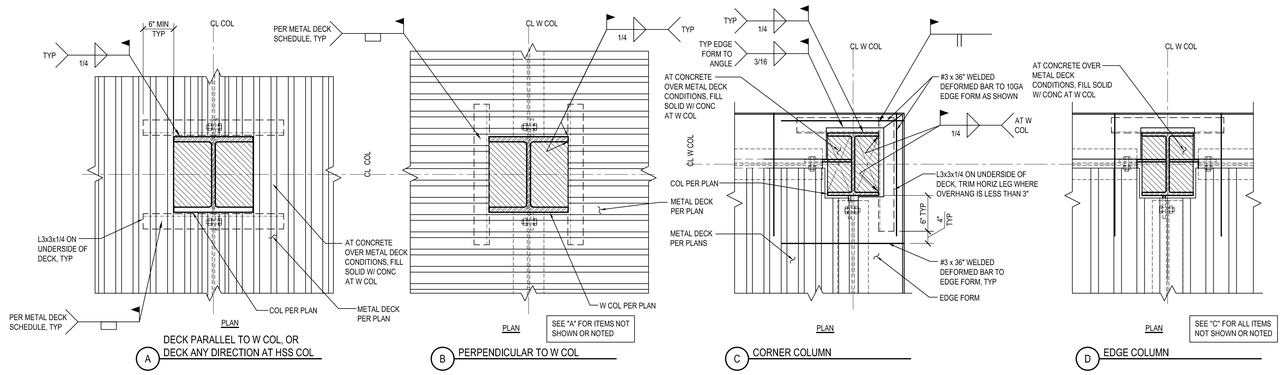

9 FRAMED OPENING AT COLUMN

NTS

053113-0105

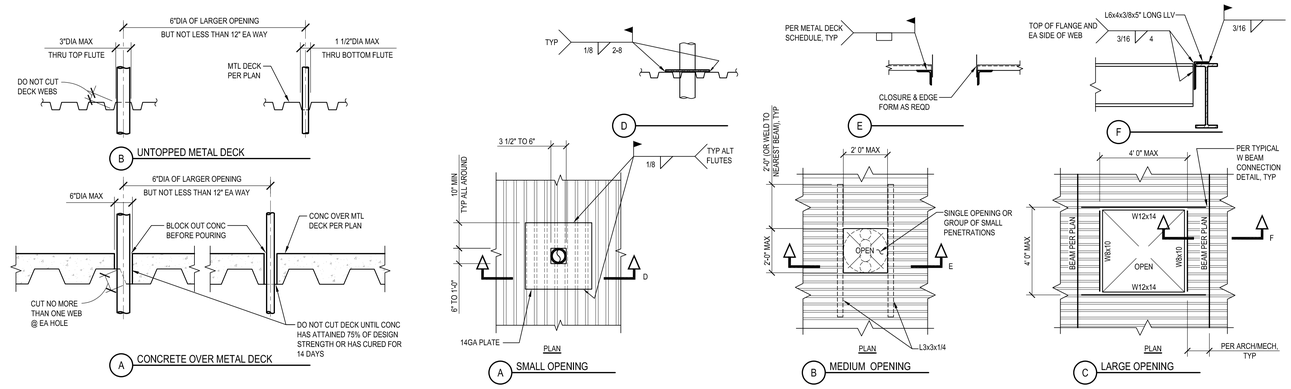

10 PENETRATIONS IN METAL DECK

NTS

053000-0101

6 OPENINGS IN METAL DECK

NTS

053123-0100

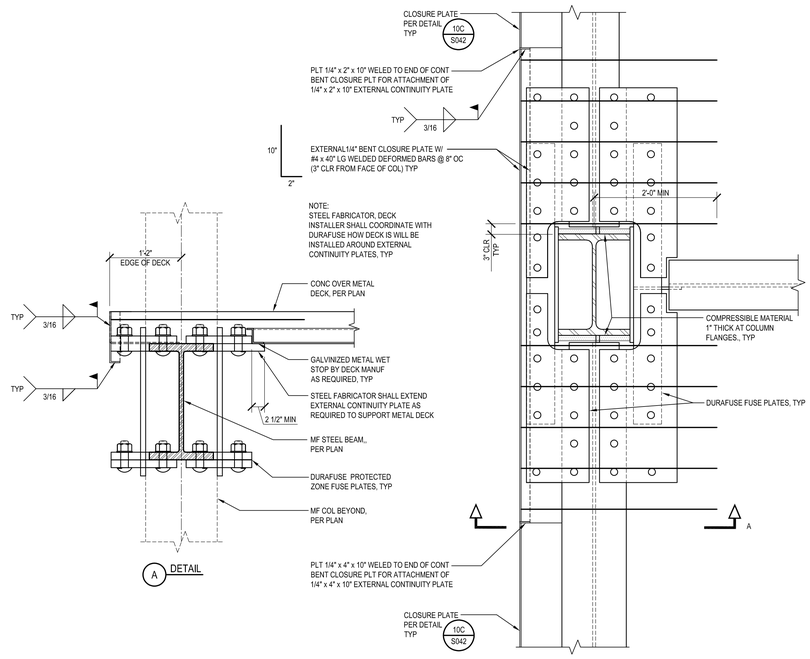

16 TYP - DURAFUSE COMPOSITE DECK ATTACHMENT DETAIL

1"=1'-0"

S041

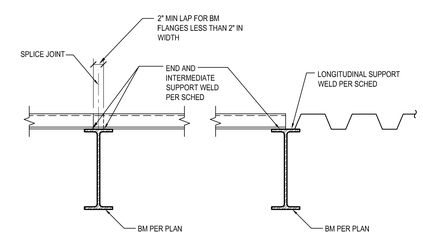

7 METAL DECK SPLICE

NTS

053000-0100

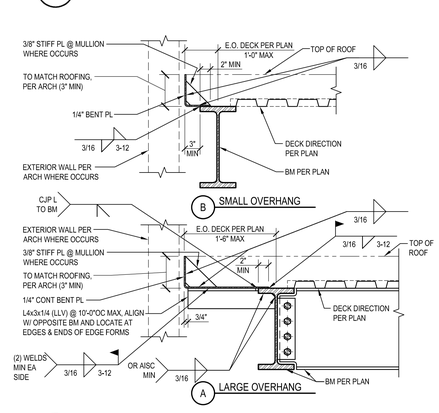

8 EDGE OF UNFILLED METAL DECK

NTS

053123-0102

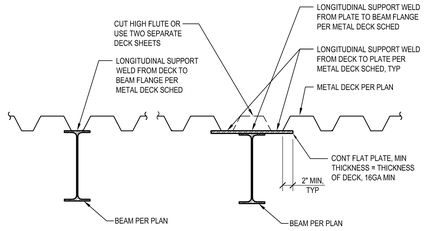

3 DECK PARALLEL TO BEAM

NTS

053123-0101

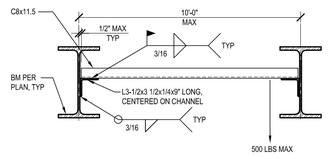

NOTES:

1. MULTIPLE CHANNELS WITH A SUPPORTED LOAD EXCEEDING 50 LBS SHALL BE SPACED AT 1'-0" MIN. TOTAL LOAD PER BEAM SHALL NOT EXCEED 1000 LBS.
2. LOAD TO HANG FROM STEEL DECK WITHOUT CHANNEL SUPPORT SHALL NOT EXCEED 150 LBS PER SHEET OF DECK PER SPAN. MINIMUM SPACING BETWEEN ANCHORS SUPPORTING GREATER THAN 20 POUNDS SHALL BE 1'-0" MIN.
3. LAYOUTS AND CONNECTIONS TO DECK IN ACCORDANCE WITH OSHPD OPM OR SMACNA DESIGNED BY OTHERS IS ACCEPTABLE IN LIEU OF THE DETAILS ABOVE.

4 HANGER SUPPORT AT BEAMS & DECK

NTS

053123-0105

PBK
RANCHO CUCAMONGA
8163 ROCHESTER AVENUE, SUITE 100
RANCHO CUCAMONGA, CA 91730
909-987-0909 P

ONTARIO FIRE DEPARTMENT ADMINISTRATION BUILDING

CITY OF ONTARIO

1420 E. FRANCIS STREET., ONTARIO, CA

LICENSED ARCHITECT — KELLEY NEEDHAM C-19064 — Ex.Dt: 03/31/25 — STATE OF CALIFORNIA

REGISTERED PROFESSIONAL ENGINEER — Rick Dorf No. S3450 — Exp. 3/31/24 — STRUCTURAL — STATE OF CALIFORNIA

CONSULTANT

miyamoto.
1047 West Sixth Street, Suite A
Ontario, CA 91762
T: (833) 2/10-miyamoto
miyamotointernational.com
MI2280306.00

NO	DATE	BY	DESCRIPTION

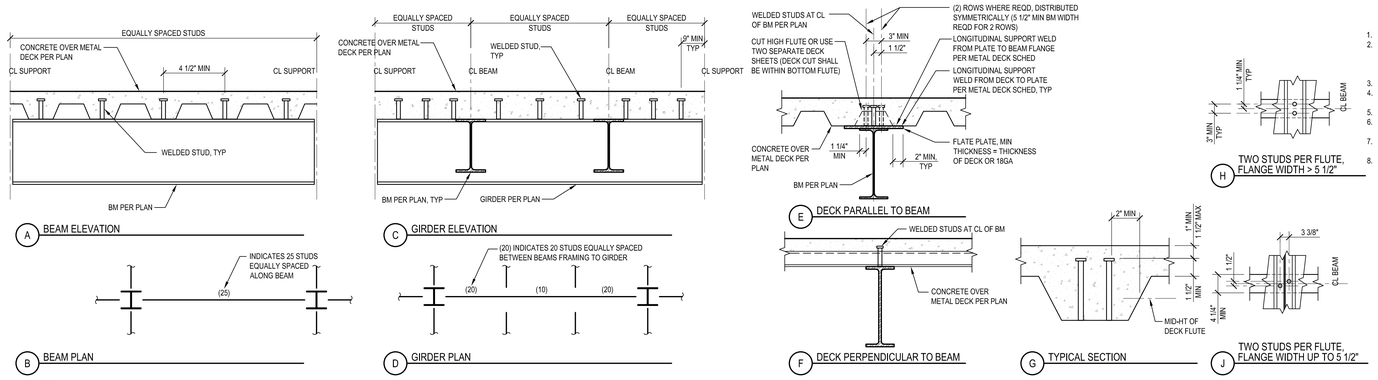

1. WELDED HEADED STUDS SHALL BE 3/4"DIA x LENGTH AS REQUIRED, UNO.
2. WHERE THE NUMBER OF STUDS EXCEEDS THE NUMBER OF DECK FLUTES, PROVIDE MINIMUM ONE STUD PER FLUTE & DOUBLE STUDS AT EACH FLUTE STARTING AT EACH SUPPORT WORKING TOWARD CENTER OF THE BEAM UNTIL THE REQUIRED NUMBER OF STUDS ARE PROVIDED. PROVIDE AN EQUAL NUMBER OF STUDS AT EACH SIDE OF BEAM SPAN CENTER LINE.
3. WHERE STUDS AND PUDDLE WELDS COINCIDE, THE PUDDLE WELD MAY BE REPLACED BY THE STUD.
4. PROVIDE STUDS AT A MAXIMUM SPACING OF 12" AT ALL BEAMS SUPPORTING CONCRETE OVER METAL DECK WHERE NUMBER OF STUDS IS NOT INDICATED.
5. MAINTAIN 1" CLEARANCE AROUND ALL STUDS.
6. WELDING AT STUDS SHALL BE PERFORMED IN ACCORDANCE WITH MANUFACTURER'S RECOMMENDATIONS.
7. CUT DECKING AND PROVIDE GAP AS REQUIRED TO MAINTAIN STUD CENTERING. ADD 16GA MIN CLOSURES AS REQUIRED.
8. REMOVE SIDELAP STANDING SEAM WHERE STUDS OCCUR.

13 WELDED HEADED STUDS

NTS

05120G_S2-0101

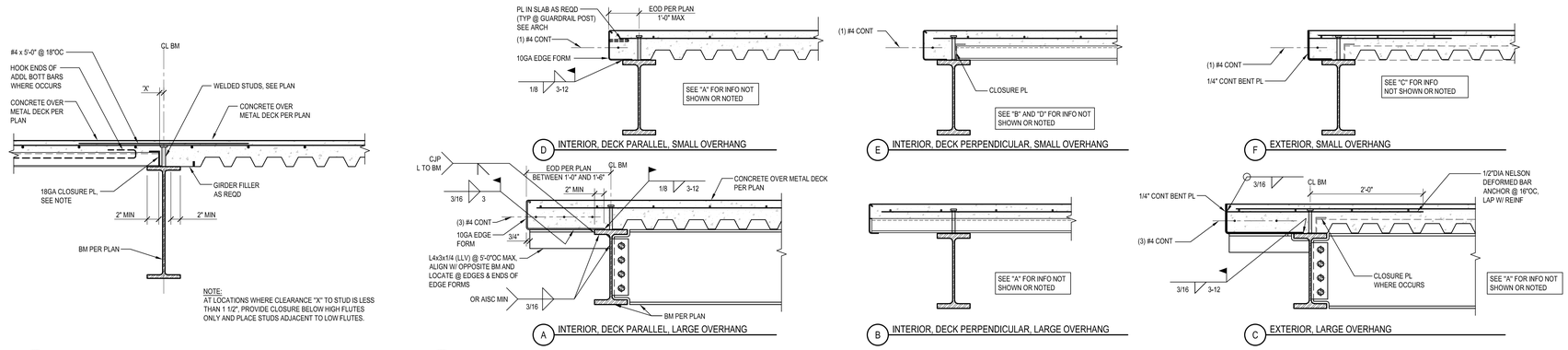

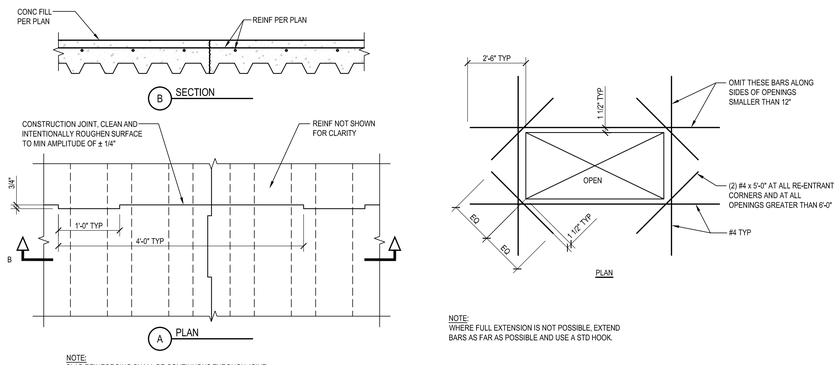

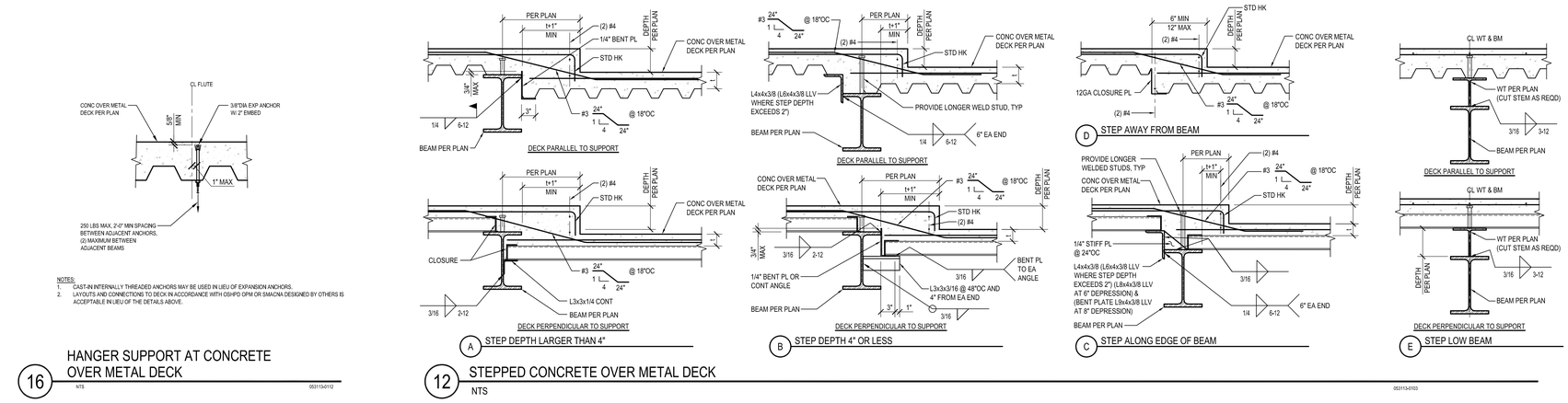

PBK
RANCHO CUCAMONGA
8163 ROCHESTER AVENUE, SUITE 100
RANCHO CUCAMONGA, CA 91730
909-987-0909 P

ONTARIO FIRE DEPARTMENT ADMINISTRATION BUILDING

CITY OF ONTARIO

1420 E. FRANCIS STREET., ONTARIO, CA

LICENSED ARCHITECT — KELLEY NEEDHAM C-19064 — Ex.Date 03/31/25 — STATE OF CALIFORNIA

REGISTERED PROFESSIONAL ENGINEER — Rick Dorf No. S3450 — Exp. 3/31/24 — STRUCTURAL — STATE OF CALIFORNIA

CONSULTANT

miyamoto.
1047 West Sixth Street, Suite A
Ontario, CA 91762
T: (833) 2/10-6846
miyamotointernational.com
MI22280036.00

NO	DATE	BY	DESCRIPTION

REVISIONS

DRAWN: AR	CHECKED: RB
DATE: 02/16/2024	SCALE: AS NOTED
PROJECT NUMBER: 2011700	

TYPICAL COMPOSITE METAL DECK DETAILS

DRAWING NUMBER: S042

BID SET 03/01/24

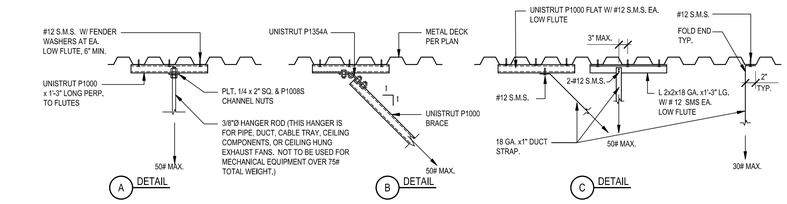

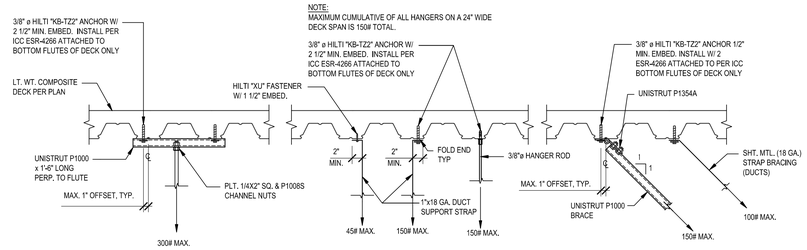

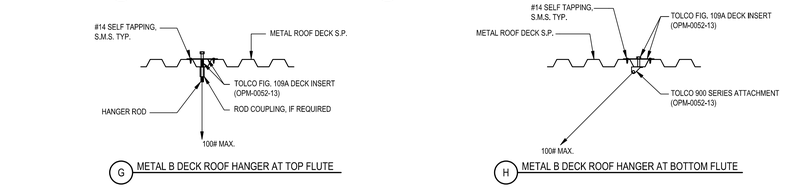

NOTES:
1. MAXIMUM LOADING AT METAL DECK ON A SINGLE 24" WIDTH OF DECK SHALL NOT EXCEED 150#, CUMULATIVE OF ALL HANGERS.
2. MAXIMUM LOADING AT CONCRETE OVER METAL DECK IN ANY 8'-0"x6'-0" AREA, SHALL NOT BE MORE THAN 1000# CUMULATIVE OF ALL HANGERS.
3. HANGER SPACING IN A SINGLE FLUTE SHALL BE 18" O.C. MINIMUM.
4. CONTRACTOR SHALL LOCATE REINFORCING BY NON-DESTRUCTIVE METHODS PRIOR TO DRILLING HOLES, REINFORCING SHALL NOT BE CUT OR DAMAGED DURING DRILLING OR INSTALLATION.
5. LOADS EXCEEDING THE LIMITS ABOVE SHALL BE HUNG PER 8/S0.6.

18 TYP - HANGER ROD FOR PIPING, CABLE TRAY & EQUIPMENT WEIGHING LESS THAN 400 LBS

1"=1'-0" S044

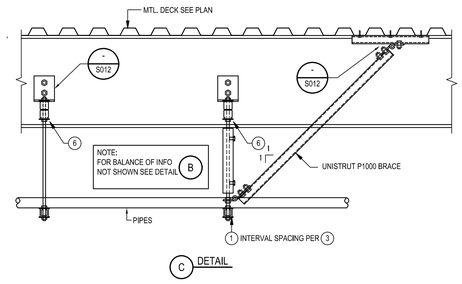

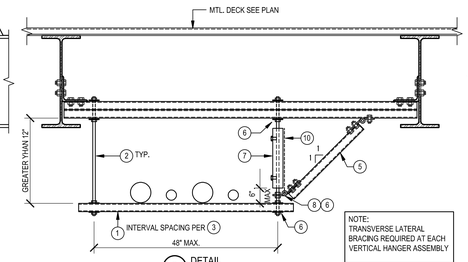

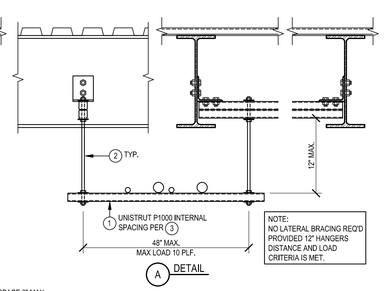

1. UNISTRUT P1000 HS
2. 3/8" ø HANGER ROD
3. MAXIMM INTERVAL SPACING OF P1000 TRAPEZE IS 10 FT ON CENTER FOR TRAPEZE SUPPORTING LESS THAN 10 PLF (TOTAL SUPPORTED WEIGHT = 10 PLF x 10'-0" O.C. SPACING = 100# PER TRAPEZE). NO PIPE GREATER THAN 2" ALL TRAPEZE SUPPORTING MORE THAN 10 PLF OR PIPES GREATER THAN 2" DIAMETER SHALL HAVE INTERVAL SPACING NOT EXCEEDING 6 FEET, MAXIMUM PERMISSABLE TRAPEZE LOAD IS 20 PLF (TOTAL SUPPORTED WEIGHT = 20 PLF x 6'-0" O.C. SPACING = 120# PER TRAPEZE).
4. USE MULTIPLE TRAPEZE AS NECESSARY TO ACCOMMODATE CAPACITY REQUIRED BEYOND ALLOWABLE. MULTIPLE TRAPEZE HANGER RODS SHALL NOT BE HUNG FROM THE SAME JOIST AS OTHER TRAPEZE.
5. P1000 HS DIAGONAL BRACE AT EACH VERTICAL ROD AT 10'-0" O.C. OR EVERY OTHER ROD (12'-0" O.C.) WHERE TRAPEZE IS SPACED AT 6'-0" O.C.
6. NUT ABOVE AND BELOW CONNECTING PART
7. UNISTRUT P2485 ROD STIFFENER WITH CRADLE CLIPS. SPACE 6" MAX FROM END OF STIFFENER AND 12" O.C. BETWEEN
8. UNISTRUT P1546 W/ 3/8" Ø BOLTS
9. UNISTRUT DIAGONAL BRACE
10. LONGITUDINAL DIAGONAL BRACE REQUIRED AT B MAX SPACING IS 20 FEET ON CENTER SEE C

9 TYP - PIPE, CONDUIT, CABLE TRAPEZE

1"=1'-0" S044

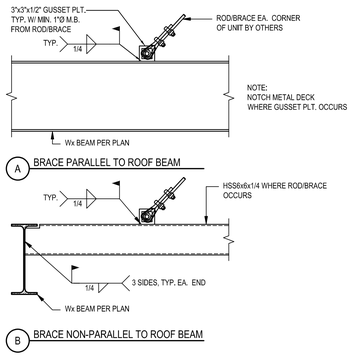

10 TYP - MEP UNIT BRACE CONNECTION DETAIL

1"=1'-0" S044

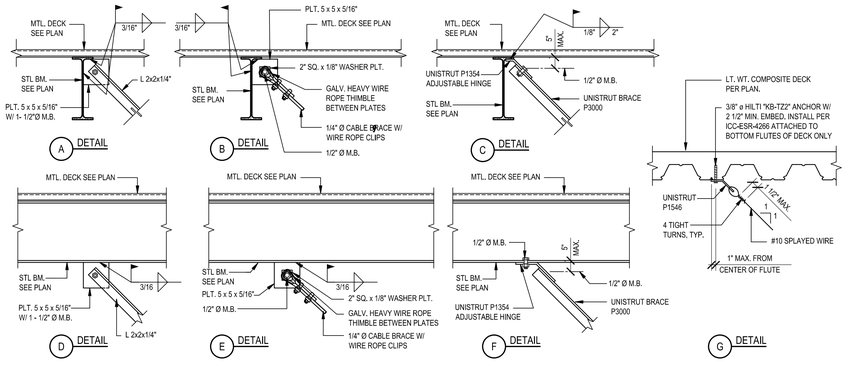

6 TYP - SEISMIC BRACING DETAIL OF DUCTS, PIPING, CABLE TRAYS AND EQUIPMENT WEIGHING LESS THAT 400 LBS

1"=1'-0" S044

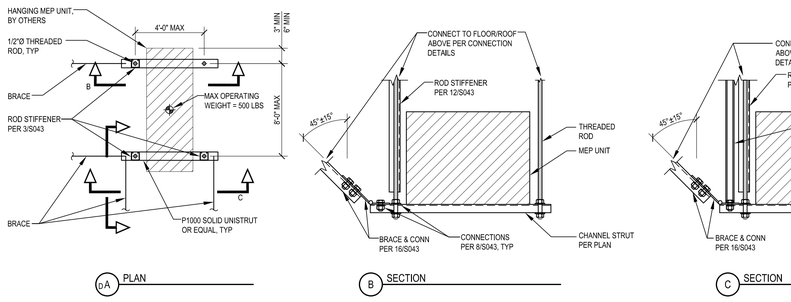

NOTES
1. THIS DETAIL MAY BE USED FOR SIMILAR HANGING EQUIPMENT.
2. SEE MEP PLANS FOR ALL HANGING EQUIPMENT LOCATIONS.
3. PROVIDE POSITIVE ATTACHMENT FROM UNIT TO STRUT PER MANUFACTURER'S RECOMMENDATION.

19 HANGING MEP UNIT SUPPORT

NTS 054300-0201

NOTES:
1. MAXIMUM ALLOWABLE HANGING LOADS TO BE AS FOLLOWS (MAXIMUM HANGER LOAD MAY BE FROM A SINGLE HANGER OR TOTAL LOAD FROM ALL HANGERS SUPPORTED FROM A COMMON STRUT)

UNISTRUT SIZE	BEAM SPACING	MAX. HANGER LOADS
P1000	10'-0" MAX.	60 LBS.
P1001	10'-0" MAX.	305 LBS.
P5000	10'-0" MAX.	142 LBS.
P5001	10'-0" MAX.	825 LBS.

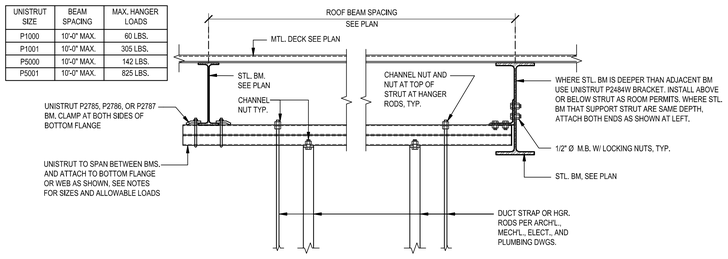

7 TYP - PIPING, CABLE TRAY AND DUCT SUPPORT DETAIL

1"=1'-0" S044

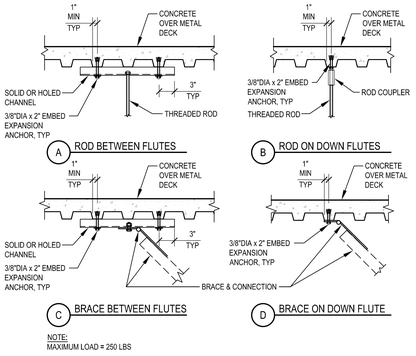

NOTE:
MAXIMUM LOAD = 250 LBS

20 CONN TO CONCRETE OVER METAL DECK

NTS 054300-0102

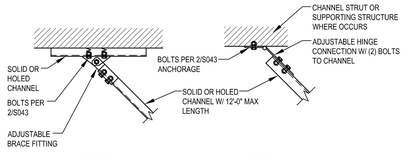

16 BRACING CONNECTION

NTS 054300-0004

ROD STIFFENER SCHEDULE		
ROD Ø	'L' MAX	PERMITTED DETAIL
3/8"	10"	C
1/2"	14"	C
5/8"	16"	C
3/4"	20"	C
7/8"	25"	B
1"	28"	B

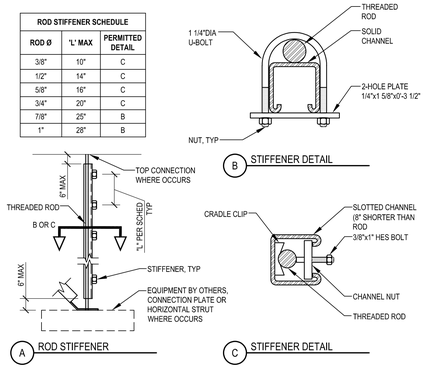

12 ROD STIFFENER

NTS 054300-0003

TORQUE SCHEDULE	
BOLT DIAMETER	APPLIED TORQUE
5/16"	11 FT-LBS
3/8"	19 FT-LBS
1/2"	50 FT-LBS
5/8"	100 FT-LBS
3/4"	125 FT-LBS

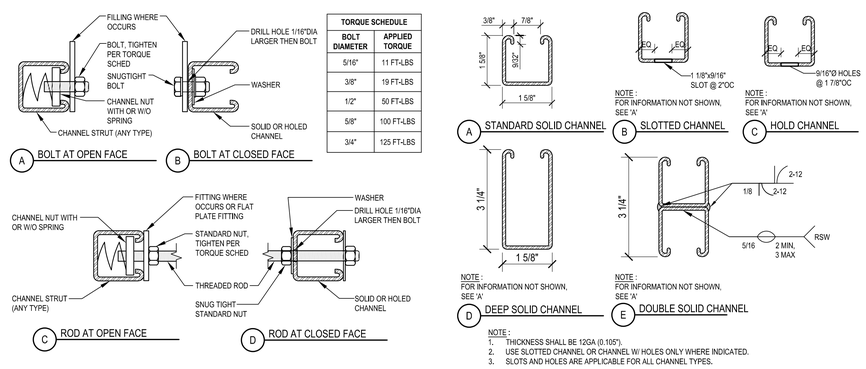

NOTE :
1. THICKNESS SHALL BE 12GA (0.105").
2. USE SLOTTED CHANNEL OR CHANNEL W/ HOLES ONLY WHERE INDICATED.
3. SLOTS AND HOLES ARE APPLICABLE FOR ALL CHANNEL TYPES.

4 STANDARD CHANNEL STRUT SECTIONS

NTS 054300-0001

8 BOLT - THREADED ROD CONNECTIONS

NTS 054300-0002

PBK
RANCHO CUCAMONGA
8163 ROCHESTER AVENUE, SUITE 100
RANCHO CUCAMONGA, CA 91730
909-987-0909 P

ONTARIO FIRE DEPARTMENT ADMINISTRATION BUILDING

CITY OF ONTARIO

1420 E. FRANCIS STREET., ONTARIO, CA

LICENSED ARCHITECT KELLEY NEEDHAM C-19064 Ex.Dt: 03/31/25 STATE OF CALIFORNIA

REGISTERED PROFESSIONAL ENGINEER Rick Dorf No. S3450 Exp. 3/31/24 STRUCTURAL STATE OF CALIFORNIA

CONSULTANT

miyamoto.
1047 West Sixth Street, Suite A
Ontario, CA 91762
T: (833) 2-TO-MIMS
MI2280036.00
miyamotointernational.com

NO	DATE	BY	DESCRIPTION

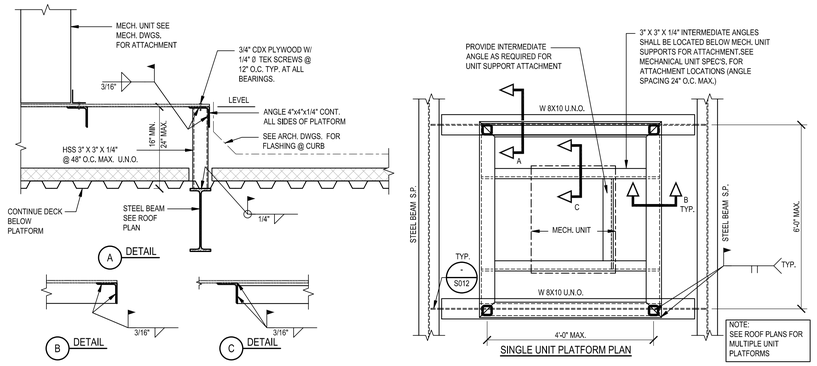

17 TYP - MECH. UNIT PLATFORM PLAN AND DETAILS
1"=1'-0" S045

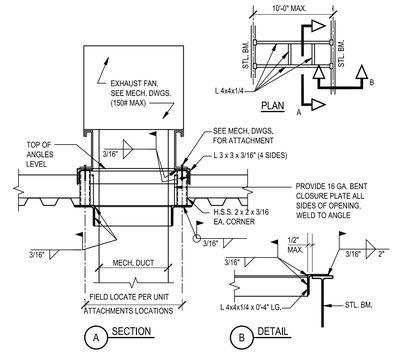

9 TYP - EXHAUST FAN SUPPORT DETAIL
1"=1'-0" S045

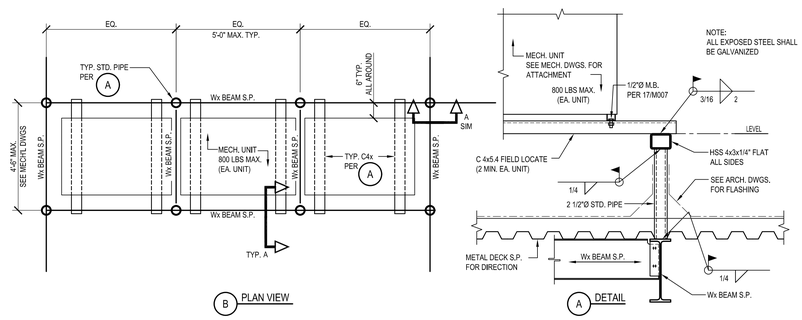

5 TYP - CONDENSING UNIT SUPPORT DETAIL
1"=1'-0" S045

EQUIPMENT ANCHORAGE SCHEDULE									
EQUIPMENT IDENTIFICATION / ITEM NO.	LOCATION	EQUIPMENT DESCRIPTION	MAXIMUM OPERATING WEIGHT (lbs)	ANCHORAGE DETAILS	ANCHORAGE CONFIGURATION	ANCHORAGE DESCRIPTION	MIN A (in)	MIN B (in)	MAX C (in)
MECHANICAL EQUIPMENT									
HRU-1	ROOF	HEAT RECOVERY UNIT	1,300	10/S045		(4) 1/2" DIAMETER THROUGH BOLTS	49	30	26
HRU-2	ROOF	HEAT RECOVERY UNIT	1,700	10/S045		(4) 1/2" DIAMETER THROUGH BOLTS	49	30	26
HRU-3	ROOF	HEAT RECOVERY UNIT	1,300	10/S045		(4) 1/2" DIAMETER THROUGH BOLTS	49	30	26
EF-3	ROOF	EXHAUST FAN	400	9/S045		(4) 1/2" DIAMETER THROUGH BOLTS	24	12	26
SF-1	ROOF	EXHAUST FAN	400	9/S045		(4) 1/2" DIAMETER THROUGH BOLTS	28	28	33
ELECTRICAL EQUIPMENT									
MSB	FIRST FLOOR	MAIN SWITCHBOARD	2,600	13/E3.2		PER DETAIL 13/E3.2			
PLUMBING EQUIPMENT									
WH-2	FIRST FLOOR	WATER HEATER	991	1/P6.1		PER DETAIL 1/P6.1			

NOTES:
1. CONTRACTOR TO VERIFY EQUIPMENT WEIGHT AND DIMENSIONS LISTED IN ABOVE SCHEDULE WITH MANUFACTURER'S CUTSHEETS. ALL DISCREPANCIES SHALL BE BROUGHT TO THE ATTENTION OF THE STRUCTURAL ENGINEER OF RECORD PRIOR TO INSTALLATION.
2. EXPANSION ANCHORS SHALL BE HILTI KWIK-BOLT TZ (ICC ESR-1917). ALL EXPANSION ANCHORS EXPOSED TO WEATHER SHALL BE HOT-DIPPED GALVANIZED OR STAINLESS STEEL.
3. SHEET METAL SCREWS (SMS) SHALL BE HILTI KWIK-PRO SDS (ICC ESR-2196).
4. CONCRETE SCREW ANCHORS SHALL BE SIMPSON TITEN HD SCREW ANCHORS (ICC ESR-2713).

18 EQUIPMENT ANCHORAGE SCHEDULE
NTS

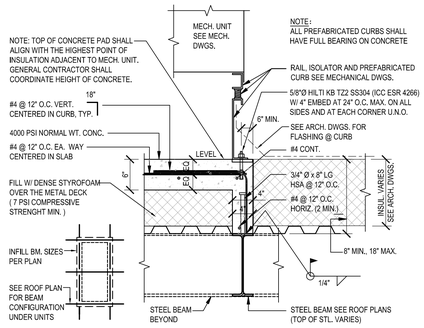

NOTE : SEE MECH. UNIT FRAMING NOTES ON SHEET S0.1

10 TYP - RAISED MECH UNIT CURB ATTACHMENT DETAIL
1"=1'-0" S045

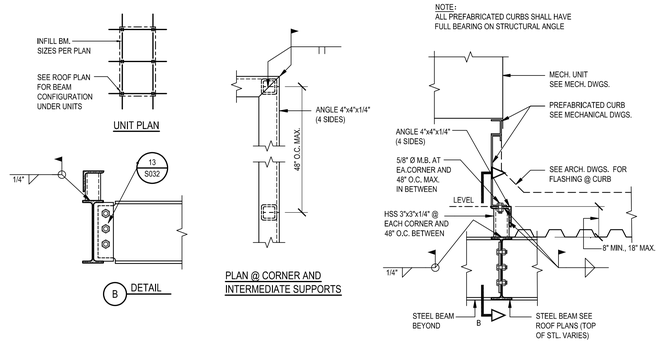

6 TYP - MECH UNIT CURB ATTACHMENT DETAIL
1"=1'-0" S045

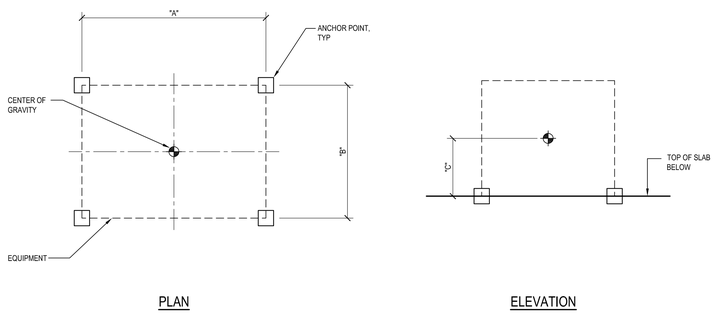

19 RECTANGULAR FLOOR-MOUNTED EQUIPMENT
NTS

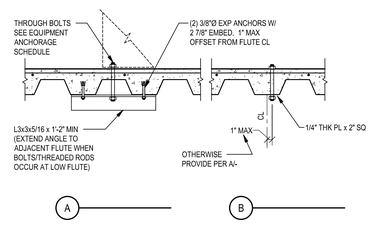

ROOFTOP ANCHORAGE TO CONCRETE FILLED DECK
11 NTS

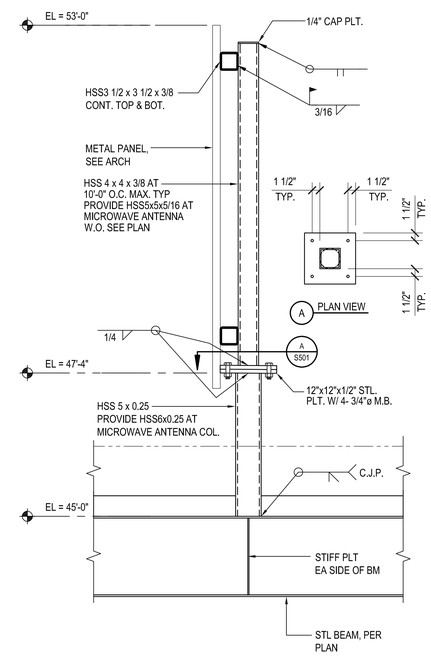

4 SCREENWALL DETAIL
FULL SCALE S045

PBK
RANCHO CUCAMONGA
8163 ROCHESTER AVENUE, SUITE 100
RANCHO CUCAMONGA, CA 91730
909-987-0909 P

ONTARIO FIRE DEPARTMENT ADMINISTRATION BUILDING
CITY OF ONTARIO
1420 E. FRANCIS STREET., ONTARIO, CA

LICENSED ARCHITECT KELLEY NEEDHAM C-19064 ex.0ie 03/31/25 STATE OF CALIFORNIA
REGISTERED PROFESSIONAL ENGINEER Rick Dorf No. S3450 Exp. 3/31/24 STRUCTURAL STATE OF CALIFORNIA

CONSULTANT

miyamoto.
1047 West Sixth Street, Suite A
Ontario, CA 91762
T: (833) 2Y0-miyo
MI22280b00
miyamotointernational.com

NO	DATE	BY	DESCRIPTION

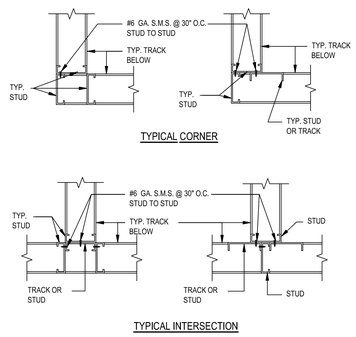

17 TYP - WALL INTERSECTIONS
NTS

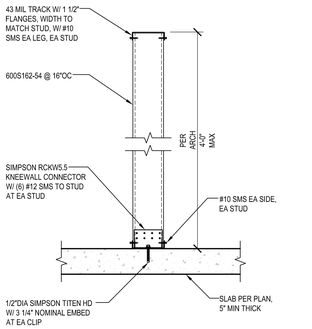

13 PARTIAL HEIGHT INT PARTITION - STUDS
NTS 054000-02-0110

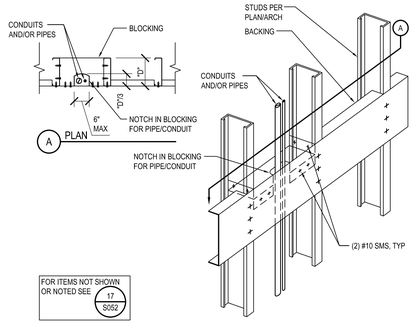

9 NOTCHED BACKING REINFORCEMENT
NTS 054000-02-0103

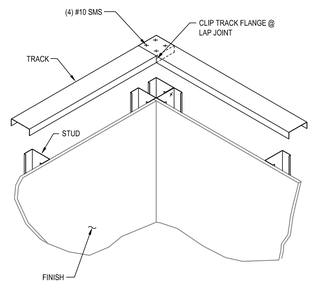

5 WALL FRAMING AT CORNER
NTS 054000_01-0106

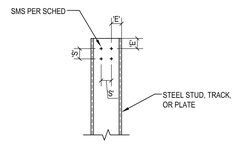

SHEET METAL SCREW SCHEDULE			
SCREW DESIGNATION	SCREW DIAMETER	MIN EDGE DISTANCE 'E'	MIN SPACING 'S'
#8	0.164"	1/4"	1/2"
#10	0.190"	3/8"	5/8"
#12	0.216"	3/8"	3/4"
#14 OR 1/4"	0.250"	1/2"	1"

NOTE:
USE THE LARGER OF THE DIMENSIONS IN THIS TABLE AND THE DIMENSIONS IN THE SCREW'S THIRD PARTY EVALUATION REPORT.

1 SCREW EDGE DISTANCE & SPACING
NTS 054000-02-0100

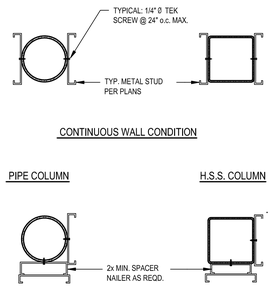

18 TYP - WALL STUD TO COLUMN
NTS

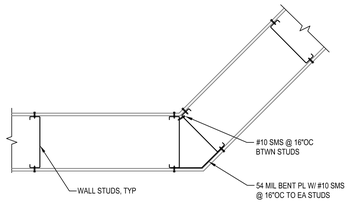

14 ANGLED WALL
NTS 054000-02-0106

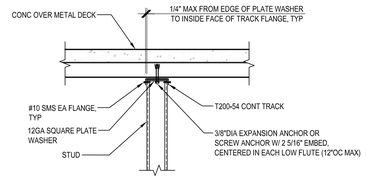

NOTE:
LOCATE AND AVOID (E) REINFORCING PRIOR TO DRILLING. DO NOT DAMAGE (E) REINFORCING.

10 SUSPENDED SOFFIT WALL TO CONCRETE OVER METAL DECK - WALL PERPENDICULAR TO FLUTES
NTS

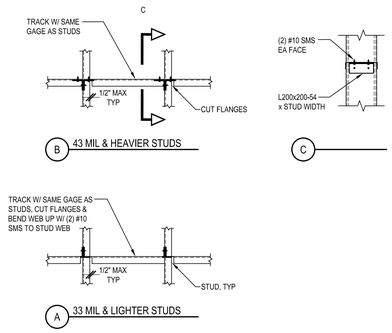

6 METAL STUD BLOCKING
NTS 054000-02-0101

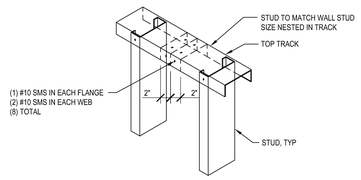

2 TOP TRACK SPLICE
NTS 054000-02-0102

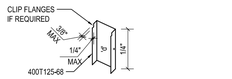

B ISOMETRIC

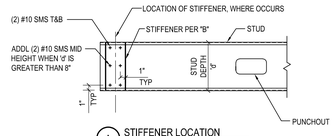

A STIFFENER LOCATION

NOTE:
STIFFENER MAY BE LOCATED ON THE BACK OF THE STUD OR WITHIN THE CHANNEL OF THE STUD.

15 WEB STIFFENER
NTS 054000-02-0107

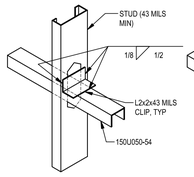

A BRIDGING CHANNEL WITH WELDED BRIDGE CLIP OPTION

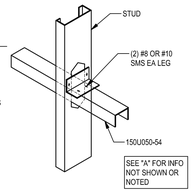

NOTE:
SIMPSON SUBH, SFC OR DBC BRIDGING CONNECTORS OR EQUIVALENT MAY BE USED IN LIEU OF BRIDGE CLIP SHOWN.

B BRIDGING CHANNEL WITH SCREWED BRIDGE CLIP OPTION

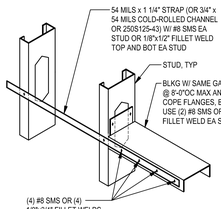

NOTE:
PROVIDE FLANGE BRACING AS SHOWN ON SIDE WITH NO FINISH MATERIAL (BOTH SIDES IF NO FINISH EITHER SIDE) @ 48"OC MAX.

C STRAP & BLOCKING OPTION

CONDITION	STUD GAUGE	SPAZZER BAR	RETAINER REQD
INTERIOR, NON-BEARING	18-30 MIL	9200	NO
	33 MIL	5400	NO
	43-68 MIL	5400	YES
EXTERIOR AND/OR BEARING	33-68 MIL	5400	YES

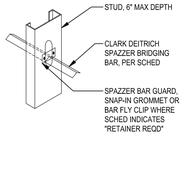

D CLARK DEITRICH SPAZZER BAR BRIDGING OPTION

11 STEEL STUD BRIDGING
NTS 054000-02-0101

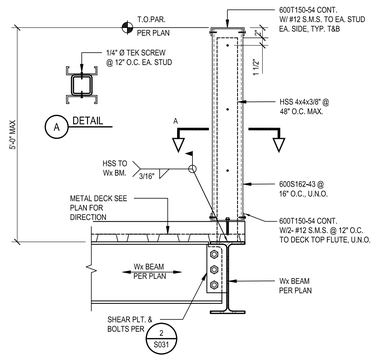

3 TYP - METAL STUD PARAPET ON Wx BEAM
NTS

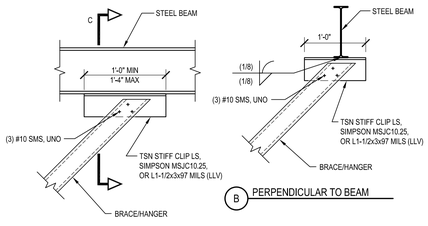

NOTE:
SHOWN AS DIAGONAL BRACE, BUT ALSO APPLIES TO VERTICAL HANGERS.

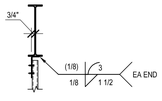

C SECTION

16 BRACE/HANGER TO STEEL BEAM
NTS 054000-02-110

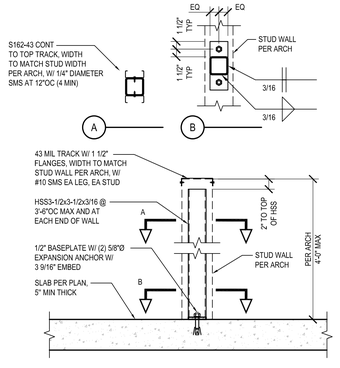

12 PARTIAL HEIGHT INT PARTITION - HSS
NTS 054000-02-0104

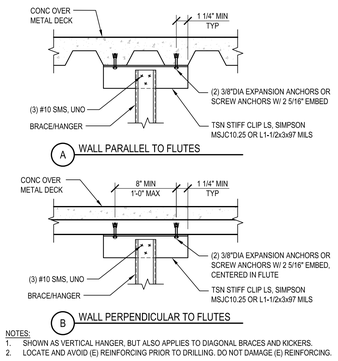

NOTES:
1. SHOWN AS VERTICAL HANGER, BUT ALSO APPLIES TO DIAGONAL BRACES AND KICKERS.
2. LOCATE AND AVOID (E) REINFORCING PRIOR TO DRILLING. DO NOT DAMAGE (E) REINFORCING.

8 BRACE/HANGER TO CONCRETE OVER METAL DECK
NTS 054000-02-0109

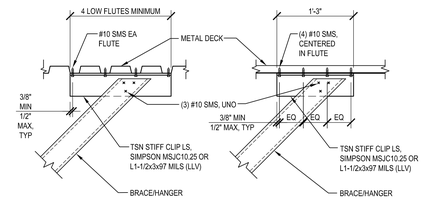

NOTE:
SHOWN AS DIAGONAL BRACE, BUT ALSO APPLIES TO VERTICAL HANGERS.

4 BRACE/HANGER TO METAL DECK
NTS 054000-02-0108

PBK
RANCHO CUCAMONGA
8163 ROCHESTER AVENUE, SUITE 100
RANCHO CUCAMONGA, CA 91730
909-987-0909 P

ONTARIO FIRE DEPARTMENT ADMINISTRATION BUILDING
CITY OF ONTARIO
1420 E. FRANCIS STREET., ONTARIO, CA

LICENSED ARCHITECT KELLEY NEEDHAM C-19064 Ex.Date 03/31/25 STATE OF CALIFORNIA
REGISTERED PROFESSIONAL ENGINEER Rick Ø Dorf No. S3450 Exp. 3/31/24 STRUCTURAL STATE OF CALIFORNIA

CONSULTANT

miyamoto.
1047 West Sixth Street, Suite A
Ontario, CA 91762
MI22280036.00
T: (833) 270-6846
miyamotointernational.com

NO	DATE	BY	DESCRIPTION

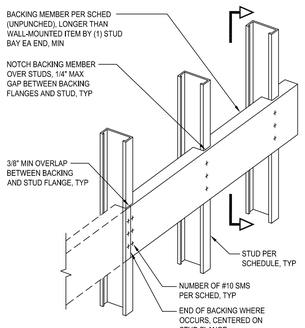

A CHANNEL OPTION

STUD SPACING	MIN STUD SIZE	BACKING MEMBER	NO OF SMS
12"	362S162-43	362T150-54	4
16"	362S162-54	400T150-54	4
24"	362S162-54	600T150-54	4

NOTES:
1. STUD FLANGE WIDTH AND THICKNESS SHOWN SHALL BE MIN AT LARGER DEPTH STUDS.
2. DO NOT OVERCUT FLANGES OF BACKING.
3. 16'-0" MAX STUD HEIGHT.
4. FOR CONDITIONS NOT COVERED BY THIS DETAIL, CONTACT SEOR.

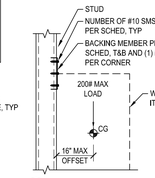

B SECTION

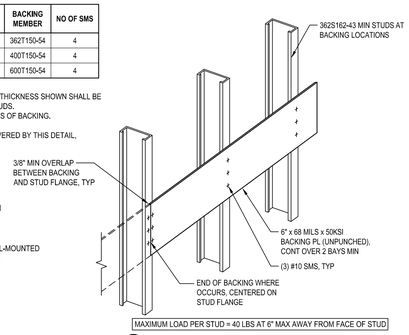

B PLATE OPTION

17 WALL-HUNG ITEM BACKING

NTS 054000-01-0107

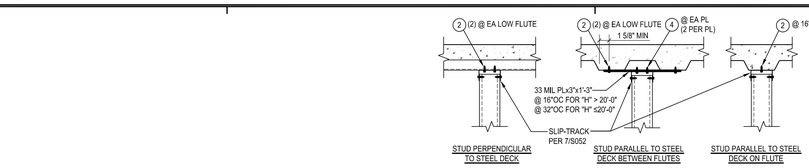

NOTE: COMPOSITE DECK SHOWN, BUT ALSO APPLICABLE TO BARE METAL DECK

F STUD TO METAL DECK

MAX HEIGHT "H" STUD SCHEDULE					
12" SPACING					
STUD THK	STUD SIZE				
	250S125	362S125	400S125	600S125	800S125
68 MILS	16'-4"	21'-11"	23'-9"	33'-0"	42'-0"
54 MILS	15'-4"	20'-6"	22'-2"	30'-9"	38'-9"
43 MILS	14'-4"	19'-2"	20'-8"	28'-9"	36'-1"
33 MILS	13'-2"	17'-7"	19'-0"	26'-2"	32'-8"
30 MILS	12'-9"	17'-0"	18'-5"	25'-2"	-
27 MILS	12'-4"	16'-5"	17'-9"	-	-
18 MILS	10'-6"	14'-1"	-	-	-
16" SPACING					
STUD THK	STUD SIZE				
	250S125	362S125	400S125	600S125	800S125
68 MILS	14'-10"	19'-11"	21'-7"	30'-0"	38'-2"
54 MILS	13'-11"	18'-7"	20'-1"	27'-11"	35'-2"
43 MILS	13'-0"	17'-7"	18'-10"	26'-1"	32'-9"
33 MILS	12'-0"	16'-0"	17'-3"	23'-9"	28'-8"
30 MILS	11'-7"	15'-5"	16'-8"	22'-11"	-
27 MILS	11'-3"	14'-11"	-	-	-
18 MILS	9'-7"	-	-	-	-
24" SPACING					
STUD THK	STUD SIZE				
	250S125	362S125	400S125	600S125	800S125
68 MILS	13'-0"	17'-5"	18'-10"	26'-2"	33'-4"
54 MILS	12'-2"	16'-3"	17'-7"	24'-6"	30'-9"
43 MILS	11'-5"	15'-2"	16'-5"	22'-10"	28'-8"
33 MILS	10'-6"	13'-11"	15'-1"	20'-6"	23'-5"
30 MILS	10'-2"	13'-6"	14'-7"	19'-0"	-
27 MILS	9'-10"	-	-	-	-
18 MILS	-	-	-	-	-

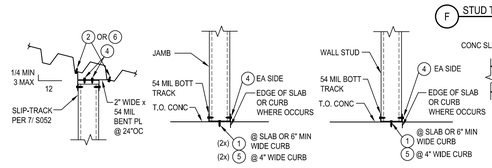

C CONDITION @ SLOPED DECK
D BOTTOM OFJAMB
E BOTTOM OF STUD
G STUD TO CONC SLAB

METAL STUD FASTENER SCHEDULE	
MARK	FASTENER SIZE & SPACING
1	PDF @ 16"OC W/ 1 1/4" MIN PENETRATION
2	PDF W/ 1 1/4" MIN PENETRATION @ DECK W/ CONC OR #10 SMS @ MTL DECK
3	#10 SHEET METAL SCREW (SMS)
4	#12 SHEET METAL SCREW (SMS)
5	3/8"DIA x 2" EMBED SCREW ANCHOR @ 16"OC
6	#10 WOOD SCREW W/ 2" EMBED

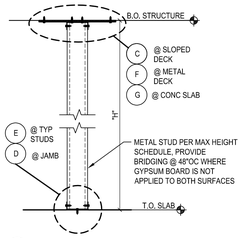

A STUD WALL SECTION

NOTES:
1. THIS SCHEDULE IS APPLICABLE FOR (2) LAYERS OF GYPBOARD PER ARCH (6 PSF MAX) AND L/240 MAX DEFLECTION CRITERIA.
2. STUDS SUPPORTING EQUIPMENT OR CASEWORK WEIGHING 40 LBS OR MORE SHALL BE 362S125 MIN & 54 MILS THICK MIN.

9 INTERIOR NON-BEARING STUD WALLS

NTS 054000-01-0101

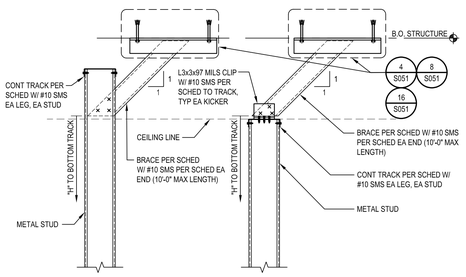

A FRAMED ABOVE CEILING
B FRAMED TO CEILING

BRACE AND CONNECTION SCHEDULE						
STUD SIZE	MAX BRACE SPACING	MAX HEIGHT	MAX TRACK CANTILEVER	MIN TRACK SIZE	MIN BRACE SIZE	# OF SCREWS
250S	5'-6"	10'-0"	2'-0"	250T125-30	362T125-43	(3) #10 SMS
	4'-0"	16'-0"	2'-0"	250T125-30	362T125-33	(2) #10 SMS
362S	6'-6"	10'-0"	3'-0"	362T125-30	362T125-43	(3) #10 SMS
	5'-0"	16'-0"	2'-0"	362T125-33	362T125-43	(3) #10 SMS
400S	7'-0"	10'-0"	3'-0"	400T125-30	362T125-33	(2) #10 SMS
	7'-0"	18'-0"	3'-0"	400T125-43	362T125-43	(3) #10 SMS
600S	6'-6"	10'-0"	3'-0"	600T125-30	362T125-43	(3) #10 SMS
	8'-0"	20'-0"	4'-0"	600T125-43	362T125-43	(4) #10 SMS
800S	10'-0"	10'-0"	6'-0"	800T125-43	362T125-43	(3) #10 SMS
	8'-6"	20'-0"	4'-0"	800T125-43	362T125-54	(5) #10 SMS

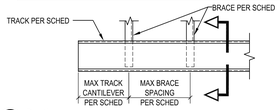

C PLAN

18 NON-BEARING WALL DIAGONAL KICKER

NTS 054000-01-0109

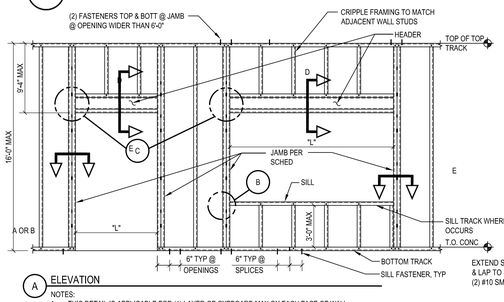

A ELEVATION

NOTES:
1. THIS DETAIL IS APPLICABLE FOR (1) LAYER OF GYPBOARD MAX ON EACH FACE OF WALL.

SCHEDULE							
MAX OPENING WIDTH "L"	CONDITION	MIN SILL TRACK SIZE	MIN HEADER TRACK SIZE	MIN HEADER STUD SIZE	MIN JAMB SIZE		
					SINGLE STUD	WELDED DOUBLE	BUILT-UP
4'-0"	1	T125-27	T250-68	-	S250-54	(2) S125-33	S125-33 & T125-33
8'-0"	2 OR 3	T125-27	T125-33	400S162-43	S350-54	(2) S137-43	S137-43 & T125-43
12'-0"	2 OR 3	T125-43	T125-43	600S162-43	S350-97	(2) S137-54	S137-54 & T125-54

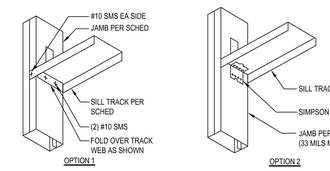

B SILL TRACK CONNECTION

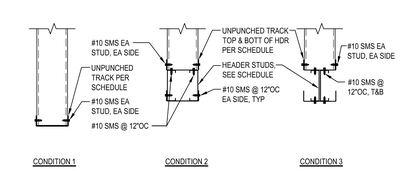

D HEADER

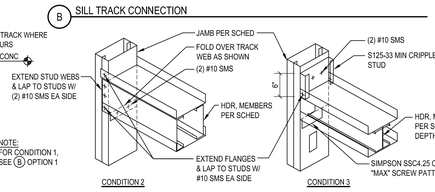

NOTE:
FOR CONDITION 1, SEE (B) OPTION 1

C HEADER CONNECTION

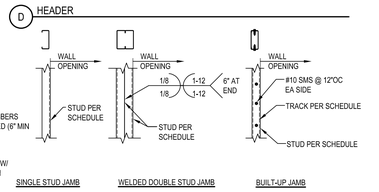

E JAMB

10 INTERIOR NON-BEARING WALL OPENING FRAMING

NTS 054000-01-0100

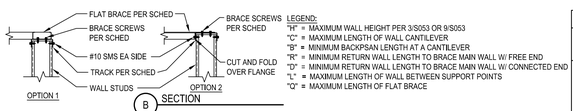

B SECTION

LEGEND:
"H" = MAXIMUM WALL HEIGHT PER 3/S053 OR 9/S053
"C" = MAXIMUM LENGTH OF WALL CANTILEVER
"B" = MINIMUM BACKSPAN LENGTH AT A CANTILEVER
"R" = MINIMUM RETURN WALL LENGTH TO BRACE MAIN WALL W/ FREE END
"D" = MINIMUM RETURN WALL LENGTH TO BRACE MAIN WALL W/ CONNECTED END
"L" = MAXIMUM LENGTH OF WALL BETWEEN SUPPORT POINTS
"Q" = MAXIMUM LENGTH OF FLAT BRACE

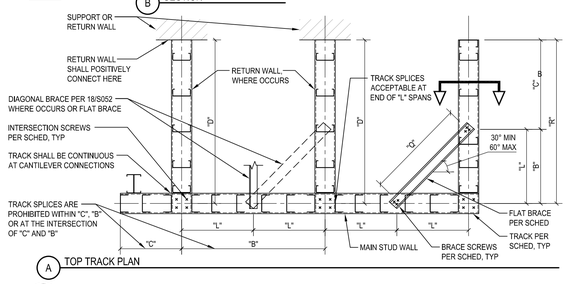

A TOP TRACK PLAN

TOP TRACK SCHEDULE							
MAX WALL HEIGHT "H"	MIN TRACK SECTION	MAX CANTILEVER "C"	MIN BACKSPAN "B"	MAX SPAN "L"	MIN RETURN "R"	MIN RETURN "D"	INTERSECTION SCREWS
6'-0"	250T125-27	4'-3"	8'-6"	8'-6"	10'-9"	6'-3"	(2) #10 SMS
	250T125-33	5'-0"	10'-0"	10'-0"	11'-9"	7'-3"	(2) #10 SMS
	250T125-43	6'-0"	12'-0"	12'-0"	12'-9"	8'-3"	(3) #10 SMS
	362T125-27	5'-3"	10'-6"	10'-6"	12'-0"	7'-6"	(2) #10 SMS
	362T125-33	6'-3"	12'-6"	12'-6"	13'-3"	8'-6"	(3) #10 SMS
	362T125-43	7'-3"	14'-6"	15'-3"	14'-3"	9'-3"	(3) #10 SMS
	400T125-27	5'-6"	11'-0"	11'-3"	12'-3"	7'-9"	(2) #10 SMS
	400T125-33	6'-6"	13'-0"	13'-3"	13'-6"	8'-9"	(3) #10 SMS
	400T125-43	7'-6"	15'-0"	16'-0"	14'-6"	9'-6"	(3) #10 SMS
	600T125-27	7'-0"	14'-0"	14'-3"	14'-0"	9'-3"	(3) #10 SMS
	600T125-33	8'-0"	16'-0"	16'-6"	15'-0"	10'-0"	(3) #10 SMS
	600T125-43	8'-9"	17'-6"	20'-3"	15'-9"	11'-0"	(4) #10 SMS
12'-0"	362T125-27	3'-9"	7'-6"	7'-6"	14'-6"	9'-6"	(3) #10 SMS
	362T125-33	4'-3"	8'-6"	8'-9"	15'-3"	10'-6"	(3) #10 SMS
	362T125-43	5'-3"	10'-6"	10'-9"	17'-0"	12'-0"	(4) #10 SMS
	400T125-27	3'-9"	7'-6"	8'-0"	14'-6"	9'-6"	(3) #10 SMS
	400T125-33	4'-6"	9'-0"	9'-3"	15'-9"	11'-0"	(4) #10 SMS
	400T125-43	5'-6"	11'-0"	11'-3"	17'-6"	12'-6"	(4) #10 SMS
	600T125-27	4'-9"	9'-6"	10'-0"	16'-3"	11'-3"	(4) #10 SMS
	600T125-33	5'-9"	11'-6"	11'-9"	17'-9"	12'-9"	(5) #10 SMS
	600T125-43	7'-0"	14'-0"	14'-3"	19'-9"	14'-6"	(5) #10 SMS

FLAT BRACE SCHEDULE				
MAX WALL HEIGHT "H"	MAX SPAN "L"	BRACE SCREWS	MAX BRACE SPAN "Q"	MIN BRACE SIZE
6'-0"	10'-0"	(4) #10 SMS	9'-6"	250S125-30
			16'-0"	362S162-33
			20'-0"	362S200-43
	15'-0"	(5) #10 SMS	10'-0"	362S137-33
			20'-0"	400S200-43
			30'-0"	600S250-54
	20'-3"	(7) #10 SMS	9'-6"	362S162-33
			20'-0"	600S200-54
			30'-0"	600S250-68
12'-0"	8'-0"	(5) #10 SMS	9'-6"	362S137-33
			12'-6"	400S162-33
			16'-0"	400S200-43
	11'-0"	(7) #10 SMS	10'-0"	362S162-43
			16'-0"	362S200-54
			22'-0"	600S250-43
	14'-3"	(9) #10 SMS	10'-0"	362S162-43
			16'-0"	400S200-54
			26'-0"	600S250-68

NOTES:
1. THIS DETAIL IS APPLICABLE FOR THE CONDITIONS SHOWN WITH GYPBOARD APPLIED TO ONE OR BOTH SIDES AND TOP TRACKS AT EQUAL ELEVATIONS.

19 FREE STANDING WALLS

NTS 054000-02-0114

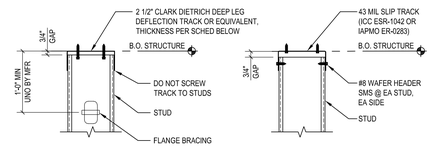

A DEEP LEG DEFLECTION TRACK OPTION
B SLIP TRACK OPTION

TRACK THICKNESS	MAX WALL HEIGHT "H"
33 MILS	15'-0"
43 MILS	24'-6"

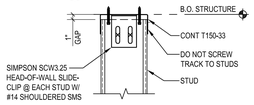

C SLIP CLIP OPTION

NOTES:
1. GAP TO BE MEASURED AFTER CONCRETE IS CAST ON DECK, WHERE OCCURS.
2. SCREWS SHALL BE CENTERED VERTICALLY IN SLOTS.
3. PROVIDE A 3/4" GAP BETWEEN THE STRUCTURE ABOVE AND THE TOP OF GYPBOARD, WHERE OCCURS.

7 DEFLECTION TRACK ASSEMBLY

NTS 054000-01-0105

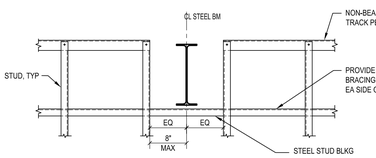

A PERPENDICULAR TO BEAM

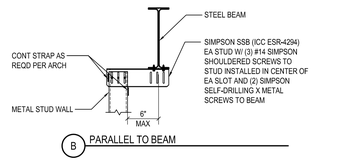

B PARALLEL TO BEAM

3 TOP OF WALL AT STEEL BEAM

NTS 054000-02-0116

MAX HEIGHT ("H") OF INTERIOR COMPOSITE STUDS SCHEDULE					
COMPOSITE WALL STUDS @ 16"OC					
STUD THK	STUD SIZE				
	162S125	250S125	362S125	400S125	600S125
33 MILS	-	14'-5"	17'-5"	18'-3"	25'-6"
30 MILS	10'-9"	14'-3"	16'-7"	17'-8"	24'-7"
27 MILS	10'-7"	13'-11"	16'-6"	17'-8"	24'-4"
18 MILS	10'-1"	12'-10"	15'-2"	15'-11"	20'-1"
COMPOSITE WALL STUDS @ 24"OC					
STUD THK	STUD SIZE				
	162S125	250S125	362S125	400S125	600S125
33 MILS	-	12'-7"	15'-3"	15'-11"	22'-3"
30 MILS	9'-4"	12'-5"	14'-6"	15'-5"	21'-6"
27 MILS	9'-1"	12'-2"	14'-5"	15'-5"	21'-3"
18 MILS	8'-9"	11'-3"	13'-2"	13'-8"	16'-4"

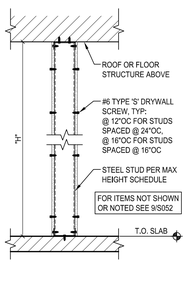

NOTES:
1. THIS SCHEDULE IS APPLICABLE FOR L/240 MAX DEFLECTION CRITERIA.
2. STUDS SUPPORTING EQUIPMENT OR CASEWORK WEIGHING 40 LBS OR MORE SHALL BE 362S125 MIN & 54 MILS THICK MIN.

- NON-BEARING COMPOSITE STUD WALLS

NTS 054000-02-0117

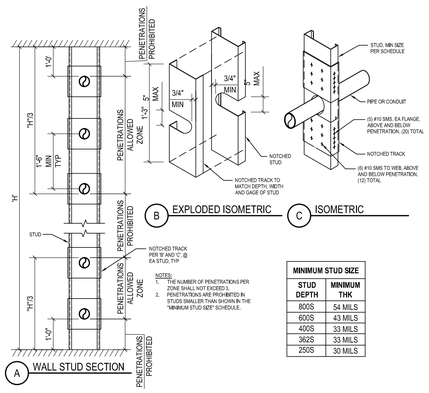

A WALL STUD SECTION
B EXPLODED ISOMETRIC
C ISOMETRIC

MINIMUM STUD SIZE	
STUD DEPTH	MINIMUM THK
800S	54 MILS
600S	43 MILS
400S	33 MILS
362S	33 MILS
250S	30 MILS

16 PENETRATION THROUGH STUDS

NTS 054000-02-0104

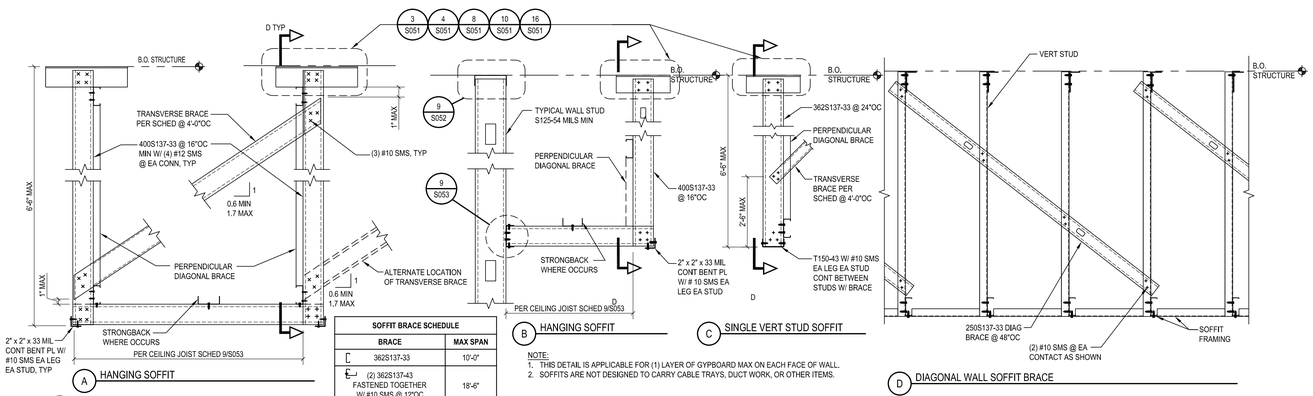

A HANGING SOFFIT
B HANGING SOFFIT
C SINGLE VERT STUD SOFFIT
D DIAGONAL WALL SOFFIT BRACE

SOFFIT BRACE SCHEDULE	
BRACE	MAX SPAN
362S137-33	10'-0"
(2) 362S137-43 FASTENED TOGETHER W/ #10 SMS @ 12"OC	18'-6"

NOTE:
1. THIS DETAIL IS APPLICABLE FOR (1) LAYER OF GYPBOARD MAX ON EACH FACE OF WALL.
2. SOFFITS ARE NOT DESIGNED TO CARRY CABLE TRAYS, DUCT WORK, OR OTHER ITEMS.

12 SOFFIT FRAMING

NTS 054000-02-0115

PBK
RANCHO CUCAMONGA
8163 ROCHESTER AVENUE, SUITE 100
RANCHO CUCAMONGA, CA 91730
909-987-0909 P

ONTARIO FIRE DEPARTMENT ADMINISTRATION BUILDING
CITY OF ONTARIO
1420 E. FRANCIS STREET., ONTARIO, CA

LICENSED ARCHITECT — KELLEY NEEDHAM C-19064 — Ex.Date 03/31/25 — STATE OF CALIFORNIA
REGISTERED PROFESSIONAL ENGINEER — Rick Dorf No. S3450 — Exp. 3/31/24 — STRUCTURAL — STATE OF CALIFORNIA

CONSULTANT

miyamoto.
1047 West Sixth Street, Suite A
Ontario, CA 91762
T: (833) 2-TO-MIMS
miyamotointernational.com
MI2280306.00

NO	DATE	BY	DESCRIPTION

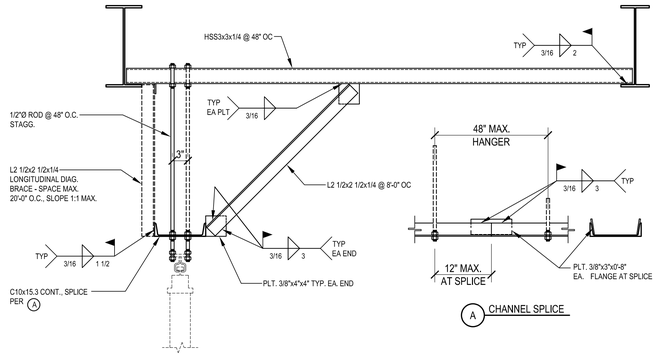

A CHANNEL SPLICE

17 FOLDING PARTITION DETAIL

NTS

054300-0004

MAX CEILING JOIST SPAN SCHEDULE									
16" SPACING									
STUD THK	MEMBER SIZE								
	NO STRONGBACK						WITH STRONGBACK		
	087F125	150F125	362F125	362S137	400S137	600S137	362S137	400S137	600S137
43 MILS	5'-5"	8'-4"	10'-5"	11'-7"	12'-0"	13'-5"	16'-7"	14'-8"	19'-3"
33 MILS	5'-1"	7'-8"	9'-5"	10'-7"	10'-11"	12'-5"	15'-2"	15'-1"	17'-10"
30 MILS	4'-11"	7'-5"	9'-1"	10'-3"	10'-7"	12'-0"	14'-8"	15'-7"	17'-3"
27 MILS	4'-9"	7'-3"	8'-10"	9'-11"	10'-3"	11'-9"	14'-3"	17'-0"	16'-9"
24" SPACING									
STUD THK	NO STRONGBACK						WITH STRONGBACK		
	087F125	150F125	362F125	362S137	400S137	600S137	362S137	400S137	600S137
43 MILS	4'-9"	7'-3"	9'-2"	10'-4"	10'-9"	12'-0"	14'-9"	15'-2"	17'-4"
33 MILS	4'-5"	6'-9"	8'-4"	9'-6"	9'-10"	11'-2"	13'-6"	13'-11"	16'-0"
30 MILS	4'-3"	6'-6"	8'-1"	9'-2"	9'-6"	10'-10"	13'-0"	13'-5"	15'-6"
27 MILS	4'-2"	6'-4"	7'-9"	8'-11"	9'-2"	10'-6"	12'-6"	13'-0"	15'-0"

NOTE:
THIS SCHEDULE IS APPLICABLE FOR (1) LAYER OF GYPBOARD PER ARCH (6 PSF MAX) AND L/240 MAX DEFLECTION CRITERIA.

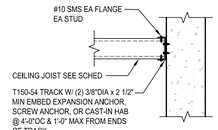

A AT CONCRETE/CMU WALL

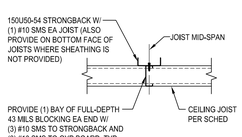

C STRONGBACK

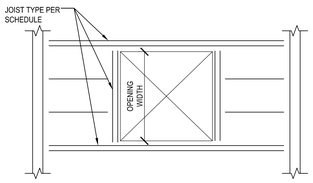

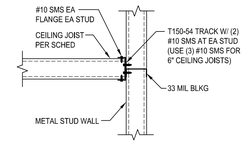

B AT STUD WALL

D DOUBLE JOIST

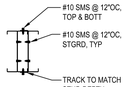

E TRIPLE JOIST

OPENING SUPPORT SCHEDULE		
OPENING WIDTH	JOIST TYPE	CONNECTION TYPE
16" MAX	SINGLE JOIST	(1) SIMPSON L50
32" MAX	DOUBLE JOIST	(1) SIMPSON L50
48" MAX	TRIPLE JOIST	(2) SIMPSON L50

F TYPICAL OPENING FRAMING PLAN

9 INTERIOR CEILING JOIST SCHEDULE & DETAILS

NTS

054000-02-0118

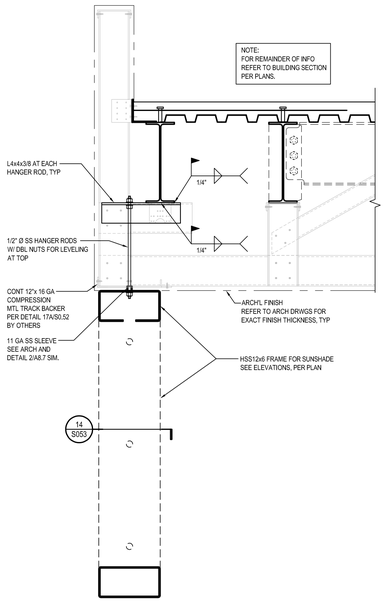

19 HORIZ SUNSHADE SUPPORT SECTION

NTS

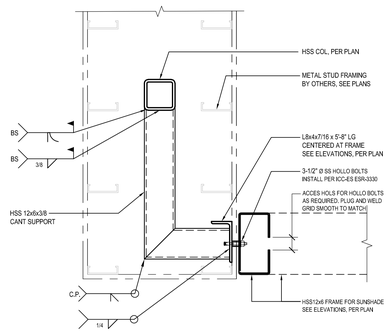

14 HORIZ SUNSHADE SUPPORT DETAIL

NTS

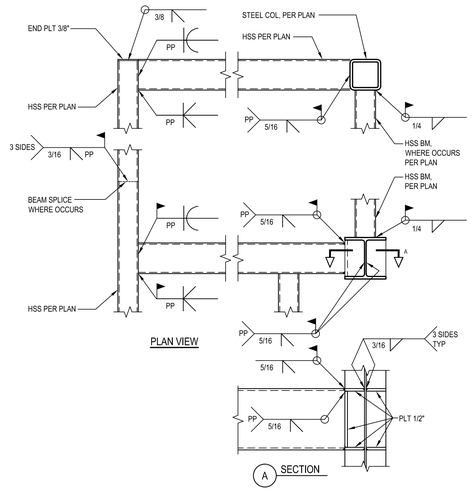

10 HSS CANOPY CONNECTIONS

NTS

051200_01-0108

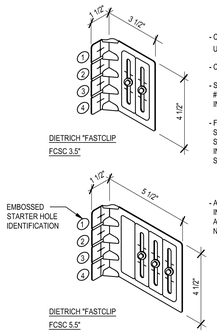

- CLIP IS A DIETRICH "UNICLIP" UNIVERSAL FRAMING
- CLIP IS 14 GA MATERIAL (50ksi)
- SCREWS TO METAL STUDS SHALL BE #14 DIETRICH DEFLECTION SCREWS, INSTALLED IN THE CENTER OF EACH SLOT
- FASTENERS TO STRUCTURALSTEEL SHALL BE TWO BUILDEX 12-124 TEK 5 SELF TAPPING SCREWS PERMISSIBLE INSTALLATION PATTERN IS AT EMBOSSED STARTER HOLE LOCATIONS 1, 4 / 1, 3
- ALTERNATE PATTERNS FOR INSTALLATION OF THE TWO FASTENERS AT EMBOSSED STARTER HOLES ARE NOT PERMISSIBLE

6 TYP - DEFLECTION CLIP DETAIL

NTS

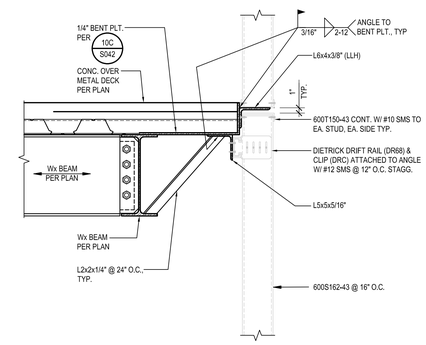

2 TYP - DRIFT JOINT AT FLOOR

NTS

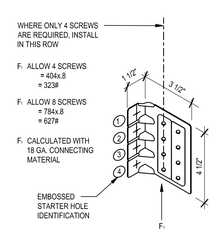

- CLIP IS A DIETRICH "UNI-CLIP UNIVERSAL FRAMING CLIP.
- CLIP IS 14 GA MATERIAL (50 ksi)
- SCREWS TO METAL STUDS SHALL BE BUILDEX #10-16 SELF DRILLING SCREWS. USE 4 SCREWS ONLY TYP. U.N.O. ON SECTIONS
- FASTENERS TO STRUCTURAL STEEL SHALL BE TWO BUILDEX 12-24 TEK 5 SELF TAPPING SCREWS. PERMISSIBLE INSTALLATION PATTERN IS AT EMBOSSED STARTER HOLE LOCATIONS 1, 4
- ALTERNATE PATTERNS FOR INSTALLATION OF THE TWO FASTENERS AT EMBOSSED STARTER HOLES ARE NOT PERMISSIBLE.

7 TYP - CLIP ANGLE DETAIL

NTS

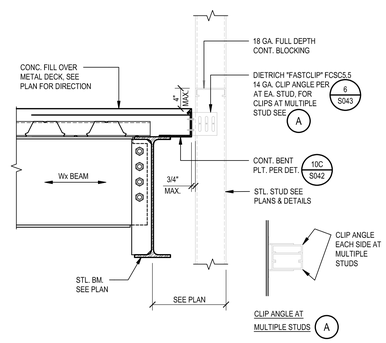

3 TYP - DELECTION CLIP ATTACHMENT AT FLOOR

NTS

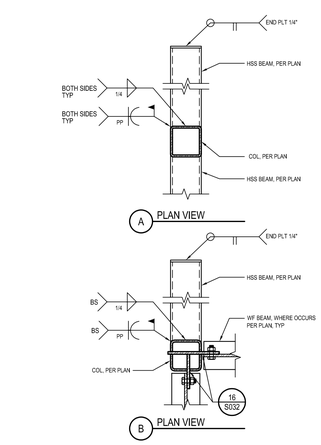

20 CANTILEVER HSS BEAM DETAIL

NTS

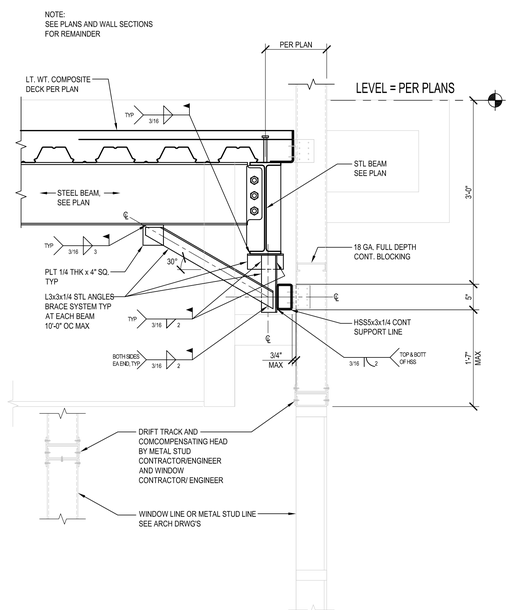

16 TYP WALL BRACE DETAIL

NTS

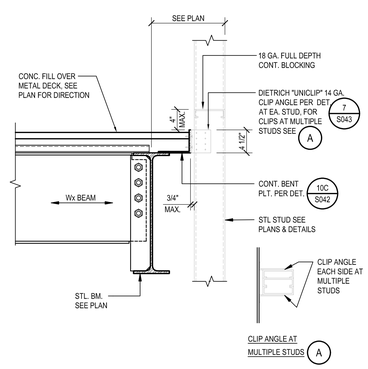

8 TYP - RIGID CLIP ATTACHMENT AT ROOF

NTS

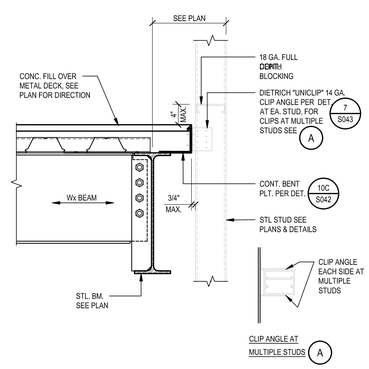

4 TYP - RIGID CLIP ATTACHMENT AT FLOOR

NTS

PBK
RANCHO CUCAMONGA
8163 ROCHESTER AVENUE, SUITE 100
RANCHO CUCAMONGA, CA 91730
909-987-0909 P

ONTARIO FIRE DEPARTMENT ADMINISTRATION BUILDING

CITY OF ONTARIO

1420 E. FRANCIS STREET., ONTARIO, CA

LICENSED ARCHITECT — KELLEY NEEDHAM C-19064 Ex.Date 03/31/25 — STATE OF CALIFORNIA

REGISTERED PROFESSIONAL ENGINEER — Rick W. Byrd No. 53360 Exp. 3/31/24 — STRUCTURAL — STATE OF CALIFORNIA

CONSULTANT

miyamoto.
1047 West Sixth Street, Suite A
Ontario, CA 91762
M22208036.00
T: (833) 270-8848
miyamotointernational@gmail.com

NO	DATE	BY	DESCRIPTION
1			REVISIONS

DRAWN: AR	CHECKED: RB
DATE: 02/16/2024	SCALE: AS NOTED
PROJECT NUMBER: 2011700	

TYPICAL COLD-FORMED STEEL DETAILS

DRAWING NUMBER: S053

BID SET 03/01/24

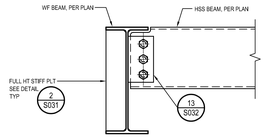

5 HSS BEAM TO WF BEAM CONNECTION
NTS

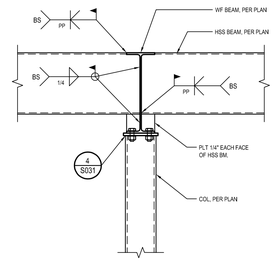

1 CANTILEVER HSS BEAM TO WF BEAM AT COL
NTS

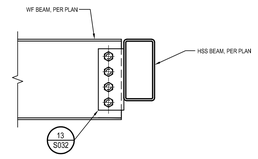

2 WF BEAM TO HSS BEAM CONNECTION
NTS

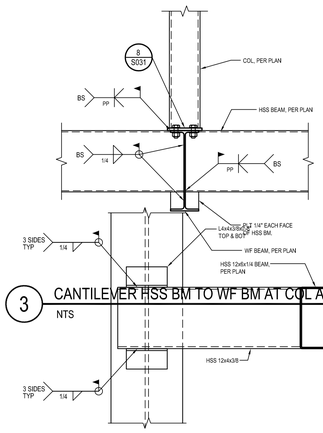

3 CANTILEVER HSS BM TO WF BM AT COL ABV
NTS

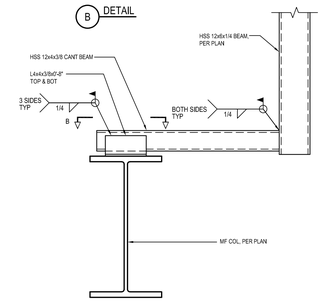

B DETAIL

A PLAN VIEW

4 CANTILEVER HSS BM OFF FACE MF COL
1"=1'-0"

RANCHO CUCAMONGA
8163 ROCHESTER AVENUE, SUITE 100
RANCHO CUCAMONGA, CA 91730
909-987-0909 P

ONTARIO FIRE DEPARTMENT ADMINISTRATION BUILDING

CITY OF ONTARIO

1420 E. FRANCIS STREET., ONTARIO, CA

LICENSED ARCHITECT
KELLEY NEEDHAM
C-19064
In.Dir. 03/31/25
STATE OF CALIFORNIA

REGISTERED PROFESSIONAL ENGINEER
Rick Dorf
No. S3450
Exp. 3/31/24
STRUCTURAL
STATE OF CALIFORNIA

CONSULTANT

miyamoto.
1047 West Sixth Street, Suite A
Ontario, CA 91762
M022280036.00
T: (833) 2/10-6846
miyamotointernational.com

NO	DATE	BY	DESCRIPTION

REVISIONS

DRAWN: AR	CHECKED: RB
DATE: 02/16/2024	SCALE: AS NOTED
PROJECT NUMBER: 2011700	

TYPICAL AND MISC. STEEL DETAILS

DRAWING NUMBER: S054

BID SET 03/01/24

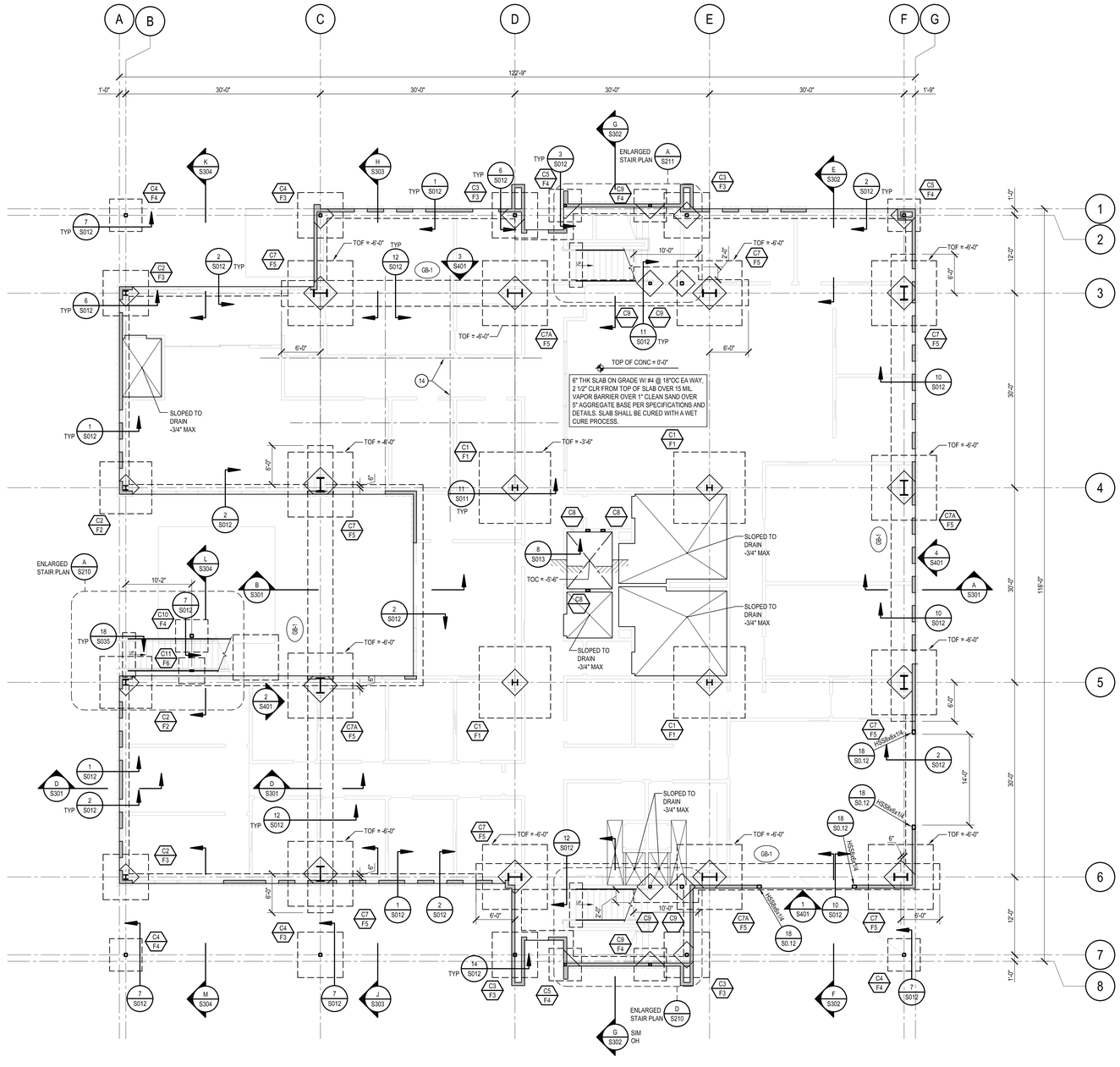

A FOUNDATION PLAN

1/8" = 1'-0"

north

NOTES:

1. ELEVATION OF FINISH FLOOR = SEE CIVIL (DATUM ELEV. = +0'-0").
2. TOP OF FOOTING SHALL BE = -1'-0" TYP. (UNO)
3. GENERAL CONTRACTOR TO LOCATE AND VERIFY ALL PANEL TO FOUNDATION CONNECTIONS WITH PANEL ELEVATION DRAWINGS PRIOR TO POURING ANY FOUNDATION CONCRETE.
4. SEE ARCHITECTURAL, ELECTRICAL, PLUMBING, MECHANICAL DRAWINGS FOR SIZE AND LOCATION OF SLAB DEPRESSION AND OPENINGS REQUIRED FOR DUCTS, PIPE SLEEVES, ELECTRICAL CONDUITS AND OTHER EMBEDDED IN CONCRETE, UNLESS NOTED OTHERWISE.
5. VERIFY ALL DIMENSIONS SHOWN WITH ARCHITECTURAL DRAWINGS. REPORT ANY DISCREPANCY ON DIMENSIONS TO THE PROJECT ENGINEER OR ARCHITECT IN CHARGE BEFORE START OF CONSTRUCTION.
6. CONTRACTOR SHALL USE A LASER SCREED FOR THE SLAB ON GRADE.
7. CONCRETE SLAB ON GRADE IS DESIGNED AS A STRUCTURAL SLAB, ANY FUTURE SAW CUTS HAVE TO BE APPROVED BY THE ENGINEER OF RECORD.
8. ARCHITECT TO REVIEW AND APPROVE REVEALS PRIOR TO POURING.
9. CONTRACTOR SHALL BE RESPONSIBLE FOR THE PROTECTION OF THE CONCRETE SLAB ON GRADE DURING THE CONSTRUCTION AND ERECTION OF THE PANELS.
10. VERIFY ALL FLOOR ELEVATIONS SHOWN WITH ARCHITECTURAL DRAWINGS. REPORT ANY DISCREPANCY TO THE PROJECT ENGINEER OR ARCHITECT IN CHARGE BEFORE START OF CONSTRUCTION.
11. FOR STEPPED FOOTING LOCATIONS SEE ELEVATIONS.
12. FOR GENERAL NOTES SEE SHEETS S001 & S002 AND REFER TO DETAIL SHEETS FOR TYPICAL DETAILS.
13. CONTRACTOR SHALL VERIFY ALL DIMENSIONS WITH THE LATEST ARCHITECTURAL AND STRUCTURAL DRAWINGS BEFORE FORMING OF PRECAST CONCRETE PANELS.
14. CONCRETE CONSTRUCTION JOINTS (CJ) AND SAW CUT WEAKENED PLANE JOINTS (SC) SHALL BE LOCATED IN COORDINATION WITH THE ARCHITECT. SPACING SHALL NOT EXCEED THE CRITERIA PER DETAIL 8/S011. SLAB ON GRADE IS EXPOSED. CONTRACTOR TO COORDINATE JOINTS WELL IN ADVANCE OF CONCRETE PLACEMENT. CURING AND CRACK CONTROL IS CRITICAL TO SLAB APPEARANCE.

LEGEND:

- C# / F# — INDICATES COLUMN / POST TYPE PER SCHEDULE ON THIS SHEET. / INDICATES PAD FOOTING TYPE PER SCHEDULE ON THIS SHEET.
- INDICATES CHANGE IN ELEVATION.
- TOF -X'-X" — INDICATES TOP OF FOOTING (TOF) ELEVATION.
- S —— S — INDICATES STEP IN FOUNDATION. SEE DETAIL 6/S011 CONTRACTOR TO VERIFY LOCATION & EXTENT OF STEPPED FOUNDATIONS.
- GB-# — INDICATES GRADE BEAM TYP PER SCHEDULE ON SHEET S201

COLUMN SCHEDULE

MARK	SIZE: SECOND FLOOR	SIZE: THIRD FLOOR	SIZE: ROOF FLOOR	BASE PLATE SIZE 'T' x 'D' x 'B'	REMARKS
C1	W10x49	W10x49	W10x49	1-1/4"x16"x16"	4-3/4"DIA x 12" MIN LONG A.B. SEE 15/S032
C2	W8x35	W8x35	-	1"x15"x15"	4-3/4"DIA x 12" MIN LONG A.B. SEE 15/S032
C3	HSS6x6x1/2	HSS6x6x1/2	HSS6x6x1/2	1"x12"x12"	4-3/4"DIA x 12" MIN LONG A.B. SEE 15/S032
C4	HSS6x6x1/2	HSS6x6x1/2	-	3/4"x12"x12"	4-3/4"DIA x 12" MIN LONG A.B. SEE 15/S032
C5	HSS6x6x1/2	-	-	1/2"x12"x12"	4-3/4"DIA x 12" MIN LONG A.B. SEE 15/S032
C7	W27x146	W27x146	W27x146	SEE 17/S011	MF COL SEE 17/S011
C7A	W27x161	W27x161	W27x161	SEE 17/S011	MF COL SEE 17/S011
C8	HSS8x4x1/2	HSS8x4x1/2	HSS8x4x1/2	1"x15"x15"	4-3/4"DIA x 12" MIN LONG A.B. SEE 15/S032
C9	HSS5x5x1/2	HSS5x5x1/2	HSS5x5x1/2	1"x12"x12"	4-3/4"DIA x 12" MIN LONG A.B. SEE 15/S032
C10	HSS8x8x1/2	HSS8x8x1/2	HSS8x8x1/2	1"x15"x15"	4-3/4"DIA x 12" MIN LONG A.B. SEE 15/S032
C11	HSS8x3x3/8			1/2"x15"x15"	4-3/4"DIA x 12" MIN LONG A.B. SEE 15/S032

FOUNDATION SCHEDULE

MARK	SIZE	REINFORCEMENT	REMARKS
F1	11'-0"x11'-0"x24" THK	(13) #6 EA WAY BOTT	
F2	8'-0"x8'-0"x18" THK	(8) #6 EA WAY BOTT	
F3	7'-0"x7'-0"x18" THK	(9) #5 EA WAY BOTT	
F4	5'-0"x5'-0"x18" THK	(8) #5 EA WAY BOTT	
F5	10'-0"x10'-0"x36" THK	(10) #9 EA WAY TOP & BOTT	15/S031
F6	4'-0"x4'-0"x18" THK	(7) #5 EA WAY BOTT	
F7	2'-0"x2'-0"x12" THK	(3) #4 EA WAY BOTT	

GRADE BEAM SCHEDULE

MARK	SIZE: WIDTH	SIZE: DEPTH	REINFORCEMENT: HORIZONTAL TOP	REINFORCEMENT: HORIZONTAL BOTTOM	REINFORCEMENT: TIES
GB-1	4'-0"	4'-6"	(9) #9	(9) #9	#4 TIES @ 4" O.C.

NOTE:-
SEE 13/S015 FOR REINFORCEMENT DETAILS

GEOTECHNICAL ENGINEER OF RECORD

THIS PLAN HAS BEEN REVIEWED BY THE UNDERSIGNED AND IS IN GENERAL CONFORMANCE WITH THE RECOMMENDATIONS CONTAINED IN KLEINFELDER'S GEOTECHNICAL PROJECT DOCUMENT DATED AUGUST 25, 2022. WE MAKE NO REPRESENTATION TO THE ACCURACY OF DIMENSION, MEASUREMENTS, CALCULATIONS, OR ANY PORTION OF THE DESIGN.

KLEINFELDER — PREPARED BY (COMPANY NAME)

AUGUST 25, 2022 — DATE OF REPORT
PROJECT NO. 20230123.003A

REGISTERED PROFESSIONAL ENGINEER JEFFREY D. WALLER NO. 2947 EXP. 9-30-24 GEOTECHNICAL STATE OF CALIFORNIA

JEFF WALLER, PE, GE
RCE NO. 73042, RGE NO. 2947

PBK
RANCHO CUCAMONGA
8163 ROCHESTER AVENUE, SUITE 100
RANCHO CUCAMONGA, CA 91730
909-987-0909 P

ONTARIO FIRE DEPARTMENT ADMINISTRATION BUILDING

CITY OF ONTARIO
1420 E. FRANCIS STREET., ONTARIO, CA

LICENSED ARCHITECT — KELLEY NEEDHAM C-19064 Exp. 03/31/25 — STATE OF CALIFORNIA

REGISTERED PROFESSIONAL ENGINEER — RICK NGUYEN No. S3060 Exp. 3/31/24 — STRUCTURAL — STATE OF CALIFORNIA

CONSULTANT

miyamoto.
10401 West Sixth Street, Suite A
Ontario, CA 91762
M022260036.00
T.: (833) 270-6846
miyamotointernational.com

NO	DATE	BY	DESCRIPTION

REVISIONS

DRAWN: AR	CHECKED: RB
DATE: 02/16/2024	SCALE: AS NOTED
PROJECT NUMBER: 2011700	

FOUNDATION PLAN

DRAWING NUMBER: S201

BID SET 03/01/24

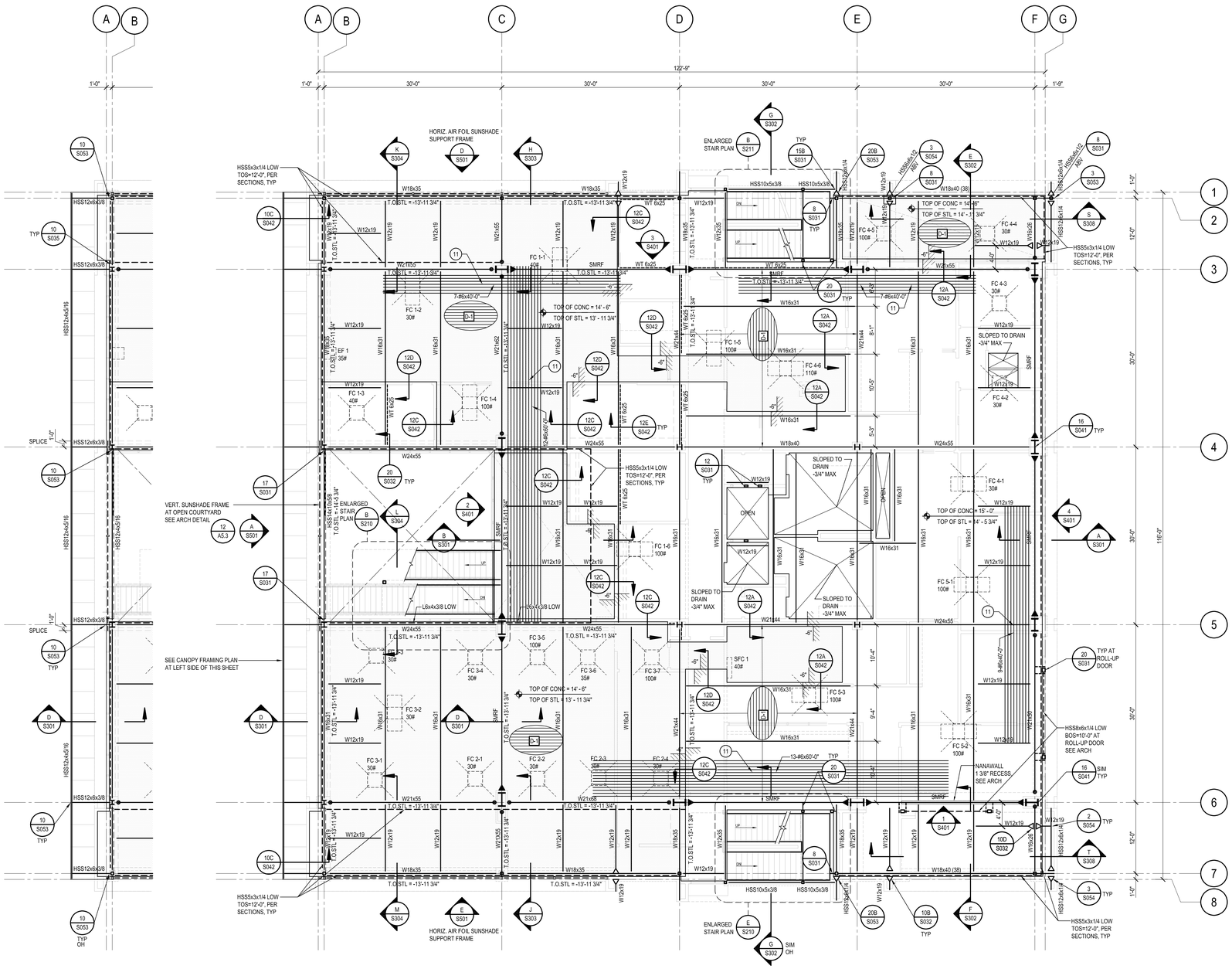

CANOPY FRAMING PLAN

1/8" = 1'-0"

A SECOND FLOOR FRAMING PLAN

1/8" = 1'-0"

NOTES:
1. SEE S001 AND S002 FOR GENERAL NOTES.
2. SEE S011 THROUGH S053 FOR TYPICAL DETAILS.
3. FINISH FLOOR ELEVATION (VERIFY WITH ARCHITECTURAL DRAWINGS) TOP OF STEEL = 14'-5 3/4". GENERAL CONTRACTOR SHALL VERIFY ALL ROOF ELEVATIONS WITH ARCHITECTURAL DRAWINGS AND NOTIFY THE ARCHITECT AND OR ENGINEER IF ANY DEISCREPANCIES ARISES PRIOR TO CONSTRUCTION.
4. SEE ARCHITECTURAL, PLUMBING, MECHANICAL AND ELECTRICAL FOR LOCATION OF EQUIPMENT. CONTRACTOR TO VERIFY ALL UNIT LOCATIONS, SIZES AND OPENINGS.
5. ALL BEAMS SHALL BE EQUALLY SPACED BETWEEN COLUMNS/GIRDERS UNLESS NOTED OTHERWISE.
6. SEE ARCHITECTURAL FOR SLOPING AND ELEVATION OF SLABS, DEPRESSIONS, OPENINGS, RAMPS, ETC.
7. SEE SMRF AND BRBF FRAME ELEVATIONS FOR COLUMN AND BEAM SIZES NOT SHOWN.
8. STEEL BEAMS AT METAL DECK WITH CONCRETE TOPPING ARE COMPOSITE WITH WELDED STUDS UNO. SEE 13/S042 FOR STUD SIZE AND SPACING.
9. SEE ARCHITECTURAL DRAWINGS FOR E.O.DECK DIMENSION.
10. FOR MECHANICAL UNIT FRAMING (# DENOTES MECH'L UNIT WEIGHT) SEE DETAIL 13/S042 FC
11. REINFORCING STEEL @6" O.C. AND SHALL BE PLACED AT THE CENTER OF THE CONCRETE MEASURED FROM THE TOP OF SLAB TO THE TOP OF THE FLUTE. THE REINFORCEMENT BAR LENGTH IS CETERED AT COLUMN GRID.

LEGEND:

- INDICATES DURAFUSE MOMENT FRAME CONNECTION
- INDICATES MOMENT CONNECTION PER DETAIL 10/S032
- INDICATES BOTTOM FLANGE BRACE PER DETAIL 7/S032
- INDICATES DRAG BEAM CONNECTION PER DETAIL 8/S-032
- (##) INDICATES NUMBER OF NELSON STUD ANCHORS, FOR ADDITIONAL INFORMATION SEE DETAIL 13/S042
- C=3/4" INDICATES TOTAL UPWARD CAMBER AT MIDSPAN OF MEMBER
- SMRF INDICATES "SPECIAL MOMENT RESISTING FRAME"
- DF INDICATES SPAN AND TYPE OF FILLED DECK. DECK SPAN INDICATED SHALL BE TYPICAL UNLESS NOTED OTHERWISE. DECK SHALL SPAN OVER 2 SPANS MINIMUM (3 SUPPORTS). SEE METAL DECK NOTES ON SHEET.
- INDICATES CHANGE IN ELEVATION
- INDICATES DECK OPENING
- INDICATES SLAB DEPRESSION PER PLAN
- INDICATES FAN COIL UNIT, SEE MECHANICAL DRAWINGS AND SEE SHEET S044 FOR SUPPORT DETAILS

METAL DECK SCHEDULE

METAL DECK (ICC ESR-2079P)								CONC OVER DECK[1,2]	
DECK TYPE	DEPTH (IN)	TYPE	GAGE	I (IN^4/FT)	S_{TOP} (IN^3/FT)	S_{BOT} (IN^3/FT)	TOTAL DEPTH	CONC TYPE	REINF[1,2]
D-1	3"	W	18	1.213	0.752	0.768	6 1/4"	LWC	#3 @ 12"OC
D-2	1.5"	B FORMLOK	16	0.381	0.399	0.410	4"	LWC	#3 @ 12"OC

METHOD OF DECK CONNECTIONS[1]			
DECK TYPE	ENDS AND INTERMEDIATE SUPPORTS	LONGITUDINAL SUPPORTS AND MEMBERS PARALLEL TO FLUTES	SIDE SEAMS
D-1	36/7 WELD PATTERN AT SUPPORT SIDELAP CONNECTION WITH PUNCHLOK II TOOL	3/4" ARC SPOT WELD CONNECTION TO SUPPORT	BUTTON PUNCH @ 36" OC
D-2	36/7 WELD PATTERN AT SUPPORT SIDELAP CONNECTION WITH PUNCHLOK II TOOL	3/4" ARC SPOT WELD CONNECTION TO SUPPORT	VCS @ 8" OC

NOTES:
1. PLACE REINFORCEMENT 1" CLEAR FROM TOP OF CONCRETE.
2. PLACE WELDED WIRE FABRIC AT MID-DEPTH OF CONCRETE FILL OVER METAL DECK.
3. SEE "WELDED HEADED STUDS" DETAIL FOR SIZE AND SPACING.
4. WHEN TWO DECK PANELS ABUT, EACH PANEL SHALL BE ATTACHED AS SPECIFIED.
5. HEADED STUDS MAY BE USED IN LIEU OF PUDDLE WELDS.

PBK
RANCHO CUCAMONGA
8163 ROCHESTER AVENUE, SUITE 100
RANCHO CUCAMONGA, CA 91730
909-987-0909 P

ONTARIO FIRE DEPARTMENT ADMINISTRATION BUILDING

CITY OF ONTARIO

1420 E. FRANCIS STREET., ONTARIO, CA

LICENSED ARCHITECT — KELLEY NEEDHAM C-19064 Exp. 03/31/25 — STATE OF CALIFORNIA

REGISTERED PROFESSIONAL ENGINEER — Rob Wright No. S3350 Exp. 3/31/24 — STRUCTURAL — STATE OF CALIFORNIA

CONSULTANT

miyamoto.
10411 West Sixth Street, Suite A
Ontario, CA, 91762
MI22090306.00
T: (833) 270-0849
miyamotointernational.com

NO	DATE	BY	DESCRIPTION

REVISIONS

DRAWN: AR	CHECKED: RB
DATE: 02/16/2024	SCALE: AS NOTED
PROJECT NUMBER: 2011700	

SECOND FLOOR FRAMING PLAN

DRAWING NUMBER: S202

BID SET 03/01/24

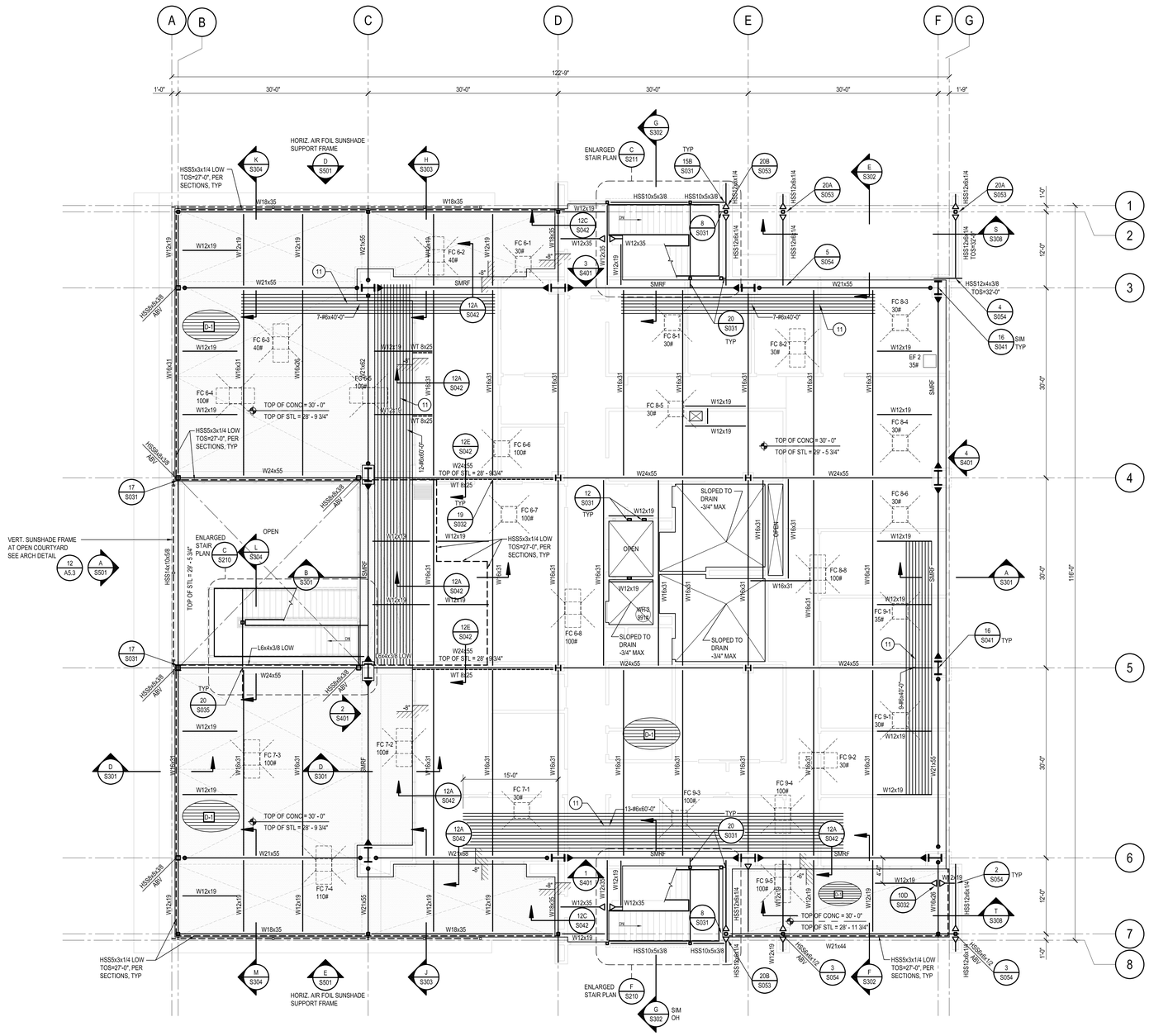

A THIRD FLOOR FRAMING PLAN

1/8" = 1'-0"

NOTES:
1. SEE S001 AND S002 FOR GENERAL NOTES.
2. SEE S011 THROUGH S053 FOR TYPICAL DETAILS.
3. FINISH FLOOR ELEVATION (VERIFY WITH ARCHITECTURAL DRAWINGS) TOP OF STEEL = 29'-5 3/4". GENERAL CONTRACTOR SHALL VERIFY ALL ROOF ELEVATIONS WITH ARCHITECTURAL DRAWINGS AND NOTIFY THE ARCHITECT AND OR ENGINEER IF ANY DISCREPANCIES ARISES PRIOR TO CONSTRUCTION.
4. SEE ARCHITECTURAL, PLUMBING, MECHANICAL AND ELECTRICAL FOR LOCATION OF EQUIPMENT. CONTRACTOR TO VERIFY ALL UNIT LOCATIONS, SIZES AND OPENINGS.
5. ALL BEAMS SHALL BE EQUALLY SPACED BETWEEN COLUMNS/GIRDERS UNLESS NOTED OTHERWISE.
6. SEE ARCHITECTURAL FOR SLOPING AND ELEVATION OF SLABS, DEPRESSIONS, OPENINGS, RAMPS, ETC.
7. SEE SMRF AND BRBF FRAME ELEVATIONS FOR COLUMN AND BEAM SIZES NOT SHOWN.
8. STEEL BEAMS AT METAL DECK WITH CONCRETE TOPPING ARE COMPOSITE WITH WELDED STUDS UNO. SEE 13/S042 FOR STUD SIZE AND SPACING.
9. SEE ARCHITECTURAL DRAWINGS FOR E.O.DECK DIMENSION.
10. FOR MECHANICAL UNIT FRAMING (# DENOTES MECH'L UNIT WEIGHT) SEE DETAIL 13/S042 FC
11. REINFORCING STEEL @6" O.C. AND SHALL BE PLACED AT THE CENTER OF THE CONCRETE MEASURED FROM THE TOP OF SLAB TO THE TOP OF THE FLUTE. THE REINFORCEMENT BAR LENGTH IS CETERED AT COLUMN GRID.

LEGEND:

- INDICATES DURAFUSE MOMENT FRAME CONNECTION
- INDICATES MOMENT CONNECTION PER DETAIL 10/S032
- INDICATES BOTTOM FLANGE BRACE PER DETAIL 7/S032
- INDICATES DRAG BEAM CONNECTION PER DETAIL 8/S-032
- (##) INDICATES NUMBER OF NELSON STUD ANCHORS, FOR ADDITIONAL INFORMATION SEE DETAIL 13/S042
- C=3/4" INDICATES TOTAL UPWARD CAMBER AT MIDSPAN OF MEMBER
- SMRF INDICATES "SPECIAL MOMENT RESISTING FRAME"
- D# INDICATES SPAN AND TYPE OF FILLED DECK. DECK SPAN INDICATED SHALL BE TYPICAL UNLESS NOTED OTHERWISE. DECK SHALL SPAN OVER 2 SPANS MINIMUM (3 SUPPORTS). SEE METAL DECK NOTES ON SHEET.
- INDICATES CHANGE IN ELEVATION
- INDICATES DECK OPENING
- INDICATES SLAB DEPRESSION PER PLAN METAL DECK AT EXTERIOR CONCRETE ON METAL DECK SHALL BE VENTED
- INDICATES FAN COIL UNIT. SEE MECHANICAL DRAWINGS AND SEE SHEET S044 FOR SUPPORT DETAILS

METAL DECK SCHEDULE

METAL DECK (ICC ESR-2078P)							CONC OVER DECK[1,2]		
DECK TYPE	DEPTH (IN)	TYPE	GAGE	I (IN^4/FT)	S_{+M} (IN^3/FT)	S_{-M} (IN^3/FT)	TOTAL DEPTH	CONC TYPE	REINF[1,2]
D-1	3"	W VENTED AS NOTED	18	1.213	0.752	0.768	6 1/4"	LWC	#3 @ 12"OC
D-2	1.5"	B FORMLOK	16	0.381	0.399	0.410	4"	LWC	#3 @ 12"OC

METHOD OF DECK CONNECTIONS[1]			
DECK TYPE	ENDS AND INTERMEDIATE SUPPORTS	LONGITUDINAL SUPPORTS AND MEMBERS PARALLEL TO FLUTES	SIDE SEAMS
D-1	36/7 WELD PATTERN AT SUPPORT SIDELAP CONNECTION WITH PUNCHLOK II TOOL	3/4" ARC SPOT WELD CONNECTION TO SUPPORT	BUTTON PUNCH @ 36" OC
D-2	36/7 WELD PATTERN AT SUPPORT SIDELAP CONNECTION WITH PUNCHLOK II TOOL	3/4" ARC SPOT WELD CONNECTION TO SUPPORT	VCS @ 8" OC

NOTES:
1. PLACE REINFORCEMENT 1" CLEAR FROM TOP OF CONCRETE.
2. PLACE WELDED WIRE FABRIC AT MID-DEPTH OF CONCRETE FILL OVER METAL DECK.
3. SEE "WELDED HEADED STUDS" DETAIL FOR SIZE AND SPACING.
4. WHEN TWO DECK PANELS ABUT, EACH PANEL SHALL BE ATTACHED AS SPECIFIED.
5. HEADED STUDS MAY BE USED IN LIEU OF PUDDLE WELDS.

PBK
RANCHO CUCAMONGA
8163 ROCHESTER AVENUE, SUITE 100
RANCHO CUCAMONGA, CA 91730
909-987-0909 P

ONTARIO FIRE DEPARTMENT ADMINISTRATION BUILDING

CITY OF ONTARIO

1420 E. FRANCIS STREET., ONTARIO, CA

LICENSED ARCHITECT — KELLEY NEEDHAM C-19064 Exp. 03/31/25 — STATE OF CALIFORNIA

REGISTERED PROFESSIONAL ENGINEER — RICK W. BOHL No. S3060 Exp. 3/31/24 — STRUCTURAL — STATE OF CALIFORNIA

CONSULTANT

miyamoto.
1047 West Sixth Street, Suite A
Ontario, CA 91762
T: (833) 270-8848
miyamotointernational.com
M22280036.00

NO	DATE	BY	DESCRIPTION

REVISIONS

DRAWN: AR	CHECKED: RB
DATE: 02/16/2024	SCALE: AS NOTED
PROJECT NUMBER: 2011700	

THIRD FLOOR FRAMING PLAN

DRAWING NUMBER: S203

BID SET 03/01/24

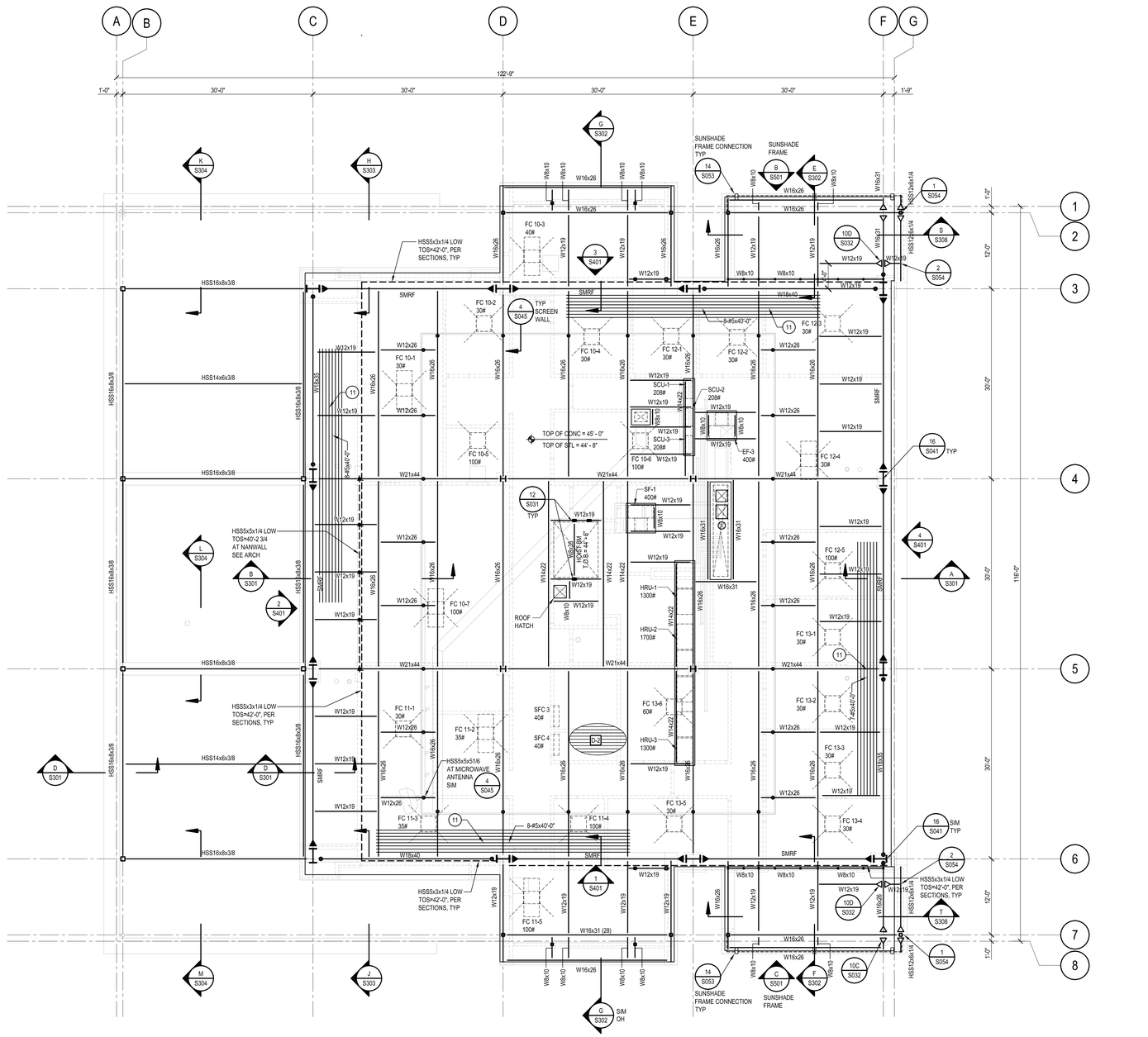

A ROOF FRAMING PLAN
1/8" = 1'-0"

NOTES:
1. SEE S001 AND S002 FOR GENERAL NOTES.
2. SEE S011 THROUGH S045 FOR TYPICAL DETAILS.
3. FINISH FLOOR ELEVATION (VERIFY WITH ARCHITECTURAL DRAWINGS) TOP OF STEEL = 44'-8". GENERAL CONTRACTOR SHALL VERIFY ALL ROOF ELEVATIONS WITH ARCHITECTURAL DRAWINGS AND NOTIFY THE ARCHITECT AND OR ENGINEER IF ANY DESCREPANCIES ARISES PRIOR TO CONSTRUCTION.
4. SEE ARCHITECTURAL, PLUMBING, MECHANICAL AND ELECTRICAL FOR LOCATION OF EQUIPMENT. CONTRACTOR TO VERIFY ALL UNIT LOCATIONS, SIZES AND OPENINGS.
5. ALL BEAMS SHALL BE EQUALLY SPACED BETWEEN COLUMNS/GIRDERS UNLESS NOTED OTHERWISE.
6. SEE ARCHITECTURAL FOR SLOPING AND ELEVATION OF SLABS, DEPRESSIONS, OPENINGS, RAMPS, ETC.
7. SEE SMRF AND BRBF FRAME ELEVATIONS FOR COLUMN AND BEAM SIZES NOT SHOWN.
8. STEEL BEAMS AT METAL DECK WITH CONCRETE TOPPING ARE COMPOSITE WITH WELDED STUDS UNO. SEE 13/S042 FOR STUD SIZE AND SPACING.
9. SEE ARCHITECTURAL DRAWINGS FOR E.O.DECK DIMENSION.
10. FOR MECHANICAL UNIT FRAMING (# DENOTES MECH'L UNIT WEIGHT) SEE DETAILS 9/S045 EF, 4/S045 SCU & HRU, 17/S045 SF, 19/S044 FC
11. REINFORCING STEEL @6" O.C. AND SHALL BE PLACED AT THE CENTER OF THE CONCRETE MEASURED FROM THE TOP OF SLAB TO THE TOP OF THE FLUTE. THE REINFORCEMENT BAR LENGTH IS CETERED AT COLUMN GRID.

LEGEND:

- INDICATES DURAFUSE MOMENT FRAME CONNECTION
- INDICATES MOMENT CONNECTION PER DETAIL 10/S032
- INDICATES BOTTOM FLANGE BRACE PER DETAIL 7/S032
- INDICATES DRAG BEAM CONNECTION PER DETAIL 8/S-032
- (##) INDICATES NUMBER OF NELSON STUD ANCHORS, FOR ADDITIONAL INFORMATION SEE DETAIL 13/S042
- C=3/4" INDICATES TOTAL UPWARD CAMBER AT MIDSPAN OF MEMBER
- SMRF INDICATES "SPECIAL MOMENT RESISTING FRAME"
- DF INDICATES SPAN AND TYPE OF FILLED DECK. DECK SPAN INDICATED SHALL BE TYPICAL UNLESS NOTED OTHERWISE. DECK SHALL SPAN OVER 2 SPANS MINIMUM (3 SUPPORTS). SEE METAL DECK NOTES ON SHEET.
- INDICATES CHANGE IN ELEVATION
- INDICATES DECK OPENING
- INDICATES FAN COIL UNIT, SEE MECHANICAL DRAWINGS AND SEE SHEET S044 FOR SUPPORT DETAILS

METAL DECK SCHEDULE

METAL DECK (ICC ESR-2078P)							CONC OVER DECK[1,4]		
DECK TYPE	DEPTH (IN)	TYPE	GAGE	I (IN^4/FT)	S_{TOP} (IN^3/FT)	S_{BOT} (IN^3/FT)	TOTAL DEPTH	CONC TYPE	REINF[1,2]
D-1	3"	W	18	1.213	0.752	0.768	6 1/4"	LWC	#3 @ 12"OC
D-2	1.5"	B (FORMLOK VENTED)	16	0.381	0.399	0.410	4"	LWC	#3 @ 12"OC

METHOD OF DECK CONNECTIONS[3]			
DECK TYPE	ENDS AND INTERMEDIATE SUPPORTS	LONGITUDINAL SUPPORTS AND MEMBERS PARALLEL TO FLUTES	SIDE SEAMS
D-1	36/7 WELD PATTERN AT SUPPORT SIDELAP CONNECTION WITH PUNCHLOK II TOOL	3/4" ARC SPOT WELD CONNECTION TO SUPPORT	BUTTON PUNCH @ 36" OC
D-2	36/7 WELD PATTERN AT SUPPORT SIDELAP CONNECTION WITH PUNCHLOK II TOOL	3/4" ARC SPOT WELD CONNECTION TO SUPPORT	VSC @ 8" OC

NOTES:
1. PLACE REINFORCEMENT 1" CLEAR FROM TOP OF CONCRETE.
2. PLACE WELDED WIRE FABRIC AT MID-DEPTH OF CONCRETE FILL OVER METAL DECK.
3. SEE "WELDED HEADED STUDS" DETAIL FOR SIZE AND SPACING.
4. WHEN TWO DECK PANELS ABUT, EACH PANEL SHALL BE ATTACHED AS SPECIFIED.
5. HEADED STUDS MAY BE USED IN LIEU OF PUDDLE WELDS.

PBK
RANCHO CUCAMONGA
8163 ROCHESTER AVENUE, SUITE 100
RANCHO CUCAMONGA, CA 91730
909-987-0909 P

ONTARIO FIRE DEPARTMENT ADMINISTRATION BUILDING
CITY OF ONTARIO
1420 E. FRANCIS STREET., ONTARIO, CA

LICENSED ARCHITECT KELLEY NEEDHAM C-19064 Exp. 03/31/25 STATE OF CALIFORNIA
REGISTERED PROFESSIONAL ENGINEER Rob Wright No. S3350 Exp. 3/31/24 STRUCTURAL STATE OF CALIFORNIA

CONSULTANT

miyamoto.
10411 West Sixth Street, Suite A
Ontario, CA, 91762
T: (833) 270-6846
miyamotointernational.com
M022090306.00

NO	DATE	BY	DESCRIPTION

REVISIONS

DRAWN: AR	CHECKED: RB
DATE: 02/16/2024	SCALE: AS NOTED
PROJECT NUMBER: 2011700	

ROOF FRAMING PLAN

DRAWING NUMBER: S204

BID SET 03/01/24

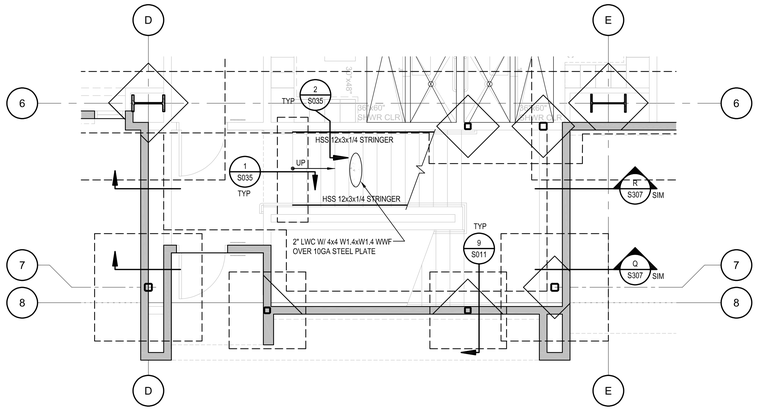

D FIRST FLOOR SOUTH STAIR FOUNDATION PLAN
1/4" = 1'-0"

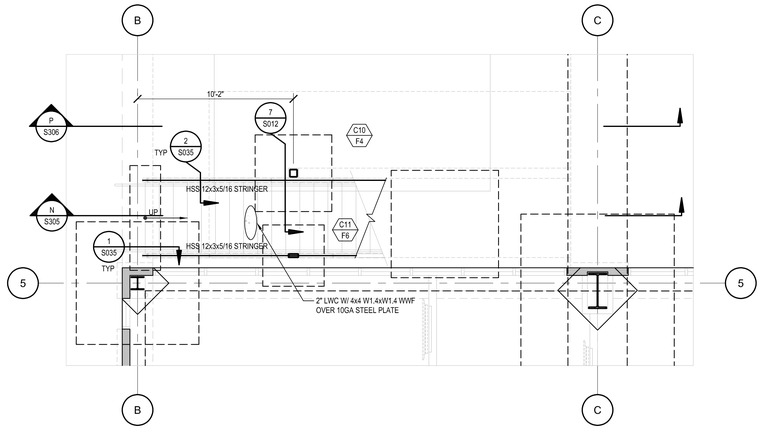

A FIRST FLOOR EXTERIOR STAIR FOUNDATION PLAN
1/4" = 1'-0"

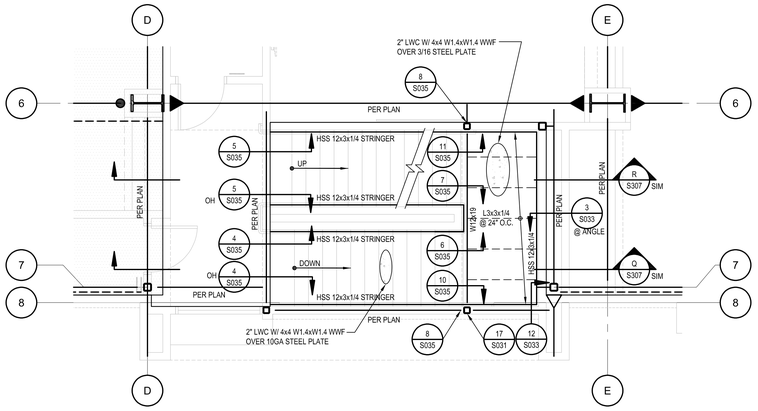

E SECOND FLOOR SOUTH STAIR FRAMING PLAN
1/4" = 1'-0"

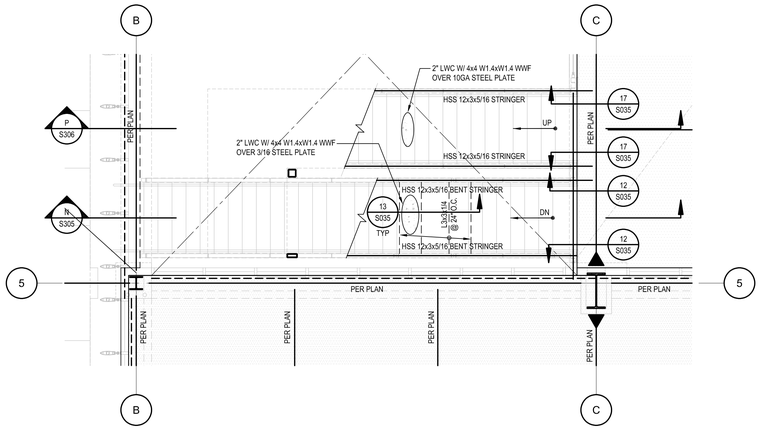

B SECOND FLOOR EXTERIOR STAIR FRAMING PLAN
1/4" = 1'-0"

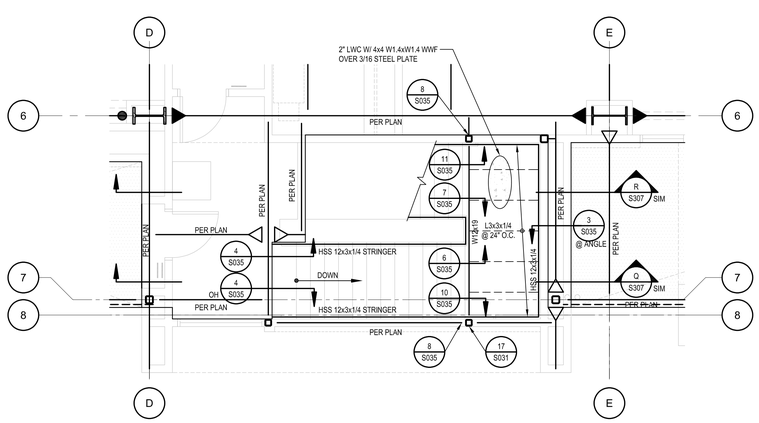

F THIRD FLOOR SOUTH STAIR FRAMING PLAN
1/4" = 1'-0"

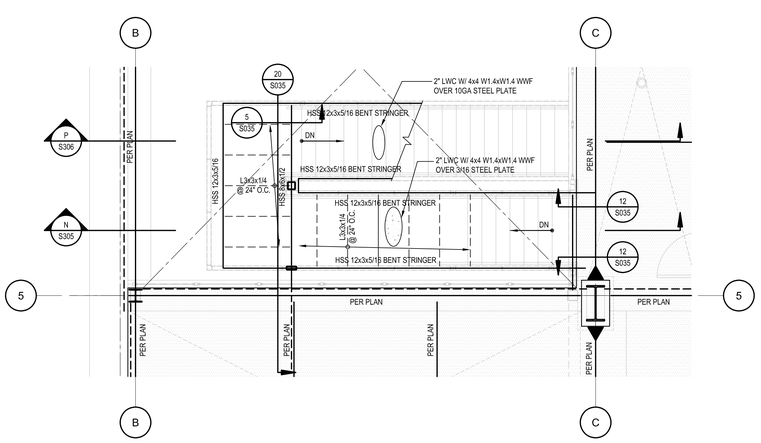

C THIRD FLOOR EXTERIOR STAIR FRAMING PLAN
1/4" = 1'-0"

RANCHO CUCAMONGA
8163 ROCHESTER AVENUE, SUITE 100
RANCHO CUCAMONGA, CA 91730
909-987-0909 P

ONTARIO FIRE DEPARTMENT ADMINISTRATION BUILDING

CITY OF ONTARIO

1420 E. FRANCIS STREET., ONTARIO, CA

LICENSED ARCHITECT — KELLEY NEEDHAM C-190964 — Inactive 03/31/25 — STATE OF CALIFORNIA

REGISTERED PROFESSIONAL ENGINEER — STRUCTURAL — Rick Wa Dong No. S3050 Exp. 3/31/24 — STATE OF CALIFORNIA

CONSULTANT

miyamoto.
1047 West Sixth Street, Suite A
Ontario, CA, 91762
M0208006.00
T: (833) 270-6848
miyamotointernational.com

NO	DATE	BY	DESCRIPTION

REVISIONS

DRAWN:	AR	CHECKED:	RB
DATE: 02/16/2024		SCALE:	AS NOTED
PROJECT NUMBER: 2011700			

ENLARGED STAIR FRAMING PLANS

DRAWING NUMBER: S210

BID SET 03/01/24

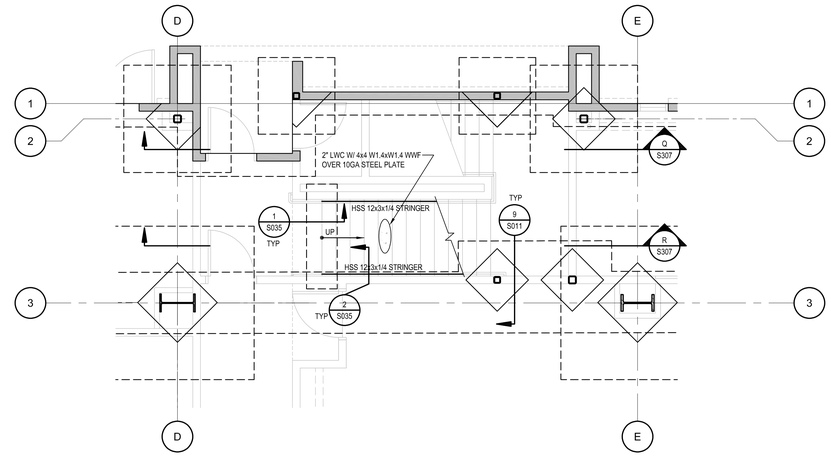

A FIRST FLOOR NORTH STAIR FOUNDATION PLAN
1/4" = 1'-0"

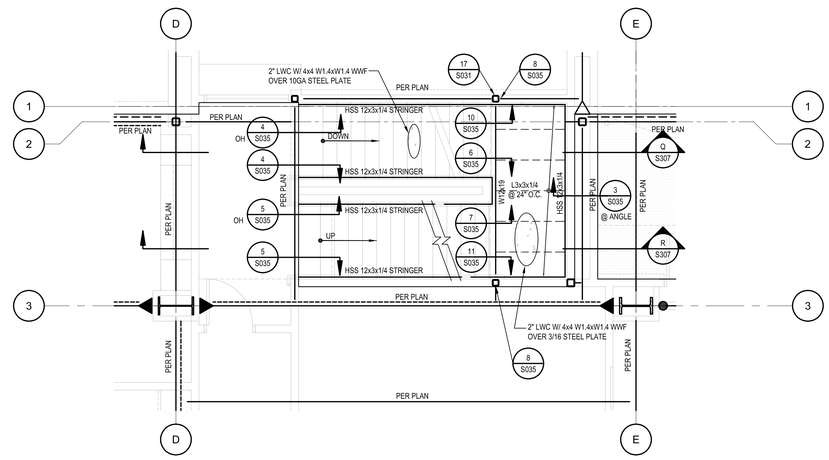

B SECOND FLOOR NORTH STAIR FRAMING PLAN
1/4" = 1'-0"

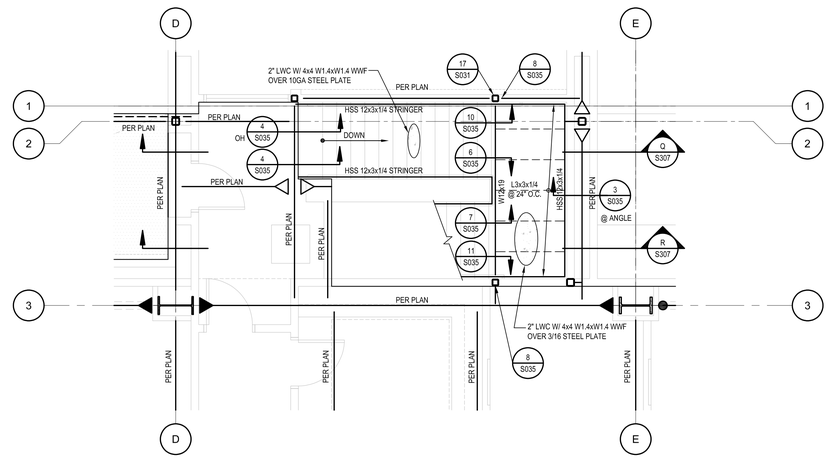

C THIRD FLOOR NORTH STAIR FRAMING PLAN
1/4" = 1'-0"

PBK
RANCHO CUCAMONGA
8163 ROCHESTER AVENUE, SUITE 100
RANCHO CUCAMONGA, CA 91730
909-987-0909 P

ONTARIO FIRE DEPARTMENT ADMINISTRATION BUILDING

CITY OF ONTARIO

1420 E. FRANCIS STREET., ONTARIO, CA

LICENSED ARCHITECT
KELLEY NEEDHAM
C-19064
Ex.Dte 03/31/25
STATE OF CALIFORNIA

REGISTERED PROFESSIONAL ENGINEER
Rick Bo Dorf
No. S3360
Exp. 12/31/24
STRUCTURAL
STATE OF CALIFORNIA

CONSULTANT

miyamoto.
10417 West Sixth Street, Suite A
Ontario, CA 91762
MI22280036.00
T: (833) 270-6846
miyamotointernational.com

NO	DATE	BY	DESCRIPTION

REVISIONS

DRAWN: AR	CHECKED: RB
DATE: 02/16/2024	SCALE: AS NOTED
PROJECT NUMBER: 2011700	

ENLARGED STAIR FRAMING PLANS

DRAWING NUMBER: S211

BID SET 03/01/24

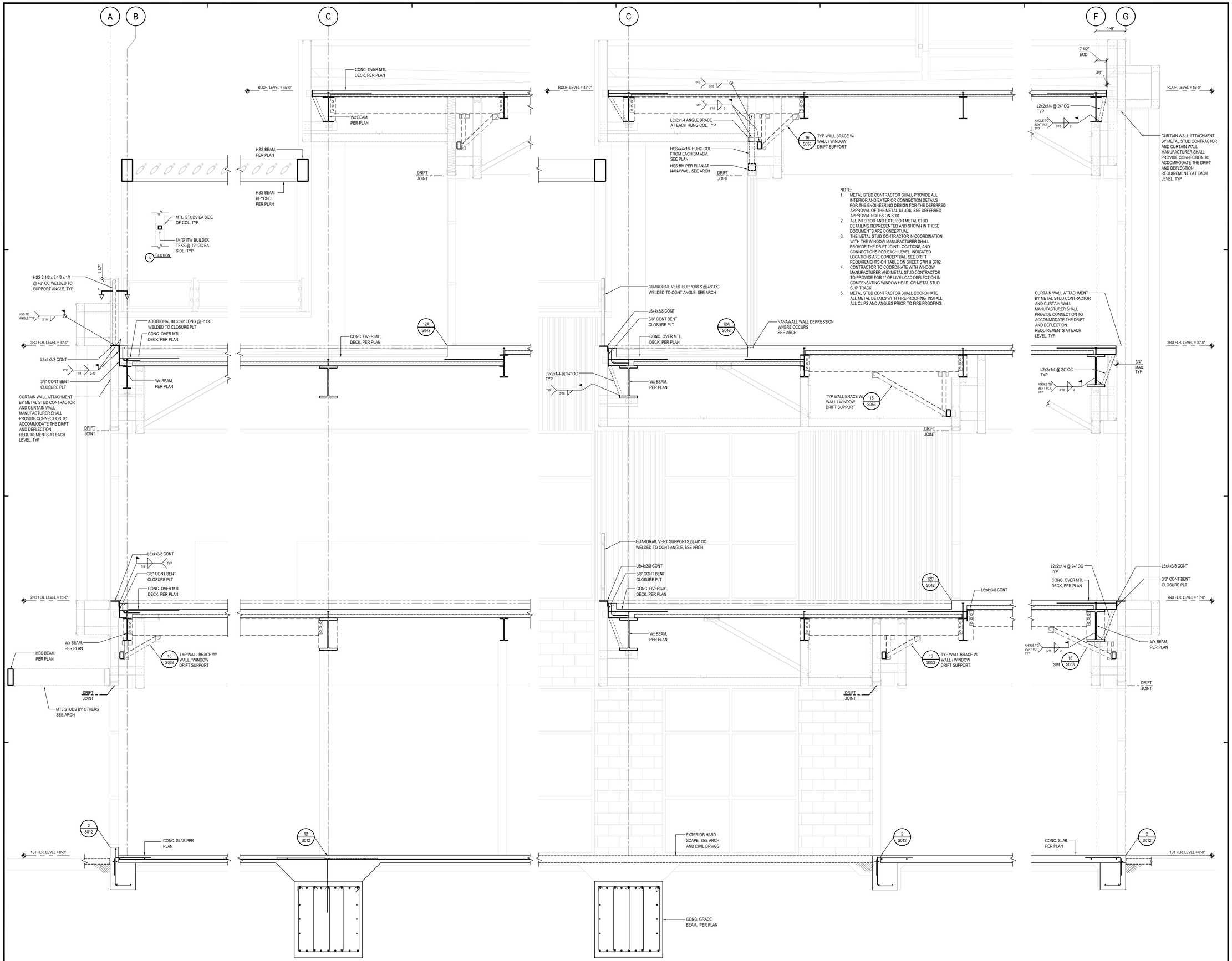

NOTE:

1. METAL STUD CONTRACTOR SHALL PROVIDE ALL INTERIOR AND EXTERIOR CONNECTION DETAILS FOR THE ENGINEERING DESIGN FOR THE DEFERRED APPROVAL OF THE METAL STUDS. SEE DEFERRED APPROVAL NOTES ON S001.
2. ALL INTERIOR AND EXTERIOR METAL STUD DETAILING REPRESENTED AND SHOWN IN THESE DOCUMENTS ARE CONCEPTUAL.
3. THE METAL STUD CONTRACTOR IN COORDINATION WITH THE WINDOW MANUFACTURER SHALL PROVIDE THE DRIFT JOINT LOCATIONS, AND CONNECTIONS FOR EACH LEVEL. INDICATED LOCATIONS ARE CONCEPTUAL. SEE DRIFT REQUIREMENTS ON TABLE ON SHEET S701 & S702.
4. CONTRACTOR TO COORDINATE WITH WINDOW MANUFACTURER AND METAL STUD CONTRACTOR TO PROVIDE FOR 1" OF LIVE LOAD DEFLECTION IN COMPENSATING WINDOW HEAD, OR METAL STUD SLIP TRACK.
5. METAL STUD CONTRACTOR SHALL COORDINATE ALL METAL DETAILS WITH FIREPROOFING. INSTALL ALL CLIPS AND ANGLES PRIOR TO FIRE PROOFING.

D BUILDING SECTION
1/2"=1'-0"

C BUILDING SECTION
1/2"=1'-0"

B BUILDING SECTION
1/2"=1'-0"

A BUILDING SECTION
1/2"=1'-0"

PBK
RANCHO CUCAMONGA
8163 ROCHESTER AVENUE, SUITE 100
RANCHO CUCAMONGA, CA 91730
909-987-0909 P

ONTARIO FIRE DEPARTMENT ADMINISTRATION BUILDING

CITY OF ONTARIO

1420 E. FRANCIS STREET., ONTARIO, CA

LICENSED ARCHITECT — KELLEY NEEDHAM C-190964 — Inactive 03/31/25 — STATE OF CALIFORNIA

REGISTERED PROFESSIONAL ENGINEER — Rick Wo Dong — No. S3150 — Exp. 12/31/24 — STRUCTURAL — STATE OF CALIFORNIA

CONSULTANT

miyamoto.
1047 West Sixth Street, Suite A
Ontario, CA, 91762
M022080006.00
T: (833) 270-6846
miyamotointernational.com

NO	DATE	BY	DESCRIPTION

REVISIONS

DRAWN: AR	CHECKED: RB
DATE: 02/16/2024	SCALE: AS NOTED
PROJECT NUMBER: 2011700	

BUILDING SECTIONS

DRAWING NUMBER: S301

BID SET 03/01/24

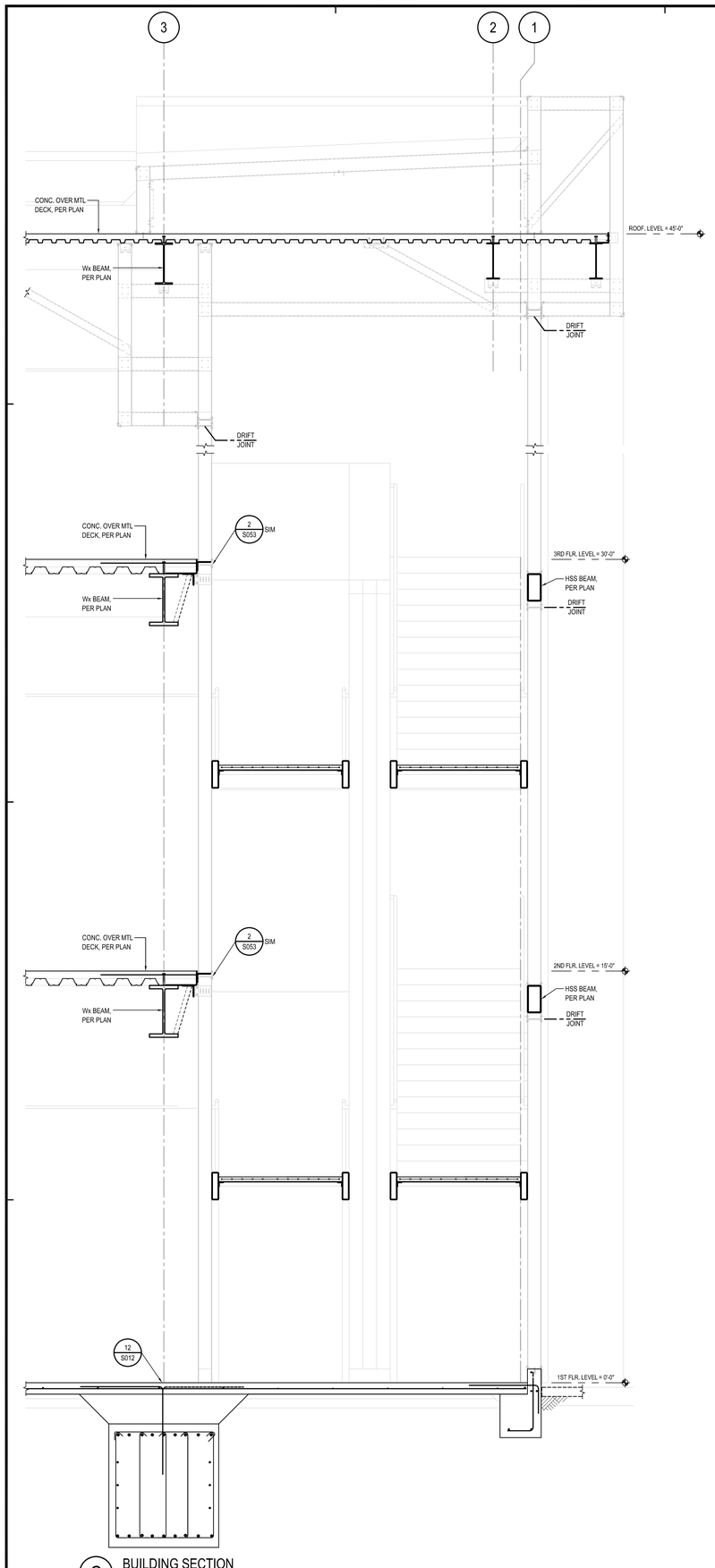

G BUILDING SECTION
1/2"=1'-0"

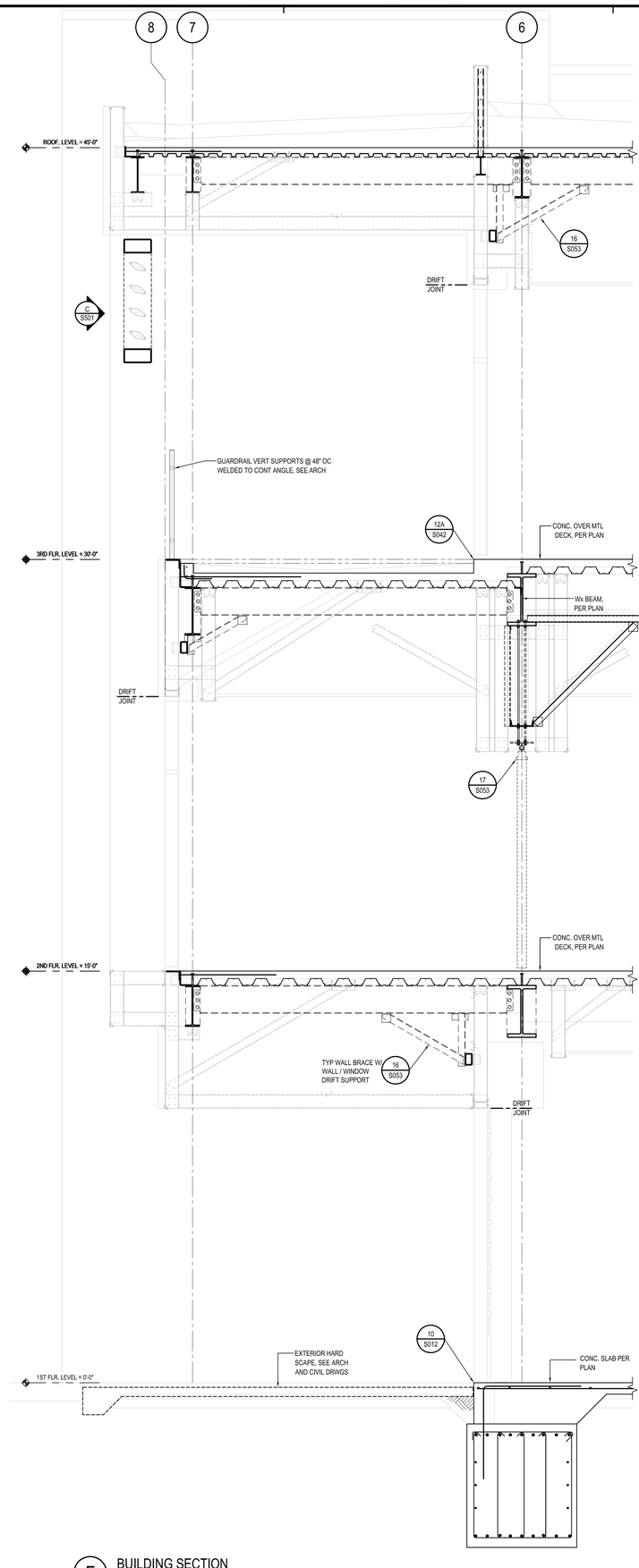

F BUILDING SECTION
1/2"=1'-0"

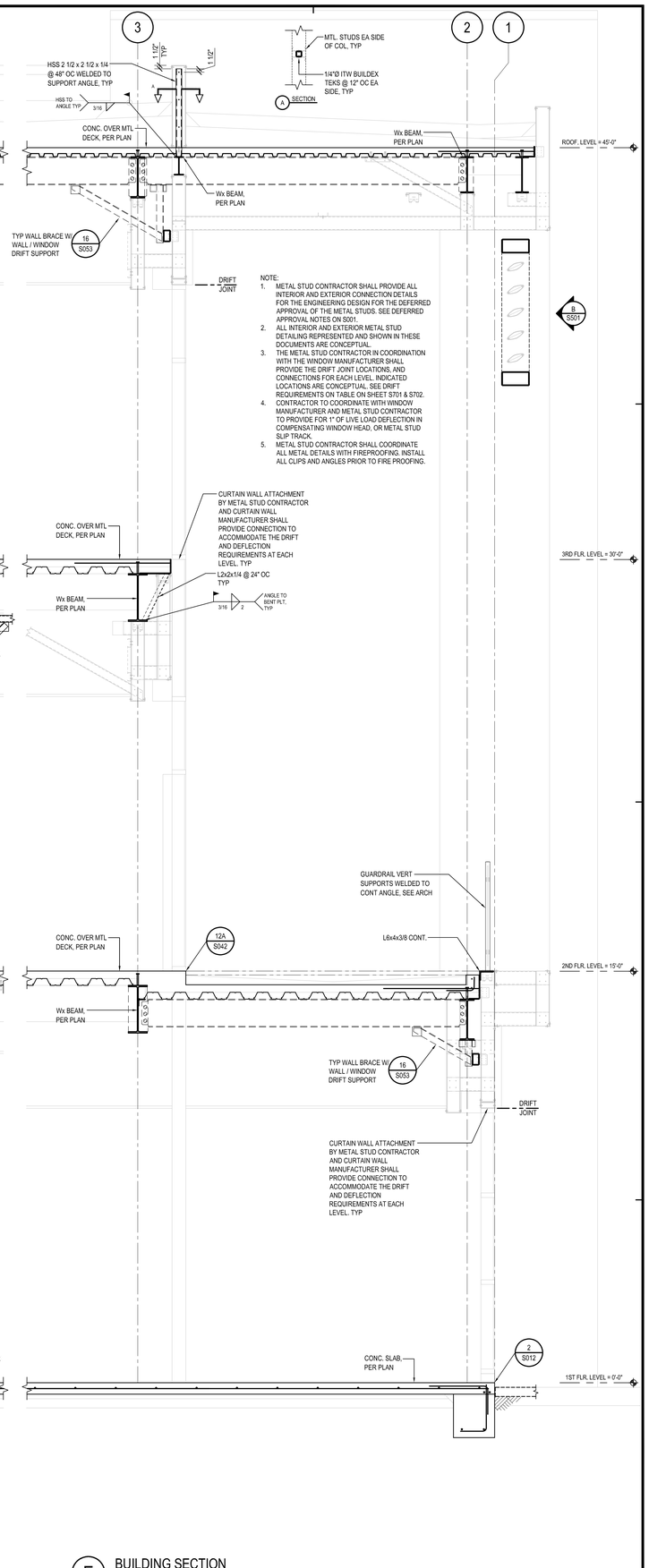

NOTE:
1. METAL STUD CONTRACTOR SHALL PROVIDE ALL INTERIOR AND EXTERIOR CONNECTION DETAILS FOR THE ENGINEERING DESIGN FOR THE DEFERRED APPROVAL OF THE METAL STUDS. SEE DEFERRED APPROVAL NOTES ON S001.
2. ALL INTERIOR AND EXTERIOR METAL STUD DETAILING REPRESENTED AND SHOWN IN THESE DOCUMENTS ARE CONCEPTUAL.
3. THE METAL STUD CONTRACTOR IN COORDINATION WITH THE WINDOW MANUFACTURER SHALL PROVIDE THE DRIFT JOINT LOCATIONS, AND CONNECTIONS FOR EACH LEVEL, INDICATED LOCATIONS ARE CONCEPTUAL. SEE DRIFT REQUIREMENTS ON TABLE ON SHEET S701 & S702.
4. CONTRACTOR TO COORDINATE WITH WINDOW MANUFACTURER AND METAL STUD CONTRACTOR TO PROVIDE FOR 1" OF LIVE LOAD DEFLECTION IN COMPENSATING WINDOW HEAD, OR METAL STUD SLIP TRACK.
5. METAL STUD CONTRACTOR SHALL COORDINATE ALL METAL DETAILS WITH FIREPROOFING. INSTALL ALL CLIPS AND ANGLES PRIOR TO FIRE PROOFING.

E BUILDING SECTION
1/2"=1'-0"

PBK
RANCHO CUCAMONGA
8163 ROCHESTER AVENUE, SUITE 100
RANCHO CUCAMONGA, CA 91730
909-987-0909 P

ONTARIO FIRE DEPARTMENT ADMINISTRATION BUILDING

CITY OF ONTARIO

1420 E. FRANCIS STREET., ONTARIO, CA

LICENSED ARCHITECT
KELLEY NEEDHAM
C-19064
Exp. 03/31/25
STATE OF CALIFORNIA

REGISTERED PROFESSIONAL ENGINEER
Rob Wu
No. S3350
Exp. 3/31/24
STRUCTURAL
STATE OF CALIFORNIA

CONSULTANT

miyamoto.
1041 West Sixth Street, Suite A
Ontario, CA, 91762
M022090006.00
T: (833) 270-6846
miyamotointernational.com

NO	DATE	BY	DESCRIPTION

REVISIONS

DRAWN: AR	CHECKED: RB
DATE: 02/16/2024	SCALE: AS NOTED
PROJECT NUMBER: 2011700	

BUILDING SECTIONS

DRAWING NUMBER: S302

BID SET 03/01/24

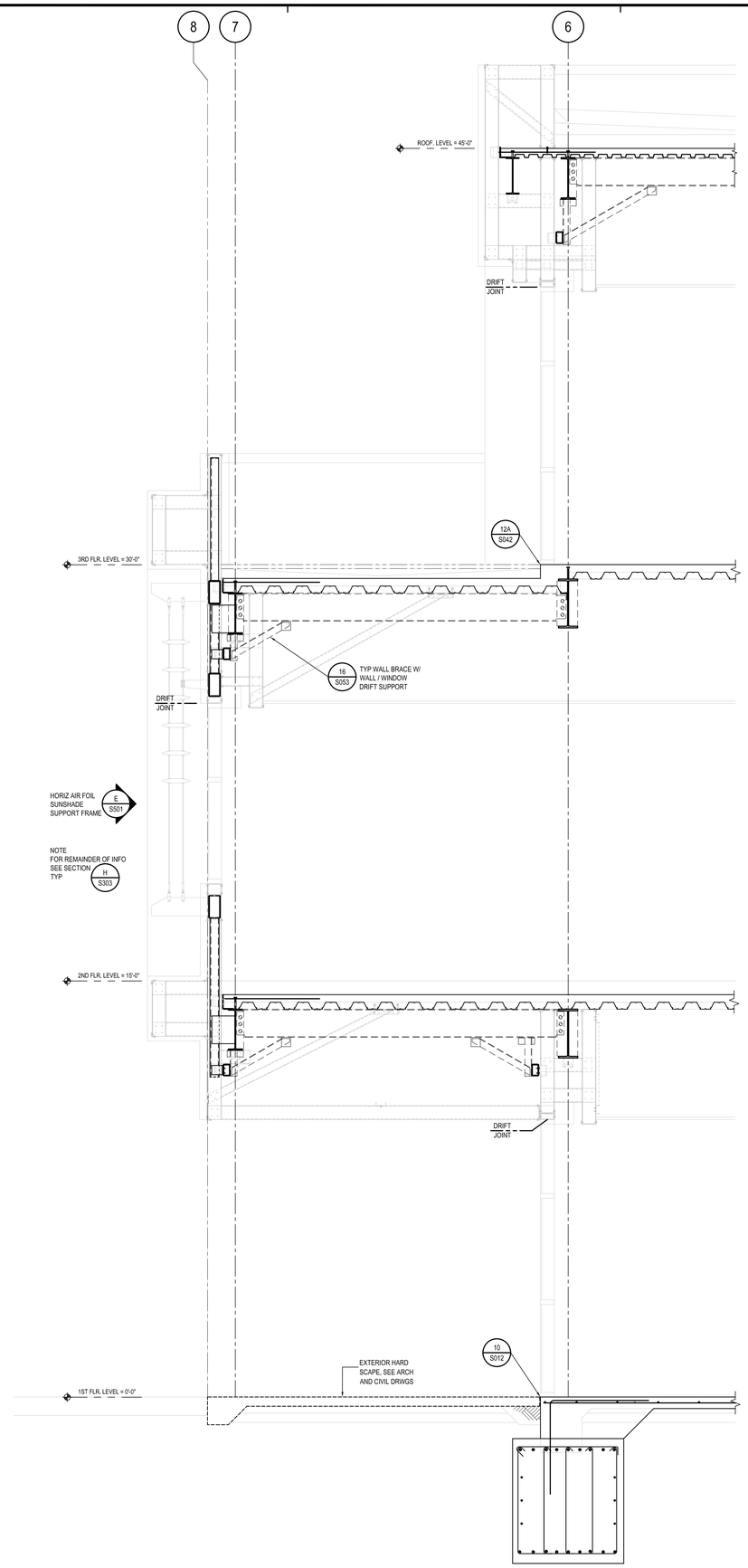

J BUILDING SECTION
1/2"=1'-0"

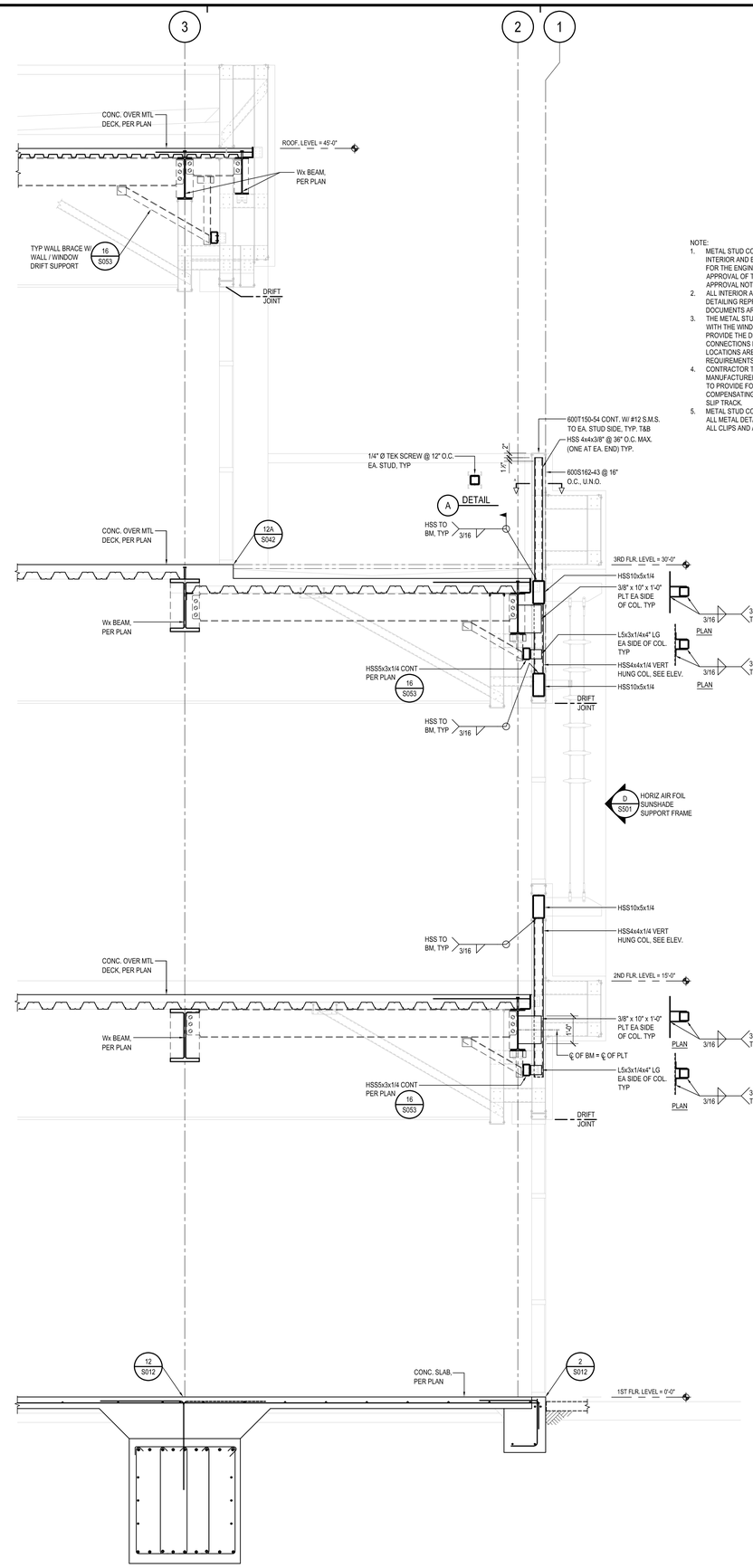

H BUILDING SECTION
1/2"=1'-0"

NOTE:
1. METAL STUD CONTRACTOR SHALL PROVIDE ALL INTERIOR AND EXTERIOR CONNECTION DETAILS FOR THE ENGINEERING DESIGN FOR THE DEFERRED APPROVAL OF THE METAL STUDS. SEE DEFERRED APPROVAL NOTES ON S001.
2. ALL INTERIOR AND EXTERIOR METAL STUD DETAILING REPRESENTED AND SHOWN IN THESE DOCUMENTS ARE CONCEPTUAL.
3. THE METAL STUD CONTRACTOR IN COORDINATION WITH THE WINDOW MANUFACTURER SHALL PROVIDE THE DRIFT JOINT LOCATIONS, AND CONNECTIONS FOR EACH LEVEL. INDICATED LOCATIONS ARE CONCEPTUAL. SEE DRIFT REQUIREMENTS ON TABLE ON SHEET S701 & S702.
4. CONTRACTOR TO COORDINATE WITH WINDOW MANUFACTURER AND METAL STUD CONTRACTOR TO PROVIDE FOR 1" OF LIVE LOAD DEFLECTION IN COMPENSATING WINDOW HEAD, OR METAL STUD SLIP TRACK.
5. METAL STUD CONTRACTOR SHALL COORDINATE ALL METAL DETAILS WITH FIREPROOFING. INSTALL ALL CLIPS AND ANGLES PRIOR TO FIRE PROOFING.

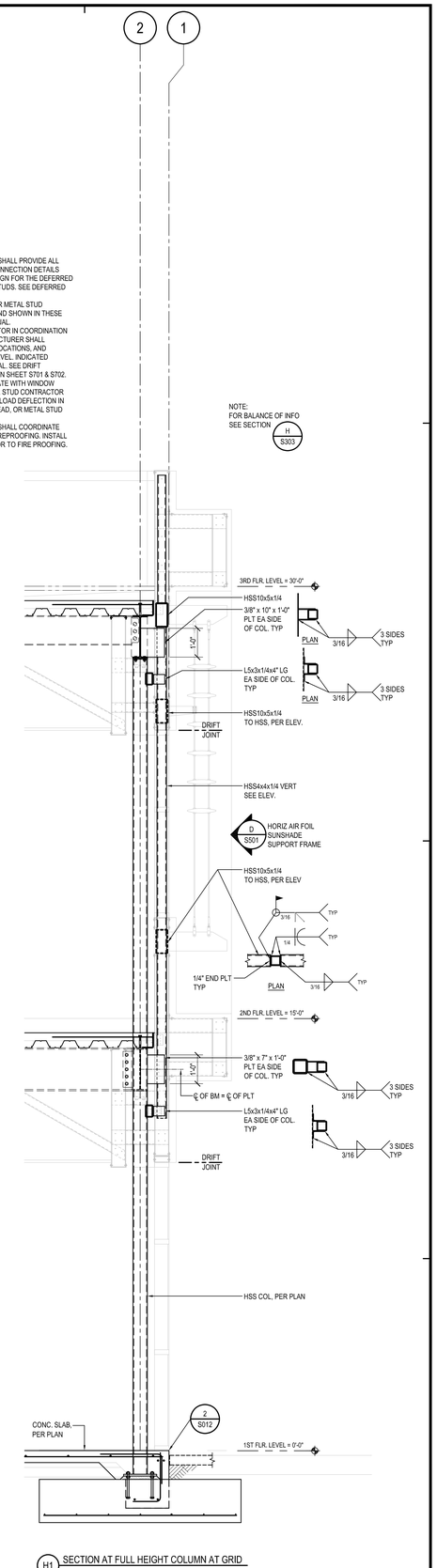

H1 SECTION AT FULL HEIGHT COLUMN AT GRID

PBK
RANCHO CUCAMONGA
8163 ROCHESTER AVENUE, SUITE 100
RANCHO CUCAMONGA, CA 91730
909-987-0909 P

ONTARIO FIRE DEPARTMENT ADMINISTRATION BUILDING

CITY OF ONTARIO

1420 E. FRANCIS STREET., ONTARIO, CA

LICENSED ARCHITECT — KELLEY NEEDHAM C-19064 Ex.Dt: 03/31/25 — STATE OF CALIFORNIA

REGISTERED PROFESSIONAL ENGINEER — Rob Bonacci No. S3050 Exp. 3/31/24 — STRUCTURAL — STATE OF CALIFORNIA

CONSULTANT

miyamoto.
10411 West Sixth Street, Suite A
Ontario, CA, 91762
MI22209/00.00
T: (833) 370-6846
miyamotointernational.com

NO	DATE	BY	DESCRIPTION

REVISIONS

DRAWN: AR	CHECKED: RB
DATE: 02/16/2024	SCALE: AS NOTED
PROJECT NUMBER: 2011700	

BUILDING SECTIONS

DRAWING NUMBER: S303

BID SET 03/01/24

NOTE:
1. METAL STUD CONTRACTOR SHALL PROVIDE ALL INTERIOR AND EXTERIOR CONNECTION DETAILS FOR THE ENGINEERING DESIGN FOR THE DEFERRED APPROVAL OF THE METAL STUDS. SEE DEFERRED APPROVAL NOTES ON S001.
2. ALL INTERIOR AND EXTERIOR METAL STUD DETAILING REPRESENTED AND SHOWN IN THESE DOCUMENTS ARE CONCEPTUAL.
3. THE METAL STUD CONTRACTOR IN COORDINATION WITH THE WINDOW MANUFACTURER SHALL PROVIDE THE DRIFT JOINT LOCATIONS, AND CONNECTIONS FOR EACH LEVEL. INDICATED LOCATIONS ARE CONCEPTUAL. SEE DRIFT REQUIREMENTS ON TABLE ON SHEET S701 & S702.
4. CONTRACTOR TO COORDINATE WITH WINDOW MANUFACTURER AND METAL STUD CONTRACTOR TO PROVIDE FOR 1" OF LIVE LOAD DEFLECTION IN COMPENSATING WINDOW HEAD, OR METAL STUD SLIP TRACK.
5. METAL STUD CONTRACTOR SHALL COORDINATE ALL METAL DETAILS WITH FIREPROOFING. INSTALL ALL CLIPS AND ANGLES PRIOR TO FIRE PROOFING.

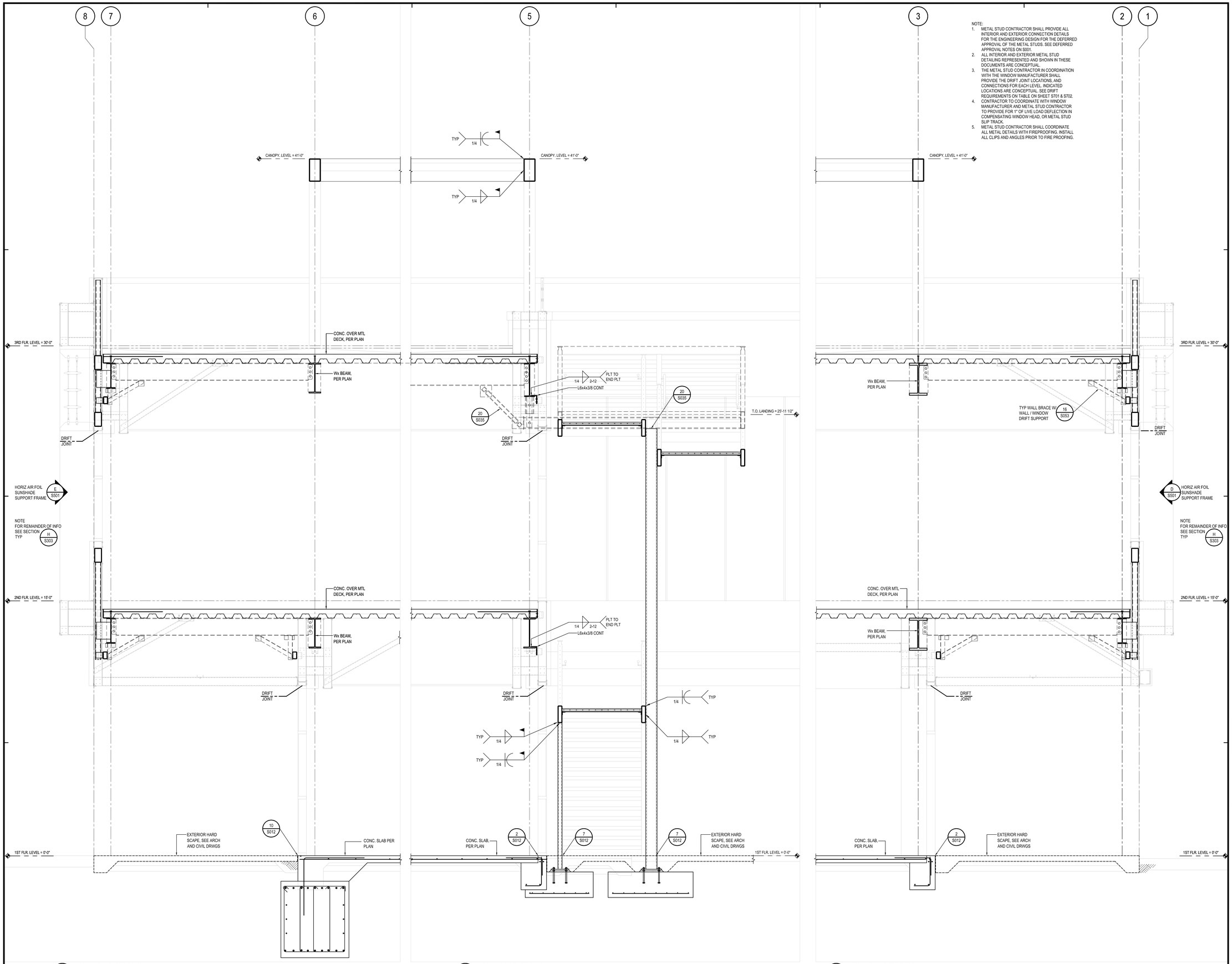

M BUILDING SECTION
1/2"=1'-0"

L BUILDING SECTION
1/2"=1'-0"

K BUILDING SECTION
1/2"=1'-0"

PBK
RANCHO CUCAMONGA
8163 ROCHESTER AVENUE, SUITE 100
RANCHO CUCAMONGA, CA 91730
909-987-0909 P

ONTARIO FIRE DEPARTMENT ADMINISTRATION BUILDING

CITY OF ONTARIO

1420 E. FRANCIS STREET., ONTARIO, CA

LICENSED ARCHITECT
KELLEY NEEDHAM
C-19064
Bid Set 03/01/24
STATE OF CALIFORNIA

REGISTERED PROFESSIONAL ENGINEER
Rick Wang
No. S3350
Exp. 3/31/24
STRUCTURAL
STATE OF CALIFORNIA

CONSULTANT

miyamoto.
1047 West Sixth Street, Suite A
Ontario, CA, 91762
M022060306.00
T: (833) 270-6846
miyamotointernational.com

NO	DATE	BY	DESCRIPTION

REVISIONS

DRAWN: AR	CHECKED: RB
DATE: 02/16/2024	SCALE: AS NOTED
PROJECT NUMBER: 2011700	

BUILDING SECTIONS

DRAWING NUMBER: S304

BID SET 03/01/24

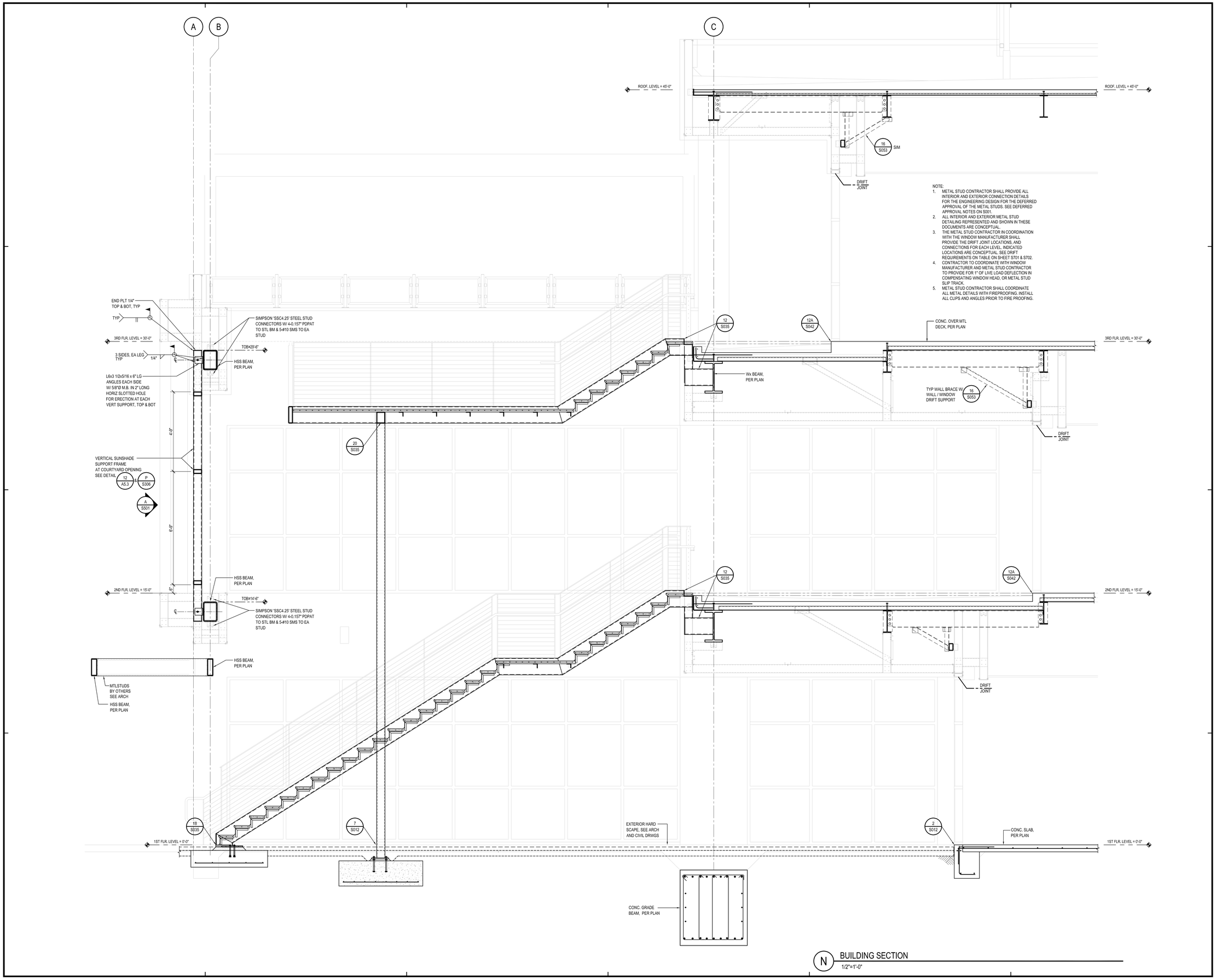

N BUILDING SECTION
1/2"=1'-0"

PBK
RANCHO CUCAMONGA
8163 ROCHESTER AVENUE, SUITE 100
RANCHO CUCAMONGA, CA 91730
909-987-0909 P

ONTARIO FIRE DEPARTMENT ADMINISTRATION BUILDING

CITY OF ONTARIO

1420 E. FRANCIS STREET., ONTARIO, CA

LICENSED ARCHITECT
KELLEY NEEDHAM
C-19064
In.Ex: 03/31/25
STATE OF CALIFORNIA

REGISTERED PROFESSIONAL ENGINEER
Rick Bo Dorf
No. S3860
Exp. 12/31/24
STRUCTURAL
STATE OF CALIFORNIA

CONSULTANT

miyamoto.
10447 West Sixth Street, Suite A
Ontario, CA 91762
M022280036.00
T: (833) 270-6846
miyamotointernational.com

NO	DATE	BY	DESCRIPTION

REVISIONS

DRAWN: AR	CHECKED: RB
DATE: 02/16/2024	SCALE: AS NOTED
PROJECT NUMBER: 2011700	

BUILDING SECTIONS

DRAWING NUMBER: S305

BID SET 03/01/24

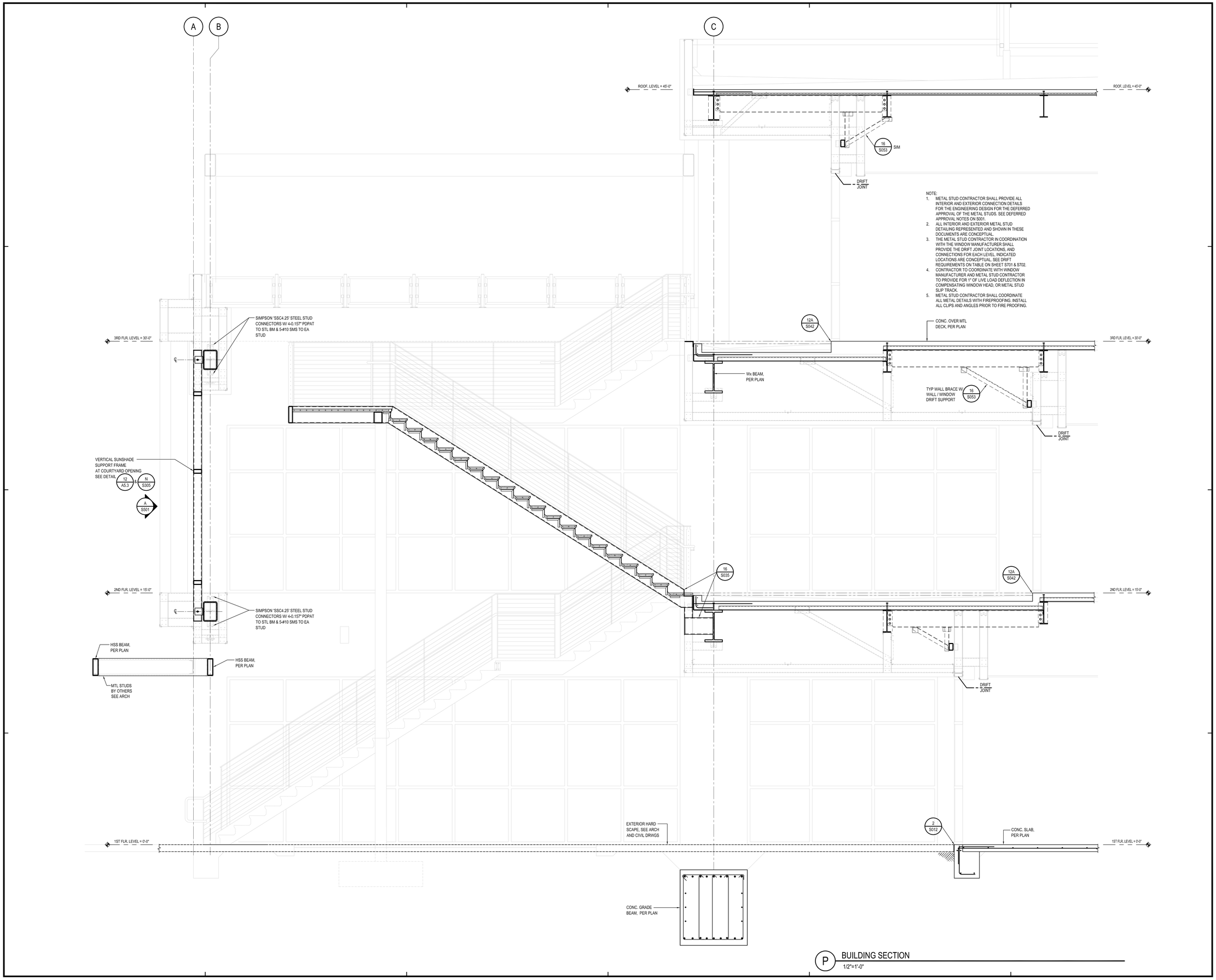

P BUILDING SECTION
1/2"=1'-0"

PBK
RANCHO CUCAMONGA
8163 ROCHESTER AVENUE, SUITE 100
RANCHO CUCAMONGA, CA 91730
909-987-0909 P

ONTARIO FIRE DEPARTMENT ADMINISTRATION BUILDING

CITY OF ONTARIO

1420 E. FRANCIS STREET., ONTARIO, CA

LICENSED ARCHITECT
KELLEY NEEDHAM
C-19064
In.Ex: 03/31/25
STATE OF CALIFORNIA

REGISTERED PROFESSIONAL ENGINEER
Rick Bo Dorf
No. S3860
Exp. 12/31/24
STRUCTURAL
STATE OF CALIFORNIA

CONSULTANT

miyamoto.
10447 West Sixth Street, Suite A
Ontario, CA 91762
M022280036.00
T: (833) 270-6846
miyamotointernational.com

NO	DATE	BY	DESCRIPTION

REVISIONS

DRAWN: AR	CHECKED: RB
DATE: 02/16/2024	SCALE: AS NOTED
PROJECT NUMBER: 2011700	

BUILDING SECTIONS

DRAWING NUMBER: S306

BID SET 03/01/24

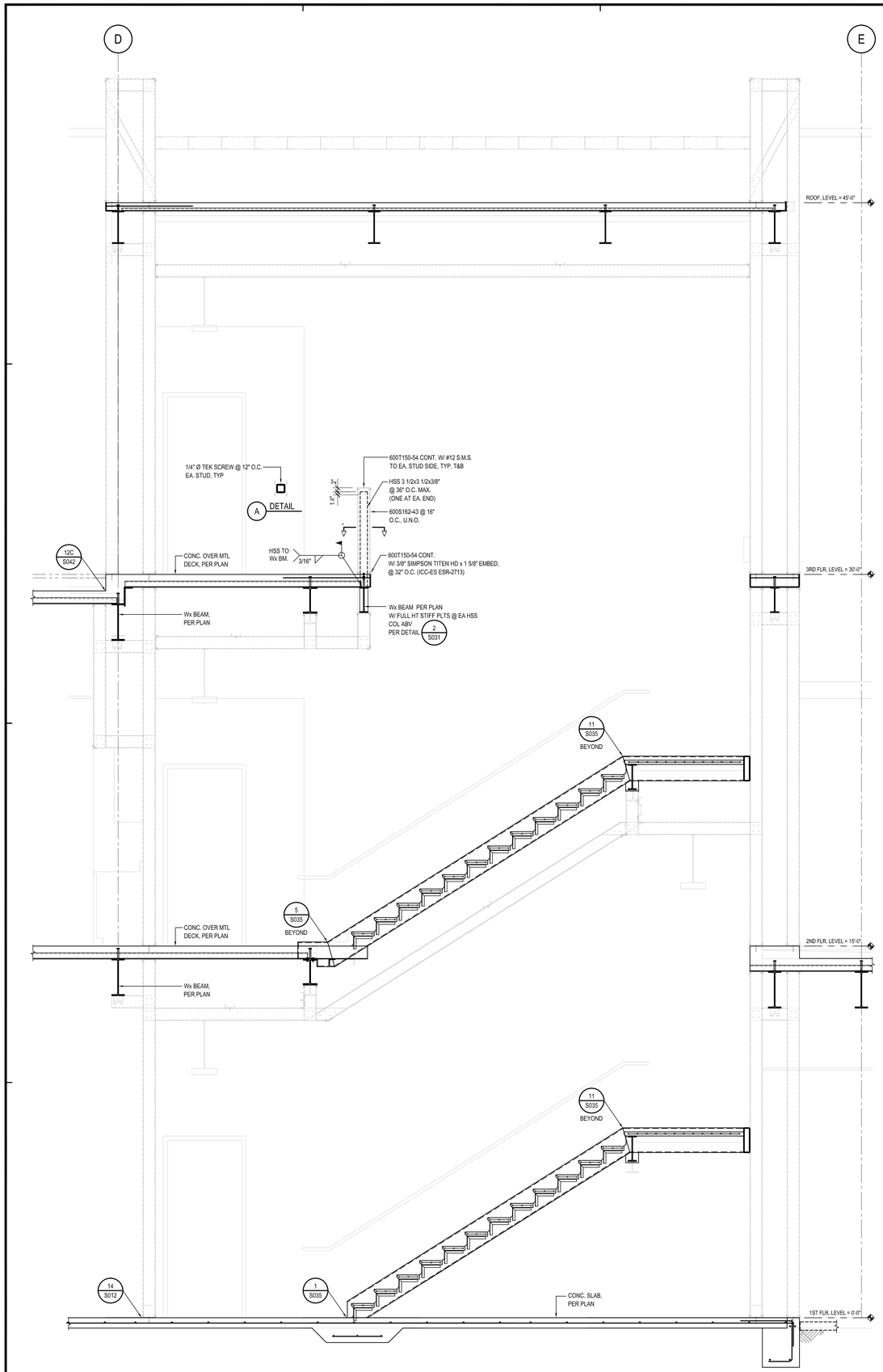

R BUILDING SECTION
1/2"=1'-0"

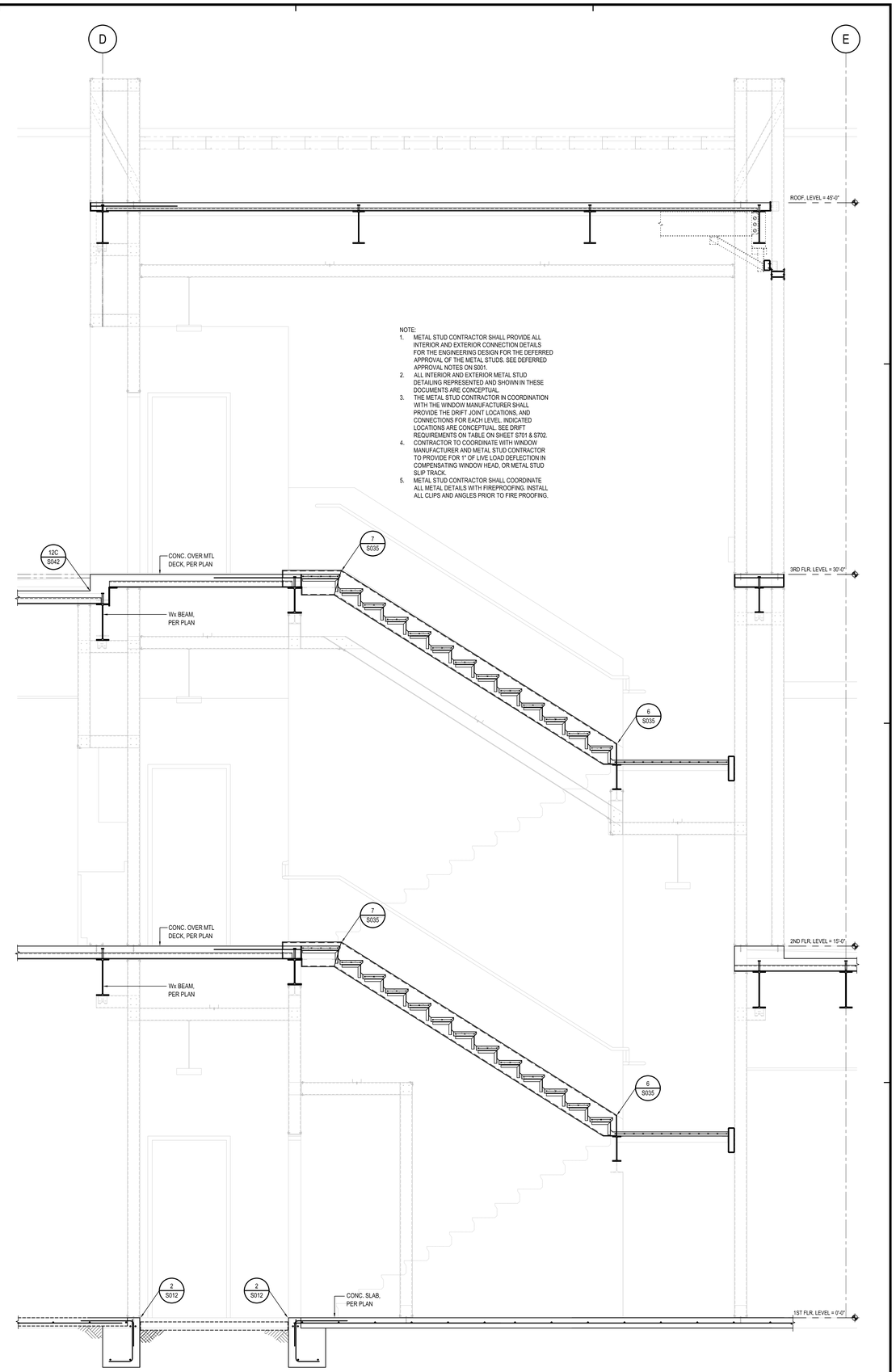

NOTE:
1. METAL STUD CONTRACTOR SHALL PROVIDE ALL INTERIOR AND EXTERIOR CONNECTION DETAILS FOR THE ENGINEERING DESIGN FOR THE DEFERRED APPROVAL OF THE METAL STUDS. SEE DEFERRED APPROVAL NOTES ON S001.
2. ALL INTERIOR AND EXTERIOR METAL STUD DETAILING REPRESENTED AND SHOWN IN THESE DOCUMENTS ARE CONCEPTUAL.
3. THE METAL STUD CONTRACTOR IN COORDINATION WITH THE WINDOW MANUFACTURER SHALL PROVIDE THE DRIFT JOINT LOCATIONS, AND CONNECTIONS FOR EACH LEVEL. INDICATED LOCATIONS ARE CONCEPTUAL. SEE DRIFT REQUIREMENTS ON TABLE ON SHEET S701 & S702.
4. CONTRACTOR TO COORDINATE WITH WINDOW MANUFACTURER AND METAL STUD CONTRACTOR TO PROVIDE FOR 1" OF LIVE LOAD DEFLECTION IN COMPENSATING WINDOW HEAD, OR METAL STUD SLIP TRACK.
5. METAL STUD CONTRACTOR SHALL COORDINATE ALL METAL DETAILS WITH FIREPROOFING. INSTALL ALL CLIPS AND ANGLES PRIOR TO FIRE PROOFING.

Q BUILDING SECTION
1/2"=1'-0"

PBK
RANCHO CUCAMONGA
8163 ROCHESTER AVENUE, SUITE 100
RANCHO CUCAMONGA, CA 91730
909-987-0909 P

ONTARIO FIRE DEPARTMENT ADMINISTRATION BUILDING

CITY OF ONTARIO

1420 E. FRANCIS STREET., ONTARIO, CA

LICENSED ARCHITECT
KELLEY NEEDHAM
C-19064
In:Ex: 03/31/25
STATE OF CALIFORNIA

REGISTERED PROFESSIONAL ENGINEER
Rick Bond
No. S3050
Exp. 3/31/24
STRUCTURAL
STATE OF CALIFORNIA

CONSULTANT

miyamoto.
1047 West Sixth Street, Suite A
Ontario, CA, 91762
M0220030.00
T: (833) 270-4848
miyamotointernational.com

NO	DATE	BY	DESCRIPTION

REVISIONS

DRAWN: AR	CHECKED: RB
DATE: 02/16/2024	SCALE: AS NOTED
PROJECT NUMBER: 2011700	

BUILDING SECTIONS

DRAWING NUMBER: S307

BID SET 03/01/24

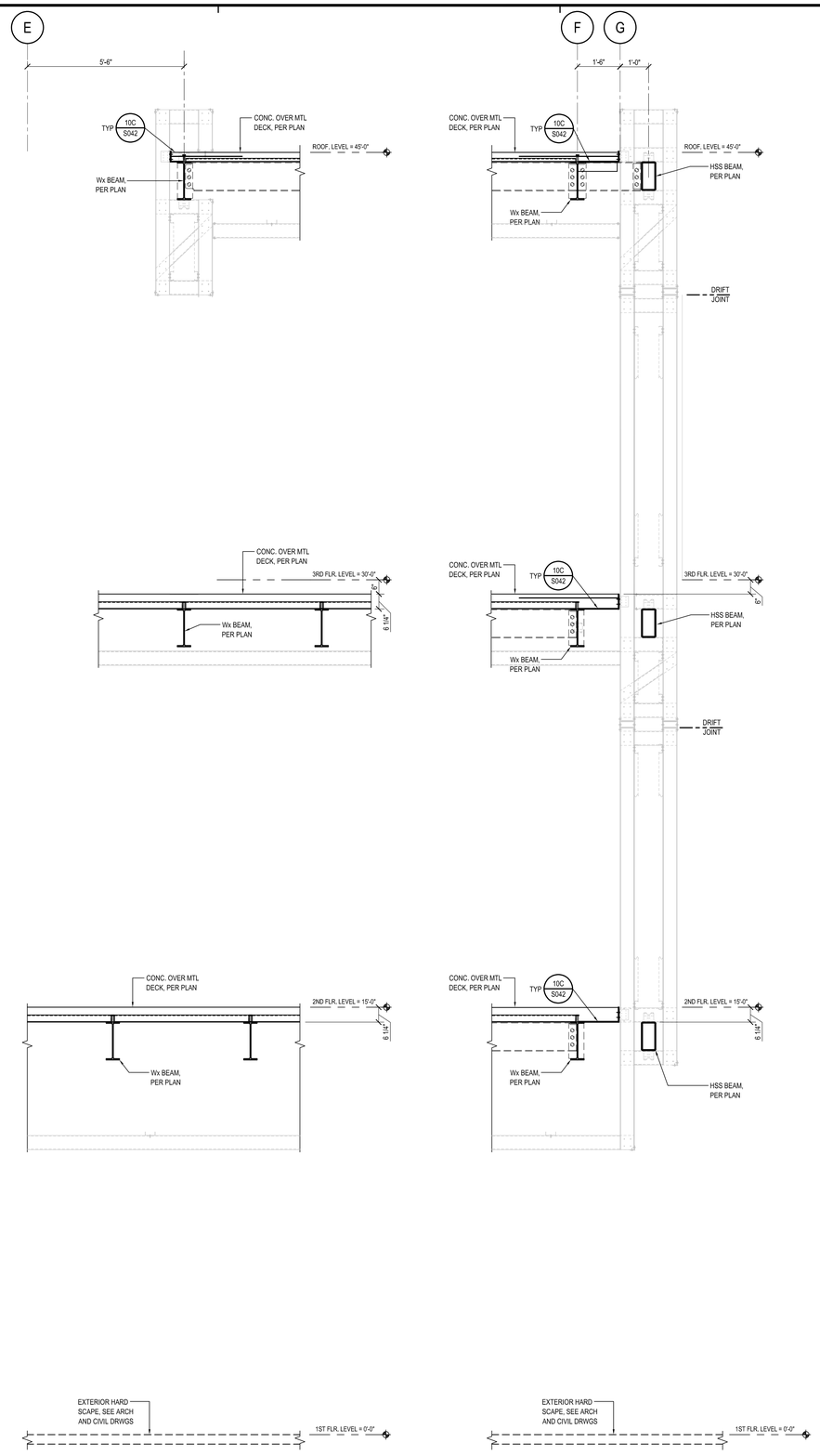

T BUILDING SECTION
1/2"=1'-0"

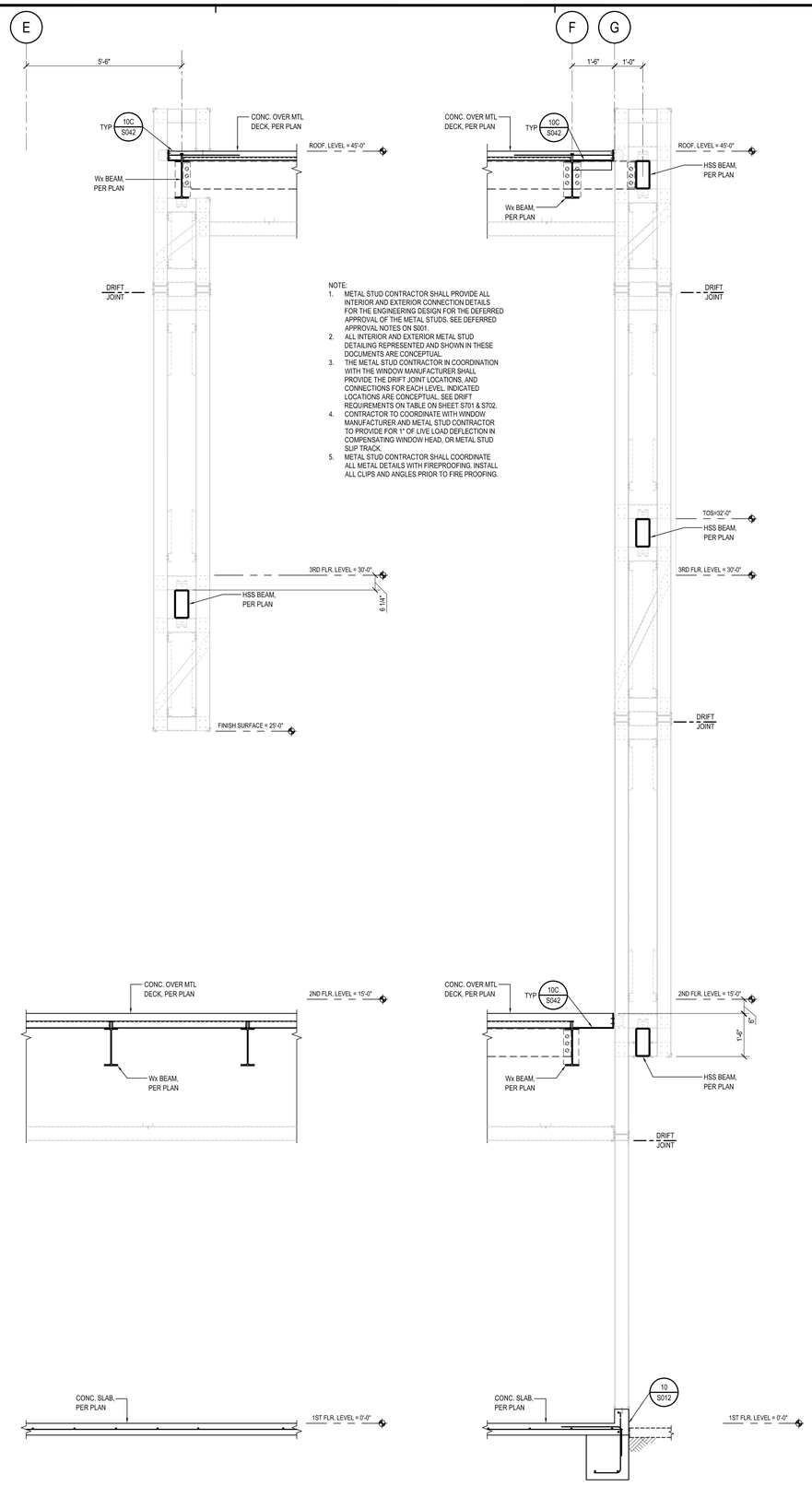

S BUILDING SECTION
1/2"=1'-0"

PBK
RANCHO CUCAMONGA
8163 ROCHESTER AVENUE, SUITE 100
RANCHO CUCAMONGA, CA 91730
909-987-0909 P

ONTARIO FIRE DEPARTMENT ADMINISTRATION BUILDING

CITY OF ONTARIO

1420 E. FRANCIS STREET., ONTARIO, CA

LICENSED ARCHITECT
KELLEY NEEDHAM
C-19064
Ex.Date 03/31/25
STATE OF CALIFORNIA

REGISTERED PROFESSIONAL ENGINEER
Rick Bond
No. S3450
Exp. 3/31/24
STRUCTURAL
STATE OF CALIFORNIA

CONSULTANT

miyamoto.
1047 West Sixth Street, Suite A
Ontario, CA 91762
MI22280036.00
T: (833) 270-6846
miyamotointernational.com

NO	DATE	BY	DESCRIPTION

REVISIONS

DRAWN: AR	CHECKED: RB
DATE: 02/16/2024	SCALE: AS NOTED
PROJECT NUMBER: 2011700	

BUILDING SECTIONS

DRAWING NUMBER: S308

BID SET 03/01/24

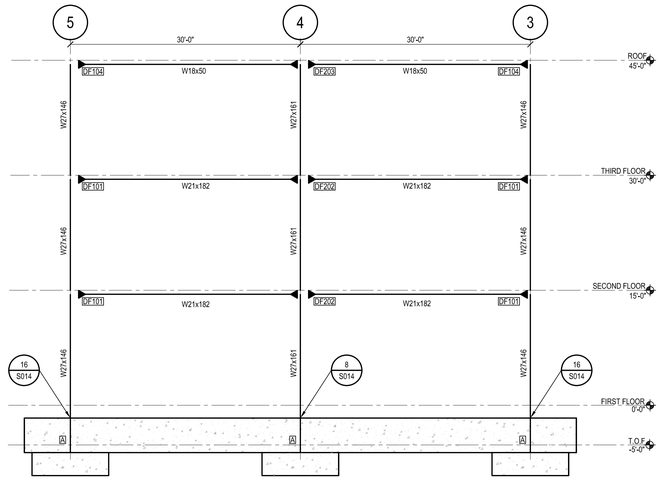

4 FRAME ELEVATION AT GRID F
1/8"-1'-0"

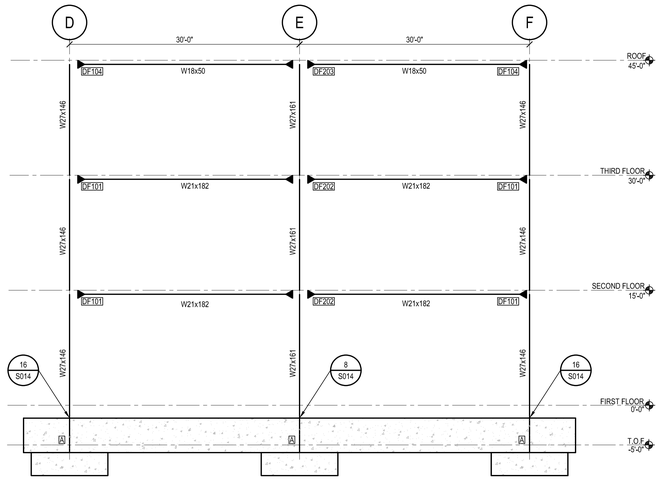

1 FRAME ELEVATION AT GRID 7
1/8"-1'-0"

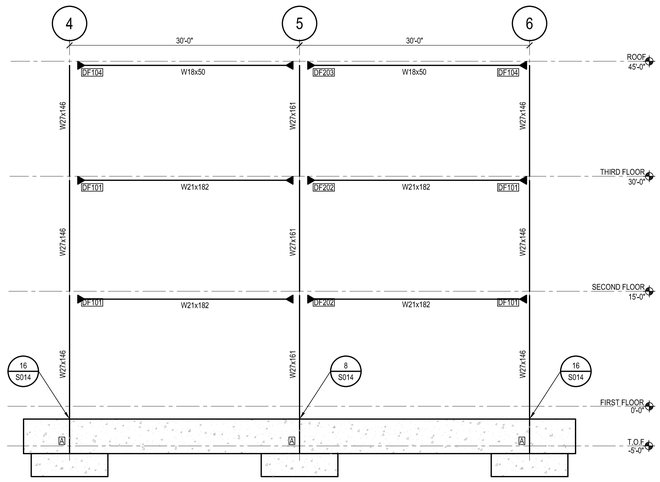

2 FRAME ELEVATION AT GRID C
1/8"-1'-0"

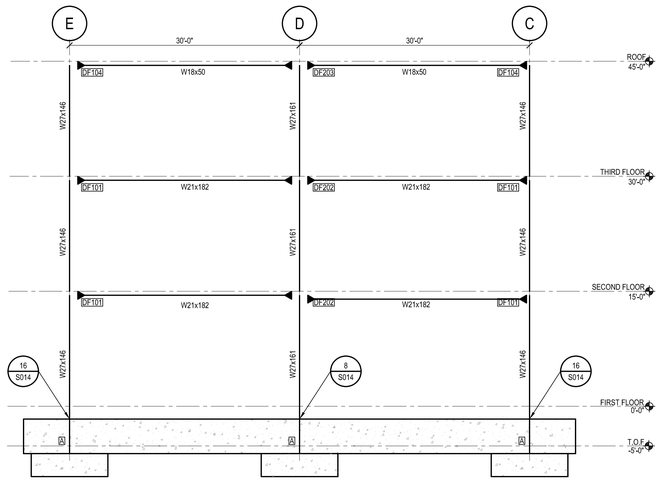

3 FRAME ELEVATION AT GRID 3
1/8"-1'-0"

NOTES:
1. SEE SHEET SDF01 THROUGH SDF-05 FOR DURAFUSE FRAME SCHEDULE AND DETAILS
2. SEE SHEET S015 FOR GRADE BEAM ELEVATION DETAIL.

LEGEND:

SMRF	INDICATES A DETAIL OR PORTION OF FRAMING IS A PART OF THE LATERAL RESISTING SYSTEM AND IS SUBJECT TO ADDITIONAL REQUIREMENTS OUTLINED IN THE GENERAL NOTES & SPECIFICATIONS.
DF###	INDICATES DURAFUSE CONNECTION ID NUMBER.
#	INDICATES MOMENT FRAME BASE PLATE TYPE, SEE 17/S011
⊣⊢	INDICATES COLUMN SPLICE SEE 9/S031 CPJ-DC WELDS AT SMRF

PBK
RANCHO CUCAMONGA
8163 ROCHESTER AVENUE, SUITE 100
RANCHO CUCAMONGA, CA 91730
909-987-0909 P

ONTARIO FIRE DEPARTMENT ADMINISTRATION BUILDING

CITY OF ONTARIO

1420 E. FRANCIS STREET., ONTARIO, CA

LICENSED ARCHITECT
KELLEY NEEDHAM
C-19064
ex.Dte 03/31/25
STATE OF CALIFORNIA

REGISTERED PROFESSIONAL ENGINEER
Rick Bond
No. 53450
Exp. 3/31/24
STRUCTURAL
STATE OF CALIFORNIA

CONSULTANT

miyamoto.
1047 West Sixth Street, Suite A
Ontario, CA 91762
M022280306.00
T: (833) 270-6846
miyamotointernational.com

NO	DATE	BY	DESCRIPTION
1			

REVISIONS

DRAWN: AR	CHECKED: RB
DATE: 02/16/2024	SCALE: AS NOTED
PROJECT NUMBER: 2011700	

SMRF ELEVATIONS

DRAWING NUMBER: S401

BID SET 03/01/24

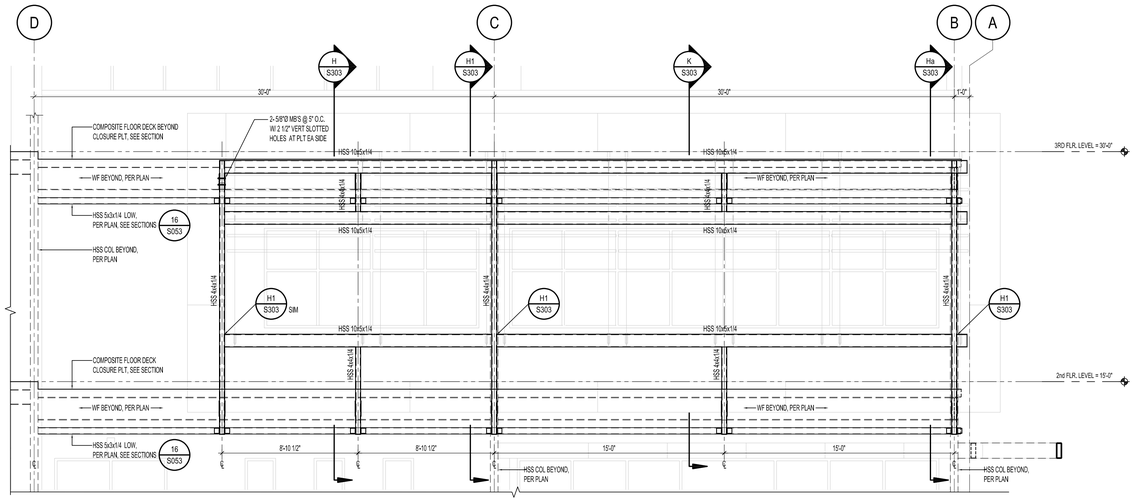

D HORIZONTAL AIR FOIL SUNSHADE SUPPORT FRAME
1/4"=1'-0"

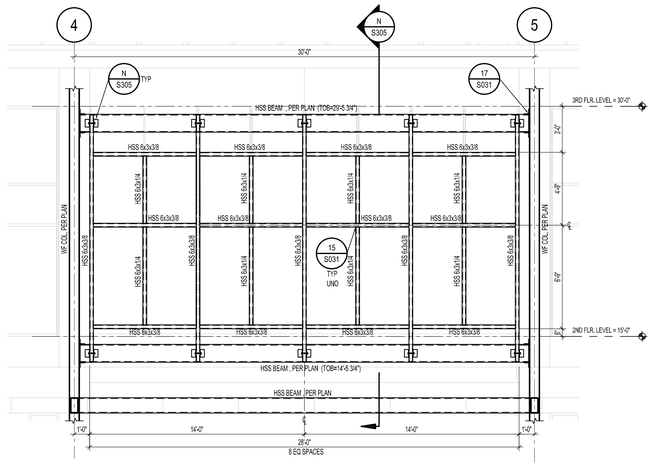

A VERTICAL SUNSHADE SUPPORT FRAME AT COURTYARD OPENING
1/4"=1'-0"

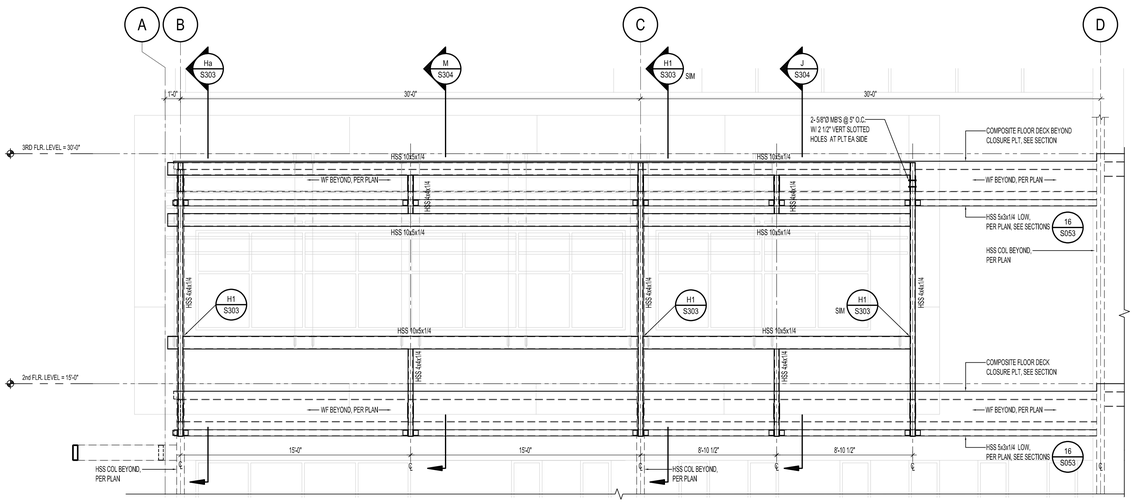

E HORIZONTAL AIR FOIL SUNSHADE SUPPORT FRAME
1/4"=1'-0"

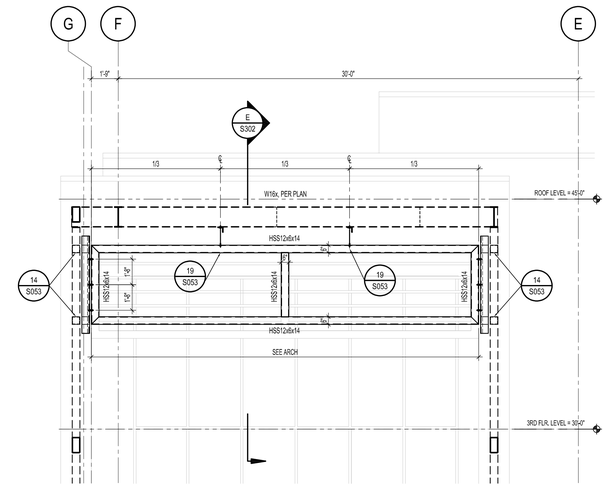

B HORIZONTAL SUNSHADE SUPPORT FRAME
1/4"=1'-0"

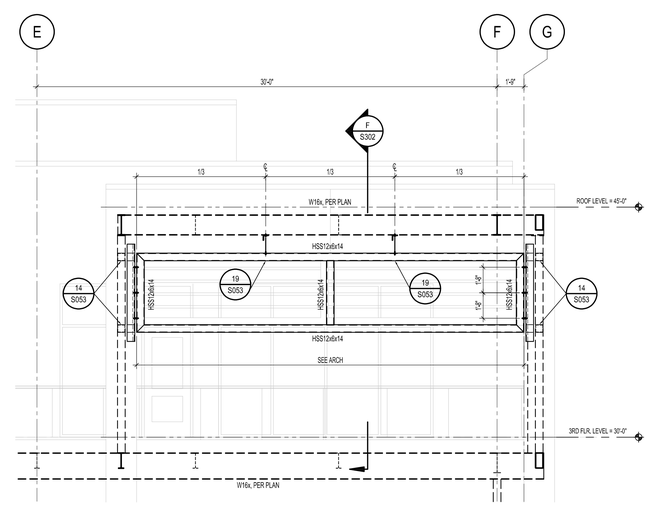

C HORIZONTAL SUNSHADE SUPPORT FRAME
1/4"=1'-0"

PBK
RANCHO CUCAMONGA
8163 ROCHESTER AVENUE, SUITE 100
RANCHO CUCAMONGA, CA 91730
909-987-0909 P

ONTARIO FIRE DEPARTMENT ADMINISTRATION BUILDING

CITY OF ONTARIO

1420 E. FRANCIS STREET., ONTARIO, CA

LICENSED ARCHITECT
KELLEY NEEDHAM
C-190964
Ins.Ex: 03/31/25
STATE OF CALIFORNIA

REGISTERED PROFESSIONAL ENGINEER
Rick Ng Dong
No. S3350
Exp. 3/31/24
STRUCTURAL
STATE OF CALIFORNIA

CONSULTANT

miyamoto.
1047 West Sixth Street, Suite A
Ontario, CA, 91762
MI02080006.00
T: (833) 270-6846
miyamotointernational.com

NO	DATE	BY	DESCRIPTION

REVISIONS

DRAWN: AR	CHECKED: RB
DATE: 02/16/2024	SCALE: AS NOTED
PROJECT NUMBER: 2011700	

FRAME ELEVATIONS

DRAWING NUMBER: S501

BID SET 03/01/24

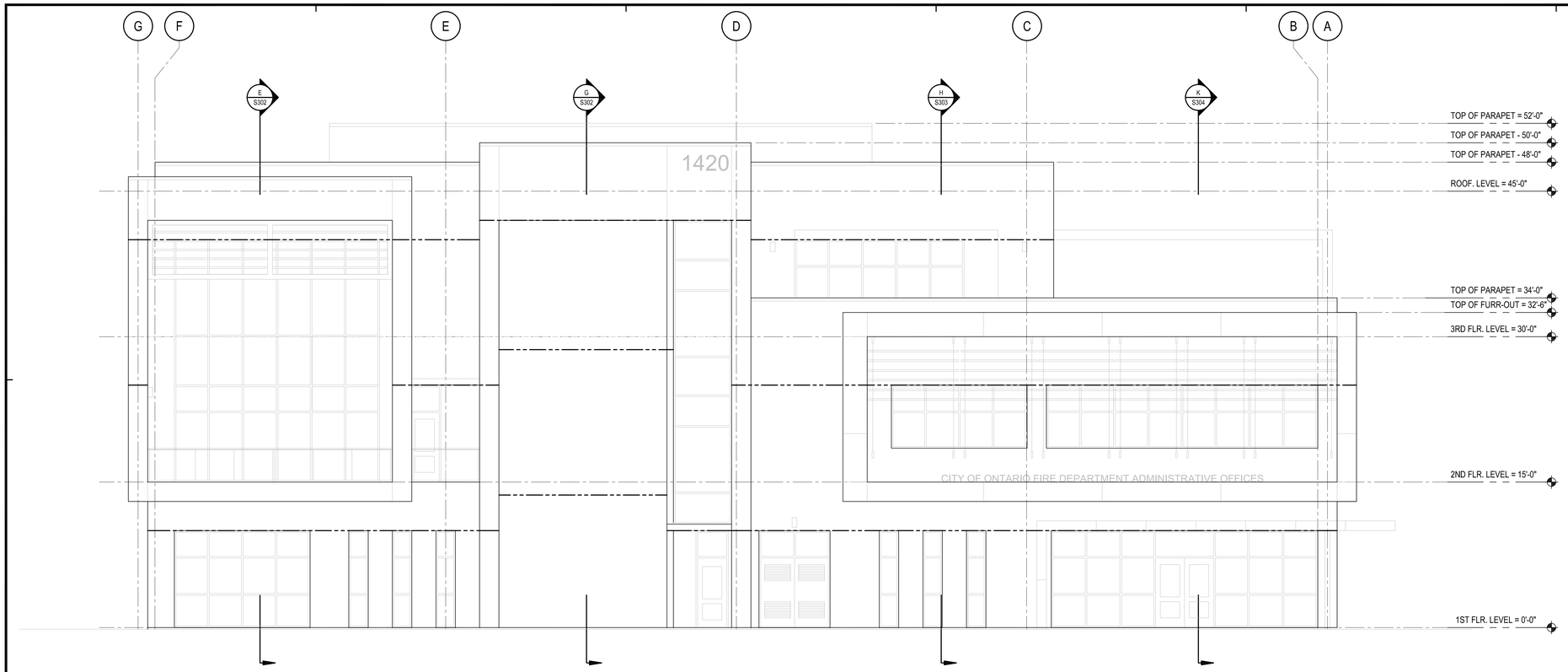

A NORTH EXTERIOR STUD ELEVATION
3/16" = 1'-0"

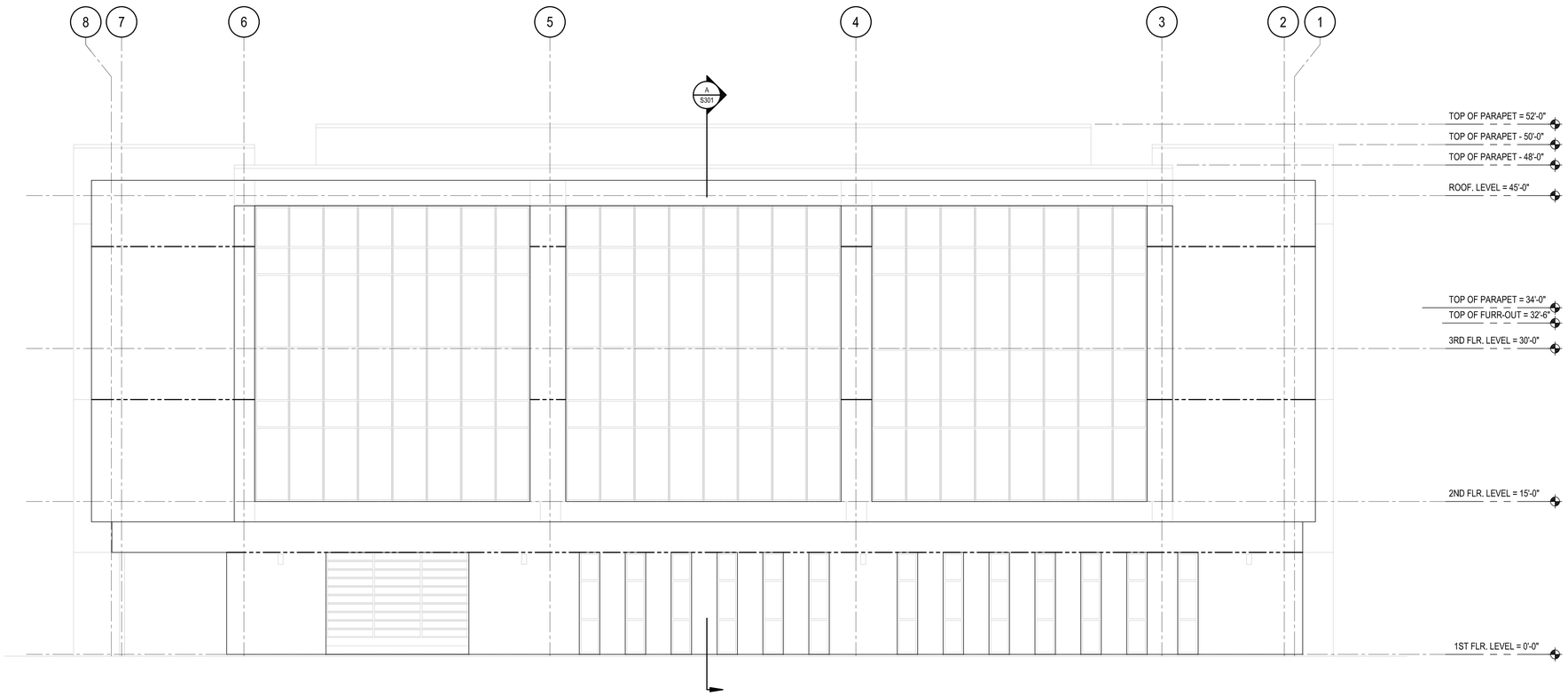

B EAST EXTERIOR STUD ELEVATION
3/16" = 1'-0"

DRIFT REQUIREMENTS	
LEVEL	AMPLIFIED (Dd) dRIFT
2nd LEVEL	2 1/2 INCHES
3rd IEVEL	2 3/4 INCHES
ROOF LEVEL	2 1/2 INCHES

NOTE:
1. METAL STUD CONTRACTOR SHALL PROVIDE ALL INTERIOR AND EXTERIOR CONNECTION DETAILS FOR THE ENGINEERING DESIGN FOR THE DEFERRED APPROVAL OF THE METAL STUDS.
2. ALL INTERIOR AND EXTERIOR METAL STUD DETAING REPRESENTED AND SHOWN IN THESE DOCUMENTS ARE CONCEPTUAL.
3. DRIFT JOINT LOCATION. SEE DRIFT REQUIREMENTS ON TABLE ON THIS SHEET.
4. CONTRACTOR SHALL COORDINATE WITH WINDOW MANUFACTURER AND METAL STUD CONTRACTOR TO PROVIDE FOR 1" OF LIVE LOAD DEFLECTION IN COMPENSATING WINDOW HEAD, OR METAL STUD SLIP TRACK

LEGEND:

— — — INDICATES DRIFT JOINT LOCATION

PBK
RANCHO CUCAMONGA
8163 ROCHESTER AVENUE, SUITE 100
RANCHO CUCAMONGA, CA 91730
909-987-0909 P

ONTARIO FIRE DEPARTMENT ADMINISTRATION BUILDING

CITY OF ONTARIO

1420 E. FRANCIS STREET., ONTARIO, CA

LICENSED ARCHITECT
KELLEY NEEDHAM
C-19064
ex.ite 03/31/25
STATE OF CALIFORNIA

REGISTERED PROFESSIONAL ENGINEER
Rick Dorf
No. 53450
Exp. 3/31/24
STRUCTURAL
STATE OF CALIFORNIA

CONSULTANT

miyamoto.
1047 West Sixth Street, Suite A
Ontario, CA 91762
M022280b.00
T: (833) 270-6846
miyamotointernational.com

NO	DATE	BY	DESCRIPTION

REVISIONS

DRAWN: AR	CHECKED: RB
DATE: 02/16/2024	SCALE: AS NOTED
PROJECT NUMBER: 2011700	

BUILDING ELEVATIONS

DRAWING NUMBER: S701

BID SET 03/01/24

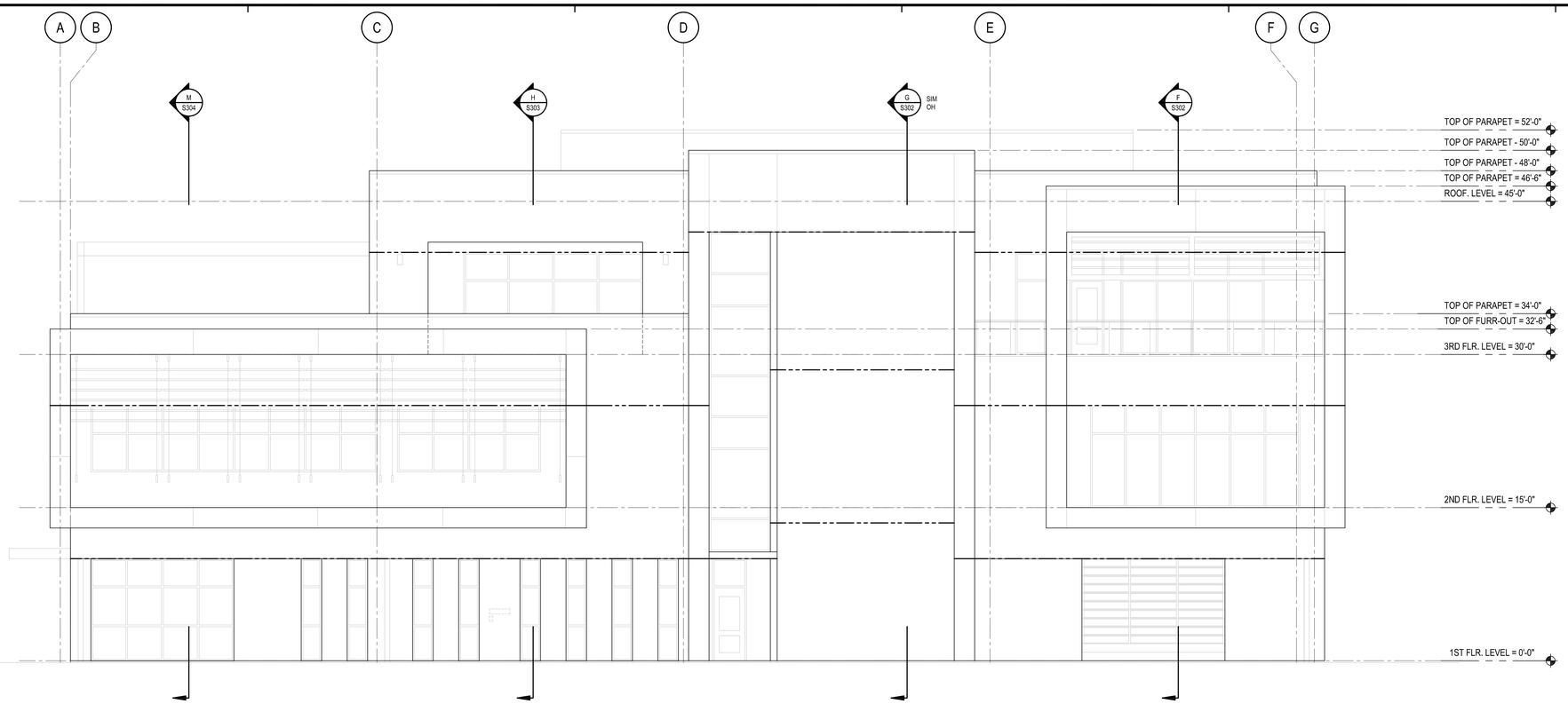

C SOUTH EXTERIOR STUD ELEVATION
3/16" = 1'-0"

DRIFT REQUIREMENTS	
LEVEL	AMPLIFIED (Dd) dRIFT
2nd LEVEL	2 1/2 INCHES
3rd IEVEL	2 3/4 INCHES
ROOF LEVEL	2 1/2 INCHES

NOTE:
1. METAL STUD CONTRACTOR SHALL PROVIDE ALL INTERIOR AND EXTERIOR CONNECTION DETAILS FOR THE ENGINEERING DESIGN FOR THE DEFERRED APPROVAL OF THE METAL STUDS.
2. ALL INTERIOR AND EXTERIOR METAL STUD DETAING REPRESENTED AND SHOWN IN THESE DOCUMENTS ARE CONCEPTUAL.
3. DRIFT JOINT LOCATION. SEE DRIFT REQUIREMENTS ON TABLE ON THIIS SHEET.
4. CONTRACTOR SHALL COORDINATE WITH WINDOW MANUFACTURER AND METAL STUD CONTRACTOR TO PROVIDE FOR 1" OF LIVE LOAD DEFLECTION IN COMPENSATING WINDOW HEAD, OR METAL STUD SLIP TRACK

LEGEND:

— — — INDICATES DRIFT JOINT LOCATION

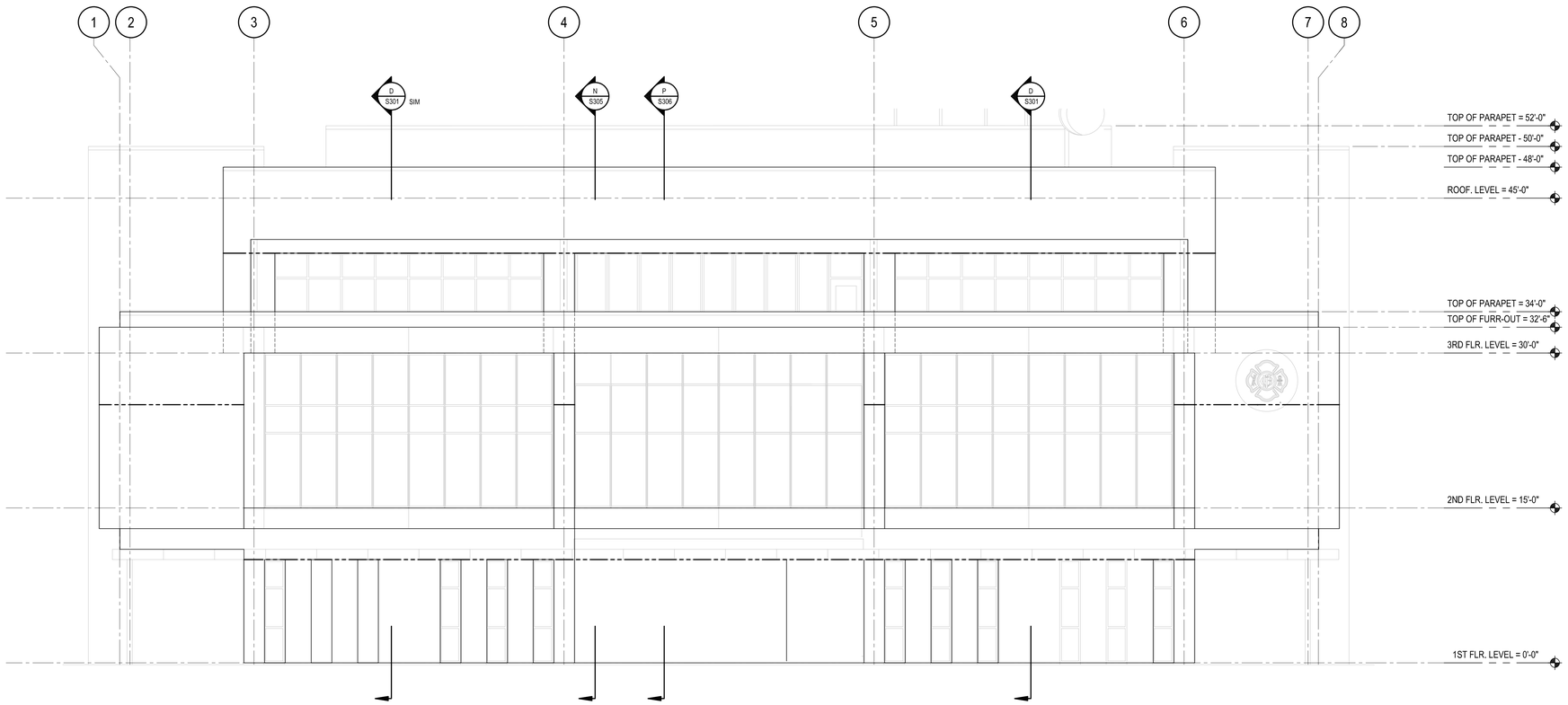

D WEST EXTERIOR STUD ELEVATION
3/16" = 1'-0"

PBK
RANCHO CUCAMONGA
8163 ROCHESTER AVENUE, SUITE 100
RANCHO CUCAMONGA, CA 91730
909-987-0909 P

ONTARIO FIRE DEPARTMENT ADMINISTRATION BUILDING

CITY OF ONTARIO

1420 E. FRANCIS STREET., ONTARIO, CA

LICENSED ARCHITECT
KELLEY NEEDHAM
C-19064
Ex.Date 03/31/25
STATE OF CALIFORNIA

REGISTERED PROFESSIONAL ENGINEER
Rob Bond
No. 53460
Exp. 3/31/24
STRUCTURAL
STATE OF CALIFORNIA

CONSULTANT

miyamoto.
1047 West Sixth Street, Suite A
Ontario, CA 91762
M022280036.00
T: (833) 270-6846
miyamotointernational.com

NO	DATE	BY	DESCRIPTION

REVISIONS

DRAWN: AR	CHECKED: RB
DATE: 02/16/2024	SCALE: AS NOTED
PROJECT NUMBER: 2011700	

BUILDING ELEVATIONS

DRAWING NUMBER: S702

BID SET 03/01/24

COPYRIGHT, INTELLECTUAL PROPERTY, AND LICENSE FEE

1.1. © 2024 DURAFUSE FRAMES, LLC. THIS DRAWING IS PROPRIETARY TO DURAFUSE FRAMES, LLC AND IS NOT TO BE USED OR DUPLICATED WITHOUT THE EXPRESS WRITTEN CONSENT OF DURAFUSE FRAMES, LLC.

1.2. DURAFUSE FRAMES® IS A REGISTERED TRADEMARK OF DURAFUSE FRAMES, LLC.

1.3. THE USE OF THIS DRAWING IS RESTRICTED FOR USE FOR THE BUILDING SPECIFICALLY IDENTIFIED BELOW:

PROJECT: ONTARIO ESOC
LOCATION: ONTARIO, CA
DFF TRACKING NUMBER: 220923-00

1.4. DURAFUSE FRAMES, LLC IS NOT RESPONSIBLE FOR THE USE OF THIS DRAWING BY OTHERS WITHOUT ITS KNOWLEDGE AND CONSENT.

1.5. THE IBC/CBC SEC. 104.11 DESIGN REQUIREMENTS ARE SATISFIED PER IAPMO UES ER 610, INCLUDING THE CALIFORNIA SUPPLEMENT.

1.6. THE DURAFUSE FRAMES SYSTEM IS COVERED BY ONE OR MORE U.S. PAT. NOS. US-2017-0218616-A1, US-2018-0274223-A1, US-2018-0347222-A1, AND FOREIGN COUNTERPARTS.

1.7. THIS DRAWING AND THE INFORMATION HEREON MAY ONLY BE USED AFTER THE PAYMENT OF A LICENSE FEE TO DURAFUSE FRAMES, LLC.

1.8. LICENSE FEE:

1.8.1. PROSPECTIVE STEEL FABRICATORS SHALL REQUEST THE LICENSE FEE IN WRITING FROM DURAFUSE FRAMES, LLC (801-727-4060) (QUOTE@DURAFUSEFRAMES.COM).

1.8.2. PROSPECTIVE STEEL FABRICATORS SHALL INCLUDE THE LICENSE FEE IN THEIR BID PRICE.

1.8.3. UPON CONTRACT AWARD, THE FABRICATOR SHALL SUBMIT A PURCHASE ORDER TO DURAFUSE FRAMES, LLC FOR THE TOTAL FEE, AND SHALL INCLUDE THE FEE IN ITS FIRST CONSTRUCTION DRAW.

1.8.4. PAYMENT OF THE FEE SHALL BE MADE TO:
DURAFUSE FRAMES, LLC
5801 WEST WELLS PARK ROAD
WEST JORDAN, UT 84081

1.9. FABRICATORS ARE ENCOURAGED TO USE THE TEKLA OR SDS2 PLUGINS TO HELP AUTOMATE DURAFUSE FRAMES DETAILING. USE OF THESE TOOLS IS INCLUDED IN THE LICENSE FEE.

DESIGN RESPONSIBILITY AND SUBMITTALS

2.1. DURAFUSE FRAMES ENGINEERING DESIGN RESPONSIBILITIES ARE LIMITED TO DESIGN OF THE BEAM-TO-COLUMN CONNECTIONS IN THE MOMENT FRAMES.

2.2. MEMBER SIZES, DIMENSIONS, AND ELEVATIONS ON DURAFUSE FRAMES SHEETS ARE SHOWN FOR COORDINATION ONLY. PROJECT DOCUMENTS SHALL GOVERN.

2.3. PRIOR TO SHOP FABRICATION, THE CONTRACTOR SHALL SUBMIT THE FOLLOWING TO DURAFUSE FRAMES, LLC (VIA THE ENGINEER OF RECORD) FOR REVIEW AND DISPOSITION:

2.3.1. ELECTRONIC COPY OF ALL STRUCTURAL STEEL DRAWINGS PERTAINING TO OR EFFECTING THE SHOP FABRICATION AND ERECTION OF THE DURAFUSE FRAMES, INCLUDING ALL RE-SUBMITTALS. REVIEW TIME FOR DURAFUSE FRAMES SHALL BE AT LEAST THE SPECIFIED REVIEW TIME FOR THE ENGINEER OF RECORD (NOT LESS THAN 7 BUSINESS DAYS).

2.3.2. WELDING PROCEDURE SPECIFICATION (WPS) AND CURRENT CERTIFICATE OF COMPLIANCE BY WIRE MANUFACTURER.

2.3.3. QUALITY CONTROL PROGRAM (ONLY REQUIRED IF SHOP IS NOT AISC CERTIFIED).

MATERIALS

3.1. STRUCTURAL SHAPES:

3.1.1. ROLLED WIDE-FLANGE BEAMS AND COLUMN SECTION SHALL CONFORM TO ASTM A992.

3.1.2. PLATES FOR BUILT-UP WIDE FLANGE OR BOX COLUMNS SHALL CONFORM TO THE DURAFUSE FRAMES REQUIREMENTS FOR PLATES AND FLAT BAR.

3.2. PLATES AND FLAT BAR:

3.2.1. ALL CONNECTION STEEL PLATES, WHICH CONSIST OF COVER PLATES, EXTERNAL CONTINUITY PLATES, INTERNAL CONTINUITY PLATES, SHEAR TABS, TOP PLATES, AND FUSE PLATES SHALL BE FABRICATED FROM STRUCTURAL STEEL COMPLYING WITH ASTM A572 GRADE 50 STEEL.

3.2.2. FUSE PLATES SHALL BE FABRICATED FROM PLATES WITH MILL CERTIFIED TENSILE STRENGTH LESS THAN OR EQUAL TO 85 KSI, UNLESS INDEPENDENT MATERIAL TESTING DETERMINES THAT THE TENSILE STRENGTH IS LESS THAN OR EQUAL TO 85 KSI.

3.2.3. PLATES THAT ARE THICKER THAN 2 IN. SHALL HAVE A MINIMUM CHARPY V-NOTCH TOUGHNESS OF 20 FT-LB AT 70F IN ACCORDANCE WITH A3.3 OF AISC 341-16 OR AISC 341-10.

3.3. WELDS:

3.3.1. ALL WELDING SHALL BE PERFORMED USING E70 ELECTRODES. WELD FILLER METAL AND ASSOCIATED WELDING PROCESS FOR ALL FILLET WELDS SHALL MEET THE REQUIREMENTS OF ANY OF THE FOLLOWING:

- E70T-6, E71T-8, OR E70TG-K2 FOR FLUX CORED ARC WELDING (FCAW)
- E7XT-9 FOR FLUX CORE ARC WELDING (FCAW) WITH GAS SHIELDING
- F7A2-EXXX FOR SUBMERGED ARC WELDING (SAW)
- E7018 STICK ELECTRODE FOR SHIELDED METAL ARC WELDING (SMAW)
- ER70S-X, E70C-XM OR E70C-XC FOR GAS METAL ARC WELDING, EXCEPT SHORT CIRCUIT TRANSFER.

3.3.2. ALL WELD FILLER MATERIAL SHALL SATISFY THE REQUIREMENTS IN CLAUSE 6.3 OF AWS D1.8, INCLUDING THE MINIMUM CHARPY V-NOTCH TOUGHNESS OF 20 FT-LB AT A TEMPERATURE LOWER THAN 0F IN ACCORDANCE WITH A3.4 OF AISC 341-16 OR AISC 341-10.

3.4. BOLTS:

3.4.1. BOLTS SHALL BE ASTM F3125 GRADE A490, OR GRADE A325, OR GRADE F2280, OR GRADE F1852, AS SPECIFIED ON THE SCHEDULE.

3.4.2. SHIMS WITH A MAXIMUM OVERALL THICKNESS OF ¼ INCH MAY BE USED BETWEEN TOP PLATES AND BARS OR BEAMS AND BETWEEN THE FUSE PLATE AND BAR OR BEAMS. SHIMS MAY BE FINGER SHIMS OR MAY BE PRODUCED WITH DRILLED OR PUNCHED HOLES.

CONSTRUCTION

4.1. FABRICATION AND ERECTION

4.1.1. DURAFUSE FRAMES SHALL BE MANUFACTURED BY AN APPROVED FABRICATOR IN ACCORDANCE WITH SECTION 1704.2.5.1 OF THE 2018 OR 2015 IBC, OR 1704.2.5.2 OF THE 2012 IBC.

4.1.2. FABRICATION AND ERECTION OF DURAFUSE FRAMES SHALL BE IN ACCORDANCE WITH CHAPTER M OF AISC 360, AISC 303, CHAPTER I OF AISC 341, AND CHAPTER 22 OF THE IBC.

4.1.3. BOLT HOLES MAY BE PRODUCED BY DRILLING, THERMAL CUTTING, OR BY SUB-PUNCHING AND REAMING.

4.1.4. THE ROUGHNESS OF ALL THERMAL CUT SURFACES SHALL BE NO GREATER THAN AN ANSI SURFACE ROUGHNESS OF 1000 MICRO-INCHES. ROUGHNESS EXCEEDING THIS VALUE OR GOUGES NOT MORE THAN 3/16 IN SHALL BE REMOVED BY MACHINING OR GRINDING. GOUGES DEEPER THAN 3/16 SHALL BE REPAIRED PER AWS.

4.1.5. LOOSE SLAG OR CUTTING BY-PRODUCTS SHOULD BE REMOVED FROM PARTS.

4.1.6. CURVED CUTS SHALL BE DEFINED BY A SMOOTH RADIUS (NO FACETED CURVES).

4.1.7. ALL WELDERS, TACK WELDERS, AND WELDING OPERATORS SHALL BE QUALIFIED IN CONFORMANCE WITH AWS D1.1, CLAUSE 4, PART C.

4.1.8. WELDERS AND WELDING OPERATORS PERFORMING WELDS AS DESCRIBED IN AWS D1.8 CLAUSE 5.1.1 SHALL BE SUBJECTED TO SUPPLEMENTAL WELDER QUALIFICATION TESTING IN ACCORDANCE WITH AWS D1.8 CHAPTER 5.

4.1.9. WELDING SHALL BE PERFORMED IN ACCORDANCE WITH A WELDING PROCEDURE SPECIFICATION (WPS) IN ACCORDANCE WITH AWS D1.1 WHICH SHALL BE PREPARED FOR EVERY DIFFERENT WELDING POSITION, WELDING PROCESS, ELECTRODE MANUFACTURER, FILLER METAL TRADE NAME FOR THE ELECTRODE TYPE SELECTED, AND OTHER ESSENTIAL VARIABLES AS DEFINED IN AWS D1.1.

4.1.10. BOLTS SHALL BE INSTALLED TO A PRETENSIONED CONDITION FOLLOWING THE REQUIREMENTS IN THE RCSC SPECIFICATION. PRETENSION CAN BE PROVIDED BY: THE TURN-OF-THE-NUT METHOD, A CALIBRATED WRENCH, TWIST-OFF BOLTS (ASTM 2280 OR ASTM 1852), OR DIRECT TENSION INDICATORS (ASTM F929).

4.1.11. AN ORDINARY THICKNESS WASHER SHALL BE USED UNDER EACH NUT AT ALL LOCATIONS IN THE DURAFUSE FRAMES CONNECTIONS.

4.2. QUALITY CONTROL AND QUALITY ASSURANCE SHALL BE IN ACCORDANCE WITH CHAPTER N OF AISC 360 AND CHAPTER J OF AISC 341.

4.3. PROTECTED ZONE

4.3.1. THE PROTECTED ZONE AT EACH CONNECTION CONSISTS OF THE FUSE PLATE.

4.3.2. THE CONTRACTOR SHALL KEEP THE PROTECTED ZONES IDENTIFIED THROUGHOUT CONSTRUCTION.

4.3.3. WITHIN THE PROTECTED ZONE, DISCONTINUITIES CREATED BY FABRICATION OR ERECTION OPERATIONS, BEYOND THOSE REQUIRED FOR INITIAL FABRICATION OF THE PLATE, SUCH AS TACK WELDS, ERECTION AIDS, AIR-ARC GOUGING AND THERMAL CUTTING SHALL BE REPAIRED. REPAIR METHODS SHALL BE APPROVED BY THE E.O.R.

4.3.4. WELDING, BOLTING, SCREWING, OR SHOT-IN ATTACHMENTS FOR PARTITIONS, DUCT WORK, PIPING, OR OTHER CONSTRUCTION SHALL NOT BE PLACED WITHIN THE PROTECTED ZONE.

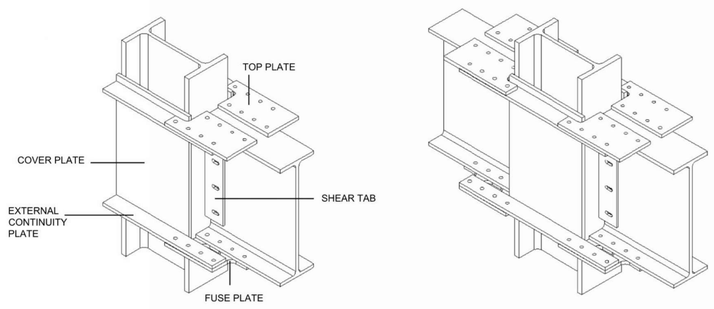

9 **ISOMETRIC CONNECTION VIEW**
SCALE: NTS

PROJECT:
ONTARIO ESOC
ONTARIO, CA

NO.	DATE	DESCRIPTION

ADDITIONAL NOTES:

STAMP AND SIGNATURE:
JOSEPH D. MARONEY, C 63229, CIVIL, STATE OF CALIFORNIA
02/15/2024

DURAFUSE FRAMES
THE RESILIENT SEISMIC SOLUTION
5801 West Wells Park Rd.
West Jordan, Utah 84081
(801) 727-4060

SHEET TITLE:
GENERAL NOTES

DRAWN BY: MR	DATE: 2/14/2024
CHECKED BY: JM	REV #:
SCALE: NONE	PROJECT NUMBER: 220923-00

SHEET NUMBER:
SDF-01

PBK
RANCHO CUCAMONGA
8163 ROCHESTER AVENUE, SUITE 100
RANCHO CUCAMONGA, CA 91730
909-987-0909 P

ONTARIO FIRE DEPARTMENT ADMINISTRATION BUILDING
CITY OF ONTARIO
1420 E. FRANCIS STREET., ONTARIO, CA

LICENSED ARCHITECT, KELLEY NEEDHAM, C-19064, Exp. 03/31/25, STATE OF CALIFORNIA
REGISTERED PROFESSIONAL ENGINEER, No. S3350, Exp. 3/31/24, STRUCTURAL, STATE OF CALIFORNIA

CONSULTANT

miyamoto.
1041 West Sixth Street, Suite A
Ontario, CA, 91762
M022090006.00
T: (833) 270-6848
miyamotointernational.com

NO	DATE	BY	DESCRIPTION

REVISIONS

DRAWN: AR	CHECKED: RB
DATE: 02/16/2024	SCALE: AS NOTED
PROJECT NUMBER: 2011700	

DURAFUSE GENERAL NOTES

DRAWING NUMBER: SDF-01

BID SET 03/01/24

© 2024 DURAFUSE FRAMES, LLC

NOTE
FOR DIMENSIONS INDICATED, SEE CONNECTION SCHEDULE DETAIL 9/SDF-02 OR PLATE AND BEAM END SCHEDULE DETAIL 9/SDF-04

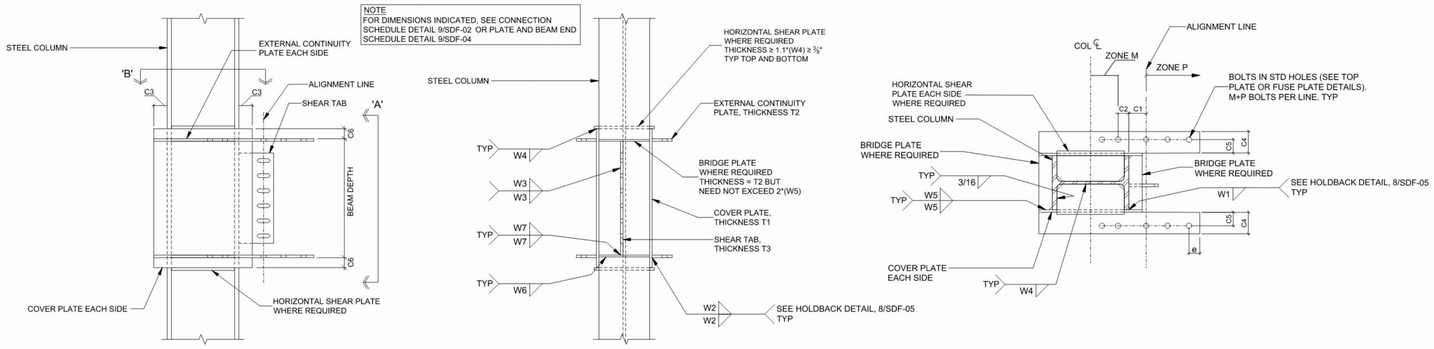

FRONT ELEVATION — SECTION 'A' — SECTION 'B'

1 ONE SIDED CONNECTION - COLUMN ASSEMBLY
SCALE: NTS

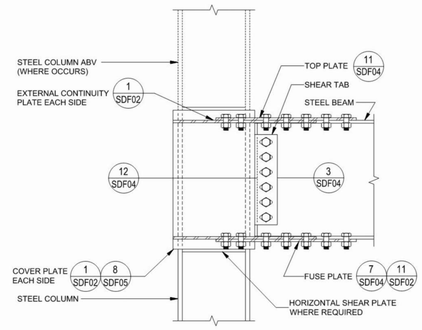

4 ONE SIDED CONNECTION
SCALE: NTS

NOTES
1. FOR DIMENSIONS INDICATED, SEE CONNECTION SCHEDULE DETAIL 9/SDF-02 OR PLATE AND BEAM END SCHEDULE DETAIL 9/SDF-04.
2. CONNECTION PER 1/SDF-02 EXCEPT AT TOP FLANGE LEVEL AS SHOWN.
3. SHEAR PLATES AND BRIDGE PLATES ARE NOT REQUIRED AT TOP FLANGE LEVEL.

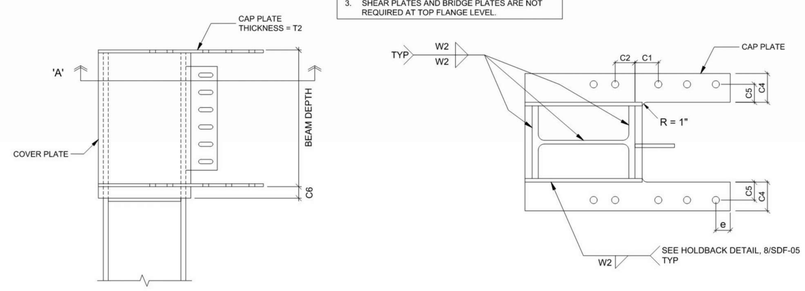

FRONT ELEVATION — SECTION 'A'

7 TOP-OF-COLUMN CAP PLATE DETAIL FOR ONE SIDED CONNECTION
SCALE: NTS

ID	MEMBER SIZES		PLATE THICKNESS			DIMENSIONS						WELDS							BOLTS PER CONNECTION (EACH SIDE)					
	COLUMN	BEAM	T1	T2	T3	C1	C2	C3	C4	C5	C6	W1	W2	W3	W4	W5	W6	W7	DIA	SPACING	M	P	B	N
DF101	W27X146	W21X182	3/4	1 1/2	1 3/4	6 1/4	1/8	3	6	3 1/8	3	5/16	1/2	7/16	5/16	7/16	3/8	9/16	1 1/4	3 3/4	3	4	7	4
DF102	W27X146	W21X182	1	1 1/2	1 1/2	6 1/4	1/8	3	6	3 1/8	3	5/16	1/2	3/8	5/16	7/16	5/16	7/16	1 1/4	3 3/4	3	4	7	4
DF103	W27X161	W18X50	1/2	5/8	1/2	4 3/8	2 1/8	1	3 3/4	2 3/8	3	5/16	3/16	3/8	0	0	0	0	7/8	3 7/8	2	3	5	3
DF104	W27X146	W18X50	1/2	5/8	1/2	4 3/8	3 1/4	1	4 5/8	2 3/8	3	3/8	1/4	3/8	0	0	0	0	7/8	3 7/8	2	3	5	3

NOTES:
1. ALL BOLTS SHALL BE ASTM F3125 GR. A490 OR F2280 PRETENSIONED HIGH-STRENGTH BOLTS W/ THREADS EXCLUDED (X) FROM SHEAR PLANE.
2. ZONE "M" INCLUDES THE BOLTS THAT CONNECT THE TOP PLATE OR FUSE PLATE TO THE EXTERNAL CONTINUITY PLATE BEHIND THE ALIGNMENT LINE.
   ZONE "P" INCLUDES THE BOLTS THAT CONNECT THE TOP PLATE OR FUSE PLATE TO THE EXTERNAL CONTINUITY PLATE ON OR BEYOND THE ALIGNMENT LINE.
   ZONE "N" INCLUDES THE BOLTS IN THE SHEAR TAB CONNECTION.
   ZONE "B" CORRESPONDS TO THE BEAM FLANGE BOLTS (EXCEPT ERECTION AIDS)
3. ø = 1-1/8" FOR 3/4" BOLTS, 1-1/4" FOR 7/8" BOLTS, 1-3/8" FOR 1" BOLTS, 1-5/8" FOR 1-1/8" BOLTS, OR 1-3/4" FOR 1-1/4" BOLTS.
4. BOLT SPACING IN TABLE APPLIES TO ALL M, P, AND B BOLTS, UNO.
5. IF W4 EQUALS 0 THEN HORIZONTAL SHEAR PLATES ARE NOT REQUIRED.
6. IF W5, W6, AND W7 EQUAL ZERO THEN BRIDGE PLATES ARE NOT REQUIRED.

9 ONE SIDED CONNECTION SCHEDULE
SCALE: NTS

NOTES
1. THE BOTTOM FUSE PLATE IS A PROTECTED ZONE. NO OTHER COMPONENT OF THE CONNECTION, NOR ANY PORTION OF THE BEAMS OR COLUMN ARE A PROTECTED ZONE.
2. PROTECTED ZONE SHALL BE MARKED USING ANY NON-DESTRUCTIVE METHODS PRIOR TO AND AFTER APPLICATION OF SPRAYED ON FIRE-RESISTING MATERIAL.
3. AREA MARKED AS PROTECTED ZONE SHALL COMPLY WITH THE FOLLOWING REQUIREMENTS:
   3.1. WITHIN THE PROTECTED ZONE, DISCONTINUITIES CREATED BY FABRICATION OR ERECTION OPERATIONS, BEYOND THOSE REQUIRED FOR INITIAL FABRICATION OF THE PLATE, SUCH AS TACK WELDS, ERECTION AIDS, AIR-ARC GOUGING AND THERMAL CUTTING SHALL BE REPAIRED. REPAIR METHOD SHALL BE APPROVED BY THE ENGINEER OF RECORD.
   3.2. WELDING, BOLTING, SCREWING OR SHOT-IN ATTACHMENTS FOR PARTITIONS, DUCT WORK, PIPING OR OTHER CONSTRUCTION SHALL NOT BE PLACED WITHIN THE PROTECTED ZONE.

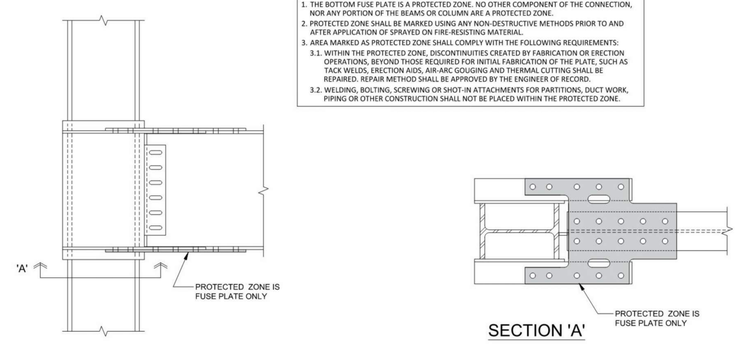

SECTION 'A'

11 ONE SIDED PROTECTED ZONE
SCALE: NTS

PROJECT:
ONTARIO ESOC
ONTARIO, CA

NO.	DATE	DESCRIPTION

ADDITIONAL NOTES:

STAMP AND SIGNATURE:
KEITH D. MARSHALL C 63229 CIVIL STATE OF CALIFORNIA
02/15/2024

DURAFUSE FRAMES
THE RESILIENT SEISMIC SOLUTION
5801 West Wells Park Rd.
West Jordan, Utah 84081
(801) 727-4060

SHEET TITLE:
ONE-SIDED CONNECTION DETAILS

DRAWN BY: MR	DATE: 2/14/2024
CHECKED BY: JM	REV #:
SCALE: NONE	PROJECT NUMBER: 220923-00

SHEET NUMBER:
SDF-02

PBK
RANCHO CUCAMONGA
8163 ROCHESTER AVENUE, SUITE 100
RANCHO CUCAMONGA, CA 91730
909-987-0909 P

ONTARIO FIRE DEPARTMENT ADMINISTRATION BUILDING
CITY OF ONTARIO
1420 E. FRANCIS STREET., ONTARIO, CA

LICENSED ARCHITECT KELLEY NEEDHAM C-19064 Inactive 03/31/25 STATE OF CALIFORNIA
REGISTERED PROFESSIONAL ENGINEER Rick Dorf No. 53450 Exp. 3/31/24 STRUCTURAL STATE OF CALIFORNIA

CONSULTANT

miyamoto.
1047 West Sixth Street, Suite A
Ontario, CA 91762
M022806.00
T: (833) 270-6846
miyamotointernational.com

NO	DATE	BY	DESCRIPTION

REVISIONS

DRAWN: DETAILS	CHECKED: RB
DATE: 02/16/2024	SCALE: AS NOTED
PROJECT NUMBER: 2011700	

DURAFUSE ONE-SIDED CONNECTION

DRAWING NUMBER: SDF-02

BID SET 03/01/24

© 2024 DURAFUSE FRAMES, LLC

NOTE
FOR DIMENSIONS INDICATED, SEE CONNECTION SCHEDULE DETAIL 9/SDF-03 OR PLATE AND BEAM END SCHEDULE DETAIL 9/SDF-04

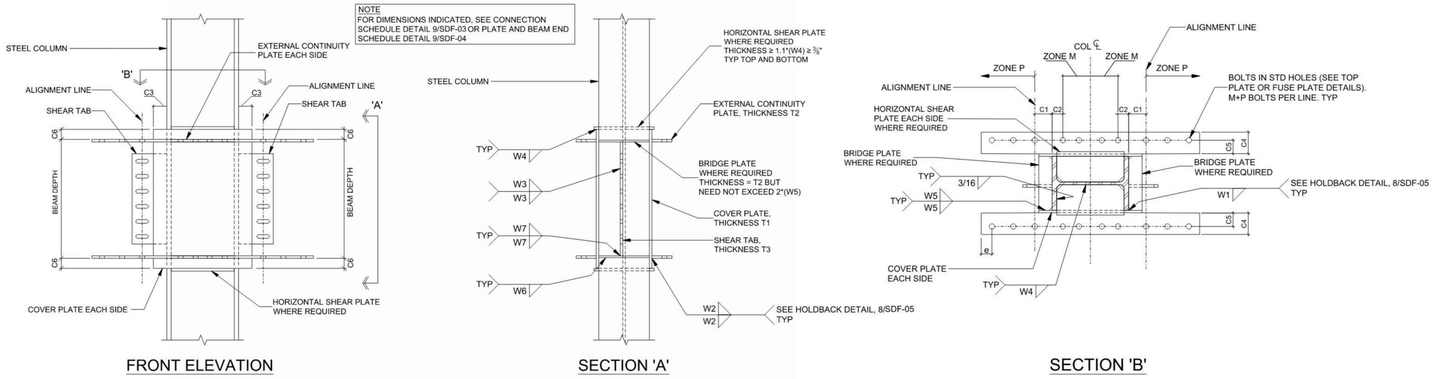

FRONT ELEVATION — SECTION 'A' — SECTION 'B'

1 TWO SIDED CONNECTION - COLUMN ASSEMBLY
SCALE: NTS

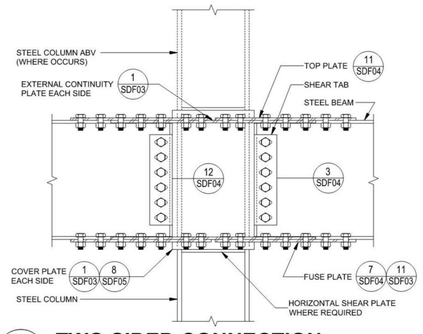

4 TWO SIDED CONNECTION
SCALE: NTS

NOTES
1. FOR DIMENSIONS INDICATED, SEE CONNECTION SCHEDULE DETAIL 9/SDF-03 OR PLATE AND BEAM END SCHEDULE DETAIL 9/SDF-04.
2. CONNECTION PER 1/SDF-03 EXCEPT AT TOP FLANGE LEVEL AS SHOWN.
3. SHEAR PLATES AND BRIDGE PLATES ARE NOT REQUIRED AT TOP FLANGE LEVEL.

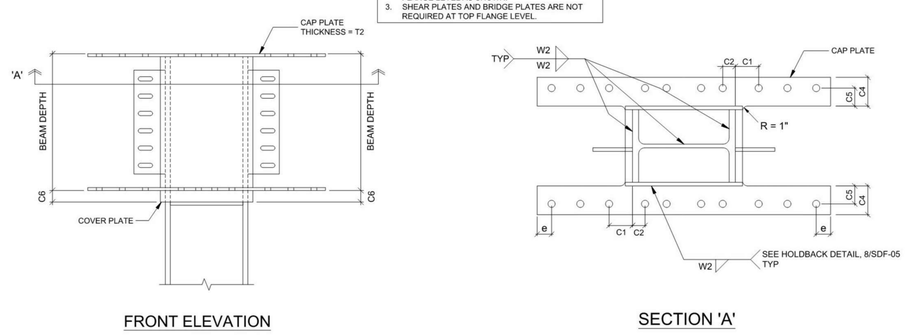

FRONT ELEVATION — SECTION 'A'

7 TOP-OF-COLUMN DETAIL FOR TWO SIDED CONNECTION
SCALE: NTS

ID	MEMBER SIZES		PLATE THICKNESS			DIMENSIONS						WELDS							BOLTS PER CONNECTION (EACH SIDE)					
	COLUMN	BEAM	T1	T2	T3	C1	C2	C3	C4	C5	C6	W1	W2	W3	W4	W5	W6	W7	DIA	SPACING	M	P	B	N
DF201	W27X161	W21X182	3/4	1 1/2	1 1/2	6 3/4	- 1/2	3 1/2	6	3 1/4	3	7/16	9/16	3/8	5/16	7/16	5/16	7/16	1 1/4	3 3/4	3	4	7	4
DF202	W27X161	W21X182	1	1 1/2	1 1/2	9	-2 7/8	5 7/8	6 1/8	3 3/8	4 1/2	3/4	11/16	3/8	5/16	3/8	1/4	5/16	1 1/4	3 3/4	3	4	7	4
DF203	W27X161	W18X50	1/2	5/8	1/2	6 3/8	3	1	4 3/8	2 1/2	3	11/16	3/8	7/16	0	0	0	0	7/8	3 7/8	2	3	5	3

NOTES:
1. ALL BOLTS SHALL BE ASTM F3125 GR. A490 OR F2280 PRETENSIONED HIGH-STRENGTH BOLTS W/ THREADS EXCLUDED (X) FROM SHEAR PLANE.
2. ZONE "M" INCLUDES THE BOLTS THAT CONNECT THE TOP PLATE OR FUSE PLATE TO THE EXTERNAL CONTINUITY PLATE BEHIND THE ALIGNMENT LINE.
   ZONE "P" INCLUDES THE BOLTS THAT CONNECT THE TOP PLATE OR FUSE PLATE TO THE EXTERNAL CONTINUITY PLATE ON OR BEYOND THE ALIGNMENT LINE.
   ZONE "N" INCLUDES THE BOLTS IN THE SHEAR TAB CONNECTION.
   ZONE "B" CORRESPONDS TO THE BEAM FLANGE BOLTS (EXCEPT ERECTION AIDS)
3. e = 1-1/8" FOR 3/4" BOLTS, 1-1/4" FOR 7/8" BOLTS, 1-3/8" FOR 1" BOLTS, 1-5/8" FOR 1-1/8" BOLTS, OR 1-3/4" FOR 1-1/4" BOLTS.
4. BOLT SPACING IN TABLE APPLIES TO ALL M, P, AND B BOLTS, UNO.
5. IF W4 EQUALS 0 THEN HORIZONTAL SHEAR PLATES ARE NOT REQUIRED.
6. IF W5, W6, AND W7 EQUAL ZERO THEN BRIDGE PLATES ARE NOT REQUIRED.

9 TWO SIDED CONNECTION SCHEDULE
SCALE: NTS

NOTES
1. THE BOTTOM FUSE PLATE IS A PROTECTED ZONE. NO OTHER COMPONENT OF THE CONNECTION, NOR ANY PORTION OF THE BEAMS OR COLUMN ARE A PROTECTED ZONE.
2. PROTECTED ZONE SHALL BE MARKED USING ANY NON-DESTRUCTIVE METHODS PRIOR TO AND AFTER APPLICATION OF SPRAYED ON FIRE-RESISTING MATERIAL.
3. AREA MARKED AS PROTECTED ZONE SHALL COMPLY WITH THE FOLLOWING REQUIREMENTS:
   3.1. WITHIN THE PROTECTED ZONE, DISCONTINUITIES CREATED BY FABRICATION OR ERECTION OPERATIONS, BEYOND THOSE REQUIRED FOR INITIAL FABRICATION OF THE PLATE, SUCH AS TACK WELDS, ERECTION AIDS, AIR-ARC GOUGING AND THERMAL CUTTING SHALL BE REPAIRED. REPAIR METHOD SHALL BE APPROVED BY THE ENGINEER OF RECORD.
   3.2. WELDING, BOLTING, SCREWING OR SHOT-IN ATTACHMENTS FOR PARTITIONS, DUCT WORK, PIPING OR OTHER CONSTRUCTION SHALL NOT BE PLACED WITHIN THE PROTECTED ZONE.

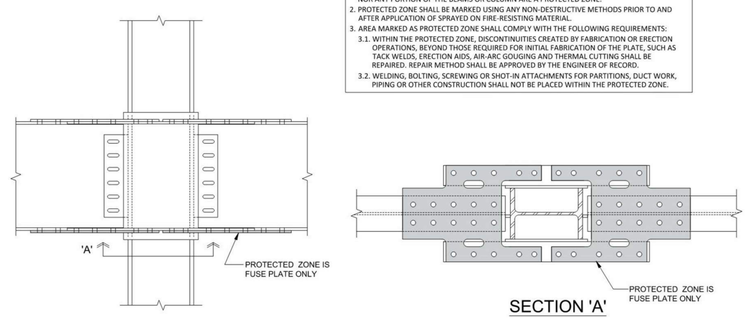

SECTION 'A'

11 TWO SIDED PROTECTED ZONE
SCALE: NTS

PROJECT:
ONTARIO ESOC
ONTARIO, CA

NO.	DATE	DESCRIPTION

ADDITIONAL NOTES:

STAMP AND SIGNATURE:
REGISTERED PROFESSIONAL ENGINEER — JEFFREY D. MARSHALL — C 63229 — CIVIL — STATE OF CALIFORNIA
02/15/2024

DURAFUSE FRAMES — THE RESILIENT SEISMIC SOLUTION
5801 West Wells Park Rd.
West Jordan, Utah 84081
(801) 727-4060

SHEET TITLE:
TWO-SIDED CONNECTION DETAILS

DRAWN BY: MR	DATE: 2/14/2024
CHECKED BY: JM	REV #:
SCALE: NONE	PROJECT NUMBER: 220923-00

SHEET NUMBER:
SDF-03

PBK
RANCHO CUCAMONGA
8163 ROCHESTER AVENUE, SUITE 100
RANCHO CUCAMONGA, CA 91730
909-987-0909 P

ONTARIO FIRE DEPARTMENT ADMINISTRATION BUILDING
CITY OF ONTARIO
1420 E. FRANCIS STREET., ONTARIO, CA

LICENSED ARCHITECT — KELLEY NEEDHAM — C-19064 — lic.ex 03/31/25 — STATE OF CALIFORNIA
REGISTERED PROFESSIONAL ENGINEER — Rick Wu Chang — No. 53050 — Exp. 3/31/24 — STRUCTURAL — STATE OF CALIFORNIA

CONSULTANT

miyamoto.
1047 West Sixth Street, Suite A
Ontario, CA, 91762
M0220030-00
T: (833) 270-8848
miyamotointernational.com

NO	DATE	BY	DESCRIPTION

REVISIONS

DRAWN: DETAILS	CHECKED: RB
DATE: 02/16/2024	SCALE: AS NOTED
PROJECT NUMBER: 2011700	

DURAFUSE TWO-SIDED CONNECTION

DRAWING NUMBER: SDF-03

BID SET 03/01/24

© 2024 DURAFUSE FRAMES, LLC

NOTE
FOR DIMENSIONS INDICATED IN TYPICAL DETAILS THIS SHEET, SEE CONNECTION SCHEDULE DETAILS 9/SDF-02 AND 9/SDF-03 OR PLATE AND BEAM END SCHEDULE DETAIL 9/SDF-04

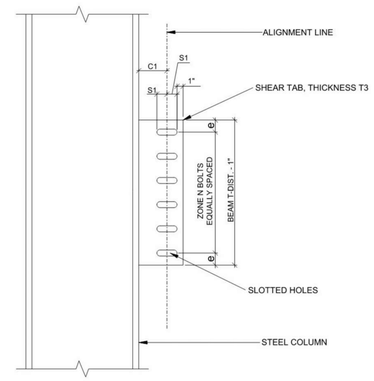

NO BRIDGE PLATE REQUIRED

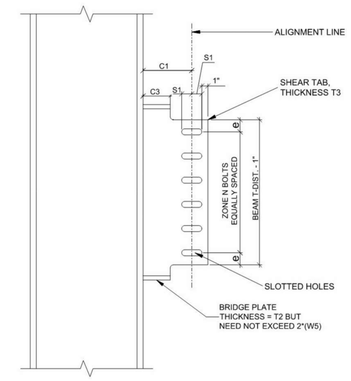

WHEN BRIDGE PLATE REQUIRED

3 SHEAR TAB
SCALE: NTS

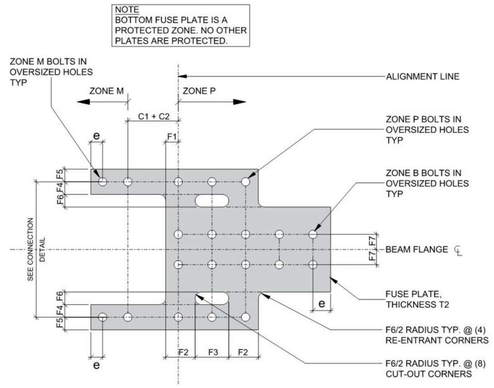

7 FUSE PLATE
SCALE: NTS

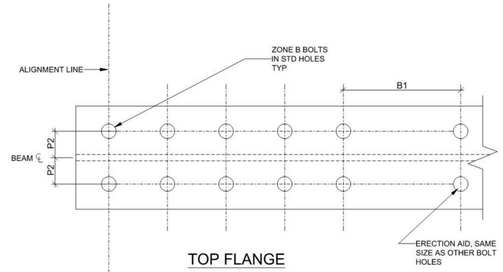

TOP FLANGE

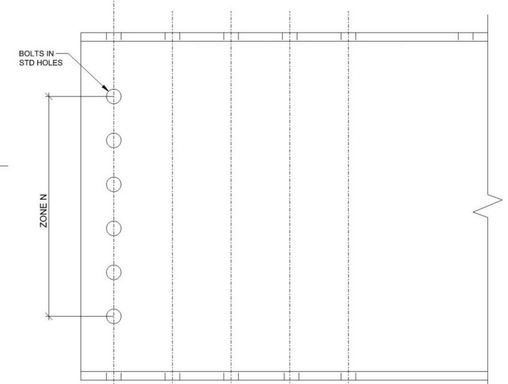

FRONT ELEVATION

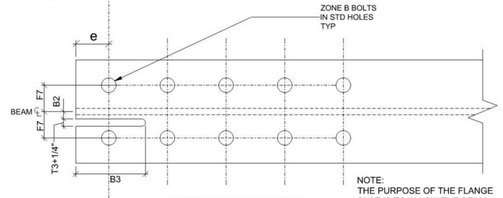

BOTTOM FLANGE

NOTE:
THE PURPOSE OF THE FLANGE SLOT IS TO ALLOW THE BEAM TO DROP-IN PAST THE SHEAR TAB DURING ERECTION.

12 BEAM END
SCALE: NTS

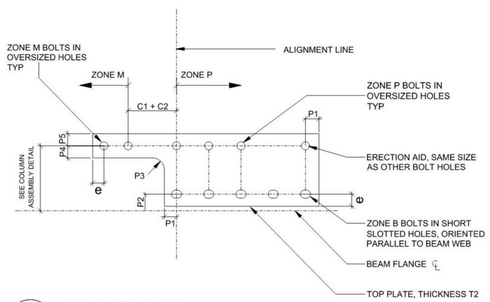

11 TOP PLATE
SCALE: NTS

ID	MEMBER SIZES		TOP PLATE DIMENSIONS					FUSE PLATE DIMENSIONS							SHEAR TAB			BEAM DIMENSIONS		
	COLUMN	BEAM	P1	P2	P3	P4	P5	F1	F2	F3	F4	F5	F6	F7	S1	S2	S3	B1	B2	B3
DF101	W27X146	W21X182	1 7/8	3 7/8	1 1/2	2 1/8	2 3/4	1 7/8	2 3/4	9 3/8	2 1/8	2	3	3 7/8	1 3/4	1 3/4	1	7	11/16	6 3/4
DF102	W27X146	W21X182	1 7/8	3 5/8	1 1/2	2 1/8	2 3/4	1 7/8	2 7/8	9 1/8	2 1/8	2	3 1/4	3 5/8	1 3/4	1 3/4	1	7 1/2	11/16	6 1/2
DF103	W27X161	W18X50	2	2 5/8	1 1/2	1 3/4	1 1/4	2	2	7	1 3/4	1 1/4	1 7/8	2 5/8	1 3/8	1 3/8	1	7 1/4	7/16	4 5/8
DF104	W27X146	W18X50	2	2 5/8	1 1/2	1 3/4	1 3/4	2	2	7	1 3/4	1 1/4	1 7/8	2 5/8	1 3/8	1 3/8	1	7 1/4	7/16	4 5/8
DF201*	W27X161	W21X182	1 7/8	3 5/8	1 5/8	2 1/8	2 5/8	1 7/8	2 7/8	9 1/8	2 1/8	2	3 1/4	3 5/8	1 3/4	1 3/4	1	7 3/8	11/16	6 1/2
DF202	W27X161	W21X182	1 7/8	3 5/8	1 5/8	2 1/8	2 3/4	1 7/8	2 7/8	9 1/8	2 1/8	2	3 1/4	3 5/8	1 3/4	1 3/4	1	7 3/4	11/16	6 1/2
DF203	W27X161	W18X50	2	2 5/8	2	1 3/4	1 5/8	2	2	7	1 3/4	1 1/4	1 7/8	2 5/8	1 3/8	1 3/8	1	7 3/8	7/16	4 5/8

NOTES:
1. SEE CONNECTION SCHEDULE FOR C1, C2, T1, T2, T3, AND NUMBER OF BOLTS IN M, N, P, AND B ZONES.
2. e = 1-1/8" FOR 3/4" BOLTS, 1-1/4" FOR 7/8" BOLTS, 1-3/8" FOR 1" BOLTS, 1-5/8" FOR 1-1/8" BOLTS, OR 1-3/4" FOR 1-1/4" BOLTS.
3. IF B2 AND B3 EQUAL ZERO THEN THERE IS NO SLOT IN THE BEAM FLANGE, AND THE BEAM CAN SWING AROUND THE SHEAR TAB DURING ERECTION.
* THERE ARE NO FUSE HOLES ON THE FUSE PLATE FOR THE CANTILEVER SIDE OF THE CONNECTION. STANDARD BOLT HOLES MUST BE USED ON TOP PLATES AND FUSE PLATES ON THE CANTILEVER SIDE.

9 PLATE AND BEAM END SCHEDULE
SCALE: NTS

PROJECT:

ONTARIO ESOC

ONTARIO, CA

NO.	DATE	DESCRIPTION

ADDITIONAL NOTES:

STAMP AND SIGNATURE:

REGISTERED PROFESSIONAL ENGINEER — JUSTIN G. MARSHALL — C 63229 — CIVIL — STATE OF CALIFORNIA — 02/15/2024

DURAFUSE FRAMES
THE RESILIENT SEISMIC SOLUTION
5801 West Wells Park Rd.
West Jordan, Utah 84081
(801) 727-4060

SHEET TITLE:

BEAM AND PLATE DETAILS

DRAWN BY: MR	DATE: 2/14/2024
CHECKED BY: JM	REV #:
SCALE: NONE	PROJECT NUMBER: 220923-00

SHEET NUMBER:

SDF-04

PBK
RANCHO CUCAMONGA
8163 ROCHESTER AVENUE, SUITE 100
RANCHO CUCAMONGA, CA 91730
909-987-0909 P

ONTARIO FIRE DEPARTMENT ADMINISTRATION BUILDING
CITY OF ONTARIO
1420 E. FRANCIS STREET., ONTARIO, CA

LICENSED ARCHITECT — KELLEY NEEDHAM — C-19064 — Inactive 03/31/25 — STATE OF CALIFORNIA

REGISTERED PROFESSIONAL ENGINEER — Rick Mo Dyer — No. 53360 — Exp. 12/31/24 — CIVIL — STATE OF CALIFORNIA

CONSULTANT

miyamoto.
1047 West Sixth Street, Suite A
Ontario, CA 91762
MI22280036.00
T: (833) 270-6848
miyamotointernational.com

NO	DATE	BY	DESCRIPTION

REVISIONS

DRAWN: AR	CHECKED: RB
DATE: 02/16/2024	SCALE: AS NOTED
PROJECT NUMBER: 2011700	

DURAFUSE BEAM & PLATE DETAILS

DRAWING NUMBER: SDF-04

BID SET 03/01/24

© 2024 DURAFUSE FRAMES, LLC

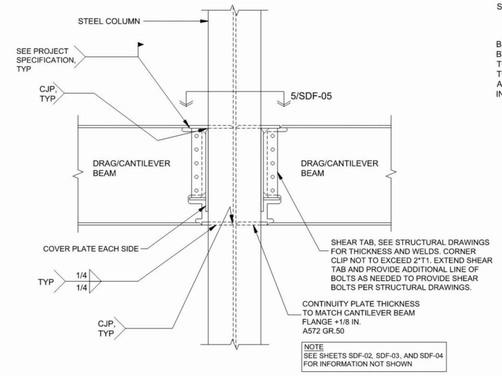

3 **DRAG CANTILEVER BEAM - BEAM DEPTH > MOMENT FRAME BEAM DEPTH**
SCALE: NTS

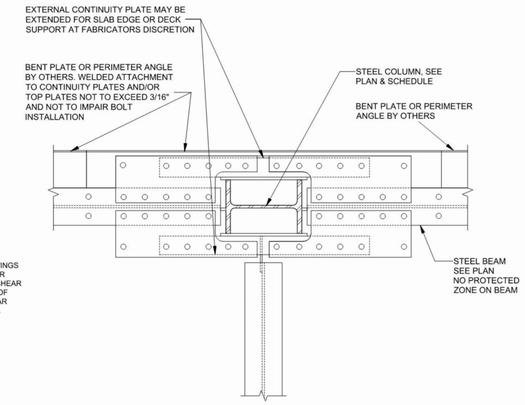

4 **SLAB EDGE AND DECK SUPPORT**
SCALE: NTS

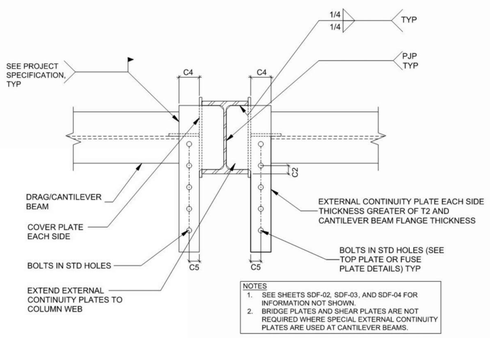

5 **SPECIAL EXTERNAL CONTINUITY PLATE AT DRAG/CANTILEVER BEAM**
SCALE: NTS

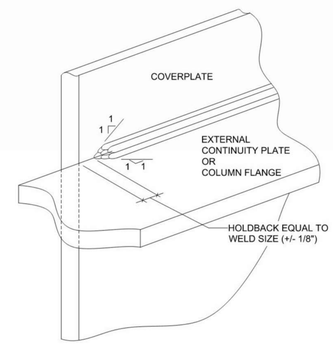

8 **HOLDBACK DETAIL**
SCALE: NTS

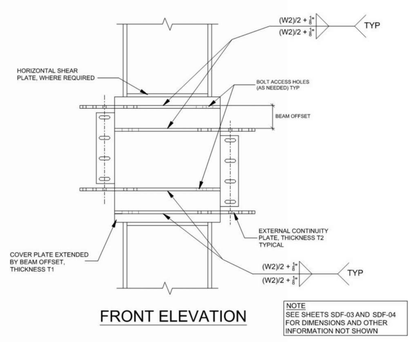

10 **DROPPED BEAM CONNECTION - LARGE OFFSET**
SCALE: NTS

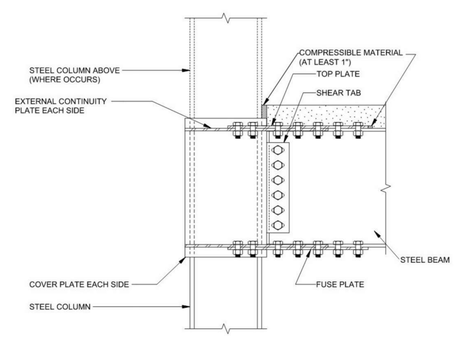

11 **COMPRESSIBLE MATERIAL AT SLAB-TO-COLUMN INTERFACE**
SCALE: NTS

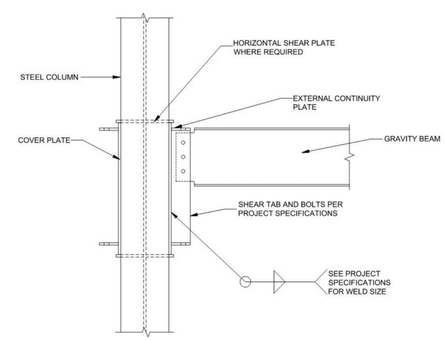

12 **GRAVITY BEAM TO DURAFUSE CONNECTION**
SCALE: NTS

PROJECT:

ONTARIO ESOC

ONTARIO, CA

NO.	DATE	DESCRIPTION

ADDITIONAL NOTES:

STAMP AND SIGNATURE:

ALVIN D. MARQUEZ, C 63229, CIVIL, STATE OF CALIFORNIA, REGISTERED PROFESSIONAL ENGINEER
02/15/2024

DURAFUSE FRAMES
THE RESILIENT SEISMIC SOLUTION
5801 West Wells Park Rd.
West Jordan, Utah 84081
(801) 727-4060

SHEET TITLE:

MISCELLANEOUS DETAILS

DRAWN BY: MR	DATE: 2/14/2024
CHECKED BY: JM	REV #:
SCALE: NONE	PROJECT NUMBER: 220923-00

SHEET NUMBER:

SDF-05

PBK
RANCHO CUCAMONGA
8163 ROCHESTER AVENUE, SUITE 100
RANCHO CUCAMONGA, CA 91730
909-987-0909 P

ONTARIO FIRE DEPARTMENT ADMINISTRATION BUILDING
CITY OF ONTARIO
1420 E. FRANCIS STREET., ONTARIO, CA

LICENSED ARCHITECT, KELLEY NEEDHAM, C-19064, Exp. 03/31/25, STATE OF CALIFORNIA
REGISTERED PROFESSIONAL ENGINEER, STRUCTURAL, No. S3350, Exp. 3/31/24, STATE OF CALIFORNIA

CONSULTANT

miyamoto.
1041 West Sixth Street, Suite A
Ontario, CA, 91762
M022090306.00
T: (833) 270-6846
miyamotointernational.com

NO	DATE	BY	DESCRIPTION

REVISIONS

DRAWN: AR	CHECKED: RB
DATE: 02/16/2024	SCALE: AS NOTED
PROJECT NUMBER: 2011700	

DURAFUSE MISCELLANEOUS DETAILS

DRAWING NUMBER: SDF-05

BID SET 03/01/24

AIR DISTRIBUTION SCHEDULE

SYM.	MANUF & MODEL	NECK SIZE	FACE SIZE	CFM RANGE	MAX. NECK VELOCITY	MAX. N.C.	T. P. DROP	TYPE	DAMPER	REMARKS
– / SD–1	PRICE PDMC	6"Ø 8"Ø 10"Ø 12"Ø 14"Ø 16"Ø 18"Ø	24"x24"	0 - 80 85 - 175 180 - 275 280 - 390 395 - 480 485 - 600 605 - 780	500	25	0.075	MODULAR PERFOR.	MVD	FRAME TYPE 3 FOR T-BAR
– / RG–1	PRICE PDDR	6"Ø 8"Ø 10"Ø 12"Ø 14"Ø 16"Ø 18"Ø	24"x24"	0 - 80 85 - 175 180 - 275 280 - 390 395 - 480 485 - 600 605 - 780	500	25	0.016	PERFOR.	MVD	FRAME TYPE 3 FOR T-BAR
– / SD–2	PRICE SMCD	6"x6" 8"x8" 10"x10" 12"x12" 14"x14" 16"x16" 18"x18" 20"x20"	12"x12" 14"x14" 16"x16" 18"x18" 20"x20" 22"x22" 24"x24" 26"x26"	0 - 125 130 - 220 225 - 350 355 - 500 505 - 680 685 - 880 885 - 1125 1130 - 1400	500	25	.057	MODULAR CORE	MVD	BORDER TYPE 1 FOR GYP. BOARD CEILING PROVIDE SQUARE TO ROUND ADAPTER FOR ALL
– / RG–2	PRICE 530L	6"x6" 8"x8" 10"x10" 12"x12" 14"x14" 16"x16" 18"x18" 22"x20"	8"x8" 10"x10" 12"x12" 14"x14" 16"x16" 18"x18" 20"x20" 24"x22"	0 - 90 95 - 195 200 - 300 305 - 450 455 - 590 595 - 800 805 - 1040 1045 - 1400	500	25	.067	LOUVERED	MVD	BORDER TYPE N FOR GYP. BOARD CEILING
– / SL–1	PRICE SDS100	6" 8" OVAL 10" OVAL 12" OVAL	48"x4" 48"x4" 48"x4" 48"x4"	0 - 90 90 - 200 200 - 300 300 - 360	500	25	.098	2 SLOT	MVD	1" SLOT WIDTH WITH SDB PLENUM
– / EG–1	PRICE PDDR	6"Ø 8"Ø 10"Ø 12"Ø 14"Ø 16"Ø 18"Ø	24"x24"	0 - 80 85 - 175 180 - 275 280 - 390 395 - 480 485 - 600 605 - 780	500	25	0.016	PERFOR.	MVD	FRAME TYPE 3 FOR T-BAR
– / EG–2	PRICE 530L	6"x6" 8"x8" 10"x10" 12"x12" 14"x14" 16"x16" 22"x20"	8"x8" 10"x10" 12"x12" 14"x14" 16"x16" 18"x18" 24"x22"	0 - 90 95 - 195 200 - 300 305 - 450 455 - 590 595 - 800 1045 - 1400	500	25	.067	LOUVERED	MVD	BORDER TYPE N FOR SURFACE MOUNT

LEGEND

– CFM
– AIR DISTRIBUTION DEVICE

SD SUPPLY DIFFUSER
SR SUPPLY REGISTER
RG RETURN GRILLE
EG EXHAUST GRILLE
TG TRANSFER GRILLE

NOTES:
1. NOT ALL DIFFUSER/GRILLE TYPES OR SIZES MAY BE USED ON THIS PROJECT.

CALIFORNIA GREEN BUILDING STANDARDS NOTES

ENTIRE INSTALLATION SHALL COMPLY WITH THE 2019 CALIFORNIA GREEN BUILDING STANDARDS (CALGREEN) CODE INCLUDING THE FOLLOWING APPLICABLE MANDATORY MEASURES:

1. 5.504.1.3 – PERMANENT HVAC SYSTEM SHALL ONLY BE USED DURING CONSTRUCTION IF NECESSARY TO CONDITION THE BUILDING WITHIN THE REQUIRED TEMPERATURE RANGE FOR MATERIAL AND EQUIPMENT INSTALLATION. IF THE HVAC SYSTEM IS USED DURING CONSTRUCTION, CONTRACTOR SHALL USE MERV 8 MINIMUM RETURN AIR FILTERS. REPLACE ALL FILTERS IMMEDIATELY PRIOR TO OCCUPANCY.
2. 5.504.3 – CONTRACTOR SHALL COVER ALL DUCT AND OTHER RELATED AIR DISTRIBUTION COMPONENT OPENINGS WITH TAPE, PLASTIC, SHEET METAL OR OTHER METHODS ACCEPTABLE TO THE ENFORCING AGENCY DURING STORAGE AND CONSTRUCTION AND UNTIL FINAL STARTUP.
3. 5.504.5.3 – MERV 13 FILTERS ARE REQUIRED FOR HVAC SYSTEMS SERVING REGULARLY OCCUPIED AREAS AND AS INDICATED IN THESE PLANS.
4. 5.504.7 – OUTDOOR SMOKING AREAS SHALL BE MINIMUM 25'–0" FROM ALL BUILDING ENTRIES, OUTDOOR AIR INTAKES, AND OPERABLE WINDOWS.
5. 5.505.1 – INSTALLATION SHALL COMPLY WITH CBC SECTION 1203 AND CHAPTER 14 FOR INDOOR MOISTURE CONTROL.
6. 5.506.2 – DEMAND CONTROL VENTILATION REQUIRED FOR ALL DENSELY OCCUPIED SPACES PER 2013 CALIFORNIA ENERGY CODE REQUIREMENTS.
7. 5.508.1 – HVAC, REFRIGERATION, AND FIRE SUPPRESSION EQUIPMENT SHALL NOT CONTAIN CFCS OR HALONS.

LEGEND

SYMBOL	ABBR.	DESCRIPTION
	–	SUPPLY AIR RISER
	–	RETURN AIR RISER
	–	EXHAUST AIR RISER
	SAG	SUPPLY AIR GRILLE
	RAG	RETURN AIR GRILLE
	EAG	EXHAUST AIR GRILLE
	SWR	SIDEWALL REGISTER
	(L)	LINED DUCTWORK
	–	FLEXIBLE CONNECTION
	FC	FLEXIBLE CONNECTION
	–	DEMO DUCT (SEE PLAN)
	MVD	MANUAL VOLUME DAMPER
	BDD	BACKDRAFT DAMPER
S/F	SFD	SMOKE / FIRE DAMPER
F	FD	FIRE DAMPER
	DL	DOOR LOUVER
U.C.	UC	UNDERCUT DOOR 3/4"
RS	RS	REFRIGERANT SUCTION LINE
RL	RL	REFRIGERANT LIQUID LINE
CD	CD	CONDENSATE DRAIN
	S.D.	SMOKE DETECTOR
	P.O.C.	POINT OF CONNECTION
T	T–STAT	THERMOSTAT
H	H	HUMIDISTAT
TS	TS	TEMPERATURE SENSOR
OS	OS	OVERRIDE SWITCH
PD	PD	PRESSURE DIFFERENTIAL SWITCH
S	S	SWITCH
	O.C.	ON CENTER
	I.D.	INSIDE DIAMETER
	O.D.	OUTSIDE DIAMETER
	W/	WITH
	S/M	SHEET METAL
	S/S	STAINLESS STEEL
	G.C.	GENERAL CONTRACTOR
	VTR	VENT THRU ROOF
	OBD	OPPOSED BLADE DAMPER
	FSC	FAN SPEED CONTROL
E	E	ITEMS FURNISHED AND INSTALLED BY ELECTRICAL CONTRACTOR AS SPECIFIED ON THE ELECTRICAL CONTRACT DOCUMENTS
M	M	ITEMS FURNISHED AND INSTALLED BY MECHANICAL CONTRACTOR AS SPECIFIED ON THE MECHANICAL CONTRACT DOCUMENTS
EM	EM	ITEMS FURNISHED BY ELECTRICAL CONTRACTOR AND INSTALLED BY MECHANICAL CONTRACTOR.
ME	ME	ITEMS FURNISHED BY MECHANICAL CONTRACTOR AND INSTALLED BY ELECTRICAL CONTRACTOR.
	CBD	COUNTER–BALANCE DAMPER
	D.S.	FAN SPEED CONTROL
DS	FSC	DOOR SWITCH

GENERAL NOTES

1. ENTIRE INSTALLATION SHALL CONFORM TO THE REQUIREMENTS OF THE 2019 CALIFORNIA MECHANICAL CODE, 2019 CALIFORNIA BUILDING CODE, AND ALL OTHER APPLICABLE CODES AND REGULATIONS, INCLUDING 2019 CALIFORNIA ENERGY CONSERVATION STANDARDS DIVISION T-24.
2. COORDINATE ENTIRE INSTALLATION OF THE HVAC SYSTEM WITH THE WORK OF ALL OTHER TRADES PRIOR TO ANY FABRICATION OR INSTALLATION. PROVIDE ALL FITTINGS, OFFSETS, AND TRANSITIONS AS REQUIRED FOR A COMPLETE WORKABLE INSTALLATION. THE MECHANICAL CONTRACTOR SHALL BE RESPONSIBLE TO COORDINATE ITEMS TO BE PROVIDED BY OTHER TRADES WHERE MENTIONED IN THE CONTRACT DOCUMENTS PRIOR TO BID - NO EXCEPTIONS.
3. COORDINATE THE LOCATIONS OF ALL CEILING DIFFUSERS, REGISTERS, AND GRILLES WITH THE ARCHITECTURAL REFLECTIVE CEILING PLAN, ELECTRICAL LIGHTING LAYOUT AND ARCHITECTURAL ROOM ELEVATIONS. THE ARCHITECT AND ENGINEER SHALL BE IMMEDIATELY NOTIFIED OF ANY CONFLICTS PRIOR TO FABRICATION AND INSTALLATION.
4. ALL EQUIPMENT, DUCTS, PIPING, AND OTHER DEVICES AND MATERIALS INSTALLED OUTSIDE OF THE BUILDING OR OTHERWISE EXPOSED TO THE WEATHER SHALL BE COMPLETELY WEATHER-PROOFED AND PAINTED TO MATCH, COORDINATE WITH ARCHITECT PRIOR TO PAINTING.
5. THESE DRAWINGS SHALL BE READ IN CONJUNCTION WITH AND BE CONSIDERED TO BE PART OF A SEPARATE AND COMPLETE MECHANICAL SPECIFICATION.
6. ALL DIMENSIONS SHOWN ON THESE PLANS ARE APPROXIMATE AND MUST BE CONFIRMED ON SITE.
7. PRIOR TO OCCUPANCY, THE ENTIRE H.V.A.C. SYSTEMS SHALL BE BALANCED IN ACCORDANCE WITH (AABC) ASSOCIATED AIR BALANCE COUNCIL STANDARDS BY AN INDEPENDANT AIR BALANCE CONTRACTOR. CERTIFICATION SHALL BE PROVIDED BY THE CONTRACTOR FOR AIR AND HYDRONIC AS APPLICABLE. SYSTEMS SHALL BE BALANCED AS INDICATED ON PLANS INCLUDING FRESH AIR VENTILATION. WHERE THERE IS A CONFLICT WITH THE MECHANICAL PLANS, THE AIR BALANCE CONTRACTOR SHALL NOTIFY THE ENGINEER PRIOR TO BALANCING OF SYSTEM. IF NOT THE AIR BALANCE CONTRACTOR SHALL BEAR ALL COSTS INCURRED FOR WORK THAT MUST BE RE-BALANCED DUE TO CONFLICTS ON CONTRACT DOCUMENTS. CONTRACTOR SHALL PROVIDE THREE COPIES OF THE AIR BALANCE REPORT TO THE ENGINEER FOR APPROVAL.
8. FOR INACCESSIBLE AREAS THE CONTRACTOR SHALL PROVIDE ACCESS PANELS FOR ALL DAMPERS, EQUIPMENT, SMOKE DETECTORS, AND CONTROL DEVICES. THESE PANELS SHALL MATCH THE RATING OF THE WALL AND/OR CEILING THAT THEY ARE LOCATED IN. MINIMUM ACCESS PANEL SIZES SHALL BE AS FOLLOWS:

   1) HAND ACCESS: 12"x12"

   2) BODY ACCESS: 30"x30" MIN. WHERE A LARGER ACCESS SIZE IS REQUIRED DUE TO INSTALLATION CONSTRAINTS, THE CONTRACTOR SHALL DO SO AT NO ADDITIONAL COST AND SHALL NOTIFY THE ARCHITECT AND ENGINEER OF DEVIATIONS PRIOR TO INSTALLATION.
9. COORDINATE THE LOCATION OF ALL ROOF OPENINGS AND THE LOCATION OF ALL ROOF MOUNTED EQUIPMENT WITH THE STRUCTURAL AND ARCHITECTURAL PLANS PRIOR TO ANY INSTALLATION.
10. PLATFORMS, CURBS, AND FLASHINGS FOR MECHANICAL EQUIPMENT SHALL BE AS INDICATED ON THE STRUCTURAL AND ARCHITECTURAL PLANS, UNLESS NOTED OTHERWISE. WHERE THERE IS A CONFLICT WITH THE MECHANICAL PLANS, THE CONTRACTOR SHALL NOTIFY THE ARCHITECT AND ENGINEER PRIOR TO FABRICATION AND INSTALLTION.
11. ALL EQUIPMENT, ACCESSORIES, AND RELATED PIPING SHALL BE INSTALLED IN STRICT ACCORDANCE WITH THE EQUIPMENT MANUFACTURER'S RECOMMENDATIONS. PROVIDE ALL FITTINGS, TRANSITIONS, DAMPERS, VALVES, AND OTHER DEVICES REQUIRED FOR A COMPLETE WORKABLE INSTALLATION.
12. MAINTENANCE LABEL SHALL BE AFFIXED TO ALL MECHANICAL EQUIPMENT AND A MAINTENANCE MANUAL SHALL BE PROVIDED FOR THE OWNER'S USE.
13. PROVIDE MERV 13 FILTERS FOR ALL AIR CONDITIONING UNITS. SEE EQUIPMENT SCHEDULE AND SPECIFICATIONS FOR TYPE. SIZES SHALL BE AS RECOMMENDED BY THE MANUFACTURER, UNLESS OTHERWISE SPECIFIED.
14. AIR FILTERS SHALL BE STATE FIRE MARSHALL APPROVED AND LISTED. PREFORMED FILTERS HAVING COMBUSTIBLE FRAMING SHALL BE TESTED AS A COMPLETE ASSEMBLY. AIR FILTERS SHALL BE ACCESSIBLE FOR CLEANING OR REPLACEMENT.
15. ALL EQUIPMENT WITH MOVING PARTS SHALL BE PROVIDED WITH FLEXIBLE DUCT AND PIPE CONNECTIONS.
16. ALL EQUIPMENT SHALL BE LABELED AS TO THE SPACE IT SERVES. SEE PLANS AND SPECIFICATIONS FOR IDENTIFICATION STANDARDS.
17. ALL HVAC EQUIPMENT SHALL BE CERTIFIED BY THE CALIFORNIA ENERGY COMMISSION TO COMPLY WITH LATEST EFFICIENCY STANDARDS.
18. AC UNITS PROVIDED WITH ECONOMY CYCLE DAMPERS SHALL HAVE DAMPERS SET UP TO CLOSE AUTOMATICALLY ON FAN SHUTDOWN.
19. PROVIDE MANUAL VOLUME DAMPERS AND BACKDRAFT DAMPERS FOR FRESH AIR INTAKES ON ALL AIR HANDLING EQUIPMENT AND EXHAUST FANS SERVING CONDITIONED SPACES. EXCEPTION: EQUIPMENT WITH FACTORY ECONOMIZERS.
20. ALL FRESH AIR INTAKES SHALL MEET CODE REQUIRED CLEARANCES FROM EXHAUST, FLUE, FUEL BURNING APPLIANCE AND PLUMBING VENT OUTLETS. FOR GAS/ELECTRIC AIR CONDITIONING UNITS WHERE THE CODE REQUIRED CLEARANCES ARE NOT MET, A FACTORY FLUE GAS DEFLECTOR AND EXTENSION SHALL BE USED TO MINIMIZE THESE CLEARANCES. CONTRACTOR SHALL DETERMINE LOCATIONS WHERE REQUIRED PRIOR TO BID. THIS SHALL BE PROVIDED AT NO ADDITIONAL COST.
21. ALL AIR HANDLING EQUIPMENT SERVING CONDITIONED SPACES SHALL PROVIDE CONTINUOUS FRESH AIR TO SPACES IN OCCUPIED MODE.
22. CONTRACTOR SHALL VERIFY ALL CLEARANCES AND AVAILABLE SPACE FOR DUCTWORK PRIOR TO ORDERING AND/OR FABRICATING MATERIAL.
23. CONTRACTOR TO SUBMIT ALL EQUIPMENT, DUCTWORK, AIR DISTRIBUTION DEVICES, AND OTHER ACCESSORIES TO THE ENGINEER FOR APPROVAL PRIOR TO ANY ORDERING OF SUCH ITEMS.
24. CONTRACTOR SHALL PROVIDE SHOP DRAWINGS WITHIN 45 DAYS OF AWARD OF CONTRACT. SEE 230000 SPECIFICATIONS FOR REQUIREMENTS. ALL CONFLICTS BETWEEN VARIOUS TRADE SHOP DRAWINGS SHALL BE REPORTED TO THE CITY, ARCHITECT, AND ENGINEER OF RECORD. FAILURE TO REPORT CONFLICTS SHALL RESULT IN REJECTION OF RELATED CLAIMS FOR REWORK, EXTRA WORK, AND TIME FOR EXTENSIONS.
25. CONTRACTOR SHALL BE RESPONSIBLE FOR COMMISSIONING OF EQUIPMENT AS STIPULATED ON MECH-1-C FORM ON PLANS UNLESS NOTED OTHERWISE.
26. CONTROL SCHEMATICS ARE FOR SEQUENCE ONLY. REFER TO ELECTRICAL DRAWINGS AND SPECIFICATIONS FOR ALL ELECTRICAL DEVICES REQUIRED.
27. ALL LINE VOLTAGE WIRING SHALL BE INSTALLED IN CONDUIT. ALL LINE VOLTAGE CONDUIT AND WIRING, INCLUDING FINAL CONNECTIONS, SHALL BE FURNISHED AND INSTALLED BY THE ELECTRICAL CONTRACTOR AS INDICATED ON THE ELECTRICAL DRAWINGS OR SPECIFIED IN THE ELECTRICAL SECTION OF THE SPECIFICATIONS. ALL ELECTRICAL WORK SHALL BE INSTALLED IN ACCORDANCE WITH ALL APPLICABLE CODES AND REGULATIONS OF ALL GOVERNING BODIES HAVING JURISDICTION THEREOF.
28. ALL LOW VOLTAGE CONDUIT AND WIRING AS APPLICABLE, INCLUDING FINAL CONNECTIONS, SHALL BE FURNISHED AND INSTALLED BY THE MECHANICAL CONTRACTOR AS INDICATED ON THE MECHANICAL DRAWINGS OR SPECIFIED IN THE MECHANICAL SECTION OF THE SPECIFICATIONS.

   A) ALL LOW VOLTAGE WIRING SHALL BE INSTALLED IN CONDUIT.

   B) WHERE THE CONTROLS CONTRACTOR IS RETAINED BY THE OWNER, THEY SHALL BE RESPONSIBLE FOR THE FOLLOWING:

   1) FURNISH AND INSTALL ALL DEVICES, WIRING, AND TERMINATIONS REQUIRED FOR A COMPLETE AND FUNCTIONAL INSTALLATION.

   2) COORDINATE ALL WORK AND REQUIREMENTS WITH OTHER TRADES INCLUDING GENERAL, MECHANICAL, AND ELECTRICAL CONTRACTORS PRIOR TO BID.

   3) CONTRACTOR SHALL FOLLOW ALL SUBMITTAL REQUIREMENTS PER DRAWINGS AND SPECIFICATIONS.
29. CONTRACTOR SHALL BE RESPONSIBLE FOR ORDERING AIR CONDITIONING EQUIPMENT WITH THRU-THE-BASE POWER, CONTROL, AND GAS CONNECTIONS. VERIFY ALL CONNECTION LOCATIONS WITH UNIT MANUFACTURER AND COORDINATE WITH OTHER TRADES AS NECESSARY.
30. ELECTRICAL CONTRACTOR SHALL PROVIDE REQUIRED RELAY ACCESSORIES FOR CONNECTION OF 120 VOLT 1 PHASE VENTILATION EQUIPMENT TO 277 VOLT 1 PHASE LIGHTING AS APPLICABLE. MECHANICAL CONTRACTOR SHALL BE RESPONSIBLE FOR SUCH COORDINATION PRIOR TO BID.
31. WHERE HVAC CONTROL WIRING IS REQUIRED BETWEEN BUILDINGS. PROVIDE UNDERGROUND CONDUIT WITH PULL STRING(S) FURNISHED AND INSTALLED BY ELECTRICAL FOR THE ENERGY MANAGEMENT SYSTEM WIRING TERMINATIONS ONLY. CONTRACTOR SHALL FURNISH AND INSTALL CONDUIT AND WIRING TERMINATIONS FOR BETWEEN BUILDINGS.
32. ALL THERMOSTATS SHALL HAVE LOCKABLE COVERS (WHERE INDICATED ON PLANS) AND SHALL BE OF THE ELECTRONIC, PROGRAMMABLE, AUTOMATIC CHANGEOVER TYPE TO SEQUENCE HEATING OR COOLING. SET POINT RANGE SHALL BE 10 DEGREES F. BETWEEN FULL HEATING AND COOLING. THEY SHALL HAVE CAPABILITY OF TERMINATING ALL HEATING AT A TEMPERATURE NO MORE THAN 70 DEGREES F., AND COOLING AT A TEMPERATURE NOT LESS THAN 78 DEGREES F. ADJUSTABLE TEMPERATURE DIFFERENTIAL SHALL BE 1- 1/2 DEGREES F. CONTROL LIMITS SHALL BE FROM 55 DEGREES F. TO 85 DEGREES F. MOUNT AT 48 INCHES ABOVE FLOOR OR AS REQUIRED BY LOCAL AUTHORITIES OR ACCESSIBILITY CODES.

   NOTES:
   1) THERMOSTATS THAT ARE PART OF AN ENERGY MANAGEMENT SYSTEM SHALL FOLLOW CONTROL SPECIFICATIONS AND DRAWING REQUIREMENTS.

   2) SHOULD THE LOCATION OF THE THERMOSTAT NOT MEET THE ADA HEIGHT REQUIREMENTS DUE TO OBSTRUCTIONS, THEN AN ALTERNATE LOCATION SHALL BE PROPOSED OR REQUESTED BY THE CONTRACTOR THAT SHALL BE APPROVED BY THE ENGINEER AND ARCHITECT.
33. LINE VOLTAGE THERMOSTATS SHALL BE FURNISHED BY THE MECHANICAL CONTRACTOR AND INSTALLED BY THE ELECTRICAL CONTRACTOR.
34. CONTROLS CONTRACTOR AND AIR BALANCE CONTRACTOR SHALL COORDINATE WORK AND PERFORM NECESSARY TASKS AS REQUIRED TO OBTAIN AIR AND WATER FLOW QUANTITIES FOR SYSTEMS SHOWN HEREIN.
35. CONTROLS SHALL BE PROVIDED TO PROVIDE THE MINIMUM RATE OF OUTDOOR AIR REQUIRED BY THE STATE ENERGY REGULATIONS.
36. ALL DUCTWORK SHALL BE SHEET METAL CONSTRUCTED OR SPIRAL, ERECTED, AND TESTED IN ACCORDANCE WITH THE MOST RESTRICTIVE OF LOCAL REGULATIONS, PROCEDURES DETAILED IN THE ASHRAE HANDBOOK OF FUNDAMENTALS, CHAPTER 6 OF THE MECHANICAL CODE, OR THE APPLICABLE STANDARDS ADOPTED BY THE SHEET METAL AND AIR CONDITIONING CONTRACTORS NATIONAL ASSOCIATION.
37. ALL FLEXIBLE DUCTWORK SHALL BE MAX FIVE FEET AND MIN 3 FEET IN LENGTH TO RESPECTIVE DIFFUSERS, GRILLES, AND REGISTERS, OR OTHER AIR DEVICES.
38. PROVIDE SEISMIC RESTRAINTS TO ALL DUCTWORK, PIPE, AND EQUIPMENT SUPPORTS IN ACCORDANCE WITH THE LATEST SMACNA GUIDELINES FOR SEISMIC RESTRAINT OF MECHANICAL SYSTEMS. SUSPENDED EQUIPMENT SHALL BE PROVIDED WITH SEISMIC ANCHORAGE AND ISOLATION SUPPORTS. SEE SEISMIC NOTES THIS SHEET FOR ADDITIONAL REQUIREMENTS.
39. ALL RECTANGULAR DUCT TURNS IN SUPPLY, RETURN, AND EXHAUST DUCTS SHALL HAVE TURNING VANES UNLESS OTHERWISE NOTED.
40. DUCTWORK HANDLING CONDITIONED AIR SHALL BE INSULATED OR LINED AS INDICATED ON DRAWINGS. SUPPLY AND RETURN DUCT INSULATION SHALL BE MIN. 1.5" THICK, 3/4 LB./CUBIC FT. DENSITY AND HAVE A MIN. VALUE OF R-8 WHERE LOCATED IN ONE OR MORE OF THE FOLLOWING SPACES:

   A) OUTDOORS, OR

   B) IN A SPACE BETWEEN THE ROOF AND AN INSULATED CEILING, OR

   C) IN A SPACE DIRECTLY UNDER A ROOF WITH FIXED VENTS OR OPENINGS TO THE OUTSIDE OR UNCONDITIONED SPACES, OR

   D) IN AN UNCONDITIONED CRAWLSPACE; OR

   E) IN OTHER UNCONDITIONED SPACES

   PER 2019 CEC, OTHERWISE PROVIDE R-4.2 WHEN LOCATED IN CONDITIONED ATTIC SPACES ABOVE CEILINGS. ALL DUCTWORK EXPOSED ON ROOF SHALL BE INTERNALLY LINED WITH 1.5" THICK, 1.5LB./CUBIC FT. DENSITY DUCT LINER UNLESS OTHERWISE INDICATED OR SPECIFIED. ALL DUCT SIZES ARE SHEET METAL SIZES. ALL DUCT JOINTS SHALL BE SEALED PER CHAPTER 6 MECHANICAL CODE REQUIREMENTS. PROVIDE PIPING AND DUCT INSULATION IN ACCORDANCE WITH THE LATEST STANDARDS OF THE CALIFORNIA ENERGY COMMISSION.

   ALL INSULATION SHALL HAVE A FLAME SPREAD OF NOT MORE THAN 25 AND A SMOKE DENSITY NOT EXCEEDING 50.

   MANUAL VOLUME DAMPERS SHALL BE PROVIDED IN ALL DUCT BRANCHES TO INDIVIDUAL DIFFUSERS, GRILLES, AND REGISTERS, AS WELL AS FRESH AIR INTAKE DUCTS. DAMPERS SHALL BE LOCATED AT THE BRANCH DUCT LOCATIONS. THE MECHANICAL CONTRACTOR SHALL COORDINATE LOCATIONS OF DAMPERS WITH THE AIR BALANCE CONTRACTOR PRIOR TO BID, SO THEY ARE ACCESSIBLE PRIOR TO INSTALLATION. IN LOCATIONS WHERE THESE DAMPERS ARE INACCESSIBLE, CABLE OPERATED ADJUSTMENT CONTROLS SHALL BE PROVIDED AT NO ADDITIONAL COST. SEE DETAIL 1/M5.1. OPPOSED BLADE DAMPERS SHALL NOT BE PERMITTED UNLESS NOTED OTHERWISE.
43. ALL VOLUME DAMPERS SHALL BE INSTALLED MIN THREE DUCT DIAMETERS UPSTREAM OF REGISTERS.

   AUTOMATIC FIRE DAMPER REQUIREMENTS ARE AS FOLLOWS:

   A) PROVIDE AUTOMATIC FIRE DAMPERS AT ALL PENETRATIONS OF FIRE-RATED CEILINGS AND WALLS THROUGHOUT. CONTRACTOR SHALL COORDINATE FIRE-RATED AREAS WITH THE ARCHITECTURAL DRAWINGS AND OTHER TRADES PRIOR TO INSTALL AND SHALL NOTIFY PERTINENT PARTIES PRIOR TO ANY WORK PERFORMED IN THESE AREAS. IN ADDITION, CONTRACTOR SHALL BE RESPONSIBLE TO PROVIDE PROPER ACCESS FOR DAMPERS INSTALLED. THE DAMPER FIRE RATING SHALL BE COMPATIBLE WITH THE CEILING/WALL RATING.

   B) LOCATION OF FIRE-RATED CEILINGS AND WALLS ARE AS INDICATED ON THE ARCHITECTURAL DRAWINGS.

   C) FIRE AND/OR SMOKE DAMPER(S) SHALL BE PROVIDED AS REQUIRED BY 2019 CBC AND CFC.

   D) CONTRACTOR SHALL FURNISH FLUSH MOUNTED FIRE AND/OR SMOKE DAMPERS, SO THAT DAMPER DO NOT EXTEND PASS WALLS, FOR AREAS WITHOUT CEILINGS FOR QUALITY WORKMENSHIP.
44. ALL DUCTWORK PASSING THROUGH FIRE RATED CORRIDORS AND LOBBIES SHALL BE MIN. 26 GAGE SHEET METAL CONSTRUCTION. FLEXIBLE DUCTWORK SHALL NOT BE ALLOWED.
45. ALL DUCTWORK, PIPING, CONDUIT, & ETC. PENETRATING FIRE RATED CONSTRUCTION SHALL HAVE APPROVED FIRE STOPPING. COORDINATE WITH OTHER TRADES PRIOR TO INSTALLATION.
46. MECHANICAL CONTRACTOR SHALL BE RESPONSIBLE FOR THE PROPER OPERATION OF ALL MECHANICAL EQUIPMENT INCLUDING NECESSARY DEVICES FOR INTERLOCKING OF SUCH EQUIPMENT.
47. CONTRACTOR SHALL REFER TO MECHANICAL AND ARCHITECTURAL PLANS FOR REGISTER, DIFFUSER, AND GRILLE LOCATIONS PRIOR TO INSTALLATION.
48. CONTACT THE ENGINEER IMMEDIATELY IF THERE ARE CONFLICTS PRIOR TO INSTALLATION. CONTRACTOR SHALL COORDINATE ALL LOCATIONS OF DUCT PENETRATIONS THROUGH SHEAR WALLS. NO DUCT PENETRATE SHEAR WALLS UNLESS SPECIFICALLY SHOWN ON STRUCTURAL PLANS.
49. CONTRACTOR SHALL REFER TO STRUCTURAL, MECHANICAL, AND ARCHITECTURAL PLANS FOR EXTERIOR LOUVER LOCATIONS PRIOR TO FABRICATION AND INSTALLATION. CONTACT THE ENGINEER IMMEDIATELY IF THERE ARE CONFLICTS. REFER TO ARCHITECTURAL EXTERIOR ELEVATION PLANS FOR MOUNTING HEIGHTS. IF MOUNTING HEIGHTS ARE NOT IDENTIFIED ON THE ARCHITECTURAL PLANS. THEN THE CONTRACTOR SHALL RECEIVE FINAL APPROVAL FROM THE ARCHITECT PRIOR TO FABRICATION AND INSTALLATION.
50. CONTRACTOR SHALL COORDINATE ALL DOOR UNDERCUT QUANTITIES AND LOCATIONS WITH THE APPROPRIATE TRADES PRIOR TO FINAL BID. CONTACT THE ARCHITECT IMMEDIATELY IF THERE ARE CONFLICTS.
51. ALL DOOR UNDERCUTS INDICATED ON FLOOR PLAN(S) SHALL BE 3/4" MIN. ABOVE THRESHOLD.
52. CONTRACTOR SHALL IDENTIFY ALL CEILING ACCESS DOORS FOR MANUAL AND REMOTE CONTROLLED (CABLE OPERATED) DAMPERS, CEILING CUP LOCATIONS FOR INACCESSIBLE AREAS FOR THE ARCHITECT'S REVIEW AND APPROVAL PRIOR TO FABRICATION AND INSTALLATION OF DUCTWORK, EQUIPMENT, ETC.
53. CONTRACTOR SHALL CONFIRM FINAL REFRIGERANT PIPE SIZING UPON DETERMINATION OF ACTUAL DEVELOPED LENGTH. ALL PIPE MATERIALS SHALL BE PER MANUFACTURER'S GUIDELINES.
54. FOR INACCESSIBLE AREAS THE CONTRACTOR SHALL PROVIDE ACCESS PANELS FOR ALL DAMPERS, EQUIPMENT, SMOKE DETECTORS, AND CONTROL DEVICES. THESE PANELS SHALL MATCH THE RATING OF THE WALL AND/OR CEILING WHERE THEY ARE LOCATED IN. MINIMUM ACCESS PANEL SIZES SHALL BE AS FOLLOWS:

   1) HAND ACCESS: 12"x12" MIN.
   2) BODY ACCESS: 30"x30" MIN.
   3) MANUAL REMOTE CONTROL (CABLE OPERATED) DAMPERS IN LIEU OF VOLUME DAMPERS. SEE DETAIL...
55. WHERE A LARGER ACCESS SIZE IS REQUIRED DUE TO INSTALLATION CONSTRAINTS, THE CONTRACTOR SHALL DO SO AT NO ADDITIONAL COST AND SHALL NOTIFY THE ARCHITECT AND ENGINEER OF DEVIATIONS PRIOR TO INSTALLATION.
56. CONTRACTOR SHALL COORDINATE ALL MOUNTING HEIGHTS ABOVE FINISHED FLOOR WITH OTHER TRADES AND RECEIVE FINAL APPROVAL FROM THE ARCHITECT PRIOR TO FABRICATING AND INSTALLING EXPOSED DUCTWORK, EQUIPMENT, REGISTERS, ETC.
57. CONTRACTOR SHALL REFER TO MECHANICAL AND ARCHITECTURAL PLANS FOR ALL SIDE-WALL GRILLE LOCATIONS PRIOR TO FABRICATION AND INSTALLATION. CONTACT THE ENGINEER IMMEDIATELY IF THERE ARE CONFLICTS. REFER TO ARCHITECTURAL INTERIOR ELEVATION PLANS FOR MOUNTING HEIGHTS. IF MOUNTING HEIGHTS ARE NOT IDENTIFIED ON THE ARCHITECTURAL PLANS. THEN THE CONTRACTOR SHALL RECEIVE FINAL APPROVAL FROM THE ARCHITECT PRIOR TO FABRICATION AND INSTALLATION.
58. CONTRACTOR SHALL INSULATE ALL REFRIGERANT PIPING SUCTION AND VAPOR LINES.
59. CONTRACTOR SHALL PAINT ALL EXPOSED DUCTWORK, REGISTERS, ETC. COORDINATE PAINT FINISHES WITH THE ARCHITECT PRIOR TO INSTALLATION.
60. PROVIDE PRICE MSDRBG / MSTRBG BARRIER BARS AT ALL DUCT PENETRATIONS OF EXTERIOR WALL AND/OR ROOF OF 96 SQ IN CROSS-SECTION OR MORE PER ORDINANCE NUMBER 7-79, 15.52.080 AND 15.52.090.

PBK
RANCHO CUCAMONGA
8163 ROCHESTER AVENUE, SUITE 100
RANCHO CUCAMONGA, CA 91730
909-987-0909 P

ONTARIO FIRE DEPARTMENT ADMINISTRATION BUILDING

CITY OF ONTARIO
1420 E. FRANCIS STREET., ONTARIO, CA

LICENSED ARCHITECT — KELLEY NEEDHAM C-19064 — Exp. 03/31/25 — STATE OF CALIFORNIA
REGISTERED PROFESSIONAL ENGINEER — ANDREW R. DOSSEHA — No. M39639 — Exp. 3/31/24 — MECHANICAL — STATE OF CALIFORNIA

CONSULTANT
PDS
PocockDesignSolutions Inc.

NO	DATE	BY	DESCRIPTION

REVISIONS

DRAWN: REVIEWED	CHECKED: AG
DATE: 07/15/2022	SCALE: AS NOTED
PROJECT NUMBER: 2011700	

MECHANICAL GENERAL NOTES AND LEGEND

DRAWING NUMBER: M0.1

BID SET 03/01/24

VRF - FAN COIL UNIT SCHEDULE

SYM	MFR & MODEL #	AREA SERVICED	NOMINAL TONS	CFM	OSA CFM	ESP (IN. WG)	COOLING TOTAL CAP (BTUH)	COOLING SENSIBLE CAP (BTUH)	HEATING TOTAL CAP (BTUH)	FILTER EFFICIENCY	OUTDOOR UNIT	ELECTRICAL V	ELECTRICAL PH	ELECTRICAL MCA	ELECTRICAL MOCP	WEIGHT (LBS)	REMARKS	WIRING DETAIL	ANCHORAGE DETAIL
FC 1-1	LG ARNU243M2A4	CONF ROOM	2.0	675	300	0.50	24,200	-	27,300	MERV 13	HRU 1	208	1	2.9	-	40	1	1 M5.2	9 M5.1
FC 1-2	LG ARNU123M2A4	LOBBY	1.0	500	20	0.50	12,300	-	13,600	MERV 13	HRU 1	208	1	2.90	-	30	1	1 M5.2	9 M5.1
FC 1-4	LG ARNU363M2A4	OFFICE	3.0	1050	250	0.50	36,200	-	40,600	MERV 13	HRU 1	208	1	2.90	-	100	1	1 M5.2	9 M5.1
FC 1-5	LG ARNU243M2A4	HALL	2.0	675	150	0.50	24,200	-	27,300	MERV 13	HRU 1	208	1	2.9	-	100	1	1 M5.2	9 M5.1
FC 1-6	LG ARNU243M2A4	EMS SKILLS	2.0	675	150	0.50	24,200	-	27,300	MERV 13	HRU 1	208	1	2.9	-	100	1	1 M5.2	9 M5.1
FC 2-1	LG ARNU073TRD4	OFFICE	0.5	265	20	-	7,500	-	8,500	MERV 13	HRU 1	208	1	0.25	-	30	1, 2	1 M5.2	6 M5.1
FC 2-2	LG ARNU073TRD4	OFFICE	0.5	265	20	-	7,500	-	8,500	MERV 13	HRU 1	208	1	0.25	-	30	1, 2	1 M5.2	6 M5.1
FC 2-3	LG ARNU073TRD4	OFFICE	0.5	265	20	-	7,500	-	8,500	MERV 13	HRU 1	208	1	0.25	-	30	1, 2	1 M5.2	6 M5.1
FC 2-4	LG ARNU073TRD4	OFFICE	0.5	265	20	-	7,500	-	8,500	MERV 13	HRU 1	208	1	0.25	-	30	1, 2	1 M5.2	6 M5.1
FC 3-1	LG ARNU183TQD4	DC OFFICE	1.5	395	20	-	19,100	-	21,500	MERV 13	HRU 1	208	1	0.25	-	30	1, 2	1 M5.2	6 M5.1
FC 3-2	LG ARNU123M2A4	PT OFFICE	1.0	500	60	0.50	12,300	-	13,600	MERV 13	HRU 1	208	1	2.90	-	30	1	1 M5.2	9 M5.1
FC 3-3	LG ARNU123TRD4	EMS DIRECTOR	1.0	310	20	-	12,300	-	13,600	MERV 13	HRU 1	208	1	0.25	-	30	1, 2	1 M5.2	6 M5.1
FC 3-4	LG ARNU073TRD4	EMS NURSE	0.5	265	20	-	7,500	-	8,500	MERV 13	HRU 1	208	1	0.25	-	30	1, 2	1 M5.2	6 M5.1
FC 3-5	LG ARNU073TRD4	EMS CAPTAIN	0.5	265	20	-	7,500	-	8,500	MERV 13	HRU 1	208	1	0.25	-	100	1, 2	1 M5.2	6 M5.1
FC 3-6	LG ARNU073TRD4	OFFICE	0.5	265	20	-	7,500	-	8,500	MERV 13	HRU 1	208	1	0.25	-	30	1, 2	1 M5.2	6 M5.1
FC 3-7	LG ARNU073TRD4	OFFICE	0.5	265	20	-	7,500	-	8,500	MERV 13	HRU 1	208	1	0.25	-	100	1, 2	1 M5.2	6 M5.1
FC 4-1	LG ARNU183M2A4	WORKSTATIONS	1.5	625	100	0.50	19,100	-	21,500	MERV 13	HRU 1	208	1	2.90	-	30	1	1 M5.2	9 M5.1
FC 4-2	LG ARNU073TRD4	OFFICE	0.5	265	20	-	7,500	-	8,500	MERV 13	HRU 1	208	1	0.25	-	30	1, 2	1 M5.2	6 M5.1
FC 4-3	LG ARNU073TRD4	ADMIN TECH	0.5	265	20	-	7,500	-	8,500	MERV 13	HRU 1	208	1	0.25	-	40	1, 2	1 M5.2	6 M5.1
FC 4-4	LG ARNU123TRD4	DC OFFICE	1.0	310	20	-	12,300	-	13,600	MERV 13	HRU 1	208	1	0.25	-	30	1, 2	1 M5.2	6 M5.1
FC 4-5	LG ARNU099TRD4	DFM OFFICE	0.75	285	20	-	9,600	-	10,900	MERV 13	HRU 1	208	1	0.25	-	100	1, 2	1 M5.2	6 M5.1
FC 4-6	LG ARNU483M3A4	OPEN OFFICE	4.0	1600	200	0.50	48,100	-	52,200	MERV 13	HRU 1	208	1	3.10	-	110	1	1 M5.2	9 M5.1
FC 5-1	LG ARNU123M2A4	PC OFFICE	1.0	500	40	0.50	12,300	-	13,600	MERV 13	HRU 1	208	1	2.90	-	100	1	1 M5.2	9 M5.1
FC 5-2	LG ARNU363M2A4	EXERCISE	3.0	1050	250	0.50	36,200	-	40,600	MERV 13	HRU 1	208	1	2.90	-	100	1	1 M5.2	9 M5.1
FC 5-3	LG ARNU183M2A4	HALL	1.5	625	150	0.50	19,100	-	21,500	MERV 13	HRU 1	208	1	2.90	-	100	1	1 M5.2	9 M5.1
FC 6-1	LG ARNU099TRD4	FD OFFICE	0.75	285	20	-	9,600	-	10,900	MERV 13	HRU 2	208	1	0.25	-	30	1, 2	3 M5.2	6 M5.1
FC 6-2	LG ARNU283M2A4	DISPATCH	2.0	950	130	0.50	28,000	-	31,500	MERV 13	HRU 2	208	1	2.9	-	40	1	3 M5.2	9 M5.1
FC 6-3	LG ARNU283M2A4	DISPATCH	2.0	950	130	0.50	28,000	-	31,500	MERV 13	HRU 2	208	1	2.9	-	40	1	3 M5.2	9 M5.1
FC 6-4	LG ARNU243M2A4	TRAINING	2.0	675	60	0.50	24,200	-	27,300	MERV 13	HRU 2	208	1	2.9	-	100	1	3 M5.2	9 M5.1
FC 6-5	LG ARNU183M2A4	DISPATCH	1.5	625	60	0.50	19,100	-	21,500	MERV 13	HRU 2	208	1	2.90	-	100	1	3 M5.2	9 M5.1
FC 6-6	LG ARNU073TRD4	LOCKERS	0.5	265	20	-	7,500	-	8,500	MERV 13	HRU 2	208	1	0.25	-	100	1, 2	3 M5.2	6 M5.1
FC 6-7	LG ARNU099TRD4	FIRE COMM	0.75	285	20	-	9,600	-	10,900	MERV 13	HRU 2	208	1	0.25	-	100	1, 2	3 M5.2	6 M5.1
FC 6-8	LG ARNU183M2A4	OPEN CLASS	1.5	625	80	0.50	19,100	-	21,500	MERV 13	HRU 2	208	1	2.90	-	100	1	3 M5.2	9 M5.1
FC 7-1	LG ARNU123TRD4	EQUIP ROOM	1.0	310	50	-	12,300	-	13,600	MERV 13	HRU 2	208	1	0.25	-	30	1, 2	3 M5.2	6 M5.1
FC 7-2	LG ARNU243M2A4	EOC	2.0	675	120	0.50	24,200	-	27,300	MERV 13	HRU 2	208	1	2.9	-	100	1	3 M5.2	9 M5.1
FC 7-3	LG ARNU363M2A4	EOC	3.0	1050	120	0.50	36,200	-	40,600	MERV 13	HRU 2	208	1	2.90	-	100	1	3 M5.2	9 M5.1

1. PROVIDE WITH FACTORY FILTER BOX AND MERV 13 FILTERS, LGRED CONTROLS AND PROGRAMMABLE THERMOSTAT, CONDENSATE PUMP, AND OVERFLOW SHUT-OFF SWITCH.
2. PROVIDE WITH VENTILATION KIT

VRF - FAN COIL UNIT SCHEDULE

SYM	MFR & MODEL #	AREA SERVICED	NOMINAL TONS	CFM	OSA CFM	ESP (IN. WG)	COOLING TOTAL CAP (BTUH)	COOLING SENSIBLE CAP (BTUH)	HEATING TOTAL CAP (BTUH)	FILTER EFFICIENCY	OUTDOOR UNIT	ELECTRICAL V	ELECTRICAL PH	ELECTRICAL MCA	ELECTRICAL MOCP	WEIGHT (LBS)	REMARKS	WIRING DETAIL	ANCHORAGE DETAIL
FC 7-4	LG ARNU483M3A4	EOC	4.0	1600	120	0.50	48,100	-	52,200	MERV 13	HRU 2	208	1	3.10	-	110	1	3 M5.2	9 M5.1
FC 8-1	LG ARNU123TRD4	DAYROOM	1.0	310	20	-	12,300	-	13,600	MERV 13	HRU 2	208	1	0.25	-	30	1, 2	3 M5.2	6 M5.1
FC 8-2	LG ARNU283M2A4	KITCHEN	2.0	950	120	0.50	28,000	-	31,500	MERV 13	HRU 2	208	1	2.9	-	30	1	3 M5.2	9 M5.1
FC 8-3	LG ARNU073TRD4	BUNK 1	0.5	265	20	-	7,500	-	8,500	MERV 13	HRU 2	208	1	0.25	-	30	1, 2	3 M5.2	6 M5.1
FC 8-4	LG ARNU073TRD4	BUNK 2	0.5	265	20	-	7,500	-	8,500	MERV 13	HRU 2	208	1	0.25	-	30	1, 2	3 M5.2	6 M5.1
FC 8-5	LG ARNU123TRD4	RADIO RM	1.0	310	20	-	12,300	-	13,600	MERV 13	HRU 2	208	1	0.25	-	30	1, 2	3 M5.2	6 M5.1
FC 8-6	LG ARNU073TRD4	OFFICE	0.5	265	20	-	7,500	-	8,500	MERV 13	HRU 2	208	1	0.25	-	30	1, 2	3 M5.2	6 M5.1
FC 8-8	LG ARNU243M2A4	WORKSPACE	2.0	675	60	0.50	24,200	-	27,300	MERV 13	HRU 2	208	1	2.9	-	100	1	3 M5.2	9 M5.1
FC 9-1	LG ARNU123TRD4	EMRG COORD	1.0	310	20	-	12,300	-	13,600	MERV 13	HRU 2	208	1	0.25	-	30	1, 2	3 M5.2	6 M5.1
FC 9-2	LG ARNU243M2A4	HALL	2.0	675	60	0.50	24,200	-	27,300	MERV 13	HRU 2	208	1	2.9	-	30	1	3 M5.2	9 M5.1
FC 9-3	LG ARNU123TRD4	BREAKOUT	1.0	310	50	-	12,300	-	13,600	MERV 13	HRU 2	208	1	0.25	-	100	1, 2	3 M5.2	6 M5.1
FC 9-4	LG ARNU123M2A4	CONF ROOM	1.0	500	100	0.50	12,300	-	13,600	MERV 13	HRU 2	208	1	2.90	-	100	1	3 M5.2	9 M5.1
FC 9-5	LG ARNU243M2A4	CONF ROOM	2.0	675	100	0.50	24,200	-	27,300	MERV 13	HRU 2	208	1	2.9	-	100	1	3 M5.2	9 M5.1
FC 10-1	LG ARNU243M2A4	CHIEF OFFICE	2.0	675	50	0.50	24,200	-	27,300	MERV 13	HRU 3	208	1	2.9	-	30	1	5 M5.2	9 M5.1
FC 10-2	LG ARNU099TRD4	ASSIST OFFICE	0.75	285	20	-	9,600	-	10,900	MERV 13	HRU 3	208	1	0.25	-	30	1, 2	5 M5.2	6 M5.1
FC 10-3	LG ARNU183M2A4	STAIR	1.5	625	-	0.50	19,100	-	21,500	MERV 13	HRU 3	208	1	2.90	-	40	1	5 M5.2	9 M5.1
FC 10-4	LG ARNU073TRD4	STORAGE	0.5	265	20	-	7,500	-	8,500	MERV 13	HRU 3	208	1	0.25	-	30	1, 2	5 M5.2	6 M5.1
FC 10-5	LG ARNU073TRD4	FILES	0.5	265	20	-	7,500	-	8,500	MERV 13	HRU 3	208	1	0.25	-	100	1, 2	5 M5.2	6 M5.1
FC 10-6	LG ARNU123TRD4	BREAKROOM	1.0	310	50	-	12,300	-	13,600	MERV 13	HRU 3	208	1	0.25	-	100	1, 2	5 M5.2	6 M5.1
FC 10-7	LG ARNU363M2A4	CLASSROOM	3.0	1050	200	0.50	36,200	-	40,600	MERV 13	HRU 3	208	1	2.90	-	100	1	5 M5.2	9 M5.1
FC 11-1	LG ARNU183TQD4	DC OFFICE	1.5	395	20	-	19,100	-	21,500	MERV 13	HRU 3	208	1	0.25	-	30	1, 2	5 M5.2	6 M5.1
FC 11-2	LG ARNU243M2A4	ADMIN OFFICE	2.0	675	50	0.50	24,200	-	27,300	MERV 13	HRU 3	208	1	2.9	-	35	1	5 M5.2	9 M5.1
FC 11-3	LG ARNU183TQD4	AD OFFICE	1.5	395	20	-	19,100	-	21,500	MERV 13	HRU 3	208	1	0.25	-	35	1, 2	5 M5.2	6 M5.1
FC 11-4	LG ARNU073TRD4	WORKROOM	0.5	265	40	-	7,500	-	8,500	MERV 13	HRU 3	208	1	0.25	-	100	1, 2	5 M5.2	6 M5.1
FC 11-5	LG ARNU363M2A4	STAIR	3.0	1050	-	0.50	36,200	-	40,600	MERV 13	HRU 3	208	1	2.90	-	100	1	5 M5.2	9 M5.1
FC 12-1	LG ARNU073TRD4	OFFICE	0.5	265	20	-	7,500	-	8,500	MERV 13	HRU 3	208	1	0.25	-	30	1, 2	5 M5.2	6 M5.1
FC 12-2	LG ARNU073TRD4	BC OFFICE	0.5	265	20	-	7,500	-	8,500	MERV 13	HRU 3	208	1	0.25	-	30	1, 2	5 M5.2	6 M5.1
FC 12-3	LG ARNU123TRD4	DC OFFICE	1.0	310	20	-	12,300	-	13,600	MERV 13	HRU 3	208	1	0.25	-	30	1, 2	5 M5.2	6 M5.1
FC 12-4	LG ARNU483M3A4	WORKSTATIONS	4.0	1600	150	0.50	48,100	-	52,200	MERV 13	HRU 3	208	1	3.10	-	30	1	5 M5.2	9 M5.1
FC 12-5	LG ARNU073TRD4	OFFICE	0.5	265	20	-	7,500	-	8,500	MERV 13	HRU 3	208	1	0.25	-	110	1, 2	5 M5.2	6 M5.1
FC 13-1	LG ARNU073TRD4	OFFICE	0.5	265	20	-	7,500	-	8,500	MERV 13	HRU 3	208	1	0.25	-	30	1, 2	5 M5.2	6 M5.1
FC 13-2	LG ARNU073TRD4	ANALYST	0.5	265	20	-	7,500	-	8,500	MERV 13	HRU 3	208	1	0.25	-	30	1, 2	5 M5.2	6 M5.1
FC 13-3	LG ARNU073TRD4	FINANCIAL	0.5	265	20	-	7,500	-	8,500	MERV 13	HRU 3	208	1	0.25	-	30	1, 2	5 M5.2	6 M5.1
FC 13-4	LG ARNU243TAA4	EMERG OFFICE	2.0	810	20	-	24,200	-	27,300	MERV 13	HRU 3	208	1	2.09	-	30	1, 2	5 M5.2	6 M5.1
FC 13-5	LG ARNU073TRD4	COORDINATOR	0.5	265	20	-	7,500	-	8,500	MERV 13	HRU 3	208	1	0.25	-	30	1, 2	5 M5.2	6 M5.1
FC 13-6	LG ARNU123TRD4	DAY ROOM	1.0	310	50	-	12,300	-	13,600	MERV 13	HRU 3	208	1	0.25	-	60	1, 2	5 M5.2	6 M5.1

1. PROVIDE WITH FACTORY FILTER BOX AND MERV 13 FILTERS, LGRED CONTROLS AND PROGRAMMABLE THERMOSTAT, CONDENSATE PUMP, AND OVERFLOW SHUT-OFF SWITCH.
2. PROVIDE WITH VENTILATION KIT

SPLIT SYSTEM OUTDOOR CONDENSING UNIT SCHEDULE

SYM	MFR & MODEL #	NOMINAL TONS	REFRIG.	COOLING TOTAL CAPACITY (BTU/h)	COOLING SENSIBLE CAPACITY (BTU/h)	SEER	EER	AMBIENT (°F DB)	INDOOR UNIT	ELECTRICAL V	ELECTRICAL PH	ELECTRICAL MCA	ELECTRICAL MOCP	WEIGHT (LBS)	REMARKS	WIRING DETAIL	CONTROL DETAIL	ANCHORAGE DETAIL
SCU 1	LG LSU240HFV3	2.0	R-410A	24,000	18,000	17.0	10.0	95	SFC 1	208	1	15	20	150	1	7 M5.2	7 M5.2	10 M5.1
SCU 2	LG LSU240HFV3	2.0	R-410A	24,000	18,000	17.0	10.0	95	SFC 2	208	1	15	20	150	1	7 M5.2	7 M5.2	10 M5.1
SCU 3	LG LSU240HFV3	2.0	R-410A	24,000	18,000	17.0	10.0	95	SFC 3	208	1	15	20	150	1	7 M5.2	7 M5.2	10 M5.1
SCU 4	LG LSU240HFV3	2.0	R-410A	24,000	18,000	17.0	10.0	95	SFC 4	208	1	15	20	150	1	7 M5.2	7 M5.2	10 M5.1

1. PROVIDE WITH PROGRAMMABLE THERMOSTAT, LOW TEMP KIT, AND NEOPRENE PADS.

SPLIT SYSTEM INDOOR WALL MOUNTED FAN COIL UNIT SCHEDULE

SYM	MFR & MODEL #	AREA SERVICED	NOMINAL TONS	CFM	FAN POWER (WATT)	FILTER EFFICIENCY	OUTDOOR UNIT	ELECTRICAL V	ELECTRICAL PH	ELECTRICAL MCA	ELECTRICAL MOCP	WEIGHT (LBS)	REMARKS	WIRING DETAIL	CONTROL DETAIL	ANCHORAGE DETAIL
SFC 1	LG LSN240HFV3	IDF	2.0	600	-	WASHABLE	SCU 1	208	1	-	-	40	1	7 M5.2	7 M5.2	7 M5.1
SFC 2	LG LSN240HFV3	IDF	2.0	600	-	WASHABLE	SCU 2	208	1	-	-	40	1	7 M5.2	7 M5.2	7 M5.1
SFC 3	LG LSN240HFV3	IDF	2.0	600	-	WASHABLE	SCU 3	208	1	-	-	40	1	7 M5.2	7 M5.2	7 M5.1
SFC 4	LG LSN240HFV3	ELEV ROOM	2.0	600	-	WASHABLE	SCU 4	208	1	-	-	40	1	7 M5.2	7 M5.2	7 M5.1

1. PROVIDE WITH CONDENSATE PUMP. POWERED FROM OUTDOOR UNIT

VRF - HEAT RECOVERY UNIT SCHEDULE

SYM	MFR & MODEL #	NOMINAL TONS	REFRIG.	COOLING TOTAL CAPACITY (BTU/h)	COOLING SENSIBLE CAPACITY (BTU/h)	SEER	EER / IEER	AMBIENT (°F DB)	HEATING OUTPUT (BTU/h)	HEATING COP	HEATING AMBIENT (°F DB)	ELECTRICAL V	ELECTRICAL PH	ELECTRICAL MCA	ELECTRICAL MOCP	WEIGHT (LBS)	REMARKS	PIPING DETAIL	WIRING DETAIL	ANCHORAGE DETAIL
HRU 1	LG ARUM336BTE5	28.0	R-410A	336,00	-	20.5	10.8	95	378,000	3.25	47	208	3	30.9 + 60.3	40 + 80	1,300	1	2 M5.2	1 M5.2	10 M5.2
HRU 2	LG ARUM432BTE5	36.0	R-410A	430,500	-	28.4	21.0	95	486,000	3.25	47	208	3	30.9+30.9 +57.9	40 + 40 + 80	1,700	1	4 M5.2	3 M5.2	10 M5.2
HRU 3	LG ARUM336BTE5	28.0	R-410A	336,00	-	20.5	10.8	95	378,000	3.25	47	208	3	30.9 + 60.3	40 + 80	1,300	1	6 M5.2	5 M5.2	10 M5.2

1. PROVIDE WITH LGRED CONTROLS AND NEOPRENE MOUNTING PADS

FAN SCHEDULE

SYM	MFR & MODEL #	SERVICE	CFM	ESP	HP	BHP	ELECTRICAL V	ELECTRICAL PH	FAN RPM	WT (LBS)	REMARKS	CONTROL DETAIL	ANCHORAGE DETAIL
EF 1	GREENHECK SP-A90-130-VG	RESTROOM	100	0.33	1/20	12W	115	1	960	35	1	9 M5.2	13 M5.2
EF 2	GREENHECK SP-A90-130-VG	RESTROOM	100	0.33	1/20	12W	115	1	960	35	1	9 M5.2	13 M5.2
EF 3	GREENHECK USF-24-B2	CORE	3,500	1.25	1.5	1.12	208	1	1,202	400	1,2	8 M5.2	11 M5.2
SF 1	GREENHECK USF-24-B2	CORE	4,300	2.0	3.0	2.17	208	1	961	400	1,2	8 M5.2	11 M5.2

1. PROVIDE WITH BACKDRAFT DAMPER
2. PROVIDE WITH ROOF CURB

PBK
RANCHO CUCAMONGA
8163 ROCHESTER AVENUE, SUITE 100
RANCHO CUCAMONGA, CA 91730
909-987-0909 P

ONTARIO FIRE DEPARTMENT ADMINISTRATION BUILDING

CITY OF ONTARIO

1420 E. FRANCIS STREET., ONTARIO, CA

LICENSED ARCHITECT — KELLEY NEEDHAM C-19064 — Ex.Dt 03/31/25 — STATE OF CALIFORNIA

REGISTERED PROFESSIONAL ENGINEER — ANDREW R. GUSMAN — No. M30630 — Exp. 3/31/24 — MECHANICAL — STATE OF CALIFORNIA

CONSULTANT

PDS PocockDesignSolutions Inc.

NO	DATE	BY	DESCRIPTION

REVISIONS

DRAWN: RKZ | CHECKED: AG

DATE: 07/15/2022 | SCALE: AS NOTED

PROJECT NUMBER: 2011700

MECHANICAL SCHEDULES

DRAWING NUMBER: M0.2

BID SET 03/01/24

VRF - BRANCH SELECTOR UNIT SCHEDULE

SYM	MFR & MODEL #	TOTAL CAPACITY (BTU)	PORTS	OUTDOOR UNIT	ELECTRICAL				WEIGHT (LBS)	REMARKS	ANCHORAGE DETAIL
					V	PH	MCA	MOCP			
BS 1	LG PRHR063A	120,000	6	HRU 1	208	1	0.06	-	50	-	8 M5.1
BS 2	LG PRHR043A	120,000	4	HRU 1	208	1	0.06	-	50	-	8 M5.1
BS 3	LG PRHR063A	120,000	6	HRU 1	208	1	0.06	-	50	-	8 M5.1
BS 4	LG PRHR063A	120,000	6	HRU 1	208	1	0.06	-	50	-	8 M5.1
BS 5	LG PRHR033A	120,000	3	HRU 1	208	1	0.06	-	50	-	8 M5.1
BS 6	LG PRHR083A	120,000	8	HRU 2	208	1	0.06	-	50	-	8 M5.1
BS 7	LG PRHR043A	120,000	4	HRU 2	208	1	0.06	-	50	-	8 M5.1
BS 8	LG PRHR083A	120,000	8	HRU 2	208	1	0.06	-	50	-	8 M5.1
BS 9	LG PRHR063A	120,000	6	HRU 2	208	1	0.06	-	50	-	8 M5.1
BS 10	LG PRHR083A	120,000	8	HRU 3	208	1	0.06	-	50	-	8 M5.1
BS 11	LG PRHR063A	120,000	6	HRU 3	208	1	0.06	-	50	-	8 M5.1
BS 12	LG PRHR063A	120,000	6	HRU 3	208	1	0.06	-	50	-	8 M5.1
BS 13	LG PRHR063A	120,000	6	HRU 3	208	1	0.06	-	50	-	8 M5.1

PBK
RANCHO CUCAMONGA
8163 ROCHESTER AVENUE, SUITE 100
RANCHO CUCAMONGA, CA 91730
909-987-0909 P

ONTARIO FIRE DEPARTMENT ADMINISTRATION BUILDING

CITY OF ONTARIO

1420 E. FRANCIS STREET., ONTARIO, CA

LICENSED ARCHITECT
KELLEY NEEDHAM
C-19064
Ex.Dt: 03/31/25
STATE OF CALIFORNIA

REGISTERED PROFESSIONAL ENGINEER
ANDREW R. GOSSMAN
No. M29639
Exp. 3/31/24
MECHANICAL
STATE OF CALIFORNIA

CONSULTANT

PDS
PocockDesignSolutions Inc.

NO	DATE	BY	DESCRIPTION

REVISIONS

DRAWN: REVZ	CHECKED: AG
DATE: 07/15/2022	SCALE: AS NOTED
PROJECT NUMBER: 2011700	

MECHANICAL SCHEDULES

DRAWING NUMBER: M0.3

BID SET 03/01/24

ROOM #	ROOM NAME	ROOM #	ROOM NAME
101	LOBBY	126	HALLWAY - WEST
102	PUBLIC RESTROOM	127	DEPUTY FIRE MARSHALL
103	ADMIN OPEN OFFICE	128	DC FIRE MARSHALL
104	LARGE CONFERENCE RM	129	FIRE PROTECT ANALYST
105	ELECTRICAL ROOM	130	SR FIRE SPC OFFICE
106	STORAGE	131	FIRE SPC/PERMIT TECH
107	STORAGE	132	PLAN CHECKER OFFICE
108	COPY ROOM	133	LACTATION ROOM
109	EMS STORAGE	134	EXERCISE ROOM
110	EMS SKILLS ROOM	135	OPEN OFFICE
111	EMS DIRECTOR'S OFFICE	136	VESTIBULE
112	EMS NURSE'S OFFICE	137	MALE RESTROOM
113	EMS CAPTAIN'S OFFICE	138	JANITOR'S CLOSET
114	OFFICE XXXXX	139	VESTIBULE
115	OFFICE XXXXX	140	FEMALE RESTROOM
116	ADMIN WORKSTATIONS	141	IDF ROOM
117	DC OFFICE	142	BREAK AREA
118	TRAINING OFFICE 1	143	MALE SHOWER / LOCKER
119	TRAINING OFFICE 2	144	FEMALE SHWR / LOCKER
120	TRAINING OFFICE 3	145	STAIR - NORTH
121	TRAINING OFFICE 4	146	FIRE RISER CLOSET
122	HALLWAY - NORTH	147	STAIR - SOUTH
123	HALLWAY - CENTRAL		
124	HALLWAY - SOUTH		
125	HALLWAY - EAST		

KEY NOTES:

1. 22"x22" EXHAUST AIR DUCT UP TO SECOND FLOOR.
2. 22"X26" SUPPLY AIR DUCT UP TO SECOND FLOOR.
3. COMBINATION SMOKE / FIRE DAMPER AT PENETRATION OF SHAFT.
4. MANUAL VOLUME DAMPER BALANCED AT 20CFM OF OUTSIDE AIR.
5. MANUAL VOLUME DAMPER BALANCED AT 40CFM OF OUTSIDE AIR.
6. MANUAL VOLUME DAMPER BALANCED AT 50CFM OF OUTSIDE AIR.
7. MANUAL VOLUME DAMPER BALANCED AT 60CFM OF OUTSIDE AIR.
8. MANUAL VOLUME DAMPER BALANCED AT 90CFM OF OUTSIDE AIR.
9. MANUAL VOLUME DAMPER BALANCED AT 100CFM OF OUTSIDE AIR.
10. MANUAL VOLUME DAMPER BALANCED AT 150CFM OF OUTSIDE AIR.
11. MANUAL VOLUME DAMPER BALANCED AT 200CFM OF OUTSIDE AIR.
12. MANUAL VOLUME DAMPER BALANCED AT 250CFM OF OUTSIDE AIR.
13. MANUAL VOLUME DAMPER BALANCED AT 300CFM OF OUTSIDE AIR.
14. EXTERIOR LOUVER WITH MIN. 0.25 SQ FT FREE AREA.

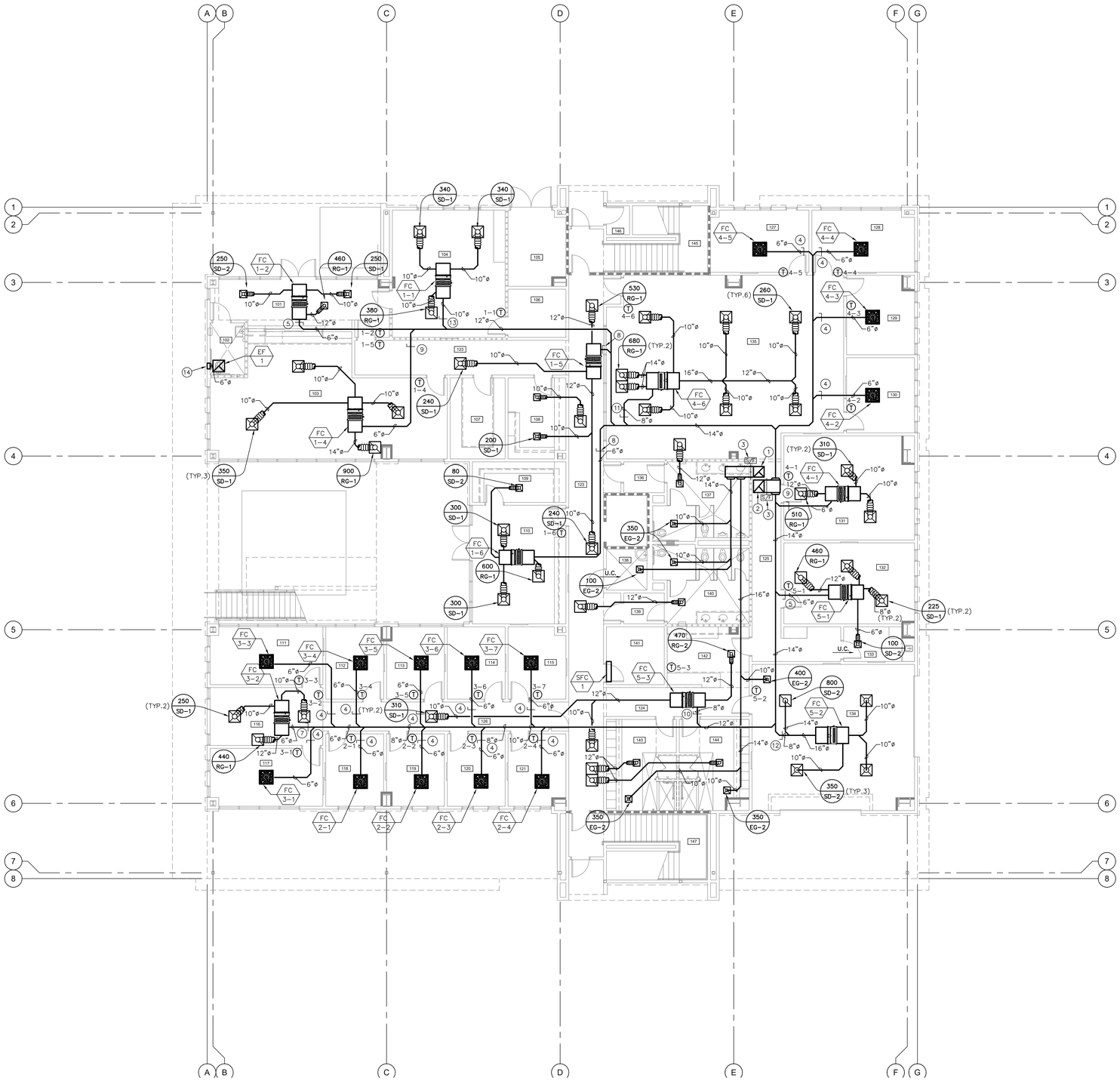

NORTH

MECHANICAL FIRST FLOOR PLAN

SCALE 1/8"=1'-0"

1

PBK
RANCHO CUCAMONGA
8163 ROCHESTER AVENUE, SUITE 100
RANCHO CUCAMONGA, CA 91730
909-987-0909 P

ONTARIO FIRE DEPARTMENT ADMINISTRATION BUILDING

CITY OF ONTARIO

1420 E. FRANCIS STREET., ONTARIO, CA

LICENSED ARCHITECT KELLEY NEEDHAM C-19064 Exp. 03/31/25 STATE OF CALIFORNIA

REGISTERED PROFESSIONAL ENGINEER ANDREW R. GOSSMAN No. M28249 Exp. 12/31/24 MECHANICAL STATE OF CALIFORNIA

CONSULTANT

PDS PocockDesignSolutions Inc.

NO	DATE	BY	DESCRIPTION

REVISIONS

DRAWN: REZ	CHECKED: AG
DATE: 07/15/2022	SCALE: AS NOTED
PROJECT NUMBER: 2011700	

MECHANICAL FIRST FLOOR PLAN

DRAWING NUMBER: M2.1

BID SET 03/01/24

ROOM #	ROOM NAME	ROOM #	ROOM NAME
101	LOBBY	126	HALLWAY - WEST
102	PUBLIC RESTROOM	127	DEPUTY FIRE MARSHALL
103	ADMIN OPEN OFFICE	128	DC FIRE MARSHALL
104	LARGE CONFERENCE RM	129	FIRE PROTECT ANALYST
105	ELECTRICAL ROOM	130	SR FIRE SPC OFFICE
106	STORAGE	131	FIRE SPC/PERMIT TECH
107	STORAGE	132	PLAN CHECKER OFFICE
108	COPY ROOM	133	LACTATION ROOM
109	EMS STORAGE	134	EXERCISE ROOM
110	EMS SKILLS ROOM	135	OPEN OFFICE
111	EMS DIRECTOR'S OFFICE	136	VESTIBULE
112	EMS NURSE'S OFFICE	137	MALE RESTROOM
113	EMS CAPTAIN'S OFFICE	138	JANITOR'S CLOSET
114	OFFICE XXXXX	139	VESTIBULE
115	OFFICE XXXXX	140	FEMALE RESTROOM
116	ADMIN WORKSTATIONS	141	IDF ROOM
117	DC OFFICE	142	BREAK AREA
118	TRAINING OFFICE 1	143	MALE SHOWER / LOCKER
119	TRAINING OFFICE 2	144	FEMALE SHWR / LOCKER
120	TRAINING OFFICE 3	145	STAIR - NORTH
121	TRAINING OFFICE 4	146	FIRE RISER CLOSET
122	HALLWAY - NORTH	147	STAIR - SOUTH
123	HALLWAY - CENTRAL		
124	HALLWAY - SOUTH		
125	HALLWAY - EAST		

KEY NOTES:

1. REFRIGERANT PIPING UP TO SECOND FLOOR.
2. CONTRACTOR TO VERIFY REFRIGERANT PIPING SIZE AND ROUTING WITH MANUFACTURER PRIOR TO ORDERING.

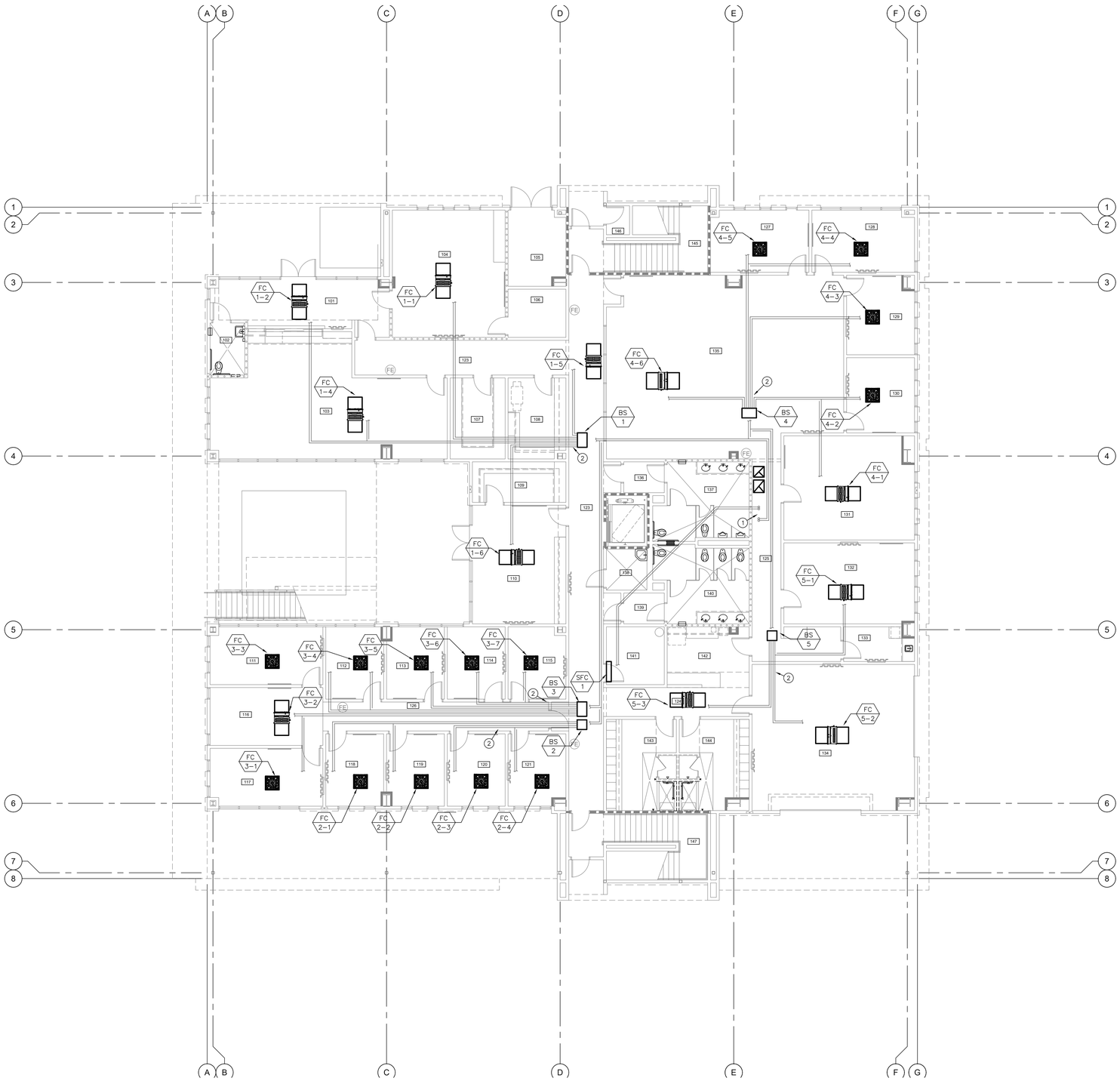

NORTH

MECHANICAL FIRST FLOOR PIPING PLAN

SCALE 1/8"=1'-0"

1

PBK
RANCHO CUCAMONGA
8163 ROCHESTER AVENUE, SUITE 100
RANCHO CUCAMONGA, CA 91730
909-987-0909 P

ONTARIO FIRE DEPARTMENT ADMINISTRATION BUILDING

CITY OF ONTARIO

1420 E. FRANCIS STREET., ONTARIO, CA

LICENSED ARCHITECT — KELLEY NEEDHAM C-190064 Exp. 03/31/25 — STATE OF CALIFORNIA

REGISTERED PROFESSIONAL ENGINEER — ANDREW R. GUSSEMAN No. M35670 Exp. 12/31/24 — MECHANICAL — STATE OF CALIFORNIA

CONSULTANT

PDS PocockDesignSolutions Inc.

NO	DATE	BY	DESCRIPTION

REVISIONS

DRAWN: REVZ	CHECKED: AG
DATE: 07/15/2022	SCALE: AS NOTED
PROJECT NUMBER: 2011700	

MECHANICAL FIRST FLOOR PIPING PLAN

DRAWING NUMBER: M2.1P

BID SET 03/01/24

ROOM #	ROOM NAME	ROOM #	ROOM NAME
201	DISPATCH FLOOR	226	E.O.C. BREAKOUT ROOM
202	FIRE DISPATCH SUPVR.	227	QUIET ROOM 1
203	STORAGE	228	BATHROOM
204	TRAINING/MULTI-USE RM.	229	QUIET ROOM 2
205	DISPATCH TRAINING RM.	230	EMERGENCY MGR
206	LOCKERS	231	EMERGENCY COORD
207	FIRE COMM. MANAGER	232	STORAGE
208	OPEN CONF./CLASS RM.	233	E.O.C. CONFERENCE RM.
209	E.O.C. FLOOR	234	COVERED PATIO
210	E.O.C. EQUIPMENT ROOM	235	PATIO 1
211	HALLWAY - NORTH		
212	HALLWAY - CENTRAL		
213	HALLWAY - EAST		
214	HALLWAY - SOUTH		
215	DAY ROOM		
216	DINING		
217	KITCHEN		
218	RADIO EQUIPMENT RM.		
219	VESTIBULE		
220	MALE RESTROOM		
221	JANITOR'S CLOSET		
222	VESTIBULE		
223	FEMALE RESTROOM		
224	SHARED WORKSPACE		
225	MDF ROOM		

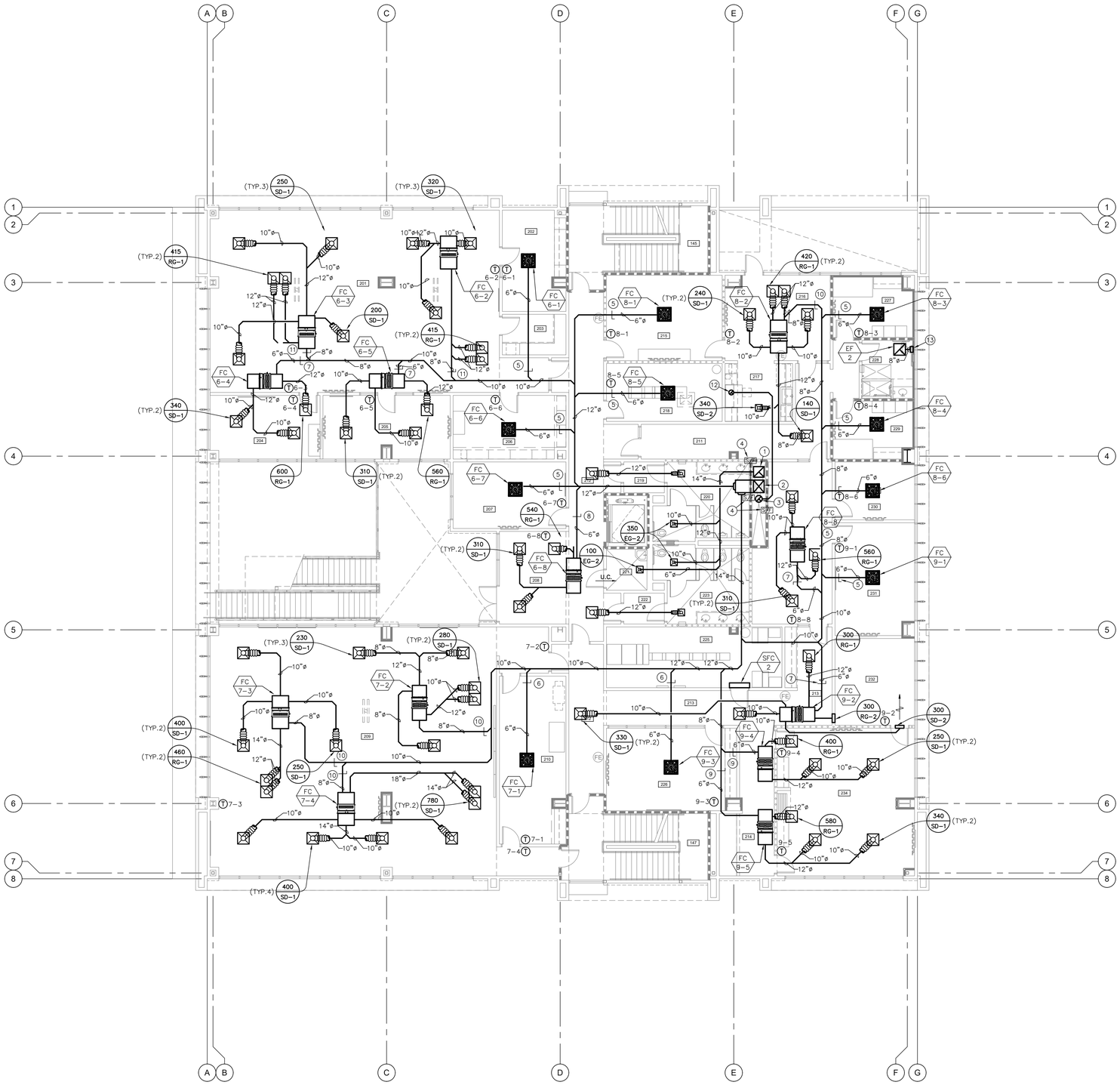

KEY NOTES:

1. 22"x22" EXHAUST AIR DUCT UP THRU ROOF AND DOWN TO SECOND FLOOR.
2. 22"X26" SUPPLY AIR DUCT UP THRU ROOF AND DOWN TO SECOND FLOOR.
3. 14"ø EXHAUST AIR DUCT UP THRU ROOF AND DOWN TO SECOND FLOOR.
4. COMBINATION SMOKE / FIRE DAMPER AT PENETRATION OF SHAFT.
5. MANUAL VOLUME DAMPER BALANCED AT 20CFM OF OUTSIDE AIR.
6. MANUAL VOLUME DAMPER BALANCED AT 50CFM OF OUTSIDE AIR.
7. MANUAL VOLUME DAMPER BALANCED AT 60CFM OF OUTSIDE AIR.
8. MANUAL VOLUME DAMPER BALANCED AT 80CFM OF OUTSIDE AIR.
9. MANUAL VOLUME DAMPER BALANCED AT 100CFM OF OUTSIDE AIR.
10. MANUAL VOLUME DAMPER BALANCED AT 120CFM OF OUTSIDE AIR.
11. MANUAL VOLUME DAMPER BALANCED AT 130CFM OF OUTSIDE AIR.
12. 10"ø EXHAUST AIR DUCT DOWN TO P.O.C. AT HOOD.
13. EXTERIOR LOUVER WITH MIN. 0.25 SQ FT FREE AREA.

NORTH

MECHANICAL SECOND FLOOR PLAN

SCALE 1/8"=1'-0" | 1

PBK
RANCHO CUCAMONGA
8163 ROCHESTER AVENUE, SUITE 100
RANCHO CUCAMONGA, CA 91730
909-987-0909 P

ONTARIO FIRE DEPARTMENT ADMINISTRATION BUILDING

CITY OF ONTARIO

1420 E. FRANCIS STREET., ONTARIO, CA

LICENSED ARCHITECT — KELLEY NEEDHAM C-19064 — Ex.Date 03/31/25 — STATE OF CALIFORNIA

REGISTERED PROFESSIONAL ENGINEER — ANDREW R. GOSSARD — No. M28828 Exp. 3/31/24 — MECHANICAL — STATE OF CALIFORNIA

CONSULTANT

PDS PocockDesignSolutions Inc.

NO	DATE	BY	DESCRIPTION

REVISIONS

DRAWN: REVZ | CHECKED: AG

DATE: 07/15/2022 | SCALE: AS NOTED

PROJECT NUMBER: 2011700

MECHANICAL SECOND FLOOR PLAN

DRAWING NUMBER: M2.2

BID SET 03/01/24

ROOM #	ROOM NAME	ROOM #	ROOM NAME
201	DISPATCH FLOOR	226	E.O.C. BREAKOUT ROOM
202	FIRE DISPATCH SUPVR.	227	QUIET ROOM 1
203	STORAGE	228	BATHROOM
204	TRAINING/MULTI-USE RM.	229	QUIET ROOM 2
205	DISPATCH TRAINING RM.	230	EMERGENCY MGR
206	LOCKERS	231	EMERGENCY COORD
207	FIRE COMM. MANAGER	232	STORAGE
208	OPEN CONF./CLASS RM.	233	E.O.C. CONFERENCE RM.
209	E.O.C. FLOOR	234	COVERED PATIO
210	E.O.C. EQUIPMENT ROOM	235	PATIO 1
211	HALLWAY - NORTH		
212	HALLWAY - CENTRAL		
213	HALLWAY - EAST		
214	HALLWAY - SOUTH		
215	DAY ROOM		
216	DINING		
217	KITCHEN		
218	RADIO EQUIPMENT RM.		
219	VESTIBULE		
220	MALE RESTROOM		
221	JANITOR'S CLOSET		
222	VESTIBULE		
223	FEMALE RESTROOM		
224	SHARED WORKSPACE		
225	MDF ROOM		

KEY NOTES:

1. REFRIGERANT PIPING UP TO THIRD FLOOR AND DOWN TO SECOND FLOOR.
2. CONTRACTOR TO VERIFY REFRIGERANT PIPING SIZE AND ROUTING WITH MANUFACTURER PRIOR TO ORDERING.

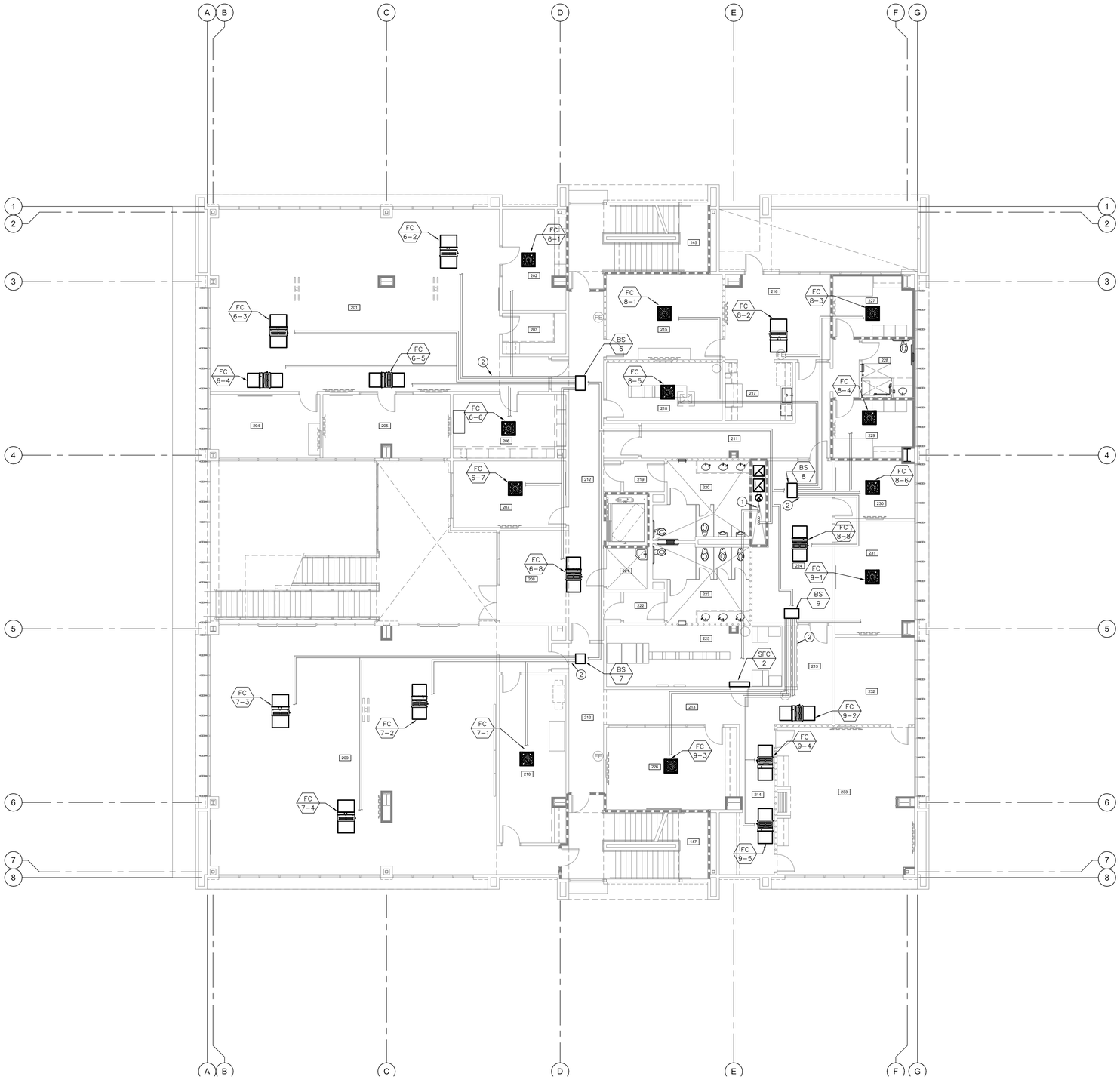

MECHANICAL SECOND FLOOR PIPING PLAN

SCALE 1/8"=1'-0"

1

PBK
RANCHO CUCAMONGA
8163 ROCHESTER AVENUE, SUITE 100
RANCHO CUCAMONGA, CA 91730
909-987-0909 P

ONTARIO FIRE DEPARTMENT ADMINISTRATION BUILDING

CITY OF ONTARIO

1420 E. FRANCIS STREET., ONTARIO, CA

LICENSED ARCHITECT — KELLEY NEEDHAM C-19064 — Date 03/31/24 — STATE OF CALIFORNIA

REGISTERED PROFESSIONAL ENGINEER — ANDREW M. GOSSMAN — No. M28436 — Exp. 3/31/24 — MECHANICAL — STATE OF CALIFORNIA

CONSULTANT

PDS
PocockDesignSolutions Inc.

NO	DATE	BY	DESCRIPTION

REVISIONS

DRAWN: REVZ	CHECKED: AG
DATE: 07/15/2022	SCALE: AS NOTED
PROJECT NUMBER: 2011700	

MECHANICAL SECOND FLOOR PIPING PLAN

DRAWING NUMBER: M2.2P

BID SET 03/01/24

ROOM #	ROOM NAME	ROOM #	ROOM NAME
301	FIRE CHIEF OFFICE	326	OFFICE
302	SR. ADMIN. ASSIST. OFC	327	BC OFFICE
303	STORAGE	328	DC OPERATIONS OFFICE
304	OPEN CONF./CLASSRM.	329	OPEN WORK STATIONS
305	SECURED FILES ROOM	330	ENGAGEMENT SUPER
306	DC LOGISTICS OFFICE	331	TRAINING MGMT ANALYST
307	WELLNESS ADMIN ASSIST	332	SR MGMT ANALYST
308	DC WELLNESS OFFICE	333	ADMIN OFFICER OFFICE
309	WAITING VESTIBULE	334	ADMIN DIRECTOR OFFICE
310	HALLWAY - CENTRAL	335	PATIO 2
311	HALLWAY - NORTH	336	ROOF DECK - NORTH
312	HALLWAY - EAST	337	ROOF DECK - SOUTH
313	HALLWAY - SOUTH		
314	WORKRM. AND STORAGE		
315	BREAK ROOM		
316	VESTIBULE		
317	MALE RESTROOM		
318	JANITOR		
319	VESTIBULE		
320	FEMALE RESTROOM		
321	IDF ROOM		
322	ELEVATOR CONTROL RM.		
323	DAY ROOM		
324	WORKROOM		
325	OFFICE		

KEY NOTES:

1. 22"x22" EXHAUST AIR DUCT UP THRU ROOF AND DOWN TO SECOND FLOOR.
2. 22"X26" SUPPLY AIR DUCT UP THRU ROOF AND DOWN TO SECOND FLOOR.
3. 14"ø EXHAUST AIR DUCT UP THRU ROOF AND DOWN TO SECOND FLOOR.
4. COMBINATION SMOKE / FIRE DAMPER AT PENETRATION OF SHAFT.
5. MANUAL VOLUME DAMPER BALANCED AT 20CFM OF OUTSIDE AIR.
6. MANUAL VOLUME DAMPER BALANCED AT 50CFM OF OUTSIDE AIR.
7. MANUAL VOLUME DAMPER BALANCED AT 150CFM OF OUTSIDE AIR.
8. MANUAL VOLUME DAMPER BALANCED AT 200CFM OF OUTSIDE AIR.

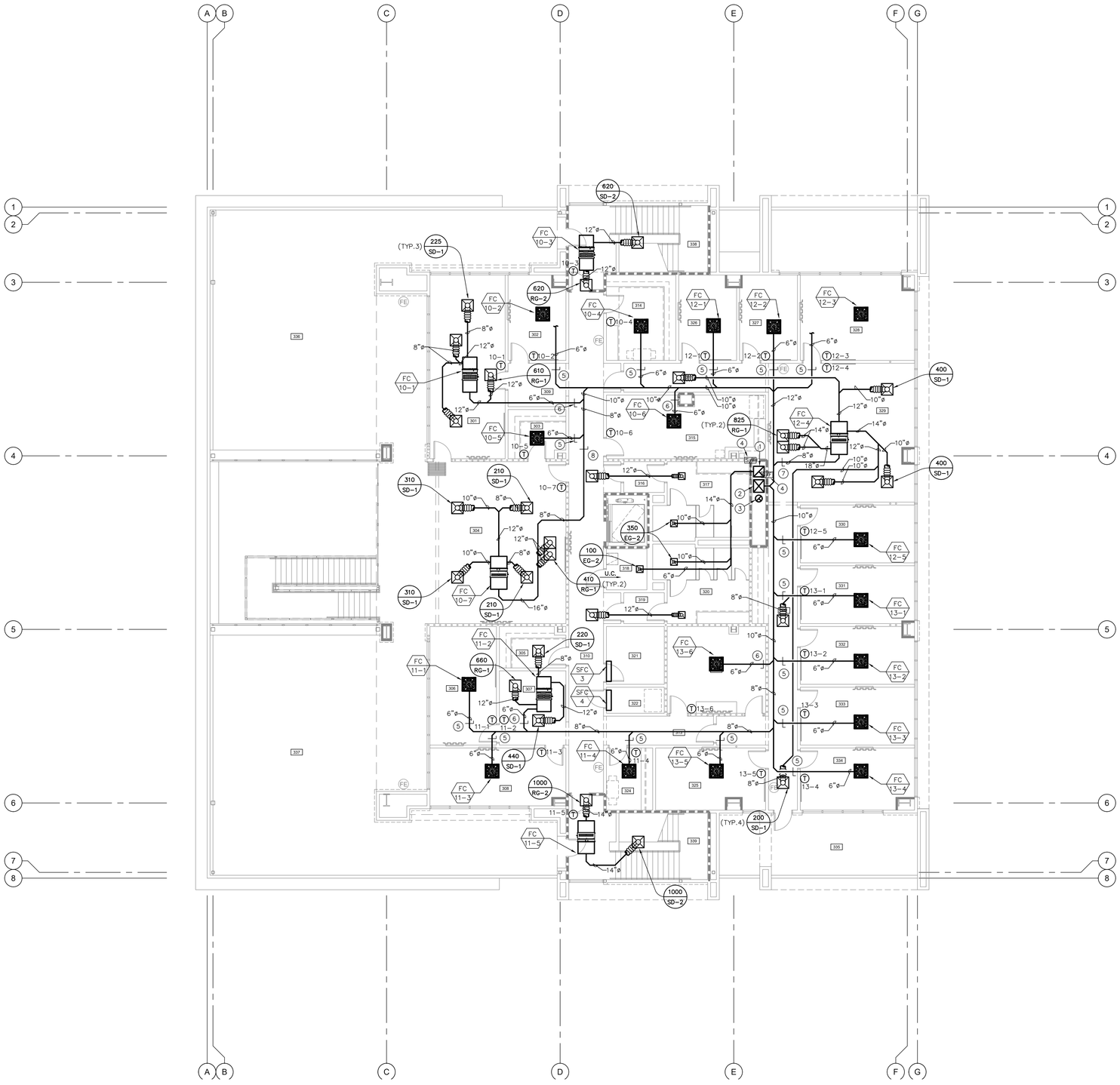

NORTH

MECHANICAL THIRD FLOOR PLAN

SCALE 1/8"=1'-0"

1

PBK

RANCHO CUCAMONGA
8163 ROCHESTER AVENUE, SUITE 100
RANCHO CUCAMONGA, CA 91730
909-987-0909 P

ONTARIO FIRE DEPARTMENT ADMINISTRATION BUILDING

CITY OF ONTARIO

1420 E. FRANCIS STREET., ONTARIO, CA

LICENSED ARCHITECT — KELLEY NEEDHAM C-19064 — Ex.Date 03/31/25 — STATE OF CALIFORNIA

REGISTERED PROFESSIONAL ENGINEER — ANDREW R. GOSSMAN — No. M29939 — Exp. 3/31/24 — MECHANICAL — STATE OF CALIFORNIA

CONSULTANT

PDS PocockDesignSolutions Inc.

NO	DATE	BY	DESCRIPTION

REVISIONS

DRAWN: REVZ | CHECKED: AG

DATE: 07/15/2022 | SCALE: AS NOTED

PROJECT NUMBER: 2011700

MECHANICAL THIRD FLOOR PLAN

DRAWING NUMBER: M2.3

BID SET 03/01/24

ROOM #	ROOM NAME	ROOM #	ROOM NAME
301	FIRE CHIEF OFFICE	326	OFFICE
302	SR. ADMIN. ASSIST. OFC	327	BC OFFICE
303	STORAGE	328	DC OPERATIONS OFFICE
304	OPEN CONF./CLASSRM.	329	OPEN WORK STATIONS
305	SECURED FILES ROOM	330	ENGAGEMENT SUPER
306	DC LOGISTICS OFFICE	331	TRAINING MGMT ANALYST
307	WELLNESS ADMIN ASSIST	332	SR MGMT ANALYST
308	DC WELLNESS OFFICE	333	ADMIN OFFICER OFFICE
309	WAITING VESTIBULE	334	ADMIN DIRECTOR OFFICE
310	HALLWAY - CENTRAL	335	PATIO 2
311	HALLWAY - NORTH	336	ROOF DECK - NORTH
312	HALLWAY - EAST	337	ROOF DECK - SOUTH
313	HALLWAY - SOUTH		
314	WORKRM. AND STORAGE		
315	BREAK ROOM		
316	VESTIBULE		
317	MALE RESTROOM		
318	JANITOR		
319	VESTIBULE		
320	FEMALE RESTROOM		
321	IDF ROOM		
322	ELEVATOR CONTROL RM.		
323	DAY ROOM		
324	WORKROOM		
325	OFFICE		

KEY NOTES:

1. REFRIGERANT PIPING UP THRU ROOF AND DOWN TO SECOND FLOOR.
2. CONTRACTOR TO VERIFY REFRIGERANT PIPING SIZE AND ROUTING WITH MANUFACTURER PRIOR TO ORDERING.

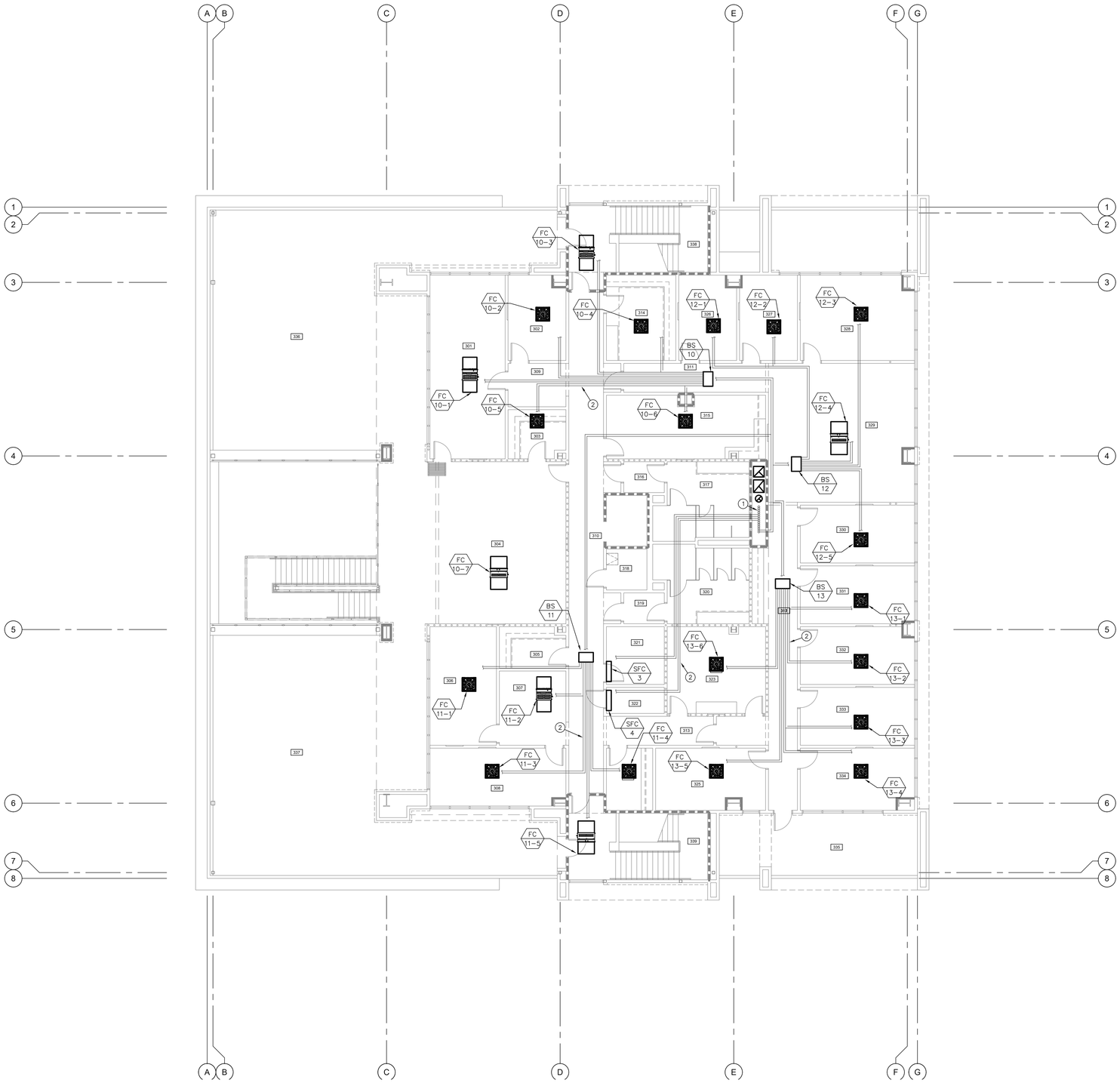

NORTH

MECHANICAL THIRD FLOOR PIPING PLAN

SCALE 1/8"=1'-0"

1

PBK
RANCHO CUCAMONGA
8163 ROCHESTER AVENUE, SUITE 100
RANCHO CUCAMONGA, CA 91730
909-987-0909 P

ONTARIO FIRE DEPARTMENT ADMINISTRATION BUILDING

CITY OF ONTARIO

1420 E. FRANCIS STREET., ONTARIO, CA

LICENSED ARCHITECT — KELLEY NEEDHAM — C-19064 — Ex.Dt: 03/31/25 — STATE OF CALIFORNIA

REGISTERED PROFESSIONAL ENGINEER — ANDREW R. GUSMAN — No. M30639 — Exp. 3/31/24 — MECHANICAL — STATE OF CALIFORNIA

CONSULTANT

PDS
PocockDesignSolutions Inc.

NO	DATE	BY	DESCRIPTION

REVISIONS

DRAWN: REZ	CHECKED: AG
DATE: 07/15/2022	SCALE: AS NOTED
PROJECT NUMBER: 2011700	

MECHANICAL THIRD FLOOR PIPING PLAN

DRAWING NUMBER: M2.3P

BID SET 03/01/24

KEY NOTES:

1. 22"x22" EXHAUST AIR DUCT UP THRU ROOF AND DOWN TO SECOND FLOOR.
2. 22"X26" SUPPLY AIR DUCT UP THRU ROOF AND DOWN TO SECOND FLOOR.
3. 14"ø EXHAUST AIR DUCT UP THRU ROOF AND DOWN TO SECOND FLOOR.
4. REFRIGERANT PIPING DOWN THRU ROOF.
5. CONTRACTOR TO VERIFY REFRIGERANT PIPING SIZE AND ROUTING WITH MANUFACTURER PRIOR TO ORDERING.
6. ROOF ACCESS HATCH BY OTHERS.

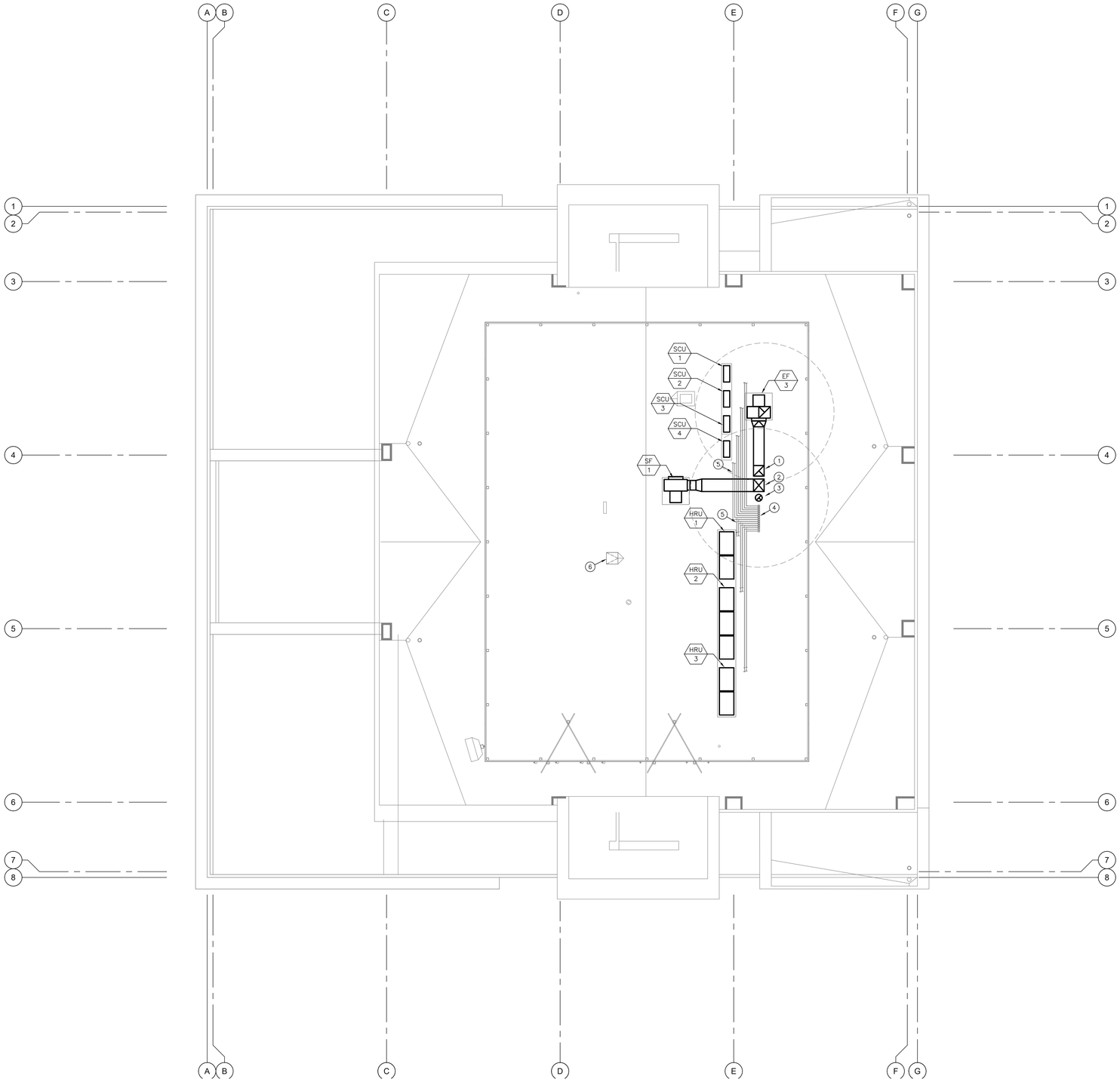

PBK
RANCHO CUCAMONGA
8163 ROCHESTER AVENUE, SUITE 100
RANCHO CUCAMONGA, CA 91730
909-987-0909 P

ONTARIO FIRE DEPARTMENT ADMINISTRATION BUILDING

CITY OF ONTARIO

1420 E. FRANCIS STREET., ONTARIO, CA

LICENSED ARCHITECT
KELLEY NEEDHAM
C-19064
Exp. 03/31/25
STATE OF CALIFORNIA

REGISTERED PROFESSIONAL ENGINEER
ANDREW R. OSSEMAN
No. M39639
Exp. 3/31/24
MECHANICAL
STATE OF CALIFORNIA

CONSULTANT

PDS
PocockDesignSolutions Inc.

NO	DATE	BY	DESCRIPTION

REVISIONS

DRAWN: RMZ EC	CHECKED: AG
DATE: 07/15/2022	SCALE: AS NOTED
PROJECT NUMBER: 2011700	

MECHANICAL ROOF PLAN

DRAWING NUMBER: M3.1

BID SET 03/01/24

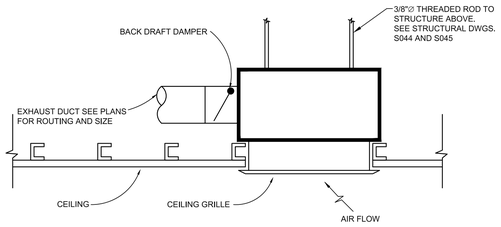

CEILING EXHAUST FAN ANCHORAGE DETAIL — SCALE NONE — 13

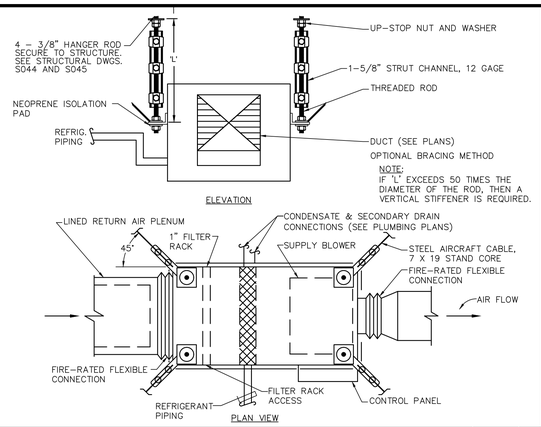

DUCTED FAN COIL ANCHORAGE — SCALE NONE — 9

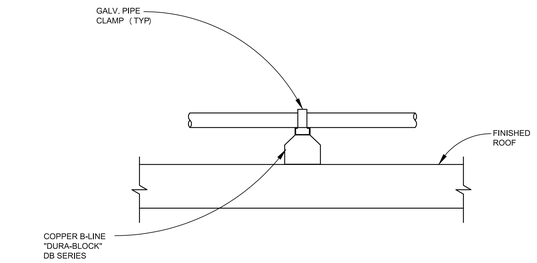

NOTES:
1. COORDINATE WITH ROOFING MANUFACTURER TO ENSURE PROPER INSTALLATION IN ACCORDANCE WITH ALL ROOFING WARRANTEES, EXISTING OR NEW, AND SO AS NOT TO VOID SUCH WARRANTEES.

BASE-MOUNTED PIPING SUPPORT DETAIL — SCALE NONE — 5

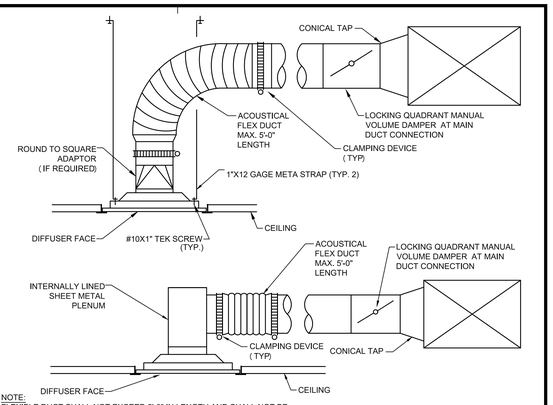

NOTE:
FLEXIBLE DUCT SHALL NOT EXCEED 5'-0" IN LENGTH AND SHALL NOT BE USED IN LIEU OF A RIGID ELBOW OR TRANSITION PER CMC REQUIREMENTS.

CEILING DIFFUSER DETAIL — SCALE NONE — 1

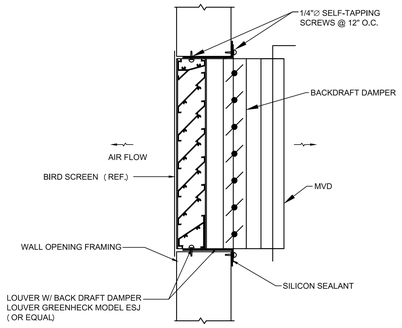

EXTERIOR LOUVER ATTACHMENT DETAIL — SCALE NONE — 14

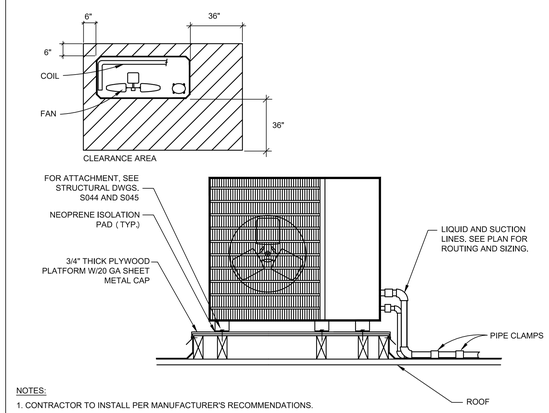

NOTES:
1. CONTRACTOR TO INSTALL PER MANUFACTURER'S RECOMMENDATIONS.

CONDENSING UNIT ANCHORAGE DETAIL — SCALE NONE — 10

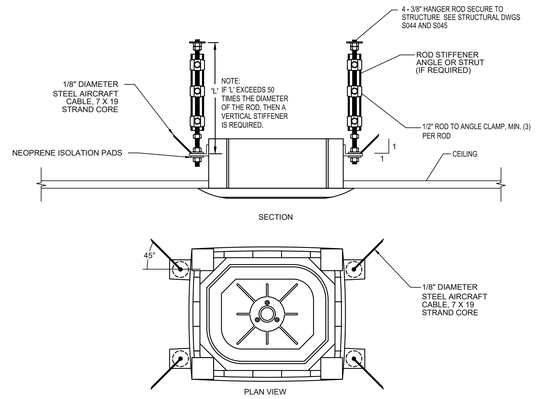

CASSETTE FAN COIL ANCHORAGE — SCALE NONE — 6

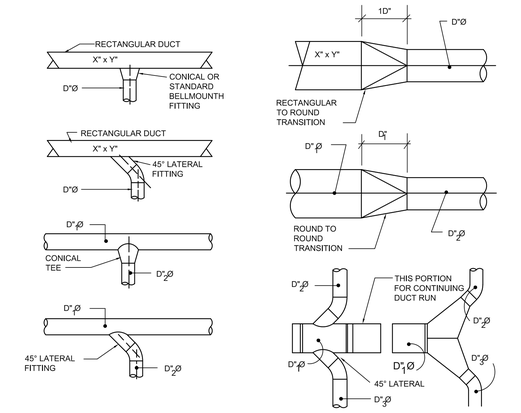

DUCTWORK TRANSITION DETAIL — SCALE NONE — 2

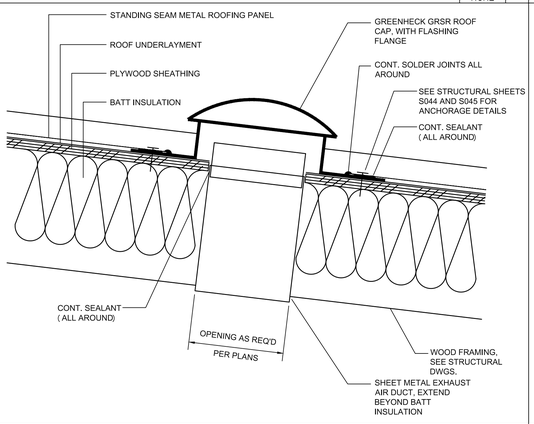

ROOF CAP DETAIL — SCALE NONE — 15

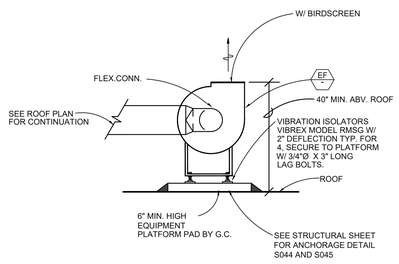

UTILITY SET FAN DETAIL — SCALE NONE — 11

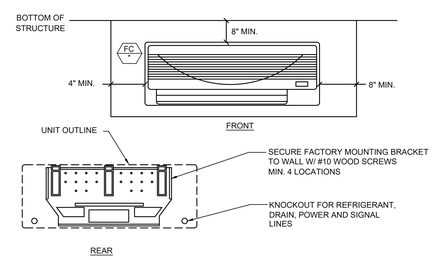

NOTES:
1. CLEARANCES OF 4" ON TOP OF AND TO THE LEFT OF THE FAN COIL UNIT ARE ABSOLUTE MIN.. CLEARANCES OF 10" ARE RECOMMENDED.
2. REFRIGERANT IS METERED BY CAPILLARY TUBES IN THE OUTDOOR UNIT. INSULATE BOTH REFRIGERANT LINES.
3. REFRIGERANT, DRAIN, AND POWER CONNECTIONS MAY BE MADE IN UNIT REAR, BOTTOM,
4. CONTRACTOR TO INSTALL PER MANUFACTURER'S RECOMMENDATIONS.

WALL-MOUNTED FAN COIL ANCHORAGE — SCALE NONE — 7

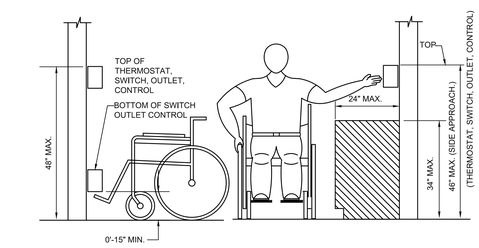

THERMOSTAT MOUNTING DETAIL — SCALE NONE — 3

RECTANGULAR DUCT			ROUND DUCT		
MAX. OF DUCT PERIMETER/IN.	PAIR AT 8 FT. SPACING	MAX. LOAD EACH HANGER/LBS.	DIAMETER /INCHES	STRAP AT 12 FT. SPACING	MAX. LOAD EACH HANGER/LBS.
P/Z =72	1"X 20 GA.	320	UP TO 24"	1"X 22 GA.	260
P/Z =96	1"X 18 GA.	420	25" TO 36"	1"X 20 GA.	320
P/Z =120	1"X 16 GA.	700	37" TO 50"	(2)1"X 20 GA.	320

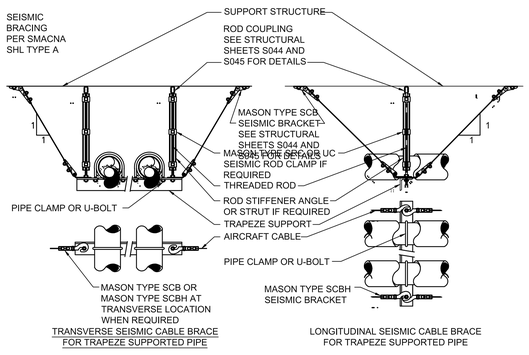

PIPING ANCHORAGE DETAIL — SCALE NONE — 16

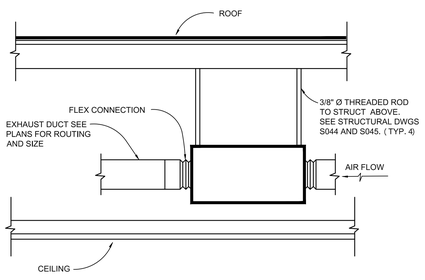

INLINE EXHAUST FAN ANCHORAGE DETAIL — SCALE NONE — 12

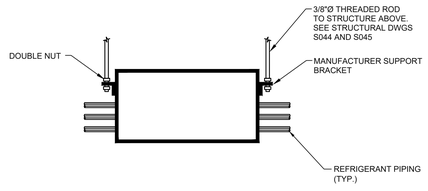

BRANCH SELECTOR ANCHORAGE — SCALE NONE — 8

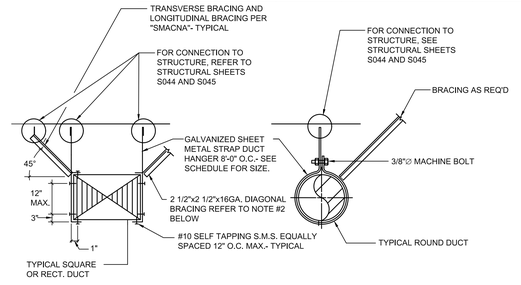

NOTES:
1. PROVIDE TRANSVERSE BRACING AT 4O FT. AND LONGITUDINAL BRACING AT 80 FT. (LATES SMACNA SEISMIC RESTRAINT MANUAL)

DUCTWORK HANGER SUPPORT DETAIL — SCALE NONE — 4

PBK
RANCHO CUCAMONGA
8163 ROCHESTER AVENUE, SUITE 100
RANCHO CUCAMONGA, CA 91730
909-987-0909 P

ONTARIO FIRE DEPARTMENT ADMINISTRATION BUILDING

CITY OF ONTARIO

1420 E. FRANCIS STREET., ONTARIO, CA

LICENSED ARCHITECT — KELLEY NEEDHAM C-19064 — Ex.Date 03/31/25 — STATE OF CALIFORNIA

REGISTERED PROFESSIONAL ENGINEER — ANDREW R. GOSSMAN — No. M39939 — Exp. 3/31/24 — MECHANICAL — STATE OF CALIFORNIA

CONSULTANT

PDS
PocockDesignSolutions Inc.

NO	DATE	BY	DESCRIPTION
#	REVISIONS		

DRAWN: REVZ	CHECKED: AG
DATE: 07/15/2022	SCALE: AS NOTED
PROJECT NUMBER: 2011700	

MECHANICAL DETAILS

DRAWING NUMBER: M5.1

BID SET 03/01/24

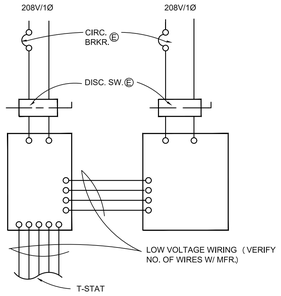

LEGEND:

(E) PROVIDED BY ELEC.

(M) PROVIDED BY MECH.

SPLIT SYSTEM WIRING DIAGRAM

SCALE NONE | 7

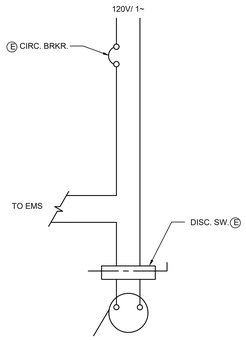

NOTE:
FAN TO BE CONTROLLED VIA TIME SCHEDULE

LEGEND:

(E) PROVIDED BY ELEC.

(M) PROVIDED BY MECH.

FAN WIRING DIAGRAM

SCALE NONE | 8

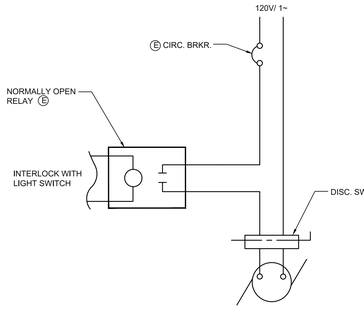

LEGEND:

(E) PROVIDED BY ELEC.

(M) PROVIDED BY MECH.

EXHAUST FAN WIRING DIAGRAM

SCALE NONE | 9

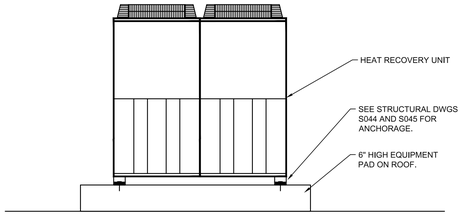

VRF HRU ANCHORAGE DETAIL

SCALE NONE | 10

Note :
Power wiring, breaker size, and disconnects should follow local code and NEC.
Multi-frame outdoor units require a separate power connection for each frame.
Refer to the most up-to-date submittal sheets for applicable electrical data.
.

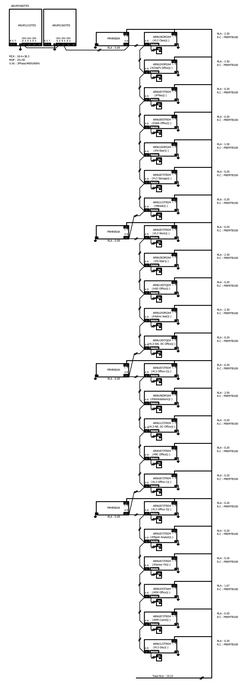

Power line(Outdoor unit)
Power line(Indoor unit / HR unit)
Communication line (ODU-IDU / ODU-ODU) : Twisted, Stranded and shielded AWG 18 x 2C
Communication line (ODU-CEN) : Twisted, Stranded and shielded AWG 18 x 2C
Communication line(Remote controller) : Twisted and stranded AWG 22 x 3C
Ground shield wire at ODU only
Note : Polarity matters: Always connect 'A' to 'A' and 'B' to 'B'

VRF WIRING DIAGRAM 3

SCALE NONE | 5

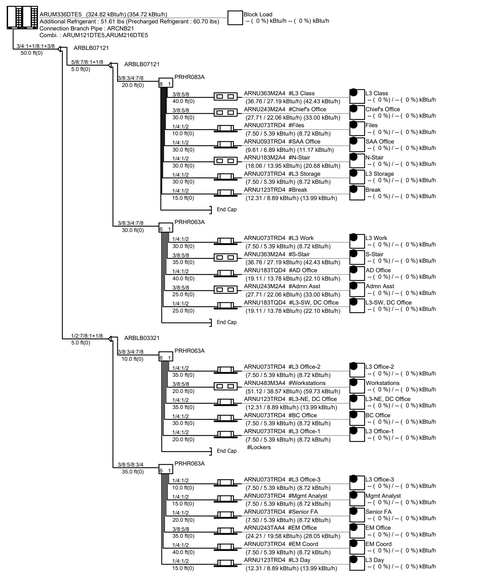

VRF PIIPING DIAGRAM 3

SCALE NONE | 6

Note :
Power wiring, breaker size, and disconnects should follow local code and NEC.
Multi-frame outdoor units require a separate power connection for each frame.
Refer to the most up-to-date submittal sheets for applicable electrical data.
.

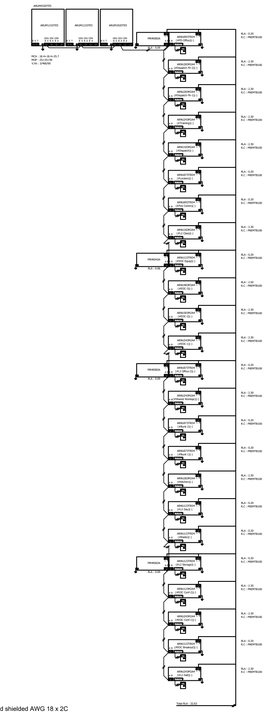

Power line(Outdoor unit)
Power line(Indoor unit / HR unit)
Communication line (ODU-IDU / ODU-ODU) : Twisted, Stranded and shielded AWG 18 x 2C
Communication line (ODU-CEN) : Twisted, Stranded and shielded AWG 18 x 2C
Communication line(Remote controller) : Twisted and stranded AWG 22 x 3C
Ground shield wire at ODU only
Note : Polarity matters: Always connect 'A' to 'A' and 'B' to 'B'

VRF WIRING DIAGRAM 2

SCALE NONE | 3

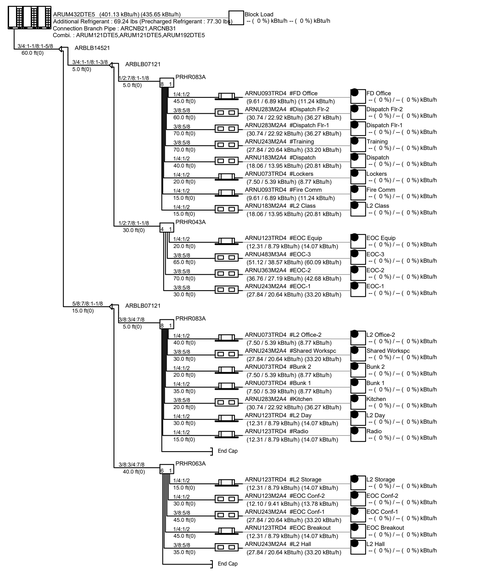

VRF PIIPING DIAGRAM 2

SCALE NONE | 4

Note :
Power wiring, breaker size, and disconnects should follow local code and NEC.
Multi-frame outdoor units require a separate power connection for each frame.
Refer to the most up-to-date submittal sheets for applicable electrical data.

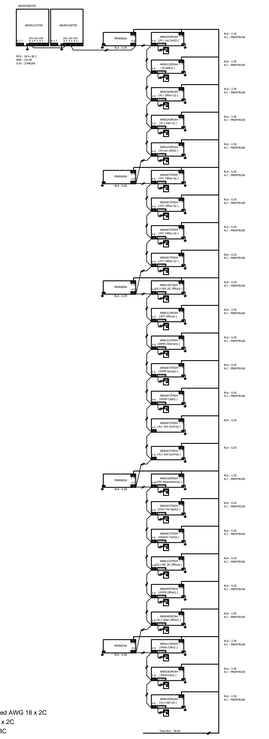

Power line(Outdoor unit)
Power line(Indoor unit / HR unit)
Communication line (ODU-IDU / ODU-ODU) : Twisted, Stranded and shielded AWG 18 x 2C
Communication line (ODU-CEN) : Twisted, Stranded and shielded AWG 18 x 2C
Communication line(Remote controller) : Twisted and stranded AWG 22 x 3C
Ground shield wire at ODU only
Note : Polarity matters: Always connect 'A' to 'A' and 'B' to 'B'

VRF WIRING DIAGRAM 1

SCALE NONE | 1

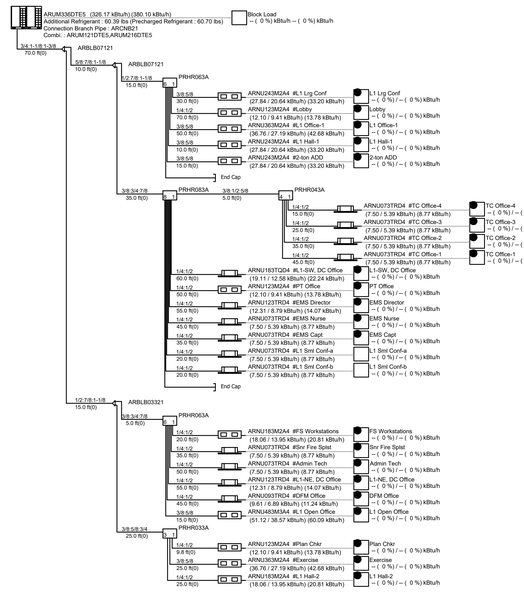

VRF PIIPING DIAGRAM 1

SCALE NONE | 2

PBK
RANCHO CUCAMONGA
8163 ROCHESTER AVENUE, SUITE 100
RANCHO CUCAMONGA, CA 91730
909-987-0909 P

ONTARIO FIRE DEPARTMENT ADMINISTRATION BUILDING

CITY OF ONTARIO

1420 E. FRANCIS STREET., ONTARIO, CA

LICENSED ARCHITECT — KELLEY NEEDHAM C-19064 — Exp. 03/31/25 — STATE OF CALIFORNIA

REGISTERED PROFESSIONAL ENGINEER — ANDREW R. GUSSMAN — No. M39939 — Exp. 3/31/24 — MECHANICAL — STATE OF CALIFORNIA

CONSULTANT

PDS — PocockDesignSolutions Inc.

NO	DATE	BY	DESCRIPTION

REVISIONS

DRAWN: REVZ | CHECKED: AG

DATE: 07/15/2022 | SCALE: AS NOTED

PROJECT NUMBER: 2011700

MECHANICAL DETAILS

DRAWING NUMBER: M5.2

BID SET 03/01/24

VRF CONTROL POINTS

Point Name	Hardware Points				Software Points						Show On Graphic
	AI	AO	BI	BO	AV	BV	Loop	Sched	Trend	Alarm	
Zone Temp	x								x	x	x
Zone Setpoint Adjust	x										x
FC Status						x					x
FC Fault/Alarm						x				x	x
FC Start/Stop						x					x

SFC/SCU CONTROL POINTS

Point Name	Hardware Points				Software Points						Show On Graphic
	AI	AO	BI	BO	AV	BV	Loop	Sched	Trend	Alarm	
Zone Temp	x								x	x	x
Zone Setpoint Adjust	x										x
FC Status						x					x
FC Fault/Alarm						x				x	x
FC Start/Stop						x					x

EF/SF CONTROL POINTS

Point Name	Hardware Points				Software Points						Show On Graphic
	AI	AO	BI	BO	AV	BV	Loop	Sched	Trend	Alarm	
Fan Status			x						x		x
Fan Start/Stop				x					x		x
Fan Failure										x	

BP CONTROL POINTS

Point Name	Hardware Points				Software Points						Show On Graphic
	AI	AO	BI	BO	AV	BV	Loop	Sched	Trend	Alarm	
Pump Status			x						x		x

CONTROL POINTS

SCALE NONE 2

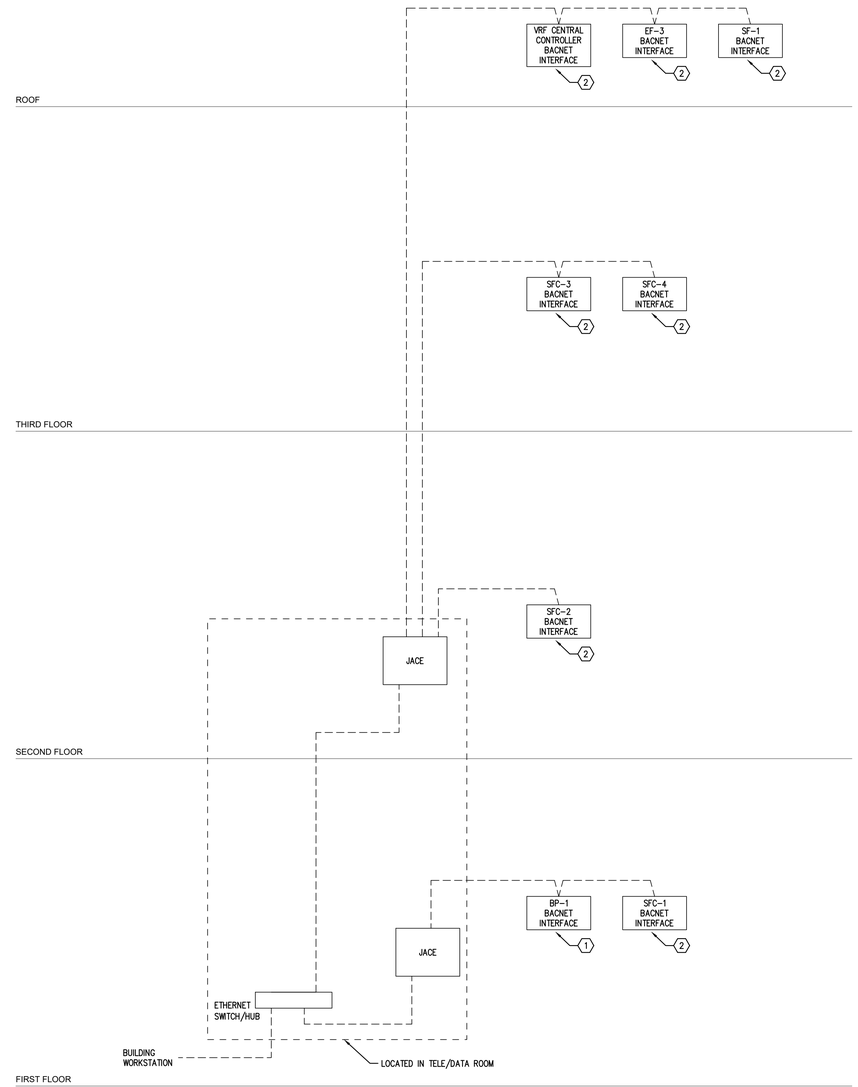

KEY NOTES:

1. PROVIDED BY PLUMBING CONTRACTOR, INSTALLED BY PLUMBING CONTRACTOR.
2. CONTROLS ARE PROVIDED BY THE EQUIPMENT MANUFACTURER AND CONNECTED TO THE BMS VIA BACNET INTERFACE.

ETHERNET CABLE
BACNET MSTP CABLE
MODBUS CABLE
LONWORKS CABLE

VERIFY EXACT NUMBERS WITH LATEST MECHANICAL DRAWINGS

BMS HIERARCHY DIAGRAM

SCALE NONE 1

PBK
RANCHO CUCAMONGA
8163 ROCHESTER AVENUE, SUITE 100
RANCHO CUCAMONGA, CA 91730
909-987-0909 P

ONTARIO FIRE DEPARTMENT ADMINISTRATION BUILDING

CITY OF ONTARIO

1420 E. FRANCIS STREET., ONTARIO, CA

LICENSED ARCHITECT KELLEY NEEDHAM C-19064 Exp. 03/31/25 STATE OF CALIFORNIA

REGISTERED PROFESSIONAL ENGINEER ANDREW R. GOSSMAN No. M30630 Exp. 12/31/24 MECHANICAL STATE OF CALIFORNIA

CONSULTANT

PDS PocockDesignSolutions Inc.

NO	DATE	BY	DESCRIPTION

REVISIONS

DRAWN: REVZ	CHECKED: AG
DATE: 07/15/2022	SCALE: AS NOTED
PROJECT NUMBER: 2011700	

MECHANICAL DETAILS

DRAWING NUMBER: M5.3

BID SET 03/01/24

STATE OF CALIFORNIA
Envelope Component Approach
CALIFORNIA ENERGY COMMISSION

CERTIFICATE OF COMPLIANCE — **NRCC-ENV-E**

This document is used to demonstrate compliance with mandatory requirements in 110.8(g) and 120.7(b)/ 160.1 for newly constructed nonresidential; hotel/ motel, multifamily and mixed-use buildings, and 141.0(b)1/ 180.2 for alterations, related to roof, wall and floor assemblies. It is also used to demonstrate compliance with prescriptive requirements in 140.3/ 170.2 for newly constructed buildings, and 141.0/ 180.1/ 180.2 for additions and alterations, related to roof, wall, floor, door, fenestration and daylighting requirements.

Project Name:	Ontario Fire Dept Admin Building	**Report Page:**	**(Page 1 of 50)**
Project Address:	Corner of Francis St and Parco Ave	**Date Prepared:**	11/17/2023

A. GENERAL INFORMATION

01	Project Location (city)	Ontario	05 # of Stories (Habitable Above Grade)	1
02	Zipcode		06 Total Conditioned Floor Area (ft²)	24320
03	Climate Zone	10	07 Total Unconditioned Floor Area (ft²)	0
04	Occupancy Types Within Project: (select all that apply): If one occupancy constitutes >= 80% of the conditioned floor area, the entire building envelope may be designed to comply with the provisions of that occupancy per 100.0(f).		08 ☐ Project includes unconditioned enclosed space(s) > 5,000 ft² under a roof with a ceiling height of at least 15 ft.[1]	

● Office

[1] FOOTNOTE: Enclosed spaces > 5,000 ft² directly under roof with ceiling height > 15 ft in climate zones 2 through 15 are required to meet the minimum daylighting requirements defined in 140.3(c)/ 170.2(b). Compliance with 140.3(c)/ 170.2(b) is documented in Table L. This is the only prescriptive requirement which applies to unconditioned spaces.

B. PROJECT SCOPE

This table specifies project envelope components within the permit application demonstrating compliance using the prescriptive paths outlined in 140.3/ 170.2 and 141.0(a)1/ 180.1 and 141.0(b)1 and 2/ 180.2 for additions and alterations.

My project consists of (check all that apply)		Component Types					
01		02					
☒	New Construction or Newly Conditioned Space	☒	Roof	☒	Walls	☒	Exterior Opaque Doors
	☐ One or more enclosed spaces > 5,000 ft² directly under roof with ceiling height > 15ft			☒	Floors	☒	Fenestration/ Glazed Doors[1]
☐	Addition of conditioned space	☐	Roof	☐	Walls	☐	Exterior Opaque Doors
	☐ One or more enclosed spaces > 5,000 ft² directly under roof with ceiling height > 15ft						
	☐ Addition is <=700 ft²			☐	Floors	☐	Fenestration/ Glazed Doors[1]
	☐ Addition is >700 ft²						
☐	Alteration of conditioned space	☐	Roof Assembly	☐	Walls		
	☐ One or more enclosed spaces > 5,000 ft² directly under roof with ceiling height > 15ft and lighting system installed for the first time	☐	Roofing Material[2]	☐	Floors	☐	Fenestration

STATE OF CALIFORNIA
Envelope Component Approach
CALIFORNIA ENERGY COMMISSION

CERTIFICATE OF COMPLIANCE — **NRCC-ENV-E**

Project Name:	Ontario Fire Dept Admin Building	**Report Page:**	**(Page 2 of 50)**
		Date Prepared:	11/17/2023

B. PROJECT SCOPE

[2]FOOTNOTE: Doors that are more than 25% glass in area are considered Glazed Doors and should be documented on table K with fenestration.
[2]Roof recovers and replacements must also check "Roof Assembly" box and document compliance with insulation requirements in Table F. Roof recoats may document compliance with roof material only in Table G.

C. COMPLIANCE RESULTS

Results in this table are automatically calculated from data input and calculations in Tables F through L. Note: If any cell on this table says "COMPLIES with Exceptional Conditions" refer to Table D. Exceptional Conditions for guidance or see the applicable table referenced below.

Opaque Envelope Components					Fenestration	Daylighting Spaces > 5,000ft²	Compliance Results
Roof Assembly	Roofing Materials	Walls	Floors	Doors			
01	02	03	04	05	06	07	08
(See Table F)	(See Table G)	(See Table H)	(See Table I)	(See Table J)	(See Table K)	(See Table L)	COMPLIES
Yes	Yes	Yes	Yes	Yes	Yes		

D. EXCEPTIONAL CONDITIONS

This table is auto-filled with uneditable comments because of selections made or data entered in tables throughout the form.

E. ADDITIONAL REMARKS

This table includes remarks made by the permit applicant to the Authority Having Jurisdiction.

F. ROOF ASSEMBLY SCHEDULE

This table demonstrates compliance for prescriptive roof assembly requirements in 140.3(a)1B/ 170.2(a)1B for new construction, 141.0(a)/ 180.1 for additions, or 141.0(b)2B(ii)/ 180.2 for alterations.

01	Indicate roof types included in the project:	☒ Framed ☐ Framed-Multifamily ☐ SIPS ☐ Span Deck & Concrete ☐ Metal Panels ☐ Metal Building

Framed Roof Assemblies

01	☒	Include Framed Roof Assemblies in Area-Weighted Average U-factor Calculation[1]		
02	03	04	05	06

STATE OF CALIFORNIA
Envelope Component Approach
CALIFORNIA ENERGY COMMISSION

CERTIFICATE OF COMPLIANCE — **NRCC-ENV-E**

Project Name:	Ontario Fire Dept Admin Building	**Report Page:**	**(Page 3 of 50)**
		Date Prepared:	11/17/2023

F. ROOF ASSEMBLY SCHEDULE

Framed Roof Assemblies

Tag/Plan Detail ID	Name/Description	Status	Exception to Roof Insulation Requirements in §141.0(b)2B(ii) (Alts. Only)	Occupancy Type
R-38 Roof Attic	Roof	New		Nonresidential/ Relocatable 1 CZ

STATE OF CALIFORNIA
Envelope Component Approach
CALIFORNIA ENERGY COMMISSION

CERTIFICATE OF COMPLIANCE NRCC-ENV-E
Project Name: Ontario Fire Dept Admin Building | **Report Page:** (Page 17 of 50) | **Date Prepared:** 11/17/2023

H. WALL ASSEMBLY SCHEDULE

03	04	05	06	07	08	09	10	11	12		13
Tag/Plan Detail ID	Occupancy & Status	How Design U-factor was determined	Location/ Fire Rating	Frame Material, Spacing & Depth	Cavity Insulation per Design	Continuous Insulation per Design	Thermal Performance Unit	Required Thermal Performance	U-factor per Design		Net Area[3] ft²
West Wall	Nonresidential/ Relocatable 1 CZ: New	JA4 Tables	Exterior wall	Wood 1/2" gyp 16" OC 2x6	20	4	U-factor	0.059	per JA4 per Software/ Other	0.055	140
South Wall	Nonresidential/ Relocatable 1 CZ: New	JA4 Tables	Exterior wall	Wood 1/2" gyp 16" OC 2x6	20	4	U-factor	0.059	per JA4 per Software/ Other	0.055	120
West Wall	Nonresidential/ Relocatable 1 CZ: New	JA4 Tables	Exterior wall	Wood 1/2" gyp 16" OC 2x6	20	4	U-factor	0.059	per JA4 per Software/ Other	0.055	110
South Wall	Nonresidential/ Relocatable 1 CZ: New	JA4 Tables	Exterior wall	Wood 1/2" gyp 16" OC 2x6	20	4	U-factor	0.059	per JA4 per Software/ Other	0.055	190
South Wall	Nonresidential/ Relocatable 1 CZ: New	JA4 Tables	Exterior wall	Wood 1/2" gyp 16" OC 2x6	20	4	U-factor	0.059	per JA4 per Software/ Other	0.055	130
West Wall	Nonresidential/ Relocatable 1 CZ: New	JA4 Tables	Exterior wall	Wood 1/2" gyp 16" OC 2x6	20	4	U-factor	0.059	per JA4 per Software/ Other	0.055	100

Generated Date/Time: | Documentation Software: EnergyPro
CA Building Energy Efficiency Standards - 2022 Nonresidential Compliance | Report Version: 2022.0.000 | Schema Version: rev 20220101 | Compliance ID: EnergyPro-30031-1123-0151 | Report Generated: 2023-11-17 13:09:02

STATE OF CALIFORNIA
Envelope Component Approach
CALIFORNIA ENERGY COMMISSION

CERTIFICATE OF COMPLIANCE NRCC-ENV-E
Project Name: Ontario Fire Dept Admin Building | **Report Page:** (Page 18 of 50) | **Date Prepared:** 11/17/2023

H. WALL ASSEMBLY SCHEDULE

03	04	05	06	07	08	09	10	11	12		13
Tag/Plan Detail ID	Occupancy & Status	How Design U-factor was determined	Location/ Fire Rating	Frame Material, Spacing & Depth	Cavity Insulation per Design	Continuous Insulation per Design	Thermal Performance Unit	Required Thermal Performance	U-factor per Design		Net Area[3] ft²
North Wall	Nonresidential/ Relocatable 1 CZ: New	JA4 Tables	Exterior wall	Wood 1/2" gyp 16" OC 2x6	20	4	U-factor	0.059	per JA4 per Software/ Other	0.055	350
West Wall	Nonresidential/ Relocatable 1 CZ: New	JA4 Tables	Exterior wall	Wood 1/2" gyp 16" OC 2x6	20	4	U-factor	0.059	per JA4 per Software/ Other	0.055	250
North Wall	Nonresidential/ Relocatable 1 CZ: New	JA4 Tables	Exterior wall	Wood 1/2" gyp 16" OC 2x6	20	4	U-factor	0.059	per JA4 per Software/ Other	0.055	100
North Wall	Nonresidential/ Relocatable 1 CZ: New	JA4 Tables	Exterior wall	Wood 1/2" gyp 16" OC 2x6	20	4	U-factor	0.059	per JA4 per Software/ Other	0.055	170
North Wall	Nonresidential/ Relocatable 1 CZ: New	JA4 Tables	Exterior wall	Wood 1/2" gyp 16" OC 2x6	20	4	U-factor	0.059	per JA4 per Software/ Other	0.055	110
East Wall	Nonresidential/ Relocatable 1 CZ: New	JA4 Tables	Exterior wall	Wood 1/2" gyp 16" OC 2x6	20	4	U-factor	0.059	per JA4 per Software/ Other	0.055	80

Generated Date/Time: | Documentation Software: EnergyPro
CA Building Energy Efficiency Standards - 2022 Nonresidential Compliance | Report Version: 2022.0.000 | Schema Version: rev 20220101 | Compliance ID: EnergyPro-30031-1123-0151 | Report Generated: 2023-11-17 13:09:02

STATE OF CALIFORNIA
Envelope Component Approach
CALIFORNIA ENERGY COMMISSION

CERTIFICATE OF COMPLIANCE NRCC-ENV-E
Project Name: Ontario Fire Dept Admin Building | **Report Page:** (Page 19 of 50) | **Date Prepared:** 11/17/2023

H. WALL ASSEMBLY SCHEDULE

03	04	05	06	07	08	09	10	11	12		13
Tag/Plan Detail ID	Occupancy & Status	How Design U-factor was determined	Location/ Fire Rating	Frame Material, Spacing & Depth	Cavity Insulation per Design	Continuous Insulation per Design	Thermal Performance Unit	Required Thermal Performance	U-factor per Design		Net Area[3] ft²
East Wall	Nonresidential/ Relocatable 1 CZ: New	JA4 Tables	Exterior wall	Wood 1/2" gyp 16" OC 2x6	20	4	U-factor	0.059	per JA4 per Software/ Other	0.055	110
East Wall	Nonresidential/ Relocatable 1 CZ: New	JA4 Tables	Exterior wall	Wood 1/2" gyp 16" OC 2x6	20	4	U-factor	0.059	per JA4 per Software/ Other	0.055	80
East Wall	Nonresidential/ Relocatable 1 CZ: New	JA4 Tables	Exterior wall	Wood 1/2" gyp 16" OC 2x6	20	4	U-factor	0.059	per JA4 per Software/ Other	0.055	50
East Wall	Nonresidential/ Relocatable 1 CZ: New	JA4 Tables	Exterior wall	Wood 1/2" gyp 16" OC 2x6	20	4	U-factor	0.059	per JA4 per Software/ Other	0.055	70
East Wall	Nonresidential/ Relocatable 1 CZ: New	JA4 Tables	Exterior wall	Wood 1/2" gyp 16" OC 2x6	20	4	U-factor	0.059	per JA4 per Software/ Other	0.055	70
East Wall	Nonresidential/ Relocatable 1 CZ: New	JA4 Tables	Exterior wall	Wood 1/2" gyp 16" OC 2x6	20	4	U-factor	0.059	per JA4 per Software/ Other	0.055	120

Generated Date/Time: | Documentation Software: EnergyPro
CA Building Energy Efficiency Standards - 2022 Nonresidential Compliance | Report Version: 2022.0.000 | Schema Version: rev 20220101 | Compliance ID: EnergyPro-30031-1123-0151 | Report Generated: 2023-11-17 13:09:02

STATE OF CALIFORNIA
Envelope Component Approach
CALIFORNIA ENERGY COMMISSION

CERTIFICATE OF COMPLIANCE NRCC-ENV-E
Project Name: Ontario Fire Dept Admin Building | **Report Page:** (Page 20 of 50) | **Date Prepared:** 11/17/2023

H. WALL ASSEMBLY SCHEDULE

03	04	05	06	07	08	09	10	11	12		13
Tag/Plan Detail ID	Occupancy & Status	How Design U-factor was determined	Location/ Fire Rating	Frame Material, Spacing & Depth	Cavity Insulation per Design	Continuous Insulation per Design	Thermal Performance Unit	Required Thermal Performance	U-factor per Design		Net Area[3] ft²
East Wall	Nonresidential/ Relocatable 1 CZ: New	JA4 Tables	Exterior wall	Wood 1/2" gyp 16" OC 2x6	20	4	U-factor	0.059	per JA4 per Software/ Other	0.055	180
South Wall	Nonresidential/ Relocatable 1 CZ: New	JA4 Tables	Exterior wall	Wood 1/2" gyp 16" OC 2x6	20	4	U-factor	0.059	per JA4 per Software/ Other	0.055	170
South Wall	Nonresidential/ Relocatable 1 CZ: New	JA4 Tables	Exterior wall	Wood 1/2" gyp 16" OC 2x6	20	4	U-factor	0.059	per JA4 per Software/ Other	0.055	100
South Wall	Nonresidential/ Relocatable 1 CZ: New	JA4 Tables	Exterior wall	Wood 1/2" gyp 16" OC 2x6	20	4	U-factor	0.059	per JA4 per Software/ Other	0.055	170
West Wall	Nonresidential/ Relocatable 1 CZ: New	JA4 Tables	Exterior wall	Wood 1/2" gyp 16" OC 2x6	20	4	U-factor	0.059	per JA4 per Software/ Other	0.055	80
West Wall	Nonresidential/ Relocatable 1 CZ: New	JA4 Tables	Exterior wall	Wood 1/2" gyp 16" OC 2x6	20	4	U-factor	0.059	per JA4 per Software/ Other	0.055	170

Generated Date/Time: | Documentation Software: EnergyPro
CA Building Energy Efficiency Standards - 2022 Nonresidential Compliance | Report Version: 2022.0.000 | Schema Version: rev 20220101 | Compliance ID: EnergyPro-30031-1123-0151 | Report Generated: 2023-11-17 13:09:02

STATE OF CALIFORNIA
Envelope Component Approach
CALIFORNIA ENERGY COMMISSION

CERTIFICATE OF COMPLIANCE NRCC-ENV-E
Project Name: Ontario Fire Dept Admin Building | **Report Page:** (Page 21 of 50) | **Date Prepared:** 11/17/2023

H. WALL ASSEMBLY SCHEDULE

03	04	05	06	07	08	09	10	11	12		13
Tag/Plan Detail ID	Occupancy & Status	How Design U-factor was determined	Location/ Fire Rating	Frame Material, Spacing & Depth	Cavity Insulation per Design	Continuous Insulation per Design	Thermal Performance Unit	Required Thermal Performance	U-factor per Design		Net Area[3] ft²
West Wall	Nonresidential/ Relocatable 1 CZ: New	JA4 Tables	Exterior wall	Wood 1/2" gyp 16" OC 2x6	20	4	U-factor	0.059	per JA4 per Software/ Other	0.055	180
North Wall	Nonresidential/ Relocatable 1 CZ: New	JA4 Tables	Exterior wall	Wood 1/2" gyp 16" OC 2x6	20	4	U-factor	0.059	per JA4 per Software/ Other	0.055	100
West Wall	Nonresidential/ Relocatable 1 CZ: New	JA4 Tables	Exterior wall	Wood 1/2" gyp 16" OC 2x6	20	4	U-factor	0.059	per JA4 per Software/ Other	0.055	230
North Wall	Nonresidential/ Relocatable 1 CZ: New	JA4 Tables	Exterior wall	Wood 1/2" gyp 16" OC 2x6	20	4	U-factor	0.059	per JA4 per Software/ Other	0.055	50
North Wall	Nonresidential/ Relocatable 1 CZ: New	JA4 Tables	Exterior wall	Wood 1/2" gyp 16" OC 2x6	20	4	U-factor	0.059	per JA4 per Software/ Other	0.055	80
North Wall	Nonresidential/ Relocatable 1 CZ: New	JA4 Tables	Exterior wall	Wood 1/2" gyp 16" OC 2x6	20	4	U-factor	0.059	per JA4 per Software/ Other	0.055	70

Generated Date/Time: | Documentation Software: EnergyPro
CA Building Energy Efficiency Standards - 2022 Nonresidential Compliance | Report Version: 2022.0.000 | Schema Version: rev 20220101 | Compliance ID: EnergyPro-30031-1123-0151 | Report Generated: 2023-11-17 13:09:02

STATE OF CALIFORNIA
Envelope Component Approach
CALIFORNIA ENERGY COMMISSION

CERTIFICATE OF COMPLIANCE NRCC-ENV-E
Project Name: Ontario Fire Dept Admin Building | **Report Page:** (Page 22 of 50) | **Date Prepared:** 11/17/2023

H. WALL ASSEMBLY SCHEDULE

03	04	05	06	07	08	09	10	11	12		13
Tag/Plan Detail ID	Occupancy & Status	How Design U-factor was determined	Location/ Fire Rating	Frame Material, Spacing & Depth	Cavity Insulation per Design	Continuous Insulation per Design	Thermal Performance Unit	Required Thermal Performance	U-factor per Design		Net Area[3] ft²
North Wall	Nonresidential/ Relocatable 1 CZ: New	JA4 Tables	Exterior wall	Wood 1/2" gyp 16" OC 2x6	20	4	U-factor	0.059	per JA4 per Software/ Other	0.055	160
East Wall	Nonresidential/ Relocatable 1 CZ: New	JA4 Tables	Exterior wall	Wood 1/2" gyp 16" OC 2x6	20	4	U-factor	0.059	per JA4 per Software/ Other	0.055	110
East Wall	Nonresidential/ Relocatable 1 CZ: New	JA4 Tables	Exterior wall	Wood 1/2" gyp 16" OC 2x6	20	4	U-factor	0.059	per JA4 per Software/ Other	0.055	168
East Wall	Nonresidential/ Relocatable 1 CZ: New	JA4 Tables	Exterior wall	Wood 1/2" gyp 16" OC 2x6	20	4	U-factor	0.059	per JA4 per Software/ Other	0.055	70

STATE OF CALIFORNIA
Envelope Component Approach
CALIFORNIA ENERGY COMMISSION

CERTIFICATE OF COMPLIANCE		NRCC-ENV-E
Project Name: Ontario Fire Dept Admin Building	Report Page:	(Page 33 of 50)
	Date Prepared:	11/17/2023

K. FENESTRATION AND GLAZED DOOR SCHEDULE

This table demonstrates compliance with prescriptive fenestration requirements in 140.3(a)5/ 170.2(a)3 for new constructions, 141.0(a)/ 180.1 for additions, or 141.0(b)2A/ 180.2 for alterations. Exterior doors that are more than 25% glass in area are considered Glazed Doors and should be documented on this table with fenestration.

01 Indicate fenestration types included in the project:[1] ☐ Vertical (alterations) ☒ Vertical (new) ☐ Skylights ☐ Glazed Doors (new only)

[1] FOOTNOTES: Fenestration types indicated above as "(new only)" do not have Title 24, Part 6 requirements for alterations. New construction and additions do have requirements and should be clicked above and compliance demonstrated within this table.

Vertical Fenestration and Glazed Doors- Total Building & West Facing Area (New Construction & Additions Only)

01	02	03	04	05
Elevation Item Tag/ Description	Orientation (Azimuth)[1]	Gross Exterior Wall Area[2] (ft^2)	Display Perimeter Length[3] (ft)	Vertical Fenestration Area per Design[3] (ft^2)
North	North Facing	6210	0	2520
East	East Facing	3805	0	1412
South	South Facing	4915	0	1900
West	West Facing	4600	0	1740

06	Maximum Allowed Vertical Fenestration (ft^2)- All Orientations	7740	07 Total Vertical Fenestration (ft^2) per design- All Orientations	7572
08	Maximum Allowed Vertical Fenestration (ft^2)- West Facing	1840	09 Total Vertical Fenestration (ft^2) per design- West Facing	1740

[1] FOOTNOTES: Orientation between 226 deg and 315 deg are considered "West Facing". A diagram has been provided in the Nonresidential Compliance Manual for visual reference.
[2] Do not include demising walls per 140.3(a)5 .
[3] Includes glazed door fenestration area .

Vertical Fenestration And Glazed Doors- U-factor, Solar Heat Gain Coefficient (RSHGC/ SHGC), Visible Transmittance (VT)

01	☒	Calculate Area-Weighted Average U-factor for Vertical Fenestration and Glazed Doors[1]
02	☒	Calculate Area-Weighted Average (R)SHGC for Vertical Fenestration and Glazed Doors[1]
03	☒	Calculate Area-Weighted Average VT for Vertical Fenestration and Glazed Doors[1]

Generated Date/Time: Documentation Software: EnergyPro
CA Building Energy Efficiency Standards - 2022 Nonresidential Compliance
Report Version: 2022.0.000 Compliance ID: EnergyPro-30031-1123-0151
Schema Version: rev 20220101 Report Generated: 2023-11-17 13:09:02

STATE OF CALIFORNIA
Envelope Component Approach
CALIFORNIA ENERGY COMMISSION

CERTIFICATE OF COMPLIANCE		NRCC-ENV-E
Project Name: Ontario Fire Dept Admin Building	Report Page:	(Page 34 of 50)
	Date Prepared:	11/17/2023

K. FENESTRATION AND GLAZED DOOR SCHEDULE

Vertical Fenestration And Glazed Doors- U-factor, Solar Heat Gain Coefficient (RSHGC/ SHGC), Visible Transmittance (VT)

04 Tag/Plan Detail ID	05 Fenestration Type	06 Occupancy & Status	07 U-factor/ (R)SHGC Compliance Method	08 VT Compliance Method	09 Calculation Method for Performance Values per Design[2]		10 Product Performance Unit	11 Required Product Performance	12 Product Performance per Design	13 Area ft^2
Window	Fixed window	Nonresidential/ Relocatable 1 CZ: : New			NFRC Certified		U-factor (max)	0.36	0.3	150
					☐	Overhang/ Slats used for RSHGC	(R)SHGC (max)	0.25	0.23	
							VT (min)	0.28	0.5	
Window	Fixed window	Nonresidential/ Relocatable 1 CZ: : New			NFRC Certified		U-factor (max)	0.36	0.3	20
					☐	Overhang/ Slats used for RSHGC	(R)SHGC (max)	0.25	0.23	
							VT (min)	0.28	0.5	
Window	Fixed window	Nonresidential/ Relocatable 1 CZ: : New			NFRC Certified		U-factor (max)	0.36	0.3	20
					☐	Overhang/ Slats used for RSHGC	(R)SHGC (max)	0.25	0.23	
							VT (min)	0.28	0.5	
Window	Fixed window	Nonresidential/ Relocatable 1 CZ: : New			NFRC Certified		U-factor (max)	0.36	0.3	80

STATE OF CALIFORNIA
Envelope Component Approach
CALIFORNIA ENERGY COMMISSION

CERTIFICATE OF COMPLIANCE		NRCC-ENV-E
Project Name: Ontario Fire Dept Admin Building	Project Page:	(Page 49 of 50)
	Date Prepared:	11/17/2023

O. DECLARATION OF REQUIRED CERTIFICATES OF VERIFICATION
There are no forms required for this project.

STATE OF CALIFORNIA
Envelope Component Approach
CALIFORNIA ENERGY COMMISSION

CERTIFICATE OF COMPLIANCE		NRCC-ENV-E
Project Name: Ontario Fire Dept Admin Building	Project Page:	(Page 50 of 50)
Project Address: Corner of Francis St and Parco Ave	Date Prepared:	11/17/2023

DOCUMENTATION AUTHOR'S DECLARATION STATEMENT
I certify that this Certificate of Compliance documentation is accurate and complete.

Documentation Author Name: Andrew Gossman	Documentation Author Signature: Andrew Gossman
Company: Pocock Design Solutions	Signature Date:
Address: 14451 Chambers Road, Suite 210	CEA/ HERS Certification Identification (if applicable): M35839
City/State/Zip: Tustin CA 92780	Phone: 949-4173903

RESPONSIBLE PERSON'S DECLARATION STATEMENT
I certify the following under penalty of perjury, under the laws of the State of California:
1. The information provided on this Certificate of Compliance is true and correct.
2. I am eligible under Division 3 of the Business and Professions Code to accept responsibility for the building design or system design identified on this Certificate of Compliance (responsible designer)
3. The energy features and performance specifications, materials, components, and manufactured devices for the building design or system design identified on this Certificate of Compliance conform to the requirements of Title 24, Part 1 and Part 6 of the California Code of Regulations.
4. The building design features or system design features identified on this Certificate of Compliance are consistent with the information provided on other applicable compliance documents, worksheets, calculations, plans and specifications submitted to the enforcement agency for approval with this building permit application.
5. I will ensure that a completed signed copy of this Certificate of Compliance shall be made available with the building permit(s) issued for the building, and made available to the enforcement agency for all applicable inspections. I understand that a completed signed copy of this Certificate of Compliance is required to be included with the documentation the builder provides to the building owner at occupancy.

Responsible Designer Name:	Responsible Designer Signature:
Company:	Date Signed: 2023-11-17
Address:	License:
City/State/Zip:	Phone:

STATE OF CALIFORNIA
Mechanical Systems
CALIFORNIA ENERGY COMMISSION

CERTIFICATE OF COMPLIANCE		NRCC-MCH-E
This document is used to demonstrate compliance for mechanical systems that are within the scope of the permit application and are demonstrating compliance using the prescriptive path outlined in 140.4c or 141.0(b)2 for alterations.		
Project Name: Ontario Fire Dept Admin Building	Project Page:	(Page 1 of 18)
Project Address: Corner of Francis St and Parco Ave	Date Prepared:	11/17/2023

A. GENERAL INFORMATION

01	Project Location (city)	Ontario	04	Total Conditioned Floor Area	24320
02	Climate Zone	10	05	Total Unconditioned Floor Area	0
03	Occupancy Types Within Project:		06	# of Stories (Habitable Above Grade)	1

- Office

B. PROJECT SCOPE
This table includes mechanical systems or components that are within the scope of the permit application and are demonstrating compliance using the prescriptive path outlined in 140.4, 170.2(b) or 141.0(b)2 and 180.2(b)2 for alterations.

01	02	03
Air System(s)	Wet System Components	Dry System Components
☐ Heating Air System	☐ Water Economizer	☐ Air Economizer
☐ Cooling Air System	☐ Pumps	☐ Electric Resistance Heat
Mechanical Controls	☐ System Piping	☐ Fan Systems
☒ Mechanical Controls (existing to remain, altered or new)	☐ Cooling Towers	☐ Ductwork (existing to remain, altered or new)
	☐ Chillers	☒ Ventilation
	☐ Boilers	☐ Zonal Systems/ Terminal Boxes

STATE OF CALIFORNIA
Mechanical Systems
CALIFORNIA ENERGY COMMISSION

CERTIFICATE OF COMPLIANCE		NRCC-MCH-E
Project Name: Ontario Fire Dept Admin Building	Project Page:	(Page 2 of 18)
	Date Prepared:	11/17/2023

C. COMPLIANCE RESULTS
Table C will indicate if the project data input into the compliance document is compliant with mechanical requirements. This table is not editable by the user. If this table says "DOES NOT COMPLY" or "COMPLIES with Exceptional Conditions" refer to Table D_ or the table indicated as not compliant for guidance.

01		02		03		04		05		06		07		08	09
System Summary 110.1, 110.2, 140.4, 170.2(c)	AND	Pumps 140.4(k), 170.2(c)4I	AND	Fans/ Economizers 140.4(c), 140.4(e), 170.1(c)	AND	System Controls 110.2, 120.2 140.4(f), 170.2(c)	AND	Ventilation 120.1, 160.2	AND	Terminal Box Controls 140.4(d), 170.2(c)4B	AND	Distribution 120.3, 140.4(l), 160.2, 160.3	AND	Cooling Towers 110.2(e)2	Compliance Results
(See Table F)		(See Table G)		(See Table H)		(See Table I)		(See Table J)		(See Table K)		(See Table L)		(See Table M)	
	AND		AND		AND	Yes	AND	Yes	AND		AND		AND		COMPLIES
Mandatory Measures Compliance (See Table Q for Details)								COMPLIES							

D. EXCEPTIONAL CONDITIONS
This table is auto-filled with uneditable comments because of selections made or data entered in tables throughout the form.

E. ADDITIONAL REMARKS
This table includes remarks made by the permit applicant to the Authority Having Jurisdiction.

F. HVAC SYSTEM SUMMARY (DRY & WET SYSTEMS)
This section does not apply to this project.

G. PUMPS
This section does not apply to this project.

STATE OF CALIFORNIA
Mechanical Systems
CALIFORNIA ENERGY COMMISSION

CERTIFICATE OF COMPLIANCE		NRCC-MCH-E
Project Name: Ontario Fire Dept Admin Building	Project Page:	(Page 3 of 18)
	Date Prepared:	11/17/2023

H. FAN SYSTEMS & AIR ECONOMIZERS
This section does not apply to this project.

I. SYSTEM CONTROLS
This table is used to demonstrate compliance with mandatory controls in 110.2 and 120.2 and prescriptive controls in 140.4(f) and (n), 170.2(c)4D 170.2(c)4L or requirements in 141.0(b)2E 180.2(b)2 for altered space conditioning systems.

01	02	03	04	05	06	07	08	09
System Name	System Zoning	Conditioned Floor Area Being Served (ft^2)	Thermostats 110.2(b) & (c)[1], 120.2(a) 160.3(a)2A or 141.0(b)2E & 180.2(b)2	Shut-Off Controls 120.2(e) & 160.3(a)2D	Isolation Zone Controls 120.2(g) & 160.3(a)2F	Demand Response 110.12 120.2(b) & 160.3(a)2B	Supply Air Temp. Reset 140.4(f) & 170.2(c)4D	Window Interlocks per 140.4(n) & 170.2(c)4D
Admin Building Floor 1	Single zone	<= 25,000 ft^2	Setback	Auto Timer Switch	4 Hour Timer	EMCS	NA: Healthcare only	NA: HRR dwelling unit
Admin Building Floor 2	Single zone	<= 25,000 ft^2	Setback	Auto Timer Switch	4 Hour Timer	EMCS	NA: Healthcare only	NA: HRR dwelling unit
Admin Building Floor 3	Single zone	<= 25,000 ft^2	Setback	Auto Timer Switch	4 Hour Timer	EMCS	NA: Healthcare only	NA: HRR dwelling unit

[1] *FOOTNOTES: Gravity gas wall heaters, gravity floor heaters, gravity room heaters, non-central electric heaters, fireplaces or decorative gas appliances, wood stoves are not required to have setback thermostats.*

STATE OF CALIFORNIA
Mechanical Systems
CALIFORNIA ENERGY COMMISSION

CERTIFICATE OF COMPLIANCE		NRCC-MCH-E
Project Name: Ontario Fire Dept Admin Building	Project Page:	(Page 4 of 18)
	Date Prepared:	11/17/2023

J. VENTILATION AND INDOOR AIR QUALITY
This table is used to demonstrate compliance with mandatory ventilation requirements in 120.1 120.2(e)3B 140.4(p) and 140.4(q) for all nonresidential and hotel/motel and d141Refroliink/1160.2, 160.3(a)3D, 170.2(a)4N, 170.2(q)4D for high-rise residential occupancies. For alterations, only ventilation systems being altered within the scope of the permit application need to be documented in this table. In lieu of this table, the required outdoor ventilation rates and airflows may be shown on the plans or the calculations can be presented in a spreadsheet.

01	☐	Check the box if the project is showing ventilation calculations on the plans, or attaching the calculations instead of completing this table.
02	☒	Check this box if the project included Nonresidential, Hotel/Motel Spaces or Multifamily Common Use Spaces
	☐	
03	☐	Check the box if the project is using natural ventilation in any nonresidential or hotel/motel spaces to meet required ventilation rates per 120.1(c)2.

Nonresidential and Hotel/ Motel Multifamily Common Use Ventilation Systems

04		05			06			07	
System Name	Admin Building Floor 1	System Design OA CFM Airflow[1]		2340	System Design Transfer Air CFM		0	Air Filtration per 120.1(c) 141.0(b)2 and 160.2(c)2I[1]	
08	09	10	11	12	13	14	15	Provided	
Space Name or Item Tag	Mechanical Ventilation Required per 120.1(c)3[1] & 160.2(c)3				Exh. Vent per 120.1(c)4 & 160.2(c)4			DCV or Sensor Controls per 120.1(d)3, 120.1(d)5, and 120.1(e)3[1] 160.2(c)5D 160.2(c)5E 160.2(c)5D	
	Occupancy Type[4]	Conditioned Floor Area (ft^2)	# of Shower heads/ toilets	# of people[5]	Required Min OA CFM	Required Min CFM	Provided per Design CFM		
DC OFFICE 1	Office space	200			30	0	0	DCV	NA: Not required per §120.1(d)3
								Occ Sensor	NA: Not required space type
TC OFFICE 1	Office space	130			19.5	0	0	DCV	NA: Not required per §120.1(d)3
								Occ Sensor	NA: Not required space type

STATE OF CALIFORNIA
Mechanical Systems
CALIFORNIA ENERGY COMMISSION

CERTIFICATE OF COMPLIANCE		NRCC-MCH-E
Project Name: Ontario Fire Dept Admin Building	Project Page:	(Page 5 of 18)
	Date Prepared:	11/17/2023

J. VENTILATION AND INDOOR AIR QUALITY

TC OFFICE 2	Office space	130			19.5	0	0	DCV	NA: Not required per §120.1(d)3
								Occ Sensor	NA: Not required space type
TC OFFICE 3	Office space	130			19.5	0	0	DCV	NA: Not required per §120.1(d)3
								Occ Sensor	NA: Not required space type
TC OFFICE 4	Office space	130			19.5	0	0	DCV	NA: Not required per §120.1(d)3
								Occ Sensor	NA: Not required space type
SMALL CONFERENCE ROOM	Office space	260			39	0	0	DCV	NA: Not required per §120.1(d)3
								Occ Sensor	NA: Not required space type
EMS CAPT	Office space	130			19.5	0	0	DCV	NA: Not required per §120.1(d)3
								Occ Sensor	NA: Not required space type
EMS NURSE	Office space	130			19.5	0	0	DCV	NA: Not required per §120.1(d)3
								Occ Sensor	NA: Not required space type
EMS DIRECTOR	Office space	200			30	0	0	DCV	NA: Not required per §120.1(d)3
								Occ Sensor	NA: Not required space type

STATE OF CALIFORNIA
Mechanical Systems
CALIFORNIA ENERGY COMMISSION

CERTIFICATE OF COMPLIANCE		NRCC-MCH-E
Project Name: Ontario Fire Dept Admin Building	Project Page:	(Page 6 of 18)
	Date Prepared:	11/17/2023

J. VENTILATION AND INDOOR AIR QUALITY

ADMIN ASSISTANT	Office space	390			58.5	0	0	DCV	NA: Not required per §120.1(d)3
								Occ Sensor	NA: Not required space type
EMS SKILLS ROOM	Office space	340			51	0	0	DCV	NA: Not required per §120.1(d)3
								Occ Sensor	NA: Not required space type
EMS STORAGE	Office space	120			18	0	0	DCV	NA: Not required per §120.1(d)3
								Occ Sensor	NA: Not required space type
STORAGE 1	Office space	140			21	0	0	DCV	NA: Not required per §120.1(d)3
								Occ Sensor	NA: Not required space type
LOBBY/ ADMIN OPEN OFFICE	Office space	840			126	0	0	DCV	NA: Not required per §120.1(d)3
								Occ Sensor	NA: Not required space type
OFFICE	Office space	140			21	0	0	DCV	NA: Not required per §120.1(d)3
								Occ Sensor	NA: Not required space type
LOBBY RESTROOM	Office space	60			9	0	0	DCV	NA: Not required per §120.1(d)3
								Occ Sensor	NA: Not required space type

STATE OF CALIFORNIA
Mechanical Systems
CALIFORNIA ENERGY COMMISSION

CERTIFICATE OF COMPLIANCE		NRCC-MCH-E
Project Name: Ontario Fire Dept Admin Building	Project Page:	(Page 7 of 18)
	Date Prepared:	11/17/2023

J. VENTILATION AND INDOOR AIR QUALITY

LARGE CONFERENCE ROOM	Office space	430			64.5	0	0	DCV	NA: Not required per §120.1(d)3
								Occ Sensor	NA: Not required space type
ELECTRICAL ROOM	Office space	120			18	0	0	DCV	NA: Not required per §120.1(d)3
								Occ Sensor	NA: Not required space type
NORTH STORAGE	Office space	60			9	0	0	DCV	NA: Not required per §120.1(d)3
								Occ Sensor	NA: Not required space type
DFM OFFICE	Office space	200			30	0	0	DCV	NA: Not required per §120.1(d)3
								Occ Sensor	NA: Not required space type
DC OFFICE 2	Office space	200			30	0	0	DCV	NA: Not required per §120.1(d)3
								Occ Sensor	NA: Not required space type
ADMIN TECH	Office space	150			22.5	0	0	DCV	NA: Not required per §120.1(d)3
								Occ Sensor	NA: Not required space type
SR FIRE SPECIALIST	Office space	150			22.5	0	0	DCV	NA: Not required per §120.1(d)3
								Occ Sensor	NA: Not required space type

STATE OF CALIFORNIA
Mechanical Systems
CALIFORNIA ENERGY COMMISSION

CERTIFICATE OF COMPLIANCE		NRCC-MCH-E
Project Name: Ontario Fire Dept Admin Building	Project Page:	(Page 8 of 18)
	Date Prepared:	11/17/2023

J. VENTILATION AND INDOOR AIR QUALITY

FIRE SPECIALIST WORKSTATIONS	Office space	390			58.5	0	0	DCV	NA: Not required per §120.1(d)3
								Occ Sensor	NA: Not required space type
PROTECTION ANALYST & PLAN CHECKER	Office space	310			46.5	0	0	DCV	NA: Not required per §120.1(d)3
								Occ Sensor	NA: Not required space type
EAST STORAGE	Office space	130			19.5	0	0	DCV	NA: Not required per §120.1(d)3
								Occ Sensor	NA: Not required space type
EXERCISE ROOM	Office space	670			100.5	0	0	DCV	NA: Not required per §120.1(d)3
								Occ Sensor	NA: Not required space type
SOUTH STORAGE	Office space	60			9	0	0	DCV	NA: Not required per §120.1(d)3
								Occ Sensor	NA: Not required space type
FEMALE SHOWER/ LOCKERS	Office space	190			28.5	0	0	DCV	NA: Not required per §120.1(d)3
								Occ Sensor	NA: Not required space type
MALE SHOWER/ LOCKERS	Office space	190			28.5	0	0	DCV	NA: Not required per §120.1(d)3
								Occ Sensor	NA: Not required space type

STATE OF CALIFORNIA
Mechanical Systems
CALIFORNIA ENERGY COMMISSION

CERTIFICATE OF COMPLIANCE		NRCC-MCH-E
Project Name: Ontario Fire Dept Admin Building	Project Page:	(Page 9 of 18)
	Date Prepared:	11/17/2023

J. VENTILATION AND INDOOR AIR QUALITY

HALLWAY	Office space	1080			162	0	0	DCV	NA: Not required per §120.1(d)3
								Occ Sensor	NA: Not required space type
17	Total System Required Min OA CFM				1170	18	Ventilation for this System Complies?		Yes
04		05			06			07	
System Name	Admin Building Floor 2	System Design OA CFM Airflow[1]		2484	System Design Transfer Air CFM		0	Air Filtration per 120.1(c) 141.0(b)2 and 160.2(c)2I[1]	
08	09	10	11	12	13	14	15	Provided	
Space Name or Item Tag	Mechanical Ventilation Required per 120.1(c)3[1] & 160.2(c)3				Exh. Vent per 120.1(c)4 & 160.2(c)4			16	
								DCV or Sensor Controls per 120.1(d)3, 120.1(d)5, and 120.1(e)3[1] 160.2(c)5D 160.2(c)5E 160.2(c)5D	
	Occupancy Type[4]	Conditioned Floor Area (ft^2)	# of Shower heads/ toilets	# of people[5]	Required Min OA CFM	Required Min CFM	Provided per Design CFM		
EOC FLOOR	Office space	2250			337.5	0	0	DCV	NA: Not required per §120.1(d)3
								Occ Sensor	NA: Not required space type
OPEN CONFERENCE / CLASSROOM	Office space	610			91.5	0	0	DCV	NA: Not required per §120.1(d)3
								Occ Sensor	NA: Not required space type
FIRE COMM MANAGER	Office space	230			34.5	0	0	DCV	NA: Not required per §120.1(d)3
								Occ Sensor	NA: Not required space type

STATE OF CALIFORNIA
Mechanical Systems
CALIFORNIA ENERGY COMMISSION

CERTIFICATE OF COMPLIANCE		NRCC-MCH-E
Project Name: Ontario Fire Dept Admin Building	Project Page:	(Page 10 of 18)
	Date Prepared:	11/17/2023

J. VENTILATION AND INDOOR AIR QUALITY

DISPATCH ROOM	Office space	250			37.5	0	0	DCV	NA: Not required per §120.1(d)3
								Occ Sensor	NA: Not required space type
TRAINING/ MULTI-USE ROOM	Office space	210			31.5	0	0	DCV	NA: Not required per §120.1(d)3
								Occ Sensor	NA: Not required space type
DISPATCH FLOOR	Office space	1630			244.5	0	0	DCV	NA: Not required per §120.1(d)3
								Occ Sensor	NA: Not required space type
FIRE DISPATCH SUPERVISOR OFFICE	Office space	200			30	0	0	DCV	NA: Not required per §120.1(d)3
								Occ Sensor	NA: Not required space type
KITCHEN	Office space	710			106.5	0	0	DCV	NA: Not required per §120.1(d)3
								Occ Sensor	NA: Not required space type
BUNK 1	Office space	130			19.5	0	0	DCV	NA: Not required per §120.1(d)3
								Occ Sensor	NA: Not required space type
BATHROOM	Office space	80			12	0	0	DCV	NA: Not required per §120.1(d)3
								Occ Sensor	NA: Not required space type

STATE OF CALIFORNIA
Mechanical Systems
CALIFORNIA ENERGY COMMISSION

CERTIFICATE OF COMPLIANCE		NRCC-MCH-E
Project Name: Ontario Fire Dept Admin Building	Project Page:	(Page 11 of 18)
	Date Prepared:	11/17/2023

J. VENTILATION AND INDOOR AIR QUALITY

BUNK 2	Office space	130			19.5	0	0	DCV	NA: Not required per §120.1(d)3
								Occ Sensor	NA: Not required space type
EAST STORAGE 1	Office space	90			13.5	0	0	DCV	NA: Not required per §120.1(d)3
								Occ Sensor	NA: Not required space type
EAST OFFICE 1	Office space	130			19.5	0	0	DCV	NA: Not required per §120.1(d)3
								Occ Sensor	NA: Not required space type
EAST OFFICE 2	Office space	130			19.5	0	0	DCV	NA: Not required per §120.1(d)3
								Occ Sensor	NA: Not required space type
EAST STORAGE 2	Office space	220			33	0	0	DCV	NA: Not required per §120.1(d)3
								Occ Sensor	NA: Not required space type
EOC CONFERENCE ROOM	Office space	590			88.5	0	0	DCV	NA: Not required per §120.1(d)3
								Occ Sensor	NA: Not required space type
HALLWAY	Office space	690			103.5	0	0	DCV	NA: Not required per §120.1(d)3
								Occ Sensor	NA: Not required space type
17	Total System Required Min OA CFM				1242	18	Ventilation for this System Complies?		Yes

STATE OF CALIFORNIA
Mechanical Systems
CALIFORNIA ENERGY COMMISSION

CERTIFICATE OF COMPLIANCE		NRCC-MCH-E
Project Name: Ontario Fire Dept Admin Building	Project Page:	(Page 12 of 18)
	Date Prepared:	11/17/2023

J. VENTILATION AND INDOOR AIR QUALITY

04		05			06			07	
System Name	Admin Building Floor 3	System Design OA CFM Airflow[1]		2472	System Design Transfer Air CFM		0	Air Filtration per 120.1(c) 141.0(b)2 and 160.2(c)2I[1]	
08	09	10	11	12	13	14	15	Provided	
Space Name or Item Tag	Mechanical Ventilation Required per 120.1(c)3[1] & 160.2(c)3				Exh. Vent per 120.1(c)4 & 160.2(c)4			DCV or Sensor Controls per 120.1(d)3, 120.1(d)5, and 120.1(e)3[1] 160.2(c)5D 160.2(c)5E 160.2(c)5D	
	Occupancy Type[4]	Conditioned Floor Area (ft^2)	# of Shower heads/ toilets	# of people[5]	Required Min OA CFM	Required Min CFM	Provided per Design CFM		
ADMIN DIRECTOR OFFICE	Office space	240			36	0	0	DCV	NA: Not required per §120.1(d)3
								Occ Sensor	NA: Not required space type
DC OFFICE 1	Office space	240			36	0	0	DCV	NA: Not required per §120.1(d)3
								Occ Sensor	NA: Not required space type
OPEN CONFERENCE / CLASSROOM	Office space	660			99	0	0	DCV	NA: Not required per §120.1(d)3
								Occ Sensor	NA: Not required space type
FIRE CHIEF OFFICE	Office space	410			61.5	0	0	DCV	NA: Not required per §120.1(d)3
								Occ Sensor	NA: Not required space type
SR ADMIN ASSISTANT OFFICE	Office space	140			21	0	0	DCV	NA: Not required per §120.1(d)3
								Occ Sensor	NA: Not required space type

STATE OF CALIFORNIA
Mechanical Systems
CALIFORNIA ENERGY COMMISSION

CERTIFICATE OF COMPLIANCE		NRCC-MCH-E
Project Name: Ontario Fire Dept Admin Building	Project Page:	(Page 13 of 18)
	Date Prepared:	11/17/2023

J. VENTILATION AND INDOOR AIR QUALITY

NORTH OFFICE	Office space	140			21	0	0	DCV	NA: Not required per §120.1(d)3
								Occ Sensor	NA: Not required space type
BC OFFICE	Office space	140			21	0	0	DCV	NA: Not required per §120.1(d)3
								Occ Sensor	NA: Not required space type
DC OFFICE 2	Office space	270			40.5	0	0	DCV	NA: Not required per §120.1(d)3
								Occ Sensor	NA: Not required space type
WORKSTATIONS	Office space	2250			337.5	0	0	DCV	NA: Not required per §120.1(d)3
								Occ Sensor	NA: Not required space type
EAST OFFICE 1	Office space	190			28.5	0	0	DCV	NA: Not required per §120.1(d)3
								Occ Sensor	NA: Not required space type
EAST OFFICE 2	Office space	190			28.5	0	0	DCV	NA: Not required per §120.1(d)3
								Occ Sensor	NA: Not required space type
MANAGEMENT ANALYST	Office space	190			28.5	0	0	DCV	NA: Not required per §120.1(d)3
								Occ Sensor	NA: Not required space type

STATE OF CALIFORNIA
Mechanical Systems
CALIFORNIA ENERGY COMMISSION

CERTIFICATE OF COMPLIANCE		NRCC-MCH-E
Project Name: Ontario Fire Dept Admin Building	Project Page:	(Page 14 of 18)
	Date Prepared:	11/17/2023

J. VENTILATION AND INDOOR AIR QUALITY

SENIOR FINANCIAL ANALYST	Office space	190			28.5	0	0	DCV	NA: Not required per §120.1(d)3
								Occ Sensor	NA: Not required space type
EMERGENCY MANAGER OFFICE	Office space	190			28.5	0	0	DCV	NA: Not required per §120.1(d)3
								Occ Sensor	NA: Not required space type
STORAGE	Office space	30			4.5	0	0	DCV	NA: Not required per §120.1(d)3
								Occ Sensor	NA: Not required space type
EMERGENCY MANAGEMENT COORDINATOR	Office space	190			28.5	0	0	DCV	NA: Not required per §120.1(d)3
								Occ Sensor	NA: Not required space type
WORKROOM	Office space	80			12	0	0	DCV	NA: Not required per §120.1(d)3
								Occ Sensor	NA: Not required space type
HALLWAY	Office space	950			142.5	0	0	DCV	NA: Not required per §120.1(d)3
								Occ Sensor	NA: Not required space type
STORAGE	Office space	50			7.5	0	0	DCV	NA: Not required per §120.1(d)3
								Occ Sensor	NA: Not required space type

PBK
RANCHO CUCAMONGA
8163 ROCHESTER AVENUE, SUITE 100
RANCHO CUCAMONGA, CA 91730
909-987-0909 P

ONTARIO FIRE DEPARTMENT ADMINISTRATION BUILDING
CITY OF ONTARIO
1420 E. FRANCIS STREET., ONTARIO, CA

LICENSED ARCHITECT — KELLEY NEEDHAM C-19064 — Ex.Date 03/31/25 — STATE OF CALIFORNIA
REGISTERED PROFESSIONAL ENG

STATE OF CALIFORNIA
Mechanical Systems CALIFORNIA ENERGY COMMISSION

CERTIFICATE OF COMPLIANCE		NRCC-MCH-E
Project Name: Ontario Fire Dept Admin Building	**Report Page:**	(Page 15 of 18)
	Date Prepared:	11/17/2023

J. VENTILATION AND INDOOR AIR QUALITY

DAYROOM	Office space	260			39	0	0	DCV	NA: Not required per §120.1(d)3
								Occ Sensor	NA: Not required space type
IDF ROOM	Office space	100			15	0	0	DCV	NA: Not required per §120.1(d)3
								Occ Sensor	NA: Not required space type
VESTIBULE 1	Office space	40			6	0	0	DCV	NA: Not required per §120.1(d)3
								Occ Sensor	NA: Not required space type
VESTIBULE 2	Office space	40			6	0	0	DCV	NA: Not required per §120.1(d)3
								Occ Sensor	NA: Not required space type
RESTROOM 1	Office space	210			31.5	0	0	DCV	NA: Not required per §120.1(d)3
								Occ Sensor	NA: Not required space type
RESTROOM 2	Office space	210			31.5	0	0	DCV	NA: Not required per §120.1(d)3
								Occ Sensor	NA: Not required space type
JANITORS CLOSET	Office space	50			7.5	0	0	DCV	NA: Not required per §120.1(d)3
								Occ Sensor	NA: Not required space type

STATE OF CALIFORNIA
Mechanical Systems CALIFORNIA ENERGY COMMISSION

CERTIFICATE OF COMPLIANCE		NRCC-MCH-E
Project Name: Ontario Fire Dept Admin Building	**Report Page:**	(Page 16 of 18)
	Date Prepared:	11/17/2023

J. VENTILATION AND INDOOR AIR QUALITY

BREAK ROOM	Office space	310			46.5	0	0	DCV	NA: Not required per §120.1(d)3
								Occ Sensor	NA: Not required space type
SECURED FILES ROOM	Office space	110			16.5	0	0	DCV	NA: Not required per §120.1(d)3
								Occ Sensor	NA: Not required space type
WORKROOM AND STORAGE	Office space	170			25.5	0	0	DCV	NA: Not required per §120.1(d)3
								Occ Sensor	NA: Not required space type
17	Total System Required Min OA CFM				1236	18	Ventilation for this System Complies?		Yes

[1] FOOTNOTES: System CFM should include both mechanical and natural ventilation for the zone/system

[2] Air filtration requirements apply to the following three system types per 120.1(c)1A: space conditioning systems utilizing ducts to supply air to occupiable space; supply-only ventilation systems providing outside air to occupiable space; supply side of balanced ventilation systems including heat recovery and energy recovery ventilation systems providing outside air to occupiable space.

[3] Uniform Mechanical Code may have more stringent ventilation requirements; the most stringent code requirement takes precedence.

[4] See Standards Tables 120.1-A and 120.1-B.

[5] For lecture halls with fixed seating, the expected number of occupants shall be determined In accordance with the California Building Code.

[6] 120.2(e)3 requires systems serving rooms that are required by 130.1(c) to have lighting occupancy sensing controls to also have occupancy sensing zone controls for ventilation. Examples of spaces which require lighting occupancy sensors include offices 250ft² or smaller, multipurpose rooms less than 1,000 ft², classrooms, conference rooms, restrooms, aisles and open areas in warehouses, library book stack aisles, corridors, stairwells, parking garages, and loading and unloading zones, unless excepted by 130.1(c).

K. TERMINAL BOX CONTROLS

This section does not apply to this project.

STATE OF CALIFORNIA
Mechanical Systems CALIFORNIA ENERGY COMMISSION

CERTIFICATE OF COMPLIANCE		NRCC-MCH-E
Project Name: Ontario Fire Dept Admin Building	**Report Page:**	(Page 17 of 18)
	Date Prepared:	11/17/2023

L. DISTRIBUTION (DUCTWORK and PIPING)

This section does not apply to this project.

M. COOLING TOWERS

This section does not apply to this project.

N. DECLARATION OF REQUIRED CERTIFICATES OF INSTALLATION

Selections have been made based on information provided in previous tables of this document. If any selection needs to be changed, please explain why in Table E Additional Remarks. These documents must be provided to the building inspector during construction and can be found online at https://www.energy.ca.gov/title24/2019standards/2019_compliance_documents/Nonresidential_Documents/NRCI/

Form/Title

NRCI-MCH-01-E - Must be submitted for all buildings

O. DECLARATION OF REQUIRED CERTIFICATES OF ACCEPTANCE

There are no NRCA forms required for this project.

P. DECLARATION OF REQUIRED CERTIFICATES OF VERIFICATION

There are no NRCV forms required for this project.

Q. MANDATORY MEASURES DOCUMENTATION LOCATION

This table is used to indicate where mandatory measures are documented in the plan set or construction documentation.

01		02
Compliance with Mandatory Measures documented through MCH Mandatory Measures Note Block	Yes	Plan sheet or construction document location
		M-Sheets

STATE OF CALIFORNIA
Mechanical Systems CALIFORNIA ENERGY COMMISSION

CERTIFICATE OF COMPLIANCE		NRCC-MCH-E
Project Name: Ontario Fire Dept Admin Building	**Report Page:**	(Page 18 of 18)
Project Address: Corner of Francis St and Parco Ave	**Date Prepared:**	11/17/2023

DOCUMENTATION AUTHOR'S DECLARATION STATEMENT

I certify that this Certificate of Compliance documentation is accurate and complete.

Documentation Author Name: Andrew Gossman	Documentation Author Signature: Andrew Gossman
Company: Pocock Design Solutions	Signature Date:
Address: 14451 Chambers Road, Suite 210	CEA/ HERS Certification Identification (if applicable): M35839
City/State/Zip: Tustin CA 92780	Phone: 949-4173903

RESPONSIBLE PERSON'S DECLARATION STATEMENT

I certify the following under penalty of perjury, under the laws of the State of California:

1. The information provided on this Certificate of Compliance is true and correct.
2. I am eligible under Division 3 of the Business and Professions Code to accept responsibility for the building design or system design identified on this Certificate of Compliance (responsible designer)
3. The energy features and performance specifications, materials, components, and manufactured devices for the building design or system design identified on this Certificate of Compliance conform to the requirements of Title 24, Part 1 and Part 6 of the California Code of Regulations.
4. The building design features or system design features identified on this Certificate of Compliance are consistent with the information provided on other applicable compliance documents, worksheets, calculations, plans and specifications submitted to the enforcement agency for approval with this building permit application.
5. I will ensure that a completed signed copy of this Certificate of Compliance shall be made available with the building permit(s) issued for the building, and made available to the enforcement agency for all applicable inspections. I understand that a completed signed copy of this Certificate of Compliance is required to be included with the documentation the builder provides to the building owner at occupancy.

Responsible Designer Name: Andrew Gossman	Responsible Designer Signature: Andrew Gossman
Company: Pocock Design Solutions	Date Signed: 2023-11-17
Address: 14451 Chambers Road, Suite 210	License: M35839
City/State/Zip: Tustin, CA 92780	Phone:

PBK
RANCHO CUCAMONGA
8163 ROCHESTER AVENUE, SUITE 100
RANCHO CUCAMONGA, CA 91730
909-987-0909 P

ONTARIO FIRE DEPARTMENT ADMINISTRATION BUILDING

CITY OF ONTARIO

1420 E. FRANCIS STREET., ONTARIO, CA

LICENSED ARCHITECT — KELLEY NEEDHAM — C-19064 — Ex.Date 03/31/25 — STATE OF CALIFORNIA

REGISTERED PROFESSIONAL ENGINEER — ANDREW R. GOSSMAN — No. M35839 — Exp. 3/31/24 — MECHANICAL — STATE OF CALIFORNIA

CONSULTANT

PDS
PocockDesignSolutions Inc.

NO	DATE	BY	DESCRIPTION

REVISIONS

DRAWN: REVZ	CHECKED: AG
DATE: 07/15/2022	SCALE: AS NOTED
PROJECT NUMBER: 2011700	

TITLE 24 COMPLIANCE FORMS

DRAWING NUMBER: M6.5

BID SET 03/01/24

WATER HEATER SCHEDULE

ITEM	MANUFACTURER	MODEL NO.	SERVICE	LOCATION	STORAGE	ELECTRICAL DEMANDS				RECOVERY CAPACITY @ 60°F	INLET TEMP °F	OUTLET TEMPER °F	OPER. WT. LBS.	REMARKS
						VOLT	PHASE	KW/AMP	CYCLE					
WH 1	CHRONOMITE MICRO	INSTANT-TEMP CMI-20L	DOMESTIC HOT WATER	SEE PLANS	INSTANT-FLOW	208	1	20 A	60	INSTANT	60	104	8 LBS.	MUST HAVE ASHRAE STICKER OR OTHERWISE COMPLY WITH TITLE 24 REQUIREMENT FOR SERVICE WATER HEATERS.

GAS WATER HEATER SCHEDULE

ITEM	MANUFACTURER	MODEL NO.	SERVICE	LOCATION	STORAGE	INPUT BTU/HR	RECOVERY CAPACITY @ 60°F	INLET TEMP °F	OUTLET TEMPER °F	OPER. WT. LBS.	REMARKS
WH 2	A.O. SMITH	BTH-120	DOMESTIC HOT WATER	SEE PLANS	60 GALLONS	120,000	230 GPH	60	120	991 LBS.	MUST HAVE ASHRAE STICKER OR OTHERWISE COMPLY WITH TITLE 24 REQUIREMENT FOR SERVICE WATER HEATERS.

PUMP SCHEDULE

ITEM	MANUFACTURER	MODEL NO.	SERVICE	LOCATION	STORAGE	CAPACITY		MOTOR					REMARKS
						GPM	HEAD	HORSE POWER	VOLT	PHASE	CYCLE	R.P.M.	
CP 1	GRUNDFOS	"UP" SERIES	HOT WATER RETURN	SEE PLANS	CENTRIFUGAL	2	8	1/25	115	1	60	1750	PROVIDED WITH BUILT-IN OVERLOAD.

BOOSTER PUMP SCHEDULE

ITEM	MANUFACTURER	MODEL NO.	SERVICE	LOCATION	TYPE	CAPACITY		MOTOR					OPER. WT. LBS.	REMARKS
						GPM	HEAD	HORSE POWER	VOLT	PHASE	CYCLE	R.P.M.		
BP 1	WEIL AQUATRONICS /SYNCROFLO BOOSTER PUMP SYTEM	EWS-S51VTP59-S15SPP13.5-1A-208-SW	DOMESTIC WATER	GROUND LEVEL	VERTICAL TURBINE	51	147'	5/1.5	208	3	60	3450	7,159 LBS.	BOOSTER PUMP FACTORY-ASSEMBLED PACKAGE SYSTEM WITH ENVIRONMENTAL ENCLOSURE AND WATER PROTECTION SYSTEM BOOSTER PUMP DISCHARGE PRESSURE: 59-PSIG, MOTORS: 5-HP, CIRCULATING PUMP CAPACITY/HEAD: 15-GPM / 31' TDH MOTORS: 1.5-HP WITH CONTROL PANEL, VFD LEVEL MONITORING AND ALARMS, BLADDER TANK, FXA-50. FACTORY-INSTALLED ENTIRE PACKAGE TO BE ON EMERGENCY POWER. TANK FILL VALVE SHIPPED SEPARATELY (SEE SPEC) WITH BMS SYSTEM FOR BACNET INTERFACE. CONTACT INFORMATION: WEIL AQUATRONICS 800-747-8677.

GENERAL NOTES

1. BEFORE COMMENCEMENT OF WORK, THE CONTRACTOR SHALL VERIFY THE EXACT LOCATIONS, ELEVATIONS AND CHARACTERISTICS OF ALL UTILITIES AND PIPING, AND SHALL IMMEDIATELY NOTIFY THE ARCHITECT OF ANY DISCREPANCIES.
2. ALL ACCESSIBLE WATER CLOSETS SHALL HAVE FLUSH VALVE WITH HANDLE ON OPEN SIDE.
3. ALL VALVES, UNIONS, ETC. TO BE SAME SIZE AS PIPE UNLESS OTHERWISE INDICATED ON DRAWINGS.
4. ALL PLUMBING FIXTURE VENTS TO TERMINATE A MINIMUM OF 12 INCHES FROM ANY VERTICAL SURFACE AND 10 FEET FROM ANY OUTSIDE AIR INTAKES.
5. EXACT LOCATIONS AND MOUNTING HEIGHTS OF PLUMBING FIXTURES SHALL BE OBTAINED FROM THE ARCHITECTURAL DRAWINGS.
6. ALL EXTERIOR GAS COCKS, WATER SHUT OFF VALVES AND/OR SEWER CLEANOUTS BELOW GROUND SHALL BE INSTALLED IN YARD BOXES WITH THE COVERS CONSPICUOUSLY MARKED "GAS", "WATER", AND "SEWER" RESPECTIVELY.
7. CONNECTION BETWEEN INCOMPATIBLE MATERIALS ABOVE GRADE AND INSIDE BUILDING SHALL BE MADE WITH TWO (2) DIELECTRIC UNIONS SEPARATED BY A TWELVE INCH (12") SECTION OF RED BRASS PIPE.
8. ALL CLEANOUTS SHALL BE INSTALLED WHERE READILY ACCESSIBLE. ALL URNINALS SHALL HAVE CLEANOUTS ABOVE FIXTURE, CPC 707.4. THE CONTRACTOR SHALL COORDINATE ALL CLEANOUT LOCATIONS WITH EQUIPMENT, CABINETS, ETC., AND THE ARCHITECT PRIOR TO ANY INSTALLATION.
9. ALL URINALS SHALL HAVE CLEANOUTS ABOVE FIXTURE, PER CPC 707.4. THE CONTRACTOR SHALL COORDINATE ALL CLEANOUT LOCATIONS WITH THE ARCHITECT PRIOR TO ANY INSTALLATION.
10. SEE ARCHITECTURAL DRAWINGS FOR ACCESSIBLE FIXTURE LOCATIONS AND MOUNTING HEIGHTS. INSULATE ALL EXPOSED HOT WATER AND DRAIN PIPING BELOW ACCESSIBLE LAVATORIES AND SINKS.
11. ALL PLUMBING WORK SHALL BE INSTALLED SO AS TO AVOID INTERFERENCE WITH ELECTRICAL AND MECHANICAL EQUIPMENT AND STRUCTURAL FRAMING.
12. ALL WORK AND MATERIAL SHALL BE PERFORMED AND INSTALLED IN COMPLIANCE WITH CALIFORNIA PLUMBING CODE 2019.
13. THESE DRAWINGS INDICATE THE SEWER, WATER, AND STORM DRAIN SYSTEMS TO POINT OF CONNECTION 5'-0" OUTSIDE OF THE BUILDING. CONTINUATION OF THESE SYSTEMS IS SHOWN ON THE CIVIL DRAWINGS AND IS SPECIFIED UNDER ANOTHER SECTION OF THE SPECIFICATIONS. THE PIPING SHALL BE INSTALLED TO MEET THE INVERT ELEVATIONS SHOWN ON THE CIVIL DRAWINGS.
14. INSULATION (SEE SPECIFICATION FOR TYPE REQUIRED) AND COVERING ON PIPE AND TUBING SHALL HAVE A FLAME SPREAD RATING NOT TO EXCEED 25 AND A SMOKE DENSITY NOT TO EXCEED 450 WHEN TESTED IN ACCORDANCE WITH 2019 C.B.C. SECTION 720.3.
15. MATERIALS EXPOSED WITHIN DUCTS OR PLENUMS SHALL HAVE A FLAME-SPREAD INDEX OF NOT MORE THAN 25 AND A SMOKE-DEVELOPED INDEX OF NOT MORE THAN 50 WHERE TESTED IN ACCORDANCE WITH ASTM E84 OR UL 723. CMC 2019, CHAPTERS 7, 9 ,& 11.
16. THE BUILDING SHALL BE PROVIDED WITH AN AUTOMATIC SPRINKLER SYSTEM PER C.B.C. CHAPTER 9 SECTION 903 & NFPA 13, ALL LOCAL CODES, AND INSURANCE UNDERWRITERS REQUIREMENTS. THE FIRE SPRINKLER CONTRACTOR SHALL SUBMIT AN APPROVED AND STAMPED SET OF DRAWINGS SHOWING ALL SIZES AND LOCATIONS OF FIRE SPRINKLER RISER, PIPING, DETECTOR CHECK VALVE AND ANY OTHER EQUIPMENT REQUIRED. IN ADDITION, SUBMITTAL SHALL BE MADE FOR ALL MATERIAL AND EQUIPMENT.

LEGEND

SYMBOL	ABBREVIATION	DESCRIPTION
	S OR W	SOIL OR WASTE ABOVE FLOOR
	S OR W	SOIL OR WASTE BELOW FLOOR OR GRADE
SD	SD	STORM DRAIN ABOVE FLOOR
SD	SD	STORM DRAIN BELOW FLOOR OR GRADE
OD	OD	OVERFLOW DRAIN ABOVE FLOOR
	V	SANITARY VENT
	CW	COLD WATER
	HW	HOT WATER
	HWR	HOT WATER RETURN
CD	CD	CONDENSATE DRAIN
TP	TP	TRAP PRIMER
G	G	GAS LINE
TW	TW	TEMPER WATER
F	F	FIRE LINE
AS	AS	AUTOMATIC SPRINKLER LINE
		DIRECTION OF FLOW
	SOV	SHUT-OFF VALVE
	SOV/GC	SHUT-OFF VALVE OR GAS COCK IN YARD BOX
	GC	GAS COCK
	BV	BALANCING VALVE
	FCO	FLOOR CLEANOUT
	WCO	WALL CLEANOUT
		RISER UP
		RISER DOWN
	ABV	ABOVE
	AP	ACCESS PANEL
	BEL	BELOW
	CLG	CEILING
	CONT	CONTINUATION
	COTG	CLEANOUT TO GRADE
	DN	DOWN
	FLR	FLOOR
	FFE	FINISH FLOOR ELEVATION
	I.E.	INVERT ELEVATION
	POC	POINT OF CONNECTION
	PLCS	PLACES
	SLVE	SLEEVE
	VTR	VENT THRU ROOF
	YB	YARD BOX

WATER CALCULATION

STREET PRESSURE: STATIC = 66 PSI
RESIDUAL = 63 PSI
TOTAL DEMAND FOR BUILDING: 179.5 FIXTURE UNITS = 88 GPM
RESIDUAL PRESSURE (FLUSH VALVE WATER CLOSET) = 25 PSI
STATIC HEIGHT 32' X .433 = 14 PSI
2 1/2" BACKFLOW PREVENTER = 12 PSI
2" WATER METER = 5 PSI
SUB TOTAL = 56 PSI

RESIDUAL = 63 PSI
SUB TOTAL = 56 PSI
TOTAL = 7.0 PSI

AVAILABLE FOR LINE LOSS = 7.0 PSI
ALLOWABLE FRICTION LOSS PER 100 FEET OF PIPE
DEVELOPMENT LENGTH = 365 FEET
EQUIVALENT LENGTH = 457 FEET (25 % FOR FITTINGS)

7.0 PSI X 100 = 1.53 PSI/100 FEET DESIGN FOR 1.5 PSI

DESIGN PIPE SIZES ON 1.5 PSI/100 FEET
AT MAXIMUM VELOCITY 8 FPS

SIZES TABLE

PIPE SIZES	GPM	(FT) F.U.	(FV) F.U.	VELOCITY
1/2"	1.3	0	0	1.8
3/4"	3.4	3	0	2.3
1"	6.8	7	0	2.6
1 1/4"	11.8	15	0	3.0
1 1/2"	18.5	26	0	3.3
2"	39.0	83	26	4.0
2 1/2"	69.0	220	105	4.6
3"	110.0	431	295	5.2

PBK
RANCHO CUCAMONGA
8163 ROCHESTER AVENUE, SUITE 100
RANCHO CUCAMONGA, CA 91730
909-987-0909 P

ONTARIO FIRE DEPARTMENT ADMINISTRATION BUILDING
CITY OF ONTARIO
1420 E. FRANCIS STREET., ONTARIO, CA

LICENSED ARCHITECT — KELLEY NEEDHAM C-19064 Ex. Date 03/31/25 — STATE OF CALIFORNIA
REGISTERED PROFESSIONAL ENGINEER — ANDREW R. GUSSMAN No. M35630 Exp. 3/31/24 MECHANICAL — STATE OF CALIFORNIA

CONSULTANT
PDS
PocockDesignSolutions Inc.

NO	DATE	BY	DESCRIPTION

REVISIONS

DRAWN: RMZ
CHECKED:
DATE: 07/15/2022
SCALE:
PROJECT NUMBER: 2011700

PLUMBING LEGEND AND GENERAL NOTES

DRAWING NUMBER: P0.1

BID SET 03/01/24

FIXTURE SCHEDULE

ITEM	FIXTURE	ROUGH-IN CONNECTIONS TRAP	WASTE	VENT	HOT WATER	COLD WATER	GAS	DESCRIPTION
WC 1	WATER CLOSET (BATTERY I/R SENSOR)	INT	4"	2"	--	1"	--	AMERICAN STANDARD (A/S) NO. 3451.001 "MADERA FLOWSE 15" HEIGHT ELONGATED FLUSHOMETER TOILET", SIPHON JET, FLOOR MOUNTED, ELONGATED BOWL, 15" HIGH. COMPLETE WITH SLOAN ECOS NO. 8111-1.28 GPF BATTERY POWERED SENSOR OPERATED FLUSH VALVE, OLSONITE NO. 95SSCT SEAT AND A/S BOLT CAPS.
WC 2	WATER CLOSET (ACCESSIBLE, BAT. I/R SENSOR)	INT	4"	2"	--	1"	--	AMERICAN STANDARD (A/S) NO. 3461.160 "MADERA FLOWSE 16-1/2" HEIGHT ELONGATED FLUSHOMETER TOILET", SIPHON JET, FLOOR MOUNTED, ELONGATED BOWL, 16-1/2" HIGH. COMPLETE WITH SLOAN ECOS NO. 8111-1.28 GPF BATTERY POWERED SENSOR OPERATED FLUSH VALVE, OLSONITE NO. 95SSCT SEAT AND A/S BOLT CAPS.
UR 1	URINAL (BAT. I/R SENSOR)	INT	2"	1-1/2"	--	3/4"	--	AMERICAN STANDARD (A/S) NO. 6002.001 "PINTBROOK URINAL", WALL HUNG, SIPHON JET. COMPLETE WITH SLOAN ECOS NO. 8186-0.125 GPF BATTERY POWERED FLUSH VALVE, AND ZURN NO. Z-1222 WALL HANGER.
UR 2	URINAL (ACCESSIBLE, BAT. I/R SENSOR)	INT	2"	1-1/2"	--	3/4"	--	AMERICAN STANDARD (A/S) NO. 6002.001 "PINTBROOK URINAL", WALL HUNG, SIPHON JET. COMPLETE WITH SLOAN ECOS NO. 8186-0.125 GPF BATTERY POWERED FLUSH VALVE AND ZURN NO. Z-1222 WALL HANGER, MOUNT AT ADA ACCESSIBLE HEIGHT.
L 1	LAVATORY (ACCESSIBLE, BAT. I/R SENSOR)	1-1/4"	2"	1-1/2"	1/2" TW	--	--	AMERICAN STANDARD (A/S) NO. 0355.012 "LUCERNE WALL HUNG LAVATORY", 20" X 18", WALL HUNG. COMPLETE WITH CHICAGO NO. 116.201.AB.1 BATTERY POWERED ELECTRONIC FAUCET WITH E2805-5AB 0.5 GPM NON-AERATING SPRAY, 240.627.21.1 COVER PLATE, McGUIRE NO. 155A 1-1/4" OUTLET "OPEN GRID P.O. PLUG", McGUIRE NO. PW8090NCO 1-1/4" L.A. PATTERN P-TRAP WITH TRAP AND SUPPLY COVERS, GALVANIZED NIPPLE AND CHROMIUM PLATED BRASS CASING, CHICAGO NO. 1017-ABCP LOOSE KEY STOPS WITH RIGID SUPPLIES, AND ZURN NO. Z-1231 ADJUSTABLE CONCEALED ARM CARRIER W/ SLEEVE FOR WASTE. MOUNT IN ACCORDANCE WITH ADA REQUIREMENTS.
L 2	LAVATORY (ACCESSIBLE, UNDER COUNTER, BAT. I/R SENSOR)	1-1/4"	2"	1-1/2"	1/2" TW	--	--	AMERICAN STANDARD (A/S) NO. 0496.221 "OVALYN II UNDERCOUNTER LAVATORY", 20" X 17", UNDERCOUNTER MOUNTED, VITREOUS CHINA. COMPETE WITH CHICAGO NO. 116.201.AB.1 BATTERY POWERED ELECTRONIC FAUCET WITH E2805-5AB 0.5 GPM NON-AERATING SPRAY, McGUIRE NO. 155A 1-1/4" OUTLET "OPEN GRID P.O. PLUG", McGUIRE NO. PW8090NCO 1-1/4" L.A. PATTERN P-TRAP WITH TRAP AND SUPPLY COVERS, GALVANIZED NIPPLE AND CHROMIUM PLATED BRASS CASING, AND CHICAGO NO. 1017-ABCP LOOSE KEY STOPS WITH RIGID SUPPLIES. MOUNT IN ACCORDANCE WITH ADA REQUIREMENTS.
S 1	SINK (KITCHEN, SINGLE BOWL, ACCESSIBLE, HW/CW, DISPOSER)	1-1/2"	2"	1-1/2"	1/2"	1/2"	--	ELKAY NO. ELUHAD211555 "LUSTERTONE SINGLE BOWL UNDERMOUNT SINK", SINGLE COMPARTMENT, 18 GAUGE TYPE 304 STAINLESS STEEL, UNDERMOUNT, 21" X 15" X 5-1/2" DEEP. COMPLETE WITH CHICAGO NO. 786-E35VPCABCP DECK MOUNTED, BLADE HANDLES, GOOSENECK FAUCET WITH E35VPAB 1.5 GPM SOFTFLO AERATOR, INSINKERATOR "BADGER 1" FOOD WASTE DISPOSER, 1/3 H.P./120V/6.7 AMP AVG., McGUIRE NO. PW8089NCO 1-1/2" L.A. PATTERN P-TRAP WITH TRAP AND SUPPLY COVERS, GALVANIZED NIPPLE AND CHROMIUM PLATED BRASS CASING, AND CHICAGO NO. 1017-ABCP LOOSE KEY STOPS WITH RIGID SUPPLIES. MOUNT IN ACCORDANCE WITH ADA REQUIREMENTS.
S 2	SINK (SINGLE BOWL, ACCESSIBLE, HW/CW)	1-1/2"	2"	1-1/2"	1/2"	1/2"	--	ELKAY NO. LRAD221955 "LUSTERTONE SINGLE BOWL SINK", SINGLE COMPARTMENT, 18 GAUGE TYPE 304 STAINLESS STEEL, SELF-RIMMING, 22" X 19" X 5-1/2" DEEP. COMPLETE WITH CHICAGO NO. 786-E35VPCABCP DECK MOUNTED, BLADE HANDLES, GOOSENECK FAUCET 1.5 GPM AERATOR AND VANDAL RESISTANT COVER PLATE, McGUIRE NO. 152 1-1/2" OUTLET "WIDE TOP SINK STRAINER", McGUIRE NO. PW8089NCO 1-1/2" L.A. PATTERN P-TRAP WITH TRAP AND SUPPLY COVERS, GALVANIZED NIPPLE AND CHROMIUM PLATED BRASS CASING, AND CHICAGO NO. 1017-ABCP LOOSE KEY STOP WITH RIGID SUPPLIES. MOUNT IN ACCORDANCE WITH ADA REQUIREMENTS.
SS 1	SERVICE SINK	3"	3"	2"	3/4"	3/4"	--	CECO NO. 871 "CORNER SERVICE SINK", ENAMELED CAST IRON, CORNER FLOOR MOUNTED, COMPLETE WITH CHICAGO NO. 445-PVB-CP FAUCET, CECO NO. B71-3" 3" DIAMETER DRAIN WITH FLAT CHROME STRAINER, CECO NO. B-872 COATED WIRE RIM GUARD AND HOSE.
TP 1	TRAP PRIMER (SINGLE DRAIN)	--	--	--	--	1/2"	--	MIFAB NO. MR-500 TRAP PRIMER VALVE, BRASS BODY, ADJUSTABLE, COMPLETE WITH 1/2" COPPER TYPE "L" PIPE TO RECEPTOR. INSTALL PER MANUFACTURER'S RECOMMENDATIONS, COMPLETE BEHIND ACCESS PANEL WITH SHUT-OFF VALVE.
TP 2	TRAP PRIMER (MULTIPLE DRAIN)	--	--	--	--	1/2"	--	MIFAB NO. MR-500 TRAP PRIMER VALVE, BRASS BODY, ADJUSTABLE, COMPLETE WITH MI-DU DISTRIBUTION UNIT, 1/2" COPPER TYPE "L" PIPE TO EACH RECEPTOR. INSTALL PER MANUFACTURER'S RECOMMENDATIONS, COMPLETE BEHIND ACCESS PANEL WITH SHUT-OFF VALVE.
TP 3	TRAP PRIMER (ELECTRONIC)	--	--	--	--	1/2"	--	PPP NO. MP-500-115V MINI-PRIME ELECTRONIC TRAP SEAL PRIMER SYSTEM WITH BALL VALVE, VACUUM BREAKER AND SOLENOID VALVE (120 VOLT, 1 PHASE). COMPLETE WITH SHUT-OFF VALVE AND 1/2" COPPER TYPE "L" PIPE TO RECEPTOR.
WHA 1	WATER HAMMER ARRESTOR	--	--	--	--	--	--	ZURN NO. Z-1700 SERIES "SHOKTROL" WATER HAMMER ARRESTOR COMPLETE BEHIND ACCESS PANEL. INSTALL PER MANUFACTURER'S RECOMMENDATIONS.
FD 1	FLOOR DRAIN	2"	2"	1-1/2"	--	--	--	ZURN NO. ZN-415-BZ1-P, CAST IRON BODY, COMPLETE WITH ROUND NICKEL-BRONZE TOP, CLAMPING COLLAR, 1/2" TRAP PRIMER CONNECTION AND P-TRAP.
FD 2	FLOOR DRAIN (SHOWER)	2"	2"	1-1/2"	--	--	--	ZURN NO. ZN-415-BZ1-113, CAST IRON BODY, COMPLETE WITH ROUND NICKEL-BRONZE TOP, CLAMPING COLLAR, AND P-TRAP.
RD 1	ROOF DRAIN	SEE PLAN FOR SIZES						ZURN NO. ZC100-DP-84, 15" CAST IRON BODY, COMPLETE WITH ADJUSTABLE EXTENSION SLEEVE, FLASHING COLLAR, STAINLESS STEEL GRAVEL STOP, CAST IRON DOME STRAINER, SUMP RECEIVER, AND UNDERDECK CLAMP.
OD 1	OVERFLOW DRAIN	SEE PLAN FOR SIZES						ZURN NO. ZC100-DP-84-89, 15" CAST IRON BODY, COMPLETE WITH CAST IRON DOME STRAINER, UNDERDECK CLAMP, AND 2" HIGH WATER DAM.
AD 1	AREA DRAIN	SEE PLAN FOR SIZES						ZURN NO. ZN-158-NH-C "8" TOP PROM-DECK DRAIN WITH HEEL PROOF GRATE, CAST IRON BODY, COMPLETE WITH SQUARE POLISHED NICKEL-BRONZE GRATE AND UNDERDECK CLAMP.
AD 2	AREA DRAIN	SEE PLAN FOR SIZES						ZURN NO. ZN-158-NH-C "8" TOP PROM-DECK DRAIN WITH HEEL PROOF GRATE, CAST IRON BODY, COMPLETE WITH SQUARE POLISHED NICKEL-BRONZE GRATE AND UNDERDECK CLAMP.
DN 1	DOWNSPOUT NOZZLE	SEE PLAN FOR SIZES						ZURN NO. ZANB199-SS, NICKEL BRONZE BODY, STAINLESS STEEL SCREEN, THREADED INLET AND DECORATIVE FACE OF WALL FLANGE AND OUTLET NOZZLE. CONNECT TO NO-HUB PIPING WITH ZURN NO. Z-1040-NHXNH NO-HUB ELBOW ADAPTER.
SH 1	SHOWER	--	--	--	3/4"	3/4"	--	SYMMONS NO. 261XBODY WITH 350T-CYL-B-L1-TRM AND 432SH1.5, COMPLETE WITH PRESSURE BALANCING MIXING VALVE WITH LEVER HANDLE, INTEGRAL SERVICE STOPS, 1.5 GPM ADJUSTABLE SHOWER HEAD.
SH 2	SHOWER (ACCESSIBLE)	--	--	--	3/4"	3/4"	--	SYMMONS NO. 261XBODY WITH 350O-CYL-B-TRM WITH 35EX UNIT, 432SH-1.5, ADACHS-1.5. COMPLETE WITH PRESSURE BALANCING MIXING VALVE WITH LEVER HANDLE, INTEGRAL SERVICE STOPS, 1.5 GPM HAND-HELD SHOWER, 60" HOSE, AND INLINE VACUUM BREAKER.
FS 1	FLOOR SINK	2"	2"	1-1/2"	--	--	--	ZURN NO. ZN1901-KC-P-2, 12" X 12" X 8" DEEP, CAST IRON BODY, ACID-RESISTING ENAMELED INTERIOR. COMPLETE WITH DOME STRAINER, NICKEL-BRONZE HALF GRATE, SEEPAGE FLANGE, TRAP PRIMER CONNECTION AND P-TRAP.
ET 1	EXPANSION TANK	--	--	--	--	--	--	WILKINS NO. WXT-18, 4 GALLON, DIAPHRAGM TYPE, PRE-PRESSURIZED WITH WELDED EXTERIOR, BUTYL DIAPHRAGM AND EPOXY COATED EXTERIOR W/ MAPA MXC-11 EXPANSION TANK CAGE.
HB 1	HOSE BIBB (WALL)	--	--	--	--	3/4"	--	ACORN NO. 8121-CP "BENT NOSE WITH FLANGE" HOSE BIBB, WALL MOUNTED, CHROME-PLATED POLISHED, WITH INTEGRAL VACUUM BREAKER, LOOSE KEY OPERATION.
HB 2	HOSE BIBB (FREE STANDING, ROOF)	--	--	--	--	3/4"	--	ACORN NO. 8126-CR "BENT NOSE" HOSE BIBB, FREE STANDING, CHROME-PLATED ROUGH, WITH INTEGRAL VACUUM BREAKER, LOOSE KEY OPERATION. SUPPLY PIPING SHALL BE SECURELY FASTENED TO ROOF DECKING WITH 3/4" NIBCO NO. 724-5-A "HY-SET HANGER COUPLING".
RHB 1	RECESSED HOSE BIBB	--	--	--	--	3/4"	--	ACORN NO. 8104, RECESSED WALL MOUNTED, STAINLESS STEEL BOX, WITH INTEGRAL VACUUM BREAKER AND LOCKING DOOR.
MV 1	MIXING VALVE	--	--	--	1/2"	1/2"	--	SYMMONS NO. 7-225-CK-MS-BTX "MAXLINE", WATER TEMPERATURE LIMITING VALVE. COMPLETE WITH INTEGRAL CHECKS AND DUAL STAINLESS STEEL STRAINERS, STAINLESS STEEL RECESSED WALL CABINET, AND SEPARATE CHECK STOPS.
IMB 1	ICE MAKER BOX	--	--	--	--	1/2"	--	GUY GRAY NO. MIB1-HAAB "METAL LEAD FREE ICE MAKER BOX", COMPLETE WITH INTEGRAL HAMMER ARRESTER QUARTER-TURN VALVE, 1/4" O.D. COMPRESSION OUTLET CONNECTION AND WHITE POWDER COAT FINISH. INSTALL ICE MAKER BOX @ 18" ABOVE FINISH FLOOR.
SGV 1	SEISMIC GAS VALVE	ITEM SHALL BE SIZED TO MATCH FULL LINE SIZE OF PIPING SERVED. SEE PLAN FOR SIZES.						KOSO/CALIFORNIA EARTHQUAKE SENSITIVE SHUT-OFF VALVE, 60 PSI WORKING PRESSURE, U.L. LISTED, THREADED CONNECTIONS FOR SIZES 2" AND LESS, FLANGED CONNECTIONS FOR SIZES GREATER THAN 2". PRESSURE DROP SHALL NOT EXCEED 13' EQUIVALENT PIPING LENGTH.

PBK
RANCHO CUCAMONGA
8163 ROCHESTER AVENUE, SUITE 100
RANCHO CUCAMONGA, CA 91730
909-987-0909 P

ONTARIO FIRE DEPARTMENT ADMINISTRATION BUILDING
CITY OF ONTARIO
1420 E. FRANCIS STREET., ONTARIO, CA

LICENSED ARCHITECT — KELLEY NEEDHAM C-19064 — STATE OF CALIFORNIA

REGISTERED PROFESSIONAL ENGINEER — ANDREW R. GOSSMAN — MECHANICAL — STATE OF CALIFORNIA

CONSULTANT
PDS
PocockDesignSolutions Inc.

NO	DATE	BY	DESCRIPTION

REVISIONS

DRAWN: RMZ	CHECKED:
DATE: 07/15/2022	SCALE:
PROJECT NUMBER: 2011700	

PLUMBING FIXTURE SCHEDULE

DRAWING NUMBER: P0.2

BID SET 03/01/24

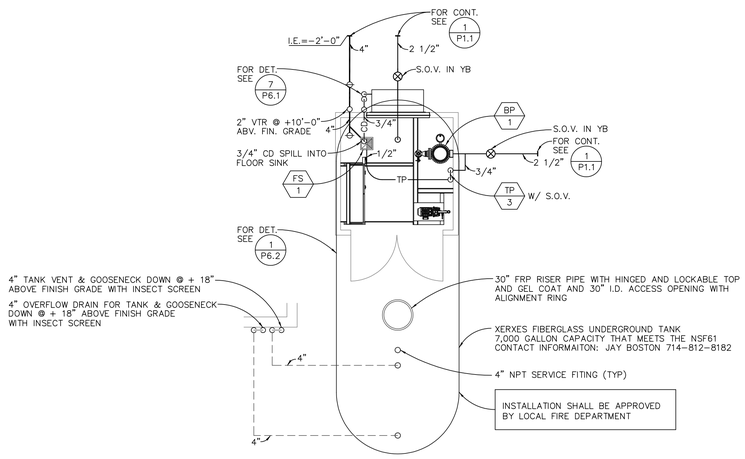

CONSTRUCTION NOTES:

1. TANK INSTALLATION SHALL COMPLY WITH NFPA 30, 70 & 329 AND ALL APPLICABLE CODES, STANDARD PRACTICES OF THE TRADE AND AUTHORITES HAVING JURISDICATION AND TANK MFG. INSTRUCTIONS.
2. CONTRACTOR SHALL OBTAIN ENVIRONMENT HEALTH SERVICES APPROVAL OF UNDERGROUND FUEL TANK, BEFORE INSTALLATION.
3. ANCHORING TANK AND DEADMAN SHALL BE INSTALL PER TANK MANUFACTURER RECOMMENDATIONS.
4. PER 2022 CBC 1705.13.4 AND ASCE 7 13.2.2 ACTIVE MECHANICAL EQUIPMENT THAT MUST REMAIN OPERABLE FOLLOWING THE DESIGN EARTHQUAKE SHALL BE CERTIFIED BY THE SUPPLIER AS OPERABLE BASED ON APPROVED SHAKE TABLE TESTING IN ACCORDANCE WITH SECTION 13.2.5 OR EXPERIENCE DATA IN ACCORDANCE WITH 13.2.6.

PARTIAL PLUMBING SITE PLAN

SCALE 1/4"=1'-0" | 3

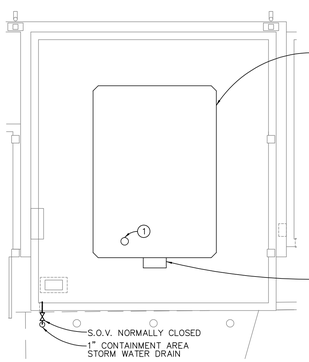

ABOVE GROUND FUEL TANK

2000 GALLON CAPACITY ABOVE GROUND FUEL TANK BY CONVAULT. TANK TO BE 2000 GALLON UNLEADED GAS. TANK TO COME EQUIPPED WITH ONE (1) SIDE-MOUNT UNLEADED GAS DISPENSER PACKAGE. DISPENSER PUMP SHALL BE MINIMUM 7 AMPS AND MAXIMUM 10 AMPS. TANK TO BE EQUIPPED WITH A SEVEN GALLON UL LISTED SPILL CONTAINMENT AND EARTHQUAKE RESTRAINTS IN ACCORDANCE WITH MANUFACTURER'S INSTRUCTIONS. ON THE NORTH END OF THE TANK, USING A STENCIL, PAINT THE STATEMENTS, "NO SMOKING" AND "EMERGENCY SHUT OFF SWITCH AT MAIN BUILDING". LETTERING TO BE 2 INCHES HIGH, BLACK IN COLOR AND OF HELVETICA REGULAR TYPE ONE REQUIRED, LOCATE AS INDICATED ON THE DRAWINGS.

SIDE MOUNTED PUMP WITH MOUNTING BRACKET, NOZZLE, FILTER, HOSE AND ACCESSORIES AS REQUIRED

CONSTRUCTION KEY NOTES:

1. 2" D.O.V. UP TO 12'-0" ABOVE FINISH GRADE WITH OPW MODEL NO. 23-0033, (2") OPEN ATMOSPHERIC VAPOR VENT.

CONSTRUCTION NOTES:

1. TANK INSTALLATION AND TESTING SHALL COMPLY WITH NFPA 30, 30A, 70 AND UFC STANDARD 79-9 AND ALL APPLICABLE CODES, STANDARD PRACTICES OF THE TRADE AND AUTHORITIES HAVING JURISDICTION AND TANK MFG. INSTRUCTIONS.
2. CONTRACTOR SHALL OBTAIN ENVIRONMENT HEALTH SERVICES APPROVAL OF ABOVE GROUND FUEL TANK, BEFORE INSTALLATION.
3. ANCHORING TANK SHALL BE INSTALL PER TANK MANUFACTURER RECOMMENDATIONS.

PARTIAL PLUMBING SITE PLAN

SCALE 1/4"=1'-0" | 2

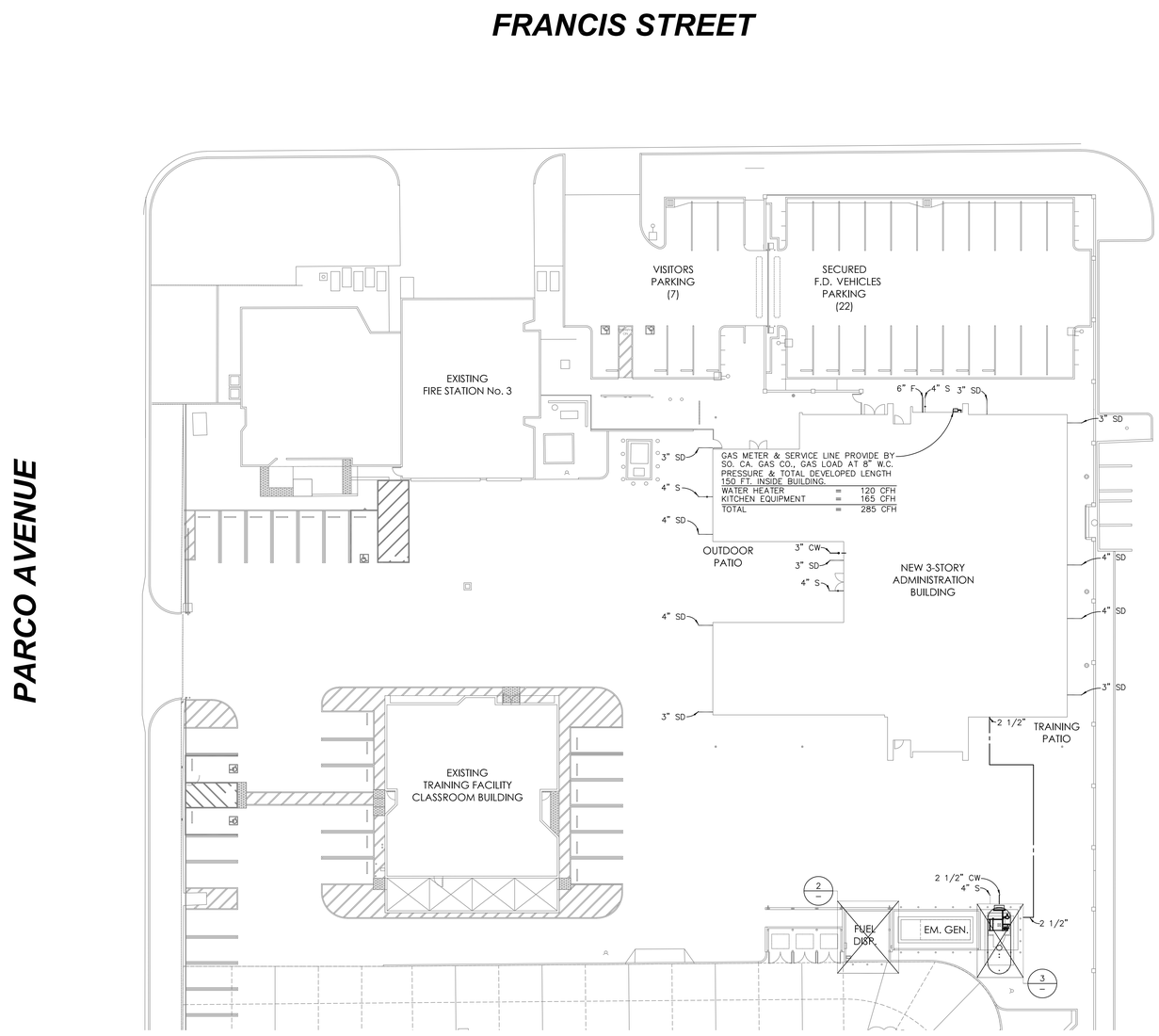

CONSTRUCTION NOTES:

1. FOR CONTINUATION OF ALL UTILITIES SEE CIVIL ENGINEERING DRAWINGS.

NORTH

PLUMBING SITE PLAN

SCALE 1"=20'-0" | 1

PBK
RANCHO CUCAMONGA
8163 ROCHESTER AVENUE, SUITE 100
RANCHO CUCAMONGA, CA 91730
909-987-0909 P

ONTARIO FIRE DEPARTMENT ADMINISTRATION BUILDING

CITY OF ONTARIO

1420 E. FRANCIS STREET., ONTARIO, CA

LICENSED ARCHITECT — KELLEY NEEDHAM C-19064 — Re-Ne 03/31/25 — STATE OF CALIFORNIA

REGISTERED PROFESSIONAL ENGINEER — ANDREW R. GOSSMAN — No. M39639 — Exp. 3/31/24 — MECHANICAL — STATE OF CALIFORNIA

CONSULTANT
PDS
PocockDesignSolutions Inc.

NO	DATE	BY	DESCRIPTION

REVISIONS

DRAWN: RMZ	CHECKED:
DATE: 07/15/2022	SCALE:
PROJECT NUMBER: 2011700	

PLUMBING SITE PLAN

DRAWING NUMBER: P1.1

BID SET 03/01/24

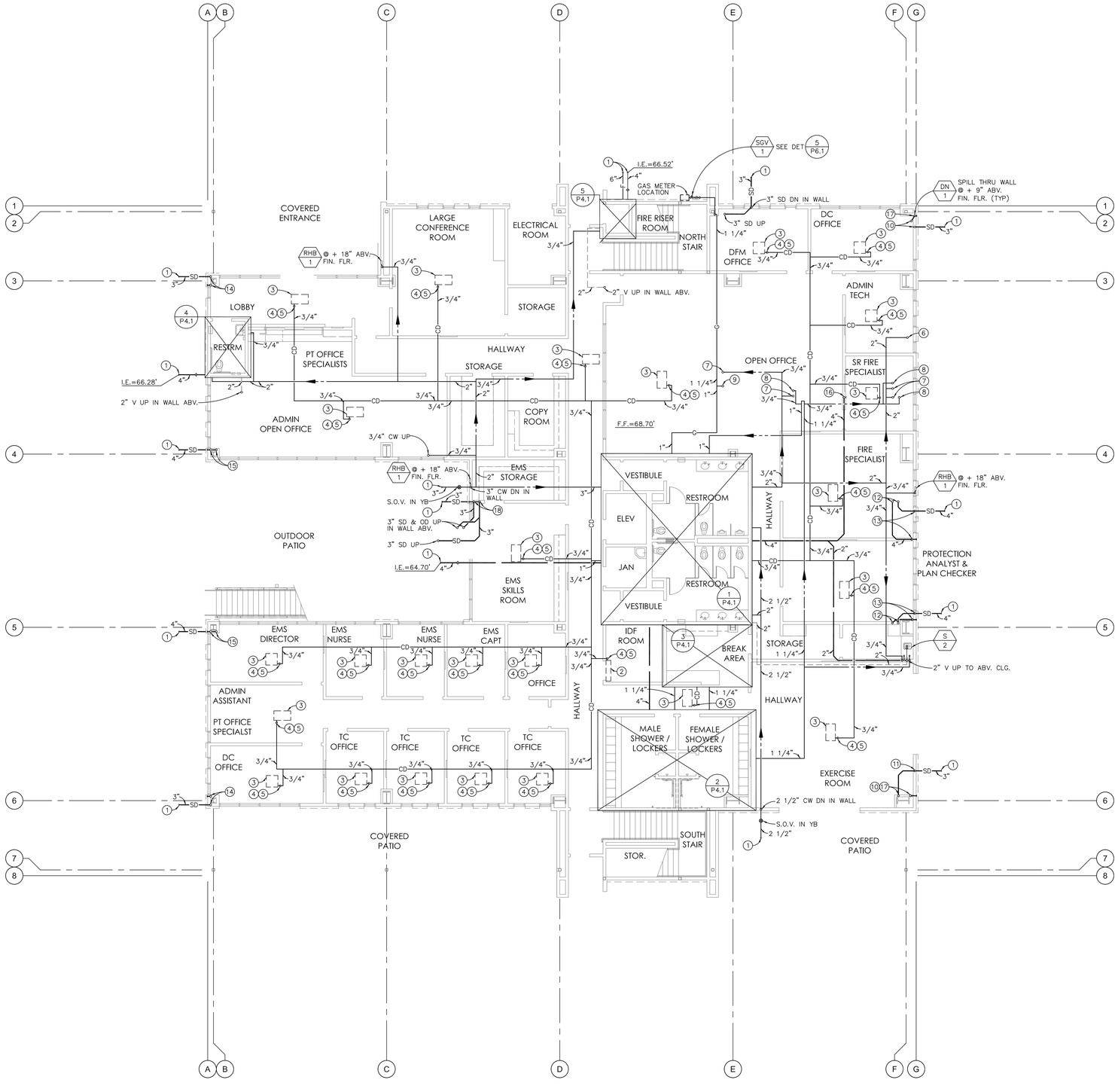

CONSTRUCTION NOTES:

1. ALL HORIZONTAL STORM DRAIN PIPING ABOVE CEILING SHALL SLOPE AT 1% UNLESS OTHERWISE NOTED.
2. ALL CONDENSATE DRAIN PIPING ABOVE CEILING SHALL SLOPE AT 1% UNLESS OTHERWISE NOTED.
3. ALL GAS PIPING SIZES INSIDE THE BUILDING ARE BASED ON CALIFORNIA PLUMBING CODE 2019 TABLE 1215.2(1) (LOW PRESSURE) AT TOTAL DEVELOPED LENGTH 150 FEET & 285 CFH.
4. ALL SLEEVES THRU FOOTINGS SHALL BE MINIMUM TWO PIPE SIZES LARGER THAN THE PIPE GOING THRU IT, PROVIDE ALL SLEEVES.
5. ALL STORM DRAIN LINES, WASTE LINES & COLD WATER LINES INTO FOOTINGS SHALL BE DOUBLE HALF LAP WRAPPED WITH 1/8" THICK "ARMOFLEX" INSULATION. ALSO, THE CONTRACTOR SHALL PROVIDE BLOCKED OUT AREAS IN THE FOOTING FOR STORM DRAIN LINES, WASTE LINES & COLD WATER LINES. ALL PIPING SHALL AVOID THE LOWER 9" OF THE FOOTING.

CONSTRUCTION KEY NOTES:

1. FOR CONTINUATION OF ALL UTILITIES SEE SHEET P1.1.
2. FAN COIL ON WALL SEE MECH. DWGS. FOR EXACT LOCATION
3. FAN COIL UNIT ABOVE CEILING, SEE MECH. DWGS. FOR EXACT LOCATION.
4. P.O.C. 3/4" CD TO CONDENSATE PUMP ON WALL.
5. CONDENSATE PUMP PROVIDED BY MECHANICAL CONTRACTOR.
6. 2" CW UP.
7. 3/4" CW UP.
8. 3/4" HW UP.
9. 1 1/4" GAS UP.
10. 3" SD & OD UP IN WALL ABV.
11. 3" SD DN IN WALL.
12. 4" SD & OD UP IN WALL ABV.
13. 4" SD & OD DN IN WALL.
14. 3" SD & OD UP & DN IN WALL.
15. 4" SD & OD UP & DN IN WALL.
16. 4" SEWER LINE UP & DN IN WALL. AND @ I.E.=66.70' BELOW GRADE.
17. 3" OD DN IN WALL.
18. 3" SD & OD DN IN WALL.

PLUMBING FIRST FLOOR PLAN

SCALE 1/8"=1'-0"

1

PBK
RANCHO CUCAMONGA
8163 ROCHESTER AVENUE, SUITE 100
RANCHO CUCAMONGA, CA 91730
909-987-0909 P

ONTARIO FIRE DEPARTMENT ADMINISTRATION BUILDING

CITY OF ONTARIO

1420 E. FRANCIS STREET., ONTARIO, CA

LICENSED ARCHITECT — KELLEY NEEDHAM C-19064 — Ex.Date: 03/31/25 — STATE OF CALIFORNIA

REGISTERED PROFESSIONAL ENGINEER — ANDREW R. GOSSMAN — No. M35639 — Exp. 3/31/24 — MECHANICAL — STATE OF CALIFORNIA

CONSULTANT

PDS PocockDesignSolutions Inc.

NO	DATE	BY	DESCRIPTION

REVISIONS

DRAWN: RMZ	CHECKED:
DATE: 07/15/2022	SCALE:
PROJECT NUMBER: 2011700	

PLUMBING FIRST FLOOR PLAN

DRAWING NUMBER: P2.1

BID SET 03/01/24

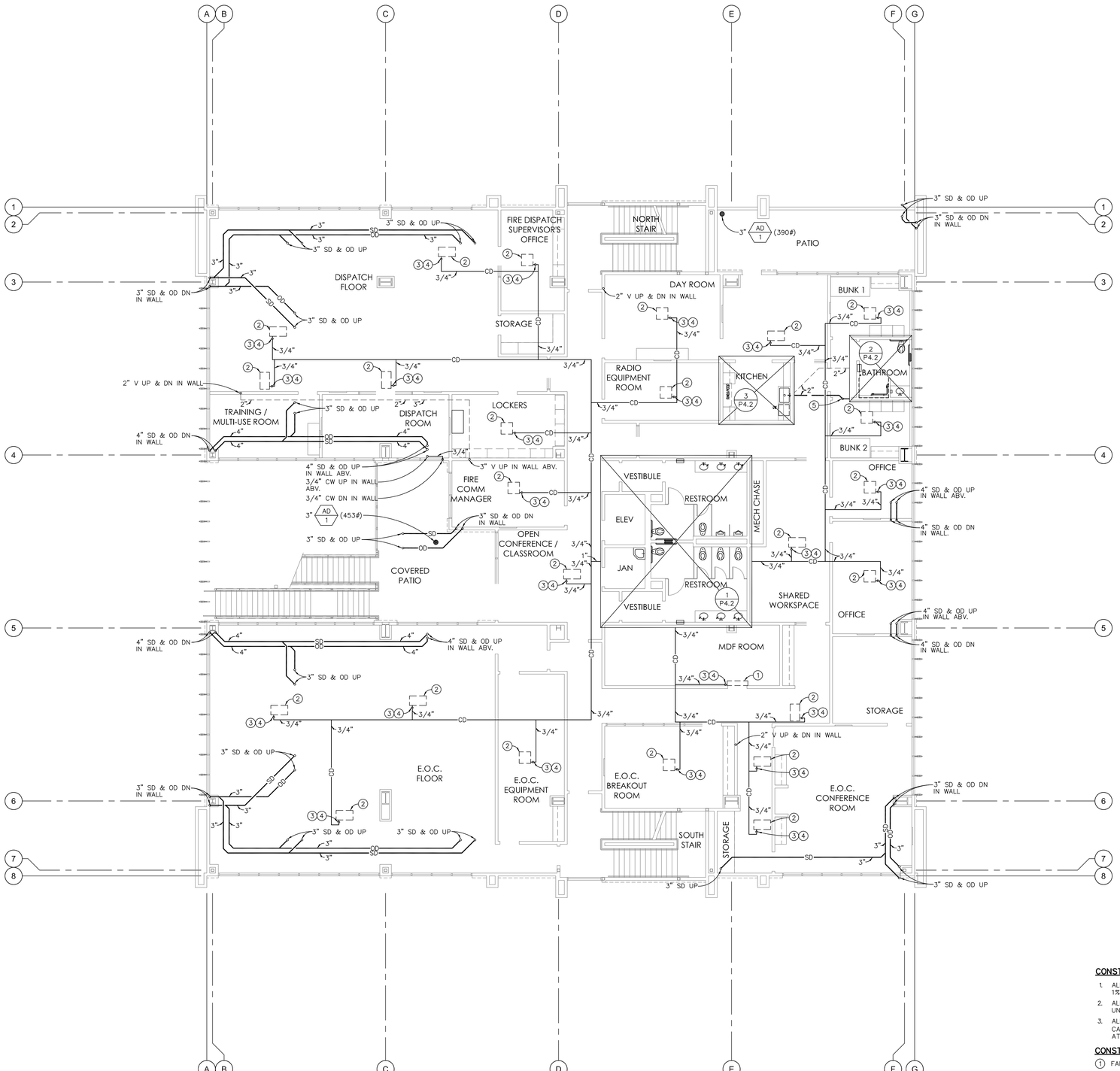

CONSTRUCTION NOTES:

1. ALL HORIZONTAL STORM DRAIN PIPING ABOVE CEILING SHALL SLOPE AT 1% UNLESS OTHERWISE NOTED.
2. ALL CONDENSATE DRAIN PIPING ABOVE CEILING SHALL SLOPE AT 1% UNLESS OTHERWISE NOTED.
3. ALL GAS PIPING SIZES INSIDE THE BUILDING ARE BASED ON CALIFORNIA PLUMBING CODE 2019 TABLE 1215.2(1) (LOW PRESSURE) AT TOTAL DEVELOPED LENGTH 150 FEET & 285 CFH.

CONSTRUCTION KEY NOTES:

1. FAN COIL ON WALL SEE MECH. DWGS. FOR EXACT LOCATION
2. FAN COIL UNIT ABOVE CEILING, SEE MECH. DWGS. FOR EXACT LOCATION.
3. P.O.C. 3/4" CD TO CONDENSATE PUMP ON WALL.
4. CONDENSATE PUMP PROVIDED BY MECHANICAL CONTRACTOR.
5. 4" SEWER LINE DOWN IN WALL BELOW.

PLUMBING SECOND FLOOR PLAN

SCALE 1/8"=1'-0"

1

PBK
RANCHO CUCAMONGA
8163 ROCHESTER AVENUE, SUITE 100
RANCHO CUCAMONGA, CA 91730
909-987-0909 P

ONTARIO FIRE DEPARTMENT ADMINISTRATION BUILDING
CITY OF ONTARIO
1420 E. FRANCIS STREET., ONTARIO, CA

LICENSED ARCHITECT — KELLEY NEEDHAM C-19064 Re.Dte: 03/31/25 — STATE OF CALIFORNIA
REGISTERED PROFESSIONAL ENGINEER — ANDREW R. GRUMAN No. M35839 Exp. 3/31/24 MECHANICAL — STATE OF CALIFORNIA

CONSULTANT
PDS
PocockDesignSolutions Inc.

NO	DATE	BY	DESCRIPTION

REVISIONS

DRAWN: RMZ	CHECKED:
DATE: 07/15/2022	SCALE:
PROJECT NUMBER: 2011700	

PLUMBING SECOND FLOOR PLAN

DRAWING NUMBER: P2.2

BID SET 03/01/24

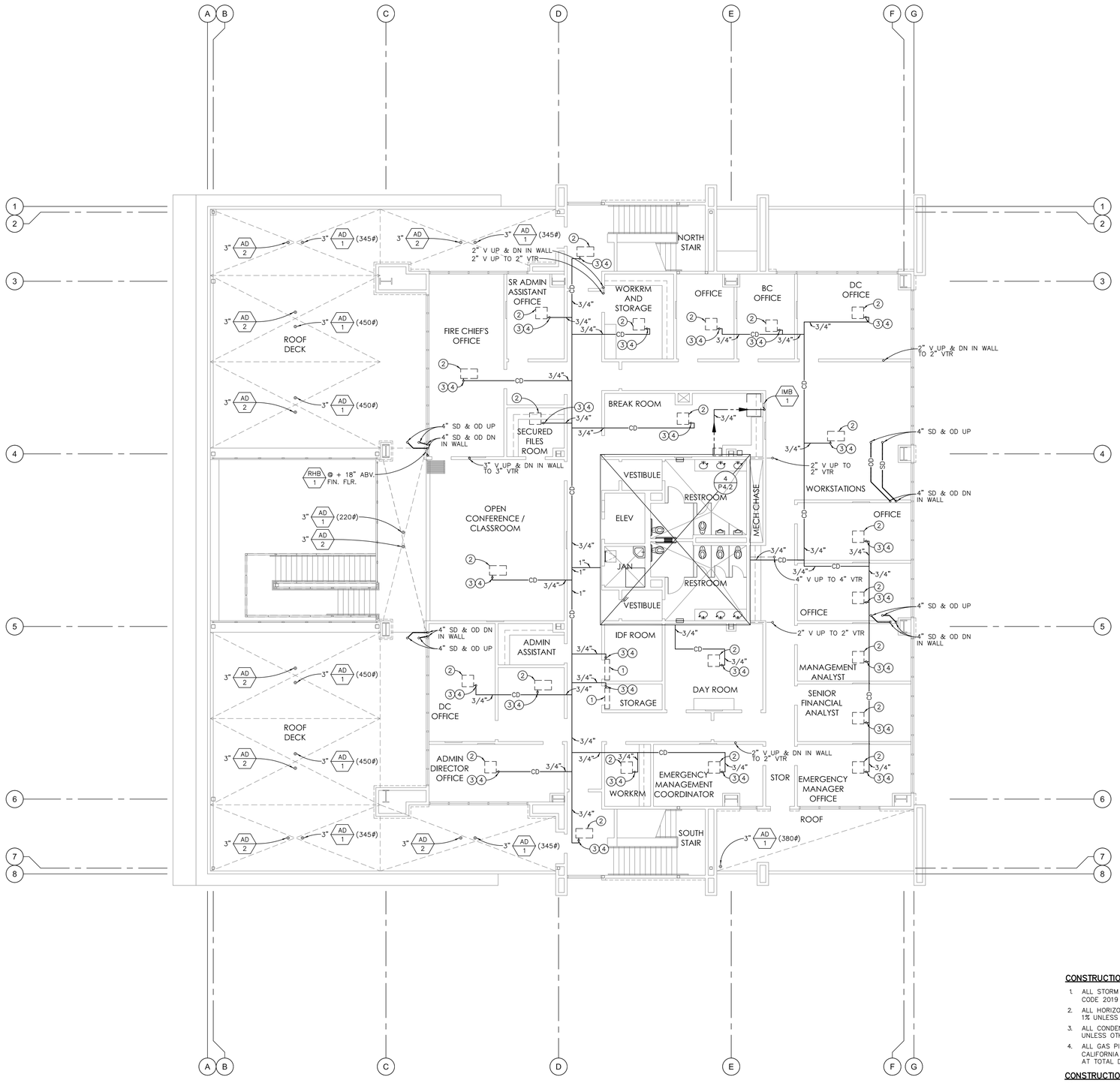

CONSTRUCTION NOTES:

1. ALL STORM DRAIN PIPE SIZES ARE BASED ON CALIFORNIA PLUMBING CODE 2019 TABLE 1103.1 & 1103.2 AT 2" RAINFALL PER HOUR.
2. ALL HORIZONTAL STORM DRAIN PIPING ABOVE CEILING SHALL SLOPE AT 1% UNLESS OTHERWISE NOTED.
3. ALL CONDENSATE DRAIN PIPING ABOVE CEILING SHALL SLOPE AT 1% UNLESS OTHERWISE NOTED.
4. ALL GAS PIPING SIZES INSIDE THE BUILDING ARE BASED ON CALIFORNIA PLUMBING CODE 2019 TABLE 1215.2(1) (LOW PRESSURE) AT TOTAL DEVELOPED LENGTH 150 FEET & 285 CFH.

CONSTRUCTION KEY NOTES:

1. FAN COIL ON WALL SEE MECH. DWGS. FOR EXACT LOCATION
2. FAN COIL UNIT ABOVE CEILING, SEE MECH. DWGS. FOR EXACT LOCATION.
3. P.O.C. 3/4" CD TO CONDENSATE PUMP ON WALL.
4. CONDENSATE PUMP PROVIDED BY MECHANICAL CONTRACTOR.

NORTH

PLUMBING THIRD FLOOR PLAN

SCALE 1/8"=1'-0" | 1

PBK
RANCHO CUCAMONGA
8163 ROCHESTER AVENUE, SUITE 100
RANCHO CUCAMONGA, CA 91730
909-987-0909 P

ONTARIO FIRE DEPARTMENT ADMINISTRATION BUILDING
CITY OF ONTARIO
1420 E. FRANCIS STREET., ONTARIO, CA

LICENSED ARCHITECT — KELLEY NEEDHAM C-19064 — Sc.Dat: 03/31/25 — STATE OF CALIFORNIA
REGISTERED PROFESSIONAL ENGINEER — ANDREW R. GOSSMAN No. M35630 Exp. 3/31/24 MECHANICAL — STATE OF CALIFORNIA

CONSULTANT
PDS PocockDesignSolutions Inc.

NO	DATE	BY	DESCRIPTION

REVISIONS

DRAWN: RMZ	CHECKED:
DATE: 07/15/2022	SCALE:
PROJECT NUMBER: 2011700	

PLUMBING THIRD FLOOR PLAN

DRAWING NUMBER: P2.3

BID SET 03/01/24

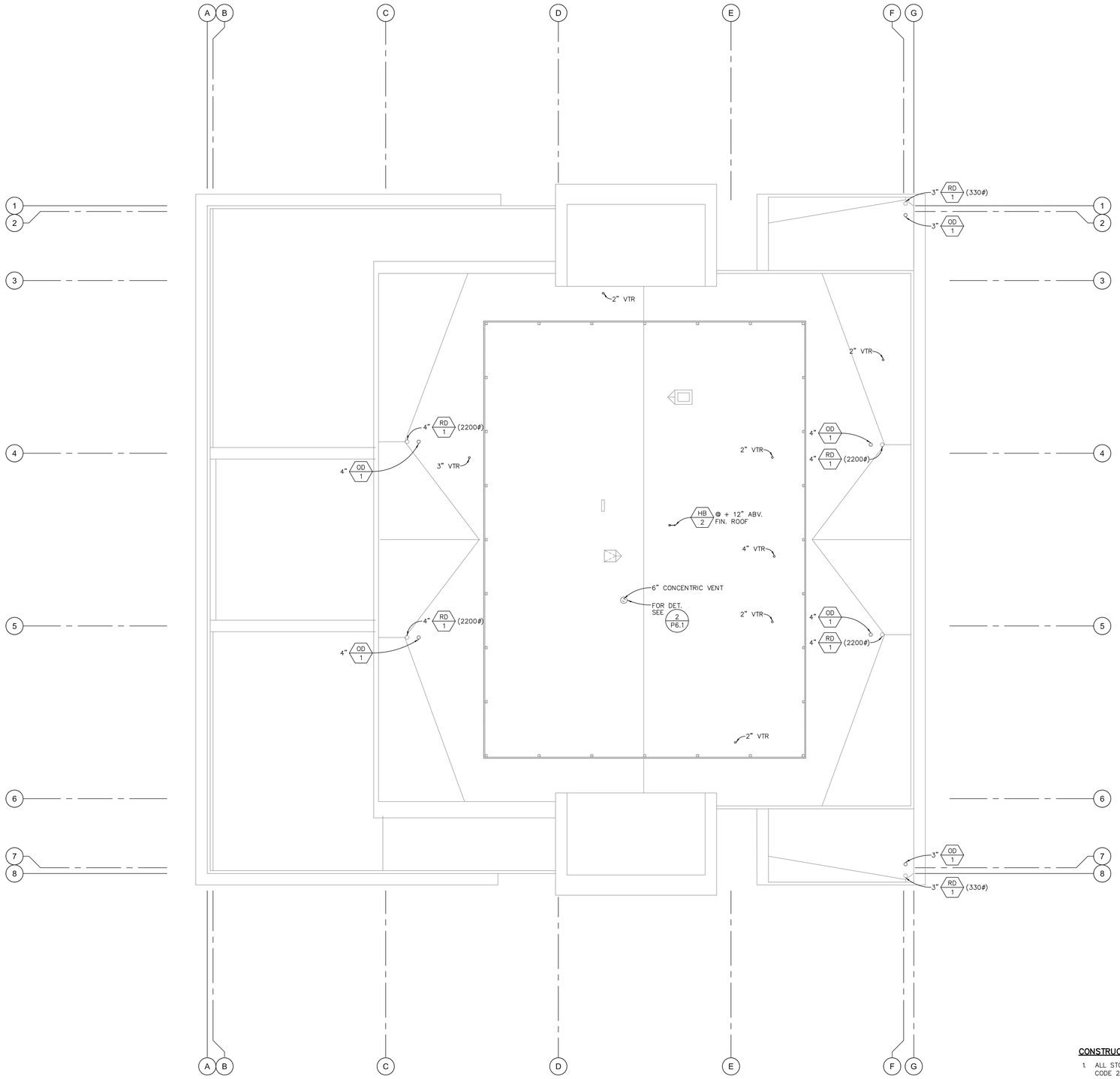

CONSTRUCTION NOTES:

1. ALL STORM DRAIN PIPE SIZES ARE BASED ON CALIFORNIA PLUMBING CODE 2019 TABLE 1103.1 & 1103.2 AT 2" RAINFALL PER HOUR.

NORTH

PLUMBING ROOF PLAN

SCALE 1/8"=1'-0"

1

PBK
RANCHO CUCAMONGA
8163 ROCHESTER AVENUE, SUITE 100
RANCHO CUCAMONGA, CA 91730
909-987-0909 P

ONTARIO FIRE DEPARTMENT ADMINISTRATION BUILDING

CITY OF ONTARIO

1420 E. FRANCIS STREET., ONTARIO, CA

LICENSED ARCHITECT KELLEY NEEDHAM C-19064 Exp. 03/31/25 STATE OF CALIFORNIA

REGISTERED PROFESSIONAL ENGINEER ANDREW R. GUSSMAN No. M35630 Exp. 3/31/24 MECHANICAL STATE OF CALIFORNIA

CONSULTANT

PDS PocockDesignSolutions Inc.

NO	DATE	BY	DESCRIPTION

REVISIONS

DRAWN: RMZ	CHECKED:
DATE: 07/15/2022	SCALE:
PROJECT NUMBER: 2011700	

PLUMBING ROOF PLAN

DRAWING NUMBER: P3.1

BID SET 03/01/24

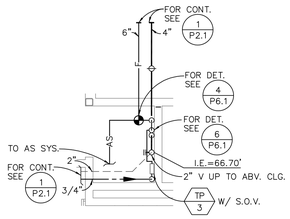

ENLARGED PLUMBING FLOOR PLAN — SCALE 1/4"=1'-0" — 5

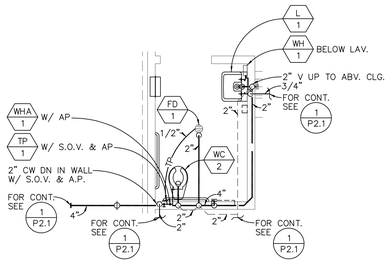

ENLARGED PLUMBING FLOOR PLAN — SCALE 1/4"=1'-0" — 4

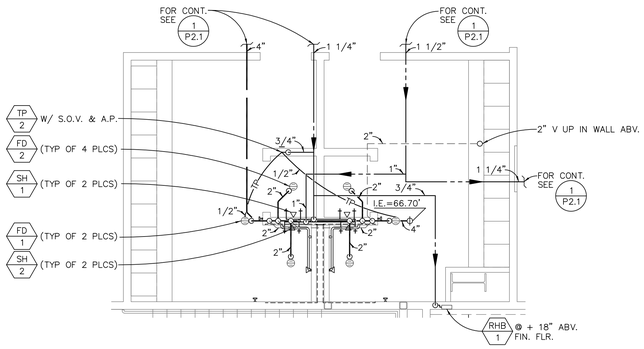

ENLARGED PLUMBING FLOOR PLAN — SCALE 1/4"=1'-0" — 2

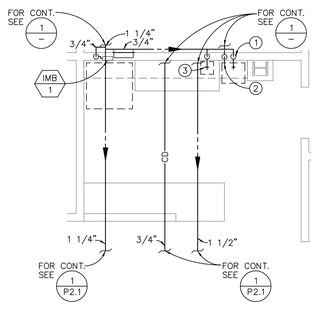

CONSTRUCTION KEY NOTES:

1. CONTRACTOR SHALL ROUGH-IN CONNECT 3/4" COLD WATER WITH SHUT OFF VALVE FOR PURIFIED WATER REFILL STATION.
2. CONTRACTOR SHALL ROUGH-IN CONNECT 3/4" DRAIN LINE FOR PURIFIED WATER REFILL STATION.
3. CONTRACTOR SHALL ROUGH-IN AND CONNECT 3/4" COLD WATER WITH ANGLE STOP AND SINGLE CARTRIDGE WATER FILTER UNDER THE COUNTER FOR COFFEE MAKER WATER.

ENLARGED PLUMBING FLOOR PLAN — SCALE 1/4"=1'-0" — 3

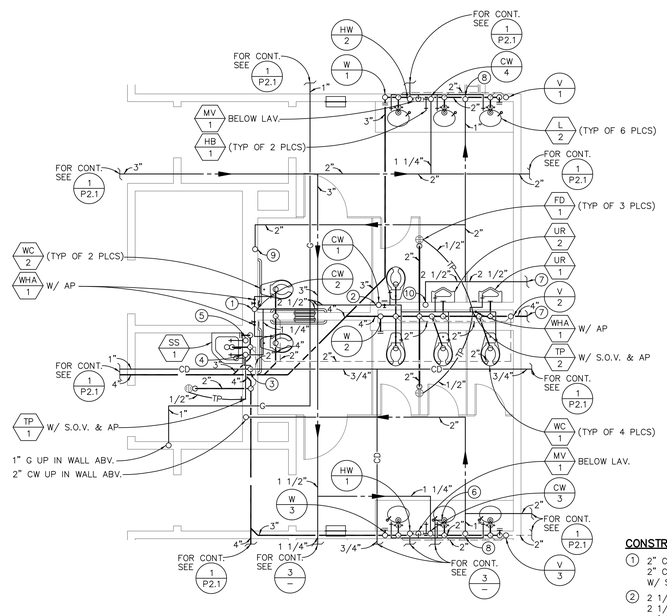

CONSTRUCTION KEY NOTES:

1. 2" COLD WATER UP & DN IN WALL WITH 2" COLD WATER TEE OFF RISER W/ S.O.V. & A.P.
2. 2 1/2" COLD WATER UP & DN IN WALL WITH 2 1/2" COLD WATER TEE OFF RISER W/ S.O.V. & A.P.
3. 1" CONDENSATE DRAIN DOWN IN WALL AND SPILL INTO SERVICE SINK W/ 2' AIR GAP.
4. 3/4" COLD WATER DN IN WALL & 1" COLD WATER UP IN WALL ABOVE.
5. 3/4" HOT WATER UP & DN IN WALL.
6. CONTRACTOR SHALL ROUGH-IN CONNECT 3/4" DRAIN LINE TO LAVATORY TAILPIECE ABOVE FINISH FLOOR AS REQUIRED.
7. FOR CONTINUATION SEE SHEET P2.1.
8. 1" COLD WATER UP IN WALL ABOVE.
9. 2" COLD WATER UP IN WALL ABOVE.
10. 2 1/2" COLD WATER UP IN WALL ABOVE.

ENLARGED PLUMBING FIRST FLOOR PLAN — SCALE 1/4"=1'-0" — 1

PBK
RANCHO CUCAMONGA
8163 ROCHESTER AVENUE, SUITE 100
RANCHO CUCAMONGA, CA 91730
909-987-0909 P

ONTARIO FIRE DEPARTMENT ADMINISTRATION BUILDING

CITY OF ONTARIO

1420 E. FRANCIS STREET., ONTARIO, CA

LICENSED ARCHITECT — KELLEY NEEDHAM C-19064 — Ex.Date: 03/31/25 — STATE OF CALIFORNIA

REGISTERED PROFESSIONAL ENGINEER — ANDREW R. GOSSMAN — No. M35630 — Exp. 3/31/24 — MECHANICAL — STATE OF CALIFORNIA

CONSULTANT

PDS — PocockDesignSolutions Inc.

NO	DATE	BY	DESCRIPTION

REVISIONS

DRAWN: RMZ	CHECKED:
DATE: 07/15/2022	SCALE:
PROJECT NUMBER: 2011700	

PLUMBING ENLARGED PLANS

DRAWING NUMBER: P4.1

BID SET 03/01/24

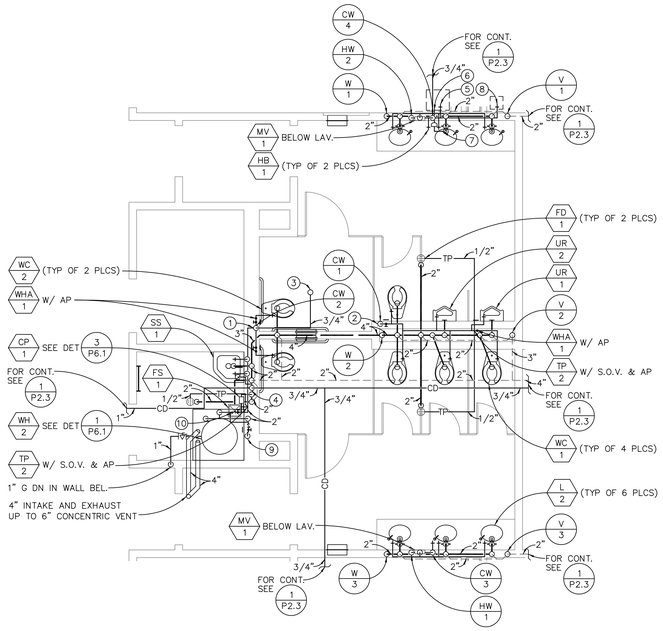

CONSTRUCTION KEY NOTES:

1. 2" COLD WATER UP IN WALL WITH S.O.V. & AP.
2. 2 1/2" COLD WATER UP IN WALL WITH S.O.V. & AP.
3. 3/4" COLD WATER UP THRU ROOF.
4. 1" CONDENSATE DRAIN DOWN IN WALL AND SPILL INTO SERVICE SINK W/ 2' AIR GAP.
5. CONTRACTOR SHALL ROUGH-IN CONNECT 3/4" COLD WATER WITH SHUT OFF VALVE FOR PURIFIED WATER REFILL STATION.
6. CONTRACTOR SHALL ROUGH-IN CONNECT 3/4" DRAIN LINE FOR PURIFIED WATER REFILL STATION.
7. CONTRACTOR SHALL ROUGH-IN CONNECT 3/4" DRAIN LINE TO LAVATORY TAILPIECE ABOVE FINISH FLOOR AS REQUIRED.
8. CONTRACTOR SHALL ROUGH-IN AND CONNECT 3/4" COLD WATER WITH ANGLE STOP AND SINGLE CARTRIDGE WATER FILTER UNDER THE COUNTER FOR COFFEE MAKER WATER.
9. 2" COLD WATER UP IN WALL W/ S.O.V. & AP & CHECK VALVE. 2" COLD WATER SHALL CONNECT DOWNSTREAM OF COLD WATER S.O.V. AND CHECK VALVE SERVING WH-1.
10. PROVIDE 2" CHECK VALVE DOWNSTREAM OF S.O.V. FOR SERVING WH-1.

ENLARGED PLUMBING THIRD FLOOR PLAN

SCALE 1/4"=1'-0" | 4

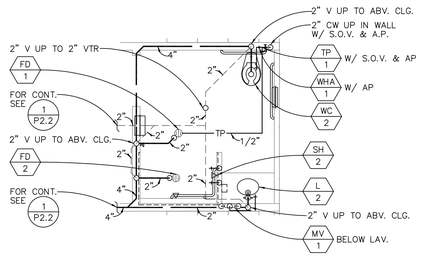

ENLARGED PLUMBING FLOOR PLAN

SCALE 1/4"=1'-0" | 2

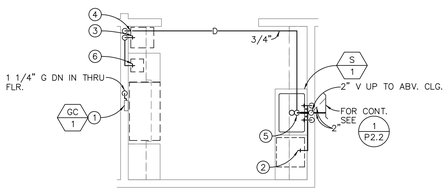

CONSTRUCTION KEY NOTES:

1. P.O.C. 1-1/4" GAS TO RANGE (165 CFH) WITH RECESSED GC-1 IN WALL.
2. DISHWASHER ROUGH-IN & CONNECTION 1/2" HOT WATER WITH S.O.V. & 3/4" HOSE WASTE THRU COUNTER MOUNTED AIR GAP FITTING TO GARBAGE DISPOSER.
3. CONTRACTOR SHALL ROUGH-IN CONNECT 3/4" COLD WATER WITH SHUT OFF VALVE FOR PURIFIED WATER REFILL STATION.
4. CONTRACTOR SHALL ROUGH-IN CONNECT 3/4" DRAIN LINE FOR PURIFIED WATER REFILL STATION.
5. CONTRACTOR SHALL ROUGH-IN CONNECT 3/4" DRAIN LINE TO SINK TAILPIECE ABOVE FINISH FLOOR AS REQUIRED.
6. CONTRACTOR SHALL ROUGH-IN AND CONNECT 3/4" COLD WATER WITH ANGLE STOP AND SINGLE CARTRIDGE WATER FILTER UNDER THE COUNTER FOR COFFEE MAKER WATER.

ENLARGED PLUMBING FLOOR PLAN

SCALE 1/4"=1'-0" | 3

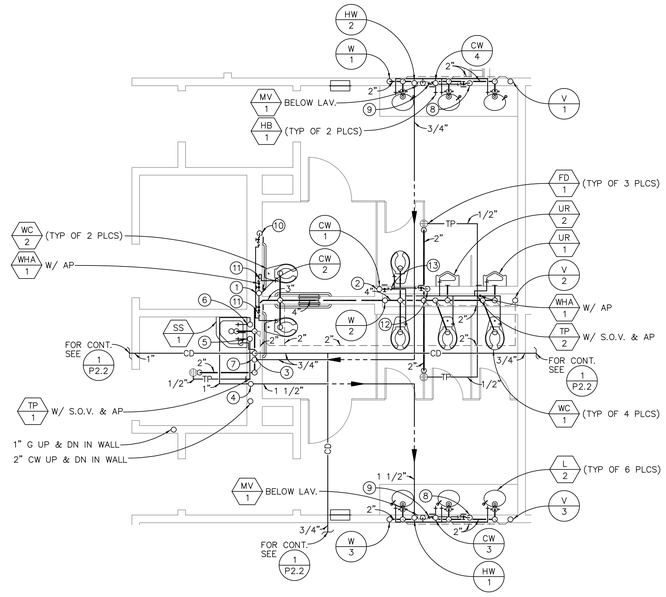

CONSTRUCTION KEY NOTES:

1. 2" COLD WATER UP & DN IN WALL WITH 2" COLD WATER TEE OFF RISER W/ S.O.V. & A.P.
2. 2 1/2" COLD WATER UP & DN IN WALL WITH 2 1/2" COLD WATER TEE OFF RISER W/ S.O.V. & A.P.
3. 1" CONDENSATE DRAIN DOWN IN WALL AND SPILL INTO SERVICE SINK W/ 2' AIR GAP.
4. 2" HOT WATER UP IN WALL ABOVE.
5. 3/4" COLD WATER UP & 1" COLD WATER DN IN WALL.
6. 3/4" HOT WATER UP & 1" HOT WATER DN IN WALL.
7. 3/4" HOT WATER RETURN UP IN WALL ABOVE.
8. 3/4" COLD WATER UP IN WALL W/ S.O.V. & AP & CHECK VALVE. 3/4" COLD WATER SHALL CONNECT DOWNSTREAM OF COLD WATER AND CHECK VALVE TO SERVING MIXING VALVE.
9. PROVIDE 3/4" CHECK VALVE W/ S.O.V. & AP OFF RISER FOR 3/4" COLD WATER TO MIXING VALVE.
10. 2" COLD WATER UP IN WALL W/ S.O.V. & AP & CHECK VALVE. 2" COLD WATER SHALL CONNECT DOWNSTREAM OF COLD WATER S.O.V. AND CHECK VALVE SERVING RESTROOM.
11. PROVIDE 2" CHECK VALVE & AP DOWNSTREAM OF S.O.V. FOR SERVING RESTROOM.
12. 2 1/2" COLD WATER UP IN WALL W/ S.O.V. & AP & CHECK VALVE. 2 1/2" COLD WATER SHALL CONNECT DOWNSTREAM OF COLD WATER S.O.V. AND CHECK VALVE SERVING RESTROOM.
13. PROVIDE 2 1/2" CHECK VALVE & AP DOWNSTREAM OF S.O.V. FOR SERVING RESTROOM.

ENLARGED PLUMBING SECOND FLOOR PLAN

SCALE 1/4"=1'-0" | 1

PBK
RANCHO CUCAMONGA
8163 ROCHESTER AVENUE, SUITE 100
RANCHO CUCAMONGA, CA 91730
909-987-0909 P

ONTARIO FIRE DEPARTMENT ADMINISTRATION BUILDING

CITY OF ONTARIO

1420 E. FRANCIS STREET., ONTARIO, CA

LICENSED ARCHITECT — KELLEY NEEDHAM C-19064 Ex.Date: 03/31/25 — STATE OF CALIFORNIA

REGISTERED PROFESSIONAL ENGINEER — ANDREW R. GOSSMAN No. M35630 Exp. 3/31/24 MECHANICAL — STATE OF CALIFORNIA

CONSULTANT

PDS PocockDesignSolutions Inc.

NO	DATE	BY	DESCRIPTION

REVISIONS

DRAWN: RMZ	CHECKED:
DATE: 07/15/2022	SCALE:
PROJECT NUMBER: 2011700	

PLUMBING ENLARGED PLANS

DRAWING NUMBER: P4.2

BID SET 03/01/24

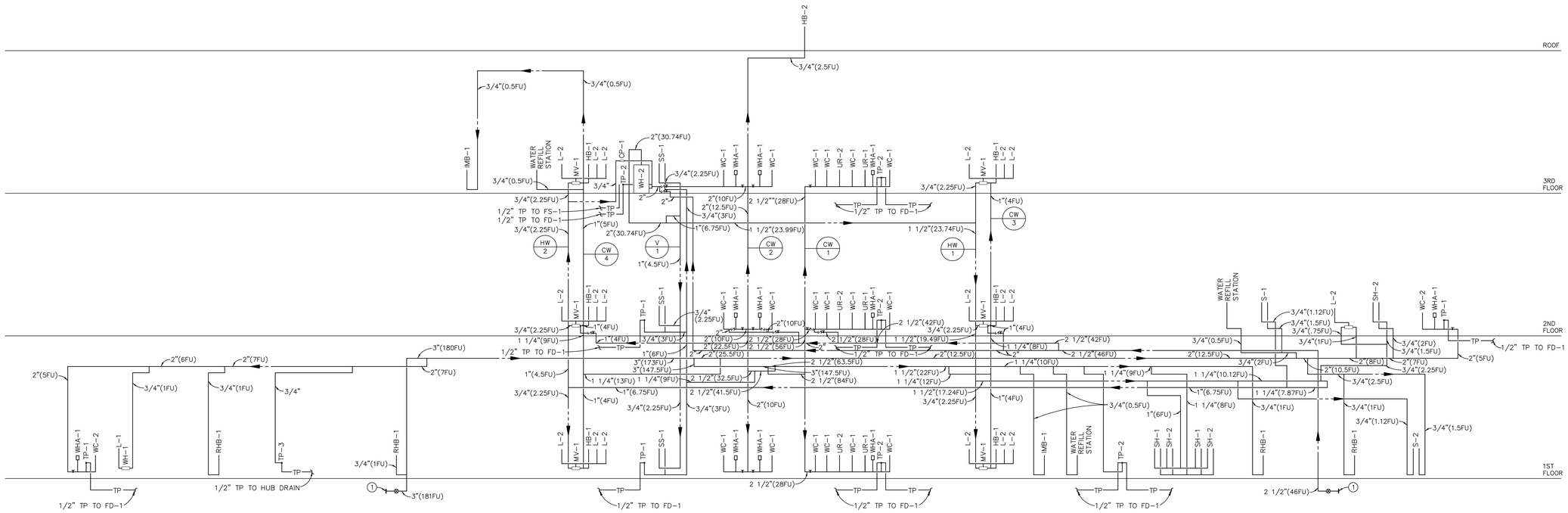

CONSTRUCTION KEY NOTES:

1. FOR CONTINUATION OF ALL UTILITIES SEE CIVIL ENGINEERING DRAWINGS.

PLUMBING HOT + COLD WATER RISER DIAGRAM

SCALE NONE | 2

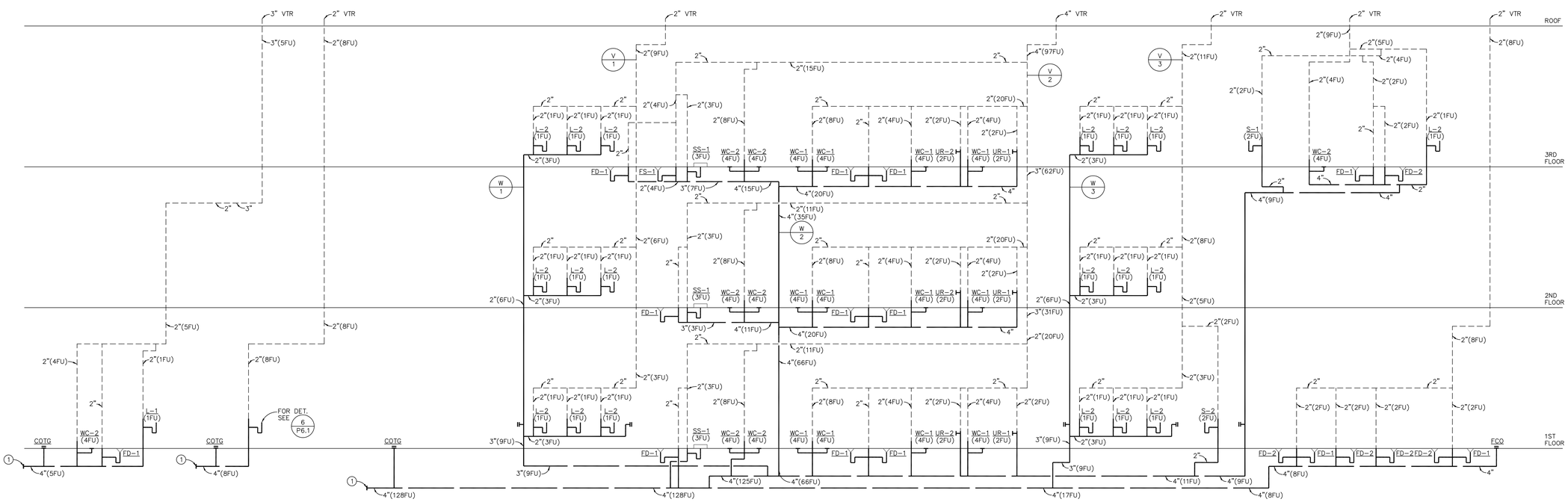

CONSTRUCTION KEY NOTES:

1. FOR CONTINUATION OF ALL UTILITIES SEE CIVIL ENGINEERING DRAWINGS.

PLUMBING WASTE + VENT RISER DIAGRAM

SCALE NONE | 1

PBK
RANCHO CUCAMONGA
8163 ROCHESTER AVENUE, SUITE 100
RANCHO CUCAMONGA, CA 91730
909-987-0909 P

ONTARIO FIRE DEPARTMENT ADMINISTRATION BUILDING

CITY OF ONTARIO

1420 E. FRANCIS STREET., ONTARIO, CA

LICENSED ARCHITECT — KELLEY NEEDHAM C-19064 — Re-Inst 03/31/25 — STATE OF CALIFORNIA

REGISTERED PROFESSIONAL ENGINEER — ANDREW R. GOSSMAN — No. M35630 — Exp. 3/31/24 — MECHANICAL — STATE OF CALIFORNIA

CONSULTANT

PDS PocockDesignSolutions Inc.

NO	DATE	BY	DESCRIPTION

REVISIONS

DRAWN: RMZ	CHECKED:
DATE: 07/15/2022	SCALE:
PROJECT NUMBER: 2011700	

PLUMBING RISER DIAGRAMS

DRAWING NUMBER: P5.1

BID SET 03/01/24

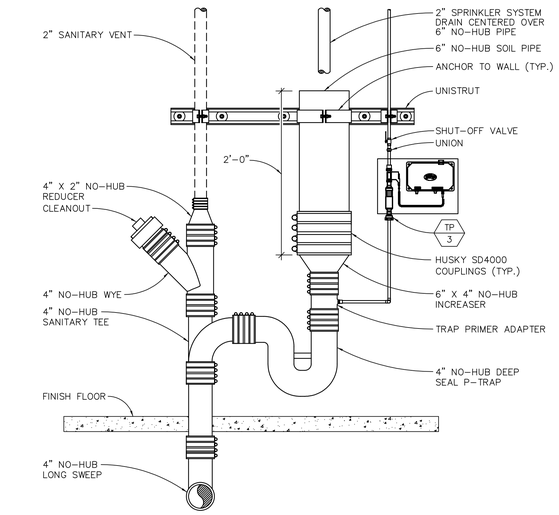

HUB DRAIN DETAIL

SCALE	
NONE	6

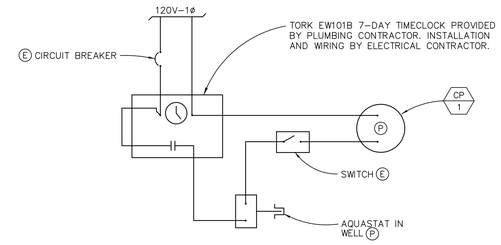

NOTE: ALL CONDUIT AND WIRING SHALL BE PROVIDED BY THE ELECTRICAL CONTRACTOR.

(E) ITEM INDICATED ON THE ELECTRICAL DRAWING AND SPECIFIED IN THE ELECTRICAL SECTIONS OF THE SPECIFICATION.

(P) ITEM INDICATED ON THE PLUMBING DRAWING AND SPECIFIED IN THE WATER HEATER DETAILS.

CIRC. PUMP WIRING DIAGRAM

SCALE	
NONE	3

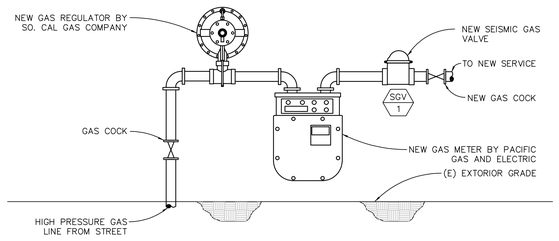

SEISMIC GAS VALVE DETAIL

SCALE	
NONE	5

NOTE:
TERMINATIONS SHALL BE IN ACCORDANCE WITH CURRENT NFPA 54. GAS VENTS THAT ARE 12" OR LESS IN SIZE AND LOCATED NOT LESS THAN 8' FROM A VERTICAL WALL OR SIMILAR OBSTRUCTION SHALL TERMINATE ABOVE THE ROOF IN ACCORDANCE WITH FIGURE 509.6.2. CPC 509.6.2.

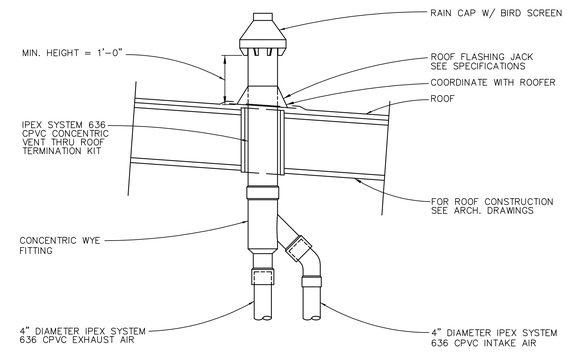

CONCENTRIC VENT THRU ROOF DETAIL

SCALE	
NONE	2

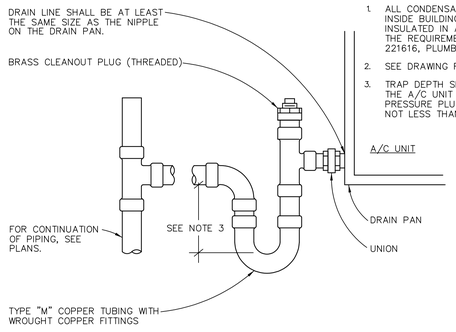

NOTES:

1. ALL CONDENSATE DRAIN LINES INSIDE BUILDING SHALL BE INSULATED IN ACCORDANCE WITH THE REQUIREMENTS OF SECTION 221616, PLUMBING SPECIFICATIONS.
2. SEE DRAWING FOR SIZES.
3. TRAP DEPTH SHALL BE EQUAL TO THE A/C UNIT TOTAL STATIC PRESSURE PLUS 1-INCH BUT NOT LESS THAN 2-INCHES.

CONDENSATE TRAP DETAIL

SCALE	
NONE	7

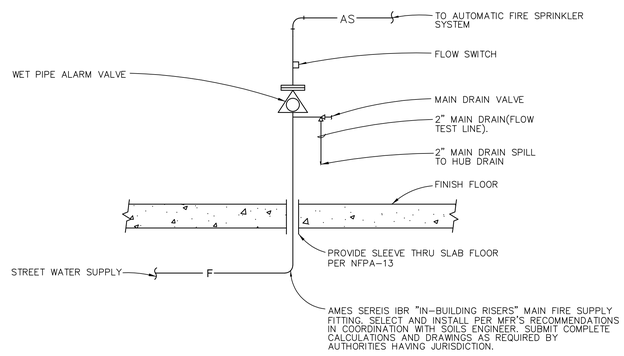

FIRE SPRINKLER RISER DETAIL

SCALE	
NONE	4

NOTE:
WATER HEATER STRAPPING SHALL BE AT POINTS WITHIN THE UPPER ONE-THIRD (1/3) AND LOWER ONE-THIRD (1/3) OF ITS VERTICAL DIMENSIONS. AT THE LOWER POINT, A MINIMUM DISTANCE OF FOUR (4) INCHES SHALL BE MAINTAINED ABOVE THE CONTROLS WITH THE STRAPPING.

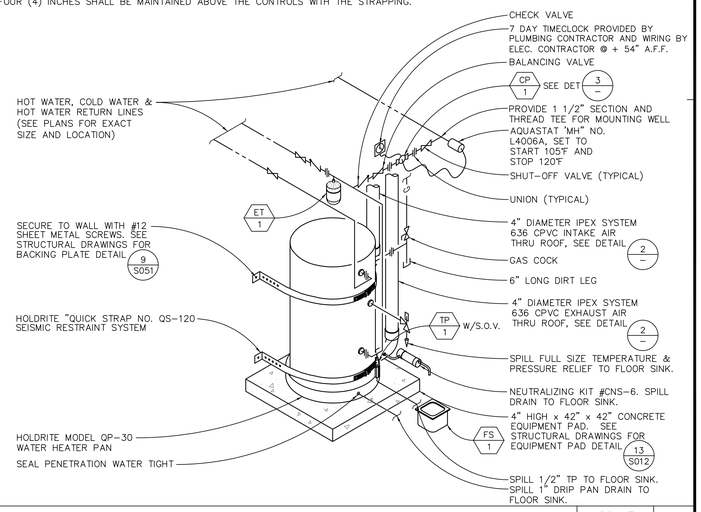

CONCENTRIC VENT WATER HEATER W/CIRC. PUMPDETAIL

SCALE	
NONE	1

PBK
RANCHO CUCAMONGA
8163 ROCHESTER AVENUE, SUITE 100
RANCHO CUCAMONGA, CA 91730
909-987-0909 P

ONTARIO FIRE DEPARTMENT ADMINISTRATION BUILDING

CITY OF ONTARIO

1420 E. FRANCIS STREET., ONTARIO, CA

LICENSED ARCHITECT — KELLEY NEEDHAM C-19064 Exp. Date 03/31/25 — STATE OF CALIFORNIA

REGISTERED PROFESSIONAL ENGINEER — ANDREW R. GOSSMAN No. M35639 Exp. 3/31/24 — MECHANICAL — STATE OF CALIFORNIA

CONSULTANT

PDS
PocockDesignSolutions Inc.

NO	DATE	BY	DESCRIPTION

REVISIONS

DRAWN: RMZ	CHECKED:
DATE: 07/15/2022	SCALE:
PROJECT NUMBER: 2011700	

PLUMBING DETAILS

DRAWING NUMBER: P6.1

BID SET 03/01/24

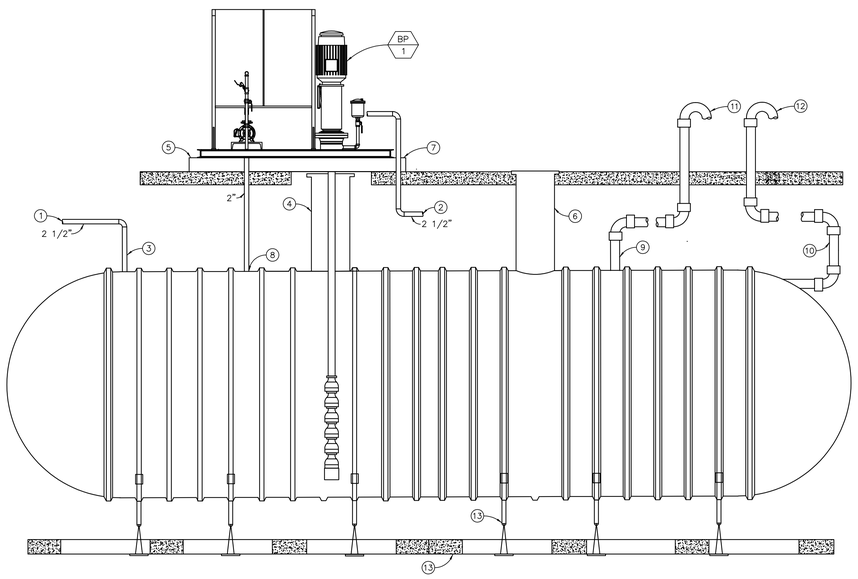

CONSTRUCTION KEY NOTES:

1. FOR CONTINUATION OF ALL UTILITIES SEE CIVIL ENGINEERING DRAWINGS.
2. FOR CONTINUATION OF ALL UTILITIES SEE SHEET P1.1.
3. 2 1/2" MAKE-UP WATER WITH SELF-CONTAINTED SOLENOID CONTROL VALVE
4. XERXES CORPORATION MODEL ACR, 24" X 48" FIBERGLASS MANWAY RISER. WITH 32" DIA ACCESS OPENING WITH LID AND NSF-APPROVED FRP LADDER.
5. DOMESTIC WATER BOOSTER PUMP SKID.
6. 30" FRP RISER PIPE WITH HINGED AND LOCKABLE TOP AND GEL COAT AND 30" I.D. ACCESS OPENING WITH ALIGNMENT RING.
7. ANCHOR POINTS: PROVIDE W/ 1/2" DIA. HILTI KB-TZ, 4" EMBED. ICC ESR-1917 (TYP).
8. 2" RE-CIRCULATING WATER, TYPE 'K' COPPER TUBING WITH WROUGHT COPPER SWEAT FITTINGS, WITH RECIRC INJECTION MANIFOLD SyncroFlo. INSIDE TANK.
9. 4" TANK VENT, PVC DWV SCHEDULE 40 PIPE, ASTM D 1784 WITH SOLVENT CEMENT FITTINGS. SEE SHEET P1.1 & DETAIL NO. 3.
10. 4" OVERFLOW DRAIN FOR TANK, PVC DWV SCHEDULE 40 PIPE, ASTM D 1784 WITH SOLVENT CEMENT FITTINGS. SEE SHEET P1.1 & DETAIL NO. 3.
11. 4" TANK VENT & GOOSENECK DOWN @ + 18" ABOVE FINISH GRADE WITH INSECT SCREEN.
12. 4" OVERFLOW DRAIN FOR TANK & GOOSENECK DOWN @ + 18" ABOVE FINISH GRADE WITH INSECT SCREEN.
13. XERXES PRECAST DEADMAN SYSTEM WITH HOLD DOWN STRAP AND TURNBUCKLE ASSEMBLY (TYP).

DOMESTIC WATER BOOSTER PUMP AND STORAGE TANK DETAIL

SCALE: NONE

1

PBK
RANCHO CUCAMONGA
8163 ROCHESTER AVENUE, SUITE 100
RANCHO CUCAMONGA, CA 91730
909-987-0909 P

ONTARIO FIRE DEPARTMENT ADMINISTRATION BUILDING
CITY OF ONTARIO
1420 E. FRANCIS STREET., ONTARIO, CA

LICENSED ARCHITECT — KELLEY NEEDHAM, C-19064, Re-Inc 03/31/25 — STATE OF CALIFORNIA

REGISTERED PROFESSIONAL ENGINEER — ANDREW R. GRONNAY, No. M35839, Exp. 3/31/24, MECHANICAL — STATE OF CALIFORNIA

CONSULTANT
PDS
PocockDesignSolutions Inc.

NO	DATE	BY	DESCRIPTION

REVISIONS

DRAWN: RMZ	CHECKED:
DATE: 07/15/2022	SCALE:
PROJECT NUMBER: 2011700	

PLUMBING DETAIL

DRAWING NUMBER: P6.2

BID SET 03/01/24

GENERAL NOTES

1. THE CONTRACTOR SHALL SECURE AND PAY FOR PERMITS AND FEES NECESSARY FOR EXECUTION AND COMPLETION OF ELECTRICAL WORK, INCLUDING ALL CHARGES BY THE LOCAL GOVERNMENT AGENCIES.
2. ALL OUTLET LOCATIONS SHALL BE COORDINATED WITH ARCHITECTURAL ELEVATIONS PRIOR TO INSTALLATION.
3. THIS CONTRACTOR SHALL SUPPLY POWER TO AND MAKE CONNECTION TO ALL MOTORS AND EQUIPMENT REQUIRING ELECTRICAL CONNECTIONS AS SHOWN ON THE MECHANICAL AND PLUMBING DRAWINGS, INCLUDING ALL FRACTIONAL HORSEPOWER MOTORS. IT SHALL BE THE RESPONSIBILITY OF THE CONTRACTOR TO REVIEW THE MECHANICAL AND PLUMBING DRAWINGS FOR DUCTS, LINES AND EQUIPMENT.
4. SEE SINGLE LINE DIAGRAM FOR CONDUIT AND CONDUCTOR SIZES, PANELS, MECHANICAL EQUIPMENT, ETC. HOMERUNS TO PANELS MAY NOT BE SHOWN ON PLANS BUT ARE A PART OF THIS CONTRACT.
5. EXACT LOCATION OF ALL CEILING MOUNTED DEVICES SHALL BE AS INDICATED ON THE ARCHITECTURAL REFLECTED CEILING PLANS.
6. UNLESS OTHERWISE NOTED, OR REQUIRED BY ADA MOUNTING HEIGHTS INDICATED ON ELECTRICAL OUTLETS ARE FROM FINISHED FLOOR TO CENTER OF OUTLETS.
7. THE CONTRACTOR SHALL BE RESPONSIBLE FOR CUT-OUTS IN TILE OR COUNTER SPLASHES WHERE RECEPTACLES, OUTLETS, ETC., OCCUR.
8. ALL RECESSED DEVICES, ETC., MOUNTED IN FIRE RATED CEILING SHALL BE ENCLOSED WITH AN APPROVED ENCLOSURE CARRYING THE SAME FIRE RATING AS THE CEILING. THE CEILING.
9. ALL SURFACE MOUNTED LIGHTING FIXTURES SHALL BE APPROVED FOR DIRECT MOUNTING ON LOW DENSITY COMBUSTIBLE CEILINGS.
10. THE NUMERAL(S) SHOWN AT TOP LIGHT FIXTURE IDENTIFICATION SYMBOL WHICH INDICATES NUMBER OF LIGHT FIXTURES REQUIRED SHALL NOT BE USED BY THE CONTRACTOR FOR HIS QUANTITY TAKE-OFF AT BIDDING OR FOR DETERMINATION OF HOW MANY FIXTURES WILL BE INSTALLED. THE CONTRACTOR SHALL INSTALL A LIGHT FIXTURE WHEREVER A FIXTURE OUTLET IS SHOWN ON DRAWINGS.
11. NO CONDUIT SHALL BE RUN HORIZONTALLY IN CONCRETE FLOOR SLABS.
12. ALL WIRING AND ELECTRICAL EQUIPMENT INSTALLED FOR MECHANICAL AND PLUMBING EQUIPMENT SHALL BE IN ACCORDANCE WITH THESE DRAWINGS AND THE WIRING DIAGRAMS OF THE MECHANICAL AND PLUMBING DRAWINGS.
13. ALL FINAL CONNECTIONS TO OWNER-FURNISHED EQUIPMENT SHALL BE MADE BY THE CONTRACTORS.
14. EQUIPMENT ANCHORAGE

    THE SEISMIC ANCHORAGE OF ELECTRICAL EQUIPMENT SHALL CONFORM TO C.C.R. TITLE 24, 2019 CBC.
15. THE CONTRACTOR SHALL VISIT THE SITE INCLUDING SPECIFICALLY ALL AREAS INDICATED ON THE DRAWINGS. HE SHALL THOROUGHLY FAMILIARIZE HIMSELF WITH THESE EXISTING CONDITIONS AND BY SUBMITTING A BID ACCEPTS CONDITIONS UNDER WHICH HE WILL BE REQUIRED TO PERFORM HIS WORK.
16. IT SHALL BE THIS CONTRACTOR'S RESPONSIBILITY TO DO ALL CORING, CUTTING, PATCHING AND REFINISHING OF WALLS AND SURFACES WHEREVER IT IS NECESSARY FOR HIM TO PENETRATE FOR HIS WORK. ALL OPENINGS MADE SHALL BE SEALED TO MEET THE RATED INTEGRITY OF THE PARTICULAR WALL, FLOOR OR CEILING.
17. ATTENTION IS CALLED TO THE FACT THAT THE CEILING SYSTEMS FOR THE MOST PART ARE CONSIDERED TO BE INACCESSIBLE. THE CONTRACTOR SHALL STRATEGICALLY LOCATE BOXES, ETC., IN AN ACCESSIBLE CEILING SPACE.
18. WHERE EXPOSED CONDUIT IS PERMITTED BY THE ARCHITECT, SUCH CONDUIT SHALL BE PAINTED TO MATCH FINISH OF SURFACE TO WHICH IT IS ATTACHED/SUPPORTED TO.
19. INSTALL RACEWAY SYSTEMS AS FOLLOWS:
    A. RIGID GALVANIZED STEEL IN ALL OUTDOOR LOCATIONS AND IN INDOOR LOCATIONS WHERE SUBJECT TO PHYSICAL DAMAGE.
    B. I.M.C. OR E.M.T. IN ALL INDOOR AREAS.
    C. FLEXIBLE METAL CONDUIT TO LIGHT FIXTURES, MOTORS AND VIBRATING ELECTRICAL EQUIPMENT IN A WHIP 6' OR LESS APPLICATION ONLY. NO RUNS ANYWHERE INCLUDING GOOD FRAMING. ANY WEARYING FROM THAT SHOULD REQUIRE AN APPROVAL FROM BUILDINGS.
    D. PVC CONDUIT FOR UNDERGROUND RUNS. USE 20 MIL PVC TAPED RIGID STEEL RISER ELBOWS AND RISERS FOR CONDUIT STUB-UPS.
    E. USE COMPRESSION TYPE FITTINGS FOR ALL METALLIC CONDUIT.
    F. 1" CONDUIT MINIMUM FOR UNDERGROUND INSTALLATIONS. 3/4" MIN. ABOVE GROUND.
    G. NO MC CABLE ALLOWED.
20. CONDUIT ROUTING INDICATED ON THESE PLANS IS DIAGRAMMATIC. ACTUAL ROUTING OF CONDUITS SHALL BE COORDINATED IN THE FIELD TO AVOID INTERFERENCE WITH OTHER UTILITIES AND TRADES. THE CONTRACTOR SHALL INSTALL ALL CONDUIT, JUNCTION/PULL BOXES, ETC., AS REQUIRED FOR A COMPLETE SYSTEM IN FULL COMPLIANCE WITH ALL APPLICABLE CODES.
21. ALL EXTERIOR MOUNTED EQUIPMENT SHALL BE WEATHERPROOF OR PROVIDED IN A WEATHERPROOF ENCLOSURE.
22. ALL POWER AND LIGHTING BRANCH CIRCUITS SHALL BE INSTALLED WITH A #12 GREEN GROUND WIRE U.O.N. THE COMPLETE ELECTRICAL SYSTEM SHALL BE GROUNDED IN ACCORDANCE WITH ARTICLE 250 OF THE CALIFORNIA ELECTRICAL CODE (CEC).
23. IDENTIFICATION NAME PLATES FOR BRANCH CIRCUIT PANELS SHALL MATCH THE NOMENCLATURE PROVIDED BY THE OWNER AT THE END OF THE CONTRACT.
24. UNLESS SPECIFICALLY SHOWN ON THESE PLANS NO STRUCTURAL MEMBER SHALL BE CUT, DRILLED, NOR NOTCHED WITHOUT PRIOR WRITTEN AUTHORIZATION FROM THE STRUCTURAL ENGINEER.
25. ALL ELECTRICAL EQUIPMENT SHALL BE LISTED AND LABELED FOR THEIR USE.
26. WHERE MORE THAN ONE NOMINAL VOLTAGE SYSTEM EXISTS IN A BUILDING, EACH UNDERGROUND SYSTEM CONDUCTOR SHALL BE IDENTIFIED BY PHASE AND SYSTEM. THE MEANS OF IDENTIFICATION SHALL BE PERMANENTLY POSTED AT EACH BRANCH CIRCUIT PANELBOARD. THE PHASE COLOR CODING OF THE INSULATION OF CONDUCTORS SHALL BE: A) BROWN-ORANGE-YELLOW FOR 480/277I-VOLTS. B) BLACK-RED-BLUE FOR 208/120-VOLTS.
27. PROVIDE THE SHORT CIRCUIT CURRENT RATING OF THE ELECTRICAL SERVICE IN A LETTER FROM SCE. THE PANELBOARD(S) AND/OR CIRCUIT BREAKERS SHALL MEET OR EXCEED THE S.C.C RATING. A POINT-TO-POINT GROUND-FAULT AND SHORT-CIRCUIT CALCULATIONS MAY BE REQUIRED TO SUBSTANTIATE THE RATINGS OF THE ELECTRICAL EQUIPMENT.
28. ALL CONTROLS AND SWITCHES INTENDED TO BE USED BY THE OCCUPANT OF THE ROOM OR AREA TO CONTROL LIGHTING AND RECEPTACLE OUTLETS, APPLIANCES OR COOLING, HEATING AND VENTILATING EQUIPMENT, SHALL LOCATED NO MORE THAN 48 INCHES MEASURED FROM THE TOP OF THE JUNCTION OR DEVICE BOX NOR LESS THAN 15 INCHES MEASURED TO THE BOTTOM OF THE JUNCTION OR DEVICE BOX ABOVE THE FINISHED FLOOR.
29. ALL RECEPTACLES OUTLETS ON BRANCH CIRCUITS OF 30-AMPERES OR LESS AND COMMUNICATION SYSTEM RECEPTACLES SHALL BE LOCATED NO MORE THAN 48 INCHES MEASURED FROM THE TOP OF THE RECEPTACLE OUTLET BOX OR RECEPTACLE HOUSING NOR LESS THAN 15 INCHES MEASURED TO THE BOTTOM OF THE RECEPTACLE OUTLET BOX OR RECEPTACLE HOUSING ABOVE THE FINISHED FLOOR.
30. LIGHTING FIXTURES INSTALLED IN A SUSPENDED CEILING SHALL BE FASTENED TO THE CEILING FRAMING MEMBER AT ALL FOUR CORNERS WITH SCREWS AND ATTACHED #12 CEILING WIRES TO THE LIGHT FIXTURE AT DIAGONALLY OPPOSITE CORNERS AND TO THE STRUCTURAL CEILING.
31. ALL CONDUCTOR TO BE COPPER, TYPE THWN/THHN OR XHHW (75/90 DEGREES C).
32. ALL EQUIPMENT TO BE U.L. LISTED OR EQUIVALENT.
33. PROVIDE ACCESS PANELS.
34. EMERGENCY LIGHTING FACILITIES SHALL BE ARRANGED TO PROVIDE INITIAL ILLUMINATION THAT IS AT LEAST AN AVERAGE OF 1 FOOTCANDLE (11 LUX) AND A MINIMUM AT ANY POINT OF 0.1 FOOT CANDLE (1 LUX) MEASURED ALONG THE PATH OF EGRESS AT FLOOR LEVEL. ILLUMINATION LEVELS SHALL BE PERMITTED TO DECLINE TO 0.6 FOOT CANDLE (6 LUX) AVERAGE AND A MINIMUM AT ANY POINT OF 0.06 FOOT CANDLE (0.6 LUX) AT THE END OF THE EMERGENCY LIGHTING TIME DURATION. A MAXIMUM-TO-MINIMUM ILLUMINATION UNIFORMITY RATIO OF 40 TO 1 SHALL NOT BE EXCEEDED. SECTION 1006.3.1 CFC
35. THE MEANS OF EGRESS ILLUMINATION LEVEL SHALL NOT BE LESS THAN 1 FOOT-CANDLE (11 LUX) AT THE WALKING SURFACE LEVEL. IN THE EVENT OF POWER SUPPLY FAILURE, AN EMERGENCY ELECTRICAL SYSTEM SHALL AUTOMATICALLY ILLUMINATE THE FOLLOWING AREAS:
    A. AISLES AND UNENCLOSED EGRESS STAIRWAYS IN ROOMS AND SPACES THAT REQUIRE TWO OR MORE MEAN OF EGRESS.
    B. CORRIDORS, EXIT ENCLOSURES AND EXIT PASSAGEWAYS IN BUILDINGS REQUIRED TO HAVE TWO OR MORE EXITS.
    C. EXTERIOR EGRESS COMPONENTS AT OTHER THAN THE LEVEL OF EXIT DISCHARGE UNTIL EXIT DISCHARGE IS ACCOMPLISHED FOR BUILDINGS REQUIRED TO HAVE TWO OR MORE EXITS.
    D. INTERIOR EXIT DISCHARGE ELEMENTS, AS PERMITTED IN SECTION 1024.1, IN BUILDINGS REQUIRED TO HAVE TWO OR MORE EXITS.
    E. EXTERIOR LANDINGS, AS REQUIRED BY SECTION 1008.1.5, FOR EXIT DISCHARGE DOORWAYS IN BUILDINGS REQUIRED TO HAVE TWO OR MORE EXITS.
    F. THE EMERGENCY POWER SYSTEM SHALL PROVIDE POWER FOR DURATION OF NOT LESS THAN 90 MINUTES AND SHALL CONSIST OF STORAGE BATTERIES, UNIT EQUIPMENT OR AN ON-SITE GENERATOR. THE INSTALLATION OF THE EMERGENCY POWER SYSTEM SHALL BE IN ACCORDANCE WITH SECTION 2702.
36. LIGHTING AT EXTERIOR DOORWAYS SHALL BE MAINTAINED AT A MINIMUM OF 1 FOOT CANDLE AT GROUND WITH VANDAL PROOF LENSES.
37. ELECTRIC CIRCUITS SERVING CONTROLLED RECEPTACLES SHALL BE EQUIPPED WITH AUTOMATIC SHUT-OFF CONTROLS FOLLOWING THE REQUIREMENTS PRESCRIBED IN SECTION 130.1(c)1 THROUGH 5), AND AT LEAST ONE CONTROLLED RECEPTACLE TO BE INSTALLED WITHIN 6 FEET FROM EACH UNCONTROLLED RECEPTACLE OR A SPLIT WIRED DUPLEX RECEPTACLE WITH ONE CONTROLLED AND ONE UNCONTROLLED RECEPTACLE SHALL BE INSTALLED, AND CONTROLLED RECEPTACLES SHALL HAVE A PERMANENT MARKING TO DIFFERENTIATE THEM FROM UNCONTROLLED RECEPTACLES, AND FOR OPEN OFFICE AREAS, CONTROLLED CIRCUITS SHALL BE PROVIDED AND MARKED TO SUPPORT INSTALLATION AND CONFIGURATION OF OFFICE FURNITURE WITH RECEPTACLES THAT COMPLY WITH SECTION 130.5(d)1, 2, AND 3.
38. CONTRACTOR TO PROVIDE ENGRAVED LABELING AT EACH RECEPTACLE, DATA OUTLET, JUNCTION BOX, DISCONNECT SWITCH, ECT. DISPLAYING THE IDF OR PANEL (WITH CIRCUIT) FEEDING THE DATA OUTLET, RECEPTACLE, JUNCTION BOX, DISCONNECT SWITCH, ECT.

REFERENCES & ABBREVIATIONS

	DETAIL REFERENCE	MCB	MAIN CIRCUIT BREAKER
1	KEYNOTE REFERENCE	FLA	FULL LOAD AMPS
A.F.F.	ABOVE FINISH FLOOR	C.	CONDUIT
U.O.N.	UNLESS OTHERWISE NOTED	V.	VOLTS
C.O.	CONDUIT ONLY W/PULL ROPE	A	AMPS
WP	WEATHER PROOF	GFI	GROUND FAULT INTERRUPTER
CU.	COPPER	GND	GROUND
M.L.O.	MAIN LUGS ONLY	V.L.	VERIFY LOCATION
E or (E)	EXISTING TO REMAIN	A.C.	ABOVE COUNTER
		N.L.	NIGHT LIGHT
		EM.	EMERGENCY

APPLICABLE CODES

ALL WORK SHALL BE PERFORMED IN ACCORDANCE WITH ALL APPLICABLE LAWS AND REGULATIONS, AND THE REQUIREMENTS OF THE CALIFORNIA CODE OF REGULATIONS (C.C.R.), TITLE 24, INCLUSIVE OF:

2019 CALIFORNIA ADMINISTRATIVE CODE (CAC), PART 1, TITLE 24 C.C.R.

2019 CALIFORNIA BUILDING CODE (CBC), PART 2, TITLE 24 C.C.R. (2018 INTERNATIONAL BUILDING CODE, VOL. 1 & 2, AND 2019 CALIFORNIA AMENDMENTS)

2019 CALIFORNIA ELECTRICAL CODE (CEC), PART 3, TITLE 24 C.C.R. (2017 NATIONAL ELECTRICAL CODE AND 2019 CALIFORNIA AMENDMENTS)

2019 CALIFORNIA ENERGY CODE (CEC), PART 6, TITLE 24 C.C.R.

2019 CALIFORNIA FIRE CODE (CFC), PART 9, TITLE 24 C.C.R. (2018 INTERNATIONAL FIRE CODE AND 2019 CALIFORNIA AMENDMENTS)

2019 CALIFORNIA GREEN BUILDING STANDARDS CODE (CALGREEN), PART 11, TITLE 24 C.C.R.

2019 CALIFORNIA REFERENCED STANDARDS CODE, PART 12, TITLE 24 C.C.R.

TITLE 19 C.C.R. PUBLIC SAFETY, STATE FIRE MARSHAL REGULATIONS

2013 ASME A17.1/CSA B44-13 SAFETY CODE FOR ELEVATORS AND ESCALATOR

NFPA 72 - NATIONAL FIRE ALARM AND SIGNALING CODE (CA AMENDED) 2016 ED.

NFPA 80 - STANDARD FOR FIRE DOORS AND OTHER OPENING PROTECTIVES 2016 ED.

APPLICABLE REQUIREMENTS OF THE SOUTH COAST AIR QUALITY MANAGEMENT DISTRICT (SCAQMD).

FIRE ALARM DEFERRED APPROVAL NOTE

THE FIRE ALARM SYSTEM IS A DEFERRED APPROVAL ITEM AND THE SOLE RESPONSIBILITY OF THE CONTRACTOR TO SUBMIT PLANS, EQUIPMENT DATA SHEETS/LISTINGS, WIRING DIAGRAMS AND CALCULATIONS TO THE CITY OF ORANGE FIRE DEPARTMENT FOR REVIEW AND APPROVAL. THE CONTRACTOR SHALL OBTAIN APPROVAL FROM THE CITY OF ORANGE FIRE DEPARTMENT PRIOR TO INSTALLING THE FIRE ALARM SYSTEM COMPONENTS.

FIRE ALARM SYSTEM DEVICES AND COMPONENTS INDICATED ON THE DRAWINGS ARE THE MINIMUM REQUIREMENTS, THE CONTRACTOR SHALL BE RESPONSIBLE FOR PROVIDING THE QUANTITY AND TYPE OF DEVICES REQUIRED BY THE CITY OF ORANGE FIRE DEPARTMENT AT NO ADDITIONAL COST TO THE CONTRACT.

THE FIRE ALARM SYSTEM DRAWINGS SHALL BEAR THE STAMP AND SIGNATURE OF A STATE OF CALIFORNIA PROFESSIONAL ELECTRICAL ENGINEER.

SYMBOL LIST

- CONDUIT RUN, CONCEALED IN CEILING, WALLS OR UNDER FLOOR 3/4" MIN.
- CONDUIT RUN, UNDERGROUND.
- CONDUIT STUBBED OUT AND CAPPED. PULL LINE IN PLACE.
- FLEXIBLE CONDUIT. SEALTITE WHERE EXPOSED TO WEATHER. REFER TO SPECIFICATIONS FOR USE.
- CONDUIT TURNED DOWN.
- CONDUIT TURNED UP.
- #10 — CROSS LINES ON CONDUIT RUNS INDICATE NUMBER OF #12 WIRES CONTAINED THEREIN. TWO #12 ARE TO BE PROVIDED WHEN CROSS LINES ARE NOT SHOWN. NUMERALS ADJACENT TO CROSS LINES ON CONDUIT RUNS INDICATE SIZE OF CONDUCTORS IN LIEU OF #12. PROVIDE CONDUIT SIZE AS REQUIRED TO ACCOMMODATE THE WIRE SIZE TO BE CONTAINED THEREIN.
- B-1,3 — CONDUIT HOME RUN TO PANELBOARD. LETTER AND NUMERALS INDICATES ELECTRICAL PANEL AND CIRCUIT NUMBER.
- CAT 5 CABLE IN DEDICATED CONDUIT.
- DW — 3/4"C. WITH 2/C#18 CLASS 2 DATA WIRE PER SWITCH LEG (DIMMING CONTROLS). QUANTITY OF CROSS TICKS REPRESENT QUANTITY OF SWITCH LEGS WITHIN CONDUIT.
- RECESSED MOUNTED BRANCH CIRCUIT PANEL. OUTDOOR TO BE NEMA 3R.
- SURFACE MOUNTED BRANCH CIRCUIT PANEL. OUTDOOR TO BE NEMA 3R.
- MOLDED CASE CIRCUIT BREAKER (SINGLE LINE DIAGRAM).
- AT — CIRCUIT BREAKER AMPERE TRIP RATING (SINGLE LINE DIAGRAM).
- GROUND.
- M — UTILITY METER AND SOCKET (SINGLE LINE DIAGRAM).
- WP — WEATHERPROOF.
- F — DUPLEX GROUNDING RECEPTACLE FLUSH IN FLOOR. PROVIDE COMPLETE WITH FULLY ADJUSTABLE 1-GANG FLOOR BOX, COLLAR ASSEMBLY, CARPET FLANGE AND BRASS COVERS. WIREMOLD OPNIBOX 880 SERIES OR APPROVED EQUAL.
- DUPLEX RECEPTACLE, FLUSH IN WALL, GROUNDING TYPE (20 AMP, 120V, WALL PLATE TO MATCH DEVICE) MTD. AT +18".
- DUPLEX RECEPTACLE, FLUSH IN WALL (20 AMP, 120 V, WALL PLATE TO MATCH DEVICE) MTD. AT +18".
- GFI — DUPLEX RECEPTACLE, WITH GROUND FAULT INTERRUPTER (20 AMP, 120V, 3W, WALL PLATE TO MATCH DEVICE) MTD. AT +18".
- SPECIALTY RECEPTACLE/OUTLET. COORDINATE EXACT REQUIREMENTS WITH EQUIPMENT VENDOR/SUPPLIER. WHERE A RECEPTACLE IS REQUIRED PROVIDE COMPLETE WITH STAINLESS STEEL WALL PLATE AND VOLTAGE, AMPERE RATING AND CONFIGURATION TO MATCH VENDOR SUPPLIED PLUG. WHERE HARD WIRED CONNECTION IS REQUIRED PROVIDE STAINLESS STEEL WALL PLATE WITH GROMMETT AND SEAL-TITEFLEXIBLE CONDUIT AND CONDUCTORS FOR FINAL CONNECTION TO THE VENDOR SUPPLIED EQUIPMENT. MTD. AT +18".
- HALF SWITCHED DUPLEX RECEPTACLE, FLUSH IN WALL, GROUNDING TYPE (20 AMP, 120V, WALL PLATE TO MATCH DEVICE) MTD. AT +18".
- FLUSH FLOOR MOUNTED DOUBLE DUPLEX RECEPTACLE.
- U E / U F — COMBINATION USB AND DUPLEX RECEPTACLE, FLUSH IN WALL, GROUNDING TYPE (20 AMP, 120V, WALL PLATE TO MATCH DEVICE) MTD. AT +18". F= FLUSH FLOOR MOUNTED IN FLOOR BOX.
- DUPLEX RECEPTACLE GROUNDING TYPE (20AMP, 120V.), FLUSH IN WALL, WITH 4" SQUARE BACK BOX, 1-GANG PLASTER RING AND WALL PLATE TO MATCH DEVICE. MTD. AT +18". CONNECTED TO EMERGENCY CIRCUIT.
- DOUBLE DUPLEX (QUAD) RECEPTACLE, FLUSH IN WALL, WITH 4" SQUARE BACK BOX, 2-GANG PLASTER RING AND WALL PLATE TO MATCH THE DEVICE. MTD. AT +18". CONNECTED TO EMERGENCY CIRCUIT.
- SPECIALTY RECEPTACLE/OUTLET. COORDINATE EXACT REQUIREMENTS WITH EQUIPMENT VENDOR SUPPLIER. WHERE A RECEPTACLE IS REQUIRED PROVIDE COMPLETE WITH STAINLESS STEEL WALL PLATE AND VOLTAGE, AMPERE RATING AND CONFIGURATION TO MATCH VENDOR SUPPLIED PLUG. WHERE HARD WIRED CONNECTION IS REQUIRED PROVIDE STAINLESS STEEL WALL PLATE WITH GROMMETT AND SEAL-TITEFLEXIBLE CONDUIT AND CONDUCTORS FOR FINAL CONNECTION TO THE VENDOR SUPPLIED EQUIPMENT. MTD. AT +18". CONNECTED TO EMERGENCY CIRCUIT.
- 2/0 F — COMBINATION (POWER / DATA) CAST IRON FLOOR BOX. PROVIDE COMPLETE WITH 2-GANG PLASTER RING, FULLY ADJUSTABLE FLOOR BOX, COLLAR ASSEMBLY, FACE PLATE AND CARPET FLANGE. LEGRAND RFB4-CI-1 OR APPROVED EQUAL. FOR DATA OUTLET, FIRST NUMERAL INDICATES QUANTITY OF "CAT 6" DATA CABLE DROPS TO BE PROVIDED AND TERMINATED. SECOND NUMERAL INDICATES QUANTITY OF "CAT 6" VOICE CABLE DROPS TO BE PROVIDED AND TERMINATED.
- H-0-A — COMBINATION FUSED DISCONNECT SWITCH AND MAGNETIC MOTOR STARTER. ROMAN NUMERAL INDICATES THE STARTER SIZE. H-O-A INDICATES DOOR MOUNTED HAND-OFF-AUTO SELECTOR SWITCH. FUSES AND OVERLOADS SHALL BE SIZED PER THE EQUIPMENT NAME PLATE.
- _AS/_P — DISCONNECT SWITCH. HEAVY DUTY TYPE WITH REQUIRED. AS=SWITCH AMPERE RATING. P=NUMBER OF POLES.
- 2/0 — DATA OUTLET WITH OPEN-BACKED 4" SQUARE BACKBOX AND (1) 3/4"C. STUB-UP INTO THE ACCESSIBLE CEILING. MOUNTED AT +18" A.F.F.-U.O.N. W=48" A.F.F. FIRST NUMERAL INDICATES QUANTITY OF "CAT 6" DATA CABLE DROPS TO BE PROVIDED AND TERMINATED. SECOND NUMERAL INDICATES QUANTITY OF "CAT 6" VOICE CABLE DROPS TO BE PROVIDED AND TERMINATED. THIRD NUMERAL INDICATES QUANTITY OF BLANK POSITIONS TO BE PROVIDED ON THE WALL PLATE. QUANTITY OF "RJ45" CONNECTORS TO BE PROVIDED SHALL MATCH THE QUANTITY OF CABLE DROPS.
- F — COMBINATION TELEPHONE/DATA OUTLET FLUSH IN FLOOR. PROVIDE COMPLETE WITH FULLY ADJUSTABLE 2-GANG FLOOR BOX, COLLAR ASSEMBLY, CARPET FLANGE AND BRASS COVERS. WIREMOLD OMNIBOX 880 SERIES OR APPROVED EQUAL. ROUTE AND TERMINATE TWO (2) "CAT 6" DATA CABLES AND ONE (1) "CAT 3" TELEPHONE CABLE. QUANTITY OF CONNECTORS TO MATCH QUANTITY OF CABLES.
- CLOSED CIRCUIT TV SYSTEM CAMERA.
- T — THERMOSTAT. MOUNTED AT +48" A.F.F. TO TOP OF BOX. SEE MECHANICAL.
- TELEPHONE OUTLET COMPLETE WITH 4" SQUARE BACKBOX AND 3/4"C. STUB-UP INTRO CEILING SPACE. MOUNTED AT +18" A.F.F. U.O.N. W=48" A.F.F.
- W — TELEPHONE OUTLET. 4" SQ. BOX WITH 1 GANG FRAME AND 1"C. STUB UP INTO ACCESSIBLE CEILING. MOUNT AT +18" A.F.F.. W = WALL MOUNTED AT +48" A.F.F.
- F — AUDIO VISUAL OUTLET FLUSH IN FLOOR. PROVIDE COMPLETE ADJUSTABLE 2-GANG FLOOR BOX, COLLAR ASSEMBLY, CARPET FLANGE AND BRASS COVERS. WIREMOLD OMNIBOX 880 SERIES OR APPROVED EQUAL. REFER TO PLANS FOR CONDUIT AND CABLE REQUIREMENTS.
- F — TELEPHONE OUTLET FLUSH IN FLOOR. PROVIDE COMPLETE WITH FULLY ADJUSTABLE 2-GANG FLOOR BOX, COLLAR ASSEMBLY, CARPET FLANGE AND BRASS COVERS. WIREMOLD OMNIBOX 880 SERIES OR APPROVED EQUAL. ROUTE CAT 6 CABLE BACK TO IDF.
- TS — FIRE ALARM TAMPER SWITCH.
- FS — FIRE ALARM FLOW SWITCH.
- PIV — POST INDICATOR VALVE
- K — SECURITY KEY PAD IDENTIFICATION SYMBOL.
- CR — DOOR ACCESS PROXIMITY CARD READER. SEMI-FLUSH IN WALL WITH 4" SQUARE BACK-BOX, 1-GANG PLASTER RING AND 3/4" CONDUIT STUB-UP INTO ACCESSIBLE CEILING SPACE. WALL PLATE AND DEVICE TO BE PROVIDED AND INSTALLED BY OTHERS. MOUNTED AT +48". PROVIDED AND INSTALLED BY OTHERS. MOUNTED AT +48".
- SECURITY DOOR CONTACT IDENTIFICATION SYMBOL.
- CLOCK IDENTIFICATION SYMBOL.
- AC 1 — HVAC EQUIPMENT DESIGNATION. SEE MECHANICAL PLANS.
- JUNCTION BOX.
- LED STRIP LIGHT FIXTURES. SHADING INDICATES FIXTURE WITH EMERGENCY BATTERY PACK.
- POLE MOUNTED AREA LIGHTING FIXTURE
- LED LIGHT FIXTURE. SHADING INDICATES FIXTURE TO BE PROVIDED WITH EMERGENCY BATTERY PACK.
- 2X2 LED LIGHT FIXTURE. SHADING INDICATES FIXTURE TO BE PROVIDED WITH 90 MINUTE EMERGENCY BATTERY PACK.
- WALL MOUNTED LED SCONCE FIXTURE. SHADING INDICATES FIXTURE TO BE PROVIDED WITH EMERGENCY BATTERY PACK.
- CEILING MOUNTED PENDANT FIXTURE. SHADING INDICATES FIXTURE WITH EMERGENCY BATTERY PACK.
- WALL MOUNTED LINEAR STRIP FIXTURE.
- SLOT RECESSED LED FIXTURE
- SPECIALTY LIGHTING REFER TO FIXTURE SCHEDULE.
- BOLLARD LED FIXTURE
- EC — LED LIGHT FIXTURE. EC AND SHADING INDICATES FIXTURE TO BE CONNECTED TO THE ALERTING SYSTEM.
- AUTOMATIC LIGHTING CONTROL SYSTEM OCCUPANT SENSOR. CEILING MOUNTED.
- AUTOMATIC LIGHTING CONTROL SYSTEM DAYLIGHT SENSOR. CEILING MOUNTED.
- WALL MOUNTED LIGHT FIXTURE. SHADING INDICATES FIXTURE WITH EMERGENCY BATTERY PACK.
- CEILING OR PENDANT MOUNTED LIGHT FIXTURE. SHADING INDICATES LIGHT FIXTURE WITH EMERGENCY BATTERY PACK.
- LV-# — BUILDING LIGHTING SHUT-OFF CONTROL SYSTEM LOW VOLTAGE BY-PASS SWITCH. NUMERAL INDICATES THE ZONE CONTROLLED.
- CEILING / WALL-SWITCH — DUAL TECHNOLOGY OCCUPANT SENSOR WITH 2,000 SQUARE FOOT COVERAGE. COORDINATE EXACT LOCATION IN THE FIELD WITH THE SENSOR MANUFACTURER TO ENSURE OPTIMUM SENSOR OPERATION COVERAGE TO BE DETERMINED BY THE SENSOR APPLICATION INDICATED ON PLAN. PROVIDE SLAVE-PACK WHERE TWO CIRCUITS ARE TO BE CONTROLLED. PROVIDE TWO-CIRCUIT (2p) TYPE WALL-SWITCH TYPE SENSOR WHERE INDICATED ON PLAN. WALL SWITCH SENSOR SHALL BE WATT-STOPPER #WI-200 COLOR AS SELECTED BY THE ARCHITECT. CEILING SENSOR SHALL BE WATT-STOPPER #DT-355.
- EXIT SIGN.
- ROLL-UP DOOR LOCAL CONTROL
- SD — SMOKE DETECTOR AND LOW FREQUENCY SOUNDER.
- C/O — COMBINATION SMOKE DETECTOR AND CARBON MONOXIDE DETECTOR.
- REX — REQUEST TO EXIT MOTION SENSOR. REFER TO VOLTAGE SPECIALIST ACCESS CONTROL PLANS FOR REQUIREMENTS.
- TV — TV SYSTEM WALL-TAP WITH 4" SQUARE BACKBOX AND 3/4" CONDUIT STUB-UP INTO CEILING SPACE.
- WAP — WIRELESS ACCESS POINT
- A — AQUA STAT
- TC — TIME CLOCK
- AV — AUDIO VISUAL OUTPUT FOR GEST ELECTRONIC DEVICES.
- $m — MANUAL MOTOR STARTER WITH THERMAL OVERLOAD. RATING AND NUMBER OF POLES PER THE EQUIPMENT NAMEPLATE DATA.
- 3 A +20'-0" — LIGHTING FIXTURE IDENTIFICATION SYMBOL. LETTER INDICATES TYPE OF FIXTURE. NUMERAL AT TOP OF HEXAGON INDICATES NUMBER OF FIXTURES REQUIRED. NUMBER AT BOTTOM OF HEXAGON INDICATES MOUNTING HEIGHT FROM FLOOR TO BOTTOM OF FIXTURE. OMISSION OF MOUNTING HEIGHT INDICATES CEILING MOUNTING.
- $a3 — SINGLE POLE SWITCH. LETTER AT BOTTOM INDICATES OUTLETS CONTROLLED. MOUNTED AT +48" TO TOP OF THE BOX. STAINLESS STEEL WALL PLATE. SUPERSCRIPT DENOTES:
  - 2 - DOUBLE POLE
  - 3 - THREE WAY
  - 4 - FOUR WAY
  - P - PILOT LIGHT
  - K - KEY OPERATED
  - T - TIMER
- ELECTRICAL NOTE CALLOUT.
- X E4X — ELECTRICAL DETAIL CALLOUT.
- SFD — SMOKE FIRE DAMPER. SEE MECHANICAL.
- V.cd — FIRE ALARM STROBE. cd = STROBE CANDELA RATING. C=CEILING MOUNTED.
- SD — FIRE ALARM SMOKE DETECTOR.
- HD — FIRE ALARM HEAT DETECTOR.
- GAP — GENERATOR REMOTE ALARM PANEL
- FC — FAN CONTROLLER
- VFD — VARIABLE FREQUENCY DRIVE. COORDINATE WITH MECHANICAL DRAWINGS FOR EXACT OPTIONS / FUNCTIONALITY TO BE PROVIDED.

PBK
RANCHO CUCAMONGA
8163 ROCHESTER AVENUE, SUITE 100
RANCHO CUCAMONGA, CA 91730
909-987-0909 P

ONTARIO FIRE DEPARTMENT ADMINISTRATION BUILDING
CITY OF ONTARIO
1420 E. FRANCIS STREET., ONTARIO, CA

LICENSED ARCHITECT — KELLEY NEEDHAM C-19064 — 8/31/23 — STATE OF CALIFORNIA
REGISTERED PROFESSIONAL ENGINEER — RICHARD E. SPENCER — No. E17229 — 8/30/24 — STATE OF CALIFORNIA

CONSULTANT
A&F ENGINEERING GROUP, INC.
9320 BASELINE RD., SUITE C, RANCHO CUCAMONGA, CA 91701
TEL: (909) 941-3008 FAX: (909) 941-8211

NO	DATE	BY	DESCRIPTION

REVISIONS

DRAWN: CBF	CHECKED: RES
DATE: 07/15/2022	SCALE: AS NOTED
PROJECT NUMBER: 2011700	

GENERAL NOTES & SYMBOLS LIST

DRAWING NUMBER: E0.1

BID SET 03/01/24

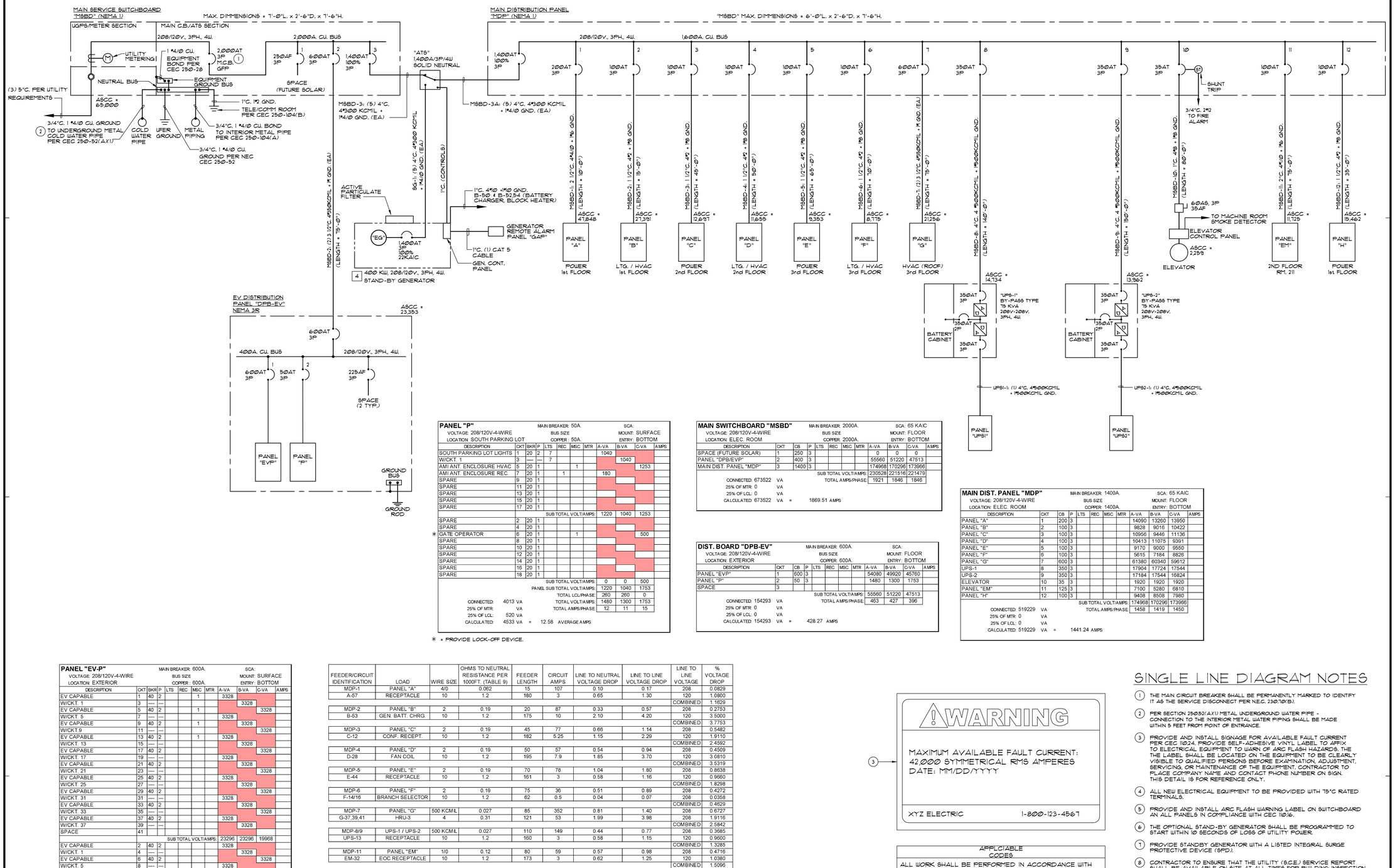

PANEL "P"
VOLTAGE: 208/120V-4-WIRE
LOCATION: SOUTH PARKING LOT
MAIN BREAKER: 50A.
BUS SIZE COPPER: 50A.
SCA:
MOUNT: SURFACE
ENTRY: BOTTOM

DESCRIPTION	CKT	BKR	P	LTS	REC	MSC	MTR	A-VA	B-VA	C-VA	AMPS
SOUTH PARKING LOT LIGHTS	1	20	2	7				1040			
W/CKT. 1	3	---	---	7					1040		
AMI ANT. ENCLOSURE HVAC	5	20	1			1				1253	
AMI ANT. ENCLOSURE REC.	7	20	1		1			180			
SPARE	9	20	1								
SPARE	11	20	1								
SPARE	13	20	1								
SPARE	15	20	1								
SPARE	17	20	1								
SUB TOTAL VOLT/AMPS:								1220	1040	1253	
SPARE	2	20	1								
SPARE	4	20	1								
* GATE OPERATOR	6	20	1			1				500	
SPARE	8	20	1								
SPARE	10	20	1								
SPARE	12	20	1								
SPARE	14	20	1								
SPARE	16	20	1								
SPARE	18	20	1								
SUB TOTAL VOLT/AMPS:								0	0	500	
PANEL SUB TOTAL VOLT/AMPS:								1220	1040	1753	
TOTAL LCL/PHASE:								260	260	0	
TOTAL VOLT/AMPS:								1480	1300	1753	
TOTAL AMPS/PHASE:								12	11	15	

CONNECTED: 4013 VA
25% OF MTR: VA
25% OF LCL: 520 VA
CALCULATED: 4533 VA = 12.58 AVERAGE AMPS

* = PROVIDE LOCK-OFF DEVICE.

MAIN SWITCHBOARD "MSBD"
VOLTAGE: 208/120V-4-WIRE
LOCATION: ELEC. ROOM
MAIN BREAKER: 2000A.
BUS SIZE COPPER: 2000A.
SCA: 65 KAIC
MOUNT: FLOOR
ENTRY: BOTTOM

DESCRIPTION	CKT	CB	P	LTS	REC	MSC	MTR	A-VA	B-VA	C-VA	AMPS
SPACE (FUTURE SOLAR)	1	250	3					0	0	0	
PANEL "DPB/EVP"	2	400	3					55560	51220	47513	
MAIN DIST. PANEL "MDP"	3	1400	3					174968	170296	173966	
SUB TOTAL VOLT/AMPS:								230528	221516	221479	
TOTAL AMPS/PHASE:								1921	1846	1846	

CONNECTED: 673522 VA
25% OF MTR: 0 VA
25% OF LCL: 0 VA
CALCULATED: 673522 VA = 1869.51 AMPS

DIST. BOARD "DPB-EV"
VOLTAGE: 208/120V-4-WIRE
LOCATION: EXTERIOR
MAIN BREAKER: 600A.
BUS SIZE COPPER: 600A.
SCA:
MOUNT: FLOOR
ENTRY: BOTTOM

DESCRIPTION	CKT	CB	P	LTS	REC	MSC	MTR	A-VA	B-VA	C-VA	AMPS
PANEL "EVP"	1	600	3					54080	49920	45760	
PANEL "P"	2	50	3					1480	1300	1753	
SPACE	3										
SUB TOTAL VOLT/AMPS:								55560	51220	47513	
TOTAL AMPS/PHASE:								463	427	396	

CONNECTED: 154293 VA
25% OF MTR: 0 VA
25% OF LCL: 0 VA
CALCULATED: 154293 VA = 428.27 AMPS

MAIN DIST. PANEL "MDP"
VOLTAGE: 208/120V-4-WIRE
LOCATION: ELEC. ROOM
MAIN BREAKER: 1400A.
BUS SIZE COPPER: 1400A.
SCA: 65 KAIC
MOUNT: FLOOR
ENTRY: BOTTOM

DESCRIPTION	CKT	CB	P	LTS	REC	MSC	MTR	A-VA	B-VA	C-VA	AMPS
PANEL "A"	1	200	3					14090	13260	13950	
PANEL "B"	2	100	3					9828	9016	10422	
PANEL "C"	3	100	3					10956	9446	11136	
PANEL "D"	4	100	3					10413	11075	9391	
PANEL "E"	5	100	3					9170	9000	9550	
PANEL "F"	6	100	3					5615	7184	8826	
PANEL "G"	7	600	3					61380	60340	59612	
UPS-1	8	350	3					17904	17724	17544	
UPS-2	9	350	3					17184	17544	16824	
ELEVATOR	10	35	3					1920	1920	1920	
PANEL "EM"	11	125	3					7100	5280	6810	
PANEL "H"	12	100	3					9408	8508	7980	
SUB TOTAL VOLT/AMPS:								174968	170296	173966	
TOTAL AMPS/PHASE:								1458	1419	1450	

CONNECTED: 519229 VA
25% OF MTR: 0 VA
25% OF LCL: 0 VA
CALCULATED: 519229 VA = 1441.24 AMPS

PANEL "EV-P"
VOLTAGE: 208/120V-4-WIRE
LOCATION: EXTERIOR
MAIN BREAKER: 600A.
BUS SIZE COPPER: 600A.
SCA:
MOUNT: SURFACE
ENTRY: BOTTOM

DESCRIPTION	CKT	BKR	P	LTS	REC	MSC	MTR	A-VA	B-VA	C-VA	AMPS
EV CAPABLE	1	40	2			1		3328			
W/CKT. 1	3	---	---						3328		
EV CAPABLE	5	40	2			1				3328	
W/CKT. 5	7	---	---					3328			
EV CAPABLE	9	40	2			1			3328		
W/CKT.9	11	---	---							3328	
EV CAPABLE	13	40	2			1		3328			
W/CKT. 13	15	---	---						3328		
EV CAPABLE	17	40	2							3328	
W/CKT. 17	19	---	---					3328			
EV CAPABLE	21	40	2						3328		
W/CKT. 21	23	---	---							3328	
EV CAPABLE	25	40	2					3328			
W/CKT. 25	27	---	---						3328		
EV CAPABLE	29	40	2							3328	
W/CKT. 31	31	---	---					3328			
EV CAPABLE	33	40	2						3328		
W/CKT. 33	35	---	---							3328	
EV CAPABLE	37	40	2					3328			
W/CKT. 37	39	---	---						3328		
SPACE	41										
SUB TOTAL VOLT/AMPS:								23296	23296	19968	
EV CAPABLE	2	40	2					3328			
W/CKT. 1	4	---	---						3328		
EV CAPABLE	6	40	2							3328	
W/CKT. 5	8	---	---					3328			
EV CAPABLE	10	40	2						3328		
W/CKT.9	12	---	---							3328	
EV CAPABLE	14	40	2					3328			
W/CKT.14	16	---	---						3328		
EV CAPABLE	18	40	2							3328	
W/CKT.18	20	---	---					3328			
EV CAPABLE	22	40	2						3328		
W/CKT.22	24	---	---							3328	
EV CAPABLE	26	40	2					3328			
W/CKT.26	28	---	---						3328		
EV CAPABLE	30	40	2							3328	
W/CKT.30	32	---	---					3328			
SPACE	34	---	---								
SPACE	36	---	---								
SPACE	38	---	---								
SPACE	40	---	---								
SPACE	42	---	---								
SUB TOTAL VOLT/AMPS:								19968	16640	16640	
PANEL SUB TOTAL VOLT/AMPS:								43264	39936	36608	
TOTAL LCL/PHASE:								10816	9984	9152	
TOTAL VOLT/AMPS:								54080	49920	45760	
TOTAL AMPS/PHASE:								451	416	381	

CONNECTED: 119808 VA
25% OF MTR: VA
25% OF LCL: 29952 VA
CALCULATED: 149760 VA = 415.69 AVERAGE AMPS

FEEDER/CIRCUIT IDENTIFICATION	LOAD	WIRE SIZE	OHMS TO NEUTRAL RESISTANCE PER 1000FT. (TABLE 9)	FEEDER LENGTH	CIRCUIT AMPS	LINE TO NEUTRAL VOLTAGE DROP	LINE TO LINE VOLTAGE DROP	LINE TO LINE VOLTAGE	% VOLTAGE DROP
MDP-1	PANEL "A"	4/0	0.062	15	107	0.10	0.17	208	0.0829
A-57	RECEPTACLE	10	1.2	180	3	0.65	1.30	120	1.0800
								COMBINED	1.1629
MDP-2	PANEL "B"	2	0.19	20	87	0.33	0.57	208	0.2753
B-53	GEN. BATT. CHRG.	10	1.2	175	10	2.10	4.20	120	3.5000
								COMBINED	3.7753
MDP-3	PANEL "C"	2	0.19	45	77	0.66	1.14	208	0.5482
C-12	CONF. RECEPT.	10	1.2	182	5.25	1.15	2.29	120	1.9110
								COMBINED	2.4592
MDP-4	PANEL "D"	2	0.19	50	57	0.54	0.94	208	0.4509
D-28	FAN COIL	10	1.2	195	7.9	1.85	3.70	120	3.0810
								COMBINED	3.5319
MDP-5	PANEL "E"	2	0.19	70	78	1.04	1.80	208	0.8638
E-44	RECEPTACLE	10	1.2	161	3	0.58	1.16	120	0.9660
								COMBINED	1.8298
MDP-6	PANEL "F"	2	0.19	75	36	0.51	0.89	208	0.4272
F-14/16	BRANCH SELECTOR	10	1.2	62	0.5	0.04	0.07	208	0.0358
								COMBINED	0.4629
MDP-7	PANEL "G"	500 KCMIL	0.027	85	352	0.81	1.40	208	0.6727
G-37,39,41	HRU-3	4	0.31	121	53	1.99	3.98	208	1.9116
								COMBINED	2.5842
MDP-8/9	UPS-1 / UPS-2	500 KCMIL	0.027	110	149	0.44	0.77	208	0.3685
UPS-13	RECEPTACLE	10	1.2	160	3	0.58	1.15	120	0.9600
								COMBINED	1.3285
MDP-11	PANEL "EM"	1/0	0.12	80	59	0.57	0.98	208	0.4716
EM-32	EOC RECEPTACLE	10	1.2	173	3	0.62	1.25	120	1.0380
								COMBINED	1.5096

FEEDER/CIRCUIT IDENTIFICATION	LOAD	WIRE SIZE	WIRE PER PHASE	CONDUIT TYPE PVC/STL	OHMS TO NEUTRAL RESISTANCE PER 1000FT.	FEEDER LENGTH	CONNECTED AMPS	AMPS PER CONDUCTOR	LINE TO NEUTRAL VOLTAGE DROP	LINE TO LINE VOLTAGE DROP	LINE TO LINE VOLTAGE	PHASE	% VOLTAGE DROP
MDP-1	PANEL "A"	4/0	1	S	0.08	10	99	99	0.08	0.14	208	3	0.0659
MDP-2	PANEL "B"	2	1	S	0.2	15	57	57	0.17	0.30	208	3	0.1424
MDP-3	PANEL "C"	2	1	S	0.2	45	81	81	0.73	1.26	208	3	0.6070
MDP-4	PANEL "D"	2	1	S	0.2	50	56	56	0.56	0.97	208	3	0.4663
MDP-5	PANEL "E"	2	1	S	0.2	65	60	60	0.78	1.35	208	3	0.6495
MDP-6	PANEL "F"	2	1	S	0.2	70	35	35	0.49	0.85	208	3	0.4080
MDP-7	PANEL "G"	500	1	S	0.05	75	352	352	1.32	2.29	208	3	1.0992
MDP-8	UPS-1	500	1	S	0.05	140	207	207	1.45	2.51	208	3	1.2066
MDP-9	UPS-2	500	1	S	0.05	150	207	207	1.55	2.69	208	3	1.2928
MDP-10	ELEVATOR	8	1	P	0.78	80	16	16	1.00	1.73	208	3	0.8314
MDP-11	PANEL "EM"	1/0	1	S	0.13	75	30	30	0.29	0.51	208	3	0.2436
MDP-12	PANEL "H"	2	1	S	0.2	35	18	18	0.13	0.22	208	3	0.1049
MSBD-2	PANEL "EVP"	350	2	P	0.053	75	358	179	0.71	1.23	208	3	0.5925
EG-1	GENERATOR	4/0	2	P	0.074	165	0	0	0.00	0.00	208	3	0.0000

WARNING

MAXIMUM AVAILABLE FAULT CURRENT:
42,000 SYMMETRICAL RMS AMPERES
DATE: MM/DD/YYYY

XYZ ELECTRIC 1-800-123-4567

APPLICABLE CODES

ALL WORK SHALL BE PERFORMED IN ACCORDANCE WITH ALL APPLICABLE LAWS AND REGULATIONS, AND THE REQUIREMENTS OF THE CALIFORNIA CODE OF REGULATIONS (C.C.R.), TITLE 24, INCLUSIVE OF:

2019 CALIFORNIA ADMINISTRATIVE CODE (CAC), C.C.R. TITLE 24, PART 1

2019 CALIFORNIA BUILDING CODE (CBC), C.C.R. TITLE 24, PART 2, BASED ON 2017 INTERNATIONAL BUILDING CODE.

2019 CALIFORNIA ELECTRICAL CODE (CEC), C.C.R. TITLE 24, PART 3, BASED ON 2017 NATIONAL ELECTRICAL CODE (NEC).

2019 CALIFORNIA MECHANICAL CODE (CMC), C.C.R. TITLE 24, PART 4, BASED ON 2016 UNIFORM MECHANICAL CODE (UMC).

2019 CALIFORNIA PLUMBING CODE (CPC), C.C.R. TITLE 24, PART 5, BASED ON 2016 UNIFORM PLUMBING CODE (UPC).

2019 CALIFORNIA ENERGY CODE, C.C.R. TITLE 24, PART 6.

2019 CALIFORNIA FIRE CODE (CFC), C.C.R. TITLE 24, PART 9, BASED ON 2017 INTERNATIONAL FIRE CODE.

2019 CALIFORNIA REFERENCED STANDARDS CODE, C.C.R. TITLE 24, PART 12.

SINGLE LINE DIAGRAM NOTES

1. THE MAIN CIRCUIT BREAKER SHALL BE PERMANENTLY MARKED TO IDENTIFY IT AS THE SERVICE DISCONNECT PER N.E.C. 230.70(B).
2. PER SECTION 250.52(AX1) METAL UNDERGROUND WATER PIPE - CONNECTION TO THE INTERIOR METAL WATER PIPING SHALL BE MADE WITHIN 5 FEET FROM POINT OF ENTRANCE.
3. PROVIDE AND INSTALL SIGNAGE FOR AVAILABLE FAULT CURRENT PER CEC 110.24. PROVIDE SELF-ADHESIVE VINYL LABEL TO AFFIX TO ELECTRICAL EQUIPMENT TO WARN OF ARC FLASH HAZARDS. THE THE LABEL SHALL BE LOCATED ON THE EQUIPMENT TO BE CLEARLY VISIBLE TO QUALIFIED PERSONS BEFORE EXAMINATION, ADJUSTMENT, SERVICING, OR MAINTENANCE OF THE EQUIPMENT. CONTRACTOR TO PLACE COMPANY NAME AND CONTACT PHONE NUMBER ON SIGN. THIS DETAIL IS FOR REFERENCE ONLY.
4. ALL NEW ELECTRICAL EQUIPMENT TO BE PROVIDED WITH 75°C RATED TERMINALS.
5. PROVIDE AND INSTALL ARC FLASH WARNING LABEL ON SWITCHBOARD AN ALL PANELS IN COMPLIANCE WITH CEC 110.16.
6. THE OPTIONAL STAND-BY GENERATOR SHALL BE PROGRAMMED TO START WITHIN 10 SECONDS OF LOSS OF UTILITY POWER.
7. PROVIDE STANDBY GENERATOR WITH A LISTED INTEGRAL SURGE PROTECTIVE DEVICE (SPD).
8. CONTRACTOR TO ENSURE THAT THE UTILITY (S.C.E.) SERVICE REPORT SHALL BE AVAILABLE ON SITE AT ALL TIMES FOR BUILDING INSPECTION TO VERIFY.

CONSTRUCTION NOTES

1. ALL EQUIPMENT SHALL BE LISTED BY UL. OR A COUNTY APPROVED THIRD PARTY TESTING FACILITY.
2. RESISTANCE TO GROUND SHALL NOT EXCEED 25 OHMS. PROVIDE ADDITIONAL GROUND RODS, SPACED 6'-0" APART, TO MEET THIS REQUIREMENT. REFER TO SHEET E3.2, DETAIL #4 AND #5 FOR COMPLETE REQUIREMENTS.
3. FOR COMPLIANCE WITH CEC 240.87 THE INSTANTANEOUS TRIP SETTING OF CIRCUIT BREAKERS OPERATING AT 1200A AND ABOVE SHALL BE SET LOWER THAN THE AVAILABLE ARCING CURRENT.
4. EMERGENCY GENERATOR SHALL HAVE SEISMIC CATEGORY/ZONE 4 CERTIFICATION. SUBMIT SEISMIC CERTIFICATE FOR REVIEW AS PART OF THE GENERATOR SUBMITTAL/ SHOP DRAWINGS.

PBK
RANCHO CUCAMONGA
8163 ROCHESTER AVENUE, SUITE 100
RANCHO CUCAMONGA, CA 91730
909-987-0909 P

ONTARIO FIRE DEPARTMENT ADMINISTRATION BUILDING

CITY OF ONTARIO
1420 E. FRANCIS STREET., ONTARIO, CA

LICENSED ARCHITECT — KELLEY NEEDHAM C-19064 — Exp. 03/31/23 — STATE OF CALIFORNIA
REGISTERED PROFESSIONAL ENGINEER — RICHARD T. SUTTON — No. E17229 — 6/30/22 — STATE OF CALIFORNIA

CONSULTANT
A&E ENGINEERING GROUP, INC.
9320 BASELINE RD. SUITE C, RANCHO CUCAMONGA, CA 91701
TEL: (909) 941-3008 FAX (909) 941-8211

NO	DATE	BY	DESCRIPTION

REVISIONS

DRAWN: CBF
CHECKED: RES
DATE: 07/15/2022
SCALE: AS NOTED
PROJECT NUMBER: 2011700

SINGLE LINE DIAGRAM & LOAD SCHEDULES

DRAWING NUMBER: E0.2

BID SET 03/01/24

PANEL "A"

VOLTAGE: 208/120V-4-WIRE | MAIN BREAKER: M.L.O. | SCA:
LOCATION: ELEC. ROOM | BUS SIZE COPPER: 200A. | MOUNT: SURFACE
ENTRY: BOTTOM

DESCRIPTION	CKT	BKR	P	LTS	REC	MSC	MTR	A-VA	B-VA	C-VA	AMPS
RM. 105 RECEPTACLES	1	20	1		4				450		
RM. 105 RECEPTACLES	3	20	1		3					450	
RM. 105 RECEPTACLES	5	20	1		4						360
RMS. 101,103,104 RECEPT.	7	20	1		6			540			
RMS. 101,103,104 RECEPT.	9	20	1		11				990		
RMS. 101 - 104 RECEPT.	11	20	1		6					630	
RM. 103 CUBICLE	13	20	1		5			900			
RM. 103 CUBICLE	15	20	1		5				900		
RM. 103 CUBICLE	17	20	1		5					900	
RM. 109 COPIER	19	20	1		1			800			
RM. 109 RECEPTACLES	21	20	1		5				720		
RM. 109 RECEPTACLES	23	20	1		2					180	
RM. 110, 111 RECEPTACLES	25	20	1		7			990			
RM. 111 RECEPTACLES	27	20	1		3				270		
RMS.107,108,122,123,146 REC.	29	20	1		8					1440	
RM. 114-115 RECEPTACLES	31	20	1		6			540			
RM. 114-115 RECEPTACLES	33	20	1		7				630		
RMS. 112 - 114 RECEPT.	35	20	1		9					810	
RMS. 112 - 114 RECEPT.	37	20	1		7			810			
RMS. 112 - 114 RECEPT.	39	20	1		5				540		
RMS. 124,143,144,146 REC.	41	20	1		6					1080	
ROOM 131 CUBICLE	43	20	1		4			720			
ROOM 131 CUBICLE	45	20	1		2				360		
ROOM 131 CUBICLE	47	20	1		2					360	
ROOM 132 CUBICLE	49	20	1		3			540			
ROOM 132 CUBICLE	51	20	1		3				540		
ROOM 133, 142 RECEPT.	53	20	1		4					630	
ROOM 133, 142 RECEPT.	55	20	1		2			270			
RM. 134 RECEPTACLES	57	20	1		2				360		
RM. 134 RECEPTACLES	59	20	1		2					360	
RM. 134 TV. RECEPT.	61	20	1		1			500			
LACTATION RM. U/C REFRIG.	63	20	1		1				500		
RM. 114-115 RECEPTACLES	65	20	1		4					450	
SPACE	67	—	—								
DOOR ACCESS CNTRL. PNL.	69	20	1	1					100		
ELEC. ROOM 106 RECEPT.	71	20	1		1					180	
							SUB TOTAL VOLT/AMPS:	7060	6360	7380	
RMS. 116, 117 RECEPTACLES	2	20	1		7			720			
RMS. 116, 117 RECEPTACLES	4	20	1		6				540		
RMS. 118, 119 RECEPTACLES	6	20	1		8					720	
RMS. 118, 119 RECEPTACLES	8	20	1		6			720			
RMS. 118, 119 RECEPTACLES	10	20	1		5				540		
RMS. 120, 121 RECEPTACLES	12	20	1		6					720	
RMS. 120, 121 RECEPTACLES	14	20	1		5			540			
RMS. 120, 121 RECEPTACLES	16	20	1		8				720		
RM. 135 CUBICLES	18	20	1		4					720	
RM. 135 CUBICLES	20	20	1		4			720			
RM. 135 CUBICLES	22	20	1		6				1080		
RM. 135 CUBICLES	24	20	1		3					540	
RM. 135 CUBICLES	26	20	1		3			540			
RM. 135 CUBICLES	28	20	1		2				360		
RM. 135 CUBICLES	30	20	1		2					360	
RMS. 127, 128 RECEPTACLES	32	20	1		8			720			
RMS. 127, 128 RECEPTACLES	34	20	1		5				540		
RMS. 127, 128 RECEPTACLES	36	20	1		5					540	
RMS. 129, 130 RECEPTACLES	38	20	1		4			450			
RMS. 129, 130 RECEPTACLES	40	20	1		6				540		
RMS. 129, 130 RECEPTACLES	42	20	1		4					450	
RMS. 123,125,131,136,139 REC	44	20	1		7			1260			
RMS. 125,137,138,140 REC.	46	20	1		5				900		
RM. 142 FRIDGE. REC.	48	20	1		1					800	
RM. 142 CNTR. RECEPT.	50	20	1		2			360			
RM. 134 TREADMILL REC.	52	20	1		1				500		
RM. 134 TREADMILL REC.	54	20	1		1					500	
RM. 134 TREADMILL REC.	56	20	1		1			500			
RM. 134 TREADMILL REC.	58	20	1		1				500		
RM. 134 TV. RECEPT.	60	20	1		1					500	
RM. 132 TV RECEPT.	62	20	1		1			500			
TP-3 FIRE RISER	64	20	1			1			180		
RM. 135 CUBICLES	66	20	1		4					720	
SPARE	68	20	1								
* GATE OPERATOR	70	20	1			1			500		
SPARE	72	20	1								
							SUB TOTAL VOLT/AMPS:	7030	6900	6570	
							PANEL SUB TOTAL VOLT/AMPS:	14090	13260	13950	
							TOTAL LCL/PHASE:	0	0	0	
CONNECTED: 41300 VA							TOTAL VOLT/AMPS:	14090	13260	13950	
25% OF MTR: VA							TOTAL AMPS/PHASE:	117	111	116	
25% OF LCL: 0 VA											
CALCULATED: 41300 VA = 114.64 AVERAGE AMPS											

* = PROVIDE LOCK-OFF DEVICE.

PANEL "B"

VOLTAGE: 208/120V-4-WIRE | MAIN BREAKER: M.L.O. | SCA:
LOCATION: ELEC. ROOM | BUS SIZE COPPER: 100A. | MOUNT: SURFACE
ENTRY: BOTTOM

DESCRIPTION	CKT	BKR	P	LTS	REC	MSC	MTR	A-VA	B-VA	C-VA	AMPS
1ST FLR. HALL LTG.	1	20	1	22				722			
ADMIN.,LOBBY,ELEC. LTG.	3	20	1	51					1329		
TECH OPEN OFF.,OFF. LTG.	5	20	1	40						1264	
WRKST.,EXERCISE LTG.	7	20	1	31				810			
R.R.,LOCKERS LTG.	9	20	1	29					693		
EMS. OFFICES LTG.	11	20	1	53						1330	
NORTH STAIRS LTG.	13	20	1	6				150			
SOUTH STAIRS LTG.	15	20	1	6					150		
EXTERIOR MAIN ENTRY LTG.	17	20	1	19						385	
EXTERIOR CAN./STAIR LTG.	19	20	1	9				185			
EXT. CAN./WALL LTG. - S/SE	21	20	1	33					680		
ELEVATOR PIT LIGHT	23	20	1	2	1					230	
NLIGHT "NECY"	25	20	1			1		50			
SPACE	27	—	—								
SPACE	29	—	—								
NORTH PARKING LOT LIGHTS	31	20	2					390			
W/CKT. 31	33	—	—						390		
RM. 102 WH-1	35	30	2			1				2080	
W/CKT. 35	37	—	—			1		2080			
TP-3 FIRE RISER ROOM	39	20	1			1			180		
ELEVATOR CAB LIGHTS	41	20	1			1				500	
ELEVATOR PIT RECEPTACLE	43	20	1		2			360			
ELEVATOR PIT LIGHT	45	20	1			2			50		
ELEVATOR VIDEO CKT.	47	20	1			1				500	
FUEL PUMP	49	20	1			1		500			
GEN. BLOCK HEATER	51	20	1			1			1500		
GEN. BATTERY CHARGER	53	20	1			1				1200	
							SUB TOTAL VOLT/AMPS:	5247	4972	7489	
FC1-1 THRU FC1-6	2	20	2			6		1534			
W/CKT. 2	4	—	—						1534		
BS-1	6	15	2			1				30	
W/CKT. 6	8	—	—					30			
FC2-1 THRU FC2-4	10	15	2			4			104		
W/CKT. 10	12	—	—							104	
BS-2	14	15	2			1		30			
W/CKT. 14	16	—	—						30		
FC3-1 THRU FC3-6	18	15	2			6				432	
W/CKT. 18	20	—	—					432			
BS-3	22	15	2			1			30		
W/CKT. 22	24	—	—							30	
FC4-1 THRU FC4-6	26	15	2			6		728			
W/CKT. 26	28	—	—						728		
BS-4	30	15	2			1				30	
W/CKT. 30	32	—	—					30			
FC5-1 THRU FC5-3	34	15	2						905		
W/CKT. 34	36	—	—							905	
BS-5	38	15	2			2		30			
W/CKT. 38	40	—	—								
SMOKE FIRE DAMPER	42	20	1			2				100	
FUEL DISPENSING SYSTEM	44	20	1			1		500			
SHUNT TRIP	46	20	1								
FUEL MONITORING SYSTEM	48	20	1			1				500	
OVERVILL SYSTEM	50	20	1			1		800			
SPARE	52	20	1								
SPARE	54	20	1								
							SUB TOTAL VOLT/AMPS:	4114	3331	2131	
							PANEL SUB TOTAL VOLT/AMPS:	9361	8303	9620	
							TOTAL LCL/PHASE:	467	713	802	
CONNECTED: 27284 VA							TOTAL VOLT/AMPS:	9828	9016	10422	
25% OF MTR: VA							TOTAL AMPS/PHASE:	82	75	87	
25% OF LCL: 1982 VA											
CALCULATED: 29266 VA = 81.23 AVERAGE AMPS											

PANEL "C"

VOLTAGE: 208/120V-4-WIRE | MAIN BREAKER: 100A. | SCA:
LOCATION: 2ND FLR. | BUS SIZE COPPER: 100A. | MOUNT: RECESSED
ENTRY: BOTTOM

DESCRIPTION	CKT	BKR	P	LTS	REC	MSC	MTR	A-VA	B-VA	C-VA	AMPS
RM. 215 RECEPTACLES	1	20	1		3			540			
RM. 215 RECEPTACLES	3	20	1		3				540		
RMS. 206,208,211 RECEPT.	5	20	1		6					1080	
RMS. 227-229 RECEPTACLES	7	20	1		4			720			
RMS. 227-229 RECEPTACLES	9	20	1		4				720		
RM. 216 RECEPTACLES	11	20	1		4					450	
RM. 216 RECEPTACLES	13	20	1		4			360			
RM. 217 RECEPTACLES	15	20	1		3				540		
RM. 217 RECEPTACLES	17	20	1		2					360	
RM. 217 FRIDGE	19	20	1		1			800			
CANOPY 235 RECEPTACLE	21	20	1		1				180		
PATIO 236 RECEPTACLES	23	20	1		2					360	
RM. 217 DISHWASHER	25	20	1		1			800			
RM. 217 RANGE	27	20	1		1				180		
RM. 217 HOOD	29	20	1		1					180	
SPARE	31	20	1								
SPARE	33	20	1								
RMS. 219-223 RECEPTACLES	35	20	1		6					1080	
RMS. 204,207 RECEPTACLES	37	20	1		8			810			
RMS. 204,207 RECEPTACLES	39	20	1		7				630		
RMS. 224,230,233 RECEPT.	41	20	1		5					900	
RLLR.SHD. RSC2-1 / RSC2-2	43	20	1			2		1416			
RLLR.SHD. RSC2-3 / RSC2-4	45	20	1			2			1416		
RLLR.SHD. RSC2-5 / RSC2-6	47	20	1			2				1416	
SPACE	49	—	—								
SPACE	51	—	—								
DOOR ACCESS CNTR. PNL.	53	20	1			1				100	
							SUB TOTAL VOLT/AMPS:	5446	4206	5926	
RM. 224 CUBICLES	2	20	1		3			540			
RM. 224 CUBICLES	4	20	1		3				540		
RMS. 231,232 RECEPTACLES	6	20	1		6					720	
RMS. 231,232 RECEPTACLES	8	20	1		5			540			
RMS. 231,232 RECEPTACLES	10	20	1		8				720		
RMS. 226,234 RECEPTACLES	12	20	1		6					630	
RMS. 226,234 RECEPTACLES	14	20	1		5			630			
RMS. 226,234 RECEPTACLES	16	20	1		8				720		
RMS. 213-212 RECEPTACLES	18	20	1		4					720	
RM. 210 PLOTTER	20	20	1		1			800			
RM. 210 COPIER	22	20	1		1				500		
RM. 210 COPIER	24	20	1		1					500	
RM. 210 RECEPTACLES	26	20	1		3			540			
RM. 209 FLOOR RECEPT.	28	20	1		1				180		
RM. 207 U/C FRDIGE	30	20	1		1					180	
SPARE	32	20	1								
SERVER RM. 225 RECEP.	34	15	2		1				1200		
W/CKT. 32	36	—	—							1200	
SERVER RM. 225 RECEP.	38	15	2		1			1200			
W/CKT. 38	40	—	—						1200		
ROOM 233 FLR. OUTLETS	42	20	1		4					1260	
ROOM 233 FLR. OUTLETS	44	20	1		4			1260			
GAUZY SMART GLASS	46	20	1			4			180		
SPACE	48	—	—								
SPACE	50	—	—								
SPACE	52	—	—								
SPACE	54	—	—								
							SUB TOTAL VOLT/AMPS:	5510	5240	5210	
							PANEL SUB TOTAL VOLT/AMPS:	10956	9446	11136	
							TOTAL LCL/PHASE:	0	0	0	
CONNECTED: 31538 VA							TOTAL VOLT/AMPS:	10956	9446	11136	
25% OF MTR: VA							TOTAL AMPS/PHASE:	91	79	93	
25% OF LCL: 0 VA											
CALCULATED: 31538 VA = 87.54 AVERAGE AMPS											

PANEL "D"

VOLTAGE: 208/120V-4-WIRE | MAIN BREAKER: 100A. | SCA:
LOCATION: 2ND FLR. | BUS SIZE COPPER: 100A. | MOUNT: RECESSED
ENTRY: BOTTOM

DESCRIPTION	CKT	BKR	P	LTS	REC	MSC	MTR	A-VA	B-VA	C-VA	AMPS
2ND FLR. HALL LIGHTING	1	20	1	19				736			
2ND FLR. DISPATCH LTG.	3	20	1	57					1616		
2ND FLR. BUNKS,DINING LTG.	5	20	1	36						1366	
2ND FLR. OFF.,R.R.,CONF. LTG.	7	20	1	59				1399			
2ND FLR. EOC FLR. LTG.	9	20	1	25					850		
2ND FLR. EOC FLR. LTG.	11	20	1	28						939	
2ND FLR. RADIO EQUIP. LTG.	13	20	1	2				46			
2ND FLR. MDF LTG.	15	20	1	4					92		
2ND FLR. PATIO	17	20	1	10						200	
2ND FLR. PATIO	19	20	1	2				45			
2ND FLR. NLIGHT NECY	21	20	1			1			50		
EXTERIOR MONUMENT LTS.	23	20	1	2						48	
EXTERIOR MONUMENT LTS.	25	20	1	1				12			
RLLR.SHD. RSC2-7 / RSC2-8	27	20	1			2			1416		
RLLR.SHD. RSC2-9 / RSC2-10	29	20	1			2				1416	
RLLR.SHD. RSC2-11 / RSC2-12	31	20	1			2		1416			
RLLR.SHD. RSC2-13 / RSC2-14	33	20	1			2			1416		
RLLR.SHD. RSC2-15 / RSC2-16	35	20	1			2				1416	
RLLR.SHD. RSC2-17 / RSC2-18	37	20	1			2		1416			
RLLR.SHD. RSC2-19 / RSC2-20	39	20	1			2			1416		
RLLR.SHD. RSC2-21 / RSC2-22	41	20	1			2				1416	
							SUB TOTAL VOLT/AMPS:	5070	6856	6801	
FC6-1 THRU FC6-8	2	20	2			8		1560			
W/CKT. 2	4	—	—						1560		
BS-6	6	15	2			1				30	
W/CKT. 6	8	—	—					30			
FC7-1 THRU FC7-4	10	15	2			4			952		
W/CKT. 10	12	—	—							952	
BS-7	14	15	2			1		30			
W/CKT. 14	16	—	—						30		
FC8-1 THRU FC8-8	18	15	2			8				760	
W/CKT. 18	20	—	—					760			
BS-8	22	15	2			1			30		
W/CKT. 22	24	—	—							30	
FC9-1 THRU FC9-5	26	15	2			5		957			
W/CKT. 26	28	—	—						957		
BS-9	30	15	2			1				30	
W/CKT. 30	32	—	—					30			
RM. 228 EF-2	34	15	1			1			50		
SMOKE FIRE DAMPERS	36	20	1			3				150	
RLLR.SHD. RSC2-23 / RSC2-24	38	20	1			2		1416			
SPACE	40	—	—								
SPACE	42	—	—								
							SUB TOTAL VOLT/AMPS:	4783	3579	1952	
							PANEL SUB TOTAL VOLT/AMPS:	9853	10435	8753	
							TOTAL LCL/PHASE:	560	640	638	
CONNECTED: 29041 VA							TOTAL VOLT/AMPS:	10413	11075	9391	
25% OF MTR: VA							TOTAL AMPS/PHASE:	87	92	78	
25% OF LCL: 1837.3 VA											
CALCULATED: 30878 VA = 85.71 AVERAGE AMPS											

PANEL "E"

VOLTAGE: 208/120V-4-WIRE | MAIN BREAKER: 100A. | SCA:
LOCATION: 3RD FLR. | BUS SIZE COPPER: 100A. | MOUNT: RECESSED
ENTRY: BOTTOM

DESCRIPTION	CKT	BKR	P	LTS	REC	MSC	MTR	A-VA	B-VA	C-VA	AMPS
RM. 313 RECEPTACLES	1	20	1		4			720			
RM. 313 RECEPTACLES	3	20	1		3				540		
RM. 313 COPIER	5	20	1		1					500	
RMS. 325-327 RECEPTACLES	7	20	1		10			900			
RMS. 325-327 RECEPTACLES	9	20	1		7				810		
RMS. 325-327 RECEPTACLES	11	20	1		6					630	
RM. 314 RECEPTACLES	13	20	1		4			360			
RM. 314 RECEPTACLES	15	20	1		4				540		
RM. 314 RECEPTACLES	17	20	1		4					540	
RM. 314 FRIDGE	19	20	1		1			800			
RMS. 303,308,310,328 REC.	21	20	1		7					1260	
RMS. 309,312,321 RECEPT.	23	20	1		6					1080	
RMS. 301,302 RECEPTACLES	25	20	1		5			540			
RMS. 301,302 RECEPTACLES	27	20	1		4				450		
RMS. 301,302 RECEPTACLES	29	20	1		7					630	
RMS 305-307 RECEPTACLES	31	20	1		6			630			
RMS 305-307 RECEPTACLES	33	20	1		6				630		
RMS 305-307 RECEPTACLES	35	20	1		10					900	
RM. 328 TV RECEPT.	37	20	1		1			180			
RM. 301 U/C FRIDGE	39	20	1		1				180		
RM. 328 U/C FRIDGE	41	20	1		1					180	
RM. 308 U/C FRIDGE	43	20	1		1			180			
RM. 308 U/C FRIDGE	45	20	1		1				180		
SPACE	47	—	—								
SPACE	49	—	—								
SPACE	51	—	—								
SPACE	53	—	—								
							SUB TOTAL VOLT/AMPS:	4310	4590	4460	
RM. 304 RECEPTACLES	2	20	1		5			900			
RM. 304 RECEPTACLES	4	20	1		5				900		
RMS. 315-319 RECEPT.	6	20	1		5					900	
RM. 328 CUBICLES	8	20	1		4			720			
RM. 328 CUBICLES	10	20	1		4				720		
RMS. 311,312 RECEPTACLES	12	20	1		5					900	
RMS. 329-331 RECEPTACLES	14	20	1		5			540			
RMS. 329-331 RECEPTACLES	16	20	1		9				810		
RMS. 329-331 RECEPTACLES	18	20	1		6					630	
RMS. 324,332,333 RECEPT.	20	20	1		10			900			
RMS. 324,332,333 RECEPT.	22	20	1		6				720		
RMS. 324,332,333 RECEPT.	24	20	1		5					720	
RM. 323 RECEPTACLES	26	20	1		2			360			
RM. 323 RECEPTACLES	28	20	1		1				180		
RM. 323 COPIER	30	20	1		1					500	
RM. 322 RECEPTACLES	32	20	1		3			540			
RM. 322 RECEPTACLES	34	20	1		3				540		
ROOF DECK 335 RECEPT.	36	20	1		3					540	
ROOF DECK 335 RECEPT.	38	20	1		3			540			
ROOF DECK 336 RECEPT.	40	20	1		3				540		
ROOF DECK 336 RECEPT.	42	20	1		3					540	
PATIO 334 RECEPTACLES	44	20	1		2			360			
SPACE	46	—	—								
SPACE	48	—	—								
SPACE	50	—	—								
SPACE	52	—	—								
ROOF RECEPTACLES	54	20	1		2					360	
							SUB TOTAL VOLT/AMPS:	4860	4410	5090	
							PANEL SUB TOTAL VOLT/AMPS:	9170	9000	9550	
							TOTAL LCL/PHASE:	0	0	0	
CONNECTED: 27720 VA							TOTAL VOLT/AMPS:	9170	9000	9550	
25% OF MTR: VA							TOTAL AMPS/PHASE:	76	75	80	
25% OF LCL: 0 VA											
CALCULATED: 27720 VA = 76.94 AVERAGE AMPS											

PANEL SCHEDULE NOTES

1. ALL RECEPTACLES AND LIGHT FIXTURES INSTALLED IN RESIDENTIAL OCCUPANCY ROOMS SHALL BE PROTECTED BY AN AFCI CIRCUIT BREAKER. REFER TO SHEET T-2, CODE ANALYSIS, FOR RESIDENTIAL OCCUPANCY BOUNDARY.
2. ALL ELECTRICAL EQUIPMENT SHALL BE LISTED BY UL OR A COUNTY APPROVED THIRD PARTY TESTING FACILITY PER SECTION 110.3(b).
3. REFER TO GENERAL NOTES, DRAWING E0.1, FOR ADDITIONAL REQUIREMENTS.
4. CONTRACTOR TO PROVIDE BRANCH CIRCUIT PANELS WITH DEDICATED SPACE FOR INSTALLATION OF FUTURE CT'S FOR MONITORING OF INDIVIDUAL BRANCH CIRCUITS.
5. CONTRACTOR TO PROVIDE ENGRAVED NAME PLATES FOR MAIN SWITCHBOARD, SWITCHBOARD METERS, AND PANELS.

PANEL "F"

VOLTAGE: 208/120V-4-WIRE | MAIN BREAKER: 100A. | SCA:
LOCATION: 3RD FLR. | BUS SIZE COPPER: 100A. | MOUNT: RECESSED
ENTRY: BOTTOM

DESCRIPTION	CKT	BKR	P	LTS	REC	MSC	MTR	A-VA	B-VA	C-VA	AMPS
3RD FLR. HALL LIGHTING	1	20	1	23				688			
3RD FLR. ADMIN., OFF. LTG.	3	20	1	48					1237		
3RD FLR. OFF.,WRKST. LTG.	5	20	1	41						1044	
3RD FLR. OFF.,DAYRM. LTG.	7	20	1	41				973			
3RD FLR. R.R. LTG.	9	20	1	18					446		
3RD FLR. EXTERIOR LTG.	11	20	1	12						240	
3RD FLR. PATIO 334 LTG.	13	20	1	6				120			
3RD FLR. NLIGHT NECY	15	20	1			1			50		
SPARE	17	20	1								
SPARE	19	20	1								
SPARE	21	20	1								
RLLR.SHD. RSC3-1 / RSC3-2	23	20	1			2				1416	
SPARE	25	20	1								
RLLR.SHD. RSC3-3 / RSC3-4	27	20	1			2			1416		
RLLR.SHD. RSC3-5 / RSC3-6	29	20	1			2				1416	
RLLR.SHD. RSC3-7 / RSC3-8	31	20	1			2		1416			
RLLR.SHD. RSC3-9 / RSC3-10	33	20	1			2			1416		
RLLR.SHD. RSC3-11 / RSC3-12	35	20	1			2				1416	
SPACE	37	—	—								
SPACE	39	—	—								
RLLR.SHD. RSC3-13 / RSC3-14	41	20	1			2				1416	
							SUB TOTAL VOLT/AMPS:	3197	4565	6948	
FC10-1 THRU FC10-7	2	15	2			7		1009			
W/CKT. 2	4	—	—						1009		
BS-10	6	15	2			1				30	
W/CKT. 6	8	—	—					30			
FC11-1 THRU FC11-5	10	15	2			5			681		
W/CKT. 10	12	—	—							681	
BS-11	14	15	2			1

LIGHTING FIXTURE SCHEDULE

TYPE	MANUFACTURER CATALOG*	LAMP QTY, & TYPE	FIXTURE WATTAGE	VOLTS	REMARKS
A	LITHONIA LIGHTING *2AVL2-30L SE-ADP-EZ1-LP840-N100 OR APPROVED EQUAL	3160 LUMEN 93 LM/W 4000K	34	120	2'X2' RECESSED LED LIGHT FIXTURE. FIXTURE SHALL BE PROVIDED WITH 3,160 LUMEN OUTPUT, ACRYLIC LINEAR PRISMATIC DIFFUSER, INTEGRAL 0-10V, LED DIMMING DRIVER, 4000K COLOR TEMPERATURE AND INTEGRAL N-LIGHT CONTROLS. PROVIDE ALL REQUIRED MOUNTING HARDWARE FOR TYPE OF CEILING LIGHT FIXTURE IS TO BE INSTALLED IN.
AE	LITHONIA LIGHTING *2AVL2-30L SE-ADP-EZ1-LP840-N100-E10WLCP OR APPROVED EQUAL	3160 LUMEN 93 LM/W 4000K	34	120	2'X2' RECESSED LED LIGHT FIXTURE. FIXTURE SHALL BE PROVIDED WITH 3,160 LUMEN OUTPUT, ACRYLIC LINEAR PRISMATIC DIFFUSER, INTEGRAL 0-10V, LED DIMMING DRIVER, 4000K COLOR TEMPERATURE AND INTEGRAL N-LIGHT CONTROLS. PROVIDE ALL REQUIRED MOUNTING HARDWARE FOR TYPE OF CEILING LIGHT FIXTURE IS TO BE INSTALLED IN. WHERE SHADING INDICATES ON PLAN PROVIDE INTEGRAL 90 MINUTE EM. BATTERY PACK.
B	LITHONIA LIGHTING *2AVL2-20L SE-ADP-EZ1-LP840-N100 OR APPROVED EQUAL	2098 LUMEN 95 LM/W 4000K	22	120	2'X2' RECESSED LED LIGHT FIXTURE. FIXTURE SHALL BE PROVIDED WITH 2,098 LUMEN OUTPUT, ACRYLIC LINEAR PRISMATIC DIFFUSER, INTEGRAL 0-10V, LED DIMMING DRIVER, 4000K COLOR TEMPERATURE AND INTEGRAL N-LIGHT CONTROLS. PROVIDE ALL REQUIRED MOUNTING HARDWARE FOR TYPE OF CEILING LIGHT FIXTURE IS TO BE INSTALLED IN.
BE	LITHONIA LIGHTING *2AVL2-20L SE-ADP-EZ1-LP840-N100-E10WLCP OR APPROVED EQUAL	2098 LUMEN 95 LM/W 4000K	22	120	2'X2' RECESSED LED LIGHT FIXTURE. FIXTURE SHALL BE PROVIDED WITH 2,098 LUMEN OUTPUT, ACRYLIC LINEAR PRISMATIC DIFFUSER, INTEGRAL 0-10V, LED DIMMING DRIVER, 4000K COLOR TEMPERATURE AND INTEGRAL N-LIGHT CONTROLS. PROVIDE ALL REQUIRED MOUNTING HARDWARE FOR TYPE OF CEILING LIGHT FIXTURE IS TO BE INSTALLED IN. WHERE SHADING INDICATES ON PLAN PROVIDE INTEGRAL 90 MINUTE EM. BATTERY PACK.
C	FINELITE LIGHTING *1G4-1D-RO-10'-S-S-840-TG-OPN-120V-FA-CE-SC-C1 OR APPROVED EQUAL	8,890 LUMEN 121 LM/W 4000K	70	120	4" WIDE X 10' LONG INDIRECT / DIRECT LED PENDANT LIGHT FIXTURE. FIXTURE SHALL BE PROVIDED WITH STANDARD OUTPUT LUMEN PACKAGE, INTEGRAL 0-10V, LED DIMMING DRIVER, 4000K COLOR TEMPERATURE AND ADJUSTABLE MOUNTING. PROVIDE ALL REQUIRED MOUNTING HARDWARE FOR TYPE OF CEILING LIGHT FIXTURE IS TO BE INSTALLED IN.
D	GOTHAM *EVO6-40/20-AR-MD-LS6-120-G210-NLT OR APPROVED EQUAL	2,006 LUMEN 100 LM/W 4000K	20	120	6" LED DOWNLIGHT FIXTURE. FIXTURE SHALL BE PROVIDED WITH INTEGRAL 0-10V, LED DIMMING DRIVER, N-LIGHT POWER PACK AND 4000K COLOR TEMPERATURE. WHERE SHADING INDICATES ON PLAN PROVIDE INTEGRAL 90 MINUTE EMERGENCY BATTERY PACK. PROVIDE ALL REQUIRED MOUNTING HARDWARE FOR TYPE OF CEILING LIGHT FIXTURE IS TO BE INSTALLED IN.
DE	GOTHAM *EVO6-40/20-AR-MD-LS6-120-G210-NLT-E10WLCP OR APPROVED EQUAL	2,006 LUMEN 100 LM/W 4000K	20	120	6" LED DOWNLIGHT FIXTURE. FIXTURE SHALL BE PROVIDED WITH 0-10V, LED DIMMING DRIVER, N-LIGHT POWER PACK AND 4000K COLOR TEMPERATURE. WHERE SHADING INDICATES ON PLAN PROVIDE INTEGRAL 90 MINUTE EMERGENCY BATTERY PACK. PROVIDE ALL REQUIRED MOUNTING HARDWARE FOR TYPE OF CEILING LIGHT IS TO BE INSTALLED IN.
E	LITHONIA LIGHTING *2AVL4-30L SE-ADP-EZ1-LP840-N100 *DGA24 (DRY-WALL KIT) OR APPROVED EQUAL	3,009 LUMEN 84 LM/W 4000K	36	120	2'X4' RECESSED LED LIGHT FIXTURE. FIXTURE SHALL BE PROVIDED WITH 3,009 LUMEN OUTPUT, ACRYLIC LINEAR PRISMATIC DIFFUSER, INTEGRAL 0-10V, LED DIMMING DRIVER, 4000K COLOR TEMPERATURE AND INTEGRAL N-LIGHT CONTROLS. PROVIDE ALL REQUIRED MOUNTING HARDWARE FOR TYPE OF CEILING LIGHT FIXTURE IS TO BE INSTALLED IN.
EE	LITHONIA LIGHTING *2AVL4-30L SE-ADP-EZ1-LP840-N100-E10WLCP *DGA24 (DRY-WALL KIT) OR APPROVED EQUAL	3,009 LUMEN 84 LM/W 4000K	36	120	2'X4' RECESSED LED LIGHT FIXTURE. FIXTURE SHALL BE PROVIDED WITH 3,009 LUMEN OUTPUT, ACRYLIC LINEAR PRISMATIC DIFFUSER, INTEGRAL 0-10V, LED DIMMING DRIVER, 4000K COLOR TEMPERATURE AND INTEGRAL N-LIGHT CONTROLS. PROVIDE ALL REQUIRED MOUNTING HARDWARE FOR TYPE OF CEILING LIGHT FIXTURE IS TO BE INSTALLED IN. WHERE SHADING INDICATES ON PLAN PROVIDE INTEGRAL 90 MINUTE EM. BATTERY PACK.
F	LITHONIA LIGHTING *AVL4-25L-MDR-EZ1-LP840-N100 OR APPROVED EQUAL	2,483 LUMEN 93 LM/W 4000K	27	120	1'X4' RECESSED ARCHITECTURAL LED LIGHT FIXTURE. FIXTURE SHALL BE PROVIDED WITH 2,500 LUMENS, INTEGRAL 0-10V, LED DIMMING DRIVER, 4000K COLOR TEMPERATURE AND INTEGRAL N-LIGHT CONTROLS. PROVIDE ALL REQUIRED MOUNTING HARDWARE FOR TYPE OF CEILING LIGHT FIXTURE IS TO BE INSTALLED IN.
FE	LITHONIA LIGHTING *AVL4-25L-MDR-EZ1-LP840-N100 N100-E10WLCP *DGA24 (DRY-WALL KIT) OR APPROVED EQUAL	2,483 LUMEN 93 LM/W 4000K	27	120	1'X4' RECESSED ARCHITECTURAL LED LIGHT FIXTURE. FIXTURE SHALL BE PROVIDED WITH 2,500 LUMENS, INTEGRAL 0-10V, LED DIMMING DRIVER, 4000K COLOR TEMPERATURE AND INTEGRAL N-LIGHT CONTROLS. PROVIDE ALL REQUIRED MOUNTING HARDWARE FOR TYPE OF CEILING LIGHT FIXTURE IS TO BE INSTALLED IN. WHERE SHADING INDICATES ON PLAN PROVIDE INTEGRAL 90 MINUTE EM. BATTERY PACK.
G	LITHONIA LIGHTING *STL-P-4-30L-EZ1-LP840-N100 *DGA24 (DRYWALL KIT) OR APPROVED EQUAL	3,100 LUMEN 134 LM/W 4000K	23	120	1'X4' RECESSED LED LIGHT FIXTURE. FIXTURE SHALL BE PROVIDED WITH 3,000 LUMENS, INTEGRAL 0-10V, LED DIMMING DRIVER, 4000K COLOR TEMPERATURE AND INTEGRAL N-LIGHT CONTROLS. PROVIDE ALL REQUIRED MOUNTING HARDWARE FOR TYPE OF CEILING LIGHT FIXTURE IS TO BE INSTALLED IN.
GE	LITHONIA LIGHTING *STL-P-4-30L-EZ1-LP840-N100-E10WLCP *DGA24 (DRYWALL KIT) OR APPROVED EQUAL	3,100 LUMEN 134 LM/W 4000K	23	120	1'X4' RECESSED LED LIGHT FIXTURE. FIXTURE SHALL BE PROVIDED WITH 3,000 LUMENS, INTEGRAL 0-10V, LED DIMMING DRIVER, 4000K COLOR TEMPERATURE AND INTEGRAL N-LIGHT CONTROLS. WHERE SHADING INDICATES ON PLAN PROVIDE INTEGRAL 90 MINUTE EMERGENCY BATTERY PACK. PROVIDE ALL REQUIRED MOUNTING HARDWARE FOR TYPE OF CEILING LIGHT FIXTURE IS TO BE INSTALLED IN.
H	LITHONIA LIGHTING *STL4-30L-EZ1-LP840-N100-E10WLCP-U OR APPROVED EQUAL	3,195 LUMEN 120 LM/W 4000K	27	120	1'X4' SURFACE LED UNDERCABINET LIGHT FIXTURE. FIXTURE SHALL BE PROVIDED WITH 3,195 LUMENS, INTEGRAL 0-10V, LED DIMMING DRIVER, 4000K COLOR TEMPERATURE, INTEGRAL N-LIGHT CONTROLS, AND INTEGRAL 90 MINUTE EMERGENCY BATTERY PACK. PROVIDE ALL REQUIRED MOUNTING HARDWARE FOR TYPE OF CEILING LIGHT FIXTURE IS TO BE INSTALLED IN.
I	GOTHAM LIGHTING *EVO6SH-40/15-DFR-SH10-MVOLT-E210 OR APPROVED EQUAL	1500 LUMEN LED 89 LM/W 4000K	15	120	6" LED SHOWER DOWNLIGHT. FIXTURE SHALL BE PROVIDED WITH INTEGRAL 0-10V, LED DIMMING DRIVER & IP65 RATED SUITABLE FOR STEAM ROOM APPLICATION. PROVIDE ALL REQUIRED MOUNTING HARDWARE FOR TYPE OF CEILING FIXTURE IS TO BE INSTALLED IN.
J	FINELITE *S1T-LED-ACF-SF-4'-B-940-120-SC OR APPROVED EQUAL	1,376 LUMEN 73 LM/W 4000K	19	120	4' LED WALL MOUNT FIXTURE. FIXTURE SHALL BE PROVIDED WITH BOOSTED STANDARD OUTPUT, 4000K KELVIN COLOR TEMPERATURE, ADA COMPLIANT, AND 0-10V, LED DIMMING DRIVER. PROVIDE ALL REQUIRED MOUNTING HARDWARE FOR TYPE OF CEILING FIXTURE IS TO BE INSTALLED IN.
K	FINELITE *S1T-LED-ACF-SF-8'-B-940-120-SC OR APPROVED EQUAL	2,752 LUMEN 73 LM/W 4000K	37	120	8' LED WALL MOUNT FIXTURE. FIXTURE SHALL BE PROVIDED WITH BOOSTED STANDARD OUTPUT, 4000K KELVIN COLOR TEMPERATURE, ADA COMPLIANT, AND 0-10V, LED DIMMING DRIVER. PROVIDE ALL REQUIRED MOUNTING HARDWARE FOR TYPE OF CEILING FIXTURE IS TO BE INSTALLED IN.
L	FINELITE LIGHTING *1G4-1D-RO-8'-S-S-840-TG-OPN-120V-FA-CE-SC-C1 OR APPROVED EQUAL	6,896 LUMEN 123 LM/W 4000K	56	120	4" WIDE X 8' LONG INDIRECT / DIRECT LED PENDANT LIGHT FIXTURE. FIXTURE SHALL BE PROVIDED WITH STANDARD OUTPUT LUMEN PACKAGE, INTEGRAL 0-10V, LED DIMMING DRIVER, 4000K COLOR TEMPERATURE AND ADJUSTABLE MOUNTING. PROVIDE ALL REQUIRED MOUNTING HARDWARE FOR TYPE OF CEILING LIGHT FIXTURE IS TO BE INSTALLED IN.
M	DUAL-LITE *LE-*-**-R-***-N-E-1 OR APPROVED EQUAL	LED	3	120	ARCHITECTURAL LED EDGE-LIT EXIT SIGN WITH RED LETTER, SATIN ALUMINUM FINISH, INTEGRAL 90 MINUTE BATTERY BACK-UP. * = MOUNTING PER PLAN. ** = FACES PER PLAN. *** = DIRECTIONAL ARROWS PER PLAN.
N	COOPER LIGHTING *LU1-48-D3-40-* OR APPROVED EQUAL	1,540 LUMEN 73 LM/W 4000K	21	120	4' UNDERCABINET LED FIXTURE. FIXTURE SHALL BE PROVIDED WITH 4000K COLOR TEMPERATURE, INTEGRAL 0-10V, LED DIMMING, AND 80 COLOR RENDERING INDEX. * = FINISH AS SELECTED BY ARCHITECT.
O	COOPER LIGHTING *LU1-24-D3-40-* OR APPROVED EQUAL	785 LUMEN 71 LM/W 4000K	11	120	2' UNDERCABINET LED FIXTURE. FIXTURE SHALL BE PROVIDED WITH 4000K COLOR TEMPERATURE, INTEGRAL 0-10V, LED DIMMING, AND 80 COLOR RENDERING INDEX. * = FINISH AS SELECTED BY ARCHITECT.
P	LITHONIA LIGHTING *ELN-L48-3000LM-FST-MVOLT-40K OR APPROVED EQUAL	3,000 LUMEN 131 LM/W 4000K	25	UNV	4'-0" LED STRIP LIGHT FIXTURE. FIXTURE SHALL BE PROVIDED WITH 3,000 LUMEN PACKAGE, 4000K COLOR TEMPERATURE, INTEGRAL ELECTRONIC DRIVER, AND FROSTED DIFFUSER. PROVIDE ALL REQUIRED MOUNTING HARDWARE FOR TYPE OF CEILING / WALL LIGHT FIXTURE IS TO BE INSTALLED IN / ON.
Q	ALUZ LIGHTING *AU-ZJACT-S8W1-SF-2W-10V-40K-IP67-*-12'-0" OR APPROVED EQUAL	2,592 LUMEN 108 LM/W 4000K	24	UNV	12'-0" LED LINEAR LIGHT FIXTURE. FIXTURE SHALL BE PROVIDED WITH 2,592 LUMEN PACKAGE, 4000K COLOR TEMPERATURE, 0-10V, LED DIMMING DRIVER, IP67 RATED, AND SEMI-FROSTED DIFFUSER. PROVIDE ALL REQUIRED MOUNTING HARDWARE / CONNECTORS FOR A COMPLETE AND OPERABLE SYSTEM. * = FINISH AS SELECTED BY ARCHITECT.
R	ALUZ LIGHTING *AU-ZJACT-S8W1-SF-2W-10V-40K-IP67-*-6'-0" OR APPROVED EQUAL	1,296 LUMEN 108 LM/W 4000K	12	UNV	6'-0" LED LINEAR LIGHT FIXTURE. FIXTURE SHALL BE PROVIDED WITH 1,296 LUMEN PACKAGE, 4000K COLOR TEMPERATURE, 0-10V, LED DIMMING DRIVER, IP67 RATED, AND SEMI-FROSTED DIFFUSER. PROVIDE ALL REQUIRED MOUNTING HARDWARE / CONNECTORS FOR A COMPLETE AND OPERABLE SYSTEM. * = FINISH AS SELECTED BY ARCHITECT.

SITE LIGHTING FIXTURE SCHEDULE

TYPE	MANUFACTURER CATALOG*	LAMP QTY, & TYPE	FIXTURE WATTAGE	VOLTS	REMARKS
SA	U.S. ARCHITECTURAL *RZR-PLED-III-80LED-525MA-NW-120-1-* HS-PLED-7TS-F311 OR APPROVED EQUAL	14,093 LUMEN LED 101 LM/W 4000K	131	208	POLE MOUNTED LED AREA LIGHT FIXTURE. FIXTURE TO BE PROVIDED WITH HIGH-LOW DIMMING AND MOTION/VACANCY SENSOR, 4000K COLOR TEMPERATURE, TYPE III DISTRIBUTION AND 525mA DRIVER. * = FINISH AS SELECTED BY ARCHITECT.
SB	U.S. ARCHITECTURAL *RZR-PLED-V-90LED-825MA-NW-120-1-* HS-PLED-7TS-F311 OR APPROVED EQUAL	11,432 LUMEN LED 101 LM/W 4000K	131	208	POLE MOUNTED LED AREA LIGHT FIXTURE. FIXTURE TO BE PROVIDED WITH HIGH-LOW DIMMING AND MOTION/VACANCY SENSOR, 4000K KELVIN COLOR TEMPERATURE, TYPE V90M DISTRIBUTION AND 525mA DRIVER. * = FINISH AS SELECTED BY ARCHITECT.
SC	LITHONIA LIGHTING *ARCI-LED-P3-40K-MVOLT-E4WH-FE-* OR APPROVED EQUAL	3,000 LUMEN LED 101 LM/W 4000K	25	MVOLT	WALL MOUNTED LED LIGHT FIXTURE. FIXTURE TO BE PROVIDED WITH 3,000 LUMEN PACKAGE AND INTEGRAL LED PHOTOCELL. WHERE SHADING INDICATES ON PLAN PROVIDE 90 MINUTE EMERGENCY BATTERY PACK. PROVIDE ALL REQRUIED MOUNTING HARDWARE FOR TYPE OF WALL LIGHT FIXTURE IS TO BE MOUNTED ON. * = FINISH AS SELECTED BY ARCHITECT.
SD	LUMINAIRE LED *AEL-36"-T2-30W-4000K-120-277-DFP-_-PC OR APPROVED EQUAL	2,911 LUMEN LED 101 LM/W 4000K	28	120	WALL MOUNTED LED LIGHT FIXTURE. FIXTURE TO BE PROVIDED WITH 120V, LED PHOTOCELL. PROVIDE ALL REQUIRED MOUNTING HARDWARE FOR TYPE OF WALL LIGHT FIXTURE IS TO BE MOUNTED ON. * = FINISH AS SELECTED BY ARCHITECT.
SE	U.S. ARCHITECTURAL *RZR-PLED-IV-80LED-525MA-40K-120-1-* HS-PLED-7TS-F311 OR APPROVED EQUAL	14,093 LUMEN LED 101 LM/W 4000K	131	208	POLE MOUNTED LED AREA LIGHT FIXTURE. FIXTURE TO BE PROVIDED WITH HIGH-LOW DIMMING AND MOTION/VACANCY SENSOR, 4000K COLOR TEMPERATURE, TYPE IV DISTRIBUTION AND 525mA DRIVER. * = FINISH AS SELECTED BY ARCHITECT.
SF	U.S. ARCHITECTURAL *RZR-PLED-IV-FT-80LED-525MA-40K-120-1-2-180-* HS-PLED-7TS-F311 OR APPROVED EQUAL	28,186 LUMEN LED 109 LM/W 4000K	258	208	DUAL HEAD POLE MOUNTED LED AREA LIGHT FIXTURE. FIXTURE TO BE PROVIDED WITH HIGH-LOW DIMMING AND MOTION/VACANCY SENSOR, 4000K COLOR TEMPERATURE, TYPE IV FORWARD THROW DISTRIBUTION AND 525mA DRIVER. * = FINISH AS SELECTED BY ARCHITECT.

PANEL "H"
VOLTAGE: 208/120V-4-WIRE
LOCATION: 1ST FLR. HALL
MAIN BREAKER: 100A.
BUS SIZE
COPPER: 100A.
SCA:
MOUNT: RECESSED
ENTRY: BOTTOM

DESCRIPTION	CKT	BKR	P	LTS	REC	MSC	MTR	A-VA	B-VA	C-VA	AMPS
RMS. 127/128 U/C FRIDGE	1	20	1		2			360			
RM. 132 RECEPTACLES	3	20	1		2				360		
RM. 117 U/C FRIDGE	5	20	1		1					180	
RM. 111 U/C FRIDGE	7	20	1		1			180			
SPARE	9	20	1								
SPARE	11	20	1								
RLLR SHD. RSC-1 / RSC-2	13	20	1			2		1416			
RLLR SHD. RSC-3 / RSC-4	15	20	1			2			1416		
RLLR SHD. RSC-5 / RSC-6	17	20	1			2				1416	
RLLR SHD. RSC-7 / RSC-8	19	20	1			2		1416			
RLLR SHD. RSC-9 / RSC-10	21	20	1			2			1416		
RLLR SHD. RSC-11 / RSC-12	23	20	1			2				1416	
RLLR SHD. RSC-13 / RSC-14	25	20	1			2		1416			
RLLR SHD. RSC-15 / RSC-16	27	20	1			2			1416		
RLLR SHD. RSC-17	29	20	1			1				708	
SPACE	31	—	—								
SPACE	33	—	—								
SPACE	35	—	—								
SPACE	37	—	—								
SPACE	39	—	—								
SPACE	41	—	—								
SUB TOTAL VOLT/AMPS:								4788	4608	3720	
LOCKER 143 RECEPTACLES	2	20	1		5			900			
LOCKER 143 RECEPTACLES	4	20	1		5				900		
LOCKER 144 RECEPTACLES	6	20	1		5					900	
LOCKER 144 RECEPTACLES	8	20	1		4			720			
SPARE	10	20	1								
SPACE	12	20	1								
SPARE	14	20	1								
SPARE	16	20	1								
SPARE	18	20	1								
SPARE	20	20	1								
SPARE	22	20	1								
SPARE	24	20	1								
SPARE	26	20	1								
SPARE	28	20	1								
SPARE	30	20	1								
SPACE	32	—	—								
SPACE	34	—	—								
TP-3	36	20	1			1				360	
BOOSTER PUMP/CP	38	40	3			1		3000			
W/CKT. 38	40	—	—						3000		
W/CKT. 38	42	—	—							3000	
SUB TOTAL VOLT/AMPS:								4620	3900	4260	
PANEL SUB TOTAL VOLT/AMPS:								9408	8508	7980	
TOTAL LCL/PHASE:								0	0	0	
TOTAL VOLT/AMPS:								9408	8508	7980	
TOTAL AMPS/PHASE:								78	71	67	

CONNECTED: 25896 VA
25% OF MTR: VA
25% OF LCL: 0 VA
CALCULATED: 25896 VA = 71.88 AVERAGE AMPS

PBK
RANCHO CUCAMONGA
8163 ROCHESTER AVENUE, SUITE 100
RANCHO CUCAMONGA, CA 91730
909-987-0909 P

ONTARIO FIRE DEPARTMENT ADMINISTRATION BUILDING
CITY OF ONTARIO
1420 E. FRANCIS STREET., ONTARIO, CA

LICENSED ARCHITECT
KELLEY NEEDHAM
C-19064
Expire 03/31/25
STATE OF CALIFORNIA

REGISTERED PROFESSIONAL ENGINEER
RICARDO E. SOTELO
No. E17229
6/30/24
STATE OF CALIFORNIA

CONSULTANT
A&F ENGINEERING GROUP, INC.
9320 BASELINE RD., SUITE C, RANCHO CUCAMONGA, CA 91701
TEL: (909) 941-3008 FAX: (909) 941-8211

NO	DATE	BY	DESCRIPTION

REVISIONS

DRAWN: CBF	CHECKED: RES
DATE: 07/15/2022	SCALE: AS NOTED
PROJECT NUMBER: 2011700	

LIGHT FIXTURE SCHEDULE

DRAWING NUMBER: E0.4

BID SET 03/01/24

STATE OF CALIFORNIA
Electrical Power Distribution
NRCC-ELC-E — CALIFORNIA ENERGY COMMISSION

CERTIFICATE OF COMPLIANCE		NRCC-ELC-E
Project Name:	Ontario Fire Department Administration Building	Report Page: (Page 1 of 6)
Project Address:	NE Corner of Francis St. & Parco Ave.	Date Prepared: 11/22/2022

This document is used to demonstrate compliance with mandatory requirements in §130.5, for electrical systems in newly constructed nonresidential, high-rise residential and hotel/motel occupancies. Additions and alterations to electrical service systems in these occupancies will also use this document to demonstrate compliance per §141.0(a) or §141.0(b)2P for alterations..

A. GENERAL INFORMATION

01 Project Location (city)	Ontario		02 Occupancy Types Within Project:		
☒ Office	☐ Retail	☒ Warehouse	☒ Hotel/Motel	☐ School	☒ Support Areas
☐ Parking Garage	☐ High-Rise Residential	☐ Relocatable	☐ Healthcare Facilities	☒ Other (write in)	See Table I

B. PROJECT SCOPE
This table includes electrical systems that are within the scope of the permit application.

01	02	03	04	05
Electrical Service Designation/Description	Scope of Work[1]	Rating (kVA)	Utility Provided Metering System Exception to §130.5(a)[2]	System subject to CA Elec Code Article 517 Exception to §130.5(a)and (b)
MSBD	New electrical service equipment and meter	50	☐	☐
06 Demand Response Controls	Where required, demand response controls must be specified which are capable of receiving and automatically responding to at least one standards based messaging protocol which enables demand response after receiving a demand response signal. Sections §120.2, §130.1 and §130.3 and compliance documents NRCC-MCH, NRCC-LTI and NRCC-LTS will indicate when demand response controls are required.			

[1] FOOTNOTES: Adding only new feeders and branch circuits triggers Voltage Drop 130.5(c), no other requirements from 130.5 are required.
[2] Applicable if the utility company is providing a metering system that indicates instantaneous kW demand and kWh for a utility-defined period.

C. COMPLIANCE RESULTS
Results in this table are automatically calculated from data input and calculations in Tables F through I. Note: If any cell on this table says "COMPLIES with Exceptional Conditions" refer to Table D. Exceptional Conditions for guidance or see applicable Table referenced below.

01		02		03		04	05
Service Electrical Metering §130.5(a) (See Table F)	AND	Separation for Monitoring §130.5(b) (See Table G)	AND	Voltage Drop §130.5(c) (See Table H)	AND	Controlled Receptacles §130.5(d) (See Table I)	
Yes	AND	Yes	AND	Yes	AND	Yes	COMPLIES

STATE OF CALIFORNIA
Electrical Power Distribution
NRCC-ELC-E — CALIFORNIA ENERGY COMMISSION

CERTIFICATE OF COMPLIANCE		NRCC-ELC-E
Project Name:	Ontario Fire Department Administration Building	Report Page: (Page 2 of 6)
Project Address:	NE Corner of Francis St. & Parco Ave.	Date Prepared: 11/22/2022

D. EXCEPTIONAL CONDITIONS
This table is auto-filled with uneditable comments because of selections made or data entered in tables throughout the form.

E. ADDITIONAL REMARKS
This table is includes remarks made by the permit applicant to the Authority Having Jurisdiction.

F. SERVICE ELECTRICAL METERING
This table includes new or replacement electrical service systems OR equipment to demonstrate compliance with §130.5(a)

01	02	03				04	05	
Electrical Service Designation/Description	Rating (kVA)	Required Metering Capabilities per Table 130.5-A				Location of Requirements in Construction Documents	Field Inspector	
		Instantaneous Demand (kW)	Historical Peak Demand (kW)	Tracking kWh for user-defined period	kWh per rate period		Pass	Fail
MSBD	50	☐	☒	☒	☐	E0.2	☐	☐

STATE OF CALIFORNIA
Electrical Power Distribution
NRCC-ELC-E — CALIFORNIA ENERGY COMMISSION

CERTIFICATE OF COMPLIANCE		NRCC-ELC-E
Project Name:	Ontario Fire Department Administration Building	Report Page: (Page 3 of 6)
Project Address:	NE Corner of Francis St. & Parco Ave.	Date Prepared: 11/22/2022

G. SEPARATION OF ELECTRICAL CIRCUITS FOR ENERGY MONITORING
This table includes entirely new or complete replacement electrical power distribution systems to demonstrate compliance with §130.5(b). Any load types that are not included in the service do not need to be shown.

01	02	03	04	05	
Load Type per Table 130.5-B[1]	Minimum Required Separation of Load per Table 130.5-B	Compliance Method[2]	Location of Requirements in Construction Documents	Field Inspector	
				Pass	Fail
MSBD					
Lighting including exit, egress and exterior	not required	Method 1		☐	☐
Lighting including exit, egress and exterior	not required	Method 1		☐	☐
Lighting including exit, egress and exterior	not required	Method 1	E0.3	☐	☐
HVAC systems and components	not required	Method 1	E0.3	☐	☐
Domestic and service water systems	not required	Method 1	E0.3	☐	☐
Plug Loads and appliances less than 25kVA	not required	Method 1	E0.3	☐	☐
Other non-HVAC loads and appliances greater than or equal to 25kVA	not required	Method 1	E0.3	☐	☐
Elevators, escalators, moving walkways	not required	Method 1	E0.3	☐	☐
Charging stations for electrical vehicle	All loads in aggregate	Method 1	E0.3	☐	☐

** NOTES: If "Other*" is selected under Compliance Method above, please indicate how compliance has been achieved in the space provided below.*

[1] FOOTNOTES: For each separate load type, up to 10% of the connected load may be of any type.
[2] Method 1: Switchboards/ motor control centers/ panelboard loads disaggregated for each load type.
Method 2: Switchboards/ motor control centers/ panelboard supply other distribution equipment with loads disaggregated for each load type.
Method 3: Branch circuits serve load types individually and provisions for adding future branch circuit monitoring.
Method 4: Complete metering system measures and reports loads by type.
See Chapter 8 of the Nonresidential Compliance Manual for more detail on Compliance Methods.

H. VOLTAGE DROP
This table includes entirely new or complete replacement electrical power distribution systems, or alterations that add, modify or replace both feeders and branch circuits to demonstrate compliance with §130.5(c). For alterations, only the altered circuits must demonstrate compliance per §141.0(b)2Piii

01	02	03	04	05

STATE OF CALIFORNIA
Electrical Power Distribution
NRCC-ELC-E — CALIFORNIA ENERGY COMMISSION

CERTIFICATE OF COMPLIANCE		NRCC-ELC-E
Project Name:	Ontario Fire Department Administration Building	Report Page: (Page 4 of 6)
Project Address:	NE Corner of Francis St. & Parco Ave.	Date Prepared: 11/22/2022

H. VOLTAGE DROP

Electrical Service Designation/Description	Combined Voltage Drop on Installed Feeder/Branch Circuit Conductors Compliance Method			Location of Voltage Drop Calculations[1]	Sheet Number for Voltage Drop Calculations in Construction Documents	Field Inspector	
						Pass	Fail
MSBD	☒	Voltage drop less than 5%	☐	Permitted by CA Elec Code (Exception to 130.5(c))*	In construction documents	E0.2	☐	☐

** NOTES: If "Permitted by CA Elec Code *" is selected under Compliance Method above, please indicate where the exception applies in the space provided below.*

MSBD	

[1] FOOTNOTES: Voltage drop calculations may be attached to the permit application outside the construction documents if allowed by the Authority Having Jurisdiction. Select "attached" if applicable. If calculations will be the responsibility of the installing contractor, select "Contractor Responsible".

I.CIRCUIT CONTROLS FOR 120-VOLT RECEPTACLES AND CONTROLLED RECEPTACLES
This table includes entirely new or complete replacement electrical power distribution systems to demonstrate compliance with §130.5(d). Both controlled and uncontrolled receptacles must be provided in office areas, lobbies, conference rooms, kitchen areas in office spaces, copy rooms and hotel/motel guest rooms.

01	02	03	04	05	06	
Room name or Description	Location/ Type of Controlled Receptacles	Shut-Off Controls	Permanent Durable Marking Will be Used	Location of Requirements in Construction Documents	Field Inspector	
					Pass	Fail
MSBD	Within 6ft of uncontrolled receptacle	Occupancy Sensor	☒	E2.2, E2.6 & E2.10	☐	☐
MSBD	Split-wired receptacle	Occupancy Sensor	☒	E2.2, E2.6 & E2.10	☐	☐
MSBD	Within 6ft of uncontrolled AND Split-wired receptacle	Occupancy Sensor	☒	E2.2, E2.6 & E2.10	☐	☐

** NOTES: If "Other*" is selected under Shut-Off Controls above, please indicate how compliance has been achieved in the space provided below.*

STATE OF CALIFORNIA
Electrical Power Distribution
NRCC-ELC-E — CALIFORNIA ENERGY COMMISSION

CERTIFICATE OF COMPLIANCE		NRCC-ELC-E
Project Name:	Ontario Fire Department Administration Building	Report Page: (Page 5 of 6)
Project Address:	NE Corner of Francis St. & Parco Ave.	Date Prepared: 11/22/2022

J. DECLARATION OF REQUIRED CERTIFICATES OF INSTALLATION
Selections have been made based on information provided in this document. If any selection have been changed by permit applicant, an explanation should be included in Table E. Additional Remarks. These documents must be provided to the building inspector during construction and can be found online at https://www.energy.ca.gov/title24/2019standards/2019_compliance_documents/Nonresidential_Documents/NRCI/

Yes	No	Form/Title	Field Inspector	
			Pass	Fail
●	○	NRCI-ELC-01-E - Must be submitted for all buildings	☐	☐

K. DECLARATION OF REQUIRED CERTIFICATES OF ACCEPTANCE
There are no Certificates of Acceptance applicable to electrical power distribution requirements.

STATE OF CALIFORNIA
Electrical Power Distribution
NRCC-ELC-E — CALIFORNIA ENERGY COMMISSION

CERTIFICATE OF COMPLIANCE		NRCC-ELC-E
Project Name:	Ontario Fire Department Administration Building	Report Page: (Page 6 of 6)
Project Address:	NE Corner of Francis St. & Parco Ave.	Date Prepared: 11/22/2022

DOCUMENTATION AUTHOR'S DECLARATION STATEMENT
I certify that this Certificate of Compliance documentation is accurate and complete.

Documentation Author Name: Luis E. Flores	Documentation Author Signature:
Company: A&F Engineering Group, Inc.	Signature Date: 11/22/2022
Address: 9320 Baseline Rd., Suite C	CEA/ HERS Certification Identification (if applicable):
City/State/Zip: Rancho Cucamonga, CA 91701	Phone: (909) 941-3008

RESPONSIBLE PERSON'S DECLARATION STATEMENT
I certify the following under penalty of perjury, under the laws of the State of California:
1. The information provided on this Certificate of Compliance is true and correct.
2. I am eligible under Division 3 of the Business and Professions Code to accept responsibility for the building design or system design identified on this Certificate of Compliance (responsible designer)
3. The energy features and performance specifications, materials, components, and manufactured devices for the building design or system design identified on this Certificate of Compliance conform to the requirements of Title 24, Part 1 and Part 6 of the California Code of Regulations.
4. The building design features or system design features identified on this Certificate of Compliance are consistent with the information provided on other applicable compliance documents, worksheets, calculations, plans and specifications submitted to the enforcement agency for approval with this building permit application.
5. I will ensure that a completed signed copy of this Certificate of Compliance shall be made available with the building permit(s) issued for the building, and made available to the enforcement agency for all applicable inspections. I understand that a completed signed copy of this Certificate of Compliance is required to be included with the documentation the builder provides to the building owner at occupancy.

Responsible Designer Name: Rolando E. Sotelo	Responsible Designer Signature:
Company: A & F Engineering Group, Inc.	Date Signed: 2022-11-22
Address: 9320 Baseline Rd., Suite C	License: E17229
City/State/Zip: Rancho Cucamonga CA	Phone: (909) 941-3008

STATE OF CALIFORNIA
Indoor Lighting
NRCC-LTI-E — CALIFORNIA ENERGY COMMISSION

CERTIFICATE OF COMPLIANCE		NRCC-LTI-E
Project Name:	Ontario Fire Department Administration Building	Report Page: (Page 1 of 16)
Project Address:	NE Corner of Francis St. & Parco Ave.	Date Prepared: 11/22/2022

This document is used to demonstrate compliance with requirements in §110.9, §110.12(c), §130.0, §130.1, §140.6 and §141.0(b)2 for indoor lighting scopes using the prescriptive path.

A. GENERAL INFORMATION

01 Project Location (city)	Ontario	04 Total Conditioned Floor Area (ft²)	29,870
02 Climate Zone	10	05 Total Unconditioned Floor Area (ft²)	0
03 Occupancy Types Within Project (select all that apply):		06 # of Stories (Habitable Above Grade)	1

☒ Office	☐ Retail	☒ Warehouse	☒ Hotel/Motel	☐ School	☒ Support Areas	
☐ Parking Garage	☐ High-Rise Residential	☐ Relocatable	☐ Healthcare	☒ Other (Write in)	See Table I	

B. PROJECT SCOPE
This table includes any lighting systems that are within the scope of the permit application and are demonstrating compliance using the prescriptive path outlined in §140.6 or §141.0(b)2 for alterations.

Scope of Work	Conditioned Spaces		Unconditioned Spaces	
01	02	03	04	05
My Project Consists of (check all that apply):	Calculation Method	Area (ft²)	Calculation Method	Area (ft²)
☒ New Lighting System	Area Category Method	29870	Area Category Method	0
☐ New Lighting System - Parking Garage				
Total Area of Work (ft²)	29870		0	

STATE OF CALIFORNIA
Indoor Lighting
NRCC-LTI-E — CALIFORNIA ENERGY COMMISSION

CERTIFICATE OF COMPLIANCE		NRCC-LTI-E
Project Name:	Ontario Fire Department Administration Building	Report Page: (Page 2 of 16)
Project Address:	NE Corner of Francis St. & Parco Ave.	Date Prepared: 11/22/2022

C. COMPLIANCE RESULTS
If any cell on this table says "DOES NOT COMPLY" or "COMPLIES with Exceptional Conditions" refer to Table D. for guidance.

Lighting in conditioned and unconditioned spaces must not be combined for compliance per §140.6(b)1	Allowed Lighting Power per §140.6(b) (Watts)						Adjusted Lighting Power per §140.6(a) (Watts)				Compliance Results
	01	02	03	04		05	06	07		08	09
	Complete Building §140.6(c)1	Area Category §140.6(c)2	Area Category Additional §140.6(c)2G (+)	Tailored §140.6(c)3 (+)	=	**Total Allowed** (Watts)	≥ Total Designed (Watts)	Adjustments: PAF Lighting Control Credits §140.6(a)2 (-)	=	**Total Adjusted** (Watts) *Includes Adjustments	**05 must be >= 08 §140.6**
	(See Table I)	(See Table I)	(See Table J)	(See Table K)			(See Table F)	(See Table P)			
Conditioned		18,694.1	0		=	18,694	≥ 17,261	0	=	17261	COMPLIES
Unconditioned					=		≥		=		
Controls Compliance (See Table H for Details)											COMPLIES
Rated Power Reduction Compliance (See Table Q for Details)											

D. EXCEPTIONAL CONDITIONS
This table is auto-filled with uneditable comments because of selections made or data entered in tables throughout the form.

E. ADDITIONAL REMARKS
This table includes remarks made by the permit applicant to the Authority Having Jurisdiction.

F. INDOOR LIGHTING FIXTURE SCHEDULE
This table includes all permanent designed lighting and all portable lighting in offices.

Designed Wattage: Conditioned Spaces

01	02	03	04	05	06	07	08	09	10	
Name or Item Tag	Complete Luminaire Description	Modular (Track) Fixture	Small Aperture & Color Change[1]	Watts per luminaire[2]	How is Wattage determined	Total Number of Luminaires	Excluded per §140.6(a)3	Design Watts	Field Inspector	
									Pass	Fail
A	(1) 34w LED	No	No	34	CEC Default	121	No	4,114	☐	☐
AE	(1) 34w LED	No	No	34	CEC Default	54	No	1,836	☐	☐

STATE OF CALIFORNIA
Indoor Lighting
NRCC-LTI-E — CALIFORNIA ENERGY COMMISSION

CERTIFICATE OF COMPLIANCE		NRCC-LTI-E
Project Name:	Ontario Fire Department Administration Building	Report Page: (Page 3 of 16)
Project Address:	NE Corner of Francis St. & Parco Ave.	Date Prepared: 11/22/2022

F. INDOOR LIGHTING FIXTURE SCHEDULE

B	(1) 22w LED	No	No	22	CEC Default	206	No	4,532	☐	☐
BE	(1) 22w LED	No	No	22	CEC Default	14	No	308	☐	☐
C	(1) 70w LED	No	No	70	CEC Default	4	No	280	☐	☐
D	(1) 20w LED	No	No	20	CEC Default	84	No	1,680	☐	☐
DE	(1) 20w LED	No	No	20	CEC Default	20	No	400	☐	☐
E	(1) 36w LED	No	No	36	CEC Default	36	No	1,296	☐	☐
EE	(1) 36w LED	No	No	36	CEC Default	25	No	900	☐	☐
F	(1) 27w LED	No	No	27	CEC Default	8	No	216	☐	☐
G	(1) 23w LED	No	No	23	CEC Default	28	No	644	☐	☐
GE	(1) 23w LED	No	No	23	CEC Default	10	No	230	☐	☐
H	(1) 27w LED	No	No	27	CEC Default	4	No	108	☐	☐
I	(1) 15w LED	No	No	15	CEC Default	5	No	75	☐	☐
J	(1) 19w LED	No	No	19	CEC Default	6	No	114	☐	☐
K	(1) 37w LED	No	No	37	CEC Default	12	No	444	☐	☐
L	(1) 84w LED	No	No	84	CEC Default	1	No	84	☐	☐
Total Designed Watts: CONDITIONED SPACES						17,261				

[1] FOOTNOTE: Design Watts for small aperture and color changing luminaires which qualify per §140.6(a)4B is adjusted to be 75% of their rated wattage. Table F automatically makes this adjustment, the permit applicant should enter full rated wattage in column D5.
[2] Authority Having Jurisdiction may ask for Luminaire cut sheets to confirm wattage used for compliance per §130.0(c) Wattage used must be the maximum rated for the luminaire, not the lamp.

G. MODULAR LIGHTING SYSTEMS
This section does not apply to this project.

PBK
RANCHO CUCAMONGA
8163 ROCHESTER AVENUE, SUITE 100
RANCHO CUCAMONGA, CA 91730
909-987-0909 P

ONTARIO FIRE DEPARTMENT ADMINISTRATION BUILDING
CITY OF ONTARIO
1420 E. FRANCIS STREET., ONTARIO, CA

LICENSED ARCHITECT — KELLEY NEEDHAM C-19064 Exp.Date 03/31/25 — STATE OF CALIFORNIA
REGISTERED PROFESSIONAL ENGINEER — ROLANDO E. SOTELO No. E17229 6/30/24 — STATE OF CALIFORNIA

CONSULTANT
A&F ENGINEERING GROUP, INC.
9320 BASELINE RD., SUITE C, RANCHO CUCAMONGA, CA 91701
TEL: (909) 941-3008 FAX: (909) 941-8211

NO	DATE	BY	DESCRIPTION

STATE OF CALIFORNIA
Indoor Lighting
NRCC-LTI-E — CALIFORNIA ENERGY COMMISSION

CERTIFICATE OF COMPLIANCE			**NRCC-LTI-E**
Project Name:	Ontario Fire Department Administration Building	**Report Page:**	**(Page 4 of 16)**
Project Address:	NE Corner of Francis St. & Parco Ave.	**Date Prepared:**	11/22/2022

H. INDOOR LIGHTING CONTROLS (Not including PAFs)

*This table includes lighting controls for conditioned and unconditioned spaces. When a control having a * is shown, the notes section of this table provides more detail on how compliance is achieved. The lighting controls section of the Compliance Summary Table on the first page will show "DOES NOT COMPLY" if the notes are left blank.*

Building Level Controls

01	02	03	
Mandatory Demand Response §110.12(c)	Shut-off controls §130.1(c)	Field Inspector	
		Pass	Fail
Required > 10,000 SF	Whole Building Auto Time Switch	☐	☐

Area Level Controls

04	05	06	07	08	09	10	11	12	
Area Description	Complete Building or Area Category Primary Function Area	Area Controls §130.1(a)	Multi-Level Controls §130.1(b)	Shut-Off Controls §130.1(c)	Primary/Skylit Daylighting §130.1(d)	Secondary Daylighting §140.6(d)	Interlocked Systems §140.6(a)1	Field Inspector	
								Pass	Fail
Lobby 101	Main Entry Lobby	Manual ON/OFF	Dimmer	Occupancy Sensor	Exempt*	Exempt*	No	☐	☐
Pumblic Restroom 102	Restrooms	Manual ON/OFF	Bi-level Switch	Occupancy Sensor	N/A	N/A	No	☐	☐
Male Restroom 137	Restrooms	Manual ON/OFF	Dimmer	Occupancy Sensor	N/A	N/A	No	☐	☐
Female Restroom 140	Restrooms	Manual ON/OFF	Dimmer	Occupancy Sensor	N/A	N/A	No	☐	☐
Male Restroom 220	Restrooms	Manual ON/OFF	Dimmer	Occupancy Sensor	N/A	N/A	No	☐	☐
Female Restroom 223	Restrooms	Manual ON/OFF	Dimmer	Occupancy Sensor	N/A	N/A	No	☐	☐
Bathroom 228	Restrooms	Manual ON/OFF	Dimmer	Occupancy Sensor	N/A	N/A	No	☐	☐
Male Restroom 316	Restrooms	Manual ON/OFF	Dimmer	Occupancy Sensor	N/A	N/A	No	☐	☐

Registration Number: | Registration Date/Time: | Registration Provider: Energysoft

CA Building Energy Efficiency Standards - 2019 Nonresidential Compliance | Report Version: 2019.1.003 Schema Version: rev 20200601 | Report Generated: 2022-11-22 15:39:05

STATE OF CALIFORNIA
Indoor Lighting
NRCC-LTI-E — CALIFORNIA ENERGY COMMISSION

CERTIFICATE OF COMPLIANCE			**NRCC-LTI-E**
Project Name:	Ontario Fire Department Administration Building	**Report Page:**	**(Page 5 of 16)**
Project Address:	NE Corner of Francis St. & Parco Ave.	**Date Prepared:**	11/22/2022

H. INDOOR LIGHTING CONTROLS (Not including PAFs)

Female Restroom 319	Restrooms	Manual ON/OFF	Dimmer	Occupancy Sensor	N/A	N/A	No	☐	☐
Admin Open Office 103	Office greater than 250 square feet	Manual ON/OFF	Dimmer	Occupancy Sensor	N/A	N/A	No	☐	☐
Fire SPC Workstations 131	Office greater than 250 square feet	Manual ON/OFF	Dimmer	Occupancy Sensor	N/A	N/A	No	☐	☐
Plan Checker Office 132	Office greater than 250 square feet	Manual ON/OFF	Dimmer	Occupancy Sensor	N/A	N/A	No	☐	☐
Shared Workspace 224	Office greater than 250 square feet	Manual ON/OFF	Dimmer	Occupancy Sensor	N/A	N/A	No	☐	☐
Fire Chief Office 301	Office greater than 250 square feet	Manual ON/OFF	Dimmer	Occupancy Sensor	Included	N/A	No	☐	☐
DC Office 327	Office greater than 250 square feet	Manual ON/OFF	Dimmer	Occupancy Sensor	Exempt*	Exempt*	No	☐	☐
Open Workstations 328	Office greater than 250 square feet	Manual ON/OFF	Dimmer	Occupancy Sensor	Included	Included	No	☐	☐
Admin Office 104	Office 250 square feet or less	Manual ON/OFF	Dimmer	Occupancy Sensor	N/A	N/A	No	☐	☐
EMS Directors Office 112	Office 250 square feet or less	Manual ON/OFF	Dimmer	Occupancy Sensor	Exempt*	Exempt*	No	☐	☐
EMS Nurses Office 113	Office 250 square feet or less	Manual ON/OFF	Dimmer	Occupancy Sensor	N/A	N/A	No	☐	☐
EMS Captains Office 114	Office 250 square feet or less	Manual ON/OFF	Dimmer	Occupancy Sensor	N/A	N/A	No	☐	☐
Admin Workstations 116	Office 250 square feet or less	Manual ON/OFF	Dimmer	Occupancy Sensor	N/A	N/A	No	☐	☐
DC Office 117	Office 250 square feet or less	Manual ON/OFF	Dimmer	Occupancy Sensor	N/A	N/A	No	☐	☐
Training Office #1 118	Office 250 square feet or less	Manual ON/OFF	Dimmer	Occupancy Sensor	N/A	N/A	No	☐	☐

Registration Number: | Registration Date/Time: | Registration Provider: Energysoft

CA Building Energy Efficiency Standards - 2019 Nonresidential Compliance | Report Version: 2019.1.003 Schema Version: rev 20200601 | Report Generated: 2022-11-22 15:39:05

STATE OF CALIFORNIA
Indoor Lighting
NRCC-LTI-E — CALIFORNIA ENERGY COMMISSION

CERTIFICATE OF COMPLIANCE			**NRCC-LTI-E**
Project Name:	Ontario Fire Department Administration Building	**Report Page:**	**(Page 6 of 16)**
Project Address:	NE Corner of Francis St. & Parco Ave.	**Date Prepared:**	11/22/2022

H. INDOOR LIGHTING CONTROLS (Not including PAFs)

Training Office #2 119	Office 250 square feet or less	Manual ON/OFF	Dimmer	Occupancy Sensor	N/A	N/A	No	☐	☐
Training Office #3 120	Office 250 square feet or less	Manual ON/OFF	Dimmer	Occupancy Sensor	N/A	N/A	No	☐	☐
Training Office #4 121	Office 250 square feet or less	Manual ON/OFF	Dimmer	Occupancy Sensor	N/A	N/A	No	☐	☐
DFM Office 127	Office 250 square feet or less	Manual ON/OFF	Dimmer	Occupancy Sensor	N/A	N/A	No	☐	☐
DC Office 128	Office 250 square feet or less	Manual ON/OFF	Dimmer	Occupancy Sensor	N/A	N/A	No	☐	☐
Admin Tech Office 129	Office 250 square feet or less	Manual ON/OFF	Dimmer	Occupancy Sensor	N/A	N/A	No	☐	☐
SR Fire SPC Office 130	Office 250 square feet or less	Manual ON/OFF	Dimmer	Occupancy Sensor	N/A	N/A	No	☐	☐
Fire Dispatch Supervisor 202	Office 250 square feet or less	Manual ON/OFF	Dimmer	Occupancy Sensor	N/A	N/A	No	☐	☐
Dispatch Room 205	Office 250 square feet or less	Manual ON/OFF	Dimmer	Occupancy Sensor	N/A	N/A	No	☐	☐
Fire Comm. Manager 207	Office 250 square feet or less	Manual ON/OFF	Dimmer	Occupancy Sensor	N/A	N/A	No	☐	☐
Office 231	Office 250 square feet or less	Manual ON/OFF	Dimmer	Occupancy Sensor	N/A	N/A	No	☐	☐
Office 232	Office 250 square feet or less	Manual ON/OFF	Dimmer	Occupancy Sensor	N/A	N/A	No	☐	☐
Senior Admin. Asst. Office 302	Office 250 square feet or less	Manual ON/OFF	Dimmer	Occupancy Sensor	N/A	N/A	No	☐	☐
DC Office 305	Office 250 square feet or less	Manual ON/OFF	Dimmer	Occupancy Sensor	N/A	N/A	No	☐	☐
Admin. Asst. 306	Office 250 square feet or less	Manual ON/OFF	Dimmer	Occupancy Sensor	N/A	N/A	No	☐	☐

Registration Number: | Registration Date/Time: | Registration Provider: Energysoft

CA Building Energy Efficiency Standards - 2019 Nonresidential Compliance | Report Version: 2019.1.003 Schema Version: rev 20200601 | Report Generated: 2022-11-22 15:39:05

STATE OF CALIFORNIA
Indoor Lighting
NRCC-LTI-E — CALIFORNIA ENERGY COMMISSION

CERTIFICATE OF COMPLIANCE			**NRCC-LTI-E**
Project Name:	Ontario Fire Department Administration Building	**Report Page:**	**(Page 7 of 16)**
Project Address:	NE Corner of Francis St. & Parco Ave.	**Date Prepared:**	11/22/2022

H. INDOOR LIGHTING CONTROLS (Not including PAFs)

Admin. Director Office 307	Office 250 square feet or less	Manual ON/OFF	Dimmer	Occupancy Sensor	N/A	N/A	No	☐	☐
Workroom 323	Office 250 square feet or less	Manual ON/OFF	Dimmer	Occupancy Sensor	N/A	N/A	No	☐	☐
Emer. Mgmt. Coord. 324	Office 250 square feet or less	Manual ON/OFF	Dimmer	Occupancy Sensor	N/A	N/A	No	☐	☐
Office 325	Office 250 square feet or less	Manual ON/OFF	Dimmer	Occupancy Sensor	N/A	N/A	No	☐	☐
BC Office 326	Office 250 square feet or less	Manual ON/OFF	Dimmer	Occupancy Sensor	N/A	N/A	No	☐	☐
Office 329	Office 250 square feet or less	Manual ON/OFF	Dimmer	Occupancy Sensor	N/A	N/A	No	☐	☐
Office 330	Office 250 square feet or less	Manual ON/OFF	Dimmer	Occupancy Sensor	N/A	N/A	No	☐	☐
Mgmt. Analyst 331	Office 250 square feet or less	Manual ON/OFF	Dimmer	Occupancy Sensor	N/A	N/A	No	☐	☐
Sr. Financial Analyst 332	Office 250 square feet or less	Manual ON/OFF	Dimmer	Occupancy Sensor	N/A	N/A	No	☐	☐
Emer. Manager Office 333	Office 250 square feet or less	Manual ON/OFF	Dimmer	Occupancy Sensor	N/A	N/A	No	☐	☐
Large Conference Room 105	Convention, Conference, Multipurpose and Meeting Center Areas	Manual ON/OFF	Dimmer	Occupancy Sensor	Included	Included	No	☐	☐
EMS Skills Room 111	Convention, Conference, Multipurpose and Meeting Center Areas	Manual ON/OFF	Dimmer	Occupancy Sensor	N/A	N/A	No	☐	☐
Small Conference Room 115	Convention, Conference, Multipurpose and Meeting Center Areas	Manual ON/OFF	Dimmer	Occupancy Sensor	N/A	N/A	No	☐	☐

Registration Number: | Registration Date/Time: | Registration Provider: Energysoft

CA Building Energy Efficiency Standards - 2019 Nonresidential Compliance | Report Version: 2019.1.003 Schema Version: rev 20200601 | Report Generated: 2022-11-22 15:39:05

STATE OF CALIFORNIA
Indoor Lighting
NRCC-LTI-E — CALIFORNIA ENERGY COMMISSION

CERTIFICATE OF COMPLIANCE			**NRCC-LTI-E**
Project Name:	Ontario Fire Department Administration Building	**Report Page:**	**(Page 8 of 16)**
Project Address:	NE Corner of Francis St. & Parco Ave.	**Date Prepared:**	11/22/2022

H. INDOOR LIGHTING CONTROLS (Not including PAFs)

Training / Multi-Use Room 204	Convention, Conference, Multipurpose and Meeting Center Areas	Manual ON/OFF	Dimmer	Occupancy Sensor	N/A	N/A	No	☐	☐
EOC Breakout Room 226	Convention, Conference, Multipurpose and Meeting Center Areas	Manual ON/OFF	Dimmer	Occupancy Sensor	N/A	N/A	No	☐	☐
EOC Conference Room 234	Convention, Conference, Multipurpose and Meeting Center Areas	Manual ON/OFF	Dimmer	Occupancy Sensor	Included	Included	No	☐	☐
Electrical Room 106	Electrical Mechancial Telephone Room	Manual ON/OFF	Bi-level Switch	Occupancy Sensor	N/A	N/A	No	☐	☐
IDF Room 141	Electrical Mechancial Telephone Room	Manual ON/OFF	Dimmer	Occupancy Sensor	N/A	N/A	No	☐	☐
Radio Equipment Room 218	Electrical Mechancial Telephone Room	Manual ON/OFF	Dimmer	Occupancy Sensor	N/A	N/A	No	☐	☐
MDF Room 225	Electrical Mechancial Telephone Room	Manual ON/OFF	Dimmer	Occupancy Sensor	N/A	N/A	No	☐	☐
IDF Room 320	Electrical Mechancial Telephone Room	Manual ON/OFF	Dimmer	Occupancy Sensor	N/A	N/A	No	☐	☐
Storage 107	Warehouse	Manual ON/OFF	Bi-level Switch	Occupancy Sensor	N/A	N/A	No	☐	☐
Storage 108	Warehouse	Manual ON/OFF	Bi-level Switch	Occupancy Sensor	N/A	N/A	No	☐	☐
EMS Storage 110	Warehouse	Manual ON/OFF	Dimmer	Occupancy Sensor	N/A	N/A	No	☐	☐
Storage 133	Warehouse	Manual ON/OFF	Dimmer	Occupancy Sensor	N/A	N/A	No	☐	☐
Janitors Closte 138	Warehouse	Manual ON/OFF	Bi-level Switch	Occupancy Sensor	N/A	N/A	No	☐	☐
Storage 203	Warehouse	Manual ON/OFF	Bi-level Switch	Occupancy Sensor	N/A	N/A	No	☐	☐

Registration Number: | Registration Date/Time: | Registration Provider: Energysoft

CA Building Energy Efficiency Standards - 2019 Nonresidential Compliance | Report Version: 2019.1.003 Schema Version: rev 20200601 | Report Generated: 2022-11-22 15:39:05

STATE OF CALIFORNIA
Indoor Lighting
NRCC-LTI-E — CALIFORNIA ENERGY COMMISSION

CERTIFICATE OF COMPLIANCE			**NRCC-LTI-E**
Project Name:	Ontario Fire Department Administration Building	**Report Page:**	**(Page 9 of 16)**
Project Address:	NE Corner of Francis St. & Parco Ave.	**Date Prepared:**	11/22/2022

H. INDOOR LIGHTING CONTROLS (Not including PAFs)

EOC Equipment Room 210	Warehouse	Manual ON/OFF	Dimmer	Occupancy Sensor	N/A	N/A	No	☐	☐
Janitor Closet 221	Warehouse	Manual ON/OFF	Bi-level Switch	Occupancy Sensor	N/A	N/A	No	☐	☐
Storage 230	Warehouse	Manual ON/OFF	Bi-level Switch	Occupancy Sensor	N/A	N/A	No	☐	☐
Storage 233	Warehouse	Manual ON/OFF	Dimmer	Occupancy Sensor	N/A	N/A	No	☐	☐
Secured Files Room 303	Warehouse	Manual ON/OFF	Dimmer	Occupancy Sensor	N/A	N/A	No	☐	☐
Workroom / Storage 313	Warehouse	Manual ON/OFF	Dimmer	Occupancy Sensor	N/A	N/A	No	☐	☐
Janitor 317	Warehouse	Manual ON/OFF	Bi-level Switch	Occupancy Sensor	N/A	N/A	No	☐	☐
Storage 321	Warehouse	Manual ON/OFF	Bi-level Switch	Occupancy Sensor	N/A	N/A	No	☐	☐
Hallway North 122	Corridor Area	Manual ON/OFF	Dimmer	Occupancy Sensor	N/A	N/A	No	☐	☐
Hallway Central 123	Corridor Area	Manual ON/OFF	Dimmer	Occupancy Sensor	N/A	N/A	No	☐	☐
Hallway South 124	Corridor Area	Manual ON/OFF	Dimmer	Occupancy Sensor	N/A	N/A	No	☐	☐
Hallway East 125	Corridor Area	Manual ON/OFF	Dimmer	Occupancy Sensor	N/A	N/A	No	☐	☐
Hallway West 126	Corridor Area	Manual ON/OFF	Dimmer	Occupancy Sensor	N/A	N/A	No	☐	☐
Vestible 136	Corridor Area	Manual ON/OFF	Dimmer	Occupancy Sensor	N/A	N/A	No	☐	☐
2nd Floor Hallway Central 211	Corridor Area	Manual ON/OFF	Dimmer	Occupancy Sensor	N/A	N/A	No	☐	☐

Registration Number: | Registration Date/Time: | Registration Provider: Energysoft

CA Building Energy Efficiency Standards - 2019 Nonresidential Compliance | Report Version: 2019.1.003 Schema Version: rev 20200601 | Report Generated: 2022-11-22 15:39:05

STATE OF CALIFORNIA
Indoor Lighting
NRCC-LTI-E — CALIFORNIA ENERGY COMMISSION

CERTIFICATE OF COMPLIANCE			**NRCC-LTI-E**
Project Name:	Ontario Fire Department Administration Building	**Report Page:**	**(Page 10 of 16)**
Project Address:	NE Corner of Francis St. & Parco Ave.	**Date Prepared:**	11/22/2022

H. INDOOR LIGHTING CONTROLS (Not including PAFs)

2nd Floor Hallway Central South 212	Corridor Area	Manual ON/OFF	Dimmer	Occupancy Sensor	N/A	N/A	No	☐	☐
2nd Floor Hallway East 213	Corridor Area	Manual ON/OFF	Dimmer	Occupancy Sensor	N/A	N/A	No	☐	☐
2nd Floor Hallway South East 214	Corridor Area	Manual ON/OFF	Dimmer	Occupancy Sensor	N/A	N/A	No	☐	☐
2nd Floor Vestible 219	Corridor Area	Manual ON/OFF	Dimmer	Occupancy Sensor	N/A	N/A	No	☐	☐
2nd Floor Vestible 222	Corridor Area	Manual ON/OFF	Dimmer	Occupancy Sensor	N/A	N/A	No	☐	☐
3rd Floor Hallway Central 309	Corridor Area	Manual ON/OFF	Dimmer	Occupancy Sensor	N/A	N/A	No	☐	☐
3rd Floor Hallway North 310	Corridor Area	Manual ON/OFF	Dimmer	Occupancy Sensor	N/A	N/A	No	☐	☐
3rd Floor Hallway East 311	Corridor Area	Manual ON/OFF	Dimmer	Occupancy Sensor	N/A	N/A	No	☐	☐
3rd Floor Hallway South 312	Corridor Area	Manual ON/OFF	Dimmer	Occupancy Sensor	N/A	N/A	No	☐	☐
3rd Floor Vestibule 315	Corridor Area	Manual ON/OFF	Dimmer	Occupancy Sensor	N/A	N/A	No	☐	☐
3rd Floor Vestibule 318	Corridor Area	Manual ON/OFF	Dimmer	Occupancy Sensor	N/A	N/A	No	☐	☐
Exercise Room 134	Exercise/Fitness Center GymnasiumArea	Manual ON/OFF	Dimmer	Occupancy Sensor	N/A	N/A	No	☐	☐
Open Office 135	Office Open Plan	Manual ON/OFF	Dimmer	Occupancy Sensor	N/A	N/A	No	☐	☐
Dispatch Floor 201	Office Open Plan	Manual ON/OFF	Dimmer	Occupancy Sensor	Included	Included	No	☐	☐
EOC Floor 209	Office Open Plan	Manual ON/OFF	Dimmer	Occupancy Sensor	Included	Included	No	☐	☐

Registration Number: | Registration Date/Time: | Registration Provider: Energysoft

CA Building Energy Efficiency Standards - 2019 Nonresidential Compliance | Report Version: 2019.1.003 Schema Version: rev 20200601 | Report Generated: 2022-11-22 15:39:05

STATE OF CALIFORNIA
Indoor Lighting
NRCC-LTI-E — CALIFORNIA ENERGY COMMISSION

CERTIFICATE OF COMPLIANCE			**NRCC-LTI-E**
Project Name:	Ontario Fire Department Administration Building	**Report Page:**	**(Page 11 of 16)**
Project Address:	NE Corner of Francis St. & Parco Ave.	**Date Prepared:**	11/22/2022

H. INDOOR LIGHTING CONTROLS (Not including PAFs)

Open Office / Classroom 304	Office Open Plan	Manual ON/OFF	Dimmer	Occupancy Sensor	Included	Included	No	☐	☐
Break Area 142	Lounge Breakroom or Waiting Area	Manual ON/OFF	Dimmer	Occupancy Sensor	N/A	N/A	No	☐	☐
Dayroom 215	Lounge Breakroom or Waiting Area	Manual ON/OFF	Dimmer	Occupancy Sensor	N/A	N/A	No	☐	☐
Breakroom 314	Lounge Breakroom or Waiting Area	Manual ON/OFF	Dimmer	Occupancy Sensor	N/A	N/A	No	☐	☐
Dayroom 322	Lounge Breakroom or Waiting Area	Manual ON/OFF	Dimmer	Occupancy Sensor	N/A	N/A	No	☐	☐
Male Shower / Locker 143	Locker Dressing Room	Manual ON/OFF	Dimmer	Occupancy Sensor	N/A	N/A	No	☐	☐
Female Shower / Locker 144	Locker Dressing Room	Manual ON/OFF	Dimmer	Occupancy Sensor	N/A	N/A	No	☐	☐
Lockers 206	Locker Dressing Room	Manual ON/OFF	Dimmer	Occupancy Sensor	N/A	N/A	No	☐	☐
Stiar North 145	Stairwell	Manual ON/OFF	Dimmer	Occupancy Sensor	N/A	N/A	No	☐	☐
Stair South 147	Stairwell	Manual ON/OFF	Dimmer	Occupancy Sensor	N/A	N/A	No	☐	☐
Stair North 235	Stairwell	Manual ON/OFF	Dimmer	Occupancy Sensor	N/A	N/A	No	☐	☐
Stair South 236	Stairwell	Manual ON/OFF	Dimmer	Occupancy Sensor	N/A	N/A	No	☐	☐
Stair North 335	Stairwell	Manual ON/OFF	Dimmer	Occupancy Sensor	N/A	N/A	No	☐	☐
Stair South 336	Stairwell	Manual ON/OFF	Dimmer	Occupancy Sensor	N/A	N/A	No	☐	☐
Dining 216	Family Dining Area	Manual ON/OFF	Dimmer	Occupancy Sensor	N/A	N/A	No	☐	☐

Registration Number: | Registration Date/Time: | Registration Provider: Energysoft

CA Building Energy Efficiency Standards - 2019 Nonresidential Compliance | Report Version: 2019.1.003 Schema Version: rev 20200601 | Report Generated: 2022-11-22 15:39:05

STATE OF CALIFORNIA
Indoor Lighting
NRCC-LTI-E — CALIFORNIA ENERGY COMMISSION

CERTIFICATE OF COMPLIANCE			**NRCC-LTI-E**
Project Name:	Ontario Fire Department Administration Building	**Report Page:**	**(Page 12 of 16)**
Project Address:	NE Corner of Francis St. & Parco Ave.	**Date Prepared:**	11/22/2022

H. INDOOR LIGHTING CONTROLS (Not including PAFs)

Kitchen 217	Kitchen/ Food Preparation Area	Manual ON/OFF	Dimmer	Occupancy Sensor	N/A	N/A	No	☐	☐
Bunk #1 227	All Other Space Types	Manual ON/OFF	Dimmer	Occupancy Sensor	N/A	N/A	No	☐	☐
Bunk #2 229	All Other Space Types	Manual ON/OFF	Dimmer	Occupancy Sensor	N/A	N/A	No	☐	☐

*NOTES: Controls with a * require a note in the space below explaining how compliance is achieved.
Ex: Conference 1: Primary/Skylight Daylighting: Exempt because less than 120 watts of general lighting; EXCEPTION 1 to §130.1(d)2

13
Plan Sheet Showing Daylit Zones:
Lobby 101 — Overhang
DC Office 327 — Less than 120w installed
EMS Directors Office 112 — Less than 120w installed

I. LIGHTING POWER ALLOWANCE: COMPLETE BUILDING OR AREA CATEGORY METHODS

Each area complying using the Complete Building or Area Category Methods per §140.6(b) are included in this table. Column 06 indicates if additional lighting power allowances per §140.6(c) or adjustments per §140.6(a) are being used .

Conditioned Spaces

01	02	03	04	05	06	
Area Description	Complete Building or Area Category Primary Function Area	Allowed Density (W/ft²)	Area (ft²)	Allowed Wattage (Watts)	Additional Allowance / Adjustment	
					Area Category	PAF
Main Entry Lobby	Main Entry Lobby	0.85	241	204.8	No	No
Restrooms	Restrooms	0.65	1,466	952.9	No	No
Office Area > 250 Square Feet	Office greater than 250 square feet	0.65	2,965	1,927.2	No	No
Office Area < 250 Square Feet	Office 250 square feet or less	0.7	5,681	3,976.7	No	No
Conference Areas	Convention, Conference, Multipurpose and Meeting Center Areas	0.85	2,177	1,850.4	No	No

Registration Number: | Registration Date/Time: | Registration Provider: Energysoft

CA Building Energy Efficiency Standards - 2019 Nonresidential Compliance | Report Version: 2019.1.003 Schema Version: rev 20200601 | Report Generated: 2022-11-22 15:39:05

PBK
RANCHO CUCAMONGA
8163 ROCHESTER AVENUE, SUITE 100
RANCHO CUCAMONGA, CA 91730
909-987-0909 P

ONTARIO FIRE DEPARTMENT ADMINISTRATION BUILDING
CITY OF ONTARIO
1420 E. FRANCIS STREET., ONTARIO, CA

LICENSED ARCHITECT — KELLEY NEEDHAM C-19064 — Exp. 03/31/25 — STATE OF CALIFORNIA
REGISTERED PROFESSIONAL ENGINEER — RICHARD E. SOTELO — No. E17229 6/30/24 — STATE OF CALIFORNIA

CONSULTANT
A&F ENGINEERING GROUP, INC.
9320 BASELINE RD, SUITE C, RANCHO CUCAMONGA, CA 91701
TEL: (909) 941-3008 FAX: (909) 941-8211

NO	DATE	BY	DESCRIPTION

REVISIONS

DRAWN: CBF	CHECKED: RES
DATE: 07/15/2022	SCALE: AS NOTED
PROJECT NUMBER: 2011700	

TITLE 24 COMPLIANCE FORMS

DRAWING NUMBER: E0.6

BID SET 03/01/24

STATE OF CALIFORNIA
Indoor Lighting
NRCC-LTI-E — CALIFORNIA ENERGY COMMISSION

CERTIFICATE OF COMPLIANCE			**NRCC-LTI-E**
Project Name:	Ontario Fire Department Administration Building	**Report Page:**	**(Page 13 of 16)**
Project Address:	NE Corner of Francis St. & Parco Ave.	**Date Prepared:**	11/22/2022

I. LIGHTING POWER ALLOWANCE: COMPLETE BUILDING OR AREA CATEGORY METHODS

Electrical, Mechanical, Telephone Rooms	Electrical Mechancial Telephone Room	0.4	912	364.8	No	No
Storage Areas	Commercial Industrial Storage Area	0.45	1,827	822.2	No	No
Corridors	Corridor Area	0.6	4,012	2,407.2	No	No
Exercise / Fitness Area	Exercise/Fitness Center GymnasiumArea	0.5	679	339.5	No	No
Open Plan Office	Office Open Plan	0.6	5,821	3,492.6	No	No
Lounge / Breakroom	Lounge Breakroom or Waiting Area	0.65	1,044	678.6	No	No
Locker Room	Locker Dressing Room	0.45	614	276.3	No	No
Stairwell	Stairwell	0.5	1,758	879	No	No
Dining	Family Dining Area	0.5	261	130.5	No	No
Kitchen	Kitchen/ Food Preparation Area	0.95	412	391.4	No	No
		TOTALS:	29,870	18,694.1	See Tables J, or P for detail	

J. ADDITIONAL ALLOWANCE: AREA CATEGORY METHOD QUALIFYING LIGHTING SYSTEM

This section does not apply to this project.

K. TAILORED METHOD GENERAL LIGHTING POWER ALLOWANCE

This section does not apply to this project.

L. ADDITIONAL LIGHTING ALLOWANCE: TAILORED WALL DISPLAY

This section does not apply to this project.

M. ADDITIONAL LIGHTING ALLOWANCE: TAILORED FLOOR AND TASK LIGHTING

This section does not apply to this project.

N. ADDITIONAL LIGHTING ALLOWANCE: TAILORED ORNAMENTAL/SPECIAL EFFECTS

This section does not apply to this project.

Registration Number: | Registration Date/Time: | Registration Provider: Energysoft

CA Building Energy Efficiency Standards - 2019 Nonresidential Compliance | Report Version: 2019.1.003 Schema Version: rev 20200601 | Report Generated: 2022-11-22 15:39:05

STATE OF CALIFORNIA
Indoor Lighting
NRCC-LTI-E — CALIFORNIA ENERGY COMMISSION

CERTIFICATE OF COMPLIANCE			**NRCC-LTI-E**
Project Name:	Ontario Fire Department Administration Building	**Report Page:**	**(Page 14 of 16)**
Project Address:	NE Corner of Francis St. & Parco Ave.	**Date Prepared:**	11/22/2022

O. ADDITIONAL LIGHTING ALLOWANCE: TAILORED VERY VALUABLE MERCHANDISE

This section does not apply to this project.

P. POWER ADJUSTMENT: LIGHTING CONTROL CREDIT (POWER ADJUSTMENT FACTOR (PAF))

This section does not apply to this project.

Q. RATED POWER REDUCTION COMPLIANCE FOR ALTERATIONS

This section does not apply to this project.

R. 80% LIGHTING POWER FOR ALL ALTERATIONS - CONTROLS EXCEPTIONS

This section does not apply to this project.

S. DAYLIGHT DESIGN POWER ADJUSTMENT FACTOR (PAF)

This section does not apply to this project.

T. DECLARATION OF REQUIRED CERTIFICATES OF INSTALLATION

Selections have been made based on information provided in this document. If any selection have been changed by permit applicant, an explanation should be included in Table E. Additional Remarks. These documents must be provided to the building inspector during construction and can be found online at https://www.energy.ca.gov/title24/2019standards/2019_compliance_documents/Nonresidential_Documents/NRCI/

Yes	No	Form/Title	Field Inspector Pass	Field Inspector Fail
●	○	NRCI-LTI-01-E - Must be submitted for all buildings	☐	☐
○	●	NRCI-LTI-02-E- Must be submitted for a lighting control system, or for an Energy Management Control System (EMCS), to be recognized for compliance.	☐	☐
○	●	NRCI-LTI-04-E - Must be submitted for two interlocked systems serving an auditorium, a convention center, a conference room, a multipurpose room or a theater to be recognized for compliance.	☐	☐
○	●	NRCI-LTI-05-E- Must be submitted for a Power Adjustment Factor (PAF) to be recognized for compliance.	☐	☐
○	●	NRCI-LTI-06-E- Must be submitted for additional wattage installed in a video conferencing studio to be recognized for compliance.	☐	☐

Registration Number: | Registration Date/Time: | Registration Provider: Energysoft

CA Building Energy Efficiency Standards - 2019 Nonresidential Compliance | Report Version: 2019.1.003 Schema Version: rev 20200601 | Report Generated: 2022-11-22 15:39:05

STATE OF CALIFORNIA
Indoor Lighting
NRCC-LTI-E — CALIFORNIA ENERGY COMMISSION

CERTIFICATE OF COMPLIANCE			**NRCC-LTI-E**
Project Name:	Ontario Fire Department Administration Building	**Report Page:**	**(Page 15 of 16)**
Project Address:	NE Corner of Francis St. & Parco Ave.	**Date Prepared:**	11/22/2022

U. DECLARATION OF REQUIRED CERTIFICATES OF ACCEPTANCE

Selections have been made based on information provided in this document. If any selection have been changed by the permit applicant, an explanation should be included in Table E. Additional Remarks. These documents must be provided to the building inspector during construction and any with "-A" in the form name must be completed through an Acceptance Test Technician Certification Provider (ATTCP). For more information visit: http://www.energy.ca.gov/title24/attcp/providers.html

Yes	No	Form/Title	Field Inspector Pass	Field Inspector Fail
●	○	NRCA-LTI-02-A - Must be submitted for occupancy sensors and automatic time switch controls.	☐	☐
●	○	NRCA-LTI-03-A - Must be submitted for automatic daylight controls.	☐	☐
●	○	NRCA-LTI-04-A - Must be submitted for demand responsive lighting controls.	☐	☐
○	●	NRCA-LTI-05-A. - Must be submitted for institutional tuning power adjustment factor (PAF)	☐	☐

Registration Number: | Registration Date/Time: | Registration Provider: Energysoft

CA Building Energy Efficiency Standards - 2019 Nonresidential Compliance | Report Version: 2019.1.003 Schema Version: rev 20200601 | Report Generated: 2022-11-22 15:39:05

STATE OF CALIFORNIA
Indoor Lighting
NRCC-LTI-E — CALIFORNIA ENERGY COMMISSION

CERTIFICATE OF COMPLIANCE			**NRCC-LTI-E**
Project Name:	Ontario Fire Department Administration Building	**Report Page:**	**(Page 16 of 16)**
Project Address:	NE Corner of Francis St. & Parco Ave.	**Date Prepared:**	11/22/2022

DOCUMENTATION AUTHOR'S DECLARATION STATEMENT

I certify that this Certificate of Compliance documentation is accurate and complete.

Documentation Author Name: Luis E. Flores	Documentation Author Signature:
Company: A&F Engineering Group, Inc.	Signature Date: 2022-11-22
Address: 9320 Baseline Rd. Ste. C	CEA/ HERS Certification Identification (if applicable):
City/State/Zip: Rancho Cucamonga, CA 91701	Phone: (909) 941-3008

RESPONSIBLE PERSON'S DECLARATION STATEMENT

I certify the following under penalty of perjury, under the laws of the State of California:

1. The information provided on this Certificate of Compliance is true and correct.
2. I am eligible under Division 3 of the Business and Professions Code to accept responsibility for the building design or system design identified on this Certificate of Compliance (responsible designer)
3. The energy features and performance specifications, materials, components, and manufactured devices for the building design or system design identified on this Certificate of Compliance conform to the requirements of Title 24, Part 1 and Part 6 of the California Code of Regulations.
4. The building design features or system design features identified on this Certificate of Compliance are consistent with the information provided on other applicable compliance documents, worksheets, calculations, plans and specifications submitted to the enforcement agency for approval with this building permit application.
5. I will ensure that a completed signed copy of this Certificate of Compliance shall be made available with the building permit(s) issued for the building, and made available to the enforcement agency for all applicable inspections. I understand that a completed signed copy of this Certificate of Compliance is required to be included with the documentation the builder provides to the building owner at occupancy.

Responsible Designer Name: Rolando E. Sotelo	Responsible Designer Signature:
Company: A & F Engineering Group, Inc.	Date Signed: 2022-11-22
Address: 9320 Baseline Rd., Suite C	License: E17229
City/State/Zip: Rancho Cucamonga CA	Phone: (909) 941-3008

Registration Number: | Registration Date/Time: | Registration Provider: Energysoft

CA Building Energy Efficiency Standards - 2019 Nonresidential Compliance | Report Version: 2019.1.003 Schema Version: rev 20200601 | Report Generated: 2022-11-22 15:39:05

PBK
RANCHO CUCAMONGA
8163 ROCHESTER AVENUE, SUITE 100
RANCHO CUCAMONGA, CA 91730
909-987-0909 P

ONTARIO FIRE DEPARTMENT ADMINISTRATION BUILDING
CITY OF ONTARIO
1420 E. FRANCIS STREET., ONTARIO, CA

LICENSED ARCHITECT — KELLEY NEEDHAM C-19064 — Exp. 03/31/25 — STATE OF CALIFORNIA

REGISTERED PROFESSIONAL ENGINEER — ROLANDO E. SOTELO — No. E17229 — 6/30/24 — STATE OF CALIFORNIA

CONSULTANT
A&F ENGINEERING GROUP, INC.
9320 BASELINE RD. SUITE C, RANCHO CUCAMONGA, CA 91701
TEL: (909) 941-3008 FAX: (909) 941-8211

NO	DATE	BY	DESCRIPTION

REVISIONS

DRAWN: CBF	**CHECKED:** RES
DATE: 07/15/2022	**SCALE:** AS NOTED
PROJECT NUMBER: 2011700	

TITLE 24 COMPLIANCE FORMS

DRAWING NUMBER: E0.7

BID SET 03/01/24

STATE OF CALIFORNIA
Outdoor Lighting
NRCC-LTO-E — CALIFORNIA ENERGY COMMISSION

CERTIFICATE OF COMPLIANCE			NRCC-LTO-E
Project Name:	Ontario Fire Department Administration Building	Report Page:	(Page 1 of 9)
Project Address:	NE Corner of Francis St. & Parco Ave.	Date Prepared:	11/22/2022

A. GENERAL INFORMATION

01	Project Location (city)	Ontario	04 Total Illuminated Hardscape Area (ft^2)	41765
02	Climate Zone	10		
03	Outdoor Lighting Zone per Title 24 Part 1 §10.114 or as designated by Authority Having Jurisdiction (AHJ):			
☐	LZ-0: Very Low - Undeveloped Parkland	☐ LZ-2: Moderate - Rural Areas	☐ LZ-4: High - Must be reviewed by CA Energy Commission for Approval	
☐	LZ-1: Low - Developed Parkland	☒ LZ-3: Moderately High - Urban Areas		

B. PROJECT SCOPE

This table includes outdoor lighting systems that are within the scope of the permit application and are demonstrating compliance using the prescriptive path outlined in §140.7 or §141.0(b)2L for alterations.

My Project Consists of:

01	02
☒ New Lighting System	Must Comply with Allowances from §140.7
☐ Altered Lighting System	Is your alteration increasing the connected lighting load (Watts)? ◯ Yes ◯ No

03	04	05
% of Existing Luminaires Being Altered[1]	Sum Total of Luminaires Being Added or Altered	Calculation Method
☐ < 10% ☐ >= 10% and < 50% ☐ >= 50%		

Please proceed to Table F. Outdoor Lighting Fixture Schedule to define the project's luminaires.

[1] FOOTNOTES: % of Existing Luminaires Being Altered = (Sum Total of Luminaires Being Added or Altered / Existing Luminaires within the Scope of the Permit Application) x 100.

STATE OF CALIFORNIA
Outdoor Lighting
NRCC-LTO-E — CALIFORNIA ENERGY COMMISSION

CERTIFICATE OF COMPLIANCE			NRCC-LTO-E
Project Name:	Ontario Fire Department Administration Building	Report Page:	(Page 2 of 9)
Project Address:	NE Corner of Francis St. & Parco Ave.	Date Prepared:	11/22/2022

C. COMPLIANCE RESULTS

Results in this table are automatically calculated from data input and calculations in Tables F through I. Note: If any cell on this table says "COMPLIES with Exceptional Conditions" refer to Table D. Exceptional Conditions for guidance or see applicable Table referenced below.

Calculations of Total Allowed Lighting Power (Watts) §140.7 or §141.0(b)2L													Compliance Results		
01		02		03		04		05		06		07		08	09
General Hardscape Allowance §140.7(d)1 (See Table I)	+	Per Application §140.7(d)2 (See Table J)	+	Sales Frontage §140.7(d)2 (See Table K)	+	Ornamental §140.7(d)2 (See Table L)	+	Per Specific Area §140.7(d)2 (See Table M)	OR	Existing Power Allowance §141.0(b)2L (See Table N)	=	**Total Allowed** (Watts)	≥	**Total Actual** (Watts)	**07 must be >= 08**
1,940.7	+	---	+	---	+	---	+	1,097.82	OR	---	=	3,038.52	≥	2,913	COMPLIES
Cutoff Compliance (See Table G for Details)															N/A
Controls Compliance (See Table H for Details)															COMPLIES with Exceptional Conditions

D. EXCEPTIONAL CONDITIONS

This table is auto-filled with uneditable comments because of selections made or data entered in tables throughout the form.

E. ADDITIONAL REMARKS

This table includes remarks made by the permit applicant to the Authority Having Jurisdiction.

STATE OF CALIFORNIA
Outdoor Lighting
NRCC-LTO-E — CALIFORNIA ENERGY COMMISSION

CERTIFICATE OF COMPLIANCE			NRCC-LTO-E
Project Name:	Ontario Fire Department Administration Building	Report Page:	(Page 3 of 9)
Project Address:	NE Corner of Francis St. & Parco Ave.	Date Prepared:	11/22/2022

F. OUTDOOR LIGHTING FIXTURE SCHEDULE

For new or altered lighting systems demonstrating compliance with §140.7 all new luminaires being installed and any existing luminaires remaining or being moved within the spaces covered by the permit application are included in the Table below. For altered lighting systems using the Existing Power method per §141.0(b)2L only new luminaires being installed and replacement luminaires being installed as part of the project scope are included (ie, existing luminaires remaining or existing luminaires being moved are not included).

Designed Wattage:

01	02	03	04	05	06	07	08	09	10
Name or Item Tag	Complete Luminaire Description	Watts per luminaire[1, 2]	How is Wattage determined	Total number luminaires[4]	Luminaire Status[3]	Excluded per §140.7(a)	Design Watts	Cutoff Req. > 6,200 initial lumen output §130.2(b)[4]	Field Inspector: Pass / Fail
D	(1) 20w LED ☐ Linear	20	CEC Default	56	New	☐	1,120	NA: < 6200 lumens	☐ ☐
DE	(1) 20w LED ☐ Linear	20	CEC Default	13	New	☐	260	NA: < 6200 lumens	☐ ☐
SA	(1) 130w LED ☐ Linear	130	CEC Default	5	New	☐	650	NA: < 6200 lumens	☐ ☐
SB	(1) 130w LED ☐ Linear	130	CEC Default	1	New	☐	130	NA: < 6200 lumens	☐ ☐
SC	(1) 25w LED ☐ Linear	25	CEC Default	3	New	☐	75	NA: < 6200 lumens	☐ ☐
SD	(1) 28w LED ☐ Linear	28	CEC Default	1	New	☐	28	NA: < 6200 lumens	☐ ☐
SE	(1) 130w LED ☐ Linear	130	CEC Default	3	New	☐	390	NA: < 6200 lumens	☐ ☐
SF	(1) 260w LED ☐ Linear	260	CEC Default	1	New	☐	260	NA: < 6200 lumens	☐ ☐
						Total Design Watts:	2913		

** NOTES: Selections with a * require a note in the space below explaining how compliance is achieved.*
EX: Luminaire is lighting a statue; EXCEPTION 2 to §130.2(b)

[1] FOOTNOTES: Authority Having Jurisdiction may ask for Luminaire cut sheets to confirm wattage used for compliance per §130.0(c)
[2] For linear luminaires, wattage should be indicated as W/lf instead of Watts/luminaire. Total linear feet should be indicated in column 05 instead of number of luminaires.

STATE OF CALIFORNIA
Outdoor Lighting
NRCC-LTO-E — CALIFORNIA ENERGY COMMISSION

CERTIFICATE OF COMPLIANCE			NRCC-LTO-E
Project Name:	Ontario Fire Department Administration Building	Report Page:	(Page 4 of 9)
Project Address:	NE Corner of Francis St. & Parco Ave.	Date Prepared:	11/22/2022

F. OUTDOOR LIGHTING FIXTURE SCHEDULE

For new or altered lighting systems demonstrating compliance with §140.7 all new luminaires being installed and any existing luminaires remaining or being moved within the spaces covered by the permit application are included in the Table below. For altered lighting systems using the Existing Power method per §141.0(b)2L only new luminaires being installed and replacement luminaires being installed as part of the project scope are included (ie, existing luminaires remaining or existing luminaires being moved are not included).

Designed Wattage:

01	02	03	04	05	06	07	08	09	10

[3] Select "New" for new luminaires in a new outdoor lighting project, or for added luminaires in an alteration. Select "Altered" for replacement luminaires in an alteration. Select "Existing to Remain" for existing luminaires within the project scope that are not being altered and are remaining. Select "Existing Reinstalled" for existing luminaires which are being removed and reinstalled as part of the project scope.
[4] Compliance with mandatory cutoff requirements is required for luminaires with initial lumen output >= 6,200 unless exempted by §130.2(b)

G. CUTOFF REQUIREMENTS (BUG)

This section does not apply to this project.

STATE OF CALIFORNIA
Outdoor Lighting
NRCC-LTO-E — CALIFORNIA ENERGY COMMISSION

CERTIFICATE OF COMPLIANCE			NRCC-LTO-E
Project Name:	Ontario Fire Department Administration Building	Report Page:	(Page 5 of 9)
Project Address:	NE Corner of Francis St. & Parco Ave.	Date Prepared:	11/22/2022

H. OUTDOOR LIGHTING CONTROLS

This table demonstrates compliance with controls requirements for all new or altered luminaires installed as part of the permit application. For alteration projects, luminaires which are existing to remain (ie untouched) and luminaires which are removed and reinstalled (wiring only) do not need to be included in this table even if they are within the spaces covered by the permit application.
*When an option having a * is selected, the notes section of this table must be completed. The lighting controls section of the Compliance Summary Table on the first page will show "DOES NOT COMPLY" if the notes are left blank.*

Mandatory Controls

01	02	03	04	05	
Area Description	Shut-Off §130.2(c)1	Auto-Schedule §130.2(c)2	Motion Sensor §130.2(c)3	Field Inspector: Pass	Fail
Non Sales Canopy	Astronomical Timer	Yes	Exempt*	☐	☐
Pedestrian Hardscape	Astronomical Timer	Yes	Exempt*	☐	☐
Automotive Hardscape	Astronomical Timer	Yes	Yes	☐	☐

** NOTES: Controls with a * require a note in the space below explaining how compliance is achieved.*
EX: Not permitted by health & safety to be turned off; EXCEPTION 1 to §130.2(c)

Non Sales Canopy	Motion Sensing Controls: Luminaires with a maximum rated wattage of 40 watts each are not required to have motion sensing controls; EXCEPTION 1 to Section 130.2(c)3
Pedestrian Hardscape	Motion Sensing Controls: Luminaires with a maximum rated wattage of 40 watts each are not required to have motion sensing controls; EXCEPTION 1 to Section 130.2(c)3

STATE OF CALIFORNIA
Outdoor Lighting
NRCC-LTO-E — CALIFORNIA ENERGY COMMISSION

CERTIFICATE OF COMPLIANCE			NRCC-LTO-E
Project Name:	Ontario Fire Department Administration Building	Report Page:	(Page 6 of 9)
Project Address:	NE Corner of Francis St. & Parco Ave.	Date Prepared:	11/22/2022

I. LIGHTING POWER ALLOWANCE (per §140.7)

This table includes areas using allowance calculations per §140.7. General Hardscape Allowance is per Table 140.7-A while "Use it or lose it" Allowances are per Table 140.7-B . Indicate which allowances are being used to expand sections for user input. Luminaires that qualify for one of the "Use it or lose it" allowances shall not qualify for another "Use it or lose it" allowance.

01				
☒ General Hardscape Allowance Table I (below)	"Use it or lose it" Allowance (select all that apply) (select all that apply)			
	☐ Per Application Table J	☐ Sales Frontage Table K	☐ Ornamental Table L	☒ Per Specific Area Table M

Calculated General Hardscape Lighting Power Allowance per Table 140.7-A (LZ 0, 1 & 4)
This section does not apply to this project.
Calculated General Hardscape Lighting Power Allowance per Table 140.7-A (LZ 2 & 3)

02	03	04	05	06	07	08	09	10
Area Description	Surface Type	Area Wattage Allowance (AWA): Illuminated Area (ft^2)	Allowed Density (W/ft^2)	Area Allowance (Watts)	Area Wattage Allowance (AWA): Perimeter Length (lf)	Allowed Density (W/lf)	Linear Allowance (Watts)	Total General AWA + LWA (Watts)
Pedestrian Hardscape	Concrete	2704	0.03	81.12	312	0.4	124.8	205.92
North Automotive Hardscape	Asphalt	10108	0.03	252.7	587	0.4	146.75	399.45
South Automotive Hardscape	Asphalt	28953	0.03	723.825	1046	0.4	261.5	985.325
						Initial Wattage Allowance for Entire Site (Watts):		350
						Total General Hardscape Allowance (Watts):		1940.695

J. LIGHTING ALLOWANCE: PER APPLICATION

This section does not apply to this project.

K. LIGHTING ALLOWANCE: SALES FRONTAGE

This section does not apply to this project.

L. LIGHTING ALLOWANCE: ORNAMENTAL

This section does not apply to this project.

STATE OF CALIFORNIA
Outdoor Lighting
NRCC-LTO-E — CALIFORNIA ENERGY COMMISSION

CERTIFICATE OF COMPLIANCE			NRCC-LTO-E
Project Name:	Ontario Fire Department Administration Building	Report Page:	(Page 7 of 9)
Project Address:	NE Corner of Francis St. & Parco Ave.	Date Prepared:	11/22/2022

M. LIGHTING ALLOWANCE: PER SPECIFIC AREA

This table includes areas using the wattage allowance per specific area from Table 140.7-B . More than one specific area allowance may be taken in a single project, if applicable. However, multiple specific area allowances may not be taken for the exact same area on the site.

01	02	03	04	05	06	07	08	09	10
		CALCULATED ALLOWANCE (Watts)			DESIGN WATTS				
Area Description	Specific Area Type per Table 140.7-B	Specific Area (ft^2)[1]	Allowed Density (W/ft^2)	Extra Allowance (Watts)	Luminaire Name or Item Tag	Watts per Luminaire	# of Luminaires	Design Watts	Additional Allowance (Watts)
Non Sales Canopy	NonSalesCanopy	4066	0.27	1097.82	D	20	56	1,120	1097.82
					DE	20	13	260	
							Total Design Watts for this Area:	1380	
								Total Allowance (Watts) All Areas:	1097.82

[1] FOOTNOTES: See Table 140.7-B for rules for calculating the specific areas (ft^2 for these additional lighting allowances.
[2] For luminaires indicated in Table F as linear, wattage in column 07 is W/lf instead of Watts/luminaire. Total linear feet should be indicated in column 08 instead of number of luminaires.

N. EXISTING CONDITIONS POWER ALLOWANCE (alterations only)

This section does not apply to this project.

O. DECLARATION OF REQUIRED CERTIFICATES OF INSTALLATION

Selections have been made based on information provided in this document. If any selection have been changed by permit applicant, an explanation should be included in Table E. Additional Remarks. These documents must be provided to the building inspector during construction and can be found online at https://www.energy.ca.gov/title24/2019standards/2019_compliance_documents/Nonresidential_Documents/NRCI/

Yes	No	Form/Title	Field Inspector: Pass	Fail
●	◯	NRCI-LTO-01-E - Must be submitted for all buildings	☐	☐
●	◯	NRCI-LTO-02-E- Must be submitted for a lighting control system, or for an Energy Management Control System (EMCS), to be recognized for compliance.	☐	☐

STATE OF CALIFORNIA
Outdoor Lighting
NRCC-LTO-E — CALIFORNIA ENERGY COMMISSION

CERTIFICATE OF COMPLIANCE			NRCC-LTO-E
Project Name:	Ontario Fire Department Administration Building	Report Page:	(Page 8 of 9)
Project Address:	NE Corner of Francis St. & Parco Ave.	Date Prepared:	11/22/2022

P. DECLARATION OF REQUIRED CERTIFICATES OF ACCEPTANCE

Selections have been made based on information provided in this document. If any selection have been changed by permit applicant, an explanation should be included in Table E. Additional Remarks. These documents must be provided to the building inspector during construction and must be completed through an Acceptance Test Technician Certification Provider (ATTCP). For more information visit: http://www.energy.ca.gov/title24/attcp/providers.html

Yes	No	Form/Title	Field Inspector: Pass	Fail
●	◯	NRCA-LTO-02-A - Must be submitted for all outdoor lighting controls except for alterations where controls are added to <= 20 luminaires.	☐	☐

STATE OF CALIFORNIA
Outdoor Lighting
NRCC-LTO-E — CALIFORNIA ENERGY COMMISSION

CERTIFICATE OF COMPLIANCE			NRCC-LTO-E
Project Name:	Ontario Fire Department Administration Building	Report Page:	(Page 9 of 9)
Project Address:	NE Corner of Francis St. & Parco Ave.	Date Prepared:	11/22/2022

DOCUMENTATION AUTHOR'S DECLARATION STATEMENT

I certify that this Certificate of Compliance documentation is accurate and complete.

Documentation Author Name: Luis E. Flores	Documentation Author Signature:
Company: A&F Engineering Group, Inc.	Signature Date: 2022-11-22
Address: 9320 Baseline Rd. Ste. C	CEA/ HERS Certification Identification (if applicable):
City/State/Zip: Rancho Cucamonga, CA 91701	Phone: (909) 941-3008

RESPONSIBLE PERSON'S DECLARATION STATEMENT

I certify the following under penalty of perjury, under the laws of the State of California:
1. The information provided on this Certificate of Compliance is true and correct.
2. I am eligible under Division 3 of the Business and Professions Code to accept responsibility for the building design or system design identified on this Certificate of Compliance (responsible designer)
3. The energy features and performance specifications, materials, components, and manufactured devices for the building design or system design identified on this Certificate of Compliance conform to the requirements of Title 24, Part 1 and Part 6 of the California Code of Regulations.
4. The building design features or system design features identified on this Certificate of Compliance are consistent with the information provided on other applicable compliance documents, worksheets, calculations, plans and specifications submitted to the enforcement agency for approval with this building permit application.
5. I will ensure that a completed signed copy of this Certificate of Compliance shall be made available with the building permit(s) issued for the building, and made available to the enforcement agency for all applicable inspections. I understand that a completed signed copy of this Certificate of Compliance is required to be included with the documentation the builder provides to the building owner at occupancy.

Responsible Designer Name: Rolando E. Sotelo	Responsible Designer Signature:
Company: A & F Engineering Group, Inc.	Date Signed: 2022-11-22
Address: 9320 Baseline Rd., Suite C	License: E17229
City/State/Zip: Rancho Cucamonga CA	Phone: (909) 941-3008

PBK
RANCHO CUCAMONGA
8163 ROCHESTER AVENUE, SUITE 100
RANCHO CUCAMONGA, CA 91730
909-987-0909 P

ONTARIO FIRE DEPARTMENT ADMINISTRATION BUILDING
CITY OF ONTARIO
1420 E. FRANCIS STREET., ONTARIO, CA

LICENSED ARCHITECT — KELLEY NEEDHAM C-19064 — Exp. 03/31/25 — STATE OF CALIFORNIA
REGISTERED PROFESSIONAL ENGINEER — ROLANDO E. SOTELO — No. E17229 6/30/24 — STATE OF CALIFORNIA

CONSULTANT
A&F ENGINEERING GROUP, INC.
9320 BASELINE RD, SUITE C, RANCHO CUCAMONGA, CA 91701
TEL: (909) 941-3008 FAX: (909) 941-8211

NO	DATE	BY	DESCRIPTION

REVISIONS

DRAWN: CBF	CHECKED: RES
DATE: 07/15/2022	SCALE: AS NOTED
PROJECT NUMBER: 2011700	

TITLE 24 COMPLIANCE FORMS

DRAWING NUMBER: E0.8

BID SET 03/01/24

Ontario Fire Department HQ

ASCC at Panel A (#4/0 AWG)

1.73	x	10	Ft.	x	65000	(available short circuit current)	=	0.3585 (f)
1	x	15082	(wire constant)	x	208	(line to line volts)		
1								
1 + 0.3585 (f)			=		0.736129	(M)		
65000	x	0.736129		=	47848	(fault current)		

Ontario Fire Department HQ

ASCC at Panel B (#2 AWG)

1.73	x	15	Ft.	x	65000	(available short circuit current)	=	1.3731 (f)
1	x	5906	(wire constant)	x	208	(line to line volts)		
1								
1 + 1.3731 (f)			=		0.421394	(M)		
65000	x	0.421394		=	27391	(fault current)		

Ontario Fire Department HQ

ASCC at Panel C (#2 AWG)

1.73	x	45	Ft.	x	65000	(available short circuit current)	=	4.1192 (f)
1	x	5906	(wire constant)	x	208	(line to line volts)		
1								
1 + 4.1192 (f)			=		0.195342	(M)		
65000	x	0.195342		=	12697	(fault current)		

Ontario Fire Department HQ

ASCC at Panel D (#2 AWG)

1.73	x	50	Ft.	x	65000	(available short circuit current)	=	4.5769 (f)
1	x	5906	(wire constant)	x	208	(line to line volts)		
1								
1 + 4.5769 (f)			=		0.179311	(M)		
65000	x	0.179311		=	11655	(fault current)		

Ontario Fire Department HQ

ASCC at Panel E (#2 AWG)

1.73	x	65	Ft.	x	65000	(available short circuit current)	=	5.9500 (f)
1	x	5906	(wire constant)	x	208	(line to line volts)		
1								
1 + 5.9500 (f)			=		0.143885	(M)		
65000	x	0.143885		=	9353	(fault current)		

Ontario Fire Department HQ

ASCC at Panel F (#2 AWG)

1.73	x	70	Ft.	x	65000	(available short circuit current)	=	6.4077 (f)
1	x	5906	(wire constant)	x	208	(line to line volts)		
1								
1 + 6.4077 (f)			=		0.134995	(M)		
65000	x	0.134995		=	8775	(fault current)		

Ontario Fire Department HQ

ASCC at Panel G (#350 AWG)

1.73	x	75	Ft.	x	65000	(available short circuit current)	=	2.0579 (f)
1	x	19703	(wire constant)	x	208	(line to line volts)		
1								
1 + 2.0579 (f)			=		0.327021	(M)		
65000	x	0.327021		=	21256	(fault current)		

Ontario Fire Department HQ

ASCC at Elevator (#8 AWG)

1.73	x	80	Ft.	x	65000	(available short circuit current)	=	27.7778 (f)
1	x	1557	(wire constant)	x	208	(line to line volts)		
1								
1 + 27.7778 (f)			=		0.034749	(M)		
65000	x	0.034749		=	2259	(fault current)		

Ontario Fire Department HQ

ASCC at Panel EM (#1/0 AWG)

1.73	x	75	Ft.	x	65000	(available short circuit current)	=	4.5436 (f)
1	x	8924	(wire constant)	x	208	(line to line volts)		
1								
1 + 4.5436 (f)			=		0.180389	(M)		
65000	x	0.180389		=	11725	(fault current)		

Ontario Fire Department HQ

ASCC at Panel H (#2 AWG)

1.73	x	35	Ft.	x	65000	(available short circuit current)	=	3.2038 (f)
1	x	5906	(wire constant)	x	208	(line to line volts)		
1								
1 + 3.2038 (f)			=		0.237878	(M)		
65000	x	0.237878		=	15462	(fault current)		

Ontario Fire Department HQ

ASCC at PanelDPB- EVP (#350 AWG)

1.73	x	75	Ft.	x	65000	(available short circuit current)	=	1.7834 (f)
1	x	22736	(wire constant)	x	208	(line to line volts)		
1								
1 + 1.7834 (f)			=		0.359276	(M)		
65000	x	0.359276		=	23353	(fault current)		

Ontario Fire Department HQ

ASCC at Panel UPS-1 (#500 AWG)

1.73	x	140	Ft.	x	65000	(available short circuit current)	=	3.4117 (f)
1	x	22185	(wire constant)	x	208	(line to line volts)		
1								
1 + 3.4117 (f)			=		0.226672	(M)		
65000	x	0.226672		=	14734	(fault current)		

Ontario Fire Department HQ

ASCC at Panel UPS-2 (#500 AWG)

1.73	x	150	Ft.	x	65000	(available short circuit current)	=	3.6553 (f)
1	x	22185	(wire constant)	x	208	(line to line volts)		
1								
1 + 3.6553 (f)			=		0.214807	(M)		
65000	x	0.214807		=	13962	(fault current)		

PBK

RANCHO CUCAMONGA
8163 ROCHESTER AVENUE, SUITE 100
RANCHO CUCAMONGA, CA 91730
909-987-0909 P

ONTARIO FIRE DEPARTMENT ADMINISTRATION BUILDING

CITY OF ONTARIO

1420 E. FRANCIS STREET., ONTARIO, CA

LICENSED ARCHITECT — KELLEY NEEDHAM C-19064 Exp 03/31/24 — STATE OF CALIFORNIA

REGISTERED PROFESSIONAL ENGINEER — RICHARD E. SOTELO No. E17229 6/30/24 — STATE OF CALIFORNIA

CONSULTANT

A&F ENGINEERING GROUP, INC.
8320 BASELINE RD., SUITE C, RANCHO CUCAMONGA, CA 91701
TEL: (909) 941-3008 FAX: (909) 941-8211

NO	DATE	BY	DESCRIPTION

REVISIONS

DRAWN: CBF	CHECKED: RES
DATE: 07/15/2022	SCALE: AS NOTED
PROJECT NUMBER: 2011700	

AIC CALCULATIONS

DRAWING NUMBER: E0.9

BID SET 03/01/24

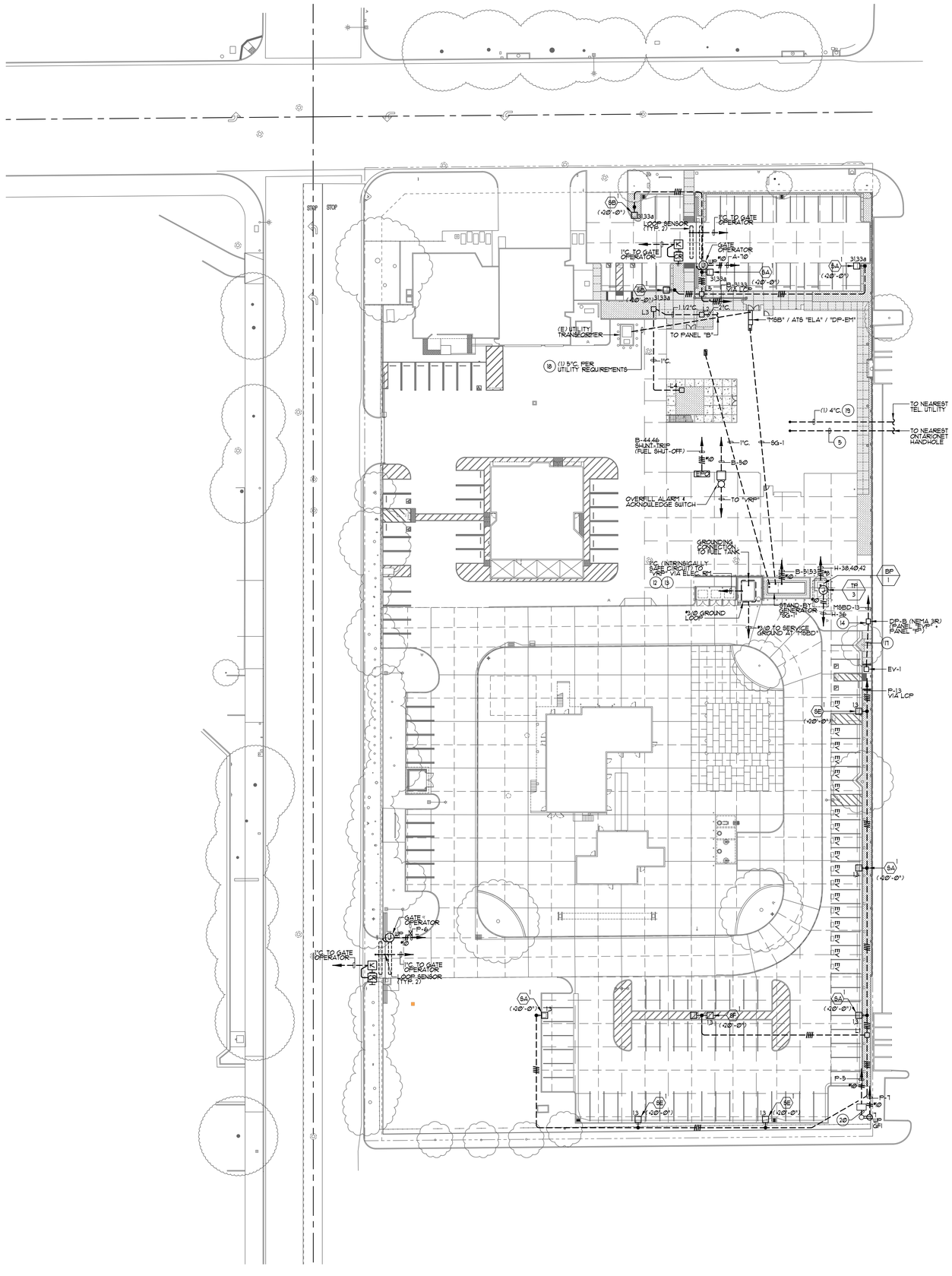

PLAN NOTES:

1. REFER TO GENERAL NOTES, DRAWING E0.1, FOR ADDITIONAL REQUIREMENTS.
2. CONTRACTOR IS RESPONSIBLE FOR LOCATING AND CONNECTING CONDUIT TO EXISTING ONTARIONET HAND HOLES ON ADJECENT PROPERTIES WITHIN A REASONABLE DISTANCE. THERE SHOULD BE NO GAPS IN CONDUIT BETWEEN THE CONTRACTOR'S DEVELOPMENT AND THE ADJACENT PROPERTY.
3. WHERE JOINT TELECOM OR STREET LIGHT CORSSING IS REQUIRED THE CONTRACTOR SHALL PROVIDE (2) 2" HDPE SDR-11 CONDUITS OR (1) 4" SCHEDULE 80 CONDUIT SLEEVE AND TERMINATE THE STREET CROSSING CONDUIT(S) IN A NEW HH-3/22 ONTARIONET HAND HOLE IN THE RIGHT OF WAY.
4. FOR RIGHT OF WAY FIBER OPTIC CONDUIT IT SHALL BE BURIED AT A MINIMUM DEPTH OF 36". TRENCHING SHALL BE PER CITY STANDARD 13.06. CONTRACTOR TO INSTALL (1) 2" HDPE SDR-11 (SMOOTHWALL) ROLL PIPE (ORANGE) DUCT AND (1) 2" HDPE SDR-11 (SMOOTHWALL) ROLL PIPE (ORANGE WITH BLACK STRIPE) DUCT. CONDUIT(S) BETWEEN RIGHT OF WAY PULL BOXES AND PULL BOXES ON PRIVATE PROPERTY SHALL BE 2" HDPE SDR-11 (SMOOTHWALL) ROLL PIPE (ORANGE) DUCT.
5. CONTRACTOR SHALL INSTALL FIBER OPTIC CONDUIT AT A MINIMUM DEPTH OF 36" AT THE BUILDING ENTRANCE. TRENCHING SHALL BE PER CITY STANDARD. CONTRACTOR TO INSTALL (1) 2" HDPE SDR-11 (SMOOTHWALL) ROLL PIPE (ORANGE) DUCT. INSTALL LOCATE/TRACER WIRES MINIMUM #12AWG WITHIN CONDUIT BANK AND FIBER WARNING TAPE 18" ABOVE THE UPPERMOST DUCT.
6. CONTRACTOR SHALL TERMINATE CONDUIT IN AND ELECTRICAL ROOM ADJACENT TO THE WALL NO LESS THAN 5" ABOVE FINISHED FLOOR. A 20" X 36" SPACE SHALL BE RESERVED ON THE PLYWOOD WALL FOR ONTARIONET EQUIPMENT. THIS SPACE SHALL BE LABELED "ONTARIONET ONLY". ONTARIO CONDUIT SHALL BE LABELED "ONTARIONET".
7. CONTRACTOR TO PROVIDE A MINIMUM 13/16" MILLIMETER MICRODUCT JOINT USE PROTECTED TELECOMMNICATIONS CONDUIT WITH PULL ROPE FROM THE MULTI-FAMILY OR COMMERCIAL BUILDING COMMUNAL TELECOMM/ ELECTRICAL ROOM/CLOSET TO EACH MULTI-FAMILY OR COMMERCIAL BUILDING UNIT SHALL BE INSTALLED AND LABELED "ONTARIONET".
8. CONTRACTOR SHALL INSTALL AN APPROVED NON-DETECTABLE WARNING TAPE 18" ABOVE THE UPPERMOST CONDUIT WHEN BACKFILLING TRENCHES, PITS OR EXCAVATIONS GREATER THAN 10'-0" IN LENGTH. WARNING TAPE SHALL BE NON-DETECTABLE, ORANGE IN COLOR, 4" MINIMUM WIDTH, 4 MIL, 500% ELOGATION, WITH BOLD PRINTED BLACK LETTERS "CAUTION-BURIED FIBER OPTIC CABLE BELOW" PRINTED IN BOLD BLACK LETTERING NO LESS THAN 2" HIGH.
9. CONTRACTOR SHALL INSTALL PULL BOXES, CONDUITS, CONDUIT BANKS, MATERIALS AND INSTALLATIONS PER THE CITY'S FIBER OPTIC MASTER PLAN AND CITY FIBER OPTIC CABLE AND DUCT STANDARDS. ALL PULL BOXES, CONDUITS AND DUCTS SHALL BE PLACED IN THE PUBLIC RIGHT OF WAY.
10. ALL UNUSED CONDUITS/DUCTS/MICRODUCTS SHALL BE PROTECTED WITH DUCT PLUGS THAT PROVIDE A POSITIVE SEAL. DUCTS THAT ARE OCCUPIED SHALL BE PROTECTED WITH INDUSTRY ACCEPTED DUCT SEAL COMPOUND.
11. CONDUIT BANK REQUIRES (1) 12AWG HIGH STRENGTH (MINIMUM BREAK LOAD 452#) COPPER-CLAD STEEL WITH 30MIL HDPE ORANGE INSULATION FOR LOCATE/TRACER WIRE. CONTRACTOR SHALL CONTACT THE CITY'S FIBER TEAM FOR TRACER WIRE SPECIFICATIONS.
12. COORDINATE CONNECTIONS TO FUEL TANK WITH FUEL TANK SUPPLIER AND MAKE ALL REQUIRED CONNECTIONS AND ATTACHMENTS TO THE FUEL TANK AND "FUEL MASTER" FUEL DISPENSING MONITORING SYSTEM FOR A FULLY FUNCTIONAL FUEL DISPENSING AND MONITORING SYSTEM. REFER TO SPECIFICATIONS FOR COMPLETE REQUIREMENTS.
13. INTRINSICALLY SAFE WIRING SYSTEM SHALL COMPLY WITH 2019 C.E.C. ART. 504.
14. (N) DISTRIBUTION PANEL"DPB" CONTAINING PANEL "EVP" AND PANEL "P".
15. CONTRACTOR SHALL LOCATE SPARE 20A/1P CIRCUIT BREAKER AT EXISTING PANEL LOCATED IN EXISTING BUILDING ON SITE AND CONNECT GATE OPERATOR AND UPDATE PANEL DIRECTORY.
16. FOR COMPLIANCE WITH CEC 702.7(A), PROVIDE A SIGN AT THE SERVICE ENTRANCE EQUIPMENT INDICATING THE LOCATION AND THE TYPE OF THE ON-SITE STAND-BY POWER SOURCE (i.e. LP FUELED GENERATORS). SIGN SHALL HAVE RED BACKGROUND WITH WHITE LETTERING.
17. CONTRACTOR TO PROVIDE CONDUIT TO PULL-BOX "EV-1" FOR FUTURE INSTALLATION OF EV CHARGERS. CONTRACTOR TO PROVIDE THE FOLLOWING QUANTITIES AND SIZE OF CONDUIT AS FOLLOWS: (5) 1 1/4"C., (1) 2 1/2"C. AND (6) 3"C.
18. THE ELECTRICAL CONTRACTOR SHALL CONTACT THE ELECTRIC SERVICE PLANNER UPON AWARD OF CONTRACT AND OBTAIN A COPY OF THE ENGINEERING DRAWINGS PRIOR TO INSTALLING THE SERVICE CONDUIT, DUCTS, PAD MOUNT, RISERS, PULL BOXES, PROTECTIVE COVERING, ETC. INDICATED ON THIS PLAN. ALL WORK INDICATED ON THE UTILITY COMPANY ENGINEERING DRAWINGS, WHETHER SHOWN ON THIS PLAN OR NOT, SHALL BE PROVIDED AND INSTALLED BY THE CONTRACTOR. THE CONTRACTOR SHALL INSTALL THE SERVICE IN COMPLIANCE WITH THE SERVING UTILITY COMPANY REQUIREMENTS AND ALL UTILITY COMPANY WORK SHALL BE INSPECTED AND APPROVED BY THE SERVING UTILITY.

    UTILITY COMPANY ENGINEERING AND PERMIT FEES ASSOCIATED WITH THE WORK SHOWN AND INDICATED ON THE UTILITY COMPANY ENGINEERING DRAWINGS SHALL BE PAID BY THE CONTRACTOR AND REIMBURSED BY THE OWNER. THE CONTRACTOR SHALL NOTIFY THE ARCHITECT/OWNER OF ANY DISCREPANCIES BETWEEN THE UTILITY COMPANY ENGINEERING DRAWINGS AND THIS PLAN RIOR TO PROCEEDING WITH THE WORK.
19. THE ELECTRICAL CONTRACTOR SHALL CONTACT THE TELEPHONE ENGINEER PRIOR TO BID AND RECEIVE COMPLETE INFORMATION OF THEIR REQUIREMENTS AND INCLUDE ALL SERVICE COSTS ASSOCIATED WITH THE WORK SHOWN AND INDICATED ON THESE PLANS AND SPECIFICATION IN HIS BID. THE ACT OF SUBMITTING THE BID SHALL CONSTITUTE THE FULL RESPONSIBILITY OF THIS CONTRACTOR TO INSTALL SERVICE IN COMPLIANCE WITH THE SERVING UTILITY AND TO PAY ALL CHARGES LEVIED BY THE SERVING UTILITY.

    ALL TELEPHONE WORK SHALL BE IN COMPLIANCE WITH THESE DRAWINGS AND REQUIREMENTS OF THE TELEPHONE COMPANY. ALL ITEMS SHOWN ON THESE DRAWINGS AND THE DRAWINGS OF THE SERVING UTILITY SHALL BE PROVIDED AND/OR INSTALLED BY THIS CONTRACTOR AND SHALL BE VERIFIED WITH THE SERVING UTILITY COMPANY.
20. CONTRACTOR SHALL PROVIDE (1) 3"C. WITH COAX CABLE FOR AMI PANEL AND (1) 1"C. WITH (2) CAT6 TO SCADA ANTENNA.

UNDERGROUND PULLBOX SCHEDULE

I.D.	SIZE	TYPE	COVER	COVER I.D.
L1, L2, L3, L4, L5	11" X 17"	CONCRETE	STEEL TRAFFIC COVER	LIGHTING
EV1	2' X 3'	CONCRETE	STEEL TRAFFIC COVER	VEHICLE CHARGER

SCHEDULE NOTES:

1. 11"x 17" UNDERGROUND PULLBOXES SHALL BE BROOKS # 36PB SERIES, OR APPROVED EQUAL. PROVIDE WITH BOLT-DOWN TRAFFIC COVERS.
2. 2'x 3' UNDERGROUND PULLBOXES SHALL BE JENSEN PRECAST #C2436-DP36-3T, OR APPROVED EQUAL. PROVIDE WITH BOLT-DOWN TRAFFIC COVERS.

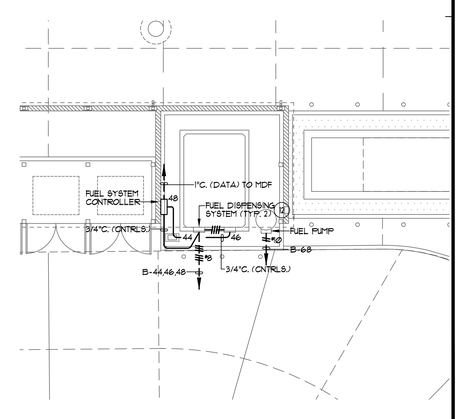

SITE PLAN 1" = 30'-0" 1

ENLARGED FUEL DISPENSING PLAN 1/8" = 1'-0" 2

PBK
RANCHO CUCAMONGA
8163 ROCHESTER AVENUE, SUITE 100
RANCHO CUCAMONGA, CA 91730
909-987-0909 P

ONTARIO FIRE DEPARTMENT ADMINISTRATION BUILDING

CITY OF ONTARIO

1420 E. FRANCIS STREET., ONTARIO, CA

LICENSED ARCHITECT — KELLEY NEEDHAM C-19064 — Exp. 03/31/25 — STATE OF CALIFORNIA

REGISTERED PROFESSIONAL ENGINEER — RICARDO E. SOTELO — No. E17229 6/30/24 — STATE OF CALIFORNIA

CONSULTANT
A&F ENGINEERING GROUP, INC.
9320 BASELINE RD., SUITE C, RANCHO CUCAMONGA, CA 91701
TEL: (909) 941-3008 FAX: (909) 941-8211

NO	DATE	BY	DESCRIPTION

REVISIONS

DRAWN: CBF	CHECKED: RES
DATE: 07/15/2022	SCALE: AS NOTED
PROJECT NUMBER: 2011700	

SITE PLAN

DRAWING NUMBER: E1.1

BID SET 03/01/24

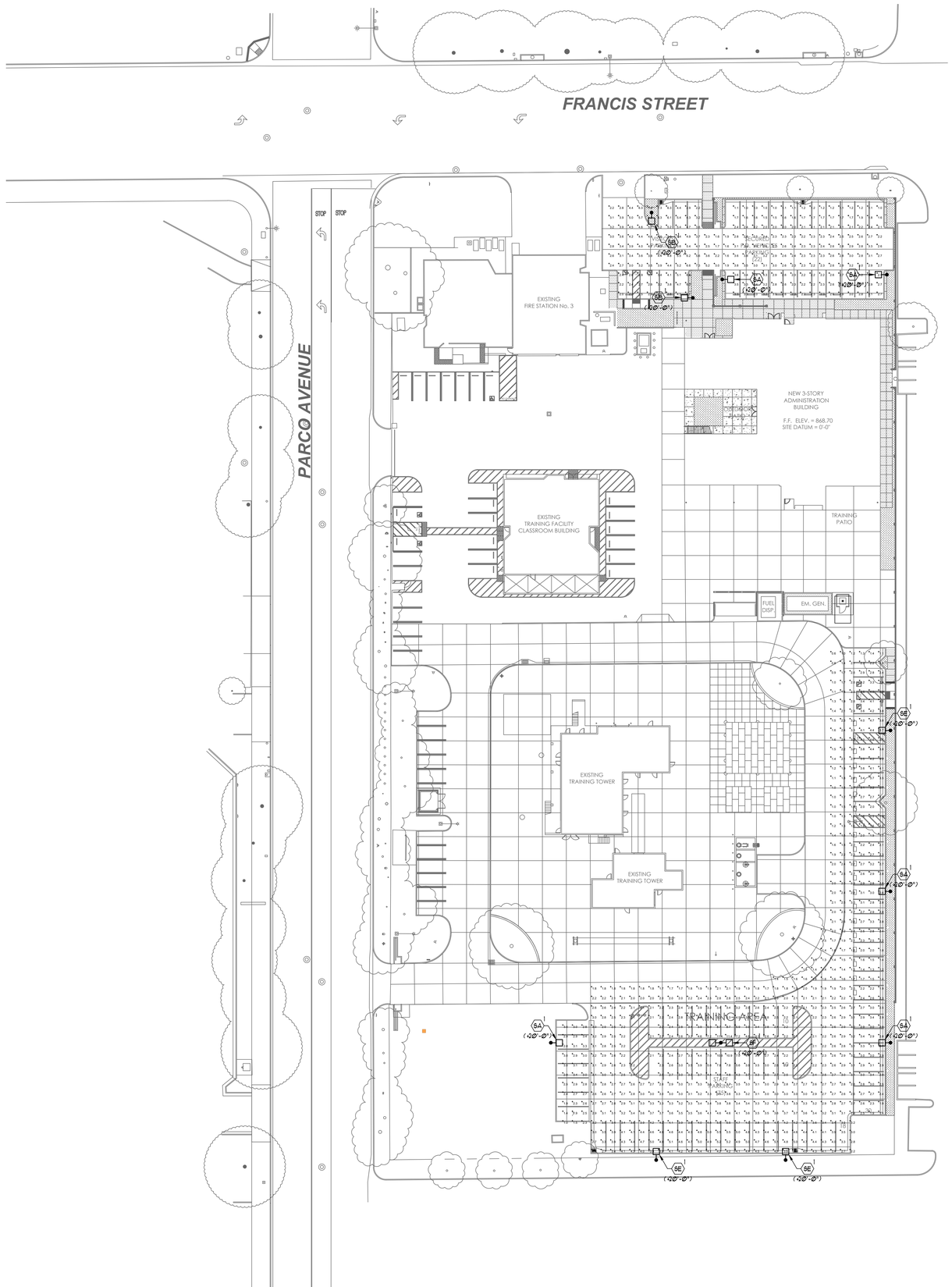

PLAN NOTES:

1. THIS LIGHTING PATTERN REPRESENTS ILLUMINATION LEVELS CALCULATED FROM LABORATORY DATA TAKEN UNDER CONTROLLED CONDITIONS UTILIZING CURRENT INDUSTRY STANDARD LAMP RATINGS IN ACCORDANCE WITH ILLUMINATING ENGINEERING SOCIETY APPROVED METHODS. ACTUAL PERFORMANCE OF ANY MANUFACTURER'S LUMINARIE MAY VARY DUE TO VARIATION IN ELECTRICAL VOLTAGE, TOLERANCE IN LAMPS AND OTHER VARIABLE FIELD CONDITIONS.
2. LIGHT LOSS FACTOR (LLF) USED FOR PHOTOMETRY IS 0.90.

Statistics						
Description	Symbol	Avg	Max	Min	Max/Min	Avg/Min
North Parking Lot	+	3.1 fc	7.3 fc	1.0 fc	7.3:1	3.1:1
South Parking Lot	+	3.0 fc	11.4 fc	0.6 fc	19.0:1	5.0:1

SITE LIGHTING FIXTURE SCHEDULE

TYPE	MANUFACTURER/ MODEL	LAMP/ TEMP	WATTS/ VOLTAGE	MOUNTING HEIGHT
5A	U.S. ARCHITECTURAL LIGHTING #RZR-PLED-IV-FT-80LED-525MA-40K-208-1-#-H8-PLED-M8-F311	LED 4000K	130W	20'-0"
5B	U.S. ARCHITECTURAL LIGHTING #RZR-PLED-IV-FT-80LED-525MA-40K-208-1-#-M8-F311	LED 4000K	130W	20'-0"
5E	U.S. ARCHITECTURAL LIGHTING #RZR-PLED-III-M-80LED-525MA-40K-208-1-#-H8-PLED-M8-F311	LED 4000K	130W	20'-0"
5F	U.S. ARCHITECTURAL LIGHTING #RZR-PLED-IV-FT-80LED-525MA-40K-208-2-#-M8-F311	LED 4000K	260W	20'-0"

PHOTOMETRIC SITE PLAN

1" = 30'-0"

1

PBK
RANCHO CUCAMONGA
8163 ROCHESTER AVENUE, SUITE 100
RANCHO CUCAMONGA, CA 91730
909-987-0909 P

ONTARIO FIRE DEPARTMENT ADMINISTRATION BUILDING

CITY OF ONTARIO

1420 E. FRANCIS STREET., ONTARIO, CA

LICENSED ARCHITECT — KELLEY NEEDHAM C-19064 — Exp. 03/31/25 — STATE OF CALIFORNIA

REGISTERED PROFESSIONAL ENGINEER — ORLANDO E. SOTTO No. E17229 6/30/24 — STATE OF CALIFORNIA

CONSULTANT
A&F ENGINEERING GROUP, INC.
9320 BASELINE RD., SUITE C, RANCHO CUCAMONGA, CA 91701
TEL: (909) 941-3006 FAX: (909) 941-8211

NO	DATE	BY	DESCRIPTION

REVISIONS

DRAWN: CBF	CHECKED: RES
DATE: 07/15/2022	SCALE: AS NOTED
PROJECT NUMBER: 2011700	

PHOTOMETRIC SITE PLAN

DRAWING NUMBER: E1.1P

BID SET 03/01/24

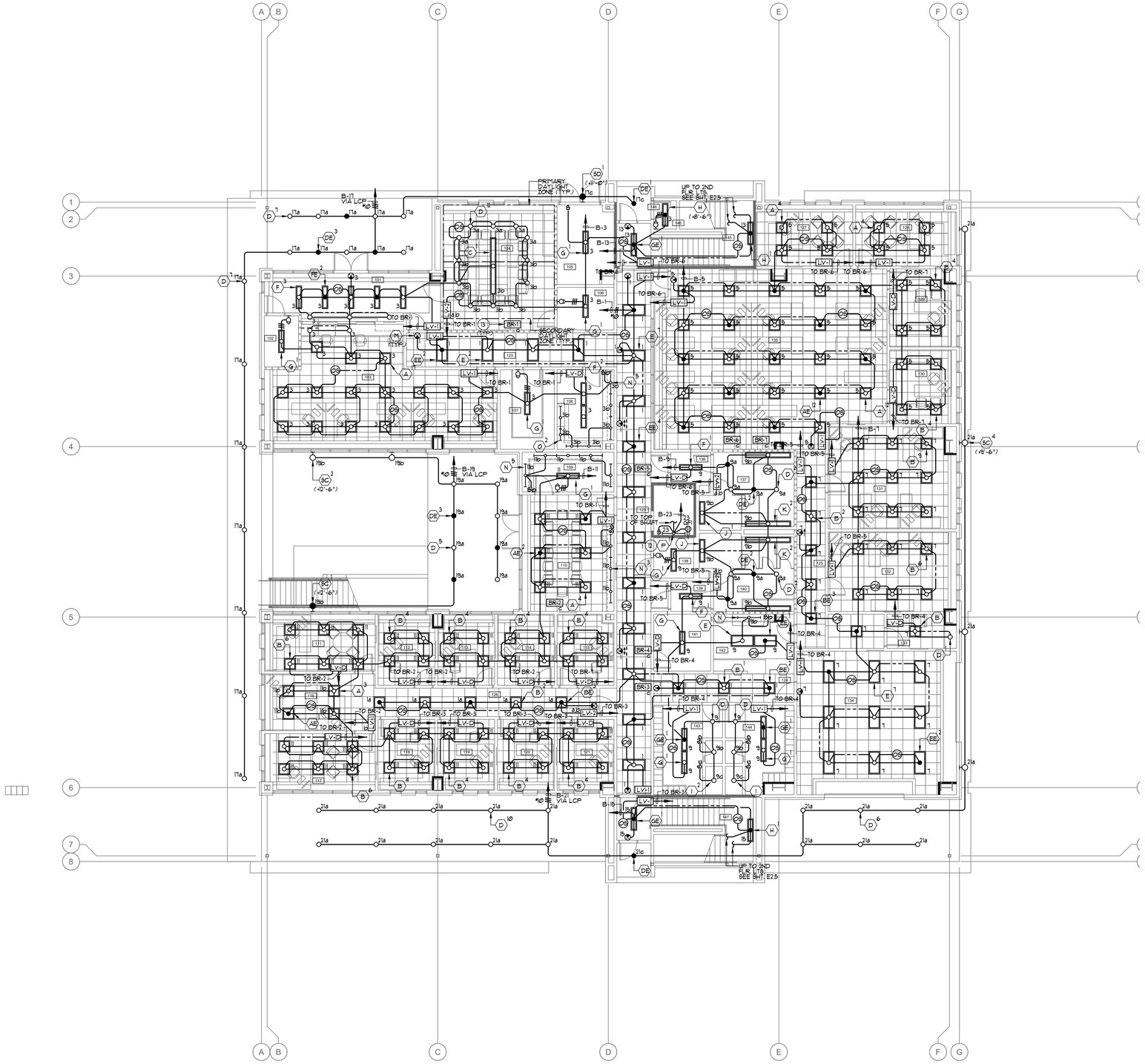

PLAN NOTES:

1. REFER TO GENERAL NOTES, DRAWING E0.1, FOR ADDITIONAL REQUIREMENTS.
2. REFER TO LIGHTING FIXTURE SCHEDULE, DRAWING E0.6, FOR TYPE OF FIXTURE TO BE PROVIDED AND INSTALLED.
3. THE CONTRACTOR SHALL BE RESPONSIBLE FOR COORDINATING ALL CEILING MOUNTED FIXTURES AND DEVICES WITH THE ARCHITECTURAL REFLECTED CEILING PLAN.
4. OCCUPANT SENSOR LOCATIONS INDICATED ON PLAN SHALL BE ADJUSTED/MOVED AS REQUIRED TO PROVIDE FULL COVERAGE OF THE AREA INDICATED ON PLAN. PLACEMENT OF SENSORS SHALL CONFORM WITH THE SENSOR MANUFACTURER'S RECOMMENDATION.
5. NO EXPOSED CONDUIT WILL BE ALLOWED.
6. LIGHTING CONTROLS ARE BASED ON ACUITY NLIGHT SYSTEM. ANY PROPOSED ALTERNATE SYSTEM WILL REQUIRE THE CONTRACTOR TO UPDATE/CHANGE THE PLAN TO REFLECT THE PROPOSED ALTERNATE SYSTEM. THE REVISED DRAWING SHALL BE ISSUED AS PART OF THE LIGHTING CONTROLS SUBMITTAL.
7. REFER TO WIRING CONTROL DIAGRAM ON SHEET E3.5 FOR WIRING REQUIREMENTS.
8. ALL SENSORS IN HALLWAYS/CORRIDORS SHALL BE PROGRAMMED TO REDUCE BY 50% WHEN NO MOVEMENT IS DETECTED.
9. CONTRACTOR TO MEET AND COORDINATE WITH THE TITLE 24 ACCEPTANCE TESTER PRIOR TO THE BEGINNING OF THE PROJECT TO VERIFY ALL TITLE 24 ACCEPTANCE TEST REQUIREMENTS AND DOCUMENTS TO BE COMPLETED. CONTRACTOR SHALL PROVIDE, COMPLETE AND SUBMIT ALL REQUIRED TITLE 24 ACCEPTANCE TEST DOCUMENTS AS REQUIRED BY THE T24 ACCEPTANCE TESTER.
10. THE CONTRACTOR SHALL NOTE THAT THE DRAWING IS DIAGRAMMATIC. EXACT ROUTING OF NEW CONDUITS AND LOCATION OF JUNCTION BOXES AND PULL BOXES SHALL BE COORDINATED AND DETERMINED IN THE FIELD. NEW CONDUIT, JUNCTION BOXES AND PULL BOXES SHALL BE ROUTED / PLACED IN SUCH A MANNER AS TO ADHERE TO ALL APPLICABLE CODES AND TO AVOID INTERFERENCE WITH EXISTING UTILITIES AND THE WORK BEING PERFORMED BY OTHER TRADES. ALL BUILDING STRUCTURES, EXTERIOR CONDUIT, FITTINGS, JUNCTION BOXES AND PULL BOXES TO BE WEATHER PROOF TYPE, NEMA 3R.
11. CONTRACTOR TO PROVIDE ENGRAVED LABELING AT EACH RECEPTACLE, DATA OUTLET, JUNCTION BOX, DISCONNECT SWITCH, ECT. DISPLAYING THE IDF OR PANEL (WITH CIRCUIT) FEEDING THE DATA OUTLET, RECEPTACLE, JUNCTION BOX, DISCONNECT SWITCH, ECT.
12. LIGHT FIXTURE SHALL BE INSTALLED IN THE ELEVATOR PIT PER ELEVATOR CODE REQUIREMENTS.
13. REFER TO WIRING CONTROL DIAGRAM ON SHEET E3.4 AND E3.5 FOR WIRING REQUIREMENTS.

ROOM #	ROOM NAME	ROOM #	ROOM NAME
101	LOBBY	126	HALLWAY - WEST
102	PUBLIC RESTROOM	127	DEPUTY FIRE MARSHALL
103	ADMIN OPEN OFFICE	128	DC FIRE MARSHALL
104	LARGE CONFERENCE RM	129	FIRE PROTECT ANALYST
105	ELECTRICAL ROOM	130	SR FIRE SPC OFFICE
106	STORAGE	131	FIRE SPC/PERMIT TECH
107	STORAGE	132	PLAN CHECKER OFFICE
108	COPY ROOM	133	LACTATION ROOM
109	EMS STORAGE	134	EXERCISE ROOM
110	EMS SKILLS ROOM	135	OPEN OFFICE
111	EMS DIRECTOR'S OFFICE	136	VESTIBULE
112	EMS NURSE'S OFFICE	137	MALE RESTROOM
113	EMS CAPTAIN'S OFFICE	138	JANITOR'S CLOSET
114	OFFICE XXXXX	139	VESTIBULE
115	OFFICE XXXXX	140	FEMALE RESTROOM
116	ADMIN WORKSTATIONS	141	IDF ROOM
117	DC OFFICE	142	BREAK AREA
118	TRAINING OFFICE 1	143	MALE SHOWER / LOCKER
119	TRAINING OFFICE 2	144	FEMALE SHWR / LOCKER
120	TRAINING OFFICE 3	145	STAIR - NORTH
121	TRAINING OFFICE 4	146	FIRE RISER CLOSET
122	HALLWAY - NORTH	147	STAIR - SOUTH
123	HALLWAY - CENTRAL		
124	HALLWAY - SOUTH		
125	HALLWAY - EAST		

FIRST FLOOR LIGHTING PLAN

1/8" = 1'-0"

1 ROOM LEGEND

PBK
RANCHO CUCAMONGA
8163 ROCHESTER AVENUE, SUITE 100
RANCHO CUCAMONGA, CA 91730
909-987-0909 P

ONTARIO FIRE DEPARTMENT ADMINISTRATION BUILDING

CITY OF ONTARIO

1420 E. FRANCIS STREET., ONTARIO, CA

LICENSED ARCHITECT — KEILEY NEEDHAM C-19064 ex.3/31/25 — STATE OF CALIFORNIA

REGISTERED PROFESSIONAL ENGINEER — RICHARD E. SOTELO No. E17229 6/30/24 — STATE OF CALIFORNIA

CONSULTANT
A&F ENGINEERING GROUP, INC.
8320 BASELINE RD. SUITE C, RANCHO CUCAMONGA, CA 91701
TEL: (909) 941-3006 FAX (909) 941-8211

NO	DATE	BY	DESCRIPTION

REVISIONS

DRAWN: CBF | CHECKED: RES

DATE: 07/15/2022 | SCALE: AS NOTED

PROJECT NUMBER: 2011700

FIRST FLOOR LIGHTING PLAN

DRAWING NUMBER: E2.1

BID SET 03/01/24

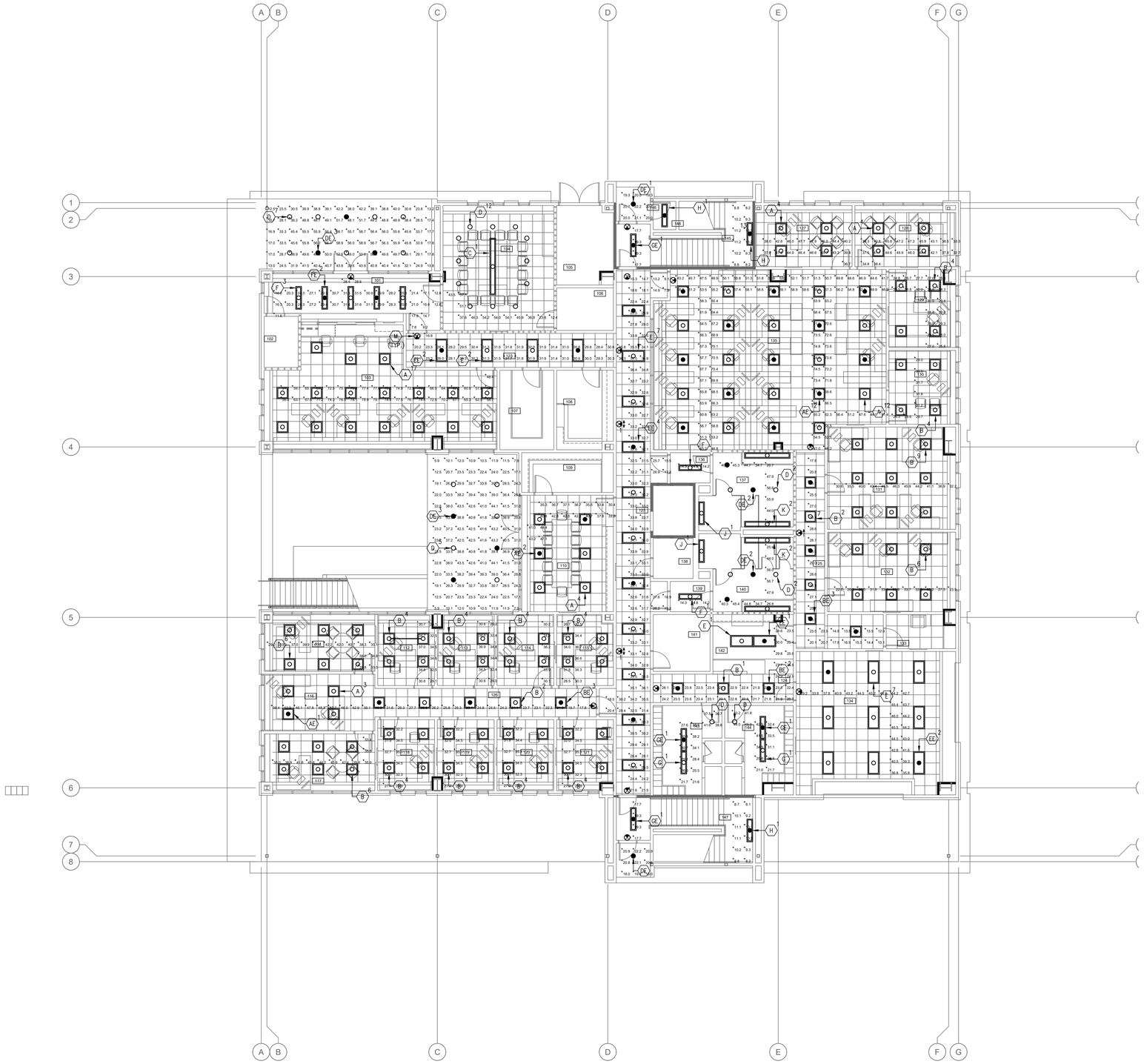

PLAN NOTES:

1. THIS LIGHTING PATTERN REPRESENTS ILLUMINATION LEVELS CALCULATED FROM LABORATORY DATA TAKEN UNDER CONTROLLED CONDITIONS UTILIZING CURRENT INDUSTRY STANDARD LAMP RATINGS IN ACCORDANCE WITH ILLUMINATING ENGINEERING SOCIETY APPROVED METHODS. ACTUAL PERFORMANCE OF ANY MANUFACTURER'S LUMINARIE MAY VARY DUE TO VARIATION IN ELECTRICAL VOLTAGE, TOLERANCE IN LAMPS AND OTHER VARIABLE FIELD CONDITIONS.

Statistics

Description	Symbol	Avg	Max	Min	Max/Min	Avg/Min
East Canopy	+	29.3 fc	44.1 fc	5.9 fc	7.5:1	5.0:1
Main Entrance Canopy	+	40.5 fc	58.9 fc	12.5 fc	4.7:1	3.2:1
North Exit	+	18.5 fc	19.3 fc	17.7 fc	1.1:1	1.0:1
North Exit Discharge	+	20.4 fc	22.2 fc	19.3 fc	1.2:1	1.1:1
Room 101	+	23.5 fc	31.6 fc	7.8 fc	4.1:1	3.0:1
Room 103	+	68.8 fc	79.1 fc	48.4 fc	1.6:1	1.4:1
Room 104	+	43.1 fc	57.1 fc	12.4 fc	4.6:1	3.5:1
Room 110	+	38.9 fc	47.1 fc	30.4 fc	1.5:1	1.3:1
Room 111	+	37.2 fc	42.2 fc	29.0 fc	1.5:1	1.3:1
Room 112	+	33.1 fc	37.0 fc	29.1 fc	1.3:1	1.1:1
Room 113	+	33.0 fc	36.9 fc	29.0 fc	1.3:1	1.1:1
Room 114	+	33.4 fc	36.2 fc	30.1 fc	1.2:1	1.1:1
Room 115	+	32.6 fc	36.7 fc	28.5 fc	1.3:1	1.1:1
Room 116/126	+	30.8 fc	48.3 fc	15.6 fc	3.1:1	2.0:1
Room 117	+	39.5 fc	44.2 fc	33.4 fc	1.3:1	1.2:1
Room 118	+	31.8 fc	35.3 fc	27.1 fc	1.3:1	1.2:1
Room 119	+	31.8 fc	35.3 fc	27.2 fc	1.3:1	1.2:1
Room 120	+	31.8 fc	35.3 fc	27.2 fc	1.3:1	1.2:1
Room 121	+	31.8 fc	35.3 fc	27.2 fc	1.3:1	1.2:1
Room 123	+	29.4 fc	36.5 fc	7.5 fc	4.9:1	3.9:1
Room 124/142	+	24.1 fc	30.0 fc	20.7 fc	1.4:1	1.2:1
Room 125	+	21.6 fc	29.0 fc	12.9 fc	2.2:1	1.7:1
Room 127	+	43.3 fc	47.9 fc	36.7 fc	1.3:1	1.2:1
Room 128	+	41.4 fc	47.2 fc	32.7 fc	1.4:1	1.3:1
Room 129	+	28.4 fc	31.3 fc	24.8 fc	1.3:1	1.1:1
Room 130	+	29.9 fc	31.8 fc	26.3 fc	1.2:1	1.1:1
Room 131	+	40.1 fc	46.3 fc	30.6 fc	1.5:1	1.3:1
Room 132	+	29.6 fc	33.9 fc	22.8 fc	1.5:1	1.3:1
Room 134	+	41.7 fc	46.0 fc	29.2 fc	1.6:1	1.4:1
Room 135	+	59.1 fc	74.9 fc	41.4 fc	1.8:1	1.4:1
Room 136	+	14.4 fc	14.8 fc	14.2 fc	1.0:1	1.0:1
Room 137	+	42.1 fc	56.6 fc	25.3 fc	2.2:1	1.7:1
Room 139	+	14.4 fc	14.8 fc	14.2 fc	1.0:1	1.0:1
Room 140	+	42.2 fc	56.7 fc	25.4 fc	2.2:1	1.7:1
Room 143	+	31.6 fc	41.6 fc	21.6 fc	1.9:1	1.5:1
Room 144	+	34.5 fc	45.9 fc	21.0 fc	2.2:1	1.6:1
Room 145	+	9.6 fc	11.2 fc	8.2 fc	1.4:1	1.2:1
Room 147	+	9.6 fc	11.1 fc	8.1 fc	1.4:1	1.2:1
South Exit	+	18.5 fc	19.3 fc	17.7 fc	1.1:1	1.0:1
South Exit Discharge	+	20.3 fc	22.2 fc	18.0 fc	1.2:1	1.1:1

ROOM #	ROOM NAME	ROOM #	ROOM NAME
101	LOBBY	126	HALLWAY - WEST
102	PUBLIC RESTROOM	127	DEPUTY FIRE MARSHALL
103	ADMIN OPEN OFFICE	128	DC FIRE MARSHALL
104	LARGE CONFERENCE RM	129	FIRE PROTECT ANALYST
105	ELECTRICAL ROOM	130	SR FIRE SPC OFFICE
106	STORAGE	131	FIRE SPC/PERMIT TECH
107	STORAGE	132	PLAN CHECKER OFFICE
108	COPY ROOM	133	LACTATION ROOM
109	EMS STORAGE	134	EXERCISE ROOM
110	EMS SKILLS ROOM	135	OPEN OFFICE
111	EMS DIRECTOR'S OFFICE	136	VESTIBULE
112	EMS NURSE'S OFFICE	137	MALE RESTROOM
113	EMS CAPTAIN'S OFFICE	138	JANITOR'S CLOSET
114	OFFICE XXXXX	139	VESTIBULE
115	OFFICE XXXXX	140	FEMALE RESTROOM
116	ADMIN WORKSTATIONS	141	IDF ROOM
117	DC OFFICE	142	BREAK AREA
118	TRAINING OFFICE 1	143	MALE SHOWER / LOCKER
119	TRAINING OFFICE 2	144	FEMALE SHWR / LOCKER
120	TRAINING OFFICE 3	145	STAIR - NORTH
121	TRAINING OFFICE 4	146	FIRE RISER CLOSET
122	HALLWAY - NORTH	147	STAIR - SOUTH
123	HALLWAY - CENTRAL		
124	HALLWAY - SOUTH		
125	HALLWAY - EAST		

FIRST FLOOR EGRESS PHOTOMETRIC PLAN

1/8" = 1'-0"

1 ROOM LEGEND

PBK
RANCHO CUCAMONGA
8163 ROCHESTER AVENUE, SUITE 100
RANCHO CUCAMONGA, CA 91730
909-987-0909 P

ONTARIO FIRE DEPARTMENT ADMINISTRATION BUILDING

CITY OF ONTARIO

1420 E. FRANCIS STREET., ONTARIO, CA

LICENSED ARCHITECT — KELLEY NEEDHAM C-19064 — Exp. 03/31/24 — STATE OF CALIFORNIA

REGISTERED PROFESSIONAL ENGINEER — RICHARD E. SOTELO — No. E17229 — 6/30/24 — STATE OF CALIFORNIA

CONSULTANT

A&F ENGINEERING GROUP, INC.
8320 BASELINE RD., SUITE C, RANCHO CUCAMONGA, CA 91701
TEL: (909) 941-3008 FAX: (909) 941-8211

NO	DATE	BY	DESCRIPTION

REVISIONS

DRAWN: CBF — CHECKED: RES

DATE: 07/15/2022 — SCALE: AS NOTED

PROJECT NUMBER: 2011700

FIRST FLOOR EGRESS PHOTOMETRIC PLAN

DRAWING NUMBER: E2.1P

BID SET 03/01/24

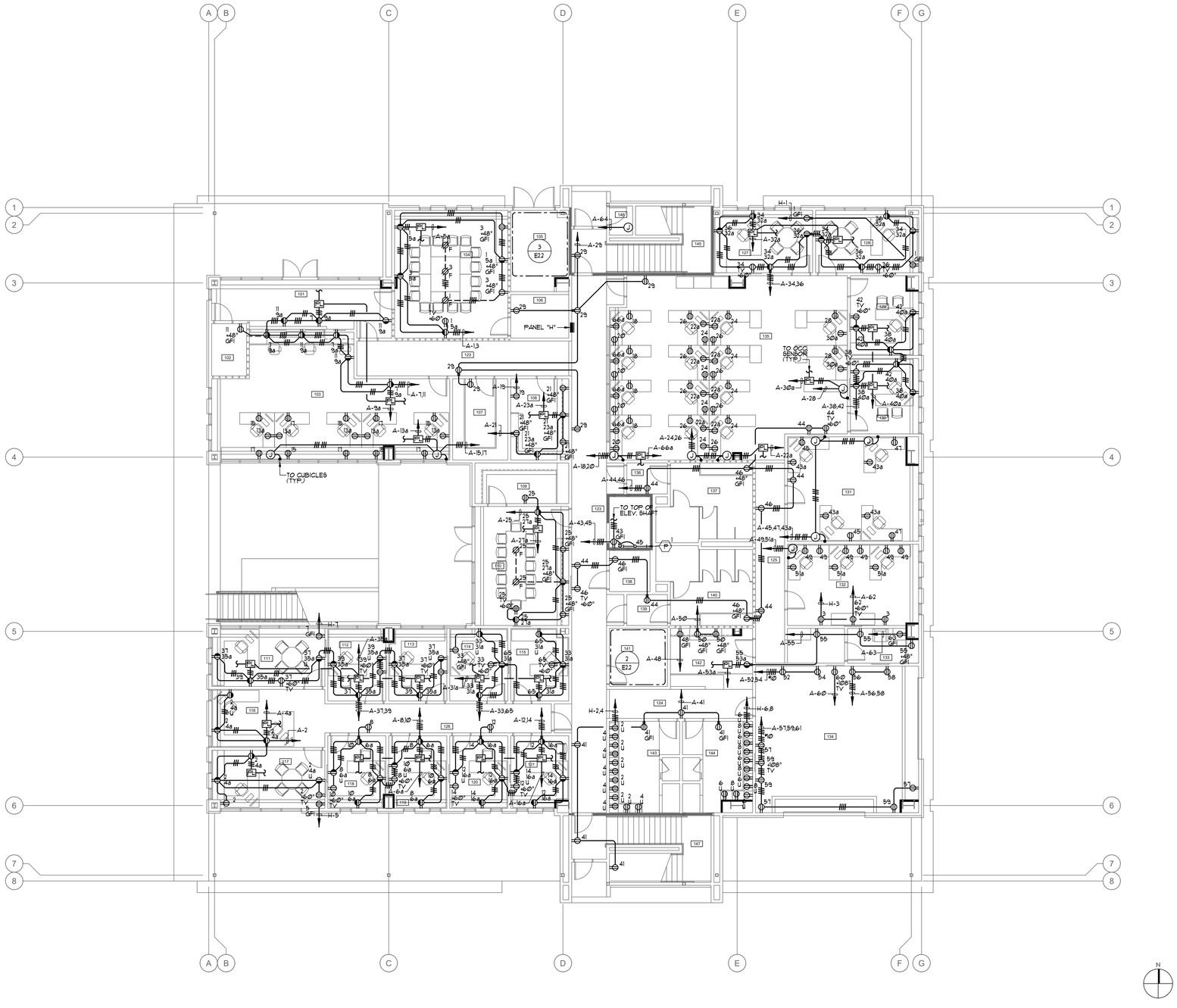

FIRST FLOOR POWER PLAN

1/8" = 1'-0" | 1

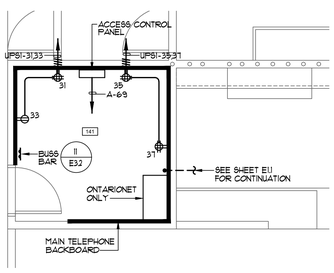

ENLARGED DATAROOM | 1/4" = 1'-0" | 2

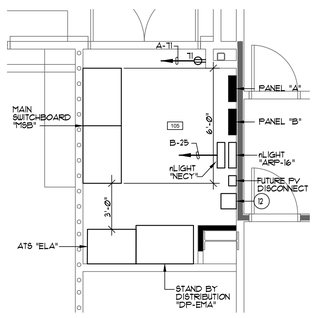

ENLARGED ELECTRICAL ROOM | 1/4" = 1'-0" | 3

NOT USED | N.T.S. | 4

PLAN NOTES:

1. REFER TO GENERAL NOTES, DRAWING E0.1, FOR ADDITIONAL REQUIREMENTS.
2. SEE SINGLE LINE DIAGRAM, DRAWING E0.2 FOR CONDUIT SIZE AND WIRE SIZE AND QUANTITIES REQUIRED FOR ALL ELECTRICAL EQUIPMENT.
3. CONDUIT AND WIRE INDICATED ON THE SINGLE LINE DIAGRAM, WHETHER SHOWN ON THIS DRAWING OR NOT, SHALL BE A PART OF THIS CONTRACT AND THE RESPONSIBILITY OF THIS CONTRACTOR TO PROVIDE REQUIRED ROUTING TO MEET THE INTENT OF THESE PLANS AND SPECIFICATIONS.
4. EXACT LOCATION OF OUTLETS SHOWN ON THESE DRAWINGS SHALL BE COORDINATED WITH THE ARCHITECTURAL ELEVATIONS PRIOR TO ROUGH-IN AND SHALL BE LOCATED IN SUCH A MANNER TO AVOID INTERFERENCES WITH OTHER OUTLETS AND CASEWORK.
5. EXTERIOR MOUNTED DEVICES / RECEPTACLES SHALL BE PROVIDED COMPLETE WITH LOCKING TYPE WEATHERPROOF COVERS AND BE U.L. LISTED FOR WET LOCATIONS WHEN IN USE. COVERS SHALL BE AS MANUFACTURED BY RACO OR APPROVED EQUAL. PLASTIC COVERS NOT ALLOWED.
6. NO OUTLET BEHIND PERMANENTLY INSTALLED CASEWORK WHERE OUTLETS ARE SPECIFICALLY NOTED TO BE INSTALLED IN CABINETS THE OUTLETS SHALL BE FLUSH WITH THE INSTALLED SURFACE OF THE CABINET.
7. NO EXPOSED CONDUIT WILL BE ALLOWED.
8. CONTRACTOR TO PROVIDE LEVITON #T5832-W TYPE RECEPTACLE (20A-125V). CONTRACTOR TO COORDINATE WITH THE ARCHITECT FOR EXACT COLOR TO BE PROVIDED PRIOR TO PURCHASE.
9. RECEPTACLE SHALL BE INSTALLED AT THE TOP OF THE SHAFT PER ELEVATOR CODE REQUIREMENTS.
10. CONTRACTOR TO COORDINATE WITH THE CASEWORK MANUFACTURE AND THE ARCHITECT TO AVOID COVERING UP THE RECEPTACLES FOR THE A/V CABINET. COORDINATION TO BE PERFORMED PRIOR TO ROUGH-IN.
11. CONTRACTOR TO PROVIDE ENGRAVED LABELING AT EACH RECEPTACLE, DATA OUTLET, JUNCTION BOX, DISCONNECT SWITCH, ECT. DISPLAYING THE IDF OR PANEL (WITH CIRCUIT) FEEDING THE DATA OUTLET, RECEPTACLE, JUNCTION BOX, DISCONNECT SWITCH, ECT.
12. CONTRACTOR TO INSTALL 12" X 12" JUNCTION BOX FOR FUTURE SOLAR EQUIPMENT CONDUITS. SEE ROOF PLAN FOR ADDITIONAL REQUIREMENTS.
13. CONTRACTOR TO COORDINATE WITH OWNERS FURNITURE VENDOR FOR FINAL POWER / DATA CONNECTION POINTS FOR ALL OWNER PROVIDED FURNITURE AND CUBICLES. IN ADDITION, CONTRACTOR TO COORDINATE WITH OWNERS FURNITURE VENDOR FOR EXACT QUANTITY OF RECEPTACLE AND DATA OUTLETS REQUIRED AND TO BE PROVIDED AT EACH LOCATION. ALL COORDINATION TO OCCUR PRIOR TO PURCHASE / ROUGH-IN / INSTALLATION OF MATERIAL.

ROOM LEGEND

ROOM #	ROOM NAME	ROOM #	ROOM NAME
101	LOBBY	126	HALLWAY - WEST
102	PUBLIC RESTROOM	127	DEPUTY FIRE MARSHALL
103	ADMIN OPEN OFFICE	128	DC FIRE MARSHALL
104	LARGE CONFERENCE RM	129	FIRE PROTECT ANALYST
105	ELECTRICAL ROOM	130	SR FIRE SPC OFFICE
106	STORAGE	131	FIRE SPC/PERMIT TECH
107	STORAGE	132	PLAN CHECKER OFFICE
108	COPY ROOM	133	LACTATION ROOM
109	EMS STORAGE	134	EXERCISE ROOM
110	EMS SKILLS ROOM	135	OPEN OFFICE
111	EMS DIRECTOR'S OFFICE	136	VESTIBULE
112	EMS NURSE'S OFFICE	137	MALE RESTROOM
113	EMS CAPTAIN'S OFFICE	138	JANITOR'S CLOSET
114	OFFICE XXXXX	139	VESTIBULE
115	OFFICE XXXXX	140	FEMALE RESTROOM
116	ADMIN WORKSTATIONS	141	IDF ROOM
117	DC OFFICE	142	BREAK AREA
118	TRAINING OFFICE 1	143	MALE SHOWER / LOCKER
119	TRAINING OFFICE 2	144	FEMALE SHWR / LOCKER
120	TRAINING OFFICE 3	145	STAIR - NORTH
121	TRAINING OFFICE 4	146	FIRE RISER CLOSET
122	HALLWAY - NORTH	147	STAIR - SOUTH
123	HALLWAY - CENTRAL		
124	HALLWAY - SOUTH		
125	HALLWAY - EAST		

PBK
RANCHO CUCAMONGA
8163 ROCHESTER AVENUE, SUITE 100
RANCHO CUCAMONGA, CA 91730
909-987-0909 P

ONTARIO FIRE DEPARTMENT ADMINISTRATION BUILDING

CITY OF ONTARIO

1420 E. FRANCIS STREET., ONTARIO, CA

LICENSED ARCHITECT — KELLEY NEEDHAM C-19064 — Exp. 03/31/25 — STATE OF CALIFORNIA

REGISTERED PROFESSIONAL ENGINEER — RICHARD E. SPEECE — No. E17229 — 6/30/24 — STATE OF CALIFORNIA

CONSULTANT
A&F ENGINEERING GROUP, INC.
9320 BASELINE RD., SUITE C, RANCHO CUCAMONGA, CA 91701
TEL: (909) 941-3008 FAX: (909) 941-8211

NO	DATE	BY	DESCRIPTION

REVISIONS

DRAWN: CBF | CHECKED: RES

DATE: 07/15/2022 | SCALE: AS NOTED

PROJECT NUMBER: 2011700

FIRST FLOOR POWER PLAN

DRAWING NUMBER: E2.2

BID SET 03/01/24

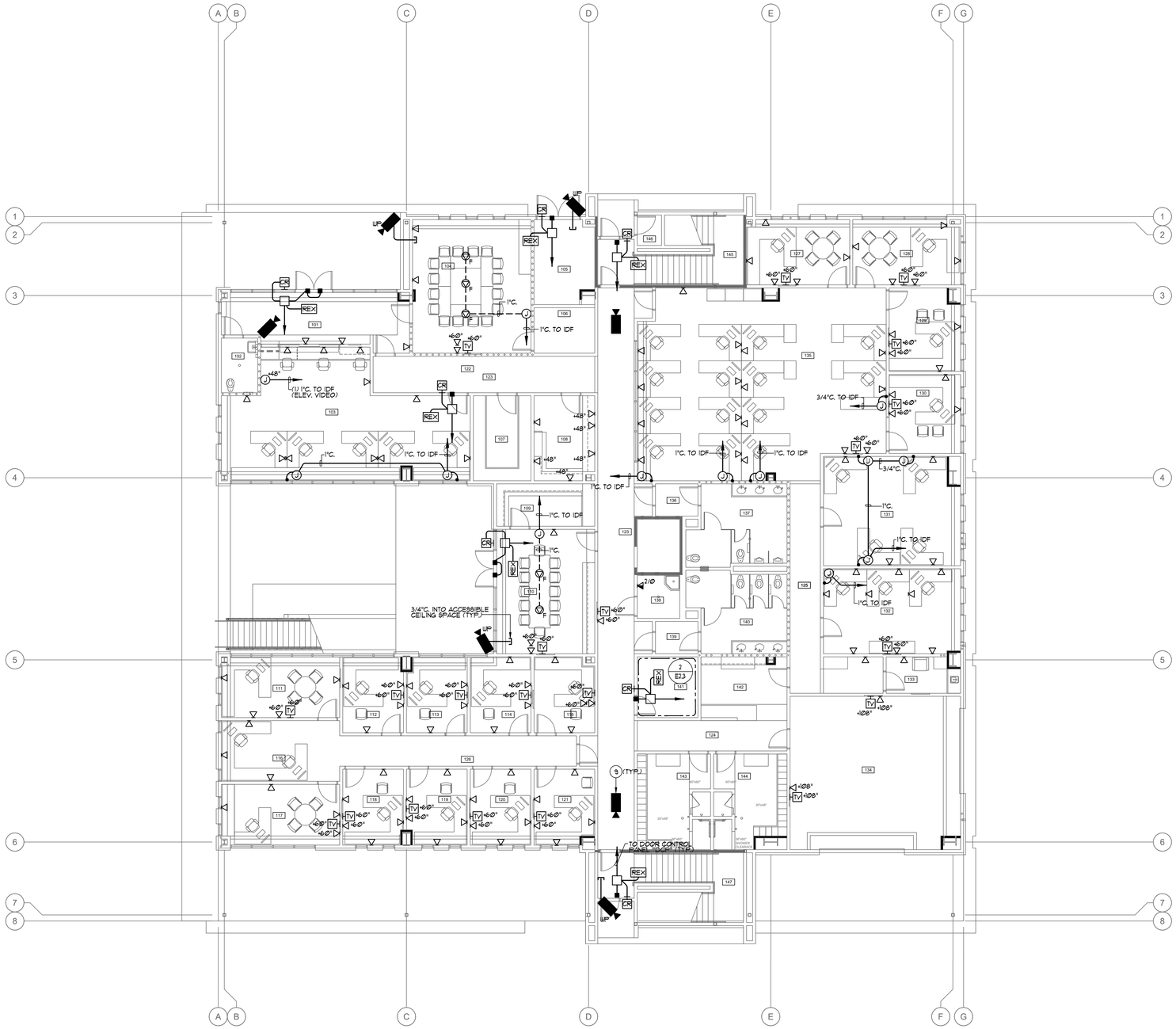

PLAN NOTES:

1. REFER TO GENERAL NOTES, DRAWING E0.1, FOR ADDITIONAL REQUIREMENTS.
2. EXACT LOCATION OF OUTLETS SHOWN ON THESE DRAWINGS SHALL BE COORDINATED WITH THE ARCHITECTURAL PLANS PRIOR TO PULLING OF CABLES / CONDUCTORS.
3. EXTERIOR MOUNTED DEVICES SHALL BE PROVIDED COMPLETE WITH WEATHERPROOF BACKBOXES AND/OR COVERS. COVERS SHALL BE AS RECOMMENDED BY THE SYSTEM'S MANUFACTURER.
4. KNOX BOX. CONNECT TO FIRE ALARM CONTROL PANEL. SEE ARCHITECTURAL DRAWINGS FOR EXACT LOCATION.
5. WHERE LOW VOLTAGE WIRING IS REQUIRED IN INACCESSIBLE CEILING SPACES, THE CONTRACTOR SHALL PROVIDE A COMPLETE CONDUIT SYSTEM FOR ROUTING OF THE SUBJECT WIRE/CABLE.
6. FIRE ALARM DEVICES SHOWN ON PLAN ARE FOR REFERENCE ONLY. CONTRACTOR TO PROVIDE PATHWAYS FOR FIRE ALARM DEVICES SHOWN ON PLAN. FIRE ALARM SYSTEM IS A DEFERRED APPROVAL. A COMPLETE FIRE ALARM SYSTEM DESIGN SHALL BE SUBMITTED AND REVIEWED BY THE LIFE SAFETY SERVICES, FIRE PREVENTION DEPARTMENT.
7. HEAT DETECTOR IN THE ELEVATOR MACHINE ROOM AND PIT SHALL BE PROGRAMMED TO AUTOMATICALLY SHUT-OFF POWER TO THE ELEVATOR UPON ACTIVATION OF THE HEAT DETECTOR.
8. CONTRACTOR TO PROVIDE ENGRAVED LABELING AT EACH RECEPTACLE, DATA OUTLET, JUNCTION BOX, DISCONNECT SWITCH, ECT. DISPLAYING THE IDF OR PANEL (WITH CIRCUIT) FEEDING THE DATA OUTLET, RECEPTACLE, JUNCTION BOX, DISCONNECT SWITCH, ECT.
9. ROUTE ONE (1) CAT 6 CABLE FROM EACH VIDEO SURVEILLANCE CAMERA TO THE IDF IN ROOM 141. COORDINATE MOUNTING OF THE VIDEO SURVEILLANCE EQUIPMENT / HEAD-END WITH THE CITY / FIRE DEPARTMENT I.T. DEPARTMENT.

FIRST FLOOR SIGNAL PLAN — 1/8" = 1'-0" — 1

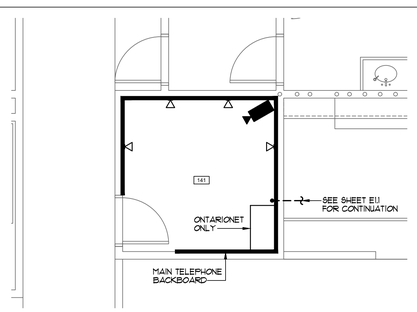

ENLARGED DATAROOM — 1/4" = 1'-0" — 2

NOT USED — N.T.S. — 3

N.T.S. — 4

ROOM #	ROOM NAME	ROOM #	ROOM NAME
101	LOBBY	126	HALLWAY - WEST
102	PUBLIC RESTROOM	127	DEPUTY FIRE MARSHALL
103	ADMIN OPEN OFFICE	128	DC FIRE MARSHALL
104	LARGE CONFERENCE RM	129	FIRE PROTECT ANALYST
105	ELECTRICAL ROOM	130	SR FIRE SPC OFFICE
106	STORAGE	131	FIRE SPC/PERMIT TECH
107	STORAGE	132	PLAN CHECKER OFFICE
108	COPY ROOM	133	LACTATION ROOM
109	EMS STORAGE	134	EXERCISE ROOM
110	EMS SKILLS ROOM	135	OPEN OFFICE
111	EMS DIRECTOR'S OFFICE	136	VESTIBULE
112	EMS NURSE'S OFFICE	137	MALE RESTROOM
113	EMS CAPTAIN'S OFFICE	138	JANITOR'S CLOSET
114	OFFICE XXXXX	139	VESTIBULE
115	OFFICE XXXXX	140	FEMALE RESTROOM
116	ADMIN WORKSTATIONS	141	IDF ROOM
117	DC OFFICE	142	BREAK AREA
118	TRAINING OFFICE 1	143	MALE SHOWER / LOCKER
119	TRAINING OFFICE 2	144	FEMALE SHWR / LOCKER
120	TRAINING OFFICE 3	145	STAIR - NORTH
121	TRAINING OFFICE 4	146	FIRE RISER CLOSET
122	HALLWAY - NORTH	147	STAIR - SOUTH
123	HALLWAY - CENTRAL		
124	HALLWAY - SOUTH		
125	HALLWAY - EAST		

ROOM LEGEND

PBK
RANCHO CUCAMONGA
8163 ROCHESTER AVENUE, SUITE 100
RANCHO CUCAMONGA, CA 91730
909-987-0909 P

ONTARIO FIRE DEPARTMENT ADMINISTRATION BUILDING

CITY OF ONTARIO

1420 E. FRANCIS STREET., ONTARIO, CA

LICENSED ARCHITECT — KELLEY NEEDHAM C-19064 — 9/30/23 — STATE OF CALIFORNIA

REGISTERED PROFESSIONAL ENGINEER — ORLANDO E. SUTEDJA — No. E17229 — 6/30/24 — STATE OF CALIFORNIA

CONSULTANT
A&F ENGINEERING GROUP, INC.
9320 BASELINE RD., SUITE C, RANCHO CUCAMONGA, CA 91701
TEL: (909) 941-3008 FAX: (909) 941-8211

NO	DATE	BY	DESCRIPTION

REVISIONS

DRAWN: CBF — CHECKED: RES

DATE: 07/15/2022 — SCALE: AS NOTED

PROJECT NUMBER: 2011700

FIRST FLOOR SIGNAL PLAN

DRAWING NUMBER: E2.3

BID SET 03/01/24

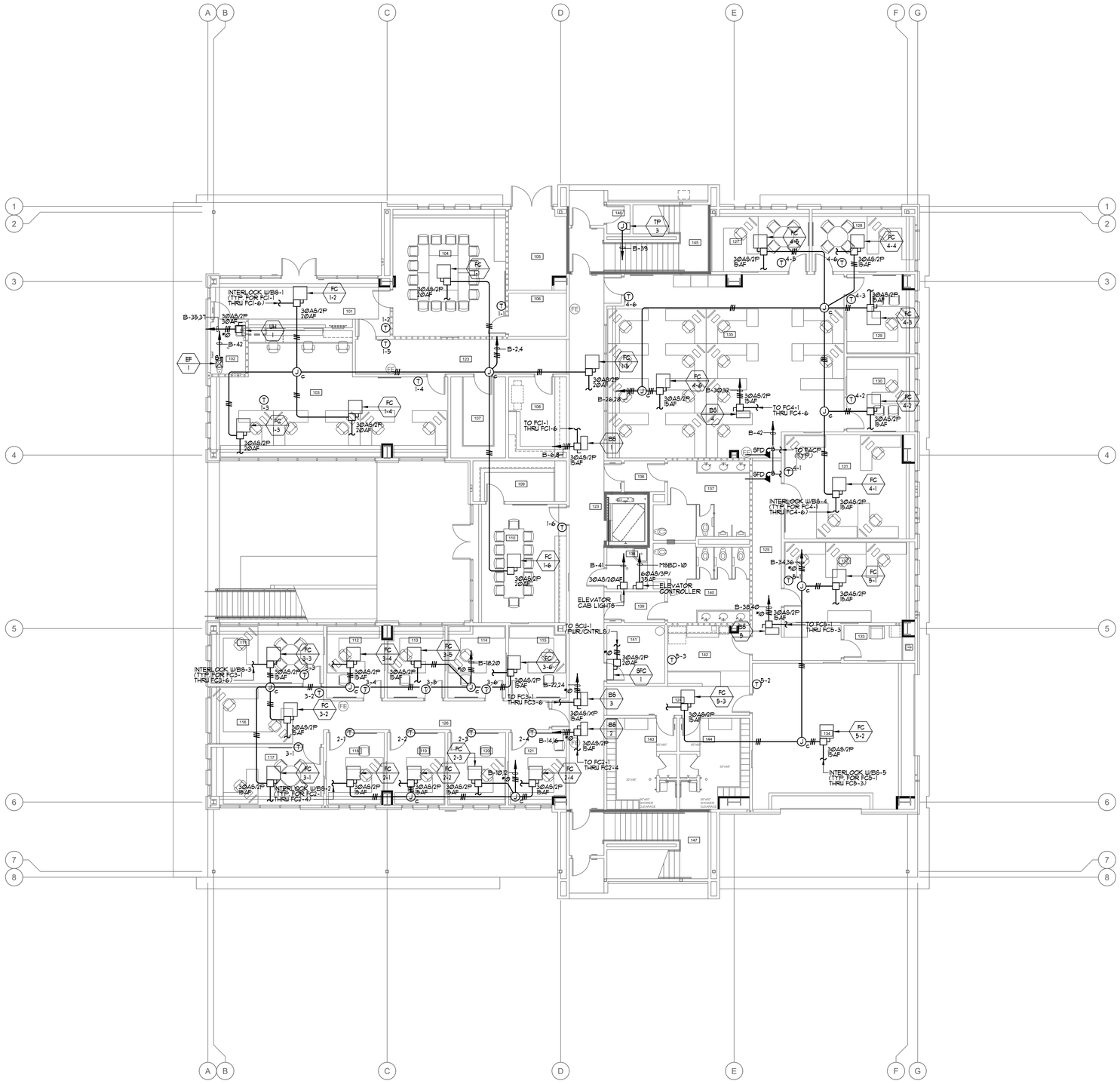

PLAN NOTES:

1. REFER TO GENERAL NOTES, DRAWING E0.1, FOR ADDITIONAL REQUIREMENTS.
2. THE CONTRACTOR SHALL BE RESPONSIBLE FOR COORDINATING ALL CEILING MOUNTED DEVICES WITH THE ARCHITECTURAL REFLECTED CEILING PLAN.
3. THE CONTRACTOR SHALL NOTE THAT THE DRAWING IS DIAGRAMMATIC. EXACT ROUTING OF NEW CONDUITS AND LOCATION OF JUNCTION BOXES, SAFETY SWITCHES, DISCONNECT SWITCHES, PULL BOXES, ECT. SHALL BE COORDINATED AND DETERMINED IN THE FIELD. NEW CONDUIT, JUNCTION BOXES, SAFETY SWITCHES, DISCONNECT SWITCHES, PULL BOXES, ECT. SHALL BE ROUTED / PLACED IN SUCH A MANNER AS TO ADHERE TO ALL APPLICABLE CODES AND TO AVOID INTERFERENCE WITH EXISTING BUILDING STRUCTURES, UTILITIES AND THE WORK BEING PERFORMED BY OTHER TRADES. ALL EXTERIOR CONDUIT, FITTINGS, JUNCTION BOXES AND PULL BOXES TO BE WEATHER PROOF TYPE: NEMA 3R.
4. CONTRACTOR TO COORDINATE FINAL POWER LOCATIONS FOR ALL EQUIPMENT IN THE FIELD WITH THE ARCHITECT / CLIENT PRIOR TO START OF WORK.
5. CONTRACTOR TO PROVIDE ENGRAVED LABELING AT EACH RECEPTACLE, DATA OUTLET, JUNCTION BOX, DISCONNECT SWITCH, ECT. DISPLAYING THE IDF OR PANEL (WITH CIRCUIT) FEEDING THE DATA OUTLET, RECEPTACLE, JUNCTION BOX, DISCONNECT SWITCH, ECT.
6. CONDUIT AND WIRE INDICATED ON THE SINGLE LINE DIAGRAM, WHETHER SHOWN ON THIS DRAWING OR NOT, SHALL BE A PART OF THIS CONTRACT AND THE RESPONSIBILITY OF THIS CONTRACTOR TO PROVIDE REQUIRED ROUTING TO MEET THE INTENT OF THESE PLANS AND SPECIFICATIONS.
7. THE CONTRACTOR SHALL REFER TO THE MECHANICAL AND PLUMBING DRAWINGS FOR EXACT EQUIPMENT LOCATIONS AND ELECTRICAL CONNECTIONS REQUIREMENTS. CONTRACTOR SHALL PROVIDE ALL POWER AND CONTROL CONNECTIONS AS INDICATED ON THE MECHANICAL AND PLUMBING DRAWINGS.
8. CONTRACTOR SHALL ROUTE ELECTRICAL CONDUITS IN THE SAME ROUTE AS REFRIGERATION PIPING. CONTRACTOR TO COORDINATE WITH THE MECHANICAL AND PLUMBING DRAWINGS PRIOR TO START OF WORK TO DETERMINE EXACT ROUTE.
9. SEE SINGLE LINE DIAGRAM FOR CONDUIT SIZE, WIRE SIZE AND QUANTITIES REQUIRED FOR ALL ELECTRICAL EQUIPMENT.
10. WHERE "OPEN WIRING" IS INSTALLED IN INACCESSIBLE CEILING SPACES THE CONTRACTOR SHALL PROVIDE A COMPLETE CONDUIT SYSTEM FOR ROUTING OF THE SUBJECT WIRE/CABLE.

ROOM #	ROOM NAME	ROOM #	ROOM NAME
101	LOBBY	126	HALLWAY - WEST
102	PUBLIC RESTROOM	127	DEPUTY FIRE MARSHALL
103	ADMIN OPEN OFFICE	128	DC FIRE MARSHALL
104	LARGE CONFERENCE RM	129	FIRE PROTECT ANALYST
105	ELECTRICAL ROOM	130	SR FIRE SPC OFFICE
106	STORAGE	131	FIRE SPC/PERMIT TECH
107	STORAGE	132	PLAN CHECKER OFFICE
108	COPY ROOM	133	LACTATION ROOM
109	EMS STORAGE	134	EXERCISE ROOM
110	EMS SKILLS ROOM	135	OPEN OFFICE
111	EMS DIRECTOR'S OFFICE	136	VESTIBULE
112	EMS NURSE'S OFFICE	137	MALE RESTROOM
113	EMS CAPTAIN'S OFFICE	138	JANITOR'S CLOSET
114	OFFICE XXXXX	139	VESTIBULE
115	OFFICE XXXXX	140	FEMALE RESTROOM
116	ADMIN WORKSTATIONS	141	IDF ROOM
117	DC OFFICE	142	BREAK AREA
118	TRAINING OFFICE 1	143	MALE SHOWER / LOCKER
119	TRAINING OFFICE 2	144	FEMALE SHWR / LOCKER
120	TRAINING OFFICE 3	145	STAIR - NORTH
121	TRAINING OFFICE 4	146	FIRE RISER CLOSET
122	HALLWAY - NORTH	147	STAIR - SOUTH
123	HALLWAY - CENTRAL		
124	HALLWAY - SOUTH		
125	HALLWAY - EAST		

ROOM LEGEND

FIRST FLOOR MECHANICAL POWER PLAN

1/8" = 1'-0"

1

PBK
RANCHO CUCAMONGA
8163 ROCHESTER AVENUE, SUITE 100
RANCHO CUCAMONGA, CA 91730
909-987-0909 P

ONTARIO FIRE DEPARTMENT ADMINISTRATION BUILDING

CITY OF ONTARIO

1420 E. FRANCIS STREET., ONTARIO, CA

LICENSED ARCHITECT — KELLEY NEEDHAM C-19064 — exp 03/31/25 — STATE OF CALIFORNIA

REGISTERED PROFESSIONAL ENGINEER — RICARDO E. STEFONI — No. E17229 — 6/30/24 — STATE OF CALIFORNIA

CONSULTANT
A&F ENGINEERING GROUP, INC.
9320 BASELINE RD., SUITE C, RANCHO CUCAMONGA, CA 91701
TEL: (909) 941-3008 FAX: (909) 941-8211

NO	DATE	BY	DESCRIPTION

REVISIONS

DRAWN: CBF	CHECKED: RES
DATE: 07/15/2022	SCALE: AS NOTED
PROJECT NUMBER: 2011700	

FIRST FLOOR MECHANICAL POWER PLAN

DRAWING NUMBER: E2.4

BID SET 03/01/24

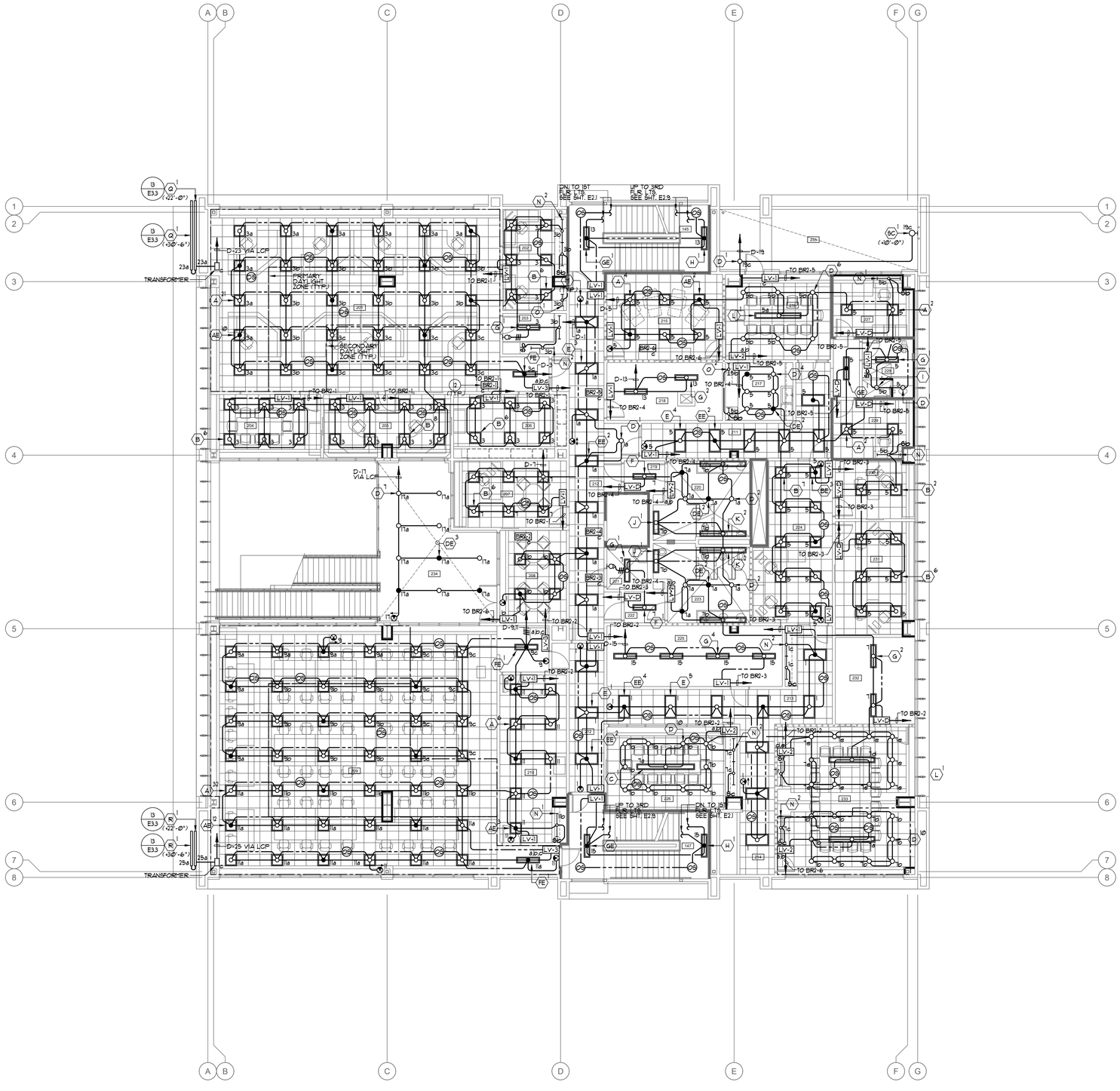

PLAN NOTES:

1. REFER TO GENERAL NOTES, DRAWING E0.1, FOR ADDITIONAL REQUIREMENTS.
2. REFER TO LIGHTING FIXTURE SCHEDULE, DRAWING E0.6, FOR TYPE OF FIXTURE TO BE PROVIDED AND INSTALLED.
3. THE CONTRACTOR SHALL BE RESPONSIBLE FOR COORDINATING ALL CEILING MOUNTED FIXTURES AND DEVICES WITH THE ARCHITECTURAL REFLECTED CEILING PLAN.
4. OCCUPANT SENSOR LOCATIONS INDICATED ON PLAN SHALL BE ADJUSTED/MOVED AS REQUIRED TO PROVIDE FULL COVERAGE OF THE AREA INDICATED ON PLAN. PLACEMENT OF SENSORS SHALL CONFORM WITH THE SENSOR MANUFACTURER'S RECOMMENDATION.
5. NO EXPOSED CONDUIT WILL BE ALLOWED.
6. LIGHTING CONTROLS ARE BASED ON ACUITY NLIGHT SYSTEM. ANY PROPOSED ALTERNATE SYSTEM WILL REQUIRE THE CONTRACTOR TO UPDATE/CHANGE THE PLAN TO REFLECT THE PROPOSED ALTERNATE SYSTEM. THE REVISED DRAWING SHALL BE ISSUED AS PART OF THE LIGHTING CONTROLS SUBMITTAL.
7. REFER TO WIRING CONTROL DIAGRAM ON SHEET E3.5 FOR WIRING REQUIREMENTS.
8. ALL SENSORS IN HALLWAYS/CORRIDORS SHALL BE PROGRAMMED TO REDUCE BY 50% WHEN NO MOVEMENT IS DETECTED.
9. CONTRACTOR TO MEET AND COORDINATE WITH THE TITLE 24 ACCEPTANCE TESTER PRIOR TO THE BEGINNING OF THE PROJECT TO VERIFY ALL TITLE 24 ACCEPTANCE TEST REQUIREMENTS AND DOCUMENTS TO BE COMPLETED. CONTRACTOR SHALL PROVIDE, COMPLETE AND SUBMIT ALL REQUIRED TITLE 24 ACCEPTANCE TEST DOCUMENTS AS REQUIRED BY THE T24 ACCEPTANCE TESTER.
10. THE CONTRACTOR SHALL NOTE THAT THE DRAWING IS DIAGRAMMATIC. EXACT ROUTING OF NEW CONDUITS AND LOCATION OF JUNCTION BOXES AND PULL BOXES SHALL BE COORDINATED AND DETERMINED IN THE FIELD. NEW CONDUIT, JUNCTION BOXES AND PULL BOXES SHALL BE ROUTED / PLACED IN SUCH A MANNER AS TO ADHERE TO ALL APPLICABLE CODES AND TO AVOID INTERFERENCE WITH EXISTING UTILITIES AND THE WORK BEING PERFORMED BY OTHER TRADES. ALL BUILDING STRUCTURES, EXTERIOR CONDUIT, FITTINGS, JUNCTION BOXES AND PULL BOXES TO BE WEATHER PROOF TYPE, NEMA 3R.
11. CONTRACTOR TO PROVIDE ENGRAVED LABELING AT EACH RECEPTACLE, DATA OUTLET, JUNCTION BOX, DISCONNECT SWITCH, ECT. DISPLAYING THE IDF OR PANEL (WITH CIRCUIT) FEEDING THE DATA OUTLET, RECEPTACLE, JUNCTION BOX, DISCONNECT SWITCH, ECT.
12. REFER TO WIRING CONTROL DIAGRAM ON SHEET E3.4 AND E3.5 FOR WIRING REQUIREMENTS.

ROOM #	ROOM NAME	ROOM #	ROOM NAME
201	DISPATCH FLOOR	226	E.O.C. BREAKOUT ROOM
202	FIRE DISPATCH SUPVR.	227	QUIET ROOM 1
203	STORAGE	228	BATHROOM
204	TRAINING/MULTI-USE RM.	229	QUIET ROOM 2
205	DISPATCH TRAINING RM.	230	EMERGENCY MGR
206	LOCKERS	231	EMERGENCY COORD
207	FIRE COMM. MANAGER	232	STORAGE
208	OPEN CONF./CLASS RM.	233	E.O.C. CONFERENCE RM.
209	E.O.C. FLOOR	234	COVERED PATIO
210	E.O.C. EQUIPMENT ROOM	235	PATIO 1
211	HALLWAY - NORTH		
212	HALLWAY - CENTRAL		
213	HALLWAY - EAST		
214	HALLWAY - SOUTH		
215	DAY ROOM		
216	DINING		
217	KITCHEN		
218	RADIO EQUIPMENT RM.		
219	VESTIBULE		
220	MALE RESTROOM		
221	JANITOR'S CLOSET		
222	VESTIBULE		
223	FEMALE RESTROOM		
224	SHARED WORKSPACE		
225	MDF ROOM		

SECOND FLOOR LIGHTING PLAN | 1/8" = 1'-0" | 1 | ROOM LEGEND

PBK
RANCHO CUCAMONGA
8163 ROCHESTER AVENUE, SUITE 100
RANCHO CUCAMONGA, CA 91730
909-987-0909 P

ONTARIO FIRE DEPARTMENT ADMINISTRATION BUILDING

CITY OF ONTARIO

1420 E. FRANCIS STREET., ONTARIO, CA

LICENSED ARCHITECT — KELLEY NEEDHAM, C-19064, Exp. 03/31/25 — STATE OF CALIFORNIA

REGISTERED PROFESSIONAL ENGINEER — RICARDO E. SOTELO, No. E17229, 6/30/24 — STATE OF CALIFORNIA

CONSULTANT
A&F ENGINEERING GROUP, INC.
9350 BASELINE RD. SUITE C, RANCHO CUCAMONGA, CA 91701
TEL: (909) 941-3068 FAX: (909) 941-8211

NO	DATE	BY	DESCRIPTION

REVISIONS

DRAWN: CBF | CHECKED: RES
DATE: 07/15/2022 | SCALE: AS NOTED
PROJECT NUMBER: 2011700

SECOND FLOOR LIGHTING PLAN

DRAWING NUMBER: E2.5

BID SET 03/01/24

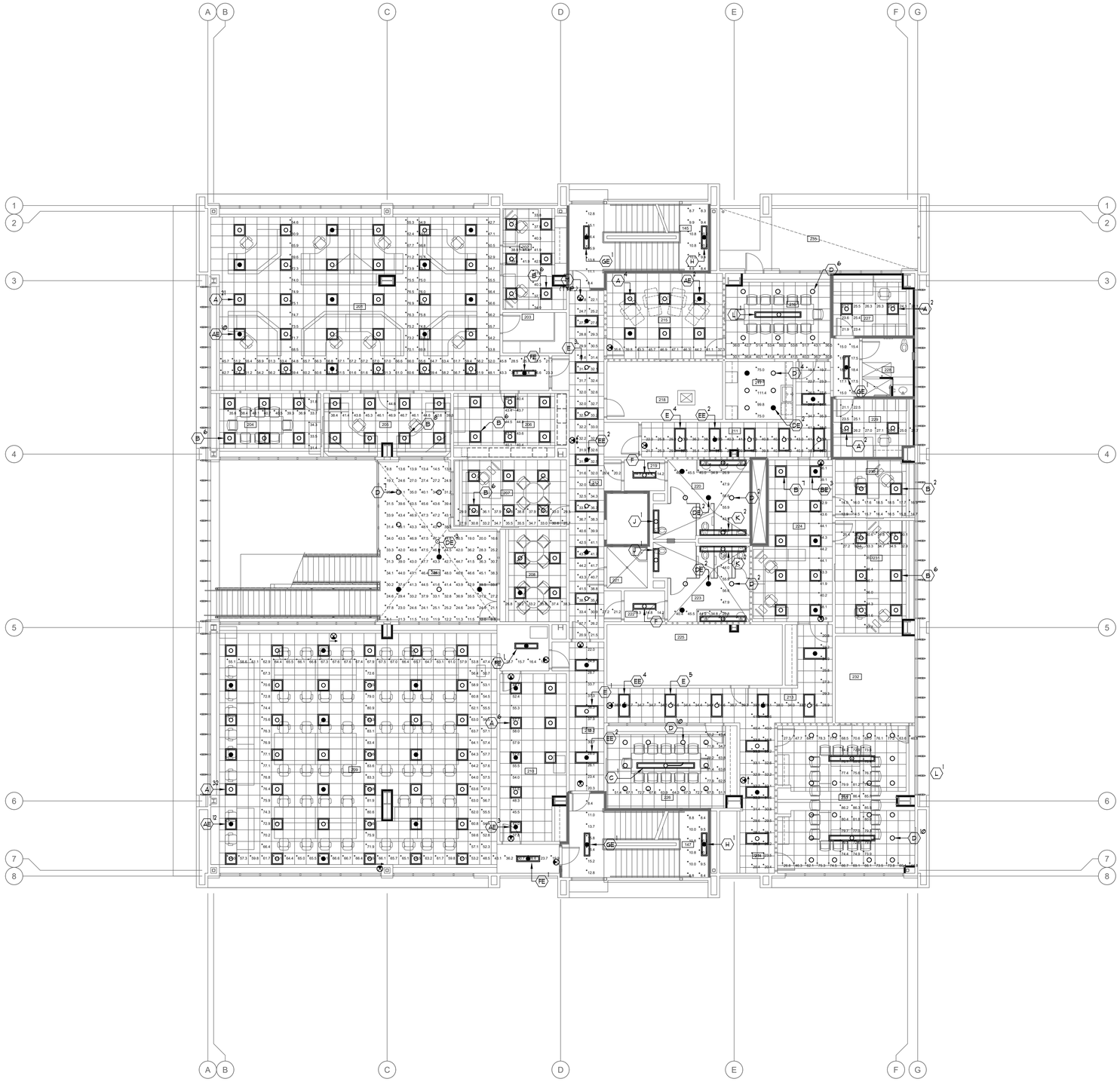

PLAN NOTES:

1. THIS LIGHTING PATTERN REPRESENTS ILLUMINATION LEVELS CALCULATED FROM LABORATORY DATA TAKEN UNDER CONTROLLED CONDITIONS UTILIZING CURRENT INDUSTRY STANDARD LAMP RATINGS IN ACCORDANCE WITH ILLUMINATING ENGINEERING SOCIETY APPROVED METHODS. ACTUAL PERFORMANCE OF ANY MANUFACTURER'S LUMINARIE MAY VARY DUE TO VARIATION IN ELECTRICAL VOLTAGE, TOLERANCE IN LAMPS AND OTHER VARIABLE FIELD CONDITIONS.

Statistics						
Description	Symbol	Avg	Max	Min	Max/Min	Avg/Min
Covered Patio	+	33.0 fc	48.1 fc	8.1 fc	5.9:1	4.1:1
North Exit	+	13.4 fc	16.4 fc	8.4 fc	2.0:1	1.6:1
Room 145	+	9.6 fc	10.8 fc	8.3 fc	1.3:1	1.2:1
Room 147	+	9.6 fc	10.8 fc	8.4 fc	1.3:1	1.1:1
Room 201	+	59.8 fc	76.9 fc	21.1 fc	3.6:1	2.8:1
Room 202	+	39.3 fc	42.5 fc	33.8 fc	1.3:1	1.2:1
Room 204	+	36.3 fc	40.7 fc	31.4 fc	1.3:1	1.2:1
Room 205	+	43.8 fc	46.9 fc	38.4 fc	1.2:1	1.1:1
Room 206	+	33.6 fc	38.3 fc	26.8 fc	1.4:1	1.3:1
Room 206	+	42.4 fc	44.8 fc	40.1 fc	1.1:1	1.1:1
Room 207	+	33.7 fc	38.8 fc	27.7 fc	1.4:1	1.2:1
Room 209	+	62.0 fc	83.6 fc	13.7 fc	6.1:1	4.5:1
Room 210	+	51.6 fc	58.0 fc	37.8 fc	1.5:1	1.4:1
Room 211	+	34.5 fc	43.0 fc	19.5 fc	2.2:1	1.8:1
Room 212	+	29.7 fc	38.3 fc	20.3 fc	1.9:1	1.5:1
Room 212	+	32.6 fc	44.2 fc	20.2 fc	2.2:1	1.6:1
Room 213/214	+	32.0 fc	41.0 fc	20.4 fc	2.0:1	1.6:1
Room 215	+	42.7 fc	47.1 fc	35.6 fc	1.3:1	1.2:1
Room 216	+	42.1 fc	53.6 fc	30.1 fc	1.8:1	1.4:1
Room 217	+	92.2 fc	111.4 fc	75.0 fc	1.5:1	1.2:1
Room 219	+	14.4 fc	14.8 fc	14.2 fc	1.0:1	1.0:1
Room 220	+	42.2 fc	56.6 fc	25.3 fc	2.2:1	1.7:1
Room 222	+	14.4 fc	14.8 fc	14.2 fc	1.0:1	1.0:1
Room 223	+	42.2 fc	56.6 fc	25.4 fc	2.2:1	1.7:1
Room 224	+	41.3 fc	44.3 fc	34.9 fc	1.3:1	1.2:1
Room 227	+	24.4 fc	26.3 fc	21.9 fc	1.2:1	1.1:1
Room 228	+	65.0 fc	81.4 fc	43.4 fc	1.9:1	1.5:1
Room 229	+	24.6 fc	27.1 fc	21.1 fc	1.3:1	1.2:1
Room 230	+	16.1 fc	18.5 fc	12.9 fc	1.4:1	1.2:1
Room 231	+	32.1 fc	36.7 fc	25.4 fc	1.4:1	1.3:1
Room 233	+	71.6 fc	86.6 fc	26.8 fc	3.2:1	2.7:1
South Exit	+	13.3 fc	16.4 fc	8.4 fc	2.0:1	1.6:1
Vestibule	+	16.6 fc	18.4 fc	15.0 fc	1.2:1	1.1:1

ROOM #	ROOM NAME	ROOM #	ROOM NAME
201	DISPATCH FLOOR	226	E.O.C. BREAKOUT ROOM
202	FIRE DISPATCH SUPVR.	227	QUIET ROOM 1
203	STORAGE	228	BATHROOM
204	TRAINING/MULTI-USE RM.	229	QUIET ROOM 2
205	DISPATCH TRAINING RM.	230	EMERGENCY MGR
206	LOCKERS	231	EMERGENCY COORD
207	FIRE COMM. MANAGER	232	STORAGE
208	OPEN CONF./CLASS RM.	233	E.O.C. CONFERENCE RM.
209	E.O.C. FLOOR	234	COVERED PATIO
210	E.O.C. EQUIPMENT ROOM	235	PATIO 1
211	HALLWAY - NORTH		
212	HALLWAY - CENTRAL		
213	HALLWAY - EAST		
214	HALLWAY - SOUTH		
215	DAY ROOM		
216	DINING		
217	KITCHEN		
218	RADIO EQUIPMENT RM.		
219	VESTIBULE		
220	MALE RESTROOM		
221	JANITOR'S CLOSET		
222	VESTIBULE		
223	FEMALE RESTROOM		
224	SHARED WORKSPACE		
225	MDF ROOM		

SECOND FLOOR EGRESS PHOTOMETRIC PLAN

1/8" = 1'-0"

1

ROOM LEGEND

PBK
RANCHO CUCAMONGA
8163 ROCHESTER AVENUE, SUITE 100
RANCHO CUCAMONGA, CA 91730
909-987-0909 P

ONTARIO FIRE DEPARTMENT ADMINISTRATION BUILDING

CITY OF ONTARIO

1420 E. FRANCIS STREET., ONTARIO, CA

LICENSED ARCHITECT — KELLEY NEEDHAM C-19064 — Exp. 03/31/25 — STATE OF CALIFORNIA

REGISTERED PROFESSIONAL ENGINEER — RICARDO E. SOTELO — No. E17229 6/30/24 — STATE OF CALIFORNIA

CONSULTANT
A&F ENGINEERING GROUP, INC.
9320 BASELINE RD., SUITE C, RANCHO CUCAMONGA, CA 91701
TEL: (909) 941-3008 FAX: (909) 941-8211

NO	DATE	BY	DESCRIPTION

REVISIONS

DRAWN: CBF | CHECKED: RES

DATE: 07/15/2022 | SCALE: AS NOTED

PROJECT NUMBER: 2011700

SECOND FLOOR EGRESS PHOTOMETRIC PLAN

DRAWING NUMBER: E2.5P

BID SET 03/01/24

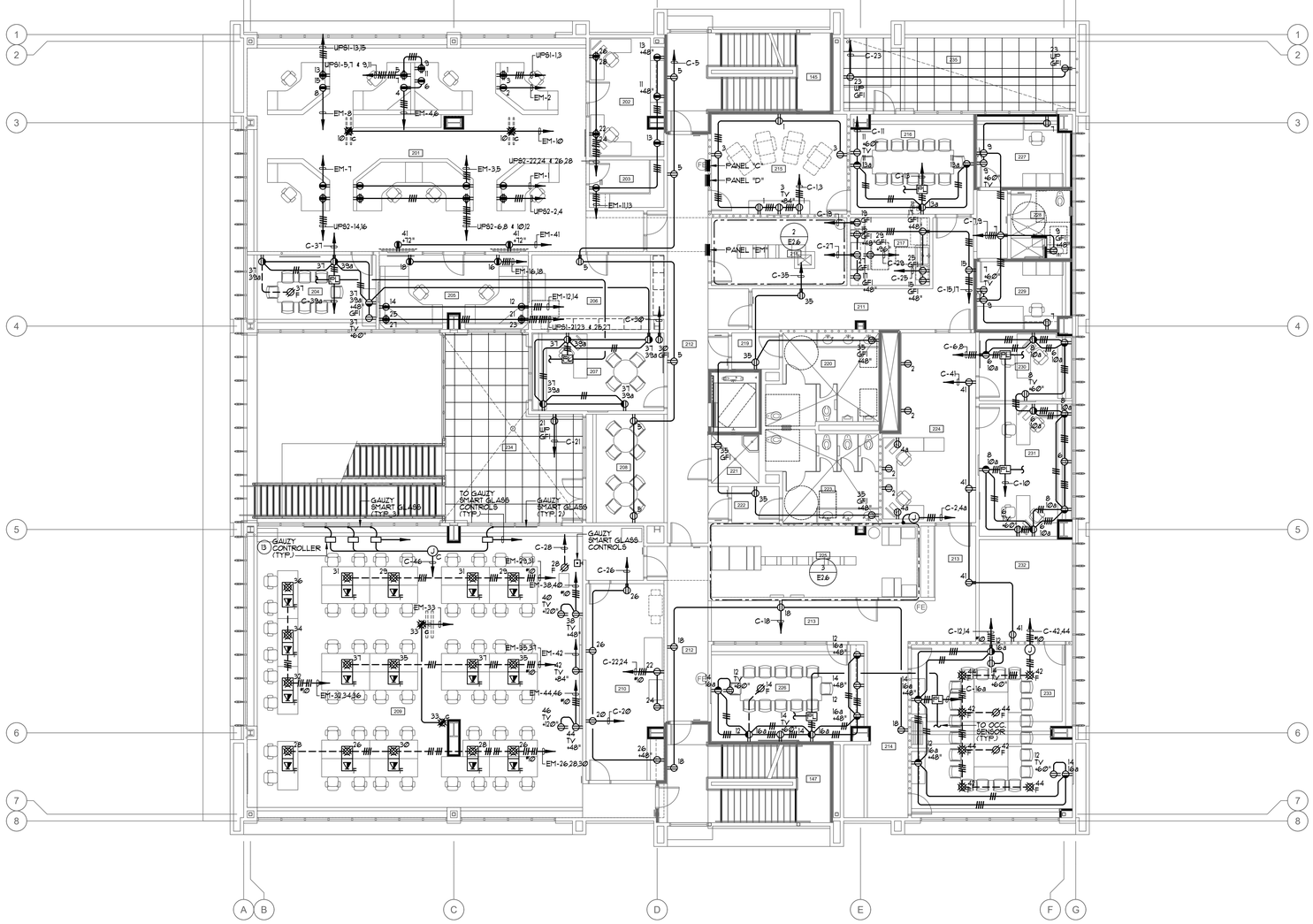

SECOND FLOOR POWER PLAN

1/8" = 1'-0" | 1

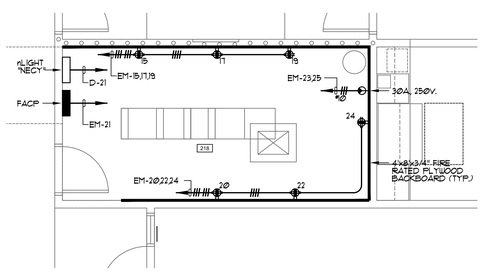

ENLARGED RADIO EQUIPMENT ROOM

1/4" = 1'-0" | 2

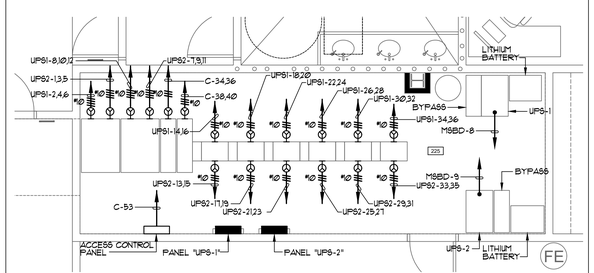

ENLARGED MDF ROOM

1/4" = 1'-0" | 3

NOT USED

N.T.S. | 4

PLAN NOTES:

1. REFER TO GENERAL NOTES, DRAWING E0.1, FOR ADDITIONAL REQUIREMENTS.
2. SEE SINGLE LINE DIAGRAM, DRAWING E0.2 FOR CONDUIT SIZE AND WIRE SIZE AND QUANTITIES REQUIRED FOR ALL ELECTRICAL EQUIPMENT.
3. CONDUIT AND WIRE INDICATED ON THE SINGLE LINE DIAGRAM, WHETHER SHOWN ON THIS DRAWING OR NOT, SHALL BE A PART OF THIS CONTRACT AND THE RESPONSIBILITY OF THIS CONTRACTOR TO PROVIDE REQUIRED ROUTING TO MEET THE INTENT OF THESE PLANS AND SPECIFICATIONS.
4. EXACT LOCATION OF OUTLETS SHOWN ON THESE DRAWINGS SHALL BE COORDINATED WITH THE ARCHITECTURAL ELEVATIONS PRIOR TO ROUGH-IN AND SHALL BE LOCATED IN SUCH A MANNER TO AVOID INTERFERENCES WITH OTHER OUTLETS AND CASEWORK.
5. EXTERIOR MOUNTED DEVICES / RECEPTACLES SHALL BE PROVIDED COMPLETE WITH LOCKING TYPE WEATHERPROOF COVERS AND BE U.L. LISTED FOR WET LOCATIONS WHEN IN USE. COVERS SHALL BE AS MANUFACTURED BY RACO OR APPROVED EQUAL. PLASTIC COVERS NOT ALLOWED.
6. NO OUTLET BEHIND PERMANENTLY INSTALLED CASEWORK WHERE OUTLETS ARE SPECIFICALLY NOTED TO BE INSTALLED IN CABINETS THE OUTLETS SHALL BE FLUSH WITH THE INSTALLED SURFACE OF THE CABINET.
7. NO EXPOSED CONDUIT WILL BE ALLOWED.
8. CONTRACTOR TO PROVIDE LEVITON #T5832-W TYPE RECEPTACLE (20A-125V). CONTRACTOR TO COORDINATE WITH THE ARCHITECT FOR EXACT COLOR TO BE PROVIDED PRIOR TO PURCHASE.
9. RECEPTACLE SHALL BE INSTALLED AT THE TOP OF THE SHAFT PER ELEVATOR CODE REQUIREMENTS.
10. CONTRACTOR TO COORDINATE WITH THE CASEWORK MANUFACTURE AND THE ARCHITECT TO AVOID COVERING UP THE RECEPTACLES FOR THE A/V CABINET. COORDINATION TO BE PERFORMED PRIOR TO ROUGH-IN.
11. CONTRACTOR TO PROVIDE ENGRAVED LABELING AT EACH RECEPTACLE, DATA OUTLET, JUNCTION BOX, DISCONNECT SWITCH, ECT. DISPLAYING THE IDF OR PANEL (WITH CIRCUIT) FEEDING THE DATA OUTLET, RECEPTACLE, JUNCTION BOX, DISCONNECT SWITCH, ECT.
12. CONTRACTOR TO COORDINATE WITH OWNERS FURNITURE VENDOR FOR FINAL POWER / DATA CONNECTION POINTS FOR ALL OWNER PROVIDED FURNITURE AND CUBICLES. IN ADDITION, CONTRACTOR TO COORDINATE WITH OWNERS FURNITURE VENDOR FOR EXACT QUANTITY OF RECEPTACLE AND DATA OUTLETS REQUIRED AND TO BE PROVIDED AT EACH LOCATION. ALL COORDINATION TO OCCUR PRIOR TO PURCHASE / ROUGH-IN / INSTALLATION OF MATERIAL.
13. CONTRACTOR TO COORDINATE WITH OWNERS GAUZY SMART GLASS VENDOR FOR FINAL POWER / DATA CONNECTION POINTS FOR ALL SMART GLASS CONTROLLERS AND GLASS. ALL COORDINATION TO OCCUR PRIOR TO PURCHASE / ROUGH-IN / INSTALLATION OF MATERIAL.

ROOM LEGEND

ROOM #	ROOM NAME	ROOM #	ROOM NAME
201	DISPATCH FLOOR	226	E.O.C. BREAKOUT ROOM
202	FIRE DISPATCH SUPVR.	227	QUIET ROOM 1
203	STORAGE	228	BATHROOM
204	TRAINING/MULTI-USE RM.	229	QUIET ROOM 2
205	DISPATCH TRAINING RM.	230	EMERGENCY MGR
206	LOCKERS	231	EMERGENCY COORD
207	FIRE COMM. MANAGER	232	STORAGE
208	OPEN CONF./CLASS RM.	233	E.O.C. CONFERENCE RM.
209	E.O.C. FLOOR	234	COVERED PATIO
210	E.O.C. EQUIPMENT ROOM	235	PATIO 1
211	HALLWAY - NORTH		
212	HALLWAY - CENTRAL		
213	HALLWAY - EAST		
214	HALLWAY - SOUTH		
215	DAY ROOM		
216	DINING		
217	KITCHEN		
218	RADIO EQUIPMENT RM.		
219	VESTIBULE		
220	MALE RESTROOM		
221	JANITOR'S CLOSET		
222	VESTIBULE		
223	FEMALE RESTROOM		
224	SHARED WORKSPACE		
225	MDF ROOM		

PBK
RANCHO CUCAMONGA
8163 ROCHESTER AVENUE, SUITE 100
RANCHO CUCAMONGA, CA 91730
909-987-0909 P

ONTARIO FIRE DEPARTMENT ADMINISTRATION BUILDING

CITY OF ONTARIO

1420 E. FRANCIS STREET., ONTARIO, CA

LICENSED ARCHITECT — KELLEY NEEDHAM C-19064 — Exp. 03/31/24 — STATE OF CALIFORNIA

REGISTERED PROFESSIONAL ENGINEER — RANDY L. SUTTON — No. E17229 — 6/30/24 — STATE OF CALIFORNIA

CONSULTANT
A&F ENGINEERING GROUP, INC.
9320 BASELINE RD., SUITE C, RANCHO CUCAMONGA, CA 91701
TEL: (909) 941-3008 FAX: (909) 941-8211

NO	DATE	BY	DESCRIPTION

REVISIONS

DRAWN: CBF | CHECKED: RES

DATE: 07/15/2022 | SCALE: AS NOTED

PROJECT NUMBER: 2011700

SECOND FLOOR POWER PLAN

DRAWING NUMBER: E2.6

BID SET 03/01/24

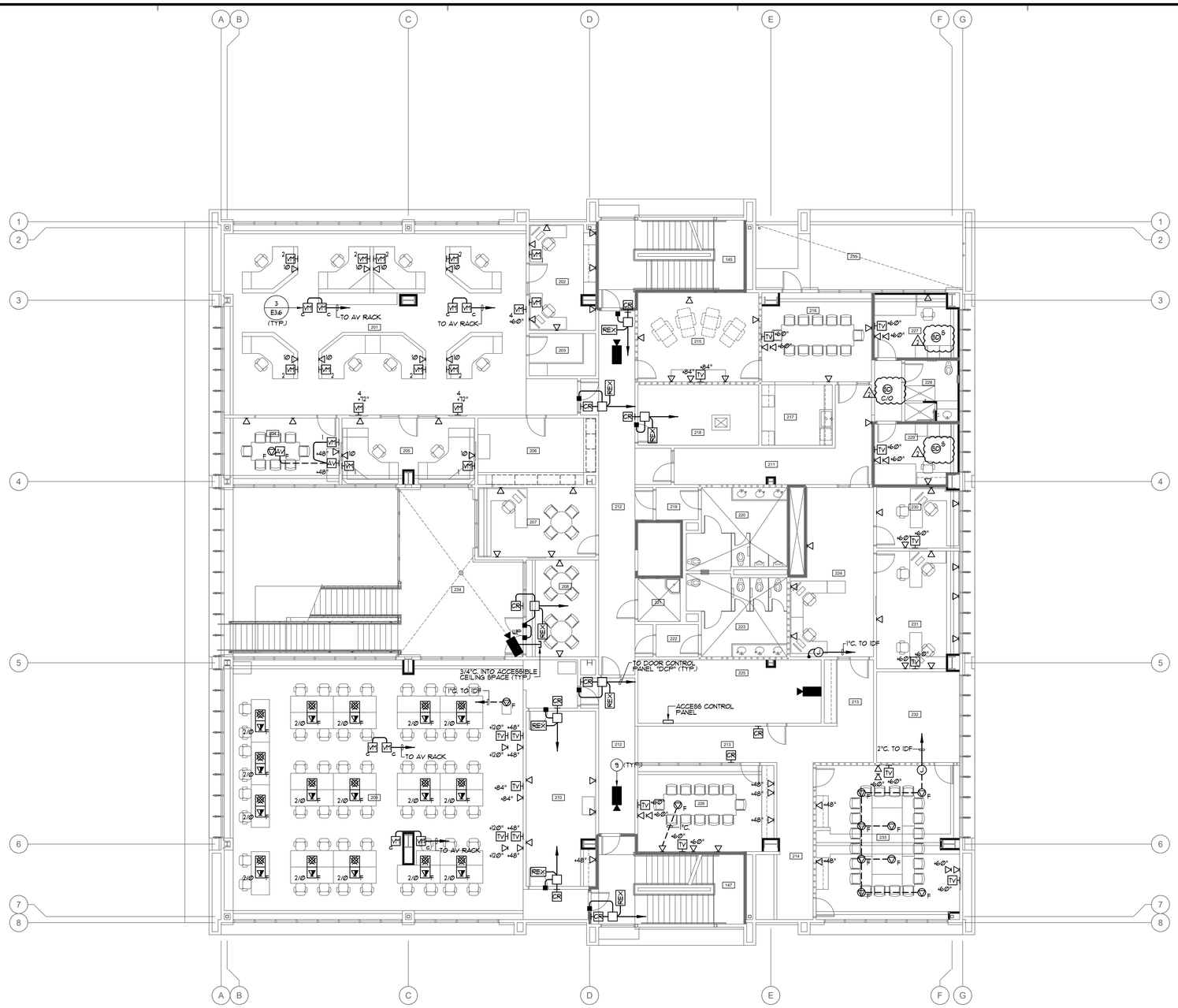

SECOND FLOOR SIGNAL PLAN 1/8" = 1'-0" 1

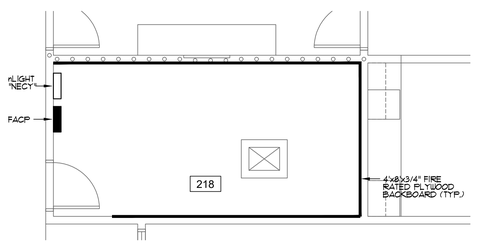

ENLARGED RADIO EQUIPMENT ROOM 1/4" = 1'-0" 2

NOT USED N.T.S. 3

NOT USED N.T.S. 4

PLAN NOTES:

1. REFER TO GENERAL NOTES, DRAWING E0.1, FOR ADDITIONAL REQUIREMENTS.
2. EXACT LOCATION OF OUTLETS SHOWN ON THESE DRAWINGS SHALL BE COORDINATED WITH THE ARCHITECTURAL PLANS PRIOR TO PULLING OF CABLES / CONDUCTORS.
3. EXTERIOR MOUNTED DEVICES SHALL BE PROVIDED COMPLETE WITH WEATHERPROOF BACKBOXES AND/OR COVERS. COVERS SHALL BE AS RECOMMENDED BY THE SYSTEM'S MANUFACTURER.
4. KNOX BOX. CONNECT TO FIRE ALARM CONTROL PANEL. SEE ARCHITECTURAL DRAWINGS FOR EXACT LOCATION.
5. WHERE LOW VOLTAGE WIRING IS REQUIRED IN INACCESSIBLE CEILING SPACES, THE CONTRACTOR SHALL PROVIDE A COMPLETE CONDUIT SYSTEM FOR ROUTING OF THE SUBJECT WIRE/CABLE.
6. FIRE ALARM DEVICES SHOWN ON PLAN ARE FOR REFERENCE ONLY. CONTRACTOR TO PROVIDE PATHWAYS FOR FIRE ALARM DEVICES SHOWN ON PLAN. FIRE ALARM SYSTEM IS A DEFERRED APPROVAL. A COMPLETE FIRE ALARM SYSTEM DESIGN SHALL BE SUBMITTED AND REVIEWED BY THE LIFE SAFETY SERVICES, FIRE PREVENTION DEPARTMENT.
7. HEAT DETECTOR IN THE ELEVATOR MACHINE ROOM AND PIT SHALL BE PROGRAMMED TO AUTOMATICALLY SHUT-OFF POWER TO THE ELEVATOR UPON ACTIVATION OF THE HEAT DETECTOR.
8. CONTRACTOR TO PROVIDE ENGRAVED LABELING AT EACH RECEPTACLE, DATA OUTLET, JUNCTION BOX, DISCONNECT SWITCH, ECT. DISPLAYING THE IDF OR PANEL (WITH CIRCUIT) FEEDING THE DATA OUTLET, RECEPTACLE, JUNCTION BOX, DISCONNECT SWITCH, ECT.
9. ROUTE ONE (1) CAT 6 CABLE FROM EACH VIDEO SURVEILLANCE CAMERA TO THE IDF IN ROOM 225. COORDINATE MOUNTING OF THE VIDEO SURVEILLANCE EQUIPMENT / HEAD-END WITH THE CITY / FIRE DEPARTMENT I.T. DEPARTMENT.

ROOM #	ROOM NAME	ROOM #	ROOM NAME
201	DISPATCH FLOOR	226	E.O.C. BREAKOUT ROOM
202	FIRE DISPATCH SUPVR.	227	QUIET ROOM 1
203	STORAGE	228	BATHROOM
204	TRAINING/MULTI-USE RM.	229	QUIET ROOM 2
205	DISPATCH TRAINING RM.	230	EMERGENCY MGR
206	LOCKERS	231	EMERGENCY COORD
207	FIRE COMM. MANAGER	232	STORAGE
208	OPEN CONF./CLASS RM.	233	E.O.C. CONFERENCE RM.
209	E.O.C. FLOOR	234	COVERED PATIO
210	E.O.C. EQUIPMENT ROOM	235	PATIO 1
211	HALLWAY - NORTH		
212	HALLWAY - CENTRAL		
213	HALLWAY - EAST		
214	HALLWAY - SOUTH		
215	DAY ROOM		
216	DINING		
217	KITCHEN		
218	RADIO EQUIPMENT RM.		
219	VESTIBULE		
220	MALE RESTROOM		
221	JANITOR'S CLOSET		
222	VESTIBULE		
223	FEMALE RESTROOM		
224	SHARED WORKSPACE		
225	MDF ROOM		

ROOM LEGEND

PBK
RANCHO CUCAMONGA
8163 ROCHESTER AVENUE, SUITE 100
RANCHO CUCAMONGA, CA 91730
909-987-0909 P

ONTARIO FIRE DEPARTMENT ADMINISTRATION BUILDING

CITY OF ONTARIO

1420 E. FRANCIS STREET., ONTARIO, CA

LICENSED ARCHITECT — KELLEY NEEDHAM C-19064 Exp. 03/31/25 — STATE OF CALIFORNIA

REGISTERED PROFESSIONAL ENGINEER — RICARDO E. SIFUENTES No. E17229 8/30/24 — STATE OF CALIFORNIA

CONSULTANT
A&F ENGINEERING GROUP, INC.
9320 BASELINE RD. SUITE C, RANCHO CUCAMONGA, CA 91701
TEL: (909) 941-3008 FAX: (909) 941-8211

NO	DATE	BY	DESCRIPTION

REVISIONS

DRAWN: CBF CHECKED: RES

DATE: 07/15/2022 SCALE: AS NOTED

PROJECT NUMBER: 2011700

SECOND FLOOR SIGNAL PLAN

DRAWING NUMBER: E2.7

BID SET 03/01/24

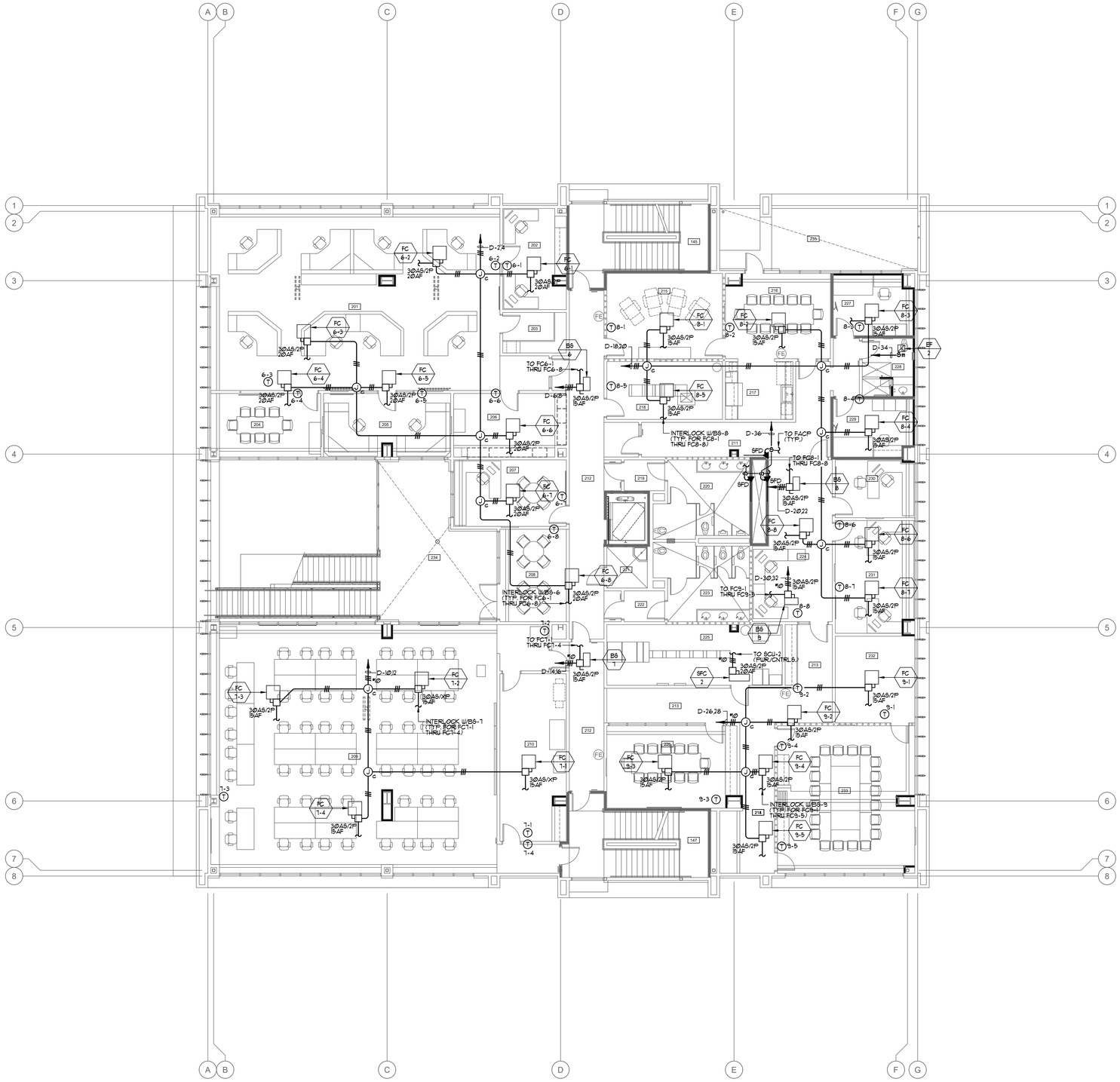

PLAN NOTES:

1. REFER TO GENERAL NOTES, DRAWING E0.1, FOR ADDITIONAL REQUIREMENTS.
2. THE CONTRACTOR SHALL BE RESPONSIBLE FOR COORDINATING ALL CEILING MOUNTED DEVICES WITH THE ARCHITECTURAL REFLECTED CEILING PLAN.
3. THE CONTRACTOR SHALL NOTE THAT THE DRAWING IS DIAGRAMMATIC. EXACT ROUTING OF NEW CONDUITS AND LOCATION OF JUNCTION BOXES, SAFETY SWITCHES, DISCONNECT SWITCHES, PULL BOXES, ECT. SHALL BE COORDINATED AND DETERMINED IN THE FIELD. NEW CONDUIT, JUNCTION BOXES, SAFETY SWITCHES, DISCONNECT SWITCHES, PULL BOXES, ECT. SHALL BE ROUTED / PLACED IN SUCH A MANNER AS TO ADHERE TO ALL APPLICABLE CODES AND TO AVOID INTERFERENCE WITH EXISTING BUILDING STRUCTURES, UTILITIES AND THE WORK BEING PERFORMED BY OTHER TRADES. ALL EXTERIOR CONDUIT, FITTINGS, JUNCTION BOXES AND PULL BOXES TO BE WEATHER PROOF TYPE: NEMA 3R.
4. CONTRACTOR TO COORDINATE FINAL POWER LOCATIONS FOR ALL EQUIPMENT IN THE FIELD WITH THE ARCHITECT / CLIENT PRIOR TO START OF WORK.
5. CONTRACTOR TO PROVIDE ENGRAVED LABELING AT EACH RECEPTACLE, DATA OUTLET, JUNCTION BOX, DISCONNECT SWITCH, ECT. DISPLAYING THE IDF OR PANEL (WITH CIRCUIT) FEEDING THE DATA OUTLET, RECEPTACLE, JUNCTION BOX, DISCONNECT SWITCH, ECT.
6. CONDUIT AND WIRE INDICATED ON THE SINGLE LINE DIAGRAM, WHETHER SHOWN ON THIS DRAWING OR NOT, SHALL BE A PART OF THIS CONTRACT AND THE RESPONSIBILITY OF THIS CONTRACTOR TO PROVIDE REQUIRED ROUTING TO MEET THE INTENT OF THESE PLANS AND SPECIFICATIONS.
7. THE CONTRACTOR SHALL REFER TO THE MECHANICAL AND PLUMBING DRAWINGS FOR EXACT EQUIPMENT LOCATIONS AND ELECTRICAL CONNECTIONS REQUIREMENTS. CONTRACTOR SHALL PROVIDE ALL POWER AND CONTROL CONNECTIONS AS INDICATED ON THE MECHANICAL AND PLUMBING DRAWINGS.
8. CONTRACTOR SHALL ROUTE ELECTRICAL CONDUITS IN THE SAME ROUTE AS REFRIGERATION PIPING. CONTRACTOR TO COORDINATE WITH THE MECHANICAL AND PLUMBING DRAWINGS PRIOR TO START OF WORK TO DETERMINE EXACT ROUTE.
9. SEE SINGLE LINE DIAGRAM FOR CONDUIT SIZE, WIRE SIZE AND QUANTITIES REQUIRED FOR ALL ELECTRICAL EQUIPMENT.
10. WHERE "OPEN WIRING" IS INSTALLED IN INACCESSIBLE CEILING SPACES THE CONTRACTOR SHALL PROVIDE A COMPLETE CONDUIT SYSTEM FOR ROUTING OF THE SUBJECT WIRE/CABLE.

ROOM #	ROOM NAME	ROOM #	ROOM NAME
201	DISPATCH FLOOR	226	E.O.C. BREAKOUT ROOM
202	FIRE DISPATCH SUPVR.	227	QUIET ROOM 1
203	STORAGE	228	BATHROOM
204	TRAINING/MULTI-USE RM.	229	QUIET ROOM 2
205	DISPATCH TRAINING RM.	230	EMERGENCY MGR
206	LOCKERS	231	EMERGENCY COORD
207	FIRE COMM. MANAGER	232	STORAGE
208	OPEN CONF./CLASS RM.	233	E.O.C. CONFERENCE RM.
209	E.O.C. FLOOR	234	COVERED PATIO
210	E.O.C. EQUIPMENT ROOM	235	PATIO 1
211	HALLWAY - NORTH		
212	HALLWAY - CENTRAL		
213	HALLWAY - EAST		
214	HALLWAY - SOUTH		
215	DAY ROOM		
216	DINING		
217	KITCHEN		
218	RADIO EQUIPMENT RM.		
219	VESTIBULE		
220	MALE RESTROOM		
221	JANITOR'S CLOSET		
222	VESTIBULE		
223	FEMALE RESTROOM		
224	SHARED WORKSPACE		
225	MDF ROOM		

SECOND FLOOR MECHANICAL POWER PLAN | 1/8" = 1'-0" | 1 | ROOM LEGEND

PBK
RANCHO CUCAMONGA
8163 ROCHESTER AVENUE, SUITE 100
RANCHO CUCAMONGA, CA 91730
909-987-0909 P

ONTARIO FIRE DEPARTMENT ADMINISTRATION BUILDING

CITY OF ONTARIO

1420 E. FRANCIS STREET., ONTARIO, CA

LICENSED ARCHITECT — KELLEY NEEDHAM C-19064 Exp. 03/31/25 — STATE OF CALIFORNIA

REGISTERED PROFESSIONAL ENGINEER — RICHARD E. SUTTON No. E17229 6/30/24 — STATE OF CALIFORNIA

CONSULTANT
A&F ENGINEERING GROUP, INC.
9320 BASELINE RD., SUITE C, RANCHO CUCAMONGA, CA 91701
TEL: (909) 941-3008 FAX (909) 941-8211

NO	DATE	BY	DESCRIPTION

REVISIONS

DRAWN: CBF	CHECKED: RES
DATE: 07/15/2022	SCALE: AS NOTED
PROJECT NUMBER: 2011700	

SECOND FLOOR MECHANICAL POWER PLAN

DRAWING NUMBER: E2.8

BID SET 03/01/24

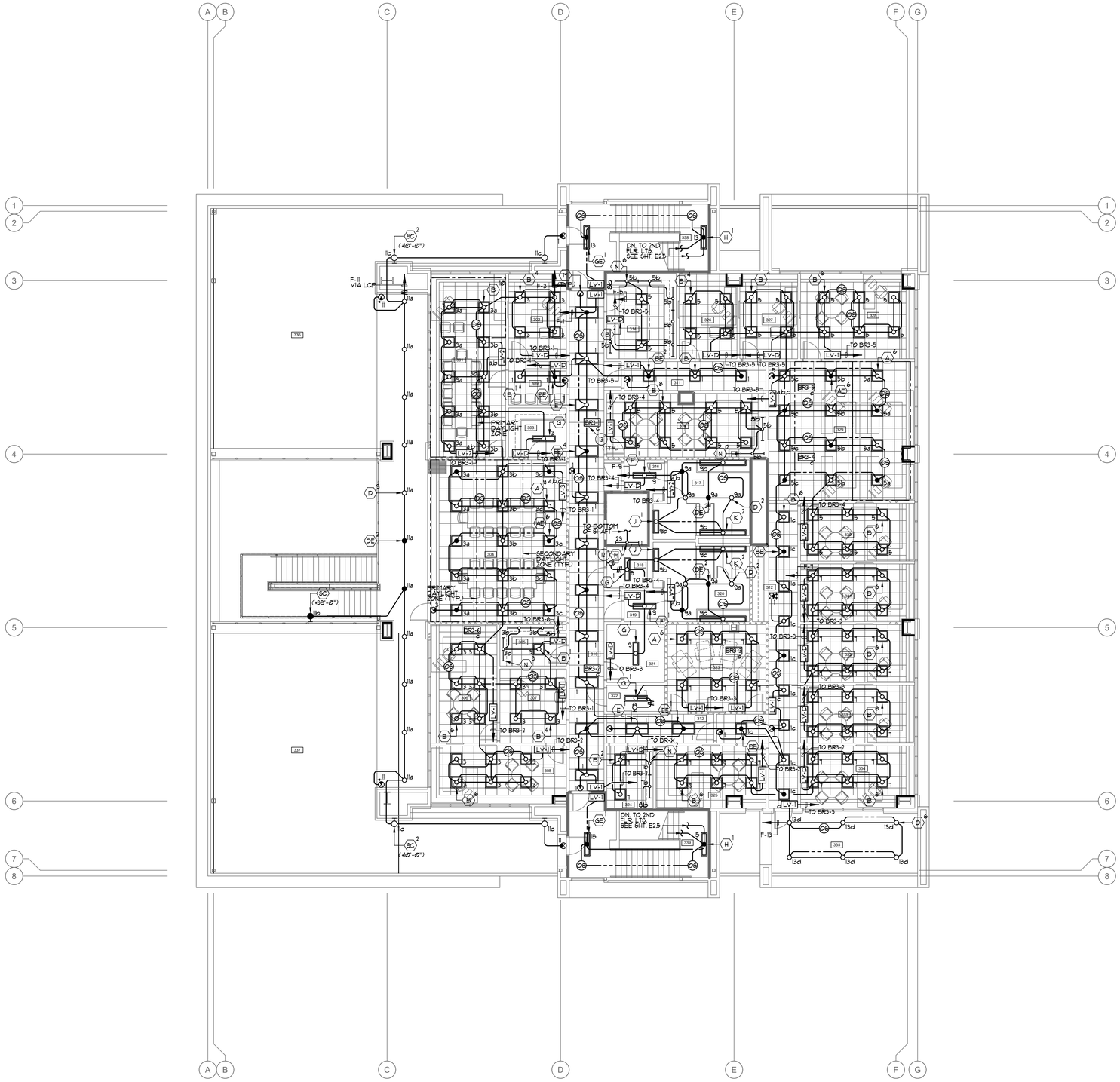

PLAN NOTES:

1. REFER TO GENERAL NOTES, DRAWING E0.1, FOR ADDITIONAL REQUIREMENTS.
2. REFER TO LIGHTING FIXTURE SCHEDULE, DRAWING E0.6, FOR TYPE OF FIXTURE TO BE PROVIDED AND INSTALLED.
3. THE CONTRACTOR SHALL BE RESPONSIBLE FOR COORDINATING ALL CEILING MOUNTED FIXTURES AND DEVICES WITH THE ARCHITECTURAL REFLECTED CEILING PLAN.
4. OCCUPANT SENSOR LOCATIONS INDICATED ON PLAN SHALL BE ADJUSTED/MOVED AS REQUIRED TO PROVIDE FULL COVERAGE OF THE AREA INDICATED ON PLAN. PLACEMENT OF SENSORS SHALL CONFORM WITH THE SENSOR MANUFACTURER'S RECOMMENDATION.
5. NO EXPOSED CONDUIT WILL BE ALLOWED.
6. LIGHTING CONTROLS ARE BASED ON ACUITY NLIGHT SYSTEM. ANY PROPOSED ALTERNATE SYSTEM WILL REQUIRE THE CONTRACTOR TO UPDATE/CHANGE THE PLAN TO REFLECT THE PROPOSED ALTERNATE SYSTEM. THE REVISED DRAWING SHALL BE ISSUED AS PART OF THE LIGHTING CONTROLS SUBMITTAL.
7. REFER TO WIRING CONTROL DIAGRAM ON SHEET E3.5 FOR WIRING REQUIREMENTS.
8. ALL SENSORS IN HALLWAYS/CORRIDORS SHALL BE PROGRAMMED TO REDUCE BY 50% WHEN NO MOVEMENT IS DETECTED.
9. CONTRACTOR TO MEET AND COORDINATE WITH THE TITLE 24 ACCEPTANCE TESTER PRIOR TO THE BEGINNING OF THE PROJECT TO VERIFY ALL TITLE 24 ACCEPTANCE TEST REQUIREMENTS AND DOCUMENTS TO BE COMPLETED. CONTRACTOR SHALL PROVIDE, COMPLETE AND SUBMIT ALL REQUIRED TITLE 24 ACCEPTANCE TEST DOCUMENTS AS REQUIRED BY THE T24 ACCEPTANCE TESTER.
10. THE CONTRACTOR SHALL NOTE THAT THE DRAWING IS DIAGRAMMATIC. EXACT ROUTING OF NEW CONDUITS AND LOCATION OF JUNCTION BOXES AND PULL BOXES SHALL BE COORDINATED AND DETERMINED IN THE FIELD. NEW CONDUIT, JUNCTION BOXES AND PULL BOXES SHALL BE ROUTED / PLACED IN SUCH A MANNER AS TO ADHERE TO ALL APPLICABLE CODES AND TO AVOID INTERFERENCE WITH EXISTING UTILITIES AND THE WORK BEING PERFORMED BY OTHER TRADES. ALL BUILDING STRUCTURES, EXTERIOR CONDUIT, FITTINGS, JUNCTION BOXES AND PULL BOXES TO BE WEATHER PROOF TYPE, NEMA 3R.
11. CONTRACTOR TO PROVIDE ENGRAVED LABELING AT EACH RECEPTACLE, DATA OUTLET, JUNCTION BOX, DISCONNECT SWITCH, ECT. DISPLAYING THE IDF OR PANEL (WITH CIRCUIT) FEEDING THE DATA OUTLET, RECEPTACLE, JUNCTION BOX, DISCONNECT SWITCH, ECT.
12. LIGHT FIXTURE SHALL BE INSTALLED AT THE TOP OF THE ELEVATOR SHAFT PER ELEVATOR CODE REQUIREMENTS.
13. REFER TO WIRING CONTROL DIAGRAM ON SHEET E3.4 AND E3.5 FOR WIRING REQUIREMENTS.

ROOM #	ROOM NAME	ROOM #	ROOM NAME
301	FIRE CHIEF OFFICE	326	OFFICE
302	SR. ADMIN. ASSIST. OFC	327	BC OFFICE
303	STORAGE	328	DC OPERATIONS OFFICE
304	OPEN CONF./CLASSRM.	329	OPEN WORK STATIONS
305	SECURED FILES ROOM	330	ENGAGEMENT SUPER
306	DC LOGISTICS OFFICE	331	TRAINING MGMT ANALYST
307	WELLNESS ADMIN ASSIST	332	SR MGMT ANALYST
308	DC WELLNESS OFFICE	333	ADMIN OFFICER OFFICE
309	WAITING VESTIBULE	334	ADMIN DIRECTOR OFFICE
310	HALLWAY - CENTRAL	335	PATIO 2
311	HALLWAY - NORTH	336	ROOF DECK - NORTH
312	HALLWAY - EAST	337	ROOF DECK - SOUTH
313	HALLWAY - SOUTH		
314	WORKRM. AND STORAGE		
315	BREAK ROOM		
316	VESTIBULE		
317	MALE RESTROOM		
318	JANITOR		
319	VESTIBULE		
320	FEMALE RESTROOM		
321	IDF ROOM		
322	ELEVATOR CONTROL RM.		
323	DAY ROOM		
324	WORKROOM		
325	OFFICE		

THIRD FLOOR LIGHTING PLAN | 1/8" = 1'-0" | 1 | ROOM LEGEND

PBK
RANCHO CUCAMONGA
8163 ROCHESTER AVENUE, SUITE 100
RANCHO CUCAMONGA, CA 91730
909-987-0909 P

ONTARIO FIRE DEPARTMENT ADMINISTRATION BUILDING

CITY OF ONTARIO

1420 E. FRANCIS STREET., ONTARIO, CA

LICENSED ARCHITECT — KEILEY NEEDHAM C-19064 Exp. 03/31/25 — STATE OF CALIFORNIA

REGISTERED PROFESSIONAL ENGINEER — RONALD E. SOTELO No. E17229 6/30/24 — STATE OF CALIFORNIA

CONSULTANT
A&F ENGINEERING GROUP, INC.
8320 BASELINE RD. SUITE C, RANCHO CUCAMONGA, CA 91701
TEL: (909) 941-3006 FAX: (909) 941-8211

NO	DATE	BY	DESCRIPTION

REVISIONS

DRAWN: CBF | CHECKED: RES
DATE: 07/15/2022 | SCALE: AS NOTED
PROJECT NUMBER: 2011700

THIRD FLOOR LIGHTING PLAN

DRAWING NUMBER: E2.9

BID SET 03/01/24

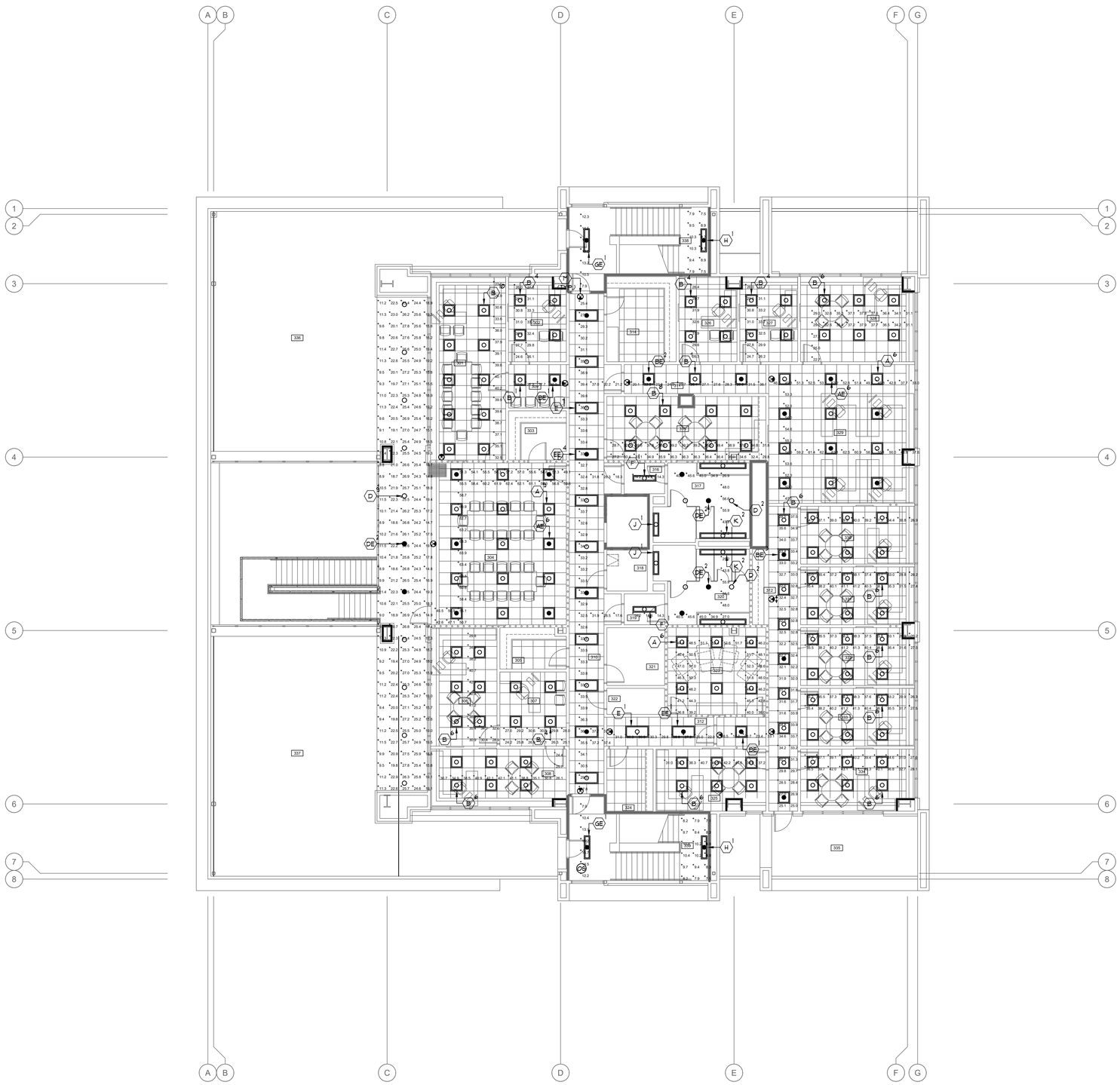

PLAN NOTES:

1. THIS LIGHTING PATTERN REPRESENTS ILLUMINATION LEVELS CALCULATED FROM LABORATORY DATA TAKEN UNDER CONTROLLED CONDITIONS UTILIZING CURRENT INDUSTRY STANDARD LAMP RATINGS IN ACCORDANCE WITH ILLUMINATING ENGINEERING SOCIETY APPROVED METHODS. ACTUAL PERFORMANCE OF ANY MANUFACTURER'S LUMINARIE MAY VARY DUE TO VARIATION IN ELECTRICAL VOLTAGE, TOLERANCE IN LAMPS AND OTHER VARIABLE FIELD CONDITIONS.

Statistics

Description	Symbol	Avg	Max	Min	Max/Min	Avg/Min
Covered Canopy	+	20.1 fc	27.8 fc	8.9 fc	3.1:1	2.3:1
North Exit	+	12.8 fc	15.7 fc	7.9 fc	2.0:1	1.6:1
Room 301	+	35.6 fc	40.2 fc	23.0 fc	1.7:1	1.5:1
Room 302	+	29.5 fc	33.7 fc	24.6 fc	1.4:1	1.2:1
Room 304	+	56.7 fc	63.9 fc	42.6 fc	1.5:1	1.3:1
Room 306	+	35.7 fc	42.2 fc	28.9 fc	1.5:1	1.2:1
Room 306	+	34.7 fc	42.1 fc	24.4 fc	1.7:1	1.4:1
Room 307	+	27.6 fc	30.8 fc	24.2 fc	1.3:1	1.1:1
Room 309	+	28.2 fc	34.4 fc	22.9 fc	1.5:1	1.2:1
Room 310	+	32.6 fc	39.6 fc	17.6 fc	2.3:1	1.9:1
Room 311	+	26.9 fc	36.1 fc	20.1 fc	1.8:1	1.3:1
Room 312	+	28.3 fc	31.0 fc	22.0 fc	1.4:1	1.3:1
Room 312	+	31.4 fc	39.5 fc	16.5 fc	2.4:1	1.9:1
Room 315	+	35.3 fc	39.4 fc	27.2 fc	1.4:1	1.3:1
Room 316	+	14.4 fc	14.8 fc	14.2 fc	1.0:1	1.0:1
Room 317	+	42.2 fc	56.6 fc	25.2 fc	2.2:1	1.7:1
Room 319	+	14.4 fc	14.8 fc	14.2 fc	1.0:1	1.0:1
Room 320	+	42.3 fc	56.6 fc	25.2 fc	2.2:1	1.7:1
Room 323	+	47.0 fc	52.6 fc	36.8 fc	1.4:1	1.3:1
Room 325	+	38.6 fc	42.2 fc	31.0 fc	1.4:1	1.2:1
Room 326	+	29.8 fc	32.6 fc	26.3 fc	1.2:1	1.1:1
Room 327	+	29.6 fc	33.7 fc	24.7 fc	1.4:1	1.2:1
Room 328	+	33.3 fc	37.9 fc	22.7 fc	1.7:1	1.5:1
Room 329	+	51.8 fc	63.1 fc	33.0 fc	1.9:1	1.6:1
Room 330	+	35.9 fc	40.0 fc	26.9 fc	1.5:1	1.3:1
Room 331	+	35.6 fc	41.2 fc	26.2 fc	1.6:1	1.4:1
Room 332	+	35.7 fc	41.3 fc	26.2 fc	1.6:1	1.4:1
Room 333	+	35.8 fc	41.3 fc	26.3 fc	1.6:1	1.4:1
Room 334	+	37.2 fc	43.1 fc	27.0 fc	1.6:1	1.4:1
Room 338	+	9.0 fc	10.3 fc	7.5 fc	1.4:1	1.2:1
Room 339	+	8.9 fc	10.4 fc	7.1 fc	1.5:1	1.3:1
South Exit	+	12.7 fc	15.7 fc	7.9 fc	2.0:1	1.6:1

ROOM #	ROOM NAME	ROOM #	ROOM NAME
301	FIRE CHIEF OFFICE	326	OFFICE
302	SR. ADMIN. ASSIST. OFC	327	BC OFFICE
303	STORAGE	328	DC OPERATIONS OFFICE
304	OPEN CONF./CLASSRM.	329	OPEN WORK STATIONS
305	SECURED FILES ROOM	330	ENGAGEMENT SUPER
306	DC LOGISTICS OFFICE	331	TRAINING MGMT ANALYST
307	WELLNESS ADMIN ASSIST	332	SR MGMT ANALYST
308	DC WELLNESS OFFICE	333	ADMIN OFFICER OFFICE
309	WAITING VESTIBULE	334	ADMIN DIRECTOR OFFICE
310	HALLWAY - CENTRAL	335	PATIO 2
311	HALLWAY - NORTH	336	ROOF DECK - NORTH
312	HALLWAY - EAST	337	ROOF DECK - SOUTH
313	HALLWAY - SOUTH		
314	WORKRM. AND STORAGE		
315	BREAK ROOM		
316	VESTIBULE		
317	MALE RESTROOM		
318	JANITOR		
319	VESTIBULE		
320	FEMALE RESTROOM		
321	IDF ROOM		
322	ELEVATOR CONTROL RM.		
323	DAY ROOM		
324	WORKROOM		
325	OFFICE		

THIRD FLOOR EGRESS PHOTOMETRIC PLAN 1/8" = 1'-0" 1 ROOM LEGEND

PBK
RANCHO CUCAMONGA
8163 ROCHESTER AVENUE, SUITE 100
RANCHO CUCAMONGA, CA 91730
909-987-0909 P

ONTARIO FIRE DEPARTMENT ADMINISTRATION BUILDING

CITY OF ONTARIO

1420 E. FRANCIS STREET., ONTARIO, CA

LICENSED ARCHITECT KELLEY NEEDHAM C-19064 Exp. 03/31/24 STATE OF CALIFORNIA

REGISTERED PROFESSIONAL ENGINEER RANDY L. SUTTON No. E17229 6/30/24 STATE OF CALIFORNIA

CONSULTANT
A&F ENGINEERING GROUP, INC.
9320 BASELINE RD, SUITE C, RANCHO CUCAMONGA, CA 91701
TEL: (909) 941-3008 FAX: (909) 941-8211

NO	DATE	BY	DESCRIPTION

REVISIONS

DRAWN: CBF CHECKED: RES

DATE: 07/15/2022 SCALE: AS NOTED

PROJECT NUMBER: 2011700

THIRD FLOOR EGRESS PHOTOMETRIC PLAN

DRAWING NUMBER: E2.9P

BID SET 03/01/24

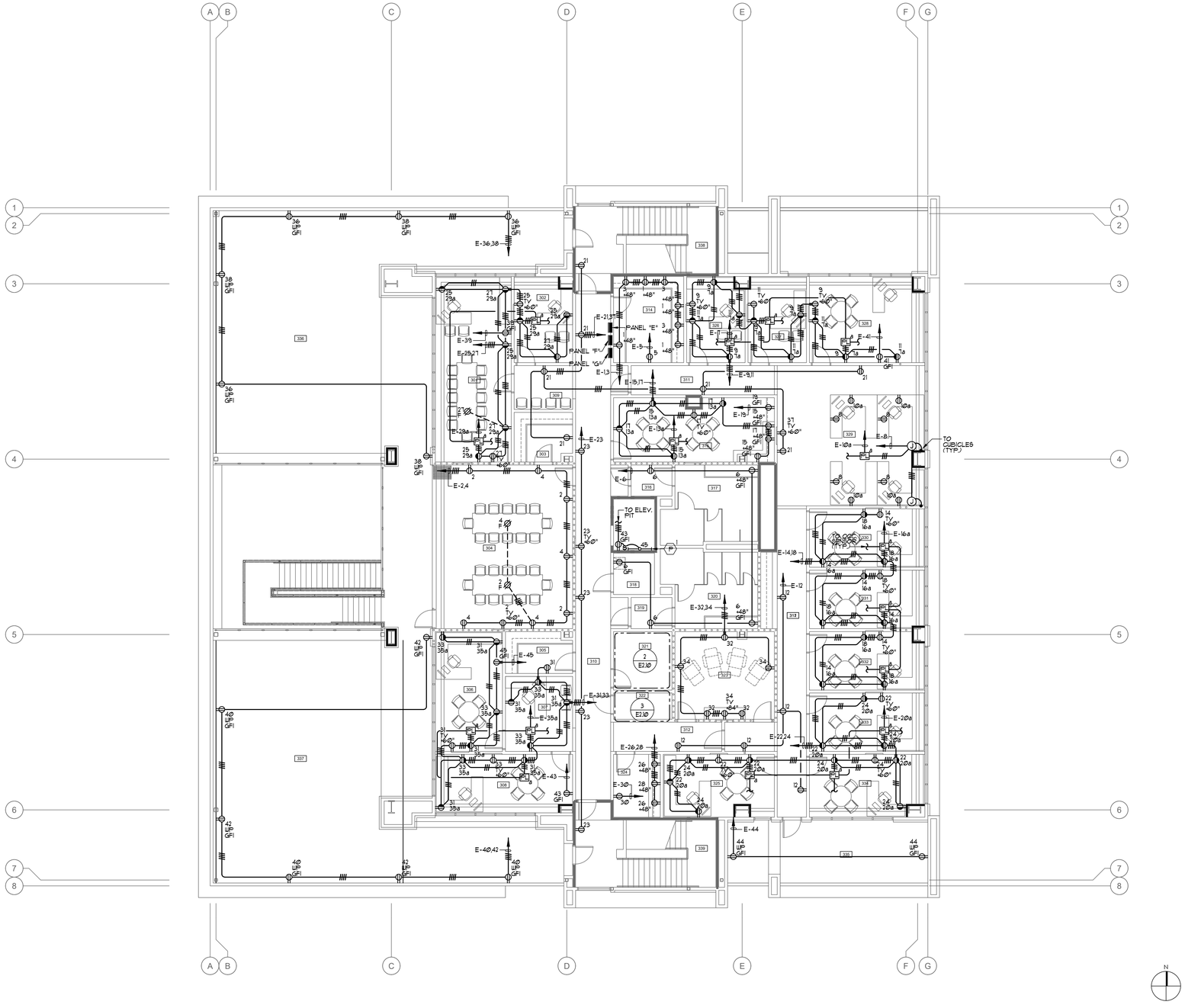

THIRD FLOOR POWER PLAN | 1/8" = 1'-0" | 1

PLAN NOTES:

1. REFER TO GENERAL NOTES, DRAWING E0.1, FOR ADDITIONAL REQUIREMENTS.
2. SEE SINGLE LINE DIAGRAM, DRAWING E0.2 FOR CONDUIT SIZE AND WIRE SIZE AND QUANTITIES REQUIRED FOR ALL ELECTRICAL EQUIPMENT.
3. CONDUIT AND WIRE INDICATED ON THE SINGLE LINE DIAGRAM, WHETHER SHOWN ON THIS DRAWING OR NOT, SHALL BE A PART OF THIS CONTRACT AND THE RESPONSIBILITY OF THIS CONTRACTOR TO PROVIDE REQUIRED ROUTING TO MEET THE INTENT OF THESE PLANS AND SPECIFICATIONS.
4. EXACT LOCATION OF OUTLETS SHOWN ON THESE DRAWINGS SHALL BE COORDINATED WITH THE ARCHITECTURAL ELEVATIONS PRIOR TO ROUGH-IN AND SHALL BE LOCATED IN SUCH A MANNER TO AVOID INTERFERENCES WITH OTHER OUTLETS AND CASEWORK.
5. EXTERIOR MOUNTED DEVICES / RECEPTACLES SHALL BE PROVIDED COMPLETE WITH LOCKING TYPE WEATHERPROOF COVERS AND BE U.L. LISTED FOR WET LOCATIONS WHEN IN USE. COVERS SHALL BE AS MANUFACTURED BY RACO OR APPROVED EQUAL. PLASTIC COVERS NOT ALLOWED.
6. NO OUTLET BEHIND PERMANENTLY INSTALLED CASEWORK WHERE OUTLETS ARE SPECIFICALLY NOTED TO BE INSTALLED IN CABINETS THE OUTLETS SHALL BE FLUSH WITH THE INSTALLED SURFACE OF THE CABINET.
7. NO EXPOSED CONDUIT WILL BE ALLOWED.
8. CONTRACTOR TO PROVIDE LEVITON #T5832-W TYPE RECEPTACLE (20A-125V). CONTRACTOR TO COORDINATE WITH THE ARCHITECT FOR EXACT COLOR TO BE PROVIDED PRIOR TO PURCHASE.
9. RECEPTACLE SHALL BE INSTALLED AT THE TOP OF THE SHAFT PER ELEVATOR CODE REQUIREMENTS.
10. CONTRACTOR TO COORDINATE WITH THE CASEWORK MANUFACTURE AND THE ARCHITECT TO AVOID COVERING UP THE RECEPTACLES FOR THE A/V CABINET. COORDINATION TO BE PERFORMED PRIOR TO ROUGH-IN.
11. CONTRACTOR TO PROVIDE ENGRAVED LABELING AT EACH RECEPTACLE, DATA OUTLET, JUNCTION BOX, DISCONNECT SWITCH, ECT. DISPLAYING THE IDF OR PANEL (WITH CIRCUIT) FEEDING THE DATA OUTLET, RECEPTACLE, JUNCTION BOX, DISCONNECT SWITCH, ECT.
12. CONTRACTOR TO COORDINATE WITH OWNERS FURNITURE VENDOR FOR FINAL POWER / DATA CONNECTION POINTS FOR ALL OWNER PROVIDED FURNITURE AND CUBICLES. IN ADDITION, CONTRACTOR TO COORDINATE WITH OWNERS FURNITURE VENDOR FOR EXACT QUANTITY OF RECEPTACLE AND DATA OUTLETS REQUIRED AND TO BE PROVIDED AT EACH LOCATION. ALL COORDINATION TO OCCUR PRIOR TO PURCHASE / ROUGH-IN / INSTALLATION OF MATERIAL.

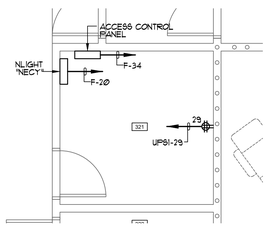

ENLARGED IDF ROOM | 1/4" = 1'-0" | 2

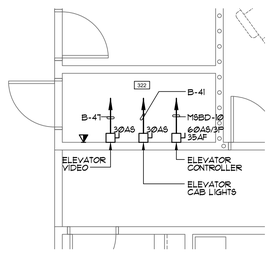

ENLARGE ELEVATOR CONTROL ROOM | 1/4" = 1'-0" | 3

NOT USED | N.T.S. | 4

ROOM #	ROOM NAME	ROOM #	ROOM NAME
301	FIRE CHIEF OFFICE	326	OFFICE
302	SR. ADMIN. ASSIST. OFC	327	BC OFFICE
303	STORAGE	328	DC OPERATIONS OFFICE
304	OPEN CONF./CLASSRM.	329	OPEN WORK STATIONS
305	SECURED FILES ROOM	330	ENGAGEMENT SUPER
306	DC LOGISTICS OFFICE	331	TRAINING MGMT ANALYST
307	WELLNESS ADMIN ASSIST	332	SR MGMT ANALYST
308	DC WELLNESS OFFICE	333	ADMIN OFFICER OFFICE
309	WAITING VESTIBULE	334	ADMIN DIRECTOR OFFICE
310	HALLWAY - CENTRAL	335	PATIO 2
311	HALLWAY - NORTH	336	ROOF DECK - NORTH
312	HALLWAY - EAST	337	ROOF DECK - SOUTH
313	HALLWAY - SOUTH		
314	WORKRM. AND STORAGE		
315	BREAK ROOM		
316	VESTIBULE		
317	MALE RESTROOM		
318	JANITOR		
319	VESTIBULE		
320	FEMALE RESTROOM		
321	IDF ROOM		
322	ELEVATOR CONTROL RM.		
323	DAY ROOM		
324	WORKROOM		
325	OFFICE		

ROOM LEGEND

PBK
RANCHO CUCAMONGA
8163 ROCHESTER AVENUE, SUITE 100
RANCHO CUCAMONGA, CA 91730
909-987-0909 P

ONTARIO FIRE DEPARTMENT ADMINISTRATION BUILDING

CITY OF ONTARIO

1420 E. FRANCIS STREET., ONTARIO, CA

LICENSED ARCHITECT — KELLEY NEEDHAM, C-19064, Exp. 03/31/25 — STATE OF CALIFORNIA

REGISTERED PROFESSIONAL ENGINEER — ROLANDO E. SORTO, No. E17229, 6/30/24 — STATE OF CALIFORNIA

CONSULTANT
A&F ENGINEERING GROUP, INC.
9320 BASELINE RD. SUITE C, RANCHO CUCAMONGA, CA 91701
TEL: (909) 941-3068 FAX: (909) 941-8211

NO	DATE	BY	DESCRIPTION

REVISIONS

DRAWN: CBF | CHECKED: RES

DATE: 07/15/2022 | SCALE: AS NOTED

PROJECT NUMBER: 2011700

THIRD FLOOR POWER PLAN

DRAWING NUMBER: E2.10

BID SET 03/01/24

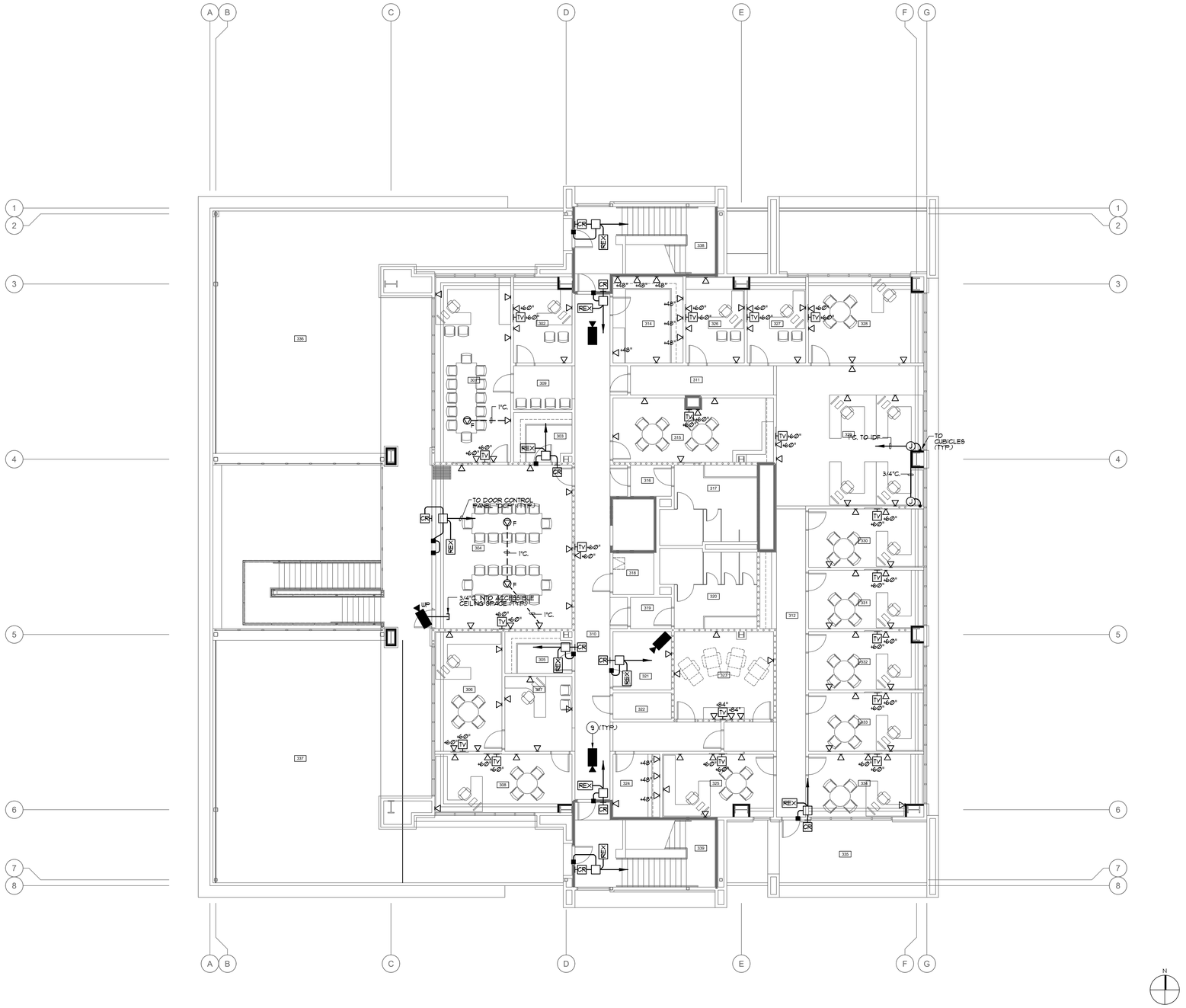

THIRD FLOOR SIGNAL PLAN 1/8" = 1'-0" 1

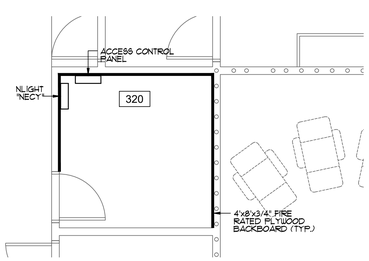

ENLARGED IDF ROOM 1/4" = 1'-0" 2

NOT USED N.T.S. 3

NOT USED N.T.S. 4

PLAN NOTES:

1. REFER TO GENERAL NOTES, DRAWING E0.1, FOR ADDITIONAL REQUIREMENTS.
2. EXACT LOCATION OF OUTLETS SHOWN ON THESE DRAWINGS SHALL BE COORDINATED WITH THE ARCHITECTURAL PLANS PRIOR TO PULLING OF CABLES / CONDUCTORS.
3. EXTERIOR MOUNTED DEVICES SHALL BE PROVIDED COMPLETE WITH WEATHERPROOF BACKBOXES AND/OR COVERS. COVERS SHALL BE AS RECOMMENDED BY THE SYSTEM'S MANUFACTURER.
4. KNOX BOX. CONNECT TO FIRE ALARM CONTROL PANEL. SEE ARCHITECTURAL DRAWINGS FOR EXACT LOCATION.
5. WHERE LOW VOLTAGE WIRING IS REQUIRED IN INACCESSIBLE CEILING SPACES, THE CONTRACTOR SHALL PROVIDE A COMPLETE CONDUIT SYSTEM FOR ROUTING OF THE SUBJECT WIRE/CABLE.
6. FIRE ALARM DEVICES SHOWN ON PLAN ARE FOR REFERENCE ONLY. CONTRACTOR TO PROVIDE PATHWAYS FOR FIRE ALARM DEVICES SHOWN ON PLAN. FIRE ALARM SYSTEM IS A DEFERRED APPROVAL. A COMPLETE FIRE ALARM SYSTEM DESIGN SHALL BE SUBMITTED AND REVIEWED BY THE LIFE SAFETY SERVICES, FIRE PREVENTION DEPARTMENT.
7. HEAT DETECTOR IN THE ELEVATOR MACHINE ROOM AND PIT SHALL BE PROGRAMMED TO AUTOMATICALLY SHUT-OFF POWER TO THE ELEVATOR UPON ACTIVATION OF THE HEAT DETECTOR.
8. CONTRACTOR TO PROVIDE ENGRAVED LABELING AT EACH RECEPTACLE, DATA OUTLET, JUNCTION BOX, DISCONNECT SWITCH, ECT. DISPLAYING THE IDF OR PANEL (WITH CIRCUIT) FEEDING THE DATA OUTLET, RECEPTACLE, JUNCTION BOX, DISCONNECT SWITCH, ECT.
9. ROUTE ONE (1) CAT 6 CABLE FROM EACH VIDEO SURVEILLANCE CAMERA TO THE IDF IN ROOM 320. COORDINATE MOUNTING OF THE VIDEO SURVEILLANCE EQUIPMENT / HEAD-END WITH THE CITY / FIRE DEPARTMENT I.T. DEPARTMENT.

ROOM #	ROOM NAME	ROOM #	ROOM NAME
301	FIRE CHIEF OFFICE	326	OFFICE
302	SR. ADMIN. ASSIST. OFC	327	BC OFFICE
303	STORAGE	328	DC OPERATIONS OFFICE
304	OPEN CONF./CLASSRM.	329	OPEN WORK STATIONS
305	SECURED FILES ROOM	330	ENGAGEMENT SUPER
306	DC LOGISTICS OFFICE	331	TRAINING MGMT ANALYST
307	WELLNESS ADMIN ASSIST	332	SR MGMT ANALYST
308	DC WELLNESS OFFICE	333	ADMIN OFFICER OFFICE
309	WAITING VESTIBULE	334	ADMIN DIRECTOR OFFICE
310	HALLWAY - CENTRAL	335	PATIO 2
311	HALLWAY - NORTH	336	ROOF DECK - NORTH
312	HALLWAY - EAST	337	ROOF DECK - SOUTH
313	HALLWAY - SOUTH		
314	WORKRM. AND STORAGE		
315	BREAK ROOM		
316	VESTIBULE		
317	MALE RESTROOM		
318	JANITOR		
319	VESTIBULE		
320	FEMALE RESTROOM		
321	IDF ROOM		
322	ELEVATOR CONTROL RM.		
323	DAY ROOM		
324	WORKROOM		
325	OFFICE		

ROOM LEGEND

PBK
RANCHO CUCAMONGA
8163 ROCHESTER AVENUE, SUITE 100
RANCHO CUCAMONGA, CA 91730
909-987-0909 P

ONTARIO FIRE DEPARTMENT ADMINISTRATION BUILDING

CITY OF ONTARIO

1420 E. FRANCIS STREET., ONTARIO, CA

LICENSED ARCHITECT — KELLEY NEEDHAM C-19064 Exp. 03/31/25 — STATE OF CALIFORNIA

REGISTERED PROFESSIONAL ENGINEER — RONALD L. SOTOMAYOR No. E17229 6/30/24 — STATE OF CALIFORNIA

CONSULTANT
A&F ENGINEERING GROUP, INC.
9320 BASELINE RD., SUITE C, RANCHO CUCAMONGA, CA 91701
TEL. (909) 941-3008 FAX (909) 941-8211

NO	DATE	BY	DESCRIPTION

REVISIONS

DRAWN: CBF CHECKED: RES

DATE: 07/15/2022 SCALE: AS NOTED

PROJECT NUMBER: 2011700

THIRD FLOOR SIGNAL PLAN

DRAWING NUMBER: E2.11

BID SET 03/01/24

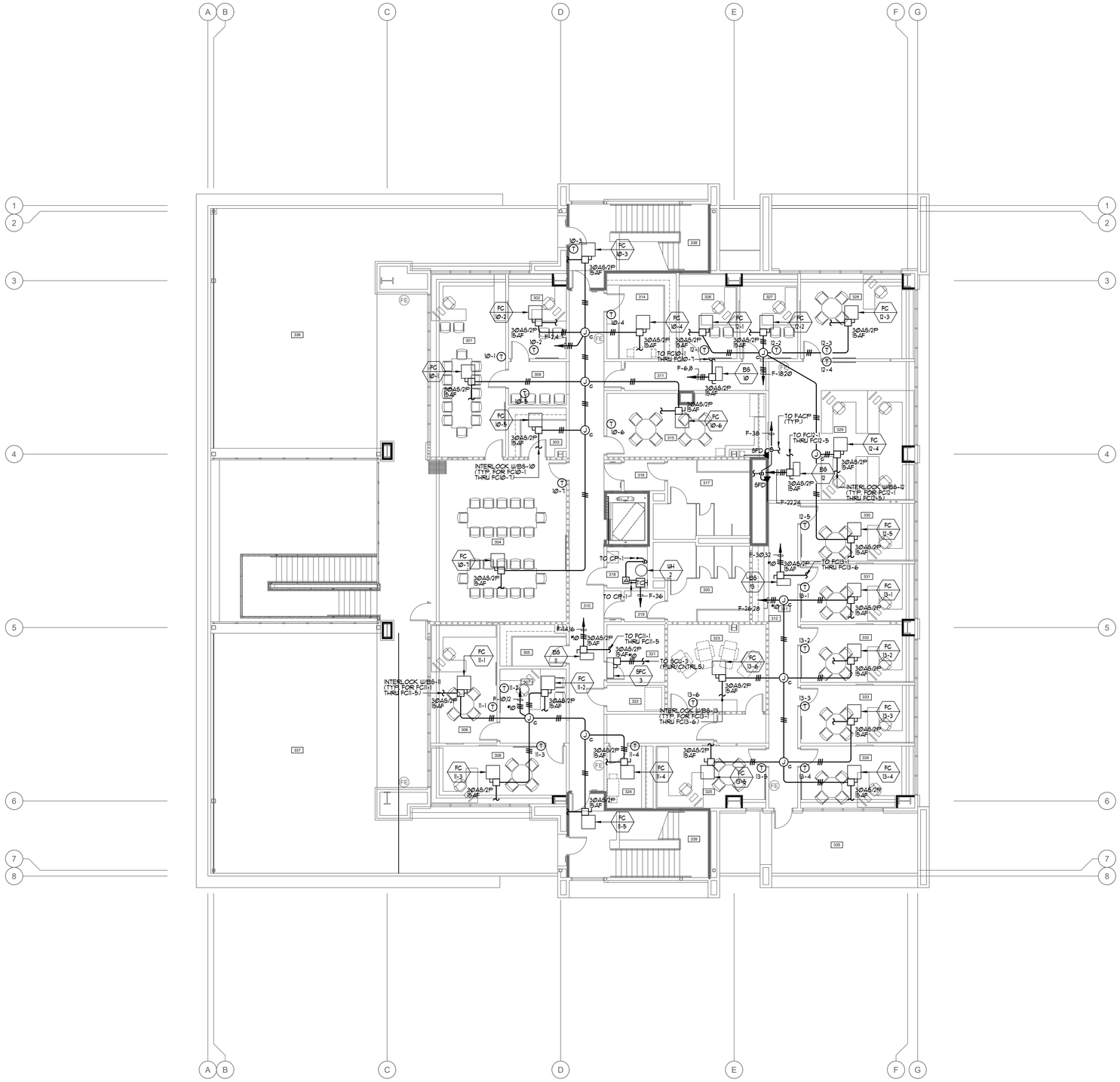

PLAN NOTES:

1. REFER TO GENERAL NOTES, DRAWING EØ.1, FOR ADDITIONAL REQUIREMENTS.
2. THE CONTRACTOR SHALL BE RESPONSIBLE FOR COORDINATING ALL CEILING MOUNTED DEVICES WITH THE ARCHITECTURAL REFLECTED CEILING PLAN.
3. THE CONTRACTOR SHALL NOTE THAT THE DRAWING IS DIAGRAMMATIC. EXACT ROUTING OF NEW CONDUITS AND LOCATION OF JUNCTION BOXES, SAFETY SWITCHES, DISCONNECT SWITCHES, PULL BOXES, ECT. SHALL BE COORDINATED AND DETERMINED IN THE FIELD. NEW CONDUIT, JUNCTION BOXES, SAFETY SWITCHES, DISCONNECT SWITCHES, PULL BOXES, ECT. SHALL BE ROUTED / PLACED IN SUCH A MANNER AS TO ADHERE TO ALL APPLICABLE CODES AND TO AVOID INTERFERENCE WITH EXISTING BUILDING STRUCTURES, UTILITIES AND THE WORK BEING PERFORMED BY OTHER TRADES. ALL EXTERIOR CONDUIT, FITTINGS, JUNCTION BOXES AND PULL BOXES TO BE WEATHER PROOF TYPE: NEMA 3R.
4. CONTRACTOR TO COORDINATE FINAL POWER LOCATIONS FOR ALL EQUIPMENT IN THE FIELD WITH THE ARCHITECT / CLIENT PRIOR TO START OF WORK.
5. CONTRACTOR TO PROVIDE ENGRAVED LABELING AT EACH RECEPTACLE, DATA OUTLET, JUNCTION BOX, DISCONNECT SWITCH, ECT. DISPLAYING THE IDF OR PANEL (WITH CIRCUIT) FEEDING THE DATA OUTLET, RECEPTACLE, JUNCTION BOX, DISCONNECT SWITCH, ECT.
6. CONDUIT AND WIRE INDICATED ON THE SINGLE LINE DIAGRAM, WHETHER SHOWN ON THIS DRAWING OR NOT, SHALL BE A PART OF THIS CONTRACT AND THE RESPONSIBILITY OF THIS CONTRACTOR TO PROVIDE REQUIRED ROUTING TO MEET THE INTENT OF THESE PLANS AND SPECIFICATIONS.
7. THE CONTRACTOR SHALL REFER TO THE MECHANICAL AND PLUMBING DRAWINGS FOR EXACT EQUIPMENT LOCATIONS AND ELECTRICAL CONNECTIONS REQUIREMENTS. CONTRACTOR SHALL PROVIDE ALL POWER AND CONTROL CONNECTIONS AS INDICATED ON THE MECHANICAL AND PLUMBING DRAWINGS.
8. CONTRACTOR SHALL ROUTE ELECTRICAL CONDUITS IN THE SAME ROUTE AS REFRIGERATION PIPING. CONTRACTOR TO COORDINATE WITH THE MECHANICAL AND PLUMBING DRAWINGS PRIOR TO START OF WORK TO DETERMINE EXACT ROUTE.
9. SEE SINGLE LINE DIAGRAM FOR CONDUIT SIZE, WIRE SIZE AND QUANTITIES REQUIRED FOR ALL ELECTRICAL EQUIPMENT.
10. WHERE "OPEN WIRING" IS INSTALLED IN INACCESSIBLE CEILING SPACES THE CONTRACTOR SHALL PROVIDE A COMPLETE CONDUIT SYSTEM FOR ROUTING OF THE SUBJECT WIRE/CABLE.

ROOM #	ROOM NAME	ROOM #	ROOM NAME
301	FIRE CHIEF OFFICE	326	OFFICE
302	SR. ADMIN. ASSIST. OFC	327	BC OFFICE
303	STORAGE	328	DC OPERATIONS OFFICE
304	OPEN CONF./CLASSRM.	329	OPEN WORK STATIONS
305	SECURED FILES ROOM	330	ENGAGEMENT SUPER
306	DC LOGISTICS OFFICE	331	TRAINING MGMT ANALYST
307	WELLNESS ADMIN ASSIST	332	SR MGMT ANALYST
308	DC WELLNESS OFFICE	333	ADMIN OFFICER OFFICE
309	WAITING VESTIBULE	334	ADMIN DIRECTOR OFFICE
310	HALLWAY - CENTRAL	335	PATIO 2
311	HALLWAY - NORTH	336	ROOF DECK - NORTH
312	HALLWAY - EAST	337	ROOF DECK - SOUTH
313	HALLWAY - SOUTH		
314	WORKRM. AND STORAGE		
315	BREAK ROOM		
316	VESTIBULE		
317	MALE RESTROOM		
318	JANITOR		
319	VESTIBULE		
320	FEMALE RESTROOM		
321	IDF ROOM		
322	ELEVATOR CONTROL RM.		
323	DAY ROOM		
324	WORKROOM		
325	OFFICE		

THIRD FLOOR MECHANICAL POWER PLAN

1/8" = 1'-0"

1 ROOM LEGEND

PBK
RANCHO CUCAMONGA
8163 ROCHESTER AVENUE, SUITE 100
RANCHO CUCAMONGA, CA 91730
909-987-0909 P

ONTARIO FIRE DEPARTMENT ADMINISTRATION BUILDING

CITY OF ONTARIO

1420 E. FRANCIS STREET., ONTARIO, CA

LICENSED ARCHITECT — KELLEY NEEDHAM C-19064 Exp. 03/31/25 — STATE OF CALIFORNIA

REGISTERED PROFESSIONAL ENGINEER — RAMO E. SOTTILE No. 617729 8/30/24 — STATE OF CALIFORNIA

CONSULTANT
A&F ENGINEERING GROUP, INC.
8920 BAXLEING RD, SUITE C, RANCHO CUCAMONGA CA 91701
TEL: (909) 941-3008 FAX (909) 941-8211

NO	DATE	BY	DESCRIPTION

REVISIONS

DRAWN: CBF | CHECKED: RES

DATE: 07/15/2022 | SCALE: AS NOTED

PROJECT NUMBER: 2011700

THIRD FLOOR MECHANICAL POWER PLAN

DRAWING NUMBER: E2.12

BID SET 03/01/24

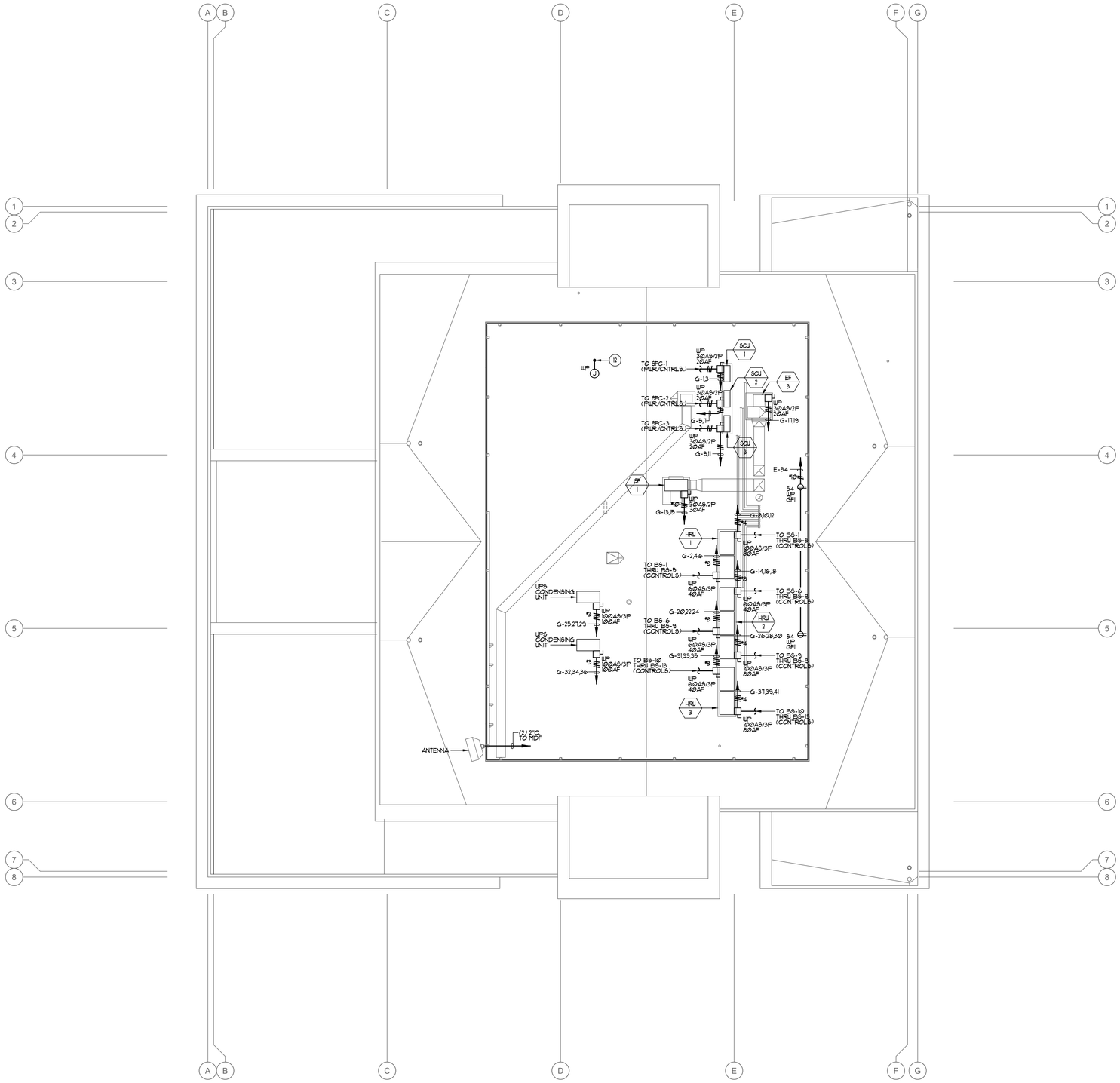

PLAN NOTES:

1. REFER TO GENERAL NOTES, DRAWING E0.1, FOR ADDITIONAL REQUIREMENTS.
2. THE CONTRACTOR SHALL BE RESPONSIBLE FOR COORDINATING ALL CEILING MOUNTED DEVICES WITH THE ARCHITECTURAL REFLECTED CEILING PLAN.
3. THE CONTRACTOR SHALL NOTE THAT THE DRAWING IS DIAGRAMMATIC. EXACT ROUTING OF NEW CONDUITS AND LOCATION OF JUNCTION BOXES, SAFETY SWITCHES, DISCONNECT SWITCHES, PULL BOXES, ECT. SHALL BE COORDINATED AND DETERMINED IN THE FIELD. NEW CONDUIT, JUNCTION BOXES, SAFETY SWITCHES, DISCONNECT SWITCHES, PULL BOXES, ECT. SHALL BE ROUTED / PLACED IN SUCH A MANNER AS TO ADHERE TO ALL APPLICABLE CODES AND TO AVOID INTERFERENCE WITH EXISTING BUILDING STRUCTURES, UTILITIES AND THE WORK BEING PERFORMED BY OTHER TRADES. ALL EXTERIOR CONDUIT, FITTINGS, JUNCTION BOXES AND PULL BOXES TO BE WEATHER PROOF TYPE: NEMA 3R.
4. CONTRACTOR TO COORDINATE FINAL POWER LOCATIONS FOR ALL EQUIPMENT IN THE FIELD WITH THE ARCHITECT / CLIENT PRIOR TO START OF WORK.
5. CONTRACTOR TO PROVIDE ENGRAVED LABELING AT EACH RECEPTACLE, DATA OUTLET, JUNCTION BOX, DISCONNECT SWITCH, ECT. DISPLAYING THE IDF OR PANEL (WITH CIRCUIT) FEEDING THE DATA OUTLET, RECEPTACLE, JUNCTION BOX, DISCONNECT SWITCH, ECT.
6. CONDUIT AND WIRE INDICATED ON THE SINGLE LINE DIAGRAM, WHETHER SHOWN ON THIS DRAWING OR NOT, SHALL BE A PART OF THIS CONTRACT AND THE RESPONSIBILITY OF THIS CONTRACTOR TO PROVIDE REQUIRED ROUTING TO MEET THE INTENT OF THESE PLANS AND SPECIFICATIONS.
7. THE CONTRACTOR SHALL REFER TO THE MECHANICAL AND PLUMBING DRAWINGS FOR EXACT EQUIPMENT LOCATIONS AND ELECTRICAL CONNECTIONS REQUIREMENTS. CONTRACTOR SHALL PROVIDE ALL POWER AND CONTROL CONNECTIONS AS INDICATED ON THE MECHANICAL AND PLUMBING DRAWINGS.
8. CONTRACTOR SHALL ROUTE ELECTRICAL CONDUITS IN THE SAME ROUTE AS REFRIGERATION PIPING. CONTRACTOR TO COORDINATE WITH THE MECHANICAL AND PLUMBING DRAWINGS PRIOR TO START OF WORK TO DETERMINE EXACT ROUTE.
9. SEE SINGLE LINE DIAGRAM FOR CONDUIT SIZE, WIRE SIZE AND QUANTITIES REQUIRED FOR ALL ELECTRICAL EQUIPMENT.
10. EXTERIOR MOUNTED DEVICES / RECEPTACLES SHALL BE PROVIDED COMPLETE WITH LOCKING TYPE WEATHERPROOF COVERS AND BE U.L. LISTED FOR WET LOCATIONS WHEN IN USE. COVERS SHALL BE AS MANUFACTURED BY RACO OR APPROVED EQUAL. PLASTIC COVERS NOT ALLOWED.
11. NO EXPOSED CONDUIT ALLOWED. CONTRACTOR TO ROUTE ALL CONDUIT / CONDUCTORS CONCEALED WITHIN THE CEILING SPACE TO EACH PIECE OF EQUIPMENT TO BE ENERGIZED. A/C AND CONDENSING UNIT CONDUITS / CONDUCTORS TO BE RAN WITHIN UNIT CURB.
12. (3) 1"C.O. WITH FULL ROPE AND RING FROM THIS WEATHER PROOF J-BOX TO WALL MOUNTED J-BOX INSTALLED IN THE ELECTRICAL ROOM FOR FUTURE CONNECTION OF FUTURE SOLAR EQUIPMENT.

ROOF PLAN

1/8" = 1'-0"

1

PBK
RANCHO CUCAMONGA
8163 ROCHESTER AVENUE, SUITE 100
RANCHO CUCAMONGA, CA 91730
909-987-0909 P

ONTARIO FIRE DEPARTMENT ADMINISTRATION BUILDING

CITY OF ONTARIO

1420 E. FRANCIS STREET., ONTARIO, CA

LICENSED ARCHITECT
KELLEY NEEDHAM
C-19064
Exp. 03/31/24
STATE OF CALIFORNIA

REGISTERED PROFESSIONAL ENGINEER
RICHARD E. SOTELO
No. E17229
6/30/24
STATE OF CALIFORNIA

CONSULTANT
A&F ENGINEERING GROUP, INC.
8320 BASELINE RD., SUITE C, RANCHO CUCAMONGA, CA 91701
TEL: (909) 941-3008 FAX: (909) 941-8211

NO	DATE	BY	DESCRIPTION

REVISIONS

DRAWN: CBF	CHECKED: RES
DATE: 07/15/2022	SCALE: AS NOTED
PROJECT NUMBER: 2011700	

ROOF PLAN

DRAWING NUMBER: E2.13

BID SET 03/01/24

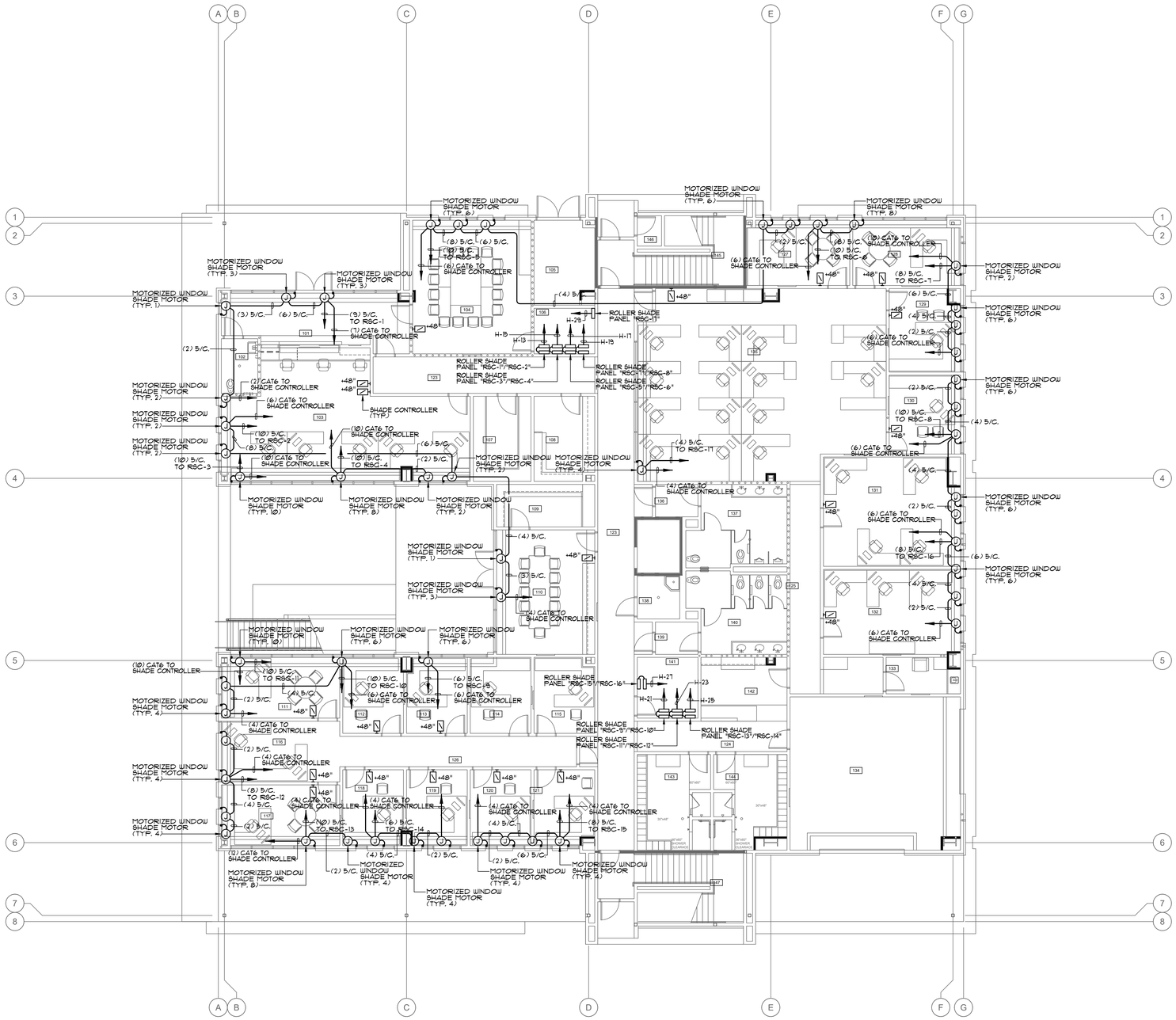

PLAN NOTES:

1. REFER TO GENERAL NOTES, DRAWING E0.1, FOR ADDITIONAL REQUIREMENTS.
2. THE CONTRACTOR SHALL BE RESPONSIBLE FOR COORDINATING ALL CEILING MOUNTED DEVICE LOCATIONS WITH THE ARCHITECTURAL REFLECTED CEILING PLAN.

NO EXPOSED CONDUIT WILL BE ALLOWED.

ROOM #	ROOM NAME	ROOM #	ROOM NAME
101	LOBBY	126	HALLWAY - WEST
102	PUBLIC RESTROOM	127	DEPUTY FIRE MARSHALL
103	ADMIN OPEN OFFICE	128	DC FIRE MARSHALL
104	LARGE CONFERENCE RM	129	FIRE PROTECT ANALYST
105	ELECTRICAL ROOM	130	SR FIRE SPC OFFICE
106	STORAGE	131	FIRE SPC/PERMIT TECH
107	STORAGE	132	PLAN CHECKER OFFICE
108	COPY ROOM	133	LACTATION ROOM
109	EMS STORAGE	134	EXERCISE ROOM
110	EMS SKILLS ROOM	135	OPEN OFFICE
111	EMS DIRECTOR'S OFFICE	136	VESTIBULE
112	EMS NURSE'S OFFICE	137	MALE RESTROOM
113	EMS CAPTAIN'S OFFICE	138	JANITOR'S CLOSET
114	OFFICE XXXXX	139	VESTIBULE
115	OFFICE XXXXX	140	FEMALE RESTROOM
116	ADMIN WORKSTATIONS	141	IDF ROOM
117	DC OFFICE	142	BREAK AREA
118	TRAINING OFFICE 1	143	MALE SHOWER / LOCKER
119	TRAINING OFFICE 2	144	FEMALE SHWR / LOCKER
120	TRAINING OFFICE 3	145	STAIR - NORTH
121	TRAINING OFFICE 4	146	FIRE RISER CLOSET
122	HALLWAY - NORTH	147	STAIR - SOUTH
123	HALLWAY - CENTRAL		
124	HALLWAY - SOUTH		
125	HALLWAY - EAST		

FIRST FLOOR POWER SHADE PLAN

1/8" = 1'-0"

1 ROOM LEGEND

PBK
RANCHO CUCAMONGA
8163 ROCHESTER AVENUE, SUITE 100
RANCHO CUCAMONGA, CA 91730
909-987-0909 P

ONTARIO FIRE DEPARTMENT ADMINISTRATION BUILDING

CITY OF ONTARIO

1420 E. FRANCIS STREET., ONTARIO, CA

LICENSED ARCHITECT
KELLEY NEEDHAM
C-19064
Exp. 03/31/23
STATE OF CALIFORNIA

REGISTERED PROFESSIONAL ENGINEER
REYNOLD L. SOTTO
No. E17229
6/30/22
STATE OF CALIFORNIA

CONSULTANT

A&F ENGINEERING GROUP, INC.
9320 BASELINE RD, SUITE C, RANCHO CUCAMONGA, CA 91701
TEL: (909) 941-3008 FAX: (909) 941-8211

NO	DATE	BY	DESCRIPTION

REVISIONS

DRAWN: CBF	CHECKED: RES
DATE: 07/15/2022	SCALE: AS NOTED
PROJECT NUMBER: 2011700	

FIRST FLOOR POWER SHADES PLAN

DRAWING NUMBER: E2.14

BID SET 03/01/24

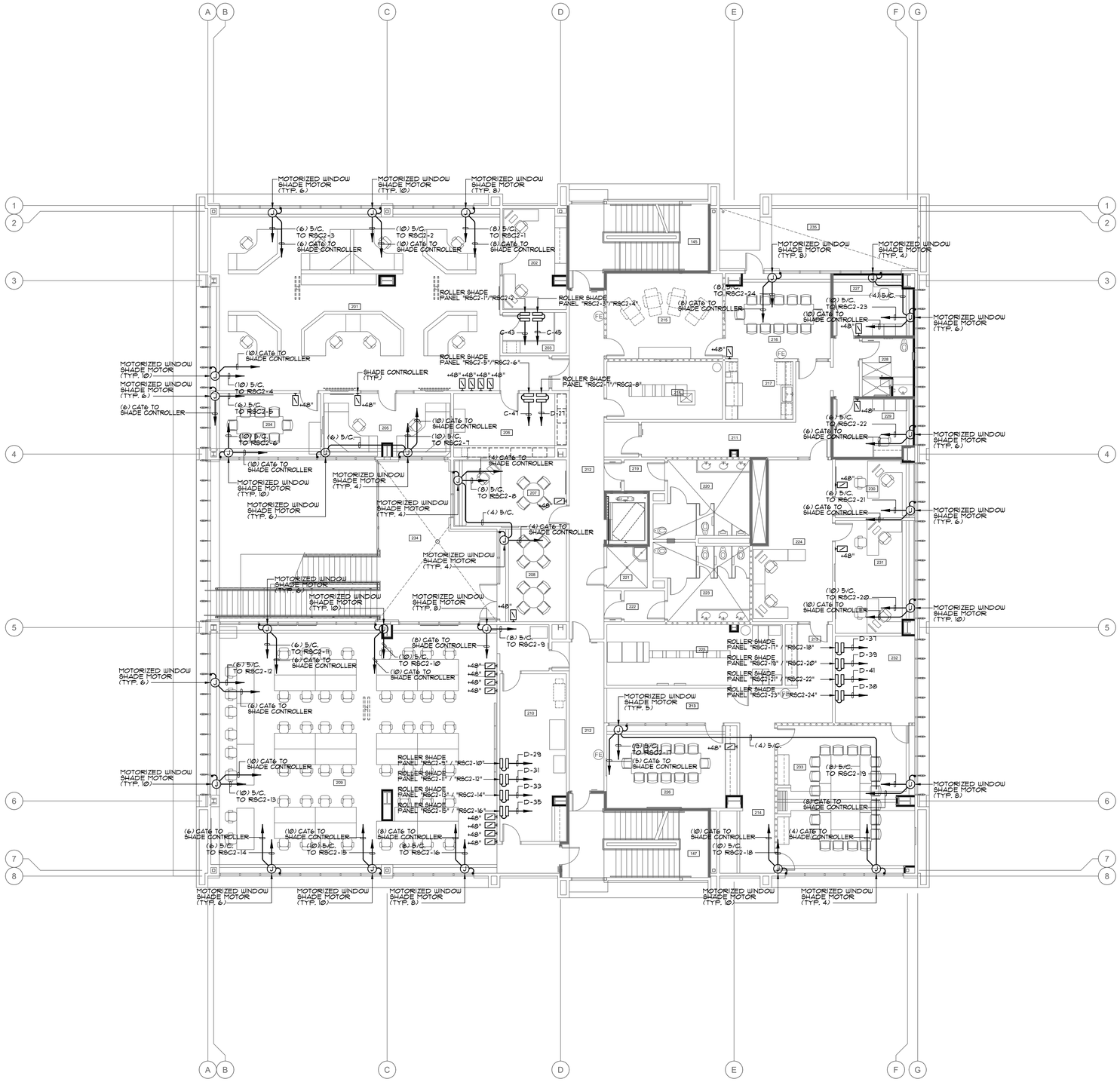

PLAN NOTES:

1. REFER TO GENERAL NOTES, DRAWING E0.1, FOR ADDITIONAL REQUIREMENTS.
2. THE CONTRACTOR SHALL BE RESPONSIBLE FOR COORDINATING ALL CEILING MOUNTED DEVICE LOCATIONS WITH THE ARCHITECTURAL REFLECTED CEILING PLAN.

NO EXPOSED CONDUIT WILL BE ALLOWED.

ROOM #	ROOM NAME	ROOM #	ROOM NAME
201	DISPATCH FLOOR	226	E.O.C. BREAKOUT ROOM
202	FIRE DISPATCH SUPVR.	227	QUIET ROOM 1
203	STORAGE	228	BATHROOM
204	TRAINING/MULTI-USE RM.	229	QUIET ROOM 2
205	DISPATCH TRAINING RM.	230	EMERGENCY MGR
206	LOCKERS	231	EMERGENCY COORD
207	FIRE COMM. MANAGER	232	STORAGE
208	OPEN CONF./CLASS RM.	233	E.O.C. CONFERENCE RM.
209	E.O.C. FLOOR	234	COVERED PATIO
210	E.O.C. EQUIPMENT ROOM	235	PATIO 1
211	HALLWAY - NORTH		
212	HALLWAY - CENTRAL		
213	HALLWAY - EAST		
214	HALLWAY - SOUTH		
215	DAY ROOM		
216	DINING		
217	KITCHEN		
218	RADIO EQUIPMENT RM.		
219	VESTIBULE		
220	MALE RESTROOM		
221	JANITOR'S CLOSET		
222	VESTIBULE		
223	FEMALE RESTROOM		
224	SHARED WORKSPACE		
225	MDF ROOM		

SECOND FLOOR POWER SHADE PLAN

1/8" = 1'-0"

1

ROOM LEGEND

PBK
RANCHO CUCAMONGA
8163 ROCHESTER AVENUE, SUITE 100
RANCHO CUCAMONGA, CA 91730
909-987-0909 P

ONTARIO FIRE DEPARTMENT ADMINISTRATION BUILDING

CITY OF ONTARIO

1420 E. FRANCIS STREET., ONTARIO, CA

LICENSED ARCHITECT
KELLEY NEEDHAM
C-190064
Exp.Date 03/31/25
STATE OF CALIFORNIA

REGISTERED PROFESSIONAL ENGINEER
RICARDO E. SOTELO
No. E17229
6/30/24
STATE OF CALIFORNIA

CONSULTANT

A&F ENGINEERING GROUP, INC.
9320 BASELINE RD., SUITE C, RANCHO CUCAMONGA, CA 91701
TEL: (909) 941-3008 FAX: (909) 941-8211

NO	DATE	BY	DESCRIPTION

REVISIONS

DRAWN: CBF	CHECKED: RES
DATE: 07/15/2022	SCALE: AS NOTED
PROJECT NUMBER: 2011700	

SECOND FLOOR POWER SHADES PLAN

DRAWING NUMBER: E2.15

BID SET 03/01/24

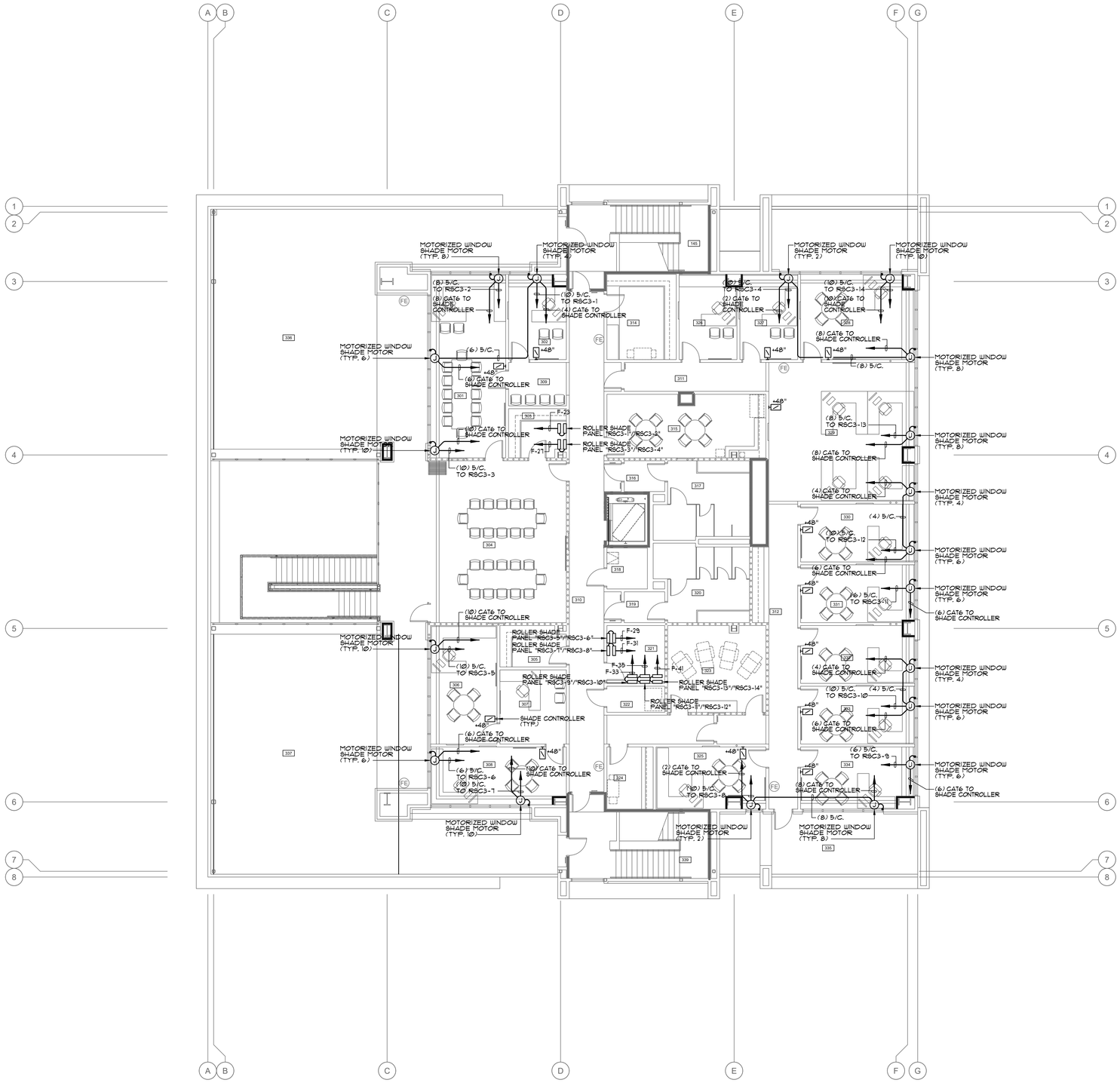

PLAN NOTES:

1. REFER TO GENERAL NOTES, DRAWING E0.1, FOR ADDITIONAL REQUIREMENTS.
2. THE CONTRACTOR SHALL BE RESPONSIBLE FOR COORDINATING ALL CEILING MOUNTED DEVICE LOCATIONS WITH THE ARCHITECTURAL REFLECTED CEILING PLAN.

NO EXPOSED CONDUIT WILL BE ALLOWED.

ROOM #	ROOM NAME	ROOM #	ROOM NAME
301	FIRE CHIEF OFFICE	326	OFFICE
302	SR. ADMIN. ASSIST. OFC	327	BC OFFICE
303	STORAGE	328	DC OPERATIONS OFFICE
304	OPEN CONF./CLASSRM.	329	OPEN WORK STATIONS
305	SECURED FILES ROOM	330	ENGAGEMENT SUPER
306	DC LOGISTICS OFFICE	331	TRAINING MGMT ANALYST
307	WELLNESS ADMIN ASSIST	332	SR MGMT ANALYST
308	DC WELLNESS OFFICE	333	ADMIN OFFICER OFFICE
309	WAITING VESTIBULE	334	ADMIN DIRECTOR OFFICE
310	HALLWAY - CENTRAL	335	PATIO 2
311	HALLWAY - NORTH	336	ROOF DECK - NORTH
312	HALLWAY - EAST	337	ROOF DECK - SOUTH
313	HALLWAY - SOUTH		
314	WORKRM. AND STORAGE		
315	BREAK ROOM		
316	VESTIBULE		
317	MALE RESTROOM		
318	JANITOR		
319	VESTIBULE		
320	FEMALE RESTROOM		
321	IDF ROOM		
322	ELEVATOR CONTROL RM.		
323	DAY ROOM		
324	WORKROOM		
325	OFFICE		

THIRD FLOOR POWER SHADES PLAN

1/8" = 1'-0"

1 ROOM LEGEND

PBK
RANCHO CUCAMONGA
8163 ROCHESTER AVENUE, SUITE 100
RANCHO CUCAMONGA, CA 91730
909-987-0909 P

ONTARIO FIRE DEPARTMENT ADMINISTRATION BUILDING

CITY OF ONTARIO

1420 E. FRANCIS STREET., ONTARIO, CA

LICENSED ARCHITECT — KELLEY NEEDHAM C-19064 Exp. 03/31/25 — STATE OF CALIFORNIA

REGISTERED PROFESSIONAL ENGINEER — RICHARD E. SYFERS No. E17229 6/30/24 — STATE OF CALIFORNIA

CONSULTANT
A&F ENGINEERING GROUP, INC.
9320 BASELINE RD., SUITE C, RANCHO CUCAMONGA, CA 91701
TEL: (909) 941-3008 FAX (909) 941-8211

NO	DATE	BY	DESCRIPTION

REVISIONS

DRAWN: CBF	CHECKED: RES
DATE: 07/15/2022	SCALE: AS NOTED
PROJECT NUMBER: 2011700	

THIRD FLOOR POWER SHADES PLAN

DRAWING NUMBER: E2.16

BID SET 03/01/24

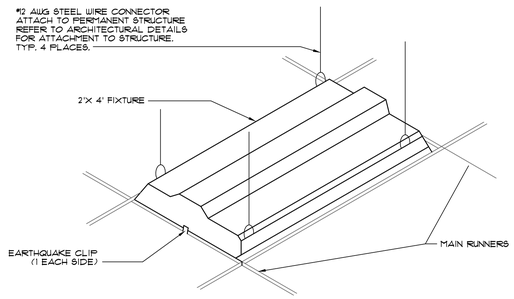

LIGHT FIXTURE - T-BAR MOUNTED | SCALE: NONE | 1

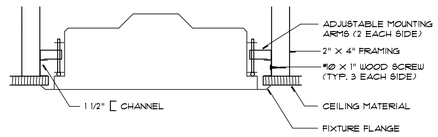

LIGHT FIXTURE - GYP BOARD CEILING | SCALE: NONE | 2

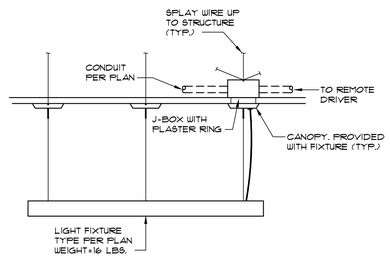

SUSPENDED ROUND FIXTURE | SCALE: NONE | 3

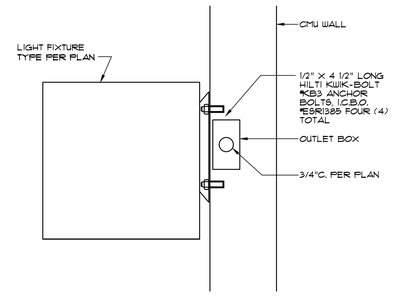

APP BAY - MAP LIGHT | SCALE: NONE | 4

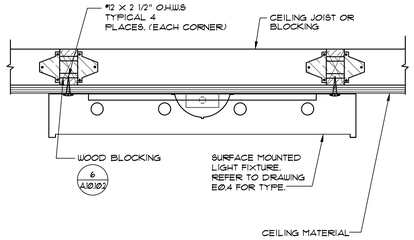

SURFACE MOUNTED FIXTURE | SCALE: NONE | 5

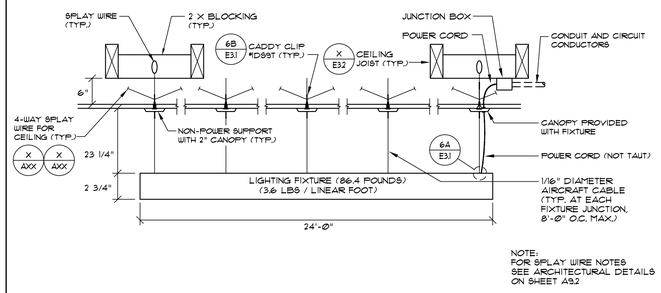

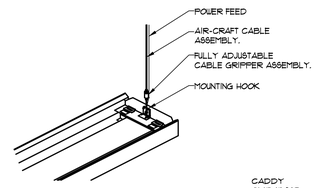

FIXTURE ATTACHEMENT DETAIL-6A

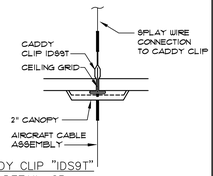

CADDY CLIP "ID59T" DETAIL-6B

SUSPENDED LINEAR LIGHT FIXTURE DETAIL | SCALE: NONE | 6

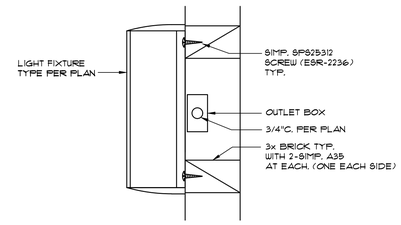

EXTERIOR FIXTURE - WALL MOUNTED | SCALE: NONE | 7

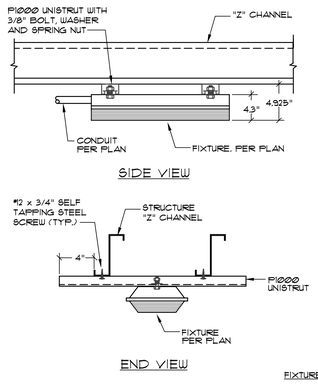

CANOPY LIGHT FIXTURE | SCALE: NONE | 8

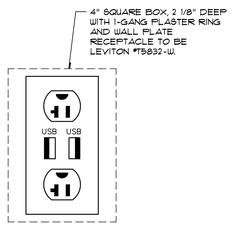

RECEPTACLE / USB OUTLET | SCALE: NONE | 9

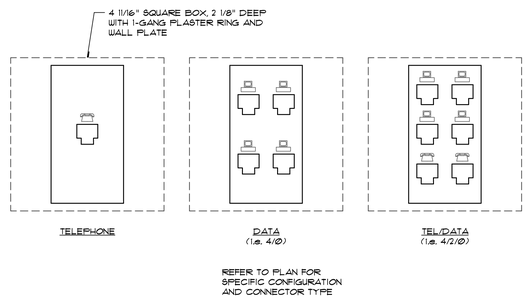

TEL/DATA OUTLET - FLUSH MOUNTED | SCALE: NONE | 10

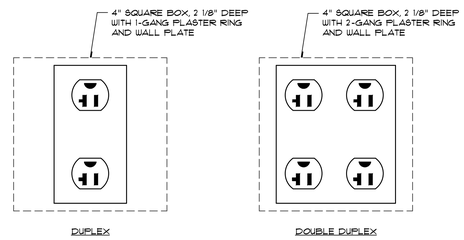

RECPTACLE - FLUSH MOUNTED | SCALE: NONE | 11

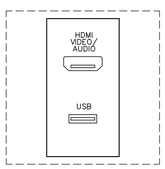

AUDIO-VIDEO (A/V) OUTLET | SCALE: NONE | 12

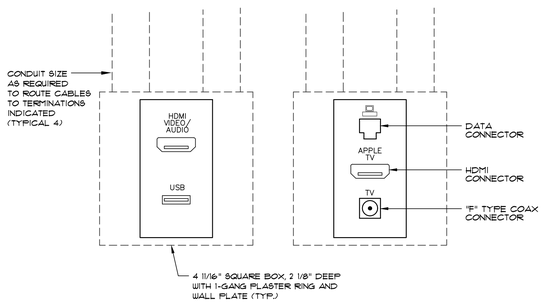

CONFERENCE/TRAINING TV OUTLET | SCALE: NONE | 13

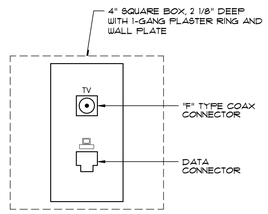

TV OUTLET - FLUSH MOUNTED | SCALE: NONE | 14

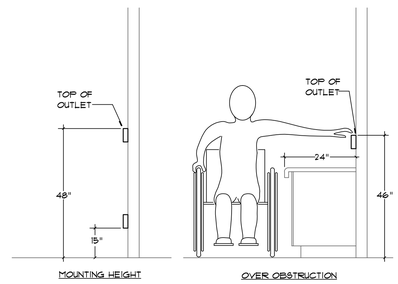

DEVICE MOUNTING HEIGHTS | SCALE: NONE | 15

PBK
RANCHO CUCAMONGA
8163 ROCHESTER AVENUE, SUITE 100
RANCHO CUCAMONGA, CA 91730
909-987-0909 P

ONTARIO FIRE DEPARTMENT ADMINISTRATION BUILDING

CITY OF ONTARIO

1420 E. FRANCIS STREET., ONTARIO, CA

LICENSED ARCHITECT — KELLEY NEEDHAM, C-19064, Exp. 03/31/25, STATE OF CALIFORNIA

REGISTERED PROFESSIONAL ENGINEER — RICHARD E. SUTTON, No. 17229, 6/30/24, STATE OF CALIFORNIA

CONSULTANT
A&F ENGINEERING GROUP, INC.
9320 BASELINE RD., SUITE C, RANCHO CUCAMONGA, CA 91701
TEL: (909) 941-3008 FAX: (909) 941-8211

NO	DATE	BY	DESCRIPTION

REVISIONS

DRAWN: CBF	CHECKED: RES
DATE: 07/15/2022	SCALE: AS NOTED
PROJECT NUMBER: 2011700	

ELECTRICAL DETAILS

DRAWING NUMBER: E3.1

BID SET 03/01/24

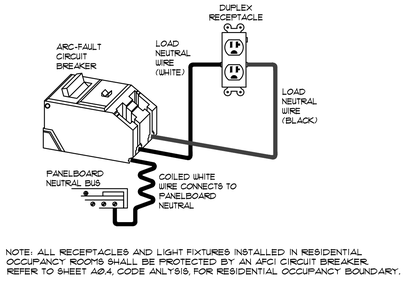

NOTE: ALL RECEPTACLES AND LIGHT FIXTURES INSTALLED IN RESIDENTIAL OCCUPANCY ROOMS SHALL BE PROTECTED BY AN AFCI CIRCUIT BREAKER. REFER TO SHEET A0.4, CODE ANLYSIS, FOR RESIDENTIAL OCCUPANCY BOUNDARY.

ARC-FAULT CIRCUIT BREAKER WIRING — SCALE: NONE — 1

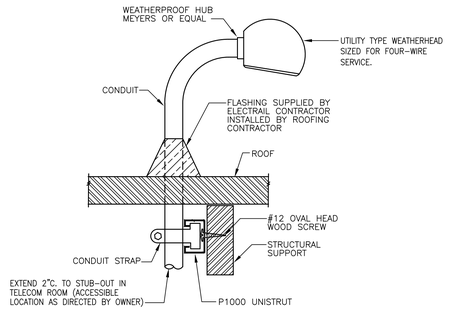

ANTENNA PROVISIONS — SCALE: NONE — 2

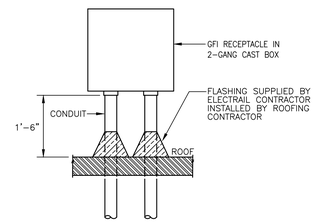

ROOF MOUNTED RECEPTACLE — SCALE: NONE — 3

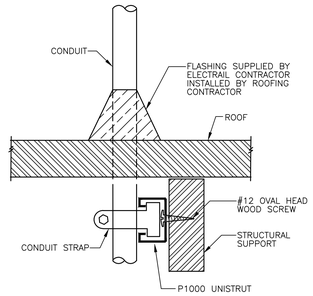

CONDUIT ROOF PENETRATION — SCALE: NONE — 4

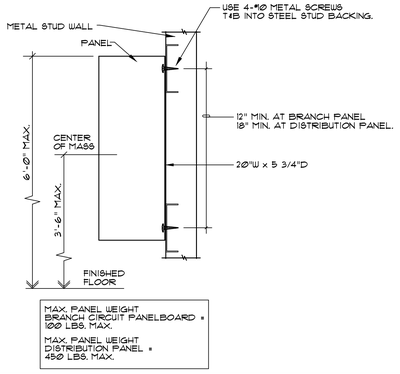

PANEL/CABINET - WALL MOUNTED — SCALE: NONE — 5

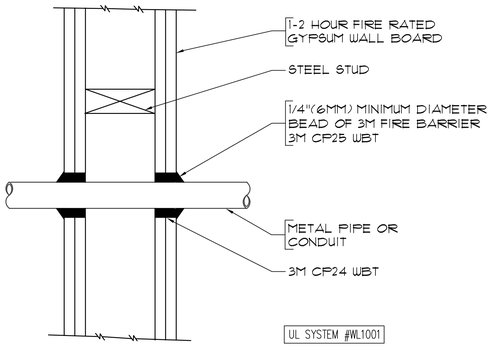

CONDUIT WALL PENETRATION — SCALE: NONE — 6

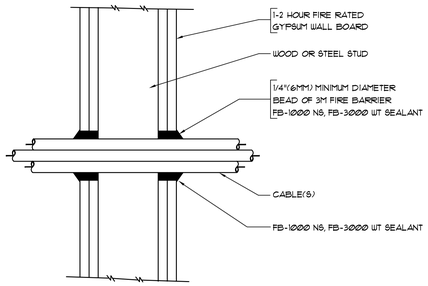

CABLE - WALL PENETRATION — SCALE: NONE — 7

OUTLET IN RATED WALL — SCALE: NONE — 8

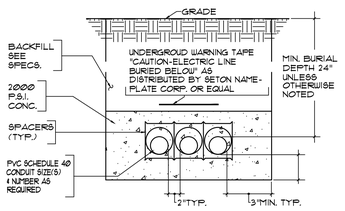

NOTES:
1. SLOPE RUNS A MIN. OF 4" IN 100 FT. BETWEEN MANHOLES OR MANHOLE AND VAULT OR CABLE RISERS.
2. RUN SHALL BE STRAIGHT WITHOUT ANY HIGH OR LOW POINTS BETWEEN ENDS, THE HIGHER END SHALL BE AT A VENTILATED MANHOLE,VAULT, OR CABLE RISER.

UNDERGROUND DUCT-BANK — SCALE: NONE — 9

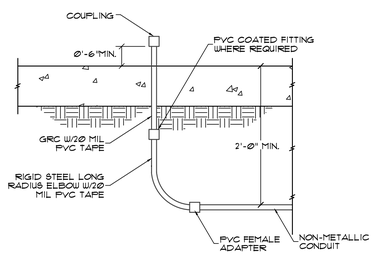

CONDUIT STUB-UP DETAIL — SCALE: NONE — 10

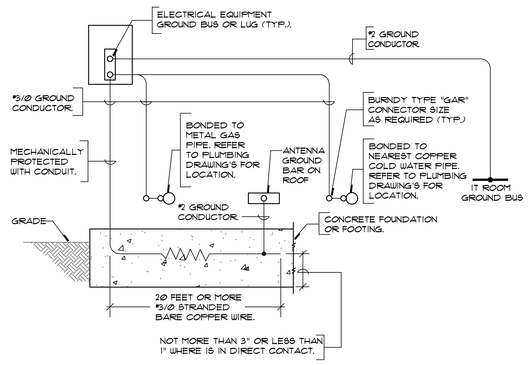

SYSTEM GROUNDING — SCALE: NONE — 11

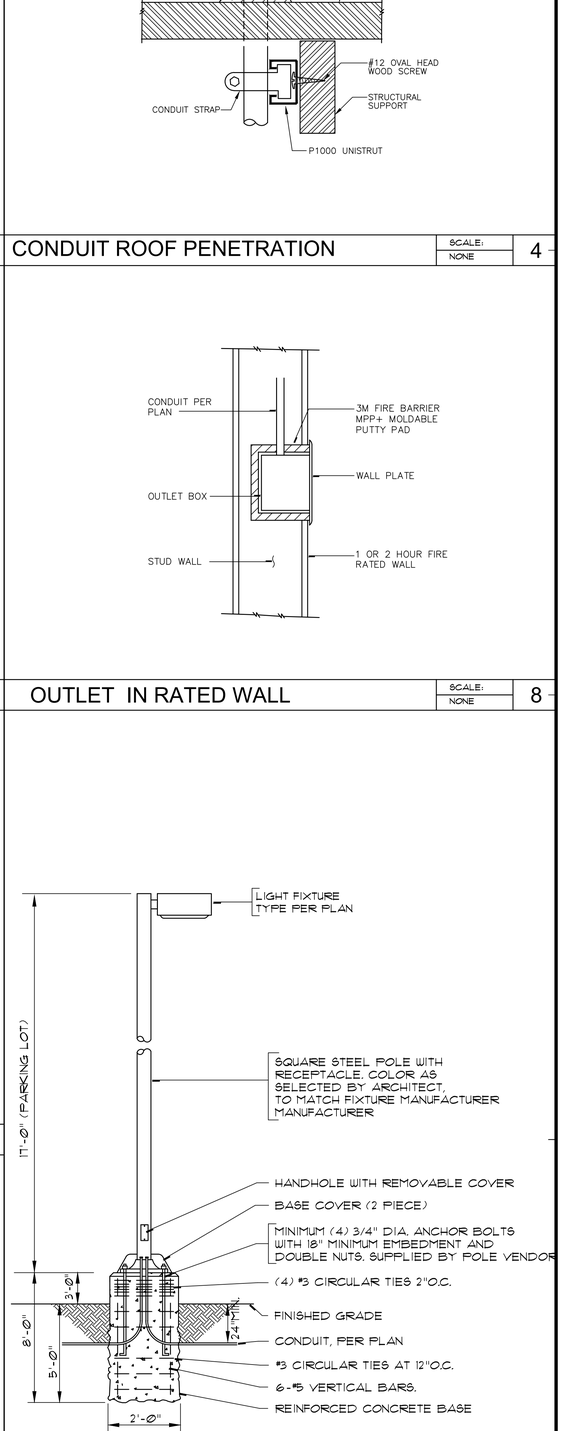

PARKING LOT FIXTURE DETAIL — SCALE: NONE — 15

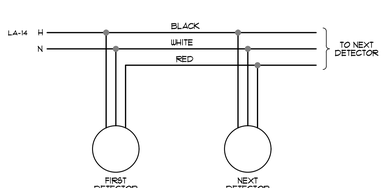

SINGLE STATION DETECTOR — SCALE: NONE — 12

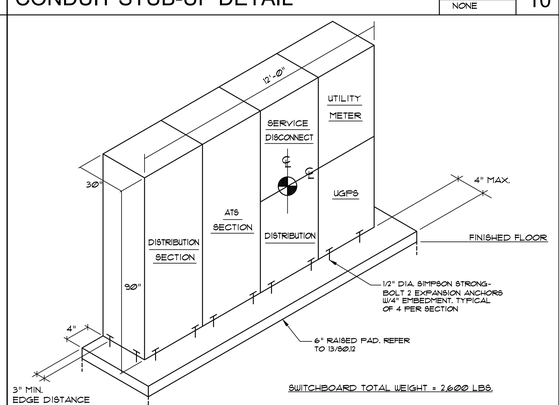

SERVICE SWBD - FLOOR MOUNTED — SCALE: NONE — 13

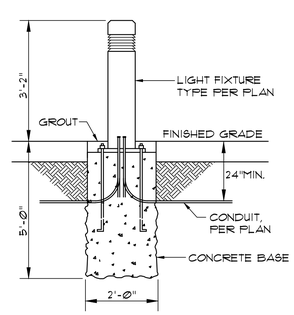

BOLLARD LIGHT FIXTURE — SCALE: NONE — 14

PBK
RANCHO CUCAMONGA
8163 ROCHESTER AVENUE, SUITE 100
RANCHO CUCAMONGA, CA 91730
909-987-0909 P

ONTARIO FIRE DEPARTMENT ADMINISTRATION BUILDING

CITY OF ONTARIO

1420 E. FRANCIS STREET., ONTARIO, CA

LICENSED ARCHITECT — KELLEY NEEDHAM C-19064 — Expir. 03/31/25 — STATE OF CALIFORNIA

REGISTERED PROFESSIONAL ENGINEER — RICHARD E. SATER No. E17229 6/30/24 — STATE OF CALIFORNIA

CONSULTANT
A&F ENGINEERING GROUP, INC.
9320 BASELINE RD., SUITE C, RANCHO CUCAMONGA, CA 91701
TEL: (909) 941-3008 FAX: (909) 941-8211

NO	DATE	BY	DESCRIPTION

REVISIONS

DRAWN: CBF	CHECKED: RES
DATE: 07/15/2022	SCALE: AS NOTED
PROJECT NUMBER: 2011700	

ELECTRICAL DETAILS

DRAWING NUMBER: E3.2

BID SET 03/01/24

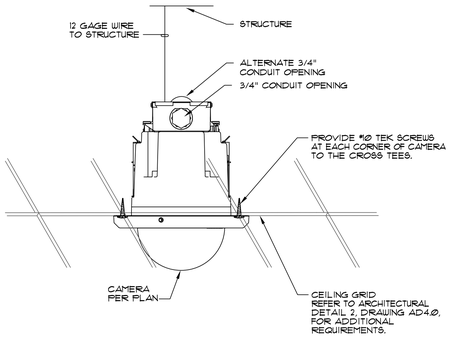

CAMERA SEMI-FLUSH IN T-BAR CEILING | SCALE: NONE | 1

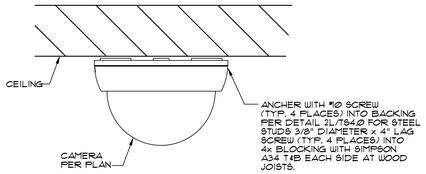

CAMERA SURFACE CEILING MOUNTED | SCALE: NONE | 2

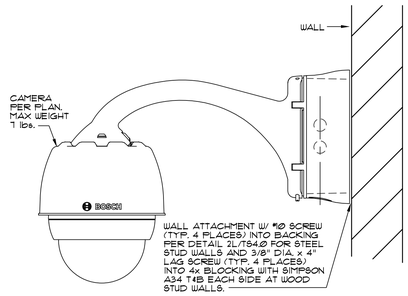

CAMERA WALL MOUNTED | SCALE: NONE | 3

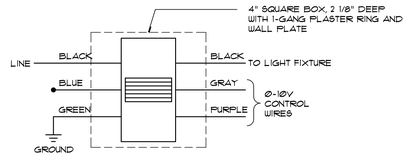

WALL SWITCH TYPE OCC. SENSOR | SCALE: NONE | 4

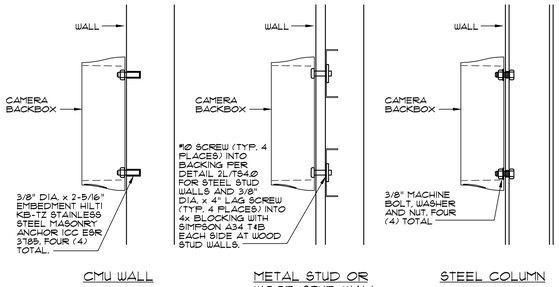

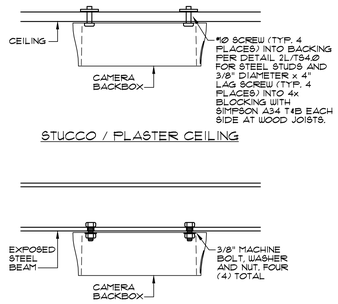

CAMERA BACK-BOX MOUNTING | SCALE: NONE | 5

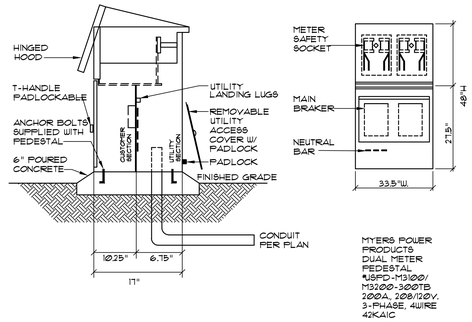

DUAL METER PEDESTAL | SCALE: NONE | 6

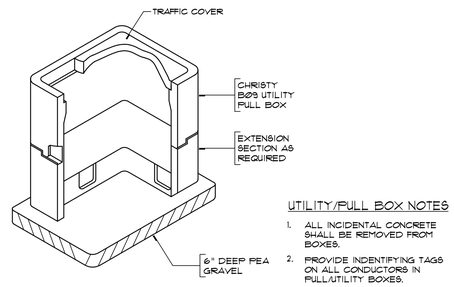

UNDERGROUND PULL BOX | SCALE: NONE | 7

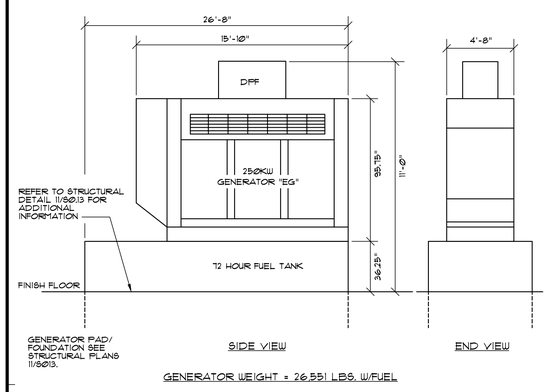

GENERATOR MAXIMUM DIMMENSION | SCALE: NONE | 8

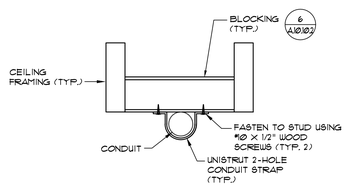

CONDUIT SUPPORT DETAIL | SCALE: NONE | 9

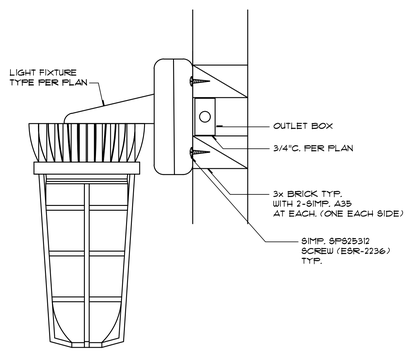

RED GLOBE FIXTURE MOUNTING | SCALE: NONE | 10

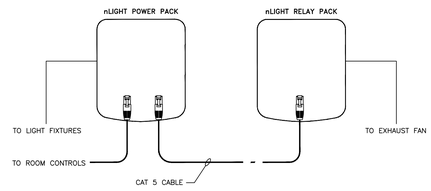

LIGHT AND EXHAUST FAN CONTROL | SCALE: NONE | 11

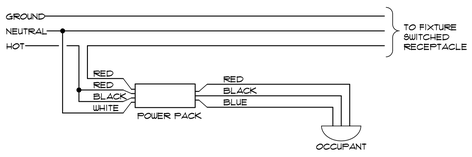

SWITCHED RECEPTACLE | SCALE: NONE | 12

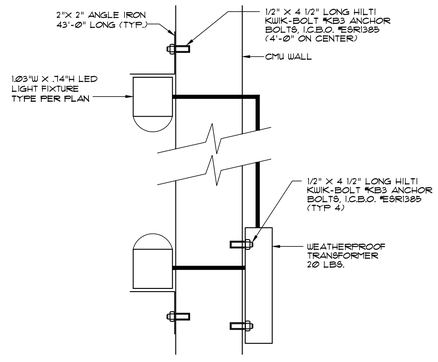

PUBLIC ART LIGHT FIXTURE | SCALE: NONE | 13

NOT USED | SCALE: NONE | 14

NOT USED | SCALE: NONE | 15

PBK
RANCHO CUCAMONGA
8163 ROCHESTER AVENUE, SUITE 100
RANCHO CUCAMONGA, CA 91730
909-987-0909 P

ONTARIO FIRE DEPARTMENT ADMINISTRATION BUILDING

CITY OF ONTARIO

1420 E. FRANCIS STREET., ONTARIO, CA

LICENSED ARCHITECT — KELLEY NEEDHAM C-19064 — Exp. 03/31/25 — STATE OF CALIFORNIA

REGISTERED PROFESSIONAL ENGINEER — RICHARD E. SOTTOS — No. E17229 — 6/30/24 — STATE OF CALIFORNIA

CONSULTANT
A&F ENGINEERING GROUP, INC.
8320 BASELINE RD. SUITE C, RANCHO CUCAMONGA, CA 91701
TEL: (909) 941-3006 FAX: (909) 941-8211

NO	DATE	BY	DESCRIPTION

REVISIONS

DRAWN: CBF | CHECKED: RES

DATE: 07/15/2022 | SCALE: AS NOTED

PROJECT NUMBER: 2011700

ELECTRICAL DETAILS

DRAWING NUMBER: E3.3

BID SET 03/01/24

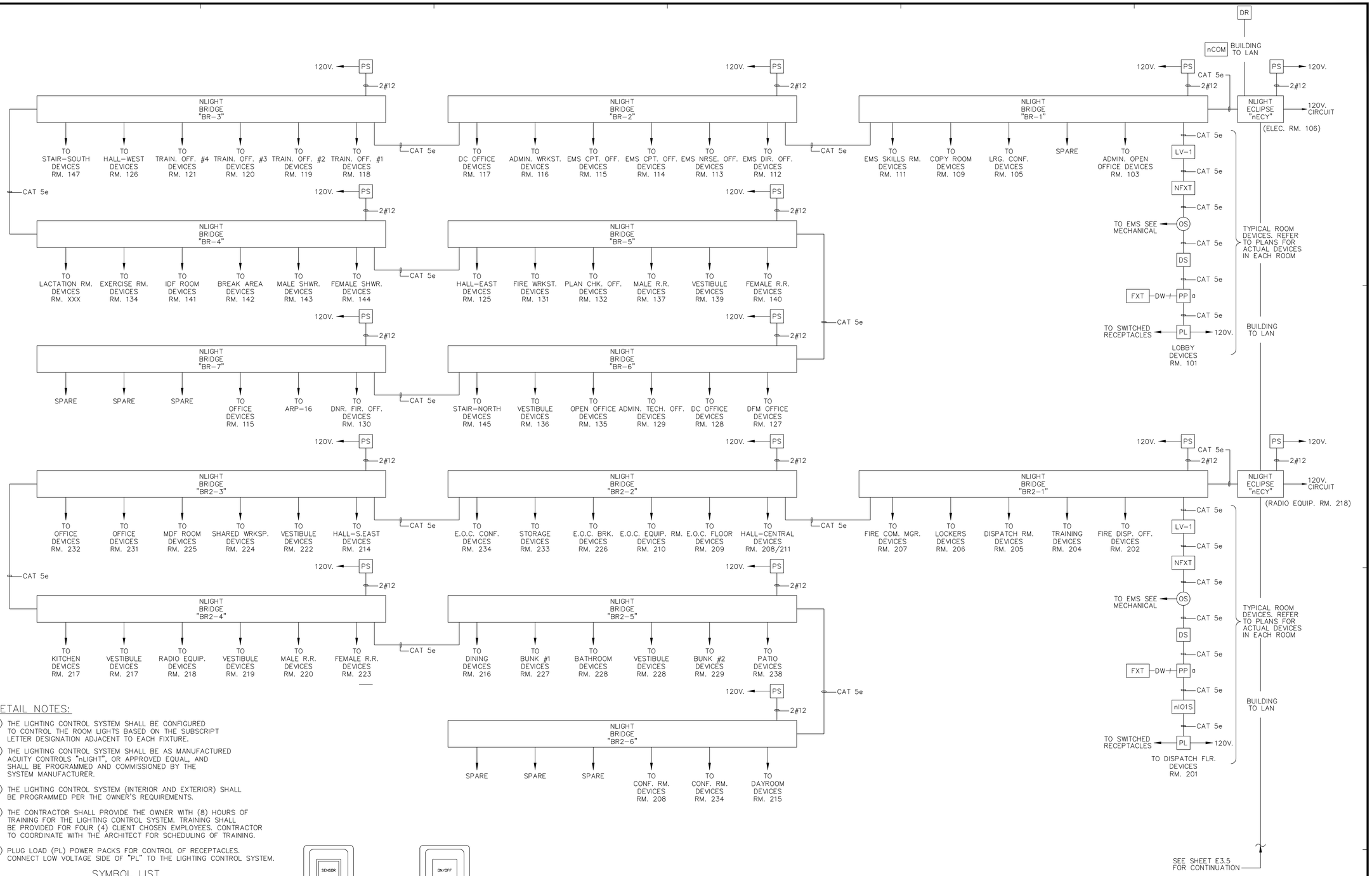

DETAIL NOTES:

1. THE LIGHTING CONTROL SYSTEM SHALL BE CONFIGURED TO CONTROL THE ROOM LIGHTS BASED ON THE SUBSCRIPT LETTER DESIGNATION ADJACENT TO EACH FIXTURE.
2. THE LIGHTING CONTROL SYSTEM SHALL BE AS MANUFACTURED ACUITY CONTROLS "nLIGHT", OR APPROVED EQUAL, AND SHALL BE PROGRAMMED AND COMMISSIONED BY THE SYSTEM MANUFACTURER.
3. THE LIGHTING CONTROL SYSTEM (INTERIOR AND EXTERIOR) SHALL BE PROGRAMMED PER THE OWNER'S REQUIREMENTS.
4. THE CONTRACTOR SHALL PROVIDE THE OWNER WITH (8) HOURS OF TRAINING FOR THE LIGHTING CONTROL SYSTEM. TRAINING SHALL BE PROVIDED FOR FOUR (4) CLIENT CHOSEN EMPLOYEES. CONTRACTOR TO COORDINATE WITH THE ARCHITECT FOR SCHEDULING OF TRAINING.
5. PLUG LOAD (PL) POWER PACKS FOR CONTROL OF RECEPTACLES. CONNECT LOW VOLTAGE SIDE OF "PL" TO THE LIGHTING CONTROL SYSTEM.

SYMBOL LIST

ACCUITY CONTROLS nLIGHT PRODUCT NUMBERS

- (OS) OCCUPANCY SENSOR #nCM PDT10 RJB AR
- [DS] DAYLIGHT SENSOR. #nCM PC DZ RJB AR
- [PL] PLUG LOAD POWER PACK #nPP20 PL BP
- [PS] POWER SUPPLY PROVIDED WITH GATEWAY OR BRIDGE
- [LV-D] nLIGHT WALLSTATION DIMMER/OCCUPANT SENSOR #nWSX PDT LV DX WH
- [LV-*] nLIGHT WALLSTATION DIMMER/SWITCH #nPODM DX WH * = DEPENDING ON NUBMER
- [DR] DEMAND RESPONSE #nADR-L400
- [nECY] ECLYPSE "nECY" #nECY MVOLT ADR ENC GFXK
- [BR-] 8 PORT BRIDGE #nBRG8 KIT
- [NFXT] nLIGHT ENABLED LIGHT FIXTURE
- [FXT] 0-10V. DIMMING LIGHT FIXTURE
- [PP] nLIGHT RELAY/POWER PACK #NPP16-D
- [NPNL] nLIGHT RELAY PANEL / CABINET #ARP-8 / ARP-16
- [NCOM] nLIGHT PROGRAMMING TOOL USED TO PROGRAM STANDALONE #NCOMKIT
- [nIOS] LOW VOTLAGE INTERFACE #nIO 1S

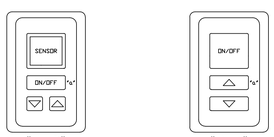

"LV-D"
NLIGHT SWITCH FOR CONTROL OF LIGHT FIXTURES (NPODM DX)

"LV-1"
NLIGHT SWITCH FOR CONTROL OF LIGHT FIXTURES (NPODM DX)

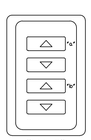

"LV-2"
NLIGHT SWITCH FOR CONTROL OF LIGHT FIXTURES (NPODM 2P DX)

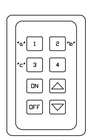

"LV-3"
NLIGHT SWITCH FOR CONTROL OF LIGHT FIXTURES (NPODM 4P DX)

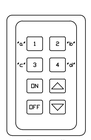

"LV-4"
NLIGHT SWITCH FOR CONTROL OF LIGHT FIXTURES (NPODM 4P DX)

RELAY CABINET "ARP-16"

DESCRIPTION	Circuit Number	Control Letter	Control	LV Switch	Relay Number	Control Zone
EXTERIOR CANOPY LIGHTS	B-17	a	T/C		1	1
EXTERIOR BUILDING LIGHTS	B-17	c	T/C		2	2
EXTERIOR CANOPY LIGHTS	B-19	a	T/C		3	1
EXTERIOR BUILDING LIGHTS	B-19	b	T/C		4	3
EXTERIOR CANOPY LIGHTS	B-21	a	T/C		5	1
EXTERIOR BUILDING LIGHTS	B-21	c	T/C		6	2
EXTERIOR CANOPY LIGHTS	D-17	a	T/C		7	1
EXTERIOR BUILDING LIGHTS	D-17	c	T/C		8	3
EXTERIOR CANOPY LIGHTS	F-11	a	T/C		9	1
EXTERIOR BUILDING LIGHTS	F-11	b	T/C		10	3
SITE LIGHTING	B-31,33	a	T/C		11	4
SITE LIGHTING	P-1,3	a	T/C		12	5
BUILDING MONUMENT SIGN	D-23	a	T/C		13	6
BUILDING MONUMENT SIGN	D-25	a	T/C		14	6
SPARE (TYP. 2)	----	–	--			

ELECTRICAL ROOM 106

RELAY CABINET – ARP
MANUFACTURER: ACUITY
1 – ARP–INTENCI6–NLT–16SPR–MVOLT–SC–FM

CONTROL LEGEND
T/C = TIME CLOCK

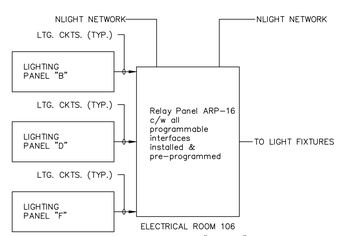

RELAY CABINET "ARP-16"

LIGHTING CONTROL DIAGRAM

SCALE: NONE

1

PBK
RANCHO CUCAMONGA
8163 ROCHESTER AVENUE, SUITE 100
RANCHO CUCAMONGA, CA 91730
909-987-0909 P

ONTARIO FIRE DEPARTMENT ADMINISTRATION BUILDING
CITY OF ONTARIO
1420 E. FRANCIS STREET., ONTARIO, CA

LICENSED ARCHITECT — KELLEY NEEDHAM C-19064 Exp 03/31/25 — STATE OF CALIFORNIA
REGISTERED PROFESSIONAL ENGINEER — RICHARD E. SUTTON No. E17229 6/30/24 — STATE OF CALIFORNIA

CONSULTANT
A&F ENGINEERING GROUP, INC.
9320 BASELINE RD., SUITE C, RANCHO CUCAMONGA, CA 91701
TEL: (909) 941-3008 FAX (909) 941-8211

NO	DATE	BY	DESCRIPTION

REVISIONS

DRAWN: CBF	CHECKED: RES
DATE: 07/15/2022	SCALE: AS NOTED
PROJECT NUMBER: 2011700	

ELECTRICAL DETAILS

DRAWING NUMBER: E3.4

BID SET 03/01/24

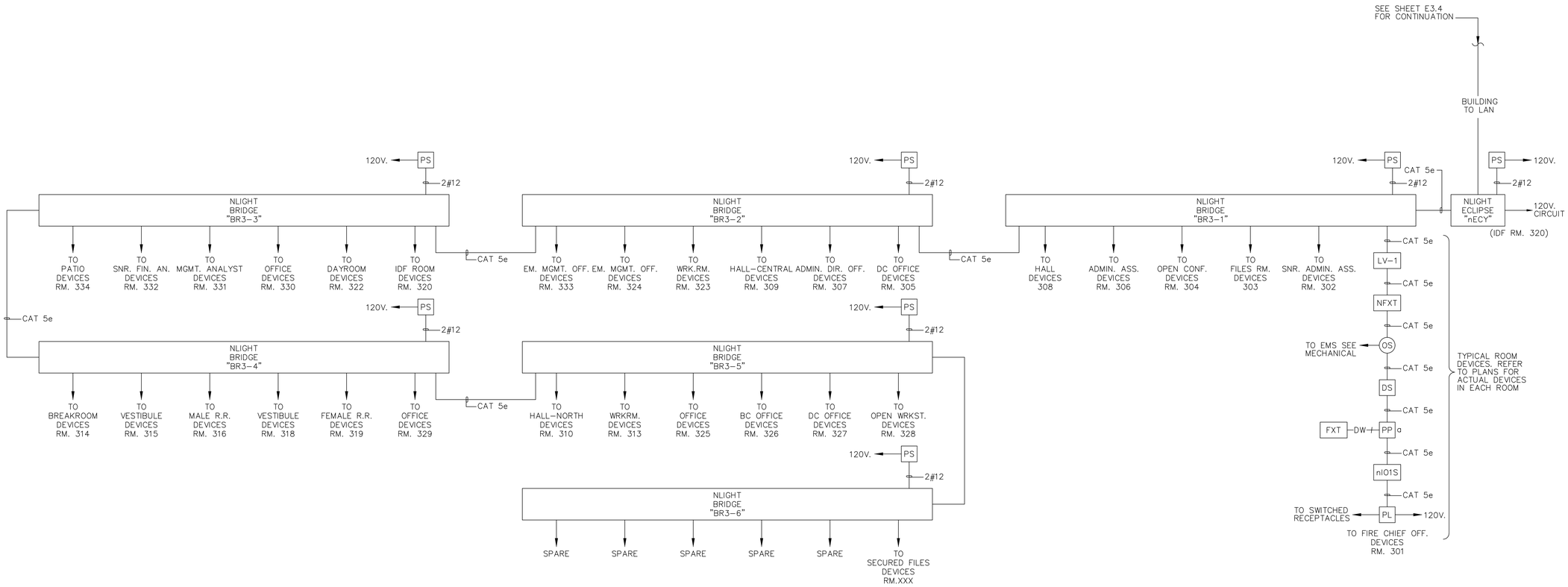

DETAIL NOTES:

1. THE LIGHTING CONTROL SYSTEM SHALL BE CONFIGURED TO CONTROL THE ROOM LIGHTS BASED ON THE SUBSCRIPT LETTER DESIGNATION ADJACENT TO EACH FIXTURE.
2. THE LIGHTING CONTROL SYSTEM SHALL BE AS MANUFACTURED ACUITY CONTROLS "nLIGHT", OR APPROVED EQUAL, AND SHALL BE PROGRAMMED AND COMMISSIONED BY THE SYSTEM MANUFACTURER.
3. THE LIGHTING CONTROL SYSTEM (INTERIOR AND EXTERIOR) SHALL BE PROGRAMMED PER THE OWNER'S REQUIREMENTS.
4. THE CONTRACTOR SHALL PROVIDE THE OWNER WITH (8) HOURS OF TRAINING FOR THE LIGHTING CONTROL SYSTEM. TRAINING SHALL BE PROVIDED FOR FOUR (4) CLIENT CHOSEN EMPLOYEES. CONTRACTOR TO COORDINATE WITH THE ARCHITECT FOR SCHEDULING OF TRAINING.
5. PLUG LOAD (PL) POWER PACKS FOR CONTROL OF RECEPTACLES. CONNECT LOW VOLTAGE SIDE OF "PL" TO THE LIGHTING CONTROL SYSTEM.

SYMBOL LIST

ACCUITY CONTROLS nLIGHT PRODUCT NUMBERS

- (OS) OCCUPANCY SENSOR #nCM PDT10 RJB AR
- DS — DAYLIGHT SENSOR. #nCM PC DZ RJB AR
- PL — PLUG LOAD POWER PACK #nPP20 PL BP
- PS — POWER SUPPLY PROVIDED WITH GATEWAY OR BRIDGE
- LV-D — nLIGHT WALLSTATION DIMMER/OCCUPANT SENSOR #nWSX PDT LV DX WH
- LV-* — nLIGHT WALLSTATION DIMMER/SWITCH #nPODM DX WH * = DEPENDING ON NUBMER
- DR — DEMAND RESPONSE #nADR-L400
- nECY — ECLYPSE "nECY" #nECY MVOLT ADR ENC GFXK
- BR- — 8 PORT BRIDGE #nBRG8 KIT
- NFXT — nLIGHT ENABLED LIGHT FIXTURE
- FXT — 0-10V. DIMMING LIGHT FIXTURE
- PP — nLIGHT RELAY/POWER PACK #NPP16-D
- NPNL — nLIGHT RELAY PANEL / CABINET #ARP-8 / ARP-16
- NCOM — nLIGHT PROGRAMMING TOOL USED TO PROGRAM STANDALONE #NCOMKIT
- nIOS — LOW VOTLAGE INTERFACE #nIO 1S

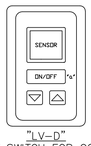

"LV-D" NLIGHT SWITCH FOR CONTROL OF LIGHT FIXTURES (NPODM DX)

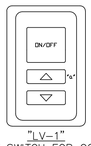

"LV-1" NLIGHT SWITCH FOR CONTROL OF LIGHT FIXTURES (NPODM DX)

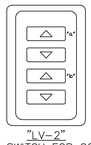

"LV-2" NLIGHT SWITCH FOR CONTROL OF LIGHT FIXTURES (NPODM 2P DX)

"LV-3" NLIGHT SWITCH FOR CONTROL OF LIGHT FIXTURES (NPODM 4P DX)

"LV-4" NLIGHT SWITCH FOR CONTROL OF LIGHT FIXTURES (NPODM 4P DX)

LIGHTING CONTROL DIAGRAM

SCALE: NONE

1

PBK
RANCHO CUCAMONGA
8163 ROCHESTER AVENUE, SUITE 100
RANCHO CUCAMONGA, CA 91730
909-987-0909 P

ONTARIO FIRE DEPARTMENT ADMINISTRATION BUILDING

CITY OF ONTARIO

1420 E. FRANCIS STREET., ONTARIO, CA

LICENSED ARCHITECT — KELLEY NEEDHAM C-19064 Exp. 03/31/25 — STATE OF CALIFORNIA

REGISTERED PROFESSIONAL ENGINEER — ROLAND E. SOTTO No. E17229 6/30/24 — STATE OF CALIFORNIA

CONSULTANT
A&F ENGINEERING GROUP, INC.
8320 BASELINE RD. SUITE C, RANCHO CUCAMONGA, CA 91701
TEL: (909) 941-3006 FAX: (909) 941-8211

NO	DATE	BY	DESCRIPTION

REVISIONS

DRAWN: CBF	CHECKED: RES
DATE: 07/15/2022	SCALE: AS NOTED
PROJECT NUMBER: 2011700	

ELECTRICAL DETAILS

DRAWING NUMBER: E3.5

BID SET 03/01/24

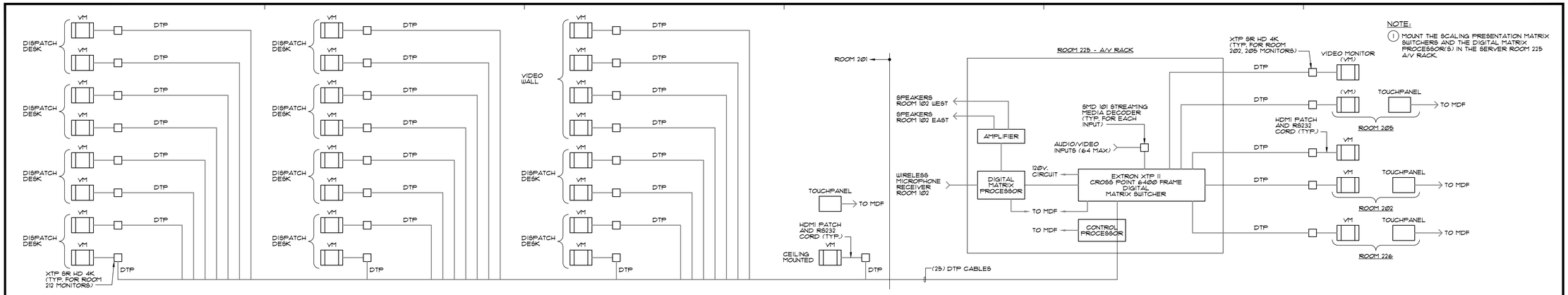

DISPATCH ROOM 201, OFFICE 202, OFFICE 205, AND EOC BREAKOUT 226 - A/V SYSTEM DIAGRAM | SCALE: NONE | 1

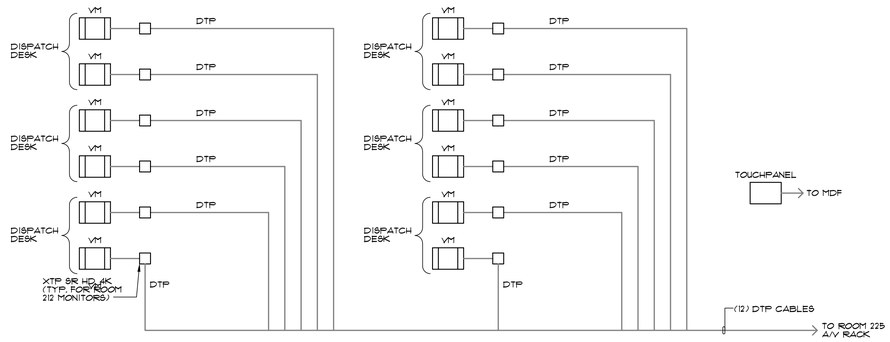

EOC ROOM 209 - A/V SYSTEM DIAGRAM | SCALE: NONE | 2

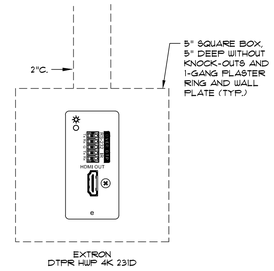

A/V MONITOR - WALL PLATE | SCALE: NONE | 3

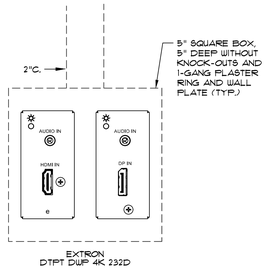

A/V INPUT (TRANSMITTER) - WALL PLATE | SCALE: NONE | 4

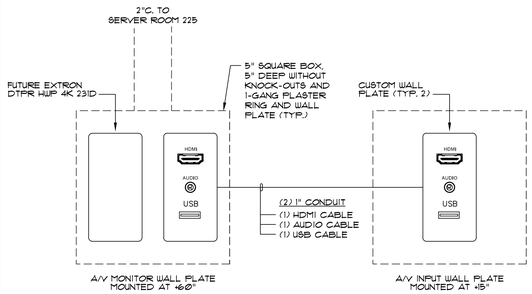

CONFERENCE ROOM 204 - A/V | SCALE: NONE | 5

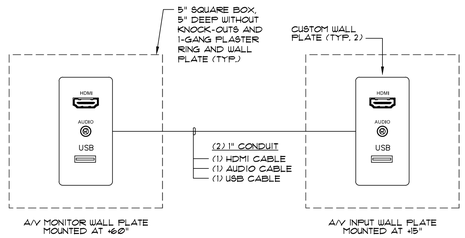

CONFERENCE ROOM 105, 115, 301 - A/V | SCALE: NONE | 6

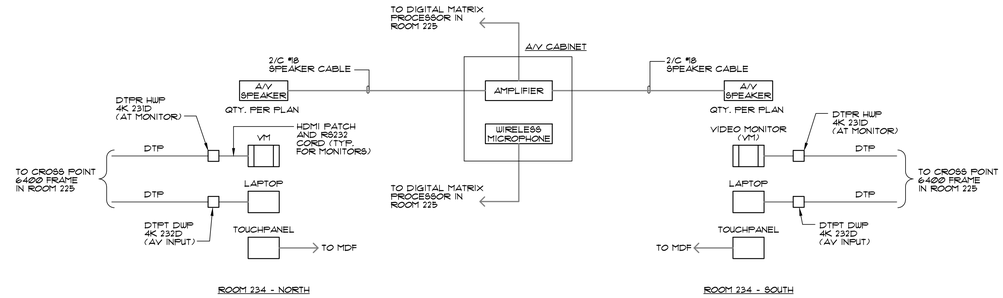

EOC CONFERENCE ROOM 234 - A/V | SCALE: NONE | 7

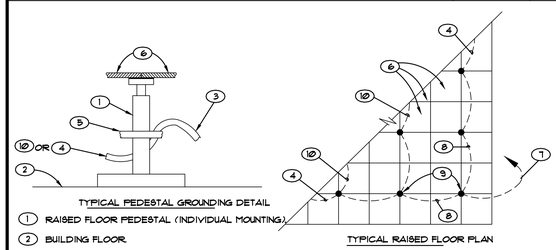

1. RAISED FLOOR PEDESTAL (INDIVIDUAL MOUNTING).
2. BUILDING FLOOR.
3. CONTINUOUS #6 AWG, FLEXABLE GROUND WIRE TO PREVIOUS PEDESTAL.
4. CONTINUOUS #6 AWG, FLEXIBLE GROUND WIRE TO NEXT PEDESTAL.
5. MALLEABLE IRON GROUND CLAMP. COAT THE PEDESTAL UNDER THE GROUND CLAMP WITH COPPER SHIELD COMPOUND.
6. RAISED FLOOR.
7. #6 AWG TO COPPER EQUIPMENT GROUND BUS (TYPICAL ALL CORNERS).
8. #6 AWG FLEXIBLE GROUND WIRE AROUND ENTIRE PERIMETER (CONTINUOUS).
9. MALLABLE IRON 3 CONDUCTOR #6 AWG GROUND CLAMP. SEE NOTE #5 FOR COATING.
10. #6 AWG. TO NEXT SERIES OF PEDESTALS AND FINAL CONNECTION TO OPPOSITE PERIMETER LOOP.

RAISED FLOOR GROUNDING | SCALE: NONE | 8

PBK
RANCHO CUCAMONGA
8163 ROCHESTER AVENUE, SUITE 100
RANCHO CUCAMONGA, CA 91730
909-987-0909 P

ONTARIO FIRE DEPARTMENT ADMINISTRATION BUILDING

CITY OF ONTARIO

1420 E. FRANCIS STREET., ONTARIO, CA

LICENSED ARCHITECT — KELLEY NEEDHAM C-19064 — Exp. 03/31/25 — STATE OF CALIFORNIA

REGISTERED PROFESSIONAL ENGINEER — RICHARD E. SUTTON — No. E17329 — 6/30/24 — STATE OF CALIFORNIA

CONSULTANT
A&F ENGINEERING GROUP, INC.
9320 BASELINE RD, SUITE C, RANCHO CUCAMONGA, CA 91701
TEL: (909) 941-3008 FAX: (909) 941-8211

NO	DATE	BY	DESCRIPTION

REVISIONS

DRAWN: CBF	CHECKED: RES
DATE: 07/15/2022	SCALE: AS NOTED
PROJECT NUMBER: 2011700	

ELECTRICAL DETAILS

DRAWING NUMBER: E3.6

BID SET 03/01/24

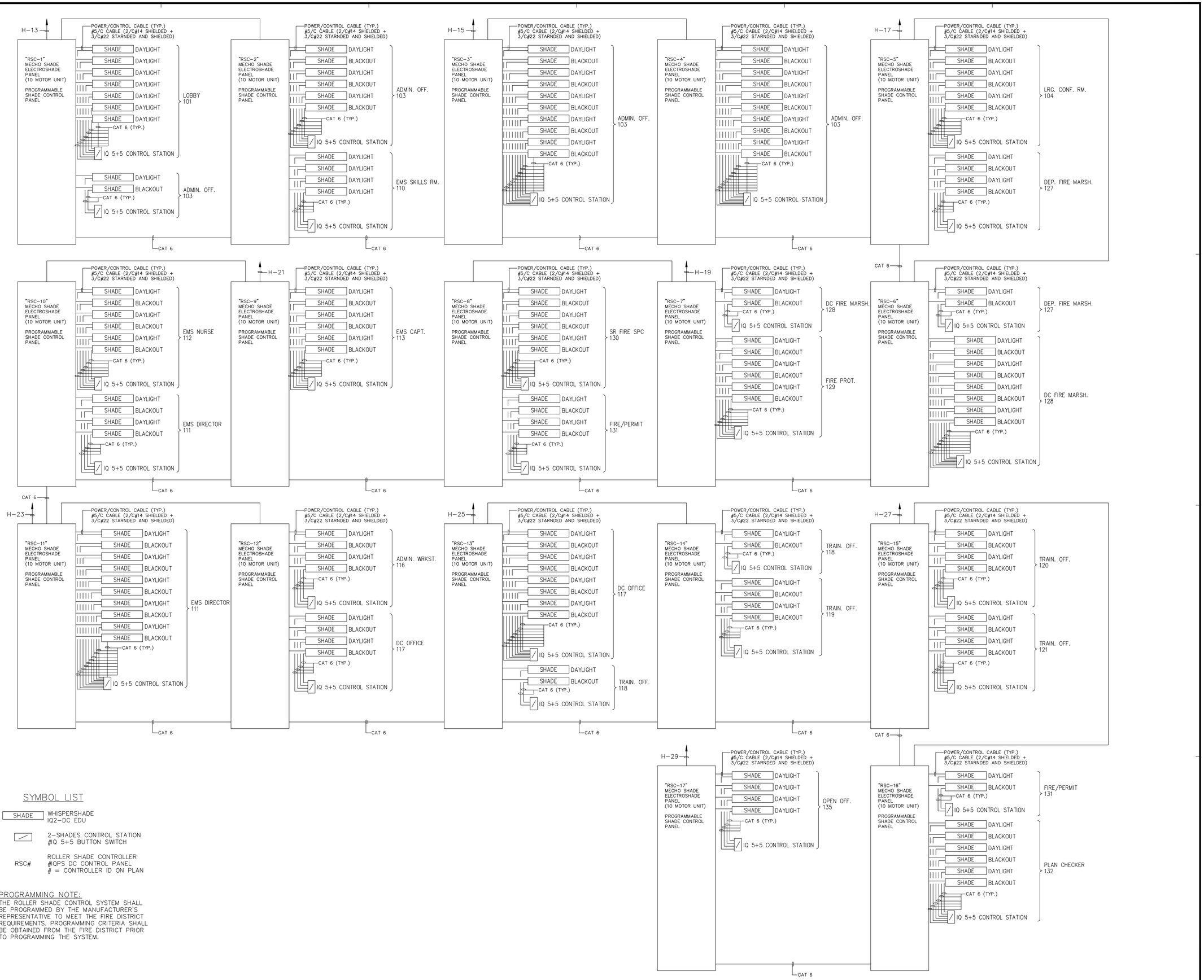

SYMBOL LIST

SHADE	WHISPERSHADE IQ2-DC EDU
	2-SHADES CONTROL STATION #IQ 5+5 BUTTON SWITCH
RSC#	ROLLER SHADE CONTROLLER #IQPS DC CONTROL PANEL # = CONTROLLER ID ON PLAN

PROGRAMMING NOTE:
THE ROLLER SHADE CONTROL SYSTEM SHALL BE PROGRAMMED BY THE MANUFACTURER'S REPRESENTATIVE TO MEET THE FIRE DISTRICT REQUIREMENTS. PROGRAMMING CRITERIA SHALL BE OBTAINED FROM THE FIRE DISTRICT PRIOR TO PROGRAMMING THE SYSTEM.

FIRST FLOOR MECHANICAL SHADE CONTROL DIAGRAMS

SCALE: NONE

1

PBK
RANCHO CUCAMONGA
8163 ROCHESTER AVENUE, SUITE 100
RANCHO CUCAMONGA, CA 91730
909-987-0909 P

ONTARIO FIRE DEPARTMENT ADMINISTRATION BUILDING

CITY OF ONTARIO

1420 E. FRANCIS STREET., ONTARIO, CA

LICENSED ARCHITECT — KELLEY NEEDHAM C-19064 — Exp. 03/31/23 — STATE OF CALIFORNIA

REGISTERED PROFESSIONAL ENGINEER — RONALD L. SOTELO — No. E17229 — 6/30/24 — STATE OF CALIFORNIA

CONSULTANT

A&F ENGINEERING GROUP, INC.
9320 BASELINE RD. SUITE C, RANCHO CUCAMONGA, CA 91701
TEL: (909) 941-3008 FAX: (909) 941-8211

NO	DATE	BY	DESCRIPTION

REVISIONS

DRAWN: CBF	CHECKED: RES
DATE: 07/15/2022	SCALE: AS NOTED
PROJECT NUMBER: 2011700	

ELECTRICAL DETAILS

DRAWING NUMBER: E3.7

BID SET 03/01/24

SYMBOL LIST

SHADE	WHISPERSHADE IQ2-DC EDU
	2-SHADES CONTROL STATION #IQ 5+5 BUTTON SWITCH
RSC#	ROLLER SHADE CONTROLLER #IQPS DC CONTROL PANEL # = CONTROLLER ID ON PLAN

PROGRAMMING NOTE:

THE ROLLER SHADE CONTROL SYSTEM SHALL BE PROGRAMMED BY THE MANUFACTURER'S REPRESENTATIVE TO MEET THE FIRE DISTRICT REQUIREMENTS. PROGRAMMING CRITERIA SHALL BE OBTAINED FROM THE FIRE DISTRICT PRIOR TO PROGRAMMING THE SYSTEM.

SECOND FLOOR MECHANICAL SHADE CONTROL DIAGRAMS

SCALE: NONE

1

PBK
RANCHO CUCAMONGA
8163 ROCHESTER AVENUE, SUITE 100
RANCHO CUCAMONGA, CA 91730
909-987-0909 P

ONTARIO FIRE DEPARTMENT ADMINISTRATION BUILDING
CITY OF ONTARIO
1420 E. FRANCIS STREET., ONTARIO, CA

LICENSED ARCHITECT — KELLEY NEEDHAM C-19064 — Exp. 03/31/23 — STATE OF CALIFORNIA
REGISTERED PROFESSIONAL ENGINEER — RICHARD L. SUTTON — No. E17229 — 6/30/22 — STATE OF CALIFORNIA

CONSULTANT
A&F ENGINEERING GROUP, INC.
9320 BASELINE RD. SUITE C, RANCHO CUCAMONGA CA 91701
TEL: (909) 941-3008 FAX: (909) 941-8211

NO	DATE	BY	DESCRIPTION
			REVISIONS

DRAWN: CBF	CHECKED: RES
DATE: 07/15/2022	SCALE: AS NOTED
PROJECT NUMBER: 2011700	

ELECTRICAL DETAILS

DRAWING NUMBER: E3.8

BID SET 03/01/24

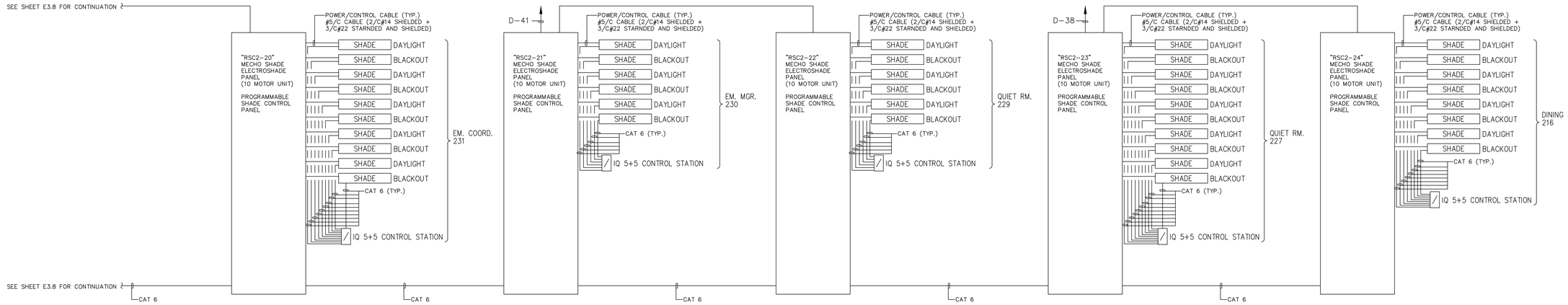

SYMBOL LIST

SHADE	WHISPERSHADE IQ2-DC EDU
/	2-SHADES CONTROL STATION #IQ 5+5 BUTTON SWITCH
RSC#	ROLLER SHADE CONTROLLER #IQPS DC CONTROL PANEL # = CONTROLLER ID ON PLAN

PROGRAMMING NOTE:

THE ROLLER SHADE CONTROL SYSTEM SHALL BE PROGRAMMED BY THE MANUFACTURER'S REPRESENTATIVE TO MEET THE FIRE DISTRICT REQUIREMENTS. PROGRAMMING CRITERIA SHALL BE OBTAINED FROM THE FIRE DISTRICT PRIOR TO PROGRAMMING THE SYSTEM.

SECOND FLOOR MECHANICAL SHADE CONTROL DIAGRAMS

SCALE: NONE

1

PBK
RANCHO CUCAMONGA
8163 ROCHESTER AVENUE, SUITE 100
RANCHO CUCAMONGA, CA 91730
909-987-0909 P

ONTARIO FIRE DEPARTMENT ADMINISTRATION BUILDING

CITY OF ONTARIO

1420 E. FRANCIS STREET., ONTARIO, CA

LICENSED ARCHITECT — KELLEY NEEDHAM C-19064 Exp. 03/31/25 — STATE OF CALIFORNIA

REGISTERED PROFESSIONAL ENGINEER — ROLANDO E. SOTTO No. E17229 6/30/24 — STATE OF CALIFORNIA

CONSULTANT
A&F ENGINEERING GROUP, INC.
8320 BASELINE RD. SUITE C, RANCHO CUCAMONGA, CA 91701
TEL: (909) 941-3006 FAX: (909) 941-8211

NO	DATE	BY	DESCRIPTION

REVISIONS

DRAWN: CBF	CHECKED: RES
DATE: 07/15/2022	SCALE: AS NOTED
PROJECT NUMBER: 2011700	

ELECTRICAL DETAILS

DRAWING NUMBER: E3.9

BID SET 03/01/24

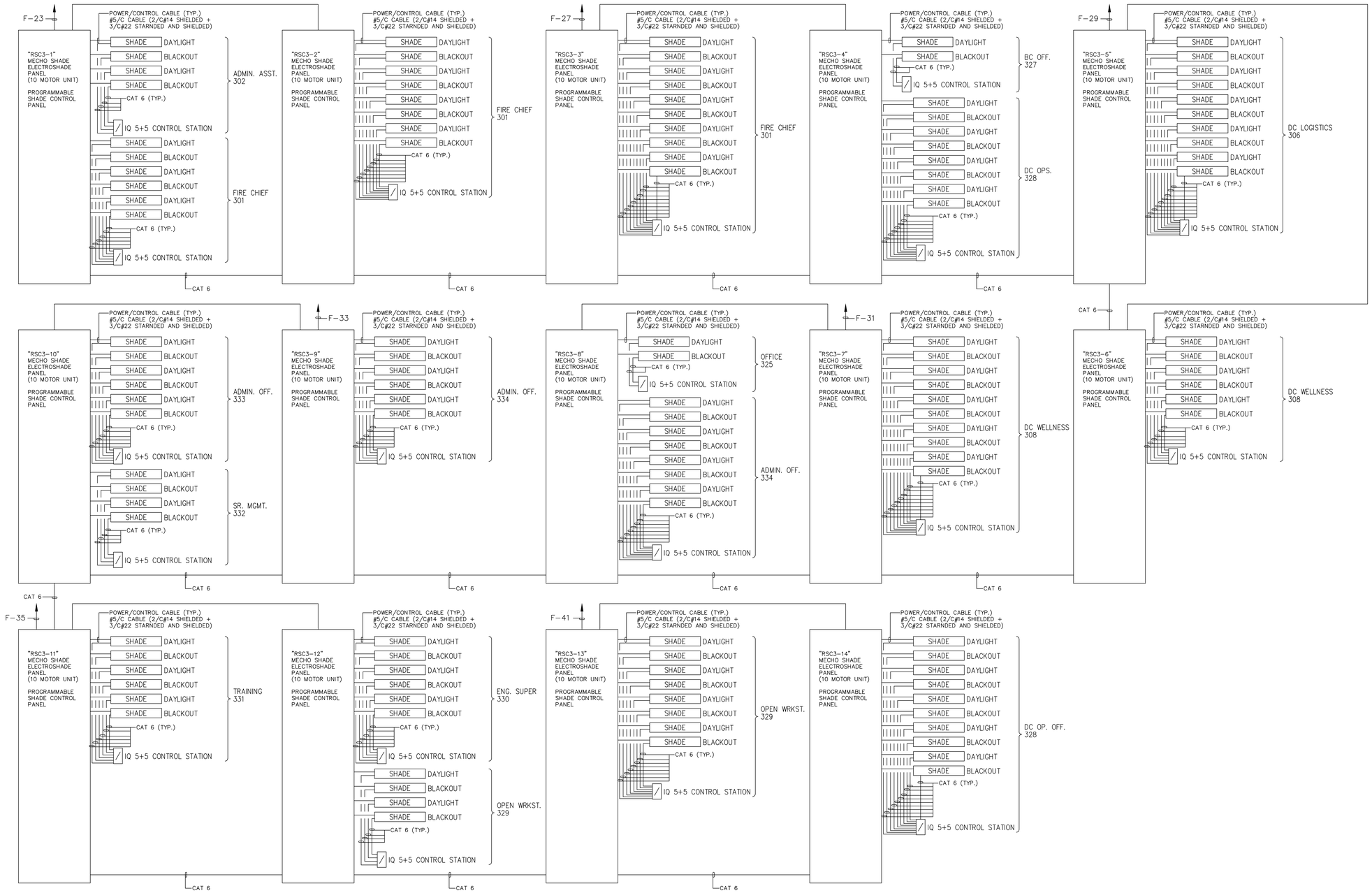

SYMBOL LIST

SHADE	WHISPERSHADE IQ2-DC EDU
	2-SHADES CONTROL STATION #IQ 5+5 BUTTON SWITCH
RSC#	ROLLER SHADE CONTROLLER #IQPS DC CONTROL PANEL # = CONTROLLER ID ON PLAN

PROGRAMMING NOTE:

THE ROLLER SHADE CONTROL SYSTEM SHALL BE PROGRAMMED BY THE MANUFACTURER'S REPRESENTATIVE TO MEET THE FIRE DISTRICT REQUIREMENTS. PROGRAMMING CRITERIA SHALL BE OBTAINED FROM THE FIRE DISTRICT PRIOR TO PROGRAMMING THE SYSTEM.

THIRD FLOOR MECHANICAL SHADE CONTROL DIAGRAMS

SCALE: NONE

1

PBK
RANCHO CUCAMONGA
8163 ROCHESTER AVENUE, SUITE 100
RANCHO CUCAMONGA, CA 91730
909-987-0909 P

ONTARIO FIRE DEPARTMENT ADMINISTRATION BUILDING

CITY OF ONTARIO

1420 E. FRANCIS STREET., ONTARIO, CA

LICENSED ARCHITECT — KELLEY NEEDHAM C-19064 — Exp. 03/31/25 — STATE OF CALIFORNIA

REGISTERED PROFESSIONAL ENGINEER — RANDY L. SOTELO — No. E17229 — 6/30/24 — STATE OF CALIFORNIA

CONSULTANT
A&F ENGINEERING GROUP, INC.
9320 BASELINE RD. SUITE C, RANCHO CUCAMONGA, CA 91701
TEL: (909) 941-3008 FAX: (909) 941-8211

NO	DATE	BY	DESCRIPTION

REVISIONS

DRAWN: CBF	CHECKED: RES
DATE: 07/15/2022	SCALE: AS NOTED
PROJECT NUMBER: 2011700	

ELECTRICAL DETAILS

DRAWING NUMBER: E3.10

BID SET 03/01/24

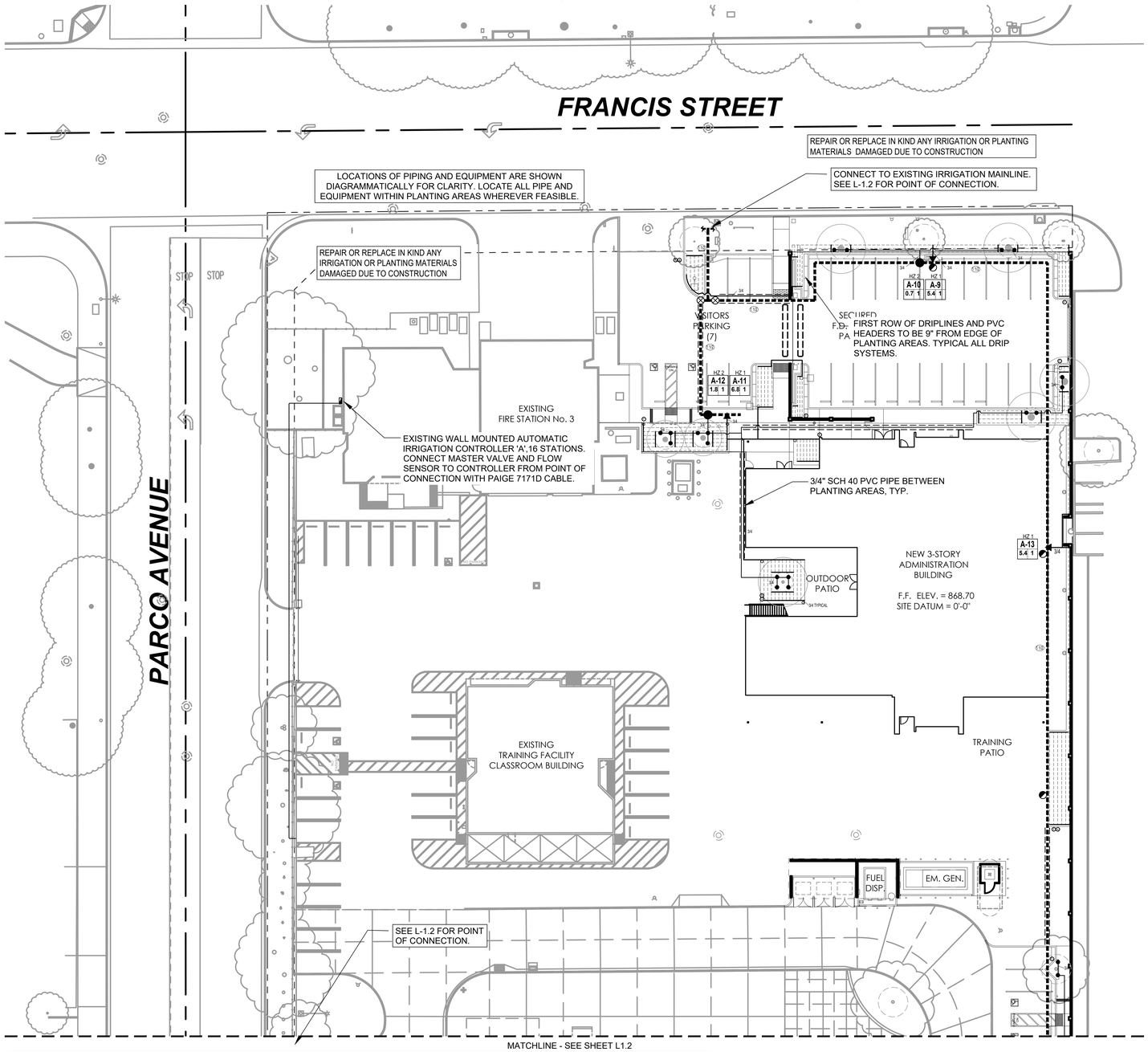

IRRIGATION NOTES

1 EXISTING UTILITIES AND CONDITIONS: PRIOR TO CUTTING INTO THE SOIL OR PAVING, LOCATE ALL CABLES, CONDUITS, AND OTHER UTILITIES COMMONLY FOUND UNDERGROUND, AND TAKE PROPER PRECAUTIONS NOT TO DAMAGE OR DISTURB SUCH IMPROVEMENTS. IF A CONFLICT EXISTS BETWEEN SUCH OBSTACLES AND THE PROPOSED WORK, PROMPTLY NOTIFY THE OWNER. PROCEED IN THE SAME MANNER IF ROCK LAYERS OR ANY OTHER CONDITIONS ENCOUNTERED UNDERGROUND MAKE CHANGES ADVISABLE.

2 THE INSTALLATION OF THE IRRIGATION SYSTEM SHALL CONFORM TO ALL APPLICABLE REGULATIONS AND CODES.

3 THE IRRIGATION SYSTEM IS SHOWN DIAGRAMMATICALLY FOR CLARITY. LOCATE ALL PIPING, EQUIPMENT AND APPURTENANCES WITHIN THE PLANTING AREAS SHOWN UNLESS NOTED OR DIRECTED OTHERWISE. LOCATE ALL VALVES AND VALVE BOXES 6" MIN., 12" MAX FROM ADJACENT PAVING. LOCATE PRESSURE MAIN LINES WITHIN 18" OF EDGE OF PLANTING AREAS.

4 ALL PRESSURE PIPE AND WIRING UNDER PAVING SHALL BE SLEEVED, 2X THE DIAMETER OF CARRYING PIPE. ADD TO SIZE IF CARRYING WIRING IN SAME SLEEVE. COORDINATE SLEEVE INSTALLATION WITH OTHER TRADES TO ENSURE PROPER AND TIMELY INSTALLATION IN LOCATIONS REQUIRED. PIPES MAY BE SLEEVED TOGETHER IF AN EQUIVALENT INCREASE IN SLEEVE SIZE IS MADE.

5 USE TEFLON PIPE TAPE ON ALL THREADED CONNECTIONS.

6 SYSTEM DESIGN IS BASED ON STATIC PRESSURE OF 66 PSI, REGULATED TO 60 PSI OPERATING PRESSURE.

7 WIRING IS BASED ON THE USE OF ONE 24 VOLT DC REMOTE CONTROL VALVE OPERATING AT ONE TIME.

8 UNLESS NOTED OTHERWISE ON PLANS, LATERAL END RUNS ARE TO BE 3/4" SIZE.

9 SET UP CONTROLLER TO ACHIEVE OPTIMUM WATERING BASED ON WATER USE CALCULATIONS.

10 ALL CONTROL WIRING TO BE 14 GAUGE MINIMUM. VALVE CONTROL WIRES TO BE WHITE WITH DIFFERENT COLOR STRIPE FOR EACH CONTROL VALVE. COMMON CONTROL WIRE TO BE SOLID COLOR.

13 MASTER VALVE AND FLOW SENSOR WIRE SHALL BE INSTALLED IN 1" ELECTRICAL CONDUIT. ONE SPARE WIRE SHALL BE INCLUDED INSIDE OF CONDUIT (DIFFERENT COLOR THAN MV AND FS).

13 MASTER VALVE AND FLOW SENSOR WIRE SHALL BE INSTALLED IN 1" ELECTRICAL CONDUIT. ONE SPARE WIRE SHALL BE INCLUDED INSIDE OF CONDUIT (DIFFERENT COLOR THAN MV AND FS).

14 TWO SPARE WIRES SHALL BE INSTALLED ALONG THE MAINLINE ALONG WITH ONE WIRE COILED IN EACH VALVE BOX.

15 ONE SPARE COMMON WIRE SHALL BE INSTALLED ALONG THE MAINLINE AND COILED UP AT EACH VALVE (WHITE).

16 END RUNS OF ALL DRIP LINES ARE TO INCLUDE A FLUSH VALVE ASSEMBLY.

17 INSTALL RAIN SENSOR ON CONTROLLER CABINET.

18 THE LANDSCAPE CERTIFICATION, GRN 12, SHALL BE COMPLETED PRIOR TO FINAL INSECTION APPROVAL.

19 PRESSURE REGULATING DEVICES ARE REQUIRED IF WATER PRESSURE EXCEEDS OR IS BELOW THE RECOMMENDED PRESSURE OF THE SPECIFIED IRRIGATION DEVICES.

20 A DIAGRAM OF THE IRRIGATION PLAN SHOWING HYDROZONES SHALL BE KEPT WITH THE IRRIGATION CONTROLLER FOR SUBSEQUENT MANAGEMENT PURPOSES.

21 A CERTIFICATION OF COMPLETION SHALL BE FILLED OUT AND CERTIFIED BY EITHER THE SIGNER OF THE LANDSCAPE OR IRRIGATION PLANS, OR THE LICENSED LANDSCAPE CONTRACTOR FOR THE PROJECT.

22 AT THE TIME OF FINAL INSPECTION, THE PERMIT APPLICANT MUST PROVIDE THE OWNER OF THE PROPERTY WITH A CERTIFICATE OF COMPLETION, CERTIFICATE OF INSTALLATION, IRRIGATION SCHEDULE OF LANDSCAPE AND MAINTENANCE.

23 NO CERTIFICATE OF OCCUPANCY SHALL BE ISSUED UNTIL THE CITY LANDSCAPE INSPECTOR HAS VERIFIED THAT ALL IRRIGATION, GRADING, AND PLANTING HAVE BEEN COMPLETED IN ACCORDANCE WITH THE APPROVED PLANS AND SPECIFICATIONS OF FCC SECTION 28-117 AT TIME OF FINAL INSPECTION.

24 AN IRRIGATION AUDIT REPORT SHALL BE COMPLETED PER FCC SECTION 28-106 AT TIME OF FINAL INSPECTION.

25 WATER SUPPLY FOR IRRIGATION ON THIS PROJECT IS PUBLIC POTABLE WATER, DESIGNED TO USE RECYCLED WATER WHEN AVAILABLE

26 CONTRACTOR TO REVIEW THE EXISTING IRRIGATION SYSTEM AND MAKE REPAIRS OR REPLACEMENTS FOR A WELL-FUNCTIONING SYSTEM WITH NO OVERSPRAY OR RUNOFF. CONTRACTOR TO REPLACE DAMAGED OR DEAD PLANT MATERIAL WITH LIKE KIND IMPACTED BY THIS CONSTRUCTION

IRRIGATION LEGEND

SYMBOL	DESCRIPTION	PSI	GPM	RAD	MFGR/MODEL	DETAIL REFERENCE #
●	TREE WATERING SPRAY SYSTEM, SEE SCHEDULE	25	0.18 GPM	5'	RAIN BIRD 5HB NOZZLE WITH PC SCREEN IN 1804 BODY	DETAIL H/ SHEET L-1.3
-----	SUB SURFACE DRIPLINE, 18" SPACING, 18" O.C.	25	0.9 GPH	18"	RAIN BIRD XFS-09-18	DETAIL I/ SHEET L-1.3
Ⓐ	DRIP IRRIGATION AIR/VACUUM RELIEF VALVE				RAIN BIRD ARV-050	DETAIL K/ SHEET L-1.3
Ⓕ	DRIP IRRIGATION FLUSH VALVE				RAIN BIRD FLUSH CAP OR APPROVED EQUAL	DETAIL J/ SHEET L-1.3
⊗	SHUT-OFF VALVE, LINE SIZE, W/ BRONZE CROSS HANDLE				NIBCO T-113 BRASS	DETAIL D/ SHEET L-1.3
◪	QUICK COUPLER VALVE				RAIN BIRD 33 LRC	DETAIL F/ SHEET L-1.3
M	WATER METER				EXISTING	SEE CIVIL DRAWINGS
MV	MASTER VALVE, 1 1/2"				SUPERIOR 950 DW	DETAIL B/ SHEET L-1.3
▼	REMOTE CONTROL VALVE FOR DRIP SYSTEMS				RAIN BIRD XCZ-100 PRB & 150-LCD	DETAIL G/ SHEET L-1.3
●	REMOTE CONTROL VALVE FOR BUBBLER SYSTEMS				RAIN BIRD EFB-CP-PRS	DETAIL C/ SHEET L-1.3
FS	FLOW SENSOR				RAIN BIRD FS-1OOP	DETAIL E/ SHEET L-1.3
RP	EXISTING BACKFLOW PREVENTER					
◪	EXISTING AUTOMATIC IRRIGATION CONTROLLER, 16 STATION. ADD RAIN BIRD RSD RAIN SENSOR.					
———	LATERAL (NON-PRESSURE) PIPING, SIZE AS SHOWN				SCH 40	DETAIL A/ SHEET L-1.3
▬▬▬	MAIN LINE (PRESSURE) PIPE, SIZE AS SHOWN				C900 CL 200 PVC	DETAIL A/ SHEET L-1.3
▬▬▬	MAIN LINE (PRESSURE) PIPE, EXISTING				C900 CL 200 PVC	DETAIL A/ SHEET L-1.3
═══	SLEEVE, PER PLAN, 2x DIAM OF CARRYING PIPE, MIN.				SCH 40	DETAIL A/ SHEET L-1.3
—·—·—	SENSOR WIRING BETWEEN POC SENSORS AND CONTROLLER				MIN 14 GAUGE WIRES IN 1" ELEC CONDUIT	DETAIL A/ SHEET L-1.3

EXISTING EQUIPMENT AND COMPONENTS ARE INSTALLED PER CITY OF ONTARIO LANDSCAPE PLANNING DEPARTMENT REQUIREMENTS.

REPAIR OR REPLACE IN KIND ANY IRRIGATION OR PLANTING MATERIALS DAMAGED DUE TO CONSTRUCTION

HYDROZONES
1 SHRUB/GC MIXED - DRIP
2 TREES - SPRAYS

HZ1 HYDROZONE
CONTROLLER A-1 SEQUENCE NUMBER
APPROXIMATE GPM 10 1 VALVE SIZE, INCHES

LANDSCAPEPLANCHECK@ONTARIOCA.GOV AND PARKS AND MAINTENANCE DEPARTMENT, 909 395-2628. MATERIALS SHALL BE SUBJECT TO CITY STAFF INSPECTION AND APPROVAL.SUBSTITUTIONS SHALL BE PRESENTED TO CITY STAFF FOR APPROVAL.COPIES OF ALL CERTIFICATIONS SHALL BE PRESENTED TO CITY STAFF AT THE INSPECTION DAY FOR THE START OF THE 90 DAY MAINTENANCE PERIOD.THE MAINTENANCE OF THE ENTIRE PROJECT SHALL BE FOR 90 DAYS FROM THE TIME THE CITY STAFF INSPECTS THE SITE AND GRANTS THE START OF THE MAINTENANCE PERIOD.

VALVE	HYDROZONE	GPM	AP RATE	EFFICIENCY	SQ FT
A-9	1	5.4	0.64	81%	1205
A-10	2	0.7	0.18	81%	448
A-11	1	6.8	0.64	81%	1090
A-12	2	1.8	0.18	81%	328
A-13	1	5.4	0.64	81%	500
A-14	1	7.7	0.64	81%	2015
A-15	2	2.2	0.18	81%	448

MAWA

ET DATA FROM:	CITY OF POMONA				
ETO	EFFECTIVE PRECIP	IN TO GAL	ET ADJ FACTOR	TOTAL AREA	SPECIAL AREAS
55.6	0.00	0.620	0.45	4810	0
MAWA = ETO - EFFECTIVE RAIN x IN TO GAL x((ET ADJ FACTOR x TOTAL AREA) + (SPECIAL AREA x 0.3))					
MAWA =	63,745	GAL/YEAR			

ETWU

ETWU = ETO - EFFECTIVE RAIN x IN TO GAL x((PLANT FACTOR x AREA) / (IRRIG EFFICIENCY))

	HYDROZONE	WATER USE	WUCOLS PLANT FACTOR (PF)	SQ FT AREA (HA)	IE	PF/IE ETAF	ETAFxHA	ETWU
MIXED	1	LOW-MED	0.30	4,810	.81	.370	1781.48	52,465
TREES	2	LOW*	0.10	1224*	.81	.123	151.11	4,450
						TOTAL ETWU		**56,915**
						MAWA		**63,745**
						DIFFERENCE		**(6,830)**

* NOTE: THE WATER USE IN HYDROZONE 2 (TREES) OCCURS WITHIN THE MIXED HYDROZONE 1 LANDSCAPE AREAS. THE WATER AMOUNT SHOWN IS FOR ADDITIONAL DEEP WATERING AND IS IN ADDITION TO HYDROZONE 1 WATER AMOUNTS. THE PLANT FACTOR IS ADDED FOR THE TREES, GIVING THEM A TOTAL PLANT FACTOR OF 0.3+0.1= 0.4.

HYDROZONES
1 SHRUB/GC MIXED - DRIP
2 TREES - SPRAYS

I HAVE COMPLIED WITH THE CRITERIA OF THE ORDINANCE AND APPLIED THEM FOR THE EFFICIENT USE OF WATER IN THE LANDSCAPE DESIGN PLANS.

WOO JUNG KIM 11/16/2023
APPLICANT

IRRIGATION PRESSURE CALCULATIONS
VALVE NO. A-14 1" SIZE 7.7 GPM

METER 1"	0.90 PSI
SERVICE LINE	1.00 PSI
1 1/2" RP BACKFLOW PREVENTER	11.00 PSI
FLOW SENSOR	0.50 PSI
MASTER VALVE, 1 1/2"	1.80 PSI
MAINLINE 1 1/2", 670ft	2.80 PSI
MAINLINE FITTINGS (10%)	0.20 PSI
GATE VALVES	1.00 PSI
REMOTE CONTROL VALVE	1.80 PSI
LATERALS	1.50 PSI
FITTINGS (5%)	0.15 PSI
TOTAL LOSSES	22.65 PSI
DRIP LINE OPERATING PRESSURE	25.00 PSI
ELEVATION	--
PRESSURE REQUIRED	47.86 PSI
STATIC PRESSURE - REGULATED	60.00 PSI
RESIDUAL PRESSURE	12.35 PSI

N

1" = 20'-0"

IRRIGATION PLAN

PBK
RANCHO CUCAMONGA
8163 ROCHESTER AVENUE, SUITE 100
RANCHO CUCAMONGA, CA 91730
909-987-0909 P

ONTARIO FIRE DEPARTMENT ADMINISTRATION BUILDING

CITY OF ONTARIO
1420 E. FRANCIS STREET., ONTARIO, CA

LICENSED ARCHITECT
KELLEY NEEDHAM
C-19064
Exp. Date 03/31/25
STATE OF CALIFORNIA

LICENSED LANDSCAPE ARCHITECT
WOO JUNG KIM
No. 6063
30 April 2024
Renewal Date
Date
STATE OF CALIFORNIA

CONSULTANT

CORNERSTONE STUDIOS, INC.
951 E Santa Ana Blvd.
Santa Ana, CA 92701
714. 973. 2200 Voice
714. 973. 0203 Fax
LANDSCAPE ARCHITECTURE • URBAN DESIGN • PLANNING • RESOURCE ANALYSIS

NO	DATE	BY	DESCRIPTION

REVISIONS

DRAWN: RB CHECKED: JK
DATE: 11/15/2023 SCALE: AS NOTED
PROJECT NUMBER: 2011700

IRRIGATION PLAN

DRAWING NUMBER: L1.1

BID SET 03/01/24

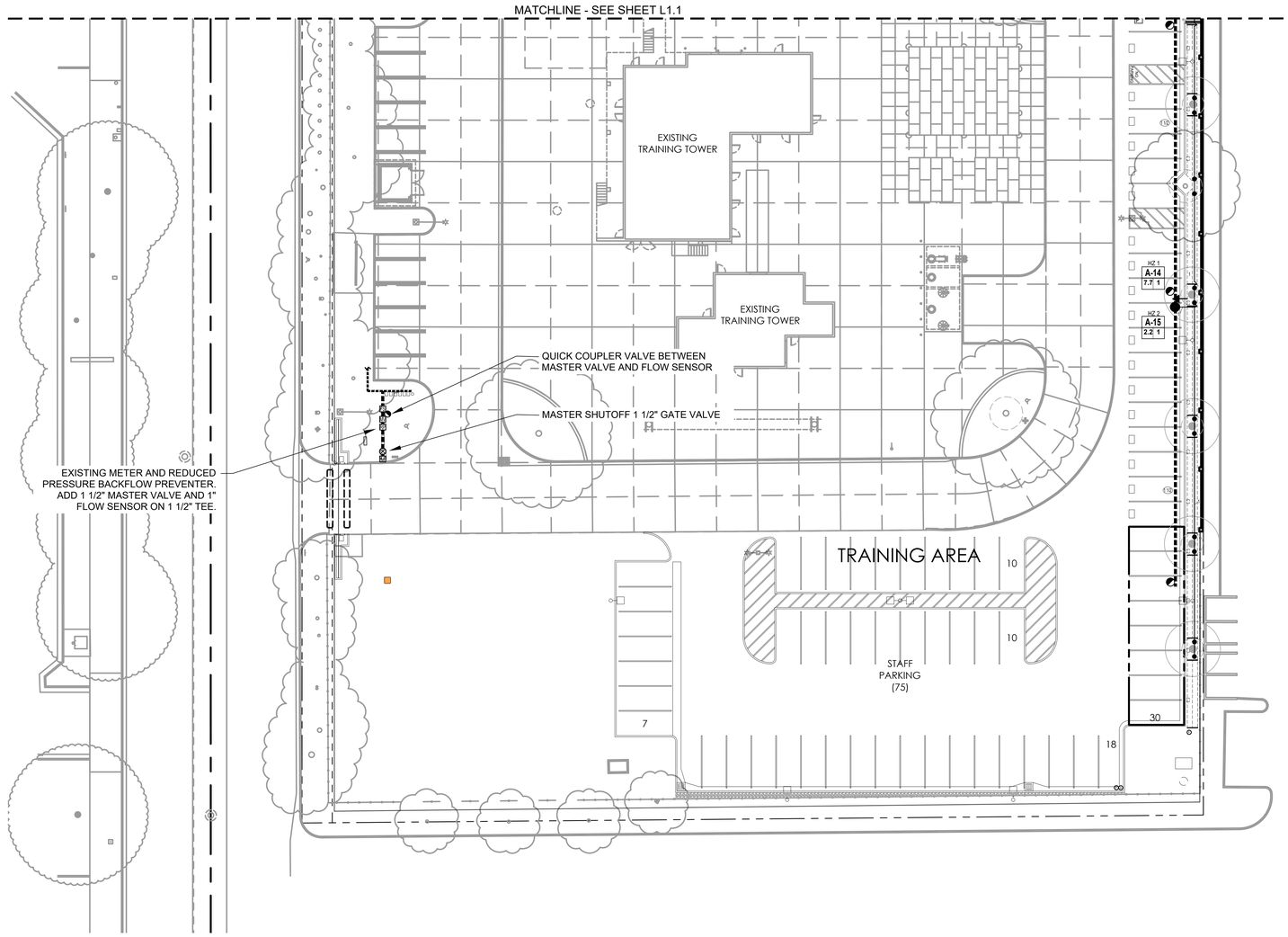

HYDROZONE		Jan	Feb	Mar	Apr	May	Jun	Jul	Aug	Sep	Oct	Nov	Dec
1	DAYS/WEEK	1	1	1	1	1	1	1	1	1	1	1	1
	CYCLES/DAY	1	1	1	1	1	1	1	1	1	1	1	1
2	DAYS/WEEK	1	1	1	1	1	1	1	1	1	1	1	1
	CYCLES/DAY	1	1	1	1	2	2	2	2	2	2	2	1

RUNTIMES DAILY												
TOTAL MINS	52	59	100	135	112	134	145	145	105	80	54	52
TOTAL HRS	0.87	0.98	1.67	2.25	1.87	2.23	2.42	2.42	1.75	1.33	0.90	0.87
	Jan	Feb	Mar	Apr	May	Jun	Jul	Aug	Sep	Oct	Nov	Dec
A-9	7	8	13	18	19	23	25	25	18	14	9	7
A-10	8	9	16	21	12	14	15	15	11	8	6	8
A-11	7	8	13	18	19	23	25	25	18	14	9	7
A-12	8	9	16	21	12	14	15	15	11	8	6	8
A-13	7	8	13	18	19	23	25	25	18	14	9	7
A-14	7	8	13	18	19	23	25	25	18	14	9	7
A-15	8	9	16	21	12	14	15	15	11	8	6	8

RUNTIMES WITH REPEAT CYCLES												
TOTAL MINS	52	59	100	135	148	176	190	190	138	104	72	52
TOTAL HRS	0.87	0.98	1.67	2.25	2.47	2.93	3.17	3.17	2.30	1.73	1.20	0.87
	Jan	Feb	Mar	Apr	May	Jun	Jul	Aug	Sep	Oct	Nov	Dec
A-9	7	8	13	18	19	23	25	25	18	14	9	7
A-10	8	9	16	21	24	28	30	30	22	16	12	8
A-11	7	8	13	18	19	23	25	25	18	14	9	7
A-12	8	9	16	21	24	28	30	30	22	16	12	8
A-13	7	8	13	18	19	23	25	25	18	14	9	7
A-14	7	8	13	18	19	23	25	25	18	14	9	7
A-15	8	9	16	21	24	28	30	30	22	16	12	8

CYCLE START TIMES WILL BE SET WHEN THE IRRIGATION CONTROLLER IS SET UP IN THE FIELD TO BEST FIT THE DESIRED SCHEDULES. THE SCHEDULES WILL BE MODIFIED BY THE CONTROLLER BASED ON SENSORS AND SITE CONDITIONS. TOTAL RUN TIME PER DAY NOT TO EXCEED 9 HOURS. WATER WINDOW IS 9PM TO 6AM.

VALVE	HYDROZONE	GPM	AP RATE	EFFICIENCY	SQ FT
A-9	1	5.4	0.64	81%	1205
A-10	2	2.5	0.18	81%	448
A-11	1	6.8	0.64	81%	1090
A-12	2	1.8	0.18	81%	328
A-13	1	5.4	0.64	81%	500
A-14	1	12.0	0.64	81%	2015
A-15	2	2.5	0.18	81%	448

HYDROZONES	
1	SHRUB/GC MIXED - DRIP
2	TREES - SPRAYS

N

IRRIGATION PLAN

1" = 20'-0"

PBK
RANCHO CUCAMONGA
8163 ROCHESTER AVENUE, SUITE 100
RANCHO CUCAMONGA, CA 91730
909-987-0909 P

ONTARIO FIRE DEPARTMENT ADMINISTRATION BUILDING

CITY OF ONTARIO
1420 E. FRANCIS STREET., ONTARIO, CA

LICENSED ARCHITECT TECH
KELLEY NEEDHAM
C-19064
Re-Ist 03/31/25
STATE OF CALIFORNIA

LICENSED LANDSCAPE ARCHITECT
BOO-JUNG KIM
30 April 2024
Renewal Date
Date
STATE OF CALIFORNIA

CONSULTANT

CORNERSTONE STUDIOS, INC.
951 E Santa Ana Blvd.
Santa Ana, CA 92701
714. 973. 2200 Voice
714. 973. 0203 Fax
LANDSCAPE ARCHITECTURE • URBAN DESIGN • PLANNING • RESOURCE ANALYSIS

NO	DATE	BY	DESCRIPTION

REVISIONS

DRAWN: RB	CHECKED: JK
DATE: 11/15/2023	SCALE: AS NOTED
PROJECT NUMBER: 2011700	

IRRIGATION PLAN

DRAWING NUMBER: L1.2

BID SET 03/01/24

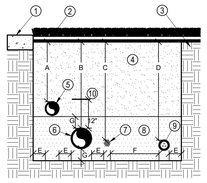

1. PAVING OR CURB EDGE
2. FINISH GRADE
3. UNDISTURBED SOIL
4. CLEAN COMPACTED BACKFILL
5. LATERAL PIPE
6. PRESSURE MAIN LINE PIPE
7. CONTROL WIRES. LAY NEXT TO MAINLINE. BUNDLE AND TAPE AT TEN FOOT INTERVALS
8. CLEAN SAND BACKFILL
9. 120V POWER WIRES IN SCH 40 CONDUIT
10. WARNING TAPE, FOIL BACKED

TIE A 36" LOOP IN ALL WIRING AT ALL CHANGES OF DIRECTION GREATER THAN 30 DEGREES, UNTIE AFTER ALL CONECTIONS HAVE BEEN MADE

DIMENSION	A	B	C	D	E	F	G
1/2" TO 1 1/2" SIZE	18"	24"	26"	30"	6"	24"	6"
2" TO 2 1/2" IN SIZE	18"	24"	26"	30"	6"	24"	6"
3" AND LARGER	18"	30"	26"	X	6"	24"	6"

PLAN VIEW - N.T.S.

SNAKE ALL PLASTIC PIPE AND WIRING WITHIN TRENCHES
INSTALL ALL PIPE IN ACCORD WITH MANUFACTURERS SPECIFICATIONS

A PIPE & WIRE TRENCHING

NTS

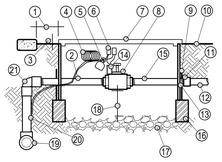

SEE SPECIFICATIONS FOR PIPE DEPTHS

1. 6" MIN, 12" MAX FROM FIXED IMPROVEMENTS
2. SCH 80 PVC NIPPLE (TxT)
3. 2" MIN 3" MAX IN GROUND COVER
4. 18" MIN EXPANSION LOOPS
5. ID TAG
6. EPOXY CONNECTORS
7. VALVE BOX W/ LOCKING COVER MARKED "MCV"
8. MASTER CONTROL VALVE
9. COVER OPENINGS W/ 15# FELT OR FIBERGLASS MATTING
10. FINISH GRADE
11. SCH 80 FEMALE ADAPTER
12. LATERAL PIPING
13. SCH 80 PVC NIPPLE (TxT)
14. SOLENOID
15. SCH 80 PVC NIPPLE (TxT)
16. SET VALVE BOX ON FOUR (4) BRICKS
17. 2 CU. FT. PEA GRAVEL
18. 2" MIN. 6" MAX CLEAR
19. PVC SCH 40 TEE OR ELL AT MAIN
20. SCH 40 PVC PIPE. LENGTH AS REQ'D
21. SCH 40 PVC ELL (SxT)

B MASTER CONTROL VALVE

NTS

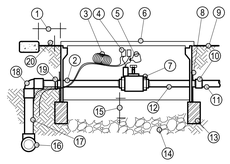

SEE SPECIFICATIONS FOR TRENCH DEPTHS

1. 6" MIN, 12" MAX FROM FIXED IMPROVEMENTS
2. 3" MIN. SCH 80 PVC NIPPLE (TxT)
3. 18" MIN EXPANSION LOOPS
4. EPOXY CONNECTORS
5. ID TAG
6. VALVE BOX W/ LOCKING COVER MARKED "RECYCLED"
7. REMOTE CONTROL VALVE
8. COVER OPENINGS W/ 15# FELT OR FIBERGLASS MATTING
9. FINISH GRADE
10. SCH 80 ADAPTER (FxF)
11. LATERAL PIPING
12. 3" MIN. SCH 80 NIPPLE (TxT)
13. SET VALVE BOX ON FOUR (4) BRICKS
14. 2 CU. FT. PEA GRAVEL
15. 2" MIN. 6" MAX CLEAR
16. PVC SCH 80 TEE OR ELL AT MAIN
17. SCH 80 PVC PIPE. LENGTH AS REQ'D
18. SCH 80 PVC ELL (SxT)
19. BUNDLE & TAPE CONTROL WIRES TO PIPE
20. 2" MIN 3" MAX IN GROUND COVER

C REMOTE CONTROL VALVE - RECYCLED WATER

NTS

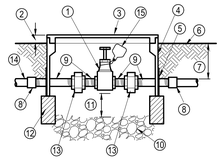

1. GATE VALVE W/ CROSS HANDLE, LINE SIZE
2. 2" MIN., 3" MAX. IN GROUND COVER
3. PLASTIC VALVE BOX W/ LOCKING COVER MARKED "GV"
4. EXTENSIONS AS REQUIRED
5. COVER OPENINGS WITH 15# FELT OR FIBERGLASS MATTING
6. FINISH GRADE
7. SEE SPECS
8. SCH 80 PVC ADAPTER (FxF)
9. SCH 80 PVC NIPPLE (TxT, NO CLOSE NIPPLES, LENGTH AS REQUIRED)
10. 2 CU FT PEA GRAVEL MIN.
11. 2" MIN 6" MAX CLEAR
12. SET BOX ON FOUR BRICKS
13. BRASS UNION
14. PVC MAIN
15. ID TAG

D GATE VALVE

NTS

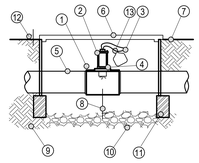

1. PVC FITTINGS AS REQUIRED
2. FLOW SENSOR
3. WIRES TO CONTROLLER
4. INSTALL PER MANUFACTURERS REQUIREMENTS
5. MAIN LINE (3 FT CLEAR OF OTHER EQUIPMENT, TEES, ELLS, ETC. ON EITHER SIDE OF FLOW METER)
6. PLASTIC VALVE BOX W/ LOCKING COVER MARKED "FV"
7. FINISH GRADE
8. 2" MIN, 6" MAX CLEAR
9. UNDISTURBED OR 95% COMPACTED SOIL
10. 2 CU FT MIN PEA GRAVEL
11. SET BOX ON 4 BRICKS
12. 2" MIN, 3" MAX IN GROUND COVER
13. ID TAG

E FLOW SENSOR

NTS

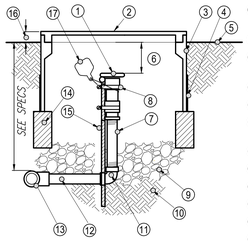

1. QUICK COUPLER VALVE W/ LOCKING RUBBER CAP.
2. PLASTIC VALVE BOX W/ LOCKINGCOVER MARKED "RW-QCV"
3. EXTENSIONS AS REQUIRED
4. COVER OPENINGS WITH 15# FELT OR FIBERGLASS MATTING
5. FINISH GRADE
6. 3" MIN., 6" MAX CLEAR
7. THREADED BRASS SCH 40 RISER. LENGTH AS REQUIRED
8. SCREW CLAMPS (2)
9. 2 CU FT PEA GRAVEL MIN.
10. UNDISTURBED OR 95% COMPACTED SOIL
11. SCH 40 BRASS ELL
12. 6" LONG SCH 40 BRASS NIPPLE
13. SCH 40 PVC TEE OR ELL AT MAIN
14. SET BOX ON FOUR BRICKS
15. 18" LONG #4 REBAR STAKE
16. 2" MIN 3" MAX IN GROUND COVER
17. ID TAG

F QUICK COUPLER VALVE

NTS

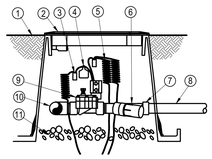

1. FINISH GRADE
2. PLASTIC VALVE BOX W/ LOCKING COVER MARKED "QCV"
3. WATERPROOF CONNECTORS
4. ID TAG
5. 30" LENGTHS OF CONTROL WIRES - COILED
6. PRESSURE REGULATING FILTER
7. FEMALE ADAPTER
8. LATERAL PIPE
9. REMOTE CONTROL VALVE
10. PVC TEE OR ELL AT MAINLINE
11. 3" LAYER PEA GRAVEL MIN.

G DRIP CONTROL VALVE 1"

NTS

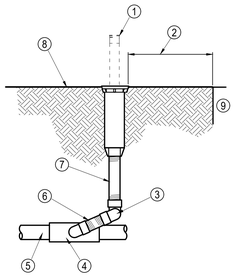

1. POP-UP SPRAY HEAD
2. LOCATE 36" FROM EDGE OF ROOT BALL. FACE THE SPRAY PATTERN AWAY FROM TRUNK. SPACE EVENLY AROUND TREE.
3. PVC ELL & 2 POLYETHYLENE STREET ELLS. INSTALL SO THEY TIGHTEN WITH DOWNWARD THRUST OF RISER
4. TEE OR ELL
5. LATERAL PIPING
6. 4" SCH 80 PVC NIPPLE
7. SCH 80 PVC RISER
8. FINISH GRADE
9. ROOT BALL

H POP-UP SPRAY HEAD

NTS

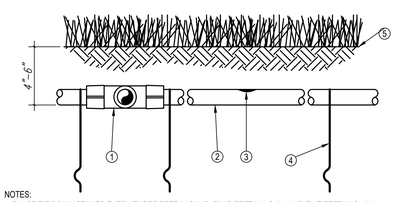

NOTES:
1. PLACE TIE DOWN STAKES EVERY THREE FEET IN SAND, F0UR FEET IN LOAM, AND FIVE FEET IN CLAY.
2. AT FITTINGS WHERE THERE IS A CHANGE OF DIRECTION SUCH AS TEES OR ELBOWS, USE TIE-DOWN STAKES ON EACH LEG OF THE CHANGE OF DIRECTION.
3. INSERTION PLOW AND TRENCHED INSTALLATIONS DO NOT REQUIRE TIE DOWN STAKES.

1. EASY FIT COMPRESSION TEE: RAIN BIRD MDCFTEE
2. SUB-SURFACE DRIPLINE: RAIN BIRD XFSP
3. INLINE DRIP EMITTER
4. TIE DOWN STAKE: RAIN BIRD TDS-050 WITH BEND (TYPICAL)
5. TURF/FINISH GRADE OR SHRUB BED WITH MULCH

I SUB SURFACE DRIPLINE

NTS

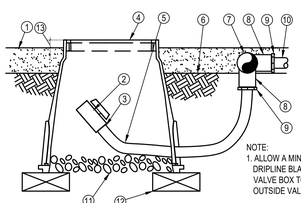

NOTE:
1. ALLOW A MINIMUM OF 10 INCHES OF DRIPLINE BLANK TUBING INSIDE THE VALVE BOX TO DIRECT FLUSHED WATER OUTSIDE VALVE BOX.

1. MULCH
2. 1/2" PVC BALL VALVE
3. PVC ADAPTER AS REQUIRED
4. 10" ROUND PLASTIC VALVE BOX W/ LOCKING PURPLE COVER
5. 10" LONG XF BLANK TUBING
6. FINISH GRADE
7. PVC EXHAUST HEADER
8. PVC SCH 40 TEE OR EL
9. BARB X MALE FITTING: RAIN BIRD XFD-MA FITTING (TYPICAL)
10. ON-SURFACE DRIPLINE: RAIN BIRD XFDP
11. 3-INCH MINIMUM DEEP 3/4" WASHED GRAVEL
12. BRICK (1 OF 2)
13. 2" MIN, 3" MAX CLEAR

J DRIP LINE FLUSH POINT

NTS

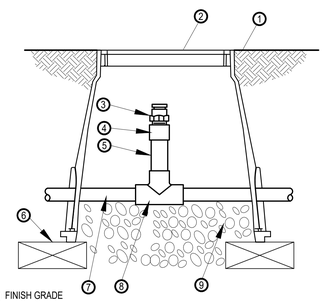

1. FINISH GRADE
2. 10" ROUND VALVE BOX
3. 1/2" AIR RELIEF VALVE: INSTALL AT HIGH POINT IN EACH DRIP VALVE ZONE
4. PVC SCH 40 FEMALE ADAPTER
5. PVC SCH 80 RISER
6. BRICK (2)
7. PVC HEADER PIPE
8. PVC SCH 40 TEE
9. 3" MINIMUM DEPTH OF 3/4" WASHED GRAVEL

K AIR RELIEF VALVE

NTS

LANDSCAPE DETAILS

PBK
RANCHO CUCAMONGA
8163 ROCHESTER AVENUE, SUITE 100
RANCHO CUCAMONGA, CA 91730
909-987-0909 P

ONTARIO FIRE DEPARTMENT ADMINISTRATION BUILDING

CITY OF ONTARIO

1420 E. FRANCIS STREET., ONTARIO, CA

LICENSED ARCHITECT — KELLEY NEEDHAM C-19064 — Exp. 03/31/25 — STATE OF CALIFORNIA

LICENSED LANDSCAPE ARCHITECT — JUNO 6045 — 30 April 2024 — Renewal Date — STATE OF CALIFORNIA

CONSULTANT
CORNERSTONE STUDIOS, INC.
951 E Santa Ana Blvd.
Santa Ana, CA 92701
714. 973. 2200 Voice
714. 973. 0203 Fax
LANDSCAPE ARCHITECTURE • URBAN DESIGN • PLANNING • RESOURCE ANALYSIS

NO	DATE	BY	DESCRIPTION

REVISIONS

DRAWN: RB	CHECKED: JK
DATE: 11/15/2023	SCALE: AS NOTED
PROJECT NUMBER: 2011700	

IRRIGATION DETAILS

DRAWING NUMBER: L1.3

BID SET 03/01/24

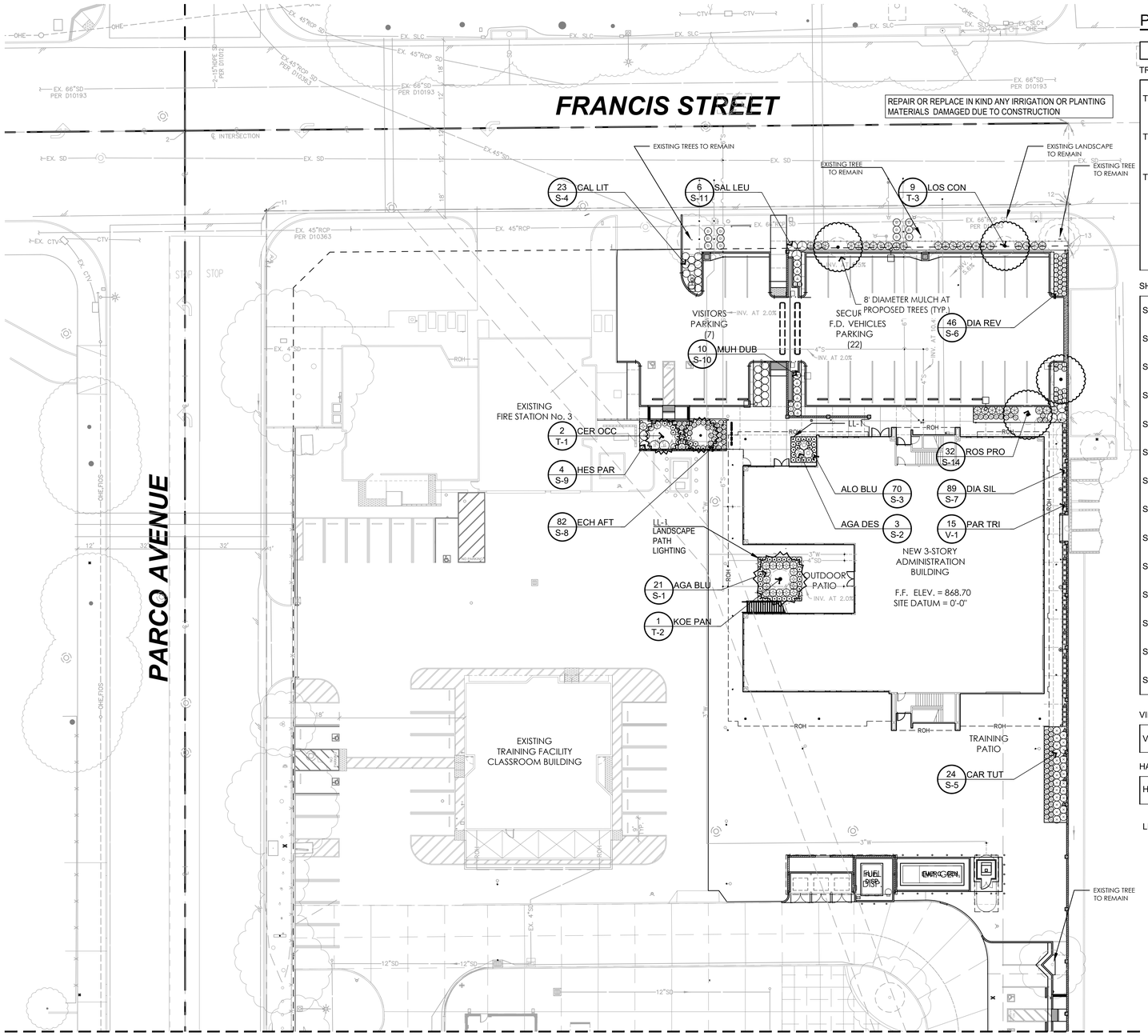

PLANTING LEGEND

SYMBOL	BOTANICAL NAME	COMMON NAME	SIZE	QTY.	WATER NEED	DETAIL REF.
TREES						
T-1	CERCIS OCCIDENTALIS	WESERN REDBUD	STANDARD TRUNK, 36" BOX	2	L	DETAIL F, J / SHEET L-2.3
T-2	KOELREUTERIA PANICULATA	GOLDEN RAIN TREE	STANDARD TRUNK, 48" BOX	1	L	DETAIL F, J / SHEET L-2.3
T-3	LOSPHOSTEMON CONFERTA	BRISBANE BOX	STANDARD TRUNK, 24" BOX	9	M	DETAIL F, J / SHEET L-2.3
	EXISTING TREES TO BE PROTECTED DURING CONSTRUCTION					DETAIL H, I / SHEET L-2.3
SHRUBS						
S-1	AGAVE 'BLUE GLOW'	BLOW GLOW AGAVE	5 GAL. @ 3' O.C.	21	L	DETAIL C/ SHEET L-2.3
S-2	AGAVE 'BLUE FLAME'	BLUE FLAME AGAVE	5 GAL. @ 4' O.C.	3	L	DETAIL C/ SHEET L-2.3
S-3	ALOE 'BLUE ELF'	BLUE ELF ALOE	5 GAL. @ 2' O.C.	70	L	DETAIL B, D/ SHEET L-2.3
S-4	CALLISTEMON LITTLE JOHN	DWARF BOTTLEBRUSH	5 GAL. @ 3' O.C.	23	L	DETAIL B, D/ SHEET L-2.3
S-5	CARISSA 'TUTTLE'	TUTTLE NATAL PLUM	5 GAL. @ 3' O.C.	24	M	DETAIL B, D/ SHEET L-2.3
S-6	DIANELLA REVOLUTA 'LITTLE REV'	LITTLE REV FLAX LILY	5 GAL. @ 2' O.C.	46	M	DETAIL B, D/ SHEET L-2.3
S-7	DIANELLA 'BABY BLISS'	BABY BLISS FLAX LILY	5 GAL. @ 2' O.C.	89	L	DETAIL B, D/ SHEET L-2.3
S-8	ECHEVERIA 'AFTERGLOW'	AFTERGLOW ECHEVERIA	5 GAL. @ 2' O.C.	82	L	DETAIL B, D/ SHEET L-2.3
S-9	HESPERALOE PARVIFLORA	RED YUCCA	5 GAL. @ 4' O.C.	4	L	DETAIL B, D/ SHEET L-2.3
S-10	MUHLENBERGIA DUBIA	PINE MUHLY	5 GAL. @ 3' O.C.	10	M	DETAIL B, D/ SHEET L-2.3
S-11	SALVIA CLEVELANDII	CLEVELAND SAGE	5 GAL. @ 4' O.C.	6	L	DETAIL B, D/ SHEET L-2.3
S-12	DIETES 'LEMON DROPS'	LEMON DROPS FORTNIGHT LILY	5 GAL. @ 3' O.C.	18	L	DETAIL B, D/ SHEET L-2.3
S-13	PITTOSPORUM TOBIRA 'CREME DE MINT'	CREME DE MINT DWARF MOCK ORANGE	5 GAL. @ 3' O.C.	96	M	DETAIL B, D/ SHEET L-2.3
S-14	ROSMARINUS PROSTRATUS	LITTLE REV FLAX LILY	5 GAL. @ 3' O.C.	32	L	DETAIL B, D/ SHEET L-2.3
VINES						
V-1	PARTHENOCISSUS TRICUSPIDATA	BOSTON IVY	5 GAL. @ 10' O.C.	15	M	DETAIL E/ SHEET L-2.3
HARDSCAPE						
H-1	RIVER ROCK MULCH, SIZE 3"-6" IN WIDTH.			270 S.F.		DETAIL G / SHEET L-2.3
LL-1	LANDSCAPE PATH LIGHTING, LIGHT COLUMN PATHWAY BOLLARD BY FORMS + SURFACES OR APPROVED EQUAL, MODEL SERIES 500 LED, 4000K, SURFACE MOUNT WITH J-BOLTS, QUANTITY (5). SEE ELECTRICAL PLAN.					

BOTANICAL NAME (ABBREVIATED)
PLANT COUNT
PLANT REF.

SF 900 SPE GEN
A-1

SPE GEN 100 SF
A-1

LANDSCAPE COVERAGE CALCULATION:

LANDSCAPE	5,040 S.F. (PROPOSED) 26,569 S.F. (EXISTING)
SITE PLAN	204,790 S.F.
TOTAL LANDSCAPED AREA PERCENTAGE	15.4%

NEW 6' TALL MIN. CONCRETE MASONRY SITE WALL, 8" WIDE, TYP. U.N.O. SPLIT-FACE ON ALL EXTERIOR FACES.

LIGHT STANDARD, REF ELECTRICAL DRAWINGS

F.H. FIRE HYDRANT, REF CIVIL DRAWINGS

PROPERTY LINE

N

LANDSCAPE PLAN

1" = 20'-0"

PBK
RANCHO CUCAMONGA
8163 ROCHESTER AVENUE, SUITE 100
RANCHO CUCAMONGA, CA 91730
909-987-0909 P

ONTARIO FIRE DEPARTMENT ADMINISTRATION BUILDING

CITY OF ONTARIO

1420 E. FRANCIS STREET., ONTARIO, CA

LICENSED ARCHITECT
KELLEY NEEDHAM
C-19064
Ex Da 03/31/25
STATE OF CALIFORNIA

LICENSED LANDSCAPE ARCHITECT
JOO-JUNG KIM
No. 5062
30 April 2024
Renewal Date
Date
STATE OF CALIFORNIA

CONSULTANT
CORNERSTONE STUDIOS, INC.
951 E Santa Ana Blvd.
Santa Ana, CA 92701
714. 973. 2200 Voice
714. 973. 0203 Fax
LANDSCAPE ARCHITECTURE • URBAN DESIGN • PLANNING • RESOURCE ANALYSIS

NO	DATE	BY	DESCRIPTION

REVISIONS

DRAWN: JL	CHECKED: JK
DATE: 11/15/2023	SCALE: AS NOTED
PROJECT NUMBER: 2011700	

LANDSCAPE PLAN

DRAWING NUMBER: L2.1

BID SET 03/01/24

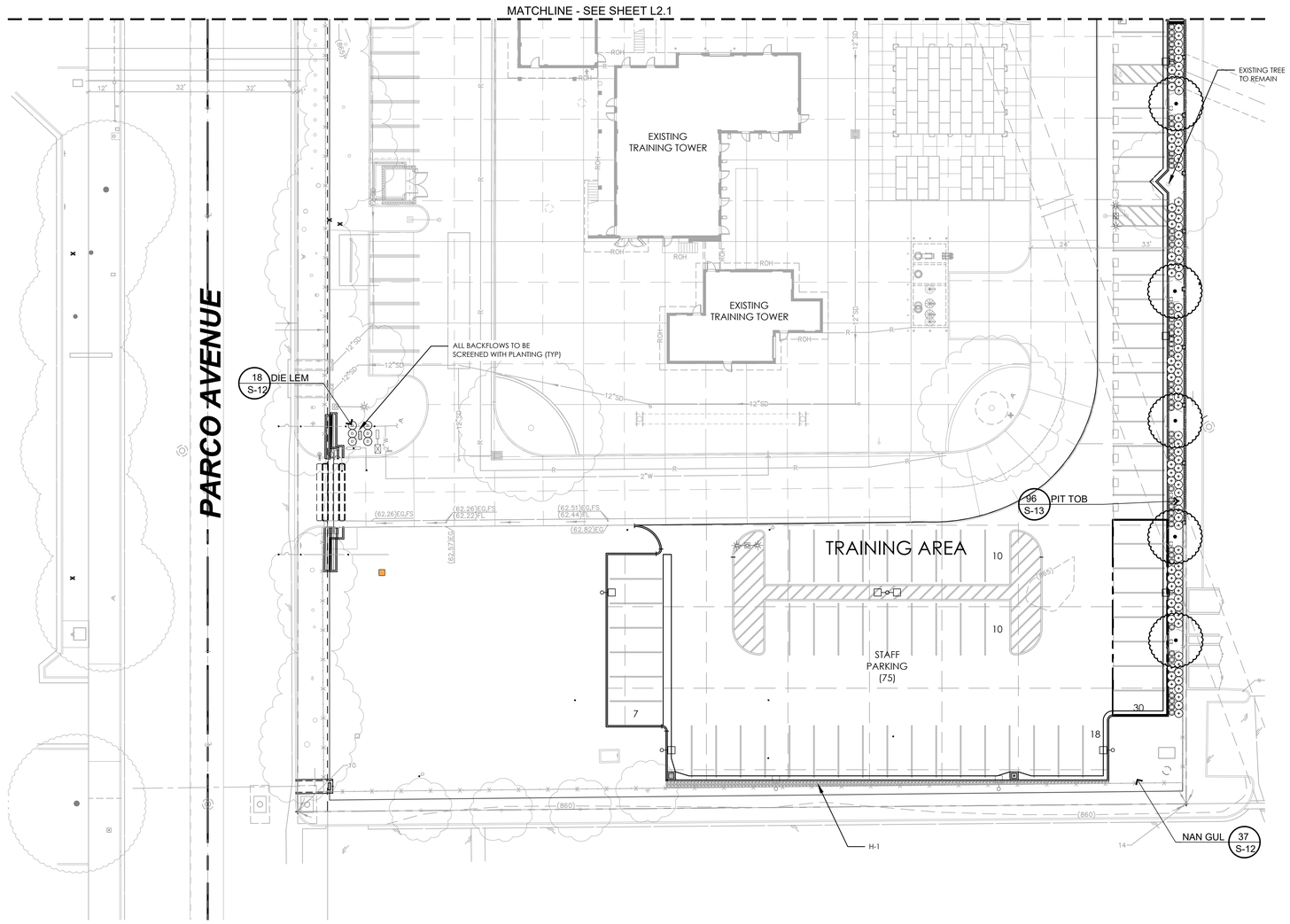

PLANTING NOTES

1. WORK SHALL MEET THE REQUIREMENTS OF ALL LOCAL, STATE, AND FEDERAL GOVERNING CODES, ORDINANCES, LAWS, REGULATIONS, SAFETY ORDERS AND DIRECTIVES.
2. CONTRACTOR SHALL BE RESPONSIBLE FOR MAKING HIMSELF/HERSELF FAMILIAR WITH ALL UNDERGROUND UTILITIES, PIPES AND STRUCTURES. CONTRACTOR SHALL TAKE SOLE RESPONSIBILITY FOR ANY COST INCURRED DUE TO DAMAGE OF SAID UTILITIES.
3. CONTRACTOR MUST CHECK ALL SITE CONDITIONS PRIOR TO COMMENCING WORK. CONTRACTOR SHALL NOT WILLFULLY PROCEED WITH CONSTRUCTION AS DESIGNED WHEN IT IS OBVIOUS THAT UNKNOWN OBSTRUCTIONS AND/OR GRADE DIFFERENCES EXIST THAT MAY NOT HAVE BEEN KNOWN DURING DESIGN. SUCH CONDITIONS SHALL BE IMMEDIATELY BROUGHT TO THE ATTENTION OF THE OWNER'S AUTHORIZED REPRESENTATIVE. THE CONTRACTOR SHALL ASSUME FULL RESPONSIBILITY FOR ALL NECESSARY REVISIONS DUE TO FAILURE TO GIVE SUCH NOTIFICATION.
4. ALL PLANT QUANTITIES ARE IDENTIFIED BY TYPICAL SYMBOLS. REFER TO PLANT LEGEND FOR QUANTITIES. IT SHALL BE THE CONTRACTOR'S RESPONSIBILITY TO CONFIRM ALL PLANT QUANTITIES PRIOR TO BIDDING. IN THE EVENT OF DISCREPANCIES IN PLANT COUNT, QUANTITIES INDICATED BY PLANT SYMBOLS SHALL PREVAIL.
5. ALL TREES SHALL BE TAGGED BY THE LANDSCAPE ARCHITECT AND MEET ANSI Z60.1 SPECIFICATIONS FOR NURSERY STOCK; BE FREE FROM DEFECTS, INCLUDING CO-DOMINANT STEMS AND GIRDLING ROOTS; ROOT FLARE SHALL BE VISIBLE AT TOP OF SOIL LEVEL. DEFECTIVE PLANT MATERIAL SHALL BE REMOVED AND REPLACED AS SOON AS POSSIBLE AND VERIFIED AT FINAL CITY INSPECTION OR TURN OVER. STREET TREES SHALL HAVE MINIMUM 5' TRUNK FREE OF BRANCHES. PLANT MATERIAL SHALL BE GUARANTEED TO BE AVAILABLE AND MEET OR EXCEED REQUIRED SPECIFICATIONS ON ESTIMATED DATE OF START OF PLANTING. CONTRACTOR SHALL SUBMIT FOR APPROVAL PHOTOS OF ALL BOXED TREES. PHOTOS SHOULD INCLUDE PERSON FOR SCALE PURPOSES.
6. CONTRACTOR SHALL NOTIFY OWNER'S AUTHORIZED REPRESENTATIVE IF, PRIOR TO BIDDING, ANY SPECIFIED PLANT MATERIAL IS FOUND TO BE UNAVAILABLE.
7. IT IS THE CONTRACTOR'S RESPONSIBILITY TO FURNISH PLANT MATERIAL FREE OF PESTS OR DISEASE.
8. ALL PLANT MATERIAL DELIVERED TO THE SITE SHALL BE APPROVED BY THE LANDSCAPE ARCHITECT PRIOR TO INSTALLATION.
9. ALL PLANT MATERIAL SHALL BE SET OUT AS SHOWN ON PLAN. FINAL LOCATION OF ALL PLANT MATERIAL SHALL BE SUBJECT TO THE APPROVAL OF THE LANDSCAPE ARCHITECT.
10. ALL EXISTING TREES NOTED TO REMAIN ON PLANTING PLAN OR TREE INVENTORY ARE TO BE PROTECTED IN PLACE DURING CONSTRUCTION.
11. DAMAGED PLANT MATERIALS DUE TO CONSTRUCTION SHALL BE REPAIRED OR REPLACED.
12. ALL TREES PLANTED NEXT TO CURBS SHALL BE AT LEAST 36" CLEAR FROM CURB FACE.
13. ANY TREE SHOWN ON PLAN TO BE INSTALLED LESS THAN 5' CLEAR DISTANCE FROM ANY CURB, WALKWAY, OR FOUNDATION, SHALL BE INSTALLED IN A ROOT CONTROL BARRIER (12" DEEP MAX AND LINEAR APPLICATION ONLY BY DEEP ROOT OR APPROVED EQUAL). INSTALL PER MANUFACTURER'S INSTRUCTIONS.
14. ADD SHREDDED MULCH TO PLANTER AREAS AT A DEPTH OF 3" FOR SHRUBS AND 1" FOR GROUNDCOVER. KEEP MULCH 3" CLEAR OF PLANT STEM AND 6" OF TREES. SHREDDED BARK SHALL BE USED ON 3:1 SLOPES OR GREATER, NOT WOOD CHIPS.
15. CONTRACTORS TO PROVIDE AGRONOMICAL SOIL TESTS AT 15" ROOTBALL DEPTH AND INCLUDE AN INDEPENDENT LAB REPORT. CONTRACTOR SHALL INSTALL AMENDMENTS PER SOIL TEST AND SEWAGE SLUDGE OR BIOSOLIDS ARE NOT ALLOWED. CONTRACTOR TO TAKE A NEW SOIL TEST AND REPORT TO LANDSCAPE ARCHITECT AND CITY INSPECTOR TO VERIFY AMENDMENTS INSTALLED ARE SATISFACTORY PRIOR TO PLANTING." THE LANDSCAPE ARCHITECT SHALL VERIFY THE REPORT WITH AMENDMENTS RECEIPTS ON CERTIFICATE OF COMPLIANCE. A NEW REPORT IS REQUIRED FOR PHASED PROJECTS FOR EACH PHASE OR A MINIMUM OF EVERY SEVEN HOMES IN RESIDENTIAL DEVELOPMENTS.
15. CONTRACTOR SHALL NOTIFY OWNER'S AUTHORIZED REPRESENTATIVE 48 HOURS PRIOR TO COMMENCEMENT OF WORK TO COORDINATE OPERATIONS.
16. THE OWNER'S AUTHORIZED REPRESENTATIVE SHALL BE THE SOLE JUDGE AS TO WHEN THE MAINTENANCE PERIOD BEGINS.
17. CONTRACTOR SHALL ENSURE THAT THE PLANT MATERIAL SPECIES NOTED ON THE APPROVED PLANS WILL BE AVAILABLE UPON THE COMMENCEMENT OF CONSTRUCTION.
18. ALL TREES, STUMPS, ROCKS AND ASSOCIATED VEGETATION AND SOILS RESULTING PRIMARILY FROM LAND CLEARING SHALL BE REUSED OR RECYCLED AS REQUIRED BY CALGREEN 5.73.8.3 EXCEPTION: REUSE EITHER ON- OR OFF-SITE, OF VEGETATION OR SOIL CONTAMINATED BY DISEASE OR PEST INFESTATION.
19. REMOVE AND REPLACE MINIMUM 24" OF SOIL IN PLANTING AREAS PREVIOUSLY PAVED OR AREAS WITH HIGHLY COMPACTED SOILS .
20. ALL LANDSCAPE ARES SUBJECT TO A 90-CALENDAR DAY MINIMUM LANDSCAPE MAINTENANCE PERIOD.
21. LANDSCAPE AREAS WHERE COMPACTION HAS OCCURRED DUE TO GRADING ACTIVITIES AND WHERE TREES OR STORMWATER INFILTRATION AREAS ARE LOCATED SHALL BE LOOSENED BY SOIL FRACTURING. FOR TREES, A 12'X12'X18" DEEP AREA; FOR STORMWATER INFILTRATION, THE ENTIRE AREA SHALL BE LOOSENED. THE BACKHOE METHOD OF SOIL FRACTURING SHALL BE USED TO BREAK UP COMPACTION. A 4" LAYER OF COMPOST IS SPREAD OVER THE SOIL SURFACE BEFORE FRACTURING IS BEGUN. THE BACKHOE SHALL DIG INTO THE SOIL LIFTING AND THEN DROP THE SOIL IMMEDIATELY BACK INTO THE HOLE. THE BUCKET THEN MOVES TO THE ADJACENT SOIL AND REPEATS. THE COMPOST FALLS INTO THE SPACES BETWEEN THE SOIL CHUNKS CREATED. FRACTURING SHALL LEAVE THE SOIL SURFACE QUITE ROUGH WITH LARGE SOIL CLODS. THESE MUST BE BROKEN BY ADDITIONAL TILLING. TILLING IN MORE COMPOST TO THE SURFACE AFTER FRACTURING PER THE SOIL REPORT WILL HELP CREATE AN A HORIZON SOIL. IMPORTED OR REUSED TOPSOIL CAN BE ADDED ON TOP OF THE FRACTURED SOIL AS NEEDED FOR GRADING. THE LANDSCAPE ARCHITECT SHALL BE PRESENT DURING THIS PROCESS AND PROVIDE CERTIFICATION OF THE SOIL FRACTURING. FOR ADDITIONAL REFERENCE, SEE URBAN TREE FOUNDATION - PLANTING SOIL SPECIFICATIONS.
22. FOR COMPACTION TO BE NO GREATER THAN 85% AT LANDSCAPE AREAS. ALL FINISHED GRADES AT 1 ½" BELOW FINISHED SURFACES. SLOPES TO BE MAXIMUM 3:1.
23. PRE-EMERGENT TO BE APPLIED BEFORE THE MULCH LAYER IS INSTALLED TO PREVENT WEEDS. WEEDS SHALL BE REMOVED BEFORE 2" HIGH OR WEED SEEDS DEVELOP.
24. CITY STAFF MAY REQUEST AN ADDITIONAL 15% OF PLANT MATERIAL.
25. CONTRACTOR SHALL INSTALL AMENDMENTS PER PLAN AND THEN TAKE A NEW SOIL TEST AND REPORT TO LANDSCAPE ARCHITECT AND CITY INSPECTOR TO VERIFY AMENDMENTS INSTALLED ARE SATISFACTORY PRIOR TO PLANTING.
26. ALL LANDSCAPE SLOPES 3:1 OR GREATER TO HAVE JUTE MATTING INSTALLED AND ALL LANDSCAPE SLOPES 2:1 OR GREATER TO HAVE EROSION CONTROL BLANKETS INSTALLED WITH 3-YEAR DURABILITY.
27. THE STREET TREES SHALL BE LOCATED WITHIN THE RIGHT OF WAY, SET BACK 9' BEHIND THE CURB TO ALLOW FOR ANY FUTURE CURB ADJACENT SIDEWALK.
28. CONTRACTOR TO REPLACE DAMAGED OR DEAD PLANT MATERIAL WITH LIKE KIND IMPACTED BY THIS CONSTRUCTION.

CITY OF ONTARIO

TREE PROTECTION DURING CONSTRUCTION

1. EXISTING TREES SHALL BE IDENTIFIED AND PRESERVED WITH PROTECTIVE FENCING TO FORM A PROTECTED ROOT ZONE (PRZ). THIS AREA ENCIRCLES THE TREE AT THE OUTER MOST EDGE OF THE CANOPY AND PROTECTS THE ROOTS GROWING TYPICALLY WITHIN THE TOP 18"-24" OF THE SOIL. THE PRZ IS DEFINED BY ITS "CRITICAL ROOT RADIUS." IT IS MORE ACCURATE THAN THE DRIPLINE FOR DETERMINING THE PRZ OF TREES. TO CALCULATE CRITICAL ROOT RADIUS, MEASURE THE TREE'S DIAMETER (DBH) 4.5 FEET ABOVE THE GROUND, MEASURED IN INCHES. FOR EACH INCH, ALLOW FOR 1 TO 1.5 FEET OF CRITICAL ROOT RADIUS. IF A TREE'S DBH IS 10 INCHES, ITS CRITICAL ROOT RADIUS IS 10 TO 15 FEET.
2. PROTECTIVE FENCING SHALL BE INSTALLED PRIOR TO ANY EARTHWORK AND UNTIL WORK IS COMPLETE. FENCING SHALL BE THREE FEET TO FOUR FEET IN HEIGHT AND INSTALLED AT THE OUTER MOST EDGE OF THE CANOPY OR PROTECTED ROOT ZONE (PRZ). THE TEMPORARY FENCING SHALL BE CHAIN LINK FENCING OR OTHER APPROVED DURABLE MATERIAL. POST "TREE PROTECTION ZONE - KEEP OUT" SIGNS ON THE PRZ FENCING.
3. NO CONSTRUCTION OR STAGING EQUIPMENT IS ALLOWED WITHIN THE PROTECTED ROOT ZONE INCLUDING HEAVY EQUIPMENT THAT WILL COMPACT AND DAMAGE THE ROOTS.
4. NO DISPOSAL OF CONSTRUCTION MATERIALS OR BY PRODUCTS INCLUDING PAINT, PLASTER OR CHEMICAL SOLUTIONS IS ALLOWED WITHIN THE PROTECTED ROOT ZONE.
5. NATURAL OR PRECONSTRUCTION GRADE SHALL BE MAINTAINED WITHIN THE TREE PROTECTION ZONE. AT NO TIME SHALL SOIL BE IN CONTACT WITH THE TREE TRUNK ABOVE THE ROOT FLARE.
6. THE PROTECTION ZONE SHOULD BE IRRIGATED SUFFICIENTLY WITH CLEAN POTABLE WATER TO KEEP THE TREE IN GOOD HEALTH AND VIGOR BEFORE DURING AND AFTER CONSTRUCTION. DEEP WATERING MAY BE NECESSARY ON A WEEKLY BASIS. VERIFY DEPTH OF IRRIGATION TO ROOTS.
7. APPLY A 4"-6" LAYER OF MULCH IN THE PRZ, 1 FOOT AWAY FROM THE TRUNK, BEFORE CONSTRUCTION BEGINS.
8. ANY WORK REQUIRED TO BE CONDUCTED IN THE GROUND WITHIN THE PROTECTION ZONE SHALL BE ACCOMPLISHED WITH AN AIR SPADE TO MAKE ROOTS VISIBLE AND USE OF HAND TOOLS.
9. PRUNING FOR CLEARANCE, IF NEEDED, SHALL BE DONE TO PREVENT DAMAGING BRANCHES WITH LARGE EQUIPMENT. ALL PRUNING SHALL BE IN ACCORDANCE WITH INDUSTRY STANDARDS, (INTERNATIONAL SOCIETY OF ARBORICULTURE OR ANSI A300), UNDER THE DIRECTION OF A CERTIFIED ARBORIST.
10. A CERTIFIED ARBORIST SHALL BE PRESENT IF MORE THAN 33% OF THE ROOT ZONE IS IMPACTED OR ROOTS GREATER THAN 2" OR WITHIN 5' OF THE TRUNK WILL BE CUT, TO ENSURE TREE STABILITY AND HEALTH. CUTS SHOULD BE CLEAN AND MADE AT RIGHT ANGLES TO THE ROOTS. CUT ROOTS BACK TO A BRANCHING LATERAL.
11. PRUNING CUTS OR DAMAGED BARK SHALL BE CUT CLEAN TO HEAL. DO NOT USE TREE SEAL OR PAINT.
12. TRENCHES FOR PIPING OR UTILITIES SHALL NOT BE CONSTRUCTED WITH THE TREE PROTECTION ZONES BUT SHALL BE RE-ROUTED OR BORED UNDER TREES AT A MINIMUM OF 36" DEEP.
13. PROTECT SOIL AND ROOTS FROM COMPACTION IN LANDSCAPE AREAS USED FOR DRIVEWAYS, STORAGE OR PARKING WITH A LAYER OF GEOTEXTILE FABRIC AND 6" OF CRUSHED GRAVEL.
14. TREES DAMAGED OR DESTROYED DURING DEMOLITION OR CONSTRUCTION SHALL BE REPLACED PER THE DEVELOPMENT CODE TREE PRESERVATION POLICY AND PROTECTION MEASURES.
15. THE CITY ARBORIST WILL BE NOTIFIED OF THE CONSTRUCTION SCHEDULE AND HAVE REGULAR INSPECTIONS WHEN ANY WORK IS OCCURRING WITHIN THE PRZ.

MAINTENANCE NOTES:

1. IF SOIL CONDITIONERS ARE NEEDED PER SOIL REPORT, CITY STAFF SHALL BE PRESENT WHEN MATERIALS ARE BEING INCORPORATED.
2. FIELD INSPECTIONS SHALL INCLUDE CITY STAFF FROM LANDSCAPE PLANNING DIVISION LANDSCAPEPLANCHECK@ONTARIOCA.GOV AND PARKS AND MAINTENANCE DEPARTMENT, (909) 395-2628.
3. MATERIALS SHALL BE SUBJECT TO CITY STAFF INSPECTION AND APPROVAL.
4. SUBSTITUTIONS SHALL BE PRESENTED TO CITY STAFF FOR APPROVAL.
5. COPIES OF ALL CERTIFICATIONS SHALL BE PRESENTED TO CITY STAFF AT THE INSPECTION DAY FOR THE START OF THE 90 DAYS MAINTENANCE PERIOD.
6. THE MAINTENANCE OF THE ENTIRE PROJECT SHALL BE FOR 90 DAYS FROM THE TIME THE CITY STAFF INSPECTS THE SITE AND GRANTS THE START OF THE MAINTENANCE PERIOD.

N

LANDSCAPE PLAN | 1" = 20'-0"

PBK
RANCHO CUCAMONGA
8163 ROCHESTER AVENUE, SUITE 100
RANCHO CUCAMONGA, CA 91730
909-987-0909 P

ONTARIO FIRE DEPARTMENT ADMINISTRATION BUILDING

CITY OF ONTARIO
1420 E. FRANCIS STREET., ONTARIO, CA

LICENSED ARCHITECT — KELLEY NEEDHAM C-19064 — Exp 03/31/25 — STATE OF CALIFORNIA
LICENSED LANDSCAPE ARCHITECT — SOO-JUNG KIM 6062 — 30 April 2024 — Renewal Date — STATE OF CALIFORNIA

CONSULTANT
CORNERSTONE STUDIOS, INC.
951 E Santa Ana Blvd.
Santa Ana, CA 92701
714. 973. 2200 Voice
714. 973. 0203 Fax
LANDSCAPE ARCHITECTURE • URBAN DESIGN • PLANNING • RESOURCE ANALYSIS

NO	DATE	BY	DESCRIPTION
1			REVISIONS

DRAWN: JL	CHECKED: JK
DATE: 11/15/2023	SCALE: AS NOTED
PROJECT NUMBER: 2011700	

LANDSCAPE PLAN

DRAWING NUMBER: L2.2

BID SET 03/01/24

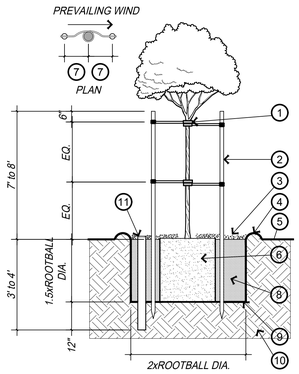

Detail Legend

1. TREE SUPPORT, BLACK CORDED RUBBER HOSE, SECURE TO THE POLE WITH GALV. NAIL AND CONNECTED WITH CINCH TIES, 4 PER TREE.
2. PLUMB LODGEPOLE TREE STAKE, 2"x10'-0". STAKE SHALL NOT PIERCE ROOTBALL AND SHALL EXTEND INTO UNDISTURBED SOIL.
3. KEEP 3" THICK LAYER OF ORGANIC MULCH 6" CLEAR OF TREE TRUNK AND 8' DIAMETER MULCH FOR NEW TREES.
4. FLOOD 3" DEEP WATER BASIN TO PLUMB TREE TRUNK & SET GRADE OF ROOTBALL
5. FINISH GRADE
6. ROOTBALL, INSTALL 2" ABOVE GRADE.
7. 12" FOR MDL TB24 FOR 15 GAL TREE OR 18" FOR MDL TB36 FOR 24" TO 36" BOX
8. SEE SPECS FOR AMMENDED BACKFILL MIX.
9. SCARIFY PLANTING PIT EDGE
10. SITE SOIL, UNDISTURBED
11. FILL 3" PERF. PIPE W/ 3/4" CRUSHED ROCK CAP w/ ATRIUM GRATE, FOR 24" BOX & LARGER, UNLESS INDICATED OTHERWISE BY OWNER'S (OR CITY'S) REPRESENTATIVE

NOTE: MIN. (4) FLEXIBLE TIES [TOP & BOTTOM] REQUIRED. HOLD TREE IN UPRIGHT POSITION. TREE TIES TO BE HIGH IN THE CANOPY FOR WIND PROTECTION.

A Tree Planting (Double Stake)

N.T.S.

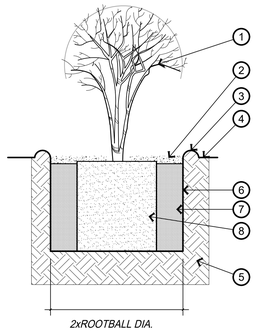

Detail Legend

1. SHRUB, 1 OR 5 GAL
2. KEEP 3" LAYER OF ORGANIC MULCH 3" CLEAR FROM PLANT STEM.
3. FLOOD & SETTLE 3" DEEP WATER BASIN TO PLUMB PLANT STEM (TO GRADE) AND SET GRADE OF ROOTBALL
4. FINISH GRADE
5. SITE SOIL, UNDISTURBED
6. SCARIFY ALL SIDES OF PLANTING PIT
7. SEE PLANTING SPEC. FOR AMMENDED BACKFILL MIX
8. PLANT ROOTBALL 1/2" ABOVE FINISH GRADE & LOOSEN ROOTS IF NECESSARY.

B Shrub Planting

N.T.S.

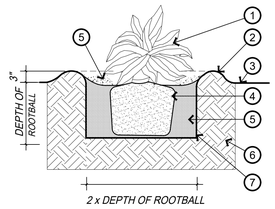

Detail Legend

1. SIZE AGAVE ACCORDING TO PLANTING LEGEND
2. GRADE WATER BASIN TO 3" MIN. DEPTH
3. FINISH GRADE
4. SEE SPECS FOR CACTUS BACKFILL MIX
5. KEEP 3" LAYER OF ORGANIC MULCH 6" CLEAR FROM PLANT CROWN.
6. SITE SOIL
7. SCARIFY ALL SIDES OF PLANTING PIT

C Agave planting

N.T.S.

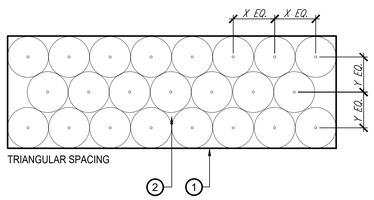

X AND Y = ON CENTER SPACING RE: PLANTING PLANS

1. EDGE OF PLANTING BED OR ADJACENT HARDSCAPE
2. PLANT SPACING AS PER PLANS

D Groundcover & Shrub Triangular Spacing

N.T.S.

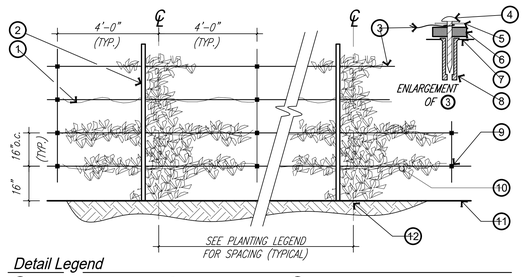

Detail Legend

1. ATTACH VINE TO WIRE USING 1" WIDE GREEN PLASTIC NURSERY TAPE @ 18" o.c.
2. REMOVE TEMPORARY NURSERY STAKE
3. 12 GA. GALVANIZED WIRE TWISTED AROUND LAG SCREW CONT. ALONG LENGTH OF WALL TO BE PLANTED
4. 1-1/2" X 1/4" DIA LAG SCREW
5. 1" GALVANIZED WASHER
6. PLASTIC SPACER
7. CMU BLOCK WALL
8. LEAD EXPANSION SHIELD
9. 1-1/2" EXPANSION SHIELD W/ 1/4" DIA. LAG SCREW SECURED TO CONC. BLOCK WALL
10. PLANT VINE PER SHRUB DETAIL
11. FINISH GRADE
12. 12" TRIANGLE BENDA BOARD VINE POCKET IN GRAVEL LOCATIONS. SEE SHEET L-2.1.

E Vine Planting

N.T.S.

Detail Legend

1. TREE TRUNK
2. ADJACENT PAVING IF APPLICABLE
3. SITE SOIL. UNDISTURBED
4. TOP OF ROOT BALL TO BE 2" ABOVE SPECIFIED SOIL MIX
5. COMPACTED SUBGRADE
6. SEE SPECS FOR AMMENDED BACKFILL MIX.
7. ROOT BARRIER -12" DEPTH WITHIN 5' OF PAVING.
8. TREE ANCHOR, DUCKBILL EARTH ANCHOR OR EQUAL - 4 PER TREE, DEPTH AND SIZE PER MNFR. RECOMMENDATION
9. UNDISTURBED SUBGRADE
10. ANCHOR MAT
11. FILL 3" PERF. PIPE W/ 3/4" CRUSHED ROCK CAP w/ ATRIUM GRATE, FOR 24" BOX & LARGER, UNLESS INDICATED OTHERWISE BY OWNER'S (OR CITY'S) REPRESENTATIVE

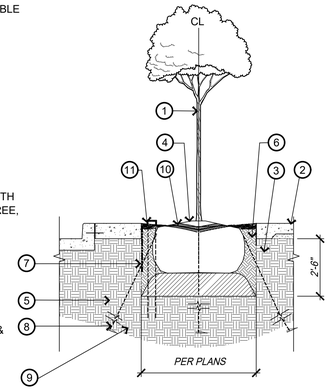

F Tree Planting (36" OR LARGER)

N.T.S.

1. WEED BARRIER FABRIC
2. 8" TO 18" DIA. RIVER ROCK COBBLE
3. SET STONE FLAT SIDE DOWN
4. EDGE OF CURB
5. FINISH SURFACE
6. SUB-GRADE
7. SAND GROUT
8. 2" SAND LEVELING BED

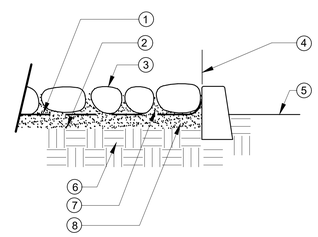

G Rock Coble Mulch

N.T.S.

TREE PROTECTION NOTES:

1. PRIOR TO START OF CONSTRUCTION WORK, TREE PROTECTION FENCING SHALL BE SETUP.
2. IF CONSTRUCTION WORK IS NEXT TO TREE WELL, CONTRACTOR TO PROCEED WITH CARE AS NOT TO DAMAGE TREE ROOTS.
3. IF TREE ROOTS ARE IN CONFLICT WITH CONSTRUCTION WORK, CONTRACTOR SHALL NOTIFY THE CITY TO PROCEEDING WITH WORK.
4. IF CONTRACTOR DOES NOT FOLLOW THE STANDARD GOOD PRACTICES AND ARBORIST'S RECOMMENDATIONS, ANY DAMAGE TO TREES SHALL BE THE RESPONSIBILITY OF THE CONTRACTOR. CITY SHALL DETERMINE THE REPLACEMENT VALUE.
5. DO NOT NAIL GRADE STAKES OR ANYTHING ELSE TO TREE.
6. NO EQUIPMENT IS TO BE OPERATED OR PARKED UNDER A TREE, NOR IS ANY MATERIAL TO BE STORED WITHIN THE DRIPLINE.
7. DO NOT STRIP TOPSOIL AROUND TREES. ANY VEGETATION TO BE REMOVED SHOULD BE REMOVED BY CUTTING AT GROUND LEVEL RATHER THAN PULLING OUT BY EQUIPMENT.
8. IN AREAS OF CONSTRUCTION, PROTECT SOIL SURFACE FROM TRAFFIC COMPACTION WITH 3" OF MULCH OR OVERLAPPING 3/4" PLYWOOD SHEETS.
9. FENCE SHALL BE STURDY AND VISIBLE
10. IF VEHICLE OR CONSTRUCTION MACHINERY TRAVELS WITHIN THE TREE PROTECTION ZONE, 6"- 12" WOOD MULCH OR A 3/4" PLYWOOD OVER 4" LAYER OF MULCH SHALL BE PLACED WITHIN THE TREE PROTECTION ZONE.
11. PROVIDE 12' MINIMUM MULCH AT EXISTING TREES.

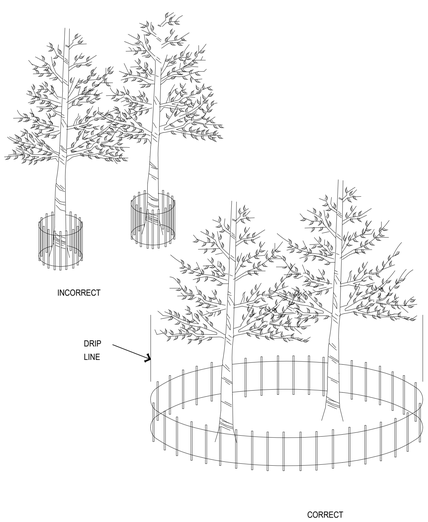

H Tree Protection Fencing

N.T.S.

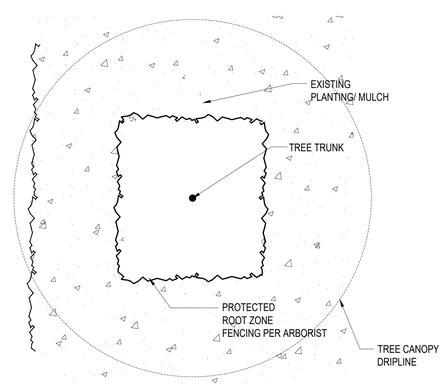

TREE IN PLANTING AREA

I Tree Protection Plan

N.T.S.

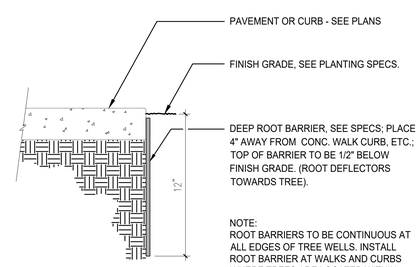

NOTE:
ROOT BARRIERS TO BE CONTINUOUS AT ALL EDGES OF TREE WELLS. INSTALL ROOT BARRIER AT WALKS AND CURBS WHERE TREES ARE LOCATED WITHIN 5'-0" OF PAVING, FOR A DISTANCE OF 8'-0" MIN. EACH SIDE OF CENTERLINE TREE.

SECTION

J Root Barrier

N.T.S.

PBK
RANCHO CUCAMONGA
8163 ROCHESTER AVENUE, SUITE 100
RANCHO CUCAMONGA, CA 91730
909-987-0909 P

ONTARIO FIRE DEPARTMENT ADMINISTRATION BUILDING

CITY OF ONTARIO

1420 E. FRANCIS STREET., ONTARIO, CA

LICENSED ARCHITECT — KELLEY NEEDHAM C-19064 Exp. Date 03/31/25 — STATE OF CALIFORNIA

LICENSED LANDSCAPE ARCHITECT — WOO-JUNG KIM 3650 — 30 April 2024 Expiration Date — STATE OF CALIFORNIA

CONSULTANT

CORNERSTONE STUDIOS, INC.
951 E Santa Ana Blvd.
Santa Ana, CA 92701
714. 973. 2200 Voice
714. 973. 0203 Fax
LANDSCAPE ARCHITECTURE • URBAN DESIGN • PLANNING • RESOURCE ANALYSIS

NO	DATE	BY	DESCRIPTION
1			

REVISIONS

DRAWN: JL	CHECKED: JK
DATE: 11/15/2023	SCALE: AS NOTED
PROJECT NUMBER: 2011700	

LANDSCAPE DETAILS

DRAWING NUMBER: L2.3

BID SET 03/01/24

PROJECT #: DC-21312-01
OPTION: 4 **REVISION:** D
PROJECT NAME: ONTARIO FIRE DISPATCH, TRAINING, & EOC ROOMS

russbassett
Russ Bassett Corporation
8189 Byron Road, Whittier, CA 90606
Tel: 800.350.2445 Fax: 562.698.8972
www.russbassett.com

QUOTE DATE: 2/14/2024
EXPIRATION DATE: 5/14/2024

CUSTOMER: ONTARIO FIRE DEPARTMENT
CONTACT: -
ADDRESS: 1408 E. FRANCIS ST.
ONTARIO CA 91761
PHONE: -
EMAIL: -

SALES EXECUTIVE: AVA RABAGO
ADDRESS: 8189 BYRON RD.
WHITTIER, CA 90606

PHONE: (562) 505-4719
EMAIL: arabago@russbassett.com

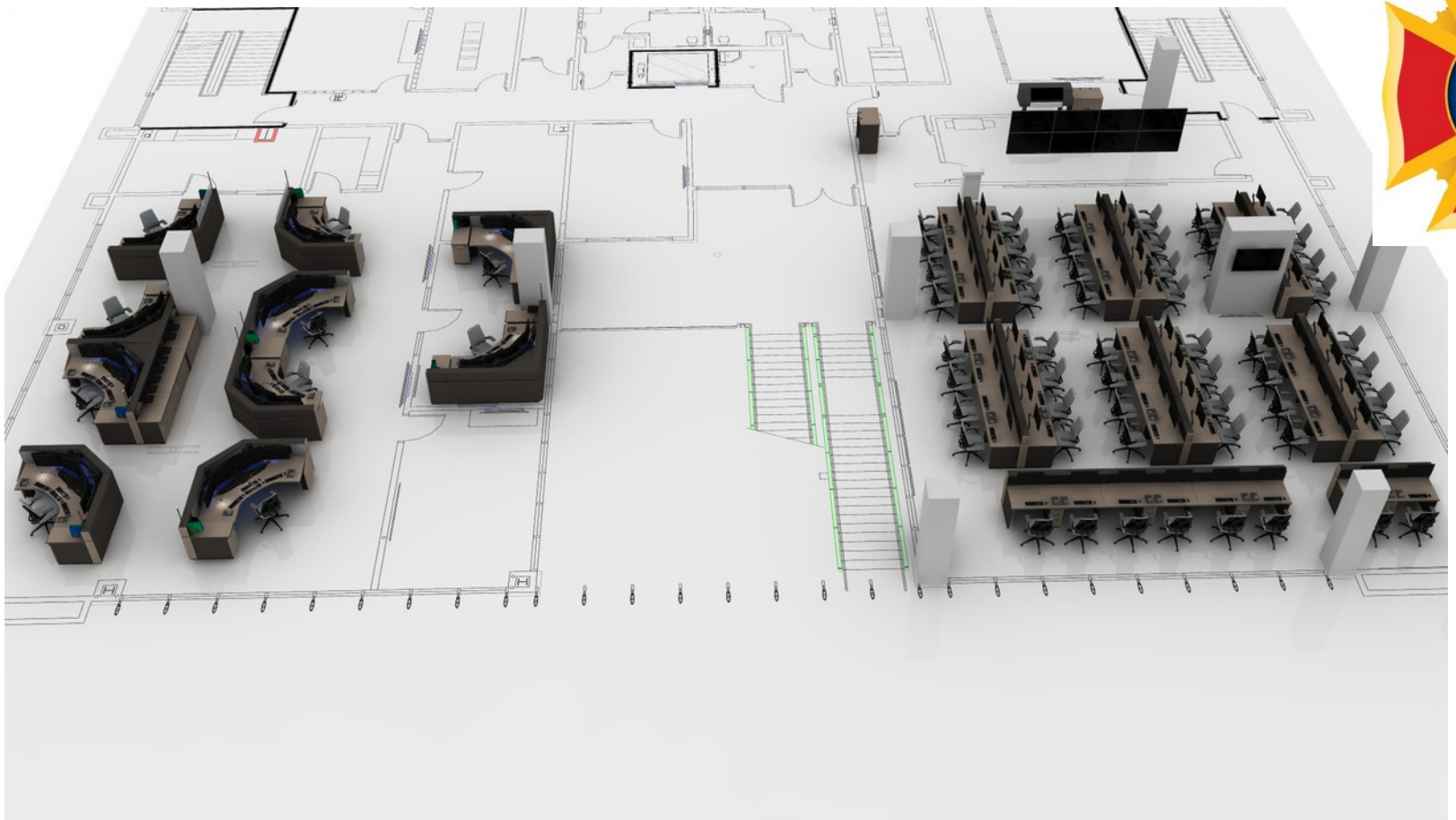

BID SET 03/01/24

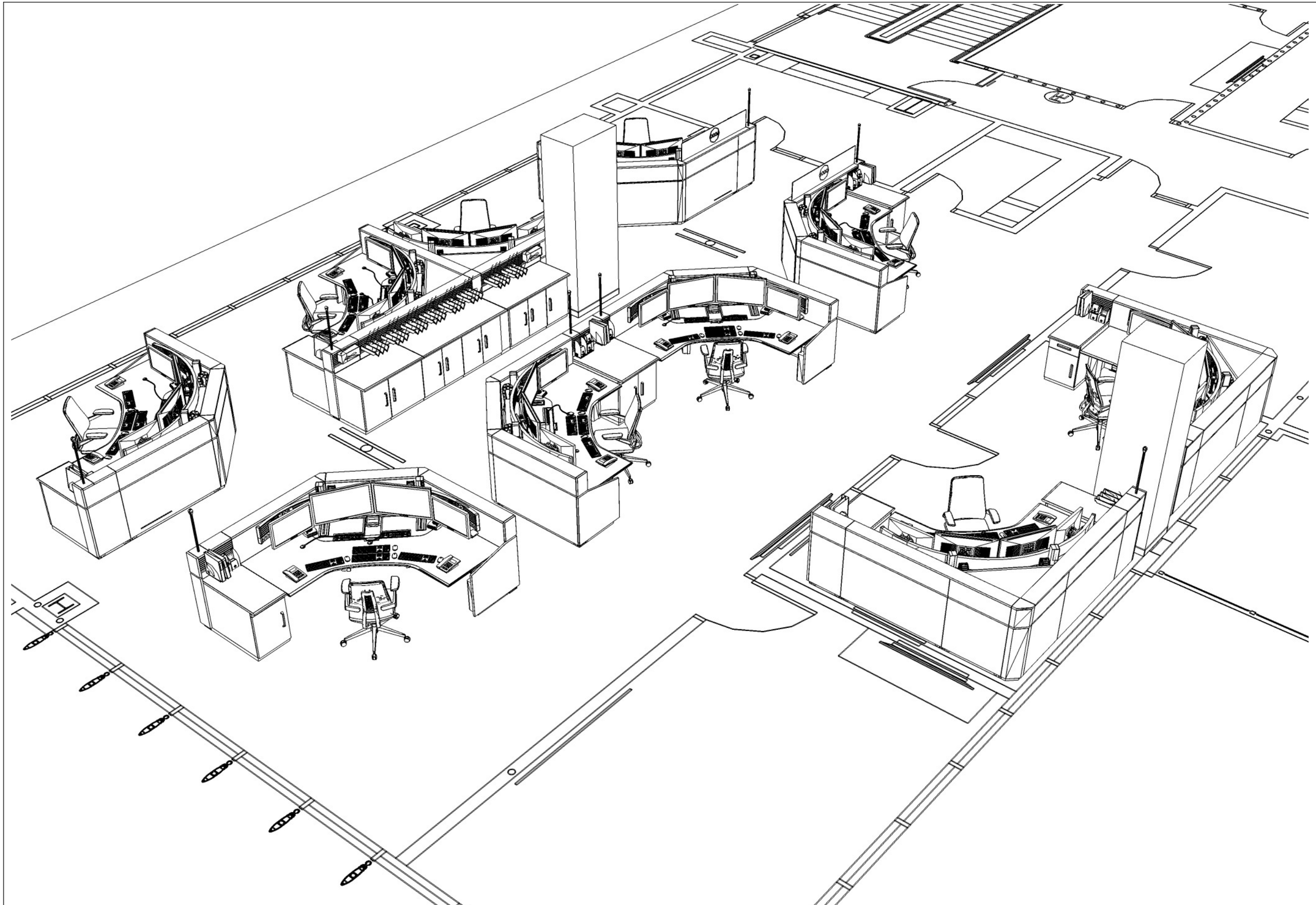

russbassett

8189 Byron Rd, Whittier, CA 90606 (800) 350-2445

CUSTOMER

CUSTOMER:

ONTARIO FIRE DEPARTMENT

PROJECT ADDRESS:
1408 E. FRANCIS ST.
ONTARIO CA 91761

PROJECT

PROJECT NAME:

ONTARIO FIRE DISPATCH, TRAINING, & EOC ROOMS

PROJECT INITIATION DATE:
6/2/2022

CONSOLE TYPE: FLEX

NUMBER OF POSITIONS: 65

SCALE:
NTS

SALES EXECUTIVE
AVA RABAGO

DESIGNER
JESSE GREEN

SHEET INDEX

NO.	
2	3D VIEW 1 - DISPATCH FLOOR & TRAINING
3	3D VIEW 2 - DISPATCH FLOOR & TRAINING
4	PLAN VIEW 1 - DISPATCH FLOOR & TRAINING
5	ELEVATION VIEW A - DISPATCH FLOOR
6	ELEVATION VIEW B - DISPATCH FLOOR
7	ELEVATION VIEW C - DISPATCH FLOOR
8	ELEVATION VIEW D - DISPATCH FLOOR
9	ELEVATION VIEW E - DISPATCH FLOOR
10	ELEVATION VIEW F - DISPATCH TRAINING
11	RENDERING 1 - DISPATCH FLOOR &
12	RENDERING 2 - DISPATCH FLOOR &
13	3D VIEW 3 - EOC
14	3D VIEW 4 - EOC
15	PLAN VIEW 2 - EOC
16	ELEVATION VIEW G - EOC
17	ELEVATION VIEW H - EOC
18	ELEVATION VIEW J - EOC
19	RENDERING 3 - EOC
20	RENDERING 4 - EOC
21	
22	
23	
24	
25	

REVISIONS

REV	DATE	DESCRIPTION	BY
A	06/02/22	2D/3D DRAWING W/ CALLOUTS	JG
B	06/15/23	UPDATED CAD, MINOR REVS	JG
C	02/09/24	COMBINE RMS & UPDATE	JG

SHEET DESCRIPTION
3D VIEW 1

RUSS BASSETT CORPORATION HEREBY EXPRESSLY RESERVES ITS COMMON LAW COPYRIGHT AND OTHER PROPERTY RIGHTS IN THESE PLANS. THESE PLANS ARE NOT TO BE COPIED, REPRODUCED OR CHANGED IN ANY FORM OR MANNER WHATSOEVER, NOR ARE THEY TO BE ASSIGNED TO ANY THIRD PARTY WITHOUT FIRST OBTAINING THE EXPRESS WRITTEN PERMISSION AND CONSENT OF RUSS BASSETT CORPORATION.

DRAWING #	OPT.	REV.	SHEET
DC-21312-01	4	D	2 / 19

BID SET 03/01/24

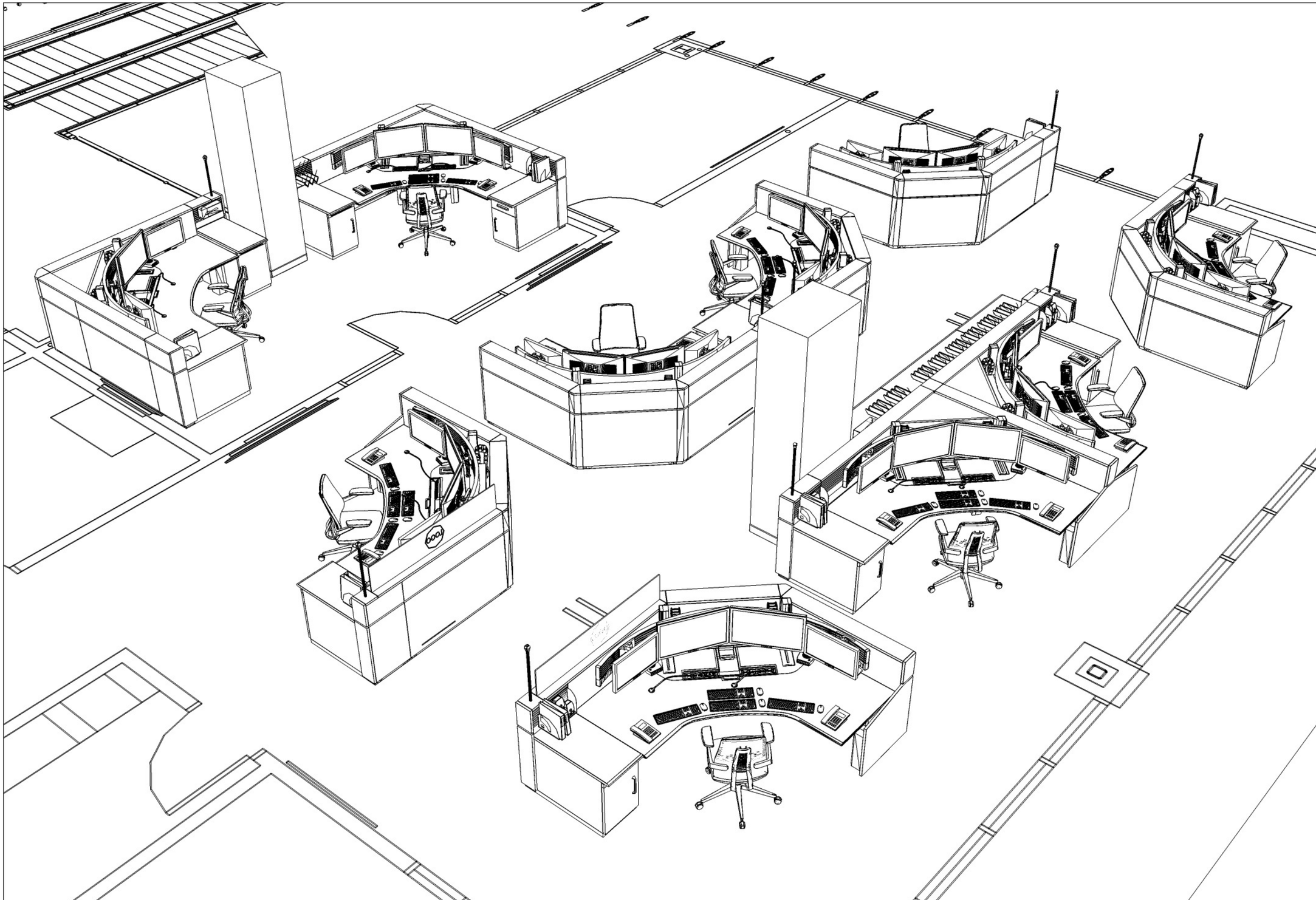

russbassett
8189 Byron Rd, Whittier, CA 90606 (800) 350-2445

CUSTOMER

CUSTOMER:

ONTARIO FIRE DEPARTMENT

PROJECT ADDRESS:
1408 E. FRANCIS ST.
ONTARIO CA 91761

PROJECT

PROJECT NAME:

ONTARIO FIRE DISPATCH, TRAINING, & EOC ROOMS

PROJECT INITIATION DATE:
6/2/2022

CONSOLE TYPE: FLEX

NUMBER OF POSITIONS: 65

SCALE:
NTS

SALES EXECUTIVE
AVA RABAGO

DESIGNER
JESSE GREEN

SHEET INDEX

NO.	
2	3D VIEW 1 - DISPATCH FLOOR & TRAINING
3	3D VIEW 2 - DISPATCH FLOOR & TRAINING
4	PLAN VIEW 1 - DISPATCH FLOOR & TRAINING
5	ELEVATION VIEW A - DISPATCH FLOOR
6	ELEVATION VIEW B - DISPATCH FLOOR
7	ELEVATION VIEW C - DISPATCH FLOOR
8	ELEVATION VIEW D - DISPATCH FLOOR
9	ELEVATION VIEW E - DISPATCH FLOOR
10	ELEVATION VIEW F - DISPATCH TRAINING
11	RENDERING 1 - DISPATCH FLOOR &
12	RENDERING 2 - DISPATCH FLOOR &
13	3D VIEW 3 - EOC
14	3D VIEW 4 - EOC
15	PLAN VIEW 2 - EOC
16	ELEVATION VIEW G - EOC
17	ELEVATION VIEW H - EOC
18	ELEVATION VIEW J - EOC
19	RENDERING 3 - EOC
20	RENDERING 4 - EOC
21	
22	
23	
24	
25	

REVISIONS

REV	DATE	DESCRIPTION	BY
A	06/02/22	2D/3D DRAWING W/ CALLOUTS	JG
B	06/15/23	UPDATED CAD, MINOR REVS	JG
C	02/09/24	COMBINE RMS & UPDATE	JG

SHEET DESCRIPTION
3D VIEW 2

RUSS BASSETT CORPORATION HEREBY EXPRESSLY RESERVES ITS COMMON LAW COPYRIGHT AND OTHER PROPERTY RIGHTS IN THESE PLANS. THESE PLANS ARE NOT TO BE COPIED, REPRODUCED OR CHANGED IN ANY FORM OR MANNER WHATSOEVER, NOR ARE THEY TO BE ASSIGNED TO ANY THIRD PARTY WITHOUT FIRST OBTAINING THE EXPRESS WRITTEN PERMISSION AND CONSENT OF RUSS BASSETT CORPORATION.

DRAWING #	OPT.	REV.	SHEET
DC-21312-01	4	D	3 / 19

BID SET 03/01/24

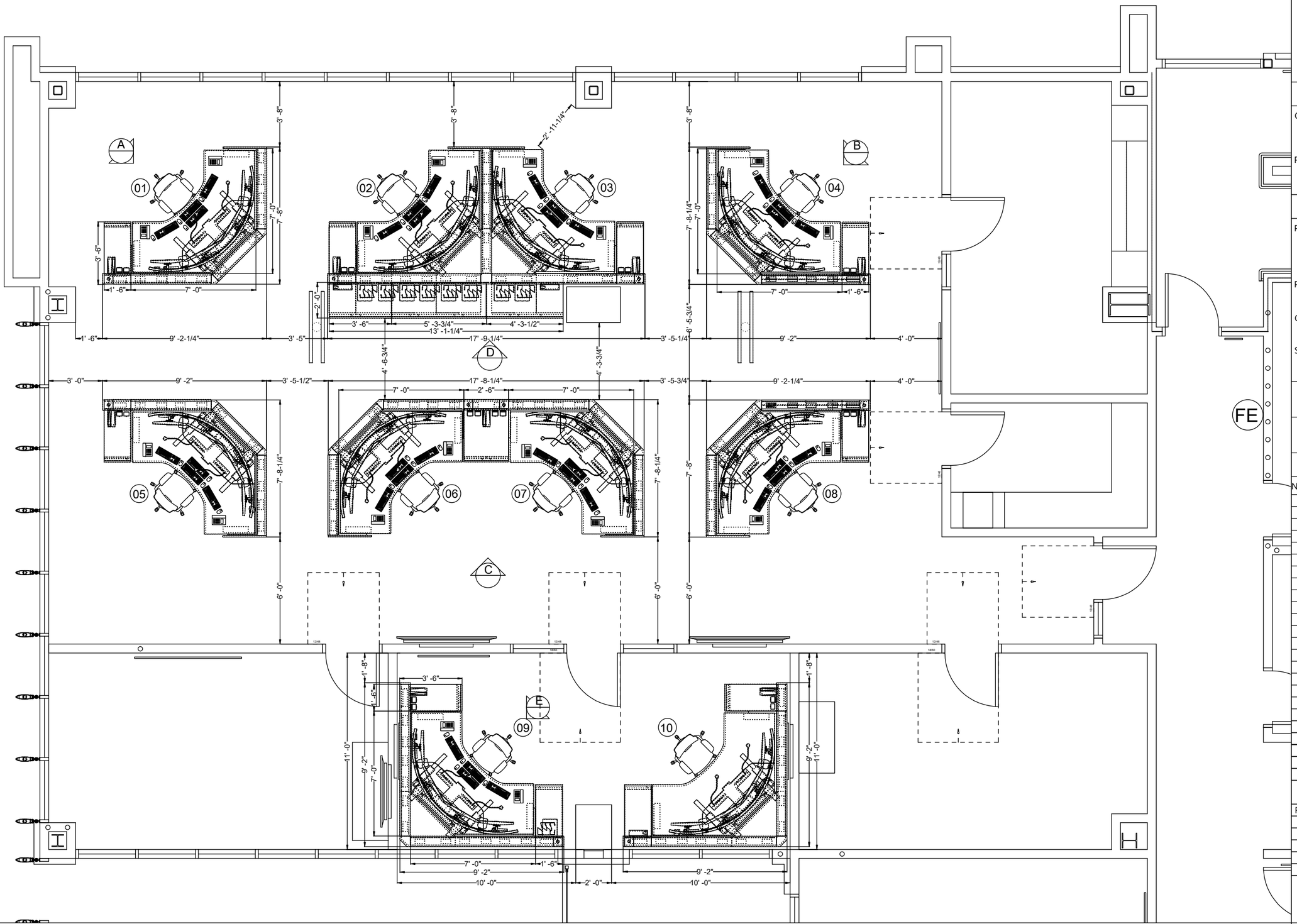

russbassett
8189 Byron Rd, Whittier, CA 90606 (800) 350-2445

CUSTOMER

CUSTOMER:

ONTARIO FIRE DEPARTMENT

PROJECT ADDRESS:
1408 E. FRANCIS ST.
ONTARIO CA 91761

PROJECT

PROJECT NAME:

ONTARIO FIRE DISPATCH, TRAINING, & EOC ROOMS

PROJECT INITIATION DATE:
6/2/2022

CONSOLE TYPE: FLEX

NUMBER OF POSITIONS: 65

SCALE:
3/16" - 1' - 0"

SALES EXECUTIVE
AVA RABAGO

DESIGNER
JESSE GREEN

SHEET INDEX

NO.	
2	3D VIEW 1 - DISPATCH FLOOR & TRAINING
3	3D VIEW 2 - DISPATCH FLOOR & TRAINING
4	PLAN VIEW 1 - DISPATCH FLOOR & TRAINING
5	ELEVATION VIEW A - DISPATCH FLOOR
6	ELEVATION VIEW B - DISPATCH FLOOR
7	ELEVATION VIEW C - DISPATCH FLOOR
8	ELEVATION VIEW D - DISPATCH FLOOR
9	ELEVATION VIEW E - DISPATCH FLOOR
10	ELEVATION VIEW F - DISPATCH TRAINING
11	RENDERING 1 - DISPATCH FLOOR &
12	RENDERING 2 - DISPATCH FLOOR &
13	3D VIEW 3 - EOC
14	3D VIEW 4 - EOC
15	PLAN VIEW 2 - EOC
16	ELEVATION VIEW G - EOC
17	ELEVATION VIEW H - EOC
18	ELEVATION VIEW J - EOC
19	RENDERING 3 - EOC
20	RENDERING 4 - EOC
21	
22	
23	
24	
25	

REVISIONS

REV	DATE	DESCRIPTION	BY
A	06/02/22	2D/3D DRAWING W/ CALLOUTS	JG
B	06/15/23	UPDATED CAD, MINOR REVS	JG
C	02/09/24	COMBINE RMS & UPDATE	JG

SHEET DESCRIPTION
PLAN VIEW 1

DRAWING #	OPT.	REV.	SHEET
DC-21312-01	4	D	4 / 19

RUSS BASSETT CORPORATION HEREBY EXPRESSLY RESERVES ITS COMMON LAW COPYRIGHT AND OTHER PROPERTY RIGHTS IN THESE PLANS. THESE PLANS ARE NOT TO BE COPIED, REPRODUCED OR CHANGED IN ANY FORM OR MANNER WHATSOEVER, NOR ARE THEY TO BE ASSIGNED TO ANY THIRD PARTY WITHOUT FIRST OBTAINING THE EXPRESS WRITTEN PERMISSION AND CONSENT OF RUSS BASSETT CORPORATION.

BID SET 03/01/24

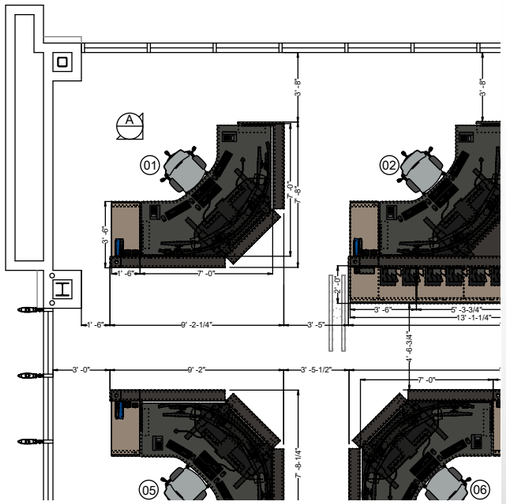

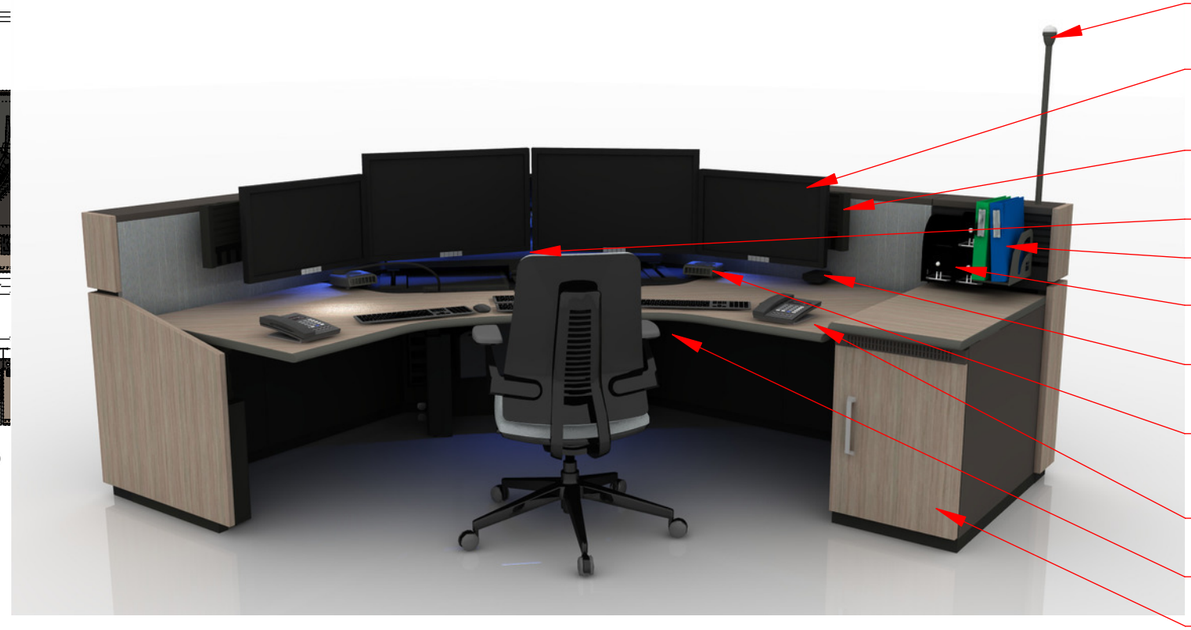

4 - COLOR DOME STATUS INDICATOR LIGHT

ARRAY SLATWALL MOUNTED MONITOR MOUNTS

SLATWALL MONITOR ARRAY W/ 11" ELECTRIC HEIGHT ADJUSTMENT & 8" MANUAL FOCAL DEPTH ADJUSTMENT

ABOVE SURFACE AMBIENT LIGHT (BLUE)

SLATWALL BINDER HOLDER

SLATWALL SINGLE & DOUBLE SPEAKER MOUNTS

POWER/USB CHARGER, EDGE-MOUNTED

PERSONAL COMFORT SYSTEM (PCS) W/ DESKTOP FANS AND FORCED AIR HEATERS UNDER SURFACE

HIGH PRESSURE LAMINATE WORK SURFACE W/ COMFORT EDGE

FOOTWELL LIGHT (BLUE)

18" W TECHNOLOGY STORAGE PEDESTAL W/ SLIDE-OUT SHELF

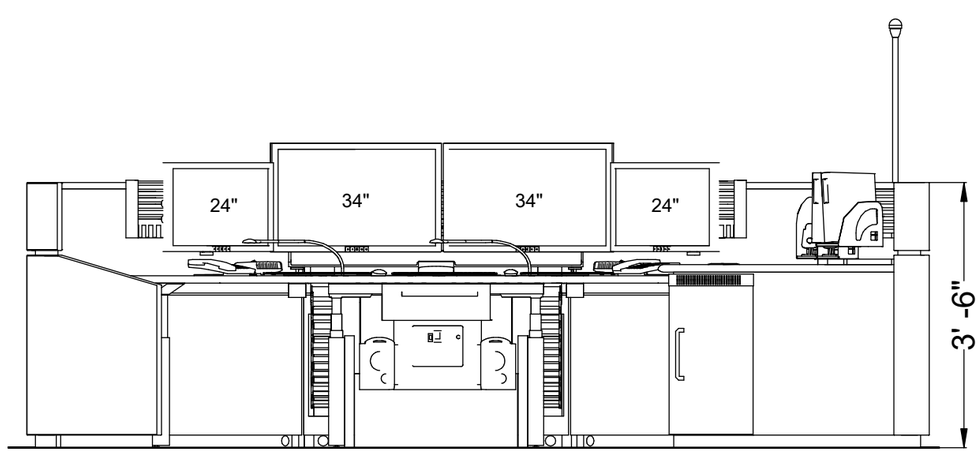

CONSOLE DASHBOARD WITH:

· QTY (2) GOOSENECK TASK LIGHT W/ DIMMER
· QTY (2) 2 - USB-A DATA PORTS
· 1 - USB-A & 1 - USB-C CHARGING PORTS
· PCS CONTROLS
· CONSOLE CONTROLS
· AMBIENT LIGHT DIMMER
· 2 - USB-A CHARGING PORTS

russbassett
8189 Byron Rd, Whittier, CA 90606 (800) 350-2445

CUSTOMER

CUSTOMER:

ONTARIO FIRE DEPARTMENT

PROJECT ADDRESS:
1408 E. FRANCIS ST.
ONTARIO CA 91761

PROJECT

PROJECT NAME:

ONTARIO FIRE DISPATCH, TRAINING, & EOC ROOMS

PROJECT INITIATION DATE:
6/2/2022

CONSOLE TYPE: FLEX

NUMBER OF POSITIONS: 65

SCALE:
1/2" - 1' - 0"

SALES EXECUTIVE
AVA RABAGO

DESIGNER
JESSE GREEN

SHEET INDEX

NO.	
2	3D VIEW 1 - DISPATCH FLOOR & TRAINING
3	3D VIEW 2 - DISPATCH FLOOR & TRAINING
4	PLAN VIEW 1 - DISPATCH FLOOR & TRAINING
5	ELEVATION VIEW A - DISPATCH FLOOR
6	ELEVATION VIEW B - DISPATCH FLOOR
7	ELEVATION VIEW C - DISPATCH FLOOR
8	ELEVATION VIEW D - DISPATCH FLOOR
9	ELEVATION VIEW E - DISPATCH FLOOR
10	ELEVATION VIEW F - DISPATCH TRAINING
11	RENDERING 1 - DISPATCH FLOOR &
12	RENDERING 2 - DISPATCH FLOOR &
13	3D VIEW 3 - EOC
14	3D VIEW 4 - EOC
15	PLAN VIEW 2 - EOC
16	ELEVATION VIEW G - EOC
17	ELEVATION VIEW H - EOC
18	ELEVATION VIEW J - EOC
19	RENDERING 3 - EOC
20	RENDERING 4 - EOC
21	
22	
23	
24	
25	

REVISIONS

REV	DATE	DESCRIPTION	BY
A	06/02/22	2D/3D DRAWING W/ CALLOUTS	JG
B	06/15/23	UPDATED CAD, MINOR REVS	JG
C	02/09/24	COMBINE RMS & UPDATE	JG

SHEET DESCRIPTION
ELEVATION A

RUSS BASSETT CORPORATION HEREBY EXPRESSLY RESERVES ITS COMMON LAW COPYRIGHT AND OTHER PROPERTY RIGHTS IN THESE PLANS. THESE PLANS ARE NOT TO BE COPIED, REPRODUCED OR CHANGED IN ANY FORM OR MANNER WHATSOEVER, NOR ARE THEY TO BE ASSIGNED TO ANY THIRD PARTY WITHOUT FIRST OBTAINING THE EXPRESS WRITTEN PERMISSION AND CONSENT OF RUSS BASSETT CORPORATION.

DRAWING #	OPT.	REV.	SHEET
DC-21312-01	4	D	5 / 19

BID SET 03/01/24

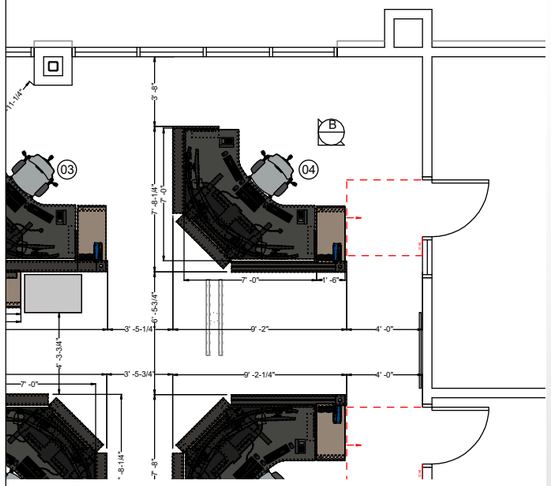

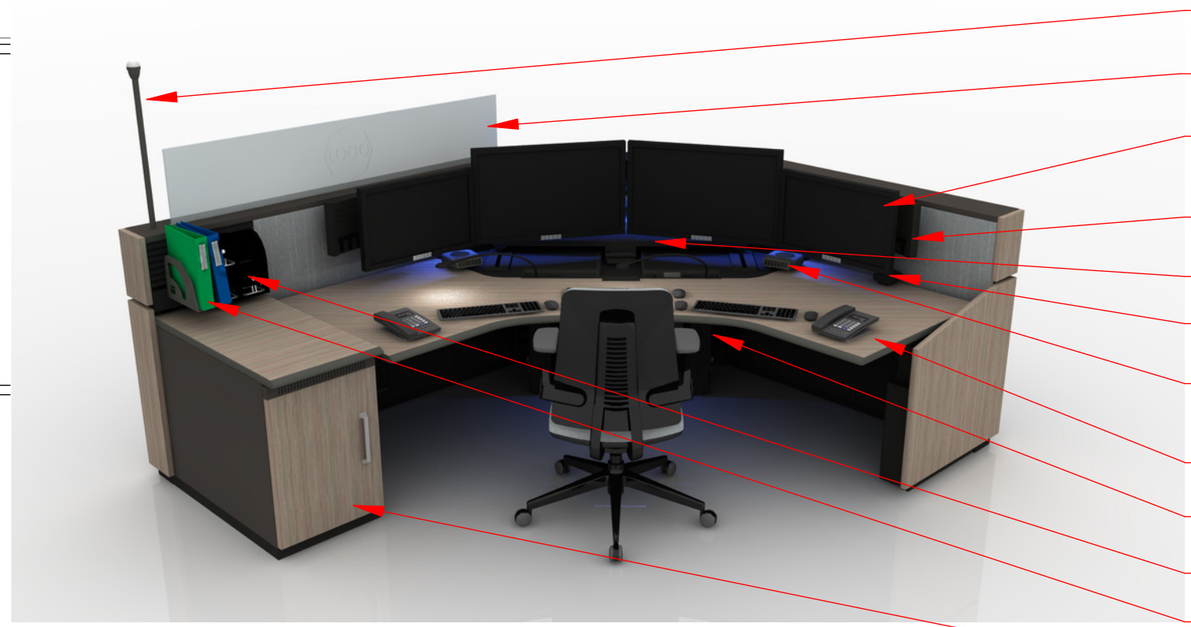

4 - COLOR DOME STATUS INDICATOR LIGHT

BLUE LED UP-LIT GLASS PARTITION W/ CUSTOM ETCHING

ARRAY SLATWALL MOUNTED MONITOR MOUNTS

SLATWALL MONITOR ARRAY W/ 11" ELECTRIC HEIGHT ADJUSTMENT & 8" MANUAL FOCAL DEPTH ADJUSTMENT

ABOVE SURFACE AMBIENT LIGHT (BLUE)

POWER/USB CHARGER, EDGE-MOUNTED

PERSONAL COMFORT SYSTEM (PCS) W/ DESKTOP FANS AND FORCED AIR HEATERS UNDER SURFACE

HIGH PRESSURE LAMINATE WORK SURFACE W/ COMFORT EDGE

FOOTWELL LIGHT (BLUE)

SLATWALL SINGLE & DOUBLE SPEAKER MOUNTS

SLATWALL BINDER HOLDER

18" W TECHNOLOGY STORAGE PEDESTAL W/ SLIDE-OUT SHELF

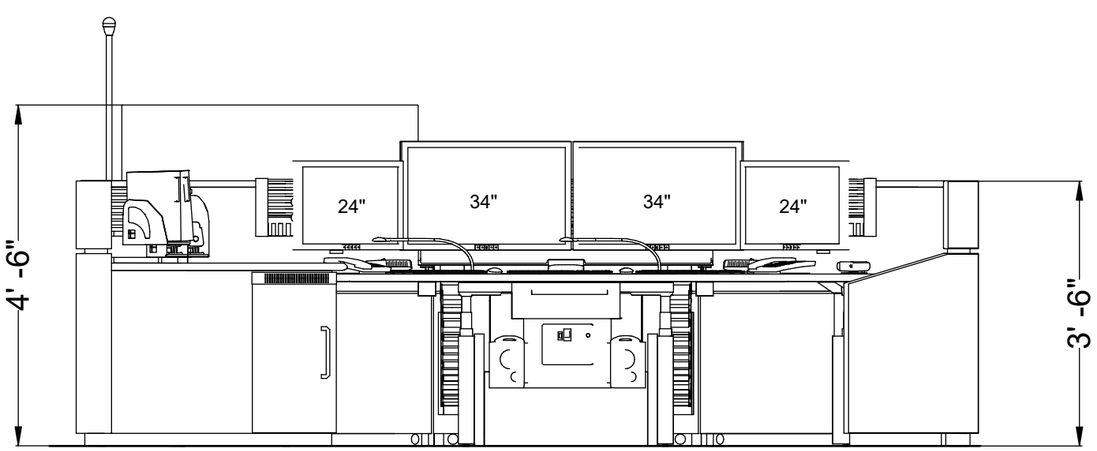

CONSOLE DASHBOARD WITH:

· QTY (2) GOOSENECK TASK LIGHT W/ DIMMER
· QTY (2) 2 - USB-A DATA PORTS
· 1 - USB-A & 1 - USB-C CHARGING PORTS
· PCS CONTROLS
· CONSOLE CONTROLS
· AMBIENT LIGHT DIMMER
· 2 - USB-A CHARGING PORTS

russbassett
8189 Byron Rd, Whittier, CA 90606 (800) 350-2445

CUSTOMER

CUSTOMER:

ONTARIO FIRE DEPARTMENT

PROJECT ADDRESS:
1408 E. FRANCIS ST.
ONTARIO CA 91761

PROJECT

PROJECT NAME:

ONTARIO FIRE DISPATCH, TRAINING, & EOC ROOMS

PROJECT INITIATION DATE:
6/2/2022

CONSOLE TYPE: FLEX

NUMBER OF POSITIONS: 65

SCALE:
1/2" - 1' - 0"

SALES EXECUTIVE
AVA RABAGO

DESIGNER
JESSE GREEN

SHEET INDEX

NO.	
2	3D VIEW 1 - DISPATCH FLOOR & TRAINING
3	3D VIEW 2 - DISPATCH FLOOR & TRAINING
4	PLAN VIEW 1 - DISPATCH FLOOR & TRAINING
5	ELEVATION VIEW A - DISPATCH FLOOR
6	ELEVATION VIEW B - DISPATCH FLOOR
7	ELEVATION VIEW C - DISPATCH FLOOR
8	ELEVATION VIEW D - DISPATCH FLOOR
9	ELEVATION VIEW E - DISPATCH FLOOR
10	ELEVATION VIEW F - DISPATCH TRAINING
11	RENDERING 1 - DISPATCH FLOOR &
12	RENDERING 2 - DISPATCH FLOOR &
13	3D VIEW 3 - EOC
14	3D VIEW 4 - EOC
15	PLAN VIEW 2 - EOC
16	ELEVATION VIEW G - EOC
17	ELEVATION VIEW H - EOC
18	ELEVATION VIEW J - EOC
19	RENDERING 3 - EOC
20	RENDERING 4 - EOC
21	
22	
23	
24	
25	

REVISIONS

REV	DATE	DESCRIPTION	BY
A	06/02/22	2D/3D DRAWING W/ CALLOUTS	JG
B	06/15/23	UPDATED CAD, MINOR REVS	JG
C	02/09/24	COMBINE RMS & UPDATE	JG

SHEET DESCRIPTION
ELEVATION B

DRAWING #	OPT.	REV.	SHEET
DC-21312-01	4	D	6 / 19

RUSS BASSETT CORPORATION HEREBY EXPRESSLY RESERVES ITS COMMON LAW COPYRIGHT AND OTHER PROPERTY RIGHTS IN THESE PLANS. THESE PLANS ARE NOT TO BE COPIED, REPRODUCED OR CHANGED IN ANY FORM OR MANNER WHATSOEVER, NOR ARE THEY TO BE ASSIGNED TO ANY THIRD PARTY WITHOUT FIRST OBTAINING THE EXPRESS WRITTEN PERMISSION AND CONSENT OF RUSS BASSETT CORPORATION.

BID SET 03/01/24

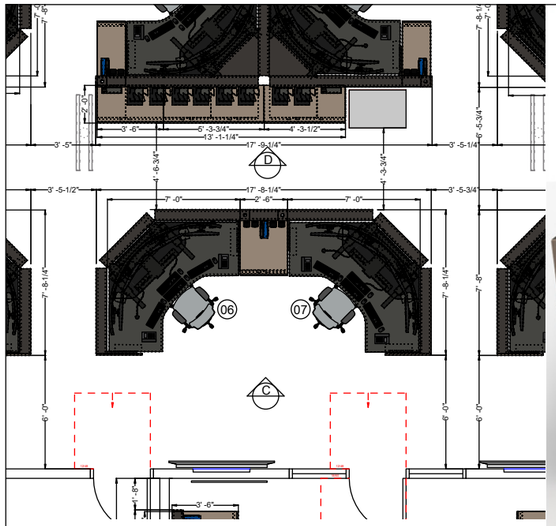

4 - COLOR DOME STATUS INDICATOR LIGHT

ARRAY SLATWALL MOUNTED MONITOR MOUNTS

SLATWALL MONITOR ARRAY W/ 11" ELECTRIC HEIGHT ADJUSTMENT & 8" MANUAL FOCAL DEPTH ADJUSTMENT

ABOVE SURFACE AMBIENT LIGHT (BLUE)

POWER/USB CHARGER, EDGE-MOUNTED

PERSONAL COMFORT SYSTEM (PCS) W/ DESKTOP FANS AND FORCED AIR HEATERS UNDER SURFACE

HIGH PRESSURE LAMINATE WORK SURFACE W/ COMFORT EDGE

FOOTWELL LIGHT (BLUE)

SLATWALL BINDER HOLDER

SLATWALL SINGLE & DOUBLE SPEAKER MOUNTS

30" W TECHNOLOGY STORAGE PEDESTAL W/ SLIDE-OUT SHELF

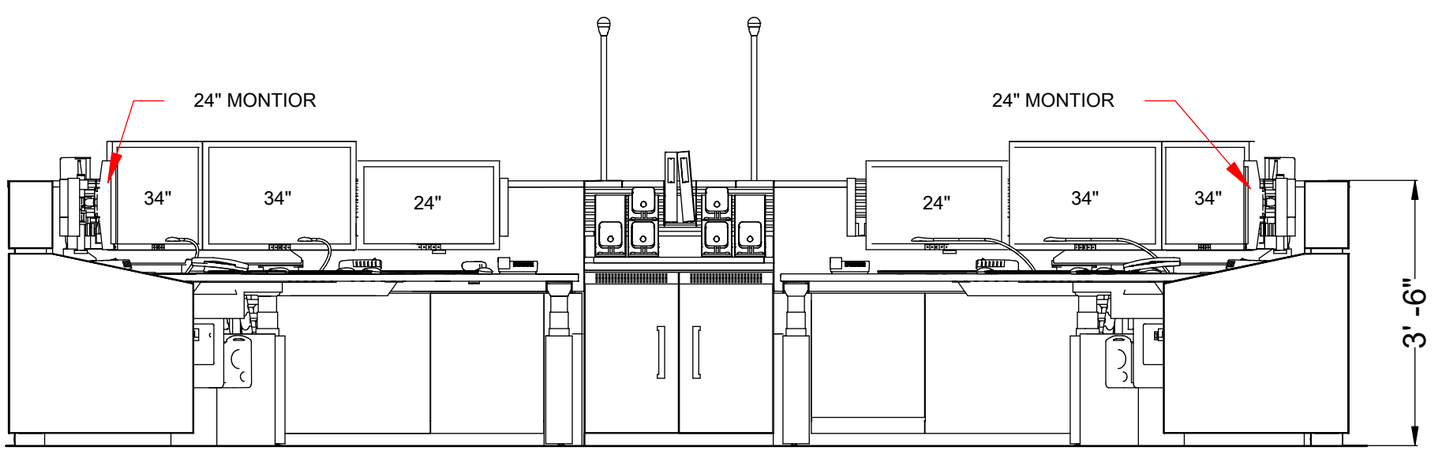

CONSOLE DASHBOARD WITH:

· QTY (2) GOOSENECK TASK LIGHT W/ DIMMER
· QTY (2) 2 - USB-A DATA PORTS
· 1 - USB-A & 1 - USB-C CHARGING PORTS
· PCS CONTROLS
· CONSOLE CONTROLS
· AMBIENT LIGHT DIMMER
· 2 - USB-A CHARGING PORTS

russbassett
8189 Byron Rd, Whittier, CA 90606 (800) 350-2445

CUSTOMER

CUSTOMER:

ONTARIO FIRE DEPARTMENT

PROJECT ADDRESS:
1408 E. FRANCIS ST.
ONTARIO CA 91761

PROJECT

PROJECT NAME:

ONTARIO FIRE DISPATCH, TRAINING, & EOC ROOMS

PROJECT INITIATION DATE:
6/2/2022

CONSOLE TYPE: FLEX

NUMBER OF POSITIONS: 65

SCALE:
1/2" - 1' - 0"

SALES EXECUTIVE
AVA RABAGO

DESIGNER
JESSE GREEN

SHEET INDEX

NO.	
2	3D VIEW 1 - DISPATCH FLOOR & TRAINING
3	3D VIEW 2 - DISPATCH FLOOR & TRAINING
4	PLAN VIEW 1 - DISPATCH FLOOR & TRAINING
5	ELEVATION VIEW A - DISPATCH FLOOR
6	ELEVATION VIEW B - DISPATCH FLOOR
7	ELEVATION VIEW C - DISPATCH FLOOR
8	ELEVATION VIEW D - DISPATCH FLOOR
9	ELEVATION VIEW E - DISPATCH FLOOR
10	ELEVATION VIEW F - DISPATCH TRAINING
11	RENDERING 1 - DISPATCH FLOOR &
12	RENDERING 2 - DISPATCH FLOOR &
13	3D VIEW 3 - EOC
14	3D VIEW 4 - EOC
15	PLAN VIEW 2 - EOC
16	ELEVATION VIEW G - EOC
17	ELEVATION VIEW H - EOC
18	ELEVATION VIEW J - EOC
19	RENDERING 3 - EOC
20	RENDERING 4 - EOC
21	
22	
23	
24	
25	

REVISIONS

REV	DATE	DESCRIPTION	BY
A	06/02/22	2D/3D DRAWING W/ CALLOUTS	JG
B	06/15/23	UPDATED CAD, MINOR REVS	JG
C	02/09/24	COMBINE RMS & UPDATE	JG

SHEET DESCRIPTION
ELEVATION C

DRAWING #	OPT.	REV.	SHEET
DC-21312-01	4	D	7 / 19

RUSS BASSETT CORPORATION HEREBY EXPRESSLY RESERVES ITS COMMON LAW COPYRIGHT AND OTHER PROPERTY RIGHTS IN THESE PLANS. THESE PLANS ARE NOT TO BE COPIED, REPRODUCED OR CHANGED IN ANY FORM OR MANNER WHATSOEVER, NOR ARE THEY TO BE ASSIGNED TO ANY THIRD PARTY WITHOUT FIRST OBTAINING THE EXPRESS WRITTEN PERMISSION AND CONSENT OF RUSS BASSETT CORPORATION.

BID SET 03/01/24

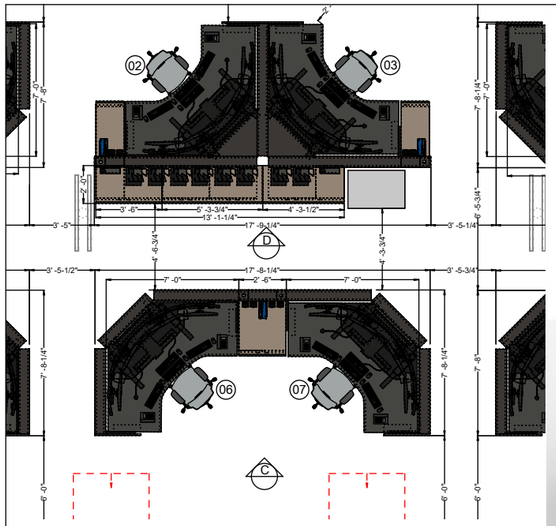

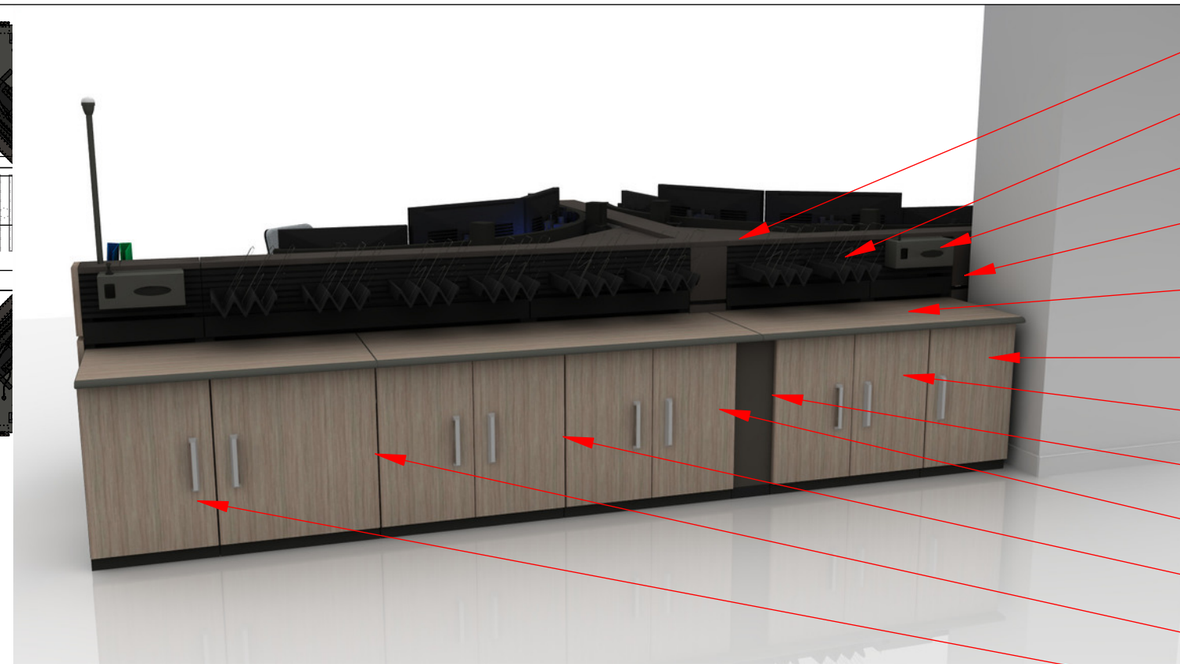

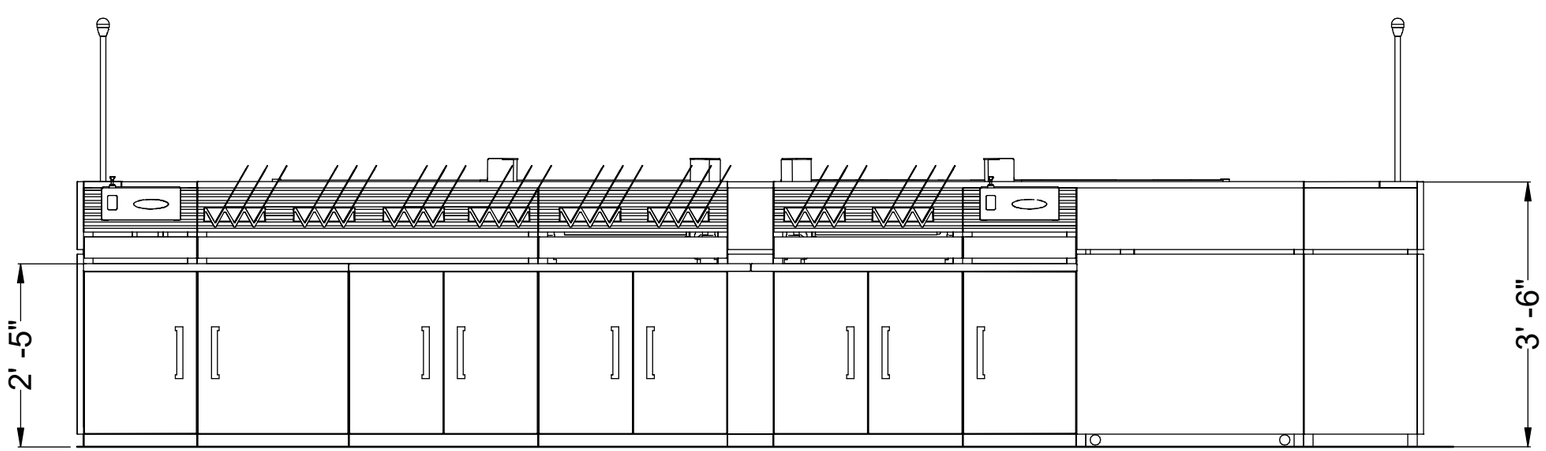

russbassett
8189 Byron Rd, Whittier, CA 90606 (800) 350-2445

CUSTOMER

CUSTOMER:

ONTARIO FIRE DEPARTMENT

PROJECT ADDRESS:
1408 E. FRANCIS ST.
ONTARIO CA 91761

PROJECT

PROJECT NAME:

ONTARIO FIRE DISPATCH, TRAINING, & EOC ROOMS

PROJECT INITIATION DATE:
6/2/2022

CONSOLE TYPE: FLEX

NUMBER OF POSITIONS: 65

SCALE:
1/2" - 1' - 0"

SALES EXECUTIVE
AVA RABAGO

DESIGNER
JESSE GREEN

SHEET INDEX

NO.	
2	3D VIEW 1 - DISPATCH FLOOR & TRAINING
3	3D VIEW 2 - DISPATCH FLOOR & TRAINING
4	PLAN VIEW 1 - DISPATCH FLOOR & TRAINING
5	ELEVATION VIEW A - DISPATCH FLOOR
6	ELEVATION VIEW B - DISPATCH FLOOR
7	ELEVATION VIEW C - DISPATCH FLOOR
8	ELEVATION VIEW D - DISPATCH FLOOR
9	ELEVATION VIEW E - DISPATCH FLOOR
10	ELEVATION VIEW F - DISPATCH TRAINING
11	RENDERING 1 - DISPATCH FLOOR &
12	RENDERING 2 - DISPATCH FLOOR &
13	3D VIEW 3 - EOC
14	3D VIEW 4 - EOC
15	PLAN VIEW 2 - EOC
16	ELEVATION VIEW G - EOC
17	ELEVATION VIEW H - EOC
18	ELEVATION VIEW J - EOC
19	RENDERING 3 - EOC
20	RENDERING 4 - EOC
21	
22	
23	
24	
25	

REVISIONS

REV	DATE	DESCRIPTION	BY
A	06/02/22	2D/3D DRAWING W/ CALLOUTS	JG
B	06/15/23	UPDATED CAD, MINOR REVS	JG
C	02/09/24	COMBINE RMS & UPDATE	JG

SHEET DESCRIPTION
ELEVATION D

DRAWING #	OPT.	REV.	SHEET
DC-21312-01	4	D	8 / 19

RUSS BASSETT CORPORATION HEREBY EXPRESSLY RESERVES ITS COMMON LAW COPYRIGHT AND OTHER PROPERTY RIGHTS IN THESE PLANS. THESE PLANS ARE NOT TO BE COPIED, REPRODUCED OR CHANGED IN ANY FORM OR MANNER WHATSOEVER, NOR ARE THEY TO BE ASSIGNED TO ANY THIRD PARTY WITHOUT FIRST OBTAINING THE EXPRESS WRITTEN PERMISSION AND CONSENT OF RUSS BASSETT CORPORATION.

BID SET 03/01/24

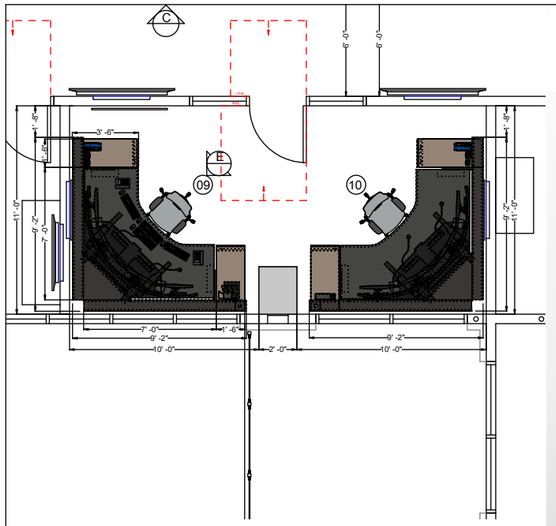

4 - COLOR DOME STATUS INDICATOR LIGHT

ARRAY SLATWALL MOUNTED MONITOR MOUNTS

SLATWALL MONITOR ARRAY W/ 11" ELECTRIC HEIGHT ADJUSTMENT & 8" MANUAL FOCAL DEPTH ADJUSTMENT

ABOVE SURFACE AMBIENT LIGHT (BLUE)

SLATWALL BINDER HOLDER

SLATWALL SINGLE & DOUBLE SPEAKER MOUNTS

POWER/USB CHARGER, EDGE-MOUNTED

PERSONAL COMFORT SYSTEM (PCS) W/ DESKTOP FANS AND FORCED AIR HEATERS UNDER SURFACE

HIGH PRESSURE LAMINATE WORK SURFACE W/ COMFORT EDGE

18" W BOX/CLOSED PEDESTAL

FOOTWELL LIGHT (BLUE)

18" W TECHNOLOGY STORAGE PEDESTAL W/ SLIDE-OUT SHELF

CONSOLE DASHBOARD WITH:

· QTY (2) GOOSENECK TASK LIGHT W/ DIMMER
· QTY (2) 2 - USB-A DATA PORTS
· 1 - USB-A & 1 - USB-C CHARGING PORTS
· PCS CONTROLS
· CONSOLE CONTROLS
· AMBIENT LIGHT DIMMER
· 2 - USB-A CHARGING PORTS

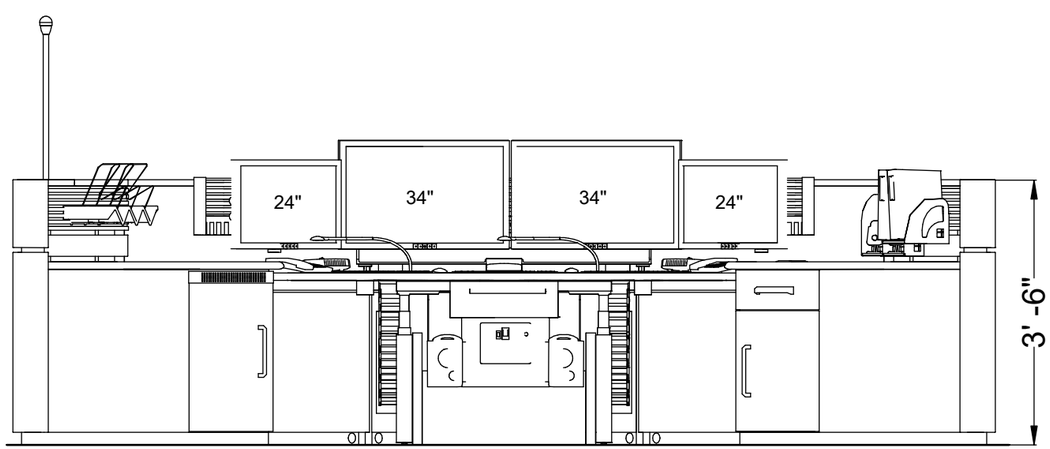

russbassett
8189 Byron Rd, Whittier, CA 90606 (800) 350-2445

CUSTOMER

CUSTOMER:

ONTARIO FIRE DEPARTMENT

PROJECT ADDRESS:
1408 E. FRANCIS ST.
ONTARIO CA 91761

PROJECT

PROJECT NAME:

ONTARIO FIRE DISPATCH, TRAINING, & EOC ROOMS

PROJECT INITIATION DATE:
6/2/2022

CONSOLE TYPE: FLEX

NUMBER OF POSITIONS: 65

SCALE:
1/2" - 1' - 0"

SALES EXECUTIVE
AVA RABAGO

DESIGNER
JESSE GREEN

SHEET INDEX

NO.	
2	3D VIEW 1 - DISPATCH FLOOR & TRAINING
3	3D VIEW 2 - DISPATCH FLOOR & TRAINING
4	PLAN VIEW 1 - DISPATCH FLOOR & TRAINING
5	ELEVATION VIEW A - DISPATCH FLOOR
6	ELEVATION VIEW B - DISPATCH FLOOR
7	ELEVATION VIEW C - DISPATCH FLOOR
8	ELEVATION VIEW D - DISPATCH FLOOR
9	ELEVATION VIEW E - DISPATCH FLOOR
10	ELEVATION VIEW F - DISPATCH TRAINING
11	RENDERING 1 - DISPATCH FLOOR &
12	RENDERING 2 - DISPATCH FLOOR &
13	3D VIEW 3 - EOC
14	3D VIEW 4 - EOC
15	PLAN VIEW 2 - EOC
16	ELEVATION VIEW G - EOC
17	ELEVATION VIEW H - EOC
18	ELEVATION VIEW J - EOC
19	RENDERING 3 - EOC
20	RENDERING 4 - EOC
21	
22	
23	
24	
25	

REVISIONS

REV	DATE	DESCRIPTION	BY
A	06/02/22	2D/3D DRAWING W/ CALLOUTS	JG
B	06/15/23	UPDATED CAD, MINOR REVS	JG
C	02/09/24	COMBINE RMS & UPDATE	JG

SHEET DESCRIPTION
ELEVATION E

RUSS BASSETT CORPORATION HEREBY EXPRESSLY RESERVES ITS COMMON LAW COPYRIGHT AND OTHER PROPERTY RIGHTS IN THESE PLANS. THESE PLANS ARE NOT TO BE COPIED, REPRODUCED OR CHANGED IN ANY FORM OR MANNER WHATSOEVER, NOR ARE THEY TO BE ASSIGNED TO ANY THIRD PARTY WITHOUT FIRST OBTAINING THE EXPRESS WRITTEN PERMISSION AND CONSENT OF RUSS BASSETT CORPORATION.

DRAWING #	OPT.	REV.	SHEET
DC-21312-01	4	D	9 / 19

BID SET 03/01/24

COLOR SCHEME:	LAGUNA - A	
FABRIC:	WATERFALL	
LAMINATE:	VERANDA TEAK	
POWDER COAT:	SUEDE	

russbassett
8189 Byron Rd, Whittier, CA 90606 (800) 350-2445

CUSTOMER

CUSTOMER:

ONTARIO FIRE DEPARTMENT

PROJECT ADDRESS:
1408 E. FRANCIS ST.
ONTARIO CA 91761

PROJECT

PROJECT NAME:

ONTARIO FIRE DISPATCH, TRAINING, & EOC ROOMS

PROJECT INITIATION DATE:
6/2/2022

CONSOLE TYPE: FLEX

NUMBER OF POSITIONS: 65

SCALE:
NTS

SALES EXECUTIVE
AVA RABAGO

DESIGNER
JESSE GREEN

SHEET INDEX

NO.	
2	3D VIEW 1 - DISPATCH FLOOR & TRAINING
3	3D VIEW 2 - DISPATCH FLOOR & TRAINING
4	PLAN VIEW 1 - DISPATCH FLOOR & TRAINING
5	ELEVATION VIEW A - DISPATCH FLOOR
6	ELEVATION VIEW B - DISPATCH FLOOR
7	ELEVATION VIEW C - DISPATCH FLOOR
8	ELEVATION VIEW D - DISPATCH FLOOR
9	ELEVATION VIEW E - DISPATCH FLOOR
10	ELEVATION VIEW F - DISPATCH TRAINING
11	RENDERING 1 - DISPATCH FLOOR &
12	RENDERING 2 - DISPATCH FLOOR &
13	3D VIEW 3 - EOC
14	3D VIEW 4 - EOC
15	PLAN VIEW 2 - EOC
16	ELEVATION VIEW G - EOC
17	ELEVATION VIEW H - EOC
18	ELEVATION VIEW J - EOC
19	RENDERING 3 - EOC
20	RENDERING 4 - EOC
21	
22	
23	
24	
25	

REVISIONS

REV	DATE	DESCRIPTION	BY
A	06/02/22	2D/3D DRAWING W/ CALLOUTS	JG
B	06/15/23	UPDATED CAD, MINOR REVS	JG
C	02/09/24	COMBINE RMS & UPDATE	JG

SHEET DESCRIPTION
RENDERING 1

RUSS BASSETT CORPORATION HEREBY EXPRESSLY RESERVES ITS COMMON LAW COPYRIGHT AND OTHER PROPERTY RIGHTS IN THESE PLANS. THESE PLANS ARE NOT TO BE COPIED, REPRODUCED OR CHANGED IN ANY FORM OR MANNER WHATSOEVER, NOR ARE THEY TO BE ASSIGNED TO ANY THIRD PARTY WITHOUT FIRST OBTAINING THE EXPRESS WRITTEN PERMISSION AND CONSENT OF RUSS BASSETT CORPORATION.

DRAWING #	OPT.	REV.	SHEET
DC-21312-01	4	D	10 / 19

BID SET 03/01/24

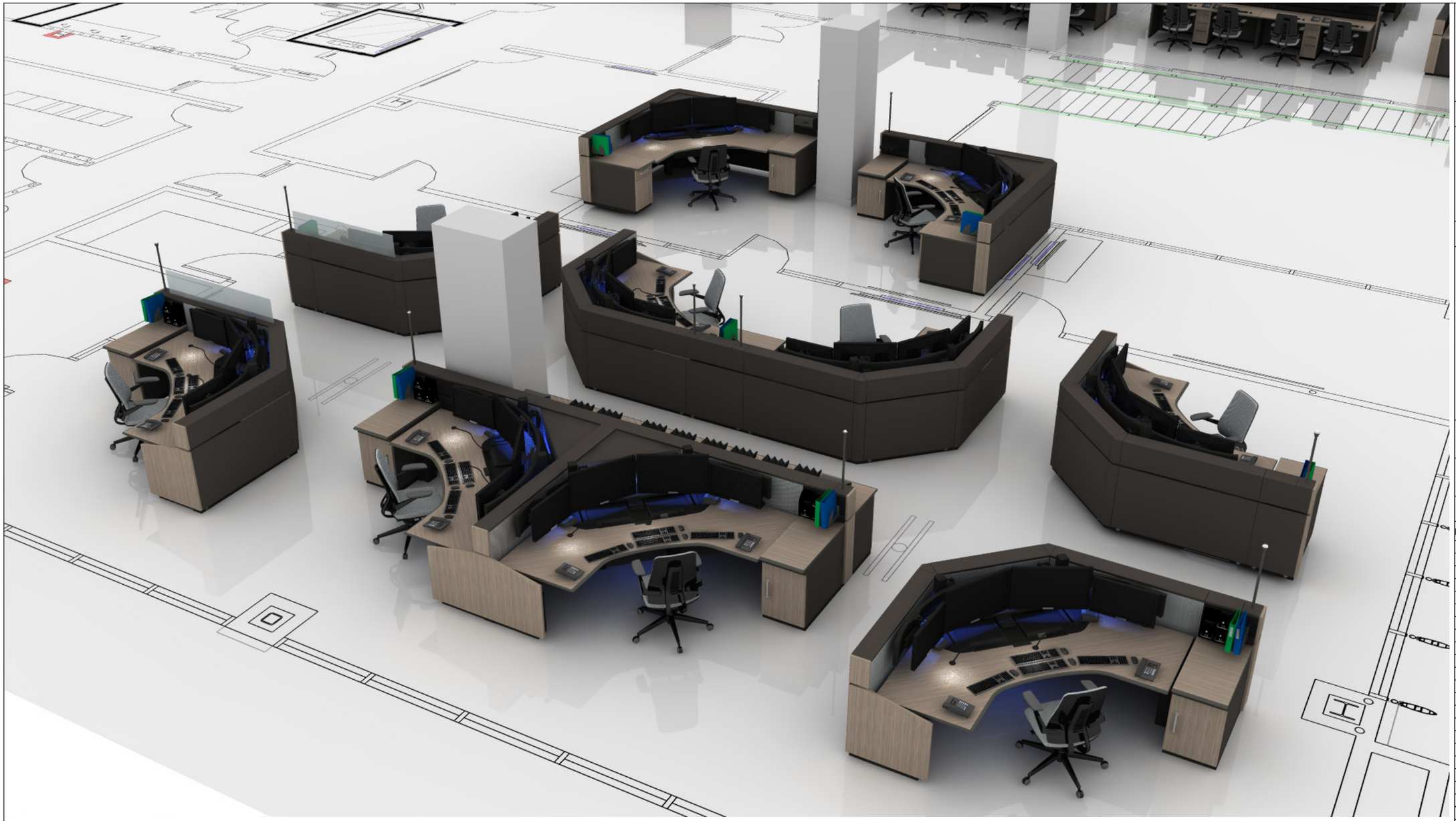

COLOR SCHEME:	LAGUNA - A	
FABRIC:	WATERFALL	
LAMINATE:	VERANDA TEAK	
POWDER COAT:	SUEDE	

russbassett
8189 Byron Rd, Whittier, CA 90606 (800) 350-2445

CUSTOMER

CUSTOMER:

ONTARIO FIRE DEPARTMENT

PROJECT ADDRESS:
1408 E. FRANCIS ST.
ONTARIO CA 91761

PROJECT

PROJECT NAME:

ONTARIO FIRE DISPATCH, TRAINING, & EOC ROOMS

PROJECT INITIATION DATE:
6/2/2022

CONSOLE TYPE: FLEX

NUMBER OF POSITIONS: 65

SCALE:
NTS

SALES EXECUTIVE
AVA RABAGO

DESIGNER
JESSE GREEN

SHEET INDEX

NO.	
2	3D VIEW 1 - DISPATCH FLOOR & TRAINING
3	3D VIEW 2 - DISPATCH FLOOR & TRAINING
4	PLAN VIEW 1 - DISPATCH FLOOR & TRAINING
5	ELEVATION VIEW A - DISPATCH FLOOR
6	ELEVATION VIEW B - DISPATCH FLOOR
7	ELEVATION VIEW C - DISPATCH FLOOR
8	ELEVATION VIEW D - DISPATCH FLOOR
9	ELEVATION VIEW E - DISPATCH FLOOR
10	ELEVATION VIEW F - DISPATCH TRAINING
11	RENDERING 1 - DISPATCH FLOOR &
12	RENDERING 2 - DISPATCH FLOOR &
13	3D VIEW 3 - EOC
14	3D VIEW 4 - EOC
15	PLAN VIEW 2 - EOC
16	ELEVATION VIEW G - EOC
17	ELEVATION VIEW H - EOC
18	ELEVATION VIEW J - EOC
19	RENDERING 3 - EOC
20	RENDERING 4 - EOC
21	
22	
23	
24	
25	

REVISIONS

REV	DATE	DESCRIPTION	BY
A	06/02/22	2D/3D DRAWING W/ CALLOUTS	JG
B	06/15/23	UPDATED CAD, MINOR REVS	JG
C	02/09/24	COMBINE RMS & UPDATE	JG

SHEET DESCRIPTION
RENDERING 2

RUSS BASSETT CORPORATION HEREBY EXPRESSLY RESERVES ITS COMMON LAW COPYRIGHT AND OTHER PROPERTY RIGHTS IN THESE PLANS. THESE PLANS ARE NOT TO BE COPIED, REPRODUCED OR CHANGED IN ANY FORM OR MANNER WHATSOEVER, NOR ARE THEY TO BE ASSIGNED TO ANY THIRD PARTY WITHOUT FIRST OBTAINING THE EXPRESS WRITTEN PERMISSION AND CONSENT OF RUSS BASSETT CORPORATION.

DRAWING #	OPT.	REV.	SHEET
DC-21312-01	4	D	11 / 19

BID SET 03/01/24

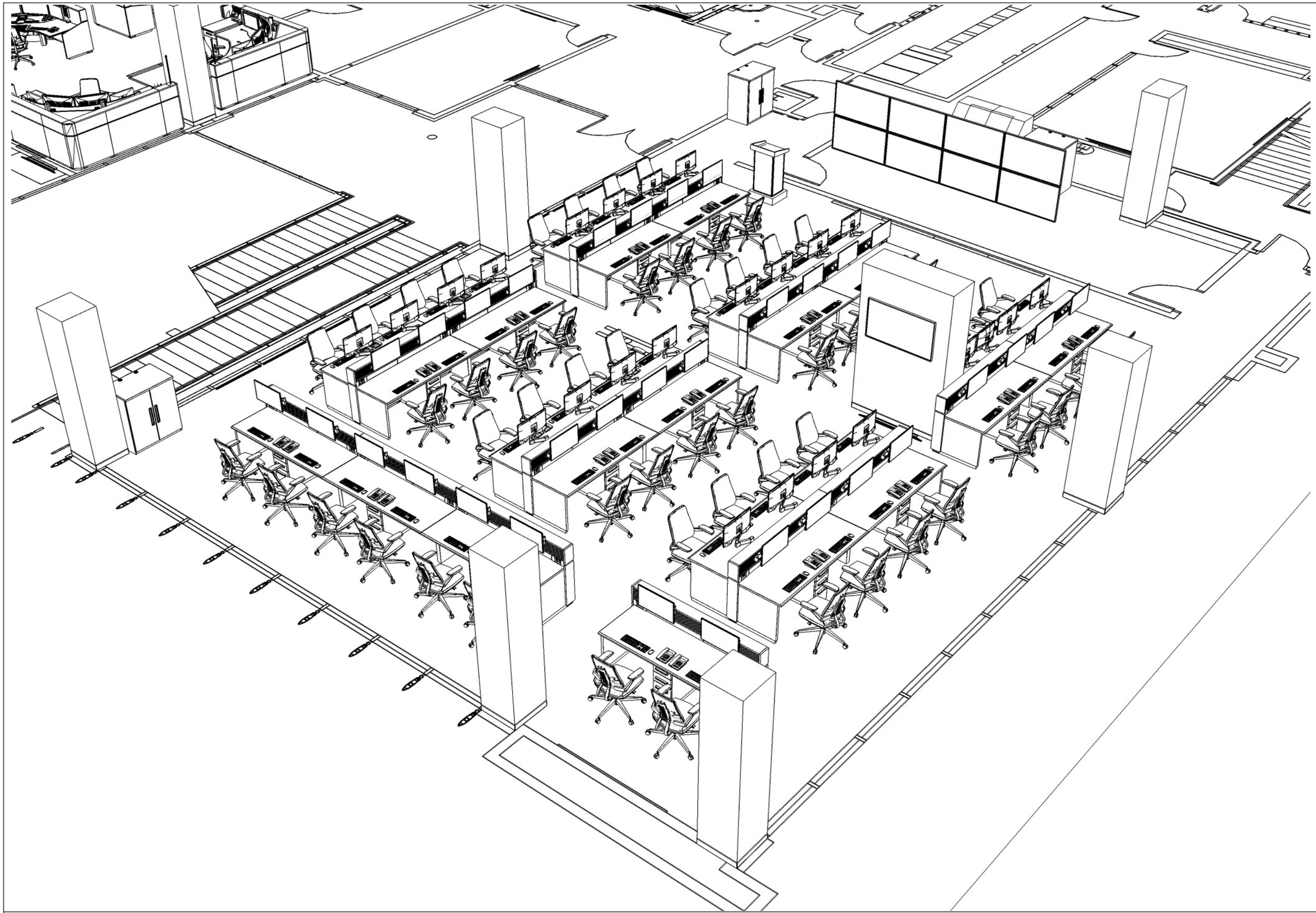

russbassett

8189 Byron Rd, Whittier, CA 90606 (800) 350-2445

CUSTOMER

CUSTOMER:

ONTARIO FIRE DEPARTMENT

PROJECT ADDRESS:
1408 E. FRANCIS ST.
ONTARIO CA 91761

PROJECT

PROJECT NAME:

ONTARIO FIRE DISPATCH, TRAINING, & EOC ROOMS

PROJECT INITIATION DATE:
6/2/2022

CONSOLE TYPE: FLEX

NUMBER OF POSITIONS: 65

SCALE:
NTS

SALES EXECUTIVE
AVA RABAGO

DESIGNER
JESSE GREEN

SHEET INDEX

NO.	
2	3D VIEW 1 - DISPATCH FLOOR & TRAINING
3	3D VIEW 2 - DISPATCH FLOOR & TRAINING
4	PLAN VIEW 1 - DISPATCH FLOOR & TRAINING
5	ELEVATION VIEW A - DISPATCH FLOOR
6	ELEVATION VIEW B - DISPATCH FLOOR
7	ELEVATION VIEW C - DISPATCH FLOOR
8	ELEVATION VIEW D - DISPATCH FLOOR
9	ELEVATION VIEW E - DISPATCH FLOOR
10	ELEVATION VIEW F - DISPATCH TRAINING
11	RENDERING 1 - DISPATCH FLOOR &
12	RENDERING 2 - DISPATCH FLOOR &
13	3D VIEW 3 - EOC
14	3D VIEW 4 - EOC
15	PLAN VIEW 2 - EOC
16	ELEVATION VIEW G - EOC
17	ELEVATION VIEW H - EOC
18	ELEVATION VIEW J - EOC
19	RENDERING 3 - EOC
20	RENDERING 4 - EOC
21	
22	
23	
24	
25	

REVISIONS

REV	DATE	DESCRIPTION	BY
A	06/02/22	2D/3D DRAWING W/ CALLOUTS	JG
B	06/15/23	UPDATED CAD, MINOR REVS	JG
C	02/09/24	COMBINE RMS & UPDATE	JG

SHEET DESCRIPTION
3D VIEW 3

RUSS BASSETT CORPORATION HEREBY EXPRESSLY RESERVES ITS COMMON LAW COPYRIGHT AND OTHER PROPERTY RIGHTS IN THESE PLANS. THESE PLANS ARE NOT TO BE COPIED, REPRODUCED OR CHANGED IN ANY FORM OR MANNER WHATSOEVER, NOR ARE THEY TO BE ASSIGNED TO ANY THIRD PARTY WITHOUT FIRST OBTAINING THE EXPRESS WRITTEN PERMISSION AND CONSENT OF RUSS BASSETT CORPORATION.

DRAWING #	OPT.	REV.	SHEET
DC-21312-01	4	D	12 / 19

BID SET 03/01/24

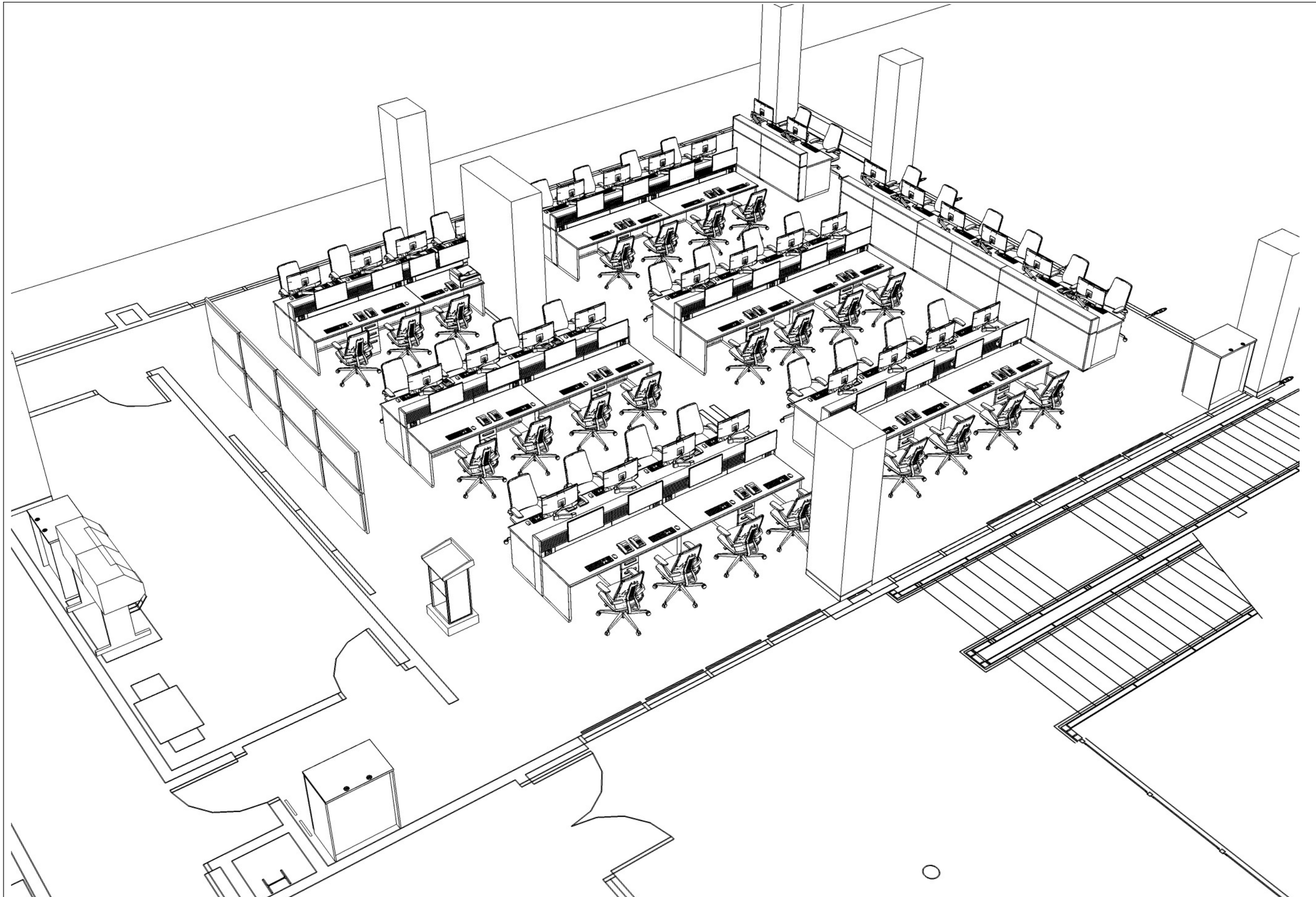

russbassett
8189 Byron Rd, Whittier, CA 90606 (800) 350-2445

CUSTOMER

CUSTOMER:

ONTARIO FIRE DEPARTMENT

PROJECT ADDRESS:
1408 E. FRANCIS ST.
ONTARIO CA 91761

PROJECT

PROJECT NAME:

ONTARIO FIRE DISPATCH, TRAINING, & EOC ROOMS

PROJECT INITIATION DATE:
6/2/2022

CONSOLE TYPE: FLEX

NUMBER OF POSITIONS: 65

SCALE:
NTS

SALES EXECUTIVE
AVA RABAGO

DESIGNER
JESSE GREEN

SHEET INDEX

NO.	
2	3D VIEW 1 - DISPATCH FLOOR & TRAINING
3	3D VIEW 2 - DISPATCH FLOOR & TRAINING
4	PLAN VIEW 1 - DISPATCH FLOOR & TRAINING
5	ELEVATION VIEW A - DISPATCH FLOOR
6	ELEVATION VIEW B - DISPATCH FLOOR
7	ELEVATION VIEW C - DISPATCH FLOOR
8	ELEVATION VIEW D - DISPATCH FLOOR
9	ELEVATION VIEW E - DISPATCH FLOOR
10	ELEVATION VIEW F - DISPATCH TRAINING
11	RENDERING 1 - DISPATCH FLOOR &
12	RENDERING 2 - DISPATCH FLOOR &
13	3D VIEW 3 - EOC
14	3D VIEW 4 - EOC
15	PLAN VIEW 2 - EOC
16	ELEVATION VIEW G - EOC
17	ELEVATION VIEW H - EOC
18	ELEVATION VIEW J - EOC
19	RENDERING 3 - EOC
20	RENDERING 4 - EOC
21	
22	
23	
24	
25	

REVISIONS

REV	DATE	DESCRIPTION	BY
A	06/02/22	2D/3D DRAWING W/ CALLOUTS	JG
B	06/15/23	UPDATED CAD, MINOR REVS	JG
C	02/09/24	COMBINE RMS & UPDATE	JG

SHEET DESCRIPTION
3D VIEW 4

RUSS BASSETT CORPORATION HEREBY EXPRESSLY RESERVES ITS COMMON LAW COPYRIGHT AND OTHER PROPERTY RIGHTS IN THESE PLANS. THESE PLANS ARE NOT TO BE COPIED, REPRODUCED OR CHANGED IN ANY FORM OR MANNER WHATSOEVER, NOR ARE THEY TO BE ASSIGNED TO ANY THIRD PARTY WITHOUT FIRST OBTAINING THE EXPRESS WRITTEN PERMISSION AND CONSENT OF RUSS BASSETT CORPORATION.

DRAWING #	OPT.	REV.	SHEET
DC-21312-01	4	D	13 / 19

BID SET 03/01/24

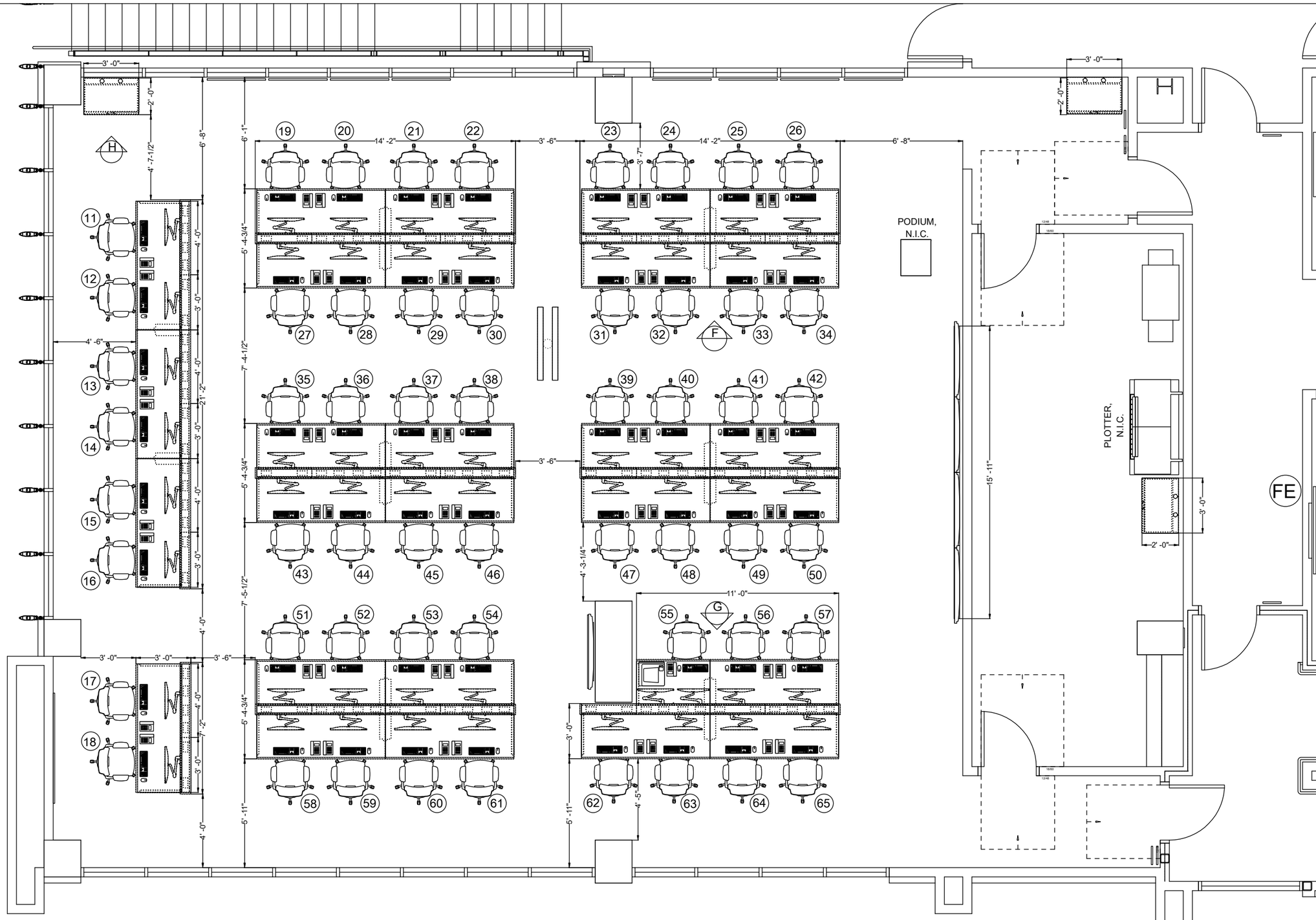

russbassett
8189 Byron Rd, Whittier, CA 90606 (800) 350-2445

CUSTOMER

CUSTOMER:

ONTARIO FIRE DEPARTMENT

PROJECT ADDRESS:
1408 E. FRANCIS ST.
ONTARIO CA 91761

PROJECT

PROJECT NAME:

ONTARIO FIRE DISPATCH, TRAINING, & EOC ROOMS

PROJECT INITIATION DATE:
6/2/2022

CONSOLE TYPE: FLEX
NUMBER OF POSITIONS: 65

SCALE:
3/16" - 1' - 0"

SALES EXECUTIVE
AVA RABAGO

DESIGNER
JESSE GREEN

SHEET INDEX

NO.	
2	3D VIEW 1 - DISPATCH FLOOR & TRAINING
3	3D VIEW 2 - DISPATCH FLOOR & TRAINING
4	PLAN VIEW 1 - DISPATCH FLOOR & TRAINING
5	ELEVATION VIEW A - DISPATCH FLOOR
6	ELEVATION VIEW B - DISPATCH FLOOR
7	ELEVATION VIEW C - DISPATCH FLOOR
8	ELEVATION VIEW D - DISPATCH FLOOR
9	ELEVATION VIEW E - DISPATCH FLOOR
10	ELEVATION VIEW F - DISPATCH TRAINING
11	RENDERING 1 - DISPATCH FLOOR &
12	RENDERING 2 - DISPATCH FLOOR &
13	3D VIEW 3 - EOC
14	3D VIEW 4 - EOC
15	PLAN VIEW 2 - EOC
16	ELEVATION VIEW G - EOC
17	ELEVATION VIEW H - EOC
18	ELEVATION VIEW J - EOC
19	RENDERING 3 - EOC
20	RENDERING 4 - EOC
21	
22	
23	
24	
25	

REVISIONS

REV	DATE	DESCRIPTION	BY
A	06/02/22	2D/3D DRAWING W/ CALLOUTS	JG
B	06/15/23	UPDATED CAD, MINOR REVS	JG
C	02/09/24	COMBINE RMS & UPDATE	JG

SHEET DESCRIPTION
PLAN VIEW 2

RUSS BASSETT CORPORATION HEREBY EXPRESSLY RESERVES ITS COMMON LAW COPYRIGHT AND OTHER PROPERTY RIGHTS IN THESE PLANS. THESE PLANS ARE NOT TO BE COPIED, REPRODUCED OR CHANGED IN ANY FORM OR MANNER WHATSOEVER, NOR ARE THEY TO BE ASSIGNED TO ANY THIRD PARTY WITHOUT FIRST OBTAINING THE EXPRESS WRITTEN PERMISSION AND CONSENT OF RUSS BASSETT CORPORATION.

DRAWING #	OPT.	REV.	SHEET
DC-21312-01	4	D	14 / 19

BID SET 03/01/24

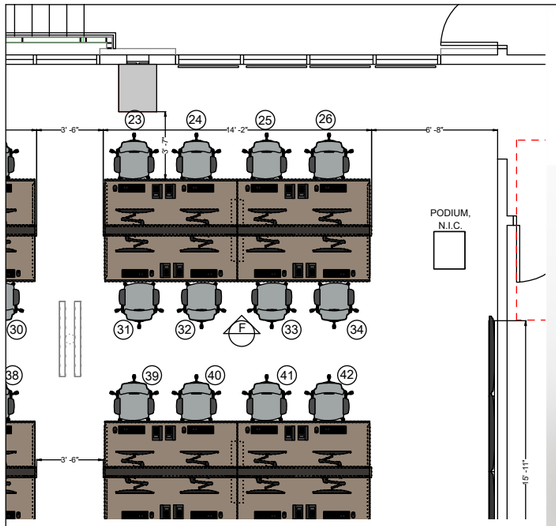

ARTICULATING MONITOR ARMS

LIFT-OFF STEEL TOP CAP

SLATWALL FOR MOUNTING
MONITOR ARMS & ACCESSORIES

CONVENIENCE OUTLET -
2 - 110v POWER OUTLETS, 1 - USB-A &
1 - USB-C CHARGING PORTS
AND 3 CONFIGURABLE DATA PORTS

FULL WIDTH QUICK RELEASE CABLE
MANAGEMENT FLIPPER DOOR

HIGH PRESSURE LAMINATE WORK
SURFACE W/ COMFORT EDGE

INTERIOR FRAME ACCESS PANEL

12" W BOX/BOX/FILE PEDESTAL

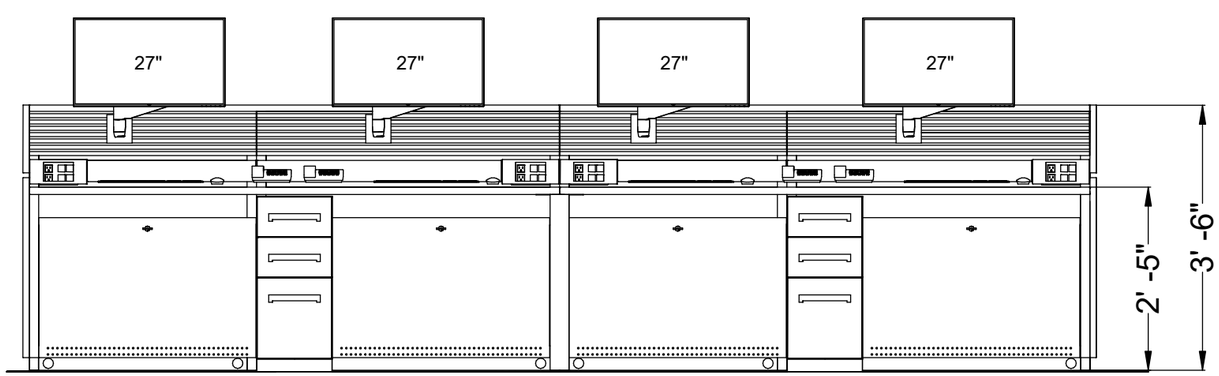

russbassett
8189 Byron Rd, Whittier, CA 90606 (800) 350-2445

CUSTOMER

CUSTOMER:

ONTARIO FIRE DEPARTMENT

PROJECT ADDRESS:
1408 E. FRANCIS ST.
ONTARIO CA 91761

PROJECT

PROJECT NAME:

ONTARIO FIRE DISPATCH, TRAINING, & EOC ROOMS

PROJECT INITIATION DATE:
6/2/2022

CONSOLE TYPE: FLEX

NUMBER OF POSITIONS: 65

SCALE:
1/2" - 1' - 0"

SALES EXECUTIVE
AVA RABAGO

DESIGNER
JESSE GREEN

SHEET INDEX

NO.	
2	3D VIEW 1 - DISPATCH FLOOR & TRAINING
3	3D VIEW 2 - DISPATCH FLOOR & TRAINING
4	PLAN VIEW 1 - DISPATCH FLOOR & TRAINING
5	ELEVATION VIEW A - DISPATCH FLOOR
6	ELEVATION VIEW B - DISPATCH FLOOR
7	ELEVATION VIEW C - DISPATCH FLOOR
8	ELEVATION VIEW D - DISPATCH FLOOR
9	ELEVATION VIEW E - DISPATCH FLOOR
10	ELEVATION VIEW F - DISPATCH TRAINING
11	RENDERING 1 - DISPATCH FLOOR &
12	RENDERING 2 - DISPATCH FLOOR &
13	3D VIEW 3 - EOC
14	3D VIEW 4 - EOC
15	PLAN VIEW 2 - EOC
16	ELEVATION VIEW G - EOC
17	ELEVATION VIEW H - EOC
18	ELEVATION VIEW J - EOC
19	RENDERING 3 - EOC
20	RENDERING 4 - EOC
21	
22	
23	
24	
25	

REVISIONS

REV	DATE	DESCRIPTION	BY
A	06/02/22	2D/3D DRAWING W/ CALLOUTS	JG
B	06/15/23	UPDATED CAD, MINOR REVS	JG
C	02/09/24	COMBINE RMS & UPDATE	JG

SHEET DESCRIPTION
ELEVATION F

DRAWING #	OPT.	REV.	SHEET
DC-21312-01	4	D	15 / 19

RUSS BASSETT CORPORATION HEREBY EXPRESSLY RESERVES ITS COMMON LAW COPYRIGHT AND OTHER PROPERTY RIGHTS IN THESE PLANS. THESE PLANS ARE NOT TO BE COPIED, REPRODUCED OR CHANGED IN ANY FORM OR MANNER WHATSOEVER, NOR ARE THEY TO BE ASSIGNED TO ANY THIRD PARTY WITHOUT FIRST OBTAINING THE EXPRESS WRITTEN PERMISSION AND CONSENT OF RUSS BASSETT CORPORATION.

BID SET 03/01/24

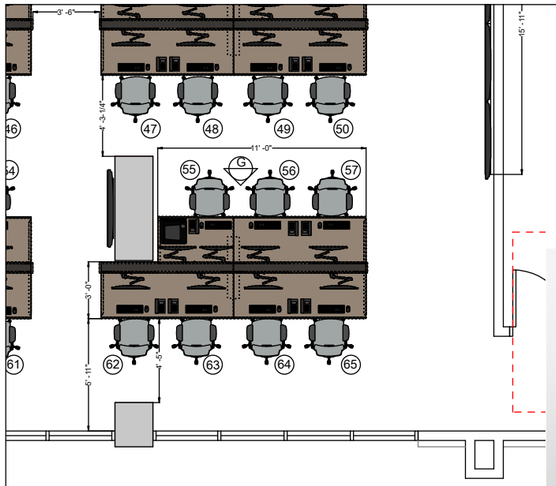

ARTICULATING MONITOR ARMS

LIFT-OFF STEEL TOP CAP

SLATWALL FOR MOUNTING MONITOR ARMS & ACCESSORIES

FULL WIDTH QUICK RELEASE CABLE MANAGEMENT FLIPPER DOOR

STEEL LIFT-OFF BACK PANELS

CONVENIENCE OUTLET - 2 - 110v POWER OUTLETS, 1 - USB-A & 1 - USB-C CHARGING PORTS AND 3 CONFIGURABLE DATA PORTS

HIGH PRESSURE LAMINATE WORK SURFACE W/ COMFORT EDGE

INTERIOR FRAME ACCESS PANEL

12" W BOX/BOX/FILE PEDESTAL

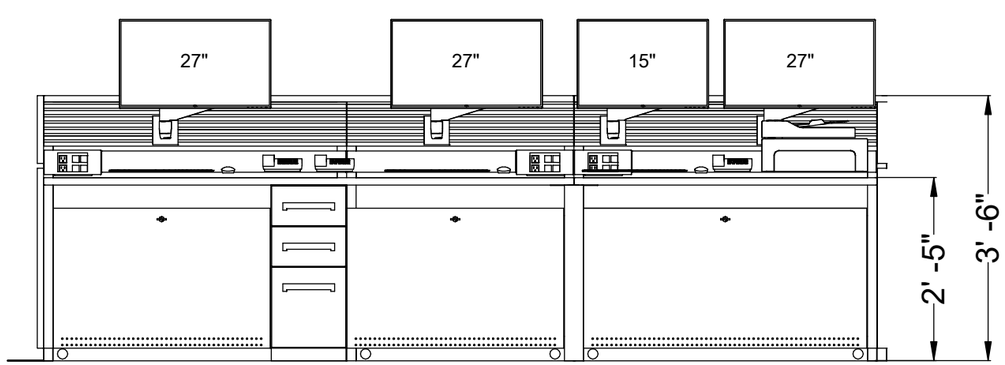

russbassett
8189 Byron Rd, Whittier, CA 90606 (800) 350-2445

CUSTOMER

CUSTOMER:

ONTARIO FIRE DEPARTMENT

PROJECT ADDRESS:
1408 E. FRANCIS ST.
ONTARIO CA 91761

PROJECT

PROJECT NAME:

ONTARIO FIRE DISPATCH, TRAINING, & EOC ROOMS

PROJECT INITIATION DATE:
6/2/2022

CONSOLE TYPE: FLEX

NUMBER OF POSITIONS: 65

SCALE:
1/2" - 1' - 0"

SALES EXECUTIVE
AVA RABAGO

DESIGNER
JESSE GREEN

SHEET INDEX

NO.	
2	3D VIEW 1 - DISPATCH FLOOR & TRAINING
3	3D VIEW 2 - DISPATCH FLOOR & TRAINING
4	PLAN VIEW 1 - DISPATCH FLOOR & TRAINING
5	ELEVATION VIEW A - DISPATCH FLOOR
6	ELEVATION VIEW B - DISPATCH FLOOR
7	ELEVATION VIEW C - DISPATCH FLOOR
8	ELEVATION VIEW D - DISPATCH FLOOR
9	ELEVATION VIEW E - DISPATCH FLOOR
10	ELEVATION VIEW F - DISPATCH TRAINING
11	RENDERING 1 - DISPATCH FLOOR &
12	RENDERING 2 - DISPATCH FLOOR &
13	3D VIEW 3 - EOC
14	3D VIEW 4 - EOC
15	PLAN VIEW 2 - EOC
16	ELEVATION VIEW G - EOC
17	ELEVATION VIEW H - EOC
18	ELEVATION VIEW J - EOC
19	RENDERING 3 - EOC
20	RENDERING 4 - EOC
21	
22	
23	
24	
25	

REVISIONS

REV	DATE	DESCRIPTION	BY
A	06/02/22	2D/3D DRAWING W/ CALLOUTS	JG
B	06/15/23	UPDATED CAD, MINOR REVS	JG
C	02/09/24	COMBINE RMS & UPDATE	JG

SHEET DESCRIPTION
ELEVATION G

DRAWING #	OPT.	REV.	SHEET
DC-21312-01	4	D	16 / 19

RUSS BASSETT CORPORATION HEREBY EXPRESSLY RESERVES ITS COMMON LAW COPYRIGHT AND OTHER PROPERTY RIGHTS IN THESE PLANS. THESE PLANS ARE NOT TO BE COPIED, REPRODUCED OR CHANGED IN ANY FORM OR MANNER WHATSOEVER, NOR ARE THEY TO BE ASSIGNED TO ANY THIRD PARTY WITHOUT FIRST OBTAINING THE EXPRESS WRITTEN PERMISSION AND CONSENT OF RUSS BASSETT CORPORATION.

BID SET 03/01/24

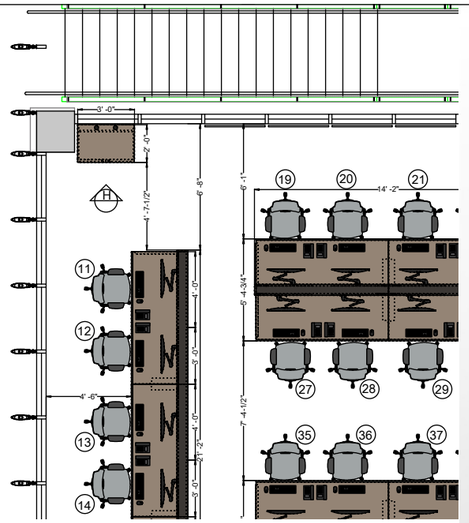

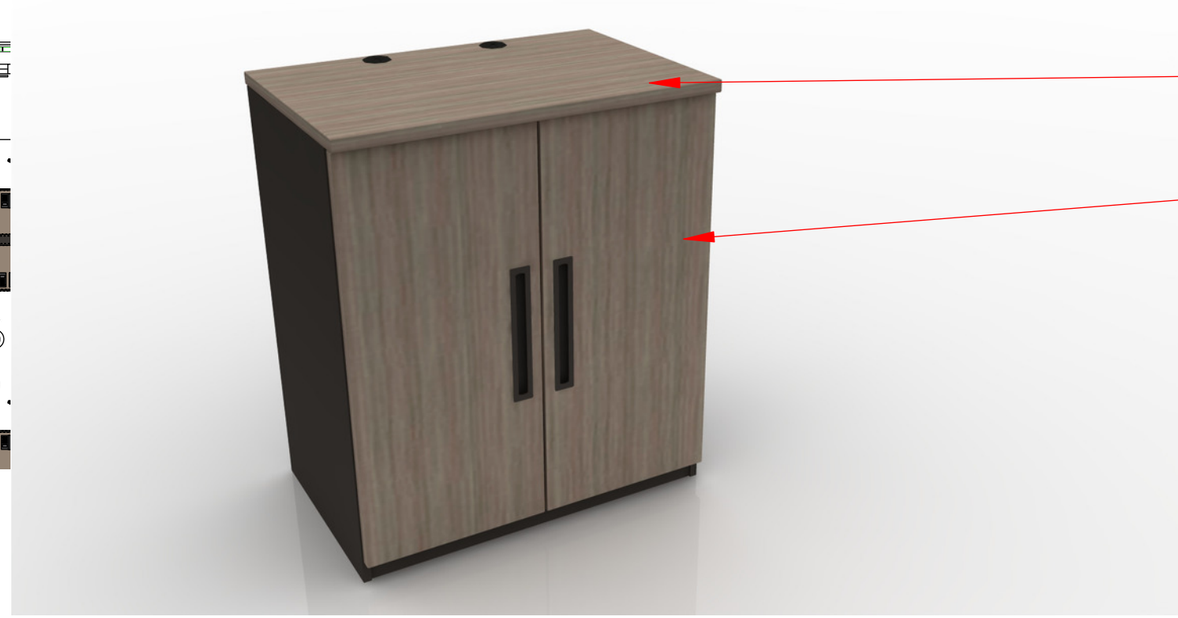

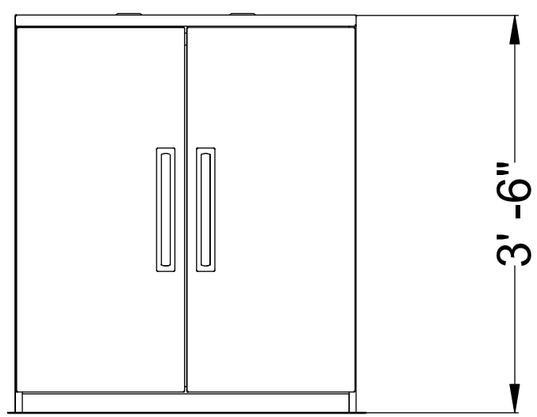

russbassett
8189 Byron Rd, Whittier, CA 90606 (800) 350-2445

CUSTOMER

CUSTOMER:

ONTARIO FIRE DEPARTMENT

PROJECT ADDRESS:
1408 E. FRANCIS ST.
ONTARIO CA 91761

PROJECT

PROJECT NAME:

ONTARIO FIRE DISPATCH, TRAINING, & EOC ROOMS

PROJECT INITIATION DATE:
6/2/2022

CONSOLE TYPE: FLEX

NUMBER OF POSITIONS: 65

SCALE:
3/4" - 1' - 0"

SALES EXECUTIVE
AVA RABAGO

DESIGNER
JESSE GREEN

SHEET INDEX

NO.	
2	3D VIEW 1 - DISPATCH FLOOR & TRAINING
3	3D VIEW 2 - DISPATCH FLOOR & TRAINING
4	PLAN VIEW 1 - DISPATCH FLOOR & TRAINING
5	ELEVATION VIEW A - DISPATCH FLOOR
6	ELEVATION VIEW B - DISPATCH FLOOR
7	ELEVATION VIEW C - DISPATCH FLOOR
8	ELEVATION VIEW D - DISPATCH FLOOR
9	ELEVATION VIEW E - DISPATCH FLOOR
10	ELEVATION VIEW F - DISPATCH TRAINING
11	RENDERING 1 - DISPATCH FLOOR &
12	RENDERING 2 - DISPATCH FLOOR &
13	3D VIEW 3 - EOC
14	3D VIEW 4 - EOC
15	PLAN VIEW 2 - EOC
16	ELEVATION VIEW G - EOC
17	ELEVATION VIEW H - EOC
18	ELEVATION VIEW J - EOC
19	RENDERING 3 - EOC
20	RENDERING 4 - EOC
21	
22	
23	
24	
25	

REVISIONS

REV	DATE	DESCRIPTION	BY
A	06/02/22	2D/3D DRAWING W/ CALLOUTS	JG
B	06/15/23	UPDATED CAD, MINOR REVS	JG
C	02/09/24	COMBINE RMS & UPDATE	JG

SHEET DESCRIPTION
ELEVATION H

RUSS BASSETT CORPORATION HEREBY EXPRESSLY RESERVES ITS COMMON LAW COPYRIGHT AND OTHER PROPERTY RIGHTS IN THESE PLANS. THESE PLANS ARE NOT TO BE COPIED, REPRODUCED OR CHANGED IN ANY FORM OR MANNER WHATSOEVER, NOR ARE THEY TO BE ASSIGNED TO ANY THIRD PARTY WITHOUT FIRST OBTAINING THE EXPRESS WRITTEN PERMISSION AND CONSENT OF RUSS BASSETT CORPORATION.

DRAWING #	OPT.	REV.	SHEET
DC-21312-01	4	D	17 / 19

BID SET 03/01/24

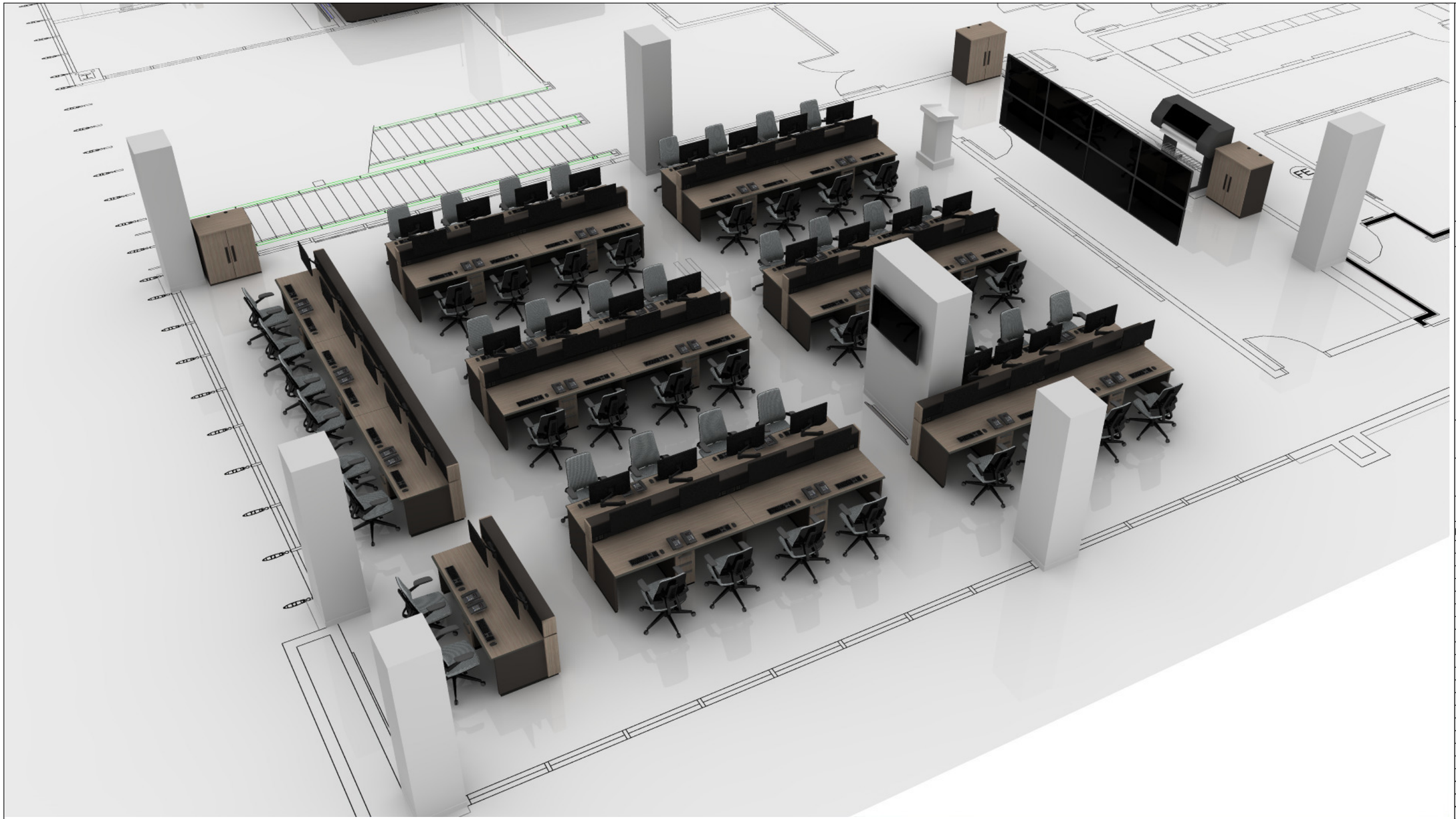

COLOR SCHEME:	LAGUNA - A	
FABRIC:	WATERFALL	
LAMINATE:	VERANDA TEAK	
POWDER COAT:	SUEDE	

russbassett
8189 Byron Rd, Whittier, CA 90606 (800) 350-2445

CUSTOMER

CUSTOMER:

ONTARIO FIRE DEPARTMENT

PROJECT ADDRESS:
1408 E. FRANCIS ST.
ONTARIO CA 91761

PROJECT

PROJECT NAME:

ONTARIO FIRE DISPATCH, TRAINING, & EOC ROOMS

PROJECT INITIATION DATE:
6/2/2022

CONSOLE TYPE: FLEX

NUMBER OF POSITIONS: 65

SCALE:
NTS

SALES EXECUTIVE
AVA RABAGO

DESIGNER
JESSE GREEN

SHEET INDEX

NO.	
2	3D VIEW 1 - DISPATCH FLOOR & TRAINING
3	3D VIEW 2 - DISPATCH FLOOR & TRAINING
4	PLAN VIEW 1 - DISPATCH FLOOR & TRAINING
5	ELEVATION VIEW A - DISPATCH FLOOR
6	ELEVATION VIEW B - DISPATCH FLOOR
7	ELEVATION VIEW C - DISPATCH FLOOR
8	ELEVATION VIEW D - DISPATCH FLOOR
9	ELEVATION VIEW E - DISPATCH FLOOR
10	ELEVATION VIEW F - DISPATCH TRAINING
11	RENDERING 1 - DISPATCH FLOOR &
12	RENDERING 2 - DISPATCH FLOOR &
13	3D VIEW 3 - EOC
14	3D VIEW 4 - EOC
15	PLAN VIEW 2 - EOC
16	ELEVATION VIEW G - EOC
17	ELEVATION VIEW H - EOC
18	ELEVATION VIEW J - EOC
19	RENDERING 3 - EOC
20	RENDERING 4 - EOC
21	
22	
23	
24	
25	

REVISIONS

REV	DATE	DESCRIPTION	BY
A	06/02/22	2D/3D DRAWING W/ CALLOUTS	JG
B	06/15/23	UPDATED CAD, MINOR REVS	JG
C	02/09/24	COMBINE RMS & UPDATE	JG

SHEET DESCRIPTION
RENDERING 3

RUSS BASSETT CORPORATION HEREBY EXPRESSLY RESERVES ITS COMMON LAW COPYRIGHT AND OTHER PROPERTY RIGHTS IN THESE PLANS. THESE PLANS ARE NOT TO BE COPIED, REPRODUCED OR CHANGED IN ANY FORM OR MANNER WHATSOEVER, NOR ARE THEY TO BE ASSIGNED TO ANY THIRD PARTY WITHOUT FIRST OBTAINING THE EXPRESS WRITTEN PERMISSION AND CONSENT OF RUSS BASSETT CORPORATION.

DRAWING #	OPT.	REV.	SHEET
DC-21312-01	4	D	18 / 19

BID SET 03/01/24

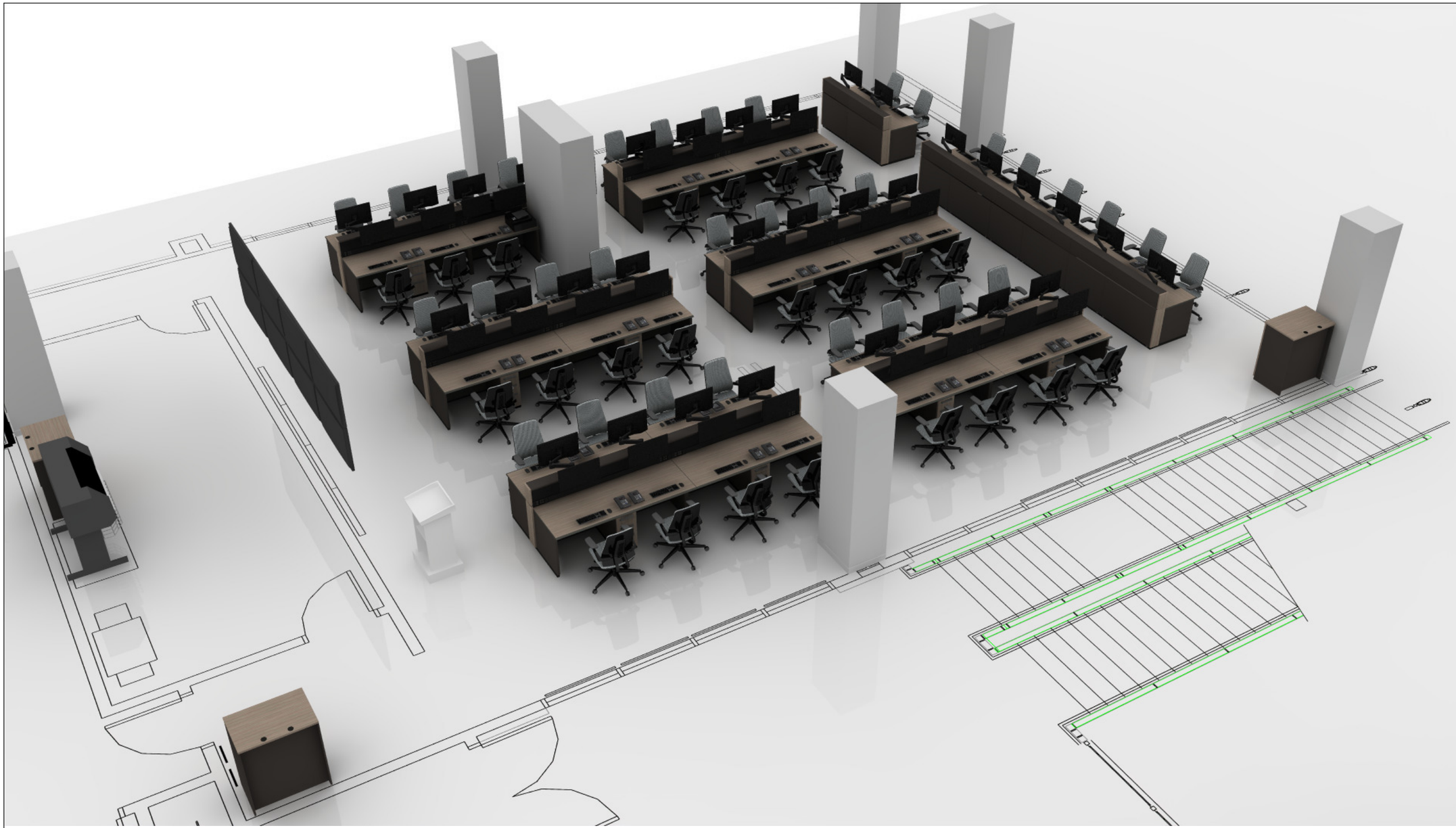

COLOR SCHEME:	LAGUNA - A	
FABRIC:	WATERFALL	
LAMINATE:	VERANDA TEAK	
POWDER COAT:	SUEDE	

RUSS BASSETT CORPORATION HEREBY EXPRESSLY RESERVES ITS COMMON LAW COPYRIGHT AND OTHER PROPERTY RIGHTS IN THESE PLANS. THESE PLANS ARE NOT TO BE COPIED, REPRODUCED OR CHANGED IN ANY FORM OR MANNER WHATSOEVER, NOR ARE THEY TO BE ASSIGNED TO ANY THIRD PARTY WITHOUT FIRST OBTAINING THE EXPRESS WRITTEN PERMISSION AND CONSENT OF RUSS BASSETT CORPORATION.

russbassett
8189 Byron Rd, Whittier, CA 90606 (800) 350-2445

CUSTOMER

CUSTOMER:

ONTARIO FIRE DEPARTMENT

PROJECT ADDRESS:
1408 E. FRANCIS ST.
ONTARIO CA 91761

PROJECT

PROJECT NAME:

ONTARIO FIRE DISPATCH, TRAINING, & EOC ROOMS

PROJECT INITIATION DATE:
6/2/2022

CONSOLE TYPE: FLEX

NUMBER OF POSITIONS: 65

SCALE:
NTS

SALES EXECUTIVE
AVA RABAGO

DESIGNER
JESSE GREEN

SHEET INDEX

NO.	
2	3D VIEW 1 - DISPATCH FLOOR & TRAINING
3	3D VIEW 2 - DISPATCH FLOOR & TRAINING
4	PLAN VIEW 1 - DISPATCH FLOOR & TRAINING
5	ELEVATION VIEW A - DISPATCH FLOOR
6	ELEVATION VIEW B - DISPATCH FLOOR
7	ELEVATION VIEW C - DISPATCH FLOOR
8	ELEVATION VIEW D - DISPATCH FLOOR
9	ELEVATION VIEW E - DISPATCH FLOOR
10	ELEVATION VIEW F - DISPATCH TRAINING
11	RENDERING 1 - DISPATCH FLOOR &
12	RENDERING 2 - DISPATCH FLOOR &
13	3D VIEW 3 - EOC
14	3D VIEW 4 - EOC
15	PLAN VIEW 2 - EOC
16	ELEVATION VIEW G - EOC
17	ELEVATION VIEW H - EOC
18	ELEVATION VIEW J - EOC
19	RENDERING 3 - EOC
20	RENDERING 4 - EOC
21	
22	
23	
24	
25	

REVISIONS

REV	DATE	DESCRIPTION	BY
A	06/02/22	2D/3D DRAWING W/ CALLOUTS	JG
B	06/15/23	UPDATED CAD, MINOR REVS	JG
C	02/09/24	COMBINE RMS & UPDATE	JG

SHEET DESCRIPTION
RENDERING 4

DRAWING #	OPT.	REV.	SHEET
DC-21312-01	4	D	19 / 19

BID SET 03/01/24