HIGHLAND HIGH SCHOOL
50M POOL & AQUATICS CENTER

KERN HIGH SCHOOL DISTRICT

DIVISION OF THE STATE ARCHITECT (DSA) PROJECT NO.:03-122664
OFFICE OF PUBLIC SCHOOL CONSTRUCTION (OPSC) PROJECT TRACKING NO: 63529-403
PJHM PROJECT NO: KHSD 2201

IDENTIFICATION STAMP
DIV. OF THE STATE ARCHITECT
APP: 03-122664 INC:
REVIEWED FOR
SS ☑ FLS ☑ ACS ☑
DATE: 05/12/2023

pjhm architects

LICENSED ARCHITECT
THOMAS W. PHAM
NO. C-35585
REN. 02/25
STATE OF CALIFORNIA

PROJECT NAME

KERN HIGH SCHOOL DISTRICT
5801 SUNDALE AVENUE BAKERSFIELD, CA 93309
(T)661.827.3100, jenny_hannah@kernhigh.org

SUPERINTENDENT
BRYON SCHAEFER, Ed. D.

BOARD OF TRUSTEES
J. BRYAN BATEY, PRESIDENT
DEREK TISINGER, VICE PRESIDENT
KATHY SCRIVNER, CLERK
STEVEN RODRIGUE, MEMBER
DAVID MANRIQUEZ, CLERK PRO TEM
YOHANNA GUZMAN VARGAS, STUDENT BOARD MEMBER

OWNER/BOARD OF TRUSTEES

GEOTECHNICAL ENGINEERING
SOILS ENGINEERING, INC.
4400 YEAGER WAY BAKERSFIELD, CA 93313
(T) 661.831.5100, onman@soilsengineering.com

GEOTECHNICAL INVESTIGATION: SEI FILE 22-18353, AUGUST 5, 2022
GEO-HAZARD REPORT: SEI FILE22-18353, OCTOBER 10, 2022
CGS APPLICATION NO.: 03 - CGS5552, OCTOBER 24, 2022

OWNERS CONSULTANTS

PJHM ARCHITECTS, INC.

IN ORANGE COUNTY
24461 RIDGE ROUTE DRIVE #110, LAGUNA HILLS, CA 92653
949.496.6191, tomk@pjhm.com, derek@pjhm.com

IN SAN DIEGO COUNTY
804 PIER VIEW WAY #103, OCEANSIDE, CA 92054
760.730.5527

IN *LOS ANGELES COUNTY*
837 TRACTION AVENUE #410, LOS ANGELES, CA 90013
949.496.6191

ARCHITECT

AQUATIC DESIGN
AQUATIC DESIGN GROUP
2226 FARADAY AVENUE, CARLSBAD, CA 92008
760.438.8400, gcannon@aquaticdesigngroup.com

CIVIL ENGINEERING
SWANSON ENGINEERING INC.
200 OAK STREET, SUITE 150, BAKERSFIELD, CA 93301
(T) 661.831.4919, bob@swansonengr.com

STRUCTURAL ENGINEERING
VCA ENGINEERS
2151 MICHELSON DRIVE #240, IRVINE, CA 92612
(T) 949.679.0870, young.nam@vcaeng.com

PLUMBING / MECHANICAL ENGINEERING
ENGINEOUS GROUP, INC.
715 N. FAIR OAKS AVENUE, SUITE 201, PASADENA, CA 91103
(T) 626.714.7506, brad@engineousgroup.com

AUTOMATIC FIRE SPRINKLER ENGINEERING
PROTECTION DESIGN & CONSULTING
2851 CAMINO DEL RIO SOUTH, SUITE 400, SAN DIEGO, CA 92108
(T) 858.751.2930, brent@protectiondesign.com

ELECTRICAL/FIRE ALARM ENGINEERING
TK1SC COLLABORATIVE
11870 PIERCE STREET, SUITE 160, RIVERSIDE, CA 92505
951.299.4160, jbrandts@tk1sc.com

LANDSCAPE DESIGN
BRANDON PETRUINO & ASSOCIATES, INC.
15699 CHERRY LEAF LANE, FONTANA, CA 92336
424.235.8940, brandon@bpalas.com

ARCHITECTS CONSULTANTS

GENERAL NOTES

1. ALL WORK SHOULD CONFORM TO 2019 TITLE 24, CALIFORNIA CODE OF REGULATIONS (C.C.R.)
2. CHANGES TO THE APPROVED DRAWINGS AND SPECIFICATIONS SHALL BE MADE BY ADDENDA OR CONSTRUCTION CHANGE DOCUMENT (CCD) APPROVED BY DSA, AS REQUIRED BY SECTION 4-338, PART 1, TITLE 24, CCR.
3. A "DSA CERTIFIED" PROJECT INSPECTOR EMPLOYED BY THE DISTRICT (OWNER) AND APPROVED BY DSA SHALL PROVIDE CONTINUOUS INSPECTION OF THE WORK. THE DUTIES OF THE INSPECTOR ARE DEFINED IN SECTION 4-342, PART 1, TITLE 24, CCR. A DSA-CERTIFIED CLASS 1 PROJECT INSPECTOR IS REQUIRED FOR THE PROJECT
4. A DSA ACCEPTED TESTING LABORATORY DIRECTLY EMPLOYED BY THE DISTRICT (OWNER) SHALL CONDUCT ALL THE REQUIRED TESTS AND INSPECTIONS FOR THE PROJECT. TESTING LAB MUST HAVE DSA LABORATORY EVALUATION AND ACCEPTANCE PROGRAM ACCEPTANCE.
5. GRADING PLANS, DRAINAGE IMPROVEMENTS, ROAD AND ACCESS REQUIREMENTS AND ENVIRONMENTAL HEALTH CONSIDERATIONS SHALL COMPLY WITH ALL LOCAL ORDINANCES.
6. THE ARCHITECT OR ENGINEER MAY FIND DEFECTS IN THE WORK, AND IF THEY DO, THEY WILL NOTIFY THE CONTRACTOR SO THE ERROR MAY BE CORRECTED. UNDER NO CIRCUMSTANCES IS IT EVER THE INTENT FOR THE ARCHITECT OR ENGINEER TO BECOME A GUARANTOR OF THE CONTRACTOR'S PERFORMANCE BY THESE ACTIVITIES. THE FACT THAT A CONTRACTOR'S ERROR GOES UNDETECTED DURING THE VISIT TO THE SITE DOES NOT MAKE THE ARCHITECT OR ENGINEER NEGLIGENT: THE CONTRACTOR IS NEVER RELIEVED OF THE RESPONSIBILITY FOR THE DISCOVERY OF HIS OWN ERRORS AND THE CORRECTION OF THEM, NOR OF THE RESPONSIBILITY OF PROPERLY PERFORMING THE WORK.
7. THE ARCHITECT OR ENGINEER WILL MAKE VISITS TO THE JOB SITE TO OBSERVE THE PROGRESS OF THE WORK AND TO OBSERVE WHETHER OR NOT IT IS, IN GENERAL, BEING PERFORMED IN ACCORDANCE WITH THEIR PLANS AND SPECIFICATIONS. THIS DOES NOT IN ANY WAY MEAN THAT THE ARCHITECT OR ENGINEER IS A GUARANTOR OF THE CONTRACTOR'S WORK: RESPONSIBILITY FOR SAFETY IN, ON OR ABOUT THE JOB SITE: IN CONTROL OF THE SAFETY OR ADEQUACY OF ANY EQUIPMENT, BUILDING COMPONENT, SCAFFOLDING,FORMS, OR OTHER WORK AIDS: OR SUPERINTENDING THE WORK.
8. FOR ALL WALL MOUNTED AND SEMI-RECESSED MOUNTED EQUIPMENT, ACCESSORIES CABINETS, HANDRAILS, MARKER BOARDS, MECHANICAL EQUIPMENT, ELECTRICAL EQUIPMENT AND ETC. PROVIDE AND INSTALL BACKING IN ACCORDANCE TO STRUCTURAL DETAILS.
9. UNLESS OTHERWISE NOTED, ALL INTERIOR WALLS SHOWN ON THE FLOOR PLAN ARE TO EXTEND TO THE UNDERSIDE OF THE ROOF SHEATHING WITH ONE LAYER OF 5/8" THICK, TYPE "X" GYPSUM BOARD ON EACH SIDE OF STUD FACE. ALL STUD WALLS TO CONTAIN SOUND INSULATION BATTS, FULL HEIGHT.
10. DO NOT SCALE DRAWINGS. WORK TO THE DIMENSIONS INDICATED ON THE DRAWINGS. CONTRACTOR SHALL VERIFY THE DIMENSIONS AT THE JOB SITE AND NOTIFY THE ARCHITECT OF ANY DISCREPANCIES FOR PROMPT CLARIFICATION.
11. THE EXISTENCE AND LOCATION OF EXISTING UNDERGROUND UTILITIES OR STRUCTURES INDICATED OR NOT ON THE DRAWING ARE OBTAINED BY SEARCH OF AVAILABLE RECORDS. IT IS THE CONTRACTOR'S RESPONSIBILITY TO VERIFY EXACT LOCATIONS OF THE UTILITIES WITH SCHOOL DISTRICT MAINTENANCE AND OPERATION PERSONNEL. THE CONTRACTOR IS REQUIRED TO TAKE PRECAUTIONARY MEASURES TO PROTECT THE UTILITIES AND OTHER STRUCTURES. ANY DAMAGE SHALL BE PROMPTLY RESTORED TO THE SCHOOL DISTRICT'S SATISFACTION.
12. PROVIDE CONSTRUCTION BARRICADES AS REQUIRED TO PROTECT PUBLIC'S HEALTH AND SAFETY INCLUDING WORK UNDER CONSTRUCTION TO THE REQUIREMENTS OF THE SCHOOL DISTRICT. COVER OPEN TRENCHES WITH SOLID MATERIAL.
13. THE CONTRACTOR SHALL PROTECT ADJACENT PROPERTY AND STRUCTURES. ANY DAMAGE SHALL BE PROMPTLY RESTORED TO THE SATISFACTION OF THE OWNER/ARCHITECT, AT CONTRACTOR'S EXPENSE.
14. BIDDERS ARE REQUIRED TO LOOK AT ALL **DRAWINGS** AND **SPECIFICATIONS**, NOT JUST THOSE SHEETS OR SECTIONS RESPECTIVE OF THEIR TRADE.
15. UNLESS SPECIFIED ON STRUCTURAL OR ARCHITECTURAL DRAWINGS, ANY ALTERATIONS OR MODIFICATIONS TO A STRUCTURAL ELEMENT BY CUTTING, DRILLING, BORING, BRACING, WELDING, ETC. SHALL HAVE WRITTEN APPROVAL BY STRUCTURAL ENGINEER OF RECORD AND APPROVAL OF DSA PRIOR TO START OF WORK.
16. ALL DETAILS CONTAINED IN THESE CONSTRUCTION DOCUMENTS ARE PART OF THE CONSTRUCTION SCOPE REGARDLESS OF THEM BEING REFERENCED IN THE SET.
17. FIRE SAFETY DURING DEMOLITION AND CONSTRUCTION SHALL COMPLY WITH CBC CHAPTER 33 AND CFC CHAPTER 33.

GENERAL ALTERATION NOTES

1. THE INTENT OF THESE DRAWINGS AND SPECIFICATIONS IS THAT THE WORK OF THE ALTERATION, REHABILITATION OR RECONSTRUCTION IS TO BE IN ACCORDANCE WITH TITLE 24, CCR. SHOULD ANY EXISTING CONDITIONS SUCH AS DETERIORATION OR NON-COMPLYING CONSTRUCTION BE DISCOVERED WHICH IS NOT COVERED BY THE CONTRACT DOCUMENTS WHEREIN THE FINISHED WORK WILL NOT COMPLY WITH TITLE 24, CCR, A CONSTRUCTION CHANGE DOCUMENT (CCD), OR A SEPARATE SET OF PLANS AND SPECIFICATIONS, DETAILING AND SPECIFYING THE REQUIRED WORK SHALL BE SUBMITTED TO AND APPROVED BY DSA BEFORE PROCEEDING WITH THE WORK. (SECTION 4-317(C), PART 1, TITLE 24, CCR)

APPLICABLE CODES AND STANDARDS

2022 CALIFORNIA ADMINISTRATIVE CODE (CAC),
PART 1, TITLE 24 CALIFORNIA CODE OF REGULATIONS

2019 CALIFORNIA BUILDING CODE (CBC),
PART 2, TITLE 24 CALIFORNIA CODE OF REGULATIONS

2019 CALIFORNIA ELECTRICAL CODE (CEC),
PART 3, TITLE 24 CALIFORNIA CODE OF REGULATIONS

2019 CALIFORNIA MECHANICAL CODE (CMC),
PART 4, TITLE 24 CALIFORNIA CODE OF REGULATIONS

2019 CALIFORNIA PLUMBING CODE (CPC),
PART 5, TITLE 24 CALIFORNIA CODE OF REGULATIONS

2019 CALIFORNIA ENERGY CODE
PART 6, TITLE 24 CALIFORNIA CODE OF REGULATIONS

2019 CALIFORNIA FIRE CODE (CFC)
PART 9, TITLE 24 CALIFORNIA CODE OF REGULATIONS

2019 CALIFORNIA EXISTING BUILDING CODE (CEBC)
PART 10, TITLE 24 CALIFORNIA CODE OF REGULATIONS

2019 CALIFORNIA GREEN BUILDING STANDARDS CODE (CALGreen)
PART 11, TITLE 24 CALIFORNIA CODE OF REGULATIONS

2019 CALIFORNIA REFERENCED STANDARDS CODE
PART 12, TITLE 24 CALIFORNIA CODE OF REGULATIONS

TITLE 19 CALIFORNIA CODE OF REGULATIONS,
PUBLIC SAFETY STATE FIRE MARCHAL REGULATIONS

APPLICABLE STANDARDS

FOR A LIST OF APPLICABLE STANDARDS, INCLUDING CALIFORNIA AMEDMENTS TO THE NFPA STANDARDS, REFER TO CALIFORNIA BUILDING CODE CHAPTER 35 AND CALIFORNIA FIRE CODE CHAPTER 80

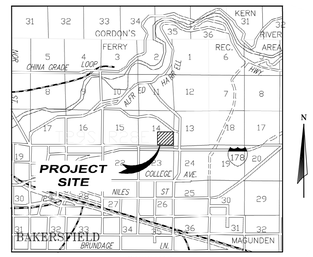

VICINITY MAP
N.T.S.

2900 ROYAL SCOTS WAY, BAKERSFIELD, CA 93306

VICINITY MAP

BRIEF PROJECT SCOPE

THIS CONSTRUCTION DOCUMENT PACKAGE INCLUDES, BUT IS NOT LIMITED TO THE FOLLOWING SCOPE:

1. DEMOLITION OF:
   - (E) SITE WORK
2. ALTERATION OF:
   - (E) PARKING LOT 'C' - ACCESSIBLE PARKING UPGRADES, FIRE LANE
3. CONSTRUCTION OF:
   - (N) 50M OUTDOOR POOL, POOL DECK
   - (N) BUILDING 'A' - POOL LOCKER ROOMS, RESTROOMS
   - (N) BUILDING 'B' - POOL CLASSROOM, TIERED SEATING, RESTROOMS
   - (N) BUILDING 'C' - POOL PUMP HOUSE
   - (N) PASSENGER DROP-OFF & LOADING ZONE
   - (N) ILLUMINATED SAFE-DISPERSAL AREA
   - (N) SITE IMPROVEMENTS

pjhm architects
OC Office: 24461 Ridge Route Drive #100, Laguna Hills, CA 92653 • OC Phone: 949.496.6191 • SD Office: 804 Pier View Way #103, Oceanside, CA 92054 • SD Phone: 760.730.5527 • LA Office: 837 Traction Avenue, #410, Los Angeles, CA 90013 • LA Phone: 213.278.0172 • Web: pjhm.com

HIGHLAND HIGH SCHOOL
50M POOL & AQUATICS CENTER

KERN HIGH SCHOOL DISTRICT

COVER SHEET

CS

4/13/2023 9:06:10 AM

AQUATICS — DP/SP/MR

1/8" = 1'-0"

DP.1	SWIMMING POOL DECK PLAN
SP.1	SWIMMING POOL LAYOUT PLAN (SWIMMING)
SP.2	SWIMMING POOL LAYOUT PLAN (WATERPOLO)
SP.3	SWIMMING POOL PIPING PLAN
SP.4	POOL UNDERWATER LIGHT / TIMING SYSTEM PLAN
SP.5	SWIMMING POOL SECTIONS
SP.6	DETAILS
SP.7	DETAILS
SP.8	DETAILS
SP.9	DETAILS
SP.10	DETAILS
SP.11	DETAILS
SP.12	DETAILS
MR.1	MECHANICAL ROOM LAYOUT PLAN
MR.2	MECHANICAL ROOM SECTIONS
MR.3	DETAILS
MR.4	DETAILS
MR.5	DETAILS
MR.6	DETAILS
MR.7	DETAILS
MR.8	DETAILS
MR.9	DETAILS

MUSCO LIGHTING — MT/MS/MD

GRAND TOTAL : 234

1/8" = 1'-0"

MT1	NOTES, FOUNDTION DETAIL
MS1	POLE DETAIL
MD1	ATTACHMENT DETAILS
MD2	ATTACHMENT DETAILS
MD3	ATTACHMENT DETAILS

FIRE PROTECTION — FP

1/8" = 1'-0"

FP-1.0	GENERAL NOTES
FP-1.1	FIRE UNDERGROUND SITE PLAN
FP-1.2	FIRE UNDERGROUND DETAILS
FP-1.3	FIRE UNDERGROUND DETAILS
FP-2-0	FIRE SPRINKLER PIPING PLAN - COMPOSITE
FP-2-1	(N) BUILDING B - FIRE SPRINKLER PIPING PLAN
FP-2-2	(N) BUILDING C - FIRE SPRINKLER PIPING PLAN
FP-3-0	FIRE SPRINKLER RCP PLAN - COMPOSITE
FP-3-1	(N) BUILDING B - FIRE SPRINKLER RCP PLAN
FP-3-2	(N) - BUILDING C - FIRE SPRINKLER RCP PLAN
FP-4-0	DETAILS
FP-4-1	DETAILS
FP-4-2	DETAILS
FP-4-3	SECTIONS

ELECTRICAL — E

1/8" = 1'-0"

E-0.0	SYMBOLS LIST
ED-1.0	DEMOLITION SITE PLAN - OVERALL
E-1.0	SITE PLAN - OVERALL
E-1.1	SITE PLAN - ENLARGED
E-3.0	POOL BUILDING - ELECTRICAL PLAN
E-4.0	POOL BUILDING - LIGHTING PLAN
E-5.0	ROOF PLAN
E-6.0	SINGLE LINE DIAGRAM
E-6.1	POWER SYSTEM STUDY AND GROUNDING
E-6.2	PANEL SCHEDULES
E-6.3	INVERTER SCHEDULE
E-7.0	LIGHTING FIXTURE SCHEDULE
E-7.1	DISTRIBUTED LIGHTING CONTROL SPECIFICATIONS
E-7.2	DISTRUBUTED LIGHTING CONTROL SPECIFICATIONS
E-7.3	DISTRIBUTED LIGHTING CONTROL SOO
E-7.4	TITLE 24 - INTERIOR
E-7.5	TITLE 24 - INTERIOR
E-7.6	TITLE 24 - EXTERIOR
E-8.0	DETAILS
E-8.1	SITE EGRESS PHOTOMETRICS
EFA-0.0	FIRE ALARM SYMBOLS LIST
EFA-1.0	FIRE ALARM DETAILS
EFA-2.0	FIRE ALARM RISER DIAGRAM AND CALCULATIONS
EFA-3.0	POOL BUILDING FIRE ALARM
T-1.0	TECHNOLOGY RISER DIAGRAMS
T-3.0	TECHNOLOGY FACEPLATE DETAILS
T-3.1	TECHNOLOGY DETAILS
T-3.2	TECHNOLOGY DETAILS
T-4.0	AV SINGLE LINE AND DETAILS

STRUCTURAL — S

1/8" = 1'-0"

S-0.1	GENERAL NOTES
S-0.2	GENERAL NOTES
S-1.1	TYPICAL DETAILS-REBAR & S.O.G
S-1.2	TYPICAL DETAILS- FOOTING AND EXCAVATION
S-1.3	TYPICAL DETAILS- FOOTING AND EXCAVATION
S-1.	TYPICAL DETAILS - WOOD
S-1.5	TYPICAL DETAILS - WOOD
S-1.6	TYPICAL DETAILS - WOOD MEP SUPPORT
S-1.7	TYPICAL DETAILS-METAL DECK
S-1.8	TYPICAL DETAILS-CMU
S-2.0	OVERALL PLAN
S-2.1	BLDG A - FOUNDATION & ROOF FRAMING PLAN
S-2.2	BLDG B - FOUNDATION & ROOF FRAMING PLAN
S-2.2.1	CANOPY - FOUNDATION & FRAMING PLAN
S-2.3	BLDG C - FOUNDATION & ROOF FRAMING PLAN
S-4.1	FOUNDATION DETAILS
S-4.2	FOUNDATION DETAILS
S-5.1	FRAMING DETAILS
S-5.2	FRAMING DETAILS
S-5.3	FRAMING DETAILS
S-6.1	CMU WALL ELEVATIONS - BLDG A
S-6.2	CMU WALL ELEVATIONS - BLDG B
S-6.3	CMU WALL ELEVATIONS - BLDG C

PLUMBING — P

1/8" = 1'-0"

P-0.0	PLUMBING FRONT SHEET
P-0.1	PLUMBING SCHEDULE & DETAILS
P-0.2	PLUMBING DETAILS
P-0.3	PLUMBING DETAILS
P-2.0	PLUMBING SITE PLAN
P-2.1	PLUMBING FLOOR PLAN - BUILDING A
P-2.2	PLUMBING FLOOR PLAN - BUILDING B
P-2.3	PLUMBING FLOOR PLAN - BUILDING C
P-3.1	PLUMBING ROOF PLAN - BUILDING A
P-3.2	PLUMBING ROOF PLAN - BUILDING B
P-3.3	PLUMBING ROOF PLAN - BUILDING C

MECHANICAL — M

1/8" = 1'-0"

M-0.1	HVAC TITLE 24 - BUILDING A
M-0.2	HVAC TITLE 24 - BUILDING A
M-0.3	HVAC TITLE 24 - BUILDING B
M-0.4	HVAC TITLE 24 - BUILDING B
M-1.1	HVAC EQUIP. SCHEDULE, LEGEND & NOTES
M-1.2	HVAC EQUIP. SCHEDULE, LEGEND & NOTES
M-2.1	HVAC FLOOR PLAN - BUILDING A
M-2.2	HVAC FLOOR PLAN - BUILDING B
M-2.3	HVAC FLOOR PLAN - BUILDING C
M-3.1	HVAC ROOF PLAN - BUILDING A
M-3.2	HVAC ROOF PLAN - BUILDING B
M-3.3	HVAC ROOF PLAN - BUILDING C
M-4.1	HVAC DETAILS
M-4.2	HVAC DETAILS
M-4.3	HVAC DETAILS

ARCHITECTURAL — A

1/8" = 1'-0"

A-0.1	SITE PLAN - LOCAL FIRE AUTHORITY ACCESS
A-0.2	BUILDING ANALYSIS
A-1.0	SITE PLAN
A-1.1	SITE PLAN - ENLARGED
A-1.2	SITE PLAN - ENLARGED
A-1.3	SITE PLAN - ENLARGED
A-1.4	SITE DETAILS - FENCES & GATES
A-1.5	SITE DETAILS - FENCES & GATES
A-1.6	SITE DETAILS - FENCES & GATES
A-1.7	SITE DETAILS - FENCES & GATES
A-1.8	SITE DETAILS - FENCES & GATES
A-1.9	SITE DETAILS - FENCES & GATES
A-1.10	SITE DETAILS - SITE WALLS
A-1.11	SITE DETAILS - SITE WALLS
A-1.12	SITE DETAILS - GUARDS & HANDRAILS
A-1.13	SITE DETAILS - HARDSCAPE
A-1.14	SITE DETAILS - HARDSCAPE
A-1.15	SITE DETAILS - SIGNAGE
A-1.16	SITE DETAILS - MISCELLANEOUS
A-2.0	SLAB PLAN - COMPOSITE
A-2.1	SLAB PLAN
A-2.2	SLAB PLAN
A-2.3	SLAB PLAN
A-2.4	SLAB PLAN DETAILS
A-2.5	SLAB PLAN DETAILS
A-3.0	FLOOR PLAN - COMPOSITE
A-3.1	FLOOR PLAN
A-3.2	FLOOR PLAN
A-3.3	FLOOR PLAN
A-3.4	FLOOR PLAN - ENLARGED
A-3.5	FLOOR PLAN DETAILS
A-4.0	REFLECTED CEILING PLAN - COMPOSITE
A-4.1	REFLECTED CEILING PLAN
A-4.2	REFLECTED CEILING PLAN
A-4.3	REFLECTED CEILING PLAN
A-4.4	REFLECTED CEILING PLAN DETAILS
A-4.5	REFLECTED CEILING PLAN DETAILS
A-4.6	REFLECTED CEILING PLAN DETAILS
A-4.7	REFLECTED CEILING PLAN DETAILS
A-4.8	REFLECTED CEILING PLAN DETAILS
A-4.9	REFLECTED CEILING PLAN DETAILS
A-5.0	ROOF PLAN - COMPOSITE
A-5.1	ROOF PLAN
A-5.2	ROOF PLAN
A-5.3	ROOF PLAN
A-5.4	ROOF PLAN DETAILS
A-5.5	ROOF PLAN DETAILS
A-5.6	ROOF PLAN DETAILS
A-5.7	ROOF PLAN DETAILS
A-5.8	ROOF PLAN DETAILS
A-5.9	ROOF PLAN DETAILS
A-6.0	EXTERIOR ELEVATIONS
A-6.1	EXTERIOR ELEVATIONS
A-6.2	EXTERIOR ELEVATIONS
A-6.3	EXTERIOR ELEVATION DETAILS
A-6.4	EXTERIOR ELEVATION DETAILS
A-6.5	EXTERIOR ELEVATION DETAILS
A-6.6	EXTERIOR ELEVATION DETAILS
A-7.0	BUILDING SECTIONS
A-7.1	BUILDING SECTIONS
A-7.2	BUILDING SECTIONS
A-7.3	BUILDING SECTIONS
A-7.4	BUILDING SECTIONS
A-8.0	WALL SECTIONS
A-8.1	WALL SECTIONS
A-8.2	WALL SECTIONS
A-8.3	WALL SECTIONS
A-8.4	WALL SECTIONS
A-8.5	WALL SECTIONS
A-8.6	WALL SECTIONS
A-8.7	WALL SECTIONS
A-8.8	WALL SECTIONS
A-8.9	WALL SECTIONS
A-8.10	WALL SECTIONS
A-8.11	WALL SECTION DETAILS
A-8.12	WALL SECTION DETAILS
A-8.13	WALL SECTION DETAILS
A-8.14	WALL SECTION DETAILS
A-9.0	INTERIOR ELEVATIONS
A-9.1	INTERIOR ELEVATIONS
A-9.2	INTERIOR ELEVATIONS
A-9.3	INTERIOR ELEVATION DETAILS
A-9.4	INTERIOR ELEVATION DETAILS
A-10.0	OPENING SCHEDULE/TYPES
A-10.1	OPENING DETAILS
A-10.2	OPENING DETAILS
A-10.3	OPENING DETAILS
A-10.4	OPENING DETAILS
A-11.0	FINISH SCHEDULE
A-12.0	TACTILE SIGNAGE DETAILS
A-13.0	COUNTERTOP DETAILS
A-14.0	ACCESSIBILITY DETAILS

CIVIL — C

1/8" = 1'-0"

TO-1	SITE TOPOGRAPHIC PLAN SOUTHWEST
TO-2	SITE TOPOGRAPHIC PLAN NORTH
TO-3	SITE TOPOGRAPHIC PLAN EAST
C-0	SITE DEMOLITION PLAN
C-1	GRADING PLAN - NORTH
C-2	GRADING PLAN - CENTRAL
C-3	GRADING PLAN - SOUTHWEST
C-4	GRADING PLAN - ADDITIONAL VIEWS
C-5	GRADING NOTES & DETAILS
C-6	SITE UTILITY PLAN - NORTH
C-7	SITE UTILITY PLAN - CENTRAL
C-8	SITE UTILITY PLAN - SOUTH
C-9	SITE UTILITY NOTES & DETAILS
C-10	B.M.P. PLAN
C-11	B.M.P. DETAILS
C-12	SITE PAVEMENT PLAN

LANDSCAPE — L

1/8" = 1'-0"

LI.1	LANDSCAPE IRRIGATION PLAN
LID.1	LANDSCAPE IRRIGATION DETAIL SHEET 1
LID.2	LANDSCAPE IRRIGATION DETAIL SHEET 2 - NOTES AND CALCS.
LP.1	LANDSCAPE PLANTING PLAN
LPD.1	LANDSCAPE PLANTING DETAILS

IDENTIFICATION STAMP
DIV. OF THE STATE ARCHITECT
APP: 03-122664 INC:
REVIEWED FOR
SS ☑ FLS ☑ ACS ☑
DATE: 05/12/2023

pjhm architects

LICENSED ARCHITECT
THOMAS W. PHILLIPS
No. C15585
REN. 02/25
STATE OF CALIFORNIA

SD Phone: 760.730.5527 • LA Office: 837 Traction Avenue, #410, Los Angeles, CA 90013 • LA Phone: 213.278.0172 • Web: pjhm.com
OC Office: 24461 Ridge Route Drive #100, Laguna Hills, CA 92653 • OC Phone: 949.496.6191 • SD Office: 804 Pier View Way #103, Oceanside, CA 92054

HIGHLAND HIGH SCHOOL
50M POOL & AQUATICS CENTER

KERN HIGH SCHOOL DISTRICT

SCHEDULE OF DRAWINGS

INDEX

4/13/2023 9:06:11 AM

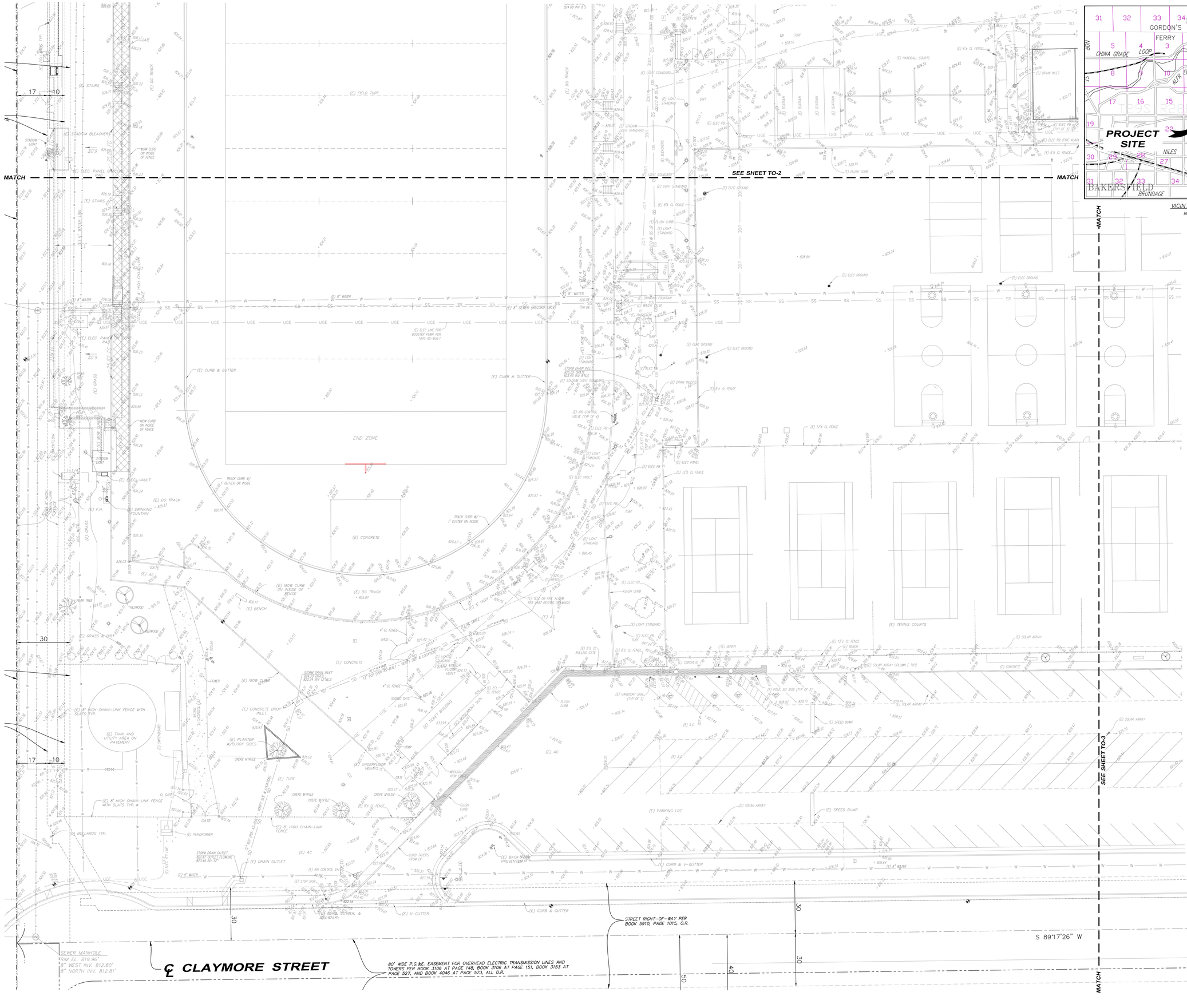
MATCH
SEE SHEET TO-2
MATCH
MATCH
SEE SHEET TO-3
(E) FIELD TURF
END ZONE
(E) CONCRETE
(E) TENNIS COURTS
(E) PARKING LOT
(E) TANK AND UTILITY AREA ON PAVEMENT
(E) CURB & GUTTER
(E) V-GUTTER
(E) CURB & V-GUTTER
(E) 8" SEWER (RECORD 1969)
(E) 8" WATER
(E) 6" WATER
(E) 8" WATER
(E) ELEC LINE FOR BOOSTER PUMP PER 1970 AS-BUILT
(E) 8' HIGH CHAIN-LINK FENCE WITH SLATS TYP.
(E) BOLLARDS TYP.
(E) 8' HIGH CHAIN-LINK FENCE
(E) 6' HIGH CHAIN-LINK FENCE
(E) 5' HIGH CHAIN-LINK
(E) 4' HIGH CHAIN-LINK
(E) 18' HIGH CHAIN-LINK FENCE WITH SLATS TYP.
(E) 8' CL FENCE
(E) 12'6 CL FENCE
(E) 6'6 CL FENCE
(E) 4' CL FENCE
(E) STADIUM BLEACHERS
(E) STAIRS
(E) ELEC. PANEL ON POST
(E) ELEC. PANEL ON PAD
(E) ELEC. VAULT
(E) DG TRACK
(E) F.H.
(E) DRINKING FOUNTAIN
(E) GRASS
(E) GRASS & DIRT
(E) MOW CURB
(E) MOW CURB ON INSIDE OF FENCE
(E) MOW CURB ON INSIDE OF FENCE
(E) BENCH
(E) PLANTER W/BLOCK SIDES
(E) TURF
(E) TICKET BUILDING
(E) CONCRETE DROP INLET
(E) UNDERFLOOR VENTS (2)
(E) MOVEMENT SIGN
(E) HANDICAP SIGN (TYP OF 2)
(E) FOUL NO SIGN (TYP OF 2)
(E) SPEED BUMP
(E) SOLAR ARRAY
(E) SOLAR ARRAY COLUMN (TYP)
(E) HANDBALL COURTS
(E) DRAIN INLET
(E) ELEC PB
(E) ELEC PB (TYP OF 3)
(E) ELEC PB (FIRE ALARM)
(E) ELEC GROUND
(E) LIGHT STANDARD
(E) STADIUM LIGHT STANDARD
(E) FLUSH CURB
(E) BLEACHERS
(E) SKYBOX
(E) DRY
(E) IRR CONTROL VALVE (TYP OF 4)
(E) IRR CONTROL VALVE
(E) 1" DOUBLE CHECK VALVE ASSEMBLY
(E) BACKFLOW PREVENTER
(E) BACKFLOW PREVENTER
(E) 1" DOUBLE CHECK VALVE ASSEMBLY
(E) 1" REDUCED PRESSURE BACKFLOW PREVENTER
(E) 1" REDUCED PRESSURE BACKFLOW PREVENTER
(E) DRAIN INLET
(E) DRAIN OUTLET
(E) 559F SIGN
(E) TRANSFORMER
(E) TELE OR FIRE ALARM PER 1997 RECORD DRAWINGS
(E) TELE PB
(E) TELE PB
(E) TELE PB

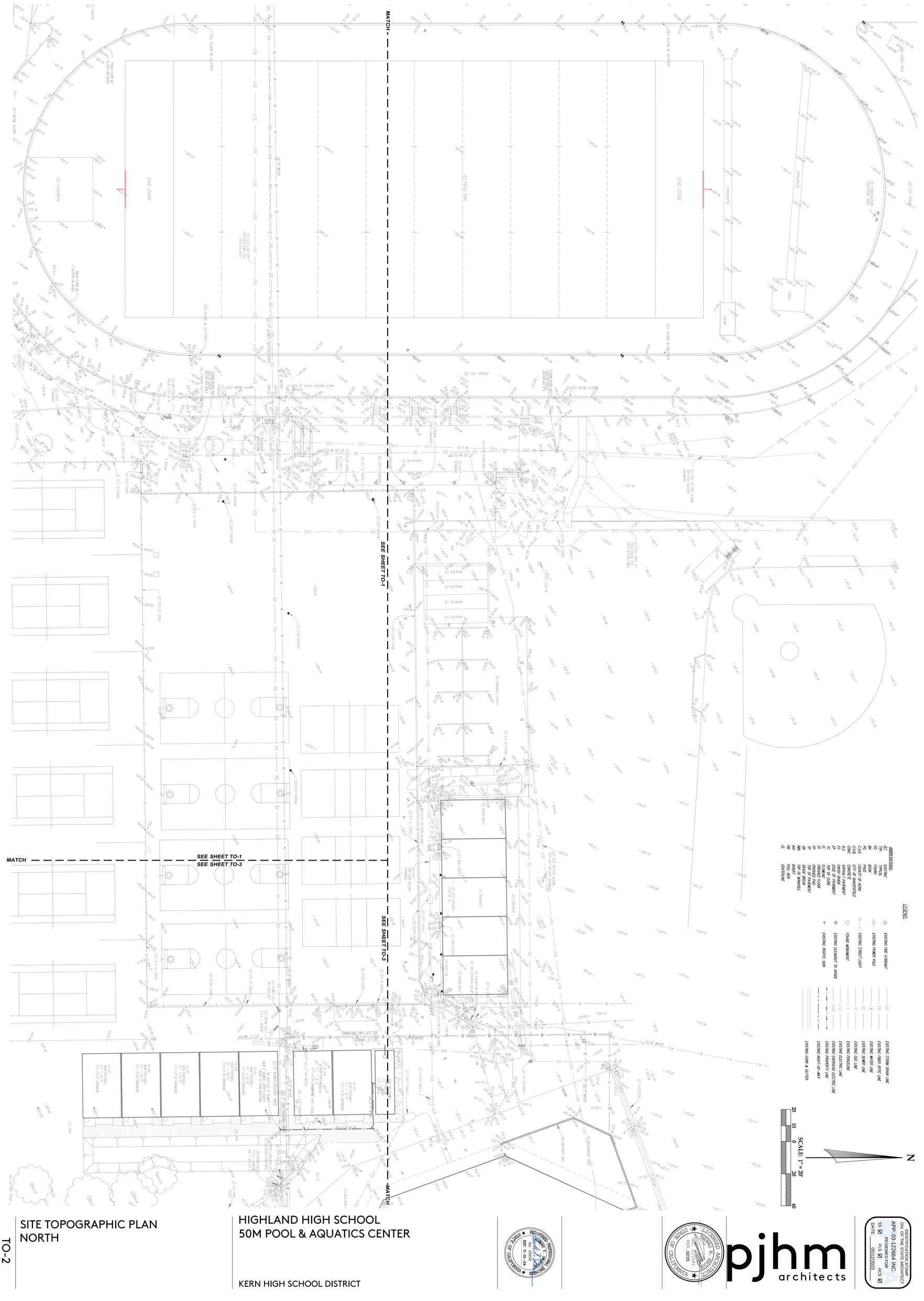
MATCH
SEE SHEET TO-1
SEE SHEET TO-3
(E) DG TRACK
END ZONE
(E) CONCRETE
(E) MOW CURB
(E) CURB & GUTTER
4' HIGH CHAIN-LINK FENCE
(E) BLEACHERS
(E) SEATRAIN
(E) HANDBALL COURTS
(E) BASEBALL FIELD
(E) BUILDING
(E) 8" WATER
(E) 12" WATER
(E) 6" SEWER
(E) STORM DRAIN
(E) GAS
(E) ELECTRIC
(E) TELEPHONE
(E) FIRE HYDRANT
(E) POWER POLE
(E) STREET LIGHT
(E) GAS VALVE
(E) WATER VALVE
(E) SEWER MANHOLE
(E) STORM DRAIN MANHOLE
(E) ELECTRIC MANHOLE
(E) TELEPHONE MANHOLE
(E) TREE
(E) SIGN
(E) TRAFFIC SIGN
(E) FIRE DEPARTMENT CONNECTION
(E) BACKFLOW PREVENTER
(E) ELECTRIC PANEL
(E) TRANSFORMER
(E) ELECTRIC VAULT
(E) AIR CONDITIONER
(E) LIGHT STANDARD
(E) FIRE RISER
(E) DOUBLE DETECTOR CHECK VALVE
(E) FIRE DEPARTMENT CONNECTION
(E) BACKFLOW PREVENTER
(E) ELECTRIC PANEL
(E) TRANSFORMER
(E) ELECTRIC VAULT
(E) AIR CONDITIONER
(E) LIGHT STANDARD
(E) FIRE RISER
(E) DOUBLE DETECTOR CHECK VALVE
(E) 12" WATER
(E) 8" WATER
(E) 6" SEWER
(E) STORM DRAIN
(E) GAS
(E) ELECTRIC
(E) TELEPHONE
(E) FIRE HYDRANT
(E) POWER POLE
(E) STREET LIGHT
(E) GAS VALVE
(E) WATER VALVE
(E) SEWER MANHOLE
(E) STORM DRAIN MANHOLE
(E) ELECTRIC MANHOLE
(E) TELEPHONE MANHOLE
(E) TREE
(E) SIGN
(E) TRAFFIC SIGN

LEGEND:

ABBREVIATIONS:

(E)	EXISTING
TYP.	TYPICAL
FD.	FOUND
BK.	BOOK
PG.	PAGE
C.O.K.	COUNTY OF KERN
C.O.B.	CITY OF BAKERSFIELD
CONC	CONCRETE
A.C.	ASPHALT PAVEMENT
FG	FINISH GRADE
EP	EDGE OF PAVEMENT
TC	TOP OF CURB
FL	FLOWLINE
FF	FINISHED FLOOR
FP	FINISHED PAD
TP	TOP OF PAVEMENT
GB	GRADE BREAK
TMH	TOP OF MANHOLE
INV	INVERT
PB	PULL BOX
CL	CENTERLINE

EXISTING FIRE HYDRANT
EXISTING POWER POLE
EXISTING STREET LIGHT
FOUND MONUMENT
EXISTING CLEANOUT TO GRADE
EXISTING TRAFFIC SIGN
SD — EXISTING STORM DRAIN LINE
FO — EXISTING FIBER OPTIC LINE
W — EXISTING WATER LINE
SS — EXISTING SEWER LINE
G — EXISTING GAS LINE
X — EXISTING FENCELINE
UGE — EXISTING ELECTRIC LINE
OHE — EXISTING OVERHEAD ELECTRIC LINE
EXISTING PROPERTY LINE
EXISTING RIGHT-OF-WAY
EXISTING CURB & GUTTER

N

SCALE: 1" = 20'

20 10 0 20 40

IDENTIFICATION STAMP
DIV. OF THE STATE ARCHITECT
APP: 03-122664 INC:
REVIEWED FOR
SS ☑ FLS ☑ ACS ☑
DATE: 05/12/2023

pjhm architects

LICENSED ARCHITECT
THOMAS W. KRUSE
NO. C15585
REN. 02/25
STATE OF CALIFORNIA

REGISTERED PROFESSIONAL ENGINEER
GILBERT T. SHANSON
No. 43032
EXP. 3-31-24
STATE OF CALIFORNIA

HIGHLAND HIGH SCHOOL
50M POOL & AQUATICS CENTER

KERN HIGH SCHOOL DISTRICT

SITE TOPOGRAPHIC PLAN
EAST

TO-3

VICINITY MAP
N.T.S.

BENCHMARK

TOP OF CAP ON CITY OF BAKERSFIELD CONCRETE MONUMENT IN UMPHOLE AT THE CENTERLINE INTERSECTION OF AUBURN STREET AND PIPER WAY PER CITY OF BAKERSFIELD BENCH MARK 900K.

ELEVATION = 804.26'

BASIS OF BEARINGS

THE BEARING OF N89°17'26"E SHOWN FOR THE SOUTH LINE OF THE SOUTHEAST QUARTER OF SECTION 14, T.29S., R.28E., M.D.M. ON RECORD OF SURVEY, R.S. BOOK 9, PAGE 91, WAS USED AS THE BASIS OF BEARINGS HEREON.

LEGAL DESCRIPTION

BEING A PORTION OF THE SOUTHEAST QUARTER OF SECTION 14, T.29S., R.28E., M.D.B.M.

ADDRESS

2900 ROYAL SCOTS WAY

APN

146-020-23

UTILITY NOTE

NOT ALL UTILITIES WERE LOCATED BY THIS SURVEY AND SWANSON ENGINEERING, INC. ASSUMES NO RESPONSIBILITY FOR UNDERGROUND UTILITIES OR FACILITIES NOT SHOWN OR FOR INFORMATION OBTAINED FROM OUTSIDE SOURCES.

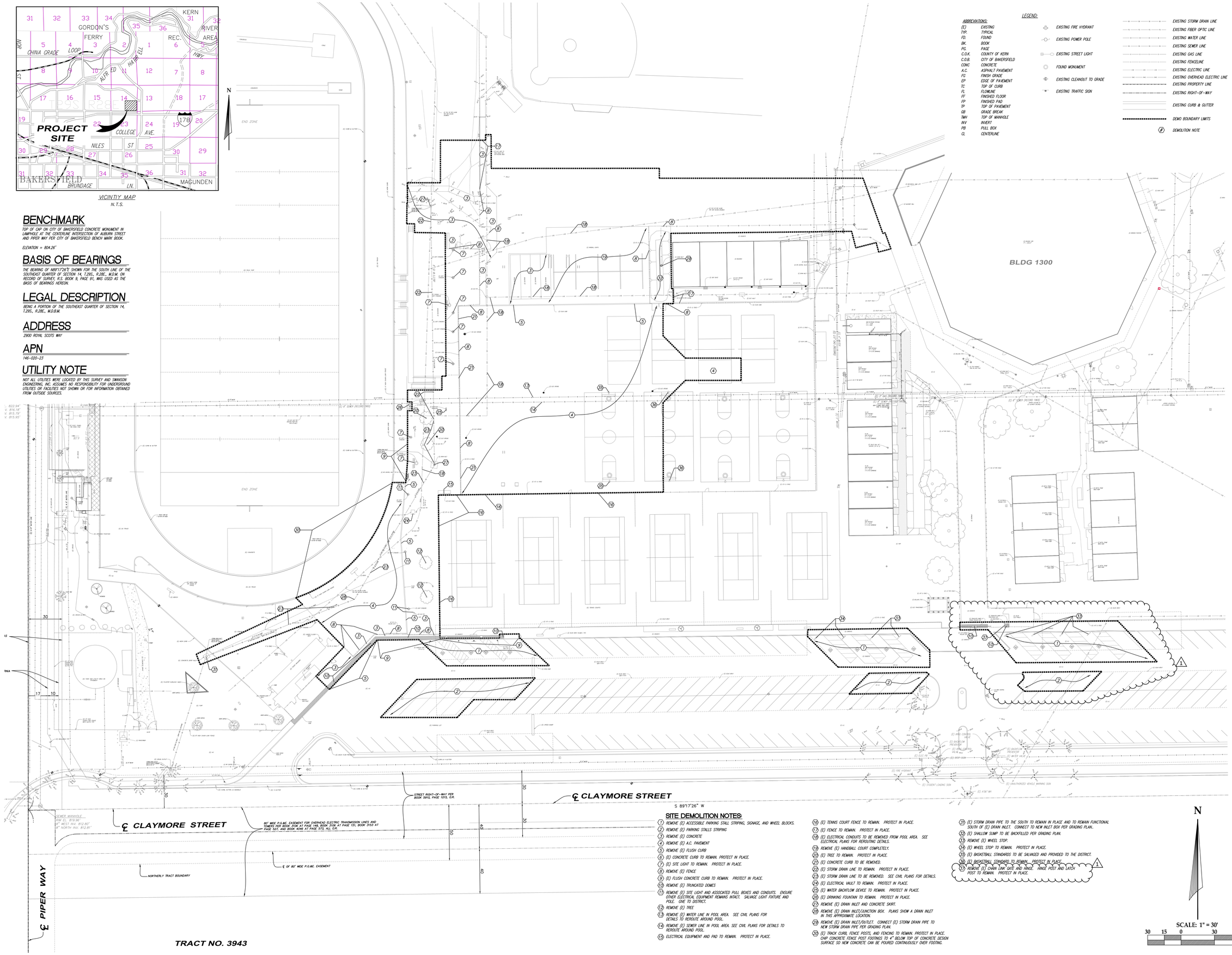

LEGEND:

ABBREVIATIONS:	
(E)	EXISTING
TYP.	TYPICAL
FD.	FOUND
BK.	BOOK
PG.	PAGE
C.O.K.	COUNTY OF KERN
C.O.B.	CITY OF BAKERSFIELD
CONC.	CONCRETE
A.C.	ASPHALT PAVEMENT
FG	FINISH GRADE
EP	EDGE OF PAVEMENT
TC	TOP OF CURB
FL	FLOWLINE
FF	FINISHED FLOOR
FP	FINISHED PAD
TP	TOP OF PAVEMENT
GB	GRADE BREAK
MH	TOP OF MANHOLE
INV	INVERT
PB	PULL BOX
CL	CENTERLINE

- EXISTING FIRE HYDRANT
- EXISTING POWER POLE
- EXISTING STREET LIGHT
- FOUND MONUMENT
- EXISTING CLEANOUT TO GRADE
- EXISTING TRAFFIC SIGN
- EXISTING STORM DRAIN LINE
- EXISTING FIBER OPTIC LINE
- EXISTING WATER LINE
- EXISTING SEWER LINE
- EXISTING GAS LINE
- EXISTING FENCELINE
- EXISTING ELECTRIC LINE
- EXISTING OVERHEAD ELECTRIC LINE
- EXISTING PROPERTY LINE
- EXISTING RIGHT-OF-WAY
- EXISTING CURB & GUTTER
- DEMO BOUNDARY LIMITS
- (#) DEMOLITION NOTE

SITE DEMOLITION NOTES:

1. REMOVE (E) ACCESSIBLE PARKING STALL STRIPING, SIGNAGE, AND WHEEL BLOCKS.
2. REMOVE (E) PARKING STALLS STRIPING
3. REMOVE (E) CONCRETE
4. REMOVE (E) A.C. PAVEMENT
5. REMOVE (E) FLUSH CURB
6. (E) CONCRETE CURB TO REMAIN. PROTECT IN PLACE.
7. (E) SITE LIGHT TO REMAIN. PROTECT IN PLACE.
8. REMOVE (E) FENCE.
9. (E) FLUSH CONCRETE CURB TO REMAIN. PROTECT IN PLACE.
10. REMOVE (E) TRUNCATED DOMES
11. REMOVE (E) SITE LIGHT AND ASSOCIATED PULL BOXES AND CONDUITS. ENSURE OTHER ELECTRICAL EQUIPMENT REMAINS INTACT. SALVAGE LIGHT FIXTURE AND POLE. GIVE TO DISTRICT.
12. REMOVE (E) TREE
13. REMOVE (E) WATER LINE IN POOL AREA. SEE CIVIL PLANS FOR DETAILS TO REROUTE AROUND POOL.
14. REMOVE (E) SEWER LINE IN POOL AREA. SEE CIVIL PLANS FOR DETAILS TO REROUTE AROUND POOL.
15. ELECTRICAL EQUIPMENT AND PAD TO REMAIN. PROTECT IN PLACE.
16. (E) TENNIS COURT FENCE TO REMAIN. PROTECT IN PLACE.
17. (E) FENCE TO REMAIN. PROTECT IN PLACE.
18. (E) ELECTRICAL CONDUITS TO BE REMOVED FROM POOL AREA. SEE ELECTRICAL PLANS FOR REROUTING DETAILS.
19. REMOVE (E) HANDBALL COURT COMPLETELY.
20. (E) TREE TO REMAIN. PROTECT IN PLACE.
21. (E) CONCRETE CURB TO BE REMOVED.
22. (E) STORM DRAIN LINE TO REMAIN. PROTECT IN PLACE.
23. (E) STORM DRAIN LINE TO BE REMOVED. SEE CIVIL PLANS FOR DETAILS.
24. (E) ELECTRICAL VAULT TO REMAIN. PROTECT IN PLACE.
25. (E) WATER BACKFLOW DEVICE TO REMAIN. PROTECT IN PLACE.
26. (E) DRINKING FOUNTAIN TO REMAIN. PROTECT IN PLACE.
27. REMOVE (E) DRAIN INLET AND CONCRETE SKIRT.
28. REMOVE (E) DRAIN INLET/JUNCTION BOX. PLANS SHOW A DRAIN INLET IN THIS APPROXIMATE LOCATION.
29. REMOVE (E) DRAIN INLET/OUTLET. CONNECT (E) STORM DRAIN PIPE TO NEW STORM DRAIN PIPE PER GRADING PLAN.
30. (E) TRACK CURB, FENCE POSTS, AND FENCING TO REMAIN. PROTECT IN PLACE. CHIP CONCRETE FENCE POST FOOTINGS TO 4" BELOW TOP OF CONCRETE DESIGN SURFACE SO NEW CONCRETE CAN BE POURED CONTINUOUSLY OVER FOOTING.
31. (E) STORM DRAIN PIPE TO THE SOUTH TO REMAIN IN PLACE AND TO REMAIN FUNCTIONAL SOUTH OF (E) DRAIN INLET. CONNECT TO NEW INLET BOX PER GRADING PLAN..
32. (E) SHALLOW SUMP TO BE BACKFILLED PER GRADING PLAN.
33. REMOVE (E) WHEEL STOP.
34. (E) WHEEL STOP TO REMAIN. PROTECT IN PLACE.
35. (E) BASKETBALL STANDARDS TO BE SALVAGED AND PROVIDED TO THE DISTRICT.
36. (E) BASKETBALL STANDARDS TO REMAIN. PROTECT IN PLACE.
37. REMOVE (E) CHAIN LINK GATE AND HINGE. HINGE POST AND LATCH POST TO REMAIN. PROTECT IN PLACE.

N

SCALE: 1" = 30'
30 15 0 30 60

IDENTIFICATION STAMP
DIV. OF THE STATE ARCHITECT
APP: 03-122664 INC:
REVIEWED FOR
SS ☑ FLS ☑ ACS ☑
DATE: 05/12/2023

pjhm architects

LICENSED ARCHITECT
RICHARD W. RIDDELL
REN. 02/25
STATE OF CALIFORNIA

SWANSON ENGINEERING, INC.
2000 21st Street, Suite 100 Bakersfield, CA 93301
ph.(661) 633-4616 fax.(661) 633-4777
CRM# 22-053

REGISTERED PROFESSIONAL ENGINEER
ROBERT T. SWANSON
No. 43032
EXP. 3-31-24
STATE OF CALIFORNIA

HIGHLAND HIGH SCHOOL
50M POOL & AQUATICS CENTER
KERN HIGH SCHOOL DISTRICT

1 ADDENDUM NO. 1

SITE DEMOLITION PLAN

C-0

BENCHMARK

TOP OF CAP ON CITY OF BAKERSFIELD CONCRETE MONUMENT IN LAMPHOLE AT THE CENTERLINE INTERSECTION OF AUBURN STREET AND PIPER WAY PER CITY OF BAKERSFIELD BENCH MARK BOOK.

ELEVATION = 804.26'

BASIS OF BEARINGS

THE BEARING OF N89°17'26"E SHOWN FOR THE SOUTH LINE OF THE SOUTHEAST QUARTER OF SECTION 14, T.29S., R.28E., M.D.M. ON RECORD OF SURVEY, R.S. BOOK 9, PAGE 91, WAS USED AS THE BASIS OF BEARINGS HEREON.

LEGAL DESCRIPTION

BEING A PORTION OF THE SOUTHEAST QUARTER OF SECTION 14, T.29S., R.28E., M.D.B.M.

ADDRESS

2900 ROYAL SCOTS WAY

APN

146-020-23

UTILITY NOTE

NOT ALL UTILITIES WERE LOCATED BY THIS SURVEY AND SWANSON ENGINEERING, INC. ASSUMES NO RESPONSIBILITY FOR UNDERGROUND UTILITIES OR FACILITIES NOT SHOWN OR FOR INFORMATION OBTAINED FROM OUTSIDE SOURCES.

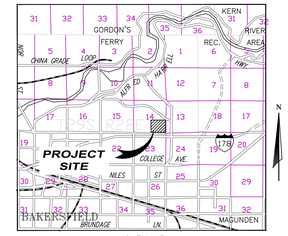

VICINITY MAP
N.T.S.

IDENTIFICATION STAMP
DIV. OF THE STATE ARCHITECT
APP: 03-122664 INC:
REVIEWED FOR
SS ☑ FLS ☑ ACS ☑
DATE: 05/12/2023

pjhm architects

LICENSED ARCHITECT
HOWARD W. KRUSE
No. C15385
REN. 02/25
STATE OF CALIFORNIA

SWANSON ENGINEERING, INC.
2000 S. Highway 395 • Suite 102 • Ridgecrest, CA 93555
ph.(661) 835-4616 • (661) 375-7719 fax
CERF 22-053

REGISTERED PROFESSIONAL ENGINEER
ROBERT T. SWANSON
No. 43032
EXP. 3-31-24
STATE OF CALIFORNIA

LA Office: 837 Traction Avenue, #410, Los Angeles, CA 90013 • LA Phone: 213.278.0172 • Web: pjhm.com
SD Office: 804 Pier View Way #103, Oceanside, CA 92054 • SD Phone: 760.730.5527
OC Office: 24461 Ridge Route Drive #100, Laguna Hills, CA 92653 • OC Phone: 949.496.6191

HIGHLAND HIGH SCHOOL
50M POOL & AQUATICS CENTER

KERN HIGH SCHOOL DISTRICT

GRADING PLAN - NORTH

C-1

ABBREVIATIONS:

(E)	EXISTING
TYP.	TYPICAL
FD.	FOUND
BK.	BOOK
PG.	PAGE
C.O.K.	COUNTY OF KERN
C.O.B.	CITY OF BAKERSFIELD
CONC	CONCRETE
A.C.	ASPHALT PAVEMENT
FG	FINISH GRADE
EP	EDGE OF PAVEMENT
TC	TOP OF CURB
FL	FLOWLINE
FF	FINISHED FLOOR
FP	FINISHED PAD
TP	TOP OF PAVEMENT
GB	GRADE BREAK
TMH	TOP OF MANHOLE
INV	INVERT
PB	PULL BOX
CL	CENTERLINE

LEGEND:

	EXISTING FIRE HYDRANT
	EXISTING POWER POLE
	EXISTING STREET LIGHT
	FOUND MONUMENT
	EXISTING CLEANOUT TO GRADE
	EXISTING TRAFFIC SIGN
	PROPOSED FIRE HYDRANT
	PROPOSED DRAIN INLET
	PROPOSED CLEANOUT TO GRADE
SD	EXISTING STORM DRAIN LINE
FO	EXISTING FIBER OPTIC LINE
W	EXISTING WATER LINE
SS	EXISTING SEWER LINE
G	EXISTING GAS LINE
X	EXISTING FENCELINE
UGE	EXISTING ELECTRIC LINE
OHE	EXISTING OVERHEAD ELECTRIC LINE
	EXISTING PROPERTY LINE
	EXISTING RIGHT-OF-WAY
	EXISTING CURB & GUTTER
SD	PROPOSED STORM DRAIN LINE
	PROPOSED 4" PERFORATED WALL FOUNDATION DRAIN PIPES
W	PROPOSED WATER LINE
SS	PROPOSED SEWER LINE
FW	PROPOSED WATER LINE
X	PROPOSED FENCELINE
	POOL DECK BOUNDARY

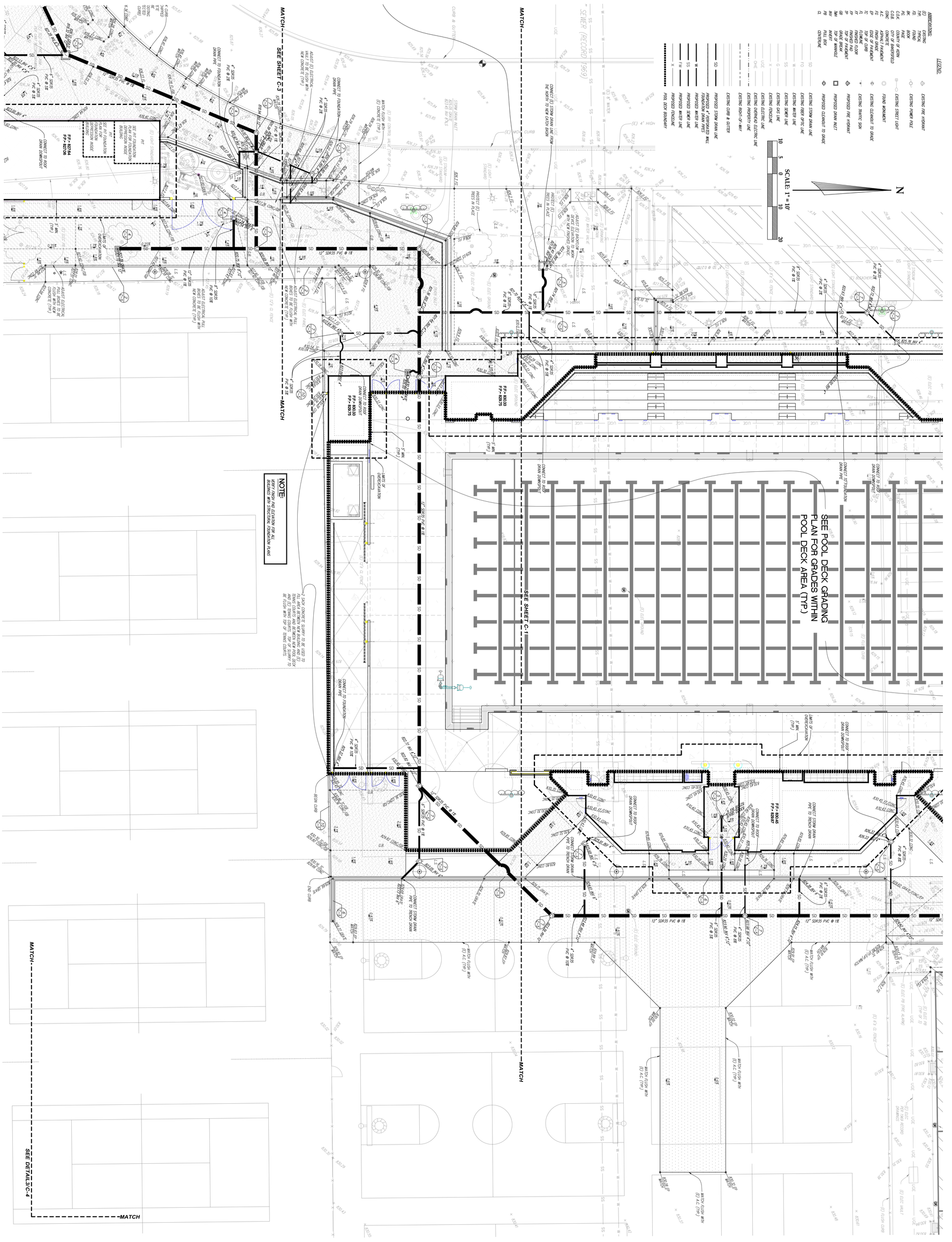

C-2

GRADING PLAN - CENTRAL

HIGHLAND HIGH SCHOOL
50M POOL & AQUATICS CENTER

KERN HIGH SCHOOL DISTRICT

REGISTERED PROFESSIONAL ENGINEER — STATE OF CALIFORNIA — EXP. 3-31-24

SWANSON ENGINEERING, INC.
2000 Oak Street, Suite 150 ~ Bakersfield, CA 93301
p:(661) 831-4919; f:(661) 873-4777
JOB#: 22-053 MCH

LICENSED ARCHITECT — STATE OF CALIFORNIA — REN. 08/31/25

pjhm architects

IDENTIFICATION STAMP
DIV. OF THE STATE ARCHITECT
APP: 03-122664 INC:
SS ☑ REVIEWED FOR
FLS ☑ ACS ☑
DATE: 06/12/2023

OC Office: 24461 Ridge Route Drive #100, Laguna Hills, CA 92653 • OC Phone: 949.496.6191 • SD Office: 804 Pier View Way #103, Oceanside, CA 92054 • SD Phone: 760.730.5527 • LA Office: 837 Traction Avenue, #410, Los Angeles, CA 90013 • LA Phone: 213.278.0172 • Web: pjhm.com

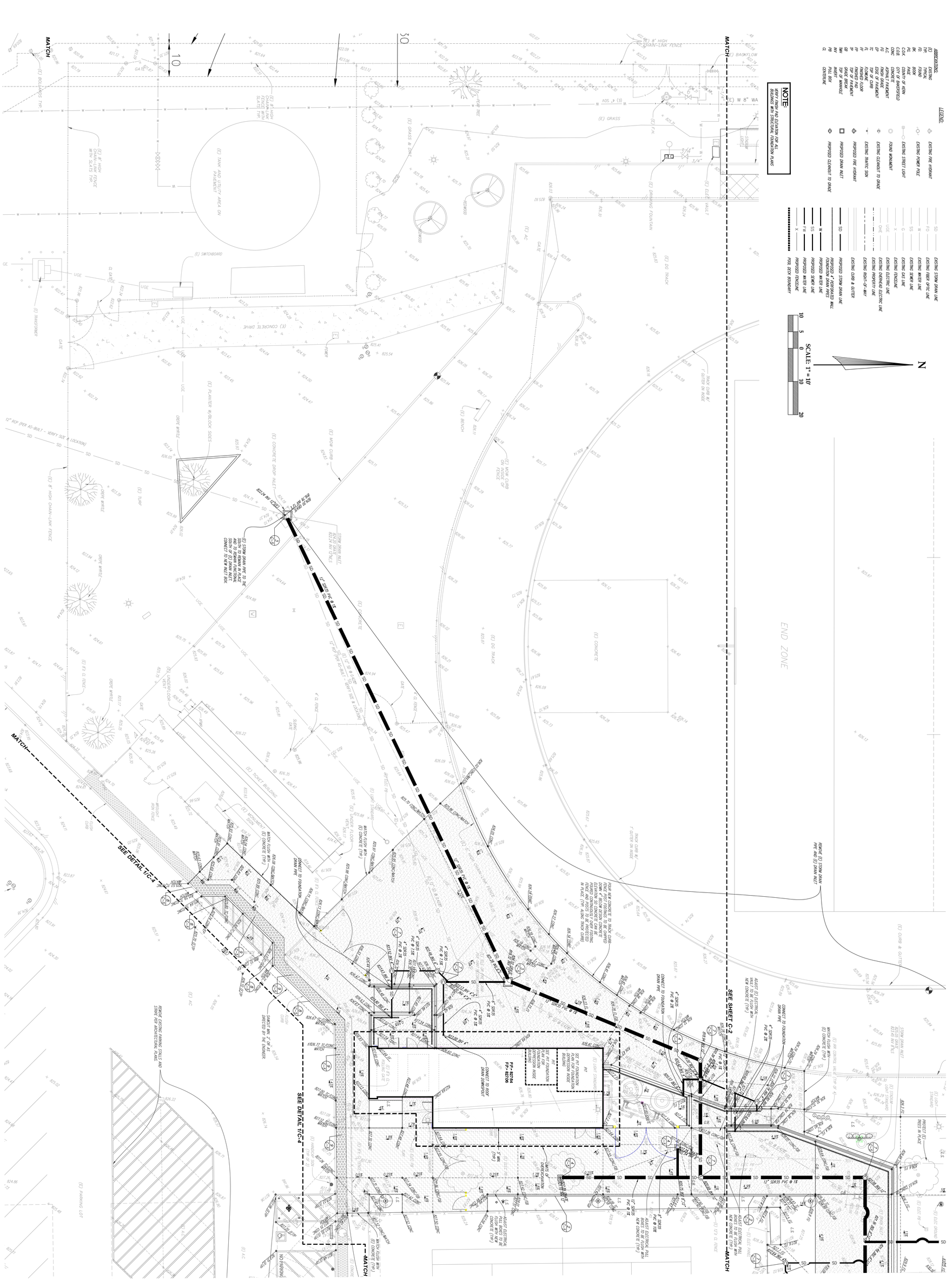
NOTE:
VERIFY FINISH PAD ELEVATION FOR ALL BUILDINGS WITH STRUCTURAL FOUNDATION PLANS
LEGEND:
EXISTING FIRE HYDRANT
EXISTING POWER POLE
EXISTING STREET LIGHT
FOUND MONUMENT
EXISTING CLEANOUT TO GRADE
EXISTING TRAFFIC SIGN
PROPOSED FIRE HYDRANT
PROPOSED STORM DRAIN INLET
PROPOSED CLEANOUT TO GRADE
EXISTING STORM DRAIN LINE
EXISTING FIBER OPTIC LINE
EXISTING WATER LINE
EXISTING SEWER LINE
EXISTING GAS LINE
EXISTING CONDUIT
EXISTING ELECTRIC LINE
EXISTING OVERHEAD ELECTRIC LINE
EXISTING PROPERTY LINE
EXISTING RIGHT-OF-WAY
EXISTING CURB & GUTTER
PROPOSED STORM DRAIN LINE
PROPOSED RETAINING WALL FOUNDATION (REFER TO STRUCTURAL PLANS)
PROPOSED SEWER LINE
PROPOSED WATER LINE
PROPOSED FENCELINE
POOL ECPC BOUNDARY
ABBREVIATIONS:
(E) EXISTING
FND FOUND
FD FOUND
BK BACK
EP EDGE OF PAVEMENT
FG FINISH GRADE
FL FLOWLINE
FS FINISHED FLOOR
TP TOP OF PAVEMENT
GB GRADE BREAK
INV INVERT
PB PULL BOX
CL CENTERLINE
SCALE: 1" = 10'
N
MATCH
SEE DETAIL 1/C-1
SEE DETAIL 1/C-4
SEE SHEET C-2
END ZONE
(E) BACKFLOW
(E) 8" HIGH CHAIN-LINK FENCE
(E) GRASS
(E) GRASS & SOD
(E) DRINKING FOUNDATION
(E) ELEC. VAULT
(E) SWITCHBOARD
(E) TRANSFORMER
(E) CONCRETE DRIVE
(E) PLANTER W/BLOCK SIDES
(E) CONCRETE DROP INLET
(E) MOW CURB
(E) BENCH
(E) TURF
(E) 8' HIGH CHAIN-LINK FENCE
(E) TICKET BUILDING
(E) DO TRACK
(E) CONCRETE
(E) CURB & GUTTER
(E) LIGHT STANDARD
(E) STORM DRAIN INLET
(E) SEWER MH
(E) WATER VALVE
(E) FIRE HYDRANT
(E) TREE
(E) PALM TREE
(E) 6" SOV
(E) W 8" WA
(E) 4" SOV
(E) 3" W
(E) 1" W
(E) 3/4" W
(E) 2" W
(E) 1 1/2" W
(E) 6" W
(E) 4" W
(E) 3" W
(E) 2" W
(E) 1" W
(E) 3/4

OC Office: 24461 Ridge Route Drive #100, Laguna Hills, CA 92653 • OC Phone: 949.496.6191 • SD Office: 804 Pier View Way #103, Oceanside, CA 92054 • SD Phone: 760.730.5527 • LA Office: 837 Traction Avenue, #410, Los Angeles, CA 90013 • LA Phone: 213.278.0172 • Web: plhm.com

IDENTIFICATION STAMP
DIV. OF THE STATE ARCHITECT
APP: 03-12664 INC:
REVIEWED FOR
SS ☑ FLS ☑ ACS ☑
DATE: 05/12/2023

plhm architects

LICENSED ARCHITECT
JEFFREY W. SHAW
REGISTERED
No. C 31511
10-25
STATE OF CALIFORNIA

SWANSON ENGINEERING, INC
2000 Oak Street, Suite 150 ~ Bakersfield, CA 93301
P: (661) 831-4916 F: (661) 873-4777
JOB# 22-053 MON

REGISTERED PROFESSIONAL ENGINEER
No. 43032
EXP: 3-31-24
STATE OF CALIFORNIA

KERN HIGH SCHOOL DISTRICT

HIGHLAND HIGH SCHOOL
50M POOL & AQUATICS CENTER

1 ADDENDUM NO. 1

GRADING PLAN - ADDITIONAL VIEWS

C-4

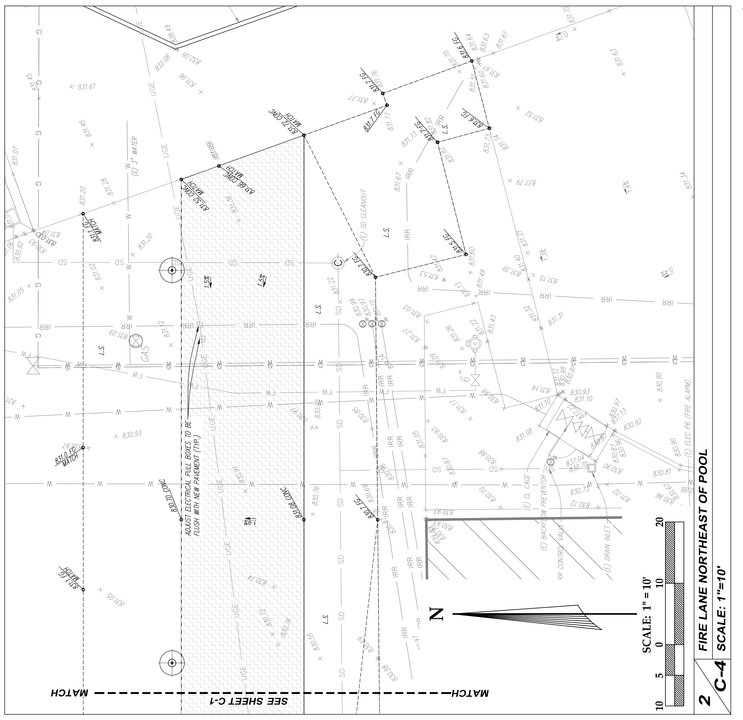

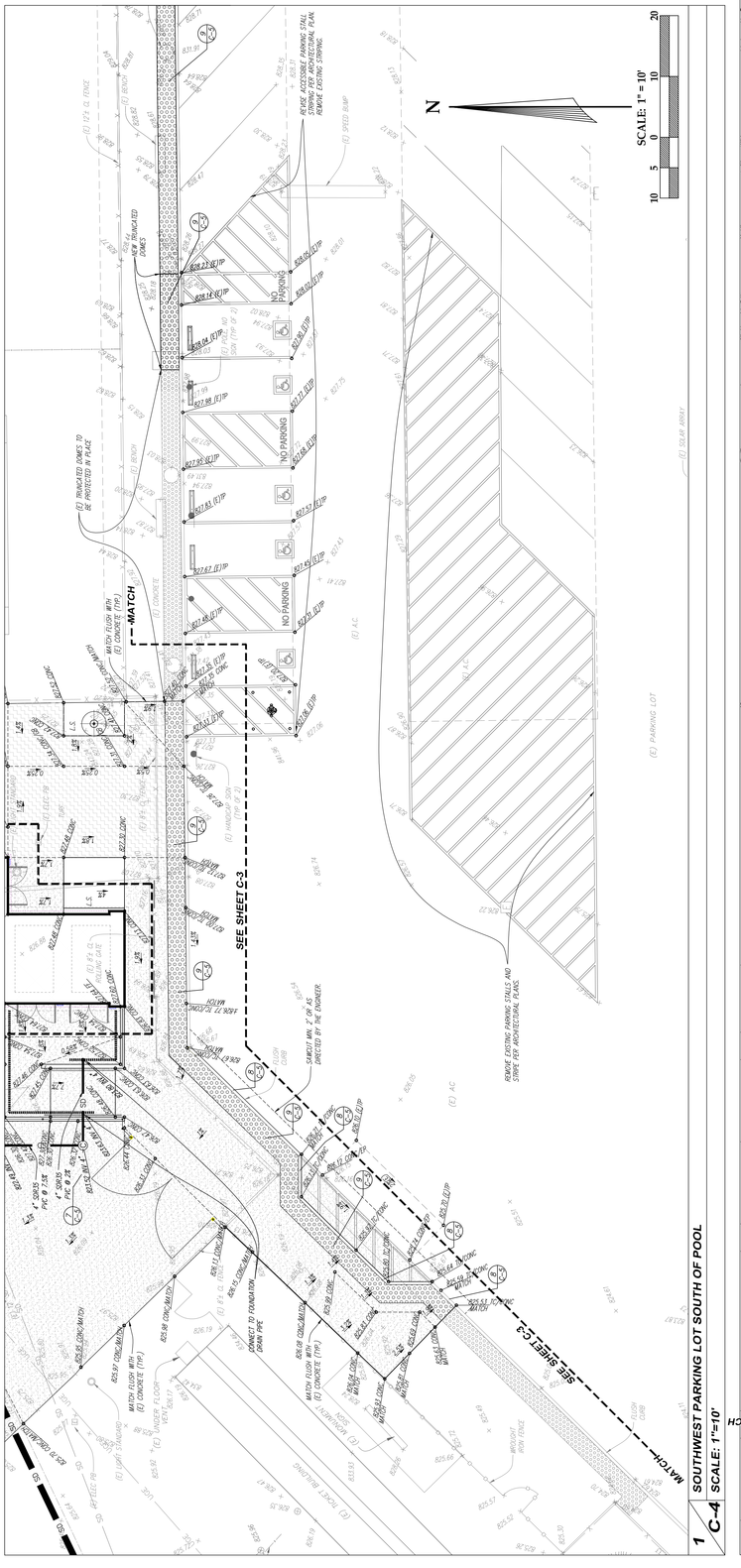

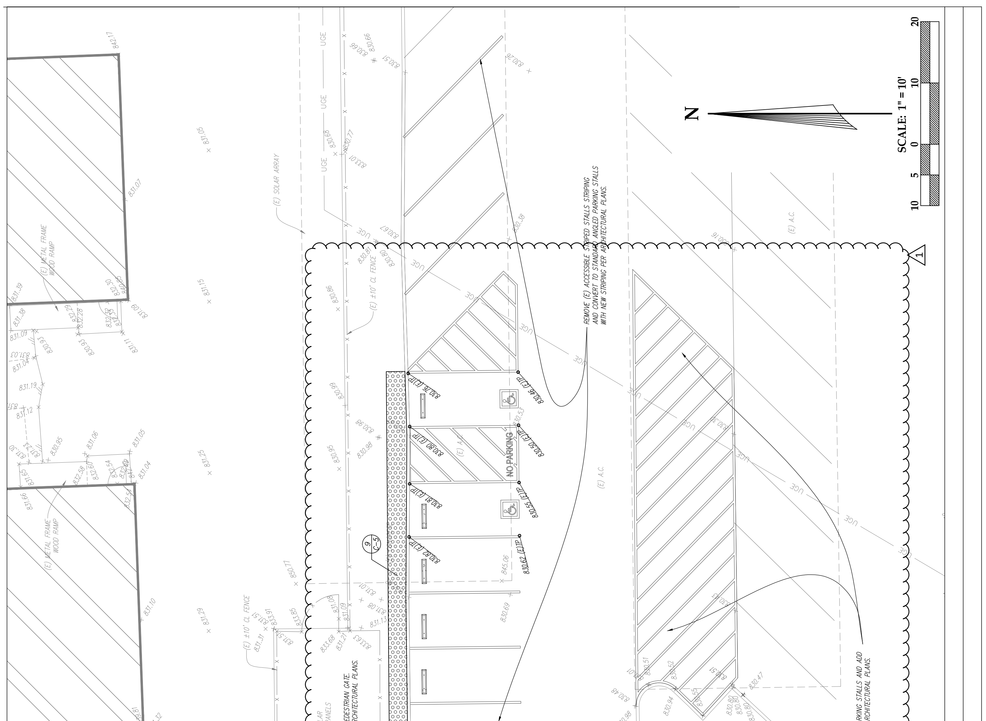

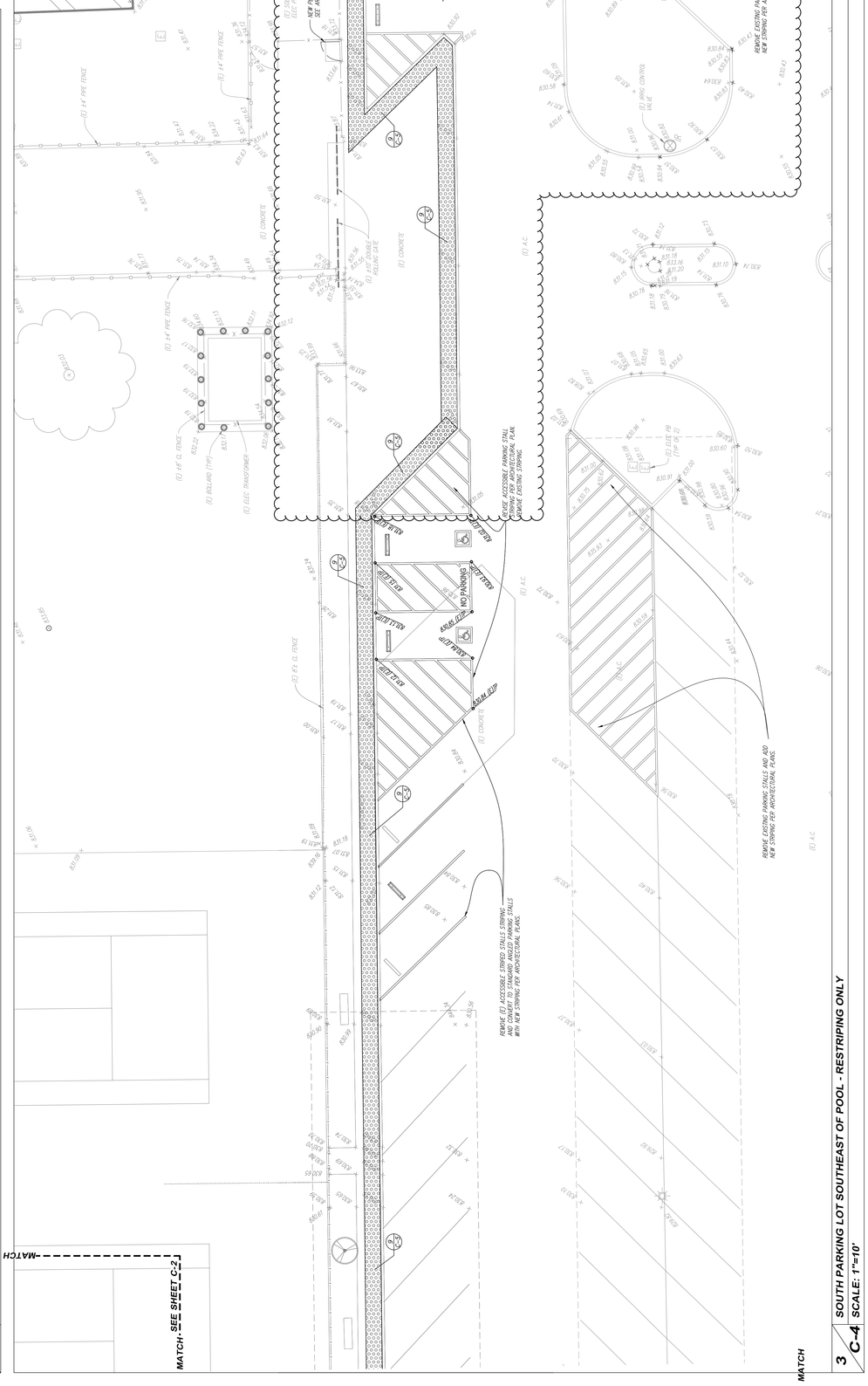

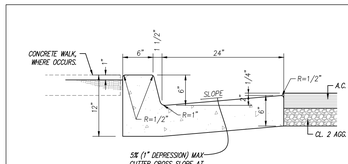

NOTE:
CLASS "3" CONCRETE (5 1/2 SACK)
EXPANSION JOINTS EA. 30'
WEAKENED PLANE JTS. EA. 15'
POUR ON COMPACTED SUBGRADE

1 C-5 6" CURB & GUTTER

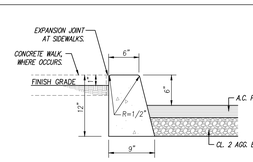

NOTE:
CLASS "3" CONCRETE (5 1/2 SACK)
EXPANSION JOINTS EA. 30'
WEAKENED PLANE JTS. EA. 15'
POUR ON COMPACTED SUBGRADE

2 C-5 6" CONCRETE CURB

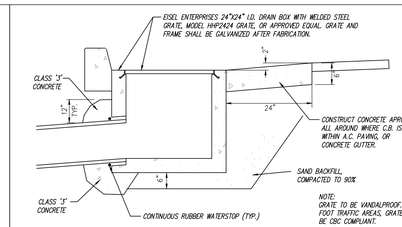

NOTE:
OPENINGS IN GRATES LOCATED IN PEDESTRIAN PATH OF TRAVEL SHALL NOT BE MORE THAN 1/2" IN LENGTH IN THE DIRECTION OF TRAVEL. ELONGATED OPENINGS SHALL BE PLACED SO THE LONG DIMENSION IS PERPENDICULAR TO THE DOMINANT DIRECTION OF TRAVEL IN COMPLIANCE WITH SECTION 11B-302.3.

3 C-5 CATCH BASIN

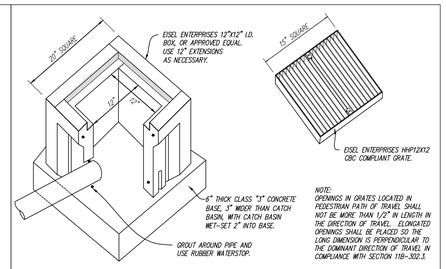

NOTE:
OPENINGS IN GRATES LOCATED IN PEDESTRIAN PATH OF TRAVEL SHALL NOT BE MORE THAN 1/2" IN LENGTH IN THE DIRECTION OF TRAVEL. ELONGATED OPENINGS SHALL BE PLACED SO THE LONG DIMENSION IS PERPENDICULAR TO THE DOMINANT DIRECTION OF TRAVEL IN COMPLIANCE WITH SECTION 11B-302.3.

4 C-5 EISEL ENTERPRISES 12X12 DRAIN BOX

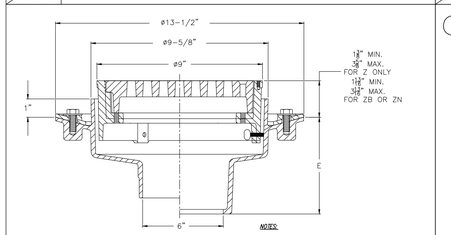

NOTES:
1. PROVIDE DURA-COATED CAST IRON BODY WITH POLISHED NICKEL BRONZE TOP.
2. INSTALL PER MANUFACTURER'S RECOMMENDATIONS.
3. PROVIDE CBC AND ADA COMPLIANT GRATE (PART #36965-1)

5 C-5 ZURN Z520 HEAVY-DUTY ADJUSTABLE FLOOR DRAIN

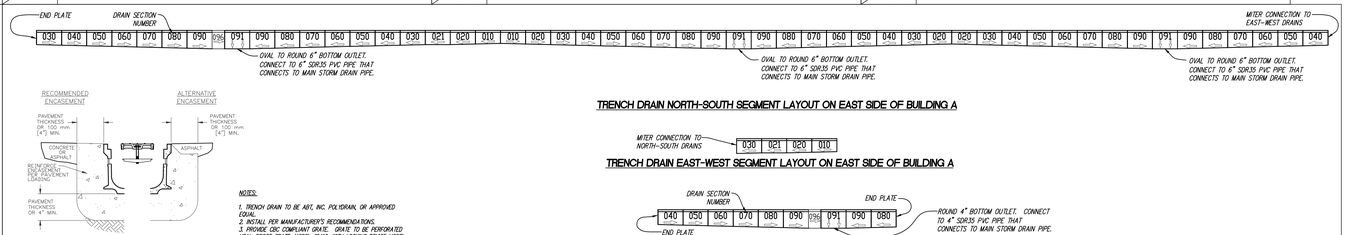

NOTES:
1. TRENCH DRAIN TO BE ABT, INC. POLYDRAIN, OR APPROVED EQUAL.
2. INSTALL PER MANUFACTURER'S RECOMMENDATIONS.
3. PROVIDE CBC COMPLIANT GRATE. GRATE TO BE PERFORATED HEAL-PROOF GRATE, MODEL #2412, WITH LOCKING DEVICE MODEL #2810A.

TRENCH DRAIN NORTH-SOUTH SEGMENT LAYOUT ON EAST SIDE OF BUILDING A

TRENCH DRAIN EAST-WEST SEGMENT LAYOUT ON EAST SIDE OF BUILDING A

TRENCH DRAIN AT WEST SIDE OF NORTH PORTION OF BUILDING B

6 C-5 TRENCH DRAIN SEGMENTS

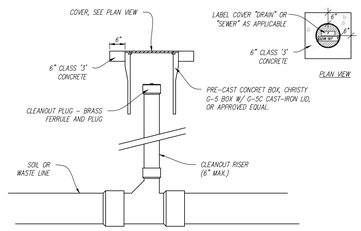

7 C-5 CLEANOUT TO GRADE

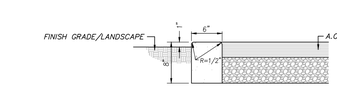

NOTE:
CLASS "3" CONCRETE (5 1/2 SACK)
EXPANSION JOINTS EA. 30'
WEAKENED PLANE JTS. EA. 15'
POUR ON COMPACTED SUBGRADE

8 C-5 FLUSH CURB

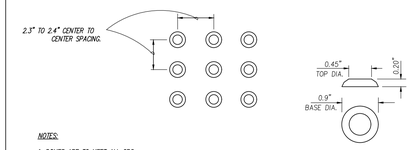

NOTES:
1. DOMES ARE TO MEET ALL CBC REQUIREMENTS.
2. NO GLUE DOWN DOMES ARE TO BE USED.

RAISED TRUNCATED DOME PATTERN (IN-LINE) DETECTABLE WARNING SURFACE.

9 C-5 TRUNCATED DOMES

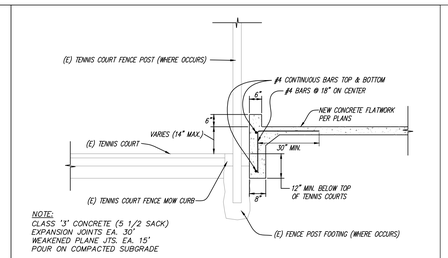

NOTE:
CLASS "3" CONCRETE (5 1/2 SACK)
EXPANSION JOINTS EA. 30'
WEAKENED PLANE JTS. EA. 15'
POUR ON COMPACTED SUBGRADE

10 C-5 CONCRETE EDGE ALONG TENNIS COURT FENCE

GRADING NOTES

1. ALL GRADING SHALL CONFORM TO THE CITY OF BAKERSFIELD ORDINANCES AND STANDARDS PERTAINING THERETO [CALIFORNIA BUILDING CODE, 2019] AND SHALL BE SUPERVISED AS ENGINEERED GRADING IN ACCORDANCE WITH CITY OF BAKERSFIELD ORDINANCES.

2. THE DESIGN ENGINEER SHALL EXERCISE SUFFICIENT SUPERVISORY CONTROL DURING GRADING AND CONSTRUCTION TO INSURE COMPLIANCE WITH THE PLANS, SPECIFICATIONS AND CODE WITHIN HIS PURVIEW.

3. THE SOIL ENGINEER, DESIGN ENGINEER, DSA PROJECT INSPECTOR, AND BUILDING OFFICIAL SHALL BE NOTIFIED 48 HOURS PRIOR TO PLACING ANY MATERIAL.

4. CONTRACTOR AGREES THAT HE SHALL ASSUME SOLE AND COMPLETE RESPONSIBILITY FOR JOB SITE CONDITIONS DURING THE COURSE OF CONSTRUCTION OF THIS PROJECT INCLUDING SAFETY OF ALL PERSONS AND PROPERTY; THAT THIS REQUIREMENT SHALL APPLY CONTINUOUSLY AND NOT BE LIMITED TO NORMAL WORKING HOURS; AND THAT THE CONTRACTOR SHALL DEFEND, INDEMNIFY, AND HOLD THE OWNER, ARCHITECT, AND THE ENGINEER HARMLESS FROM ANY LIABILITY, REAL OR ALLEGED, IN CONNECTION WITH THE PERFORMANCE OF WORK ON THIS PROJECT, EXCEPTING FOR LIABILITY ARISING FROM THE SOLE NEGLIGENCE OF THE OWNER, ARCHITECT, OR THE ENGINEER.

5. THE GRADING CONTRACTOR SHALL CONTACT ALL COMPANIES WITH UNDERGROUND FACILITIES PRIOR TO BEGINNING CONSTRUCTION AND VERIFY THE LOCATION AND DEPTH OF ALL UNDERGROUND FACILITIES, INCLUDING TELEPHONE, ELECTRIC, WATER, SEWER, OIL AND GAS LINES. THE ENGINEER ASSUMES NO RESPONSIBILITY FOR BURIED LINES NOT INDICATED ON THE PLAN OR FOR INFORMATION OBTAINED FROM OUTSIDE SOURCES. (USA - 811)

6. THE GRADING CONTRACTOR SHALL BE RESPONSIBLE FOR GRADING ALL AREAS TO + OR - 0.10 FOOT. IF AN AREA SHOULD BE FOUND TO BE MORE THAN 0.10 FOOT OUT OF TOLERANCE AFTER COMPACTING AND COMPLETION OF GRADING, THE CONTRACTOR SHALL RETURN AND CORRECT THE GRADING AT NO COST TO THE OWNER.

7. THE CONTRACTOR SHALL WATER AS REQUIRED DURING THE GRADING OPERATIONS TO PREVENT THE OCCURRENCE OF A DUST NUISANCE AND SHALL PROTECT CURBS AND OTHER OBJECTS WHICH ARE TO REMAIN. DUST CONTROL SHALL CONFORM TO THE SAN JOAQUIN VALLEY UNIFIED AIR POLLUTION CONTROL DISTRICT REGULATIONS.

8. EXCAVATION - EXCAVATION SHALL CONSIST OF ALL EXCAVATION INVOLVED IN GRADING THE PROJECT AS SHOWN ON THE PLANS. THIS SHALL INCLUDE EXPORTING MATERIAL TO AN OFF-SITE LOCATION, AS REQUIRED.

9. EMBANKMENTS - EMBANKMENT CONSTRUCTION SHALL CONSIST OF CONSTRUCTING EMBANKMENTS, INCLUDING THE PREPARATION OF AREAS WHERE THEY ARE TO BE PLACED, THE CONSTRUCTION OF DIKES WITHIN OR OUTSIDE THE CONSTRUCTION AREA, THE PLACING AND COMPACTING OF APPROVED MATERIAL WITHIN THE CONSTRUCTION AREA WHERE UNSUITABLE MATERIAL HAS BEEN REMOVED, AND THE PLACING AND COMPACTING OF EMBANKMENT MATERIAL IN HOLES, PITS, AND DEPRESSIONS. IT SHOULD ALSO CONSIST OF PREPARING SUB-GRADE AT THE GRADING PLANE, CONFORMING TO THE GRADE TOLERANCE, DOING NECESSARY PLOWING OR BENCHING, IMPORTING OR EXPORTING, PLACING AND COMPACTING MATERIAL TO THE LINE AND GRADES SHOWN ON THE PLANS. ALL EMBANKMENT CONSTRUCTION SHALL BE CONSIDERED AS INCLUDED IN THE CONTRACT PRICE.

10. THE WORK EMBRACED HEREIN SHALL BE IN ACCORDANCE WITH THE STANDARD SPECIFICATIONS OF THE STATE OF CALIFORNIA DEPARTMENT OF TRANSPORTATION DATED JULY 2018 (UNLESS OTHERWISE SPECIFIED), ROOFAID AS THE SAME MAY APPLY IN ACCORDANCE WITH THE NOTES HEREIN. IN CASE OF CONFLICT WITH THE STANDARD SPECIFICATIONS AND ANY NOTES HEREON, THE NOTES HEREON SHALL TAKE PRECEDENCE OVER AND BE USED IN LIEU OF SUCH CONFLICTING PORTIONS. SAID SPECIFICATIONS SHALL APPLY BUT NOT BE LIMITED TO THE FOLLOWING:

A) ALL CONCRETE SHALL BE CLASS "3" USING TYPE V CEMENT AS IN ACCORDANCE WITH SECTION 90 AND SHALL HAVE AT LEAST 2500 PSI COMPRESSIVE STRENGTH AT 28 DAYS, PER CALTRANS STANDARD SPECIFICATIONS (2006) UNLESS OTHERWISE SPECIFIED.

B) ASPHALTIC CONCRETE SHALL BE TYPE "B", 1/2" MAXIMUM, MEDIUM GRADED, AND INTIMATELY MIXED WITH 5-6.5(B ASPHALT PER CALTRANS STANDARD SPECIFICATIONS (2006) NO. R.A.P. (RECLAIMED ASPHALT PAVEMENT) SHALL BE USED. ASPHALT SHALL BE PERFORMANCE GRADE PG64-10.

11. SWANSON ENGINEERING SHALL NOT BE RESPONSIBLE OR LIABLE FOR UNAUTHORIZED CHANGES TO, OR USES OF, THESE PLANS. ALL CHANGES TO THESE PLANS MUST BE APPROVED, IN WRITING, BY SWANSON ENGINEERING.

12. ALL GRADING SHALL CONFORM TO THE RECOMMENDATIONS CONTAINED IN THE PRELIMINARY SOILS REPORT, MADE A PART HEREOF, PREPARED BY SOILS ENGINEERING, INC., FILE NO. 22-18353, DATED APRIL 22, 2022, TITLED "GEOTECHNICAL INVESTIGATION FOR THE NEW HIGHLAND HIGH SCHOOL SWIMMING POOL, 2900 ROYAL SCOTS WAY, IN BAKERSFIELD, CALIFORNIA", AND ALL ADDENDA THERETO. IN CASE OF A CONFLICT BETWEEN THE PLANS, SPECIFICATIONS, AND SOILS RECOMMENDATIONS, THE MORE STRINGENT REQUIREMENTS SHALL TAKE PRECEDENCE.

13. PRIOR TO COMMENCING CONSTRUCTION, CONTRACTOR SHALL POTHOLE ALL UTILITIES THAT WILL BE AFFECTED BY THIS CONSTRUCTION TO DETERMINE IF ANY UTILITY CONFLICTS EXIST. ANY UTILITY CONFLICTS SHALL BE BROUGHT TO THE ATTENTION OF THE ENGINEER SO THAT DESIGN CHANGES CAN BE MADE PRIOR TO THE START OF CONSTRUCTION.

14. UPON COMPLETION OF GRADING AND BEFORE THE START OF CONSTRUCTION, A FINAL SOILS REPORT SHALL BE PREPARED BY THE SOIL ENGINEER.

15. THE SOIL ENGINEER SHALL REVIEW ALL EXCAVATIONS PRIOR TO BACKFILLING AND SHALL BE NOTIFIED OF ANY ITEM ENCOUNTERED DURING THE GRADING OPERATIONS THAT MIGHT AFFECT FOUNDATION STABILITY SO THAT RECOMMENDATIONS CAN BE MADE BY THE SOIL ENGINEER.

16. CUT AND FILL SLOPES NEARER THAN FIVE FEET FROM THE BUILDING FOUNDATIONS SHALL NOT BE STEEPER THAN 5:1. CUT AND FILL SLOPES SHALL NOT BE STEEPER THAN 2:1 FOR SLOPES FARTHER THAN FIVE FEET FROM FOOTING LINES.

17. ALL SLOPES GREATER THAN THREE FEET IN VERTICAL HEIGHT SHALL BE PREPARED AND MAINTAINED TO PREVENT EROSION.

18. IMPORTED FILL MATERIAL SHOULD CONSIST OF ESSENTIALLY GRANULAR, SILTY SANDS WITH LOW EXPANSION POTENTIAL AND FREE OF GRASSES, WEEDS, ROCKS LARGER THAN TWO INCHES IN DIAMETER, DEBRIS, AND SOLUBLE SULFATES IN EXCESS OF 200 PARTS PER MILLION. IMPORTED FILL SHOULD CONTAIN SUFFICIENT SILT AND CLAY BINDER TO RENDER THEM STABLE IN FOOTING TRENCHES AND CAPABLE OF MAINTAINING SPECIFIED ELEVATION TOLERANCES DURING PAVING OPERATIONS. ANY EARTHEN MATERIALS PROPOSED TO BE BROUGHT ONTO SCHOOL SITES ARE SUBJECT TO TESTING TO VERIFY THEY ARE IN COMPLIANCE WITH DTSC STANDARDS. OWNER SHALL DETERMINE IF TESTING OF MATERIALS IS REQUIRED PRIOR TO ANY MATERIAL BEING BROUGHT ONTO THE SITE. TESTING OF MATERIALS MAY TAKE UP TO TWO WEEKS TO VERIFY COMPLIANCE WITH DTSC STANDARDS.

IMPORTED SOILS SHOULD ALSO MEET THE FOLLOWING CRITERIA:

A) MAXIMUM % PASSING #200 SIEVE 40
B) MAXIMUM % RETAINED 3" SIEVE 0
C) MAXIMUM % RETAINED 1-1/2" SIEVE FOR BUILDING AREAS . . . 15
D) MAXIMUM % RETAINED 3/4" SIEVE FOR LANDSCAPE AREAS . . . 5
E) MAXIMUM LIQUID LIMIT 40
F) MAXIMUM PLASTICITY INDEX 14
G) MINIMUM R-VALUE 50
H) MAXIMUM EXPANSION INDEX 20

19. CLEARING AND GRUBBING - REMOVE ALL DEBRIS, SUCH AS METAL, TRASH, BROKEN CONCRETE, VEGETATION, OTHER BIODEGRADABLE SUBSTANCES, AND UNSUITABLE SOIL FROM AREAS TO BE GRADED. UNSUITABLE SOIL IS SOIL THAT, IN THE OPINION OF THE BUILDING OFFICIAL, SOIL ENGINEER, OR CIVIL ENGINEER, IS NOT COMPETENT TO SUPPORT OTHER SOIL OR STRUCTURES, OR TO SATISFACTORILY PERFORM ANY OTHER FUNCTIONS FOR WHICH THE SOIL IS INTENDED.

20. AREAS TO RECEIVE FILL SHALL BE SCARIFIED SIX INCHES, OR AS RECOMMENDED IN THE SOIL REPORT, WHICHEVER IS GREATER, UNTIL THE SURFACE IS FREE FROM RUTS, HUMMOCKS OR OTHER UNEVEN FEATURES WHICH WOULD TEND TO PREVENT UNIFORM COMPACTION BY THE EQUIPMENT TO BE USED. MOISTEN AND COMPACT TO AT LEAST 90% OF THE MAXIMUM DENSITY PER ASTM D1557 UNLESS OTHERWISE SPECIFIED.

21. ENGINEERED FILL MATERIALS SHOULD BE PLACED IN THIN LAYERS (LESS THAN EIGHT INCHES UNCOMPACTED THICKNESS), BROUGHT TO NEAR THE OPTIMUM MOISTURE CONTENT OR TO A MOISTURE CONTENT COMMENSURATE WITH EFFECTIVE COMPACTION AND SOIL STABILITY, AND COMPACTED TO A MINIMUM OF 90 PERCENT OF THE MAXIMUM DENSITY OBTAINABLE BY ASTM TEST METHOD D1557.

22. QUANTITIES FOR EARTHWORK

EXCAVATION - 4,250 C.Y.
EMBANKMENT - 2,350 C.Y.

QUANTITIES ARE FOR GRADING PERMIT ONLY. THE ENGINEER MAKES NO WARRANTY OF THE ANTICIPATED SHRINKAGE FACTOR. THE CONTRACTOR SHALL NOT USE THESE QUANTITIES TO BASE HIS BID ON. THE GRADING PLAN DOES NOT NECESSARILY INDICATE A BALANCED SITE. CONTRACTOR SHALL BE RESPONSIBLE FOR IMPORTING MATERIALS FROM AN OFF-SITE LOCATION OR EXPORTING EXCESS MATERIAL TO AN OFF-SITE LOCATION, AS NEEDED.

23. CONTRACTOR TO VERIFY DIMENSIONS AND ELEVATIONS OF EXISTING IMPROVEMENTS IN THE FIELD BEFORE PROCEEDING WITH WORK. ANY DISCREPANCIES THAT WILL AFFECT TIE-INS TO EXISTING IMPROVEMENTS SHALL BE BROUGHT TO THE ATTENTION OF THE ENGINEER BEFORE PROCEEDING WITH ANY WORK.

24. PROPOSED STRUCTURE, POOL DECK AND POOL BOTTOM AREAS GROUND SURFACE PREPARATION:

A. EXCAVATE EARTH MATERIAL IN THE PROPOSED STRUCTURE AREA TO A MINIMUM DEPTH OF FOUR (4) FEET BELOW THE LOWEST GRADE IN EACH OF THE PROPOSED STRUCTURE AREAS OR TWO (2) FEET BELOW BOTTOM OF FOUNDATION, WHICHEVER IS DEEPER.
B. EXCAVATE EARTH MATERIAL IN THE PROPOSED POOL DECK AREA TO A MINIMUM DEPTH OF TWO (2) FEET BELOW EXISTING GRADE OR ONE (1) FOOT BELOW BOTTOM OF THE CONCRETE POOL DECK, WHICHEVER IS DEEPER.
C. EXCAVATE EARTH MATERIAL IN THE PROPOSED POOL BOTTOM AREA TO A MINIMUM DEPTH OF TWO (2) FEET BELOW.
D. THE BOTTOM OF THE EXCAVATION SHALL BE REVIEWED BY THE SOIL ENGINEER OR HIS REPRESENTATIVE PRIOR TO ANY BACKFILL OPERATIONS.
E. THE TOP TWELVE INCHES OF MATERIALS EXPOSED AT THE BOTTOM OF THE EXCAVATION SHALL BE SCARIFIED AND COMPACTED TO A MINIMUM OF 90 PERCENT OF ASTM D1557.
F. MOISTEN IMPORTED SOILS TO NEAR THE OPTIMUM MOISTURE OR TO A MOISTURE CONTENT CONSISTENT WITH EFFECTIVE COMPACTION AND SOILS STABILITY. COMPACT MOISTENED SOILS TO A MINIMUM OF 90 PERCENT OF THE MAXIMUM DENSITY OBTAINED BY ASTM TEST METHOD D1557.
G. WORK TO LINES AT LEAST FIVE (5) FEET BEYOND THE OUTSIDE EDGES OF EXTERIOR FOOTINGS AND AT LEAST TWO (2) FEET BEYOND POOL DECK AND POOL BOTTOM EDGES.

25. PAVEMENT AND FLATWORK AREA PREPARATION: GROUND SURFACES TO RECEIVE CONCRETE DRIVEWAY AND BITUMINOUS PAVEMENTS SHOULD BE SCARIFIED AND COMPACTED TO A MINIMUM DEPTH OF 12 INCHES BELOW THE GRADING PLANE IN CUT AREAS OR TO 12 INCHES IN AREAS TO RECEIVE FILL. ENGINEERED FILL PLACED IN PROPOSED PAVEMENT AREAS SHOULD BE COMPACTED TO A MINIMUM OF 90 PERCENT OF THE MAXIMUM DENSITY AS OBTAINED BY ASTM TEST METHOD D1557, AND SHOULD EXTEND TO A MINIMUM OF TWO FEET BEYOND THE OUTSIDE EDGES OF PAVEMENT.

26. ALL TRENCHES AND EXCAVATIONS SHALL BE CONSTRUCTED IN STRICT COMPLIANCE WITH THE APPLICABLE CALIFORNIA AND FEDERAL O.S.H.A. REQUIREMENTS AND OTHER APPLICABLE SAFETY ORDINANCES. CONTRACTOR SHALL BEAR FULL RESPONSIBILITY FOR TRENCH SHORING DESIGN AND INSTALLATION. CONTRACTORS SHALL OBTAIN APPLICABLE O.S.H.A. PERMITS WHEN WORKMEN MUST ENTER TRENCHES GREATER THAN FIVE FEET.

27. MAXIMUM SLOPE RATIO FROM BACK OF SIDEWALK TO FACE OF WALL OR STRUCTURE SHALL BE 4:1, EXCEPT FOR TWO FEET BEHIND THE SIDEWALK WHERE THE MAXIMUM SLOPE SHALL BE 2%. ALTERNATIVELY, THE CITY ENGINEER MAY APPROVE CURBING BEHIND THE SIDEWALK OR OTHER METHOD TO PREVENT EROSION ONTO THE SIDEWALK.

28. AN OPEN STREET PERMIT SHALL BE OBTAINED FROM THE CITY OF BAKERSFIELD PUBLIC WORKS DEPARTMENT FOR ANY WORK PERFORMED WITHIN EXISTING ACCEPTED STREET RIGHT OF WAY. UNLESS SECURED BY A SUBDIVISION AGREEMENT, SECURITY BASED ON AN APPROVED ENGINEER'S ESTIMATE FOR THE WORK PERFORMED WITHIN RIGHT OF WAY AND INSURANCE AS REQUIRED SHALL BE PROVIDED PRIOR TO ISSUANCE OF A PERMIT.

29. IF THE PROJECT IS SUBJECT TO THE PROVISIONS OF THE NATIONAL POLLUTANT DISCHARGE ELIMINATION SYSTEM (NPDES), A "NOTICE OF INTENT" (NOI) TO COMPLY WITH THE TERMS OF THE GENERAL PERMIT TO DISCHARGE STORM WATER ASSOCIATED WITH CONSTRUCTION ACTIVITY (WQ ORDER NO. 2009-009-DWQ AS AMENDED BY ORDER 2010-0014-DWQ AND ORDER 2012-0006-DWQ) MUST BE FILED WITH STATE WATER RESOURCES CONTROL BOARD IN SACRAMENTO BEFORE THE BEGINNING OF ANY CONSTRUCTION ACTIVITY. COMPLIANCE WITH THE GENERAL PERMIT REQUIRES THAT A STORM WATER POLLUTION PREVENTION PLAN (SWPPP) BE PREPARED, CONTINUOUSLY CARRIED OUT, AND ALWAYS BE AVAILABLE FOR PUBLIC INSPECTION DURING NORMAL CONSTRUCTION HOURS. WASTE DISCHARGE IDENTIFICATION (WDID) NUMBER _____ HAS BEEN ISSUED BY THE STATE WATER RESOURCES BOARD FOR THIS PROJECT.

30. 24 HOUR NOTICE: PRIOR TO THE START OF ANY PHASE OF CONSTRUCTION, THE CITY CONSTRUCTION INSPECTION SECTION SHALL BE GIVEN AT LEAST 24 HOUR NOTICE. THE SECTION MAY BE NOTIFIED AT (661) 326-3049.

31. COMPACTION TEST NOTE - COMPACTION TESTS SHALL BE THE RESPONSIBILITY OF THE DEVELOPER/SUBDIVIDER/CONTRACTOR. THE NUMBER AND LOCATION OF REQUIRED TESTS SHALL BE DETERMINED BY THE CITY ENGINEER.

32. ANY PUBLIC FACILITIES IN THE STREET RIGHT-OF-WAY WITHIN THE PROPERTY FRONTAGE WHICH ARE SUBSTANDARD OR DAMAGED WILL REQUIRE RECONSTRUCTION OR REPAIR AS DETERMINED BY THE CITY ENGINEER.

33. UNDERGROUND SERVICE ALERT SHALL BE CONTACTED TWO (2) WORKING DAYS PRIOR TO CONSTRUCTION (811).

IDENTIFICATION STAMP
DIV. OF THE STATE ARCHITECT
APP: 03-122664 INC:
REVIEWED FOR
SS ☑ FLS ☑ ACS ☑
DATE: 05/12/2023

pjhm architects

LICENSED ARCHITECT
RICHARD W. RIDDELL
REN. 02/25
STATE OF CALIFORNIA

SWANSON ENGINEERING, INC.
2000 M STREET, SUITE 420, BAKERSFIELD, CA 93301
(661) 631-4848 FAX: (661) 325-4479

DSA# 22-053

REGISTERED PROFESSIONAL ENGINEER
ROBERT T. SWANSON
No. 43032
EXP. 3-31-24
STATE OF CALIFORNIA

HIGHLAND HIGH SCHOOL
50M POOL & AQUATICS CENTER

KERN HIGH SCHOOL DISTRICT

GRADING NOTES & DETAILS

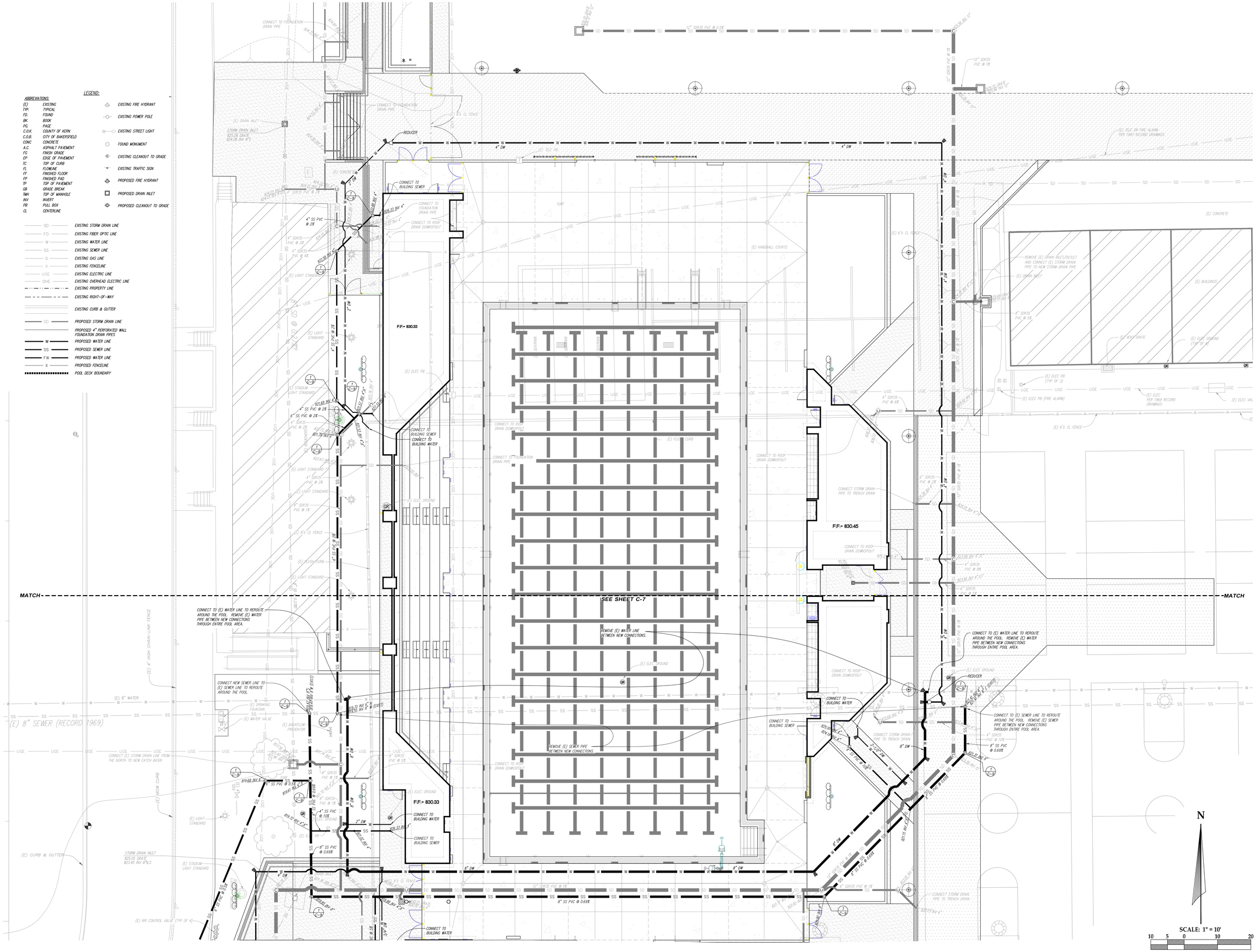

IDENTIFICATION STAMP
DIV. OF THE STATE ARCHITECT
APP: 03-122664 INC:
REVIEWED FOR
SS ☑ FLS ☑ ACS ☑
DATE: 05/12/2023

pjhm architects

LICENSED ARCHITECT
THOMAS W. KRUSE
NO. C15585
REN. 02/25
STATE OF CALIFORNIA

SWANSON ENGINEERING, INC.
2000 Oak Street, Suite 150 ~ Bakersfield, CA 93301
p:(661) 831-4919; f:(661) 873-4777
JOB# 22-053
MCN

REGISTERED PROFESSIONAL ENGINEER
ROBERT T. SWANSON
No. 43032
EXP. 3-31-24
STATE OF CALIFORNIA

HIGHLAND HIGH SCHOOL
50M POOL & AQUATICS CENTER

KERN HIGH SCHOOL DISTRICT

SITE UTILITY PLAN - NORTH

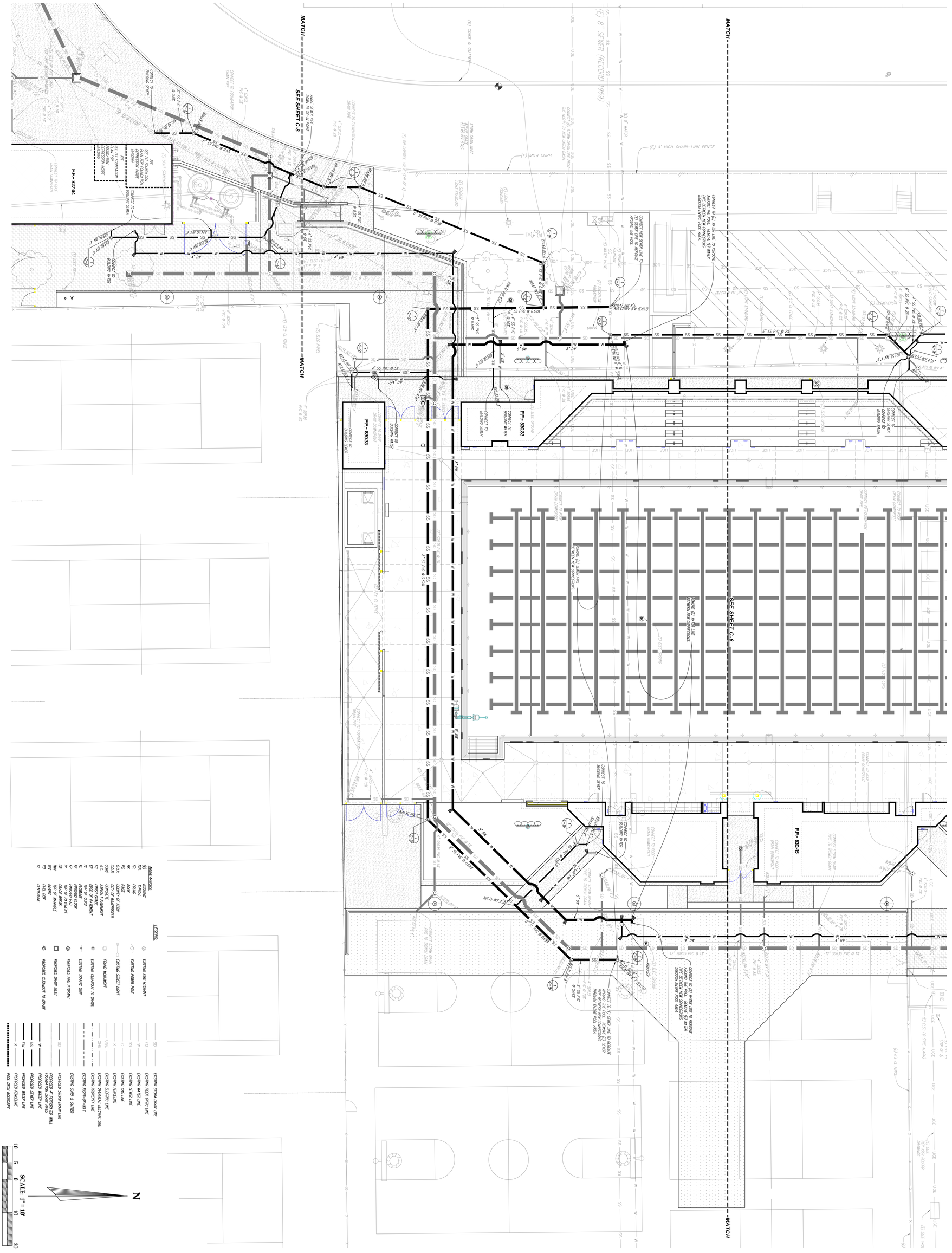

ABBREVIATIONS

(E)	EXISTING
TYP.	TYPICAL
RD.	ROUND
SQ.	SQUARE
PR.	PAIR
C.O.K.	COUNTY OF KERN
CONC.	CONCRETE
A.C.	ASPHALT PAVEMENT
EP	EDGE OF PAVEMENT
TC	TOP OF CURB
FL	FLOWLINE
FF	FINISHED FLOOR
FG	FINISHED GRADE
TP	TOP OF PAVEMENT
MH	MANHOLE
INV.	INVERT
TW	TOP OF WALL
CL	CENTERLINE

LEGEND

	EXISTING STORM DRAIN LINE
FO	EXISTING FIBER OPTIC LINE
W	EXISTING WATER LINE
SS	EXISTING SEWER LINE
G	EXISTING GAS LINE
X	EXISTING FENCELINE
UGE	EXISTING ELECTRIC LINE
OHE	EXISTING OVERHEAD ELECTRIC LINE
	EXISTING PROPERTY LINE
	EXISTING RIGHT-OF-WAY
	EXISTING CURB & GUTTER
	PROPOSED STORM DRAIN LINE
	PROPOSED FOUNDATION DRAIN PIPES
W	PROPOSED WATER LINE
SS	PROPOSED SEWER LINE
FW	PROPOSED FENCELINE
X	PROPOSED POOL KICK BOUNDARY

EXISTING FIRE HYDRANT
EXISTING POWER POLE
EXISTING STREET LIGHT
FOUND MONUMENT
EXISTING CLEANOUT TO GRADE
EXISTING TRAFFIC SIGN
PROPOSED FIRE HYDRANT
PROPOSED DRAIN INLET
PROPOSED CLEANOUT TO GRADE

SCALE: 1" = 10'
10 5 0 10 20
N

SITE UTILITY PLAN - CENTRAL

C-7

HIGHLAND HIGH SCHOOL
50M POOL & AQUATICS CENTER

KERN HIGH SCHOOL DISTRICT

SWANSON ENGINEERING, INC.
2000 Oak Street, Suite 150 ~ Bakersfield, CA 93301
p:(661) 831-4919; f:(661) 873-4777
JOB#- 22-053 MCN

pjhm architects

IDENTIFICATION STAMP
DIV. OF THE STATE ARCHITECT
APP: 03-122664 INC:
REVIEWED FOR
SS ☑ FLS ☑ ACS ☑
DATE: 05/12/2023

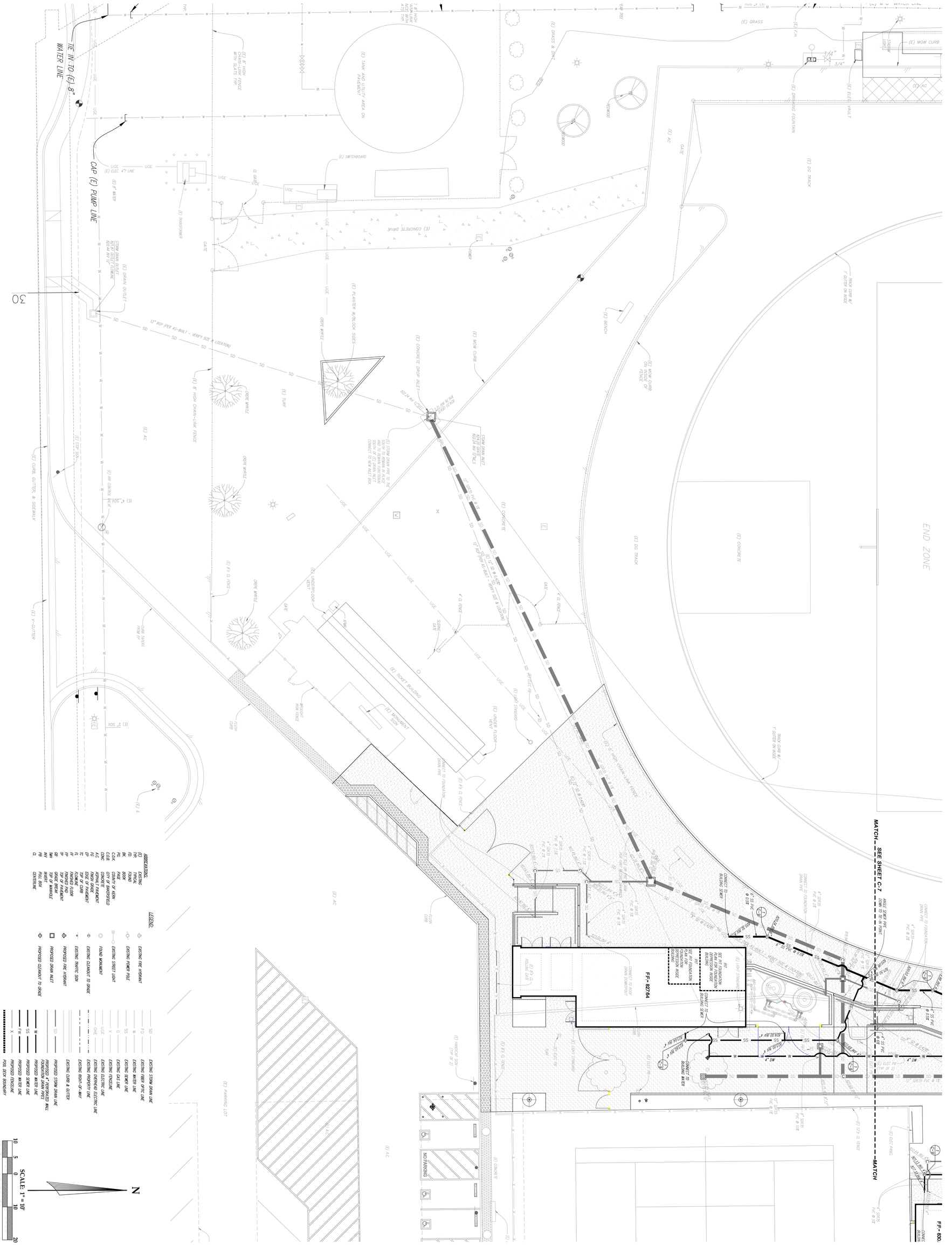

SITE UTILITY PLAN - SOUTH

HIGHLAND HIGH SCHOOL
50M POOL & AQUATICS CENTER

KERN HIGH SCHOOL DISTRICT

REGISTERED PROFESSIONAL ENGINEER — STATE OF CALIFORNIA — EXP. 3-31-24

SWANSON ENGINEERING, INC.
2000 Oak Street, Suite 150 ~ Bakersfield, CA 93301
p:(661) 831-4919; f:(661) 873-4777
JOB#- 22-053 MCN

LICENSED ARCHITECT — STATE OF CALIFORNIA — REN. 07-31-25

pjhm architects

IDENTIFICATION STAMP
DIV. OF THE STATE ARCHITECT
APP: 03-122864 INC:
SS ☑ REVIEWED FOR
FLS ☑ ACS ☑
DATE 05/12/2023

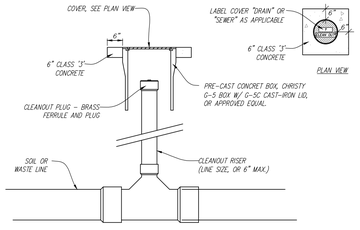

1 C-9 2-WAY CLEANOUT TO GRADE

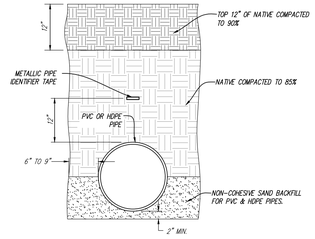

2 C-9 PVC/HDPE TRENCH DETAIL

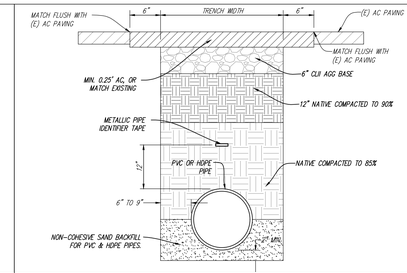

3 C-9 ON-SITE TRENCH W/ PAVEMENT PATCH

CROSS

TEE

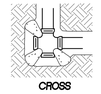
CROSS

TEE

90° ELL

22.5° ELL

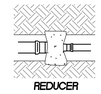
REDUCER

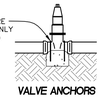

VALVE ANCHORS

THRUST BLOCK SCHEDULE

	BEARING AREA IN SQ. FT.			
PIPE SIZE	TEE OR PLUG	90° ELL OR HYDRANT	45° ELL	22-1/2° ELL
6"	2.8	4.0	2.2	1.1
8"	5.0	7.1	3.8	2.0
10"	7.9	11.1	6.0	3.1
12"	11.3	16.0	8.7	4.4

NOTES:

1. ALL THRUST BLOCKS SHALL BE POURED AGAINST UNDISTURBED SOIL. CONCRETE SHALL BE PLACED BEHIND BELL OF FITTING.
2. BEARING AREAS SHOWN IN TABLE ARE BASED ON ALLOWABLE SOIL PRESSURE OF 1500 psf.
3. KEEP CONCRETE AWAY FROM BELLS.

4 C-9 TYPICAL THRUST BLOCK DETAIL

WATER NOTES:

1. ALL IMPROVEMENTS SHALL BE IN ACCORDANCE WITH THE CITY OF BAKERSFIELD WATER RESOURCES DEPARTMENT CURRENT STANDARDS AND SPECIFICATIONS FOR DOMESTIC WATER SYSTEMS.

2. CONNECTION TO THE CITY OF BAKERSFIELD WATER SYSTEM SHALL NOT BE ALLOWED AND INSPECTIONS WILL NOT OCCUR WITHOUT VERIFICATION OF PAYMENT OF ALL ASSOCIATED WATER AVAILABILITY FEES, INSPECTION/METER SET FEES, AND APPROVAL OF WATER PLANS BY THE WATER RESOURCES DEPARTMENT.

3. BACKFILL AND COMPACTION OF TRENCHES SHALL BE IN ACCORDANCE WITH THE CITY OF BAKERSFIELD STD. DWG. W-1 AND ST-12, EXCEPT AS NOTED ON THE PLANS.

4. WATERLINE TRENCHES SHALL NOT BE SHARED WITH ANY OTHER UTILITY. THIS REQUIREMENT SHALL BE CLEARLY INDICATED ON THE WATER AND UTILITY PLANS FOR THE DEVELOPMENT.

5. CONTRACTOR SHALL VERIFY, BY POTHOLING, THE EXACT LOCATION OF ALL CONNECTION POINTS AND ALL OTHER UTILITIES OR APPURTENANCES THAT MAY POTENTIALLY INTERFERE WITH INSTALLATION OF WATER IMPROVEMENTS PRIOR TO PERFORMING ANY WORK.

6. CONTRACTOR SHALL CONTACT UNDERGROUND SERVICE ALERT (811) AT LEAST TWO (2) WORKING DAYS PRIOR TO CONSTRUCTION, 1-800-227-2600.

7. CONTRACTOR SHALL NOTIFY CALIFORNIA WATER SERVICE COMPANY, AS AGENT OF INSPECTION FOR THE CITY OF BAKERSFIELD, AT LEAST FORTY-EIGHT (48) HOURS PRIOR TO START OF CONSTRUCTION, 661-637-7200.

8. CONTRACTOR SHALL ENSURE THAT ALL FIRE HYDRANTS ARE NOT PLACED WITHIN FIVE FEET OF ANY EXISTING OR PROPOSED WALLS, FENCES, STREET LIGHTS, AND LANDSCAPING OR ANY OTHER OBSTRUCTIONS.

9. ANY EXISTING OR PROPOSED TREE SHALL HAVE A MINIMUM OF FIVE FOOT (5') HORIZONTAL CLEARANCE FROM ANY WATER MAINLINE.

10. CONTRACTOR SHALL INSTALL WHARF HYDRANTS AT PHASE BOUNDARIES IF ADJOINING PHASES ARE NOT YET CONSTRUCTED. UPON EXTENSION OF WATER LINE, WHARF HYDRANTS SHALL BE REMOVED AND RELOCATED TO THE NEXT PHASE BOUNDARY.

11. CONTRACTOR IS RESPONSIBLE TO INSTALL METER BOXES. CITY OF BAKERSFIELD WILL INSTALL METERS THROUGH REQUEST OF OWNER/CONTRACTOR.

12. ALL EXISTING WATER VALVES SHALL BE OPERATED SOLELY BY AUTHORIZED CITY OF BAKERSFIELD WATER DEPARTMENT PERSONNEL OR ITS REPRESENTATIVE AGENTS.

SEWER NOTES:

GENERAL

1. CONTRACTOR WILL FURNISH ALL MATERIALS, TOOLS, LABOR, EQUIPMENT, AND SUPERVISION NECESSARY TO COMPLETE INSTALLATION.

PVC PIPE

1. MATERIALS – PIPE AND FITTINGS SHALL MEET THE REQUIREMENTS OF THE CURRENT ASTM SPECIFICATION D-3034 FOR SDR35 PVC. PIPE AND FITTINGS SHALL BE HOMOGENEOUS THROUGHOUT AND FREE FROM CRACKS, HOLES, FOREIGN INCLUSIONS, OR OTHER INJURIOUS DEFECTS.

2. JOINTS – USE ONLY ELASTOMERIC GASKET JOINTS. THE ASSEMBLY OF JOINTS SHALL BE IN ACCORDANCE WITH THE MANUFACTURER'S RECOMMENDATIONS. WHERE PVC PIPE CONNECTS TO VCP PIPE, USE ONLY COUPLINGS APPROVED BY THE CITY OF BAKERSFIELD.

3. INSTALLATION – PIPE AND FITTINGS SHALL BE INSTALLED IN ACCORDANCE WITH THE CURRENT ASTM SPECIFICATION D-2321. ONLY CLASS I AND II EMBEDMENT MATERIALS WILL BE CONSIDERED SUITABLE.

SYSTEM TESTING

1. A PRESSURE TEST SHALL BE PERFORMED ON INSTALLED PIPE IN ACCORDANCE WITH THE CITY OF BAKERSFIELD SUBDIVISION DESIGN MANUAL AND THE RECOMMENDATIONS OF THE MANUFACTURER.

MISCELLANEOUS

1. WYE FITTINGS SHALL BE INJECTION MOLDED IN-LINE TYPE AND SHALL BE USED FOR ALL LATERAL CONNECTIONS.

2. ALL SEWER STUBS SHALL BE CLOSED WITH A STANDARD PLASTIC PLUG, SOLVENT WELDED.

3. WATER JETTING AND FLOODING SHALL NOT BE USED FOR BACKFILL COMPACTION.

4. UNDERGROUND SERVICE ALERT (USA) SHALL BE NOTIFIED AT LEAST 2 WORKING DAYS BEFORE CONSTRUCTION. TELEPHONE (1-800-642-2444)

5. CONTRACTOR TO CALL FOR USA LOCATE AND POTHOLE ALL MARKED UTILITIES THAT CROSS OR ARE WITHIN 5' HORIZONTAL DISTANCE OF SEWER AND STORM DRAIN LINES. VERTICAL AND HORIZONTAL LOCATION SHALL BE ASCERTAINED BY THE CONTRACTOR AHEAD OF ANY EXCAVATIONS TO VERIFY THAT THE PROPOSED DESIGN DOES NOT CONFLICT WITH ANY UTILITIES. IN THE EVENT A CONFLICT EXISTS THE ENGINEER SHALL BE NOTIFIED IN ORDER TO REDESIGN THE ALIGNMENT. IF RELOCATION OF EXISTING UTILITIES IS DEEMED NECESSARY, THE CONTRACTOR SHALL BE COMPENSATED FOR INSTRUCTED RELOCATION. IF REDESIGN OF THE ALIGNMENT REQUIRES ADDITIONAL FITTINGS, PIPE, OR EXCAVATION THE CONTRACTOR SHALL BE COMPENSATED FOR REVISION. IN THE EVENT A UTILITY IS DAMAGED, THE CONTRACTOR SHALL BE WHOLLY RESPONSIBLE FOR ITS REPAIR.

6. CONTRACTOR SHALL VERIFY LOCATIONS AND ELEVATIONS OF EXISTING SEWER AND STORM DRAIN LINES THAT THE NEW SYSTEM TIES INTO PRIOR TO TRENCHING. ANY DISCREPANCIES SHALL BE REPORTED TO THE ENGINEER SO THAT ANY NECESSARY ADJUSTMENTS MAY BE MADE. UTILITIES SHALL BE THOROUGHLY RESEARCHED AND LOCATED BY THE CONTRACTOR PRIOR TO TRENCHING. CROSSING UTILITIES SHALL BE DAYLIGHTED AND CHECKED FOR GRADE BY THE CONTRACTOR PRIOR TO TRENCHING.

IDENTIFICATION STAMP
DIV. OF THE STATE ARCHITECT
APP: 03-122664 INC:
REVIEWED FOR
SS ☑ FLS ☑ ACS ☑
DATE: 05/12/2023

pjhm architects

LICENSED ARCHITECT
RICHARD W. RIDDELL
REN. 02/25
STATE OF CALIFORNIA

SWANSON ENGINEERING, INC.
2000 Main Street, Suite 130 • Huntington Beach, CA 92648
ph (657) 833-4916 • (657) 273-4779 fax
CIVIL

REGISTERED PROFESSIONAL ENGINEER
ROBERT T. SWANSON
No. 43032
EXP. 3-31-24
STATE OF CALIFORNIA

HIGHLAND HIGH SCHOOL
50M POOL & AQUATICS CENTER

KERN HIGH SCHOOL DISTRICT

SITE UTILITY NOTES & DETAILS

C-9

OC Office: 24461 Ridge Route Drive #100, Laguna Hills, CA 92653 • OC Phone: 949.496.6191 • SD Office: 804 Pier View Way #103, Oceanside, CA 92054 • SD Phone: 760.730.5527 • LA Office: 837 Traction Avenue, #410, Los Angeles, CA 90013 • LA Phone: 213.278.0172 • Web: pjhm.com

VICINITY MAP
N.T.S.

BENCHMARK

TOP OF CAP ON CITY OF BAKERSFIELD CONCRETE MONUMENT IN LAMPHOLE AT THE CENTERLINE INTERSECTION OF AUBURN STREET AND PIPER WAY PER CITY OF BAKERSFIELD BENCH MARK BOOK.

ELEVATION = 804.26'

BASIS OF BEARINGS

THE BEARING OF N89°17'26"E SHOWN FOR THE SOUTH LINE OF THE SOUTHEAST QUARTER OF SECTION 14, T.29S., R.28E., M.D.M. ON RECORD OF SURVEY, R.S. BOOK 9, PAGE 91, WAS USED AS THE BASIS OF BEARINGS HEREON.

LEGAL DESCRIPTION

BEING A PORTION OF THE SOUTHEAST QUARTER OF SECTION 14, T.29S., R.28E., M.D.B.M.

ADDRESS

2900 ROYAL SCOTS WAY

APN

146-020-23

UTILITY NOTE

NOT ALL UTILITIES WERE LOCATED BY THIS SURVEY AND SWANSON ENGINEERING, INC. ASSUMES NO RESPONSIBILITY FOR UNDERGROUND UTILITIES OR FACILITIES NOT SHOWN OR FOR INFORMATION OBTAINED FROM OUTSIDE SOURCES.

LEGEND

- 15 — FURNISH AND INSTALL TRAFFIC SIGNS, 15MPH
- SILT FENCE OR FIBER ROLL PER CASQA DETAIL SE-1 OR SE-5
- 4' HIGH PLASTIC MESH ORANGE CONSTRUCTION SAFETY BARRIER FENCE
- FIRE HYDRANT
- WRAP GRATE W/ NON-WOVEN SILT FABRIC. SEE DETAILS 1, 2, AND 3 ON SHEET C-11.
- SANDBAGS
- 30'x50' GRAVEL ENTRY WITH GRIZZLY PER CASQA DETAIL TC-1. 3" ROCK SIZE.

BMP NOTES:

1. NON-STORM WATER DISCHARGES ARE PROHIBITED FROM ENTERING ANY STORM DRAIN SYSTEM
2. POLLUTANTS SHALL BE REMOVED FROM STORM WATER DISCHARGES TO THE MAXIMUM EXTENT PRACTICAL.
3. PORTABLE SANITARY FACILITIES SHALL BE LOCATED ON RELATIVELY LEVEL GROUND AWAY FROM TRAFFIC AREAS, DRAINAGE COURSES, AND STORM DRAIN INLETS.
4. EMPLOYEES, SUBCONTRACTORS AND SUPPLIERS SHALL BE EDUCATED ON ALL BMPS, INCLUDING CONCRETE WASTE STORAGE AND DISPOSAL PROCEDURES.
5. SEDIMENT CONTROL PRACTICES SHALL EFFECTIVELY PREVENT A NET INCREASE OF SEDIMENT LOAD IN STORM WATER DISCHARGE.
6. WATER SITE IN COMPLIANCE W/ CASQA WE-1.
7. SWEEP STREET DAILY IN COMPLIANCE W/ CASQA SE-7.
8. ALL STORM DRAIN GRATES ARE TO BE WRAPPED WITH NON-WOVEN SILT FABRIC TO PREVENT SILT ENTRY INTO THE DRAINAGE SYSTEM
9. ALL STORM DRAIN FILTER FABRICS ARE REQUIRED TO STAY IN PLACE UNTIL THE AREA DRAINING TO SAID STORM DRAIN INLET IS COMPLETELY STABILIZED (PAVEMENT OR LANDSCAPE HAS BEEN INSTALLED)
10. CONSULT WITH SWPPP INSPECTOR AND/OR THE QSP BEFORE MAKING PERMANENT ADJUSTMENTS TO BMPS

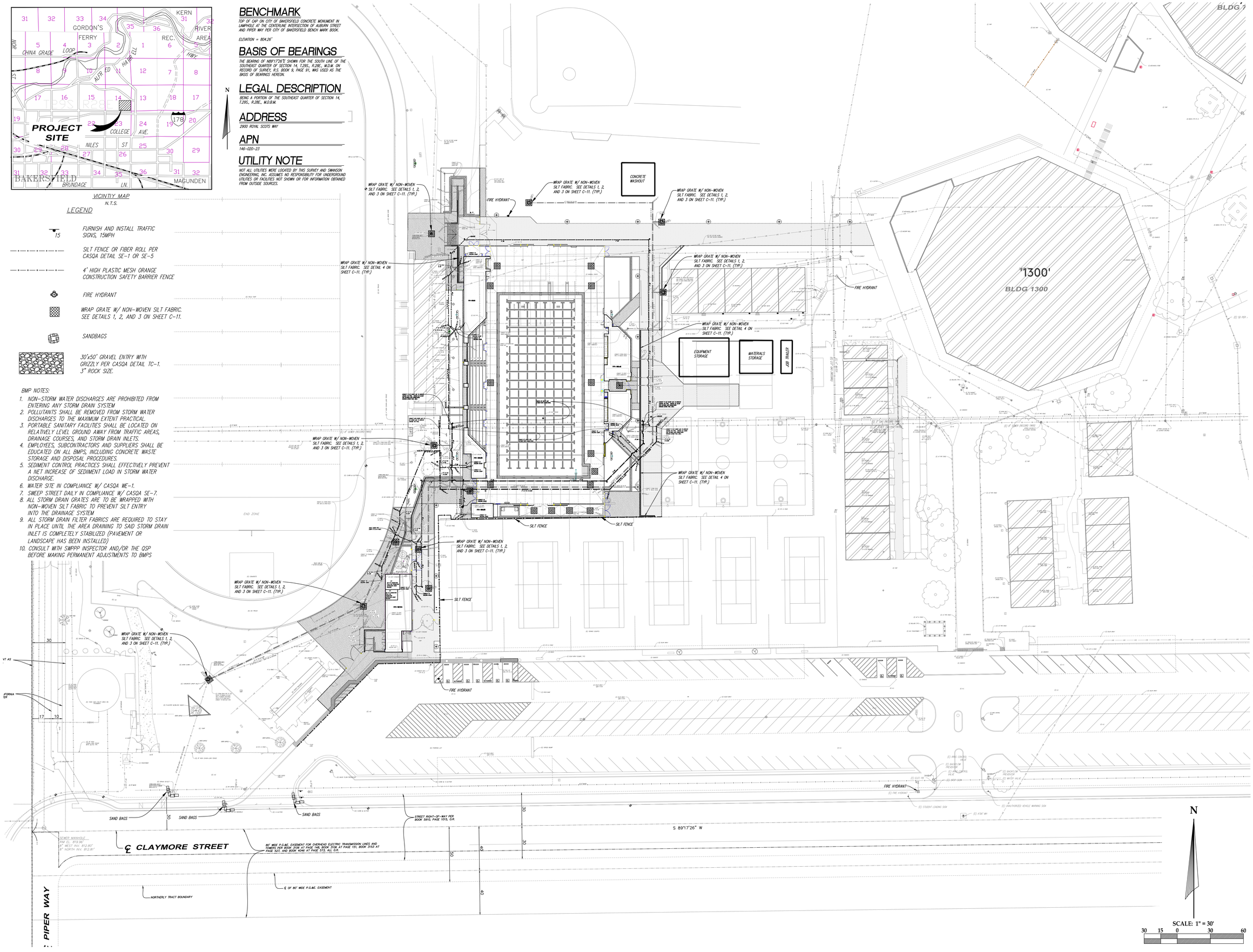

IDENTIFICATION STAMP
DIV. OF THE STATE ARCHITECT
APP: 03-122664 INC:
REVIEWED FOR
SS ☑ FLS ☑ ACS ☑
DATE: 05/12/2023

pjhm architects

LICENSED ARCHITECT
RICHARD W. RIDDELL
No. C15585
REN. 02/25
STATE OF CALIFORNIA

SWANSON ENGINEERING, INC.
2000 Business Park, 1st Floor, Bakersfield, CA 93301
ph (661) 833-4816 • (661) 833-4779 fax
CSW# 22-053

REGISTERED PROFESSIONAL ENGINEER
ROBERT T. SWANSON
No. 43032
EXP. 3-31-24
STATE OF CALIFORNIA

HIGHLAND HIGH SCHOOL
50M POOL & AQUATICS CENTER

KERN HIGH SCHOOL DISTRICT

B.M.P. PLAN

C-10

OC Office: 24461 Ridge Route Drive #100, Laguna Hills, CA 92653 • SD Phone: 760.730.5527 • OC Phone: 949.496.6191 • SD Office: 804 Pier View Way #103, Oceanside, CA 92054 • LA Office: 837 Traction Avenue, #410, Los Angeles, CA 90013 • LA Phone: 213.278.0172 • Web: pjhm.com

KERN COUNTY
ENGINEERING AND SURVEY SERVICES DEPARTMENT
BEST MANAGEMENT PRACTICES (BMP's)
INSTRUCTIONS

The following BMP's are examples only and may or may not be applicable to a specific project. It is the engineer's responsibility to develop a Storm Water Pollution Prevention Plan (SWPPP) and incorporate all appropriate BMP's into the project plans and specifications to effectively control erosion and sediment during construction.

The placement of devices to control erosion and sediment shall be clearly shown on the plans. They shall be modified as necessary during the course of construction, and the SWPPP shall be updated accordingly.

The contractor must implement an effective combination of erosion and sediment control on all disturbed areas during the rainy season.

Sediment control BMP's are required at appropriate locations along the site perimeter and at all operational internal inlets to a storm drain system at all times during the rainy season. Non-stormwater discharges may enter a new storm drain system that is not yet accepted by the County and is not connected to an existing County system. All sediments shall be removed from the storm drain system prior to acceptance by the County.

After a rainstorm, all silt and debris shall be removed from check barms, desilting basins, and other devices. Any devices and slope surface protection damaged during a rainstorm shall be immediately repaired.

All removable protective devices shall be in place at the end of each working day when the five-day rain probability forecast exceeds forty percent. (KCB)

The "Applicability of NPDES Storm Water Program for a Project Disturbing One (1) Acre or Greater Within Kern County" form must be completed and shall be submitted with the permit application. The form shall be signed by the owner and engineer and shall also indicate an emergency contact person.

Revisions Date Desc	DATE 06/18/2003 DESIGNED BY: DRAWN BY: CHECKED BY:	COUNTY OF KERN STATE OF CALIFORNIA DEVELOPMENT STANDARD	NPDES BMP SEDIMENTS AND EROSION CONTROL	PLATE NO. BMP INS

G:\EXCHANGE\IPC\dan\NPDES BMPS\SWPPP1.dwg, BMP INSTRUCTION, 6/26/2003 5:13:10 PM

BEST MANAGEMENT PRACTICES (BMP's)

General Notes

1. Best Management Practices (BMP's) contained herein reflect minimum requirements. Alternate methods providing equal or greater protection may be utilized. For additional BMP's refer to California Stormwater BMP Handbooks, available at WWW.CABMPHANDBOOKS.COM.
2. All construction activity shall be performed in accordance with a Stormwater Pollution Prevention Plan (SWPPP) developed and implemented in compliance with requirements of the Kern County Stormwater Management Program, National Pollutant Discharge Elimination System (NPDES) Permit, and the State's General Permit.
3. The SWPPP shall:
   a. Identify potential pollutant sources and include the design and placement of BMP's to effectively prohibit the entry of pollutants from the construction site into and onto the street and storm drain system during construction.
   b. Be kept on site and amended to reflect changing conditions throughout the course of construction.
   c. Be kept up to date. Any additional updates requested by agency representative are to be made immediately.
4. Non-Stormwater discharges are prohibited from entering any storm drain system and/or street.
5. Pollutants shall be removed from stormwater discharges to the Maximum Extent Practicable (MEP) through design & implementation of the SWPPP.
6. A standby crew for emergency work shall be available at all times during the rainy season (Nov. 1 to Apr. 15). Necessary materials shall be available on site and stockpiled at convenient locations to facilitate rapid construction of temporary devices or damaged erosion control measures or sediment control measures when rain is imminent.
7. Portable sanitary facilities shall be located on relatively level ground away from traffic areas, drainage courses, and storm drain inlets.
8. Employees, subcontractors and suppliers shall be educated on all BMP's including concrete waste storage and disposal procedures.
9. Sediment control practices shall effectively prevent a net increase of sediment load in stormwater discharge.

Revisions Date Desc	DATE 06/18/2003 DESIGNED BY: DRAWN BY: CHECKED BY:	COUNTY OF KERN STATE OF CALIFORNIA DEVELOPMENT STANDARD	NPDES BMP SEDIMENTS AND EROSION CONTROL	PLATE NO. BMP 1

G:\EXCHANGE\IPC\dan\NPDES BMPS\SWPPP1.dwg, BMP 1, 7/10/2003 8:55:56 AM

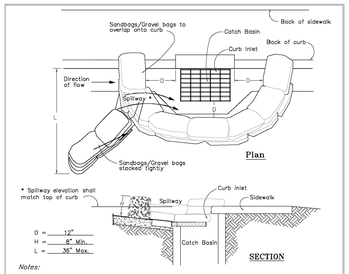

Notes:
1. Catch Basin/Inlet protection shall be installed wherever there is a potential of stormwater or non-stormwater being discharged into it.
2. Inlet protection is required along with other pollution prevention measures such as; erosion control, soil stabilization, and measures to prevent tracking onto paved surfaces.
3. Modify inlet protection as needed to avoid creating traffic hazards.
4. Include inlet protection measures at hillside v-ditches and misc. drainage swales.
5. Inlet protection shall be inspected and accumulated sediments removed. Sediment shall be disposed of properly and in a manner that assures that the sediment does not enter the storm drain system.
6. Damaged bags shall be replaced immediately.
7. Additional sandbag sediment traps shall be placed at intervals as indicated on site plan.

A CATCH BASIN/INLET PROTECTION

Revisions Date Desc	DATE 06/18/2003 DESIGNED BY: DRAWN BY: CHECKED BY:	COUNTY OF KERN STATE OF CALIFORNIA DEVELOPMENT STANDARD	NPDES BMP SEDIMENTS AND EROSION CONTROL	PLATE NO. BMP A

G:\EXCHANGE\IPC\dan\NPDES BMPS\SWPPP1.dwg, BMP A, 6/25/2003 10:34:26 AM

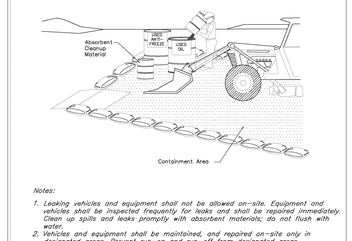

Notes:
1. Leaking vehicles and equipment shall not be allowed on-site. Equipment and vehicles shall be inspected frequently for leaks and shall be repaired immediately. Clean up spills and leaks promptly with absorbent materials; do not flush with water.
2. Vehicles and equipment shall be maintained, and repaired on-site only in designated areas. Prevent run-on and run-off from designated areas. Containment devices shall be provided and areas shall be covered if necessary.
3. Designate on-site vehicle and equipment maintenance areas, away from storm drain inlets and watercourses.
4. Always use secondary containment, such as a drain pan or drop cloth, to catch spills and leaks when removing or changing fluids.
5. Legally dispose of used oils, fluids, and lubricants.
6. Provide spill containment dikes or secondary containment around stored oil, fuel, and chemical drums.
7. Maintain an adequate supply of absorbent spill cleanup materials in designated area.

B EQUIPMENT MAINTENANCE AREAS

Revisions Date Desc	DATE 06/18/2003 DESIGNED BY: DRAWN BY: CHECKED BY:	COUNTY OF KERN STATE OF CALIFORNIA DEVELOPMENT STANDARD	NPDES BMP SEDIMENTS AND EROSION CONTROL	PLATE NO. BMP B

G:\EXCHANGE\IPC\dan\NPDES BMPS\SWPPP1.dwg, BMP B, 6/25/2003 10:35:11 AM

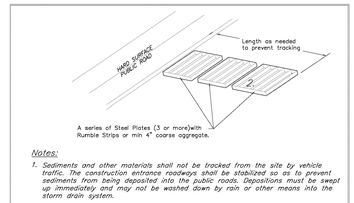

Notes:
1. Sediments and other materials shall not be tracked from the site by vehicle traffic. The construction entrance roadways shall be stabilized so as to prevent sediments from being deposited into the public roads. Depositions must be swept up immediately and may not be washed down by rain or other means into the storm drain system.
2. Stabilized construction entrance shall be:
   a. Located at any point where traffic will be entering or leaving a construction site to or from a public right of way, street, alley, and sidewalk or parking area.
   b. A series of steel plates with "rumble strips", and/or min 4" coarse aggregate with length, width & thickness as needed to adequatly prevent any tracking onto paved surfaces.
3. Adding a wash rack with a sediment trap large enough to collect all wash water can greatly improve efficiency.
4. All vehicles accessing the construction site shall utilize the stabilized construction entrance sites.
   1. Remove all sediment deposited on paved roadways immediately.
   2. Sweep paved areas that receive construction traffic whenever sediment becomes visible.
   3. Pavement washing with water is prohibited if it results in a discharge to the storm drain system.

C STABLIZED CONSTRUCTION ENTRANCE

Revisions Date Desc	DATE 06/18/2003 DESIGNED BY: DRAWN BY: CHECKED BY:	COUNTY OF KERN STATE OF CALIFORNIA DEVELOPMENT STANDARD	NPDES BMP SEDIMENTS AND EROSION CONTROL	PLATE NO. BMP C

G:\EXCHANGE\IPC\dan\NPDES BMPS\SWPPP1.dwg, BMP C, 6/25/2003 10:36:03 AM

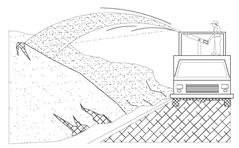

Notes:
1. Soil/Slope stabilization practices shall be designed to preserve existing vegetation where feasible and to revegetate open areas as soon as feasible after grading. These control practices shall include temporary seeding, permanent seeding, mulching, sod stabilization, vegetative buffer strips, protection of trees, or other soil stabilization practices.
2. Soil stabilization shall be implemented on all inactive disturbed areas from November 1 thru April 15 and on all disturbed areas during a rain event or potential rain.
3. Stabilization practices shall control/prevent erosion from the forces of wind and water.
4. Stabilization practices shall be implemented in conjunction with sediment trapping/filtering practices and practices to reduce the tracking of sediment onto paved roads.
5. When using straw mulching, the minimum application shall be 2 tons/acre. Mulch must be anchored immediately to minimize loss by wind or water.
6. When using hydroseeding/mulching, the minimum application of wood fiber shall be 1,500 lbs/acre, that does not contain more than 50 percent newsprint.
7. For seeding recommendations, contact: USDA, Natural Resources Conservation Service at 5000 California Avenue, Bakersfield, CA 93309-0725. Phone: (661) 336-0967.

D EROSION CONTROL

Revisions Date Desc	DATE 06/18/2003 DESIGNED BY: DRAWN BY: CHECKED BY:	COUNTY OF KERN STATE OF CALIFORNIA DEVELOPMENT STANDARD	NPDES BMP SEDIMENTS AND EROSION CONTROL	PLATE NO. BMP D

G:\EXCHANGE\IPC\dan\NPDES BMPS\SWPPP1.dwg, BMP D, 6/25/2003 10:36:31 AM

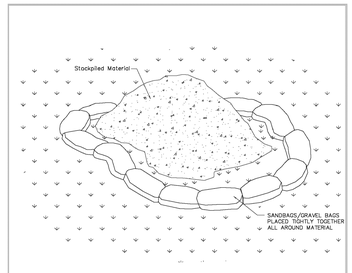

Notes:
1. Dirt and other construction related materials placed in the street or on other impervious surfaces must be contained with sandbags or other measures to prevent transport to the stormdrain system.
2. Any construction material stored on-site shall be protected from being transported by the force of wind or water.

E MATERIAL STORAGE

Revisions Date Desc	DATE 06/18/2003 DESIGNED BY: DRAWN BY: CHECKED BY:	COUNTY OF KERN STATE OF CALIFORNIA DEVELOPMENT STANDARD	NPDES BMP SEDIMENTS AND EROSION CONTROL	PLATE NO. BMP E

G:\EXCHANGE\IPC\dan\NPDES BMPS\SWPPP1.dwg, BMP E, 6/25/2003 10:37:04 AM

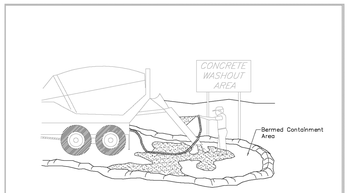

Notes:
1. Excess and waste concrete shall not be washed into the street or into a drainage system.
2. For washout of concrete and mortar products, a designated containment facility of sufficient capacity to retain liquid and solid waste shall be provided on site.
3. Slurry from concrete and asphalt saw cutting shall be vacuumed or contained, dried, picked up and disposed of properly.

F CONCRETE WASTE MANAGEMENT

Revisions Date Desc	DATE 06/18/2003 DESIGNED BY: DRAWN BY: CHECKED BY:	COUNTY OF KERN STATE OF CALIFORNIA DEVELOPMENT STANDARD	NPDES BMP SEDIMENTS AND EROSION CONTROL	PLATE NO. BMP F

G:\EXCHANGE\IPC\dan\NPDES BMPS\SWPPP1.dwg, BMP F, 6/25/2003 10:37:38 AM

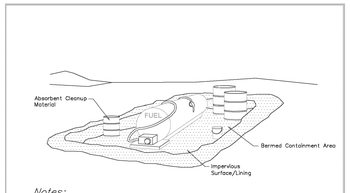

Notes:
1. Fueling shall be performed in a designated area, away from drainage courses.
2. Absorbent cleanup material shall be on site and used immediately in the event of a spill.

G VEHICLE/ EQUIPMENT FUELING

Revisions Date Desc	DATE 06/18/2003 DESIGNED BY: DRAWN BY: CHECKED BY:	COUNTY OF KERN STATE OF CALIFORNIA DEVELOPMENT STANDARD	NPDES BMP SEDIMENTS AND EROSION CONTROL	PLATE NO. BMP G

G:\EXCHANGE\IPC\dan\NPDES BMPS\SWPPP1.dwg, BMP G, 6/25/2003 11:49:53 AM

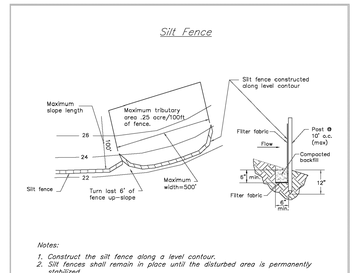

Silt Fence

Notes:
1. Construct the silt fence along a level contour.
2. Silt fences shall remain in place until the disturbed area is permanently stabilized.
3. Provide sufficient room for runoff to pond behind the fence and allow sediment removal equipment to pass between the silt fence and toe of slope or other obstructions. About 1250 sq. ft. of ponding area shall be provided for every acre draining to the fence.
4. Turn the ends of the filter fence uphill to prevent stormwater from flowing around the fence.
5. Leave an undisturbed or stabilized area immediately downslope from the fence.
6. Do not place in live stream or intermittently flowing channels.
7. When standard filter fabric is used, a wire mesh support fence shall be fastened securely to the upslope side of the posts using heavy-duty wire staples at least 1 inch long, tie wires or hog rings.

H SILT FENCE

Revisions Date Desc	DATE 06/18/2003 DESIGNED BY: DRAWN BY: CHECKED BY:	COUNTY OF KERN STATE OF CALIFORNIA DEVELOPMENT STANDARD	NPDES BMP SEDIMENTS AND EROSION CONTROL	PLATE NO. BMP H

G:\EXCHANGE\IPC\dan\NPDES BMPS\SWPPP1.dwg, BMP H, 6/25/2003 10:38:34 AM

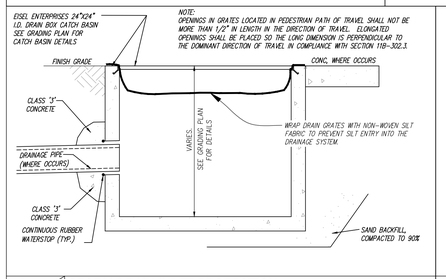

1 C-11 STORM DRAIN INLET PROTECTION

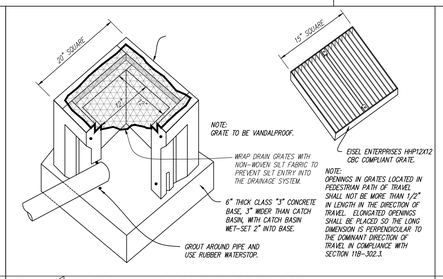

2 C-11 EISEL ENTERPRISES 12X12 DRAIN BOX

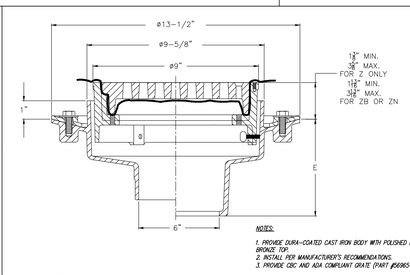

3 C-11 ZURN Z520 HEAVY-DUTY ADJUSTABLE FLOOR DRAIN INLET PROTECTION

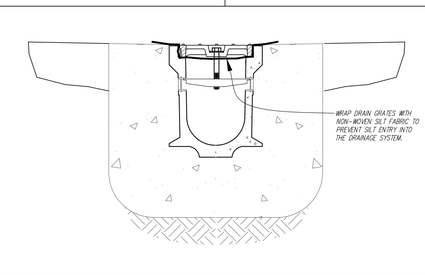

4 C-11 TRENCH DRAIN INLET PROTECTION

IDENTIFICATION STAMP
DIV. OF THE STATE ARCHITECT
APP: 03-122664 INC:
REVIEWED FOR
SS ☑ FLS ☑ ACS ☑
DATE: 05/12/2023

pjhm architects

LICENSED ARCHITECT
HOWARD W. ROBERTS
NO. C15585
REN. 02/25
STATE OF CALIFORNIA

SWANSON ENGINEERING, INC.
2000 S. Plaza Dr., Suite 104 • Santa Maria, CA 93454
ph (661) 925-4616 • (661) 925-4717 fax
CIVIL

REGISTERED PROFESSIONAL ENGINEER
ROBERT T. SWANSON
No. 43032
EXP. 3-31-24
STATE OF CALIFORNIA

HIGHLAND HIGH SCHOOL
50M POOL & AQUATICS CENTER

KERN HIGH SCHOOL DISTRICT

B.M.P. DETAILS

C-11

OC Office: 24661 Ridge Route Drive #100, Laguna Hills, CA 92653 • OC Phone: 949.496.6191 • SD Office: 804 Pier View Way #103, Oceanside, CA 92054 • SD Phone: 760.730.5527 • LA Office: 837 Traction Avenue, #410, Los Angeles, CA 90013 • LA Phone: 213.278.0172 • Web: pjhm.com

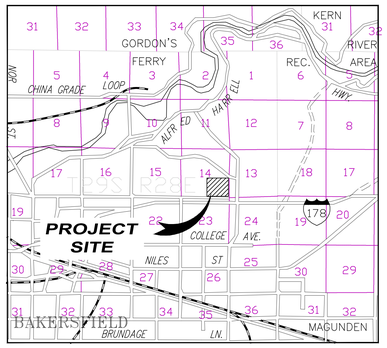

VICINTIY MAP
N.T.S.

BENCHMARK

TOP OF CAP ON CITY OF BAKERSFIELD CONCRETE MONUMENT IN LAMPHOLE AT THE CENTERLINE INTERSECTION OF AUBURN STREET AND PIPER WAY PER CITY OF BAKERSFIELD BENCH MARK BOOK.

ELEVATION = 804.26'

BASIS OF BEARINGS

THE BEARING OF N89°17'26"E, SHOWN FOR THE SOUTH LINE OF THE SOUTHEAST QUARTER OF SECTION 14, T.29S., R.28E., M.D.M. ON RECORD OF SURVEY, R.S. BOOK 9, PAGE 91, WAS USED AS THE BASIS OF BEARINGS HEREON.

LEGAL DESCRIPTION

BEING A PORTION OF THE SOUTHEAST QUARTER OF SECTION 14, T.29S., R.28E., M.D.B.M.

ADDRESS

2900 ROYAL SCOTS WAY

APN

146-020-23

UTILITY NOTE

NOT ALL UTILITIES WERE LOCATED BY THIS SURVEY AND SWANSON ENGINEERING, INC. ASSUMES NO RESPONSIBILITY FOR UNDERGROUND UTILITIES OF FACILITIES NOT SHOWN OR FOR INFORMATION OBTAINED FROM OUTSIDE SOURCES.

SEE POOL DECK PLANS FOR CONCRETE IN POOL DECK AREA

END ZONE

LEGEND:

ABBREVIATIONS:

(E)	EXISTING
TYP.	TYPICAL
FD.	FOUND
BK.	BOOK
PG.	PAGE
CO.K.	COUNTY OF KERN
C.O.B.	CITY OF BAKERSFIELD
CONC	CONCRETE
A.C.	ASPHALT PAVEMENT
FG	FINISH GRADE
EP	EDGE OF PAVEMENT
TC	TOP OF CURB
FL	FLOWLINE
FF	FINISHED FLOOR
FP	FINISHED PAD
TP	TOP OF PAVEMENT
GB	GRADE BREAK
MH	TOP OF MANHOLE
INV	INVERT
PB	PULL BOX
CL	CENTERLINE

- EXISTING FIRE HYDRANT
- EXISTING POWER POLE
- EXISTING STREET LIGHT
- FOUND MONUMENT
- EXISTING CLEANOUT TO GRADE
- EXISTING TRAFFIC SIGN
- PROPOSED FIRE HYDRANT
- PROPOSED DRAIN INLET
- PROPOSED CLEANOUT TO GRADE

- EXISTING STORM DRAIN LINE
- EXISTING FIBER OPTIC LINE
- EXISTING WATER LINE
- EXISTING SEWER LINE
- EXISTING GAS LINE
- EXISTING FENCELINE
- EXISTING ELECTRIC LINE
- EXISTING OVERHEAD ELECTRIC LINE
- EXISTING PROPERTY LINE
- EXISTING RIGHT-OF-WAY
- EXISTING CURB & GUTTER
- PROPOSED STORM DRAIN LINE
- PROPOSED WATER LINE
- PROPOSED SEWER LINE
- PROPOSED WATER LINE
- PROPOSED FENCELINE

A.C. PAVEMENT FOR FIRE LANE
2.5" A.C. OVER 6" CLASS II AGGREGATE BASE OVER 8" NATIVE COMPACTED TO 95%

CONCRETE WALKWAYS
4" 3,000 PSI CONCRETE WITH 3.5 LBS/CY SYNTHETIC MICROFIBER REINFORCEMENT WITH #4 DOWELS AT 18" ON CENTER AT CONSTRUCTION JOINTS OVER 8" NATIVE COMPACTED TO 95%

CONCRETE PAVEMENT FOR FIRE LANE
6" 4,000 PSI CONCRETE WITH 3.5 LBS/CY SYNTHETIC MICROFIBER REINFORCEMENT WITH #4 DOWELS AT 18" ON CENTER AT CONSTRUCTION JOINTS OVER 6" CLASS II AGGREGATE BASE OVER 8" NATIVE COMPACTED TO 95%

N

SCALE: 1" = 20'
20 10 0 20 40

IDENTIFICATION STAMP
DIV. OF THE STATE ARCHITECT
APP: 03-122664 INC:
REVIEWED FOR
SS ☑ FLS ☑ ACS ☑
DATE: 05/12/2023

pjhm architects

LICENSED ARCHITECT
RICHARD W. RIDDELL
REN. 02/25
STATE OF CALIFORNIA

SWANSON ENGINEERING, INC.
2000 Main Street, 12th Floor, Huntington Beach, CA 92648
ph.(661) 823-4616 • (661) 823-4717 fax
CRM# 22-053

REGISTERED PROFESSIONAL ENGINEER
ROBERT T. SWANSON
No. 43032
EXP. 3-31-24
STATE OF CALIFORNIA

HIGHLAND HIGH SCHOOL
50M POOL & AQUATICS CENTER

KERN HIGH SCHOOL DISTRICT

SITE PAVEMENT PLAN

C-12

OC Office: 24461 Ridge Route Drive #100, Laguna Hills, CA 92653 • SD Phone: 760.730.5527 • OC Phone: 949.496.6191 • SD Office: 804 Pier View Way #103, Oceanside, CA 92054 • LA Phone: 213.278.0172 • LA Office: 837 Traction Avenue, #410, Los Angeles, CA 90013 • Web: pjhm.com

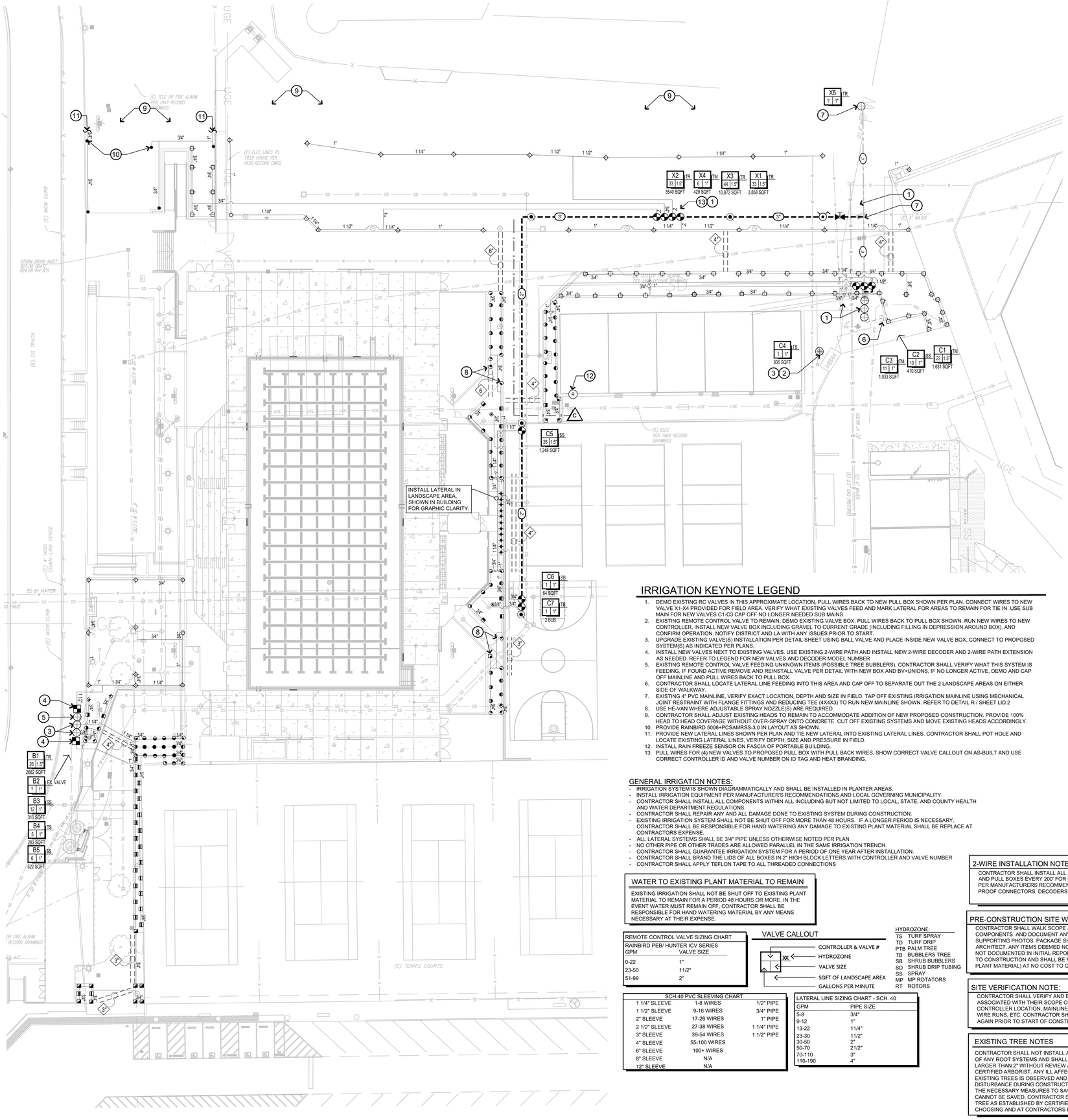

IRRIGATION KEYNOTE LEGEND

1. DEMO EXISTING RC VALVES IN THIS APPROXIMATE LOCATION, PULL WIRES BACK TO NEW PULL BOX SHOWN PER PLAN. CONNECT WIRES TO NEW VALVE X1-X4 PROVIDED FOR FIELD AREA. VERIFY WHAT EXISTING VALVES FEED AND MARK LATERAL FOR AREAS TO REMAIN FOR TIE IN. USE SUB MAIN FOR NEW VALVES C1-C3 CAP OFF NO LONGER NEEDED SUB MAINS.
2. EXISTING REMOTE CONTROL VALVE TO REMAIN, DEMO EXISTING VALVE BOX; PULL WIRES BACK TO PULL BOX SHOWN. RUN NEW WIRES TO NEW CONTROLLER, INSTALL NEW VALVE BOX INCLUDING GRAVEL TO CURRENT GRADE (INCLUDING FILLING IN DEPRESSION AROUND BOX), AND CONFIRM OPERATION. NOTIFY DISTRICT AND LA WITH ANY ISSUES PRIOR TO START.
3. UPGRADE EXISTING VALVE(S) INSTALLATION PER DETAIL SHEET USING BALL VALVE AND PLACE INSIDE NEW VALVE BOX, CONNECT TO PROPOSED SYSTEM(S) AS INDICATED PER PLANS.
4. INSTALL NEW VALVES NEXT TO EXISTING VALVES. USE EXISTING 2-WIRE PATH AND INSTALL NEW 2-WIRE DECODER AND 2-WIRE PATH EXTENSION AS NEEDED. REFER TO LEGEND FOR NEW VALVES AND DECODER MODEL NUMBER
5. EXISTING REMOTE CONTROL VALVE FEEDING UNKNOWN ITEMS (POSSIBLE TREE BUBBLERS), CONTRACTOR SHALL VERIFY WHAT THIS SYSTEM IS FEEDING, IF FOUND ACTIVE REMOVE AND REINSTALL VALVE PER DETAIL WITH NEW BOX AND BV+UNIONS, IF NO LONGER ACTIVE, DEMO AND CAP OFF MAINLINE AND PULL WIRES BACK TO PULL BOX.
6. CONTRACTOR SHALL LOCATE LATERAL LINE FEEDING INTO THIS AREA AND CAP OFF TO SEPARATE OUT THE 2 LANDSCAPE AREAS ON EITHER SIDE OF WALKWAY.
7. EXISTING 4" PVC MAINLINE, VERIFY EXACT LOCATION, DEPTH AND SIZE IN FIELD. TAP OFF EXISTING IRRIGATION MAINLINE USING MECHANICAL JOINT RESTRAINT WITH FLANGE FITTINGS AND REDUCING TEE (4X4X3) TO RUN NEW MAINLINE SHOWN. REFER TO DETAIL R / SHEET LID.2
8. USE HE-VAN WHERE ADJUSTABLE SPRAY NOZZLE(S) ARE REQUIRED.
9. CONTRACTOR SHALL ADJUST EXISTING HEADS TO REMAIN TO ACCOMMODATE ADDITION OF NEW PROPOSED CONSTRUCTION. PROVIDE 100% HEAD TO HEAD COVERAGE WITHOUT OVER-SPRAY ONTO CONCRETE. CUT OFF EXISTING SYSTEMS AND MOVE EXISTING HEADS ACCORDINGLY.
10. PROVIDE RAINBIRD 5006+PCSAMRSS-3.0 IN LAYOUT AS SHOWN.
11. PROVIDE NEW LATERAL LINES SHOWN PER PLAN AND TIE NEW LATERAL INTO EXISTING LATERAL LINES. CONTRACTOR SHALL POT HOLE AND LOCATE EXISTING LATERAL LINES, VERIFY DEPTH, SIZE AND PRESSURE IN FIELD.
12. INSTALL RAIN FREEZE SENSOR ON FASCIA OF PORTABLE BUILDING.
13. PULL WIRES FOR (4) NEW VALVES TO PROPOSED PULL BOX WITH PULL BACK WIRES, SHOW CORRECT VALVE CALLOUT ON AS-BUILT AND USE CORRECT CONTROLLER ID AND VALVE NUMBER ON ID TAG AND HEAT BRANDING.

GENERAL IRRIGATION NOTES:

- IRRIGATION SYSTEM IS SHOWN DIAGRAMMATICALLY AND SHALL BE INSTALLED IN PLANTER AREAS.
- INSTALL IRRIGATION EQUIPMENT PER MANUFACTURER'S RECOMMENDATIONS AND LOCAL GOVERNING MUNICIPALITY.
- CONTRACTOR SHALL INSTALL ALL COMPONENTS WITHIN ALL INCLUDING BUT NOT LIMITED TO LOCAL, STATE, AND COUNTY HEALTH AND WATER DEPARTMENT REGULATIONS.
- CONTRACTOR SHALL REPAIR ANY AND ALL DAMAGE DONE TO EXISTING SYSTEM DURING CONSTRUCTION.
- EXISTING IRRIGATION SYSTEM SHALL NOT BE SHUT OFF FOR MORE THAN 48 HOURS. IF A LONGER PERIOD IS NECESSARY, CONTRACTOR SHALL BE RESPONSIBLE FOR HAND WATERING ANY DAMAGE TO EXISTING PLANT MATERIAL SHALL BE REPLACE AT CONTRACTORS EXPENSE.
- ALL LATERAL SYSTEMS SHALL BE 3/4" PIPE UNLESS OTHERWISE NOTED PER PLAN.
- NO OTHER PIPE OR OTHER TRADES ARE ALLOWED PARALLEL IN THE SAME IRRIGATION TRENCH.
- CONTRACTOR SHALL GUARANTEE IRRIGATION SYSTEM FOR A PERIOD OF ONE YEAR AFTER INSTALLATION.
- CONTRACTOR SHALL BRAND THE LIDS OF ALL BOXES IN 2" HIGH BLOCK LETTERS WITH CONTROLLER AND VALVE NUMBER
- CONTRACTOR SHALL APPLY TEFLON TAPE TO ALL THREADED CONNECTIONS

WATER TO EXISTING PLANT MATERIAL TO REMAIN

EXISTING IRRIGATION SHALL NOT BE SHUT OFF TO EXISTING PLANT MATERIAL TO REMAIN FOR A PERIOD 48 HOURS OR MORE. IN THE EVENT WATER MUST REMAIN OFF, CONTRACTOR SHALL BE RESPONSIBLE FOR HAND WATERING MATERIAL BY ANY MEANS NECESSARY AT THEIR EXPENSE.

REMOTE CONTROL VALVE SIZING CHART	
RAINBIRD PEB/ HUNTER ICV SERIES	
GPM	VALVE SIZE
0-22	1"
23-50	11/2"
51-99	2"

VALVE CALLOUT

HYDROZONE:

TS	TURF SPRAY
TD	TURF DRIP
PTB	PALM TREE
TB	BUBBLERS TREE
SB	SHRUB BUBBLERS
SD	SHRUB DRIP TUBING
SS	SPRAY
MP	MP ROTATORS
RT	ROTORS

SCH 40 PVC SLEEVING CHART		
1 1/4" SLEEVE	1-8 WIRES	1/2" PIPE
1 1/2" SLEEVE	9-16 WIRES	3/4" PIPE
2" SLEEVE	17-26 WIRES	1" PIPE
2 1/2" SLEEVE	27-38 WIRES	1 1/4" PIPE
3" SLEEVE	39-54 WIRES	1 1/2" PIPE
4" SLEEVE	55-100 WIRES	
6" SLEEVE	100+ WIRES	
8" SLEEVE	N/A	
12" SLEEVE	N/A	

LATERAL LINE SIZING CHART - SCH. 40	
GPM	PIPE SIZE
5-8	3/4"
9-12	1"
13-22	11/4"
23-30	11/2"
30-50	2"
50-70	21/2"
70-110	3"
110-190	4"

2-WIRE INSTALLATION NOTE:

CONTRACTOR SHALL INSTALL ALL 2-WIRE WIRE IN 1 ½" MIN CONDUIT WITH SWEEPS AND PULL BOXES EVERY 200' FOR EASE OF ACCESS. ALL COMPONENTS SHALL BE PER MANUFACTURERS RECOMMENDATIONS INCLUDING BUT NOT LIMITED TO WATER PROOF CONNECTORS, DECODERS, SURGE PROTECTORS, ETC.

PRE-CONSTRUCTION SITE WALK AND DOCUMENTATION:

CONTRACTOR SHALL WALK SCOPE AND AREAS JUST BEYOND, OPERATE ALL COMPONENTS AND DOCUMENT ANY DEFICIENCIES OBSERVED IN WRITING AND WITH SUPPORTING PHOTOS. PACKAGE SHALL BE PROVIDED TO OWNER AND LANDSCAPE ARCHITECT. ANY ITEMS DEEMED NON-OPERATIONAL AT TURN OVER WALK THAT WAS NOT DOCUMENTED IN INITIAL REPORT, SHALL BE DEEMED TO HAVE OCCURRED DUE TO CONSTRUCTION AND SHALL BE REPAIRED OR REPLACED (INCLUDING AFFECTED PLANT MATERIAL) AT NO COST TO OWNER.

SITE VERIFICATION NOTE:

CONTRACTOR SHALL VERIFY AND BECOME FAMILIAR WITH THE SITE AND THE ITEMS ASSOCIATED WITH THEIR SCOPE OF WORK INCLUDING BUT NOT LIMITED TO CONTROLLER LOCATION, MAINLINE LOCATION, OPEN STATIONS ON CONTROLLER, WIRE RUNS, ETC. CONTRACTOR SHALL PROCEED AS STATED PRIOR TO BIDDING AND AGAIN PRIOR TO START OF CONSTRUCTION.

EXISTING TREE NOTES

CONTRACTOR SHALL NOT INSTALL ANY PLANT MATERIAL WITHIN 12" OF ANY ROOT SYSTEMS AND SHALL NOT CUT OR DAMAGE ANY ROOT LARGER THAN 2" WITHOUT REVIEW AND WRITTEN APPROVAL BY A CERTIFIED ARBORIST. ANY ILL AFFECTS ON THE HEALTH OF THE EXISTING TREES IS OBSERVED AND WAS A DIRECT RESULT OF THE DISTURBANCE DURING CONSTRUCTION, CONTRACTOR SHALL TAKE THE NECESSARY MEASURES TO SAVE THE TREE; IF THE TREE CANNOT BE SAVED, CONTRACTOR SHALL PROVIDE CREDIT FOR TREE AS ESTABLISHED BY CERTIFIED ARBORIST OF OWNERS CHOOSING AND AT CONTRACTORS EXPENSE.

POT HOLE AND SITE PREP. NOTE:

CONTRACTOR SHALL POT HOLE, LOCATE AND IDENTIFY THE SIZE AND LOCATION OF ALL EXISTING ITEMS INCLUDING BUT NOT LIMITED TO MAINLINE, VALVES, SLEEVES, AND LATERALS PRIOR TO START OF DEMOLITION. ALL AFFECTED SYSTEMS ARE TO BE CUT BACK, ISOLATED AND CAPPED TO MINIMIZE IMPACT TO ADJACENT EXISTING LANDSCAPE AREAS DURING THE DEMOLITION AND CONSTRUCTION PROCESS.

IRRIGATION DEMO NOTE:

CONTRACTOR TO DEMO ALL IRRIGATION COMPONENTS WITHIN FIELD AREA NOTED TO BE REPLACED WITH NEW INCLUDING BUT NOT LIMITED TO VALVES (TURN OVER TO DISTRICT), HEADS AND SWING JOINTS (TURN OVER TO DISTRICT), LATERALS (TO BE ABANDONED IN PLACE), ETC. CONTRACTOR SHALL KEEP ALL SYSTEMS ON OUTSIDE OF SCOPE OPERATIONAL AND SHALL NOT LEAVE SITE WITHOUT WATER LONG THAN A 48 HOUR PERIOD.

WATER EFFICIENT LANDSCAPE COMPLIANCE NOTE

I HAVE COMPLIED WITH THE CRITERIA OF THE WATER EFFICIENT LANDSCAPE ORDINANCE (STATE OF CALIFORNIA TITLE 23, DIVISION 2, CHAPTER 2.7) AND APPLIED THEM ACCORDINGLY FOR THE EFFICIENT USE OF WATER IN THE IRRIGATION DESIGN PLAN.

BRANDON PETRUNIO, RLA 5894: _____ DATE: _____

IRRIGATION LEGEND AND NOTE REFERENCE:

- REFER TO SHEET LID.2 FOR IRRIGATION NOTES.
- REFER TO SHEET LI.1 FOR IRRIGATION LEGEND.

N W E S

20' 10' 0' 20' 40' 60'

SCALE: 1" : 20'-0"
GRAPHIC SCALE

IRRIGATION MATERIAL LEGEND

EMISSION DEVICES

SYMBOL	MANUF.	MODEL	DEGREES	TYPE	GPM	PSI	RADIUS	DTL. REF.
BUBBLERS								
	SALCO	SLV-PSTM-CV-2	360	LV BUBBLER	2 GPH	30	N/A	L+M - SHEET LID.1
		INSTALL 2 BUBBLER PER SYMBOL, 2 PER SHRUB						
	BOWSMITH	FD-2010	360	T. BUBBLER	1 GPH*6	30	N/A	J+K - SHEET LID.1
SPRAY HEADS								
	HUNTER/ RAINBIRD	PROS-06-PRS30-CV-SQ-QTR	90	POP-UP	.12	30	4'	H - SHEET LID.1
	HUNTER/ RAINBIRD	PROS-06-PRS30-CV-SQ-HALF	180	POP-UP	.20	30	4'	H - SHEET LID.1
	HUNTER/ RAINBIRD	PROS-06-PRS30-CV-8Q	90	POP-UP	.26	30	6'-8'	H - SHEET LID.1
	HUNTER/ RAINBIRD	PROS-06-PRS30-CV-8H	180	POP-UP	.52	30	6'-8'	H - SHEET LID.1
	HUNTER/ RAINBIRD	PROS-06-PRS30-CV-8F	360	POP-UP	1.05	30	6'-8'	H - SHEET LID.1
	HUNTER/ RAINBIRD	PROS-06-PRS30-CV-10Q	90	POP-UP	.39	30	8'-10'	H - SHEET LID.1
	HUNTER/ RAINBIRD	PROS-06-PRS30-CV-10H	180	POP-UP	.79	30	8'-10'	H - SHEET LID.1
	HUNTER/ RAINBIRD	PROS-06-PRS30-CV-10F	360	POP-UP	1.58	30	8'-10'	H - SHEET LID.1
	HUNTER/ RAINBIRD	PROS-06-PRS30-CV-12Q	90	POP-UP	.65	30	10'-12'	H - SHEET LID.1
	HUNTER/ RAINBIRD	PROS-06-PRS30-CV-12H	180	POP-UP	1.30	30	10'-12'	H - SHEET LID.1
	HUNTER/ RAINBIRD	PROS-06-PRS30-CV-12F	360	POP-UP	2.60	30	10'-12'	H - SHEET LID.1
	HUNTER/ RAINBIRD	PROS-06-PRS30-CV-15Q	90	POP-UP	.92	30	12'-15'	H - SHEET LID.1
	HUNTER/ RAINBIRD	PROS-06-PRS30-CV-15H	180	POP-UP	1.85	30	12'-15'	H - SHEET LID.1
	HUNTER/ RAINBIRD	PROS-06-PRS30-CV-15F	360	POP-UP	3.70	30	12'-15'	H - SHEET LID.1
MP ROTORS								
	HUNTER	PROS-06-PRS40-CV-MPCORNER	360	POP-UP	.39	40	14'-0"	H - SHEET LID.1
	HUNTER	PROS-06-PRSXX-CV-MP815-90-180	ADJ	POP-UP	.49 / .93	40	10-15"	H - SHEET LID.1
	HUNTER	PROS-06-PRSXX-MP815-360	360	POP-UP	1.87	40	10-15'	H - SHEET LID.1
	XX: CONTRACTOR SHALL USE 30 PSI REGULATED FOR 10-13' AND 40 PSI REGULATED FOR 12'-15'							
	HUNTER	PROS-06-PRSXX-MP2000-90-180	ADJ	POP-UP	.43/ .77	40	13'-20'	H - SHEET LID.1
	HUNTER	PROS-06-PRSXX-MP2000-360	360	POP-UP	1.48	40	13'-20'	H - SHEET LID.1
	XX: CONTRACTOR SHALL USE 30 PSI REGULATED FOR 13-17' AND 40 PSI REGULATED FOR 18'-20'							
	HUNTER	PROS-06-PRSXX-MP3000-90-180	ADJ	POP-UP	.86/ 1.82	40	22'-30'	H - SHEET LID.1
	HUNTER	PROS-06-PRSXX-MP3000-360	360	POP-UP	3.64	40	22'-30'	H - SHEET LID.1
	XX: CONTRACTOR SHALL USE 30 PSI REGULATED FOR 22-25' AND 40 PSI REGULATED FOR 26'-30'							
ROTORS								
	HUNTER	I-20-06-SS-MPR30-Q	ADJ	ROTOR	1.40	45	30'	I - SHEET LID.1
	HUNTER	I-20-06-SS-MPR30-H	ADJ	ROTOR	2.96	45	30'	I - SHEET LID.1
	HUNTER	I-20-06-SS-MPR30-F	360	ROTOR	5.78	45	30'	I - SHEET LID.1
	RAINBIRD	6504-PC-SS-6	ADJ	ROTOR	5.5	50	45"	I - SHEET LID.1
	RAINBIRD	6504-FC-SS-6	360	ROTOR	5.5	50	45'	I - SHEET LID.1

NOTE:
-CONTRACTOR SHALL USE RAINBIRD PCS SCREENS FOR REDUCTION OF RADII GREATER THAN 10%
-VARIABLE ARC NOZZLES ARE PERMISSIBLE IN OBSCURE AREAS IF RAINBIRD HE-VANS / HUNTER ADJUSTABLE NOZZLES ARE UTILIZED ONLY.

DISTRIBUTION COMPONENTS

SYMBOL	MANUF.	MODEL	DESCRIPTION	DTL. REF.
	JAIN	ARV-2	2" COMBINATION AIR VALVE	C - SHEET LID.1
	NIBCO	T-585-70-66 (1"-2") F-619-RWS-SON (2.5"+)	BR0NZE BALL VALVE- FULL PORT - THREADED WITH SS HANDLE DUCTILE IRON GATE VALVE- RESILIENT WEDGE, SQUARE OPERATING NUT (SIZE PER MAINLINE SIZE)	D+E - SHEET LID.1
	HUNTER	ICV-XXXG-FS	REMOTE CONTROL VALVE WITH ALL PURPOSE SOLENOID AND COMPATIBLE 2-WIRE DECODER. INSTALL ON 2-WIRE PATH WITH HUNTER ICD-100 SINGLE STATION DECODER.	G - SHEET LID.1
	RAINBIRD	XXX-PEB	REMOTE CONTROL VALVE WITH ALL PURPOSE SOLENOID. WIRE TO CONVENTIONAL CONTROLLER. PULL NEW WIRES FROM EXISTING CONTROLLER INSIDE BUILDING TO PROPOSED VALVES IN ADDITION TO ONES REPLACING EXISTING VALVES.	F - SHEET LID.1
	P.V.C.	SCH 40 MIN PIPE SIZE ¾"	NON-PRESSURE LATERAL LINE WITH SCH. 40 FITTINGS. THREADED FITTINGS SHALL BE SCH. 80 (SIZE PER PLAN)	B - SHEET LID.1
	P.V.C.	SCH. 40 MIN PIPE SIZE 1" CLASS 315 CLASS 200 BELL END GASKET	PRESSURE MAINLINE 1" THRU 1 1/2" THREADED FITTINGS SHALL BE SCH. 80 (SIZE PER PLAN) PRESSURE MAINLINE 2" THRU 3" THREADED FITTINGS SHALL BE SCH. 80 (SIZE PER PLAN) PRESSURE MAINLINE 4"+ FITTINGS SHALL BE LEEMCO JOINT RESTRAINTS SELF RESTRAINED FITTINGS (RF SERIES, LPP, ETC.)	A&B - SHEET LID.1 S - SHEET LID.2 R - SHEET LID.2
	P.V.C.	SCH. 40 - GRAY CONDUIT	2" CONDUIT WITH PULL STRING FOR FUTURE USE.	A - SHEET LID.1
	P.V.C.	SCH. 40	SLEEVE FOR PRESSURE MAINLINE, LATERAL OR WIRE BUNDLE. ALL PIPE(S)/ WIRE BUNDLES REGARDLESS OF SYMBOL BEING SHOWN SHALL BE SLEEVED WHEN INSTALLED UNDER HARDSCAPE. (2X DIA. OF PIPE OR WIRE BUNDLE)	A - SHEET LID.1
P			PULL BOX FOR FUTURE VALVE WIRES. INSTALL IN PLANTER AREAS WHENEVER POSSIBLE CONCRETE BOXES TO BE USED IN HARDSCAPE AREAS. IN ADDITION TO BOXES SHOWN ON PLANS CONTRACTOR SHALL INSTALL ADDITIONAL BOXES AS NOTED PER WIRE/ CONDUIT NOTE.	Q - SHEET LID.2
C R			RAINBIRD ESP-ME3 CONTROLLER IN A LIGHT DUTY FRONT ENTRY PEDESTAL MOUNT CONTROLLER WITH FLOW SENSING, WIFI, SMART AUTO ETO ADJUST, ONSITE WEATHER STATION AND REMOTE CONTROL. ITS MODEL#: ICA13-RB7-13/SP/WRFS/IFS-100C NOTES: 120 V. ELECTRICAL LINE SHALL BE SUPPLIED BY GENERAL CONTRACTOR AND MUST BE A GFCI WITH 1-GANG EXTRA DUTY NON-METALLIC WHILE-IN-USE WEATHERPROOF HORIZONTAL/VERTICAL RECEPTACLE COVER KIT . CONTRACTOR SHALL INSTALL CONTROLLER PER MANUFACTURER'S RECOMMENDATIONS.	N-P / SHEET LID.1

EXISTING EQUIPMENT LEGEND

SYMBOL	MANUFACTURE / MODEL NO. / DESCRIPTION
	(EXISTING) IRRIGATION MAINLINE SHOWN FOR REFERENCE ONLY. PROTECT IN PLACE, REPAIR ANY DAMAGE DUE TO CONSTRUCTION. VERIFY SIZE, TYPE, AND EXACT LOCATION IN FIELD. IF CONTRACTOR IS NOT ABLE TO LOCATE EXISTING MAINLINE CONTRACTOR SHALL PROVIDE AND INSTALL NEW MAINLINE AND MAKE ALL NECESSARY CONNECTIONS FOR PROPER OPERATION OF NEW AND EXISTING IRRIGATION SYSTEM.
	(EXISTING) REMOTE CONTROL VALVE(S). PROTECT IN PLACE, VERIFY EXACT LOCATION INFIELD. CONTRACTOR TO ASSESS WHICH VALVE FEEDS WHICH LANDSCAPE AREAS TO REMAIN. REMOVE AND REPLACE EXISTING VALVE BOX, INCLUDING GRAVEL
C	EXISTING IRRIGATION CONTROLLER MOUNTED INSIDE BUILDING. CONTRACTOR TO VERIFY OPEN STATIONS, AND STATION NUMBERING FOR VALVES AFFECTED BY PROPOSED CHANGES. ADJUST STATION NUMBERS AS NEEDED AND INDICATE CHANGE ON AS-BUILT PLANS.

IDENTIFICATION STAMP
DIV. OF THE STATE ARCHITECT
APP: 03-122664 INC:
REVIEWED FOR
SS ☑ FLS ☑ ACS ☑
DATE: 05/12/2023

pjhm architects
LICENSED ARCHITECT BRANDON W. PRINCE NO. C15585 REN. 02/25 STATE OF CALIFORNIA
BPA LANDSCAPE ARCHITECTS
BRANDON PETRUNIO & ASSOCIATES, INC.
LANDSCAPE ARCHITECTS
Design Studio: 301 N. San Dimas Ave., San Dimas, CA. 91773
Corporate Office: 24461 Ridge Route Drive #100, Laguna Hills, CA. 92653
T: (424) 235-8940, M: (951) 312-9943, E: brandon@bpalas.com
LICENSED LANDSCAPE ARCHITECT BRANDON PETRUNIO No. 5894 Signature 01/31/2025 Renewal Date 01/31/2023 Date STATE OF CALIFORNIA

HIGHLAND HIGH SCHOOL
50M POOL & AQUATICS CENTER

KERN HIGH SCHOOL DISTRICT

OC Office: 24461 Ridge Route Drive #100, Laguna Hills, CA 92653 • OC Phone: 949.496.6191 • SD Office: 804 Pier View Way #103, Oceanside, CA 92054 • SD Phone: 760.730.5527 • LA Office: 837 Traction Avenue, #410, Los Angeles, CA 90013 • LA Phone: 213.278.0172 • Web: pjhm.com

LANDSCAPE IRRIGATION PLAN - ENLARGED

SITE

LI.1

IRRIGATION PLAN

SCALE: 1" = 20'-0"

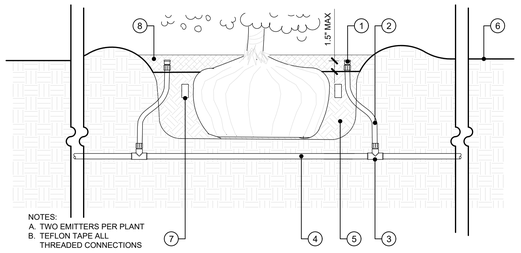

LEGEND
1. PRESSURE COMPENSATING, CHECK VALVE DRIP EMITTER PER LEGEND. LOCATE AT EDGE OF PLANTING PIT / WATERING BASIN. INSTALL AFTER FLUSHING SYSTEM OF DEBRIS. (MAX 2" ABOVE FINISH GRADE)
2. 1/2" UV-RESISTANT PVC FLEXIBLE PIPE - HUNTER IH SERIES FLEX RISER. LENGTH AS NEEDED, 5' MAXIMUM LENGTH.
3. SCHEDULE 40 PVC REDUCING TEE. SOLVENT WELD FLEX PIPE TO PVC FITTING PER MANUFACTURERS RECOMMENDATIONS.
4. PVC LATERAL LINE FROM REMOTE CONTROL VALVE. DEPTH / COVER PER IRRIGATION SPECIFICATIONS.
5. PLANTING PIT. AMEND SOIL PER SPECIFICATIONS AND AGRONOMIC SOILS REPORT
6. FINISHED GRADE.
7. PLANT TABLET PER SPECIFICATIONS.
8. MULCH PER PLANTING PLAN.

M POINT SOURCE BUBBLERS - SECTION

SCALE: NTS

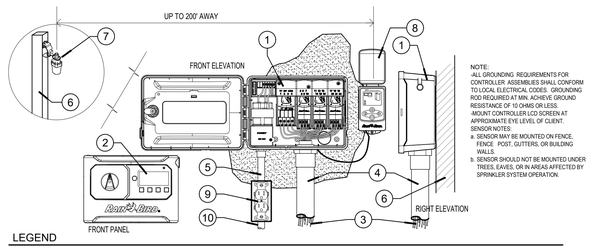

LEGEND
1. CONTROLLER/ OPEN FACE PANEL PER LEGEND
2. LCD SCREEN
3. REMOTE CONTROL VALVE WIRES (#12 COMMON/ #14 CONTROL/ SHIELDED FLOW SENSOR WIRE. SCH. 40 UV RESISTANT PIPE FOR REMOTE CONTROL VALVE WIRE BUNDLE. SIZE AS NEEDED TO HOUSE WIRES.
4. SCH. 40 GRAY ELECTRICAL SUPPLY CONDUIT, CONNECT POWER SOURCE, J-BOX INSIDE CONTROLLER. SIZE AS NEEDED MIN ¾"
6. BUILDING EDGE, POST WHERE OCCURS. MOUNT CONTROLLER USING SUPPLIED SCREWS AND ANCHORS.
7. WIRELESS RAIN & FREEZE SENSOR PER LEGEND
8. WIRELESS RAIN/FREEZE SENSOR INTERFACE
9. ALUMINUM WEATHERPROOF J-BOX, PLUG AND CEC COMPLIANT WEATHERPROOF POLYCARBONATE IN USE COVER.
10. 120 VAC 60 HZ POWER SUPPLY CONDUIT.

N CONTROLLER & RAIN SENSOR

SCALE: NTS

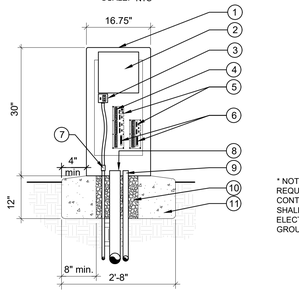

* NOTE ALL GROUNDING REQUIREMENTS FOR CONTROLLER ASSEMBLIES SHALL CONFORM TO LOCAL ELECTRICAL CODES. SEE GROUND DETAIL.

LEGEND
1. IMPERIAL ASSEMBLIES 18" FRONT ENTRY CONTROLLER ASSEMBLY NEMA 3R RAINPROOF ENCLOSURE (UL LISTED)
2. CONTROLLER
3. POWER SWITCH/GFI RECEPTACLE
4. MASTER VALVE OR PUMP START RELAY ASSEMBLY (OPTIONAL)
5. TERMINAL BOARD
6. REMOTE RECEIVER CONNECTOR (OPTIONAL)
7. 1" PVC CONDUIT FOR 120 VAC FROM METERED POWER SUPPLY. 120 WIRES MUST BE PLACED IN FLEX CONDUIT WITHIN PEDESTAL FOR UL LISTING AND SAFETY
8. PVC CONDUIT FOR CONTROL WIRES, SIZE AS REQUIRED
9. 1" PVC CONDUIT FOR FLOW SENSOR CABLE PAIGE CABLE P - 7162 - D (IF APPLICABLE)
10. FILL VOIDS WITH 3/8" PEA GRAVEL
11. POURED-IN-PLACE CONCRETE BASE

O CONTROLLER - PEDESTAL

SCALE: NTS

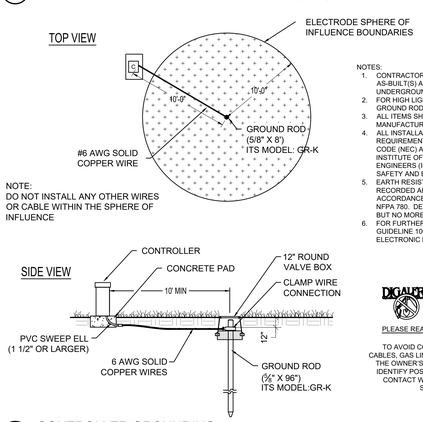

NOTES:
1. CONTRACTOR SHALL CONSULT SITE UTILITY AS-BUILT(S) AND BECOME FAMILIAR WITH ALL UNDERGROUND ITEMS WITHIN PROJECT SCOPE.
2. FOR HIGH LIGHTNING PRONE AREAS USE BOTH GROUND ROD AND GROUND PLATE.
3. ALL ITEMS SHALL BE INSTALLED PER MANUFACTURERS RECOMMENDATIONS.
4. ALL INSTALLATIONS SHALL MEET MINIMUM REQUIREMENTS OF THE NATIONAL ELECTRICAL CODE (NEC) AND SOUND PRACTICES OF THE INSTITUTE OF ELECTRICAL & ELECTRONIC ENGINEERS (IEEE) TO ENSURE PERSONNEL SAFETY AND EQUIPMENT RELIABILITY.
5. EARTH RESISTANCE SHALL BE MEASURED AND RECORDED AFTER INSTALLATION WITHIN ACCORDANCE OF LATEST REQUIREMENTS OF NFPA 780. DESIRED READINGS ARE 5 TO 10 OHMS BUT NO MORE THAN 25 OHMS.
6. FOR FURTHER REQUIREMENTS CONSULT THE ASIC GUIDELINE 100-2002 FOR EARTH GROUNDING ELECTRONIC EQUIPMENT IN IRRIGATION SYSTEMS.

DIGALERT WARNING! 811

PLEASE READ BEFORE INSTALLING GROUND ROD

TO AVOID CONTACT WITH HIGH VOLTAGE POWER CABLES, GAS LINES, OR DATA CABLES, PLEASE CONTACT THE OWNER'S REPRESENTATIVE AND "DIG ALERT" TO IDENTIFY POSSIBLE HAZARDS BELOW THE SURFACE. CONTACT WITH THESE HAZARDS WILL RESULT IN SEVERE INJURY OR DEATH.

P CONTROLLER GROUNDING

SCALE: NTS

I ROTOR

SCALE: NTS

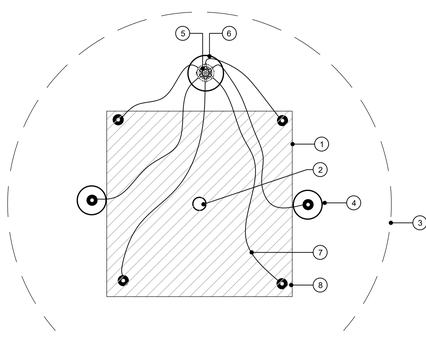

LEGEND
1. ROOT BALL
2. TREE TRUNK
3. TREE CANOPY
4. ROOTWELL DEVICE- NO BUBLR (2 PER TREE)
5. BOWSMITH MULTI-EMISSION DEVICE (1PER TREE), PER LEGEND
6. EMITTER VALVE BOX.
7. 1/4" DISTRIBUTION TUBING, BURRY 2" BELOW FG
8. STAKE AND BUG CAP PER DETAIL.

J MUTLI-OUTLET EMISSION DEVICE- TREE BUBBLER- PLAN VIEW

SCALE: NTS

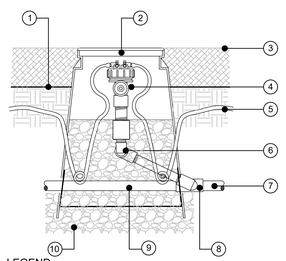

NOTE:
- COIL ADDITIONAL 9-INCHES OF TUBING IN VALVE BOX TO FACILITATE MAINTENANCE.
- FIELD INSTALLED BELOW GRADE PIPE CONNECTIONS SHALL BE THREADED PVC OR GLUED PVC.
- MICROTUBING MUST BE BURIED AT LEAST 6" BELOW GRADE AND THE MICROTUBING MUST BE SECURED BY A STAKE.
- MAXIMUM LENGTH OF MICROTUBING SHALL BE 10'-0".

LEGEND
1. FINISH GRADE
2. 7" ROUND BOX (RAINBIRD VB-7RND)
3. MULCH PER PLANTING PLAN.
4. MULTI-OUTLET EMISSION DEVICE PER LEGEND
5. 1/4-INCH TUBING: POLYETHYLENE DISTRIBUTION TUBING RAIN BIRD XQ-XXXX
6. TRIPPLE SWING JOINT
7. PVC LATERAL LINE
8. PVC SCH 40 TEE OR ELL
9. LANDSCAPE FABRIC
10. 12" MIN. 3/4" WASHED GRAVEL.
11. DIFFUSER BUG CAP: RAINBIRD DBC-025
12. 1/4-INCH TUBING STAKE: RAINBIRD TS-025

K MULTI-OUTLET EMITTER- TREE BUBBLER - SECTION

SCALE: NTS

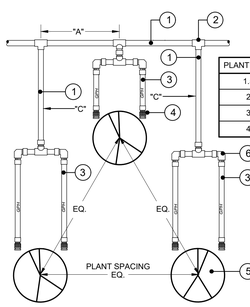

PLANT SPACING	LENGTH "A"	RISER "B"	RISER "C"
1.5 FT.	9 IN.	SLV-PVC-M-ACL-24	SLV-PVC-M-ACL-24
2 FT.	12 IN.	SLV-PVC-M-ACL-24	SLV-PVC-M-ACL-24
3 FT.	18 IN.	SLV-PVC-M-ACL-24	SLV-PVC-M-ACL-24
4 FT.	24 IN.	SLV-PVC-M-ACL-24	SLV-PVC-M-ACL-24

NOTES:
A. EMITTER SPACING SHALL BE BASED ON PLANT SPACING, INSTALL ALL IRRIGATION USING THE COMPONENTS DESCRIBED ABOVE. IRRIGATION EQUIPMENT SHALL BE COMPLETELY INSTALLED PRIOR TO PLANT LAYOUTS. ADJUST PLANT SPACING TO ACCOMMODATE FINAL IRRIGATION LAYOUT.
B. TEFLON TAPE ALL THREADED CONNECTIONS

LEGEND
1. PVC SCH. 40 PIPE.
2. PVC SCH. 80 1/2" REDUCING TEE.
3. HUNTER IH SERIES FLEX RISER
4. SALCO PRESSURE COMPENSATING EMITTER
5. PLANT, TRIANGULAR SPACING.
6. S X T COUPLING AND MARLEX STREET ELL

L POINT SOURCE BUBBLERS - PLAN VIEW

SCALE: NTS

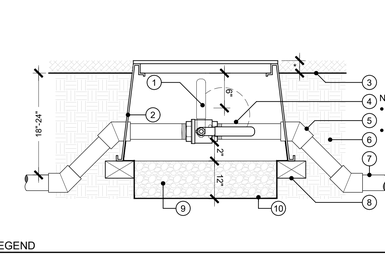

NOTES:
- USE TEFLON TAPE ON ALL PVC TO PVC CONNECTIONS; NO PIPE DOPE ALLOWED.
- SET PERIMETER HEADS 4"-6" FROM CURBS AND WALKS AND 6"-12" FROM VERTICAL OBJECTS SUCH AS FENCES AND WALLS, ETC.
- INSTALL SPRINKLER HEADS PLUMB. ADJUST NOZZLE STREAM TO COVER LANDSCAPE AREA WITHOUT OVERSPRAY ONTO PAVING, FENCES, WALLS OR BUILDINGS.

LEGEND:
1. FINISHED GRADE.
2. SIDEWALK, CURB, HARDSCAPE EDGE, ETC.
3. GEAR-DRIVEN ROTOR HEAD REFER TO LEGEND FOR MANU & MODEL.
4. TRIPLE SWING JOINT ASSEMBLY. (RAINBIRD TSJ OR EQUAL)(SIZE PER ROTOR INLET SIZE)
5. REDUCING TEE SxSxT
6. PVC NON-PRESSURE LATERAL LINE.

E BALL VALVE

SCALE: NO_SCALE

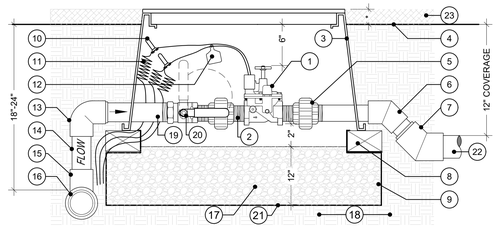

NOTES:
A. ALL THREADED FITTINGS SHALL RECEIVE 2 WRAPS OF TEFLON TAPE.
B. LAY BALL VALVE ON ITS SIDE FOR EASE OF OPERATION.
C. PER CONTRACTOR: EACH VALVE SHALL BE INDIVIDUAL CONNECTION TO MAINLINE -OR- LINE SIZE CAPACITY OF SUM GPM OF ALL VALVES ON MANIFOLD OR MAINLINE SIZE WHICHEVER IS LESS.
D. 2" AND LARGER VALVES SHALL USE SUPER JUMBO BOX (RAINBIRD VB-SPR-H + VB-SPR-B)
E. HEAT BRAND CONTROLLER AND STATION NUMBER ON LID IN 2" BLOCK LETTERS

LEGEND
1. REMOTE CONTROL VALVE PER IRRIGATION LEGEND
2. SCH 80 PVC NIPPLE (3 REQUIRED) VALVE SIZE
3. RECTANGULAR PLASTIC VALVE BOX (RAINBIRD VB-JBM-H) FINISH GRADE
4. SCH 80 UNION (TxT)(2 REQUIRED)
5. SCH 40 PVC 45 DEGREE ELL
6. SCH 40 PVC 45 DEGREE ELL (BUSH UP TO LINE SIZE)
7. RECTANGULAR PLASTIC VALVE BOX (RAINBIRD VB-JMB-B)
8. COMMON BRICK SUPPORTS (4 REQUIRED)
9. WATER PROOF WIRE CONNECTORS (DBY /2 REQUIRED)
10. UF WIRES TO CONTROLLER (COLOR CODED) SEE SPECS.
11. I.D. TAG WITH CONTROLLER & STATION NUMBER (CHRISTY'S #ID-STD-Y1)
13. SCH 80 PVC 90 DEGREE (SIZE PER MAINLINE).
14. RISER. (SEE NOTES)
15. SCH 80 PVC TEE (SEE NOTES)
16. MAINLINE PIPING REFER TO PLAN
17. FILL BASE OF BOX WITH 3/4" GRAVEL
18. COMPACTED NATIVE SOIL
19. SCH 80 NIPPLE CUT TO LENGTH (2 REQUIRED)
20. BALL VALVE - NIBCO T-585-70-66 (SIZE PER RCV)
21. FILTER FABRIC - ENSURE ALL VALVE BOX HOLES ARE COVERED
22. LATERAL LINE (SIZE PER PAN)
23. MULCH REFER TO PLANTING PLAN
* 1/2" IN TURF AREAS, 2" IN SHRUB AREAS

F REMOTE CONTROL VALVE - CONVENTIONAL WIRE

SCALE: NO_SCALE

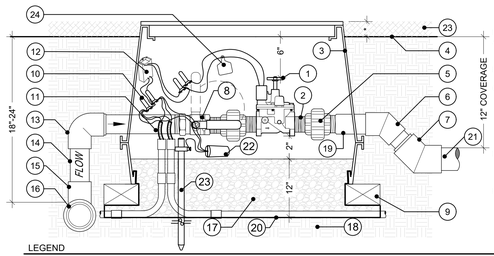

NOTES:
A. ALL THREADED FITTINGS SHALL RECEIVE 2 WRAPS OF TEFLON TAPE.
B. LAY BALL VALVE ON ITS SIDE FOR EASE OF OPERATION.
C. PER CONTRACTOR: EACH VALVE SHALL BE INDIVIDUAL CONNECTION TO MAINLINE -OR- LINE SIZE CAPACITY OF SUM GPM OF ALL VALVES ON MANIFOLD OR MAINLINE SIZE WHICHEVER IS LESS.
D. 2" AND LARGER VALVES SHALL USE SUPER JUMBO BOX (RAINBIRD VB-SPR-H + VB-SPR-B)
E. HEAT BRAND CONTROLLER AND STATION NUMBER ON LID IN 2" BLOCK LETTERS

LEGEND
1. REMOTE CONTROL VALVE PER IRRIGATION LEGEND
2. SCH 80 PVC NIPPLE (3 REQUIRED) VALVE SIZE
3. RECTANGULAR PLASTIC VALVE BOX (RAINBIRD VB-JMB-H)+ EXTENSION (RAINBIRD VB-JMB-B).
4. FINISH GRADE
5. SCH 80 UNION (TxT)(2 REQUIRED)
6. SCH 80 PVC 45 DEGREE ELL
7. SCH 80 PVC 45 DEGREE ELL (BUSH UP TO LINE SIZE)
8. BRASS FULL PORT BALL VALVE (NIBCO T-585-70-66)
9. COMMON BRICK SUPPORTS (4 REQUIRED)
10. WATER PROOF WIRE CONNECTORS (3M 3570G-N)
11. 2 WIRE CABLE TO CONTROLLER. PER MANU.
12. 2-WIRE DECODER. PER LEGEND + MANU.
13. SCH 80 PVC 90 DEGREE (SIZE PER MAINLINE).
14. PVC RISER (SEE NOTES) / LENGTH AS NEEDED
15. REDUCING TEE (SEE NOTES)
16. MAINLINE PIPING. PER PLAN
17. FILL BASE OF BOX WITH 3/4" GRAVEL
18. COMPACTED NATIVE SOIL
19. SCH 80 NIPPLE (CUT END OFF AND GLUE)
20. FILTER FABRIC - ENSURE ALL VALVE BOX HOLES ARE COVERED
21. LATERAL LINE (SIZE PER PAN)
22. SURGE PROTECTOR (WHERE APPLICABLE PER MANU.)
23. 8' GROUND ROD OR GROUND PLATE. PER DETAIL.
24. I.D. TAG WITH CONTROLLER & STATION NUMBER
* 1/2" IN TURF AREAS, 2" IN SHRUB AREAS

G REMOTE CONTROL VALVE W/ BALL VALVE - 2-WIRE DECODER

SCALE: NO_SCALE

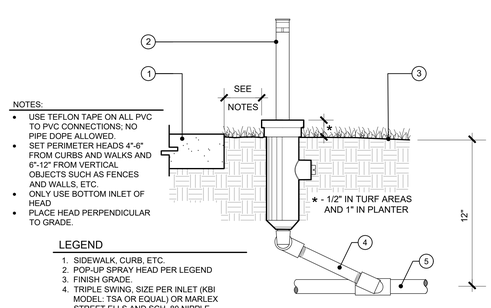

NOTES:
- USE TEFLON TAPE ON ALL PVC TO PVC CONNECTIONS; NO PIPE DOPE ALLOWED.
- SET PERIMETER HEADS 4"-6" FROM CURBS AND WALKS AND 6"-12" FROM VERTICAL OBJECTS SUCH AS FENCES AND WALLS, ETC.
- ONLY USE BOTTOM INLET OF HEAD
- PLACE HEAD PERPENDICULAR TO GRADE.

LEGEND
1. SIDEWALK, CURB, ETC.
2. POP-UP SPRAY HEAD PER LEGEND
3. FINISH GRADE.
4. TRIPLE SWING, SIZE PER INLET (KBI MODEL: TSA OR EQUAL) OR MARLEX STREET ELLS AND SCH. 80 NIPPLE
5. PVC LATERAL LINE

H POP-UP SPRAY HEAD

SCALE: NO_SCALE

A SLEEVING

SCALE: NO_SCALE

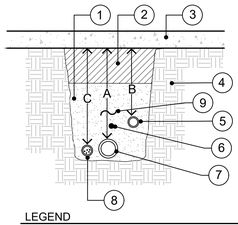

NOTES
A. SLEEVE SHALL BE 2 TIMES THE DIAMETER OF THE PIPE OR WIRE BUNDLE CARRIED.
B. BUNDLE WIRING & WRAP W/ ELECTRICAL TAPE @ 5'-0" INTERVALS.
C. ALL MAINLINE PIPING SHALL BE SLEEVED BELOW ALL HARDSCAPE ELEMENTS W/ SCH. 40 PVC UNLESS OTHERWISE SPECIFIED ON PLANS THE PIPE OR WIRE BUNDLE.
D. CONTRACTOR SHALL MARK EDGE OF PAVING ABOVE ENDS OF SLEEVE W/ A SCORE MARK TO DESIGNATED SLEEVE LOCATION.
E. SLEEVE ENDS SHALL EXTEND 24" BEYOND EDGE OF HARDSCAPE.
F. INSTALL MAINLINE MARKING TAPE AT A DEPTH OF 12" OF FINISH GRADE (RED OR YELLOW).
G. AFTER INSTALLATION OF PIPE & IRE, CONTRACTOR SHALL FILL REMAINING VOID IN ENDS OF SLEEVES W/ CONDUIT PUTTY.

LEGEND
1. SAND BACKFILL.
2. SOIL BACKFILL (SEE SPECS)
3. FINISH SURFACE (CONC./ AC. PAVING.
4. UNDISTURBED SOIL.
5. PLACE 12" DEEP NON-PRESSURE LATERAL IN SLEEVE.
6. GREEN COATED TRACER WIRE
7. PRESSURE PVC MAINLINE IN SLEEVE
8. CONTROLLER WIRING IN P.V.C. SLEEVE.
9. 6" WIDE DETECTABLE WARNING TAPE

DIMENSION	A	B	C
1/2" TO 4" IN SIZE WHERE BELOW VEHICULAR PAVING	36"	36"	36"
1/2" TO 4" IN SIZE WHERE BELOW PEDESTRIAN PAVING	24"	12"	24"

B TRENCHING

SCALE: NO_SCALE

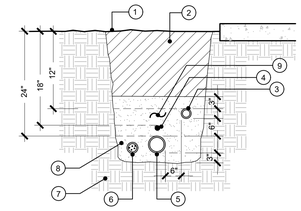

NOTES:
A. BUNDLE AND TAPE WIRES AT 10' O.C.
B. PIGTAIL AND LOOP CONTROL WIRES AT ALL CHANGES IN DIRECTION.
C. SPLICING OF WIRE RUNS IS NOT PERMITTED WITHOUT PRIOR APPROVAL FROM THE OWNER AND LANDSCAPE ARCHITECT.
D. RUN CONTROL WIRES IN SAME TRENCH AS MAINLINE WHERE POSSIBLE.
E. INSTALL 12"X12"X12" CONCRETE THRUST BLOCKS AT ALL CHANGES IN DIRECTION OF PRESSURE MAINLINE (45'S, 90'S, TEES, ETC.) AND AT ALL TERMINAL POINTS.
F. REFER TO STRUCTURAL DETAILS FOR TRENCHING NEAR FOOTINGS.

LEGEND
1. FINISH GRADE
2. CLEAN BACKFILL-90% COMPACTION-SEE SPECS.
3. NON-PRESSURE LATERAL LINE (SNAKE IN TRENCH)
4. GREEN COATED TRACER WIRE
5. PRESSURE MAINLINE (SNAKE IN TRENCH)
6. CONTROL WIRES- IN CONDUIT/ TAPE TO MAINLINE AS NOTED PER SPECS. INSTALL BELOW MAINLINE.
7. UNDISTURBED NATIVE SOIL
8. SAND BACKFILL OR SCREENED NATIVE AS ALLOWED BY LANDSCAPE ARCHITECT.
9. 6" WIDE DETECTABLE WARNING TAPE

C COMBINATION AIR/ VACUUM RELIEF

SCALE: NO_SCALE

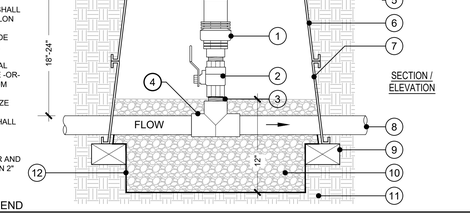

LEGEND
1. AIR RELEASE VALVE PER IRRIGATION LEGEND
2. BALL VALVE: NIBCO T-585-70-66
3. SCH 80 PVC NIPPLE, LENGTH AS NEEDED
4. SCH 80 PVC TEE WITH 2" THREADED OUTLET
5. FINISH GRADE.
6. RECTANGULAR PLASTIC VALVE BOX WITH LOCKING LID (RAINBIRD VB-STD-H) HEAT BRAND "ARV" ON LID IN 2" HIGH BLOCK LETTERS
7. RECTANGULAR PLASTIC VALVE BOX EXTENSIONS (RAINBIRD VB-STD-B)
8. MAINLINE PIPING PER IRRIGATION LEGEND
9. COMMON BRICK SUPPORTS (4 REQUIRED)
10. FILL BASE OF BOX WITH PEA GRAVEL
11. NATIVE SOIL
12. FILTER FABRIC - COVER ALL BOX HOLES
* 1/2" IN TURF AREAS, 1" IN SHRUB AREAS

D GATE VALVE

SCALE: NO_SCALE

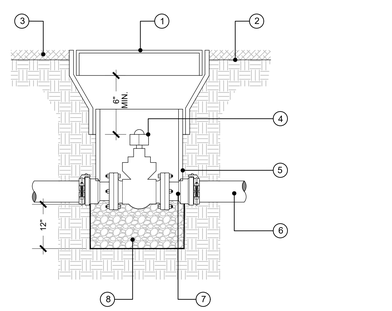

LEGEND
1. 12" ROUND PLASTIC VALVE BOX
2. FINISHED GRADE.
3. MULCH PER PLANTING PLAN.
4. FLANGED GATE VALVE WITH SQ. NUT
5. PVC EXTENSION (SIZE AS REQUIRED).
6. MAINLINE PER IRRIGATION PLAN
7. LEEMCO #SR-FB SELF RESTRAINED FLANGE ADAPTER WITH BELL END - SIZE PER VALVE AND MAINLINE PIPING (2 REQUIRE
8. PEA GRAVEL

IDENTIFICATION STAMP
DIV. OF THE STATE ARCHITECT
APP: 03-122664 INC:
REVIEWED FOR
SS ☑ FLS ☑ ACS ☑
DATE: 05/12/2023

pjhm architects
LA Phone: 213.278.0172 • Web: pjhm.com
LA Office: 837 Traction Avenue, #410, Los Angeles, CA 90013 • SD Phone: 760.730.5527 • SD Office: 804 Pier View Way #103, Oceanside, CA 92054 • OC Phone: 949.496.6191 • OC Office: 24461 Ridge Route Drive #100, Laguna Hills, CA 92653

LICENSED ARCHITECT
RONALD W. RINGER
REN.: 02/25
STATE OF CALIFORNIA

BPA LANDSCAPE ARCHITECTS
BRANDON PETRUNIO & ASSOCIATES, INC.
Design Studio: 301 N. San Dimas Ave., San Dimas, CA 91773
Corporate Office: 24461 Ridge Route Drive, Laguna Hills, CA 92653
T: (424) 235-8940, M: (951) 312-9943, E: brandon@bpalas.com

REGISTERED LANDSCAPE ARCHITECT
BRANDON PETRUNIO
No. 6504
Signature
01/31/2025
Renewal Date
03/31/2023
Date
STATE OF CALIFORNIA

HIGHLAND HIGH SCHOOL
50M POOL & AQUATICS CENTER
KERN HIGH SCHOOL DISTRICT

LANDSCAPE IRRIGATION DETAIL SHEET 1
SITE

LID.1

EXISTING IRRIGATION NOTES

1. THE CONTRACTOR MUST FAMILIARIZE HIMSELF WITH THE EXISTING IRRIGATION AND PLANTING ON PROPERTY. ANY DAMAGE OR ADJUSTMENTS REQUIRED INCLUDING REPLACING OR RELOCATING IRRIGATION LINES, HEADS, VALVES, WIRES OR ANY UTILITY THAT OCCURS ON THE PARCEL DUE TO THE CONSTRUCTION OF THIS PROJECT IS THE SOLE RESPONSIBILITY OF THE CONTRACTOR AND SHALL BE PERFORMED AT NO ADDITIONAL COST TO THE OWNER. THE OWNER'S REPRESENTATIVE MUST REVIEW ANY REQUIRED MODIFICATIONS TO THESE AREAS PRIOR TO COMMENCING WORK. THE CONTRACTOR MUST NOTIFY THE OWNER'S AUTHORIZED REPRESENTATIVE OF THESE CONDITIONS OR ANY DISCREPANCIES PRIOR TO COMMENCING WORK.

2. CONTRACTOR SHALL VERIFY ALL SITE CONDITIONS, PROPERTY LINES, DIMENSIONS, ETC. PRIOR TO COMMENCING WORK. ALL EXISTING IRRIGATION SYSTEMS SHALL BE VERIFIED IN THE FIELD AT START OF CONSTRUCTIONS. ALL EXISTING MAINLINES, RCVS, BACKFLOW DEVICES, CONTROLLERS, METERS, SERVICE LINES, ETC. SHALL BE VERIFIED IN FIELD. ALL EXISTING IRRIGATION EQUIPMENT SHALL BE CLEARLY INDICATED INCLUDING SIZES AND MODEL NUMBERS TO SCALE ON AN ACCURATE BASE DRAWING AND SUBMITTED AS A SHOP DRAWING. SAID SHOP DRAWING SHALL BE SUBMITTED TO THE LANDSCAPE ARCHITECT, AND OWNER'S AUTHORIZED REPRESENTATIVE FOR REVIEW AND APPROVAL. NOTIFY THE OWNER'S AUTHORIZED REPRESENTATIVE IMMEDIATELY IF ANY DISCREPANCIES ARE FOUND. NO WORK SHALL PROCEED WITHOUT APPROVAL OF SAID SHOP DRAWINGS.

3. ALL EQUIPMENT LOCATIONS AND PIPE ROUTING SHALL BE STAKED IN FIELD FOR REVIEW AND APPROVAL PRIOR TO INSTALLATION. ALL LAYOUT SHALL BE AS APPROVED BY, LANDSCAPE ARCHITECT, AND OWNER'S AUTHORIZED REPRESENTATIVE PRIOR TO INSTALLATION. NO EQUIPMENT SHALL BE INSTALLED WITHOUT APPROVAL OF LAYOUT.

4. CONTRACTOR SHALL BE RESPONSIBLE FOR COMPLETE INSTALLATION OF PROPOSED IRRIGATION EQUIPMENT AND RELATED EQUIPMENT, INCLUDING BUT NOT LIMITED TO R.C.V. CONTROL WIRES, ELECTRICAL WIRES, CONDUIT, REMOTE CONTROL VALVES, ETC. ALL LAYOUT AND LOCATIONS SHALL BE CONFIRMED WITH OWNER'S AUTHORIZED REPRESENTATIVE PRIOR TO COMMENCING WORK.

5. CONTRACTOR SHALL BE RESPONSIBLE FOR THE COMPLETE REMOVAL AND DISPOSAL OF ALL EXISTING IRRIGATION EQUIPMENT AFFECTED BY THE PROPOSED IRRIGATION IMPROVEMENTS. CONTRACTOR SHALL VERIFY ALL EQUIPMENT TO BE REMOVED AND DISPOSED OF IN FIELD PRIOR TO COMMENCING WORK.

6. CONTRACTOR SHALL BE RESPONSIBLE FOR REPAIR/MODIFICATION OF ALL ADJACENT IRRIGATION SYSTEM EQUIPMENT THAT IS AFFECTED BY PROPOSED IRRIGATION IMPROVEMENTS. CONTRACTOR SHALL REPAIR SAID SYSTEMS TO A LIKE NEW MANNER, PROVIDING COMPLETE 100% HEAD TO HEAD COVERAGE IN ALL AREAS WITH SYSTEM LAYOUT AS APPROVED BY THE OWNER'S AUTHORIZED REPRESENTATIVE. CONTRACTOR SHALL CONFIRM ALL AREAS REQUIRING MODIFICATION WITH THE OWNER'S AUTHORIZED REPRESENTATIVE PRIOR TO BIDDING WORK AND PRIOR TO COMMENCING WORK.

7. CONTRACTOR SHALL ADJUST AND CAP OFF EXISTING ADJACENT IRRIGATION SYSTEM AS REQUIRED. SYSTEM SHALL PROVIDE COMPLETE 100% HEAD TO HEAD COVERAGE IN ALL AREAS AS APPROVED BY OWNER'S AUTHORIZED REPRESENTATIVE. ALL LAYOUT SHALL BE CONFIRMED WITH OWNER'S AUTHORIZED REPRESENTATIVE PRIOR TO COMMENCING WORK.

8. CONTRACTOR SHALL REFER TO CORRESPONDING ON-SITE WATER AND SEWER PLAN FOR UNDERLYING WATERLINES, EASMENTS, AND OTHER RELATED EQUIPMENT. CONTRACTOR SHALL VERIFY ALL EXISTING SITE CONDITIONS IN FIELD WITH OWNERS AUTHORIZED REPRESENTATIVE PRIOR TO COMMENCING WORK.

9. CONTRACTOR SHALL BE RESPONSIBLE FOR ALL REPAIRS TO EXISTING IRRIGATION, LANDSCAPE AND HARDSCAPE DAMAGED BY NEW CONSTRUCTION AT NO ADDITIONAL COST TO THE OWNER.

10. CONTRACTOR SHALL MEET WITH THE OWNER PRIOR TO BEGINNING DEMOLITION OR ANY OTHER WORK, AND WALK SITE TO LOCATE EXISTING CONTROLLER AND LINES AND OTHER IRRIGATION TO BE PROTECTED IN PLACE.

11. CONTRACTOR SHALL PROVIDE FOR THE IRRIGATION OF EXISTING PLANT MATERIAL THROUGHOUT THE CONSTRUCTION PROCESS. ANY DAMAGE DUE TO CONSTRUCTION SHALL BE REPAIRED IMMEDIATELY TO PREVENT ANY LAPSE IN IRRIGATION OF THE EXISTING PLANT MATERIAL. ANY PLANT MATERIAL AND/OR IRRIGATION DAMAGED AS PART OF CONSTRUCTION SHALL BE REPAIRED TO A LIKE NEW CONDITION AS PART OF CONTRACT.

12. ANY EXISTING IRRIGATION CONTROL VALVES CONNECTED TO THE EXISTING CONTROLLER SHALL BE RECONNECTED TO THE NEW CONTROLLER. CONFIRM PROPER CONTROLLER OPERATION AND INSTALLATION WITH OWNER'S AUTHORIZED REPRESENTATIVE PRIOR TO COMMENCING WORK AND UPON COMPLETION OF WORK.

13. CONTRACTOR SHALL BE RESPONSIBLE FOR THE COMPLETE ADJUSTMENT/MODIFICATION OF EXISTING IRRIGATION SYSTEM WITHIN THIS AND OTHER AREAS AFFECTED BY THE PROPOSED IMPROVEMENTS. ALL LAYOUT SHALL BE CONFIRMED WITH OWNER'S AUTHORIZED REPRESENTATIVE PRIOR TO COMMENCING WORK.

14. NO DISRUPTION OF THE EXISTING IRRIGATION SYSTEMS WATERING WILL BE ALLOWED DURING CONSTRUCTION. ALL ADJACENT SYSTEM SHALL MAINTAIN AUTOMATIC PROGRAMMED WATERING SCHEDULES THROUGHOUT CONSTRUCTION.

15. CONTRACTOR SHALL OBTAIN EXISTING IRRIGATION AS-BUILT RECORD DRAWINGS FOR ADJACENT IRRIGATED AREAS PRIOR TO STARTING WORK. ALL EXISTING IRRIGATION EQUIPMENT LOCATION, SIZES, AND CONDITIONS SHALL BE VERIFIED IN FIELD WITH OWNER'S AUTHORIZED REPRESENTATIVE AT START OF WORK.

16. WHENEVER ROOTS OF EXISTING TREES ARE ENCOUNTERED DURING TRENCHING OPERATIONS, THE CONTRACTOR SHALL REROUTE MAIN LINE TRENCHES. DO NOT CUT ROOTS OVER 1" IN DIAMETER. ALL CUTS SHALL BE A CLEAN SHARP CUT. IF TRENCHING IS REQUIRED, THE CONTRACTOR SHALL HAND DIG THE TRENCHES TAKING CARE NOT TO DAMAGE ROOTS. NO MECHANICAL TRENCHING WITHIN THE DRIPLINE OF THE EXISTING TREE WILL BE ALLOWED. PROTECT ALL ROOTS EXPOSED TO SUNLIGHT WITH MOIST BURLAP UNTIL COVERED WITH SOIL.

GENERAL IRRIGATION NOTES

1. NOTIFY THE OWNER'S AUTHORIZED REPRESENTATIVE AND THE CITY/ COUNTY INSPECTORS (PLANNING, BUILDING, WATER HEALTH, ETC) 48 HOURS PRIOR TO COMMENCEMENT OF WORK TO COORDINATE PROJECT INSPECTION SCHEDULES, AND CONFIRM ANY OUTSTANDING PERMITS OR SUBMITTALS. COORDINATE WITH OWNERS REP AND LANDSCAPE ARCHITECT ANY OUTSTANDING ITEMS.

2. ALL DIMENSIONS & CONDITIONS SHALL BE VERIFIED BY THE CONTRACTOR ON THE JOB SITE. ANY DISCREPANCIES OR OMISSIONS SHALL BE BROUGHT TO THE LANDSCAPE ARCHITECTS AND OWNERS REPRESENTATIVE ATTENTION PRIOR TO COMMENCEMENT OF WORK.

3. IT IS THE RESPONSIBILITY OF THE IRRIGATION CONTRACTOR TO FAMILIARIZE HIMSELF WITH ALL GRADE DIFFERENCES, SLOPES, LOCATION OF WALLS, CURBS, ETC. COORDINATE ALL WORK WITH THE GENERAL CONTRACTOR AND OTHER SUB-CONTRACTORS FOR LOCATION OF PIPE SLEEVES THROUGH WALLS AND FOOTINGS, UNDER ROADS, PAVING AND STRUCTURES.

4. THE IRRIGATION DESIGN SHOWN IN THESE DOCUMENTS ARE INTENDED TO BE GENERALLY DIAGRAMMATIC. ALL IRRIGATION EQUIPMENT I.E PIPE, VALVES, ETC. SHOWN WITHIN PAVED AREAS ARE FOR PLAN CLARIFICATION ONLY AND SHALL BE INSTALLED WITHIN PLANTING AREAS WHEREVER POSSIBLE UNLESS WRITTEN AUTHORIZATION IS RECEIVED PRIOR TO PLACEMENT. AVOID ANY CONFLICTS BETWEEN THE SPRINKLER SYSTEM, PLANTING AND ARCHITECTURAL FEATURES. MAIN LINE AND LATERAL LINES MAY BE PLACED IN THE SAME TRENCH, PROVIDE MINIMUM HORIZONTAL CLEARANCE OF 4" BETWEEN PARALLEL PIPES.

5. DO NOT WILLFULLY INSTALL THE IRRIGATION SYSTEM AS INDICATED ON THE DRAWINGS WHEN IT IS OBVIOUS IN THE FIELD THAT UNKNOWN OBSTRUCTIONS, GRADE DIFFERENCES OR FIELD/PLAN DIMENSIONS EXIST AND SHOULD BE BROUGHT TO THE ATTENTION OF THE OWNER'S REPRESENTATIVE. IN THE EVENT THAT THIS NOTIFICATION IS NOT PERFORMED, THE CONTRACTOR MUST ASSUME FULL RESPONSIBILITY FOR REVISIONS NECESSARY AND ALL COSTS FOR REVISIONS NECESSARY FOR A COMPLETE INDUSTRY ACCEPTABLE WORKING SYSTEM.

6. THE IRRIGATION SYSTEM DESIGN IS BASED UPON THE MINIMUM OPERATING PRESSURE AND THE MAXIMUM FLOW DEMAND SHOWN ON THE IRRIGATION DRAWINGS AT EACH POINT OF CONNECTION. THE IRRIGATION CONTRACTOR SHALL VERIFY WATER PRESSURE PRIOR TO CONSTRUCTION. THE ACTUAL PRESSURE READING AT THE IRRIGATION POINT OF CONNECTION SHALL BE REPORTED IN WRITING TO THE OWNER'S AUTHORIZED REPRESENTATIVE AND LANDSCAPE ARCHITECT PRIOR TO START OF CONSTRUCTION. IF THE PRESSURE IS NOT IMMEDIATELY REPORTED PRIOR TO BEGINNING CONSTRUCTION, THE IRRIGATION CONTRACTOR SHALL ASSUME FULL RESPONSIBILITY FOR ALL REVISIONS TO THE IRRIGATION SYSTEM DEEMED NECESSARY BY THE OWNER'S REPRESENTATIVE/LA AND ALL COSTS ASSOCIATED WITH SAID REVISIONS.

7. THE CONTRACTOR SHALL PROVIDE ALL LABOR, MATERIALS, AND MAINTENANCE REQUIRED TO INSTALL A COMPLETE IRRIGATION SYSTEM, THAT IS OPERABLE IN AN EFFICIENT AND SATISFACTORY MANNER PROVIDING COMPLETE AND EVEN COVERAGE @ MIN 100% HEAD TO HEAD COVERAGE.

8. THE IRRIGATION CONTRACTOR MUST PERFORM AND DOCUMENT IN WRITING A PRE-JOB/ KICK-OFF MEETING WITH THE MANUFACTURER REPRESENTATIVES OF SPECIAL EQUIPMENT INCLUDING BUT NOT LIMITED TO DRIP TUBING, CONTROLLER & BOOSTER PUMP MANUFACTURER TO GO OVER SITE SPECIFIC ITEMS, LAYOUT AND RECEIVE PROPER TRAINING. IF IRRIGATION CONTRACTOR FAILS TO PERFORM REQUIRED MEETING, CONTRACTOR SHALL ASSUME FULL RESPONSIBILITY FOR ALL REVISIONS TO THE IRRIGATION SYSTEM DEEMED NECESSARY BY THE OWNER'S REPRESENTATIVE AND ALL COSTS ASSOCIATED WITH SAID REVISIONS.

9. MAINLINE PIPING BETWEEN THE POINT OF CONNECTION, METER AND BACKFLOW PREVENTER TO BE OF MATERIAL AS REQUIRED BY GOVERNING WATER DISTRICT.

10. ALL PIPES AND WIRES THAT RUN UNDER HARDSCAPE ARE TO BE SLEEVED IN SCH. 40 PVC SLEEVES ACCORDING TO PURVEYING (DISTRICT, CITY, ETC.) STANDARDS, SPECS AND AS INDICATED IN THE SLEEVING CHART UNLESS WRITTEN AUTHORIZATION IS RECEIVED PRIOR TO ELIMINATING ANY SECTIONS.

11. CONTRACTOR SHALL USE HEAVY BODY GRAY GLUE (WELD-ON 711 OR EQUAL) WITH PVC PRIMER (P-70 OR EQUAL) ON ALL GLUED JOINTS. NO RED HOT BLUE GLUE ALLOWED. TEFLON TAPE SHALL BE APPLIED TO ALL MALE THREADS AS REQUIRED BY MANUFACTURER. NO PIPE DOPE ALLOWED.

12. ALL MAINLINES SHALL ME CAPPED AND TESTED AT 150 PSI FOR SIX (6) HOURS; ALLOW 10% LOSS. ALL LATERAL LINES INCLUDING SWING JOINTS SHALL BE PRESSURE TESTED AT SYSTEM DESIGN PRESSURE FOR ONE HOUR . ANY LEAKS FOUND SHALL BE REPAIRED, BY REMOVING THE LEAKING PIPE OR FITTINGS AND REPLACING WITH NEW.

13. CONTRACTOR SHALL BE LIABLE FOR REMOVING AND RE-INSTALLING IRRIGATION EQUIPMENT, AND REPLANTING AREAS WHICH ARE DEEMED IN NON-COMPLIANCE WITH CONSTRUCTION DOCUMENT PLANS AND SPECIFICATIONS.

14. THE IRRIGATION CONTRACTOR SHALL BE RESPONSIBLE FOR FLUSHING ALL LINES AND ADJUSTING ALL HEADS FOR OPTIMUM PERFORMANCE AND TO PREVENT OVER-SPRAY ONTO UN-INTENDED AREAS (WALKS, & BUILDINGS). ADJUSTMENT SHALL INCLUDE BUT NOT LIMITED TO THE ADDITION OF "PRS" SCREENS, ADJUSTABLE ARC NOZZLES (HE VERSIONS ONLY), ADJUSTING PRESSURE REGULATOR AT THE VALVE TO BE NO GREATER THAN SPSI ABOVE THE INDICATED HEAD PRESSURE AT THE FARTHEST HEAD, FOR ADDITIONAL HEADS WHERE VERTICAL ELEMENTS IN FIELD BLOCK SPRAY PATTERN AND ADDING INLINE CHECK VALVES WHERE LOW HEAD DRAINAGE OCCURS AT NO EXTRA COST TO THE OWNER.

15. IRRIGATION CONTRACTOR SHALL NOTIFY THE LANDSCAPE ARCHITECT/ OWNERS REPRESENTATIVE MINIMUM 72 HOURS PRIOR TO ANY REQUEST OF FIELD OBSERVATIONS. FIELD OBSERVATIONS SHALL OCCUR AT THE FOLLOWING MILESTONES:
   A. COVERAGE TEST ONCE ALL IRRIGATION IS INSTALLED. NO PLANTING MAY OCCUR UNTIL REVIEW HAS BEEN COMPLETED AND IRRIGATION SYSTEM APPROVED.
   B. UPON COMPLETION OF PLANTING AND IRRIGATION FOR SUBSTANTIAL COMPLETION ISSUANCE.
   C. UPON COMPLETION OF MAINTENANCE PERIOD FOR FINAL WALK AND RELEASE OF MAINTENANCE.

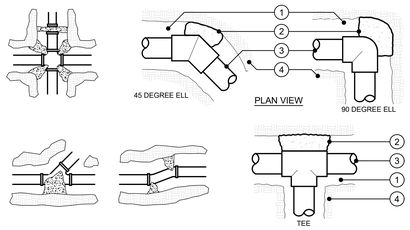

NOTES:
A. USE CONCRETE THRUST BLOCKS ON ALL SOLVENT-WELD MAINLINE PIPE AND FITTINGS.
B. USE JOINT RESTRAINTS ON ALL BELL AND GASKET MAINLINE PIPING WITH PUSH-ON FITTINGS.
C. CONCRETE THRUST BLOCKS SHALL BE A MINIMUM OF ONE CUBIC FOOT IN VOLUME. CONCRETE THRUST BLOCKS SHALL NOT ENCASE THE FITTINGS IN CONCRETE.
D. ALL MAINLINE PIPING SHALL BE INSTALLED PER THE MANUFACTURER'S INSTALLATION RECOMMENDATIONS AND PRESSURE TESTED PER THE PLAN NOTES OR SPECIFICATIONS.
E. THE DEPTH AND WIDTH OF ALL TRENCHES SHALL BE PER THE SPECIFICATIONS.
F. ALL MAINLINE PVC FITTINGS THAT ARE IN CONTACT WITH CONCRETE THRUST BLOCKS SHALL BE COVERED WITH BLACK PLASTIC PIPE WRAP.
G. ALL CONCRETE USED FOR THRUST BLOCKS SHALL BE 470-C-2000.

S THRUST BLOCK

SCALE: NTS

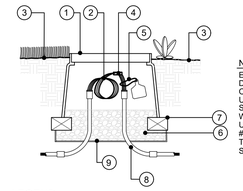

LEGEND

1. CARSON 2200 12" ROUND VALVE BOX. HEAT BRAND "PB" ONTO LID, IN 2" HIGH LETTERS
2. 36" WIRE EXPANSION LOOP TYP.
3. FINISH GRADE , PER PLAN
4. WIRE CONNECTORS
5. CONTROL WIRE LABEL, SEE SPECS
6. 3/4" ROCK, 3 CUBIC FEET
7. BRICK SUPPORT
8. PVC ELECTRICAL SWEEP IF INSTALLED IN CONDUIT
9. BIOBARRIER ROOT CONTROL FABRIC

Q PULL BOX

SCALE: NTS

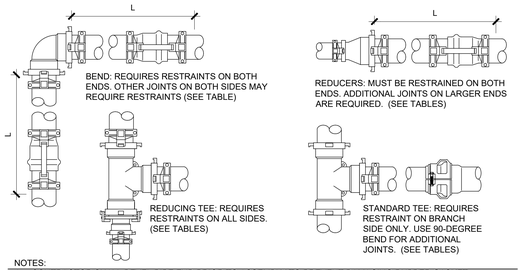

NOTES:
A. CONTRACTOR SHALL BEVEL PIPE END PRIOR TO ASSEMBLY TO PREVENT DAMAGING RUBBER GASKET.
B. CONTRACTOR SHALL APPLY SUITABLE PUSH-ON JOINT LUBRICANT I.E. SEAL LUBE BY IPS WELDON OR EQUAL.
C. CONTRACTOR SHALL USE WD-40 OR EQUAL LUBRICANT TO PREVENT THE POSSIBILITY OF GALLING OR SEIZING OF STEEL THREADS.
D. REFER TO MANU. HARDWARE SIZE AND TORQUE CHART AND PIPE-PIPE RESTRAINT CHART FOR REQUIREMENTS.
E. USE LEEMCO LB OR LPP SERIES RESTRAINTS FOR BELL AND GASKET PIPE-TO-PIPE CONNECTIONS.
F. USE LEEMCO LH SERIES RESTRAINTS FOR PVC PIPE TO DUCTILE IRON PUSH-ON FITTINGS, INCLUDING ELLS, TEES, AND VALVE TO MAINLINE CONNECTIONS (SERVICE TEES).
G. ANY FLANGED CONNECTION TO BELL AND GASKET PIPE SHALL BE MADE USING LEEMCO SR-FB SERIES SELF RESTRAINING FLANGE ADAPTERS.
H. REFER TO MANUFACTURERS RECOMMENDATIONS. MANU. RECOMMENDATIONS SUPERCEDE DETAILS.

DISTANCE CHART

REFER TO THE FOLLOWING TABLE THAT LISTS THE LENGTH (IN FEET) FOR EACH SIZE/TYPE FITTING WITHIN WHICH ALL JOINTS JUST BE RESTRAINED. ALL FITTINGS AND JOINT RESTRAINTS SHALL BE INSTALLED PER MANUFACTURERS RECOMMENDATIONS & SPECIFICATIONS.

AS AN EXAMPLE, IF YOU ARE INSTALLING A 3" MAINLINE WITH A DIRECTIONAL CHANGE OF 90°, REFER TO CHART UNDER PIPE SIZE TO 3" AND UNDER BENDS 90 YOU WILL SEE THE DISTANCE OF 11', IF THERE IS ANY JOINT (VALVE, BELL, ETC.) YOU MUST INSTALL A JOINT RESTRAINT WITHIN 11' OF THE 90° MAINLINE DIRECTIONAL CHANGE.

PIPE	BENDS				REDUCERS			DEAD END	
SIZE	11°	22°	45°	90°	1 STEP	2 STEP	3 STEP	BLIND	SERV. B.
2"	1'	1'	2'	6'	-	-	-	19'	6'
2.5"	1'	2'	4'	9'	4'	-	-	23'	10'
3"	2'	3'	6'	11'	8'	10'	-	30'	15'
4"	2'	4'	9'	20'	14'	20'	31'	45'	25'
6"	3'	6'	13'	29'	30'	40'	53'	63'	40'
8"	4'	8'	15	38'	33'	55'	63'	75'	70'
10"	5'	9'	19'	45'	36'	56'	75'	96'	90'
12"	5'	10'	21'	53'	38'	60'	83'	112'	110'

QUICK SELECTION GUIDE- PIPE-PIPE

TABLE SHOWS THE NUMBER OF ADJACENT JOINTS TO RESTRAIN...BASED ON 20' LENGTH

PIPE	BENDS		REDUCERS			DEAD END	
SIZE	45°	90°	1 STEP	2 STEP	3 STEP	BLIND	SERV. B.
2"							
2.5"						1	
3"						1	
4"		1		1	1	2	1
6"		1	1	2	2	3	1
8"		1	1	2	3	3	2
10"	1	2	1	2	3	4	2
12"	1	2	2	3	4	5	2

INSTALLATION CHART

REFER TO THE FOLLOWING TABLE WHICH LISTS THE NUMBER OF BOLTS, SIZE, AND TORQUE FOR EACH BOLT IN REFERENCE TO THE SIZE OF PIPE WHICH IS BEING RESTRAINED.

AS AN EXAMPLE, IF YOU HAVE A 3" PIPE, YOU WILL NEED 2 BOLTS THAT ARE 3/8 X 2.5" AND TIGHTEN THEM WITH A TORQUE WRENCH TO 20 FT-LBS.

PIPE SIZE	NO. BOLTS	BOLT SIZE	TORQUE FT-LBS.
2"	2	3/8" x 2.5"	20
2.5"	2	3/8" x 2.5"	20
3"	2	3/8" x 2.5"	20
4"	2	1/2" x 3".	50
6"	2	1/2" x 3.5"	50
8"	4	1/2" x 4"	50
10"	4	5/8" x 5.5"	100
12"	4	5/8" x 5.5"	100

CONTACT STEVEN KIM @ 951.461.0942, THE LEEMCO REPRESENTATIVE, FOR ALL QUESTIONS CONCERNING LEEMCO PRODUCTS. COORDINATE AN INSTALLATION CLINIC WITH STEVEN KIM PRIOR TO INSTALLING THE MAINLINE.

R MECHANICAL JOINT RESTRAINT

SCALE: NTS

California Water Efficient Landscape Worksheet

Reference Evapotranspiration (ET_o): 52.4 — Project Type: Non-Residential — 0.45

Hydrozone # / Planting Description[a]	Plant Factor (PF)	Irrigation Method	Irrigation Efficiency (IE)	ETAF (PF/IE)	Landscape Area (Sq. Ft.)	ETAF x Area	Estimated Total Water Use (ETWU)
Regular Landscape Areas							
Station B1 / Turf	0.5	Overhead	0.75	0.67	2,682	1,788	58,089
Station B2 / Low	0.3	Drip	0.81	0.37	-	-	-
Station B3 / Low	0.3	Overhead	0.75	0.40	310	124	4,029
Station B4 / Turf	0.5	Overhead	0.75	0.67	283	189	6,129
Station B5 / Low	0.3	Overhead	0.75	0.40	522	209	6,783
-	0.3	Drip	0.81	0.37	-	-	-
Station C1 / Turf	0.5	Overhead	0.75	0.67	1,631	1,087	35,325
Station C2 / Shrub	0.3	Overhead	0.75	0.40	410	164	5,328
Station C3 / Turf	0.5	Overhead	0.75	0.67	1,033	689	22,373
Station C4 / Turf	0.5	Overhead	0.75	0.67	806	537	17,457
Station C5 / Shrub	0.3	Overhead	0.75	0.40	1,248	499	16,218
Station C6 / Shrub B	0.5	Drip	0.81	0.62	64	40	1,283
Station C7 / Trees	0.5	Drip	0.81	0.62	50	31	1,003
-	0.5	Overhead	0.75	0.67	-	-	-
				Totals	9,039	5,356	174,018
Special Landscape Areas							
				1.0	-	-	-
				Totals	-	-	-
						ETWU Total	174,018
						Maximum Allowed Water Allowance (MAWA) Gallons	132,147

ETAF Calculations

Regular Landscape Areas	
Total ETAF x Area	5,356
Total Area	9,039
Average ETAF	0.59

All Landscape Areas	
Total ETAF x Area	5,356
Total Area	9,039
Average ETAF	0.59

IDENTIFICATION STAMP
DIV. OF THE STATE ARCHITECT
APP: 03-122664 INC:
REVIEWED FOR
SS ☑ FLS ☑ ACS ☑
DATE: 05/12/2023

pjhm architects
LA Phone: 213.278.0172 • Web: pjhm.com

LICENSED ARCHITECT
RANDALL W. PRINCE
No. C15585
REN. 02/25
STATE OF CALIFORNIA

BPA LANDSCAPE ARCHITECTS
BRANDON PETRUNIO & ASSOCIATES, INC.
LA Office: 837 Traction Avenue, #410, Los Angeles, CA 90013 • SD Phone: 760.730.5527
Design Studio: 320 N. San Dimas Ave., San Dimas, CA 91773
Design Studio: 1401 Dove St., Suite 540, Newport Beach, CA 92660
T: (424) 235-8940, M: (951) 312-9943, E: brandon@bpalas.com

LICENSED LANDSCAPE ARCHITECT
No. 5654
BRANDON PETRUNIO
Signature
01/31/2025
Renewal Date
05/12/2023
Date
STATE OF CALIFORNIA

HIGHLAND HIGH SCHOOL
50M POOL & AQUATICS CENTER

KERN HIGH SCHOOL DISTRICT

OC Office: 24461 Ridge Route Drive #100, Laguna Hills, CA 92653 • OC Phone: 949.496.6191 • SD Office: 804 Pier View Way #103, Oceanside, CA 92054

LANDSCAPE IRRIGATION DETAIL
SHEET 2 - NOTES AND CALCS.

SITE

LID.2

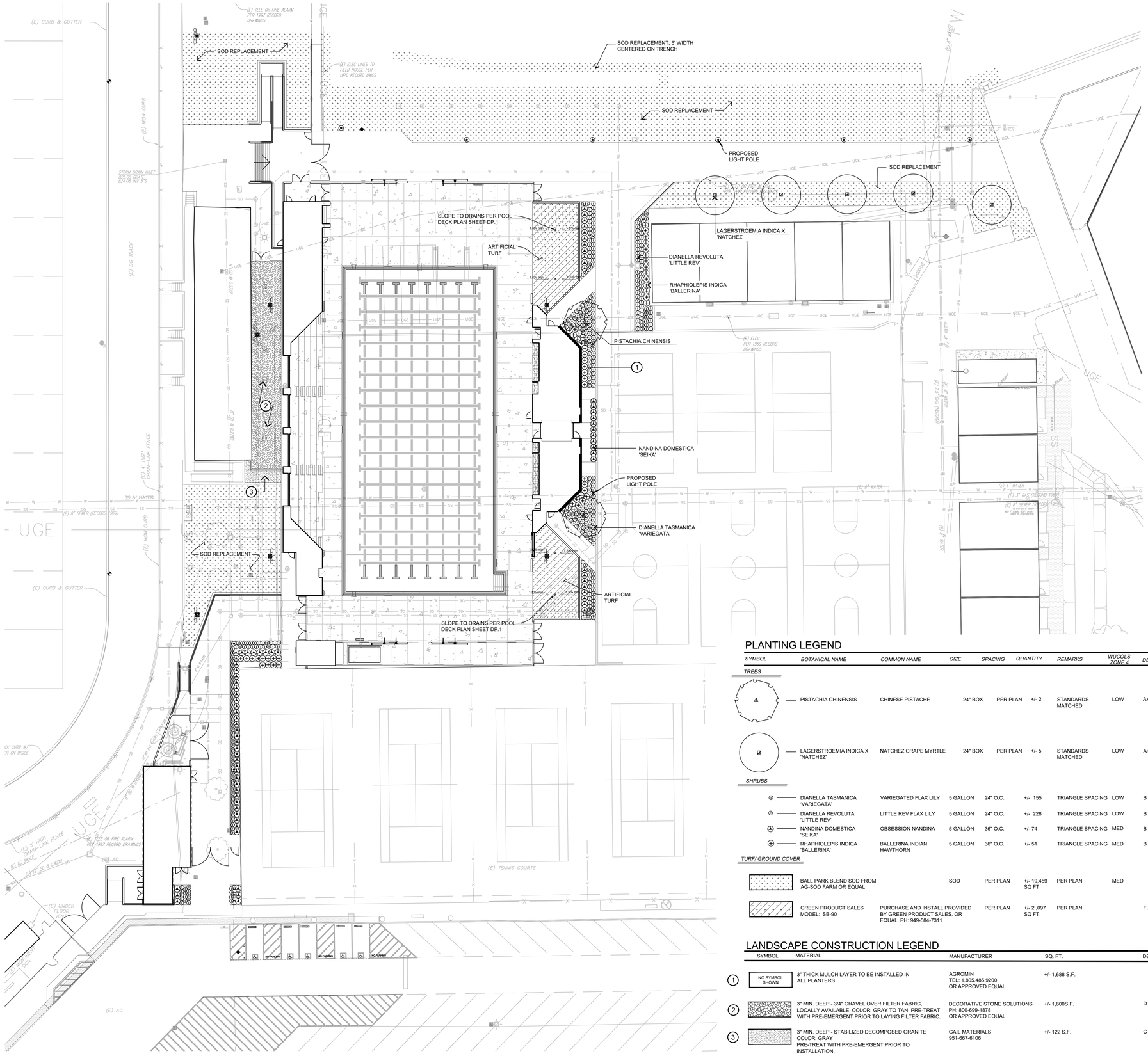

PLAN VIEW

SCALE 1" = 20'-0"

PLANTING LEGEND

SYMBOL	BOTANICAL NAME	COMMON NAME	SIZE	SPACING	QUANTITY	REMARKS	WUCOLS ZONE 4	DETAIL
TREES								
	PISTACHIA CHINENSIS	CHINESE PISTACHE	24" BOX	PER PLAN	+/- 2	STANDARDS MATCHED	LOW	A+E / LPD.1
	LAGERSTROEMIA INDICA X 'NATCHEZ'	NATCHEZ CRAPE MYRTLE	24" BOX	PER PLAN	+/- 5	STANDARDS MATCHED	LOW	A+E / LPD.1
SHRUBS								
	DIANELLA TASMANICA 'VARIEGATA'	VARIEGATED FLAX LILY	5 GALLON	24" O.C.	+/- 155	TRIANGLE SPACING	LOW	B / LPD.1
	DIANELLA REVOLUTA 'LITTLE REV'	LITTLE REV FLAX LILY	5 GALLON	24" O.C.	+/- 228	TRIANGLE SPACING	LOW	B / LPD.1
	NANDINA DOMESTICA 'SEIKA'	OBSESSION NANDINA	5 GALLON	36" O.C.	+/- 74	TRIANGLE SPACING	MED	B / LPD.1
	RHAPHIOLEPIS INDICA 'BALLERINA'	BALLERINA INDIAN HAWTHORN	5 GALLON	36" O.C.	+/- 51	TRIANGLE SPACING	MED	B / LPD.1
TURF/ GROUND COVER								
	BALL PARK BLEND SOD FROM AG-SOD FARM OR EQUAL		SOD	PER PLAN	+/- 19,459 SQ FT	PER PLAN	MED	
	GREEN PRODUCT SALES MODEL: SB-90	PURCHASE AND INSTALL PROVIDED BY GREEN PRODUCT SALES, OR EQUAL. PH: 949-584-7311	PER PLAN		+/- 2 ,097 SQ FT	PER PLAN		F / LPD.1

LANDSCAPE CONSTRUCTION LEGEND

	SYMBOL	MATERIAL	MANUFACTURER	SQ. FT.	DETAIL/SHEET
1	NO SYMBOL SHOWN	3" THICK MULCH LAYER TO BE INSTALLED IN ALL PLANTERS	AGROMIN TEL: 1.805.485.9200 OR APPROVED EQUAL	+/- 1,688 S.F.	
2		3" MIN. DEEP - 3/4" GRAVEL OVER FILTER FABRIC, LOCALLY AVAILABLE. COLOR: GRAY TO TAN. PRE-TREAT WITH PRE-EMERGENT PRIOR TO LAYING FILTER FABRIC.	DECORATIVE STONE SOLUTIONS PH: 800-699-1878 OR APPROVED EQUAL	+/- 1,600S.F.	D / LPD.1
3		3" MIN. DEEP - STABILIZED DECOMPOSED GRANITE COLOR: GRAY PRE-TREAT WITH PRE-EMERGENT PRIOR TO INSTALLATION.	GAIL MATERIALS 951-667-6106	+/- 122 S.F.	C / LPD.1

PLANTING LEGEND AND NOTE REFERENCE:
- REFER TO SHEET LPD.1 FOR PLANTING NOTES.
- REFER TO SHEET LP.1 FOR PLANTING LEGEND.

N W E S

20' 10' 0' 20' 40' 60'

SCALE: 1" : 20'-0"
GRAPHIC SCALE

IDENTIFICATION STAMP:
DIV. OF THE STATE ARCHITECT
APP: 03-122664 INC:
REVIEWED FOR
SS ☑ FLS ☑ ACS ☑
DATE: 05/12/2023

pjhm architects

LICENSED ARCHITECT
RICHARD W. RINNERT
NO. C15585
REN. 02/25
STATE OF CALIFORNIA

BPA LANDSCAPE ARCHITECTS
BRANDON PETRUNIO & ASSOCIATES, INC.
LANDSCAPE ARCHITECTS
Design Studio: 301 N. San Dimas Ave., San Dimas, CA. 91773
Corporate Office: 1900 Thunderbird Lane, Encinitas, CA. 92024
T: (424) 235-8940, M: (951) 312-9943, E: brandon@bpalas.com

LICENSED LANDSCAPE ARCHITECT
BRANDON PETRUNIO
Signature
01/31/2025
Renewal Date
01/31/2023
Date
STATE OF CALIFORNIA

HIGHLAND HIGH SCHOOL
50M POOL & AQUATICS CENTER

KERN HIGH SCHOOL DISTRICT

LANDSCAPE PLANTING PLAN

SITE

LP.1

OC Office: 24461 Ridge Route Drive #100, Laguna Hills, CA 92653 • SD Phone: 760.730.5527 • LA Office: 837 Traction Avenue, #410, Los Angeles, CA 90013 • LA Phone: 213.278.0172 • Web: pjhm.com
OC Phone: 949.496.6191 • SD Office: 804 Pier View Way #103, Oceanside, CA 92054

PLANTING NOTES

1. NOTIFY THE OWNER'S AUTHORIZED REPRESENTATIVE AND THE CITY/ COUNTY INSPECTORS (PLANNING, BUILDING, WATER,HEALTH, ETC) 48 HOURS PRIOR TO COMMENCEMENT OF WORK TO COORDINATE PROJECT INSPECTION SCHEDULES, AND CONFIRM ANY OUTSTANDING PERMITS OR SUBMITTALS. COORDINATE WITH OWNERS REP AND LANDSCAPE ARCHITECT ANY OUTSTANDING ITEMS.

2. VERIFY ALL EXISTING CONDITIONS, DIMENSIONS AND ELEVATIONS BEFORE PROCEEDING WITH THE WORK. REPORT DISCREPANCIES OR OMISSIONS IN THE DRAWINGS OR BETWEEN THE DRAWINGS AND ACTUAL FIELD CONDITIONS TO THE OWNERS REPRESENTATIVE AND LANDSCAPE ARCHITECT. CORRECTED DRAWINGS OR INSTRUCTION SHALL BE ISSUED PRIOR TO THE CONTINUATION OF THIS WORK. CONTRACTOR ASSUMES FULL RESPONSIBILITY/LIABILITY FOR ALL NECESSARY CORRECTIONS DUE TO FAILURE TO REPORT KNOWN DISCREPANCIES.

3. LOCATE ALL EXISTING UTILITIES WHETHER SHOWN HEREON OR NOT AND PROTECT THEM FROM DAMAGE. NOTIFY THE OWNER'S REPRESENTATIVE IMMEDIATELY AND ASSUME FULL RESPONSIBILITY FOR EXPENSE OF REPAIR OR REPLACEMENT IN CONJUNCTION WITH DAMAGED UTILITIES. ADJUST LOCATION OF ALL TREES TO BE PLANTED AT LEAST 5' FROM ANY UNDERGROUND UTILITY SUCH AS SEWER, GAS, STORM DRAIN, ELECTRICAL, CABLE, OR TELEPHONE.

4. LOCATION OF N.I.C. CONSTRUCTION ELEMENTS SUCH AS LIGHTS, SIGNS, VENTS, HYDRANTS, TRANSFORMERS, ETC. ARE APPROXIMATE. NOTIFY THE LANDSCAPE ARCHITECT IMMEDIATELY SHOULD THE LOCATION OF THESE ITEMS INTERFERE WITH THE PROPER EXECUTION OF WORK.

5. IRRIGATION SYSTEM SHALL BE INSTALLED AND OPERATIONAL PRIOR TO PLANT MATERIAL WITH THE EXEMPTION OF 24"+ BOX TREES. CONTRACTOR SHALL HAND WATER MATERIAL IF IRRIGATION SYSTEM WILL NOT BE FUNCTIONAL WITHIN 48 HOUR PERIOD AT NO COST TO OWNER.

6. PROVIDE PRE-PLANT WEED CONTROL IN ALL PROPOSED PLANTER AREAS, PER SPECIFICATIONS, PRIOR TO START OF PLANTING. USE A NON-SELECTIVE SYSTEMIC CONTACT HERBICIDE, APPLIED PER MANUFACTURER'S RECOMMENDATIONS AND LEAVE SPRAYED PLANTS INTACT FOR AT LEAST 14 DAYS BEFORE REMOVING BY MOWING OR GRUBBING. APPLY WATER AND FERTILIZER BY IRRIGATION OR BY HAND FOR 10 DAYS AS REQUIRED TO ACHIEVE WEED GERMINATION, AND THEN RE-APPLY CONTACT HERBICIDES PER ABOVE. REPEAT AS REQUIRED TO ELIMINATE ALL WEEDS PRIOR TO PROCEEDING WITH PLANTING OPERATIONS. MINIMUM 2 APPLICATIONS.

7. ONCE ROUGH GRADES HAVE BEEN ESTABLISHED IN PLANTING AREAS, SOIL SAMPLES SHALL BE TAKEN @ RATE OF 1 SAMPLE PER ACRE. SAMPLES SHALL BE TESTED BY AN APPROVED SOILS LABORATORY FOR STANDARD AGRICULTURAL SUITABILITY ANALYSIS AND SOILS MANAGEMENT REPORT TO BE PROVIDED. TAKE TWO SAMPLES AT EACH LOCATION. (1) GROUND LEVEL TO 6" DEEP, (2) 24" TO 36" DEEP. EACH SAMPLE SHALL CONTAIN APPROXIMATELY 1 QUART OF SOIL TO BE LABELED PER LOCATION AND DEPTH. SUBMIT SOIL REPORT TO LANDSCAPE ARCHITECT FOR APPROVAL PRIOR TO IMPLEMENTATION. INSTALL SOIL PREPARATION AND BACK FILL MIX TO CONFORM TO APPROVED RECOMMENDATIONS. PROVIDE (2) TWO FOLLOW-UP TESTS POST INCORPORATION FOR COMPLIANCE VERIFICATION. ANY FURTHER DEFICIENCIES SHALL BE INCORPORATED AT NO COST TO OWNER AND SUBSEQUENT REPORT PROVIDED UNTIL SOIL IS DEEMED ACCEPTABLE BY LAB.

8. OBTAIN ALL SOIL FOR LANDSCAPE PLANTING AREAS OR BERMS AND RAISED PLANTER BACKFILL (UNLESS OTHERWISE NOTED) FROM ON-SITE EXCAVATIONS IF DEEMED ACCEPTABLE BY SOILS LAB. SHOULD IMPORT SOIL BE NECESSARY, SUBMIT IMPORT SOIL TESTING RESULTS FOR APPROVAL PRIOR TO IMPORTATION. SOIL SHALL BE SANDY LOAM, BE DEEMED VIABLE BY SOILS LAB TEST REPORT. SOILS MAY NOT CONTAIN TOXIC CHEMICALS OR ELEMENTS WHICH MAY INHIBIT OR RETARD NORMAL PLANT GROWTH AND BE VIABLE WITH MINIMAL POST DELIVERY MODIFICATION.

9. REMOVE ALL WEED, ROCKS OVER 2" DIAMETER, DEBRIS AND OTHER EXTRANEOUS MATERIALS FROM THE UPPER 6" OF SOIL AND ALL BACKFILL AND DISPOSE OF OFFSITE IN A LEGAL MANNER.

10. ENSURE THAT ROUGH GRADING HAS BEEN CERTIFIED BY CIVIL ENGINEER AND THAT CIVIL ENGINEER OR OWNER'S AUTHORIZED REPRESENTATIVE HAS APPROVED FINE GRADING TO $\frac{1}{10}$TH OF A FOOT PRIOR TO BEGINNING SOIL PREPARATION OPERATIONS. PROVIDE FOR INCLUSION OF ALL AMENDMENTS, SETTLING, ETC. IN DETERMINATION OF FINAL GRADES. ASSURE POSITIVE DRAINAGE IN ALL PLANTING AREAS, AND WATER TO BE DIRECTED AWAY FROM STRUCTURES AND HAZARDOUS CONDITIONS.

11. CONTRACTOR RESPONSIBLE TO LOCATE AND TAG ALL PLANT MATERIAL. MATERIAL SHALL BE IN CONFORMANCE WITH PLANTING PLAN DESCRIPTIONS, SPECIFICATIONS, AND AS OUTLINED IN ANSI Z60.1. ALL PLANT MATERIAL IS SUBJECT TO REVIEW AND APPROVAL PRIOR TO INSTALLATION. PROVIDE PHOTOS OF REPRESENTATIVE EXAMPLES OF EACH TAGGED BLOCK TO LANDSCAPE ARCHITECT MINIMUM 14 DAYS PRIOR TO ANTICIPATED DELIVERY. PHOTOS SHALL INCLUDE A PERSON AND/OR POLE WITH CLEAR 1' INTERVAL MARKINGS FOR SCALE PURPOSES. LANDSCAPE ARCHITECT MAY OPT TO REVIEW MATERIAL AT NURSERY AT THEIR DISCRETION. MATERIAL DELIVERED TO THE SITE MAY BE REJECTED BASED ON UNHEALTHY APPEARANCE OR NON-CONFORMANCE EVEN IF PREVIOUSLY REVIEWED AND APPROVED.

12. TREES SHALL BE STRAIGHT AND OF UNIFORM SHAPE WITHOUT DAMAGED, CROOKED OR MULTIPLE LEADERS. TREES WITH ABRASIONS OF THE BARK, SUN SCALDS, DISFIGURING KNOTS OR FRESH CUTS OF LIMBS OVER 1/2 INCH WHICH HAVE NOT BEEN PRUNED AND PAINTED OR COMPLETELY CALLOUSED, WILL NOT BE ACCEPTED. NURSERY STOCK SHALL HAVE GROWN IN SPECIFIED CONTAINER SIZE FOR A MINIMUM TIME TO FULLY ROOT INSIDE SAID CONTAINER.

13. FINAL LOCATION OF ALL PLANT MATERIALS SHALL BE SUBJECT TO THE APPROVAL OF THE OWNER'S AUTHORIZED REPRESENTATIVE AND LANDSCAPE ARCHITECT.

14. THE PLANTING PLANS ARE ONLY ACCURATE FOR PLANTING LOCATION AND TYPES. PLANTING QUANTITIES ARE GIVEN FOR CONVENIENCE ONLY, CONTRACTOR SHALL VERIFY ALL QUANTITIES BY PLAN CHECK AND BASED UPON ACTUAL FIELD CONDITIONS. THE PLANTING LEGEND IS ACCURATE ONLY FOR PLANT TYPE AND MINIMUM SIZE. IN THE EVENT OF A DISCREPANCY, THE CONTRACTOR SHALL ADJUST THE QUANTITIES OF THE SMALLEST PLANT SIZE SPECIFIED IN THE LEGEND TO CONFORM WITH THE QUANTITIES REQUIRED BY THE PLAN AND ACTUAL FIELD CONDITIONS. PLANT SYMBOLS AND SPECIFIED SPACING SHALL TAKE PRECEDENCE.

15. INSTALL GROUND COVER AND/OR SHRUB MASSES WITH TRIANGULAR SPACING UNLESS OTHERWISE INDICATED. AT EDGES OF PLANTING AREAS, THE CENTER LINE OF THE LAST ROW OF SHRUBS AND/OR GROUND COVER SHALL BE LOCATED AT ONE-HALF THE SPECIFIED ON CENTER SPACING FROM EDGE.

16. REMOVE ALL NURSERY STAKES AND ESPALIER RACKS IMMEDIATELY AFTER INSTALLATION UPON PROVIDING SUPPORT PER PLAN UNLESS OTHERWISE CONFIRMED IN WRITING WITH OWNER/ LANDSCAPE ARCHITECT.

17. DURING THE LENGTH OF THE GUARANTEE PERIOD, THE CONTRACTOR SHALL BE RESPONSIBLE FOR PROPER STAKING AND/OR GUYING OF TREES TO ENSURE STABILITY.

18. MULCH ALL LANDSCAPE AREAS (EXCLUDING TURF AND BIO-RETENTION BASIN BOTTOMS) WITH A 3" DEEP LAYER OF 1/2"-1 1/2" FOREST FLOOR MULCH BY AGUINAGA GREEN OR APPROVED EQUAL, AT THE CONCLUSION OF PLANTING OPERATIONS. MATERIAL SHALL BE SPREAD EVENLY,RAKED SMOOTH AND THOROUGHLY WETTED TO AID IN COMPACTION. SUBMIT SAMPLE TO LANDSCAPE ARCHITECT FOR REVIEW AND APPROVAL PRIOR TO INSTALLATION. *KEEP BARK MULCH 4" CLEAR FROM BASE OF TREES, AND 3" FROM SHRUBS, GRASSES, AND SUCCULENTS.

19. CONTRACTOR IS RESPONSIBLE FOR ALL REPAIRS AND/OR REPLACEMENT OF ANY DAMAGED LANDSCAPE AREAS AND PLANT MATERIAL WITHIN AND OUTSIDE THE LIMITS OF WORK. REPLACEMENT PLANT MATERIAL MUST BE OF MATCHING SPECIES AND EQUAL SIZE; TURF SHALL BE SOD FORM. ANY REPAIRS TO TREES OR SHRUBS SHALL BE AS DIRECTED BY CERTIFIED ARBORIST HIRED BY CONTRACTOR AT NO COST TO OWNER. A REPORT SHALL BE PROVIDED ON ARBORIST LETTERHEAD AND SUBMITTED AND APPROVED BY LANDSCAPE ARCHITECT PRIOR TO COMMENCEMENT OF REPAIRS. CREDIT SHALL BE PROVIDED FOR TREES OF LESSER SIZE, WITH EXISTING TREE VALUE ESTABLISHED BY USING THE TRUNK FORMULA METHOD AS DEFINED IN THE "GUIDE FOR PLANT APPRAISAL", CURRENT EDITION AT TIME OF CALCULATION.

20. INSTALLATIONS THAT ARE ADJACENT TO OPEN SPACE, NATURALIZED SLOPES OR UNDEVELOPED LAND ARE SUBJECT TO DAMAGE BY RODENTS OR DEER AND SHALL BE TREATED WITH AN APPROPRIATE REPELLENT IN A SPRAY AND/OR TABLET FORM, WHERE ALLOWED BY CURRENT REGULATIONS. MATERIAL SUCH AS REPELLEX BY GROPOWER OR APPROVED EQUAL, THAT PROVIDES IMMEDIATE AND LONG TERM PROTECTION, SHALL BE USED.

21. INSTALL EROSION CONTROL MAT ON SLOPES 2:1 AND STEEPER (SLOPES 1:1 AND GREATER ARE TO RECEIVE BIOD-MAT 70), KEY IN MATERIAL @ TOP OF SLOPE AND SECURE WITH 12" LONG HEAVY DUTY GALVANIZED SOIL STAPLES (8" LONG NAILS MAY BE USED WHERE SOIL HARDNESS PREVENTS USE OF STAPLES) 12" O.C. HORIZONTALLY ALONG SLOPE AND 5' O.C. VERTICALLY DOWN THE SLOPE (MINIMAL TOP,MIDDLE AND TOE WHERE SHORT SLOPES APPLY). PROVIDE MINIMUM 2" OVERLAP AT TOP AND BOTTOM AND MINIMUM 6" OVERLAP ALONG SIDES OF MATERIAL.

22. ROOT BARRIERS SHALL BE INSTALLED AT ALL TREES WITHIN 6 FEET OF ANY HARDSCAPE, PAVEMENT OR CURB. ROOT BARRIERS TO BE 'UB24-2' BY DEEP ROOT CORPORATION, (800) 458-7668, INSTALLED PER MANUFACTURER'S SPECIFICATIONS. NOTE: ROOT BARRIERS SHALL NOT SURROUND OR CIRCLE THE ROOTBALL. ROOT BARRIERS INSTALLED ADJACENT TO A BIOSWALE SHALL NOT INTERFERE WITH DRAINAGE TO OR FROM THE BIOSWALE SYSTEM.

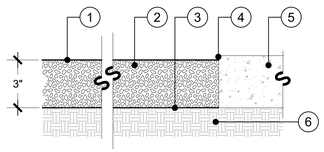

NOTES:
APPLY PRE-EMERGENT ON SUB-GRADE PRIOR TO LAYING PROPOSED MATERIALS.

LEGEND

1. FINISH GRADE
2. GRAVEL PER LEGEND
3. MIRAFI N OR EQUAL FILTER FABRIC. OVERLAP MIN 8" AND STAPLE
4. SET 1/2" MAX BELOW HARDSCAPE/ STEEL EDGE/ CONCRETE BAND
5. CONCRETE BAND/ PAVING OR STEEL EDGING (WHERE OCCURS).
6. COMPACTED SUB-GRADE (90% MIN).

D GRAVEL PLACEMENT

SCALE: NO_SCALE

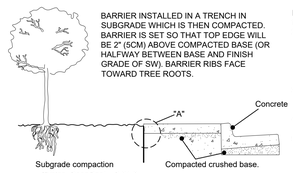

BARRIER INSTALLED IN A TRENCH IN SUBGRADE WHICH IS THEN COMPACTED. BARRIER IS SET SO THAT TOP EDGE WILL BE 2" (5CM) ABOVE COMPACTED BASE (OR HALFWAY BETWEEN BASE AND FINISH GRADE OF SW). BARRIER RIBS FACE TOWARD TREE ROOTS.

INSTALLATION SEQUENCE:
1. PREPARE BASE AND SUBGRADE
2. TRENCH TO APPROPRIATE DEPTH FOR INSTALLATION OF ROOT BARRIER SO THAT TOP OF BARRIER IS 2" (5CM) BELOW FINISH GRADE OF TOP OF SIDEWALK (OR HALFWAY BETWEEN TOP OF COMPACTED BASE AND FINISH GRADE OF SW)
3. PLACE ROOT BARRIER IN TRENCH, VERTICAL RIBS MUST FACE TOWARD TREE ROOTS.
4. BACKFILL AND COMPACT TO REQUIREMENTS.
5. PLACE FORM MATERIAL AGAINST BARRIER (IT MAY BE NAILED FROM THE OUTSIDE OF THE FORM)

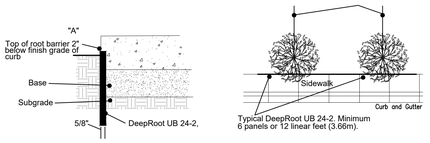

E LINEAR ROOT BARRIER

SCALE: NO_SCALE

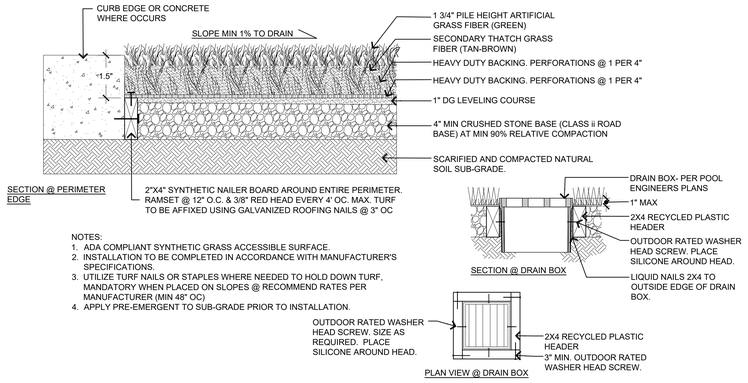

NOTES:
1. ADA COMPLIANT SYNTHETIC GRASS ACCESSIBLE SURFACE.
2. INSTALLATION TO BE COMPLETED IN ACCORDANCE WITH MANUFACTURER'S SPECIFICATIONS.
3. UTILIZE TURF NAILS OR STAPLES WHERE NEEDED TO HOLD DOWN TURF, MANDATORY WHEN PLACED ON SLOPES @ RECOMMEND RATES PER MANUFACTURER (MIN 48" OC)
4. APPLY PRE-EMERGENT TO SUB-GRADE PRIOR TO INSTALLATION.

F ARTIFICIAL TURF

SCALE: NO_SCALE

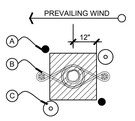

DOUBLE STAKE PLAN VIEW

LEGEND
- A. BUBBLER PER IRRIGATION PLAN
- B. TREE ROOTBALL
- C. AERATION DEVICE PER NOTE 1 BELOW

ESTABLISHED PLANTS (21 GRAM)
FOR EACH 12-18 INCHES OF PLANT HEIGHT OR SPREAD, OR FOR EACH 1/2 INCH OF TREE TRUNK DIAMETER USE:
1. ONE TABLET FOR SLOW GROWING PLANTS
2.TWO TABLETS FOR FAST-GROWING PLANTS OR POOR SOIL SITUATIONS.

21-GRAM FERTILIZER TABLET CHART - NEW PLANTINGS							
CONTAINER SIZE	1 GAL.	3 GAL.	5 GAL.	15 GAL.	24" BOX	36" BOX	48"BOX
RECOMMENDED QUANITY OF (21 G) PLANT TABLETS	1	2-3	2-3	7-10	15-24	22-36	30-48

LEGEND
1. 4" PERF. PVC PIPE W/ SAND SOCK; CAP BLACK N.D.S. DRAIN GRATE & HOLD IN PLACE W/ S.S. SET SCREW. SET FLUSH W/ GRADE & 4'6" BELOW ROOTBALL
2. PLANT TABLET. REFER TO SPECS AND TO TABLET LEGEND.
3. AMENDED BACKFILL AMEND PER AGRONOMIC SOILS REPORT.
4. COMPACTED NATIVE.
5. 2"X12" PINE LODGE POLE STAKE OR APPROVED EQUAL (2 REQU.)
6. RUBBER CINCH-TIE (4 PER TREE.)
7. ROOTBALL TO BE SET 1" ABOVE FINISH GRADE.
8. 3" DEPTH OF MULCH REFER TO PLANTING LEGEND FOR TYPE.
9. 3"-4" HIGH BERM AROUND OUTSIDE OF ROOTBALL. REMOVE PRIOR TO END OF MAINTENANCE.
10. FINISH GRADE
11. PLANT PIT. SLOPE TO DRY SUMP.
12. DRY SUMP. 6" DIA. X 6' DEEP MIN, LINE W/ FILTER FABRIC FILL WITH 3/4" WASHED GRAVEL
13. INSTALL #UB24-2 ROOT BARRIER, AT ALL TREES WITHIN 6' OF HARDSCAPE, MINIMUM 12' LENGTH. INSTALLED AT EDGE OF HARDSCAPE.

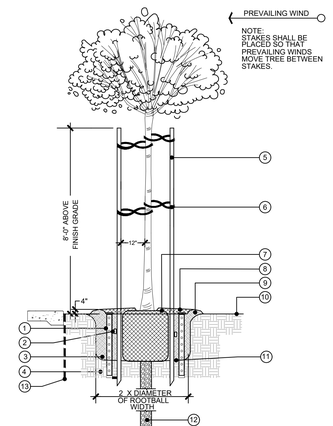

NOTES:
STAKES SHALL BE PLACED SO THAT PREVAILING WINDS MOVE TREE BETWEEN STAKES.

NOTES:
INSTALL 3' DIAMETER RING OF MULCH @ BASE OF TREES. CONTRACTOR SHALL INCREASE DIAMETER 12" FOR EVERY ADDITIONAL SIZE OVER 24" BOX.
INSTALL ARBOR GUARDS @ BASE OF TREES IN TURF AREAS ONLY. AUGURED HOLE CAN BE OMITTED FOR AREAS PASSING PERCOLATION TESTS. CONTRACTOR SHALL TEST MULTIPLE HOLES PER APPROVED PERC. TEST METHOD.
REMOVE CONCRETE DEBRIS OR OVER-POURS AS REQ'D. TO ALLOW ROOT BARRIER TO LAY FLUSH AGAINST ADJACENT HARDSCAPE.

TREE (OPTION 2 - PERF. PIPE)

NOT TO SCALE

A TREE PLANTING

SCALE: NO_SCALE

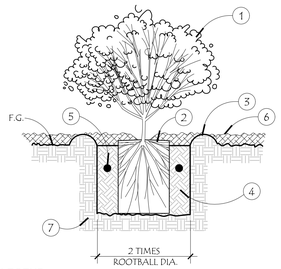

LEGEND
1. PLANT PER LEGEND - 1 GALLON THRU 15 GALLON CONTAINER
2. SET CROWN 1/2" - 1" ABOVE SURROUNDING GRADE.
3. WATER BASIN MIN 4" DEPTH. REMOVE PRIOR TO END OF MAINTENANCE PERIOD.
4. AMENDED BACKFILL - RIP AND TILL ENTIRE PLANTING AREA TO A DEPTH OF 10" & INCORPORATE AMENDMENTS IN THE UPPER 1/3 OF PLANT PIT.
5. 20-10-5 FERTILIZER TABLET PER SPECS. IN ADDITION TO COMPOST AND FERTILIZERS.
6. 3" MULCH OR OTHER GROUND PLANE MATERIAL PER PLAN, KEEP MATERIAL AWAY FROM PLANT STEM AND LOWER BRANCHES.
7. UNDISTURBED SOIL.

B SHRUB PLANTING

SCALE: NO_SCALE

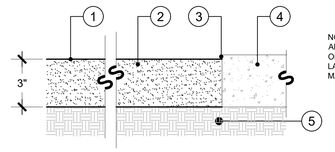

NOTES:
APPLY PRE-EMERGENT ON SUB-GRADE PRIOR TO LAYING PROPOSED MATERIALS.

LEGEND
1. FINISH GRADE
2. DECOMPOSED GRANITE PER LEGEND
3. SET 1/2" MAX BELOW HARDSCAPE/ STEEL EDGE/ CONCRETE BAND
4. CONCRETE BAND/ PAVING OR STEEL EDGING (WHERE OCCURS).
5. COMPACTED SUB-GRADE (90% MIN).

C DECOMPOSED GRANITE

SCALE: NO_SCALE

IDENTIFICATION STAMP
DIV. OF THE STATE ARCHITECT
APP: 03-122664 INC:
REVIEWED FOR
SS ☑ FLS ☑ ACS ☑
DATE: 05/12/2023

pjhm architects
LA Phone: 213.278.0172 • Web: pjhm.com
LA Office: 837 Traction Avenue, #410, Los Angeles, CA 90013
SD Phone: 760.730.5527 • OC Phone: 949.496.6191 • SD Office: 804 Pier View Way #103, Oceanside, CA 92054
OC Office: 24461 Ridge Route Drive #100, Laguna Hills, CA 92653

LICENSED ARCHITECT
RICHARD W. RINGEN
REN.: 02/25
STATE OF CALIFORNIA

BPA LANDSCAPE ARCHITECTS
BRANDON PETRUNIO & ASSOCIATES, INC.
LANDSCAPE ARCHITECTS
Design Studio: 301 N. San Dimas Ave., San Dimas, CA. 9173
Corporate Office: 24461 Ridge Route Dr. #100, Laguna Hills, CA. 92653
T: (424) 235-8940, M: (951) 312-9943, E: brandon@bpolas.com

LICENSED LANDSCAPE ARCHITECT
BRANDON PETRUNIO #6178
01/31/2025 Renewal Date
Signature
01/31/2023 Date
STATE OF CALIFORNIA

HIGHLAND HIGH SCHOOL
50M POOL & AQUATICS CENTER

KERN HIGH SCHOOL DISTRICT

LANDSCAPE PLANTING DETAILS

DETAILS

LPD.1

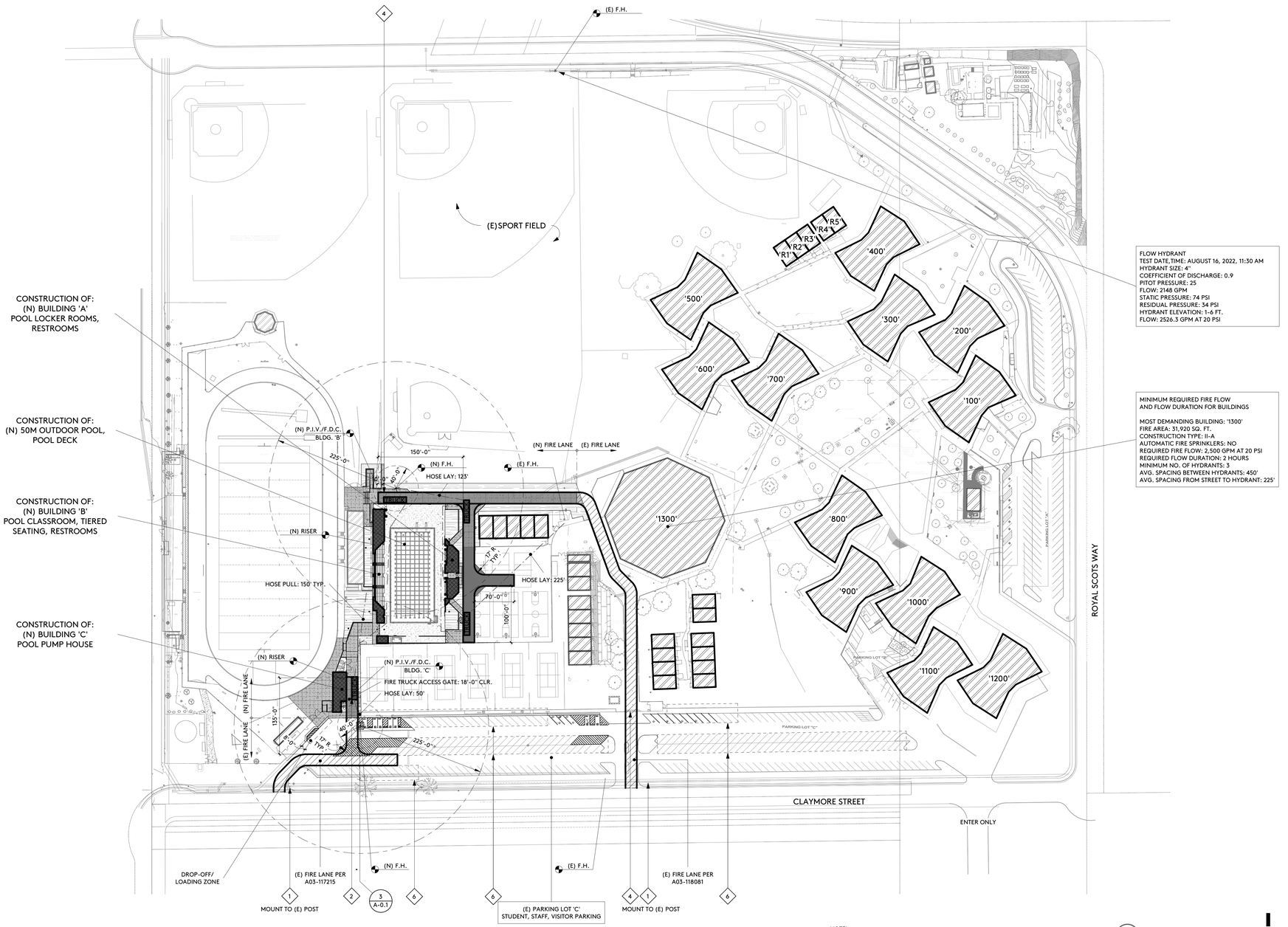

FLOW HYDRANT
TEST DATE,TIME: AUGUST 16, 2022, 11:30 AM
HYDRANT SIZE: 4"
COEFFICIENT OF DISCHARGE: 0.9
PITOT PRESSURE: 25
FLOW: 2148 GPM
STATIC PRESSURE: 74 PSI
RESIDUAL PRESSURE: 34 PSI
HYDRANT ELEVATION: 1-6 FT.
FLOW: 2526.3 GPM AT 20 PSI

MINIMUM REQUIRED FIRE FLOW
AND FLOW DURATION FOR BUILDINGS

MOST DEMANDING BUILDING: '1300'
FIRE AREA: 31,920 SQ. FT.
CONSTRUCTION TYPE: II-A
AUTOMATIC FIRE SPRINKLERS: NO
REQUIRED FIRE FLOW: 2,500 GPM AT 20 PSI
REQUIRED FLOW DURATION: 2 HOURS
MINIMUM NO. OF HYDRANTS: 3
AVG. SPACING BETWEEN HYDRANTS: 450'
AVG. SPACING FROM STREET TO HYDRANT: 225'

NOTE!
FOR LOCATION OF INTERIOR LOT LINES - ESTABLISHING FIRE SEPARATION DISTANCE, SEE 1/A-0.2

SITE PLAN - LOCAL FIRE ACCESS

1" = 80'-0"

(N) BUILDING/STRUCTURE
(E) BUILDING
(E) FIRE APPARATUS ACCESS ROADWAY
20'-0" MIN. WIDE FIRE ACCESS LANE, U.N.O.
17'-0" MIN. INSIDE TURN RADII
38'-0" MIN. OUTSIDE TURN RADII
(N) FIRE APPARATUS ACCESS ROADWAY
20'-0" MIN. WIDE FIRE ACCESS LANE, U.N.O.
17'-0" MIN. INSIDE TURN RADII
38'-0" MIN. OUTSIDE TURN RADII
CONCRETE ROADWAY 2/A-1.13
AC ROADWAY 10/A-1.13
F.H. FIRE HYDRANT
HOSE LAY LENGTH, 225' MAX./ HOSE PULL LENGTH, 150' MAX.
P.I.V./F.D.C. POST INDICATOR VALVE/FIRE DEPARTMENT CONNECTION
F.D.C. FIRE DEPARTMENT CONNECTION
D.C.D.A. DOUBLE CHECK-DETECTOR ASSEMBLY
B.F.P. BACK FLOW PREVENTOR
RISER AUTOMATIC FIRE SPRINKLER RISER
FIRE LANE IDENTIFICATION - PAINTED RED CURBS PER DETAIL 2/A-0.1
WHERE APPARATUS ACCESS ROADWAY INDICATED*
(N) CONCRETE PAVING 2/A-1.13
WHERE APPARATUS ACCESS ROADWAY INDICATED*
(N) ASPHALT PAVING 10/A-1.13
(N) LANDSCAPE
150' FIRE TRUCK PROXIMITY FROM EDGE OF FIRE LANE
SITE PROPERTY LINE
FIRE ENGINE

*ROADWAY SHALL BE CONSTRUCTED AND MAINTAINED TO SUPPORT MINIMUM IMPOSED LOADS OF: 68,000 LBS.

SYMBOLS

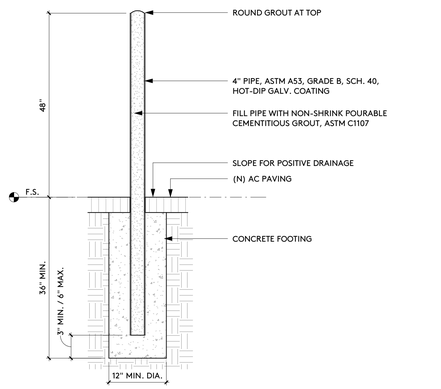

GUARD POST 4

3/4" = 1'-0"

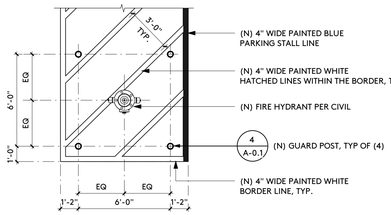

ENLARGED 3

1/4" = 1'-0"

1. (N) FIRE LANE ENTRANCE SIGN — 7/A-1.15
2. (N) MANUALLY OPERATED VEHICLE ACCESS GATE (MIN. 16'-0" CLEAR OPENING) WITH KNOX PADLOCK AND 'NO PARKING' SIGN MOUNTED TO FACE OF GATE — 6/A-1.7
3. NOT USED
4. (E) MANUALLY OPERATED VEHICLE ACCESS GATE
5. (E) LOCATION OF PREMISES IDENTIFICATION, CHARACTERS MIN. 6" TALL
6. (E) PV ARRAY OVERHEAD PER A#03-117215, 14'-0" MIN. VERTICAL CLEARANCE

SITE PLAN KEYNOTES

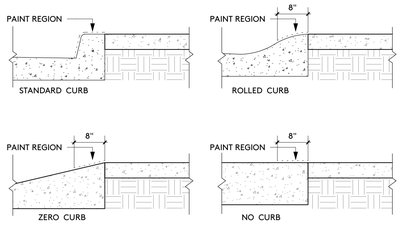

1. CURBS ALONG ACCESS LANES SHALL BE PAINTED OSHA SAFETY RED
2. "FIRE LANE NO PARKING" SHALL BE PAINTED ON TOP OF CURB IN WHITE LETTERING 3" HIGH AND SHALL BE SPACED 30'-0" ON CENTER OR PORTION THEREOF

CURB PROFILES 2

3/4" = 1'-0"

DSA 810

FIRE & LIFE SAFETY SITE CONDITIONS SUBMITTAL

Division of the State Architect (DSA) documents referenced within this publication are available on the DSA Forms or DSA Publications webpages.

To facilitate the Division of the State Architect's (DSA) fire and life safety plan review of project site conditions, DSA requires the design professional to provide the following information at time of project submittal for projects consisting of construction of a new campus, construction of new building(s), additions to existing buildings, and for site alternate design means for fire department emergency vehicle access, and fire suppression water supply.

Information associated with compliance items 1 through 3 below is to be provided for all project types indicated above. Information associated with items 4 through 7 is to be completed when an alternate means is utilized. Acknowledgement by the school district and signature from the Local Fire Authority (LFA) is only required when an alternate design means is being requested.

The Project Information and Fire & Life Safety Information sections are to be completed for all projects and imaged onto the fire access site plan. When an alternate design/means is proposed, all sections on pages 1 and 2 are to be completed and imaged on the fire access site plan.

For additional information refer to the instructions at the end of this form and DSA Policy *PI. 09-01: Fire Flow for Buildings*.

PROJECT INFORMATION	
School District/Owner:	KERN HIGH SCHOOL DISTRICT
Project Name/School:	HIGHLAND HIGH SCHOOL - 50M POOL & AQUATICS CENTER
Project Address:	2900 ROYAL SCOTS WAY, BAKERSFIELD, CA 93306

FIRE & LIFE SAFETY INFORMATION				
1.	Has a fire hydrant flow test been performed within the past 12 months? *(If yes, provide a copy of the test data.)*	Yes ■		No ☐
2.	Was the fire hydrant water flow test performed as part of this LFA review?	Yes ■		No ☐
3.	Is the project located within a designated fire hazard severity zone (FHSZ) as established by Cal-Fire? *(If yes, indicate FHSZ classification below.)*	Yes ☐		No ■
	Refer to the following website for FHSZ locations: http://egis.fire.ca.gov/FHSZ	Moderate ☐	High ☐	Very High ☐
	Wildland Interface Area (WIFA) *(If any designations are checked, project design must meet the requirements of CBC Chapter 7A.)*			WIFA ☐

DGS DSA 810 (revised 12/29/20) Page 1 of 4
DIVISION OF THE STATE ARCHITECT DEPARTMENT OF GENERAL SERVICES STATE OF CALIFORNIA

DSA - 810

IDENTIFICATION STAMP
DIV. OF THE STATE ARCHITECT
APP: 03-122664 INC:
REVIEWED FOR
SS ☑ FLS ☑ ACS ☑
DATE: 05/12/2023

pjhm architects

LICENSED ARCHITECT
THOMAS W. PHILLIPS
No. C-25585
REN. 02/25
STATE OF CALIFORNIA

OC Office: 24461 Ridge Route Drive #100, Laguna Hills, CA 92653 • SD Phone: 760.730.5527 • OC Phone: 949.496.6191 • SD Office: 804 Pier View Way #103, Oceanside, CA 92054 • LA Office: 837 Traction Avenue, #410, Los Angeles, CA 90013 • LA Phone: 213.278.0172 • Web: pjhm.com

HIGHLAND HIGH SCHOOL
50M POOL & AQUATICS CENTER

KERN HIGH SCHOOL DISTRICT

SITE PLAN - LOCAL FIRE ACCESS

A-0.1

4/13/2023 9:02:48 AM

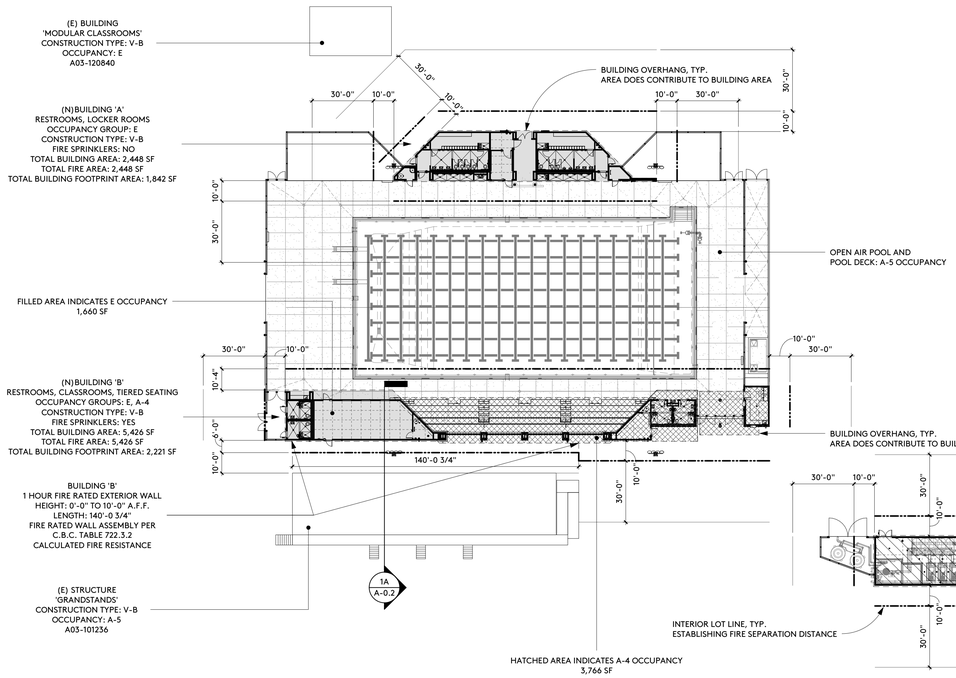

FIRE SEPARATION DIAGRAM

1A

1" = 20'-0"

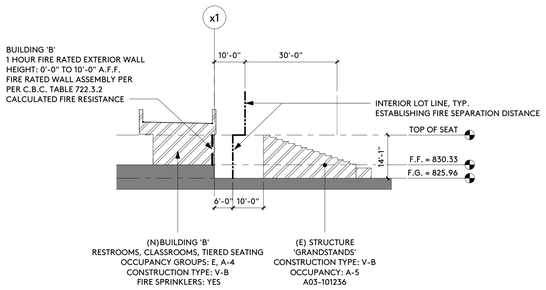

BUILDING SEPARATION ANALYSIS

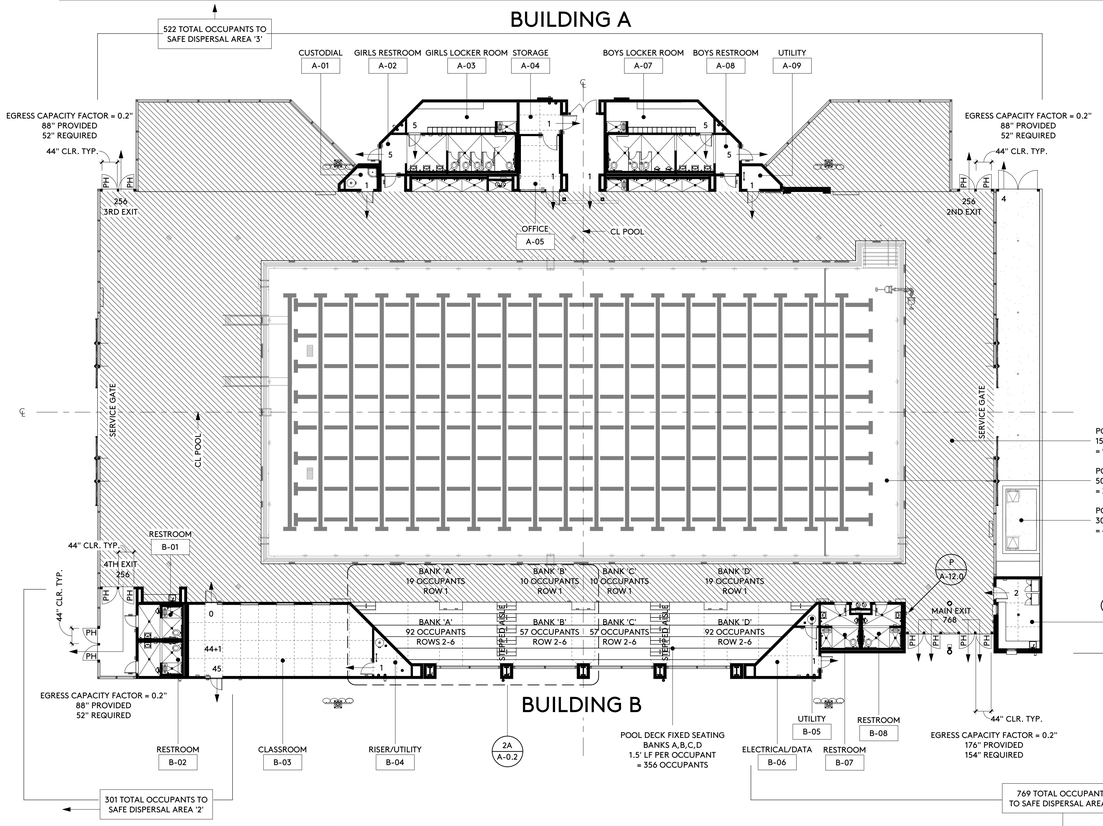

NOTE:
THIS POOL IS INTENDED FOR USE FOR COMPETITIVE AQUATIC EVENTS. AN OCCUPANT LOAD OF 50 SF PER OCCUPANT HAS BEEN ASSIGNED TO THE POOL SURFACE AREA. ANY CHANGE IN USE WILL REQUIRE REVIEW AND APPROVAL BY THE DIVISION OF THE STATE ARCHITECT.

AGGREGATE OCCUPANT LOAD EXITING:	OCCUPANTS
POOL SURFACE AREA /50 SF 12,369 SF/ 50 SF	248
POOL DECK ASSEMBLY AREA /15 SF 13,828 SF/ 15 SF	922
POOL ACCESSORY STORAGE AREA	004
POOL DECK FIXED SEATING	356
BUILDING 'A'	004
BUILDING 'B'	002
TOTAL	1,536

AGGREGATE OCCUPANT LOAD EXITING:	OCCUPANTS
BUILDING 'C' POOL ACCESSORY STORAGE AREA	5 2
TOTAL	7

EXITING ANALYSIS

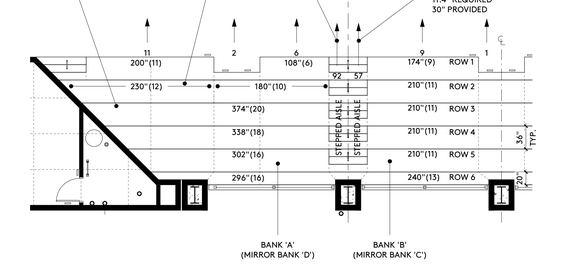

ENLARGED PLAN

2A

1/8" = 1'-0"

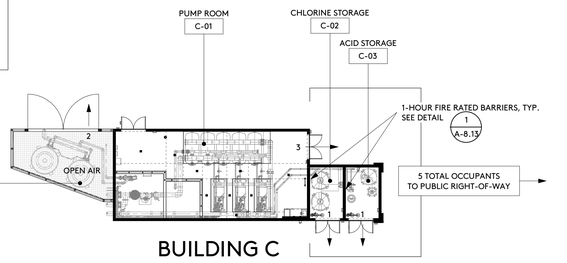

BUILDING C

2

1/16" = 1'-0"

BUILDING DATA

BUILDING 'A'

1.	OCCUPANCY GROUP(S) BUILDING:	E
2.	CONSTRUCTION TYPE TYPE:	V-B
3.	BUILDING HEIGHT (CBC TABLE 504.3) ALLOWABLE: ACTUAL:	40' E; NS 18'-0"
4.	STORIES ABOVE GRADE PLANE (CBC TABLE 504.4) ALLOWABLE: ACTUAL:	1 E; NS 1
5.	BUILDING AREA (PER STORY) (CBC TABLE 506.2) ALLOWABLE: ACTUAL:	9,500 sf E; NS 2,448 sf
7.	SPRINKLER SYSTEM:	NO

BUILDING 'B'

1.	OCCUPANCY GROUP(S) BUILDING:	E, A-4
2.	CONSTRUCTION TYPE TYPE:	V-B
3.	BUILDING HEIGHT (CBC TABLE 504.3) ALLOWABLE: ALLOWABLE: ACTUAL:	40' E; S (with area increase) 40' A-4; S (with area increase) 26'-4"
4.	STORIES ABOVE GRADE PLANE (CBC TABLE 504.4) ALLOWABLE: ALLOWABLE: ACTUAL:	1 E; S (with area increase) 1 A-4; S (with area increase) 1
5.	BUILDING AREA (PER STORY) (CBC TABLE 506.2) ALLOWABLE: ALLOWABLE: ACTUAL:	38,000 sf E; S1 24,000 sf A-4; S1 5,426 sf
6.	NONSEPARATED MIXED-OCCUPANCY CALCULATION (CBC SECTION 508.3) MOST RESTRICTIVE OCCUPANCY: ALLOWABLE BUILDING AREA: TOTAL BUILDING AREA:	A-4 (BUILDING AREA, HEIGHT, STORIES) 24,000 sf 5,426 sf
7.	SPRINKLER SYSTEM:	YES, NFPA 13

BUILDING 'C'

1.	OCCUPANCY GROUP(S) BUILDING:	S-2
2.	CONSTRUCTION TYPE TYPE:	V-B
3.	BUILDING HEIGHT (CBC TABLE 504.3) ALLOWABLE: ACTUAL:	60' S-2; S 18'-0"
4.	STORIES ABOVE GRADE PLANE (CBC TABLE 504.4) ALLOWABLE: ACTUAL:	3 S-2; S 1
5.	BUILDING AREA (PER STORY) (CBC TABLE 506.2) ALLOWABLE: ACTUAL:	54,000 sf S-2; S1 1,605 sf
6.	SPRINKLER SYSTEM:	YES , NFPA 13

OCCUPANCY LOAD

BUILDING 'A'

ROOM	NAME	OCCUPANCY	AREA (NET)	OCCUPANT LOAD FACTOR	OCCUPANTS
A-01	CUSTODIAL	E	40 SF	300	1
A-02	GIRLS RESTROOM	E	328 SF		
A-03	GIRLS LOCKER ROOM	E	219 SF	50	5
A-04	STORAGE	E	89 SF	300	1
A-05	OFFICE	E	146 SF	150	1
A-07	BOYS LOCKER ROOM	E	213 SF	50	5
A-08	BOYS RESTROOM	E	322 SF		
A-09	UTILITY	E	48 SF	300	1

TOTAL: 15

BUILDING 'B'

ROOM	NAME	OCCUPANCY	AREA (NET)	OCCUPANT LOAD FACTOR	OCCUPANTS
B-01	RESTROOM	E	96 SF		
B-02	RESTROOM	E	96 SF		
B-03	CLASSROOM	E	875 SF	20	44
B-04	RISER/UTILITY	E	71 SF	300	1
B-05	UTILITY	E	17 SF		
B-06	ELECTRICAL/DATA	A-4	158 SF	300	1
B-07	RESTROOM	A-4	105 SF		
B-08	RESTROOM	A-4	105 SF		
B-09	TICKET BOOTH/CONCESSIONS	A-4	200 SF	150	2

TOTAL: 48

BUILDING 'C'

ROOM	NAME	OCCUPANCY	AREA (NET)	OCCUPANT LOAD FACTOR	OCCUPANTS
C-01	PUMP ROOM	S-2	870 SF	300	3
C-02	CHLORINE STORAGE	S-2	116 SF	300	1
C-03	ACID STORAGE	S-2	116 SF	300	1

TOTAL: 5

pjhm architects
OC Office: 24461 Ridge Route Drive #100, Laguna Hills, CA 92653 • OC Phone: 949.496.6191 • SD Office: 804 Pier View Way #103, Oceanside, CA 92054 • SD Phone: 760.730.5527 • LA Office: 837 Traction Avenue, #410, Los Angeles, CA 90013 • LA Phone: 213.278.0172 • Web: pjhm.com

IDENTIFICATION STAMP
DIV. OF THE STATE ARCHITECT
APP: 03-122664 INC:
REVIEWED FOR
SS ☑ FLS ☑ ACS ☑
DATE: 05/12/2023

LICENSED ARCHITECT
RICHARD W. RISHER
No. C15585
REN. 02/25
STATE OF CALIFORNIA

HIGHLAND HIGH SCHOOL
50M POOL & AQUATICS CENTER

KERN HIGH SCHOOL DISTRICT

1 ADDENDUM NO. 1

BUILDING ANALYSIS

A-0.2

4/13/2023 9:04:35 AM

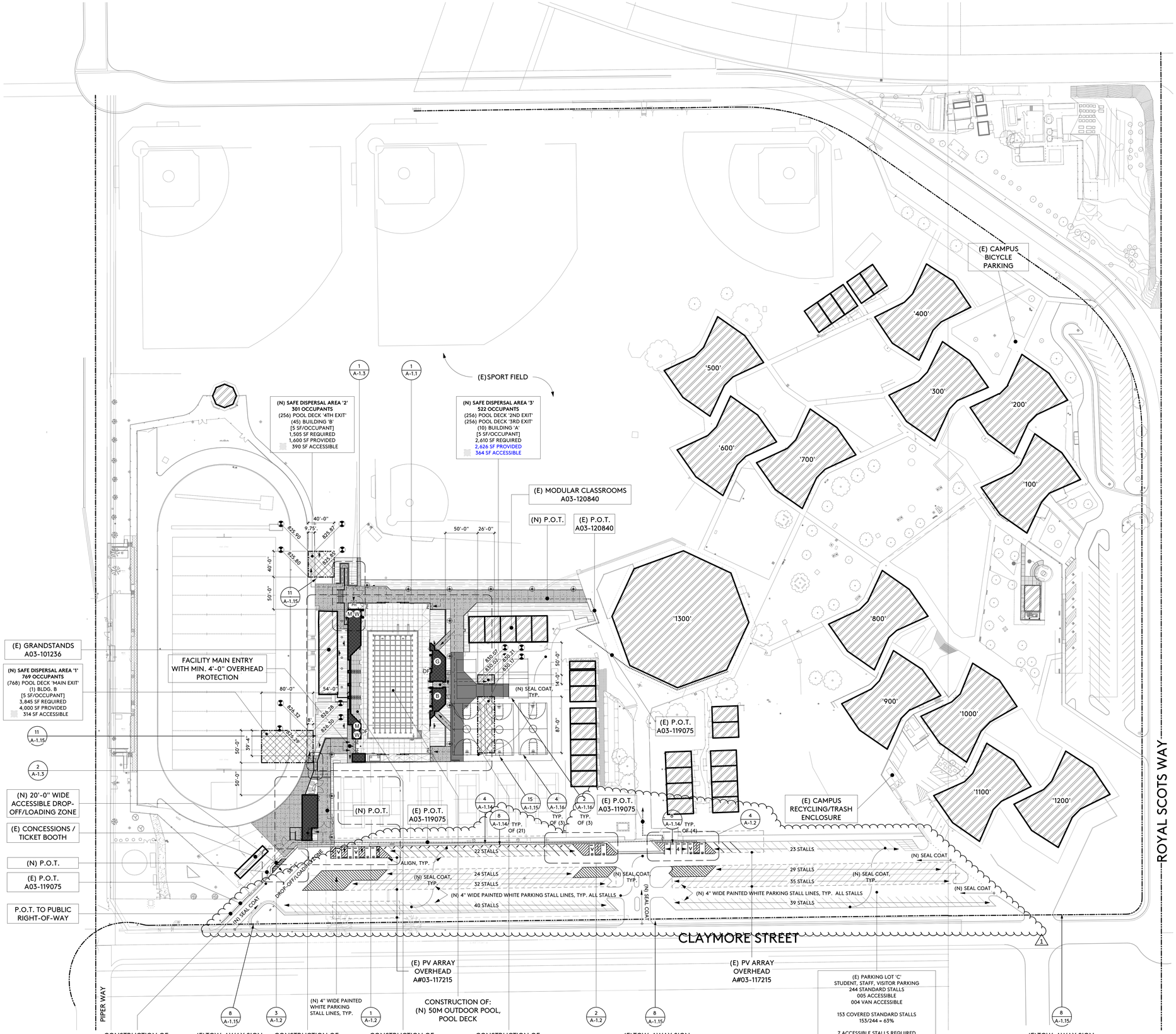

SITE PLAN - CAMPUS

1" = 60'-0"

1. CONTRACTORS BIDDING OR PERFORMING WORK SHALL VERIFY THE CONDITIONS OF THE SITE, INCLUDING ACCESS BEFORE SUBMITTING BID OR COMMENCING WORK AND SHALL NOTIFY THE ARCHITECT OF ANY DISCREPANCIES FOR PROMPT DIRECTION.
2. THE EXISTENCE AND LOCATION OF EXISTING UNDERGROUND UTILITIES OR STRUCTURES INDICATED OR NOT ON THE DRAWINGS ARE OBTAINED BY SEARCH OF AVAILABLE RECORDS. IT IS THE CONTRACTOR'S RESPONSIBILITY TO VERIFY EXACT LOCATIONS. THE CONTRACTOR IS REQUIRED TO TAKE PRECAUTIONARY MEASURES TO PROTECT THE UTILITIES AND OTHER STRUCTURES. ANY DAMAGE SHALL BE PROMPTLY RESTORED TO THE OWNERS SATISFACTION.
3. REFERENCE CIVIL, PLUMBING, MECHANICAL, AND ELECTRICAL DRAWINGS FOR ALL UNDERGROUND UTILITY WORK TO BE COMPLETED IN THIS CONTRACT.
4. GENERAL CONTRACTOR TO COORDINATE ALL PHASING AND UTILITY INTERRUPTIONS OF THIS PROJECT WITH THE OWNER AND ARCHITECT AS TO DO THE LEAST POSSIBLE INTERRUPTIONS. (AS-REQ'D)
5. PROVIDE CONSTRUCTION BARRICADES AS REQUIRED TO PROTECT THE PUBLIC'S HEALTH AND SAFETY INCLUDING WORK UNDER CONSTRUCTION TO THE REQUIREMENTS OF THE OWNER. COVER OPEN TRENCHES WITH ADEQUATE SOLID MATERIAL.
6. EXCAVATION AND TRENCHING SHALL COMPLY WITH THE REQUIREMENTS OF THE TESTING LAB AND JURISDICTIONAL REQUIREMENTS AT THE TIME WORK COMMENCES AND UP TO COMPLETION OF THE WORK.
7. COMPLY WITH 2019 CALIFORNIA FIRE CODE, CHAPTER 33 FOR FIRE SAFETY DURING CONSTRUCTION AND DEMOLITION.
8. FOR GRATINGS OR STRAINERS LOCATED IN THE SURFACE OF ANY PEDESTRIAN WAY IN THE PATH OF TRAVEL, THE MAXIMUM GRATE OR STRAINER OPENINGS SHALL NOT EXCEED 1/2" IN THE DIRECTION OF TRAFFIC FLOW.
9. TEMPORARY CONSTRUCTION FENCING TO BE SUPPLIED BY CONTRACTOR
10. ALL NEW WALK SURFACES ON P.O.T.'S SHALL HAVE FLUSH TRANSITIONS TO ALL ADJACENT NEW OR EXISTING WALK SURFACES IN P.O.T.'S

GENERAL NOTES

(N) BUILDING/STRUCTURE FOR USE, OCCUPANCY, CONSTRUCTION TYPE, A.F.S.S. REQUIREMENTS, SEE — SHEET A-0.2

(E) BUILDING

(N) CONCRETE PAVING — 2 A-1.13

CONTROL JOINT — 2 A-1.13

CONSTRUCTION JOINT — 3 A-1.13

(N) ASPHALT PAVING — 10 A-1.13

(N) LANDSCAPE, SEE LANDSCAPE DRAWINGS

M W (N) RESTROOM (MEN, WOMEN), UNLESS NOTED OTHERWISE

B G (N) RESTROOM (BOYS, GIRLS), UNLESS NOTED OTHERWISE

U (N) RESTROOM

DF (N) DUAL HEIGHT DRINKING FOUNTAIN

V VAN ACCESSIBLE PARKING STALL

1 A-1.1 SHEET REFERENCE NUMBER / DETAIL REFERENCE NUMBER

LIGHT FIXTURE, SEE ELECTRICAL

SITE PROPERTY LINE

PATH OF TRAVEL (P.O.T)
(DSA A# AS NOTED ON PLAN)

DESIGN PROFESSIONAL IN GENERAL RESPONSIBLE CHARGE STATEMENT:
THE POT IDENTIFIED IN THESE CONSTRUCTION DOCUMENTS MEETS THE REQUIREMENTS OF THE CURRENT APPLICABLE CALIFORNIA BUILDING CODE (CBC) ACCESSIBILITY PROVISIONS FOR PATH OF TRAVEL REQUIREMENTS FOR ALTERATIONS, ADDITIONS AND STRUCTURAL REPAIRS. AS PART OF THE DESIGN OF THIS PROJECT, THE POT WAS EXAMINED AND ANY ELEMENTS, COMPONENTS OR PORTIONS OF THE POT THAT WERE DETERMINED TO BE NONCOMPLIANT WITH THE CBC HAVE BEEN IDENTIFIED AND THE CORRECTIVE WORK NECESSARY TO BRING THEM INTO COMPLIANCE HAS BEEN INCLUDED WITHIN THE SCOPE OF THIS PROJECT'S WORK THROUGH DETAILS, DRAWINGS, AND SPECIFICATIONS INCORPORATED INTO THESE CONSTRUCTION DOCUMENTS. ANY NON-COMPLIANT ELEMENTS, COMPONENTS OR PORTIONS OF THE POT THAT WILL NOT BE CORRECTED BY THIS PROJECT BASED ON VALUATION THRESHOLD LIMITATIONS OR A FINDING OF UNREASONABLE HARDSHIP ARE INDICATED IN THESE CONSTRUCTION DOCUMENTS.
DURING CONSTRUCTION, IF POT ITEMS WITHIN THE SCOPE OF THE PROJECT REPRESENTED AS CBC COMPLIANT ARE FOUND TO BE NONCONFORMING BEYOND REASONABLE CONSTRUCTION TOLERANCES, THE ITEMS SHALL BE BROUGHT INTO COMPLIANCE WITH THE CBC AS A PART OF THIS PROJECT BY MEANS OF A CONSTRUCTION CHANGE DOCUMENT.

(E) P.O.T PER A#03-120840

(E) P.O.T PER A#03-119075

SYMBOLS

IDENTIFICATION STAMP
DIV. OF THE STATE ARCHITECT
APP: 03-122664 INC:
REVIEWED FOR
SS ☑ FLS ☑ ACS ☑
DATE: 05/12/2023

pjhm architects
LICENSED ARCHITECT
THOMAS W. PHILLIPS
REN. 02/25
STATE OF CALIFORNIA
SD Phone: 760.730.5527 • LA Office: 837 Traction Avenue, #410, Los Angeles, CA 90013 • LA Phone: 213.278.0172 • Web: pjhm.com
OC Office: 24461 Ridge Route Drive #100, Laguna Hills, CA 92653 • OC Phone: 949.496.6191 • SD Office: 804 Pier View Way #103, Oceanside, CA 92054

HIGHLAND HIGH SCHOOL
50M POOL & AQUATICS CENTER

KERN HIGH SCHOOL DISTRICT

1 ADDENDUM NO. 1

SITE PLAN

A-1.0

4/13/2023 9:02:52 AM

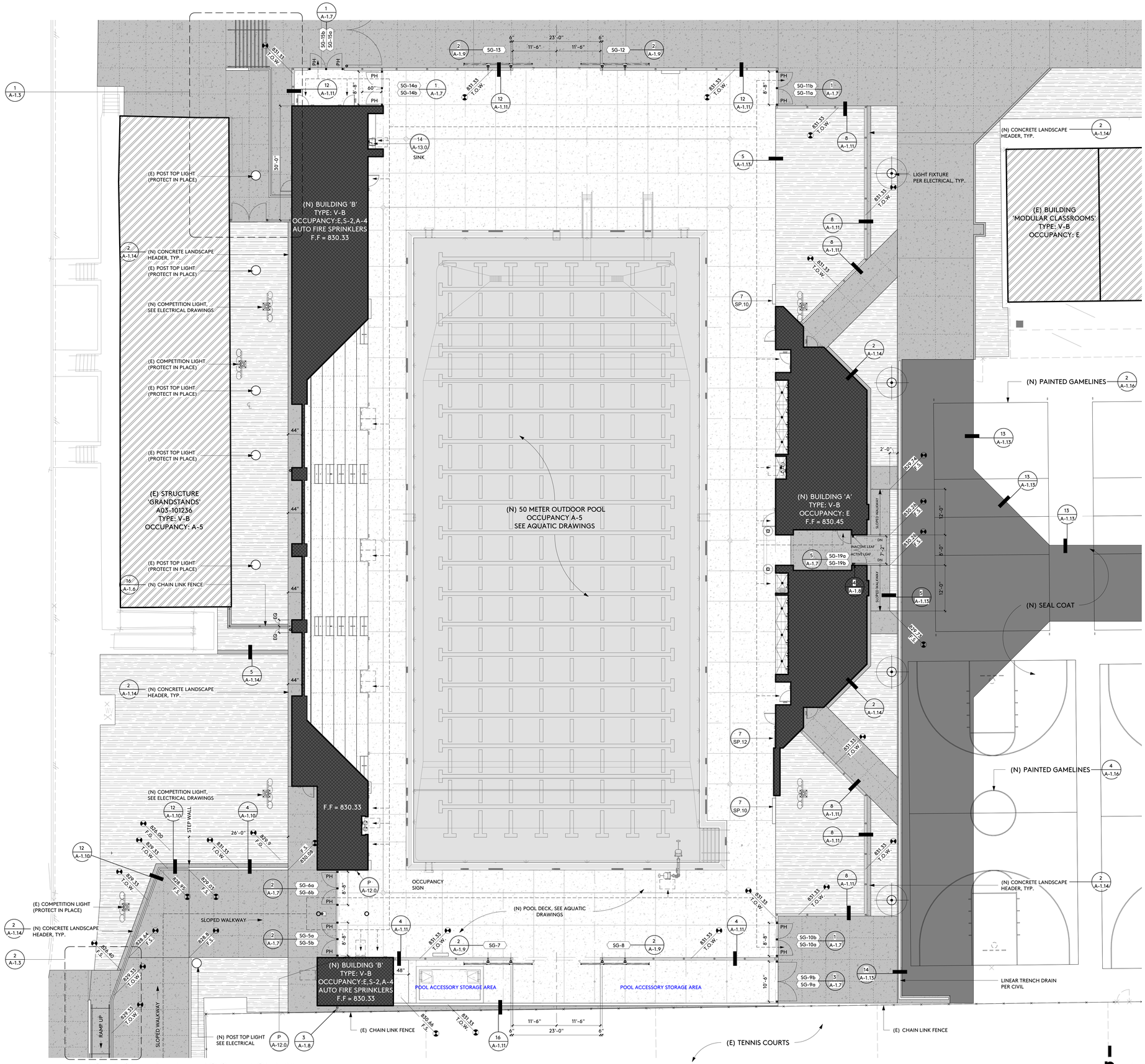

1. CONTRACTORS BIDDING OR PERFORMING WORK SHALL VERIFY THE CONDITIONS OF THE SITE, INCLUDING ACCESS BEFORE SUBMITTING BID OR COMMENCING WORK AND SHALL NOTIFY THE ARCHITECT OF ANY DISCREPANCIES FOR PROMPT DIRECTION.
2. THE EXISTENCE AND LOCATION OF EXISTING UNDERGROUND UTILITIES OR STRUCTURES INDICATED OR NOT ON THE DRAWINGS ARE OBTAINED BY SEARCH OF AVAILABLE RECORDS. IT IS THE CONTRACTOR'S RESPONSIBILITY TO VERIFY EXACT LOCATIONS. THE CONTRACTOR IS REQUIRED TO TAKE PRECAUTIONARY MEASURES TO PROTECT THE UTILITIES AND OTHER STRUCTURES. ANY DAMAGE SHALL BE PROMPTLY RESTORED TO THE OWNERS SATISFACTION.
3. REFERENCE CIVIL, PLUMBING, MECHANICAL, AND ELECTRICAL DRAWINGS FOR ALL UNDERGROUND UTILITY WORK TO BE COMPLETED IN THIS CONTRACT.
4. GENERAL CONTRACTOR TO COORDINATE ALL PHASING AND UTILITY INTERRUPTIONS OF THIS PROJECT WITH THE OWNER AND ARCHITECT AS TO DO THE LEAST POSSIBLE INTERRUPTIONS. (AS-REQ'D)
5. PROVIDE CONSTRUCTION BARRICADES AS REQUIRED TO PROTECT THE PUBLIC'S HEALTH AND SAFETY INCLUDING WORK UNDER CONSTRUCTION TO THE REQUIREMENTS OF THE OWNER. COVER OPEN TRENCHES WITH ADEQUATE SOLID MATERIAL.
6. EXCAVATION AND TRENCHING SHALL COMPLY WITH THE REQUIREMENTS OF THE TESTING LAB AND JURISDICTIONAL REQUIREMENTS AT THE TIME WORK COMMENCES AND UP TO COMPLETION OF THE WORK.
7. COMPLY WITH 2019 CALIFORNIA FIRE CODE, CHAPTER 33 FOR FIRE SAFETY DURING CONSTRUCTION AND DEMOLITION.
8. FOR GRATINGS OR STRAINERS LOCATED IN THE SURFACE OF ANY PEDESTRIAN WAY IN THE PATH OF TRAVEL, THE MAXIMUM GRATE OR STRAINER OPENINGS SHALL NOT EXCEED 1/2" IN THE DIRECTION OF TRAFFIC FLOW.
9. TEMPORARY CONSTRUCTION FENCING TO BE SUPPLIED BY CONTRACTOR
10. ALL NEW WALK SURFACES ON P.O.T.'S SHALL HAVE FLUSH TRANSITIONS TO ALL ADJACENT NEW OR EXISTING WALK SURFACES IN P.O.T.'S

GENERAL NOTES

12" = 1'-0"

(N) BUILDING IN SCOPE

(E) BUILDING - NOT IN SCOPE

(N) CONCRETE PAVING — 2 A-1.13

CONTROL JOINT — 2 A-1.13

CONSTRUCTION JOINT — 3 A-1.13

(N) ASPHALT PAVING — 10 A-1.13

(N) LANDSCAPE, SEE LANDSCAPE

1 A-1.0 — DETAIL REFERENCE NUMBER / SHEET REFERENCE NUMBER

G# 1 A-1.0 — (N) SITE GATE

LIGHT FIXTURE, SEE ELECTRICAL

PATH OF TRAVEL (P.O.T)
(DSA A# AS NOTED ON PLAN)

DESIGN PROFESSIONAL IN GENERAL RESPONSIBLE CHARGE STATEMENT:
THE POT IDENTIFIED IN THESE CONSTRUCTION DOCUMENTS MEETS THE REQUIREMENTS OF THE CURRENT APPLICABLE CALIFORNIA BUILDING CODE (CBC) ACCESSIBILITY PROVISIONS FOR PATH OF TRAVEL REQUIREMENTS FOR ALTERATIONS, ADDITIONS AND STRUCTURAL REPAIRS. AS PART OF THE DESIGN OF THIS PROJECT, THE POT WAS EXAMINED AND ANY ELEMENTS, COMPONENTS OR PORTIONS OF THE POT THAT WERE DETERMINED TO BE NONCOMPLIANT WITH THE CBC HAVE BEEN IDENTIFIED AND THE CORRECTIVE WORK NECESSARY TO BRING THEM INTO COMPLIANCE HAS BEEN INCLUDED WITHIN THE SCOPE OF THIS PROJECT'S WORK THROUGH DETAILS, DRAWINGS, AND SPECIFICATIONS INCORPORATED INTO THESE CONSTRUCTION DOCUMENTS. ANY NON-COMPLIANT ELEMENTS, COMPONENTS OR PORTIONS OF THE POT THAT WILL NOT BE CORRECTED BY THIS PROJECT BASED ON VALUATION THRESHOLD LIMITATIONS OR A FINDING OF UNREASONABLE HARDSHIP ARE INDICATED IN THESE CONSTRUCTION DOCUMENTS.
DURING CONSTRUCTION, IF POT ITEMS WITHIN THE SCOPE OF THE PROJECT REPRESENTED AS CBC COMPLIANT ARE FOUND TO BE NONCONFORMING BEYOND REASONABLE CONSTRUCTION TOLERANCES, THE ITEMS SHALL BE BROUGHT INTO COMPLIANCE WITH THE CBC AS A PART OF THIS PROJECT BY MEANS OF A CONSTRUCTION CHANGE DOCUMENT.

(E) P.O.T PER APPROVED A#03-120840

(E) P.O.T PER APPROVED A#03-119075

ENLARGED SITE PLAN - POOL FACILITY

1" = 10'-0"

SYMBOLS

1" = 20'-0"

IDENTIFICATION STAMP
DIV. OF THE STATE ARCHITECT
APP: 03-122664 INC:
REVIEWED FOR
SS ☑ FLS ☑ ACS ☑
DATE: 05/12/2023

pjhm architects

LICENSED ARCHITECT
RICHARD W. PRIEBE
NO. C15585
REN. 02/25
STATE OF CALIFORNIA

OC Office: 24461 Ridge Route Drive #100, Laguna Hills, CA 92653 • OC Phone: 949.496.6191 • SD Office: 804 Pier View Way #103, Oceanside, CA 92054 • SD Phone: 760.730.5527 • LA Office: 837 Traction Avenue, #410, Los Angeles, CA 90013 • LA Phone: 213.278.0172 • Web: pjhm.com

HIGHLAND HIGH SCHOOL
50M POOL & AQUATICS CENTER

KERN HIGH SCHOOL DISTRICT

SITE PLAN - ENLARGED

A-1.1

4/13/2023 11:36:07 AM

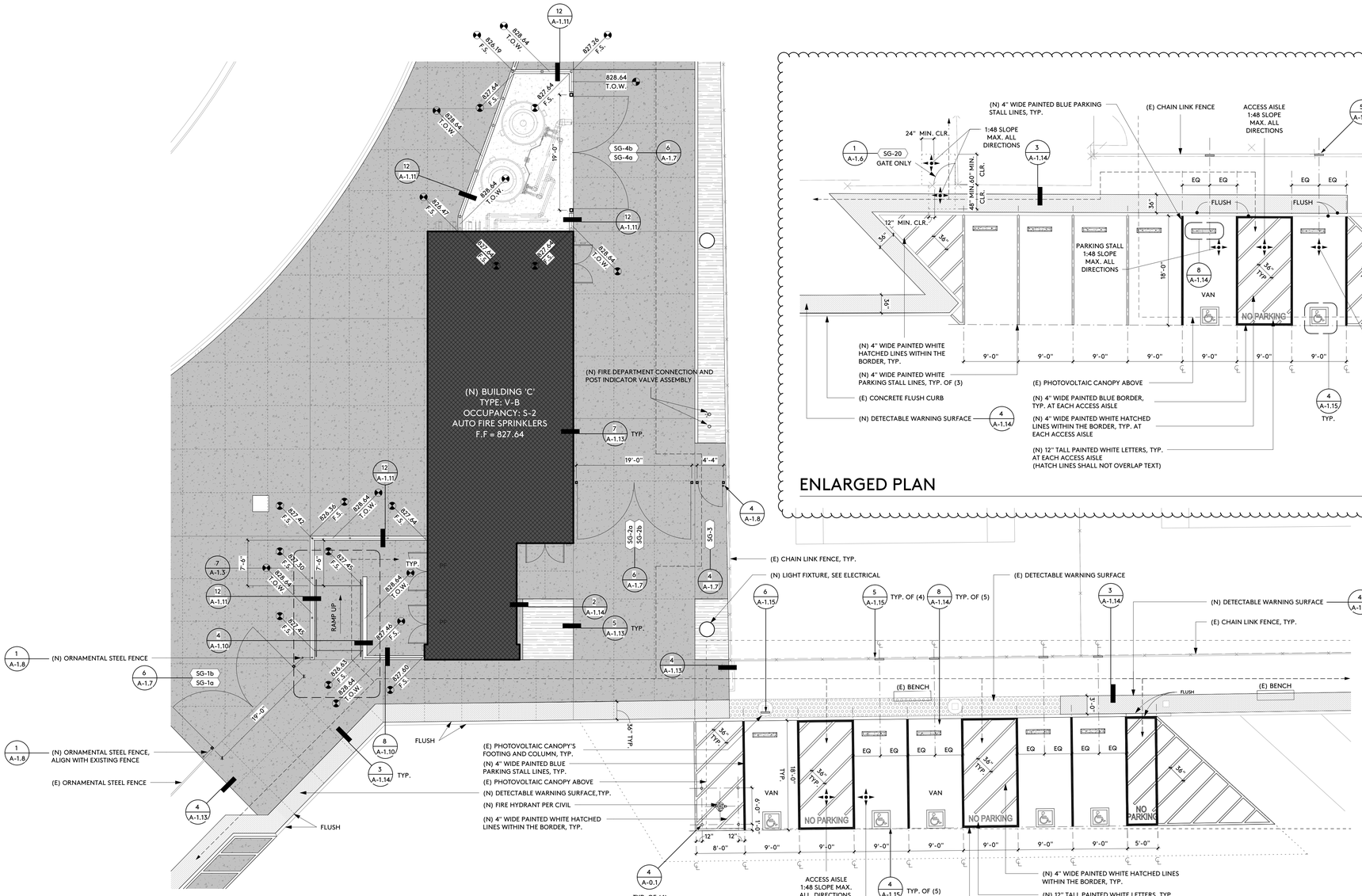

ENLARGED PLAN

1/8" = 1'-0"

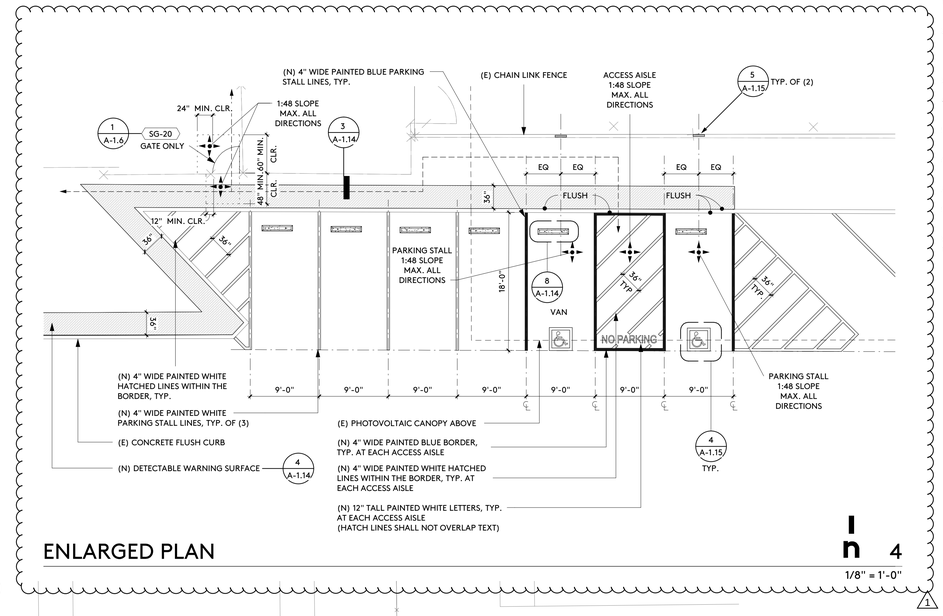

ENLARGED PLAN

1/8" = 1'-0"

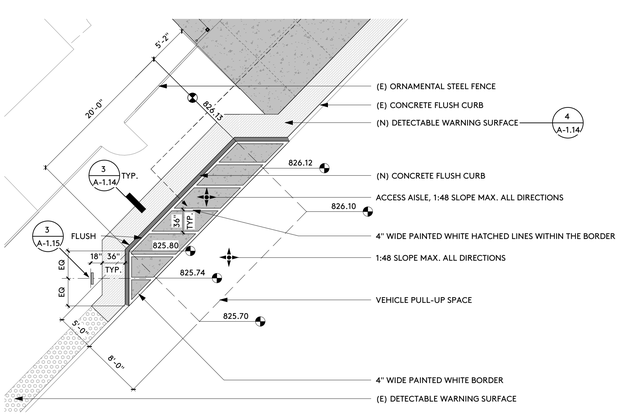

ENLARGED PLAN

1/8" = 1'-0"

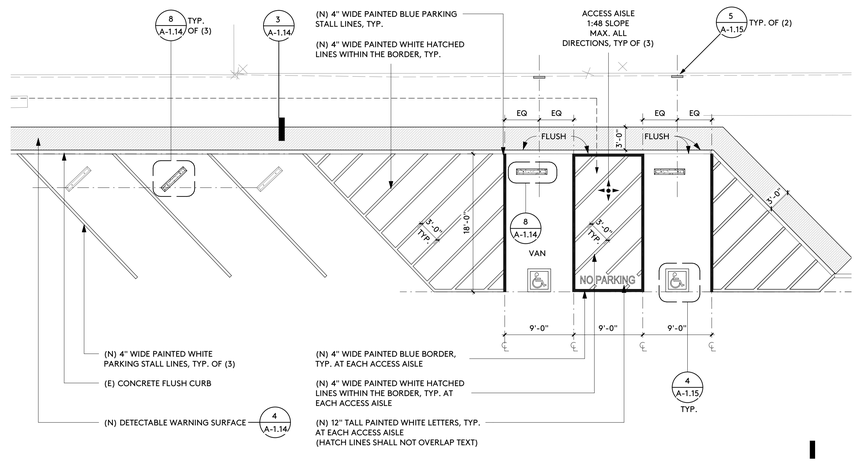

ENLARGED PLAN

1/8" = 1'-0"

1. CONTRACTORS BIDDING OR PERFORMING WORK SHALL VERIFY THE CONDITIONS OF THE SITE, INCLUDING ACCESS BEFORE SUBMITTING BID OR COMMENCING WORK AND SHALL NOTIFY THE ARCHITECT OF ANY DISCREPANCIES FOR PROMPT DIRECTION.
2. THE EXISTENCE AND LOCATION OF EXISTING UNDERGROUND UTILITIES OR STRUCTURES INDICATED OR NOT ON THE DRAWINGS ARE OBTAINED BY SEARCH OF AVAILABLE RECORDS. IT IS THE CONTRACTOR'S RESPONSIBILITY TO VERIFY EXACT LOCATIONS. THE CONTRACTOR IS REQUIRED TO TAKE PRECAUTIONARY MEASURES TO PROTECT THE UTILITIES AND OTHER STRUCTURES. ANY DAMAGE SHALL BE PROMPTLY RESTORED TO THE OWNERS SATISFACTION.
3. REFERENCE CIVIL, PLUMBING, MECHANICAL, AND ELECTRICAL DRAWINGS FOR ALL UNDERGROUND UTILITY WORK TO BE COMPLETED IN THIS CONTRACT.
4. GENERAL CONTRACTOR TO COORDINATE ALL PHASING AND UTILITY INTERRUPTIONS OF THIS PROJECT WITH THE OWNER AND ARCHITECT AS TO DO THE LEAST POSSIBLE INTERRUPTIONS. (AS-REQ'D)
5. PROVIDE CONSTRUCTION BARRICADES AS REQUIRED TO PROTECT THE PUBLIC'S HEALTH AND SAFETY INCLUDING WORK UNDER CONSTRUCTION TO THE REQUIREMENTS OF THE OWNER. COVER OPEN TRENCHES WITH ADEQUATE SOLID MATERIAL.
6. EXCAVATION AND TRENCHING SHALL COMPLY WITH THE REQUIREMENTS OF THE TESTING LAB AND JURISDICTIONAL REQUIREMENTS AT THE TIME WORK COMMENCES AND UP TO COMPLETION OF THE WORK.
7. COMPLY WITH 2019 CALIFORNIA FIRE CODE, CHAPTER 33 FOR FIRE SAFETY DURING CONSTRUCTION AND DEMOLITION.
8. FOR GRATINGS OR STRAINERS LOCATED IN THE SURFACE OF ANY PEDESTRIAN WAY IN THE PATH OF TRAVEL, THE MAXIMUM GRATE OR STRAINER OPENINGS SHALL NOT EXCEED 1/2" IN THE DIRECTION OF TRAFFIC FLOW.
9. TEMPORARY CONSTRUCTION FENCING TO BE SUPPLIED BY CONTRACTOR.
10. ALL NEW WALK SURFACES ON P.O.T.'S SHALL HAVE FLUSH TRANSITIONS TO ALL ADJACENT NEW OR EXISTING WALK SURFACES IN P.O.T.'S

GENERAL NOTES

- (N) BUILDING / (E) BUILDING - IN SCOPE
- (E) BUILDING - NOT IN SCOPE
- (N) CONCRETE PAVING — 2 A-1.13
- CONTROL JOINT — 2 A-1.13
- CONSTRUCTION JOINT — 3 A-1.13
- (N) ASPHALT PAVING — 10 A-1.13
- (N) LANDSCAPE, SEE LANDSCAPE DRAWINGS
- SITE WALL - CAST-IN-PLACE CONCRETE
- SITE WALL - UNIT MASONRY
- 1 A-1.0 — DETAIL REFERENCE NUMBER / SHEET REFERENCE NUMBER
- G# — SITE GATE, SEE 'SITE DETAILS - FENCES & GATES' SHEETS
- ELEVATION DATUM
- **PATH OF TRAVEL (P.O.T)** (DSA A# AS NOTED ON PLAN)

DESIGN PROFESSIONAL IN GENERAL RESPONSIBLE CHARGE STATEMENT:
THE POT IDENTIFIED IN THESE CONSTRUCTION DOCUMENTS MEETS THE REQUIREMENTS OF THE CURRENT APPLICABLE CALIFORNIA BUILDING CODE (CBC) ACCESSIBILITY PROVISIONS FOR PATH OF TRAVEL REQUIREMENTS FOR ALTERATIONS, ADDITIONS AND STRUCTURAL REPAIRS. AS PART OF THE DESIGN OF THIS PROJECT, THE POT WAS EXAMINED AND ANY ELEMENTS, COMPONENTS OR PORTIONS OF THE POT THAT WERE DETERMINED TO BE NONCOMPLIANT WITH THE CBC HAVE BEEN IDENTIFIED AND THE CORRECTIVE WORK NECESSARY TO BRING THEM INTO COMPLIANCE HAS BEEN INCLUDED WITHIN THE SCOPE OF THIS PROJECT'S WORK THROUGH DETAILS, DRAWINGS, AND SPECIFICATIONS INCORPORATED INTO THESE CONSTRUCTION DOCUMENTS. ANY NON-COMPLIANT ELEMENTS, COMPONENTS OR PORTIONS OF THE POT THAT WILL NOT BE CORRECTED BY THIS PROJECT BASED ON VALUATION THRESHOLD LIMITATIONS OR A FINDING OF UNREASONABLE HARDSHIP ARE INDICATED IN THESE CONSTRUCTION DOCUMENTS.
DURING CONSTRUCTION, IF POT ITEMS WITHIN THE SCOPE OF THE PROJECT REPRESENTED AS CBC COMPLIANT ARE FOUND TO BE NONCONFORMING BEYOND REASONABLE CONSTRUCTION TOLERANCES, THE ITEMS SHALL BE BROUGHT INTO COMPLIANCE WITH THE CBC AS A PART OF THIS PROJECT BY MEANS OF A CONSTRUCTION CHANGE DOCUMENT.

SYMBOLS

- (E) P.O.T PER APPROVED A#03-120840
- (E) P.O.T PER APPROVED A#03-119075

IDENTIFICATION STAMP
DIV. OF THE STATE ARCHITECT
APP: 03-122664 INC:
REVIEWED FOR
SS ☑ FLS ☑ ACS ☑
DATE: 05/12/2023

pjhm architects
LICENSED ARCHITECT
BARBARA W. PARRISH
NO. C15585
REN. 02/25
STATE OF CALIFORNIA
LA Phone: 213.278.0172 • Web: pjhm.com
LA Office: 837 Traction Avenue, #410, Los Angeles, CA 90013 • SD Phone: 760.730.5527 • SD Office: 804 Pier View Way #103, Oceanside, CA 92054 • OC Phone: 949.496.6191 • OC Office: 24461 Ridge Route Drive #100, Laguna Hills, CA 92653

HIGHLAND HIGH SCHOOL
50M POOL & AQUATICS CENTER

KERN HIGH SCHOOL DISTRICT

1 ADDENDUM NO. 1

SITE PLAN - ENLARGED

A-1.2

4/13/2023 9:03:01 AM

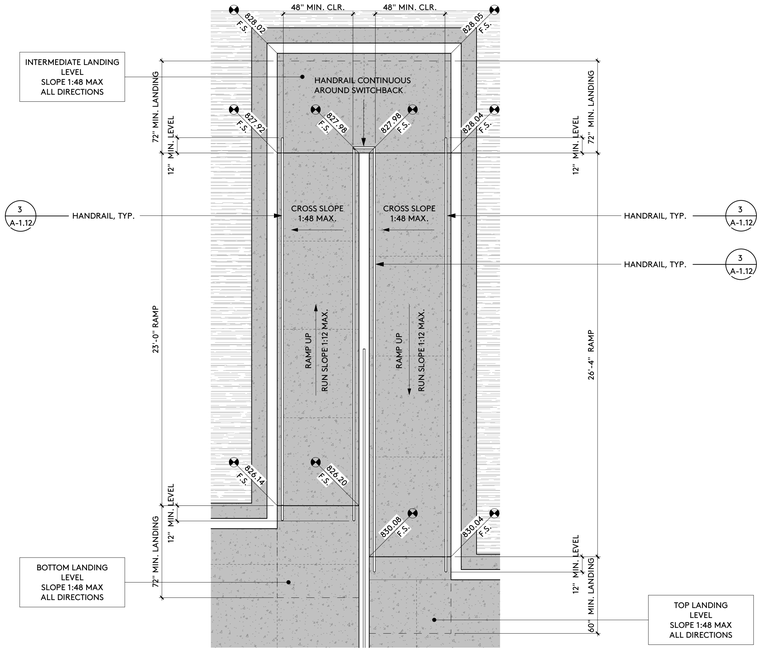

ENLARGED PLAN

1/4" = 1'-0"

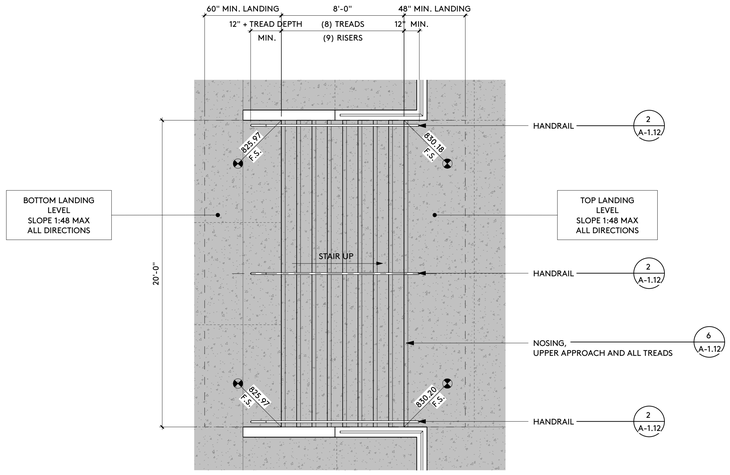

ENLARGED PLAN

1/4" = 1'-0"

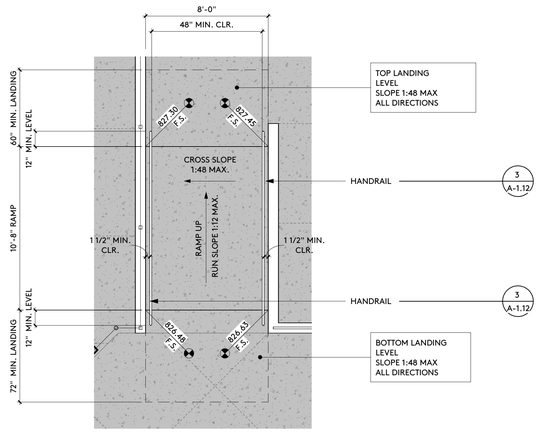

ENLARGED PLAN

1/4" = 1'-0"

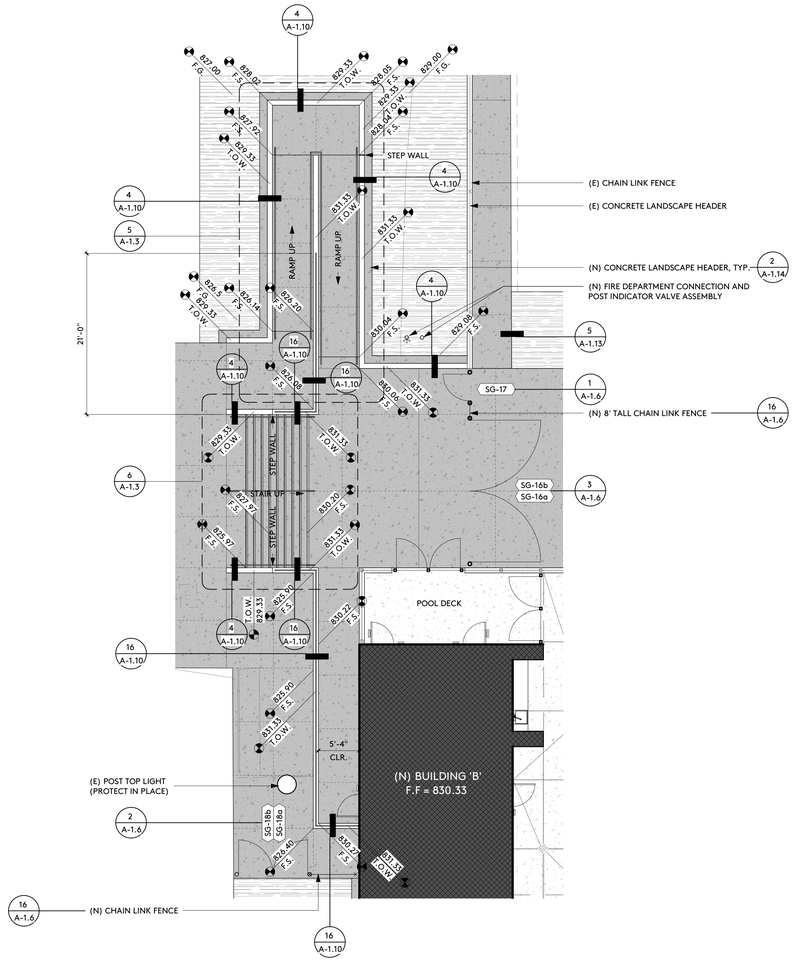

ENLARGED PLAN

1/8" = 1'-0"

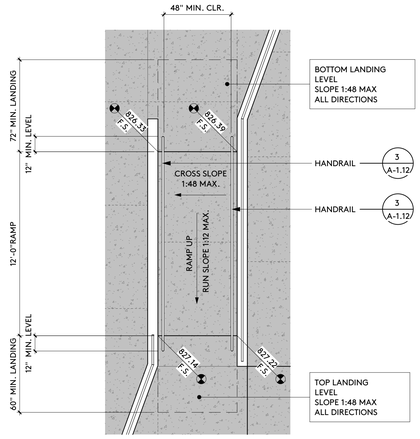

ENLARGED PLAN

1/4" = 1'-0"

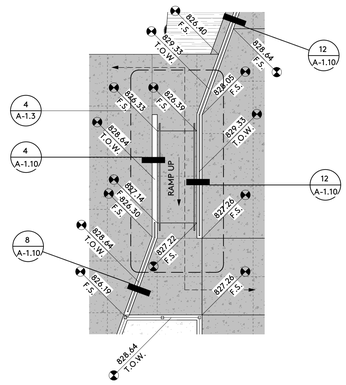

ENLARGED PLAN

1/8" = 1'-0"

1. CONTRACTORS BIDDING OR PERFORMING WORK SHALL VERIFY THE CONDITIONS OF THE SITE, INCLUDING ACCESS BEFORE SUBMITTING BID OR COMMENCING WORK AND SHALL NOTIFY THE ARCHITECT OF ANY DISCREPANCIES FOR PROMPT DIRECTION.
2. THE EXISTENCE AND LOCATION OF EXISTING UNDERGROUND UTILITIES OR STRUCTURES INDICATED OR NOT ON THE DRAWINGS ARE OBTAINED BY SEARCH OF AVAILABLE RECORDS. IT IS THE CONTRACTOR'S RESPONSIBILITY TO VERIFY EXACT LOCATIONS. THE CONTRACTOR IS REQUIRED TO TAKE PRECAUTIONARY MEASURES TO PROTECT THE UTILITIES AND OTHER STRUCTURES. ANY DAMAGE SHALL BE PROMPTLY RESTORED TO THE OWNERS SATISFACTION.
3. REFERENCE CIVIL, PLUMBING, MECHANICAL, AND ELECTRICAL DRAWINGS FOR ALL UNDERGROUND UTILITY WORK TO BE COMPLETED IN THIS CONTRACT.
4. GENERAL CONTRACTOR TO COORDINATE ALL PHASING AND UTILITY INTERRUPTIONS OF THIS PROJECT WITH THE OWNER AND ARCHITECT AS TO DO THE LEAST POSSIBLE INTERRUPTIONS. (AS-REQ'D)
5. PROVIDE CONSTRUCTION BARRICADES AS REQUIRED TO PROTECT THE PUBLIC'S HEALTH AND SAFETY INCLUDING WORK UNDER CONSTRUCTION TO THE REQUIREMENTS OF THE OWNER. COVER OPEN TRENCHES WITH ADEQUATE SOLID MATERIAL.
6. EXCAVATION AND TRENCHING SHALL COMPLY WITH THE REQUIREMENTS OF THE TESTING LAB AND JURISDICTIONAL REQUIREMENTS AT THE TIME WORK COMMENCES AND UP TO COMPLETION OF THE WORK.
7. COMPLY WITH 2019 CALIFORNIA FIRE CODE, CHAPTER 33 FOR FIRE SAFETY DURING CONSTRUCTION AND DEMOLITION.
8. FOR GRATINGS OR STRAINERS LOCATED IN THE SURFACE OF ANY PEDESTRIAN WAY IN THE PATH OF TRAVEL, THE MAXIMUM GRATE OR STRAINER OPENINGS SHALL NOT EXCEED 1/2" IN THE DIRECTION OF TRAFFIC FLOW.
9. TEMPORARY CONSTRUCTION FENCING TO BE SUPPLIED BY CONTRACTOR
10. ALL NEW WALK SURFACES ON P.O.T.'S SHALL HAVE FLUSH TRANSITIONS TO ALL ADJACENT NEW OR EXISTING WALK SURFACES IN P.O.T.'S

GENERAL NOTES

- (N) BUILDING / (E) BUILDING - IN SCOPE
- (E) BUILDING - NOT IN SCOPE
- (N) CONCRETE PAVING — 2 A-1.13
- CONTROL JOINT — 2 A-1.13
- CONSTRUCTION JOINT — 3 A-1.13
- (N) ASPHALT PAVING — 10 A-1.13
- (N) LANDSCAPE, SEE LANDSCAPE DRAWINGS
- SITE WALL - CAST-IN-PLACE CONCRETE
- SITE WALL - UNIT MASONRY
- 1 A-1.0 — DETAIL REFERENCE NUMBER / SHEET REFERENCE NUMBER
- G# — SITE GATE, SEE 'SITE DETAILS - FENCES & GATES' SHEETS
- ELEVATION DATUM
- **PATH OF TRAVEL (P.O.T)** (DSA A# AS NOTED ON PLAN)

DESIGN PROFESSIONAL IN GENERAL RESPONSIBLE CHARGE STATEMENT:
THE POT IDENTIFIED IN THESE CONSTRUCTION DOCUMENTS MEETS THE REQUIREMENTS OF THE CURRENT APPLICABLE CALIFORNIA BUILDING CODE (CBC) ACCESSIBILITY PROVISIONS FOR PATH OF TRAVEL REQUIREMENTS FOR ALTERATIONS, ADDITIONS AND STRUCTURAL REPAIRS. AS PART OF THE DESIGN OF THIS PROJECT, THE POT WAS EXAMINED AND ANY ELEMENTS, COMPONENTS OR PORTIONS OF THE POT THAT WERE DETERMINED TO BE NONCOMPLIANT WITH THE CBC HAVE BEEN IDENTIFIED AND THE CORRECTIVE WORK NECESSARY TO BRING THEM INTO COMPLIANCE HAS BEEN INCLUDED WITHIN THE SCOPE OF THIS PROJECT'S WORK THROUGH DETAILS, DRAWINGS, AND SPECIFICATIONS INCORPORATED INTO THESE CONSTRUCTION DOCUMENTS. ANY NON-COMPLIANT ELEMENTS, COMPONENTS OR PORTIONS OF THE POT THAT WILL NOT BE CORRECTED BY THIS PROJECT BASED ON VALUATION THRESHOLD LIMITATIONS OR A FINDING OF UNREASONABLE HARDSHIP ARE INDICATED IN THESE CONSTRUCTION DOCUMENTS.
DURING CONSTRUCTION, IF POT ITEMS WITHIN THE SCOPE OF THE PROJECT REPRESENTED AS CBC COMPLIANT ARE FOUND TO BE NONCONFORMING BEYOND REASONABLE CONSTRUCTION TOLERANCES, THE ITEMS SHALL BE BROUGHT INTO COMPLIANCE WITH THE CBC AS A PART OF THIS PROJECT BY MEANS OF A CONSTRUCTION CHANGE DOCUMENT.

- (E) P.O.T PER APPROVED A#03-120840
- (E) P.O.T PER APPROVED A#03-119075

SYMBOLS

IDENTIFICATION STAMP
DIV. OF THE STATE ARCHITECT
APP: 03-122664 INC:
REVIEWED FOR
SS ☑ FLS ☑ ACS ☑
DATE: 05/12/2023

pjhm architects
LA Phone: 213.278.0172 • Web: pjhm.com
LA Office: 837 Traction Avenue, #410, Los Angeles, CA 90013 • SD Phone: 760.730.5527 • OC Phone: 949.496.6191 • SD Office: 804 Pier View Way #103, Oceanside, CA 92054
OC Office: 24461 Ridge Route Drive #100, Laguna Hills, CA 92653

LICENSED ARCHITECT
RICHARD W. FRIES
NO. C15585
REN. 02/25
STATE OF CALIFORNIA

HIGHLAND HIGH SCHOOL
50M POOL & AQUATICS CENTER

KERN HIGH SCHOOL DISTRICT

SITE PLAN - ENLARGED

A-1.3

4/13/2023 11:36:12 AM

1. GATES THAT ARE PART OF THE ACCESSIBLE ROUTE SHALL MEET ALL THE REQUIREMENTS OF AN ACCESSIBLE DOOR IN COMPLIANCE WITH CBC SECTION 11B-404.
2. THE LEVERS OF LEVER ACTUATED LATCHES OR LOCKS FOR ACCESSIBLE GATES SHALL BE CURVED WITH A RETURN TO WITHIN 1/2" OF THE GATE SURFACES TO PREVENT CATCHING ON THE CLOTHING OR PERSONS. CALIFORNIA REFERENCED STANDARDS CODE. T-24 PART 12, SECTION 12-10-202, ITEM (F).
3. SWING DOORS AND GATE SURFACES WITHIN 10" OF THE FINISH FLOOR OR GROUND SHALL HAVE A SMOOTH SURFACE ON THE PUSH SIDE EXTENDING THE FULL WIDTH OF THE DOOR OR GATE. PARTS CREATING HORIZONTAL OR VERTICAL JOINTS IN THESE SURFACES SHALL BE WITHIN 1/16" OF THE SAME PLANE AS THE OTHER AND BE FREE OF SHARP OR ABRASIVE EDGES. CAVITIES CREATED BY ADDED KICK PLATES SHALL BE CAPPED. CBC SECTION 11B-404.2.10.
4. EMERGENCY EXIT AND PANIC HARDWARE PER SFM STANDARD 12-10-3, SECTION 12-10-302:
   (a) THE CROSS-BAR SHALL EXTEND ACROSS NOT LESS THAN ONE-HALF THE WIDTH OF THE DOOR/GATE.
   (d) THE ENDS OF THE CROSS-BAR SHALL BE CURVED, GUARDED OR OTHERWISE DESIGNED TO PREVENT CATCHING ON THE CLOTHING OF PERSONS DURING EGRESS.

GENERAL NOTES - GATES, AND HARDWARE 13

1/8" = 1'-0"

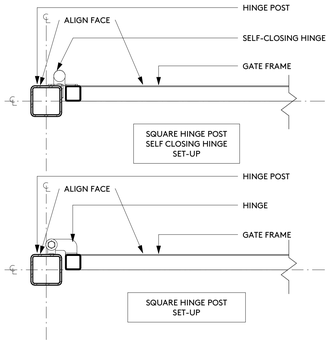

STEEL GATE - HINGE ANCHORAGE 14

1 1/2" = 1'-0"

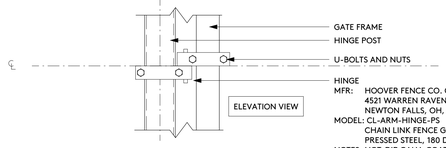

HINGE
MFR: HOOVER FENCE CO. OR EQUAL
4521 WARREN RAVENNA RD.
NEWTON FALLS, OH, 44444
MODEL: CL-ARM-HINGE-PS
CHAIN LINK FENCE GATE ARM HINGE
PRESSED STEEL, 180 DEG. SWING
NOTES: HOT-DIP GALV. COATING ALL COMPONENTS, PROVIDE U-BOLTS AND NUTS.

CL GATE - HINGE ANCHORAGE 15A

1 1/2" = 1'-0"

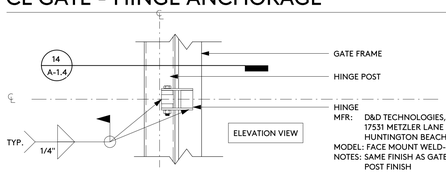

HINGE
MFR: D&D TECHNOLOGIES, OR EQUAL
17531 METZLER LANE
HUNTINGTON BEACH, CA, 92647
MODEL: FACE MOUNT WELD-ON, CI3050
NOTES: SAME FINISH AS GATE FRAME/HINGE POST FINISH

STEEL GATE - HINGE ANCHORAGE 15B

1 1/2" = 1'-0"

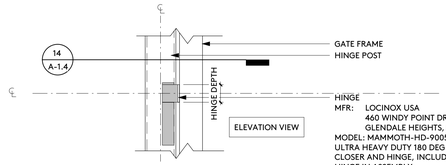

HINGE
MFR: LOCINOX USA
460 WINDY POINT DR.
GLENDALE HEIGHTS, IL, 60139
MODEL: MAMMOTH-HD-9005
ULTRA HEAVY DUTY 180 DEG HYDRAULIC GATE CLOSER AND HINGE, INCLUDED TOP & BOTTOM HINGE IN ASSEMBLY
RAL COLOR: RAL 9005

STEEL GATE - HINGE ANCHORAGE 16A

1 1/2" = 1'-0"

1. WELDING PROCEDURES, ELECTRODES AND WELDER QUALIFICATIONS SHALL CONFORM TO THE "CODE FOR WELDING IN BUILDING CONSTRUCTION", AMERICAN WELDING SOCIETY (AWS), D1.1 AND THE AISC "SPECIFICATIONS FOR THE DESIGN, FABRICATION AND ERECTION OF STRUCTURAL STEEL FOR BUILDINGS".
2. ALL WELDERS SHALL HAVE EVIDENCE OF PASSING THE AWS STANDARD QUALIFICATION TESTS, AND SHALL BE CERTIFIED FOR THE WORK THEY ARE PERFORMING.
3. PROJECT WELDING SHALL BE PERFORMED ONLY IN ACCORDANCE WITH WELDING PROCEDURE SPECIFICATIONS (WPS) SUBMITTED BY THE CONTRACTOR AND REVIEWED BY THE EOR AND PROJECT WELDING INSPECTOR. THE WPS SHALL BE IN ACCORDANCE WITH AWS D1.1-D1.4 CURRENT EDITION.
4. WELDING OF STRUCTURAL STEEL SHALL BE PERFORMED PER AWS D1.1 USING E70XX ELECTRODES UNLESS OTHERWISE NOTED.
5. WELDING OF REINFORCING BARS SHALL BE PERFORMED PER AWS D1.4 USING E90XX ELECTRODES.
6. WELDING OF METAL DECK AND LIGHT GAGE STEEL SHALL BE IN ACCORDANCE WITH AWS D1.3.
7. ALL EXPOSED WELDS ON ARCHITECTURALLY EXPOSED STRUCTURAL STEEL (AESS) SHALL COMPLY WITH AISC CODE OF STANDARD PRACTICE, SECTION 10.
8. FIELD WELDS HAVE BEEN INDICATED WHERE THEY ARE EXPECTED TO OCCUR. THE CONTRACTOR SHALL DETERMINE THE ACTUAL FIELD WELDING NECESSARY TO COMPLETE THE PROJECT AND INCLUDE ALL ASSOCIATED COSTS WITHIN THE BASE BID

GENERAL NOTES - WELDING 9

1/8" = 1'-0"

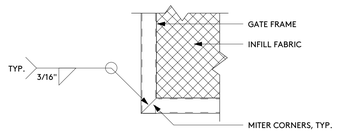

GATE FRAME CORNER 10A

1 1/2" = 1'-0"

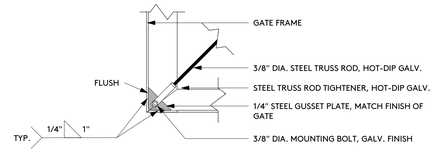

TRUSS ROD ATTACHMENT 10B

1 1/2" = 1'-0"

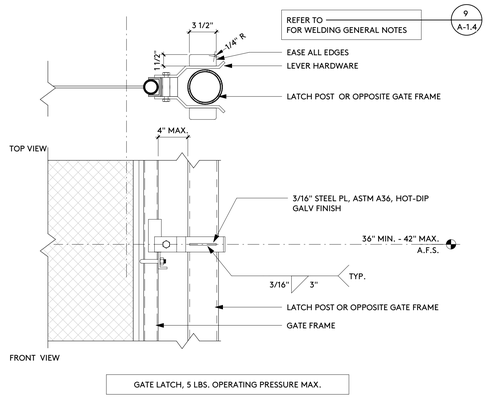

GATE HARDWARE 12

1 1/2" = 1'-0"

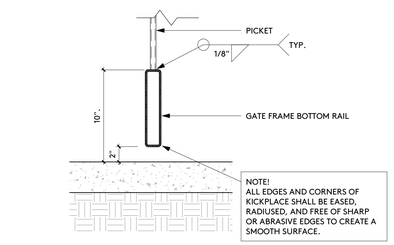

KICK PLATE ATTACHMENT 5

1 1/2" = 1'-0"

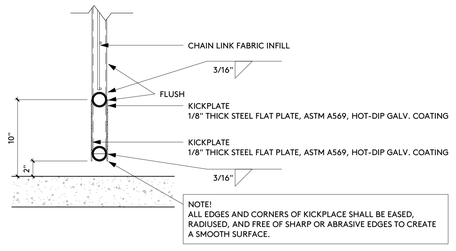

KICK PLATE ATTACHMENT 6

1 1/2" = 1'-0"

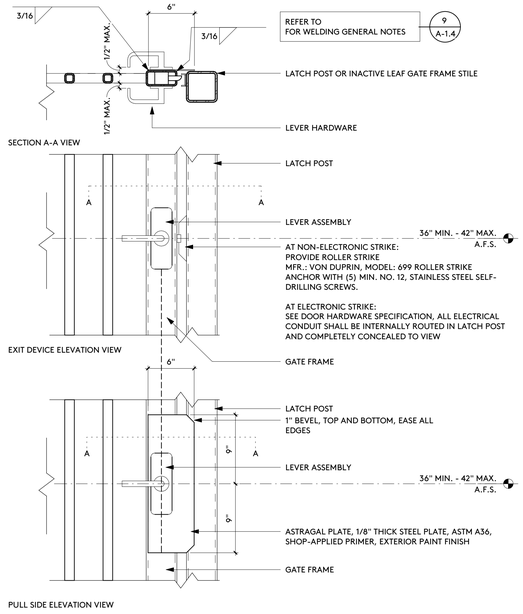

GATE HARDWARE 8

1 1/2" = 1'-0"

GATE SCHEDULE AS FOLLOWS:

GATE NUMBER	TYPE	HARDWARE GROUP	EXIT DEVICE REQUIRED	MATERIAL	FINISH
SG-1a	VEHICLE ACCESS	SG1	NO	STEEL	SHOP PRIME/FIELD PAINT
SG-1b	VEHICLE ACCESS	SG1	NO	STEEL	SHOP PRIME/FIELD PAINT
SG-2a	VEHICLE ACCESS	SG1	NO	STEEL	SHOP PRIME/FIELD PAINT
SG-2b	VEHICLE ACCESS	SG1	NO	STEEL	SHOP PRIME/FIELD PAINT
SG-3	PEDESTRIAN ACCESS	SG2	NO	STEEL	SHOP PRIME/FIELD PAINT
SG-4a	SERVICE	SG1	NO	STEEL	SHOP PRIME/FIELD PAINT
SG-4b	SERVICE	SG1	NO	STEEL	SHOP PRIME/FIELD PAINT
SG-5a	POOL ENCLOSURE EXIT	SG6	YES	STEEL	SHOP PRIME/FIELD PAINT
SG-5b	POOL ENCLOSURE EXIT	SG6	YES	STEEL	SHOP PRIME/FIELD PAINT
SG-6a	POOL ENCLOSURE EXIT	SG3	YES	STEEL	SHOP PRIME/FIELD PAINT
SG-6b	POOL ENCLOSURE EXIT	SG3	YES	STEEL	SHOP PRIME/FIELD PAINT
SG-7	HORZ. SLIDING SERVICE	SG4	NO	ALUMINUM	POWDER COAT
SG-8	HORZ. SLIDING SERVICE	SG4	NO	ALUMINUM	POWDER COAT
SG-9a	SERVICE	SG5	NO	STEEL	SHOP PRIME/FIELD PAINT
SG-9b	SERVICE	SG5	NO	STEEL	SHOP PRIME/FIELD PAINT
SG-10a	POOL ENCLOSURE EXIT	SG6	YES	STEEL	SHOP PRIME/FIELD PAINT
SG-10b	POOL ENCLOSURE EXIT	SG6	YES	STEEL	SHOP PRIME/FIELD PAINT
SG-11a	POOL ENCLOSURE EXIT	SG3	YES	STEEL	SHOP PRIME/FIELD PAINT
SG-11b	POOL ENCLOSURE EXIT	SG3	YES	STEEL	SHOP PRIME/FIELD PAINT
SG-12	HORZ. SLIDING SERVICE	SG4	NO	ALUMINUM	POWDER COAT
SG-13	HORZ. SLIDING SERVICE	SG4	NO	ALUMINUM	POWDER COAT
SG-14a	POOL ENCLOSURE EXIT	SG6	YES	STEEL	SHOP PRIME/FIELD PAINT
SG-14b	POOL ENCLOSURE EXIT	SG6	YES	STEEL	SHOP PRIME/FIELD PAINT
SG-15a	POOL ENCLOSURE EXIT	SG6	YES	STEEL	SHOP PRIME/FIELD PAINT
SG-15b	POOL ENCLOSURE EXIT	SG6	YES	STEEL	SHOP PRIME/FIELD PAINT
SG-16a	VEHICLE ACCESS	SG7	NO	CHAIN LINK FENCING	HOT-DIP GALV.
SG-16b	VEHICLE ACCESS	SG7	NO	CHAIN LINK FENCING	HOT-DIP GALV.
SG-17	PEDESTRIAN ACCESS	SG8	NO	CHAIN LINK FENCING	HOT-DIP GALV.
SG-18a	SERVICE	SG7	NO	CHAIN LINK FENCING	HOT-DIP GALV.
SG-18b	SERVICE	SG7	NO	CHAIN LINK FENCING	HOT-DIP GALV.
SG-19a	SERVICE	SG5	NO	STEEL	SHOP PRIME/FIELD PAINT
SG-19b	SERVICE	SG5	NO	STEEL	SHOP PRIME/FIELD PAINT
SG-20	PEDESTRIAN ACCESS	SG8	NO	CHAIN LINK FENCING	HOT-DIP GALV.

1

GATE SCHEDULE 2

1/8" = 1'-0"

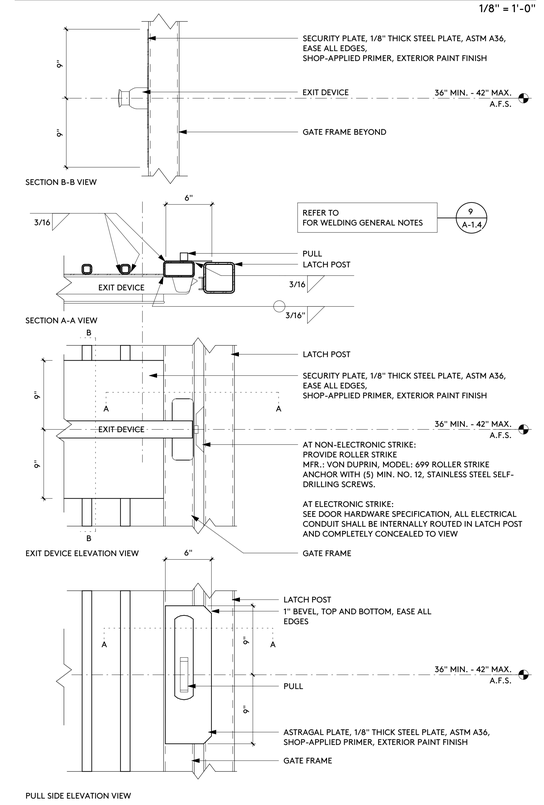

GATE HARDWARE 4

1 1/2" = 1'-0"

IDENTIFICATION STAMP
DIV. OF THE STATE ARCHITECT
APP: 03-122664 INC:
REVIEWED FOR
SS ☑ FLS ☑ ACS ☑
DATE: 05/12/2023

pjhm architects
LICENSED ARCHITECT
THOMAS W. PHILLIPS
NO. C15585
REN. 02/25
STATE OF CALIFORNIA

HIGHLAND HIGH SCHOOL
50M POOL & AQUATICS CENTER

KERN HIGH SCHOOL DISTRICT

1 ADDENDUM NO. 1

SITE DETAILS - FENCES & GATES

A-1.4

OC Office: 24461 Ridge Route Drive #100, Laguna Hills, CA 92653 • OC Phone: 949.496.6191 • SD Office: 804 Pier View Way #103, Oceanside, CA 92054 • SD Phone: 760.730.5527 • LA Office: 837 Traction Avenue, #410, Los Angeles, CA 90013 • LA Phone: 213.278.0172 • Web: pjhm.com

4/13/2023 9:05:07 AM

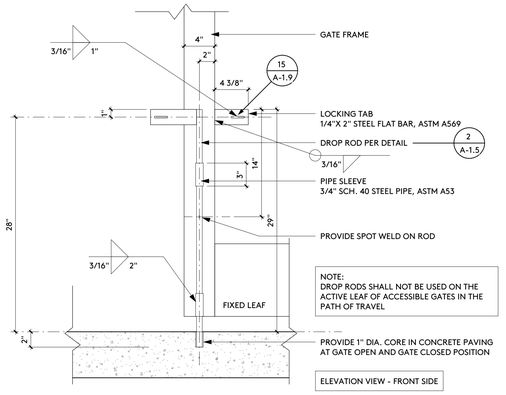

GATE HARDWARE - DROP ROD 5

1 1/2" = 1'-0"

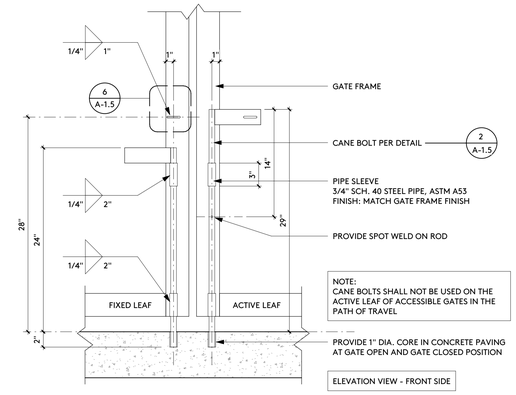

GATE HARDWARE - CANE BOLT 1

1 1/2" = 1'-0"

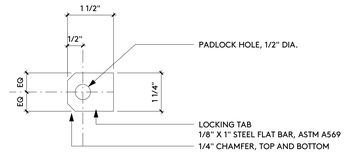

GATE HARDWARE - LOCKING TAB PROFILE 6

6" = 1'-0"

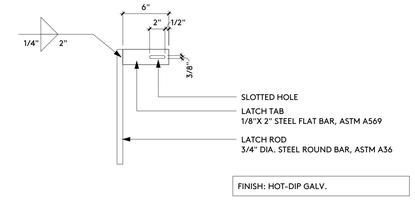

GATE HARDWARE - CANE BOLT 2

1 1/2" = 1'-0"

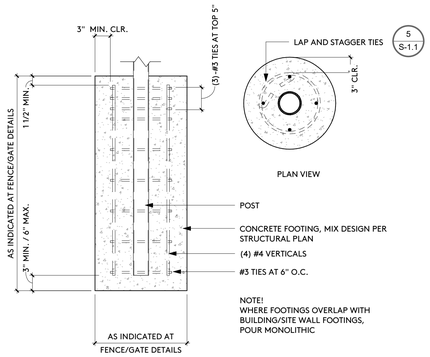

FOOTING REINFORCEMENT 4

1" = 1'-0"

IDENTIFICATION STAMP
DIV. OF THE STATE ARCHITECT
APP: 03-122664 INC:
REVIEWED FOR
SS ☑ FLS ☑ ACS ☑
DATE: 05/12/2023

pjhm architects

LICENSED ARCHITECT
THOMAS W. PHILLIPS
NO. C15585
REN. 02/25
STATE OF CALIFORNIA

OC Office: 24461 Ridge Route Drive #100, Laguna Hills, CA 92653 • OC Phone: 949.496.6191 • SD Office: 804 Pier View Way #103, Oceanside, CA 92054 • SD Phone: 760.730.5527 • LA Office: 837 Traction Avenue, #410, Los Angeles, CA 90013 • LA Phone: 213.278.0172 • Web: pjhm.com

HIGHLAND HIGH SCHOOL
50M POOL & AQUATICS CENTER

KERN HIGH SCHOOL DISTRICT

SITE DETAILS - FENCES & GATES

A-1.5

4/13/2023 9:05:08 AM

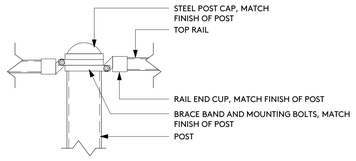

DETAIL 13A

1 1/2" = 1'-0"

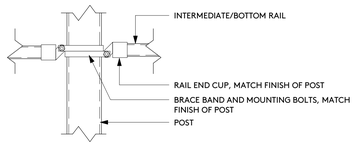

DETAIL 13B

1 1/2" = 1'-0"

NOTE! CHAIN LINK FENCES & GATES 9A

1/8" = 1'-0"

1. ALL GATE FRAMES/COMPONENTS SHALL BE: A.E.S.S. LEVEL 3
2. INFILL PANEL ℰ=50% PER ASCE 7, SECTION 26.3.
NO MEMBRANE OR MATERIAL CAN BE ATTACHED OR HUNG TO THE NETTING OR FENCING THAT WOULD EXCEED THE ℰ ABOVE
3. GATE FRAME ASSEMBLY SHALL BE FULLY WELDED, WELDS ALL AROUND WITH FIILET WELDS, SEE WELDING NOTES (9 / A-1.4)
4. GATE FRAME ASSEMBLY SHALL BE HOT-DIP GALVANIZED AFTER FABRICATION, COLD GALVANIZING WILL NOT BE PERMITTED.
5. PRODUCT DATA AND SHOP DRAWINGS ARE REQUIRED. APPROVED SUBMITTALS ARE REQUIRED PRIOR TO FABRICATION.
6. PIPES SIZES ARE NOMINAL, UNLESS NOTED OTHERWISE.

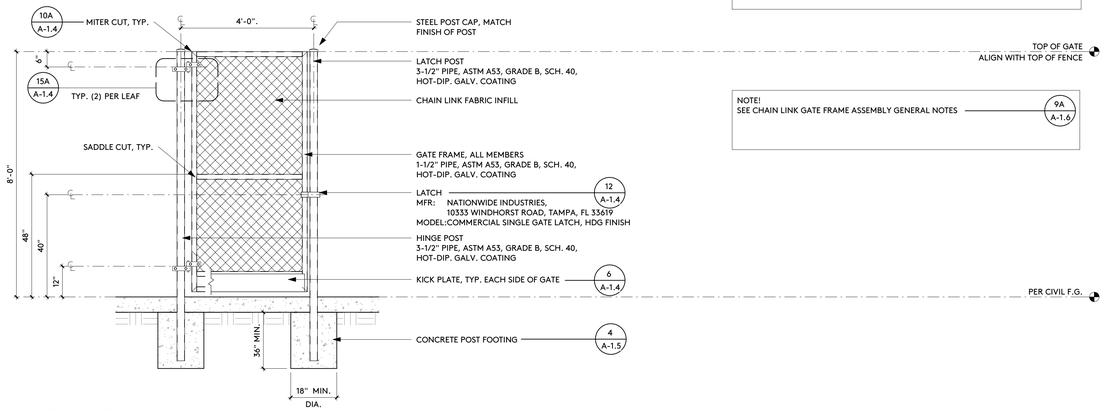

SITE GATE (4'-0") 1

1/2" = 1'-0"

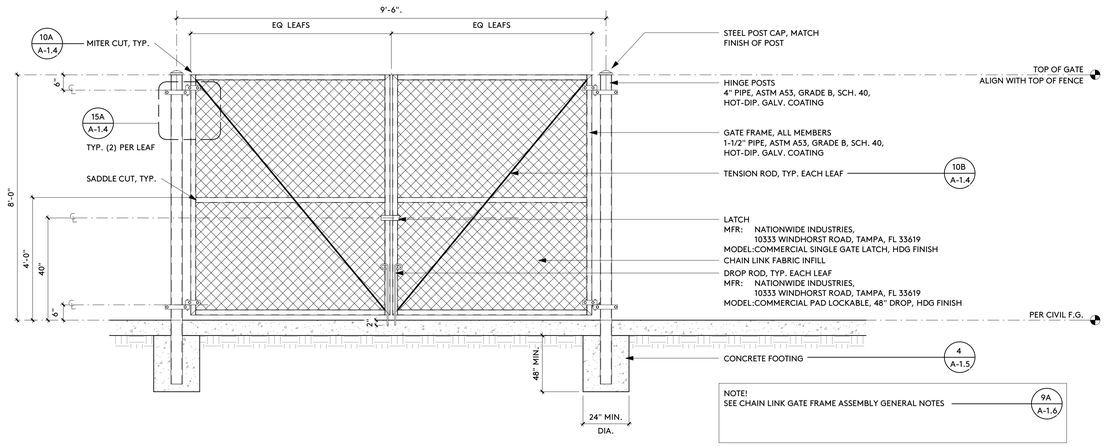

SITE GATE (9'-6") 2

1/2" = 1'-0"

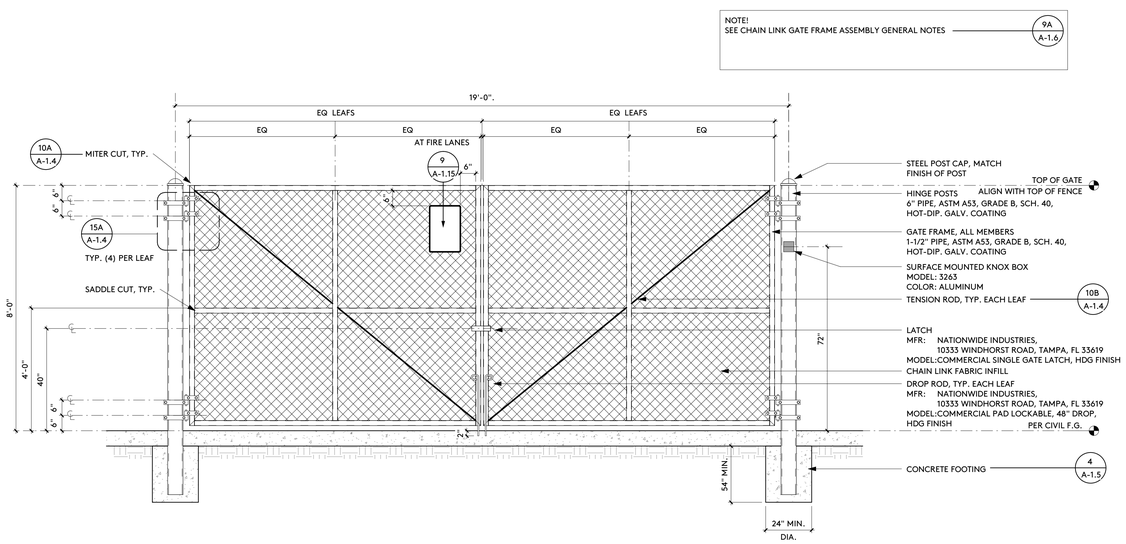

SITE GATE (19'-0") 3

1/2" = 1'-0"

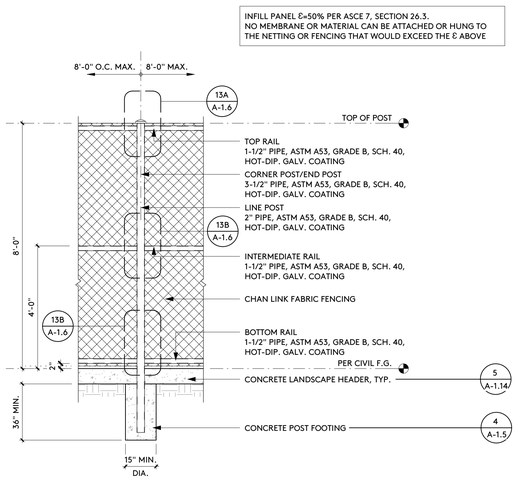

CHAIN LINK FENCE 16

1/2" = 1'-0"

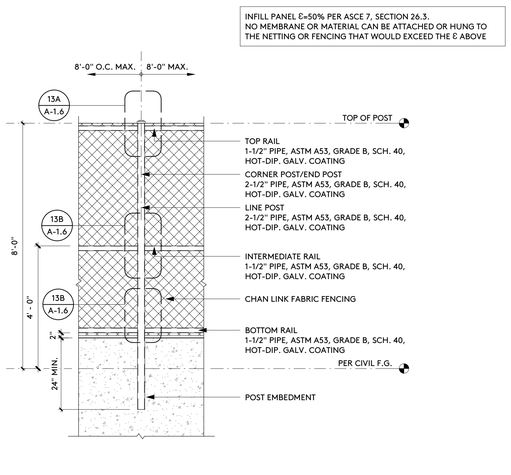

CHAIN LINK FENCE 12

1/2" = 1'-0"

IDENTIFICATION STAMP
DIV. OF THE STATE ARCHITECT
APP: 03-122664 INC:
REVIEWED FOR
SS ☑ FLS ☑ ACS ☑
DATE: 05/12/2023

pjhm architects

LICENSED ARCHITECT
BARBARA W. PARRISH
NO. C15585
REN. 02/25
STATE OF CALIFORNIA

pjhm.com • Web: 213.278.0172 • LA Phone: 837 Traction Avenue, #410, Los Angeles, CA 90013 • LA Office: 760.730.5527 • SD Phone: 804 Pier View Way #103, Oceanside, CA 92054 • SD Office: 949.496.6191 • OC Phone: 24461 Ridge Route Drive #100, Laguna Hills, CA 92653 • OC Office:

HIGHLAND HIGH SCHOOL
50M POOL & AQUATICS CENTER

KERN HIGH SCHOOL DISTRICT

SITE DETAILS - FENCES & GATES

A-1.6

4/13/2023 9:03:08 AM

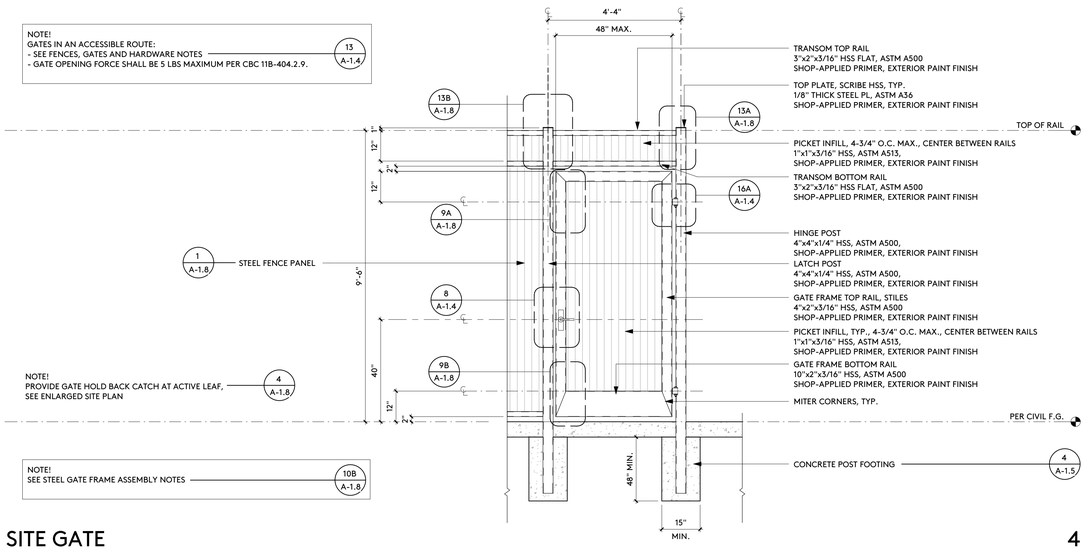

SITE GATE 4

1/2" = 1'-0"

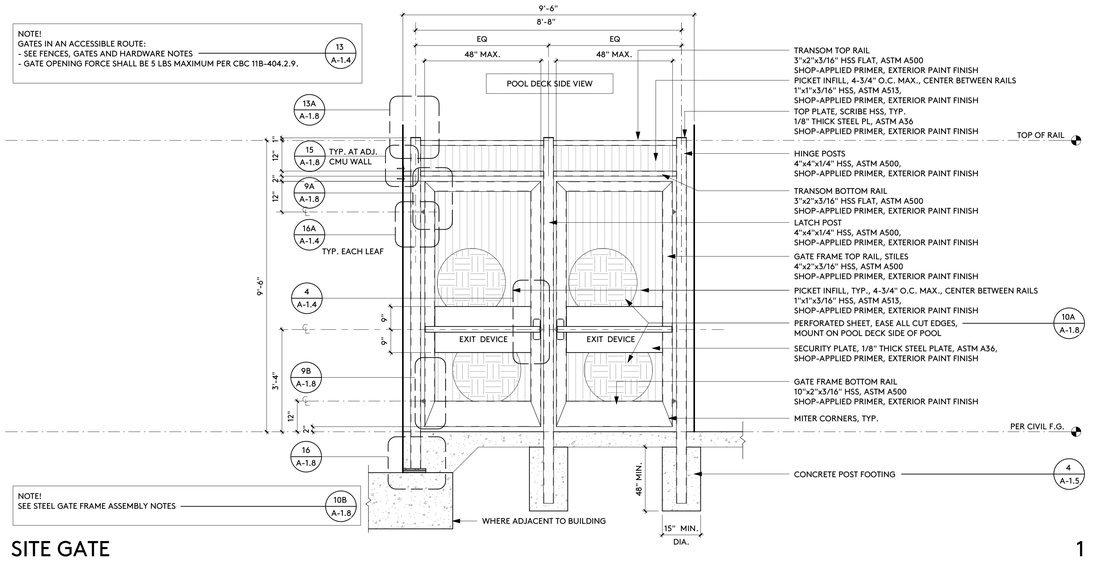

SITE GATE 1

1/2" = 1'-0"

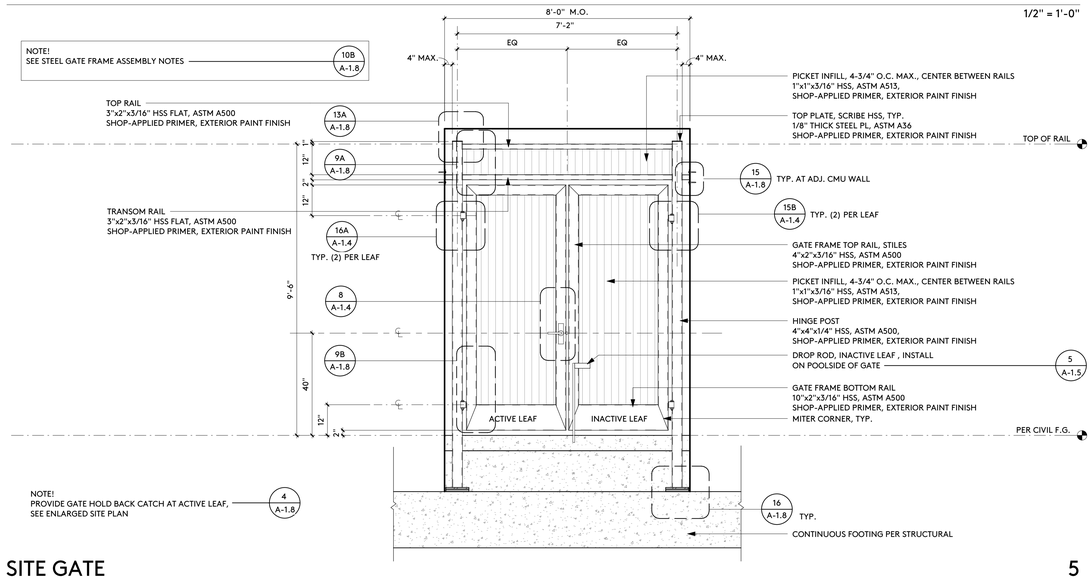

SITE GATE 5

1/2" = 1'-0"

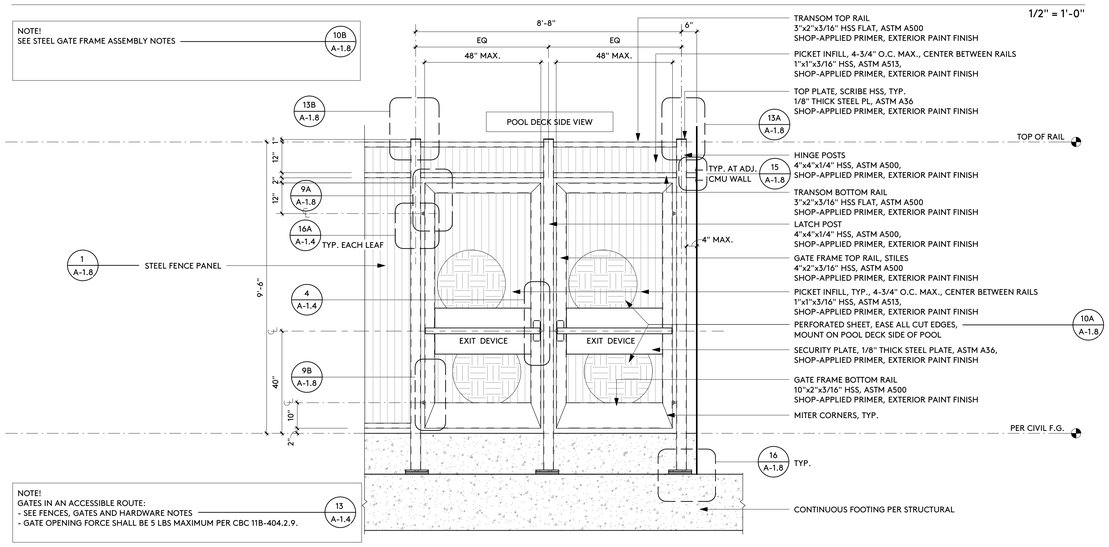

SITE GATE 2

1/2" = 1'-0"

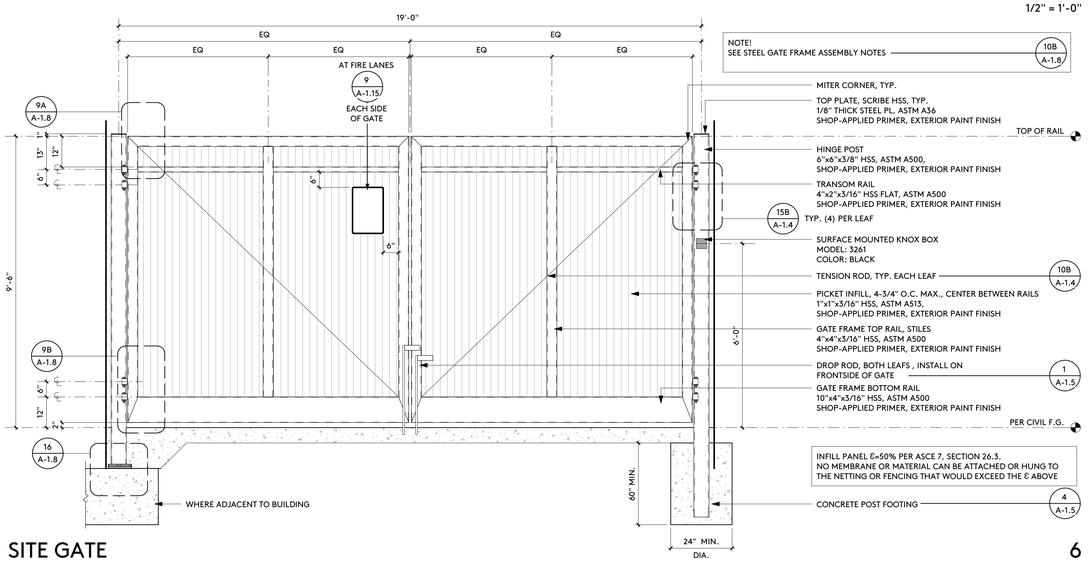

SITE GATE 6

1/2" = 1'-0"

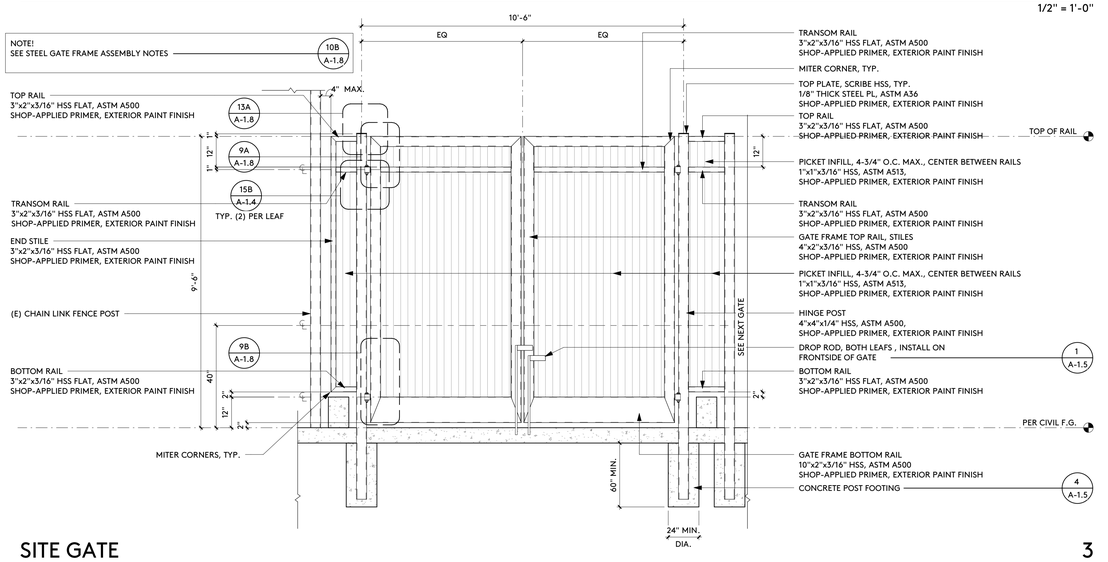

SITE GATE 3

1/2" = 1'-0"

IDENTIFICATION STAMP
DIV. OF THE STATE ARCHITECT
APP: 03-122664 INC:
REVIEWED FOR
SS ☑ FLS ☑ ACS ☑
DATE: 05/12/2023

pjhm architects
LICENSED ARCHITECT
THOMAS W. PHILLIPS
REN. 02/25
STATE OF CALIFORNIA
OC Office: 24461 Ridge Route Drive #100, Laguna Hills, CA 92653 • LA Office: 837 Traction Avenue, #410, Los Angeles, CA 90013 • SD Office: 804 Pier View Way #103, Oceanside, CA 92054 • Web: pjhm.com
OC Phone: 949.496.6191 • SD Phone: 760.730.5527

HIGHLAND HIGH SCHOOL
50M POOL & AQUATICS CENTER

KERN HIGH SCHOOL DISTRICT

SITE DETAILS - FENCES & GATES

A-1.7

4/13/2023 9:03:09 AM

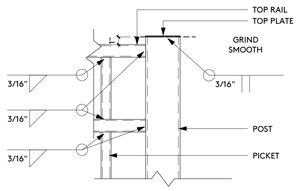

DETAIL 13A

1 1/2" = 1'-0"

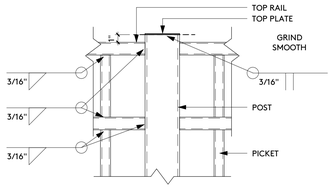

DETAIL 13B

1 1/2" = 1'-0"

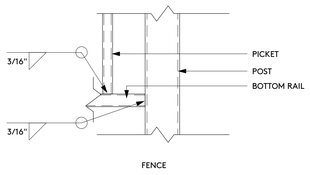

DETAIL 14A

1 1/2" = 1'-0"

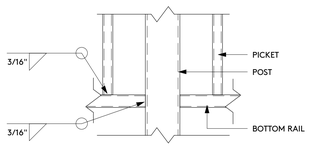

DETAIL 14B

1 1/2" = 1'-0"

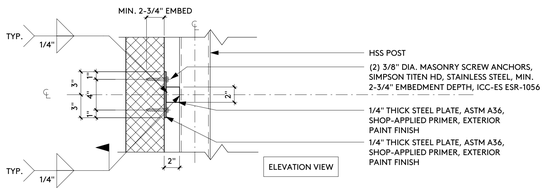

STEEL GATE - FRAME ANCHORAGE 15

1 1/2" = 1'-0"

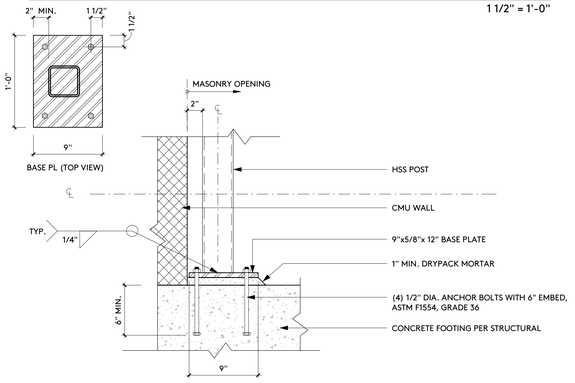

STEEL GATE - HINGE ANCHORAGE 16

1 1/2" = 1'-0"

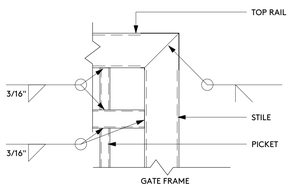

DETAIL 9A

1 1/2" = 1'-0"

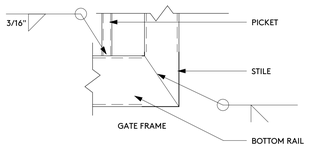

DETAIL 9B

1 1/2" = 1'-0"

MANUFACTURER: DIAMOND PERFORATED METALS OR EQUAL
7300 W. SUNNYVIEW AVE., VISALIA, CA 93291
MATERIAL: STAINLESS STEEL, 304 ALLOY
GAUGE: 14
PERF. PATTERN: 1/4" DIAMETER, 5/16" STAGGERED CENTERS
HOLES PER SQ IN: 11.82
OPEN AREA: 58%
ATTACHMENT: #12-14 x 1" SELF-DRILLING PANCAKE HEAD 410 STAINLESS STEEL SCREWS AT 12" O.C. MAX. EACH WAY, ALIGN WITH PICKETS

PERFORATION SPECIFICATION 10A

1/8" = 1'-0"

1. ALL FENCE AND GATE FRAMES/COMPONENTS SHALL BE: A.E.S.S. LEVEL 3
2. ALL FENCE AND GATE FRAME ASSEMBLIES SHALL BE FULLY WELDED, WELDS ALL AROUND WITH FIILET WELDS, SEE WELDING NOTES — 9 / A-1.4
3. ALL FENCE AND GATE FRAME ASSEMBLIES SHALL BE SHOP-PRIMED AND FIELD PAINTED (TOP COATS)
4. PRODUCT DATA AND SHOP DRAWINGS ARE REQUIRED. APPROVED SUBMITTALS ARE REQUIRED PRIOR TO FABRICATION.

NOTE! STEEL FENCES AND GATES ASSEMBLY 10B

1/8" = 1'-0"

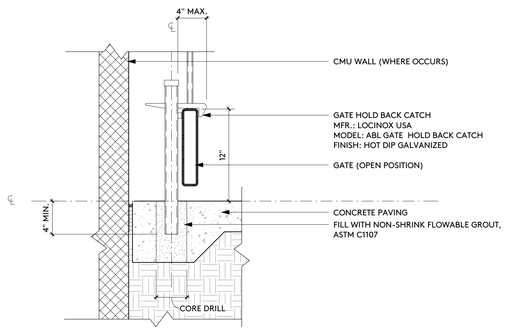

GATE HOLD-OPEN ANCHORAGE 4

1 1/2" = 1'-0"

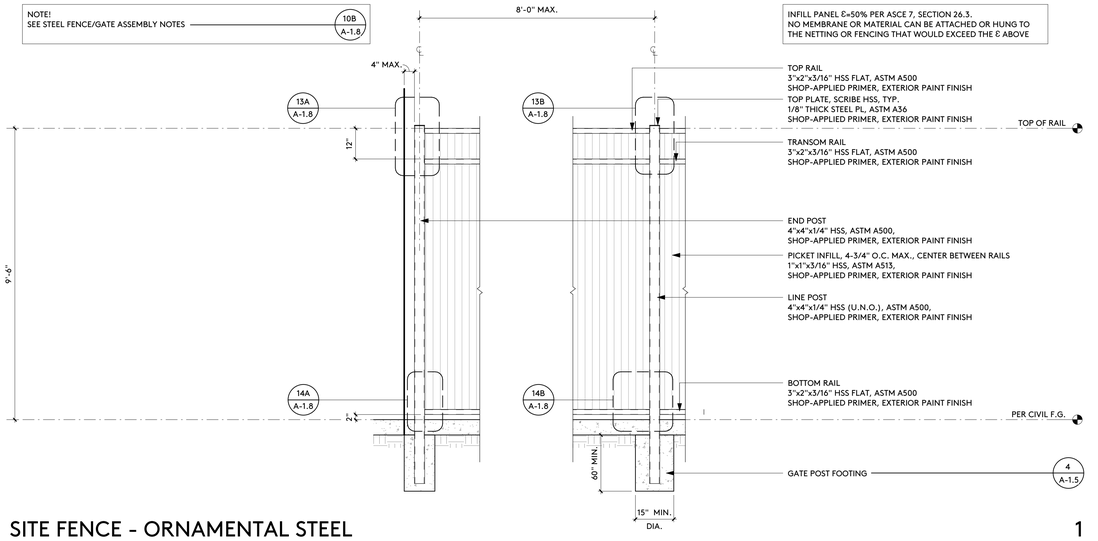

SITE FENCE - ORNAMENTAL STEEL 1

1/2" = 1'-0"

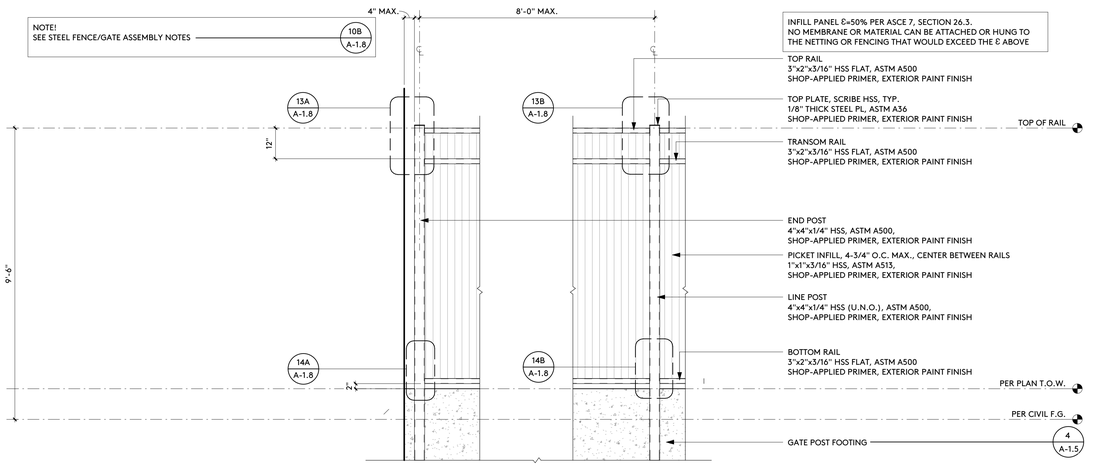

SITE FENCE - ORNAMENTAL STEEL 2

1/2" = 1'-0"

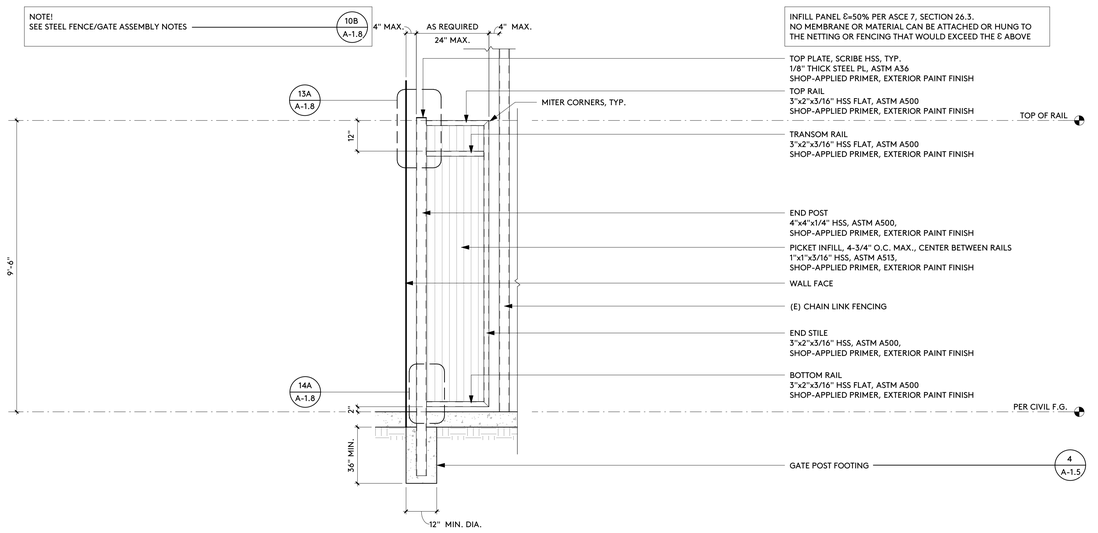

SITE FENCE - ORNAMENTAL STEEL 3

1/2" = 1'-0"

IDENTIFICATION STAMP
DIV. OF THE STATE ARCHITECT
APP: 03-122664 INC:
REVIEWED FOR
SS ☑ FLS ☑ ACS ☑
DATE: 05/12/2023

pjhm architects
LICENSED ARCHITECT
THOMAS W. PHILLIPS
NO. C 15585
REN. 02/25
STATE OF CALIFORNIA

HIGHLAND HIGH SCHOOL
50M POOL & AQUATICS CENTER

KERN HIGH SCHOOL DISTRICT

SITE DETAILS - FENCES & GATES

A-1.8

OC Office: 24461 Ridge Route Drive #100, Laguna Hills, CA 92653 • OC Phone: 949.496.6191 • SD Office: 804 Pier View Way #103, Oceanside, CA 92054 • SD Phone: 760.730.5527 • LA Office: 837 Traction Avenue, #410, Los Angeles, CA 90013 • LA Phone: 213.278.0172 • Web: pjhm.com

4/13/2023 9:03:10 AM

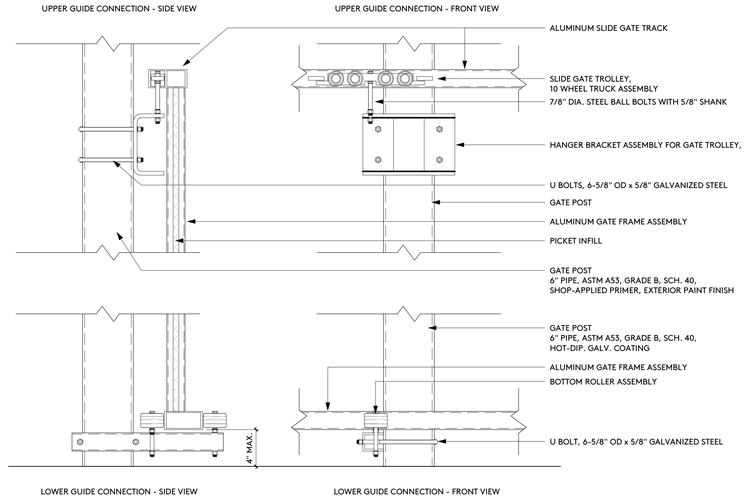

SITE GATE HARDWARE 10

1 1/2" = 1'-0"

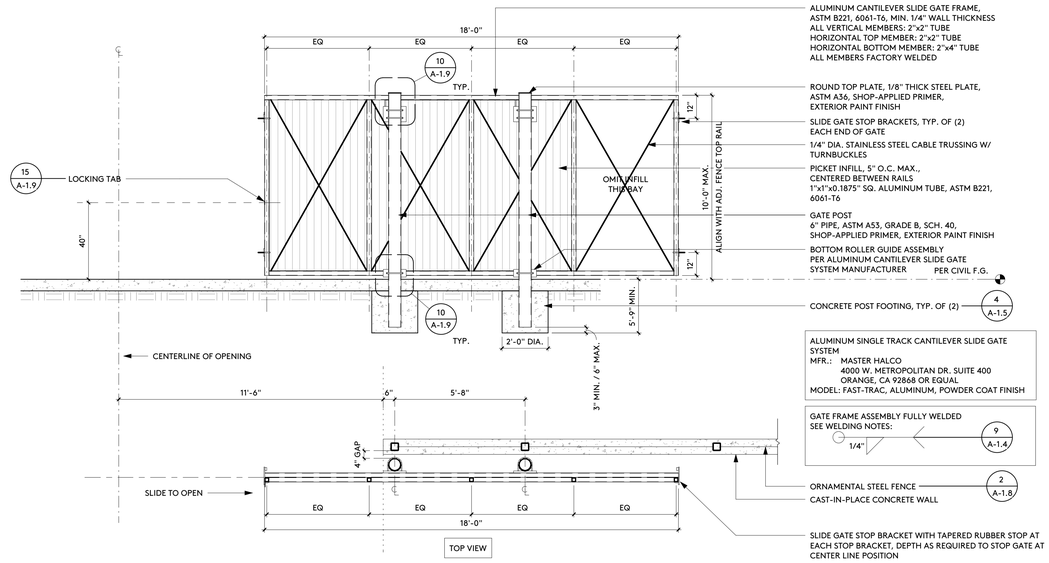

SITE GATE 2

3/8" = 1'-0"

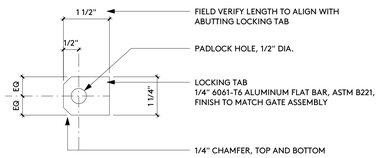

GATE HARDWARE - LOCKING TAB PROFILE 15

6" = 1'-0"

IDENTIFICATION STAMP
DIV. OF THE STATE ARCHITECT
APP: 03-122664 INC:
REVIEWED FOR
SS ☑ FLS ☑ ACS ☑
DATE: 05/12/2023

pjhm architects

LICENSED ARCHITECT THOMAS W. KRUSE NO. C15585 REN. 02/25 STATE OF CALIFORNIA

HIGHLAND HIGH SCHOOL
50M POOL & AQUATICS CENTER

KERN HIGH SCHOOL DISTRICT

SITE DETAILS - FENCES & GATES

A-1.9

OC Office: 24461 Ridge Route Drive #100, Laguna Hills, CA 92653 • OC Phone: 949.496.6191 • SD Office: 804 Pier View Way #103, Oceanside, CA 92054 • SD Phone: 760.730.5527 • LA Office: 837 Traction Avenue, #410, Los Angeles, CA 90013 • LA Phone: 213.278.0172 • Web: pjhm.com

4/13/2023 9:03:11 AM

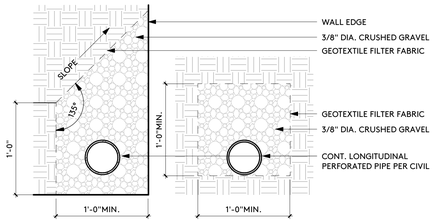

SITE WALL SUB-GRADE DRAIN 5

1 1/2" = 1'-0"

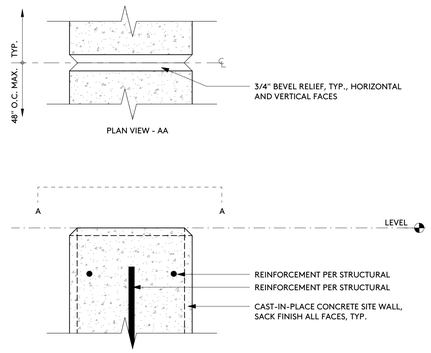

SITE WALL DETAIL 1

3" = 1'-0"

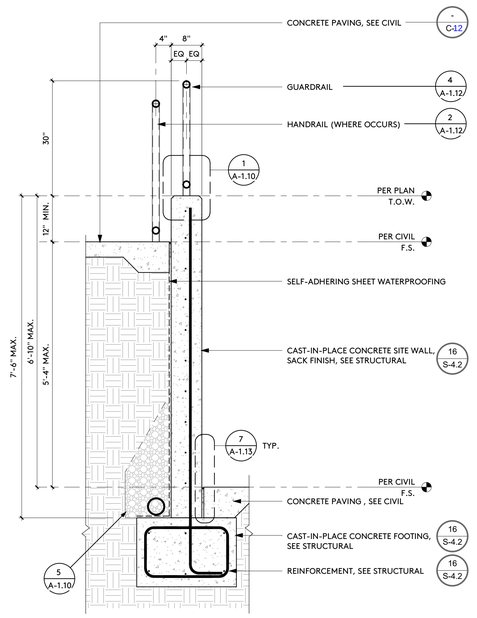

SITE WALL SECTION 16

3/4" = 1'-0"

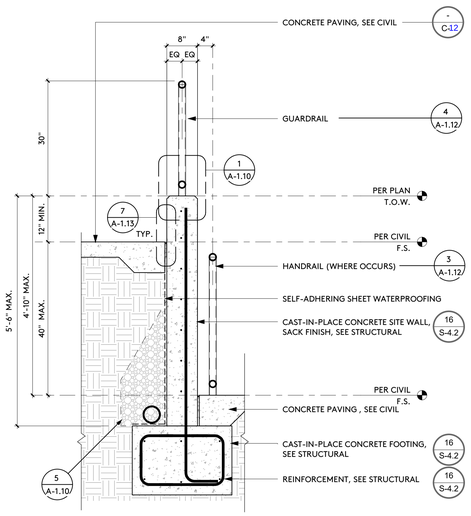

SITE WALL SECTION 12

3/4" = 1'-0"

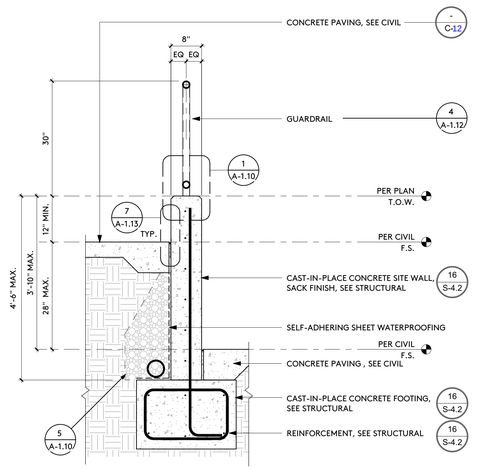

SITE WALL SECTION 8

3/4" = 1'-0"

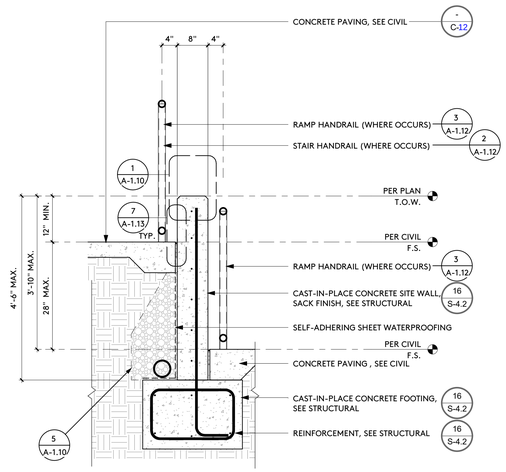

SITE WALL SECTION 4

3/4" = 1'-0"

4/13/2023 9:03:11 AM

IDENTIFICATION STAMP
DIV. OF THE STATE ARCHITECT
APP: 03-122664 INC:
REVIEWED FOR
SS ☑ FLS ☑ ACS ☑
DATE: 05/12/2023

pjhm architects

LICENSED ARCHITECT
THOMAS W. FRANK
NO. C15585
REN. 02/25
STATE OF CALIFORNIA

OC Office: 24461 Ridge Route Drive #100, Laguna Hills, CA 92653 • SD Phone: 760.730.5527 • LA Office: 837 Traction Avenue, #410, Los Angeles, CA 90013 • OC Phone: 949.496.6191 • LA Phone: 213.278.0172 • SD Office: 804 Pier View Way #103, Oceanside, CA 92054 • Web: pjhm.com

HIGHLAND HIGH SCHOOL
50M POOL & AQUATICS CENTER

KERN HIGH SCHOOL DISTRICT

SITE DETAILS - SITE WALLS

A-1.10

IDENTIFICATION STAMP
DIV. OF THE STATE ARCHITECT
APP: 03-122664 INC:
REVIEWED FOR
SS ☑ FLS ☑ ACS ☑
DATE: 05/12/2023

pjhm architects

LICENSED ARCHITECT
THOMAS W. PHILLIPS
REN. 02/25
STATE OF CALIFORNIA

SD Phone: 760.730.5527 • **LA** Office: 837 Traction Avenue, #410, Los Angeles, CA 90013 • **LA** Phone: 213.278.0172 • Web: pjhm.com

OC Office: 24461 Ridge Route Drive #100, Laguna Hills, CA 92653 • **OC** Phone: 949.496.6191 • **SD** Office: 804 Pier View Way #103, Oceanside, CA 92054

KERN HIGH SCHOOL DISTRICT

HIGHLAND HIGH SCHOOL
50M POOL & AQUATICS CENTER

SITE DETAILS - SITE WALLS

A-1.11

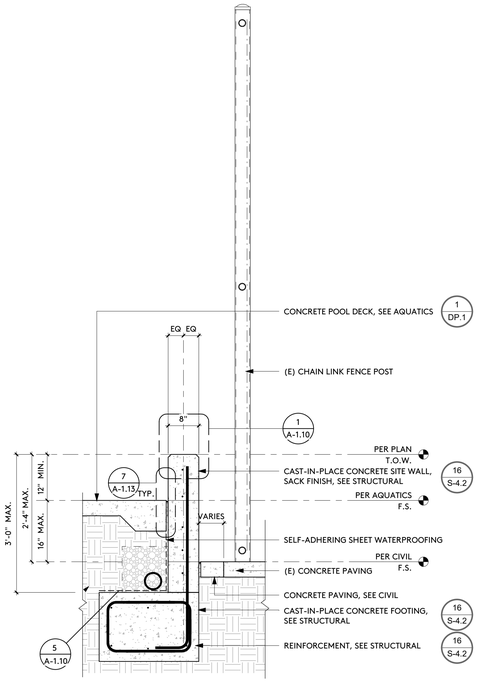

SITE WALL SECTION 16

3/4" = 1'-0"

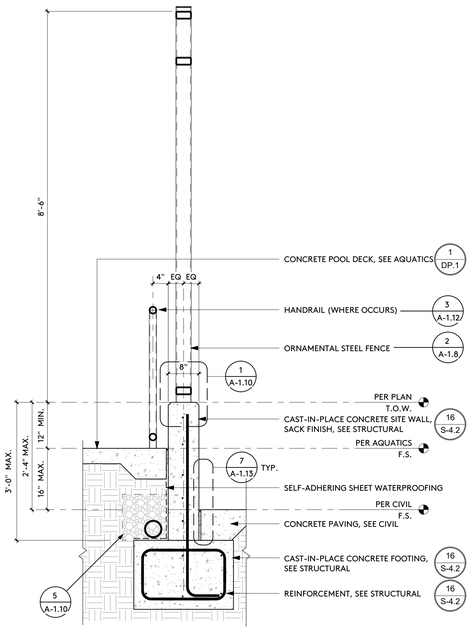

SITE WALL SECTION 12

3/4" = 1'-0"

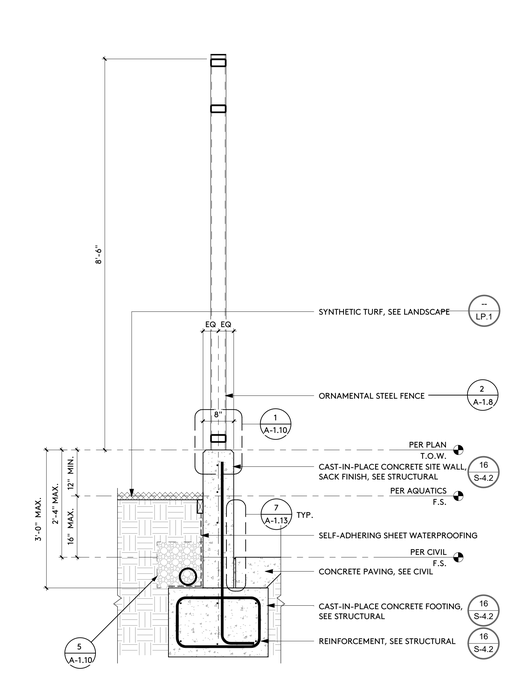

SITE WALL SECTION 8

3/4" = 1'-0"

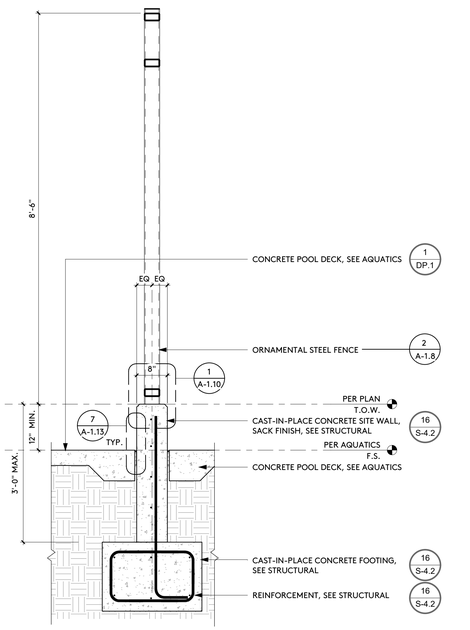

SITE WALL SECTION 4

3/4" = 1'-0"

4/13/2023 9:03:12 AM

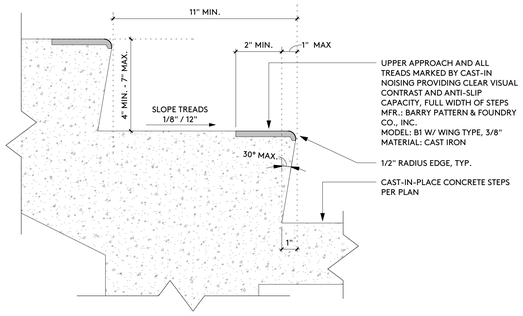

STAIR NOSING 6

3" = 1'-0"

NOTE!
HANDRAIL GRIPPING SURFACES AND ANY SURFACES ADJACENT TO THEM SHALL BE FREE OF SHARP OR ABRASIVE ELEMENTS AND SHALL BE HAVE ROUNDED EDGES. PER CBC 2019, 11B-505.8.

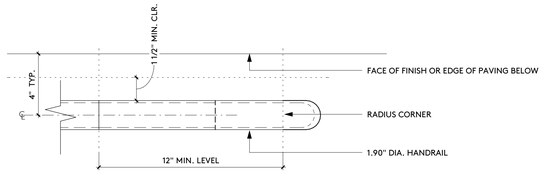

TOP VIEW - POST MOUNTED

HANDRAIL TERMINATION 7

3" = 1'-0"

NOTE!
HANDRAIL GRIPPING SURFACES AND ANY SURFACES ADJACENT TO THEM SHALL BE FREE OF SHARP OR ABRASIVE ELEMENTS AND SHALL BE HAVE ROUNDED EDGES. PER CBC 2019, 11B-505.8.

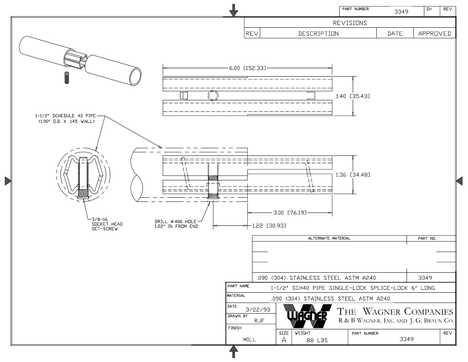

HANDRAIL TERMINATION 11

3" = 1'-0"

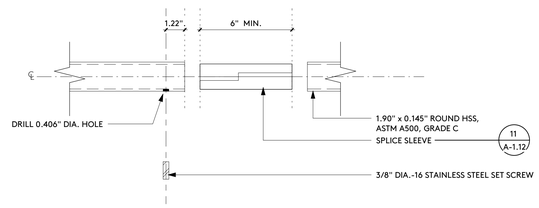

HANDRAIL TERMINATION 9

3" = 1'-0"

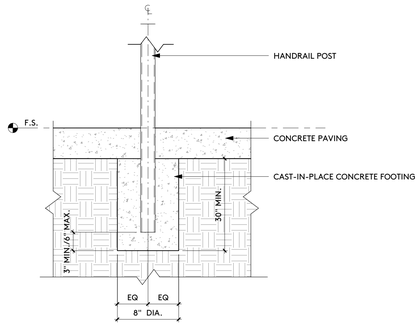

ANCHORAGE - POST MOUNTED HANDRAIL 5

1 1/2" = 1'-0"

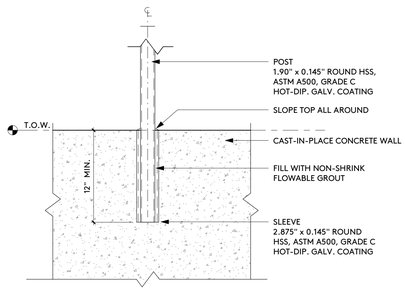

ANCHORAGE - POST MOUNTED HANDRAIL 8

1 1/2" = 1'-0"

1. ALL GUARDRAIL AND HANDRAIL FRAMES/COMPONENTS SHALL BE: A.E.S.S. LEVEL 3
2. ALL GUARDRAIL AND HANDRAIL FRAME ASSEMBLIES SHALL BE FULLY WELDED, WELDS ALL AROUND WITH FILLET WELDS, SEE WELDING NOTES — 9 A-1.4
3. ALL GUARDRAIL AND HANDRAIL FRAME ASSEMBLIES SHALL BE HOT-DIP GALVANIZED AFTER COMPLETE FABRICATION. COLD GALVANIZING WILL NOT BE PERMITTED
4. PRODUCT DATA AND SHOP DRAWINGS ARE REQUIRED. APPROVED SUBMITTALS ARE REQUIRED PRIOR TO FABRICATION.

NOTE! GUARDRAIL AND HANDRAIL ASSEMBLY 1

1/8" = 1'-0"

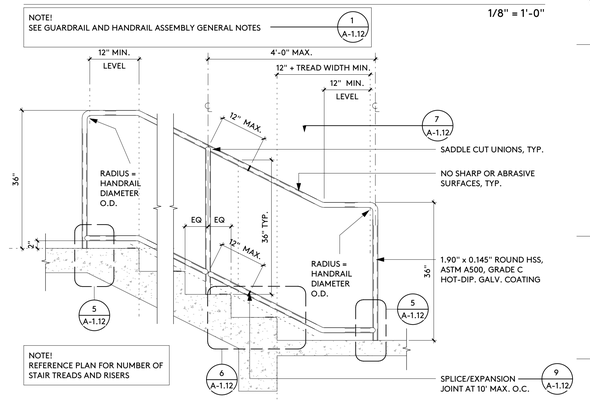

HANDRAIL ELEVATION - POST MOUNT 2

3/4" = 1'-0"

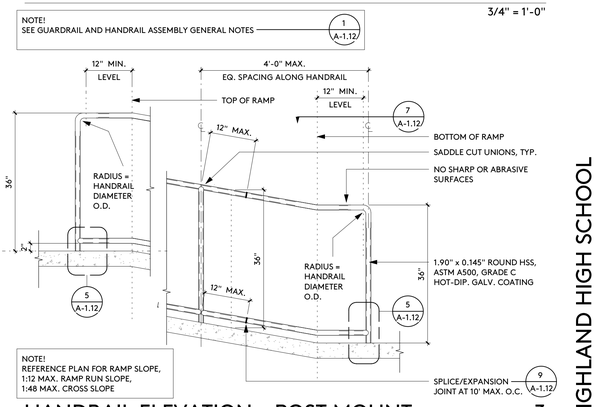

HANDRAIL ELEVATION - POST MOUNT 3

3/4" = 1'-0"

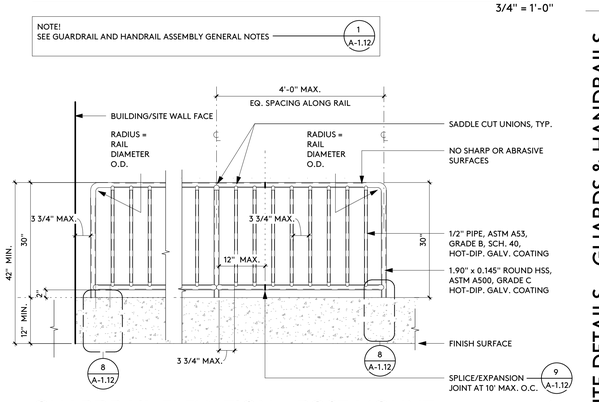

GUARDRAIL ELEVATION - POST MOUNT 4

3/4" = 1'-0"

IDENTIFICATION STAMP
DIV. OF THE STATE ARCHITECT
APP: 03-122664 INC:
REVIEWED FOR
SS ☑ FLS ☑ ACS ☑
DATE: 05/12/2023

pjhm architects

LICENSED ARCHITECT
BARBARA W. FRIES
NO. C15585
REN. 02/25
STATE OF CALIFORNIA

SD Phone: 760.730.5527 • LA Office: 837 Traction Avenue, #410, Los Angeles, CA 90013 • LA Phone: 213.278.0172 • Web: pjhm.com
OC Office: 24461 Ridge Route Drive #100, Laguna Hills, CA 92653 • OC Phone: 949.496.6191 • SD Office: 804 Pier View Way #103, Oceanside, CA 92054

HIGHLAND HIGH SCHOOL
50M POOL & AQUATICS CENTER

KERN HIGH SCHOOL DISTRICT

SITE DETAILS - GUARDS & HANDRAILS

A-1.12

4/13/2023 9:03:14 AM

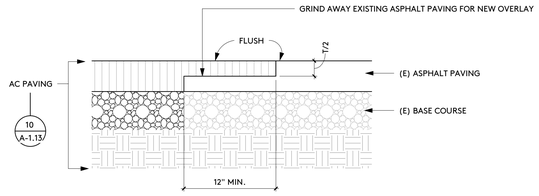

AC PAVING - CONSTRUCTION JOINT 13

1 1/2" = 1'-0"

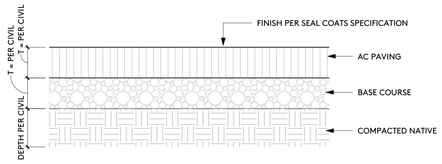

AC PAVING AT NON-APPARATUS ACCESS ROADWAY

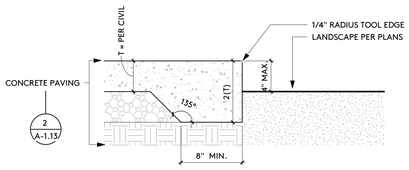

CONCRETE PAVING - SLAB EDGE 5

1 1/2" = 1'-0"

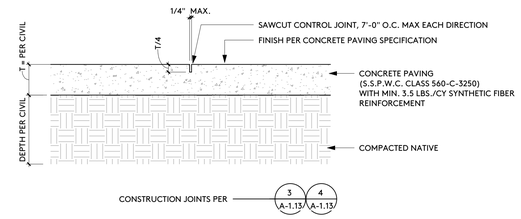

CONCRETE PAVING AT NON-APPARATUS ACCESS ROADWAY

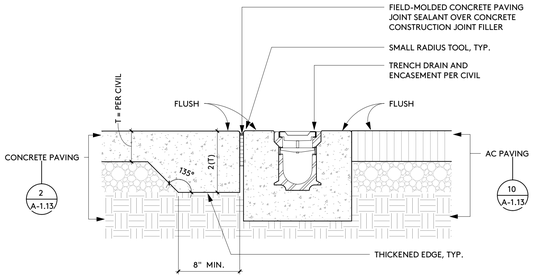

TRENCH DRAIN 14

1 1/2" = 1'-0"

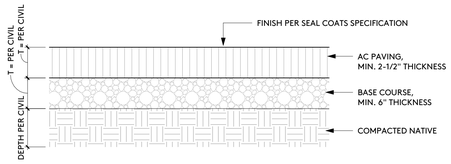

AC PAVING AT APPARATUS ACCESS ROADWAY

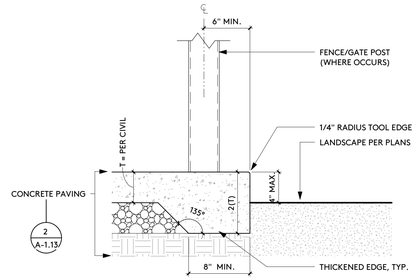

CONCRETE PAVING - SLAB EDGE 6

1 1/2" = 1'-0"

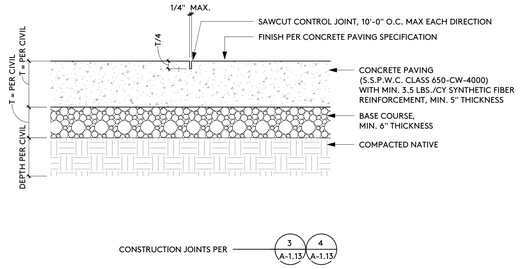

CONCRETE PAVING AT APPARATUS ACCESS ROADWAY

CONCRETE PAVING 2

1 1/2" = 1'-0"

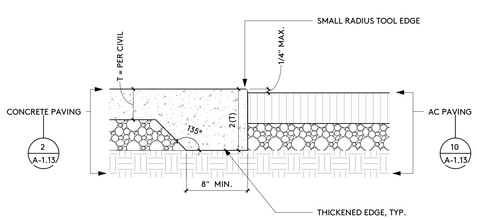

CONSTRUCTION JOINT - CONCRETE/AC 11

1 1/2" = 1'-0"

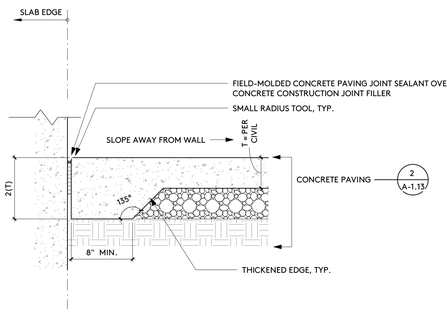

CONCRETE PAVING - SLAB EDGE 7

1 1/2" = 1'-0"

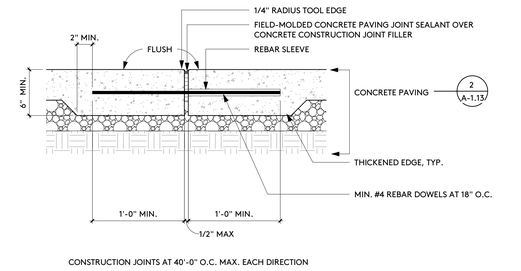

CONCRETE PAVING - CONSTRUCTION JOINT 3

1 1/2" = 1'-0"

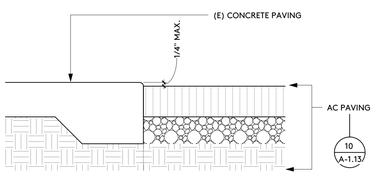

CONSTRUCTION JOINT - CONCRETE/AC 12

1 1/2" = 1'-0"

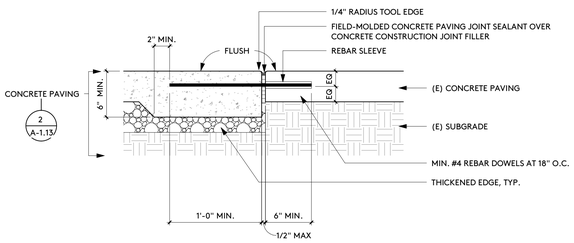

CONCRETE PAVING - CONSTRUCTION JOINT 4

1 1/2" = 1'-0"

IDENTIFICATION STAMP
DIV. OF THE STATE ARCHITECT
APP: 03-122664 INC:
REVIEWED FOR
SS ☑ FLS ☑ ACS ☑
DATE: 05/12/2023

pjhm architects
LICENSED ARCHITECT
THOMAS W. PHILLIPS
NO. C 25585
REN. 02/25
STATE OF CALIFORNIA
SD Phone: 760.730.5527 • LA Office: 837 Traction Avenue, #410, Los Angeles, CA 90013 • LA Phone: 213.278.0172 • Web: pjhm.com
OC Office: 24461 Ridge Route Drive #100, Laguna Hills, CA 92653 • OC Phone: 949.496.6191 • SD Office: 804 Pier View Way #103, Oceanside, CA 92054

HIGHLAND HIGH SCHOOL
50M POOL & AQUATICS CENTER

KERN HIGH SCHOOL DISTRICT

SITE DETAILS - HARDSCAPE

A-1.13

4/13/2023 2:58:30 PM

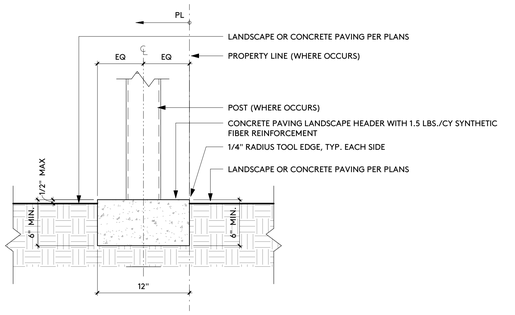

LANDSCAPE HEADER - CONCRETE 5

1 1/2" = 1'-0"

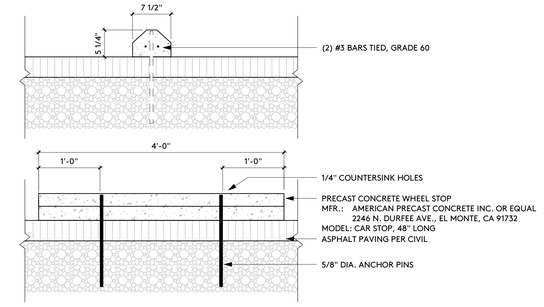

WHEEL STOP 6

1" = 1'-0"

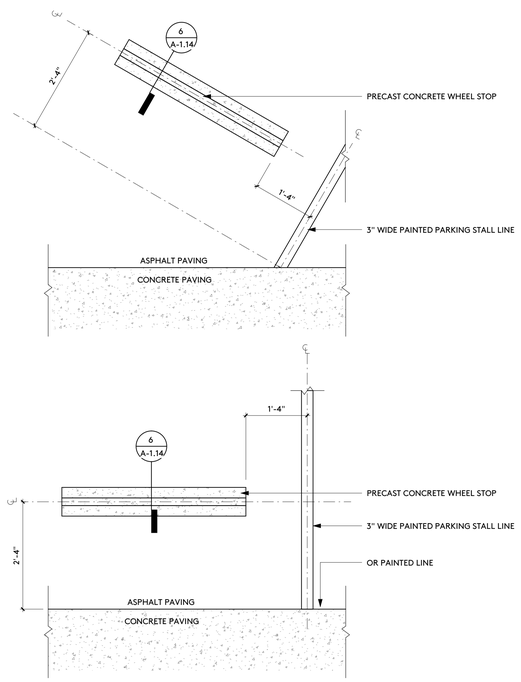

WHEEL STOP 8

3/4" = 1'-0"

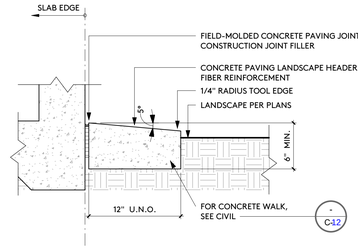

LANDSCAPE HEADER - CONCRETE 2

1 1/2" = 1'-0"

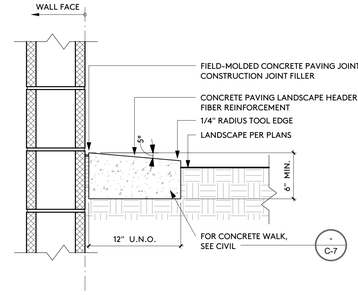

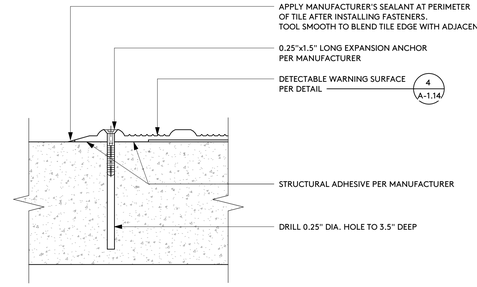

DETECTABLE WARNING SURFACE 3

6" = 1'-0"

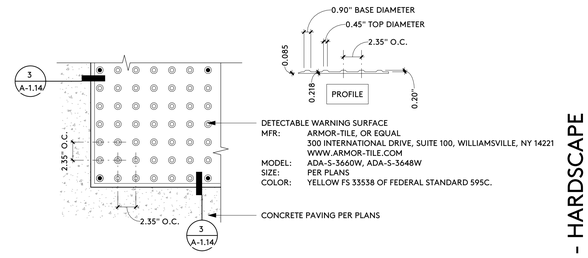

DETECTABLE WARNING SURFACES:

1. DETECTABLE WARNING SURFACES SHALL COMPLY WITH CBC SECTION 11B-705.1
2. DETECTABLE WARNING SURFACES AT TRANSIT BOARDING PLATFORM EDGES, BUS STOPS, HAZARDOUS VEHICULAR AREAS, REFLECTING POOLS, AND TRACK CROSSINGS SHALL BE YELLOW AND APPROXIMATE FS 33538 OF FEDERAL STANDARD 595C.
3. DETECTABLE WARNING SURFACES SHALL DIFFER FROM ADJOINING SURFACES IN RESILIENCY OR SOUND-ON-CANE CONTACT. SUCH CONSTRAINT SHALL NOT BE REQUIRED FOR DETECTABLE WARNING SURFACES AT CURB RAMPS, ISLANDS, OR CUT-THROUGH MEDIANS. CBC SECTION 11B-705.1.1.4
4. PROVIDE MINIMUM 5 YEAR WARRANTY.

DETECTABLE WARNING SURFACE 4

1 1/2" = 1'-0"

IDENTIFICATION STAMP
DIV. OF THE STATE ARCHITECT
APP: 03-122664 INC:
REVIEWED FOR
SS ☑ FLS ☑ ACS ☑
DATE: 05/12/2023

pjhm architects
LICENSED ARCHITECT
THOMAS W. FERRIS
NO. C 25585
REN. 02/25
STATE OF CALIFORNIA
LA Office: 837 Traction Avenue, #410, Los Angeles, CA 90013 • LA Phone: 213.278.0172 • Web: pjhm.com
SD Phone: 760.730.5527 • OC Office: 24461 Ridge Route Drive #100, Laguna Hills, CA 92653 • OC Phone: 949.496.6191 • SD Office: 804 Pier View Way #103, Oceanside, CA 92054

HIGHLAND HIGH SCHOOL
50M POOL & AQUATICS CENTER

KERN HIGH SCHOOL DISTRICT

SITE DETAILS - HARDSCAPE

A-1.14

4/13/2023 9:03:15 AM

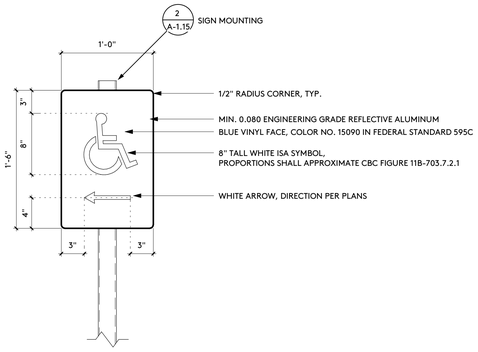

SITE SIGNAGE - DIRECTIONAL SIGN 13

1 1/2" = 1'-0"

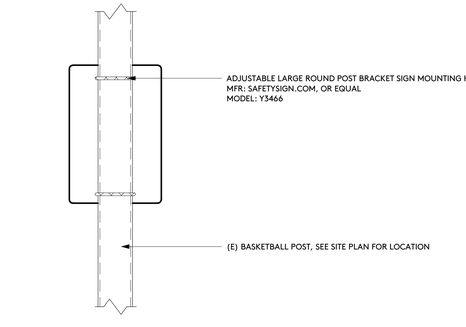

REAR ELEVATION

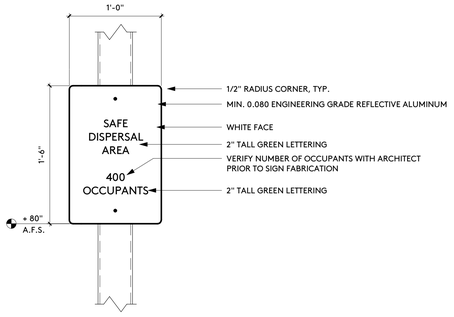

FRONT ELEVATION

SITE SIGNAGE - SAFE DISPERSAL AREA 15

1 1/2" = 1'-0"

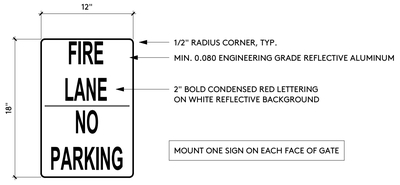

SITE SIGNAGE - FIRE LANE ENTRY - GATES 9

1 1/2" = 1'-0"

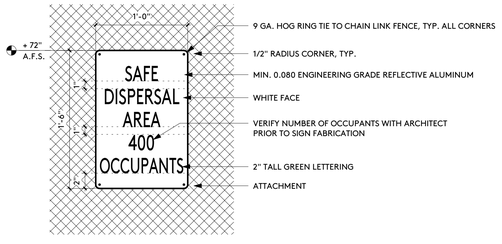

SITE SIGNAGE - SAFE DISPERSAL AREA 10

1 1/2" = 1'-0"

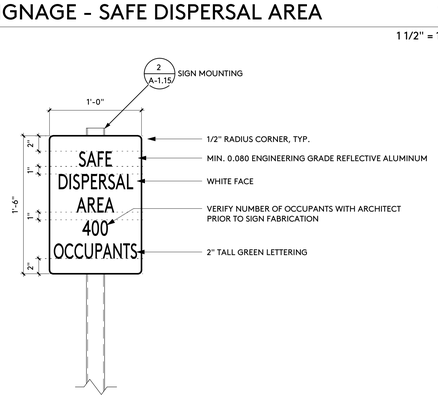

SITE SIGNAGE - SAFE DISPERSAL AREA 11

1 1/2" = 1'-0"

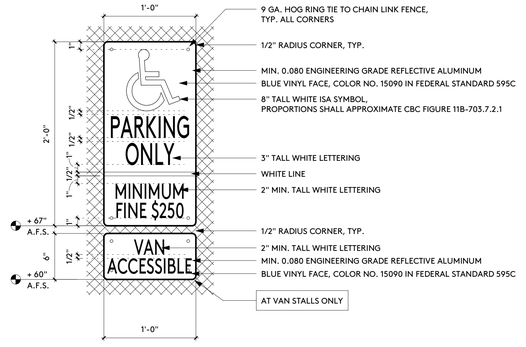

SITE SIGNAGE - ACCESSIBLE PARKING 5

1 1/2" = 1'-0"

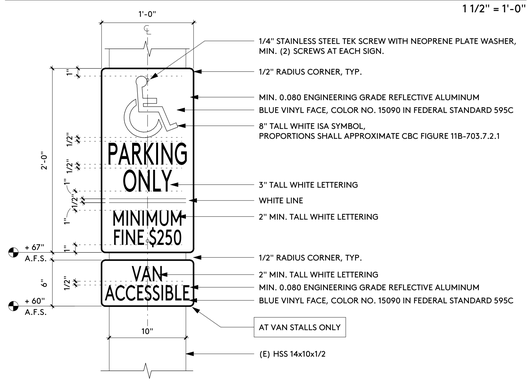

SITE SIGNAGE - ACCESSIBLE PARKING 6

1 1/2" = 1'-0"

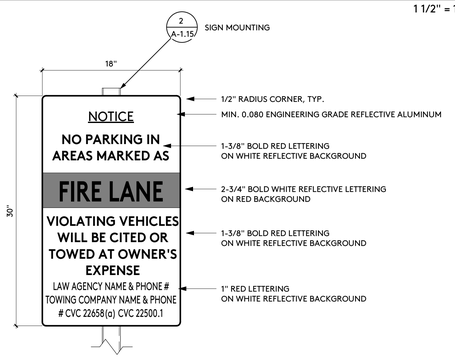

SITE SIGNAGE - FIRE LANE ENTRY 7

1 1/2" = 1'-0"

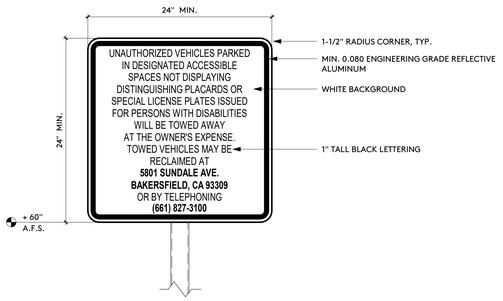

(E) SITE SIGNAGE - TOW AWAY 8

1 1/2" = 1'-0"

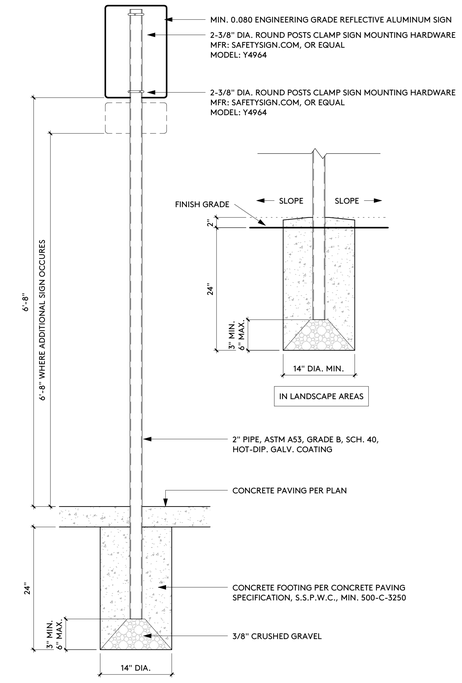

POST MOUNTED 2

1" = 1'-0"

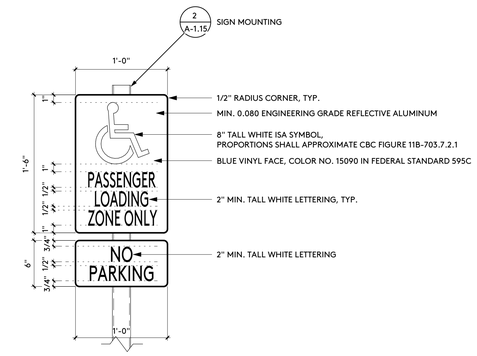

SITE SIGNAGE - PASSENGER LOADING ZONE 3

1 1/2" = 1'-0"

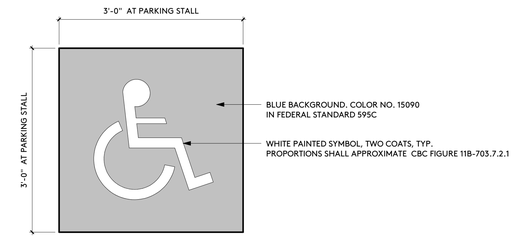

SITE SIGNAGE - INTERNATIONAL SYMBOL OF ACCESSIBILITY 4

1" = 1'-0"

IDENTIFICATION STAMP
DIV. OF THE STATE ARCHITECT
APP: 03-122664 INC:
REVIEWED FOR
SS ☑ FLS ☑ ACS ☑
DATE: 05/12/2023

pjhm architects
LICENSED ARCHITECT
BARBARA W. FRIEDMAN
No. C15585
REN. 02/25
STATE OF CALIFORNIA
OC Office: 24461 Ridge Route Drive #100, Laguna Hills, CA 92653 • OC Phone: 949.496.6191 • SD Office: 804 Pier View Way #103, Oceanside, CA 92054 • SD Phone: 760.730.5527 • LA Office: 837 Traction Avenue, #410, Los Angeles, CA 90013 • LA Phone: 213.278.0172 • Web: pjhm.com

HIGHLAND HIGH SCHOOL
50M POOL & AQUATICS CENTER

KERN HIGH SCHOOL DISTRICT

SITE DETAILS - SIGNAGE

A-1.15

4/13/2023 9:03:15 AM

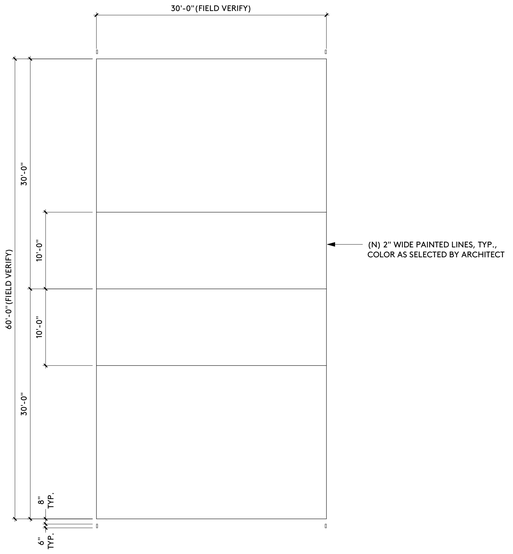

VOLLEYBALL COURT LAYOUT

1/8" = 1'-0"

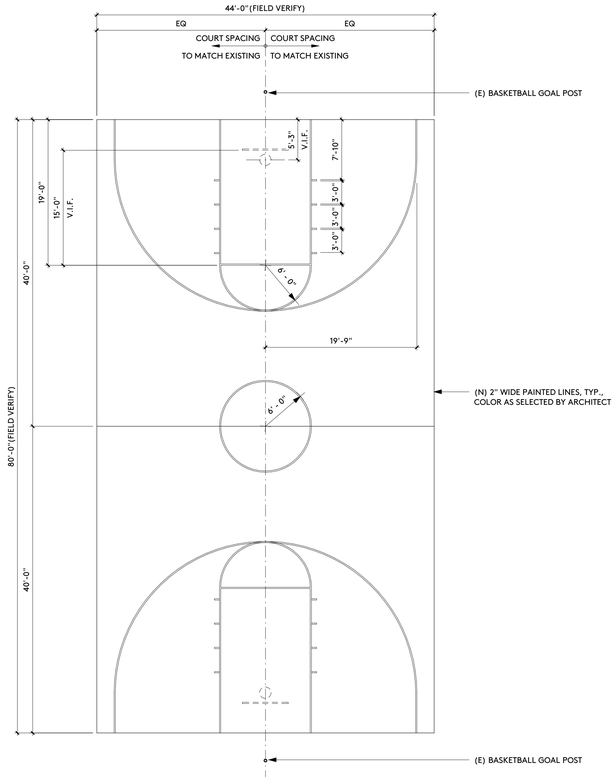

BASKETBALL COURT LAYOUT

1/8" = 1'-0"

2

4

IDENTIFICATION STAMP
DIV. OF THE STATE ARCHITECT
APP: 03-122664 INC:
REVIEWED FOR
SS ☑ FLS ☑ ACS ☑
DATE: 05/12/2023

pjhm architects

LICENSED ARCHITECT
THOMAS W. PHILLIPS
NO. C15585
REN. 02/25
STATE OF CALIFORNIA

HIGHLAND HIGH SCHOOL
50M POOL & AQUATICS CENTER

KERN HIGH SCHOOL DISTRICT

SITE DETAILS - MISCELLANEOUS

A-1.16

OC Office: 24461 Ridge Route Drive #100, Laguna Hills, CA 92653 • OC Phone: 949.496.6191 • SD Office: 804 Pier View Way #103, Oceanside, CA 92054 • SD Phone: 760.730.5527 • LA Office: 837 Traction Avenue, #410, Los Angeles, CA 90013 • LA Phone: 213.278.0172 • Web: pjhm.com

4/13/2023 9:03:15 AM

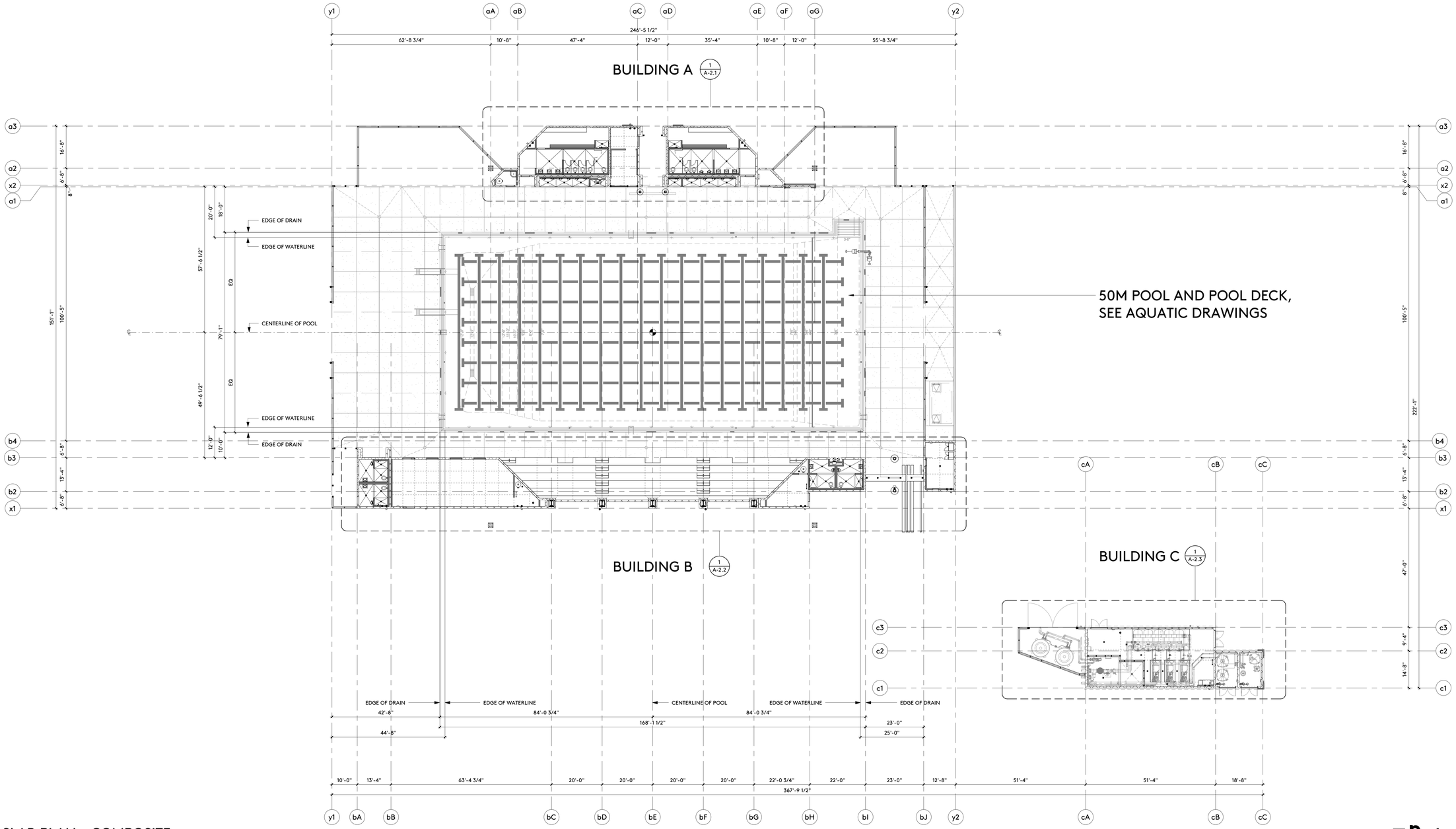

1/16" = 1'-0"

SLAB PLAN - COMPOSITE

CONCRETE SLAB ON GRADE
CONTROL JOINT PER STRUCTURAL DETAIL 15/S-1.1

CONCRETE SLAB DEPRESSION, DEPTH AS INDICATED

CONCRETE CURB, 6" A.F.F., UNLESS NOTED OTHERWISE

CAST-IN PLACE CONCRETE WALL ASSEMBLY

8" CONCRETE MASONRY UNIT WALL ASSEMBLY

AREA OF WATERPROOF MEMBRANE
BELOW CERAMIC FLOOR TILE, SEE 2/A-2.4

NOTE!
ALL WALLS ENCLOSING THIS AREA SHALL
RECEIVE WATERPROOF MEMBRANE, FULL
HEIGHT OF WALL, SEE TILING SPECIFICATION

F.D. FLOOR DRAIN

F.S. FLOOR SINK

1/A-1.1 DETAIL REFERENCE NUMBER, SHEET REFERENCE NUMBER

A BUILDING GRIDLINE

6'-0" BUILDING DIMENSION

1/A-1.1 SIM BUILDING SECTION REFERENCE NUMBER, SHEET REFERENCE NUMBER, SIMILAR SECTION

+14'-0" ELEVATION ABOVE FINISH FLOOR +0'-0"
ELEVATION BELOW FINISH FLOOR -0'-0"

SYMBOLS

IDENTIFICATION STAMP
DIV. OF THE STATE ARCHITECT
APP: 03-122664 INC:
REVIEWED FOR
SS ☑ FLS ☑ ACS ☑
DATE: 05/12/2023

pjhm architects

LICENSED ARCHITECT
RICHARD W. FRIEDMAN
NO. C15585
REN. 02/25
STATE OF CALIFORNIA

HIGHLAND HIGH SCHOOL
50M POOL & AQUATICS CENTER

KERN HIGH SCHOOL DISTRICT

SLAB PLAN - COMPOSITE

A-2.0

OC Office: 24461 Ridge Route Drive #100, Laguna Hills, CA 92653 • OC Phone: 949.496.6191 • SD Office: 804 Pier View Way #103, Oceanside, CA 92054 • SD Phone: 760.730.5527 • LA Office: 837 Traction Avenue, #410, Los Angeles, CA 90013 • LA Phone: 213.278.0172 • Web: pjhm.com

4/13/2023 9:04:36 AM

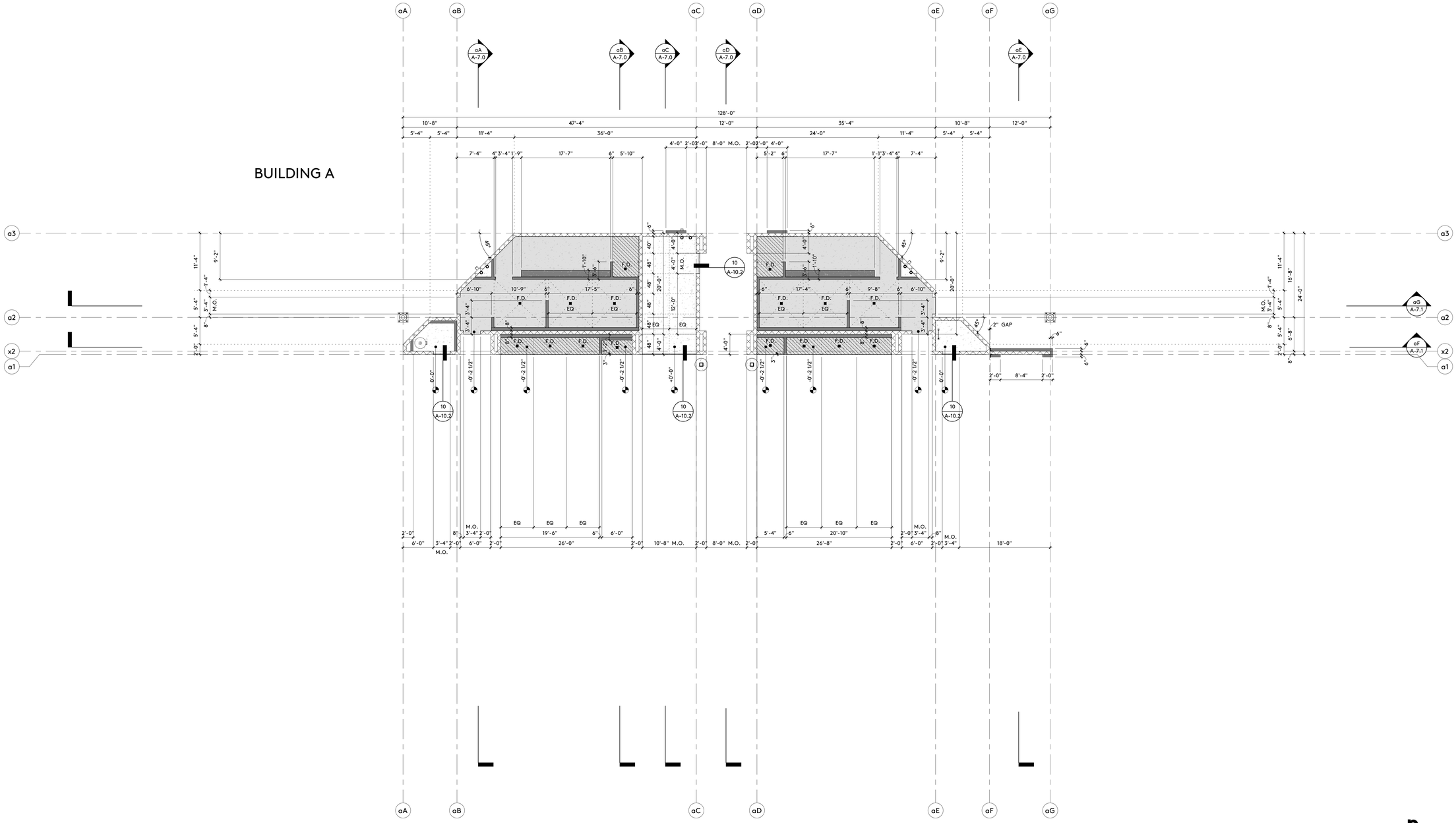

SLAB PLAN

1
1/8" = 1'-0"

CONCRETE SLAB ON GRADE
CONTROL JOINT PER STRUCTURAL DETAIL 15 S-1.1

CONCRETE SLAB DEPRESSION, DEPTH AS INDICATED

CONCRETE CURB, 6" A.F.F., UNLESS NOTED OTHERWISE

CAST-IN PLACE CONCRETE WALL ASSEMBLY

8" CONCRETE MASONRY UNIT WALL ASSEMBLY

AREA OF WATERPROOF MEMBRANE
BELOW CERAMIC FLOOR TILE, SEE 2 A-2.4

NOTE!
ALL WALLS ENCLOSING THIS AREA SHALL
RECEIVE WATERPROOF MEMBRANE, FULL
HEIGHT OF WALL, SEE TILING SPECIFICATION

F.D. FLOOR DRAIN

F.S. FLOOR SINK

1 A-1.1 DETAIL REFERENCE NUMBER
SHEET REFERENCE NUMBER

A BUILDING GRIDLINE

6'-0" BUILDING DIMENSION

1 A-1.1 BUILDING SECTION REFERENCE NUMBER
SHEET REFERENCE NUMBER
SIM SIMILAR SECTION

+14'-0" ELEVATION ABOVE FINISH FLOOR +0'-0"
ELEVATION BELOW FINISH FLOOR -0'-0"

SYMBOLS

IDENTIFICATION STAMP
DIV. OF THE STATE ARCHITECT
APP: 03-122664 INC:
REVIEWED FOR
SS ☑ FLS ☑ ACS ☑
DATE: 05/12/2023

pjhm architects

LICENSED ARCHITECT
THOMAS W. KRUSE
NO. C15585
REN. 02/25
STATE OF CALIFORNIA

HIGHLAND HIGH SCHOOL
50M POOL & AQUATICS CENTER

KERN HIGH SCHOOL DISTRICT

SLAB PLAN

A-2.1

OC Office: 24461 Ridge Route Drive #100, Laguna Hills, CA 92653 • OC Phone: 949.496.6191 • SD Office: 804 Pier View Way #103, Oceanside, CA 92054 • SD Phone: 760.730.5527 • LA Office: 837 Traction Avenue, #410, Los Angeles, CA 90013 • LA Phone: 213.278.0172 • Web: pjhm.com

4/13/2023 9:04:38 AM

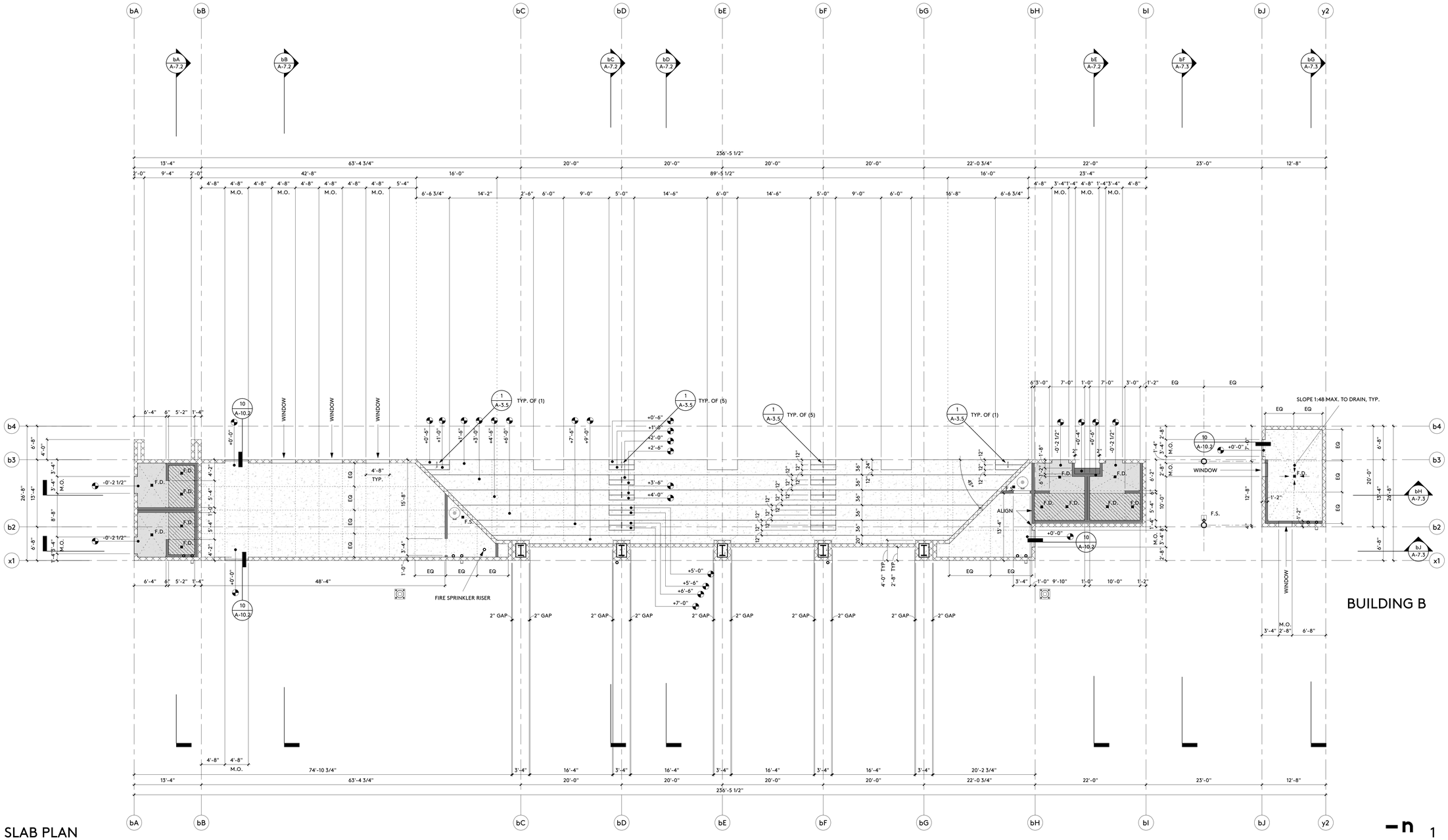

SLAB PLAN

1/8" = 1'-0"

CONCRETE SLAB ON GRADE
CONTROL JOINT PER STRUCTURAL DETAIL 15 S-1.1

CONCRETE SLAB DEPRESSION, DEPTH AS INDICATED

CONCRETE CURB, 6" A.F.F., UNLESS NOTED OTHERWISE

CAST-IN PLACE CONCRETE WALL ASSEMBLY

8" CONCRETE MASONRY UNIT WALL ASSEMBLY

AREA OF WATERPROOF MEMBRANE
BELOW CERAMIC FLOOR TILE, SEE 2 A-2.4

NOTE!
ALL WALLS ENCLOSING THIS AREA SHALL
RECEIVE WATERPROOF MEMBRANE, FULL
HEIGHT OF WALL, SEE TILING SPECIFICATION

F.D. FLOOR DRAIN

F.S. FLOOR SINK

1 A-1.1 DETAIL REFERENCE NUMBER / SHEET REFERENCE NUMBER

A BUILDING GRIDLINE

6'-0" BUILDING DIMENSION

1 A-1.1 SIM BUILDING SECTION REFERENCE NUMBER / SHEET REFERENCE NUMBER / SIMILAR SECTION

+14'-0" ELEVATION ABOVE FINISH FLOOR +0'-0"
ELEVATION BELOW FINISH FLOOR -0'-0"

SYMBOLS

IDENTIFICATION STAMP
DIV. OF THE STATE ARCHITECT
APP: 03-122664 INC:
REVIEWED FOR
SS ☑ FLS ☑ ACS ☑
DATE: 05/12/2023

pjhm architects

LICENSED ARCHITECT
THOMAS W. KRUSE
NO. C15585
REN. 02/25
STATE OF CALIFORNIA

HIGHLAND HIGH SCHOOL
50M POOL & AQUATICS CENTER

KERN HIGH SCHOOL DISTRICT

SLAB PLAN

A-2.2

OC Office: 24461 Ridge Route Drive #100, Laguna Hills, CA 92653 • OC Phone: 949.496.6191 • SD Office: 804 Pier View Way #103, Oceanside, CA 92054 • SD Phone: 760.730.5527 • LA Office: 837 Traction Avenue, #410, Los Angeles, CA 90013 • LA Phone: 213.278.0172 • Web: pjhm.com

4/13/2023 9:04:39 AM

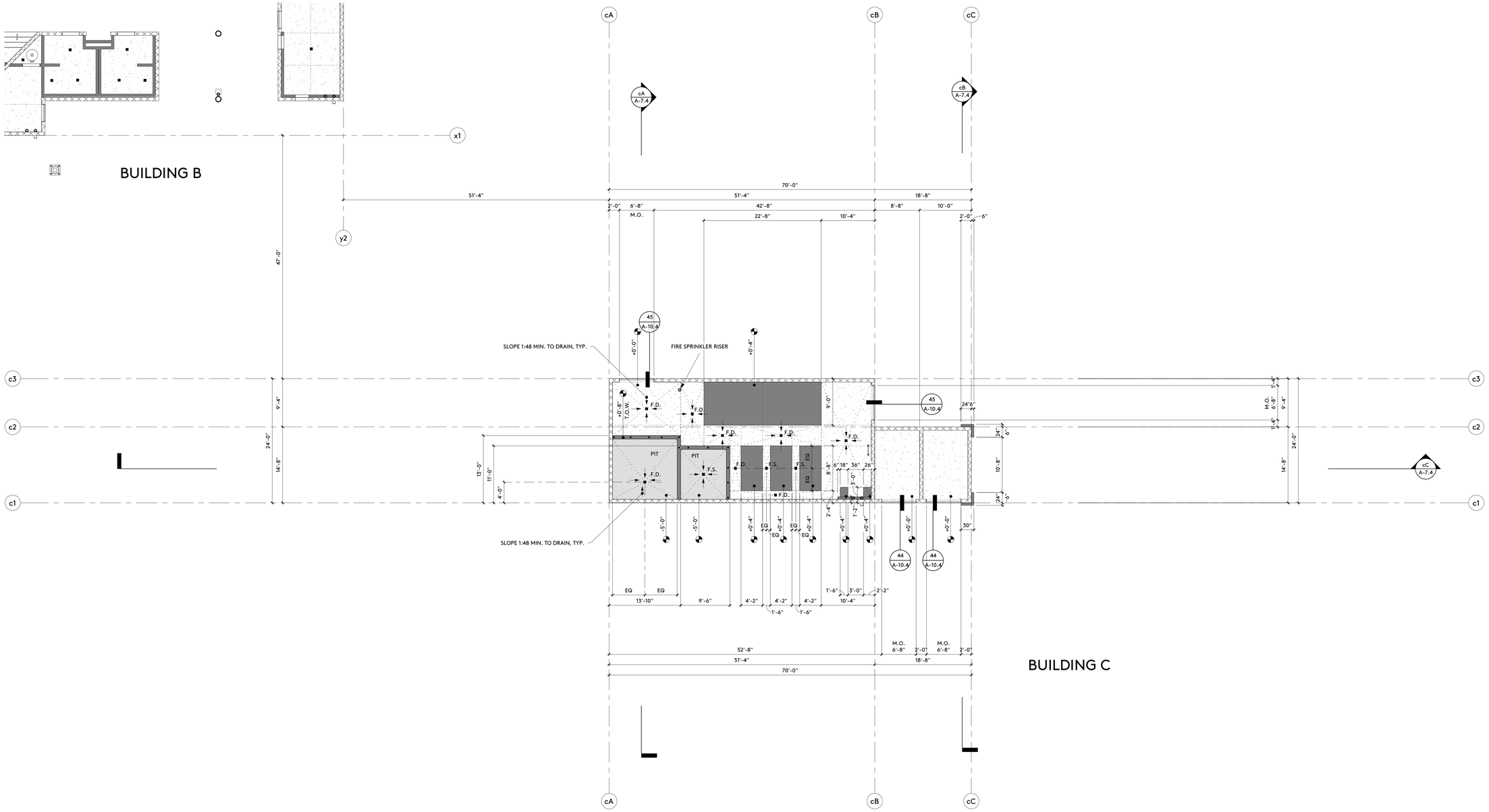

SLAB PLAN

1
1/8" = 1'-0"

CONCRETE SLAB ON GRADE
CONTROL JOINT PER STRUCTURAL DETAIL (15 / S-1.1)

CONCRETE SLAB DEPRESSION, DEPTH AS INDICATED

CONCRETE CURB, 6" A.F.F., UNLESS NOTED OTHERWISE

CAST-IN PLACE CONCRETE WALL ASSEMBLY

8" CONCRETE MASONRY UNIT WALL ASSEMBLY

AREA OF WATERPROOF MEMBRANE
BELOW CERAMIC FLOOR TILE, SEE (2 / A-2.4)

NOTE!
ALL WALLS ENCLOSING THIS AREA SHALL
RECEIVE WATERPROOF MEMBRANE, FULL
HEIGHT OF WALL, SEE TILING SPECIFICATION

F.D. FLOOR DRAIN

F.S. FLOOR SINK

(1 / A-1.1) DETAIL REFERENCE NUMBER
SHEET REFERENCE NUMBER

(A) BUILDING GRIDLINE

6'-0" BUILDING DIMENSION

(1 / A-1.1) BUILDING SECTION REFERENCE NUMBER
SHEET REFERENCE NUMBER
SIM SIMILAR SECTION

+14'-0" ELEVATION ABOVE FINISH FLOOR +0'-0"
ELEVATION BELOW FINISH FLOOR -0'-0"

SYMBOLS

IDENTIFICATION STAMP
DIV. OF THE STATE ARCHITECT
APP: 03-122664 INC:
REVIEWED FOR
SS ☑ FLS ☑ ACS ☑
DATE: 05/12/2023

pjhm architects

LICENSED ARCHITECT
THOMAS W. KRUSE
NO. C15585
REN. 02/25
STATE OF CALIFORNIA

HIGHLAND HIGH SCHOOL
50M POOL & AQUATICS CENTER

KERN HIGH SCHOOL DISTRICT

SLAB PLAN

A-2.3

OC Office: 24461 Ridge Route Drive #100, Laguna Hills, CA 92653 • OC Phone: 949.496.6191 • SD Office: 804 Pier View Way #103, Oceanside, CA 92054 • SD Phone: 760.730.5527 • LA Office: 837 Traction Avenue, #410, Los Angeles, CA 90013 • LA Phone: 213.278.0172 • Web: pjhm.com

4/13/2023 9:04:40 AM

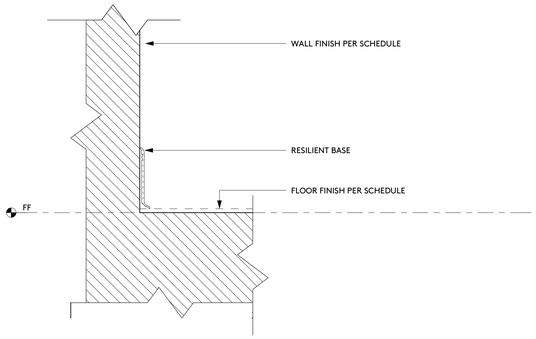

TRANSITION 13

3" = 1'-0"

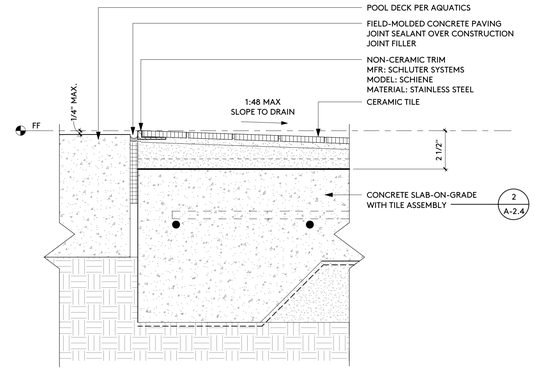

TRANSITION 9

3" = 1'-0"

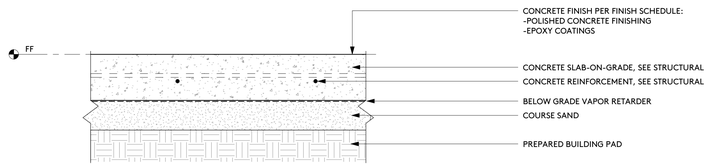

ASSEMBLY - CONCRETE SLAB-ON-GRADE 1

1 1/2" = 1'-0"

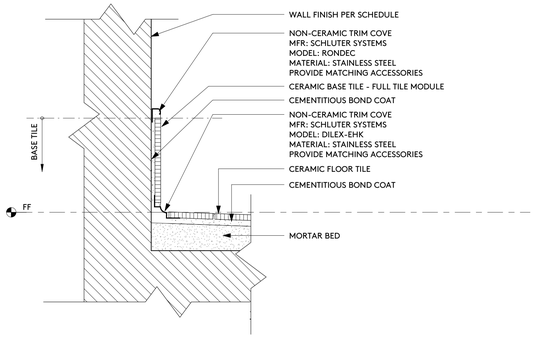

TRANSITION 14

3" = 1'-0"

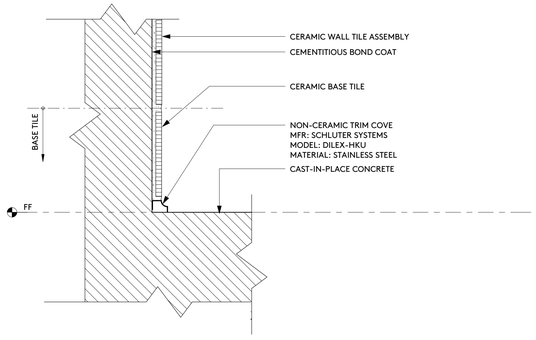

TRANSITION 10

3" = 1'-0"

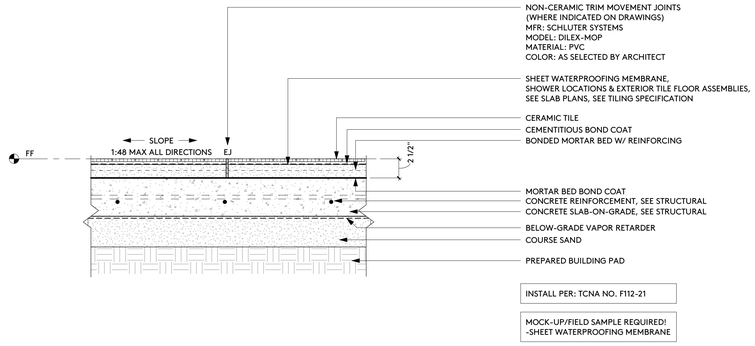

ASSEMBLY - TILE 2

1 1/2" = 1'-0"

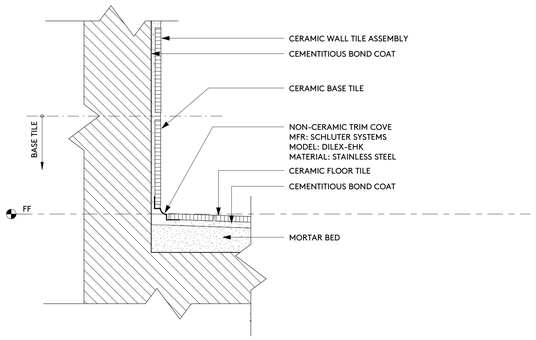

TRANSITION 15

3" = 1'-0"

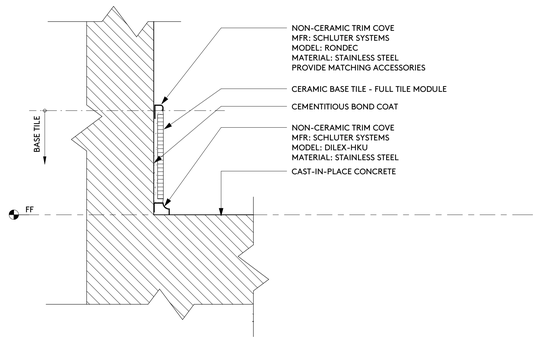

TRANSITION 11

3" = 1'-0"

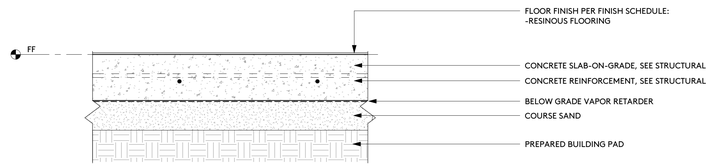

ASSEMBLY - CONCRETE SLAB-ON-GRADE 3

1 1/2" = 1'-0"

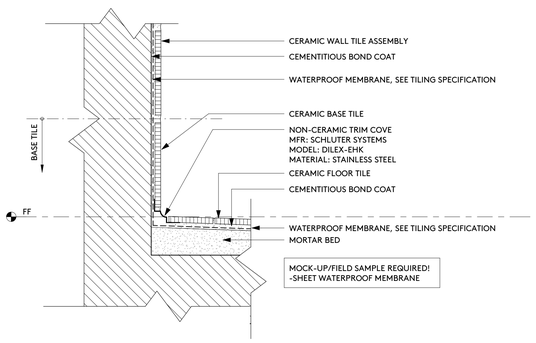

TRANSITION 16

3" = 1'-0"

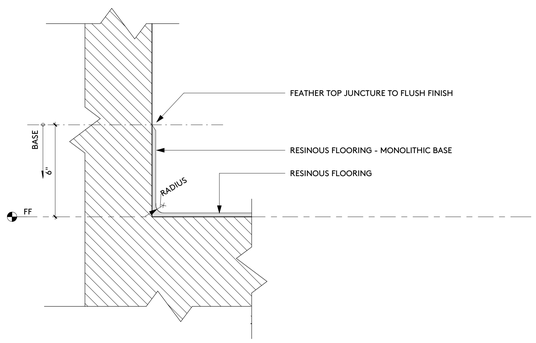

TRANSITION 12

3" = 1'-0"

IDENTIFICATION STAMP
DIV. OF THE STATE ARCHITECT
APP: 03-122664 INC:
REVIEWED FOR
SS ☑ FLS ☑ ACS ☑
DATE: 05/12/2023

pjhm architects

LICENSED ARCHITECT
RICHARD W. PRIMUS
NO. C15585
REN. 02/25
STATE OF CALIFORNIA

LA Office: 837 Traction Avenue, #410, Los Angeles, CA 90013 • LA Phone: 213.278.0172 • Web: pjhm.com
SD Phone: 760.730.5527 • OC Office: 24461 Ridge Route Drive #100, Laguna Hills, CA 92653 • OC Phone: 949.496.6191 • SD Office: 804 Pier View Way #103, Oceanside, CA 92054

HIGHLAND HIGH SCHOOL
50M POOL & AQUATICS CENTER

KERN HIGH SCHOOL DISTRICT

SLAB PLAN DETAILS

A-2.4

4/13/2023 9:04:41 AM

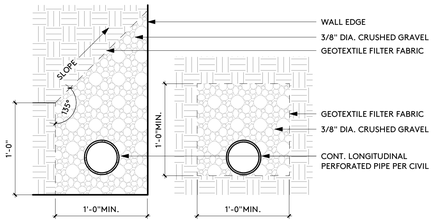

SUB-GRADE DRAIN 13

1 1/2" = 1'-0"

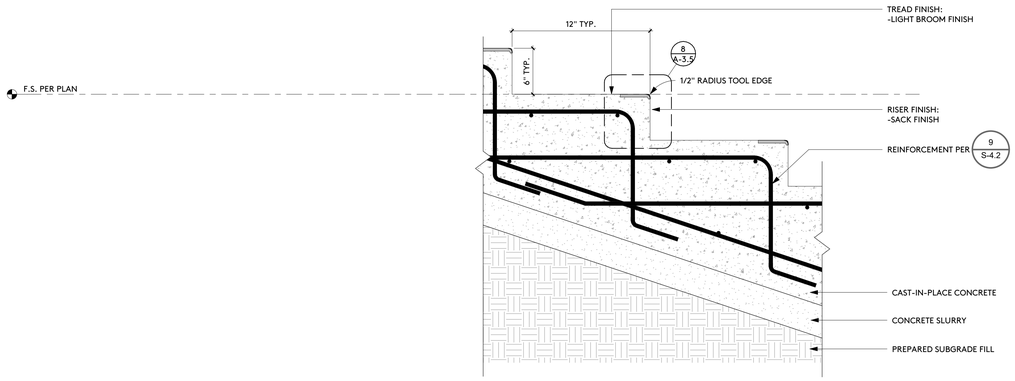

ASSEMBLY - CAST-IN-PLACE CONCRETE STAIRS 1

1 1/2" = 1'-0"

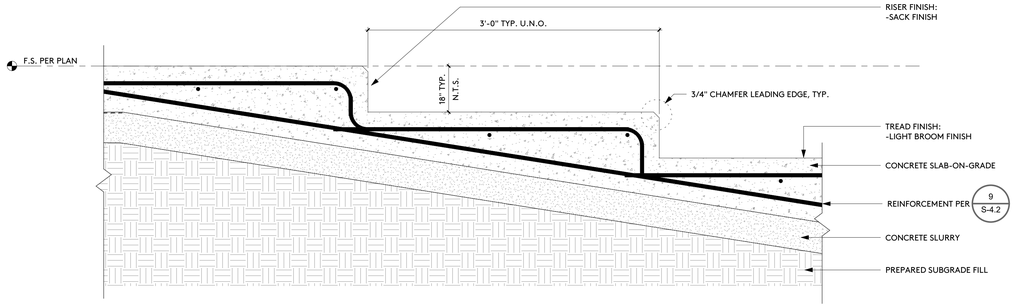

ASSEMBLY - CAST-IN-PLACE CONCRETE TIERED SEATING 2

1 1/2" = 1'-0"

IDENTIFICATION STAMP
DIV. OF THE STATE ARCHITECT
APP: 03-122664 INC:
REVIEWED FOR
SS ☑ FLS ☑ ACS ☑
DATE: 05/12/2023

pjhm architects

LICENSED ARCHITECT
RICHARD W. PRIEBE
NO. C15585
REN. 02/25
STATE OF CALIFORNIA

OC Office: 24461 Ridge Route Drive #100, Laguna Hills, CA 92653 • OC Phone: 949.496.6191 • SD Office: 804 Pier View Way #103, Oceanside, CA 92054 • SD Phone: 760.730.5527 • LA Office: 837 Traction Avenue, #410, Los Angeles, CA 90013 • LA Phone: 213.278.0172 • Web: pjhm.com

HIGHLAND HIGH SCHOOL
50M POOL & AQUATICS CENTER

KERN HIGH SCHOOL DISTRICT

SLAB PLAN DETAILS

A-2.5

4/13/2023 9:04:41 AM

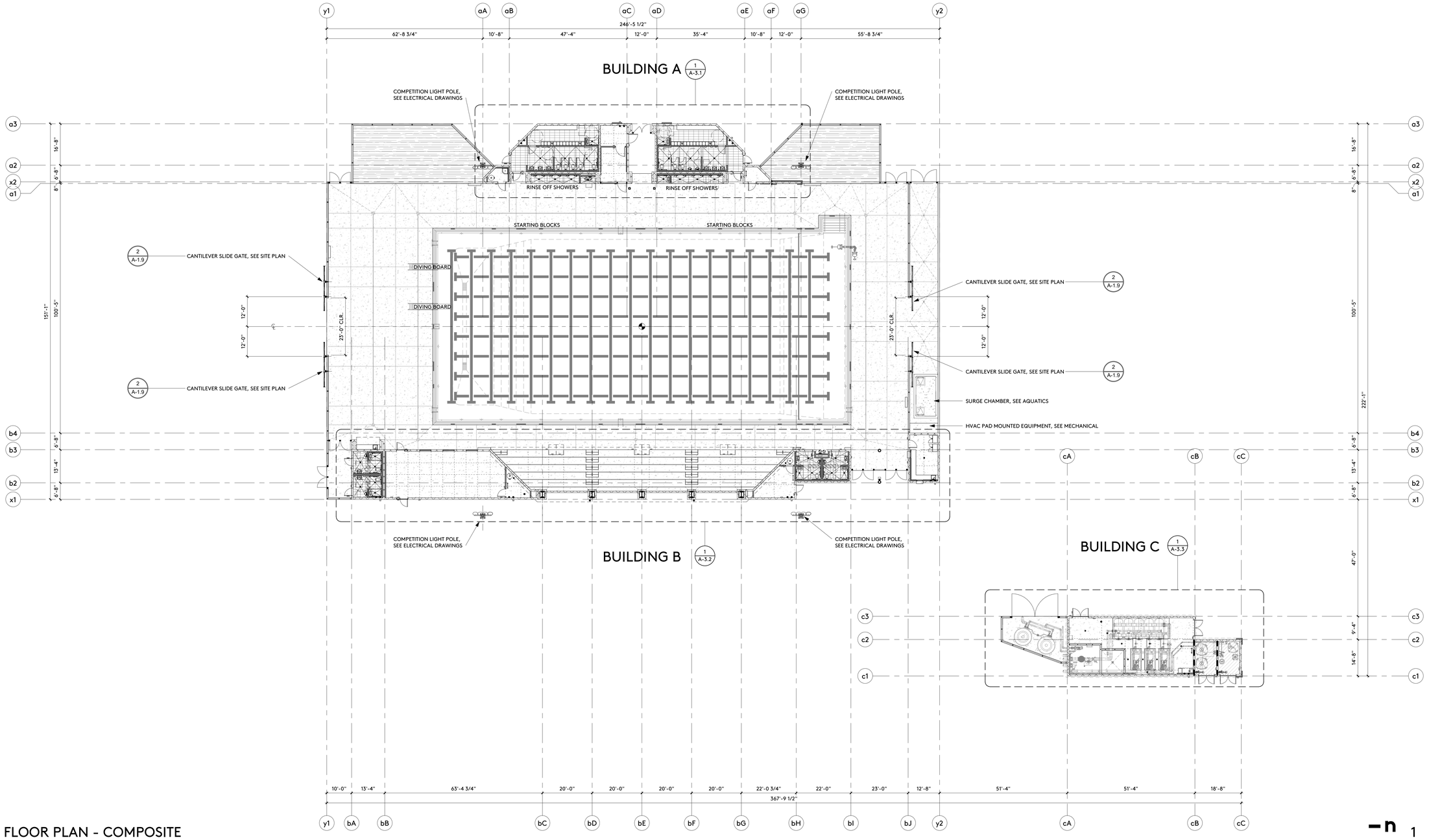

FLOOR PLAN - COMPOSITE

1/16" = 1'-0"

POOL WATER SURFACE AREA = 12,369 SQ. FT.

12,369 SQ. FT. DIVIDED BY 15 = 825

825 DIVIDED BY 2 = 412

412 MEN AND 412 FEMALES

REQUIRED MEN'S TOILETS = 6
REQUIRED MEN'S URINALS = 6
REQUIRED MEN'S LAVATORIES = 5
REQUIRED MEN'S SHOWERS = 8

REQUIRED WOMEN'S TOILETS = 7
REQUIRED WOMEN'S LAVATORIES = 5
REQUIRED WOMEN'S SHOWERS = 9

REQUIRED DRINKING FOUNTAINS = 4 TOTAL

PROVIDED MEN'S TOILETS = 6
PROVIDED MEN'S URINALS = 6
PROVIDED MEN'S LAVATORIES = 5
PROVIDED MEN'S SHOWERS = 8

PROVIDED WOMEN'S TOILETS = 7
PROVIDED WOMEN'S LAVATORIES = 5
PROVIDED WOMEN'S SHOWERS = 9

PROVIDED DRINKING FOUNTAINS = 4 TOTAL

PLUMBING FIXTURE COUNT

ASSISTIVE LISTENING SYSTEM RECEIVERS REQUIRED (CBC SECTION 11B-219.3)			
ASSEMBLY AREA	OCCUPANTS	PERSONAL RECEIVERS REQUIRED	RECEIVERS REQUIRED TO BE HEARING AID COMPATIBLE
POOL & POOL DECK	1183	48	12
TIERED SEATING	356	15	4
CLASSROOM	44	2	2

ASSISTIVE LISTENING SYSTEM

IDENTIFICATION STAMP
DIV. OF THE STATE ARCHITECT
APP: 03-122664 INC:
REVIEWED FOR
SS ☑ FLS ☑ ACS ☑
DATE: 05/12/2023

pjhm architects

LICENSED ARCHITECT
THOMAS W. KRUSE
NO. C15585
REN. 02/25
STATE OF CALIFORNIA

HIGHLAND HIGH SCHOOL
50M POOL & AQUATICS CENTER

KERN HIGH SCHOOL DISTRICT

FLOOR PLAN - COMPOSITE

A-3.0

OC Office: 24461 Ridge Route Drive #100, Laguna Hills, CA 92653 • OC Phone: 949.496.6191 • SD Office: 804 Pier View Way #103, Oceanside, CA 92054 • SD Phone: 760.730.5527 • LA Office: 837 Traction Avenue, #410, Los Angeles, CA 90013 • LA Phone: 213.278.0172 • Web: pjhm.com

4/13/2023 9:04:44 AM

GIRLS LOCKER ROOM
(12)TWO-TIER METAL LOCKERS
(2) ONE-TIER METAL LOCKERS (ADA)
TOTAL PROVIDED: 26
5% (26): 1.3
ACCESSIBLE LOCKERS PROVIDED: 2

BOYS LOCKER ROOM
(12)TWO-TIER METAL LOCKERS
(2) ONE-TIER METAL LOCKERS (ADA)
TOTAL PROVIDED: 26
5% (26): 1.3
ACCESSIBLE LOCKERS PROVIDED: 2

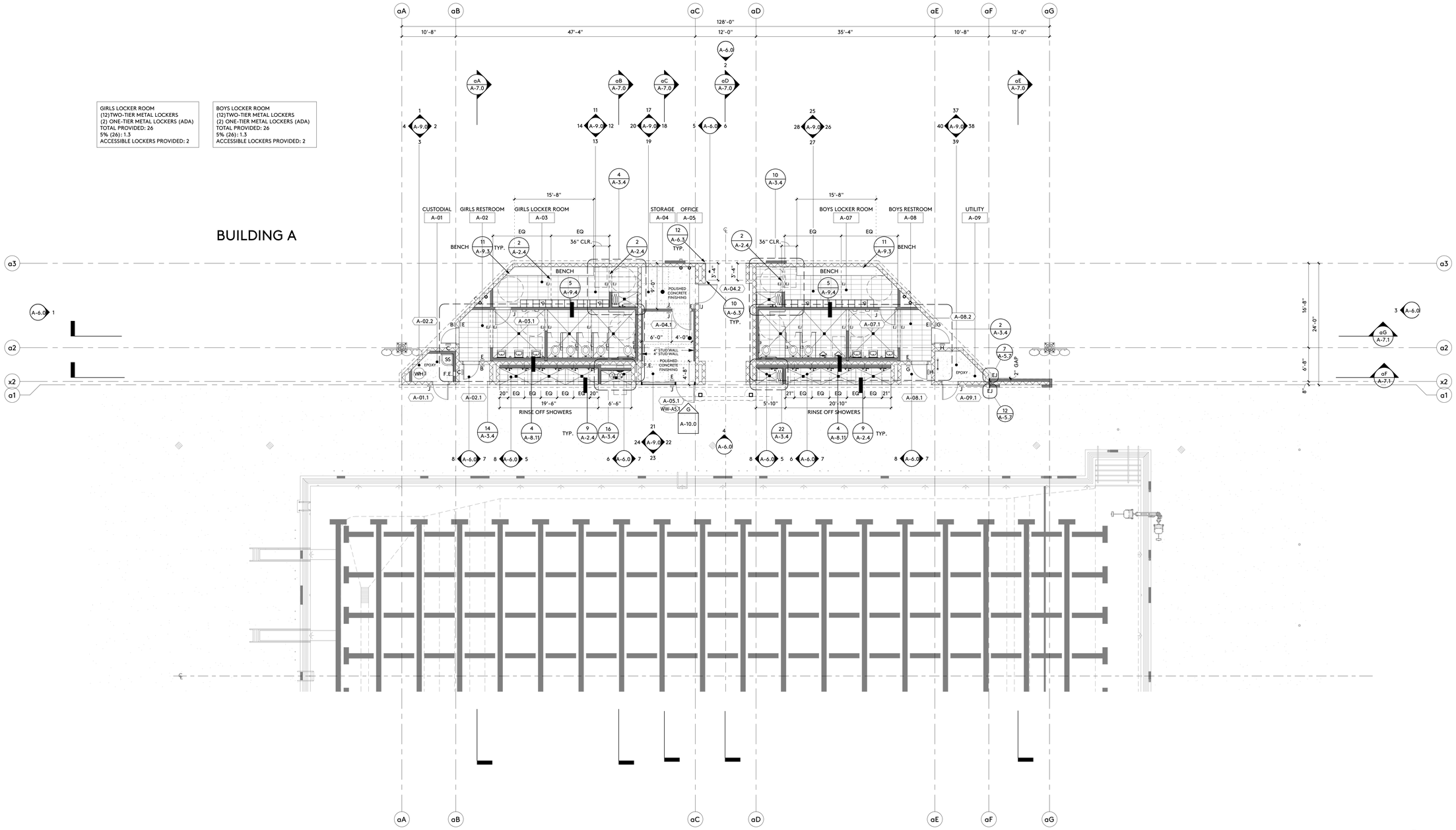

FLOOR PLAN - BUILDING A

1
1/8" = 1'-0"

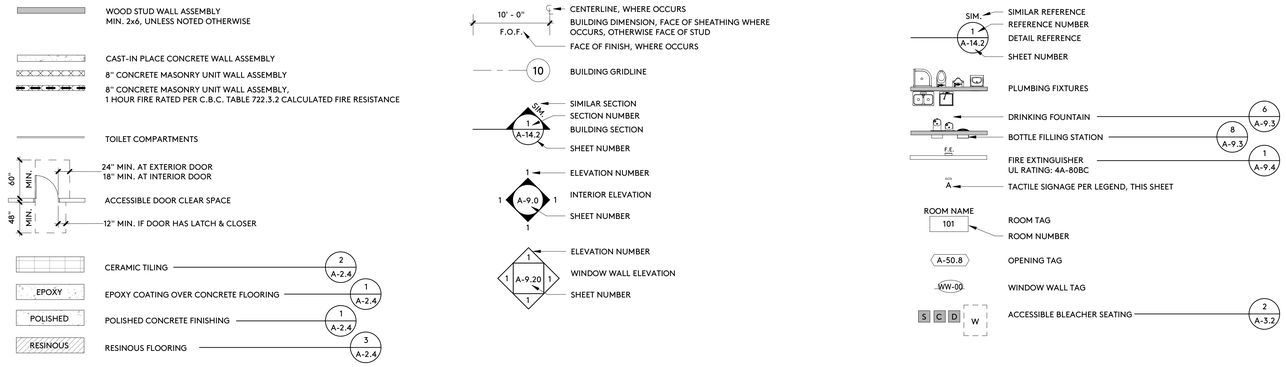

SYMBOLS

A WOMEN'S RESTROOM WALL SIGN
B GIRL'S RESTROOM WALL SIGN
C FEMALE DOOR GEOMETRIC SYMBOL
D ROOM DESIGNATION WALL SIGN WITH ISA
E EXIT
F MEN'S RESTROOM WALL SIGN
G BOY'S RESTROOM WALL SIGN
H MALE DOOR GEOMETRIC SYMBOL
J ROOM DESIGNATION WALL SIGN
K EXIT ROUTE
L SPRINKLER RISER ROOM
M GENDER NEUTRAL / UNISEX RESTROOM WALL SIGN
N GENDER NEUTRAL / UNISEX GEOMETRIC DOOR SIGN
P OCCUPANCY SIGN
Q ASSISTIVE LISTENING SIGN (25%, BUT NO FEWER THAN TWO, SHALL BE HEARING AID COMPATIBLE)
R AISLE SEAT AVAILABILITY SIGN

TACTILE SIGNAGE DETAILS PER SHEET A-12.0
UNLESS NOTED OTHERWISE

TACTILE SIGNAGE LEGEND

IDENTIFICATION STAMP
DIV. OF THE STATE ARCHITECT
APP: 03-122664 INC:
REVIEWED FOR
SS ☑ FLS ☑ ACS ☑
DATE: 05/12/2023

pjhm architects

LICENSED ARCHITECT
THOMAS W. KRUSE
NO. C15585
REN. 02/25
STATE OF CALIFORNIA

HIGHLAND HIGH SCHOOL
50M POOL & AQUATICS CENTER

KERN HIGH SCHOOL DISTRICT

FLOOR PLAN

A-3.1

OC Office: 24461 Ridge Route Drive #100, Laguna Hills, CA 92653 • OC Phone: 949.496.6191 • SD Office: 804 Pier View Way #103, Oceanside, CA 92054 • SD Phone: 760.730.5527 • LA Office: 837 Traction Avenue, #410, Los Angeles, CA 90013 • LA Phone: 213.278.0172 • Web: pjhm.com

4/13/2023 9:04:46 AM

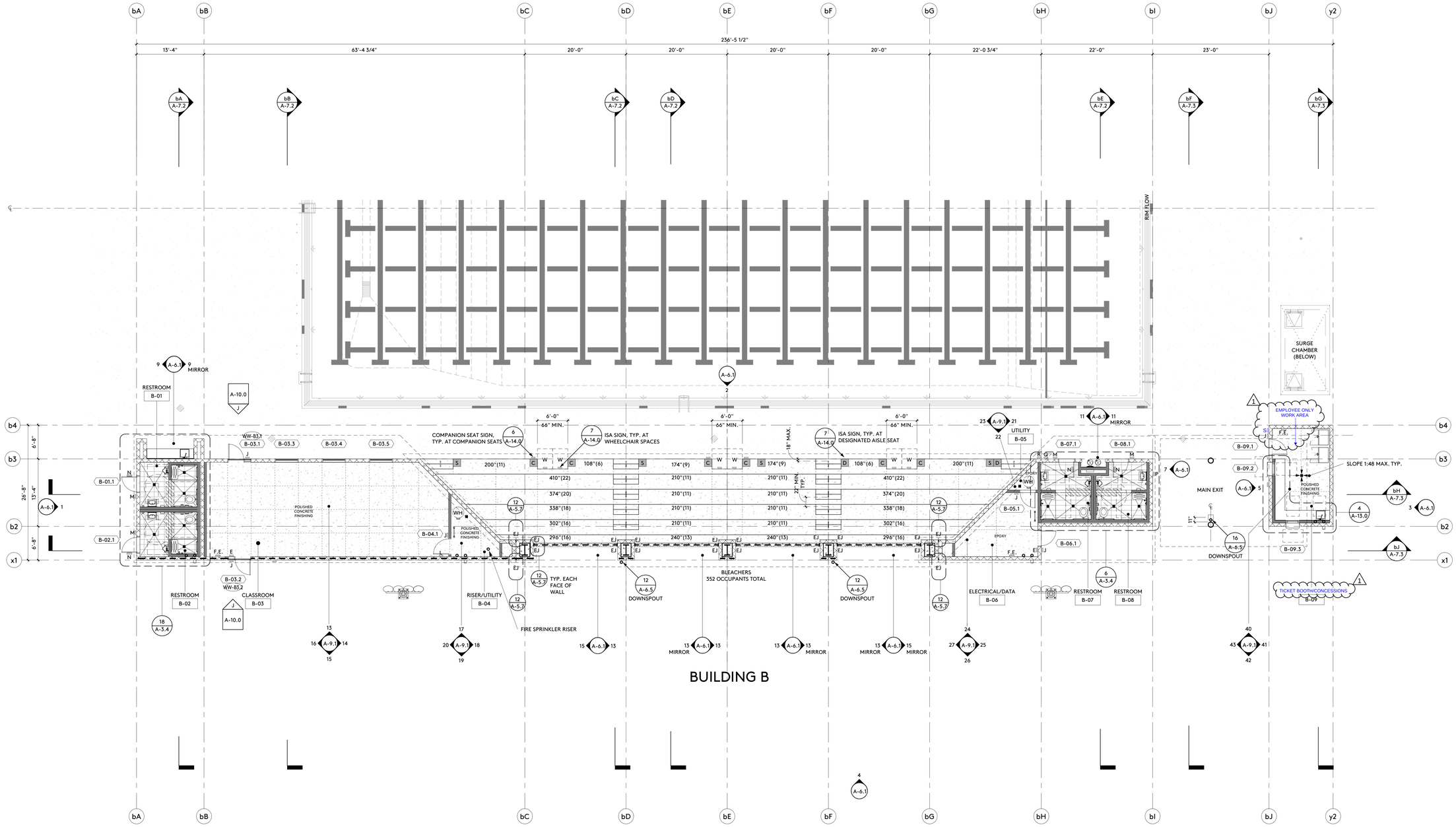

FLOOR PLAN - BUILDING B

1/8" = 1'-0"

SYMBOLS

- WOOD STUD WALL ASSEMBLY — MIN. 2x6, UNLESS NOTED OTHERWISE
- CAST-IN PLACE CONCRETE WALL ASSEMBLY
- 8" CONCRETE MASONRY UNIT WALL ASSEMBLY
- 8" CONCRETE MASONRY UNIT WALL ASSEMBLY, 1 HOUR FIRE RATED PER C.B.C. TABLE 722.3.2 CALCULATED FIRE RESISTANCE
- TOILET COMPARTMENTS
- 24" MIN. AT EXTERIOR DOOR; 18" MIN. AT INTERIOR DOOR
- ACCESSIBLE DOOR CLEAR SPACE
- 12" MIN. IF DOOR HAS LATCH & CLOSER
- CERAMIC TILING — 2 / A-2.4
- EPOXY — EPOXY COATING OVER CONCRETE FLOORING — 1 / A-2.4
- POLISHED — POLISHED CONCRETE FINISHING — 1 / A-2.4
- RESINOUS — RESINOUS FLOORING — 3 / A-2.4

- 10' - 0" F.O.F. — CENTERLINE, WHERE OCCURS; BUILDING DIMENSION, FACE OF SHEATHING WHERE OCCURS, OTHERWISE FACE OF STUD; FACE OF FINISH, WHERE OCCURS
- 10 — BUILDING GRIDLINE
- SIM. / 1 / A-14.2 — SIMILAR SECTION; SECTION NUMBER; BUILDING SECTION; SHEET NUMBER
- 1 / 1 / A-9.0 / 1 — ELEVATION NUMBER; INTERIOR ELEVATION; SHEET NUMBER
- 1 / 1 / A-9.20 / 1 — ELEVATION NUMBER; WINDOW WALL ELEVATION; SHEET NUMBER

- SIM. — SIMILAR REFERENCE
- 1 / A-14.2 — REFERENCE NUMBER; DETAIL REFERENCE; SHEET NUMBER
- PLUMBING FIXTURES
- DRINKING FOUNTAIN — 6 / A-9.3
- BOTTLE FILLING STATION — 8 / A-9.3
- F.E. — FIRE EXTINGUISHER UL RATING: 4A-80BC — 1 / A-9.4
- A — TACTILE SIGNAGE PER LEGEND, THIS SHEET
- ROOM NAME 101 — ROOM TAG; ROOM NUMBER
- A-50.8 — OPENING TAG
- WW-00 — WINDOW WALL TAG
- S C D W — ACCESSIBLE BLEACHER SEATING — 2 / A-3.2

TIERED SEATING CAPACITY (1.5 LINEAR FEET PER OCCUPANT)	
ROW 1:	58
ROW 2:	66
ROW 3:	62
ROW 4:	58
ROW 5:	54
ROW 6:	58
TOTAL SEATS:	356

BLEACHER SEATING CAPACITY

2

1/8" = 1'-0"

ACCESSIBLE SEATING CALCULATION (PER 11B-221 & TABLE 11B-221.2.1.1)

	REQUIRED	PROVIDED
STANDARD SEATS	-	338
WHEELCHAIR SPACES (W)	6	6
COMPANION SEATS (C)	6	6
DESIGNATED AISLE (D)	2	2
SEMI-AMBULANT (S)	4	4
TOTAL NUMBER OF SEATS:		356

TACTILE SIGNAGE LEGEND

- A WOMEN'S RESTROOM WALL SIGN
- B GIRL'S RESTROOM WALL SIGN
- C FEMALE DOOR GEOMETRIC SYMBOL
- D ROOM DESIGNATION WALL SIGN WITH ISA
- E EXIT
- F MEN'S RESTROOM WALL SIGN
- G BOY'S RESTROOM WALL SIGN
- H MALE DOOR GEOMETRIC SYMBOL
- J ROOM DESIGNATION WALL SIGN
- K EXIT ROUTE
- L SPRINKLER RISER ROOM
- M GENDER NEUTRAL / UNISEX RESTROOM WALL SIGN
- N GENDER NEUTRAL / UNISEX GEOMETRIC DOOR SIGN
- P OCCUPANCY SIGN
- Q ASSISTIVE LISTENING SIGN (25%, BUT NO FEWER THAN TWO, SHALL BE HEARING AID COMPATIBLE)
- R AISLE SEAT AVAILABILITY SIGN — 8 / A-14.0
- S EMPLOYEES ONLY SIGN — 4 / A-14.0 / 1

TACTILE SIGNAGE DETAILS PER — SHEET A-12.0

IDENTIFICATION STAMP
DIV. OF THE STATE ARCHITECT
APP: 03-122664 INC:
REVIEWED FOR
SS ☑ FLS ☑ ACS ☑
DATE: 05/12/2023

pjhm architects
LICENSED ARCHITECT
RICHARD W. PRIEST
NO. C15585
REN. 02/25
STATE OF CALIFORNIA
LA Office: 837 Traction Avenue, #410, Los Angeles, CA 90013 • LA Phone: 213.278.0172 • Web: pjhm.com
SD Office: 804 Pier View Way #103, Oceanside, CA 92054 • SD Phone: 760.730.5527 • OC Phone: 949.496.6191 • OC Office: 24461 Ridge Route Drive #100, Laguna Hills, CA 92653

HIGHLAND HIGH SCHOOL
50M POOL & AQUATICS CENTER

KERN HIGH SCHOOL DISTRICT

1 ADDENDUM NO. 1

FLOOR PLAN

A-3.2

4/13/2023 11:26:56 AM

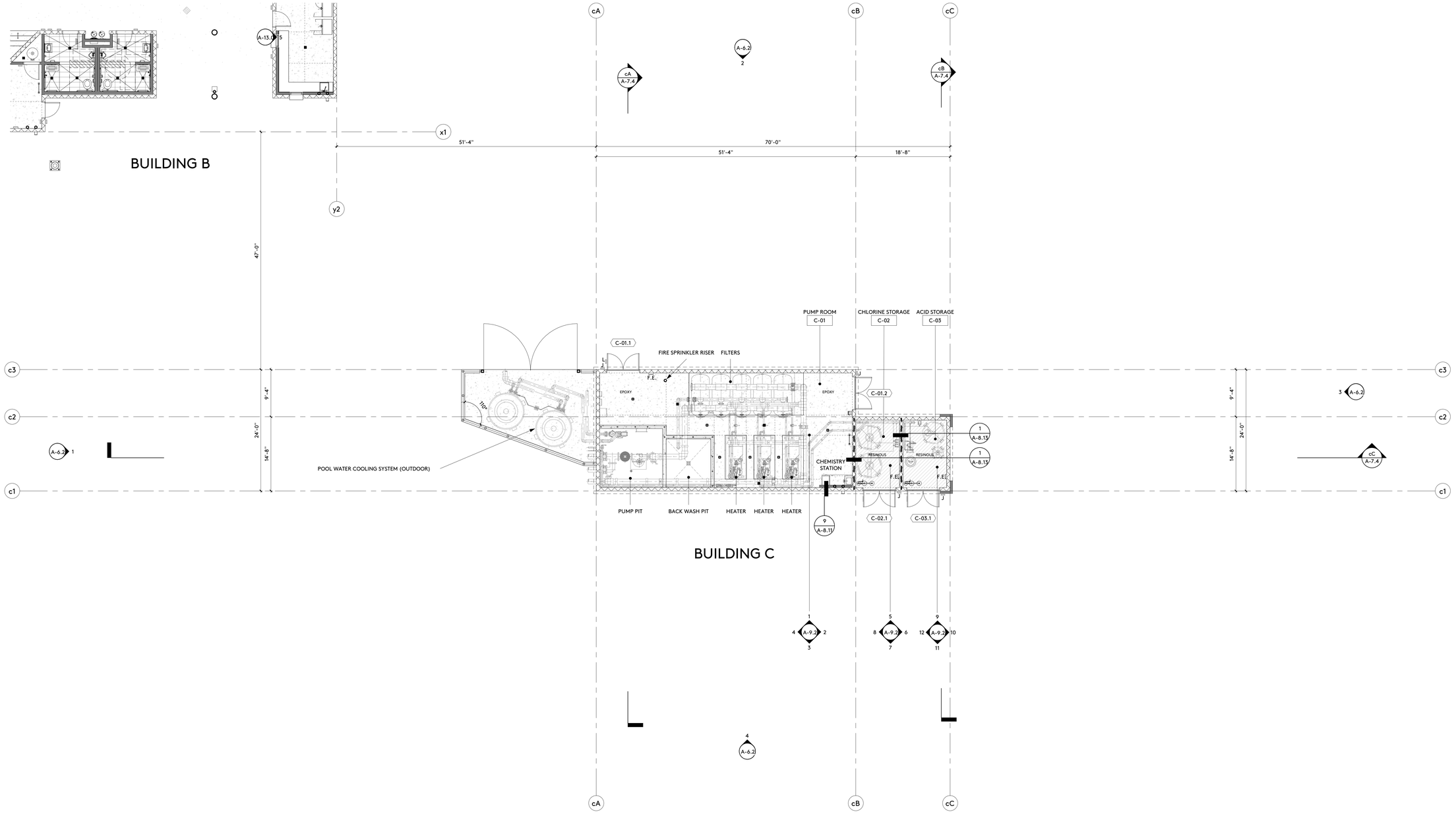

FLOOR PLAN - BUILDING C

1
1/8" = 1'-0"

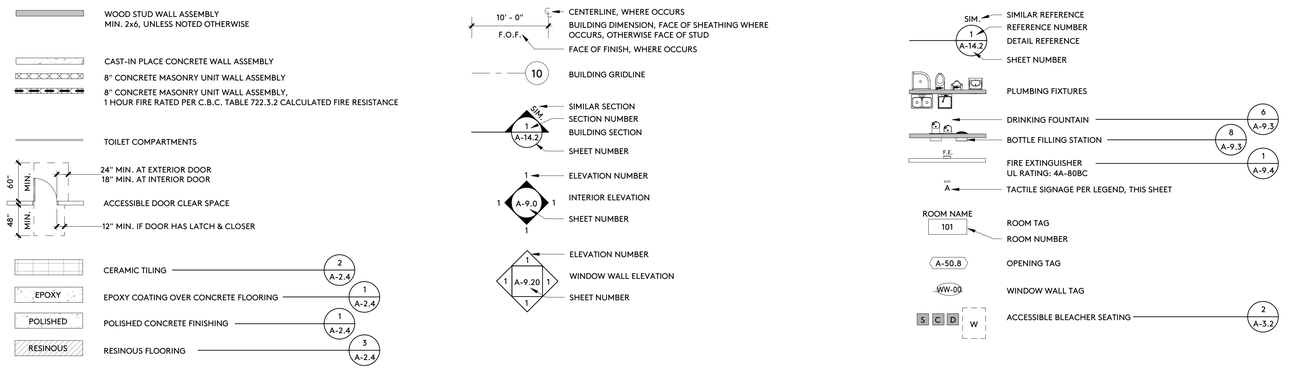

SYMBOLS

A WOMEN'S RESTROOM WALL SIGN
B GIRL'S RESTROOM WALL SIGN
C FEMALE DOOR GEOMETRIC SYMBOL
D ROOM DESIGNATION WALL SIGN WITH ISA
E EXIT
F MEN'S RESTROOM WALL SIGN
G BOY'S RESTROOM WALL SIGN
H MALE DOOR GEOMETRIC SYMBOL
J ROOM DESIGNATION WALL SIGN
K EXIT ROUTE
L SPRINKLER RISER ROOM
M GENDER NEUTRAL / UNISEX RESTROOM WALL SIGN
N GENDER NEUTRAL / UNISEX GEOMETRIC DOOR SIGN
P OCCUPANCY SIGN
Q ASSISTIVE LISTENING SIGN (25%, BUT NO FEWER THAN TWO, SHALL BE HEARING AID COMPATIBLE)
R AISLE SEAT AVAILABILITY SIGN

TACTILE SIGNAGE DETAILS PER SHEET A-12.0

TACTILE SIGNAGE LEGEND

IDENTIFICATION STAMP
DIV. OF THE STATE ARCHITECT
APP: 03-122664 INC:
REVIEWED FOR
SS ☑ FLS ☑ ACS ☑
DATE: 05/12/2023

pjhm architects

LICENSED ARCHITECT
THOMAS W. KRUSE
NO. C15585
REN. 02/25
STATE OF CALIFORNIA

HIGHLAND HIGH SCHOOL
50M POOL & AQUATICS CENTER

KERN HIGH SCHOOL DISTRICT

FLOOR PLAN

A-3.3

OC Office: 24461 Ridge Route Drive #100, Laguna Hills, CA 92653 • OC Phone: 949.496.6191 • SD Office: 804 Pier View Way #103, Oceanside, CA 92054 • SD Phone: 760.730.5527 • LA Office: 837 Traction Avenue, #410, Los Angeles, CA 90013 • LA Phone: 213.278.0172 • Web: pjhm.com

4/13/2023 9:04:49 AM

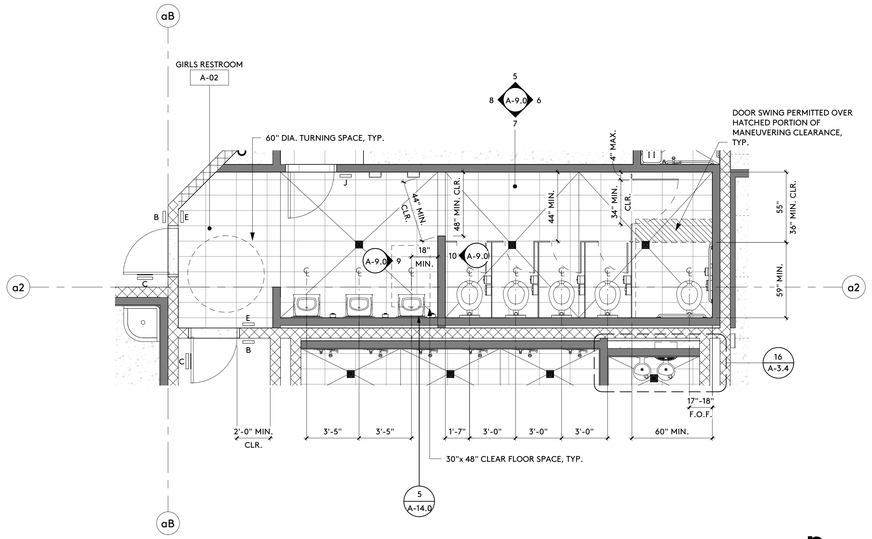

ENLARGED FLOOR PLAN — n 14

1/4" = 1'-0"

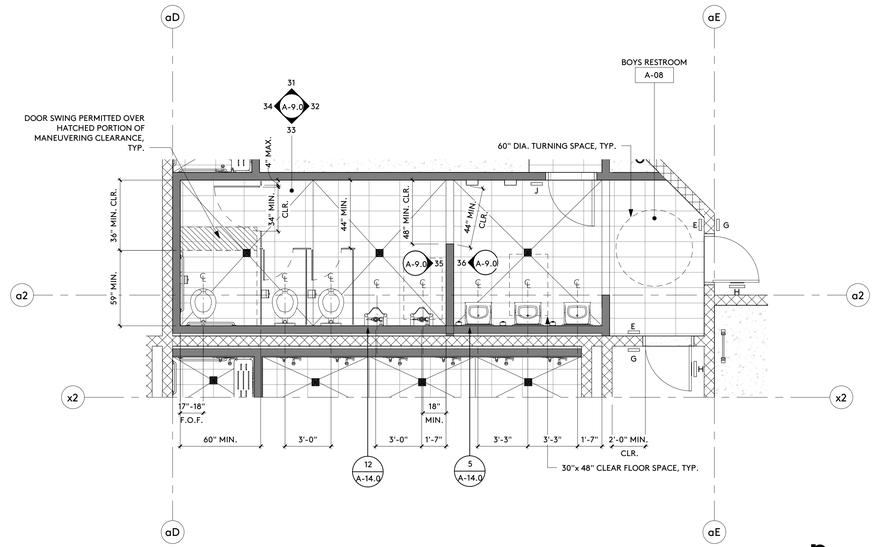

ENLARGED FLOOR PLAN — n 2

1/4" = 1'-0"

WOOD STUD WALL ASSEMBLY
MIN. 2X6, UNLESS NOTED OTHERWISE

CAST-IN-PLACE CONCRETE WALL ASSEMBLY

8" CONCRETE MASONRY UNIT WALL ASSEMBLY

8" CONCRETE MASONRY UNIT WALL ASSEMBLY
1 HOUR FIRE RATED

TOILET COMPARTMENTS

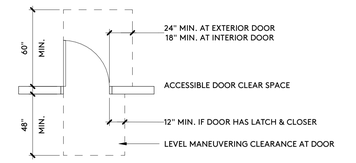

10 BUILDING GRIDLINE

1 A-14.2 SIM. SIMILAR SECTION
SECTION NUMBER
BUILDING SECTION
SHEET NUMBER

1 A-9.0 1 ELEVATION NUMBER
BUILDING ELEVATION
SHEET NUMBER

1 A-9.20 1 ELEVATION NUMBER
WINDOW WALL ELEVATION
SHEET NUMBER

1 A-14.2 SIM. REFERENCE NUMBER
REFERENCE TAG
SHEET NUMBER
SIMILAR REFERENCE

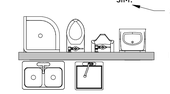

PLUMBING FIXTURES

F.E. 1 A-9.4 FIRE EXTINGUISHER

A TACTILE SIGNAGE, TYPE PER LEGEND, THIS SHEET

FD/DD FLOOR/DECK DRAIN PER PLUMBING DRAWINGS, 1/4" MAX. STRAINER OPENING IN ALL DIRECTIONS, 1:48 MAX. SLOPE TO DRAIN

ROOM NAME 101 ROOM TAG
ROOM NUMBER

A-50.8 OPENING TAG

WW-00 WINDOW WALL TAG

CERAMIC TILING

EPOXY EPOXY COATING OVER CONCRETE FLOORING

POLISHED POLISHED CONCRETE FINISHING

ENLARGED FLOOR PLAN — n 22

1/4" = 1'-0"

ENLARGED FLOOR PLAN — n 16

1/4" = 1'-0"

ENLARGED FLOOR PLAN — n 10

1/4" = 1'-0"

ENLARGED FLOOR PLAN — n 4

1/4" = 1'-0"

ENLARGED FLOOR PLAN — n 18

1/4" = 1'-0"

ENLARGED FLOOR PLAN — n 6

1/4" = 1'-0"

SYMBOLS

A WOMEN'S RESTROOM WALL SIGN
B GIRL'S RESTROOM WALL SIGN
C FEMALE DOOR GEOMETRIC SYMBOL
D ROOM DESIGNATION WALL SIGN WITH ISA
E EXIT
F MEN'S RESTROOM WALL SIGN
G BOY'S RESTROOM WALL SIGN
H MALE DOOR GEOMETRIC SYMBOL
J ROOM DESIGNATION WALL SIGN
K EXIT ROUTE
L SPRINKLER RISER ROOM
M GENDER NEUTRAL / UNISEX RESTROOM WALL SIGN
N GENDER NEUTRAL / UNISEX GEOMETRIC DOOR SIGN
P OCCUPANCY SIGN
Q ASSISTIVE LISTENING SIGN (25%, BUT NO FEWER THAN TWO, SHALL BE HEARING AID COMPATIBLE)
R AISLE SEAT AVAILABILITY SIGN — 8 A-14.0

TACTILE SIGNAGE DETAILS PER — SHEET A-12.0

TACTILE SIGNAGE LEGEND

IDENTIFICATION STAMP
DIV. OF THE STATE ARCHITECT
APP: 03-122664 INC:
REVIEWED FOR
SS ☑ FLS ☑ ACS ☑
DATE: 05/12/2023

pjhm architects
LICENSED ARCHITECT RICHARD W. PRIBYL NO. C15585 REN. 02/25 STATE OF CALIFORNIA
SD Phone: 760.730.5527 • LA Office: 837 Traction Avenue, #410, Los Angeles, CA 90013 • LA Phone: 213.278.0172 • Web: pjhm.com
OC Office: 24461 Ridge Route Drive #100, Laguna Hills, CA 92653 • OC Phone: 949.496.6191 • SD Office: 804 Pier View Way #103, Oceanside, CA 92054

HIGHLAND HIGH SCHOOL
50M POOL & AQUATICS CENTER

KERN HIGH SCHOOL DISTRICT

FLOOR PLAN - ENLARGED

A-3.4

4/13/2023 9:04:52 AM

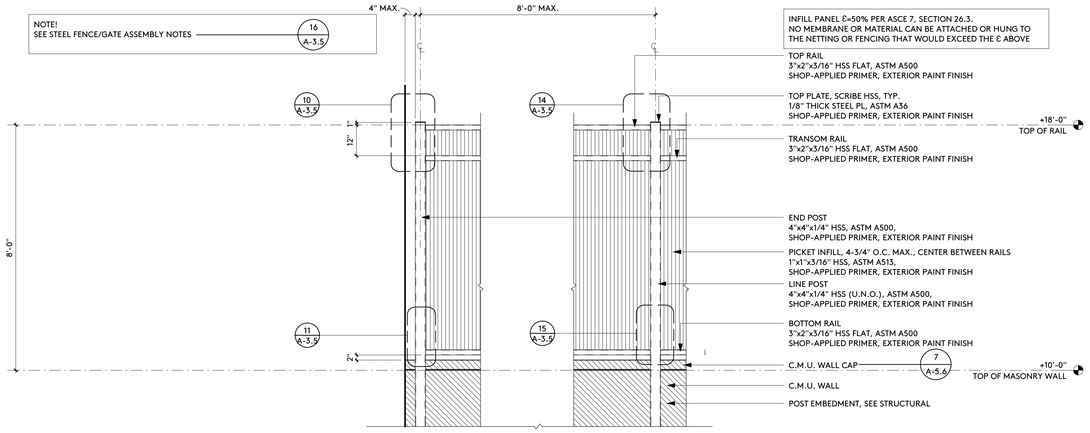

BUILDING FENCE - ORNAMENTAL STEEL 9

1/2" = 1'-0"

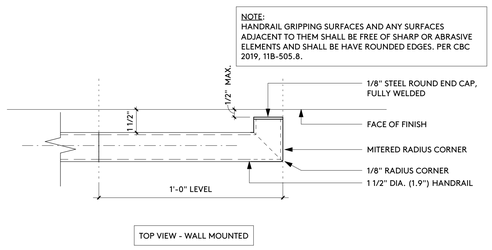

HANDRAIL TERMINATION 5

3" = 1'-0"

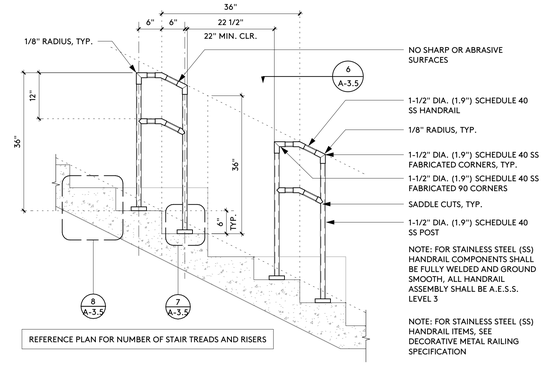

STAIR/HANDRAIL ELEVATION - POST MOUNT 1

3/4" = 1'-0"

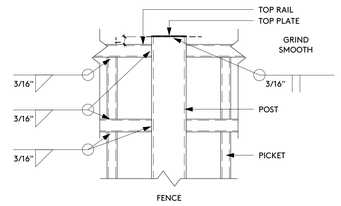

DETAIL 14

1 1/2" = 1'-0"

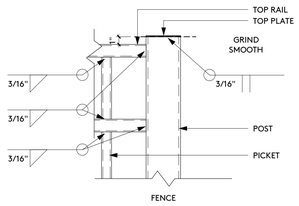

DETAIL 10

1 1/2" = 1'-0"

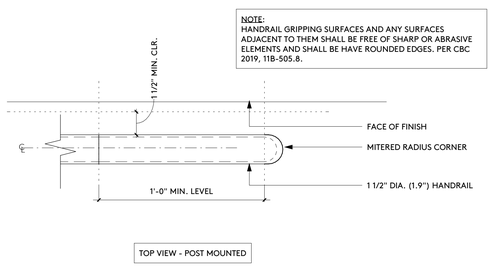

HANDRAIL TERMINATION 6

3" = 1'-0"

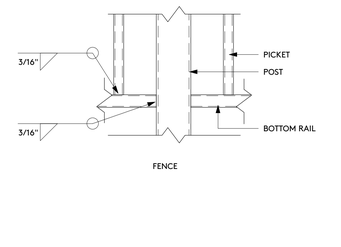

DETAIL 15

1 1/2" = 1'-0"

1. ALL FENCE FRAMES/COMPONENTS SHALL BE: A.E.S.S. LEVEL 3
2. ALL FENCE FRAME ASSEMBLIES SHALL BE FULLY WELDED, WELDS ALL AROUND WITH FILLET WELDS, SEE WELDING NOTES — 12 A-3.5
3. ALL FENCE FRAME ASSEMBLIES SHALL BE SHOP-PRIMED AND FIELD PAINTED (TOP COATS)
4. PRODUCT DATA AND SHOP DRAWINGS ARE REQUIRED. APPROVED SUBMITTALS ARE REQUIRED PRIOR TO FABRICATION.

NOTE! STEEL FENCE ASSEMBLY 16

1/8" = 1'-0"

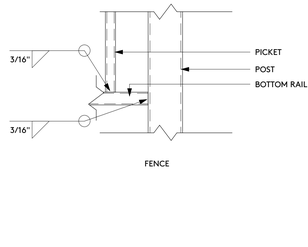

DETAIL 11

1 1/2" = 1'-0"

1. WELDING PROCEDURES, ELECTRODES AND WELDER QUALIFICATIONS SHALL CONFORM TO THE "CODE FOR WELDING IN BUILDING CONSTRUCTION", AMERICAN WELDING SOCIETY (AWS), D1.1 AND THE AISC "SPECIFICATIONS FOR THE DESIGN, FABRICATION AND ERECTION OF STRUCTURAL STEEL FOR BUILDINGS".
2. ALL WELDERS SHALL HAVE EVIDENCE OF PASSING THE AWS STANDARD QUALIFICATION TESTS, AND SHALL BE CERTIFIED FOR THE WORK THEY ARE PERFORMING.
3. PROJECT WELDING SHALL BE PERFORMED ONLY IN ACCORDANCE WITH WELDING PROCEDURE SPECIFICATIONS (WPS) SUBMITTED BY THE CONTRACTOR AND REVIEWED BY THE EOR AND PROJECT WELDING INSPECTOR. THE WPS SHALL BE IN ACCORDANCE WITH AWS D1.1-D1.4 CURRENT EDITION.
4. WELDING OF STRUCTURAL STEEL SHALL BE PERFORMED PER AWS D1.1 USING E70XX ELECTRODES UNLESS OTHERWISE NOTED.
5. WELDING OF REINFORCING BARS SHALL BE PERFORMED PER AWS D1.4 USING E90XX ELECTRODES.
6. WELDING OF METAL DECK AND LIGHT GAGE STEEL SHALL BE IN ACCORDANCE WITH AWS D1.3.
7. ALL EXPOSED WELDS ON ARCHITECTURALLY EXPOSED STRUCTURAL STEEL (AESS) SHALL COMPLY WITH AISC CODE OF STANDARD PRACTICE, SECTION 10.
8. FIELD WELDS HAVE BEEN INDICATED WHERE THEY ARE EXPECTED TO OCCUR. THE CONTRACTOR SHALL DETERMINE THE ACTUAL FIELD WELDING NECESSARY TO COMPLETE THE PROJECT AND INCLUDE ALL ASSOCIATED COSTS WITHIN THE BASE BID

GENERAL NOTES - WELDING 12

1/8" = 1'-0"

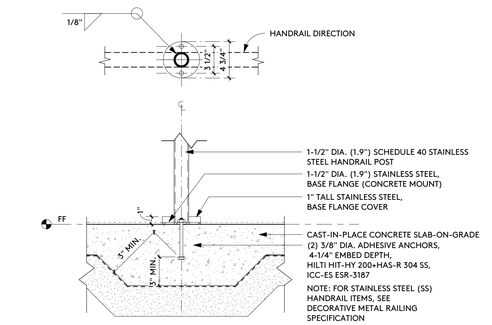

ANCHORAGE - POST MOUNTED HANDRAIL 7

1 1/2" = 1'-0"

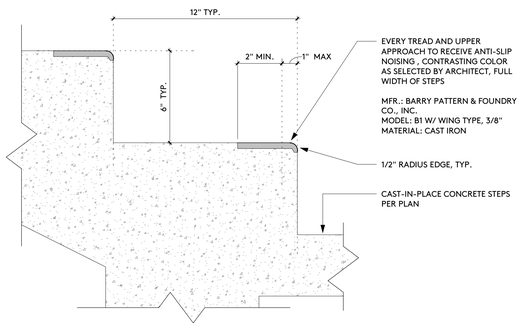

STAIR NOSING 8

3" = 1'-0"

4/13/2023 9:04:53 AM

IDENTIFICATION STAMP
DIV. OF THE STATE ARCHITECT
APP: 03-122664 INC:
REVIEWED FOR
SS ☑ FLS ☑ ACS ☑
DATE: 05/12/2023

pjhm architects

LICENSED ARCHITECT
RICHARD W. PRIMUS
NO. C15585
REN. 02/25
STATE OF CALIFORNIA

OC Office: 24461 Ridge Route Drive #100, Laguna Hills, CA 92653 • SD Phone: 760.730.5527 • LA Office: 837 Traction Avenue, #410, Los Angeles, CA 90013 • OC Phone: 949.496.6191 • LA Phone: 213.278.0172 • SD Office: 804 Pier View Way #103, Oceanside, CA 92054 • Web: pjhm.com

HIGHLAND HIGH SCHOOL
50M POOL & AQUATICS CENTER

KERN HIGH SCHOOL DISTRICT

FLOOR PLAN DETAILS

A-3.5

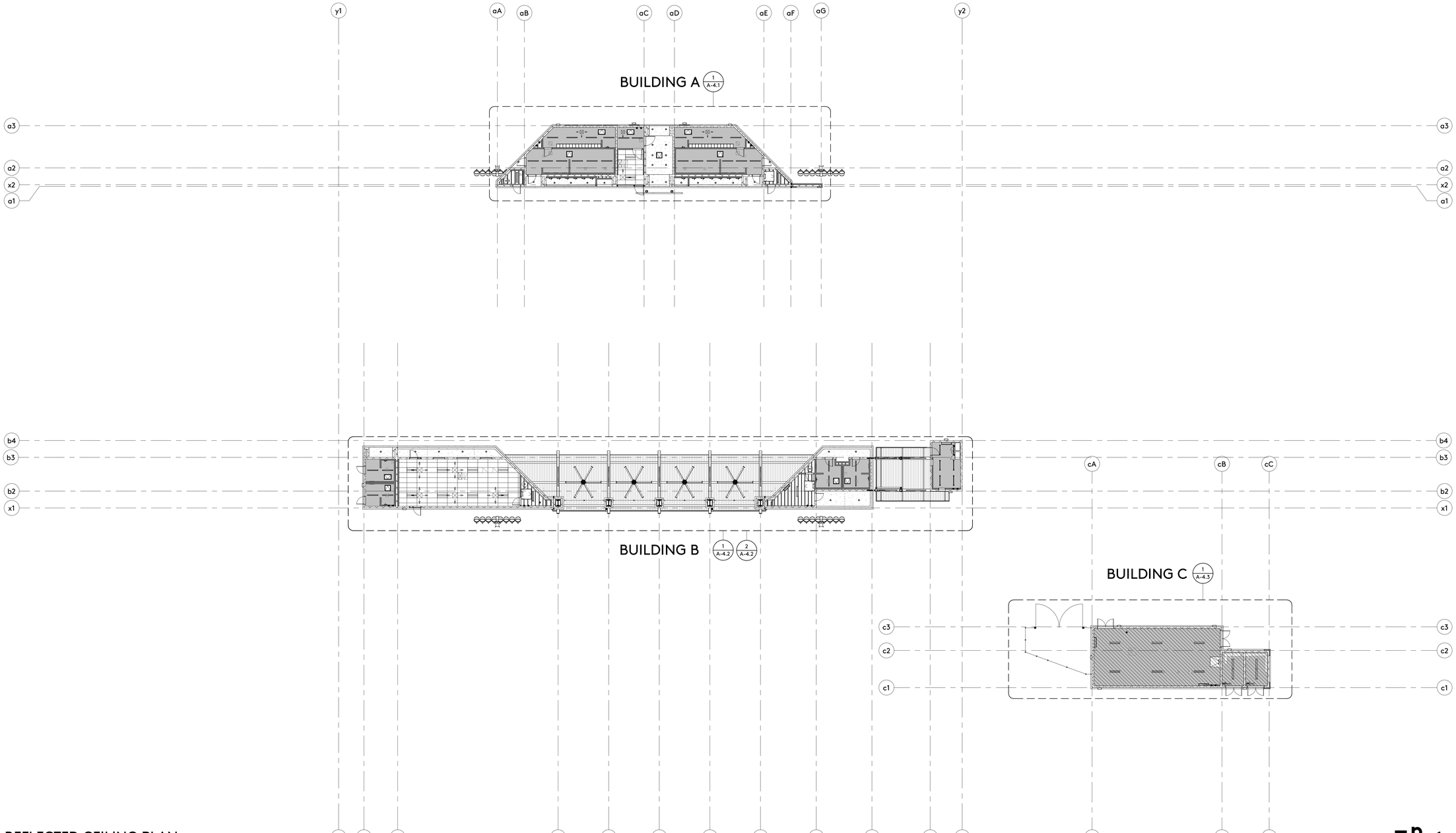

REFLECTED CEILING PLAN

PORTLAND CEMENT PLASTER CEILING/SOFFIT — 4 / A-4.4

GYPSUM BOARD CEILING/SOFFIT — 3 / A-4.4

GYPSUM SHEATHING CEILING (DIRECT ATTACH TO ROOF JOIST) — 3 / A-5.4

2'X4' METAL ACOUSTICAL CEILING SUSPENSION ASSEMBLY CEILING — 1 / A-4.4

EXPOSED STEEL DECKING — 1 / A-5.4

STUD WALL ASSEMBLY

CAST-IN-PLACE CONCRETE WALL ASSEMBLY

8" CONCRETE MASONRY UNIT WALL ASSEMBLY

8" CONCRETE MASONRY UNIT WALL ASSEMBLY, 1-HOUR FIRE RATED PER C.B.C. TABLE 722.3.2 CALCULATED FIRE RESISTANCE

ROOM NAME
A-101 — ROOM NUMBER

9'-0" — CEILING HEIGHT ABOVE FINISH FLOOR

U.R.F. — UNDERSIDE OF ROOF FRAMING

1 / A-1.1 — DETAIL REFERENCE NUMBER / SHEET REFERENCE NUMBER

A — BUILDING GRIDLINE

6'-0" FOF — BUILDING DIMENSION FACE OF SHEATHING WHERE OCCURS, OTHERWISE FACE OF STUD
BUILDING DIMENSION FACE OF FINISH, WHERE OCCURS

6'-0" — BUILDING CENTERLINE DIMENSION

1 / A-1.1 SIM — BUILDING SECTION REFERENCE NUMBER / SHEET REFERENCE NUMBER
SIMILAR SECTION

LIGHT FIXTURES, SEE ELECTRICAL DRAWINGS

EXHAUST AIR REGISTER, SEE MECHANICAL DRAWINGS

RETURN AIR REGISTER, SEE MECHANICAL DRAWINGS

SUPPLY AIR REGISTER, SEE MECHANICAL DRAWINGS

CEILING ACCESS PANEL — 15 / A-4.5

CEILING JOIST SPAN DIRECTION

SYMBOLS

IDENTIFICATION STAMP
DIV. OF THE STATE ARCHITECT
APP: 03-122664 INC:
REVIEWED FOR
SS ☑ FLS ☑ ACS ☑
DATE: 05/12/2023

pjhm architects

LICENSED ARCHITECT
RICHARD W. PRIEST
NO. C15585
REN. 02/25
STATE OF CALIFORNIA

HIGHLAND HIGH SCHOOL
50M POOL & AQUATICS CENTER

KERN HIGH SCHOOL DISTRICT

REFLECTED CEILING PLAN - COMPOSITE

A-4.0

OC Office: 24461 Ridge Route Drive #100, Laguna Hills, CA 92653 • OC Phone: 949.496.6191 • SD Office: 804 Pier View Way #103, Oceanside, CA 92054 • SD Phone: 760.730.5527 • LA Office: 837 Traction Avenue, #410, Los Angeles, CA 90013 • LA Phone: 213.278.0172 • Web: pjhm.com

4/13/2023 9:04:55 AM

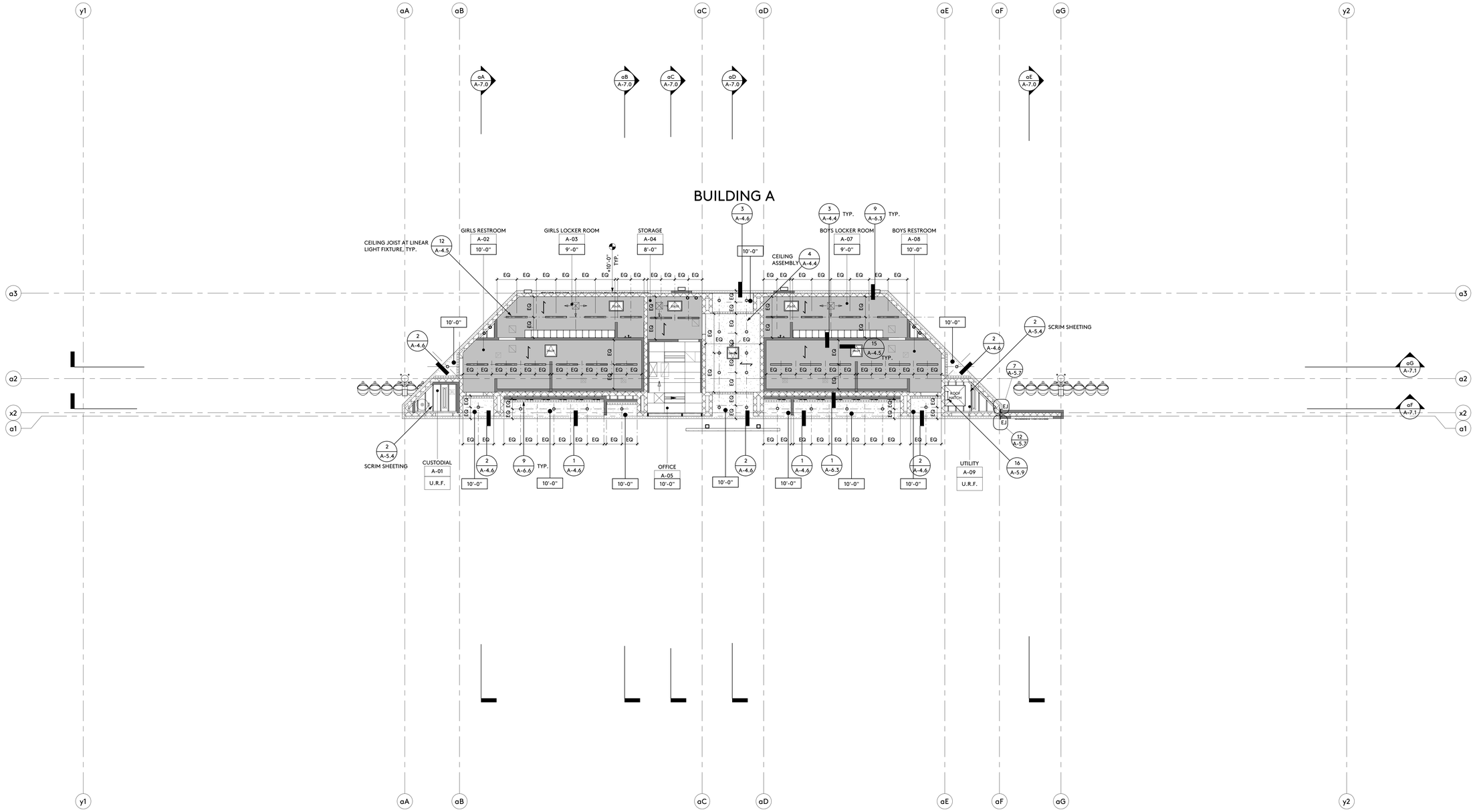

REFLECTED CEILING PLAN

1/8" = 1'-0"

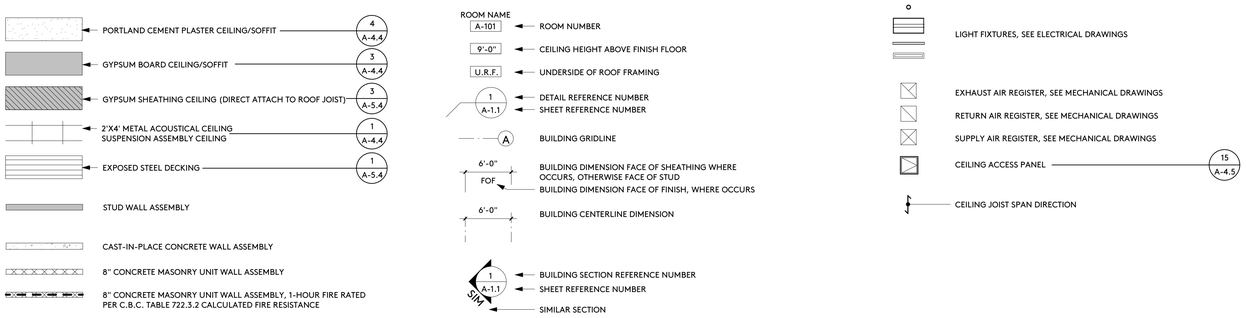

SYMBOLS

IDENTIFICATION STAMP
DIV. OF THE STATE ARCHITECT
APP: 03-122664 INC:
REVIEWED FOR
SS ☑ FLS ☑ ACS ☑
DATE: 05/12/2023

pjhm architects

LICENSED ARCHITECT
THOMAS W. KRUSE
NO. C15585
REN. 02/25
STATE OF CALIFORNIA

HIGHLAND HIGH SCHOOL
50M POOL & AQUATICS CENTER

KERN HIGH SCHOOL DISTRICT

REFLECTED CEILING PLAN

A-4.1

OC Office: 24461 Ridge Route Drive #100, Laguna Hills, CA 92653 • OC Phone: 949.496.6191 • SD Office: 804 Pier View Way #103, Oceanside, CA 920 54 • SD Phone: 760.730.5527 • LA Office: 837 Traction Avenue, #410, Los Angeles, CA 90013 • LA Phone: 213.278.0172 • Web: pjhm.com

4/13/2023 9:04:56 AM

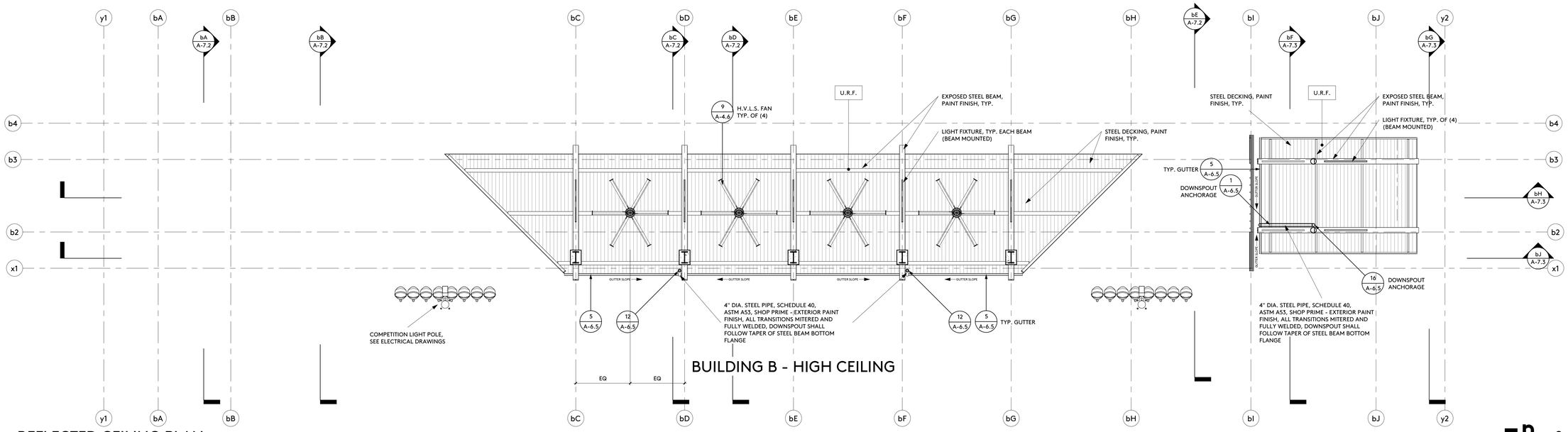

BUILDING B - HIGH CEILING

REFLECTED CEILING PLAN

1/8" = 1'-0"

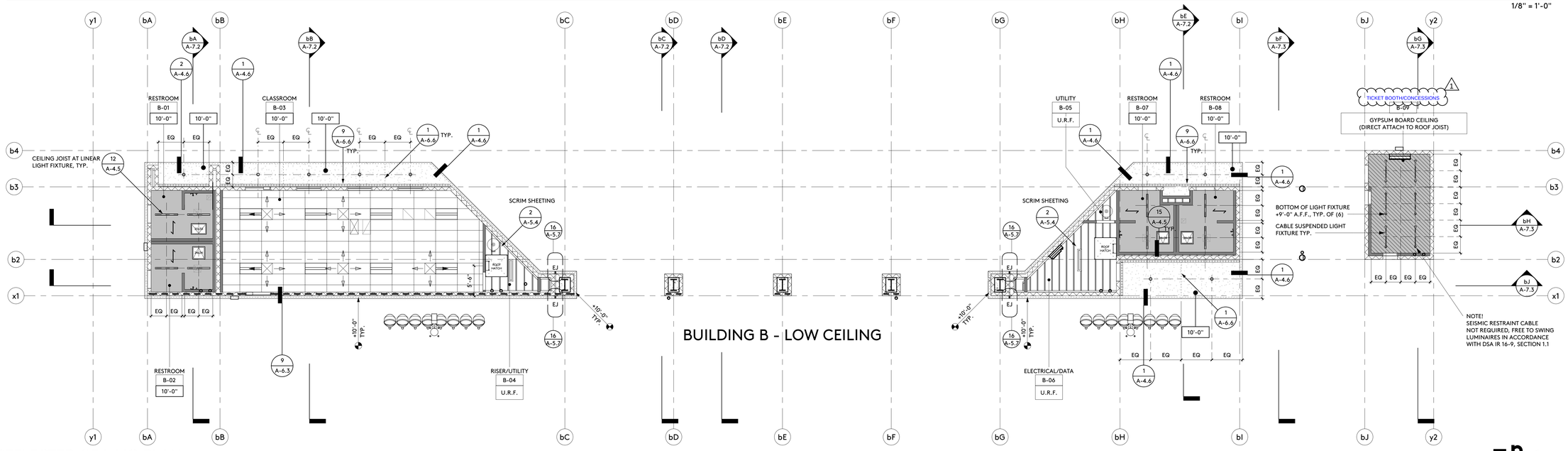

BUILDING B - LOW CEILING

REFLECTED CEILING PLAN

1/8" = 1'-0"

- PORTLAND CEMENT PLASTER CEILING/SOFFIT — 4 A-4.4
- GYPSUM BOARD CEILING/SOFFIT — 3 A-4.4
- GYPSUM SHEATHING CEILING (DIRECT ATTACH TO ROOF JOIST) — 3 A-5.4
- 2'X4' METAL ACOUSTICAL CEILING SUSPENSION ASSEMBLY CEILING — 1 A-4.4
- EXPOSED STEEL DECKING — 1 A-5.4
- STUD WALL ASSEMBLY
- CAST-IN-PLACE CONCRETE WALL ASSEMBLY
- 8" CONCRETE MASONRY UNIT WALL ASSEMBLY
- 8" CONCRETE MASONRY UNIT WALL ASSEMBLY, 1-HOUR FIRE RATED PER C.B.C. TABLE 722.3.2 CALCULATED FIRE RESISTANCE

ROOM NAME
A-101 — ROOM NUMBER
9'-0" — CEILING HEIGHT ABOVE FINISH FLOOR
U.R.F. — UNDERSIDE OF ROOF FRAMING
1 / A-1.1 — DETAIL REFERENCE NUMBER / SHEET REFERENCE NUMBER
A — BUILDING GRIDLINE
6'-0" FOF — BUILDING DIMENSION FACE OF SHEATHING WHERE OCCURS, OTHERWISE FACE OF STUD / BUILDING DIMENSION FACE OF FINISH, WHERE OCCURS
6'-0" — BUILDING CENTERLINE DIMENSION
1 / A-1.1 SIM — BUILDING SECTION REFERENCE NUMBER / SHEET REFERENCE NUMBER / SIMILAR SECTION

- LIGHT FIXTURES, SEE ELECTRICAL DRAWINGS
- EXHAUST AIR REGISTER, SEE MECHANICAL DRAWINGS
- RETURN AIR REGISTER, SEE MECHANICAL DRAWINGS
- SUPPLY AIR REGISTER, SEE MECHANICAL DRAWINGS
- CEILING ACCESS PANEL — 15 A-4.5
- CEILING JOIST SPAN DIRECTION

SYMBOLS

IDENTIFICATION STAMP
DIV. OF THE STATE ARCHITECT
APP: 03-122664 INC:
REVIEWED FOR
SS ☑ FLS ☑ ACS ☑
DATE: 05/12/2023

pjhm architects
LICENSED ARCHITECT RICHARD W. PRIMUS NO. C15585 REN. 02/25 STATE OF CALIFORNIA
SD Phone: 760.730.5527 • LA Office: 837 Traction Avenue, #410, Los Angeles, CA 90013 • LA Phone: 213.278.0172 • Web: pjhm.com
OC Office: 24461 Ridge Route Drive #100, Laguna Hills, CA 92653 • OC Phone: 949.496.6191 • SD Office: 804 Pier View Way #103, Oceanside, CA 92054 • SD Phone:

HIGHLAND HIGH SCHOOL
50M POOL & AQUATICS CENTER

KERN HIGH SCHOOL DISTRICT

1 ADDENDUM NO. 1

REFLECTED CEILING PLAN

A-4.2

4/13/2023 9:05:01 AM

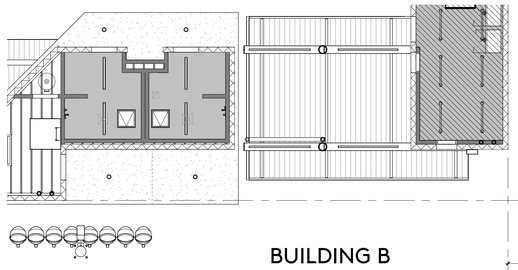

BUILDING B

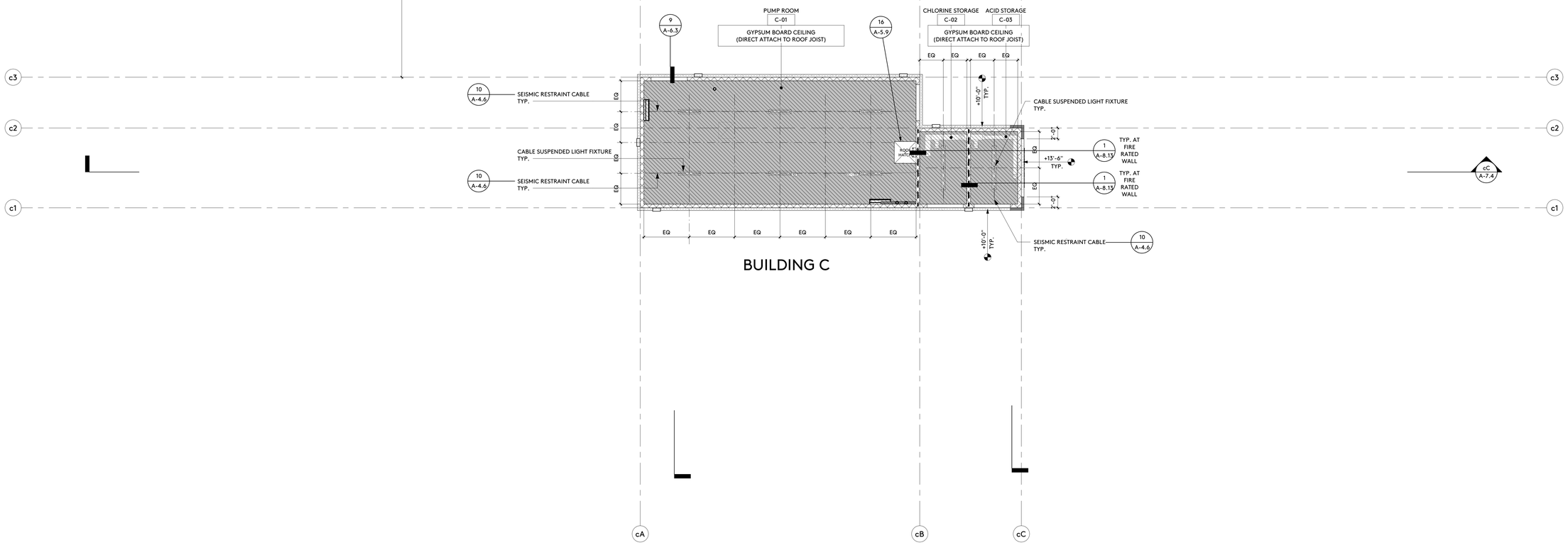

BUILDING C

REFLECTED CEILING PLAN

- PORTLAND CEMENT PLASTER CEILING/SOFFIT — 4 / A-4.4
- GYPSUM BOARD CEILING/SOFFIT — 3 / A-4.4
- GYPSUM SHEATHING CEILING (DIRECT ATTACH TO ROOF JOIST) — 3 / A-5.4
- 2'X4' METAL ACOUSTICAL CEILING SUSPENSION ASSEMBLY CEILING — 1 / A-4.4
- EXPOSED STEEL DECKING — 1 / A-5.4
- STUD WALL ASSEMBLY
- CAST-IN-PLACE CONCRETE WALL ASSEMBLY
- 8" CONCRETE MASONRY UNIT WALL ASSEMBLY
- 8" CONCRETE MASONRY UNIT WALL ASSEMBLY, 1-HOUR FIRE RATED PER C.B.C. TABLE 722.3.2 CALCULATED FIRE RESISTANCE

ROOM NAME
A-101 — ROOM NUMBER
9'-0" — CEILING HEIGHT ABOVE FINISH FLOOR
U.R.F. — UNDERSIDE OF ROOF FRAMING
1 / A-1.1 — DETAIL REFERENCE NUMBER / SHEET REFERENCE NUMBER
A — BUILDING GRIDLINE
6'-0" FOF — BUILDING DIMENSION FACE OF SHEATHING WHERE OCCURS, OTHERWISE FACE OF STUD / BUILDING DIMENSION FACE OF FINISH, WHERE OCCURS
6'-0" — BUILDING CENTERLINE DIMENSION
1 / A-1.1 SIM — BUILDING SECTION REFERENCE NUMBER / SHEET REFERENCE NUMBER / SIMILAR SECTION

- LIGHT FIXTURES, SEE ELECTRICAL DRAWINGS
- EXHAUST AIR REGISTER, SEE MECHANICAL DRAWINGS
- RETURN AIR REGISTER, SEE MECHANICAL DRAWINGS
- SUPPLY AIR REGISTER, SEE MECHANICAL DRAWINGS
- CEILING ACCESS PANEL — 15 / A-4.5
- CEILING JOIST SPAN DIRECTION

SYMBOLS

1/8" = 1'-0"

IDENTIFICATION STAMP
DIV. OF THE STATE ARCHITECT
APP: 03-122664 INC:
REVIEWED FOR
SS ☑ FLS ☑ ACS ☑
DATE: 05/12/2023

pjhm architects

LICENSED ARCHITECT
RICHARD W. PRIEBE
NO. C15585
REN. 02/25
STATE OF CALIFORNIA

OC Office: 24461 Ridge Route Drive #100, Laguna Hills, CA 92653 • SD Phone: 760.730.5527 • LA Office: 837 Traction Avenue, #410, Los Angeles, CA 90013 • LA Phone: 213.278.0172 • Web: pjhm.com

HIGHLAND HIGH SCHOOL
50M POOL & AQUATICS CENTER

KERN HIGH SCHOOL DISTRICT

REFLECTED CEILING PLAN

A-4.3

4/13/2023 9:05:01 AM

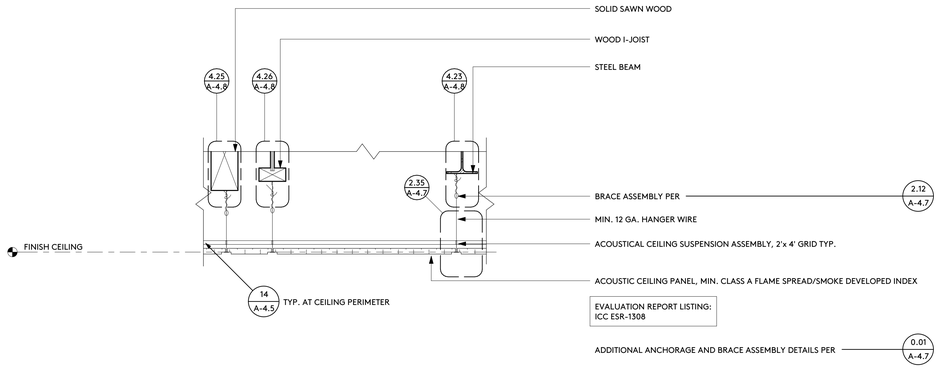

ASSEMBLY - ACOUSTICAL CEILING SUSPENSION SYSTEM 1

1 1/2" = 1'-0"

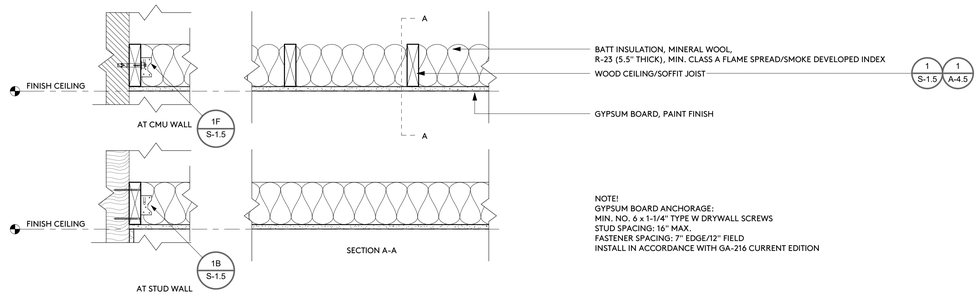

ASSEMBLY - GYPSUM BOARD CEILINGS/SOFFITS 3

1 1/2" = 1'-0"

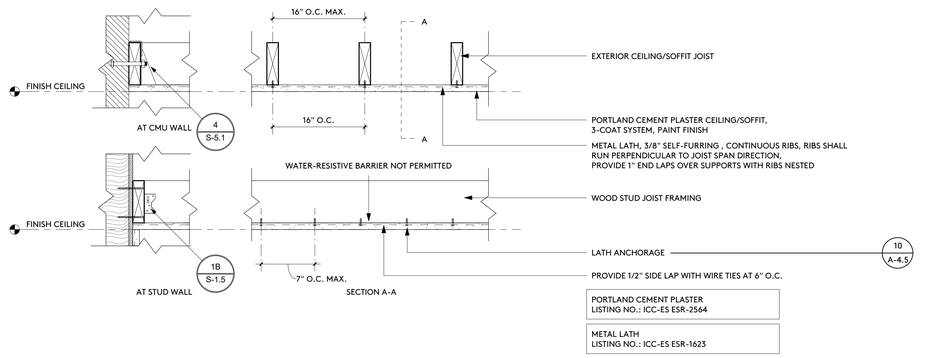

ASSEMBLY - PORTLAND CEMENT CEILINGS/SOFFITS 4

1 1/2" = 1'-0"

IDENTIFICATION STAMP
DIV. OF THE STATE ARCHITECT
APP: 03-122664 INC:
REVIEWED FOR
SS ☑ FLS ☑ ACS ☑
DATE: 05/12/2023

pjhm architects

LICENSED ARCHITECT
THOMAS W. KRUSE
NO. C15585
REN. 02/25
STATE OF CALIFORNIA

HIGHLAND HIGH SCHOOL
50M POOL & AQUATICS CENTER

KERN HIGH SCHOOL DISTRICT

REFLECTED CEILING PLAN DETAILS

A-4.4

OC Office: 24461 Ridge Route Drive #100, Laguna Hills, CA 92653 • OC Phone: 949.496.6191 • SD Office: 804 Pier View Way #103, Oceanside, CA 92054 • SD Phone: 760.730.5527 • LA Office: 837 Traction Avenue, #410, Los Angeles, CA 90013 • LA Phone: 213.278.0172 • Web: pjhm.com

4/13/2023 9:05:02 AM

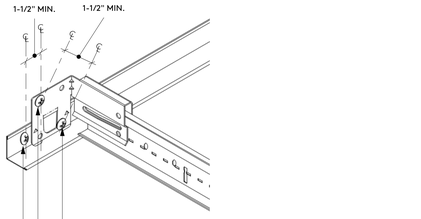

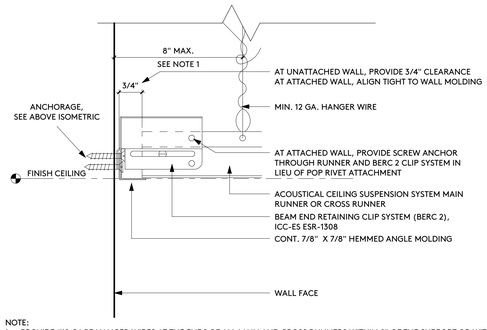

NOTE:
1. PROVIDE #12 GAGE HANGER WIRES AT THE ENDS OF ALL MAIN AND CROSS RUNNERS WITHIN 8" OF THE SUPPORT OR WITHIN 1/4 OF THE LENGTH OF THE END TEE, WHICHEVER IS LESS, FOR THE PERIMETER OF THE CEILING AREA. PERIMETER WIRES ARE NOT REQUIRED WHEN THE LENGTH TO THE END TEE IS 8" OR LESS

CEILING PERIMETER ANCHORAGE 14

6" = 1'-0"

***PERMANENTLY ATTACHED WARNING LABEL TO READ:
"WARNING:
1) DO NOT CLIMB, WALK, OR CRAWL ON THE GYPSUM BOARD CEILING PANELS OR WOOD FRAMING
2) DO NOT STORE OR STOW ANYTHING ON THE GYPSUM BOARD CEILING PANELS OR WOOD FRAMING"

CEILING ACCESS PANEL 15

3" = 1'-0"

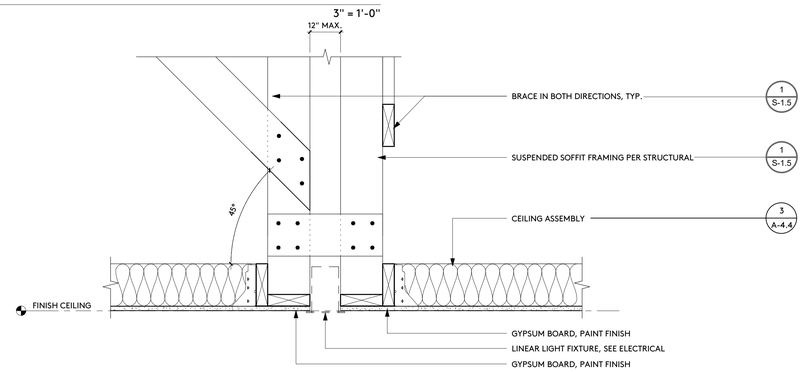

INTERIOR CEILING AT LIGHT FIXTURE 12

1 1/2" = 1'-0"

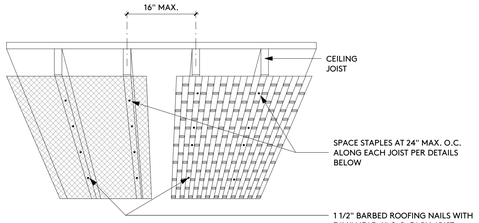

ILLUSTRATION SHOWING HOW A NAILED ON CEILING CAN BE GIVEN ADDITIONAL SUPPORT THROUGH USE OF STRONGHOLD EARTHQUAKE STAPLES, IN BUILDINGS LOCATED IN AREAS SUBJECT TO EARTHQUAKE OR OTHER DISTURBANCES.

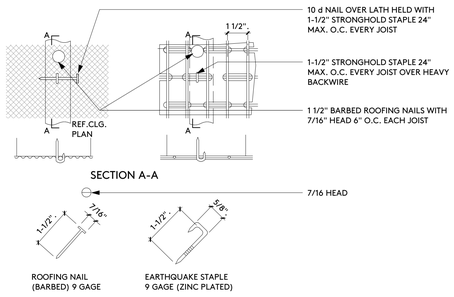

LATH ANCHORAGE AT WOOD STUD JOIST 10

3/4" = 1'-0"

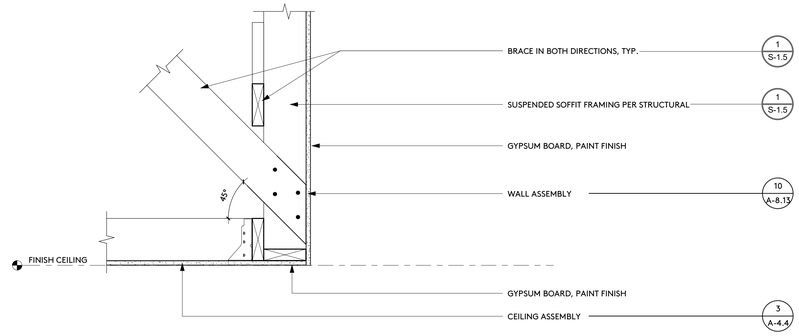

INTERIOR SUSPENDED SOFFITS 1

1 1/2" = 1'-0"

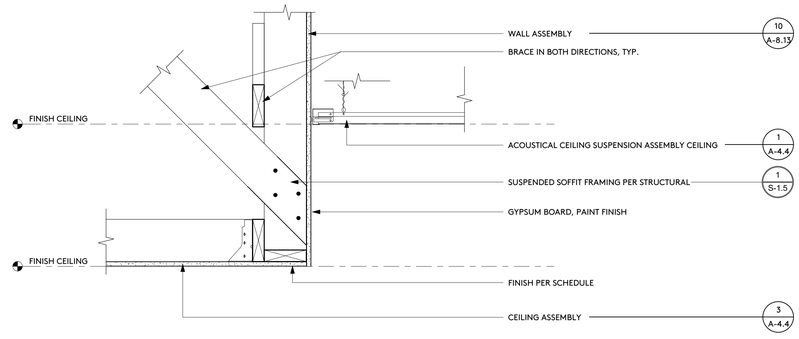

INTERIOR SUSPENDED SOFFITS 2

1 1/2" = 1'-0"

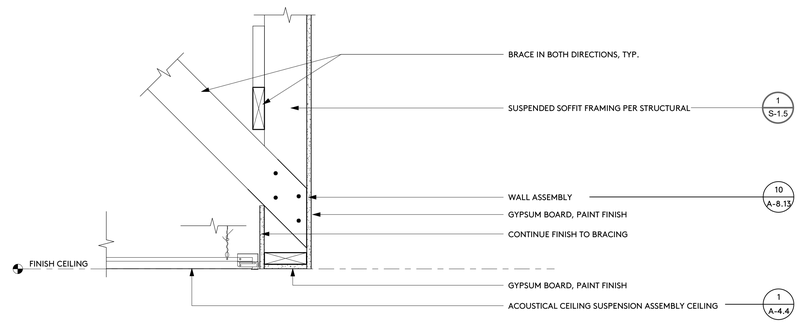

INTERIOR SUSPENDED SOFFITS 3

1 1/2" = 1'-0"

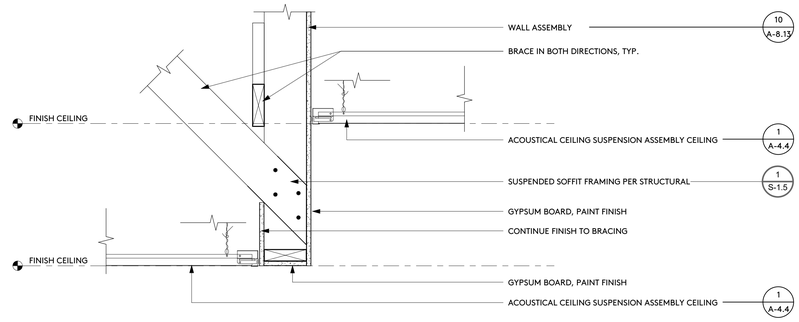

INTERIOR SUSPENDED SOFFITS 4

1 1/2" = 1'-0"

IDENTIFICATION STAMP
DIV. OF THE STATE ARCHITECT
APP: 03-122664 INC:
REVIEWED FOR
SS ☑ FLS ☑ ACS ☑
DATE: 05/12/2023

pjhm architects
LICENSED ARCHITECT
RICHARD W. RUSSELL
NO. C15585
REN. 02/25
STATE OF CALIFORNIA
OC Office: 24461 Ridge Route Drive #100, Laguna Hills, CA 92653 • OC Phone: 949.496.6191 • SD Office: 804 Pier View Way #103, Oceanside, CA 92054 • SD Phone: 760.730.5527 • LA Office: 837 Traction Avenue, #410, Los Angeles, CA 90013 • LA Phone: 213.278.0172 • Web: pjhm.com

HIGHLAND HIGH SCHOOL
50M POOL & AQUATICS CENTER

KERN HIGH SCHOOL DISTRICT

REFLECTED CEILING PLAN DETAILS

A-4.5

4/13/2023 9:05:03 AM

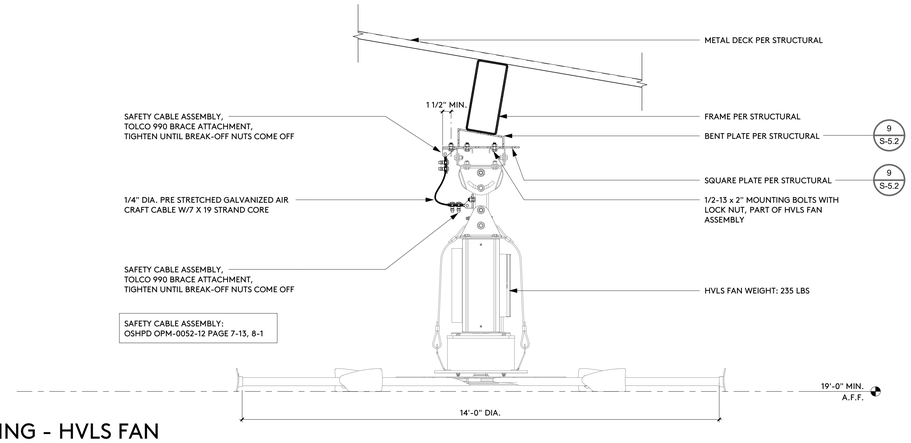

MOUNTING - HVLS FAN 9

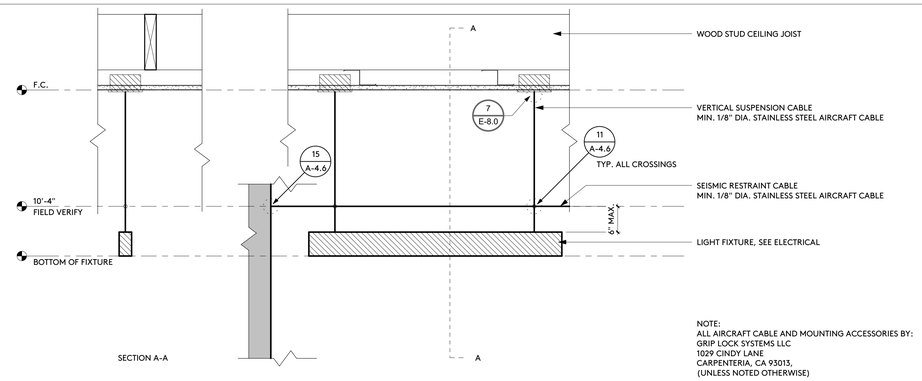

ASSEMBLY - LIGHT FIXTURE 10

1 1/2" = 1'-0"

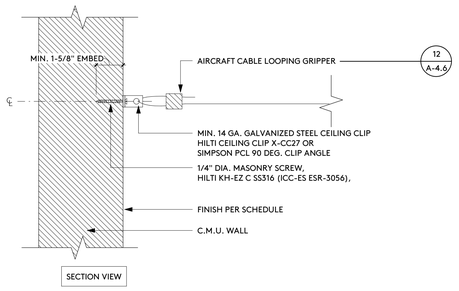

ANCHORAGE - TYPICAL BACKING 15

3" = 1'-0"

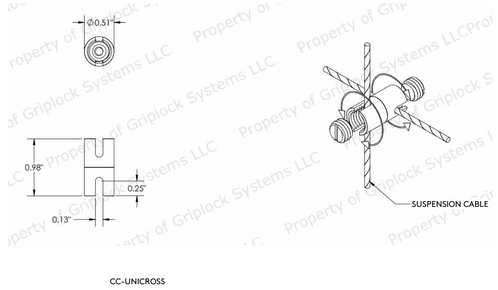

CABLE RESTRAINT - CC UNICROSS 11

3/4" = 1'-0"

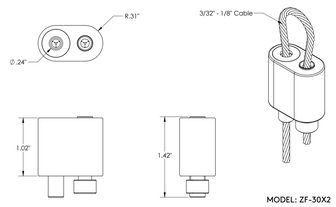

CABLE RESTRAINT - LOOPING GRIPPER 12

3/4" = 1'-0"

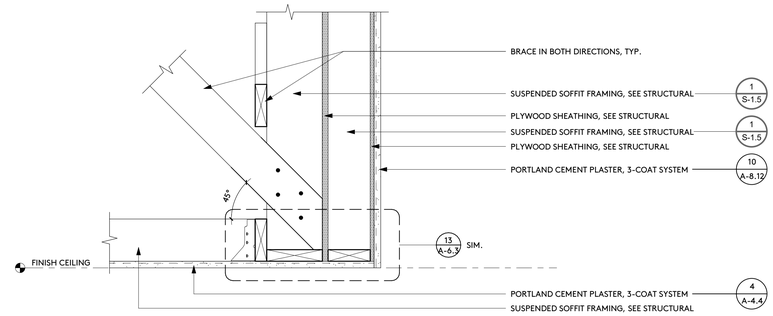

EXTERIOR SUSPENDED SOFFITS 1

1 1/2" = 1'-0"

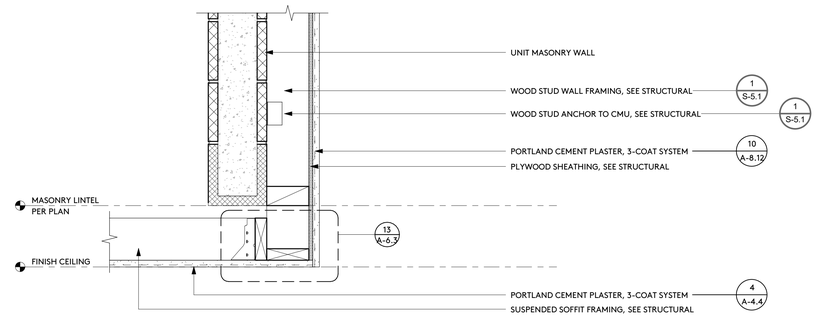

EXTERIOR SUSPENDED SOFFITS 2

1 1/2" = 1'-0"

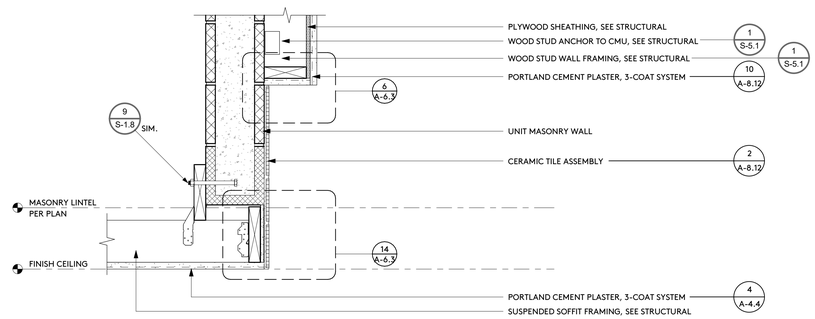

EXTERIOR SUSPENDED SOFFITS 3

1 1/2" = 1'-0"

IDENTIFICATION STAMP
DIV. OF THE STATE ARCHITECT
APP: 03-122664 INC:
REVIEWED FOR
SS ☑ FLS ☑ ACS ☑
DATE: 05/12/2023

pjhm architects
LICENSED ARCHITECT
RICHARD W. PRIMM
NO. C15585
REN. 02/25
STATE OF CALIFORNIA
SD Office: 837 Traction Avenue, #410, Los Angeles, CA 90013 • LA Phone: 213.278.0172 • Web: pjhm.com
OC Office: 24461 Ridge Route Drive #100, Laguna Hills, CA 92653 • OC Phone: 949.496.6191 • SD Office: 804 Pier View Way #103, Oceanside, CA 92054 • SD Phone: 760.730.5527

HIGHLAND HIGH SCHOOL
50M POOL & AQUATICS CENTER

KERN HIGH SCHOOL DISTRICT

REFLECTED CEILING PLAN DETAILS

A-4.6

4/13/2023 9:05:04 AM

IR 25-2
SUSPENDED LAY-IN PANEL CEILING: 2019 CBC

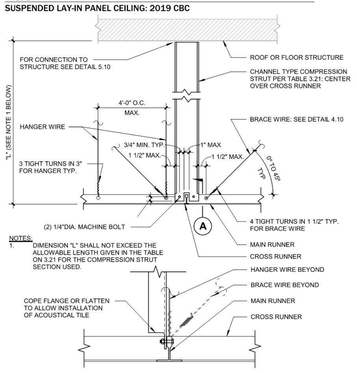

NOTES:
1. DIMENSION "L" SHALL NOT EXCEED THE ALLOWABLE LENGTH GIVEN IN THE TABLE ON 3.21 FOR THE COMPRESSION STRUT SECTION USED.

A SECTION
3" = 1'-0"

Detail Title :	REV: 09/21/2015	Detail No.
COMPRESSION STRUT - CHANNEL TYPE	REV: 03/2022	3.10

DSA IR 25-2.19 - SHEET 3.10 3.10

12" = 1'-0"

IR 25-2
SUSPENDED LAY-IN PANEL CEILING: 2019 CBC

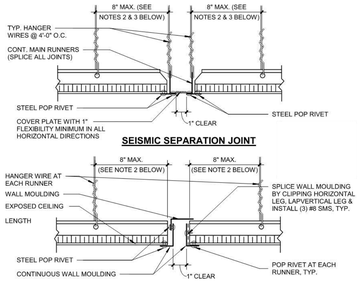

SEISMIC SEPARATION JOINT

ALTERNATE SEISMIC SEPARATION JOINT

NOTES:
1. DETAILS APPLIES TO SEISMIC SEPARATION JOINT AT CONTINUOUS CEILING AREAS EXCEEDING 2500 SQ. FT. SEE CEILING PLANS FOR LOCATION.
2. PROVIDE #12 GAGE HANGER WIRES AT THE ENDS OF ALL MAIN AND CROSS RUNNERS WITHIN EIGHT (8) INCHES OF THE SUPPORT OR WITHIN ONE-FOURTH (1/4) OF THE LENGTH OF THE END TEE, WHICHEVER IS LESS, FOR THE PERIMETER OF THE CEILING AREA. PERIMETER WIRES ARE NOT REQUIRED WHEN THE LENGTH OF THE END TEE IS EIGHT (8) INCHES OR LESS.
3.

Detail Title :	REV: 09/21/2015	Detail No.
SEISMIC SEPARATION JOINT	REV: 03/2022	2.45

DSA IR 25-2.19 - SHEET 2.45 2.45

12" = 1'-0"

IR 25-2
SUSPENDED LAY-IN PANEL CEILING: 2019 CBC

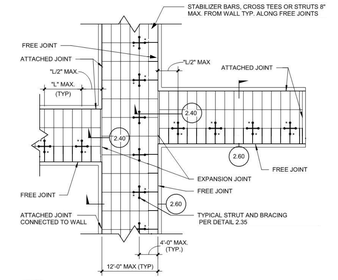

NOTES:
1. "L" IS MAX. BRACE ASSEMBLY SPACING PER CEILING PLAN DETAIL. FOR EXAMPLE, WHERE 8' x 12' SPACING IS SPECIFIED, USE "L" = 8'.

Detail Title:	REV: 09/21/2015	Detail No.
CORRIDOR CEILING PLAN (SCHOOL BUILDING)	REV: 03/2022	2.30

DSA IR 25-2.19 - SHEET 2.30 2.30

12" = 1'-0"

IR 25-2
SUSPENDED LAY-IN PANEL CEILING: 2019 CBC

3.03 Hanger wires that are more than one (horizontal) in six (vertical) out of plumb shall have counter-sloping wires.

3.04 Slack safety wires shall be considered hanger wires for installation and testing requirements.

3.05 Hanger and bracing wire anchorage to the structure shall be installed in such a manner that the direction of the anchorage aligns closely with the direction of the wire (e.g., bracing wire ceiling clips must be bent as shown in the details and rotated as required to align closely with the direction of the wire, screw eyes in wood must be installed so they align closely with the direction of the wire, etc.).

4. FASTENERS AND WELDING

4.01 Sheet metal screws shall comply with ASTM C1513 and ASME B18.6.3. Penetration of screws through joined material shall not be less than three exposed threads.

4.02 Expansion anchors shall be:
HILTI KWIK BOLT TZ2, MIN. 3/8" DIA. (ICC-ES ESR-4266), 100 LB. MAX

4.03 Power-Actuated Fasteners shall be:
HILTI LOW-VELOCITY X-U15 (ICC-ES ESR-2269) W/ X-CC27 U22 CEILING CLIP (ICC-ES ESR-2184)

4.04 If not otherwise specified in the evaluation report, power-actuated fasteners installed in steel shall be installed so the entire pointed end of the fastener is driven through the steel member.

4.05 Power-actuated fasteners in concrete or masonry are not permitted for bracing wires.

4.06 Concrete reinforcement and prestressing tendons shall be located by non-destructive means prior to installing post-installed anchors.

4.07 Welding shall be in accordance with AWS D1.3 using E60XX series electrodes.

5. TESTING

5.01 All field testing must be performed in the presence of the project inspector.

5.02 Post-installed anchors in concrete used to support hanger wires shall be tested at a frequency of 10 percent. Power-actuated fasteners in concrete shall be field tested for 200 pounds in tension. All other post-installed anchors in concrete shall be tested in accordance with CBC Section 1910A.5.

5.03 Post-installed anchors in concrete used to attach bracing wires shall be tested at a frequency of 50 percent in accordance with CBC Section 1910A5.

6. LUMINAIRES

6.01 All luminaires shall be positively attached to the ceiling suspension systems by mechanical means to resist a horizontal force equal to the weight of the luminaire. A minimum of two screws or approved fasteners are required at each luminaire, per ASTM E580 Section 5.3.1.

6.02 Surface-mounted luminaires shall be attached to the main runner with at least two positive clamping devices. The clamping device shall completely surround the supporting

Detail Title:	REV: 09/21/2015	Detail No.
CEILING NOTES	REV: 03/2022	1.00

DSA IR 25-2.19 - SHEET 1.01 1.00

12" = 1'-0"

IR 25-2
SUSPENDED LAY-IN PANEL CEILING: 2019 CBC

APPENDIX A: CONSTRUCTION DOCUMENTS CEILING NOTES AND DETAILS

See Sections 5.9 and 5.10 above for instruction and guidance on the proper use of these notes and details in the construction documents by the responsible design professional (RDP).

Sheet Index

Number	Title	Revision Date
1.00	Ceiling Notes	03/2022
2.12	Typ. Ceiling Plan for 12'-0" by 12'-0" Brace Assembly Spacing	03/2022
2.30	Corridor Ceiling Plan (School Buildings)	03/2022
2.35	Suspension and Lateral Bracing Assembly	03/2022
2.40	Expansion Joint (School Buildings)	03/2022
2.45	Seismic Separation Joint	03/2022
2.60	Ceiling Perimeter	03/2022
2.80	Luminaire / Air Terminal Support	03/2022
3.10	Compression Strut - Channel Type	03/2022
3.20	Compression Strut - EMT Type	03/2022
3.21	Compression Strut Table	03/2022
4.10	Hanger and Brace Wire Connections: Typ. Wire Turn	03/2022
4.11	Hanger and Brace Wire Connections Table	03/2022
4.23	Hanger Wire Connection to Structural Steel	03/2022
4.25	Hanger Wire Connection to Sawn Timber	03/2022
4.26	Hanger Wire Connection to Wood I-Joist	03/2022

Detail Title:	REV: 09/21/2015	Detail No.
SHEET INDEX	REV: 03/2022	0.01

DSA IR 25-2.19 - SHEET 0.01 0.01

12" = 1'-0"

IR 25-2
SUSPENDED LAY-IN PANEL CEILING: 2019 CBC

Sheet Index

Number	Title	Revision Date
4.29	Typical Saddle Tie Detail	03/2022
4.33	Brace Wire Connection to Structural Steel	03/2022
4.35	Brace Wire Connection to Sawn Timber	03/2022
4.36	Brace Wire Connection to Wood I-Joist	03/2022
4.37	Brace Wire Connection to Wood I-Joist	09/21/2015
5.10	Compression Strut Connection Table	03/2022
5.40	Strut Connection to Structural Steel	03/2022
5.50	Strut Connection to Sawn Timber with Gypsum Board	03/2022
5.51	Strut Connection to Sawn Timber without Gypsum Board	03/2022
5.52	Strut Connection to I-Joist	03/2022
6.10	Ceiling Wire Splices	03/2022

Detail Title:	REV: 09/21/2015	Detail No.
SHEET INDEX	REV: 03/2022	0.01

DSA IR 25-2.19 - SHEET 0.01 0.01

12" = 1'-0"

IR 25-2
SUSPENDED LAY-IN PANEL CEILING: 2019 CBC

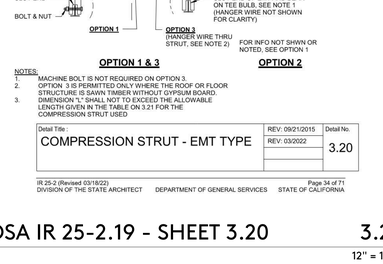

NOTES:
1. MACHINE BOLT IS NOT REQUIRED ON OPTION 3.
2. OPTION 3 IS PERMITTED ONLY WHERE THE ROOF OR FLOOR STRUCTURE IS SAWN TIMBER WITHOUT GYPSUM BOARD.
3. DIMENSION "L" SHALL NOT TO EXCEED THE ALLOWABLE LENGTH GIVEN IN THE TABLE ON 3.21 FOR THE COMPRESSION STRUT USED

Detail Title :	REV: 09/21/2015	Detail No.
COMPRESSION STRUT - EMT TYPE	REV: 03/2022	3.20

DSA IR 25-2.19 - SHEET 3.20 3.20

12" = 1'-0"

IR 25-2
SUSPENDED LAY-IN PANEL CEILING: 2019 CBC

PROPRIETARY CLIP USED, SEE 14 A-4.5

FREE JOINT

ATTACHED JOINT

NOTES:

PROPRIETARY CLIP USED, SEE 14 A-4.5

Detail Title :	REV: 09/21/2015	Detail No.
CEILING PERIMETER	REV: 03/10/2017	2.60
	REV: 03/2022	

DSA IR 25-2.19 - SHEET 2.60 2.60

12" = 1'-0"

IR 25-2
SUSPENDED LAY-IN PANEL CEILING: 2019 CBC

NOTES:
1. STRUTS SHALL NOT REPLACE HANGER WIRES.
2. THE MINIMUM ACCEPTABLE ANGLE IS DETERMINED SUCH THAT THE WIRES DO NOT INTERFERE WITH THE RUNNERS, LIGHT FIXTURES, ETC. AND REMAIN STRAIGHT AND UNOBSTRUCTED.

Detail Title :	REV: 09/21/2015	Detail No.
SUSPENSION AND LATERAL BRACING ASSEMBLY	REV: 03/10/2017	2.35
	REV: 03/2022	

DSA IR 25-2.19 - SHEET 2.35 2.35

12" = 1'-0"

IR 25-2
SUSPENDED LAY-IN PANEL CEILING: 2019 CBC

ceiling runner and be made of steel with a minimum thickness of #14 gauge. Rotational spring catches do not comply. A #12 gauge slack safety wire shall be connected from each clamping device to the structure above. Provide additional supports when a luminaire is 8 feet or longer or exceeds 56 pounds. Maximum spacing between supports shall not exceed 8 feet.

6.03 Luminaires weighing less than or equal to 10 pounds may be supported directly on the ceiling runners, shall have a minimum of one #12 gauge slack safety wire connected from the fixture housing to the structure above.

6.04 Luminaires weighing greater than 10 pounds but less than or equal to 56 pounds may be supported directly on the ceiling runners, but they shall have a minimum of two #12 gauge slack safety wires connected from the fixture housing at diagonal corners to the structure above.

Exception: All luminaires greater than two by four feet weighing less than 56 pounds shall have a #12 gauge slack safety wire at each corner.

6.05 All luminaires weighing greater than 56 pounds shall be independently supported by not less than four taut #12 gauge hanger wires (one at each corner) attached from the fixture housing to the structure above or other approved hangers. The four taut #12 gauge wires or other approved hangers, including their attachment to the structure above, shall be capable of supporting four times the weight of the fixture.

7. SERVICES WITHIN THE CEILING

7.01 All flexible sprinkler hose fitting mounting brackets, ceiling-mounted air terminals or other services shall be positively attached to the ceiling suspension systems by mechanical means. Screws or approved fasteners are required. A minimum of two attachments are required at each component.

7.02 Ceiling-mounted air terminals or other services weighing less than or equal to 20 pounds shall have one #12 gauge slack safety wire attached from the terminal or service to the structure above.

7.03 Flexible sprinkler hose fittings, ceiling-mounted air terminals or other services weighing more than 20 pounds but less than or equal to 56 pounds shall have two #12 gauge slack safety wires (at diagonal corners) connected from the terminal or service to the structure above.

7.04 Flexible sprinkler hose fittings, ceiling-mounted air terminals or other services weighing more than 56 pounds shall be supported directly from the structure above by not less than four taut #12 gauge hanger wires attached from the terminal or service to the structure above or other approved hangers.

8. OTHER DEVICES WITHIN THE CEILING

8.01 All lightweight miscellaneous devices, such as strobe lights, occupancy sensors, speakers, exit signs, etc., shall be attached to the ceiling grid. In addition, devices weighing more than 10 pounds shall have a #12 gauge slack safety wire anchored to the structure above. Devices weighing more than 20 pounds shall be supported independently from the structure above.

Detail Title:	REV: 09/21/2015	Detail No.
CEILING NOTES	REV: 03/2022	1.00

DSA IR 25-2.19 - SHEET 1.02 1.02

12" = 1'-0"

IR 25-2
SUSPENDED LAY-IN PANEL CEILING: 2019 CBC

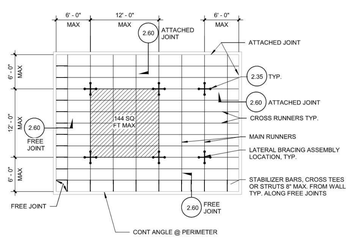

NOTE:
BRACING WIRES AND COMP. STRUT SHALL OCCUR AT EVERY 144 SQ. FT. MAX. IN ROOMS OVER 144 SQ. FT.

Detail Title:	REV: 09/21/2015	Detail No.
TYP. CEILING PLAN FOR 12'-0"x12'-0" BRACE ASSEMBLY SPACING	REV: 03/2022	2.12

DSA IR 25-2.19 - SHEET 2.12 2.12

12" = 1'-0"

IR 25-2
SUSPENDED LAY-IN PANEL CEILING: 2019 CBC

1. CEILING SYSTEM GENERAL NOTES

1.01 Ceiling system components shall comply with ASTM C635 and Section 5.1 of ASTM E580.

1.02 The ceiling grid system must be rated heavy duty as defined by ASTM C635.

1.03 Ceiling systems. The following ceiling system(s) is/are part of the scope of this project:
Manufacturer: ARMSTRONG WORLD INDUSTRIES, INC.
Product Name: PRELUDE XL
Evaluation Report Type and Number: ICC-ES ESR-1308
Main Runner Part, Model, or Catalog Number: PRELUDE XL 7501
Cross Runner Part, Model, Catalog Number: PRELUDE XL 7528, XL 7541

1.04 Seismic Wall Clip: 2" BEAM END RETAINING CLIP
Manufacturer's Model: ARMSTRONG BERC2

1.05 Ceiling panels shall not support any luminaires, air terminals or devices.

1.06 For ceiling installations utilizing acoustical tile panels of mineral or glass fiber, it is not mandatory to provide ½" clearance between the acoustical tile panels and the wall on the sides of the ceiling which are free to slip. For all other ceiling panel types, provide ½" clearance between the ceiling panel and the wall on the sides of the ceiling free to slip. Clearance between ceiling grid runners/members and walls shall comply with the details on these drawings regardless of ceiling tile material.

2. MATERIALS

2.01 Ceiling wire shall be Class 1 zinc coated (galvanized) carbon steel conforming to ASTM A641. Wire shall be #12 gauge (0.106" diameter) with soft temper and minimum ultimate tensile strength = 70 ksi.

2.02 Galvanized sheet steel (including that used for metal stud and track compression struts/posts) shall conform to ASTM A653, or other equivalent sheet steel listed in Section A3.1 of the North American Specification for the Design of Cold-Formed Steel Structural Members, (AISI S100). Material 43 mil (18 gauge) and lighter shall have minimum yield strength of 33 ksi. Material 54 mil (16 gauge) and heavier shall have a minimum yield strength of 50 ksi.

2.03 Electrical metallic tube (EMT) shall be ANSI C80.3/UL 797 carbon steel with G90 galvanizing. EMT shall have minimum yield strength (F_y) of 30 ksi and minimum ultimate strength (F_u) of 48 ksi.

3. ATTACHMENT OF HANGER AND BRACING WIRES

3.01 Separate all ceiling hanger and bracing wires at least 6 inches from all unbraced ducts, pipes, conduit, etc.

3.02 Hanger and bracing wires shall not attach to or bend around obstructions including but not limited to piping, ductwork, conduit and equipment.

Detail Title:	REV: 09/21/2015	Detail No.
CEILING NOTES	REV: 03/2022	1.00

DSA IR 25-2.19 - SHEET 1.00 0.03

12" = 1'-0"

IR 25-2
SUSPENDED LAY-IN PANEL CEILING: 2019 CBC

COMPRESSION STRUT EMT SECTION	MAXIMUM LENGTH
1/2" DIAMETER EMT (0.042" WALL THICKNESS)	3' - 11"
3/4" DIAMETER EMT (0.049" WALL THICKNESS)	6' - 4"
1" DIAMETER EMT (0.057" WALL THICKNESS)	9' - 9"
1 1/4" DIAMETER EMT (0.065" WALL THICKNESS)	12' - 9"
1 1/2" DIAMETER EMT (0.065" WALL THICKNESS)	14' - 9"
2" DIAMETER EMT (0.065" WALL THICKNESS)	18' - 10"

COMPRESSION STRUT CHANNEL SECTION	MAXIMUM LENGTH
250S125-33	5' - 10"
250S137-33	6' - 10"
362S137-33	8' - 0"
250S137-43	8' - 10"
400S137-43	10' - 10"

Detail Title :	REV: 09/21/2015	Detail No.
COMPRESSION STRUT TABLE	REV: 03/10/2017	3.21
	REV: 03/2022	

DSA IR 25-2.19 - SHEET 3.21 3.21

12" = 1'-0"

IR 25-2
SUSPENDED LAY-IN PANEL CEILING: 2019 CBC

Detail Title :	REV: 09/21/2015	Detail No.
LUMINAIRE / AIR TERMINAL SUPPORT	REV: 02/10/2016	2.80
	REV: 03/2022	

DSA IR 25-2.19 - SHEET 2.80 2.80

12" = 1'-0"

IR 25-2
SUSPENDED LAY-IN PANEL CEILING: 2019 CBC

EXPANSION JOINT

EXPANSION JOINT ALTERNATE

NOTES:
1. DETAIL APPLIES TO EXPANSION JOINTS AT THE INTERSECTION OF CORRIDORS AND AT THE JUNCTIONS OF CORRIDORS AT LOBBIES AND OTHER SIMILAR AREAS.
2. PROVIDE #12 GAGE HANGER WIRES AT THE ENDS OF ALL MAIN AND CROSS RUNNERS WITHIN EIGHT (8) INCHES OF THE SUPPORT OR WITHIN ONE-FOURTH (1/4) OF THE LENGTH OF THE END TEE, WHICHEVER IS LESS, FOR THE PERIMETER OF THE CEILING AREA. PERIMETER WIRES ARE NOT REQUIRED WHEN THE LENGTH OF THE END TEE IS EIGHT (8) INCHES OR LESS.
3.

Detail Title :	REV: 09/21/2015	Detail No.
EXPANSION JOINT (SCHOOL BUILDING)	REV: 03/2022	2.40

DSA IR 25-2.19 - SHEET 2.40 2.40

12" = 1'-0"

IR 25-2
SUSPENDED LAY-IN PANEL CEILING: 2019 CBC

1. CEILING SYSTEM GENERAL NOTES

1.01 Ceiling system components shall comply with ASTM C635 and Section 5.1 of ASTM E580.

1.02 The ceiling grid system must be rated heavy duty as defined by ASTM C635.

1.03 Ceiling systems. The following ceiling system(s) is/are part of the scope of this project:
Manufacturer: ARMSTRONG WORLD INDUSTRIES, INC.
Product Name: PRELUDE XL
Evaluation Report Type and Number: ICC-ES ESR-1308
Main Runner Part, Model, or Catalog Number: PRELUDE XL 7501
Cross Runner Part, Model, Catalog Number: PRELUDE XL 7528, XL 7541

1.04 Seismic Wall Clip: 2" BEAM END RETAINING CLIP
Manufacturer's Model: ARMSTRONG BERC2

1.05 Ceiling panels shall not support any luminaires, air terminals or devices.

1.06 For ceiling installations utilizing acoustical tile panels of mineral or glass fiber, it is not mandatory to provide ½" clearance between the acoustical tile panels and the wall on the sides of the ceiling which are free to slip. For all other ceiling panel types, provide ½" clearance between the ceiling panel and the wall on the sides of the ceiling free to slip. Clearance between ceiling grid runners/members and walls shall comply with the details on these drawings regardless of ceiling tile material.

2. MATERIALS

2.01 Ceiling wire shall be Class 1 zinc coated (galvanized) carbon steel conforming to ASTM A641. Wire shall be #12 gauge (0.106" diameter) with soft temper and minimum ultimate tensile strength = 70 ksi.

2.02 Galvanized sheet steel (including that used for metal stud and track compression struts/posts) shall conform to ASTM A653, or other equivalent sheet steel listed in Section A3.1 of the North American Specification for the Design of Cold-Formed Steel Structural Members, (AISI S100). Material 43 mil (18 gauge) and lighter shall have minimum yield strength of 33 ksi. Material 54 mil (16 gauge) and heavier shall have a minimum yield strength of 50 ksi.

2.03 Electrical metallic tube (EMT) shall be ANSI C80.3/UL 797 carbon steel with G90 galvanizing. EMT shall have minimum yield strength (F_y) of 30 ksi and minimum ultimate strength (F_u) of 48 ksi.

3. ATTACHMENT OF HANGER AND BRACING WIRES

3.01 Separate all ceiling hanger and bracing wires at least 6 inches from all unbraced ducts, pipes, conduit, etc.

3.02 Hanger and bracing wires shall not attach to or bend around obstructions including but not limited to piping, ductwork, conduit and equipment.

Detail Title:	REV: 09/21/2015	Detail No.
CEILING NOTES	REV: 03/2022	1.00

DSA IR 25-2.19 - SHEET 0.02 0.02

12" = 1'-0"

IDENTIFICATION STAMP
DIV. OF THE STATE ARCHITECT
APP: 03-122664 INC:
REVIEWED FOR
SS ☑ FLS ☑ ACS ☑
DATE: 05/12/2023

pjhm architects
LA Phone: 213.278.0172 • Web: pjhm.com
LA Office: 837 Traction Avenue, #410, Los Angeles, CA 90013 • SD Office: 804 Pier View Way #103, Oceanside, CA 92054 • SD Phone: 760.730.5527 • OC Office: 24461 Ridge Route Drive #100, Laguna Hills, CA 92653 • OC Phone: 949.496.6191

LICENSED ARCHITECT
EDWARD W. PJHM
NO. C15585
REN. 02/25
STATE OF CALIFORNIA

HIGHLAND HIGH SCHOOL
50M POOL & AQUATICS CENTER

KERN HIGH SCHOOL DISTRICT

REFLECTED CEILING PLAN DETAILS

A-4.7

4/13/2023 9:05:05 AM

IR 25-2
SUSPENDED LAY-IN PANEL CEILING: 2019 CBC

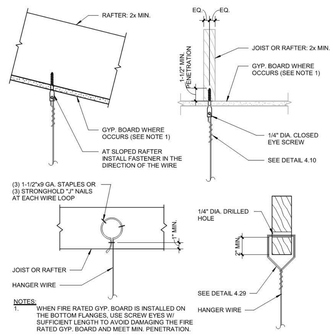

NOTES:
1. WHEN FIRE RATED GYP. BOARD IS INSTALLED ON THE BOTTOM FLANGES, USE SCREW EYES W/ SUFFICIENT LENGTH TO AVOID DAMAGING THE FIRE RATED GYP. BOARD AND MEET MIN. PENETRATION.

Detail Title :	REV: 09/21/2015	Detail No.
HANGER WIRE CONNECTION TO SAWN TIMBER	REV: 03/2022	4.25

DSA IR 25-2.19 - SHEET 4.25 4.25

12" = 1'-0"

IR 25-2
SUSPENDED LAY-IN PANEL CEILING: 2019 CBC

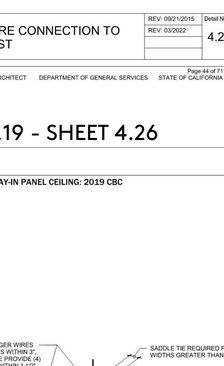

HANGER WIRE

BRACE WIRE

Detail Title :	REV: 09/21/2015	Detail No.
HANGER AND BRACE WIRE CONNECTION - TYP. WIRE TURNS	REV: 03/2022	4.10

DSA IR 25-2.19 - SHEET 4.10 4.10

12" = 1'-0"

IR 25-2
SUSPENDED LAY-IN PANEL CEILING: 2019 CBC

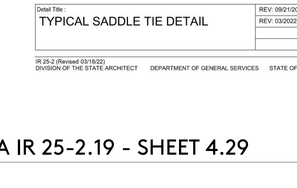

NOTES:
1. WHEN FIRE RATED GYP. BOARD IS INSTALLED ON THE BOTTOM FLANGES, USE SCREW EYES W/ SUFFICIENT LENGTH TO AVOID DAMAGING THE FIRE RATED GYP. BOARD AND MEET MIN. PENETRATION.

Detail Title :	REV: 09/21/2015	Detail No.
HANGER WIRE CONNECTION TO WOOD I-JOIST	REV: 03/2022	4.26

DSA IR 25-2.19 - SHEET 4.26 4.26

12" = 1'-0"

IR 25-2
SUSPENDED LAY-IN PANEL CEILING: 2019 CBC

Detail Title :	REV: 09/21/2015	Detail No.
HANGER AND BRACE WIRE CONNECTION TABLE	REV: 03/2022	4.11

DSA IR 25-2.19 - SHEET 4.11 4.11

12" = 1'-0"

IR 25-2
SUSPENDED LAY-IN PANEL CEILING: 2019 CBC

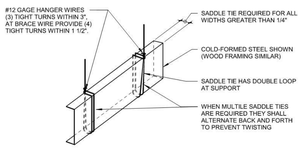

Detail Title :	REV: 09/21/2015	Detail No.
TYPICAL SADDLE TIE DETAIL	REV: 03/2022	4.29

DSA IR 25-2.19 - SHEET 4.29 4.29

12" = 1'-0"

IR 25-2
SUSPENDED LAY-IN PANEL CEILING: 2019 CBC

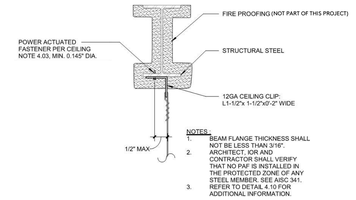

HANGER WIRE

Detail Title :	REV: 09/21/2015	Detail No.
HANGER WIRE CONNECTION TO STRUCTURAL STEEL	REV: 03/2022	4.23

DSA IR 25-2.19 - SHEET 4.23 4.23

12" = 1'-0"

IDENTIFICATION STAMP
DIV. OF THE STATE ARCHITECT
APP: 03-122664 INC:
REVIEWED FOR
SS ☑ FLS ☑ ACS ☑
DATE: 05/12/2023

pjhm architects
LA Phone: 213.278.0172 • Web: pjhm.com
LA Office: 837 Traction Avenue, #410, Los Angeles, CA 90013 • SD Phone: 760.730.5527 • SD Office: 804 Pier View Way #103, Oceanside, CA 92054 • OC Phone: 949.496.6191 • OC Office: 24461 Ridge Route Drive #100, Laguna Hills, CA 92653

LICENSED ARCHITECT
RICHARD W. FRIEND
NO. C15585
REN. 02/25
STATE OF CALIFORNIA

HIGHLAND HIGH SCHOOL
50M POOL & AQUATICS CENTER

KERN HIGH SCHOOL DISTRICT

REFLECTED CEILING PLAN DETAILS

A-4.8

4/13/2023 9:05:06 AM

IR 25-2
SUSPENDED LAY-IN PANEL CEILING: 2019 CBC

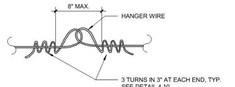

HANGER WIRE ONLY

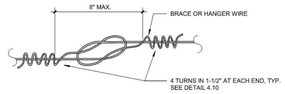

HANGER OR BRACE WIRE

NOTES:
1. WIRE SPLICES ARE SHOWN LOOSELY TIED FOR ILLUSTRATIVE PURPOSES ONLY AND SHALL BE DRAWN TIGHT TO COMPLETE INSTALLATION WHEN CONSTRUCTED.
2. WIRE LOOPS SHALL BE TIGHTLY WRAPPED AND SHARPLY BENT THE FIRST TIME ANY VERTICAL MOVEMENT OR ROTATION WITHIN THE LOOPS.
3. EACH HANGER AND BRACE WIRE SHALL BE SPLICED NO MORE THAN ONCE ALONG ITS LENGTH.

Detail Title:	REV: 09/21/2015	Detail No.
CEILING WIRE SPLICES	REV: 03/2022	6.10

DSA IR 25-2.19 - SHEET 6.10 6.10
12" = 1'-0"

IR 25-2
SUSPENDED LAY-IN PANEL CEILING: 2019 CBC

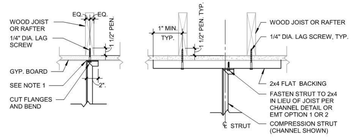

CHANNEL STRUT **CHANNEL OR EMT STRUT: BETWEEN JOIST**

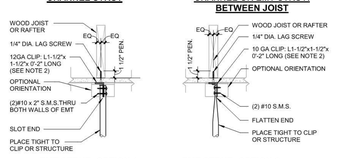

EMT STRUT: OPTION 1 **EMT STRUT: OPTION 2**

NOTES:
1. WEB OF CHANNEL TO BEAR WITHIN WIDTH OF THE WOOD MEMBER.
2. FOR ANGLE ORIENTED IN THE STANDARD POSITION, VERTICAL LEG TO FALL WITHIN THE WIDTH OF THE WOOD MEMBER.
3. PEN. = MINIMUM PENETRATION OF LAG SCREW THREADS INTO THE WOOD MEMBER.
4. NO. 14 WOOD SCREW MAY BE USED IN LIEU OF 1/4" LAG SCREW.

Detail Title:	REV: 09/21/2015	Detail No.
STRUT CONNECTION TO SAWN TIMBER WITH GYPSUM BOARD	REV: 03/2022	5.50

DSA IR 25-2.19 - SHEET 5.50 5.50
12" = 1'-0"

IR 25-2
SUSPENDED LAY-IN PANEL CEILING: 2019 CBC

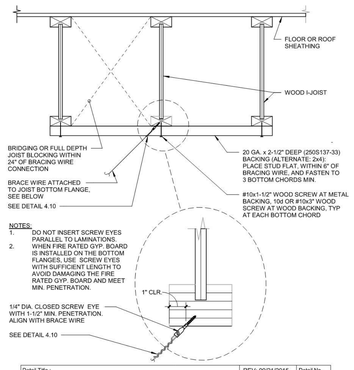

NOTES:
1. DO NOT INSERT SCREW EYES PARALLEL TO LAMINATIONS. WHEN FIRE RATED GYP. BOARD IS INSTALLED ON THE BOTTOM FLANGES, USE SCREW EYES WITH SUFFICIENT LENGTH TO AVOID DAMAGING THE FIRE RATED GYP. BOARD AND MEET MIN. PENETRATION.

Detail Title:	REV: 09/21/2015	Detail No.
BRACE WIRE CONNECTION TO WOOD I - JOIST	REV: 03/2022	4.37

DSA IR 25-2.19 - SHEET 4.37 4.37
12" = 1'-0"

IR 25-2
SUSPENDED LAY-IN PANEL CEILING: 2019 CBC

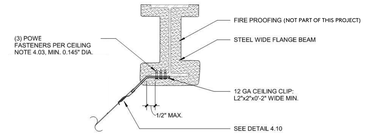

BRACING WIRE

NOTES:
1. BEAM FLANGE THICKNESS SHALL NOT BE LESS THAN 3/16".
2. ARCHITECT, IOR, AND CONTRACTOR SHALL VERIFY THAT NO POWER ACTUATED FASTENER IS INSTALLED IN THE PROTECTED ZONE OF ANY STEEL MEMBER. SEE AISC 341.
3. REFER TO DETAIL 4.10 FOR ADDITIONAL INFORMATION.

Detail Title:	REV: 09/21/2015	Detail No.
BRACE WIRE CONNECTION TO STRUCTURAL STEEL	REV: 03/2022	4.33

DSA IR 25-2.19 - SHEET 4.33 4.33
12" = 1'-0"

IR 25-2
SUSPENDED LAY-IN PANEL CEILING: 2019 CBC

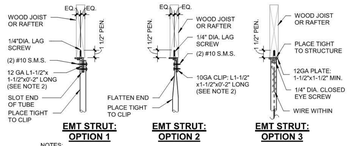

CHANNEL STRUT: OPTION 1 **CHANNEL STRUT: OPTION 2** **CHANNEL OR EMT STRUT: BETWEEN JOIST**

EMT STRUT: OPTION 1 **EMT STRUT: OPTION 2** **EMT STRUT: OPTION 3**

NOTES:
1. WEB OF CHANNEL TO BEAR WITHIN WIDTH OF WOOD MEMBER.
2. VERTICAL LEG OF MEMBER TO FALL WITHIN THE WIDTH OF THE WOOD MEMBER.
3. SEE DETAIL 5.50 FOR ADDITIONAL INFORMATION.
4. PEN. = MINIMUM PENETRATION OF LAG SCREW THREADS INTO THE WOOD MEMBER.
5. NO. 14 WOOD SCREW MAY BE USED IN LIEU OF 1/4" LAG SCREW.

Detail Title:	REV: 09/21/2015	Detail No.
STRUT CONNECTION TO SAWN TIMBER WITHOUT GYPSUM BOARD	REV: 03/2022	5.51

DSA IR 25-2.19 - SHEET 5.51 5.51
12" = 1'-0"

IR 25-2
SUSPENDED LAY-IN PANEL CEILING: 2019 CBC

STRUCTURAL SYSTEM OF FLOOR/ ROOF ABOVE SUSPENDED CEILING	APPLICABLE DETAIL
[redacted]	
STRUCTURAL STEEL	5.40
SAWN TIMBER WITH GYPSUM BOARD	5.50
SAWN TIMBER WITHOUT GYPSUM BOARD	5.51
WOOD I-JOIST	5.52

Detail Title:	REV: 09/21/2015	Detail No.
COMPRESSION STRUT CONNECTION TABLE	REV: 03/2022	5.10

DSA IR 25-2.19 - SHEET 5.10 5.10
12" = 1'-0"

IR 25-2
SUSPENDED LAY-IN PANEL CEILING: 2019 CBC

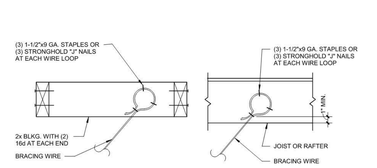

Detail Title:	REV: 09/21/2015	Detail No.
BRACE WIRE CONNECTION TO SAWN TIMBER	REV: 03/2022	4.35

DSA IR 25-2.19 - SHEET 4.35 4.35
12" = 1'-0"

IR 25-2
SUSPENDED LAY-IN PANEL CEILING: 2019 CBC

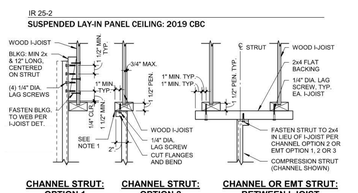

CHANNEL STRUT: OPTION 1 **CHANNEL STRUT: OPTION 2** **CHANNEL OR EMT STRUT: BETWEEN I-JOIST**

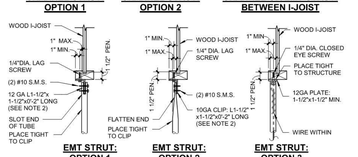

EMT STRUT: OPTION 1 **EMT STRUT: OPTION 2** **EMT STRUT: OPTION 3**

NOTES:
1. WEB OF CHANNEL TO BEAR WITHIN WIDTH OF WOOD MEMBER.
2. VERTICAL LEG OF MEMBER TO FALL WITHIN THE WIDTH OF THE WOOD MEMBER.
3. SEE DETAIL 5.50 FOR ADDITIONAL INFORMATION.
4. PEN = MINIMUM PENETRATION OF LAG SCREW THREADS INTO THE WOOD MEMBER.
5. NO. 14 WOOD SCREW MAY BE USED IN LIEU OF 1/4" LAG SCREW.

Detail Title:	REV: 03/2022	Detail No.
STRUT CONNECTION TO I-JOIST		5.52

DSA IR 25-2.19 - SHEET 5.52 5.52
12" = 1'-0"

IR 25-2
SUSPENDED LAY-IN PANEL CEILING: 2019 CBC

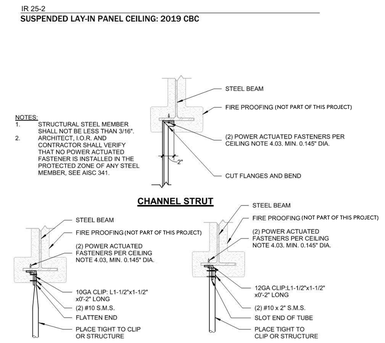

NOTES:
1. STRUCTURAL STEEL MEMBER SHALL NOT BE LESS THAN 3/16".
2. ARCHITECT, I.O.R. AND CONTRACTOR SHALL VERIFY THAT NO POWER ACTUATED FASTENER IS INSTALLED IN THE PROTECTED ZONE OF ANY STEEL MEMBER, SEE AISC 341.

EMT STRUT: OPTION 1 **EMT STRUT: OPTION 2**

Detail Title:	REV: 09/21/2015	Detail No.
STRUT CONNECTION TO STRUCTURAL STEEL	REV: 03/2022	5.40

DSA IR 25-2.19 - SHEET 5.40 5.40
12" = 1'-0"

IR 25-2
SUSPENDED LAY-IN PANEL CEILING: 2019 CBC

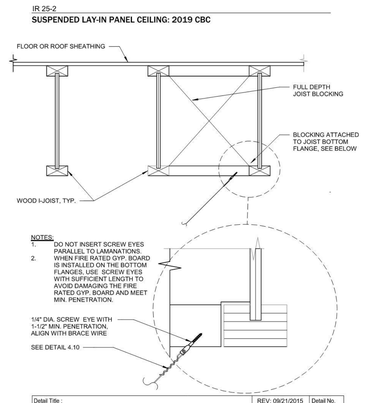

NOTES:
1. DO NOT INSERT SCREW EYES PARALLEL TO LAMANATIONS. WHEN FIRE RATED GYP. BOARD IS INSTALLED ON THE BOTTOM FLANGES, USE SCREW EYES WITH SUFFICIENT LENGTH TO AVOID DAMAGING THE FIRE RATED GYP. BOARD AND MEET MIN. PENETRATION.
2.

Detail Title:	REV: 09/21/2015	Detail No.
BRACE WIRE CONNECTION TO WOOD I-JOIST	REV: 03/2022	4.36

DSA IR 25-2.19 - SHEET 4.36 4.36
12" = 1'-0"

IDENTIFICATION STAMP
DIV. OF THE STATE ARCHITECT
APP: 03-122664 INC:
REVIEWED FOR
SS ☑ FLS ☑ ACS ☑
DATE: 05/12/2023

pjhm architects
LA Office: 837 Traction Avenue, #410, Los Angeles, CA 90013 • LA Phone: 213.278.0172 • Web: pjhm.com
SD Office: 804 Pier View Way #103, Oceanside, CA 92054 • SD Phone: 760.730.5527
OC Office: 24461 Ridge Route Drive #100, Laguna Hills, CA 92653 • OC Phone: 949.496.6191

LICENSED ARCHITECT
RICHARD W. FRIEDMAN
NO. C15585
REN. 02/25
STATE OF CALIFORNIA

HIGHLAND HIGH SCHOOL
50M POOL & AQUATICS CENTER

KERN HIGH SCHOOL DISTRICT

REFLECTED CEILING PLAN DETAILS

A-4.9

4/13/2023 9:05:07 AM

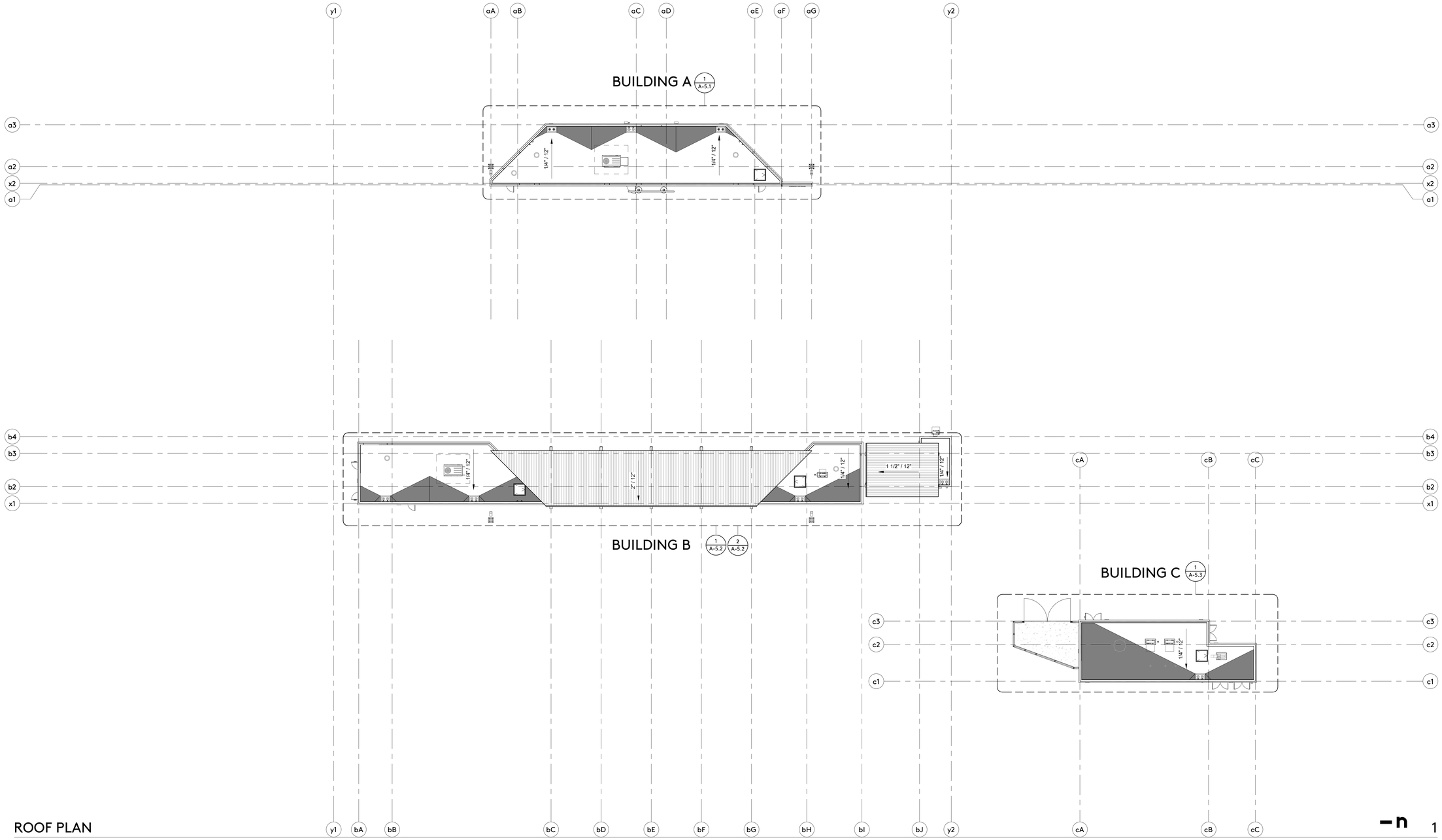

ROOF PLAN

1

1/16" = 1'-0"

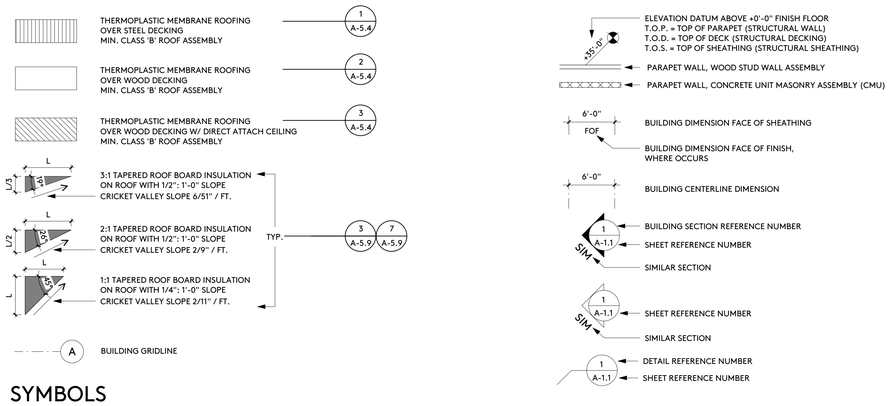

SYMBOLS

1/8" = 1'-0"

IDENTIFICATION STAMP
DIV. OF THE STATE ARCHITECT
APP: 03-122664 INC:
REVIEWED FOR
SS ☑ FLS ☑ ACS ☑
DATE: 05/12/2023

pjhm architects

LICENSED ARCHITECT
THOMAS W. KRUSE
NO. C15585
REN. 02/25
STATE OF CALIFORNIA

HIGHLAND HIGH SCHOOL
50M POOL & AQUATICS CENTER

KERN HIGH SCHOOL DISTRICT

ROOF PLAN - COMPOSITE

A-5.0

OC Office: 24461 Ridge Route Drive #100, Laguna Hills, CA 92653 • OC Phone: 949.496.6191 • SD Office: 804 Pier View Way #103, Oceanside, CA 92054 • SD Phone: 760.730.5527 • LA Office: 837 Traction Avenue, #410, Los Angeles, CA 90013 • LA Phone: 213.278.0172 • Web: pjhm.com

4/13/2023 9:05:09 AM

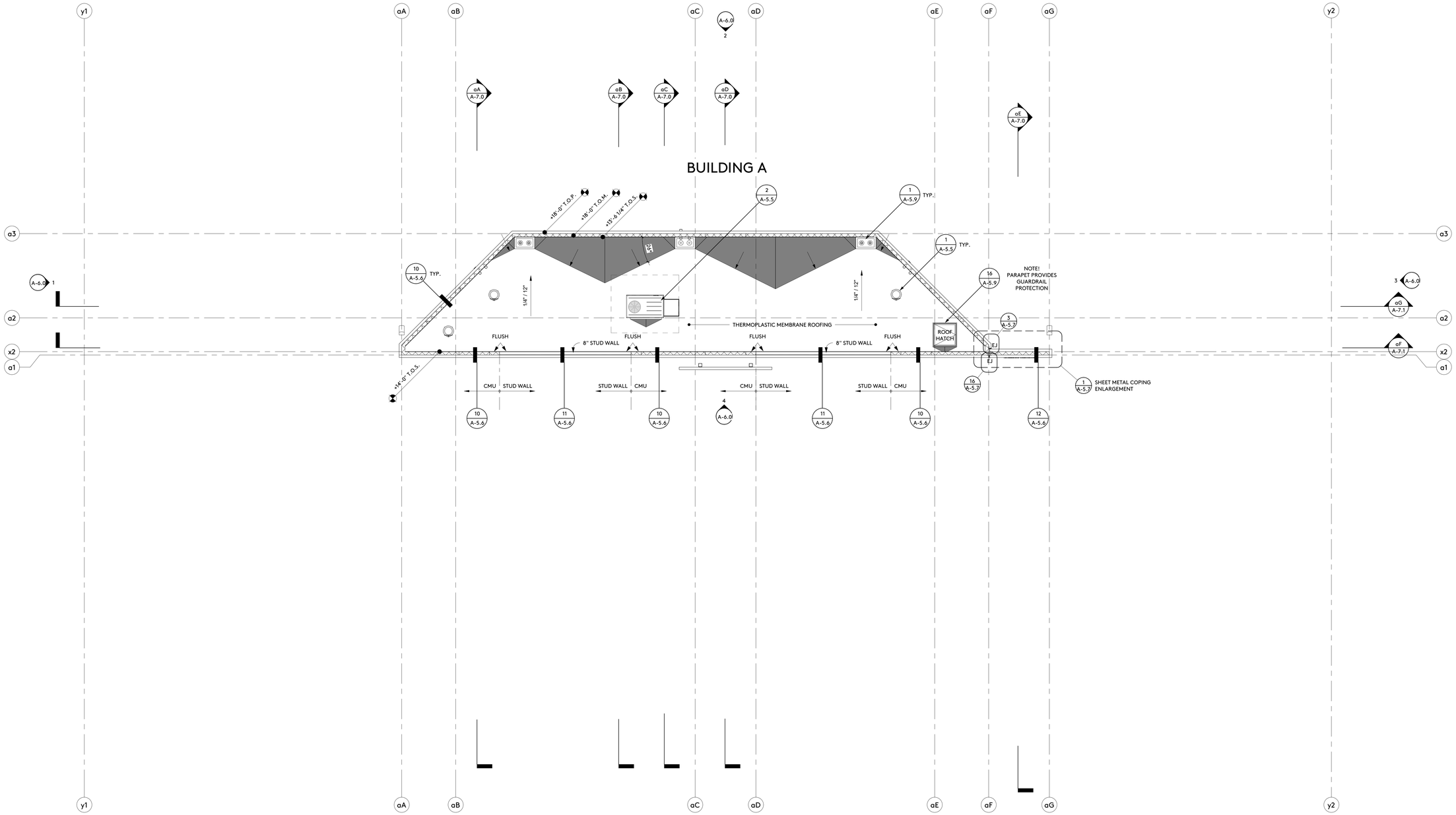

ROOF PLAN

1/8" = 1'-0"

SYMBOLS

THERMOPLASTIC MEMBRANE ROOFING
OVER STEEL DECKING
MIN. CLASS 'B' ROOF ASSEMBLY — 1 / A-5.4

THERMOPLASTIC MEMBRANE ROOFING
OVER WOOD DECKING
MIN. CLASS 'B' ROOF ASSEMBLY — 2 / A-5.4

THERMOPLASTIC MEMBRANE ROOFING
OVER WOOD DECKING W/ DIRECT ATTACH CEILING
MIN. CLASS 'B' ROOF ASSEMBLY — 3 / A-5.4

3:1 TAPERED ROOF BOARD INSULATION
ON ROOF WITH 1/2": 1'-0" SLOPE
CRICKET VALLEY SLOPE 6/51" / FT.

2:1 TAPERED ROOF BOARD INSULATION
ON ROOF WITH 1/2": 1'-0" SLOPE
CRICKET VALLEY SLOPE 2/9" / FT.

1:1 TAPERED ROOF BOARD INSULATION
ON ROOF WITH 1/4": 1'-0" SLOPE
CRICKET VALLEY SLOPE 2/11" / FT.

TYP. — 3 / A-5.9 and 7 / A-5.9

A — BUILDING GRIDLINE

+55'-0" — ELEVATION DATUM ABOVE +0'-0" FINISH FLOOR
T.O.P. = TOP OF PARAPET (STRUCTURAL WALL)
T.O.D. = TOP OF DECK (STRUCTURAL DECKING)
T.O.S. = TOP OF SHEATHING (STRUCTURAL SHEATHING)

PARAPET WALL, WOOD STUD WALL ASSEMBLY

PARAPET WALL, CONCRETE UNIT MASONRY ASSEMBLY (CMU)

6'-0" FOF — BUILDING DIMENSION FACE OF SHEATHING
BUILDING DIMENSION FACE OF FINISH, WHERE OCCURS

6'-0" — BUILDING CENTERLINE DIMENSION

1 / A-1.1 — BUILDING SECTION REFERENCE NUMBER
SHEET REFERENCE NUMBER
SIM — SIMILAR SECTION

1 / A-1.1 SIM — SHEET REFERENCE NUMBER
SIMILAR SECTION

1 / A-1.1 — DETAIL REFERENCE NUMBER
SHEET REFERENCE NUMBER

4/13/2023 11:26:58 AM

IDENTIFICATION STAMP
DIV. OF THE STATE ARCHITECT
APP: 03-122664 INC:
REVIEWED FOR
SS ☑ FLS ☑ ACS ☑
DATE: 05/12/2023

pjhm architects

LICENSED ARCHITECT
EDWARD W. PJHM
NO. C15585
REN. 02/25
STATE OF CALIFORNIA

OC Office: 24461 Ridge Route Drive #100, Laguna Hills, CA 92653 • OC Phone: 949.496.6191 • SD Office: 804 Pier View Way #103, Oceanside, CA 92054 • SD Phone: 760.730.5527 • LA Office: 837 Traction Avenue, #410, Los Angeles, CA 90013 • LA Phone: 213.278.0172 • Web: pjhm.com

HIGHLAND HIGH SCHOOL
50M POOL & AQUATICS CENTER

KERN HIGH SCHOOL DISTRICT

ROOF PLAN

A-5.1

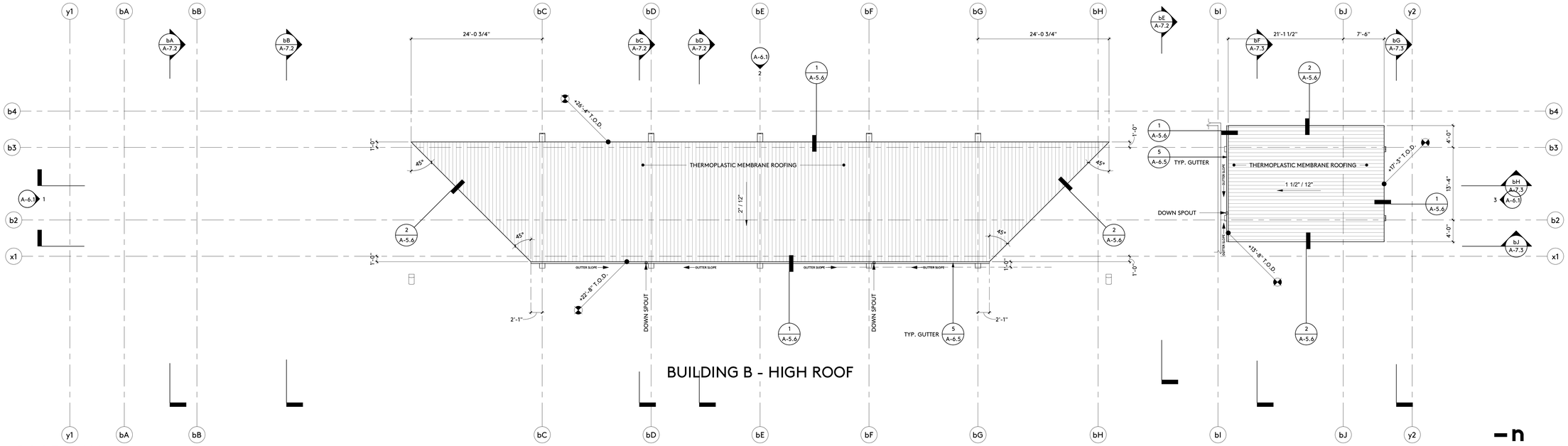

BUILDING B - HIGH ROOF

ROOF PLAN

1

1/8" = 1'-0"

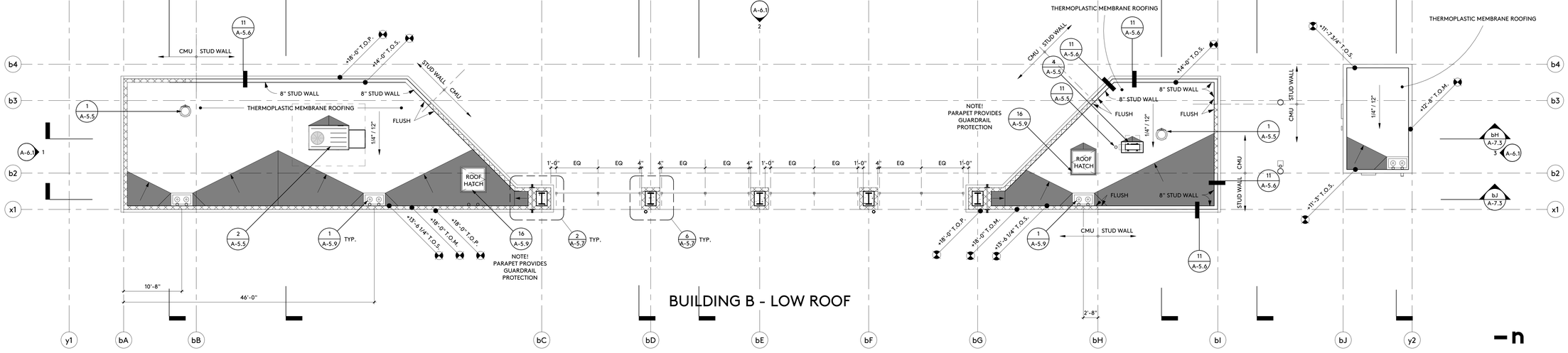

BUILDING B - LOW ROOF

ROOF PLAN

2

1/8" = 1'-0"

THERMOPLASTIC MEMBRANE ROOFING OVER STEEL DECKING MIN. CLASS 'B' ROOF ASSEMBLY — 1 A-5.4

THERMOPLASTIC MEMBRANE ROOFING OVER WOOD DECKING MIN. CLASS 'B' ROOF ASSEMBLY — 2 A-5.4

THERMOPLASTIC MEMBRANE ROOFING OVER WOOD DECKING W/ DIRECT ATTACH CEILING MIN. CLASS 'B' ROOF ASSEMBLY — 3 A-5.4

3:1 TAPERED ROOF BOARD INSULATION ON ROOF WITH 1/2": 1'-0" SLOPE CRICKET VALLEY SLOPE 6/51" / FT.

2:1 TAPERED ROOF BOARD INSULATION ON ROOF WITH 1/2": 1'-0" SLOPE CRICKET VALLEY SLOPE 2/9" / FT.

1:1 TAPERED ROOF BOARD INSULATION ON ROOF WITH 1/4": 1'-0" SLOPE CRICKET VALLEY SLOPE 2/11" / FT.

TYP. — 3 A-5.9, 7 A-5.9

A — BUILDING GRIDLINE

+35'-0" — ELEVATION DATUM ABOVE +0'-0" FINISH FLOOR
T.O.P. = TOP OF PARAPET (STRUCTURAL WALL)
T.O.D. = TOP OF DECK (STRUCTURAL DECKING)
T.O.S. = TOP OF SHEATHING (STRUCTURAL SHEATHING)

PARAPET WALL, WOOD STUD WALL ASSEMBLY

PARAPET WALL, CONCRETE UNIT MASONRY ASSEMBLY (CMU)

6'-0" FOF — BUILDING DIMENSION FACE OF SHEATHING

BUILDING DIMENSION FACE OF FINISH, WHERE OCCURS

6'-0" — BUILDING CENTERLINE DIMENSION

1 / A-1.1 SIM — BUILDING SECTION REFERENCE NUMBER; SHEET REFERENCE NUMBER; SIMILAR SECTION

1 / A-1.1 SIM — SHEET REFERENCE NUMBER; SIMILAR SECTION

1 / A-1.1 — DETAIL REFERENCE NUMBER; SHEET REFERENCE NUMBER

SYMBOLS

4/13/2023 11:26:59 AM

IDENTIFICATION STAMP
DIV. OF THE STATE ARCHITECT
APP: 03-122664 INC:
REVIEWED FOR
SS ☑ FLS ☑ ACS ☑
DATE: 05/12/2023

pjhm architects

LICENSED ARCHITECT
EDWARD W. PJHM
NO. C15585
REN. 02/25
STATE OF CALIFORNIA

SD Phone: 760.730.5527 • LA Office: 837 Traction Avenue, #410, Los Angeles, CA 90013 • LA Phone: 213.278.0172 • Web: pjhm.com
OC Office: 24461 Ridge Route Drive #100, Laguna Hills, CA 92653 • OC Phone: 949.496.6191 • SD Office: 804 Pier View Way #103, Oceanside, CA 92054 • SD Phone:

HIGHLAND HIGH SCHOOL
50M POOL & AQUATICS CENTER

KERN HIGH SCHOOL DISTRICT

ROOF PLAN

A-5.2

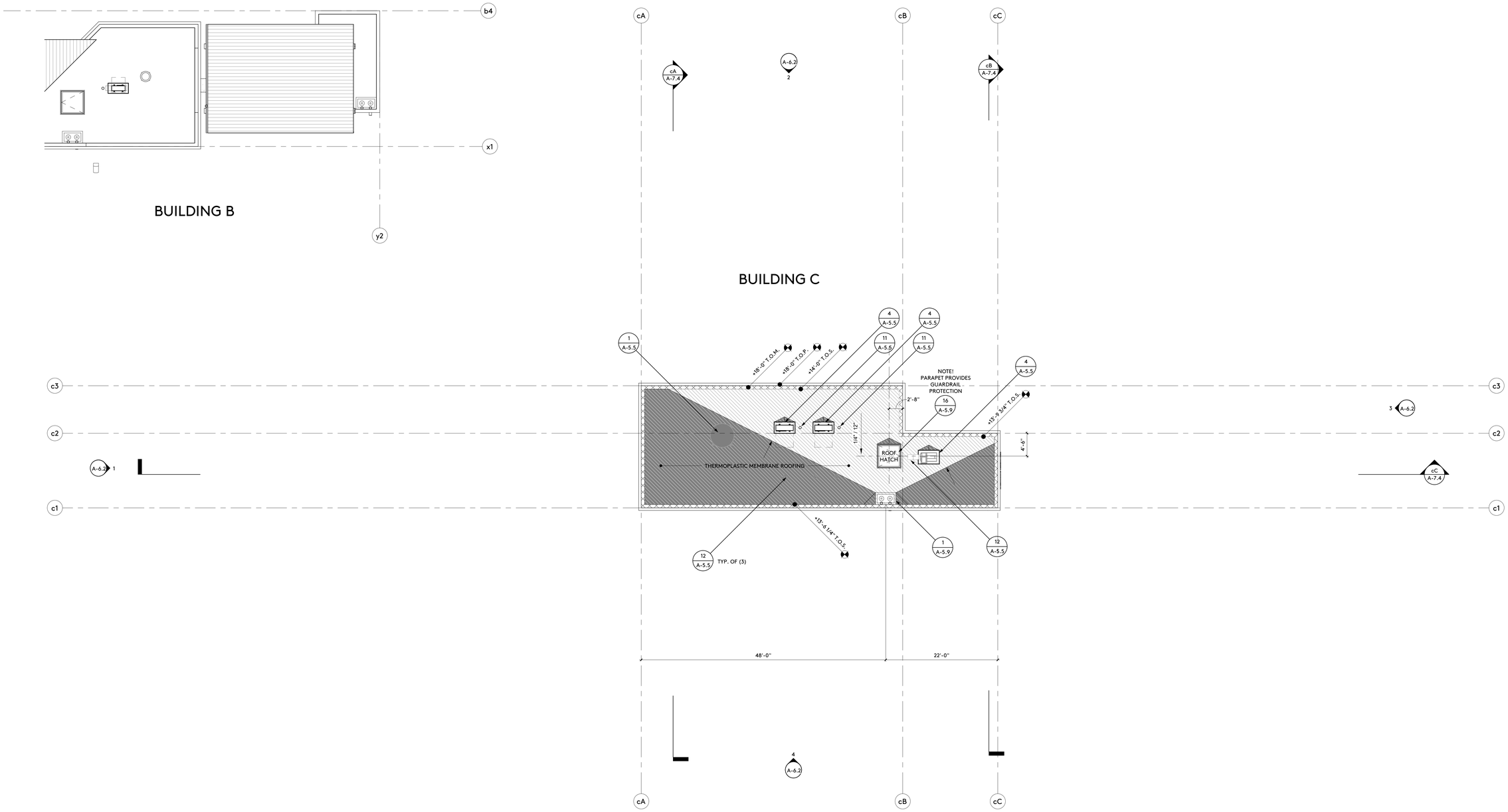

ROOF PLAN

1

1/8" = 1'-0"

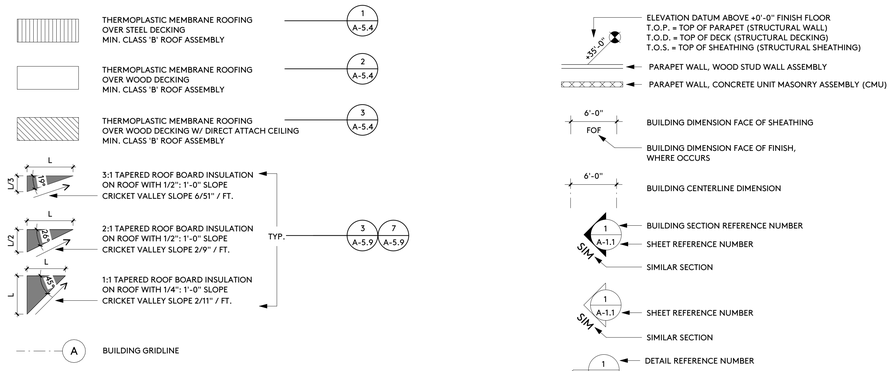

SYMBOLS

IDENTIFICATION STAMP
DIV. OF THE STATE ARCHITECT
APP: 03-122664 INC:
REVIEWED FOR
SS ☑ FLS ☑ ACS ☑
DATE: 05/12/2023

pjhm architects

LICENSED ARCHITECT
THOMAS W. KRUSE
NO. C15585
REN. 02/25
STATE OF CALIFORNIA

HIGHLAND HIGH SCHOOL
50M POOL & AQUATICS CENTER

KERN HIGH SCHOOL DISTRICT

ROOF PLAN

A-5.3

OC Office: 24461 Ridge Route Drive #100, Laguna Hills, CA 92653 • OC Phone: 949.496.6191 • SD Office: 804 Pier View Way #103, Oceanside, CA 92054 • SD Phone: 760.730.5527 • LA Office: 837 Traction Avenue, #410, Los Angeles, CA 90013 • LA Phone: 213.278.0172 • Web: pjhm.com

4/13/2023 11:27:00 AM

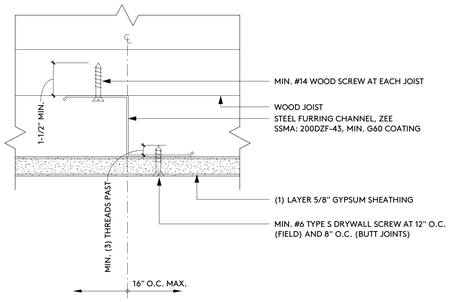

ANCHORAGE - FURRING CHANNEL 13

6" = 1'-0"

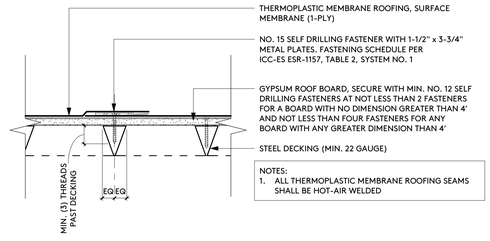

ANCHORAGE - STEEL DECKING 9

3" = 1'-0"

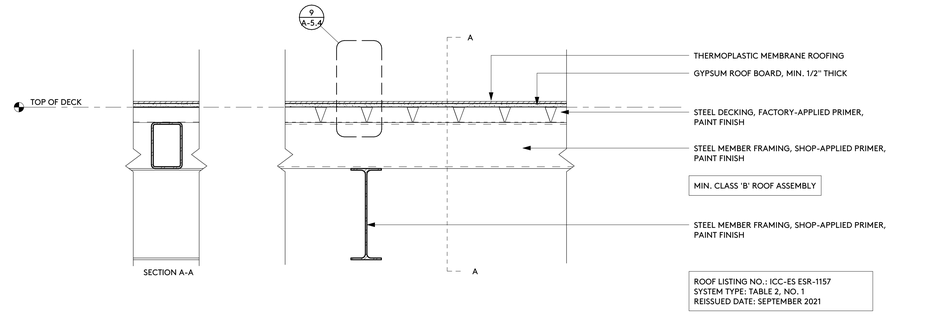

ASSEMBLY - TYP. ROOF AT STEEL DECKING 1

1 1/2" = 1'-0"

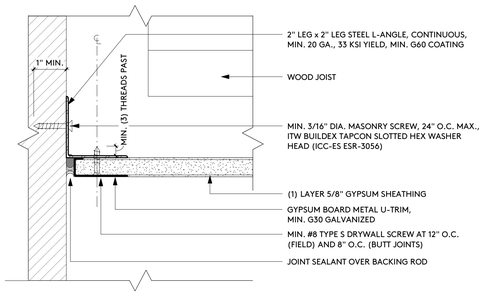

ANCHORAGE - FURRING CHANNEL 14

6" = 1'-0"

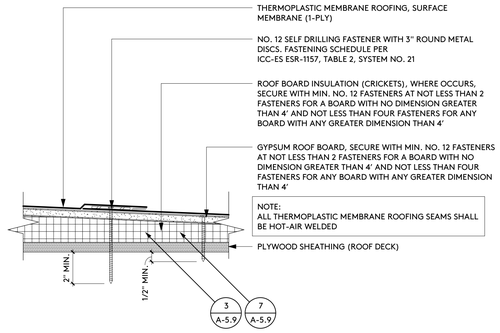

ANCHORAGE - WOOD DECKING 10

3" = 1'-0"

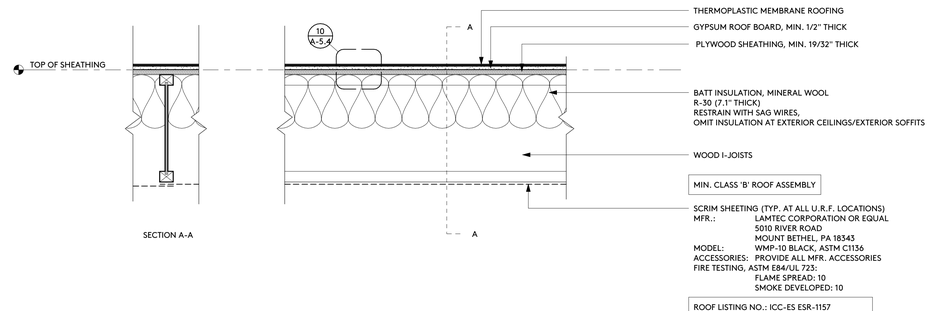

ASSEMBLY - TYP. ROOF AT WOOD DECKING 2

1 1/2" = 1'-0"

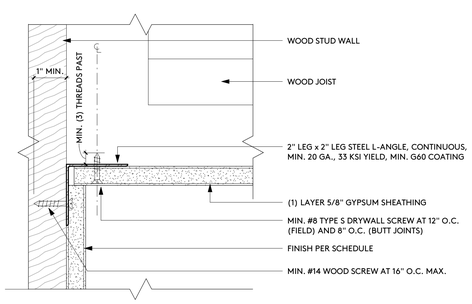

ANCHORAGE - FURRING CHANNEL 15

6" = 1'-0"

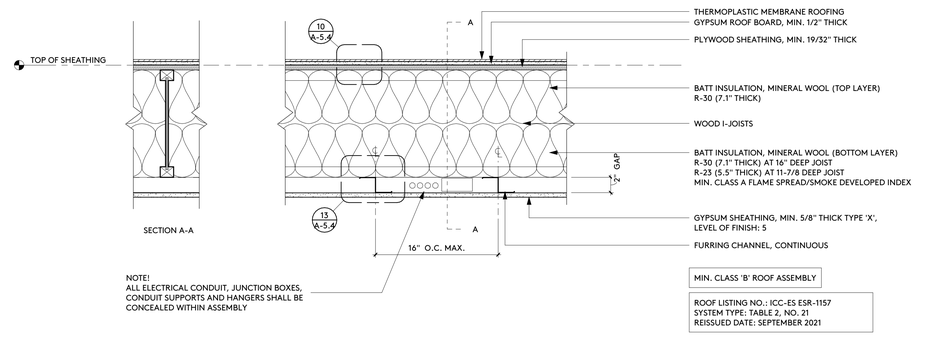

ASSEMBLY - TYP. ROOF AT WOOD DECKING 3

1 1/2" = 1'-0"

IDENTIFICATION STAMP
DIV. OF THE STATE ARCHITECT
APP: 03-122664 INC:
REVIEWED FOR
SS ☑ FLS ☑ ACS ☑
DATE: 05/12/2023

pjhm architects
LICENSED ARCHITECT
RICHARD W. PRIEST
NO. C15585
REN. 02/25
STATE OF CALIFORNIA
SD Phone: 760.730.5527 • LA Office: 837 Traction Avenue, #410, Los Angeles, CA 90013 • LA Phone: 213.278.0172 • Web: pjhm.com
OC Office: 24461 Ridge Route Drive #100, Laguna Hills, CA 92653 • OC Phone: 949.496.6191 • SD Office: 804 Pier View Way #103, Oceanside, CA 92054

HIGHLAND HIGH SCHOOL
50M POOL & AQUATICS CENTER

KERN HIGH SCHOOL DISTRICT

ROOF PLAN DETAILS

A-5.4

4/13/2023 9:05:13 AM

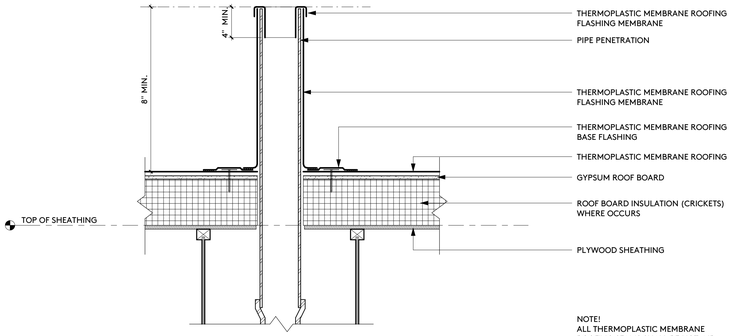

DECK PENETRATION - PIPE 9

1 1/2" = 1'-0"

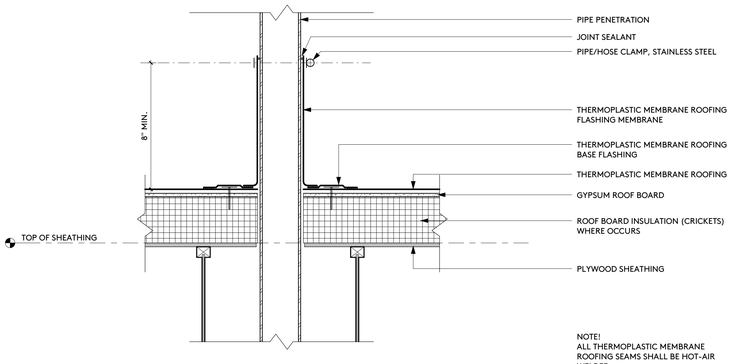

DECK PENETRATION - PIPE 10

1 1/2" = 1'-0"

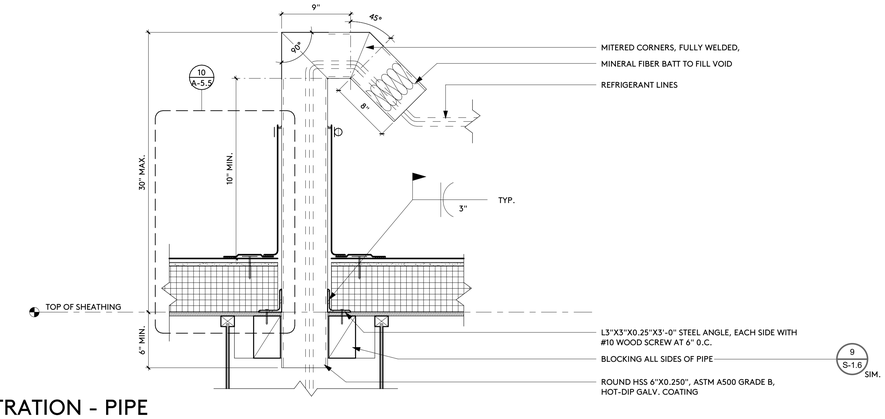

DECK PENETRATION - PIPE 11

1 1/2" = 1'-0"

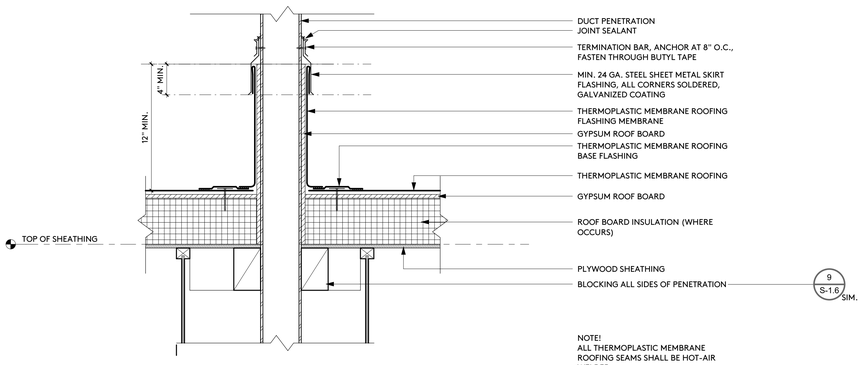

DECK PENETRATION - DUCT 12

1 1/2" = 1'-0"

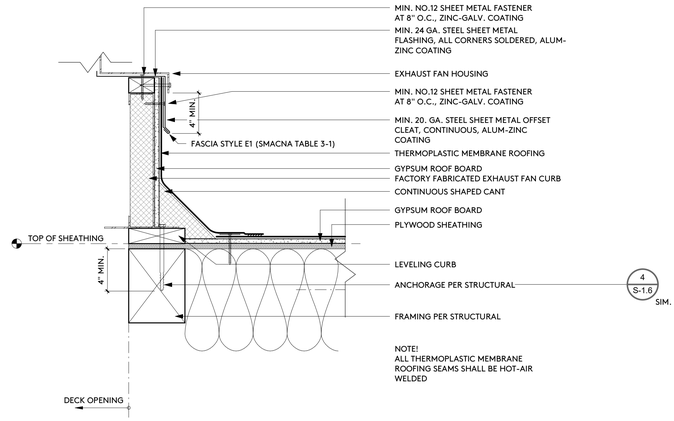

CURB - EXHAUST FAN 1

2" = 1'-0"

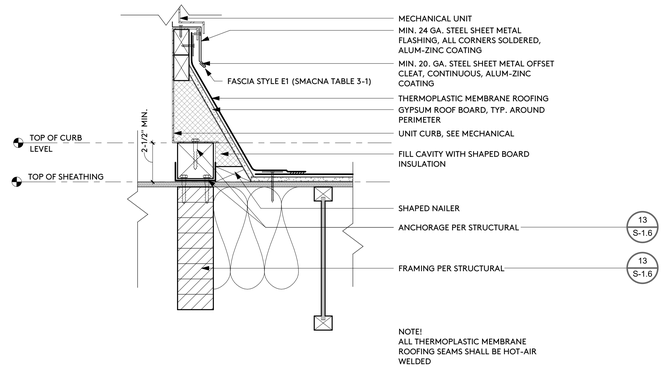

CURB - HVAC UNIT 2

2" = 1'-0"

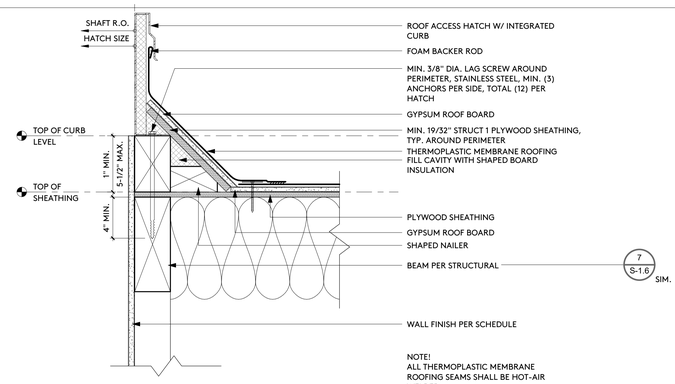

CURB - ROOF ACCESS HATCH 3

2" = 1'-0"

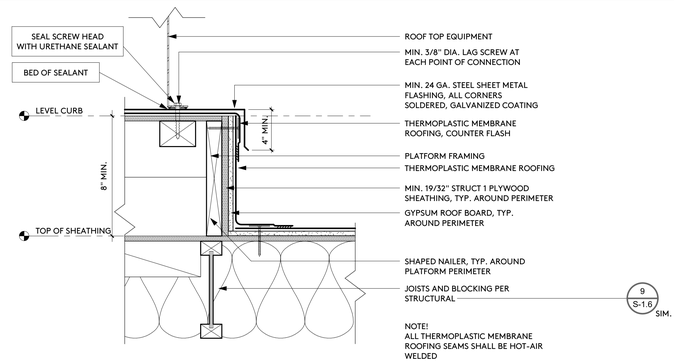

CURB - ROOF MOUNTED EQUIPMENT 4

2" = 1'-0"

IDENTIFICATION STAMP
DIV. OF THE STATE ARCHITECT
APP: 03-122664 INC:
REVIEWED FOR
SS ☑ FLS ☑ ACS ☑
DATE: 05/12/2023

pjhm architects
LICENSED ARCHITECT
EDWARD W. PJHM
NO. C15585
REN. 02/25
STATE OF CALIFORNIA

HIGHLAND HIGH SCHOOL
50M POOL & AQUATICS CENTER

KERN HIGH SCHOOL DISTRICT

ROOF PLAN DETAILS

A-5.5

OC Office: 24461 Ridge Route Drive #100, Laguna Hills, CA 92653 • OC Phone: 949.496.6191 • SD Office: 804 Pier View Way #103, Oceanside, CA 92054 • SD Phone: 760.730.5527 • LA Office: 837 Traction Avenue, #410, Los Angeles, CA 90013 • LA Phone: 213.278.0172 • Web: pjhm.com

4/13/2023 9:05:13 AM

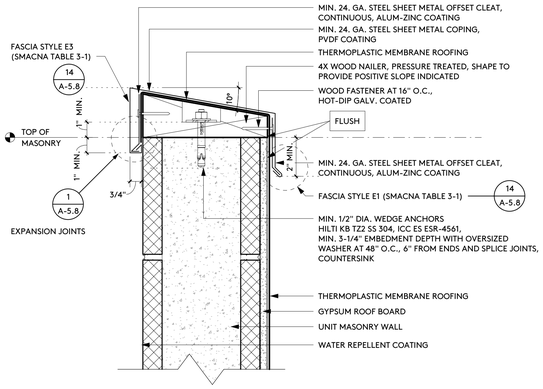

PARAPET TERMINATION 13

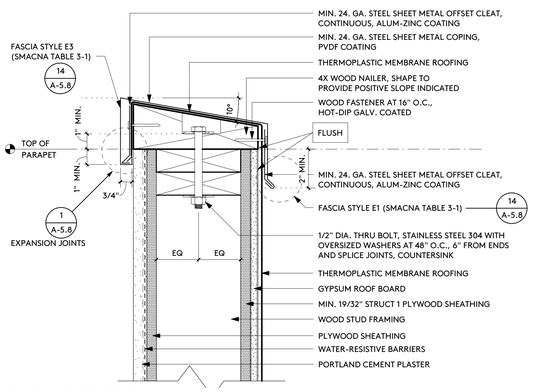

PARAPET TERMINATION 9

3" = 1'-0"

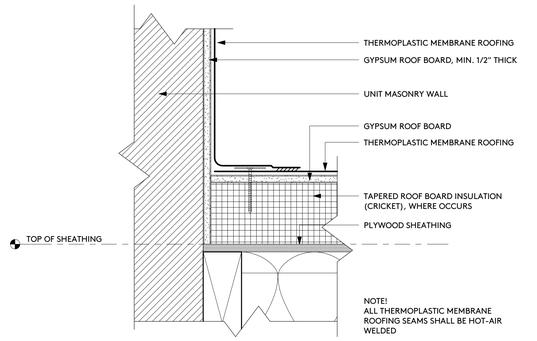

ROOF TRANSITION 5

3" = 1'-0"

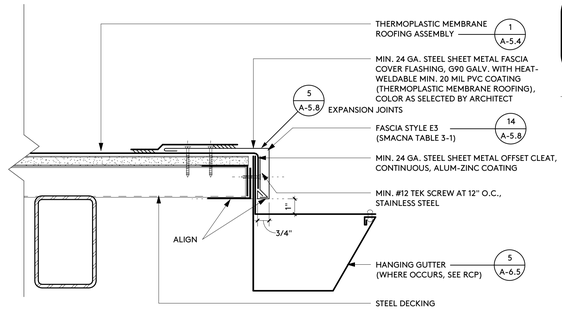

TERMINATION AT EAVE 1

3" = 1'-0"

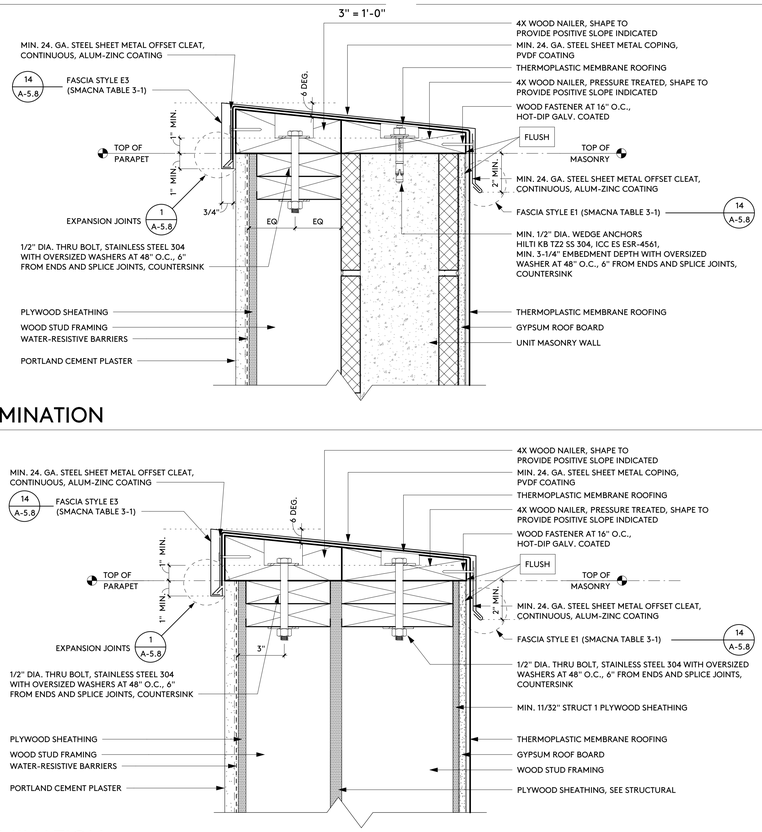

PARAPET TERMINATION 10

3" = 1'-0"

PARAPET TERMINATION 11

3" = 1'-0"

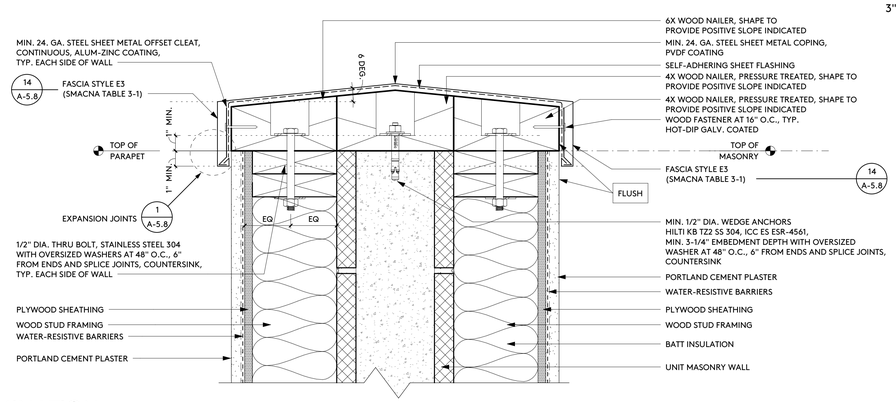

PARAPET TERMINATION 12

3" = 1'-0"

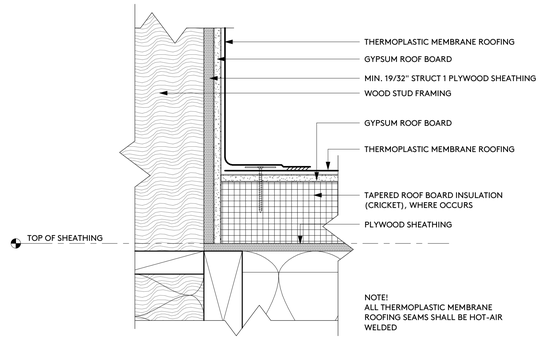

ROOF TRANSITION 6

3" = 1'-0"

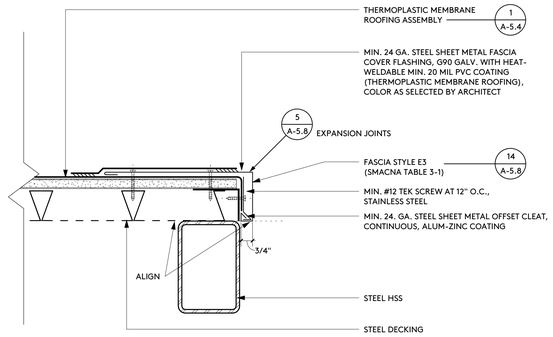

TERMINATION AT RAKE 2

3" = 1'-0"

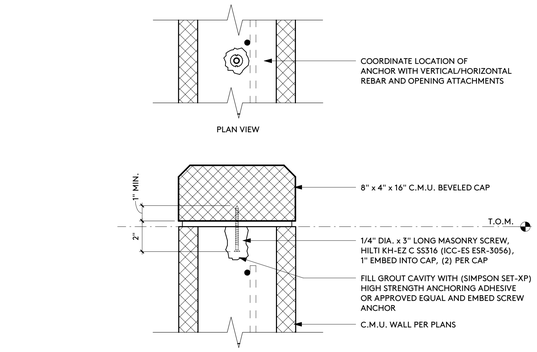

C.M.U. WALL CAP ANCHORAGE 7

3" = 1'-0"

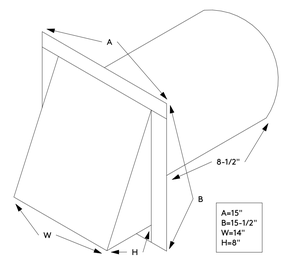

HOODED WALL VENT WITH SCREEN, MIN. 0.050 CONT. ALUMINUM SHEET METAL, PVDF COATED, WITH 1/4" INSECT SCREEN

WALL VENT 8

1 1/2" = 1'-0"

IDENTIFICATION STAMP
DIV. OF THE STATE ARCHITECT
APP: 03-122664 INC:
REVIEWED FOR
SS ☑ FLS ☑ ACS ☑
DATE: 05/12/2023

pjhm architects
LICENSED ARCHITECT
RICHARD W. PRIMUS
NO. C15585
REN. 02/25
STATE OF CALIFORNIA
LA Office: 837 Traction Avenue, #410, Los Angeles, CA 90013 • LA Phone: 213.278.0172 • Web: pjhm.com
SD Phone: 760.730.5527 • OC Office: 24461 Ridge Route Drive #100, Laguna Hills, CA 92653 • OC Phone: 949.496.6191 • SD Office: 804 Pier View Way #103, Oceanside, CA 92054

HIGHLAND HIGH SCHOOL
50M POOL & AQUATICS CENTER

KERN HIGH SCHOOL DISTRICT

ROOF PLAN DETAILS

A-5.6

4/13/2023 9:05:14 AM

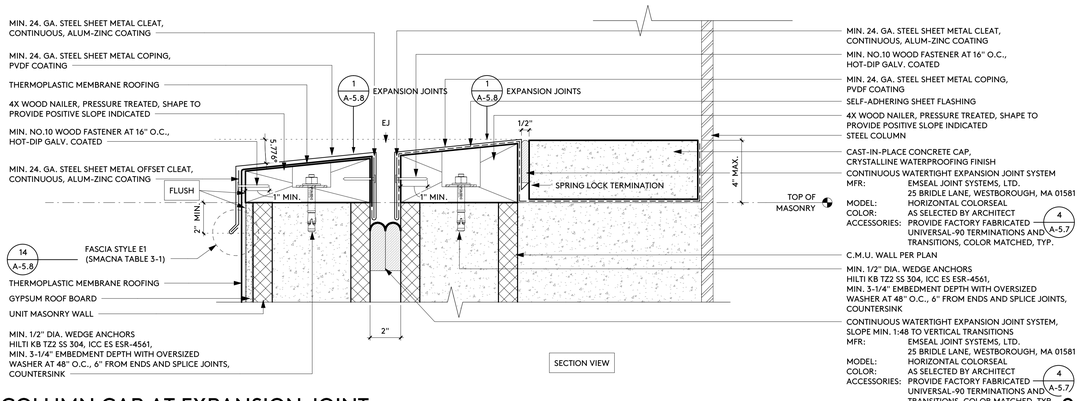

COLUMN CAP AT EXPANSION JOINT 9

3" = 1'-0"

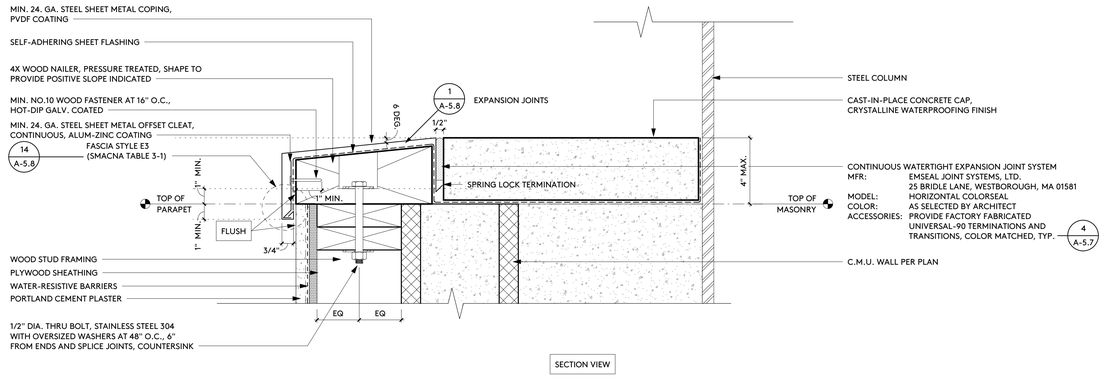

COLUMN CAP 10

3" = 1'-0"

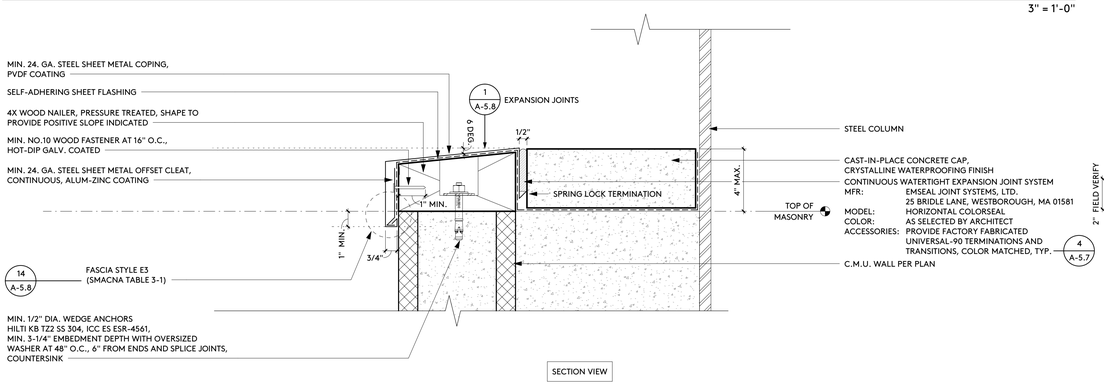

COLUMN CAP 11

3" = 1'-0"

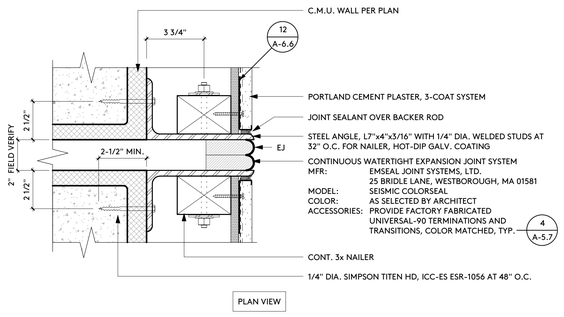

EXPANSION JOINT 16

3" = 1'-0"

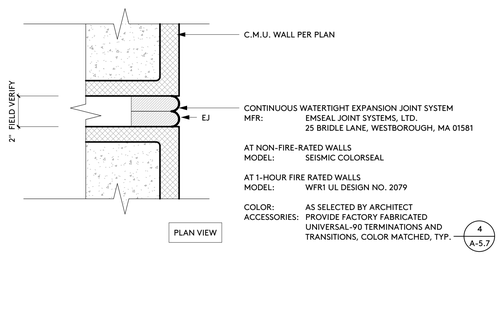

EXPANSION JOINT 12

3" = 1'-0"

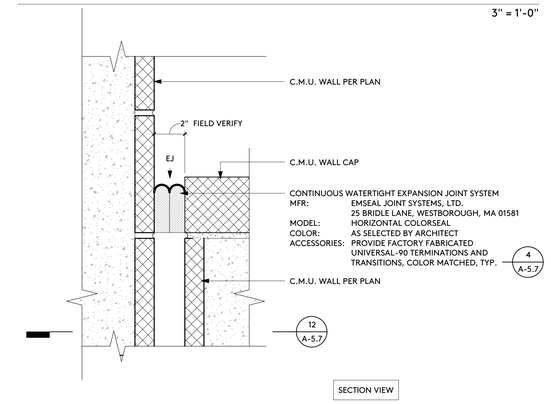

EXPANSION JOINT 8

3" = 1'-0"

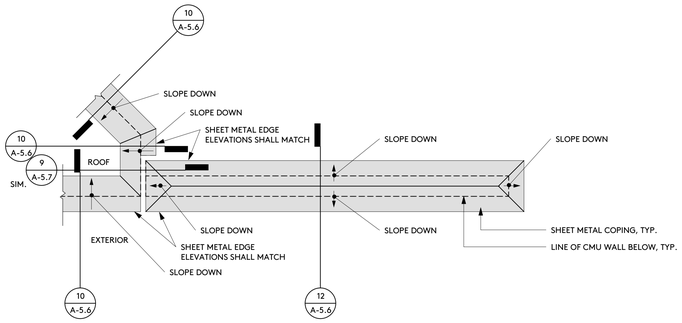

PARAPET COPING 1

1/2" = 1'-0"

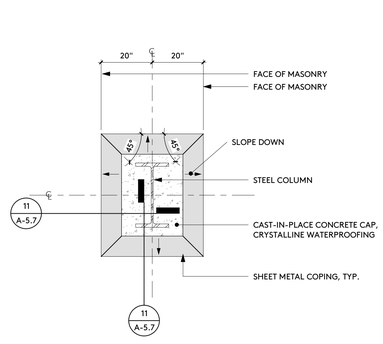

ROOF TRANSITION 6

1/2" = 1'-0"

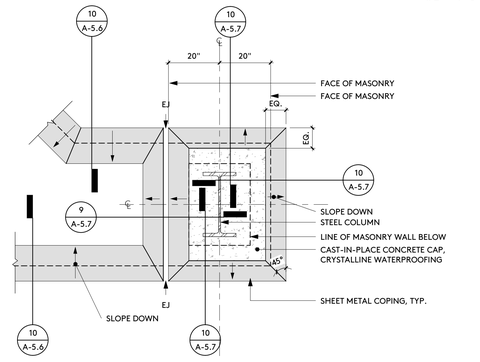

ROOF TRANSITION 2

1/2" = 1'-0"

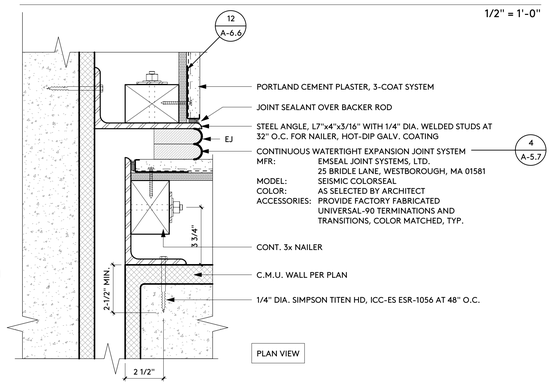

EXPANSION JOINT 7

3" = 1'-0"

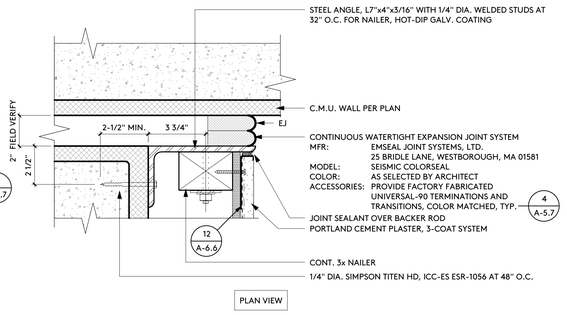

EXPANSION JOINT 3

3" = 1'-0"

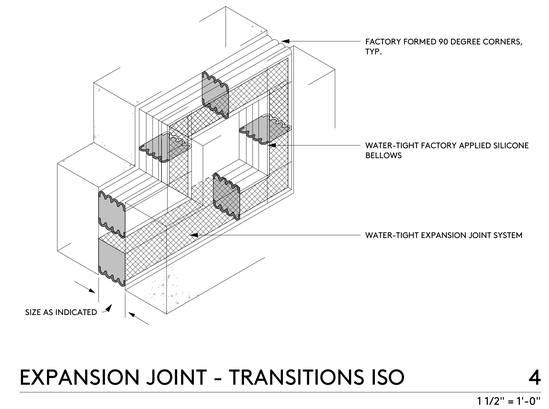

EXPANSION JOINT - TRANSITIONS ISO 4

1 1/2" = 1'-0"

IDENTIFICATION STAMP
DIV. OF THE STATE ARCHITECT
APP: 03-122664 INC:
REVIEWED FOR
SS ☑ FLS ☑ ACS ☑
DATE: 05/12/2023

pjhm architects

LICENSED ARCHITECT
RICHARD W. PRIEST
NO. C15585
REN. 02/25
STATE OF CALIFORNIA

HIGHLAND HIGH SCHOOL
50M POOL & AQUATICS CENTER

KERN HIGH SCHOOL DISTRICT

ROOF PLAN DETAILS

A-5.7

SD Phone: 760.730.5527 • LA Office: 837 Traction Avenue, #410, Los Angeles, CA 90013 • LA Phone: 213.278.0172 • Web: pjhm.com
OC Office: 24461 Ridge Route Drive #100, Laguna Hills, CA 92653 • OC Phone: 949.496.6191 • SD Office: 804 Pier View Way #103, Oceanside, CA 92054

4/13/2023 9:05:16 AM

Metal Thickness (Nom.)				Joint (J) for Top Width (W_T)				Joint (J) for Interior / Exterior Fascia Dimension	
S/S gage (mm)	Al in. (mm)	Cu oz. (mm)	Steel* gage (mm)	6" Max. (150 mm)	Over 6" to 12" (300 mm)	Over 12" to 18" (450 mm)	Over 18" (460 mm)	9" Max. (230 mm)	Over 9" to 12" (300 mm)
28 (.38)	.025 (.64)	12 (.41)	26 (.55)	ALL	ALL	NONE	NONE	ALL	8–12
26 (.46)	.032 (.81)	16 (.55)	24 (.70)	ALL	ALL	5–12	8–11	ALL	8–12
24 (.58)	.040 (1.0)	20 (.69)	22 (.85)	ALL	ALL	5–12	5–9,12	ALL	8–12
22 (.74)	.063 (1.6)	24 (.82)	20 (1.0)	1–10,12	1–10,12	1–10,12	5–9,12	1–7,9,11,11A,12	1–7,9–12
20 (.89)	.080 (2.0)	32 (.92)	18 (1.3)	1–7,12	1–7,12	1–7,12	5–7,12	1–7,11A,12	1–7, 10–12
18 (1.2)	.100 (2.5)	48 (1.6)	16 (1.6)	1–7,12	1–7,12	1–7,12	5–7,12	1–7,11A,12	1–7, 10–12
16 (1.5)	.125 (3.2)		14 (2.0)	2,4,5,12	2,4,5,12	2,4,5,12	5–7,12	2, 4, 5, 11A, 12	2, 4, 5, 12
.075 (1.9)			12 (2.8)	2,4,12	2,4,12	2,4,12	5–7,12	2, 4, 5, 11A, 12	2, 3, 5, 12
.105 (2.7)			10 (3.5)	2,4,12	2,4,12	2,4,12	5–7,12	2, 4, 5, 11A, 12	2, 4, 5, 12

*Galvanized or coated 1" = 25 mm

J1	J2	J3	J4	J5	J6
	6"		6"		¾
3" LAP	BUTT + BACK-UP PLATE	4" JOGGLE (OFF-SET FLUSH)	BUTT + COVER PLATE	6" COVER + 6" BACKUP PLATES	T & G

J7	J8	J9	J10	J11	J11A	J12
¾"						¾*
T & G FLUSH	STDG SEAM	1" DRIVE	¾" HOOK SEAM	¾" INSIDE SLIP (POCKET)	¾" S SLIP	DBL S

Table 3–1 Coping Design

NOTE:

Some cover plates slips and drives maybe fabricated with thickness lighter than the base coping material used. (J_2, J_4, J_5, J_6, J_7, J_9, J_{11A}, J_{12})

SMACNA TABLE 3-1 — 14

12" = 1'-0"

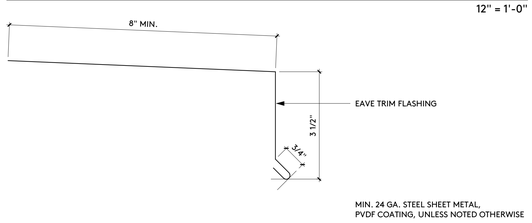

PROFILE - EAVE TRIM FLASHING — 15

6" = 1'-0"

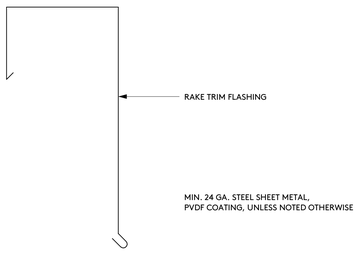

PROFILE - RAKE TRIM FLASHING — 16A

6" = 1'-0"

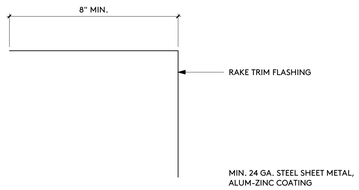

PROFILE - RAKE TRIM FLASHING — 16B

6" = 1'-0"

4/13/2023 9:05:17 AM

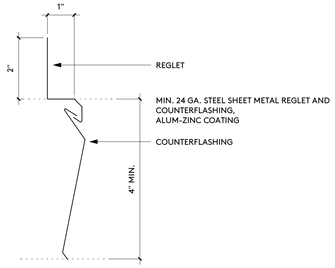

PROFILE - REGLET W/ COUNTERFLASHING — 9

6" = 1'-0"

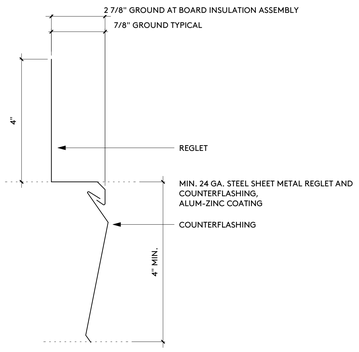

PROFILE - REGLET W/ COUNTERFLASHING — 10

6" = 1'-0"

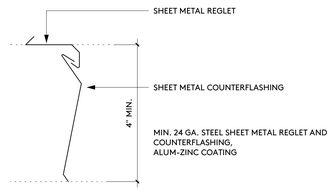

PROFILE - REGLET W/ COUNTERFLASHING — 11

6" = 1'-0"

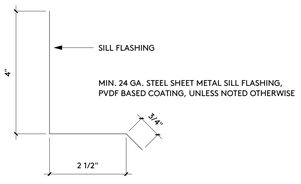

PROFILE - SILL FLASHING — 12

6" = 1'-0"

SILL FLASHING EXPANSION JOINTS — 5

3" = 1'-0"

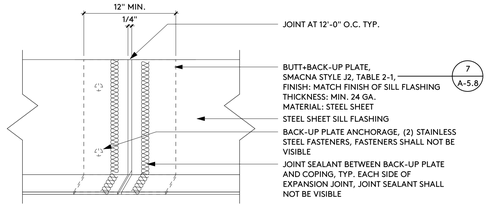

Metal Thickness (Nom.)					Joint (J) for Fascia Dimension of:	
Ss ga (mm)	Al in. (mm)	Cu oz. (mm)	Steel* ga (mm)		9" Max. (230 mm)	Over 9" to 12" (300 mm)
28 (0.38)	0.025 (.64)	12 (0.41)	26 (0.55)		J 1, 2, 4, 5, 9, 11, 11A, 12	J 8–12
26 (0.46)	0.032 (.81)	16 (0.55)	24 (0.70)		J 1, 2, 4, 5, 9, 11, 11A, 12	J 8–12
24 (0.58)	0.040 (1.0)	20 (0.69)	22 (0.85)		J 1, 2, 4, 5, 9, 11, 11A, 12	J 8–12
22 (0.74)	0.063 (1.6)	24 (0.82)	20 (1.0)		J 1, 2, 4, 5, 9, 11A, 12	J 1–11, 11A, 12
20 (0.89)	0.080 (2.0)	32 (0.92)	18 (1.3)		J 2, 4, 5, 11A, 12	J 1–7, 10, 11A, 12
18 (1.2)	0.100 (2.5)	48 (1.6)	16 (1.6)		J 2, 4, 5, 11A, 12	J 1–7, 10, 11A, 12
16 (1.5)	0.125 (3.2)		14 (2.0)		J 2, 4, 5, 11A, 12	J 2, 4, 5, 12
14 (1.9)			12 (2.8)		J 2, 4, 5, 11A, 12	J 2, 4, 5, 12
12 (2.7)			10 (3.5)		J 2, 4, 5, 11A, 12	J 2, 4, 5, 12

*Galvanized coated metal 1" = 25 mm

J1	J2	J3	J4	J5	J6
	12"		6"		¾
4" LAP	BUTT + BACK-UP PLATE	4" JOGGLE (OFF-SET FLUSH)	BUTT + COVER PLATE	6" COVER + 12" BACKUP PLATES	T & G

J7	J8	J9	J10	J11	J11A	J12
¾"						¾*
T & G FLUSH	STDG SEAM	1" DRIVE	¾" HOOK SEAM	¾" INSIDE SLIP (POCKET)	¾" S SLIP	DBL S

Table 2–1 Gravel–Stop and Cap Fascia Design

NOTE:

See Appendix L for gage and other requirements when fascia must meet wind uplift specifications.

SMACNA TABLE 2-1 — 7

12" = 1'-0"

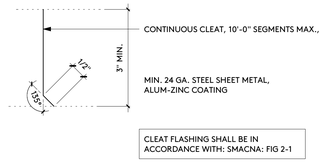

PROFILE - CLEAT — 8

6" = 1'-0"

COPING EXPANSION JOINTS — 1

3" = 1'-0"

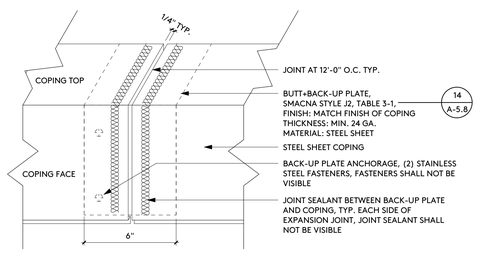

GABLE EXPANSION JOINTS — 2

3" = 1'-0"

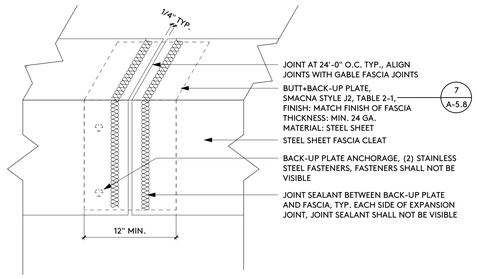

GABLE EXPANSION JOINTS — 3

3" = 1'-0"

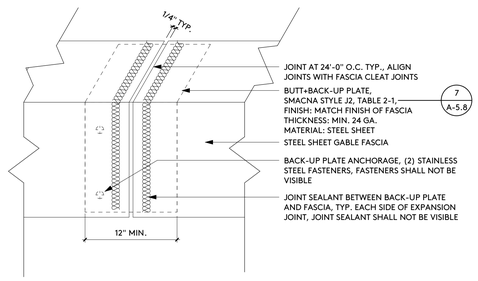

RAKE FLASHING EXPANSION JOINTS — 4

3" = 1'-0"

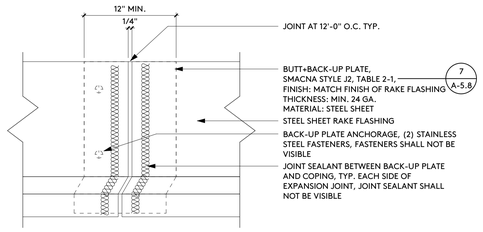

IDENTIFICATION STAMP
DIV. OF THE STATE ARCHITECT
APP: 03-122664 INC:
REVIEWED FOR
SS ☑ FLS ☑ ACS ☑
DATE: 05/12/2023

pjhm architects
LICENSED ARCHITECT
RICHARD W. PRIMUS
NO. C15585
REN. 02/25
STATE OF CALIFORNIA
SD Phone: 760.730.5527 • LA Office: 837 Traction Avenue, #410, Los Angeles, CA 90013 • LA Phone: 213.278.0172 • Web: pjhm.com
OC Office: 24461 Ridge Route Drive #100, Laguna Hills, CA 92653 • OC Phone: 949.496.6191 • SD Office: 804 Pier View Way #103, Oceanside, CA 92054 • SD Phone:

HIGHLAND HIGH SCHOOL
50M POOL & AQUATICS CENTER

KERN HIGH SCHOOL DISTRICT

ROOF PLAN DETAILS

A-5.8

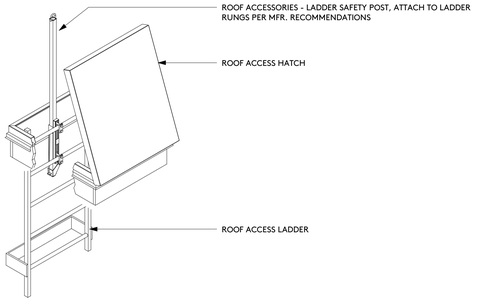

ROOF HATCH ACCESS 13

1" = 1'-0"

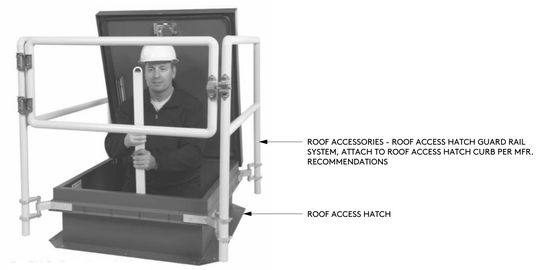

ROOF HATCH ACCESS 9

1" = 1'-0"

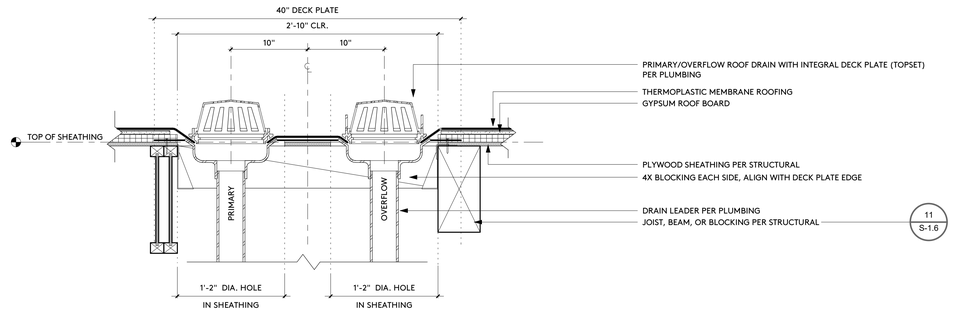

DECK PENETRATION - ROOF DRAIN ASSEMBLY 1

1 1/2" = 1'-0"

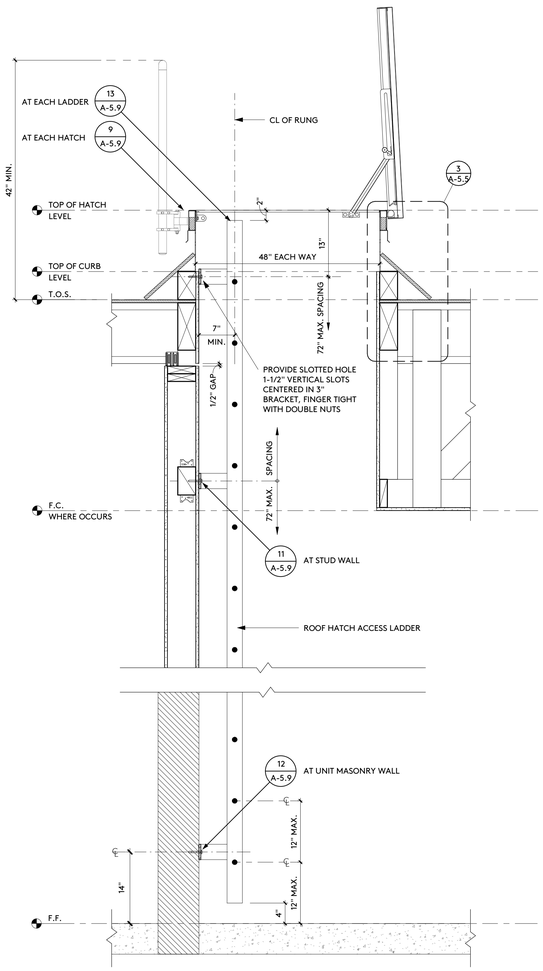

ROOF HATCH ACCESS LADDER 16

1" = 1'-0"

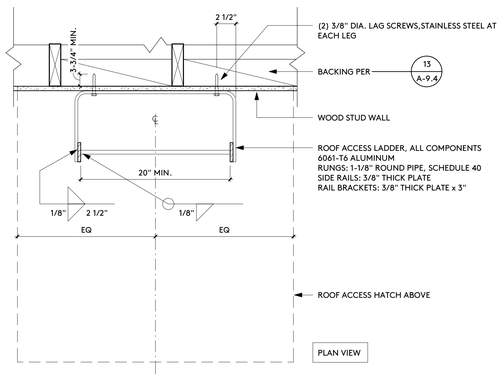

ANCHORAGE 11

1 1/2" = 1'-0"

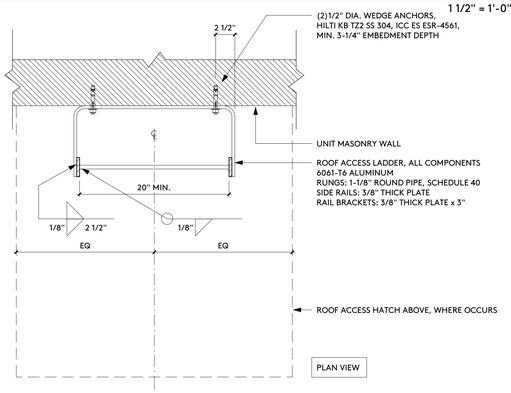

ANCHORAGE 12

1 1/2" = 1'-0"

1 Panel System
(Most Recommended)

Standard Cross Section

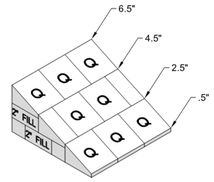

TAPERED INSULATION - 1/2"/FOOT SLOPE 7

1/2" = 1'-0"

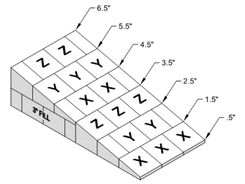

3 Panel System

Standard Cross Section

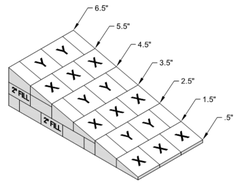

2 Panel System

Standard Cross Section

TAPERED INSULATION - 1/4"/FOOT SLOPE 3

1/2" = 1'-0"

1 Panel System

Non-Standard Cross Section

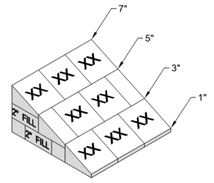

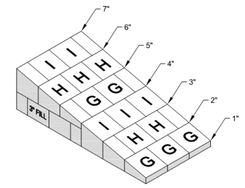

3 Panel System

Standard Cross Section

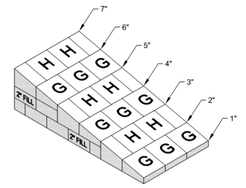

2 Panel System

Standard Cross Section

IDENTIFICATION STAMP
DIV. OF THE STATE ARCHITECT
APP: 03-122664 INC:
REVIEWED FOR
SS ☑ FLS ☑ ACS ☑
DATE: 05/12/2023

pjhm architects

LICENSED ARCHITECT
RICHARD W. PRIMM
NO. C15585
REN. 02/25
STATE OF CALIFORNIA

OC Office: 24461 Ridge Route Drive #100, Laguna Hills, CA 92653 • OC Phone: 949.496.6191 • SD Office: 804 Pier View Way #103, Oceanside, CA 92054 • SD Phone: 760.730.5527 • LA Office: 837 Traction Avenue, #410, Los Angeles, CA 90013 • LA Phone: 213.278.0172 • Web: pjhm.com

HIGHLAND HIGH SCHOOL
50M POOL & AQUATICS CENTER

KERN HIGH SCHOOL DISTRICT

ROOF PLAN DETAILS

A-5.9

4/13/2023 9:05:18 AM

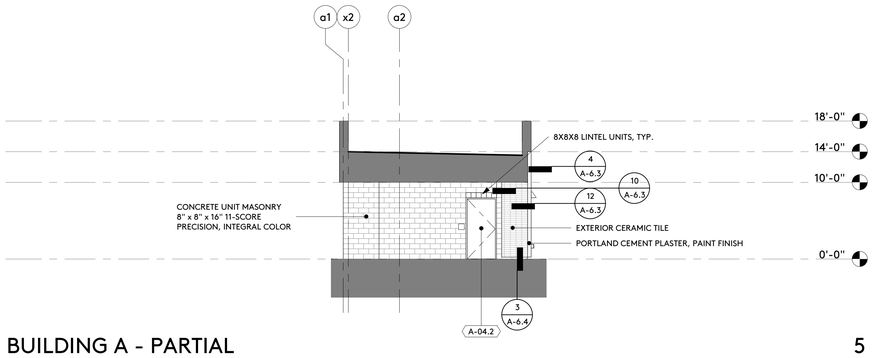

BUILDING A - PARTIAL 5

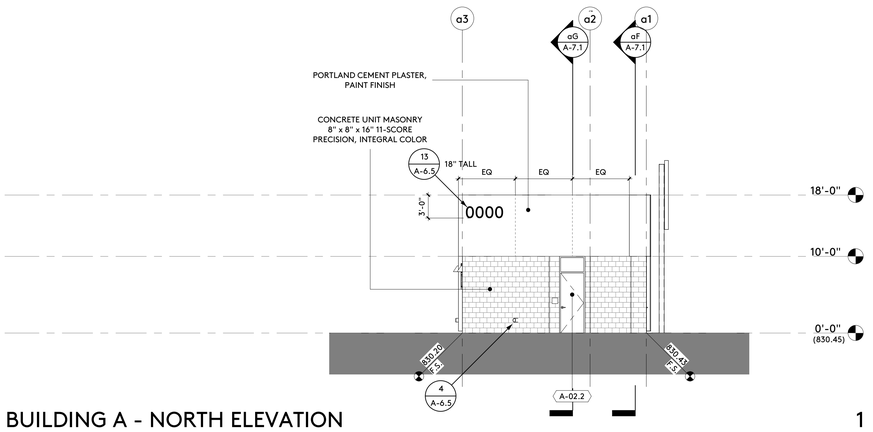

BUILDING A - NORTH ELEVATION 1

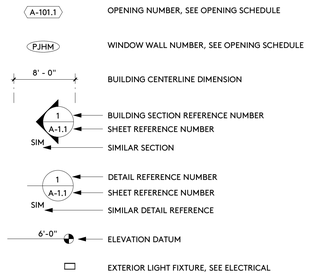

SYMBOLS

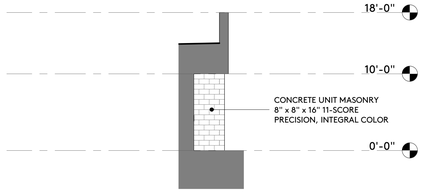

BUILDING A - PARTIAL 7

1/8" = 1'-0"

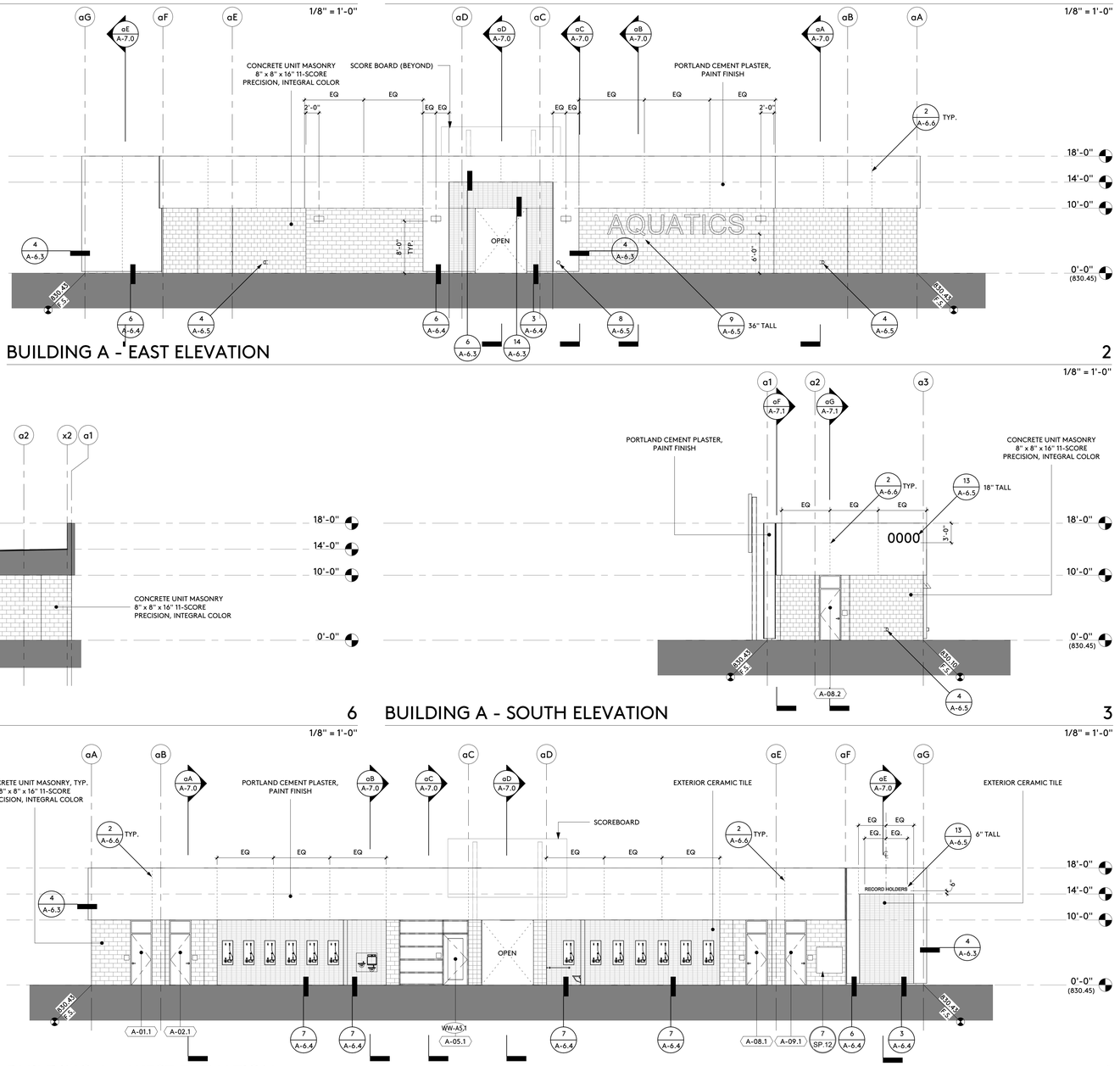

BUILDING A - EAST ELEVATION 2

1/8" = 1'-0"

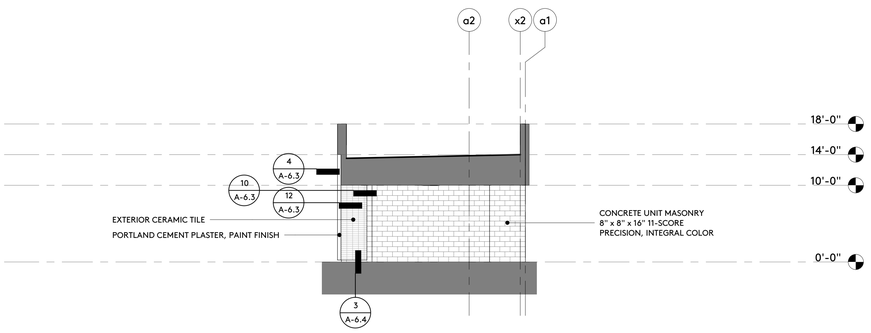

BUILDING A - PARTIAL 6

1/8" = 1'-0"

BUILDING A - SOUTH ELEVATION 3

1/8" = 1'-0"

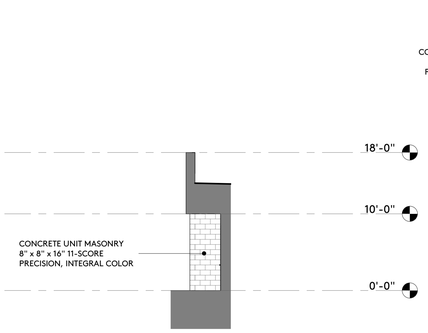

BUILDING A - PARTIAL 8

1/8" = 1'-0"

BUILDING A - WEST ELEVATION 4

1/8" = 1'-0"

IDENTIFICATION STAMP
DIV. OF THE STATE ARCHITECT
APP: 03-122664 INC:
REVIEWED FOR
SS ☑ FLS ☑ ACS ☑
DATE: 05/12/2023

pjhm architects

LICENSED ARCHITECT
RICHARD W. PRIMUS
No. C15585
REN. 02/25
STATE OF CALIFORNIA

SD Phone: 760.730.5527 • LA Office: 837 Traction Avenue, #410, Los Angeles, CA 90013 • OC Phone: 949.496.6191 • SD Office: 804 Pier View Way #103, Oceanside, CA 92054 • Web: pjhm.com

OC Office: 24461 Ridge Route Drive #100, Laguna Hills, CA 92653

HIGHLAND HIGH SCHOOL
50M POOL & AQUATICS CENTER

KERN HIGH SCHOOL DISTRICT

EXTERIOR ELEVATIONS

A-6.0

4/13/2023 9:05:20 AM

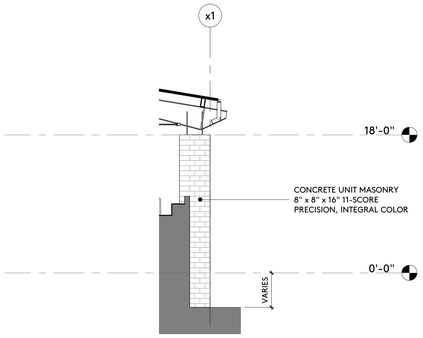

BUILDING B - PARTIAL 13

1/8" = 1'-0"

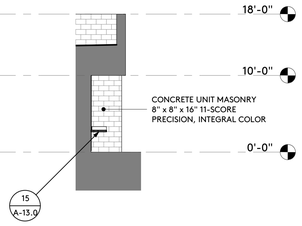

BUILDING B - PARTIAL 9

1/8" = 1'-0"

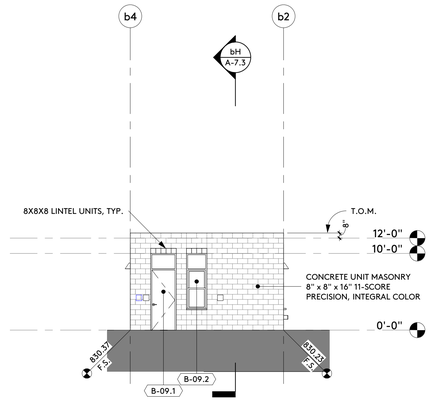

BUILDING B - PARTIAL 5

1/8" = 1'-0"

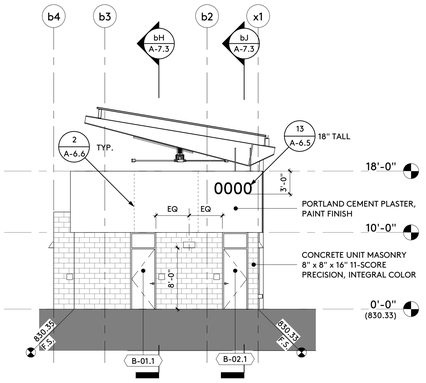

BUILDING B - NORTH ELEVATION 1

1/8" = 1'-0"

SYMBOLS

- A-101.1 — OPENING NUMBER, SEE OPENING SCHEDULE
- PJHM — WINDOW WALL NUMBER, SEE OPENING SCHEDULE
- 8' - 0" — BUILDING CENTERLINE DIMENSION
- 1 / A-1.1 (SIM) — BUILDING SECTION REFERENCE NUMBER / SHEET REFERENCE NUMBER / SIMILAR SECTION
- 1 / A-1.1 (SIM) — DETAIL REFERENCE NUMBER / SHEET REFERENCE NUMBER / SIMILAR DETAIL REFERENCE
- 6'-0" — ELEVATION DATUM
- EXTERIOR LIGHT FIXTURE, SEE ELECTRICAL

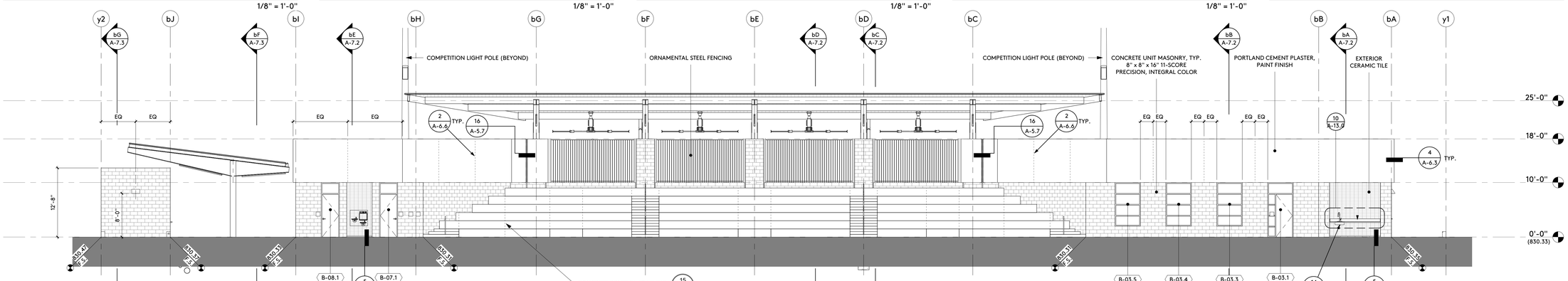

BUILDING B - EAST ELEVATION 2

1/8" = 1'-0"

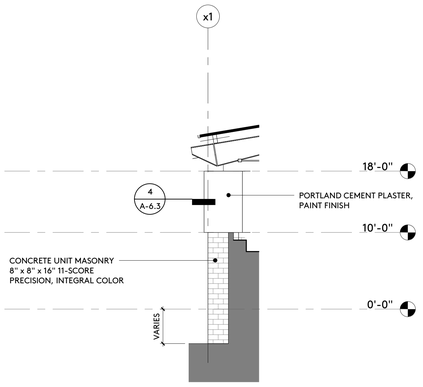

BUILDING B - PARTIAL 15

1/8" = 1'-0"

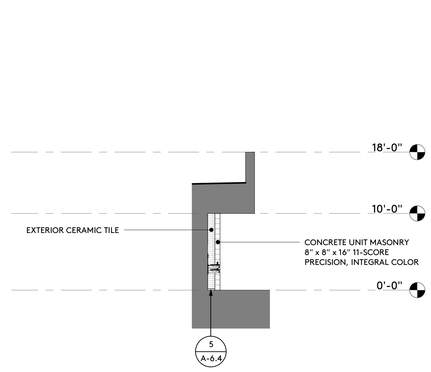

BUILDING B - PARTIAL 11

1/8" = 1'-0"

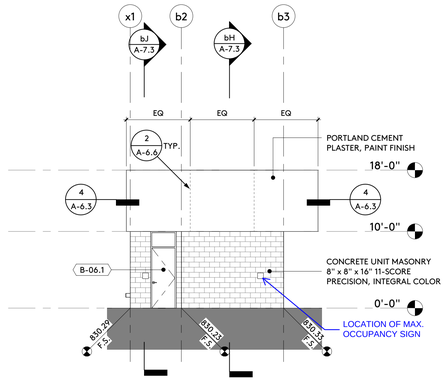

BUILDING B - PARTIAL 7

1/8" = 1'-0"

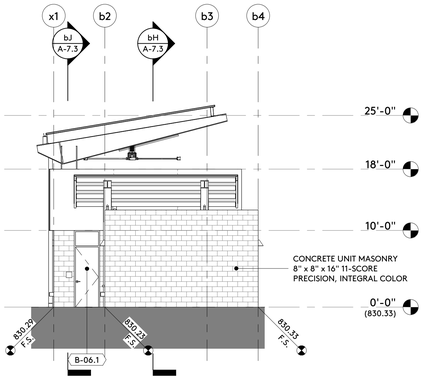

BUILDING B - SOUTH ELEVATION 3

1/8" = 1'-0"

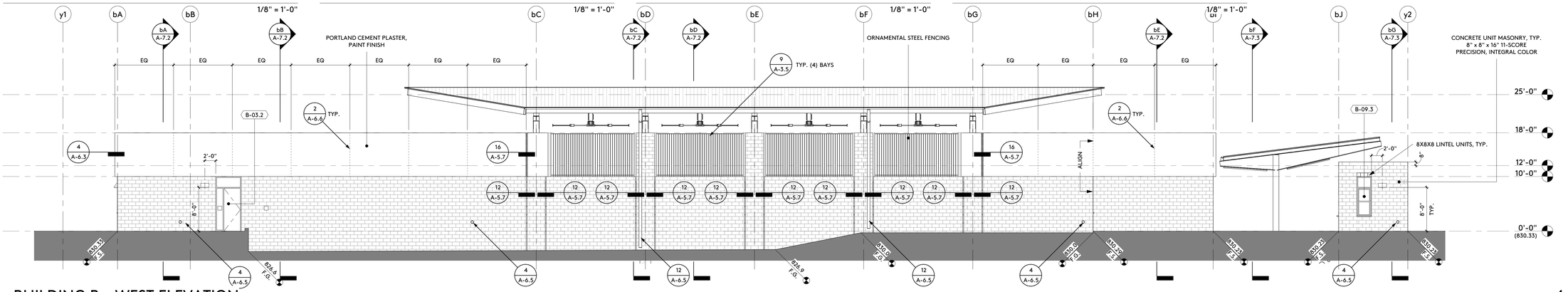

BUILDING B - WEST ELEVATION 4

1/8" = 1'-0"

IDENTIFICATION STAMP
DIV. OF THE STATE ARCHITECT
APP: 03-122664 INC:
REVIEWED FOR
SS ☑ FLS ☑ ACS ☑
DATE: 05/12/2023

pjhm architects

LICENSED ARCHITECT
RICHARD W. PRIMUS
NO. C15585
REN. 02/25
STATE OF CALIFORNIA

HIGHLAND HIGH SCHOOL
50M POOL & AQUATICS CENTER

KERN HIGH SCHOOL DISTRICT

EXTERIOR ELEVATIONS

A-6.1

OC Office: 24461 Ridge Route Drive #100, Laguna Hills, CA 92653 • OC Phone: 949.496.6191 • SD Office: 804 Pier View Way #103, Oceanside, CA 92054
SD Phone: 760.730.5527 • LA Office: 837 Traction Avenue, #410, Los Angeles, CA 90013 • LA Phone: 213.278.0172 • Web: pjhm.com

4/13/2023 11:27:04 AM

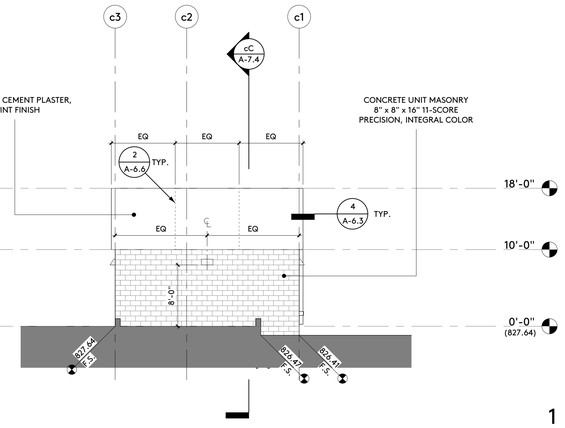

BUILDING C - NORTH ELEVATION

1

1/8" = 1'-0"

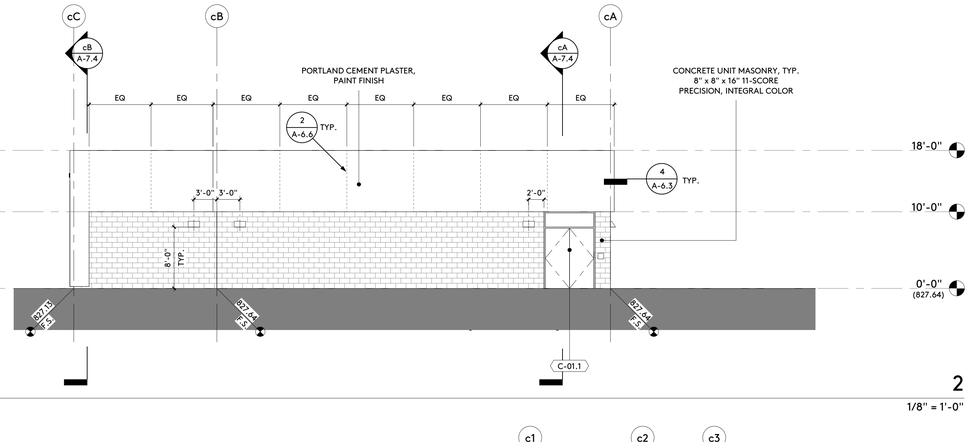

BUILDING C - EAST ELEVATION

2

1/8" = 1'-0"

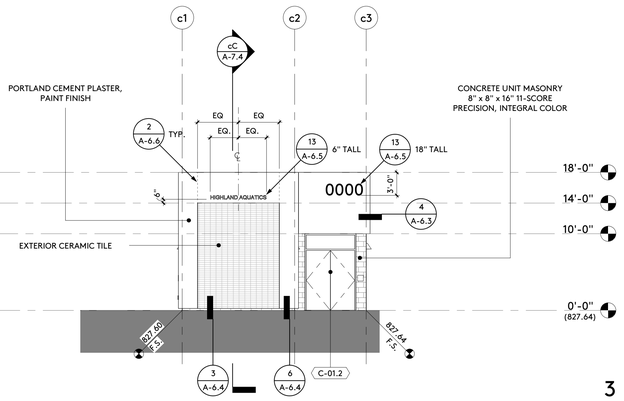

BUILDING C - SOUTH ELEVATION

3

1/8" = 1'-0"

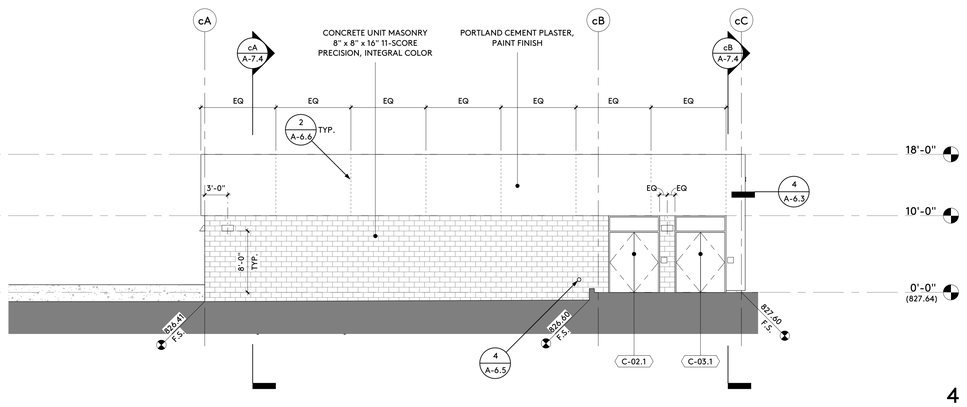

BUILDING C - WEST ELEVATION

4

1/8" = 1'-0"

SYMBOLS

- A-101.1 — OPENING NUMBER, SEE OPENING SCHEDULE
- PJHM — WINDOW WALL NUMBER, SEE OPENING SCHEDULE
- 8' - 0" — BUILDING CENTERLINE DIMENSION
- 1 / A-1.1 — BUILDING SECTION REFERENCE NUMBER; SHEET REFERENCE NUMBER
- SIM — SIMILAR SECTION
- 1 / A-1.1 — DETAIL REFERENCE NUMBER; SHEET REFERENCE NUMBER
- SIM — SIMILAR DETAIL REFERENCE
- 6'-0" — ELEVATION DATUM
- EXTERIOR LIGHT FIXTURE, SEE ELECTRICAL

IDENTIFICATION STAMP
DIV. OF THE STATE ARCHITECT
APP: 03-122664 INC:
REVIEWED FOR
SS ☑ FLS ☑ ACS ☑
DATE: 05/12/2023

pjhm architects

LICENSED ARCHITECT
RICHARD W. PRIEST
NO. C15585
REN. 02/25
STATE OF CALIFORNIA

OC Office: 24461 Ridge Route Drive #100, Laguna Hills, CA 92653 • OC Phone: 949.496.6191 • SD Office: 804 Pier View Way #103, Oceanside, CA 92054 • SD Phone: 760.730.5527 • LA Office: 837 Traction Avenue, #410, Los Angeles, CA 90013 • LA Phone: 213.278.0172 • Web: pjhm.com

HIGHLAND HIGH SCHOOL
50M POOL & AQUATICS CENTER

KERN HIGH SCHOOL DISTRICT

EXTERIOR ELEVATIONS

A-6.2

4/13/2023 11:27:05 AM

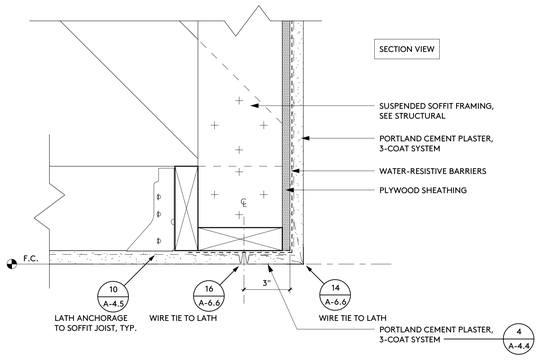

FASCIA TO SOFFIT 13

3" = 1'-0"

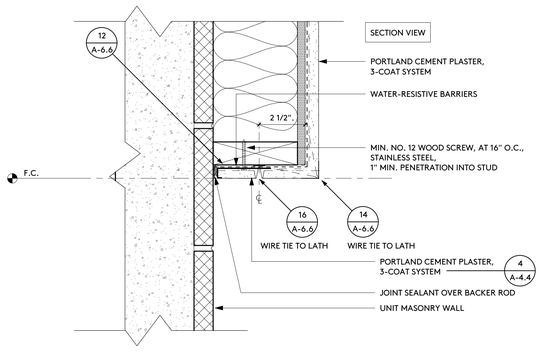

SOFFIT TO WALL 9

3" = 1'-0"

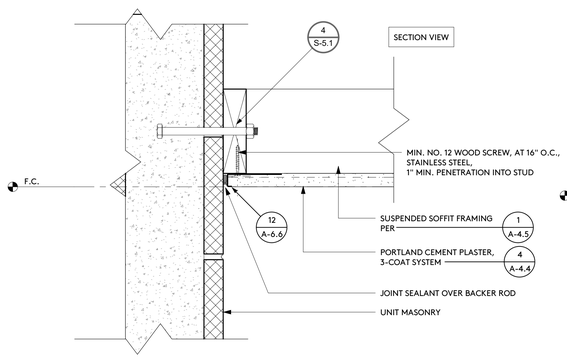

SOFFIT TO WALL 5

3" = 1'-0"

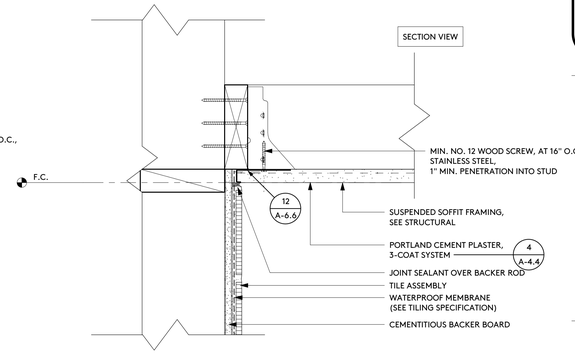

SOFFIT TO WALL 1

3" = 1'-0"

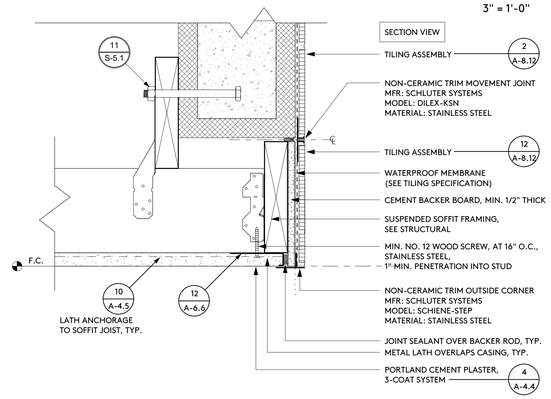

FASCIA TO SOFFIT 14

3" = 1'-0"

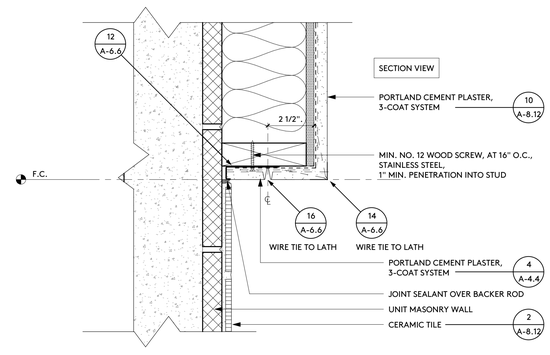

SOFFIT TO WALL 6

3" = 1'-0"

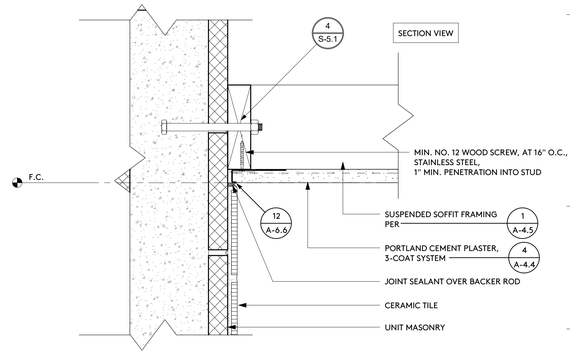

SOFFIT TO WALL 2

3" = 1'-0"

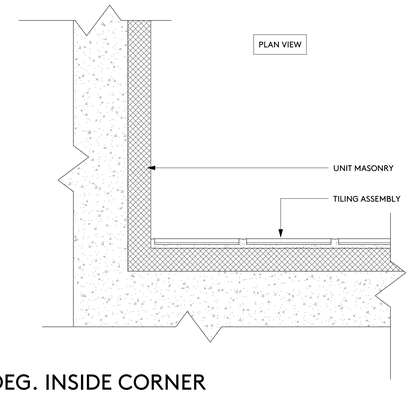

90 DEG. INSIDE CORNER 11

3" = 1'-0"

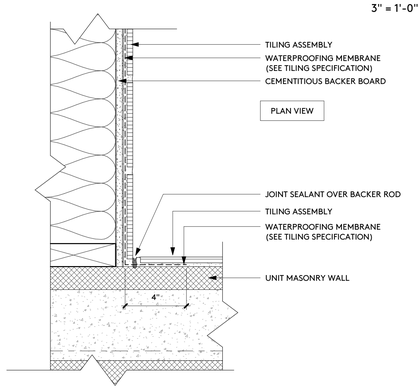

90 DEG. INSIDE CORNER 7

3" = 1'-0"

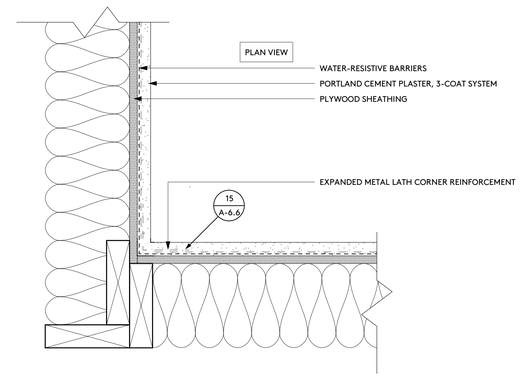

90 DEG. INSIDE CORNER 3

3" = 1'-0"

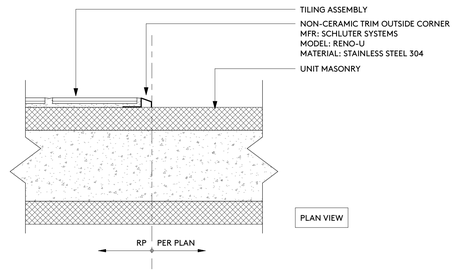

IN-PLANE TERMINATION 10

3" = 1'-0"

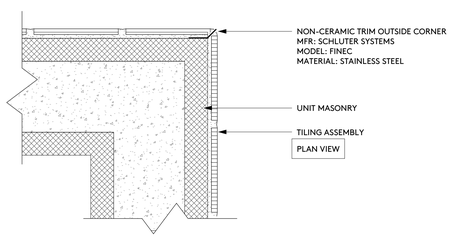

90 DEG. OUTSIDE CORNER 12

3" = 1'-0"

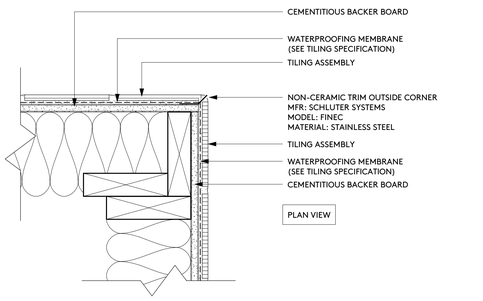

90 DEG. OUTSIDE CORNER 8

3" = 1'-0"

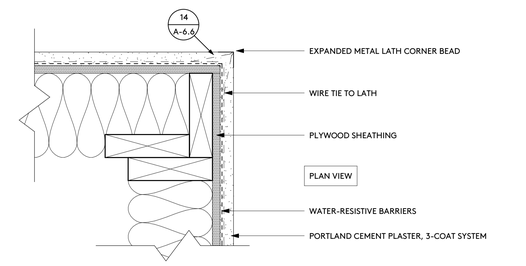

90 DEG. OUTSIDE CORNER 4

3" = 1'-0"

IDENTIFICATION STAMP
DIV. OF THE STATE ARCHITECT
APP: 03-122664 INC:
REVIEWED FOR
SS ☑ FLS ☑ ACS ☑
DATE: 05/12/2023

pjhm architects
LICENSED ARCHITECT
RICHARD W. FRUIN
NO. C15585
REN. 02/25
STATE OF CALIFORNIA
LA Phone: 213.278.0172 • Web: pjhm.com
LA Office: 837 Traction Avenue, #410, Los Angeles, CA 90013
SD Phone: 760.730.5527 • OC Phone: 949.496.6191 • SD Office: 804 Pier View Way #103, Oceanside, CA 92054
OC Office: 24461 Ridge Route Drive #100, Laguna Hills, CA 92653

HIGHLAND HIGH SCHOOL
50M POOL & AQUATICS CENTER

KERN HIGH SCHOOL DISTRICT

EXTERIOR ELEVATION DETAILS

A-6.3

4/13/2023 9:05:25 AM

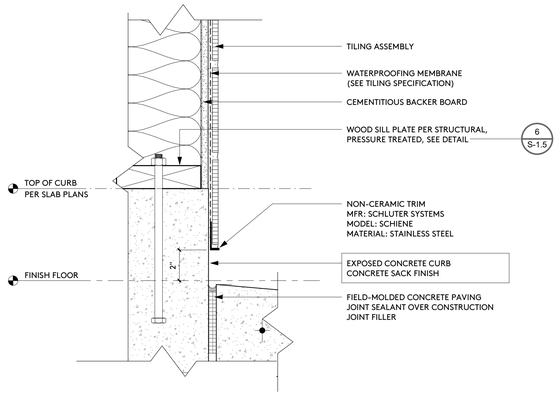

SILL - AT GRADE 5

3" = 1'-0"

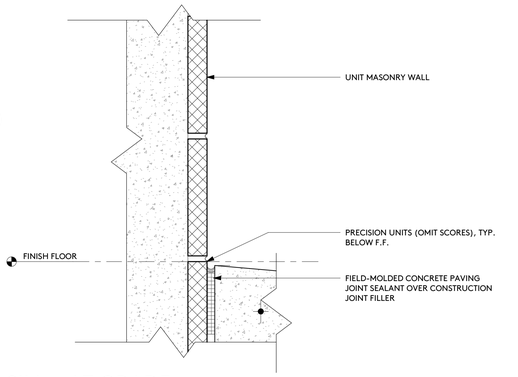

SILL - AT GRADE 1

3" = 1'-0"

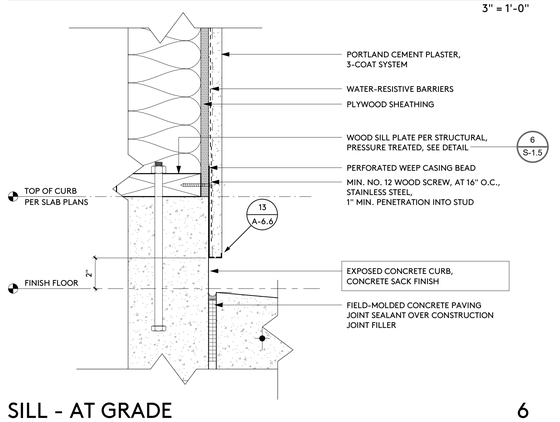

SILL - AT GRADE 6

3" = 1'-0"

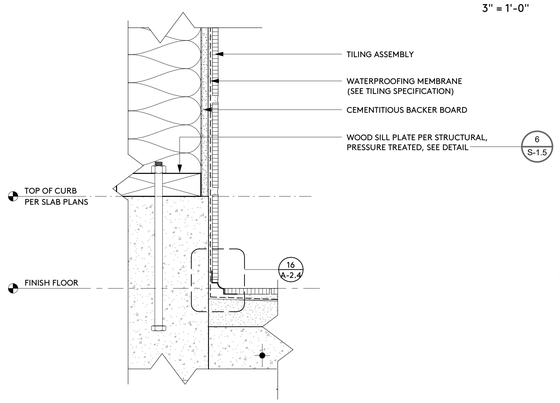

SILL - AT GRADE 7

3" = 1'-0"

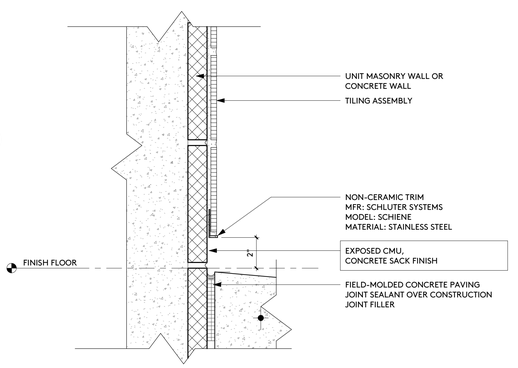

SILL - AT GRADE 3

3" = 1'-0"

IDENTIFICATION STAMP
DIV. OF THE STATE ARCHITECT
APP: 03-122664 INC:
REVIEWED FOR
SS ☑ FLS ☑ ACS ☑
DATE: 05/12/2023

pjhm architects

LICENSED ARCHITECT
RICHARD W. PRIMM
NO. C15585
REN. 02/25
STATE OF CALIFORNIA

OC Office: 24461 Ridge Route Drive #100, Laguna Hills, CA 92653 • SD Phone: 760.730.5527 • LA Office: 837 Traction Avenue, #410, Los Angeles, CA 90013 • LA Phone: 213.278.0172 • Web: pjhm.com

OC Phone: 949.496.6191 • SD Office: 804 Pier View Way #103, Oceanside, CA 92054

HIGHLAND HIGH SCHOOL
50M POOL & AQUATICS CENTER

KERN HIGH SCHOOL DISTRICT

EXTERIOR ELEVATION DETAILS

A-6.4

4/13/2023 11:27:06 AM

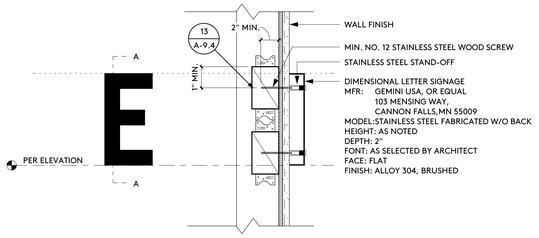

BUILDING SIGNAGE 13

1 1/2" = 1'-0"

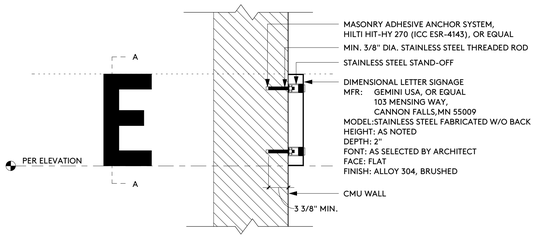

BUILDING SIGNAGE 9

1 1/2" = 1'-0"

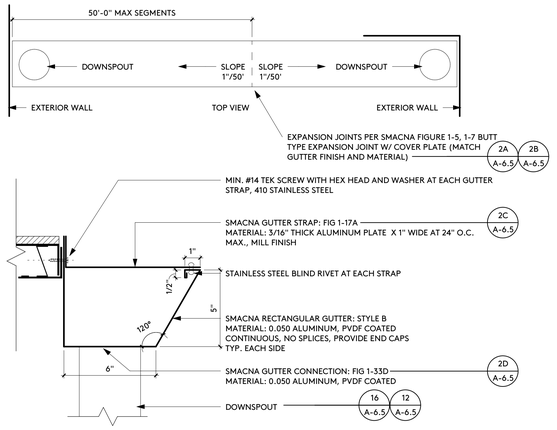

SHEET METAL GUTTERS 5

3" = 1'-0"

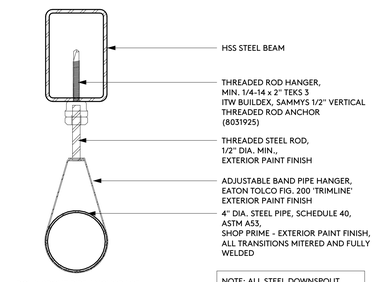

DOWNSPOUT TERMINATION 1

3" = 1'-0"

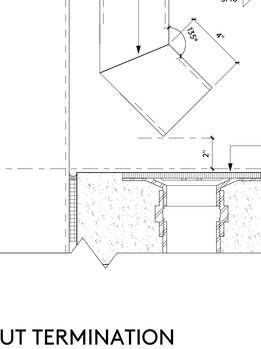

FIGURE 1-33 DOWNSPOUT — GUTTER CONNECTIONS

D - FIGURE 1-33

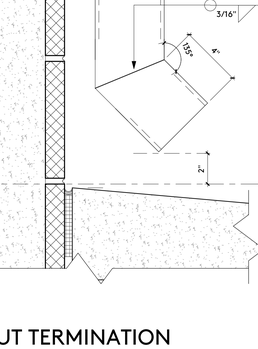

FIGURE 1-17 HANGING GUTTER INSTALLATIONS — SLOPED ROOF

C - FIGURE 1-17

FIGURE 1-7 BUTT TYPE GUTTER EXPANSION JOINT

B - FIGURE 1-7

FIGURE 1-5 ALLOWANCES FOR GUTTER EXPANSION

A - FIGURE 1-5

SHEET METAL GUTTERS 2

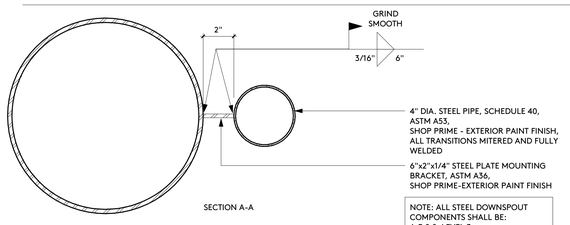

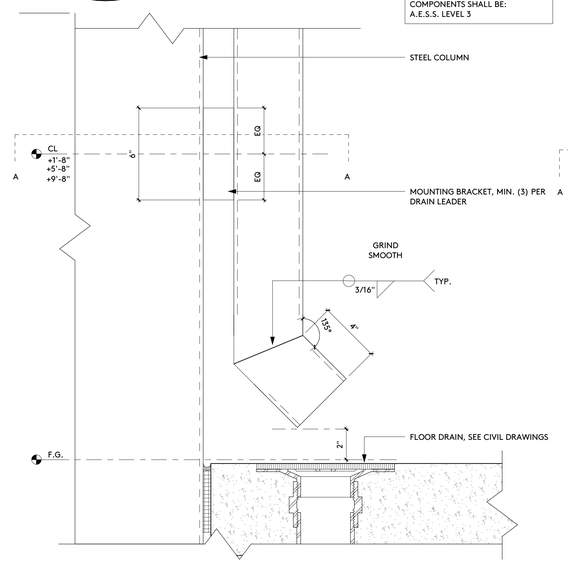

DOWNSPOUT TERMINATION 16

3" = 1'-0"

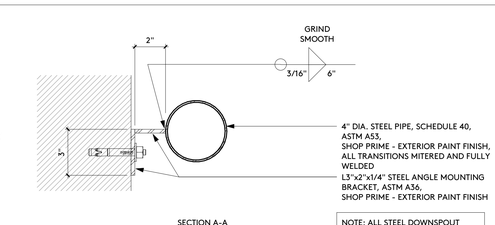

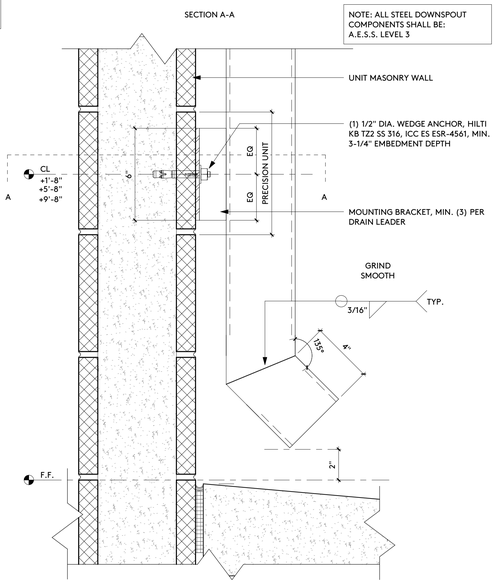

DOWNSPOUT TERMINATION 12

3" = 1'-0"

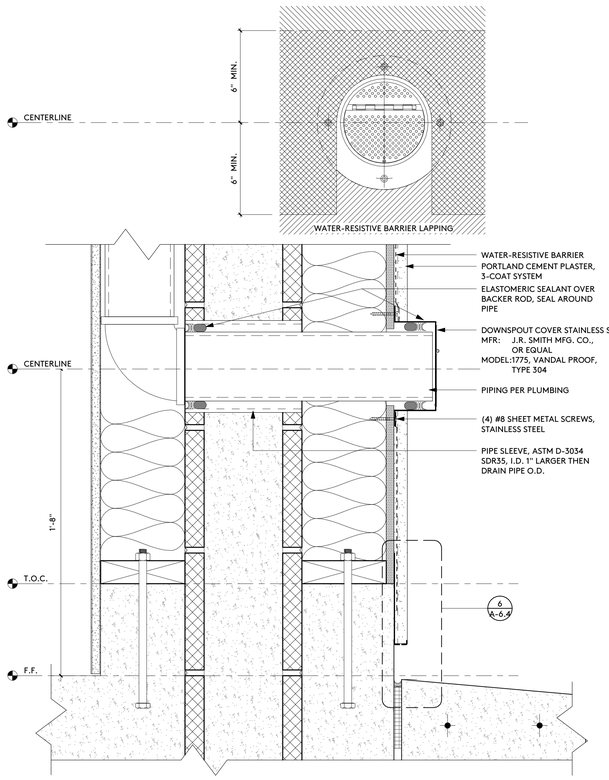

DOWNSPOUT TERMINATION 8

3" = 1'-0"

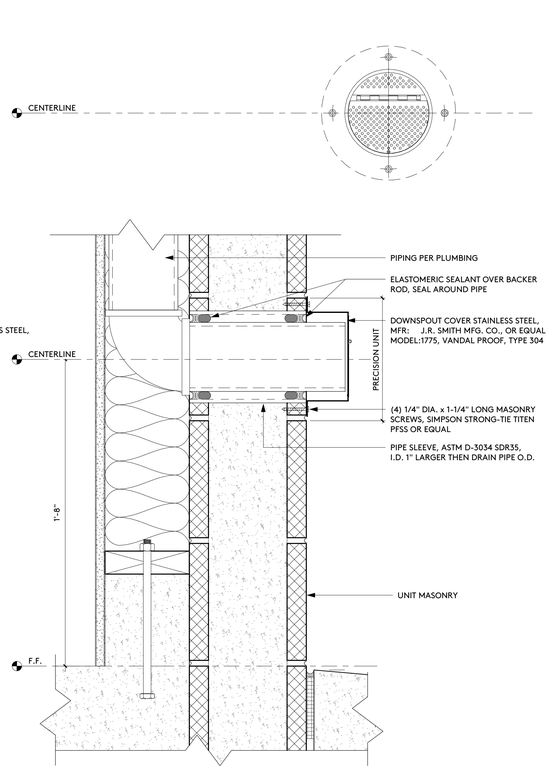

DOWNSPOUT TERMINATION 4

3" = 1'-0"

4/13/2023 9:05:27 AM

IDENTIFICATION STAMP
DIV. OF THE STATE ARCHITECT
APP: 03-122664 INC:
REVIEWED FOR
SS ☑ FLS ☑ ACS ☑
DATE: 05/12/2023

pjhm architects

LICENSED ARCHITECT
RICHARD W. PRIMUS
NO. C15585
REN. 02/25
STATE OF CALIFORNIA

OC Office: 24461 Ridge Route Drive #100, Laguna Hills, CA 92653 • SD Phone: 760.730.5527 • LA Office: 837 Traction Avenue, #410, Los Angeles, CA 90013 • OC Phone: 949.496.6191 • LA Phone: 213.278.0172 • SD Office: 804 Pier View Way #103, Oceanside, CA 92054 • Web: pjhm.com

HIGHLAND HIGH SCHOOL
50M POOL & AQUATICS CENTER

KERN HIGH SCHOOL DISTRICT

EXTERIOR ELEVATION DETAILS

A-6.5

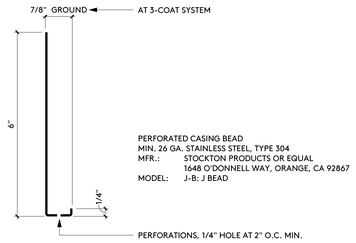

PROFILE 13

6" = 1'-0"

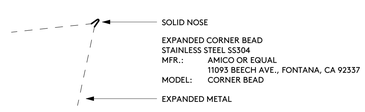

PROFILE 14

6" = 1'-0"

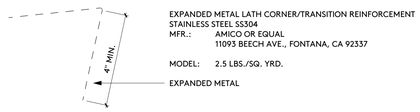

PROFILE 15

6" = 1'-0"

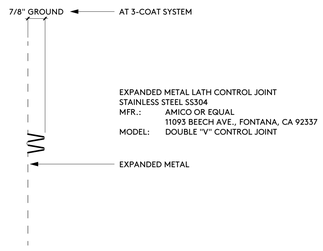

PROFILE 16

6" = 1'-0"

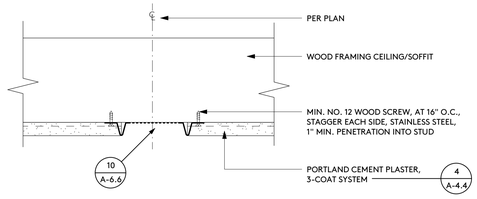

CEILING/SOFFIT VENT 9

3" = 1'-0"

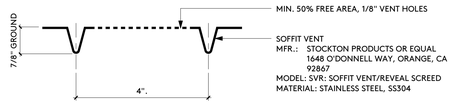

CEILING/SOFFIT VENT 10

6" = 1'-0"

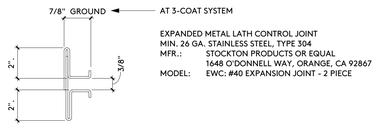

PROFILE 11

6" = 1'-0"

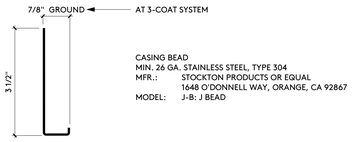

PROFILE 12

6" = 1'-0"

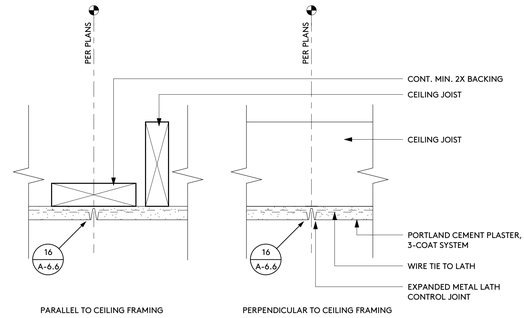

CONTROL JOINT 1

3" = 1'-0"

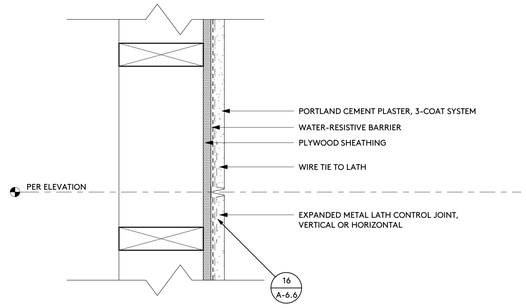

CONTROL JOINT 2

3" = 1'-0"

IDENTIFICATION STAMP
DIV. OF THE STATE ARCHITECT
APP: 03-122664 INC:
REVIEWED FOR
SS ☑ FLS ☑ ACS ☑
DATE: 05/12/2023

pjhm architects

LICENSED ARCHITECT
RICHARD W. PRIEST
NO. C15585
REN. 02/25
STATE OF CALIFORNIA

OC Office: 24461 Ridge Route Drive #100, Laguna Hills, CA 92653 • SD Phone: 760.730.5527 • LA Office: 837 Traction Avenue, #410, Los Angeles, CA 90013 • LA Phone: 213.278.0172 • Web: pjhm.com
OC Phone: 949.496.6191 • SD Office: 804 Pier View Way #103, Oceanside, CA 92054

HIGHLAND HIGH SCHOOL
50M POOL & AQUATICS CENTER

KERN HIGH SCHOOL DISTRICT

EXTERIOR ELEVATION DETAILS

A-6.6

4/13/2023 9:05:27 AM

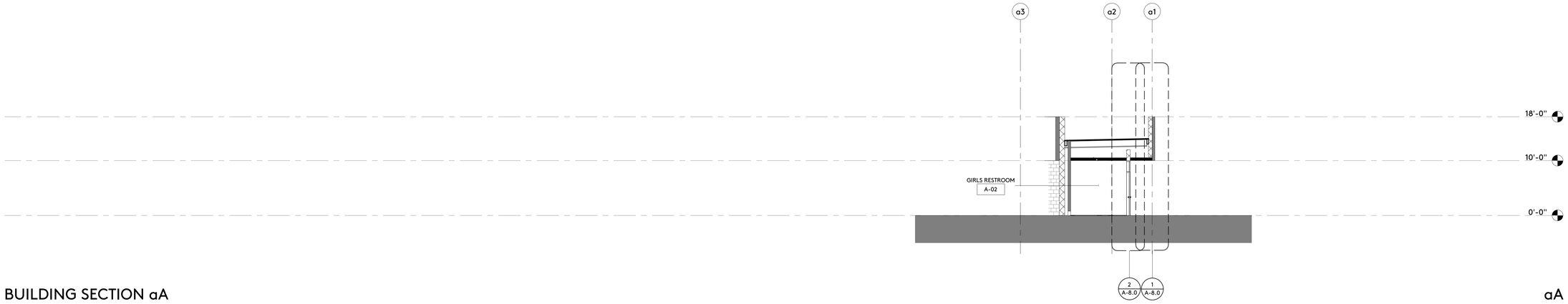

BUILDING SECTION aA

aA

1/8" = 1'-0"

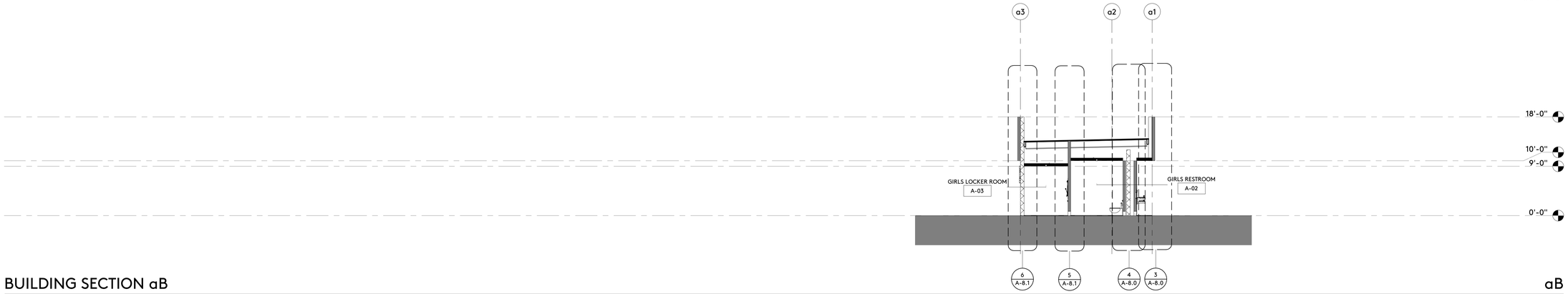

BUILDING SECTION aB

aB

1/8" = 1'-0"

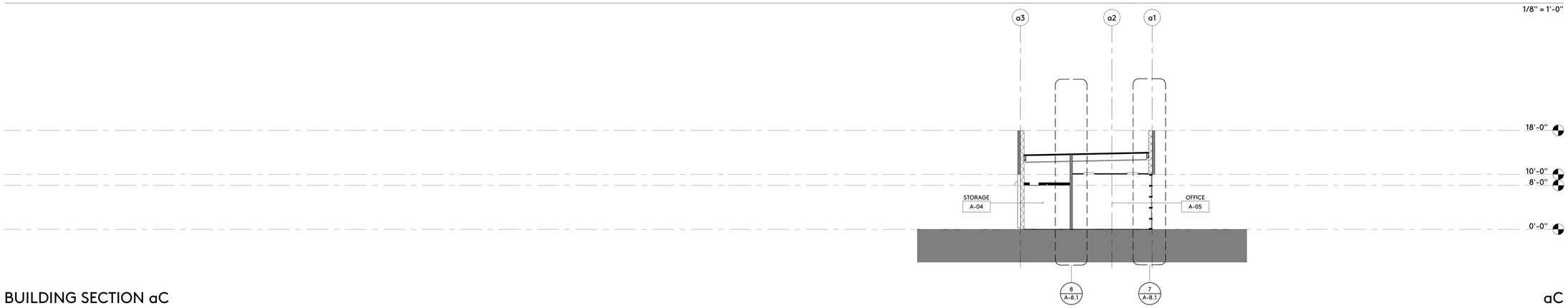

BUILDING SECTION aC

aC

1/8" = 1'-0"

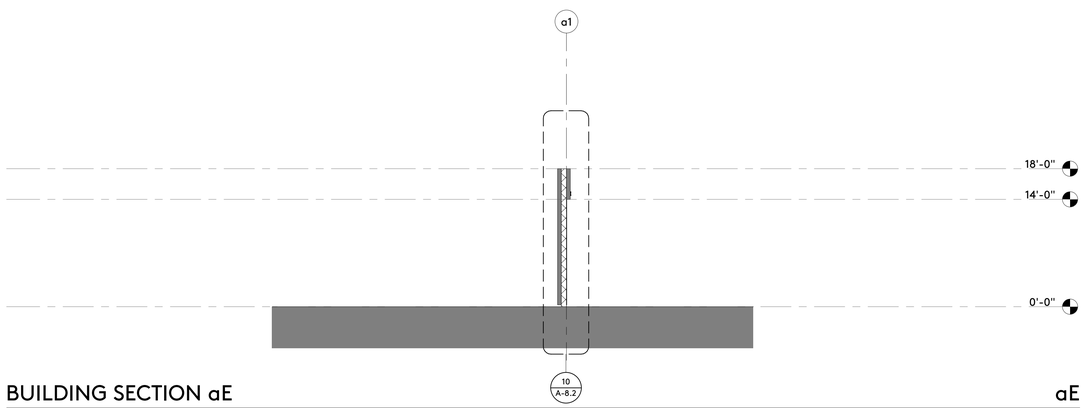

BUILDING SECTION aE

aE

1/8" = 1'-0"

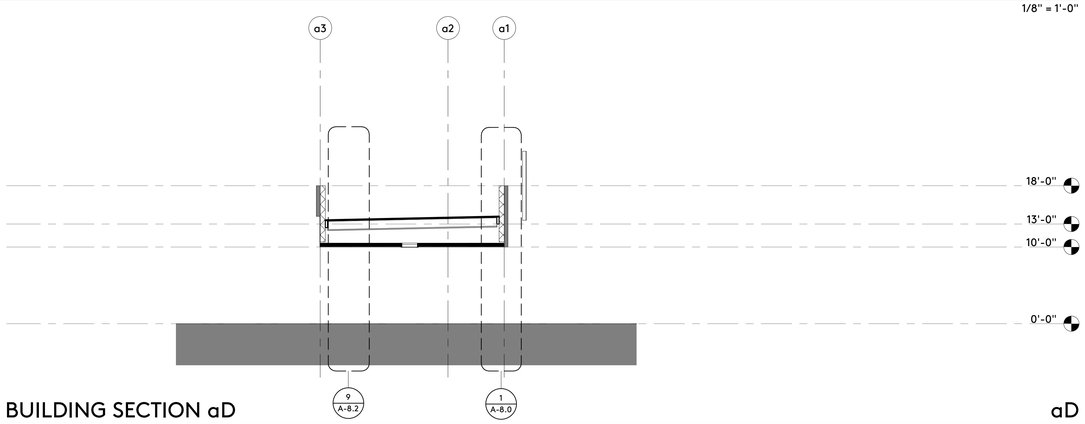

BUILDING SECTION aD

aD

1/8" = 1'-0"

IDENTIFICATION STAMP
DIV. OF THE STATE ARCHITECT
APP: 03-122664 INC:
REVIEWED FOR
SS ☑ FLS ☑ ACS ☑
DATE: 05/12/2023

pjhm architects

LICENSED ARCHITECT
THOMAS W. KRUSE
NO. C15585
REN. 02/25
STATE OF CALIFORNIA

HIGHLAND HIGH SCHOOL
50M POOL & AQUATICS CENTER

KERN HIGH SCHOOL DISTRICT

BUILDING SECTIONS

A-7.0

OC Office: 24461 Ridge Route Drive #100, Laguna Hills, CA 92653 • OC Phone: 949.496.6191 • SD Office: 804 Pier View Way #103, Oceanside, CA 92054 • SD Phone: 760.730.5527 • LA Office: 837 Traction Avenue, #410, Los Angeles, CA 90013 • LA Phone: 213.278.0172 • Web: pjhm.com

4/13/2023 9:05:28 AM

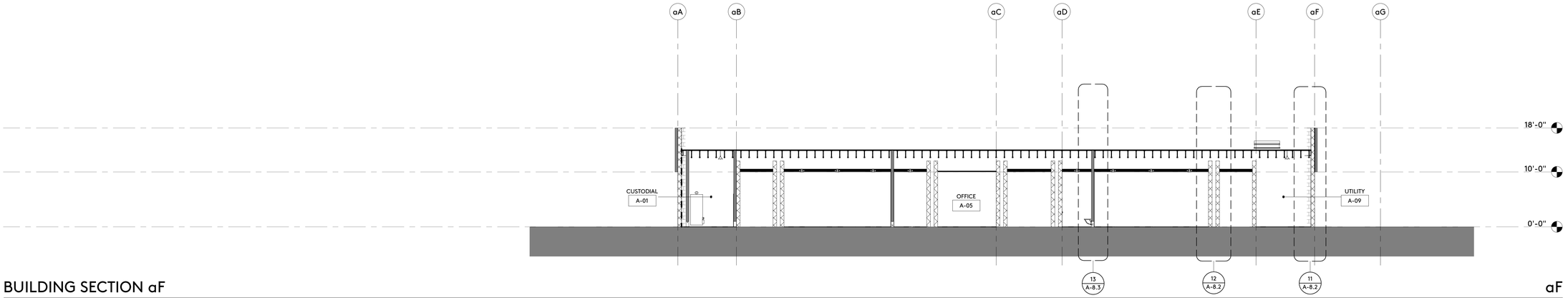

BUILDING SECTION aF

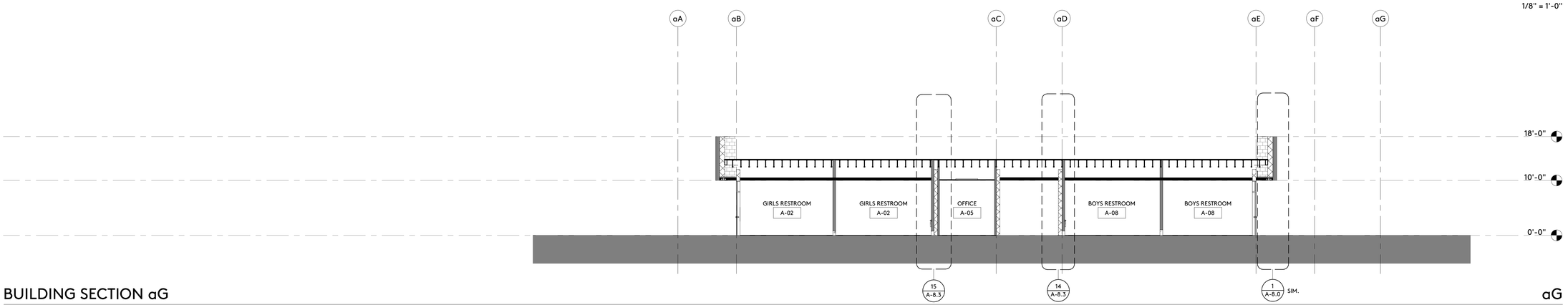

BUILDING SECTION aG

IDENTIFICATION STAMP
DIV. OF THE STATE ARCHITECT
APP: 03-122664 INC:
REVIEWED FOR
SS ☑ FLS ☑ ACS ☑
DATE: 05/12/2023

pjhm architects

LICENSED ARCHITECT
THOMAS W. KRUSE
NO. C15585
REN. 02/25
STATE OF CALIFORNIA

HIGHLAND HIGH SCHOOL
50M POOL & AQUATICS CENTER

KERN HIGH SCHOOL DISTRICT

BUILDING SECTIONS

A-7.1

OC Office: 24461 Ridge Route Drive #100, Laguna Hills, CA 92653 • OC Phone: 949.496.6191 • SD Office: 804 Pier View Way #103, Oceanside, CA 92054 • SD Phone: 760.730.5527 • LA Office: 837 Traction Avenue, #410, Los Angeles, CA 90013 • LA Phone: 213.278.0172 • Web: pjhm.com

4/13/2023 9:05:29 AM

BUILDING SECTIONS

HIGHLAND HIGH SCHOOL
50M POOL & AQUATICS CENTER

KERN HIGH SCHOOL DISTRICT

BUILDING SECTION BE

1/8" = 1'-0"

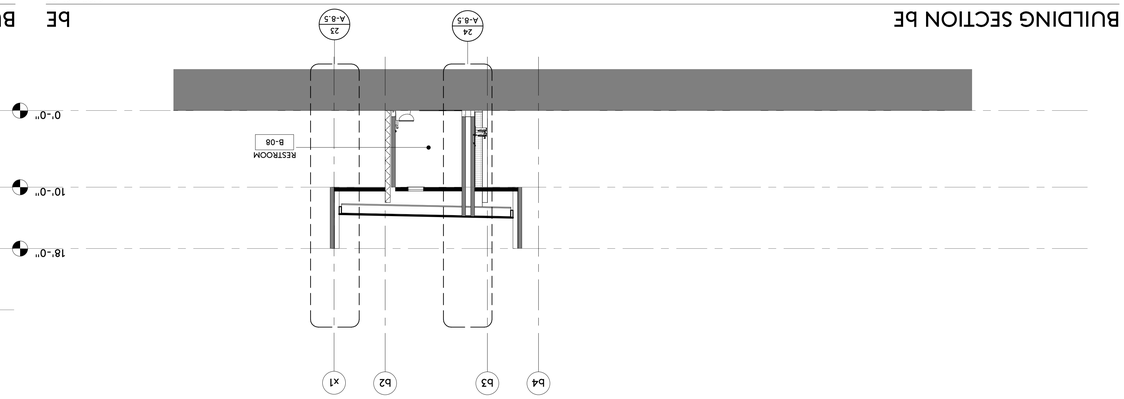

BUILDING SECTION BD

1/8" = 1'-0"

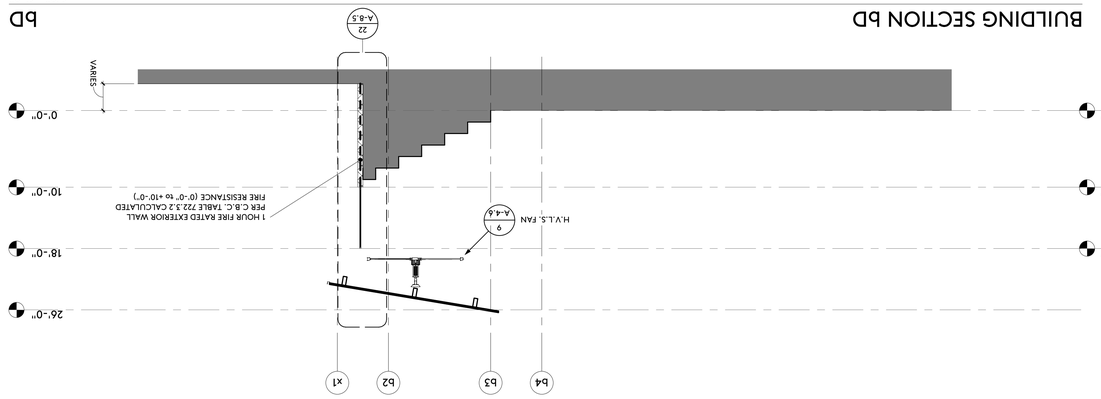

BUILDING SECTION BC

1/8" = 1'-0"

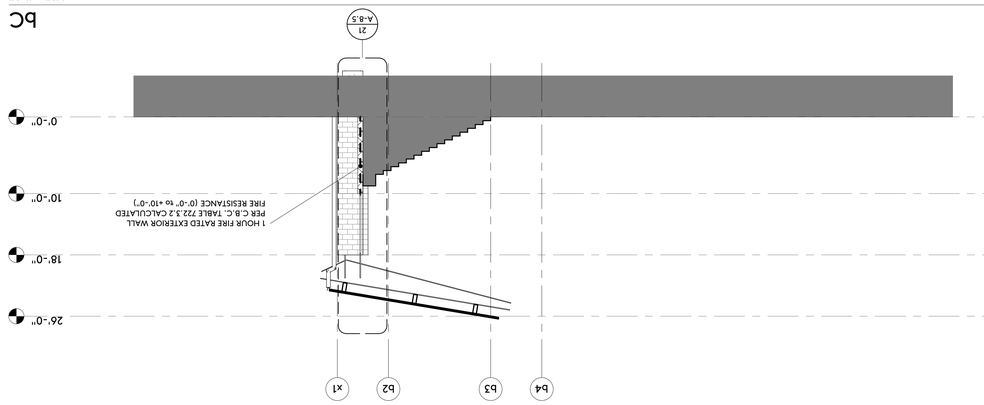

BUILDING SECTION BB

1/8" = 1'-0"

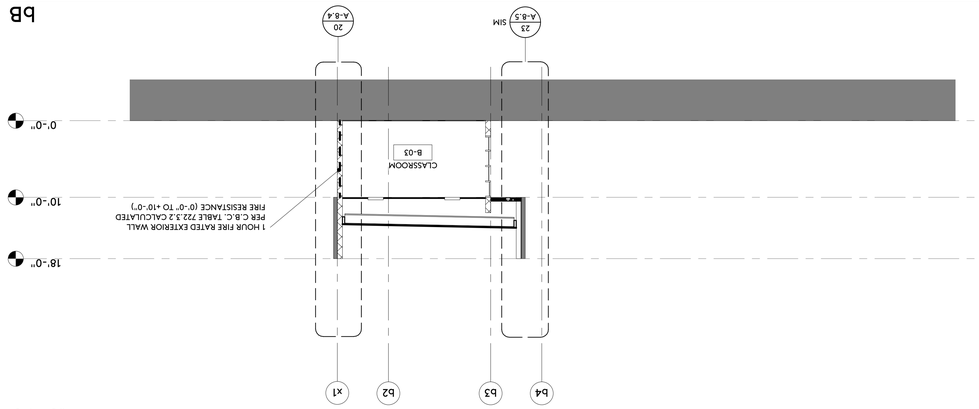

BUILDING SECTION BA

1/8" = 1'-0"

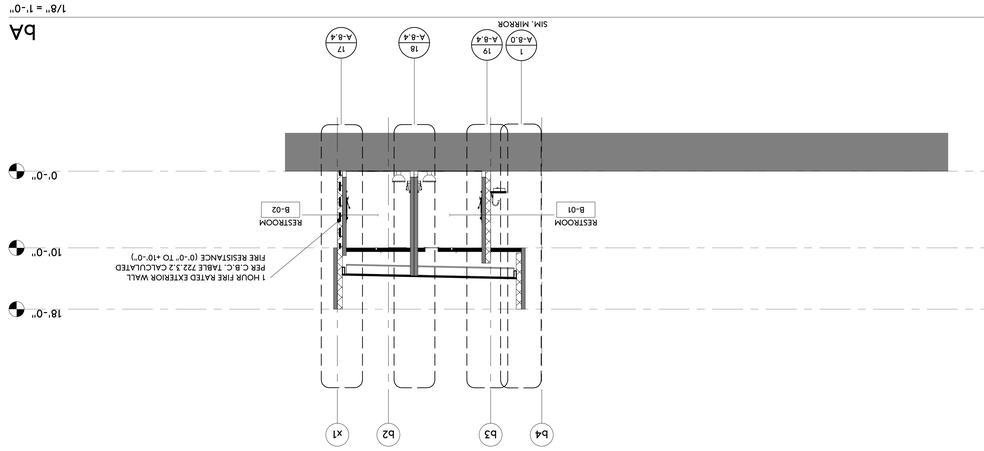

pjhm architects

LICENSED ARCHITECT
JEFFREY W. PERRY
No. C15585
REN. 02/25
STATE OF CALIFORNIA

IDENTIFICATION STAMP
DIV. OF THE STATE ARCHITECT
APP.: 03-122664 INC:
REVIEWED FOR
SS ☑ FLS ☑ ACS ☑
DATE: 05/12/2023

OC Office: 24461 Ridge Route Drive #100, Laguna Hills, CA 92653 • OC Phone: 949.496.6191 • SD Office: 804 Pier View Way #103, Oceanside, CA 92054 • SD Phone: 760.730.5527 • LA Office: 857 Traction Avenue, #410, Los Angeles, CA 90013 • LA Phone: 213.278.0172 • Web: pjhm.com

4/13/2023 9:05:30 AM

BUILDING SECTION bF

bF

1/8" = 1'-0"

BUILDING SECTION bG

bG

1/8" = 1'-0"

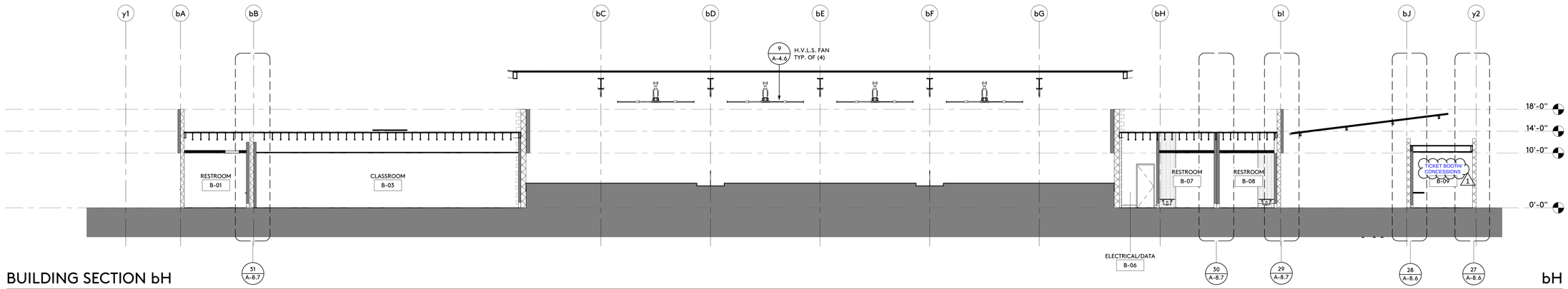

BUILDING SECTION bH

bH

1/8" = 1'-0"

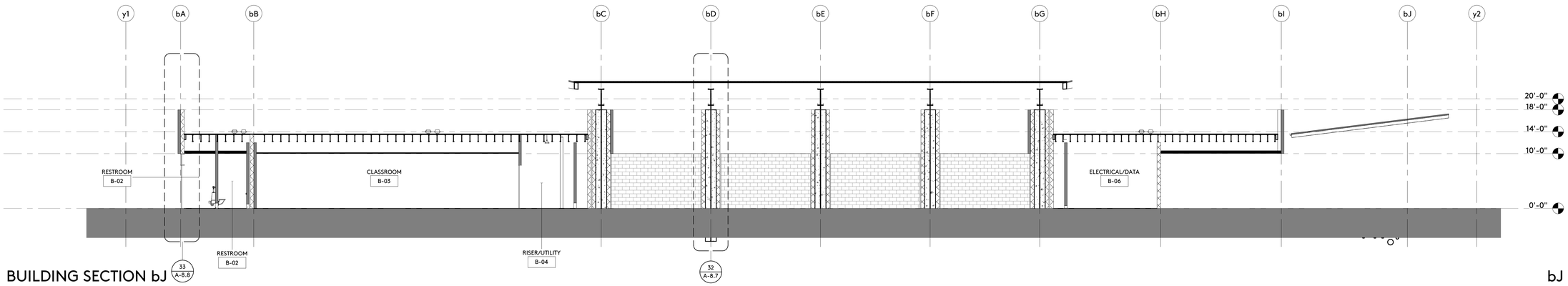

BUILDING SECTION bJ

bJ

1/8" = 1'-0"

IDENTIFICATION STAMP
DIV. OF THE STATE ARCHITECT
APP: 03-122664 INC:
REVIEWED FOR
SS ☑ FLS ☑ ACS ☑
DATE: 05/12/2023

pjhm architects

LICENSED ARCHITECT
RICHARD W. FRUIN
NO. C15585
REN. 02/25
STATE OF CALIFORNIA

HIGHLAND HIGH SCHOOL
50M POOL & AQUATICS CENTER

KERN HIGH SCHOOL DISTRICT

1 ADDENDUM NO. 1

BUILDING SECTIONS

A-7.3

OC Office: 24461 Ridge Route Drive #100, Laguna Hills, CA 92653 • OC Phone: 949.496.6191 • SD Office: 804 Pier View Way #103, Oceanside, CA 92054 • SD Phone: 760.730.5527 • LA Office: 837 Traction Avenue, #410, Los Angeles, CA 90013 • LA Phone: 213.278.0172 • Web: pjhm.com

4/13/2023 9:05:31 AM

BUILDING SECTION cA

cA

1/8" = 1'-0"

BUILDING SECTION cB

cB

1/8" = 1'-0"

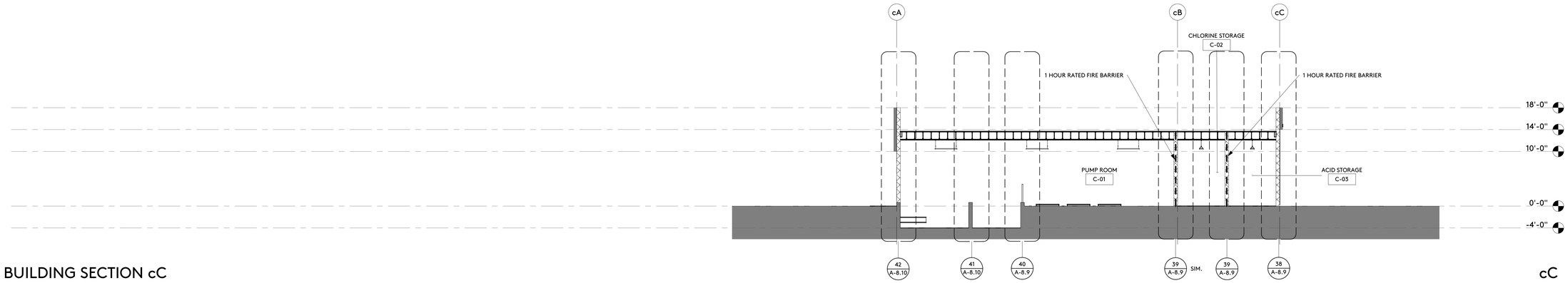

BUILDING SECTION cC

cC

1/8" = 1'-0"

IDENTIFICATION STAMP
DIV. OF THE STATE ARCHITECT
APP: 03-122664 INC:
REVIEWED FOR
SS ☑ FLS ☑ ACS ☑
DATE: 05/12/2023

pjhm architects

LICENSED ARCHITECT
RICHARD W. PRIEBE
No. C15585
REN. 02/25
STATE OF CALIFORNIA

HIGHLAND HIGH SCHOOL
50M POOL & AQUATICS CENTER

KERN HIGH SCHOOL DISTRICT

BUILDING SECTIONS

A-7.4

OC Office: 24461 Ridge Route Drive #100, Laguna Hills, CA 92653 • OC Phone: 949.496.6191 • SD Office: 804 Pier View Way #103, Oceanside, CA 92054 • SD Phone: 760.730.5527 • LA Office: 837 Traction Avenue, #410, Los Angeles, CA 90013 • LA Phone: 213.278.0172 • Web: pjhm.com

4/13/2023 11:27:06 AM

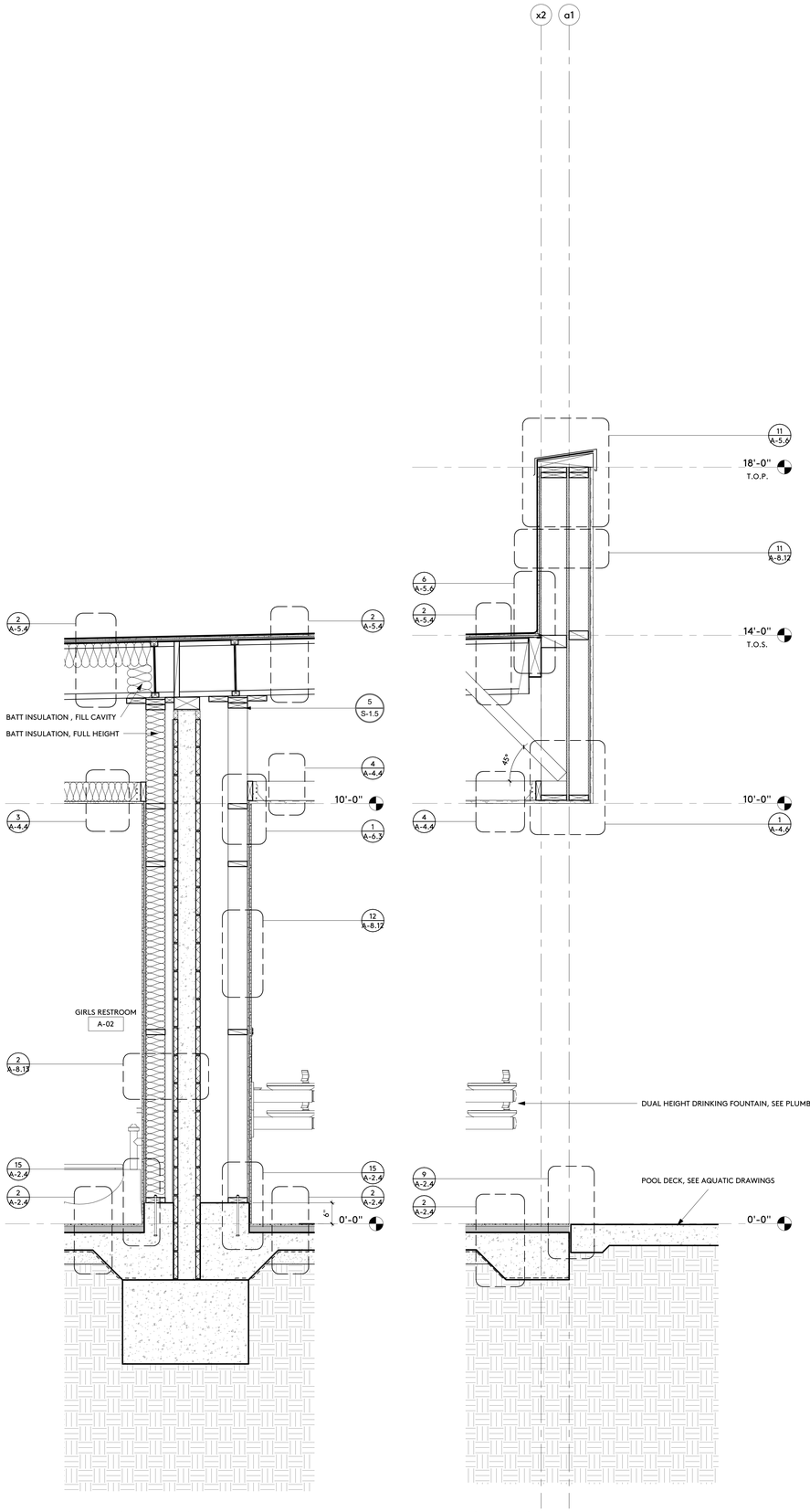

WALL SECTION aB-2 4
3/4" = 1'-0"

WALL SECTION aB-1 3
3/4" = 1'-0"

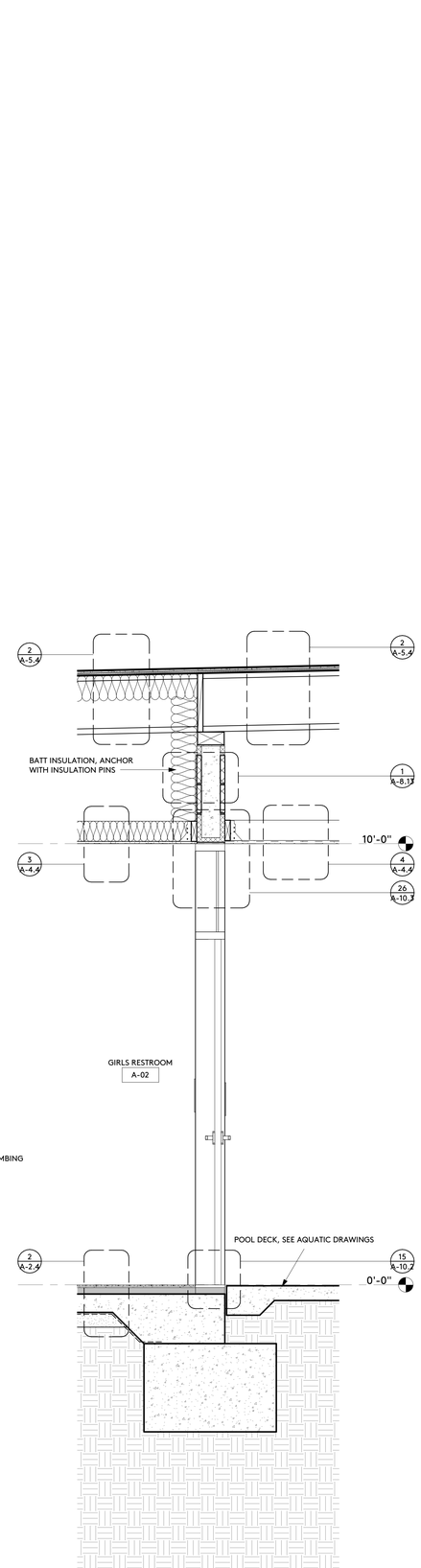

WALL SECTION aA-2 2
3/4" = 1'-0"

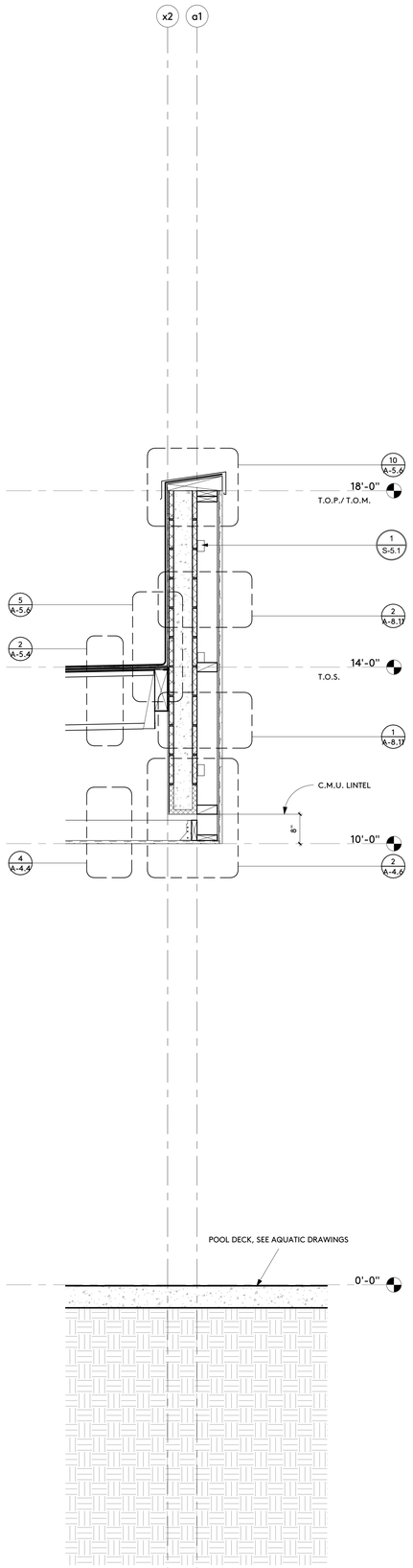

WALL SECTION aA-1 1
3/4" = 1'-0"

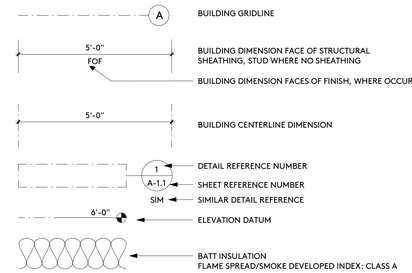

SYMBOLS

IDENTIFICATION STAMP
DIV. OF THE STATE ARCHITECT
APP: 03-122664 INC:
REVIEWED FOR
SS ☑ FLS ☑ ACS ☑
DATE: 05/12/2023

pjhm architects

LICENSED ARCHITECT
THOMAS W. KRUSE
NO. C15585
REN. 02/25
STATE OF CALIFORNIA

HIGHLAND HIGH SCHOOL
50M POOL & AQUATICS CENTER

KERN HIGH SCHOOL DISTRICT

WALL SECTIONS

A-8.0

OC Office: 24461 Ridge Route Drive #100, Laguna Hills, CA 92653 • OC Phone: 949.496.6191 • SD Office: 804 Pier View Way #103, Oceanside, CA 92054 • SD Phone: 760.730.5527 • LA Office: 837 Traction Avenue, #410, Los Angeles, CA 90013 • LA Phone: 213.278.0172 • Web: pjhm.com

4/13/2023 9:05:34 AM

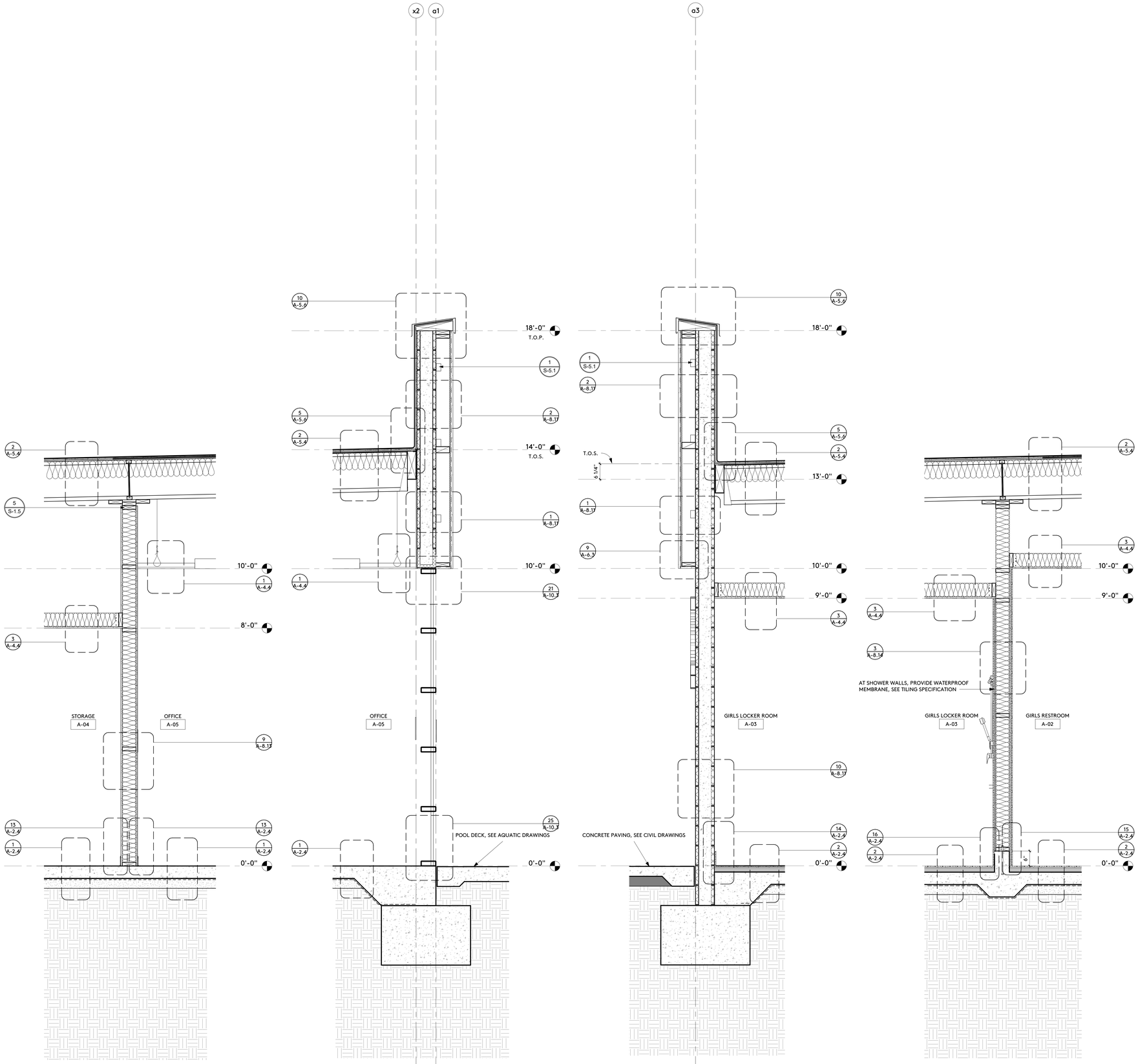

WALL SECTION aC-2 8
3/4" = 1'-0"

WALL SECTION aC-1 7
3/4" = 1'-0"

WALL SECTION aB-4 6
3/4" = 1'-0"

WALL SECTION aB-3 5
3/4" = 1'-0"

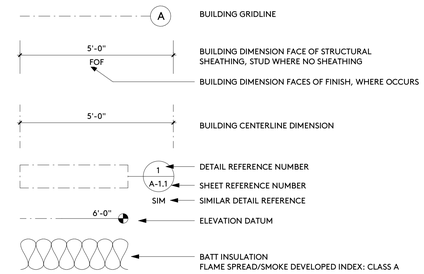

SYMBOLS

IDENTIFICATION STAMP
DIV. OF THE STATE ARCHITECT
APP: 03-122664 INC:
REVIEWED FOR
SS ☑ FLS ☑ ACS ☑
DATE: 05/12/2023

pjhm architects

LICENSED ARCHITECT
THOMAS W. KRUSE
NO. C15585
REN. 02/25
STATE OF CALIFORNIA

HIGHLAND HIGH SCHOOL
50M POOL & AQUATICS CENTER

KERN HIGH SCHOOL DISTRICT

WALL SECTIONS

A-8.1

OC Office: 24461 Ridge Route Drive #100, Laguna Hills, CA 92653 • OC Phone: 949.496.6191 • SD Office: 804 Pier View Way #103, Oceanside, CA 92054 • SD Phone: 760.730.5527 • LA Office: 837 Traction Avenue, #410, Los Angeles, CA 90013 • LA Phone: 213.278.0172 • Web: pjhm.com

4/13/2023 9:05:35 AM

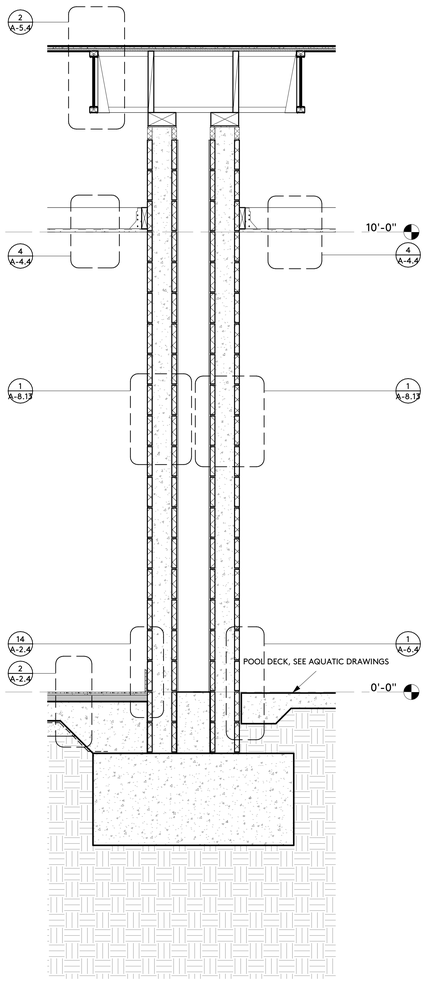

WALL SECTION aF-2 12

3/4" = 1'-0"

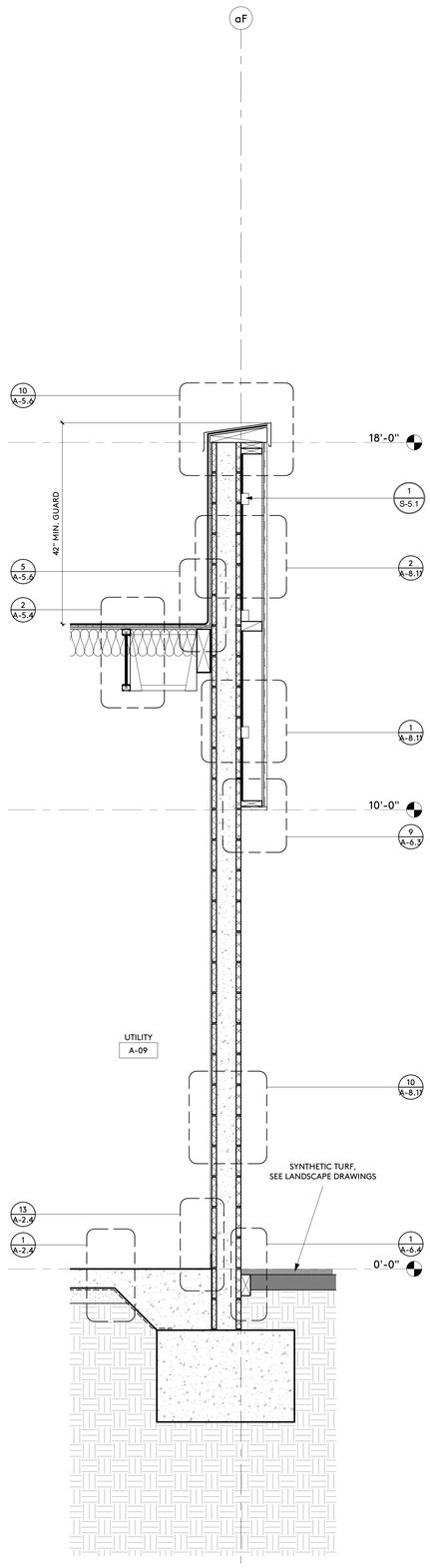

WALL SECTION aF-1 11

3/4" = 1'-0"

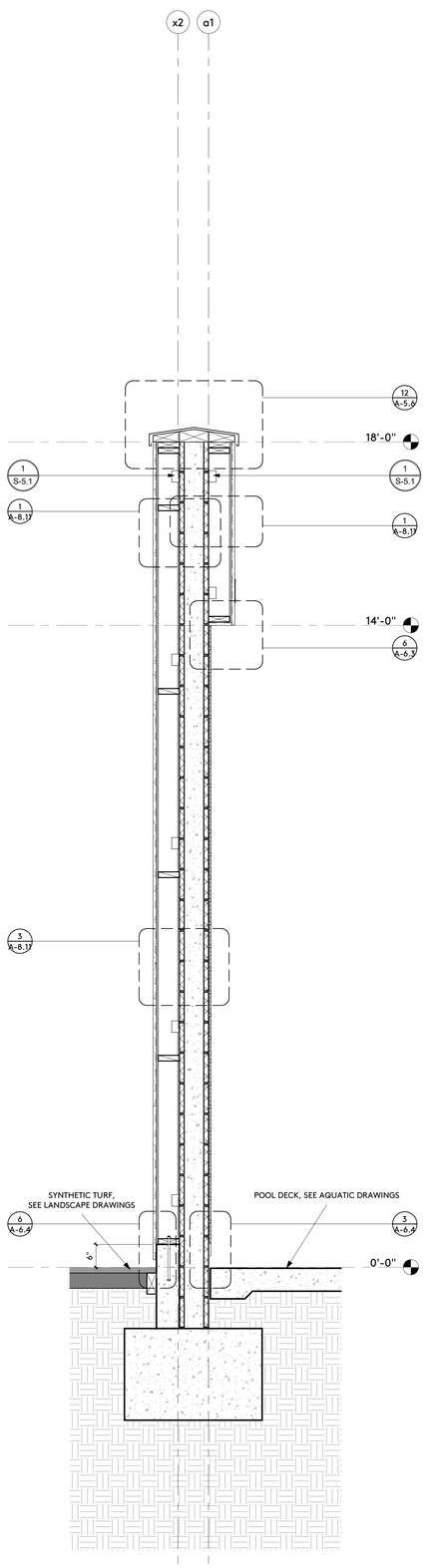

WALL SECTION aE-1 10

3/4" = 1'-0"

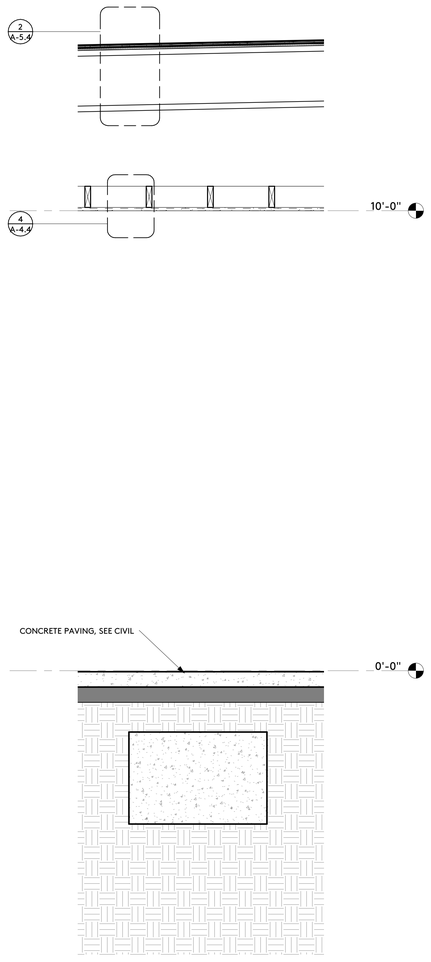

WALL SECTION aD-1 9

3/4" = 1'-0"

SYMBOLS

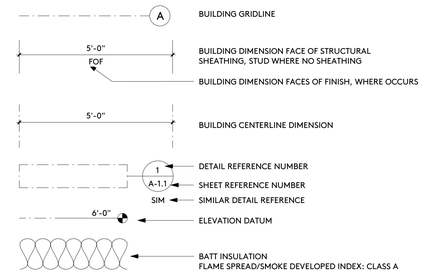

IDENTIFICATION STAMP
DIV. OF THE STATE ARCHITECT
APP: 03-122664 INC:
REVIEWED FOR
SS ☑ FLS ☑ ACS ☑
DATE: 05/12/2023

pjhm architects

LICENSED ARCHITECT
RICHARD W. PRIEST
NO. C15585
REN. 02/25
STATE OF CALIFORNIA

HIGHLAND HIGH SCHOOL
50M POOL & AQUATICS CENTER

KERN HIGH SCHOOL DISTRICT

WALL SECTIONS

A-8.2

OC Office: 24461 Ridge Route Drive #100, Laguna Hills, CA 92653 • OC Phone: 949.496.6191 • SD Office: 804 Pier View Way #103, Oceanside, CA 92054 • SD Phone: 760.730.5527 • LA Office: 837 Traction Avenue, #410, Los Angeles, CA 90013 • LA Phone: 213.278.0172 • Web: pjhm.com

4/13/2023 11:27:07 AM

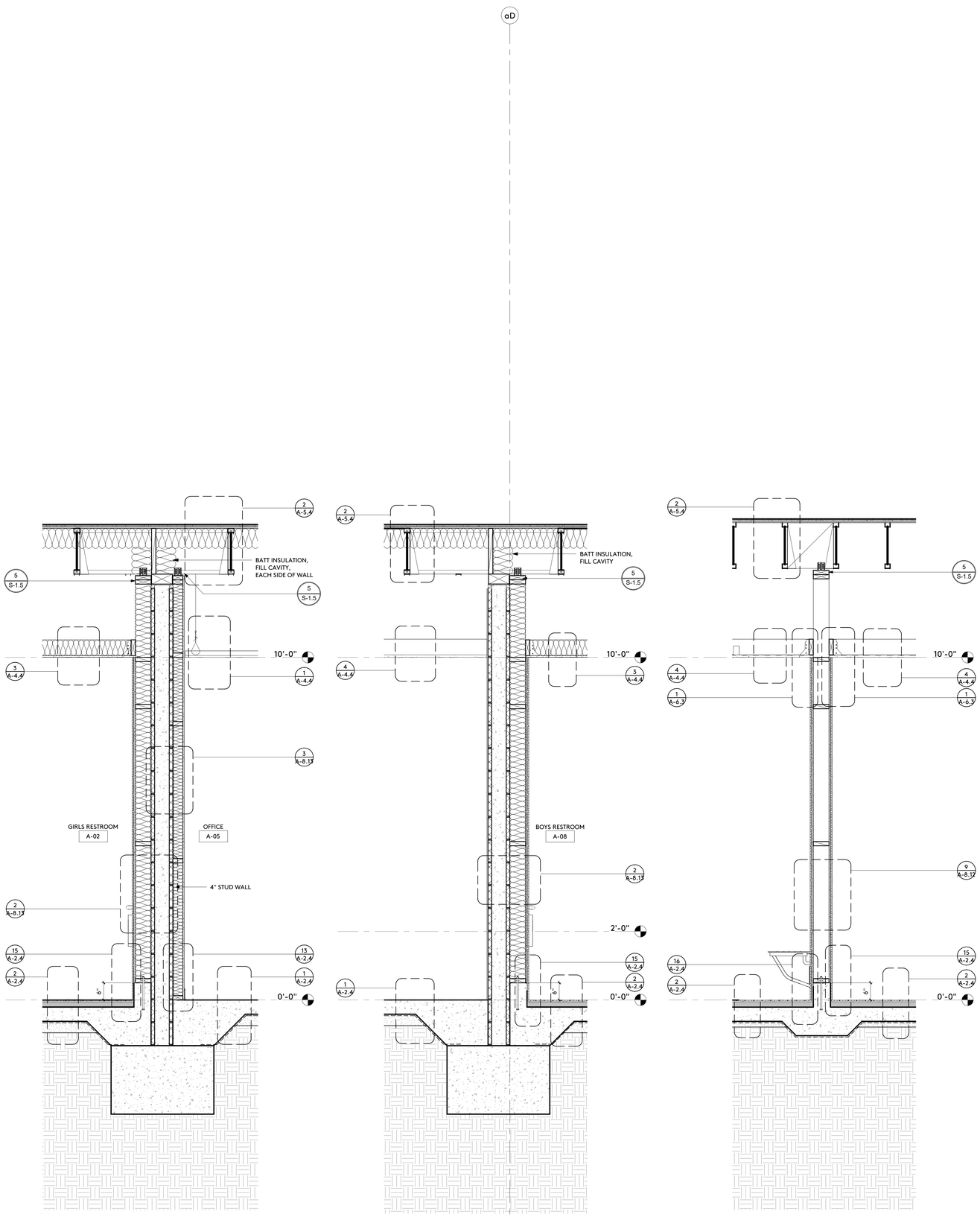

WALL SECTION aG-2 15
3/4" = 1'-0"

WALL SECTION aG-1 14
3/4" = 1'-0"

WALL SECTION aF-3 13
3/4" = 1'-0"

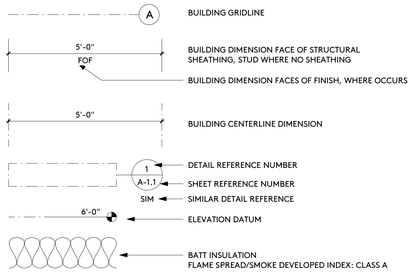

BUILDING GRIDLINE
BUILDING DIMENSION FACE OF STRUCTURAL SHEATHING, STUD WHERE NO SHEATHING
BUILDING DIMENSION FACES OF FINISH, WHERE OCCURS
BUILDING CENTERLINE DIMENSION
DETAIL REFERENCE NUMBER
SHEET REFERENCE NUMBER
SIMILAR DETAIL REFERENCE
ELEVATION DATUM
BATT INSULATION
FLAME SPREAD/SMOKE DEVELOPED INDEX: CLASS A

SYMBOLS
1/2" = 1'-0"

IDENTIFICATION STAMP
DIV. OF THE STATE ARCHITECT
APP: 03-122664 INC:
REVIEWED FOR
SS ☑ FLS ☑ ACS ☑
DATE: 05/12/2023

pjhm architects

LICENSED ARCHITECT
THOMAS W. KRUSE
NO. C15585
REN. 02/25
STATE OF CALIFORNIA

HIGHLAND HIGH SCHOOL
50M POOL & AQUATICS CENTER

KERN HIGH SCHOOL DISTRICT

WALL SECTIONS

A-8.3

OC Office: 24461 Ridge Route Drive #100, Laguna Hills, CA 92653 • OC Phone: 949.496.6191 • SD Office: 804 Pier View Way #103, Oceanside, CA 92054 • SD Phone: 760.730.5527 • LA Office: 837 Traction Avenue, #410, Los Angeles, CA 90013 • LA Phone: 213.278.0172 • Web: pjhm.com

4/13/2023 9:05:37 AM

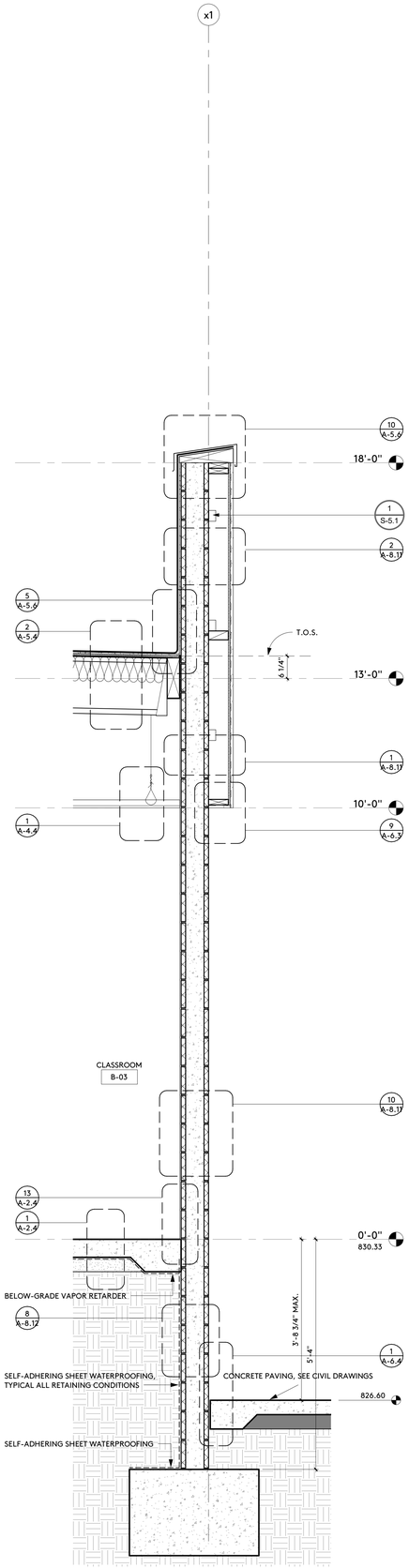

WALL SECTION bB-1 20

3/4" = 1'-0"

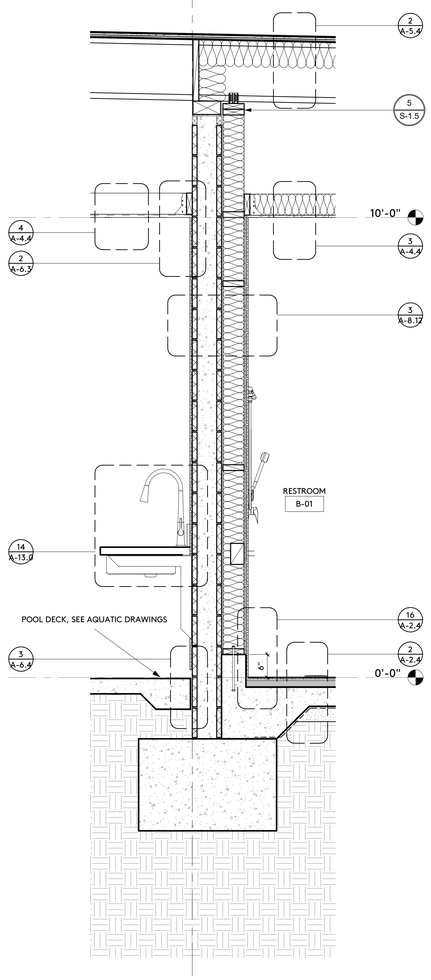

WALL SECTION bA-3 19

3/4" = 1'-0"

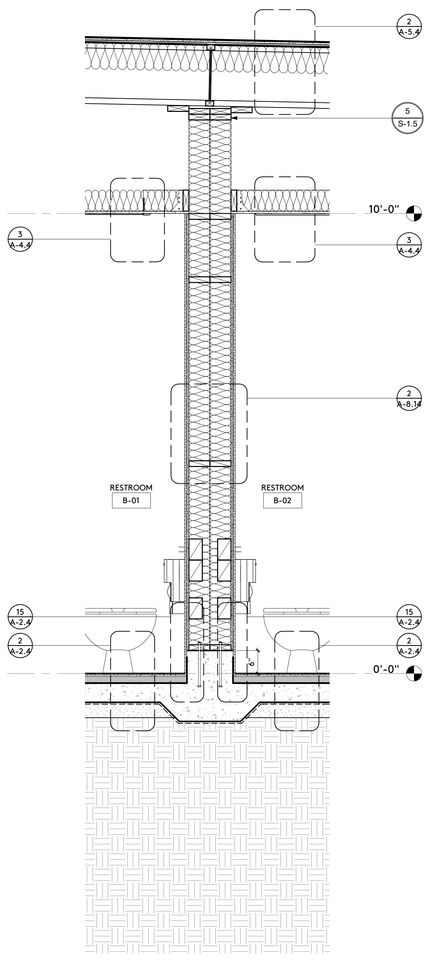

WALL SECTION bA-2 18

3/4" = 1'-0"

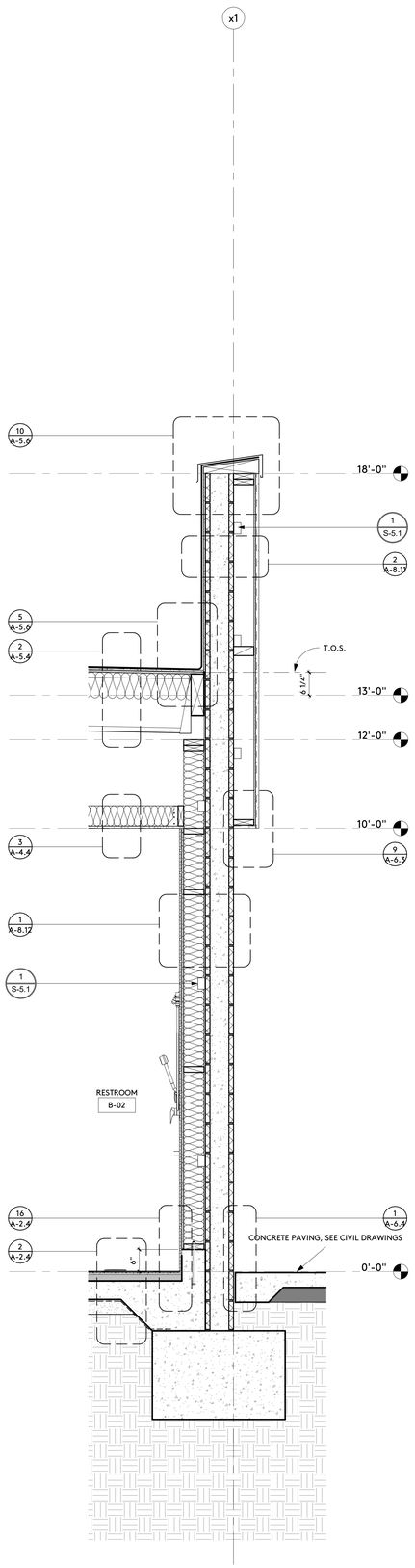

WALL SECTION bA-1 17

3/4" = 1'-0"

SYMBOLS

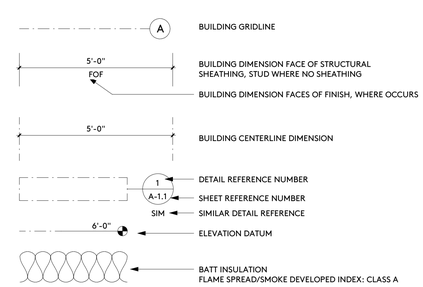

IDENTIFICATION STAMP
DIV. OF THE STATE ARCHITECT
APP: 03-122664 INC:
REVIEWED FOR
SS ☑ FLS ☑ ACS ☑
DATE: 05/12/2023

pjhm architects

LICENSED ARCHITECT
RICHARD W. PRIEST
NO. C15585
REN. 02/25
STATE OF CALIFORNIA

SD Phone: 760.730.5527 • LA Office: 837 Traction Avenue, #410, Los Angeles, CA 90013 • LA Phone: 213.278.0172 • Web: pjhm.com

OC Office: 24461 Ridge Route Drive #100, Laguna Hills, CA 92653 • OC Phone: 949.496.6191 • SD Office: 804 Pier View Way #103, Oceanside, CA 92054 • SD Phone: 760.730.5527

HIGHLAND HIGH SCHOOL
50M POOL & AQUATICS CENTER

KERN HIGH SCHOOL DISTRICT

WALL SECTIONS

A-8.4

4/13/2023 9:05:38 AM

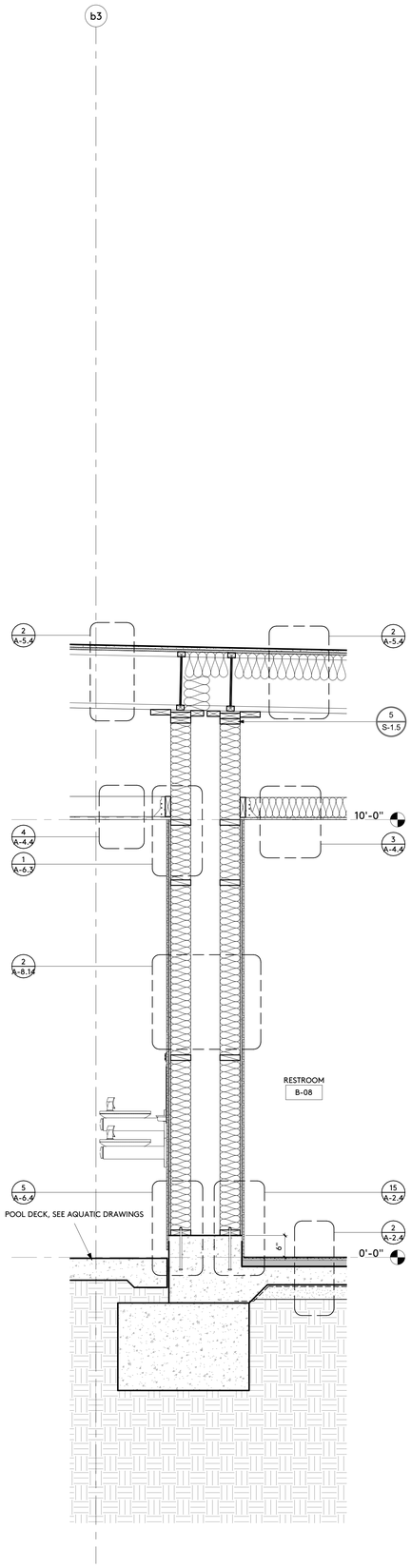

WALL SECTION bE-2 24
3/4" = 1'-0"

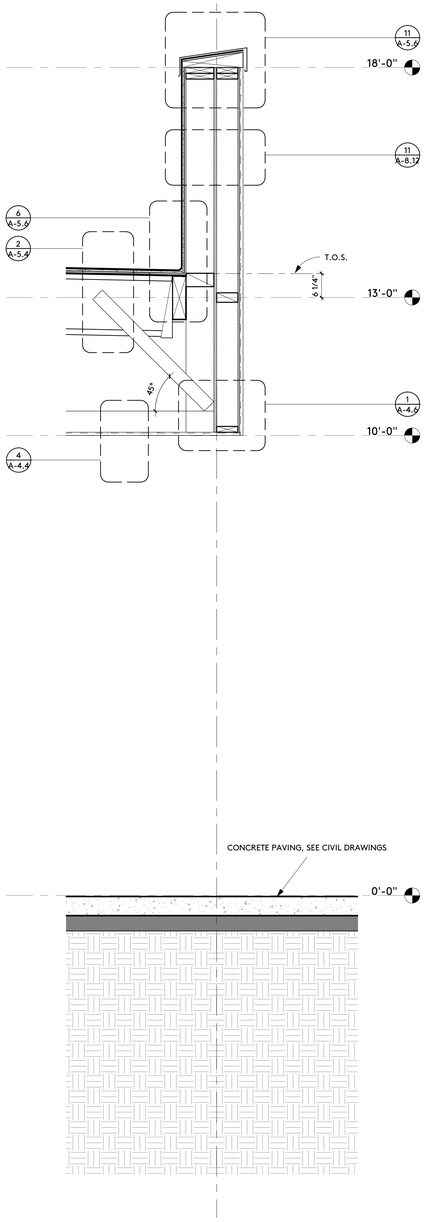

WALL SECTION bE-1 23
3/4" = 1'-0"

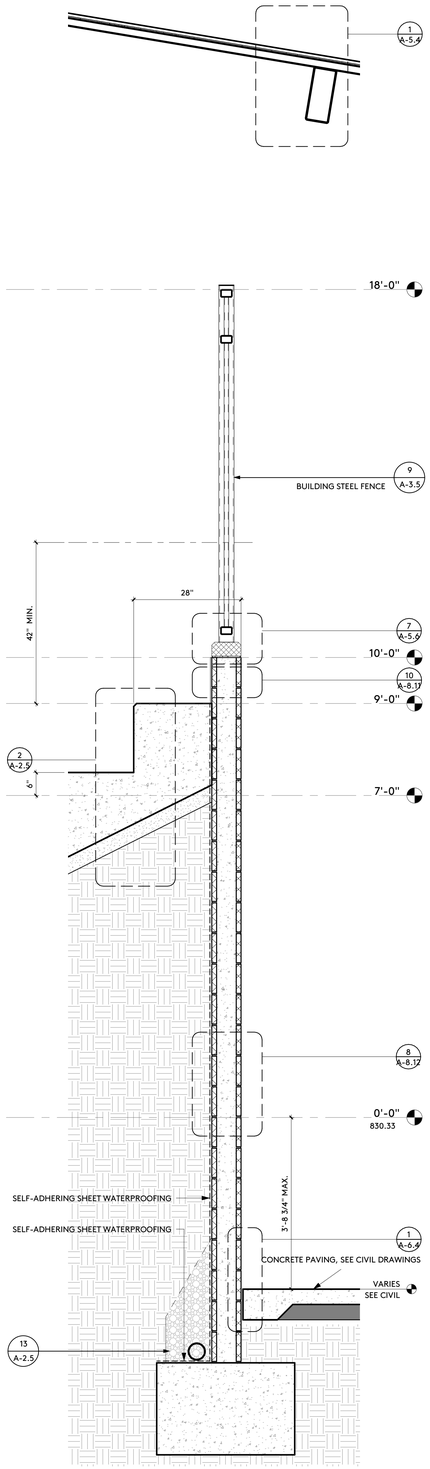

WALL SECTION bD-1 22
3/4" = 1'-0"

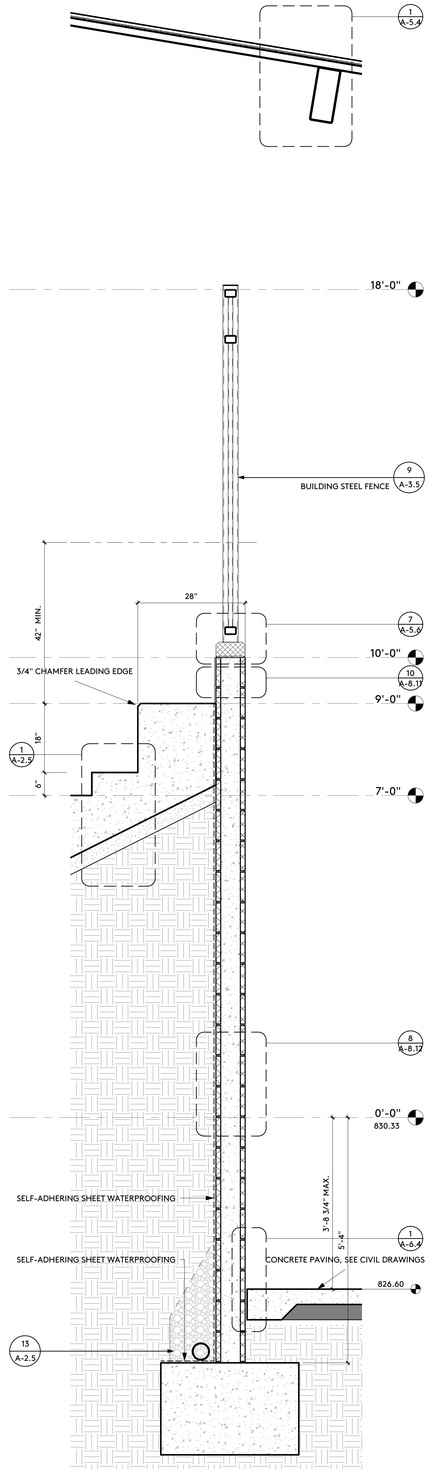

WALL SECTION bC-1 21
3/4" = 1'-0"

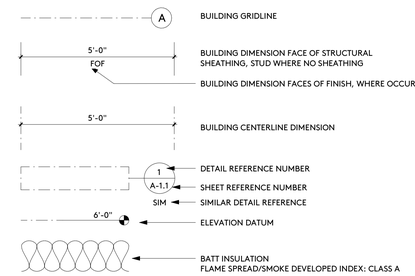

SYMBOLS

IDENTIFICATION STAMP
DIV. OF THE STATE ARCHITECT
APP: 03-122664 INC:
REVIEWED FOR
SS ☑ FLS ☑ ACS ☑
DATE: 05/12/2023

pjhm architects

LICENSED ARCHITECT
THOMAS W. KRUSE
NO. C15585
REN. 02/25
STATE OF CALIFORNIA

HIGHLAND HIGH SCHOOL
50M POOL & AQUATICS CENTER

KERN HIGH SCHOOL DISTRICT

WALL SECTIONS

A-8.5

OC Office: 24461 Ridge Route Drive #100, Laguna Hills, CA 92653 • OC Phone: 949.496.6191 • SD Office: 804 Pier View Way #103, Oceanside, CA 92054 • SD Phone: 760.730.5527 • LA Office: 837 Traction Avenue, #410, Los Angeles, CA 90013 • LA Phone: 213.278.0172 • Web: pjhm.com

4/13/2023 9:05:40 AM

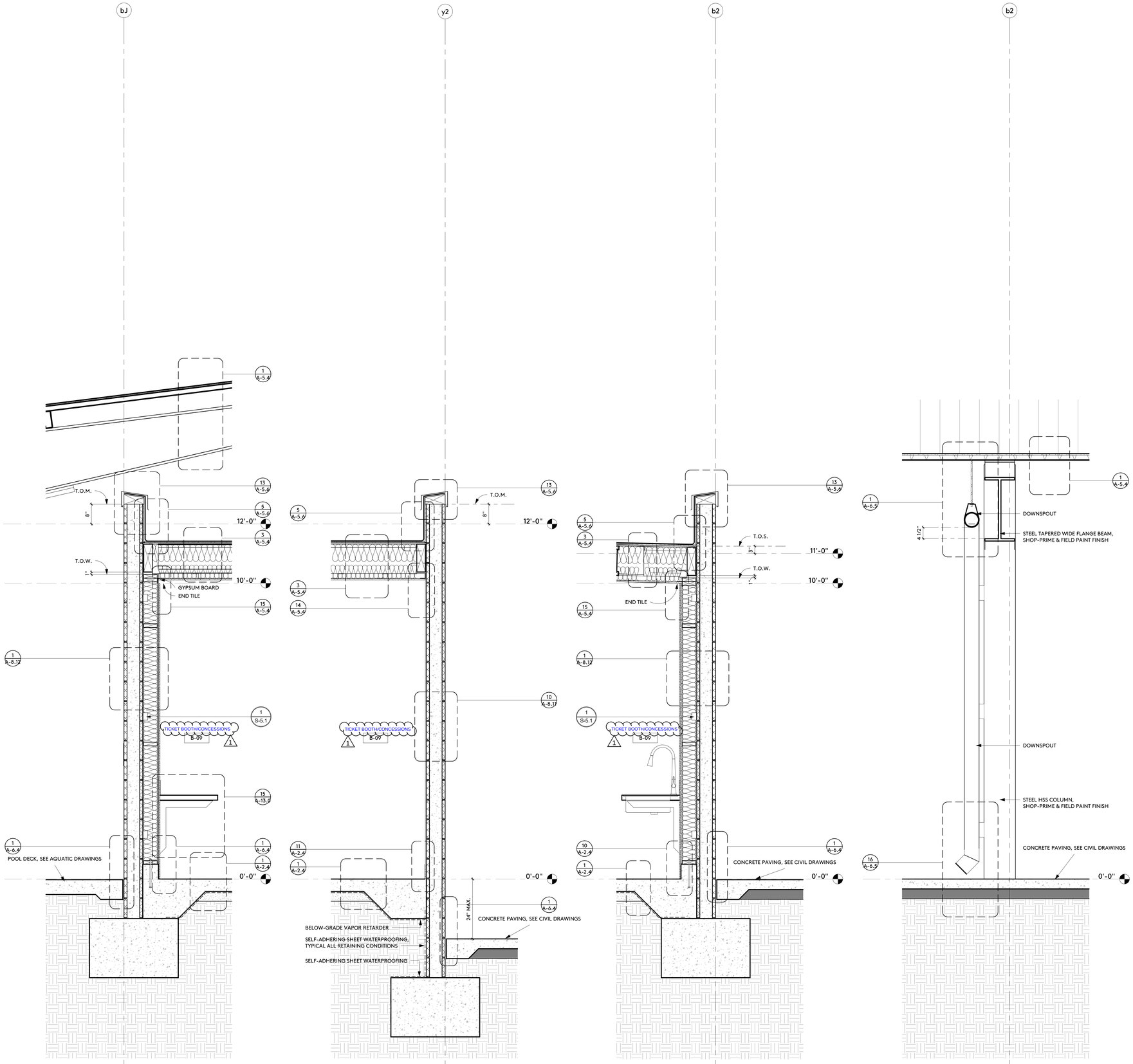

WALL SECTION bH-2 28
3/4" = 1'-0"

WALL SECTION bH-1 27
3/4" = 1'-0"

WALL SECTION bG-1 26
3/4" = 1'-0"

WALL SECTION bF-1 25
3/4" = 1'-0"

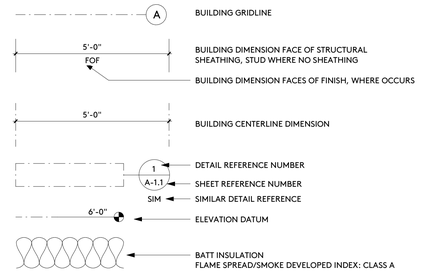

SYMBOLS

IDENTIFICATION STAMP
DIV. OF THE STATE ARCHITECT
APP: 03-122664 INC:
REVIEWED FOR
SS ☑ FLS ☑ ACS ☑
DATE: 05/12/2023

pjhm architects

LICENSED ARCHITECT
THOMAS W. KRUSE
NO. C15585
REN. 02/25
STATE OF CALIFORNIA

HIGHLAND HIGH SCHOOL
50M POOL & AQUATICS CENTER

KERN HIGH SCHOOL DISTRICT

1 ADDENDUM NO. 1

WALL SECTIONS

A-8.6

OC Office: 24461 Ridge Route Drive #100, Laguna Hills, CA 92653 • OC Phone: 949.496.6191 • SD Office: 804 Pier View Way #103, Oceanside, CA 92054 • SD Phone: 760.730.5527 • LA Office: 837 Traction Avenue, #410, Los Angeles, CA 90013 • LA Phone: 213.278.0172 • Web: pjhm.com

4/13/2023 9:05:41 AM

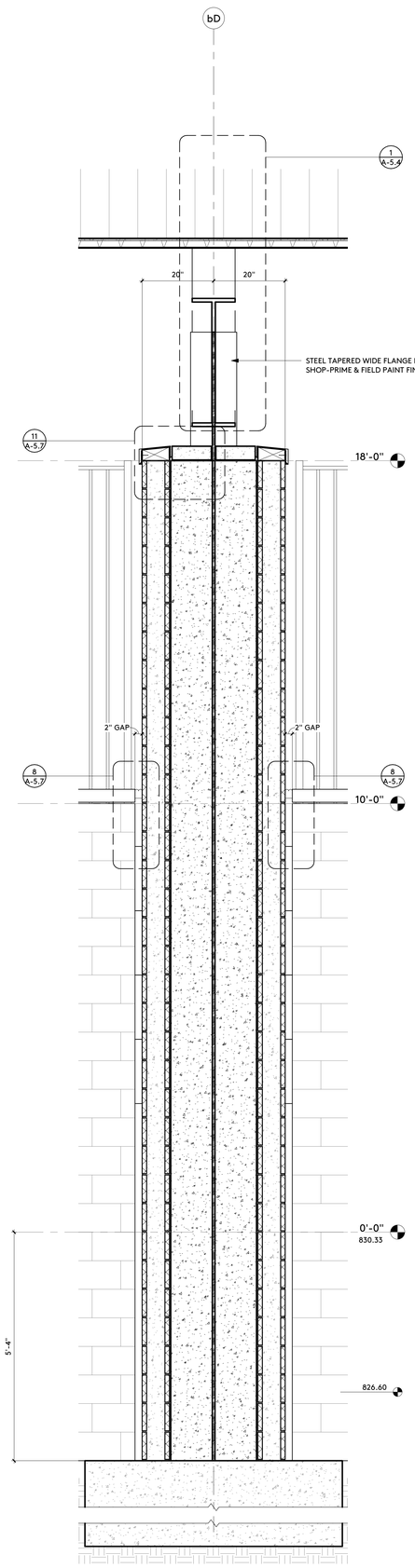

WALL SECTION bJ-1 32
3/4" = 1'-0"

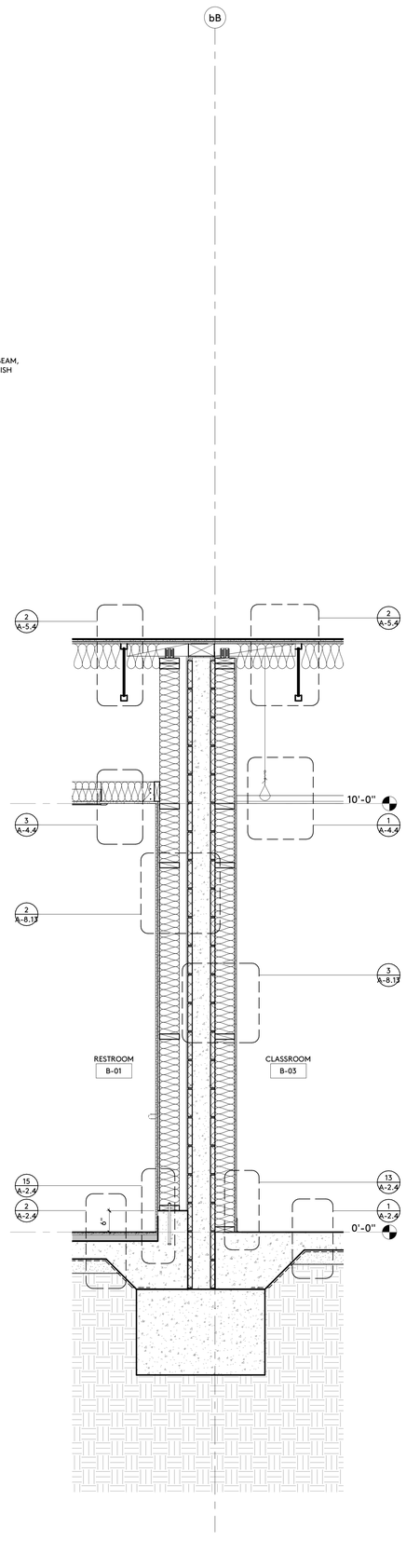

WALL SECTION bH-5 31
3/4" = 1'-0"

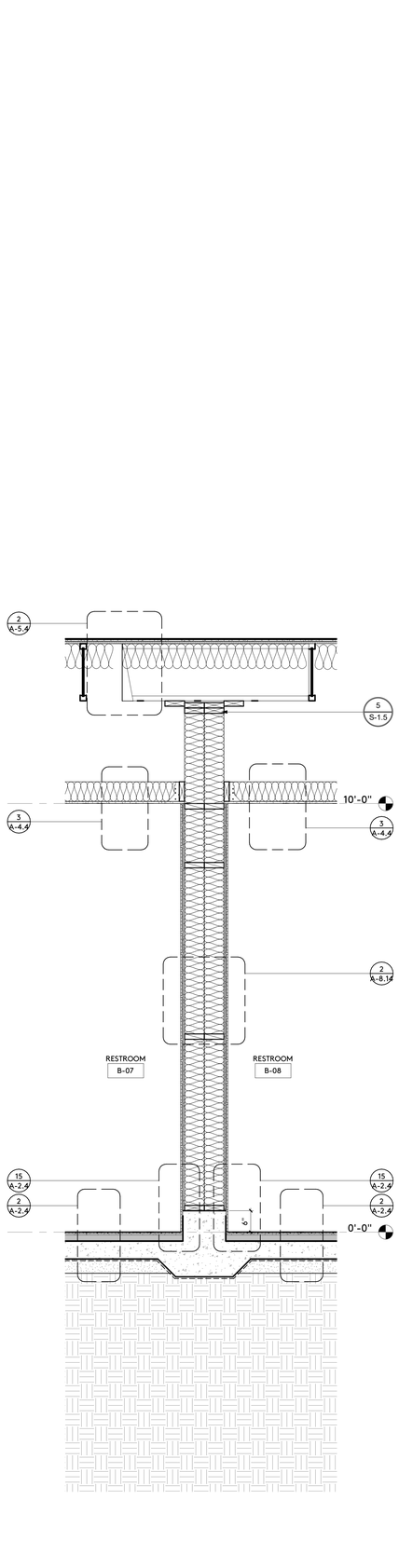

WALL SECTION bH-4 30
3/4" = 1'-0"

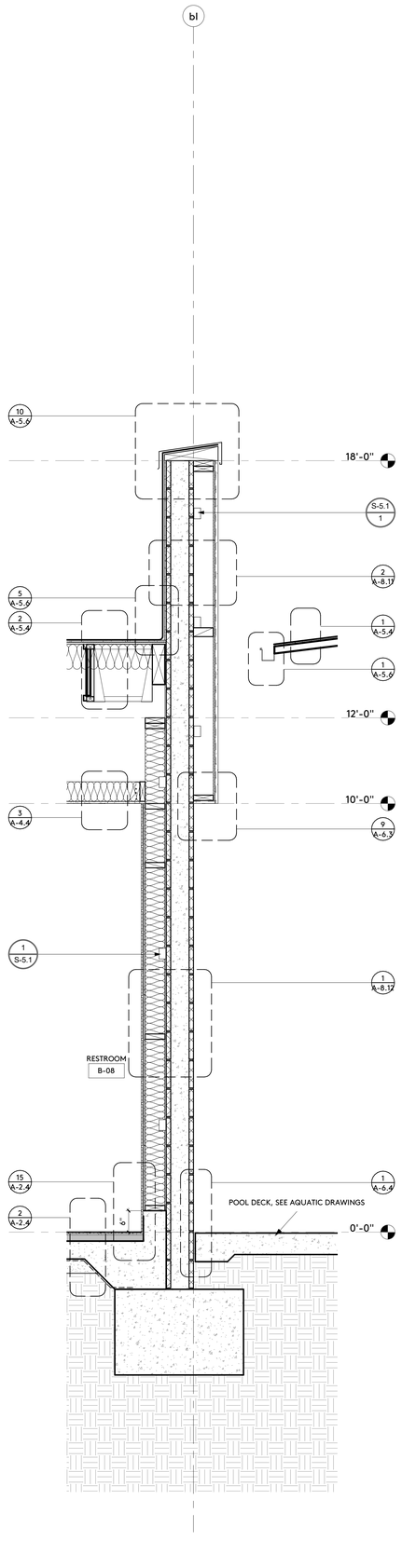

WALL SECTION bH-3 29
3/4" = 1'-0"

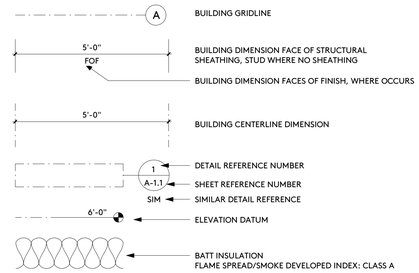

SYMBOLS

IDENTIFICATION STAMP
DIV. OF THE STATE ARCHITECT
APP: 03-122664 INC:
REVIEWED FOR
SS ☑ FLS ☑ ACS ☑
DATE: 05/12/2023

pjhm architects

LICENSED ARCHITECT
THOMAS W. KRUSE
NO. C15585
REN. 02/25
STATE OF CALIFORNIA

HIGHLAND HIGH SCHOOL
50M POOL & AQUATICS CENTER

KERN HIGH SCHOOL DISTRICT

WALL SECTIONS

A-8.7

OC Office: 24461 Ridge Route Drive #100, Laguna Hills, CA 92653 • OC Phone: 949.496.6191 • SD Office: 804 Pier View Way #103, Oceanside, CA 92054 • SD Phone: 760.730.5527 • LA Office: 837 Traction Avenue, #410, Los Angeles, CA 90013 • LA Phone: 213.278.0172 • Web: pjhm.com

4/13/2023 9:05:42 AM

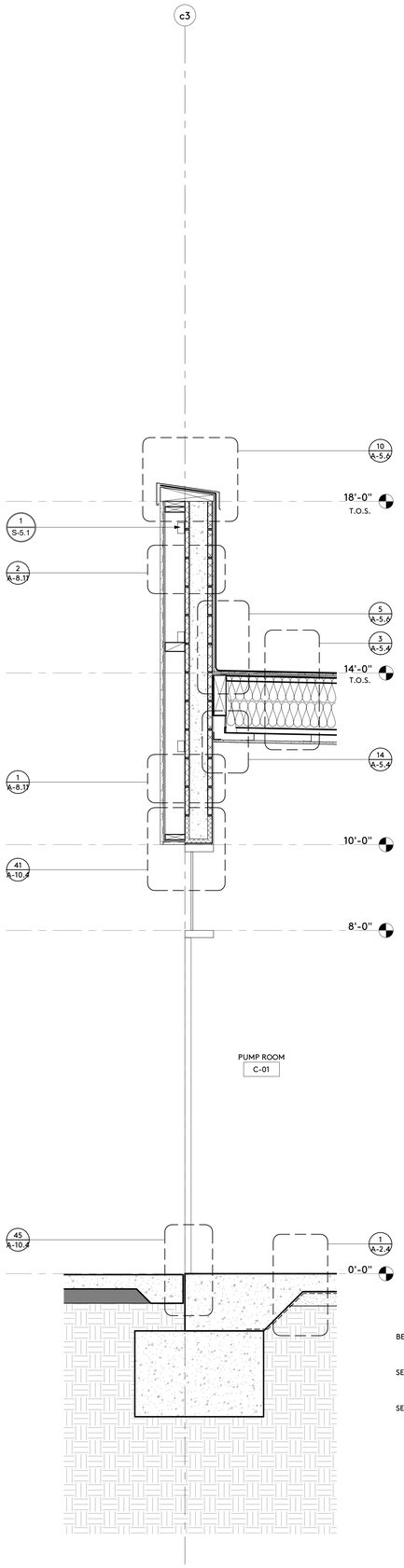

WALL SECTION cA-3 36

3/4" = 1'-0"

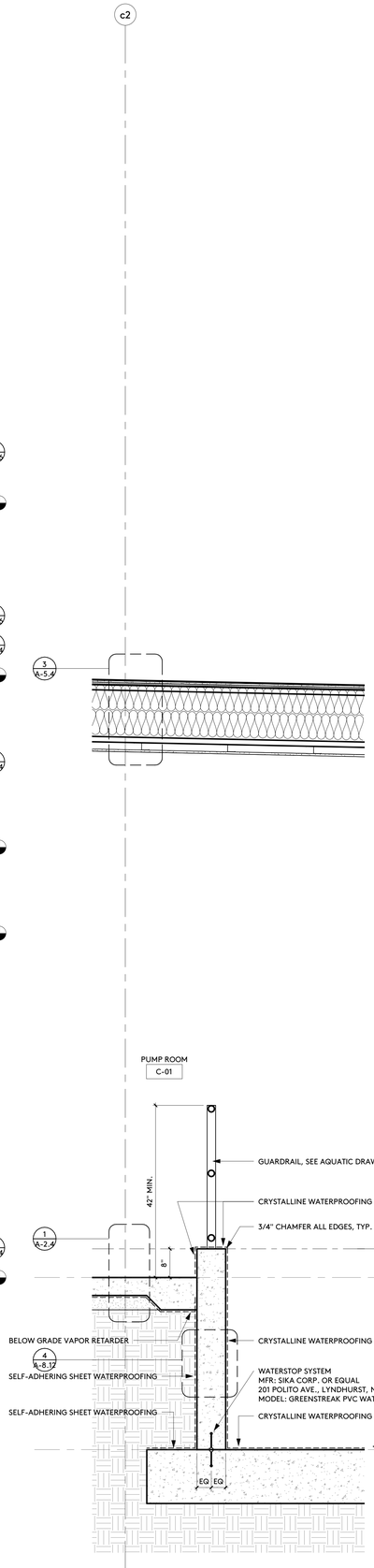

WALL SECTION cA-2 35

3/4" = 1'-0"

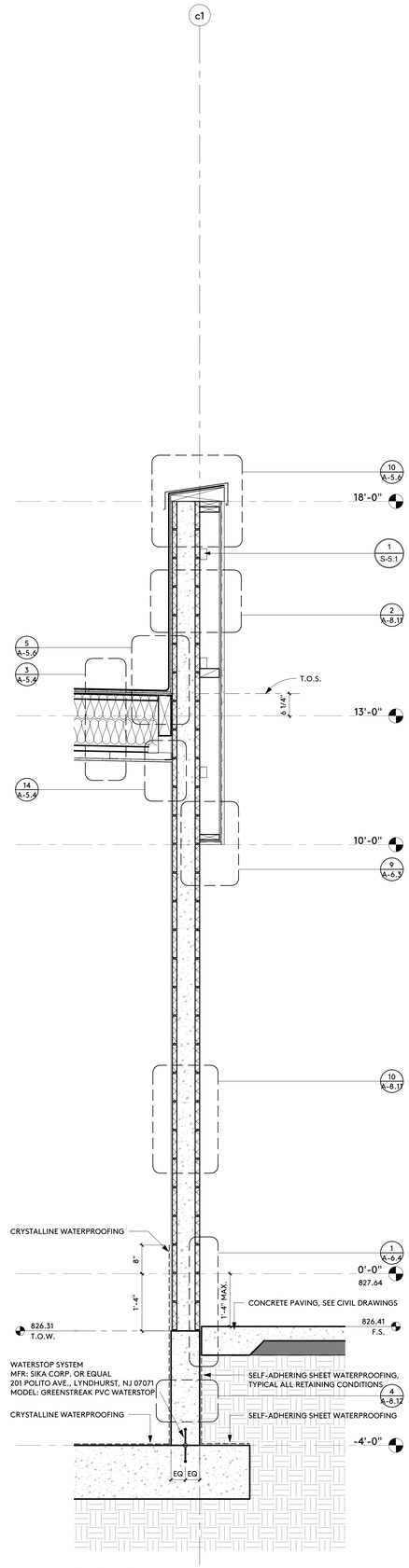

WALL SECTION cA-1 34

3/4" = 1'-0"

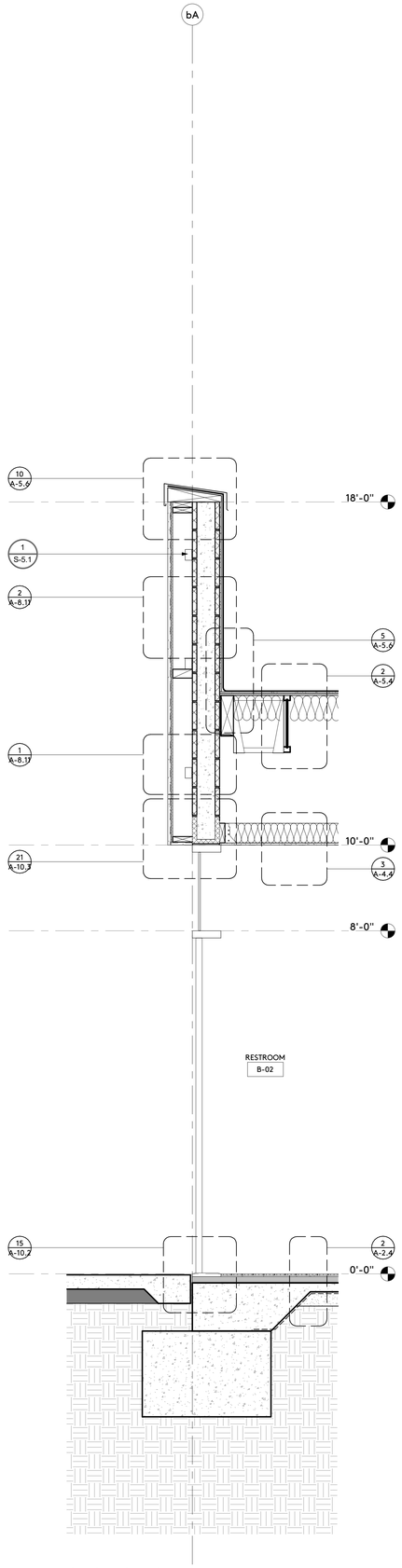

WALL SECTION bJ-2 33

3/4" = 1'-0"

SYMBOLS

- A — BUILDING GRIDLINE
- 5'-0" FOF — BUILDING DIMENSION FACE OF STRUCTURAL SHEATHING, STUD WHERE NO SHEATHING
- BUILDING DIMENSION FACES OF FINISH, WHERE OCCURS
- 5'-0" — BUILDING CENTERLINE DIMENSION
- 1 / A-1.1 — DETAIL REFERENCE NUMBER / SHEET REFERENCE NUMBER
- SIM — SIMILAR DETAIL REFERENCE
- 6'-0" — ELEVATION DATUM
- BATT INSULATION FLAME SPREAD/SMOKE DEVELOPED INDEX: CLASS A

IDENTIFICATION STAMP
DIV. OF THE STATE ARCHITECT
APP: 03-122664 INC:
REVIEWED FOR
SS ☑ FLS ☑ ACS ☑
DATE: 05/12/2023

pjhm architects

LICENSED ARCHITECT
RICHARD W. PRIMUS
NO. C15585
REN. 02/25
STATE OF CALIFORNIA

OC Office: 24461 Ridge Route Drive #100, Laguna Hills, CA 92653 • OC Phone: 949.496.6191 • SD Office: 804 Pier View Way #103, Oceanside, CA 92054 • SD Phone: 760.730.5527 • LA Office: 837 Traction Avenue, #410, Los Angeles, CA 90013 • LA Phone: 213.278.0172 • Web: pjhm.com

HIGHLAND HIGH SCHOOL
50M POOL & AQUATICS CENTER

KERN HIGH SCHOOL DISTRICT

WALL SECTIONS

A-8.8

4/13/2023 9:05:43 AM

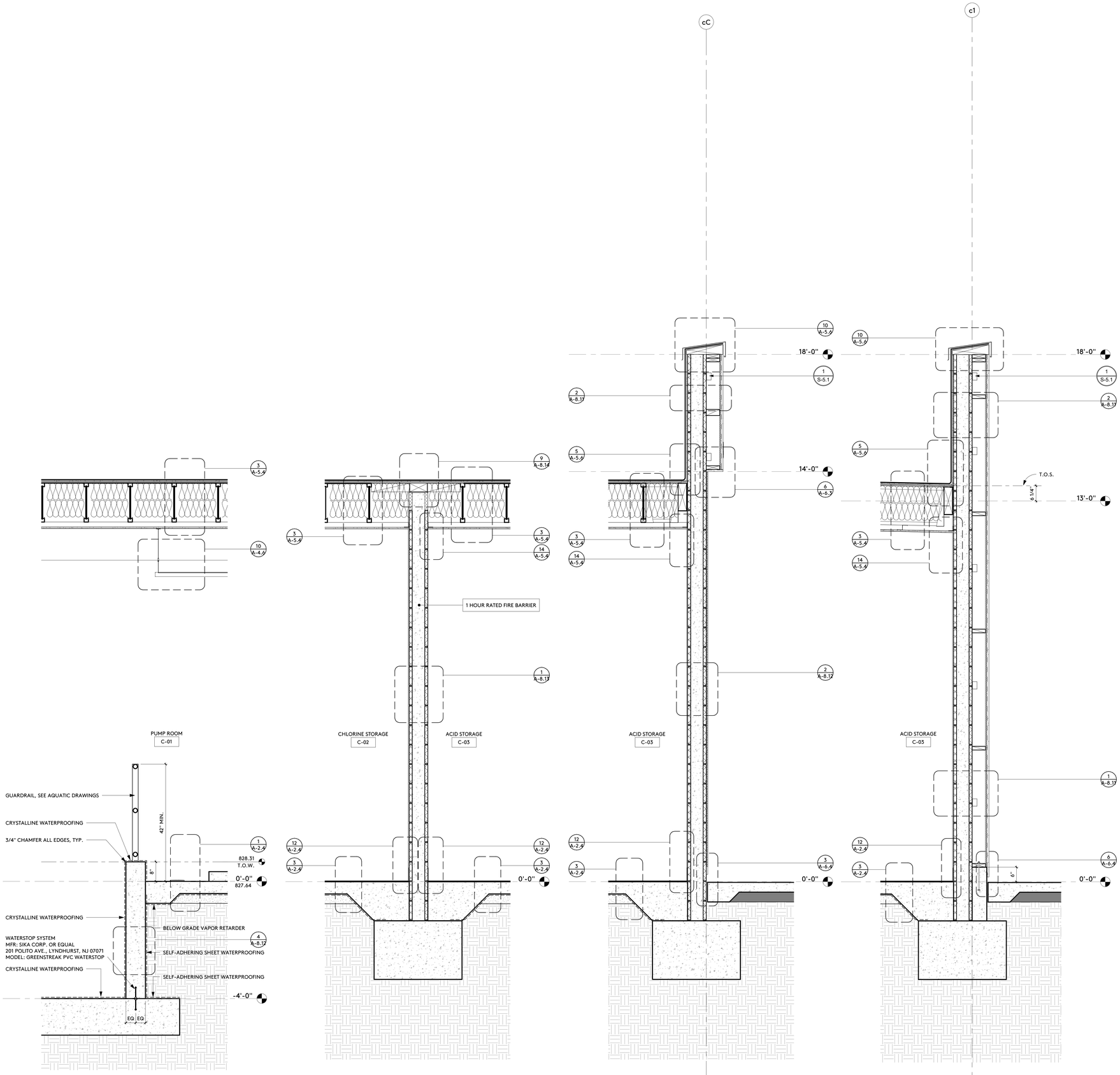

WALL SECTION cC-3 40
3/4" = 1'-0"

WALL SECTION cC-2 39
3/4" = 1'-0"

WALL SECTION cC-1 38
3/4" = 1'-0"

WALL SECTION cB-1 37
3/4" = 1'-0"

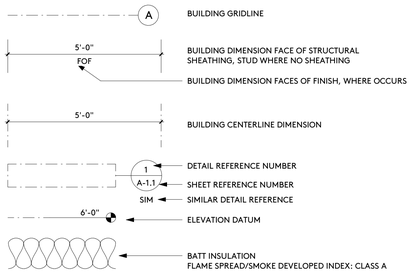

SYMBOLS

IDENTIFICATION STAMP
DIV. OF THE STATE ARCHITECT
APP: 03-122664 INC:
REVIEWED FOR
SS ☑ FLS ☑ ACS ☑
DATE: 05/12/2023

pjhm architects

LICENSED ARCHITECT
THOMAS W. KRUSE
NO. C15585
REN. 02/25
STATE OF CALIFORNIA

HIGHLAND HIGH SCHOOL
50M POOL & AQUATICS CENTER

KERN HIGH SCHOOL DISTRICT

WALL SECTIONS

A-8.9

OC Office: 24461 Ridge Route Drive #100, Laguna Hills, CA 92653 • OC Phone: 949.496.6191 • SD Office: 804 Pier View Way #103, Oceanside, CA 92054 • SD Phone: 760.730.5527 • LA Office: 837 Traction Avenue, #410, Los Angeles, CA 90013 • LA Phone: 213.278.0172 • Web: pjhm.com

4/13/2023 9:05:44 AM

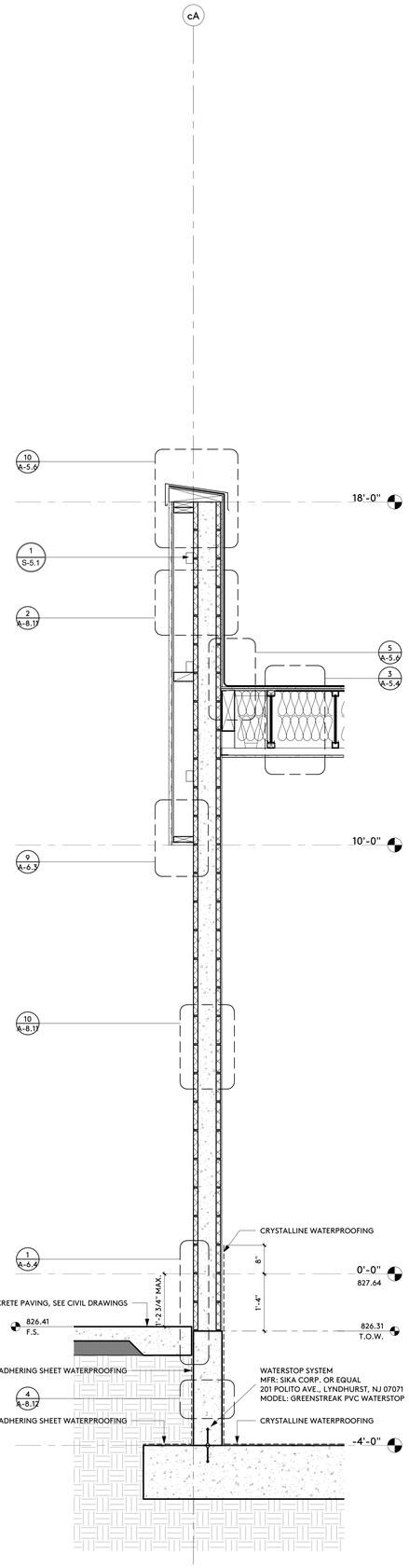

WALL SECTION cC-5 42

3/4" = 1'-0"

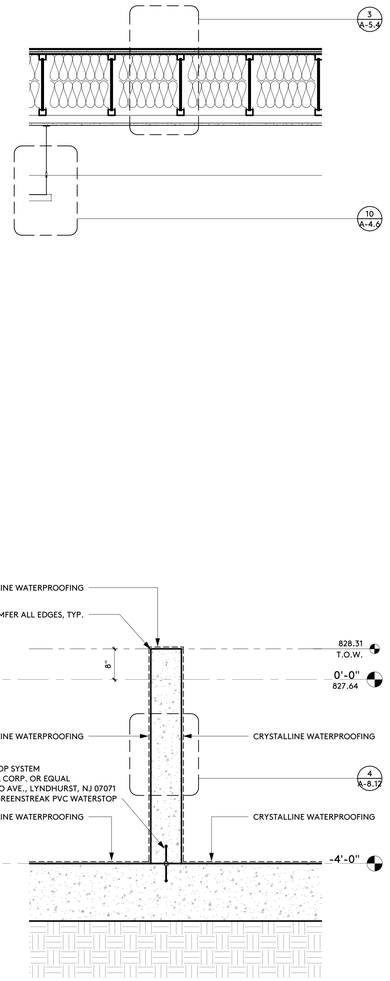

WALL SECTION cC-4 41

3/4" = 1'-0"

SYMBOLS

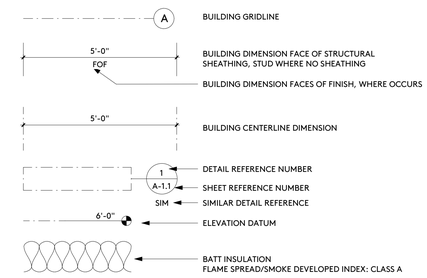

IDENTIFICATION STAMP
DIV. OF THE STATE ARCHITECT
APP: 03-122664 INC:
REVIEWED FOR
SS ☑ FLS ☑ ACS ☑
DATE: 05/12/2023

pjhm architects

LICENSED ARCHITECT
RICHARD W. FRIEND
NO. C15585
REN. 02/25
STATE OF CALIFORNIA

OC Office: 24461 Ridge Route Drive #100, Laguna Hills, CA 92653 • OC Phone: 949.496.6191 • SD Office: 804 Pier View Way #103, Oceanside, CA 92054 • SD Phone: 760.730.5527 • LA Office: 837 Traction Avenue, #410, Los Angeles, CA 90013 • LA Phone: 213.278.0172 • Web: pjhm.com

HIGHLAND HIGH SCHOOL
50M POOL & AQUATICS CENTER

KERN HIGH SCHOOL DISTRICT

WALL SECTIONS

A-8.10

4/13/2023 9:05:44 AM

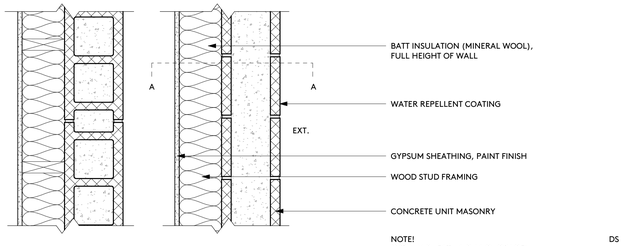

SECTION A-A
PLAN VIEW

EXTERIOR WALL ASSEMBLY

NOTE!
GYPSUM SHEATHING ANCHORAGE:
MIN. NO. 6 x 1-1/4" TYPE W DRYWALL SCREWS
STUD SPACING: 16" MAX.
FASTENER SPACING: 8" EDGE/12" FIELD
INSTALL IN ACCORDANCE WITH ICC ESR-1338

DS

EXTERIOR WALL ASSEMBLY 9

1 1/2" = 1'-0"

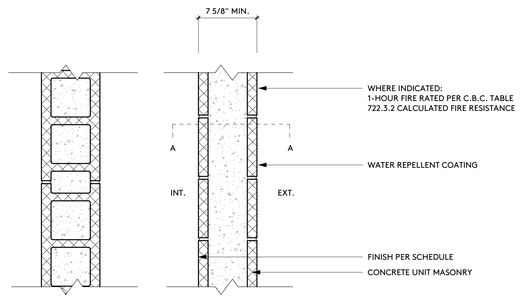

SECTION A-A
PLAN VIEW

EXTERIOR WALL ASSEMBLY

DS

EXTERIOR WALL ASSEMBLY 10

1 1/2" = 1'-0"

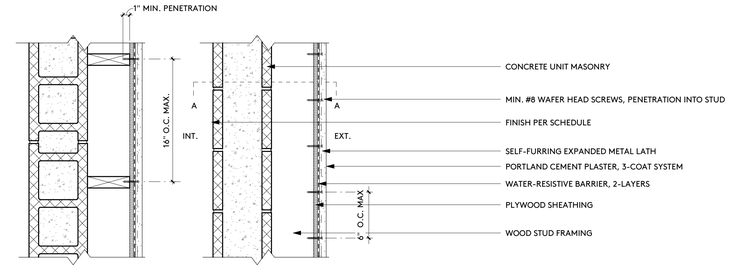

SECTION A-A

EXTERIOR WALL ASSEMBLY

PORTLAND CEMENT PLASTER
LISTING NO.: ICC-ES ESR-2564

DS

EXTERIOR WALL ASSEMBLY 1

1 1/2" = 1'-0"

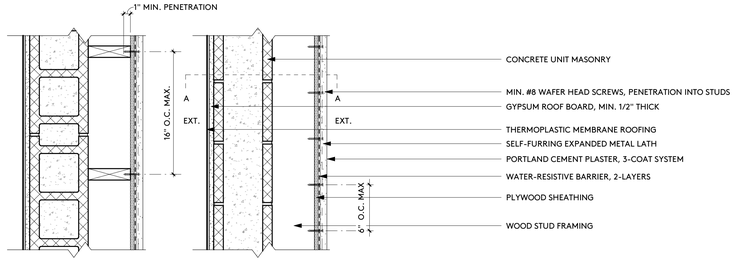

SECTION A-A

EXTERIOR WALL ASSEMBLY

PORTLAND CEMENT PLASTER
LISTING NO.: ICC-ES ESR-2564

DS

EXTERIOR WALL ASSEMBLY 2

1 1/2" = 1'-0"

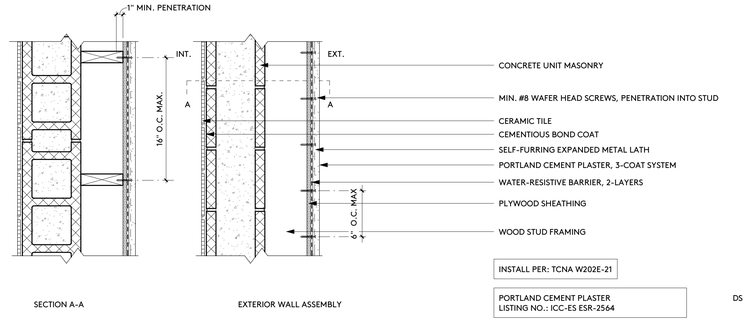

INSTALL PER: TCNA W202E-21

SECTION A-A

EXTERIOR WALL ASSEMBLY

PORTLAND CEMENT PLASTER
LISTING NO.: ICC-ES ESR-2564

DS

EXTERIOR WALL ASSEMBLY 3

1 1/2" = 1'-0"

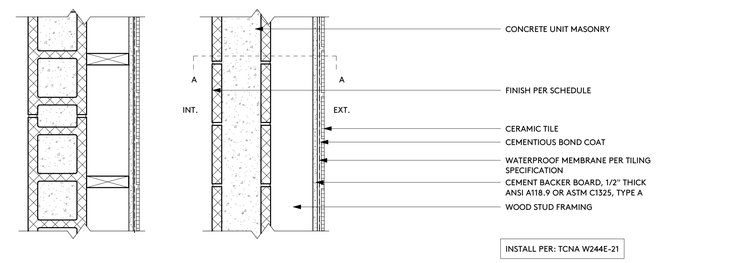

INSTALL PER: TCNA W244E-21

SECTION A-A

EXTERIOR WALL ASSEMBLY

DS

EXTERIOR WALL ASSEMBLY 4

1 1/2" = 1'-0"

4/13/2023 9:05:45 AM

IDENTIFICATION STAMP
DIV. OF THE STATE ARCHITECT
APP: 03-122664 INC:
REVIEWED FOR
SS ☑ FLS ☑ ACS ☑
DATE: 05/12/2023

pjhm architects

LICENSED ARCHITECT
RICHARD W. FRIMAN
NO. C15585
REN. 02/25
STATE OF CALIFORNIA

OC Office: 24461 Ridge Route Drive #100, Laguna Hills, CA 92653 • SD Phone: 760.730.5527 • LA Office: 837 Traction Avenue, #410, Los Angeles, CA 90013 • OC Phone: 949.496.6191 • SD Office: 804 Pier View Way #103, Oceanside, CA 92054 • LA Phone: 213.278.0172 • Web: pjhm.com

HIGHLAND HIGH SCHOOL
50M POOL & AQUATICS CENTER

KERN HIGH SCHOOL DISTRICT

WALL SECTION DETAILS

A-8.11

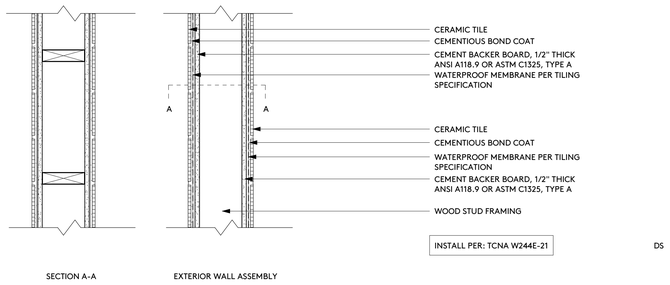

EXTERIOR WALL ASSEMBLY 9

1 1/2" = 1'-0"

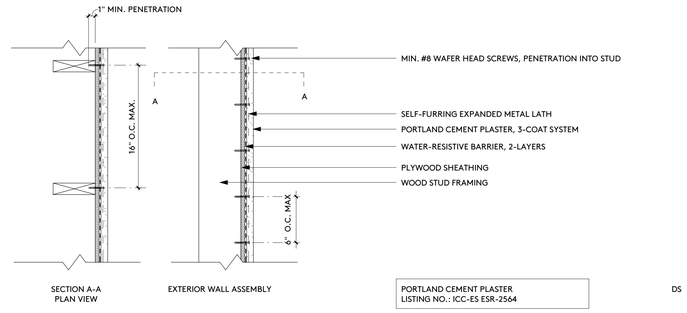

EXTERIOR WALL ASSEMBLY 10

1 1/2" = 1'-0"

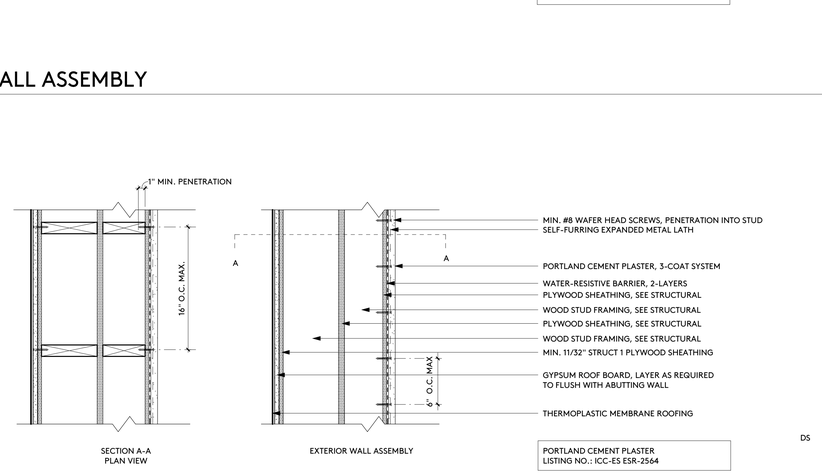

EXTERIOR WALL ASSEMBLY 11

1 1/2" = 1'-0"

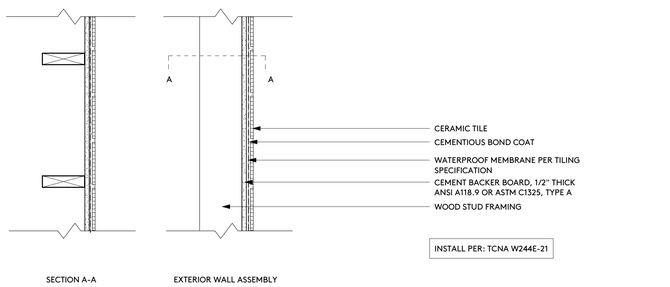

EXTERIOR WALL ASSEMBLY 12

1 1/2" = 1'-0"

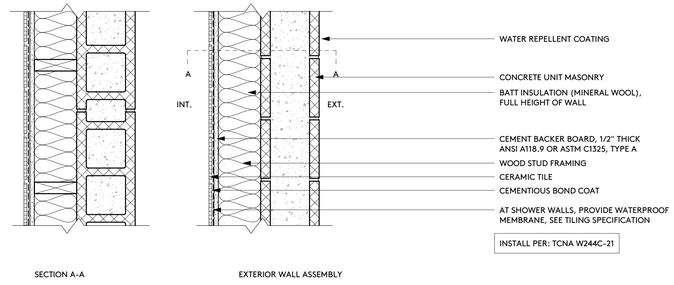

EXTERIOR WALL ASSEMBLY 1

1 1/2" = 1'-0"

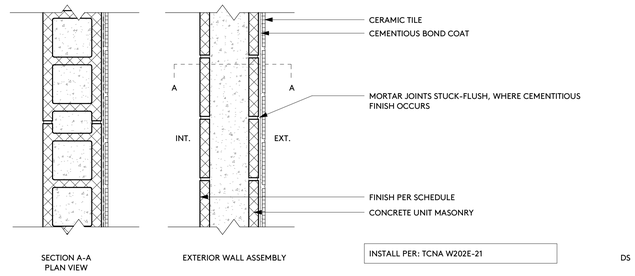

EXTERIOR WALL ASSEMBLY 2

1 1/2" = 1'-0"

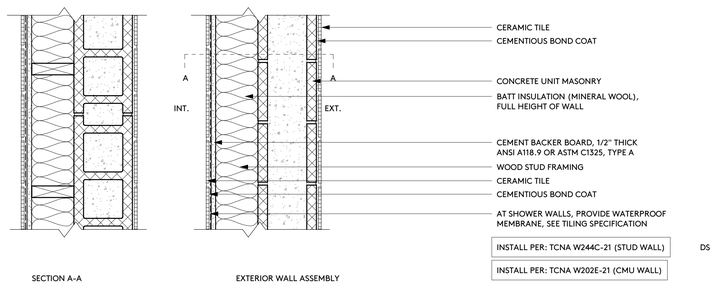

EXTERIOR WALL ASSEMBLY 3

1 1/2" = 1'-0"

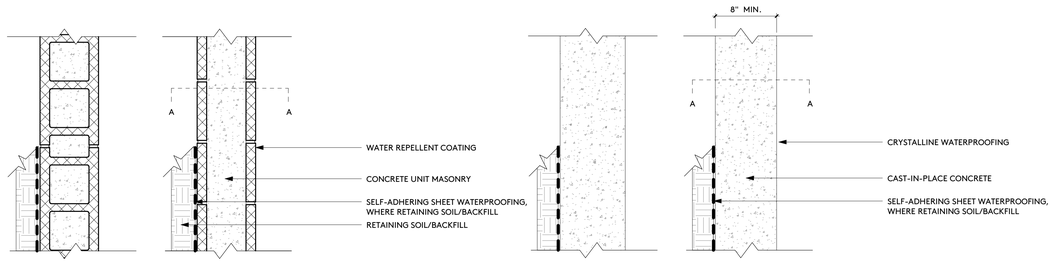

EXTERIOR WALL ASSEMBLY 8

1 1/2" = 1'-0"

EXTERIOR/INTERIOR WALL ASSEMBLY 4

1 1/2" = 1'-0"

IDENTIFICATION STAMP
DIV. OF THE STATE ARCHITECT
APP: 03-122664 INC:
REVIEWED FOR
SS ☑ FLS ☑ ACS ☑
DATE: 05/12/2023

pjhm architects

LICENSED ARCHITECT
RICHARD W. FRUIN
NO. C15585
REN. 02/25
STATE OF CALIFORNIA

SD Phone: 760.730.5527 • LA Office: 837 Traction Avenue, #410, Los Angeles, CA 90013 • LA Phone: 213.278.0172 • Web: pjhm.com
OC Office: 24461 Ridge Route Drive #100, Laguna Hills, CA 92653 • OC Phone: 949.496.6191 • SD Office: 804 Pier View Way #103, Oceanside, CA 92054

HIGHLAND HIGH SCHOOL
50M POOL & AQUATICS CENTER

KERN HIGH SCHOOL DISTRICT

WALL SECTION DETAILS

A-8.12

4/13/2023 9:05:45 AM

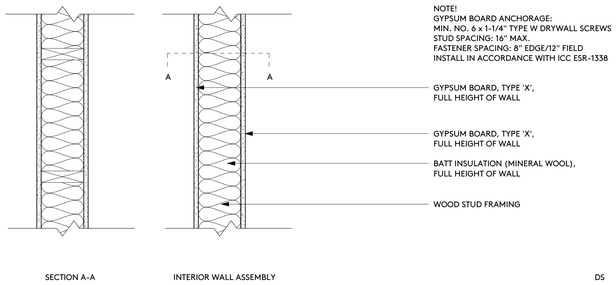

INTERIOR WALL ASSEMBLY 9

1 1/2" = 1'-0"

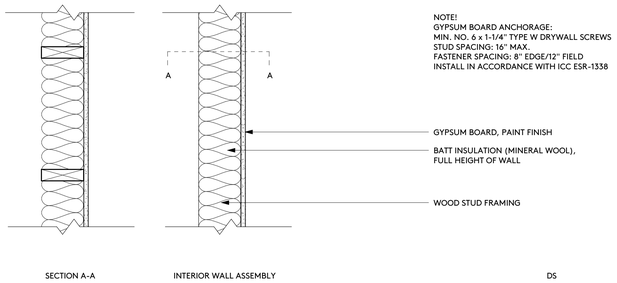

INTERIOR WALL ASSEMBLY 10

1 1/2" = 1'-0"

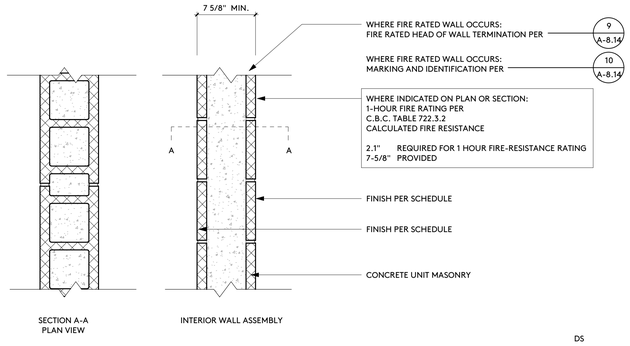

INTERIOR WALL ASSEMBLY 1

1 1/2" = 1'-0"

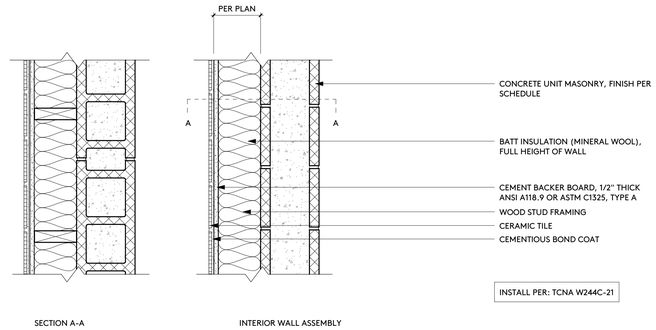

INTERIOR WALL ASSEMBLY 2

1 1/2" = 1'-0"

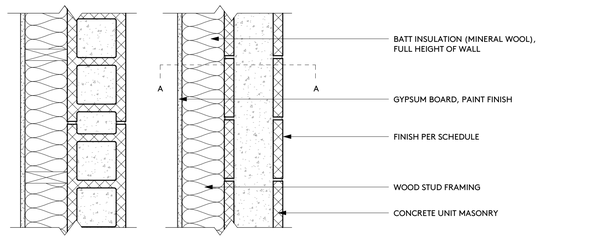

NOTE!
GYPSUM BOARD ANCHORAGE:
MIN. NO. 6 x 1-1/4" TYPE W DRYWALL SCREWS
STUD SPACING: 16" MAX.
FASTENER SPACING: 8" EDGE/12" FIELD
INSTALL IN ACCORDANCE WITH ICC ESR-1338

INTERIOR WALL ASSEMBLY 3

1 1/2" = 1'-0"

IDENTIFICATION STAMP
DIV. OF THE STATE ARCHITECT
APP: 03-122664 INC:
REVIEWED FOR
SS ☑ FLS ☑ ACS ☑
DATE: 05/12/2023

pjhm architects

LICENSED ARCHITECT
THOMAS W. KRUSE
NO. C15585
REN. 02/25
STATE OF CALIFORNIA

HIGHLAND HIGH SCHOOL
50M POOL & AQUATICS CENTER

KERN HIGH SCHOOL DISTRICT

WALL SECTION DETAILS

A-8.13

OC Office: 24461 Ridge Route Drive #100, Laguna Hills, CA 92653 • OC Phone: 949.496.6191 • SD Office: 804 Pier View Way #103, Oceanside, CA 92054 • SD Phone: 760.730.5527 • LA Office: 837 Traction Avenue, #410, Los Angeles, CA 90013 • LA Phone: 213.278.0172 • Web: pjhm.com

4/13/2023 9:05:46 AM

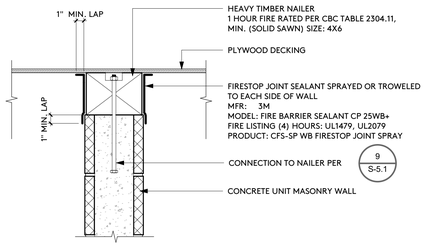

HEAD OF WALL 9

1 1/2" = 1'-0"

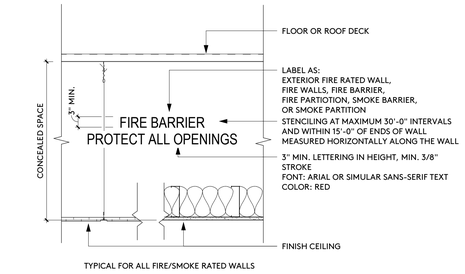

TYPICAL FOR ALL FIRE/SMOKE RATED WALLS

MARKING AND IDENTIFICATION 10

1" = 1'-0"

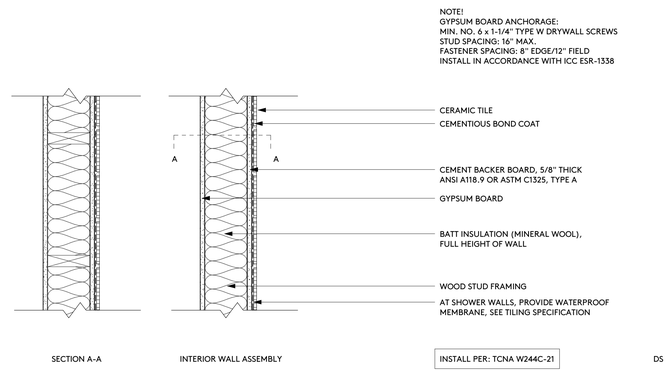

INTERIOR WALL ASSEMBLY 1

1 1/2" = 1'-0"

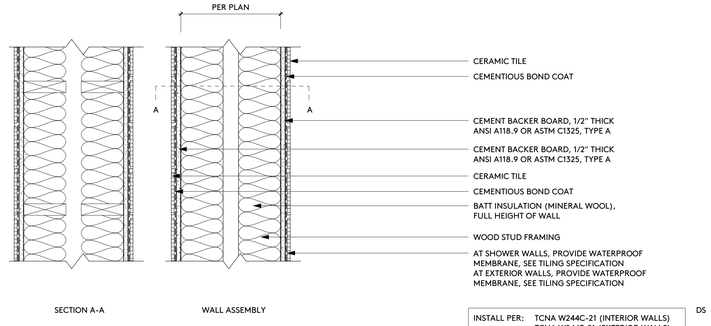

EXTERIOR / INTERIOR WALL ASSEMBLY 2

1 1/2" = 1'-0"

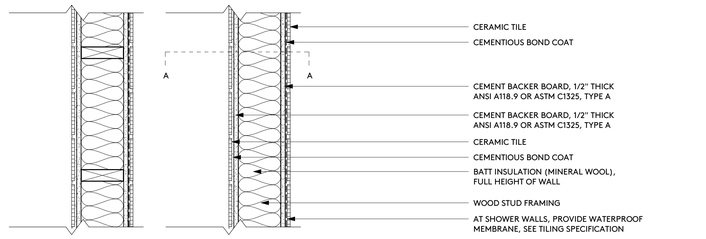

INTERIOR WALL ASSEMBLY 3

1 1/2" = 1'-0"

IDENTIFICATION STAMP
DIV. OF THE STATE ARCHITECT
APP: 03-122664 INC:
REVIEWED FOR
SS ☑ FLS ☑ ACS ☑
DATE: 05/12/2023

pjhm architects

LICENSED ARCHITECT
RICHARD W. FRUIN
NO. C15585
REN. 02/25
STATE OF CALIFORNIA

HIGHLAND HIGH SCHOOL
50M POOL & AQUATICS CENTER

KERN HIGH SCHOOL DISTRICT

WALL SECTION DETAILS

A-8.14

OC Office: 24461 Ridge Route Drive #100, Laguna Hills, CA 92653 • OC Phone: 949.496.6191 • SD Office: 804 Pier View Way #103, Oceanside, CA 92054 • SD Phone: 760.730.5527 • LA Office: 837 Traction Avenue, #410, Los Angeles, CA 90013 • LA Phone: 213.278.0172 • Web: pjhm.com

4/13/2023 9:05:46 AM

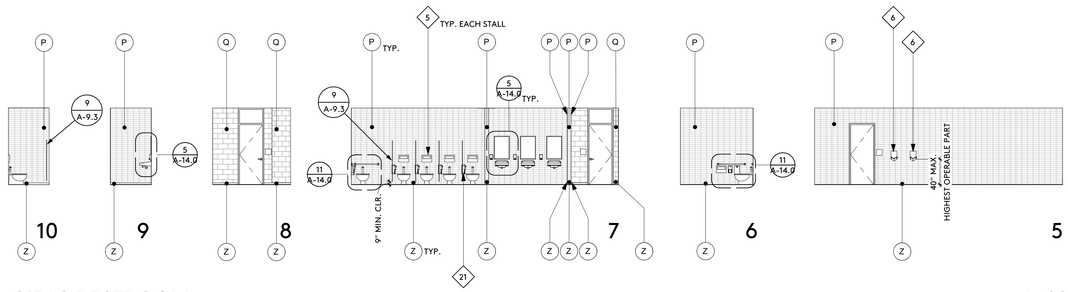

GIRLS RESTROOM A-02

1/8" = 1'-0"

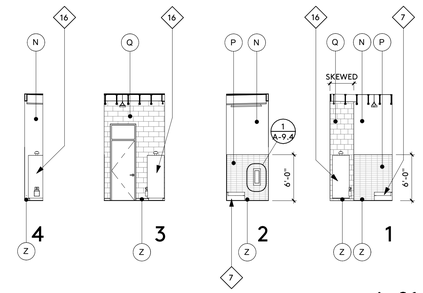

CUSTODIAL A-01

1/8" = 1'-0"

1. METAL LOCKERS
2. METAL LOCKERS EXPANSION TRIM
3. METAL LOCKERS SLOPING TOP PANEL
4. LOCKER ROOM BENCH
5. TOILET SEAT COVER DISPENSERS, SURFACE MOUNTED, SEE TOILET, BATH AND LAUNDRY ACCESSORIES
6. HAND DRYER, SURFACE MOUNTED, SEE TOILET, BATH AND LAUNDRY ACCESSORIES
7. SERVICE SINK, SEE PLUMBING
8. HVAC UNIT, SURFACE MOUNTED, SEE MECHANICAL
9. HVAC DUCT, PAINT FINISH, SEE MECHANICAL
10. ROOF DRAIN PIPES, PAINT FINISH, SEE PLUMBING
11. EMERGENCY SHOWER/EYEWASH STATION, SEE AQUATICS DRAWINGS
12. GUARDRAIL, SEE AQUATICS
13. REFRIGERATOR, OWNER FURNISHED - OWNER INSTALLED
14. STAINLESS STEEL COUNTERTOP
15. GRAB BAR, SEE TOILET, BATH AND LAUNDRY ACCESSORIES
16. WATER HEATER, SEE PLUMBING
17. PRESENTATION DRY ERASE WALL COVERING
18. MARKERBOARD, SURFACE MOUNTED
19. DISPLAY CASE
20. TOILET TISSUE DISPENSER, SURFACE MOUNTED, SEE TOILET, BATH AND LAUNDRY ACCESSORIES
21. SANITARY NAPKIN DISPOSAL, SEE TOILET, BATH AND LAUNDRY ACCESSORIES
22. SHOWER CURTAIN, SHOWER CURTAIN ROD, SHOWER CURTAIN HOOKS, SEE TOILET, BATH AND LAUNDRY ACCESSORIES

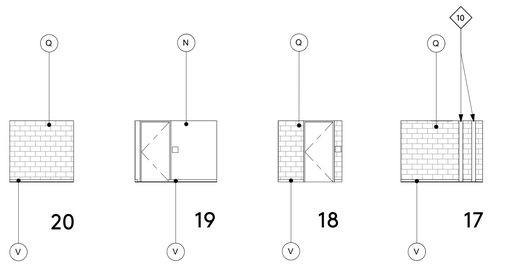

STORAGE A-04

1/8" = 1'-0"

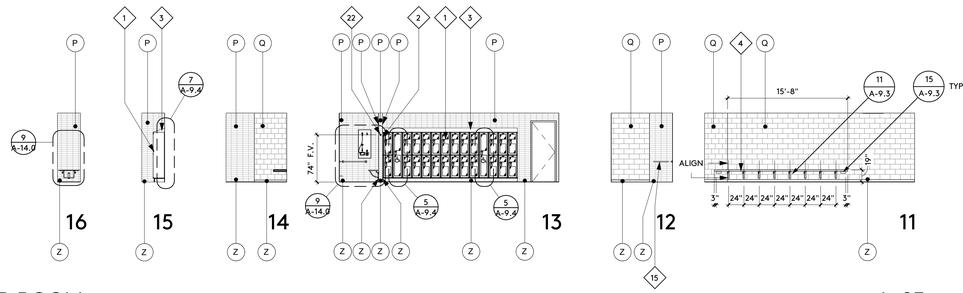

GIRLS LOCKER ROOM A-03

1/8" = 1'-0"

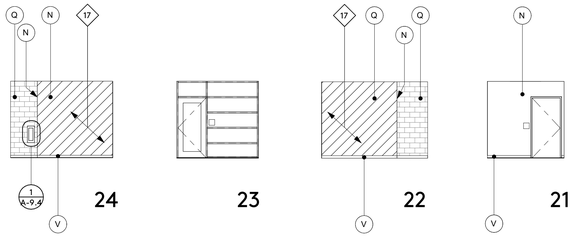

OFFICE A-05

1/8" = 1'-0"

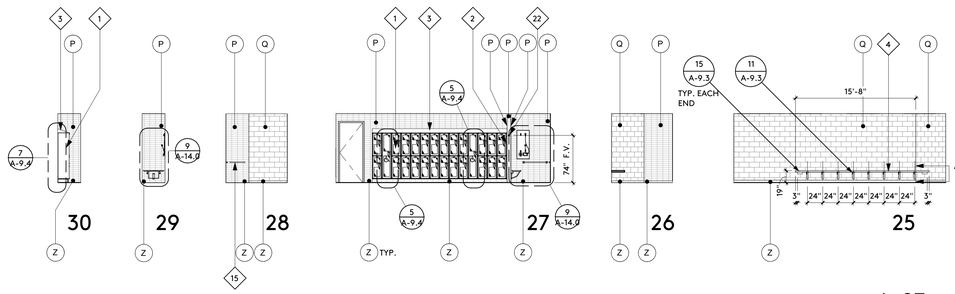

BOYS LOCKER ROOM A-07

1/8" = 1'-0"

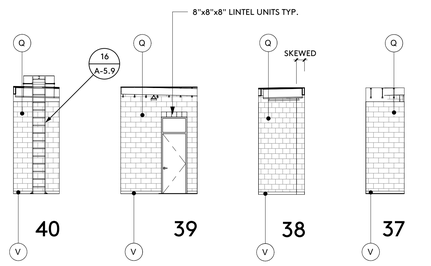

UTILITY A-09

1/8" = 1'-0"

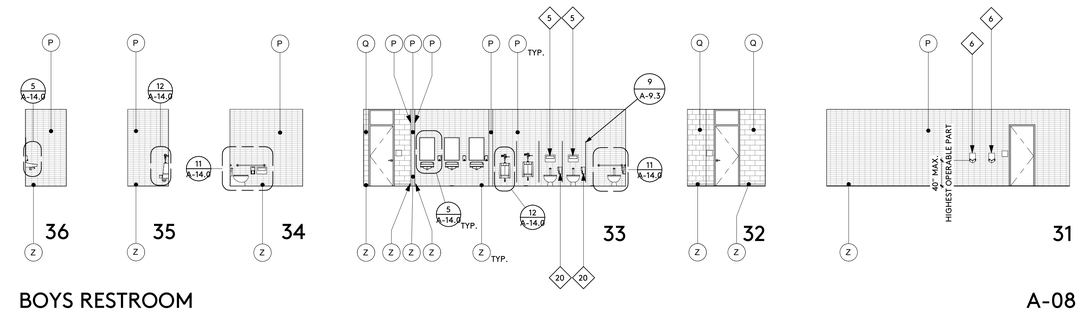

BOYS RESTROOM A-08

1/8" = 1'-0"

KEYNOTES

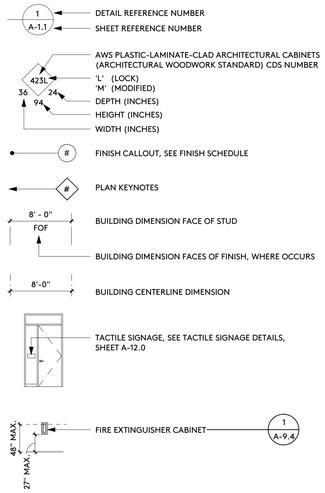

SYMBOLS

IDENTIFICATION STAMP
DIV. OF THE STATE ARCHITECT
APP: 03-122664 INC:
REVIEWED FOR
SS ☑ FLS ☑ ACS ☑
DATE: 05/12/2023

pjhm architects

LICENSED ARCHITECT
THOMAS W. KRUSE
NO. C15585
REN. 02/25
STATE OF CALIFORNIA

HIGHLAND HIGH SCHOOL
50M POOL & AQUATICS CENTER

KERN HIGH SCHOOL DISTRICT

INTERIOR ELEVATIONS

A-9.0

OC Office: 24461 Ridge Route Drive #100, Laguna Hills, CA 92653 • OC Phone: 949.496.6191 • SD Office: 804 Pier View Way #103, Oceanside, CA 92054 • SD Phone: 760.730.5527 • LA Office: 837 Traction Avenue, #410, Los Angeles, CA 90013 • LA Phone: 213.278.0172 • Web: pjhm.com

4/13/2023 9:05:52 AM

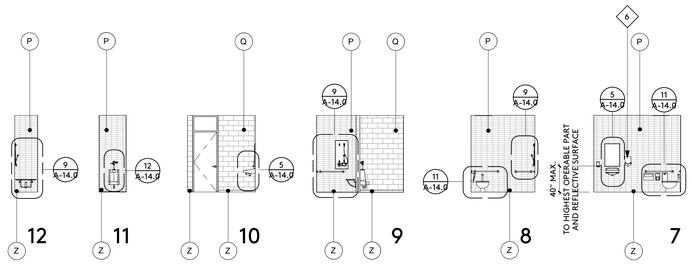

RESTROOM B-02

1/8" = 1'-0"

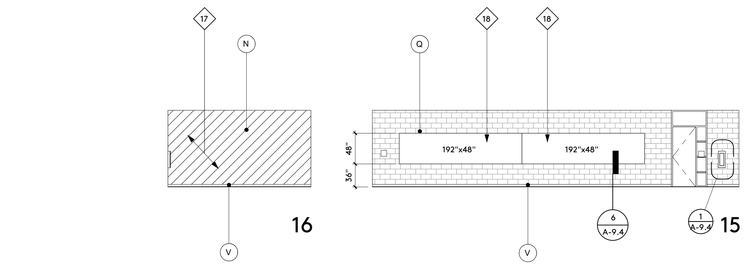

RESTROOM B-01

1/8" = 1'-0"

1. METAL LOCKERS
2. METAL LOCKERS EXPANSION TRIM
3. METAL LOCKERS SLOPING TOP PANEL
4. LOCKER ROOM BENCH
5. TOILET SEAT COVER DISPENSERS, SURFACE MOUNTED, SEE TOILET, BATH AND LAUNDRY ACCESSORIES
6. HAND DRYER, SURFACE MOUNTED, SEE TOILET, BATH AND LAUNDRY ACCESSORIES
7. SERVICE SINK, SEE PLUMBING
8. HVAC UNIT, SURFACE MOUNTED, SEE MECHANICAL
9. HVAC DUCT, PAINT FINISH, SEE MECHANICAL
10. ROOF DRAIN PIPES, PAINT FINISH, SEE PLUMBING
11. EMERGENCY SHOWER/EYEWASH STATION, SEE AQUATICS DRAWINGS
12. GUARDRAIL, SEE AQUATICS
13. REFRIGERATOR, OWNER FURNISHED - OWNER INSTALLED
14. STAINLESS STEEL COUNTERTOP
15. GRAB BAR, SEE TOILET, BATH AND LAUNDRY ACCESSORIES
16. WATER HEATER, SEE PLUMBING
17. PRESENTATION DRY ERASE WALL COVERING
18. MARKERBOARD, SURFACE MOUNTED
19. DISPLAY CASE
20. TOILET TISSUE DISPENSER, SURFACE MOUNTED, SEE TOILET, BATH AND LAUNDRY ACCESSORIES
21. SANITARY NAPKIN DISPOSAL, SEE TOILET, BATH AND LAUNDRY ACCESSORIES
22. SHOWER CURTAIN, SHOWER CURTAIN ROD, SHOWER CURTAIN HOOKS, SEE TOILET, BATH AND LAUNDRY ACCESSORIES

CLASSROOM B-03

1/8" = 1'-0"

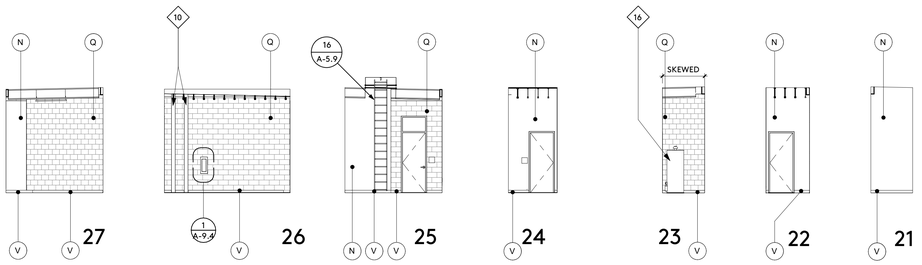

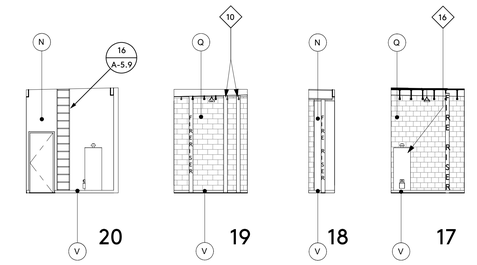

UTILITY B-06

1/8" = 1'-0"

UTILITY B-05

1/8" = 1'-0"

RISER/UTILITY B-04

1/8" = 1'-0"

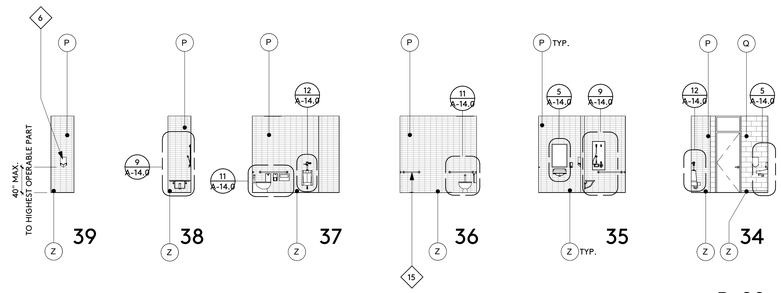

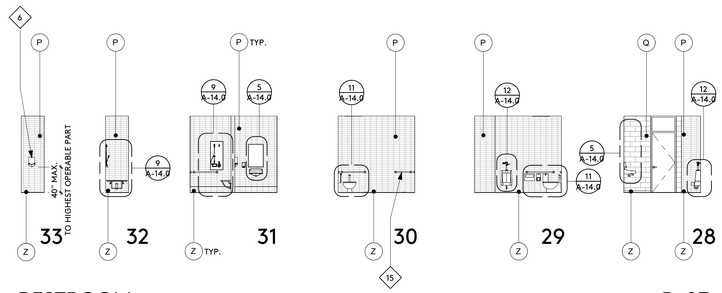

RESTROOM B-08

1/8" = 1'-0"

RESTROOM B-07

1/8" = 1'-0"

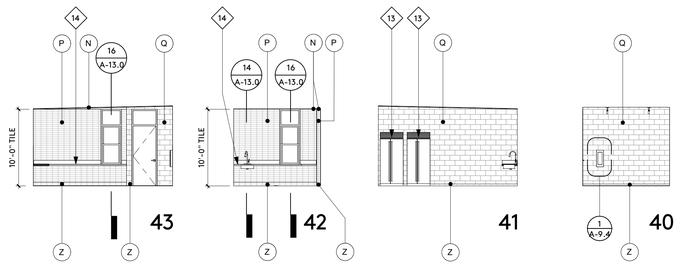

KEYNOTES

- 1 / A-1.1 — DETAIL REFERENCE NUMBER; SHEET REFERENCE NUMBER
- 423L — AWS PLASTIC-LAMINATE-CLAD ARCHITECTURAL CABINETS (ARCHITECTURAL WOODWORK STANDARD) CDS NUMBER; 'L' (LOCK); 'M' (MODIFIED); 36 DEPTH (INCHES); 24 HEIGHT (INCHES); 94 WIDTH (INCHES)
- # — FINISH CALLOUT, SEE FINISH SCHEDULE
- # — PLAN KEYNOTES
- 8' - 0" FOF — BUILDING DIMENSION FACE OF STUD; BUILDING DIMENSION FACES OF FINISH, WHERE OCCURS
- 8'-0" — BUILDING CENTERLINE DIMENSION
- TACTILE SIGNAGE, SEE TACTILE SIGNAGE DETAILS, SHEET A-12.0
- 48" MAX. / 27" MAX. — FIRE EXTINGUISHER CABINET — 1 / A-9.4

SYMBOLS

TICKET BOOTH/CONCESSIONS 1

4/13/2023 9:05:57 AM

IDENTIFICATION STAMP
DIV. OF THE STATE ARCHITECT
APP: 03-122664 INC:
REVIEWED FOR
SS ☑ FLS ☑ ACS ☑
DATE: 05/12/2023

pjhm architects

LICENSED ARCHITECT
EDWARD W. PJHM
NO. C15585
REN. 02/25
STATE OF CALIFORNIA

LA Office: 837 Traction Avenue, #410, Los Angeles, CA 90013 • LA Phone: 213.278.0172 • Web: pjhm.com
SD Office: 804 Pier View Way #103, Oceanside, CA 92054 • SD Phone: 760.730.5527
OC Office: 24461 Ridge Route Drive #100, Laguna Hills, CA 92653 • OC Phone: 949.496.6191

HIGHLAND HIGH SCHOOL
50M POOL & AQUATICS CENTER

KERN HIGH SCHOOL DISTRICT

1 ADDENDUM NO. 1

INTERIOR ELEVATIONS

A-9.1

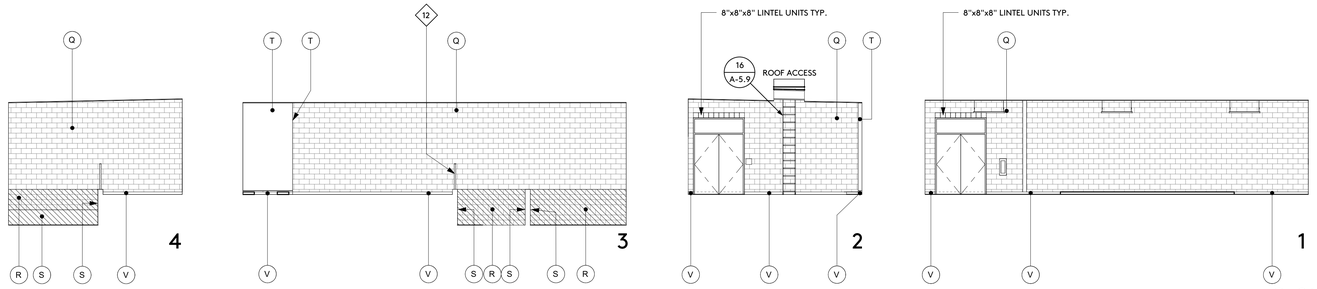

PUMP ROOM

C-01

1/8" = 1'-0"

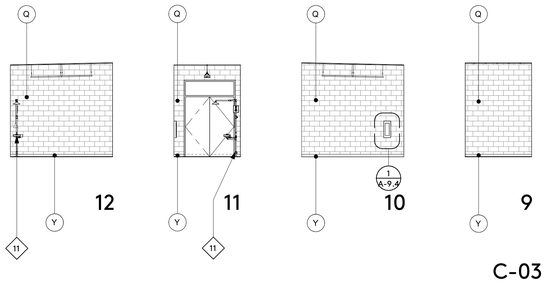

ACID STORAGE

C-03

1/8" = 1'-0"

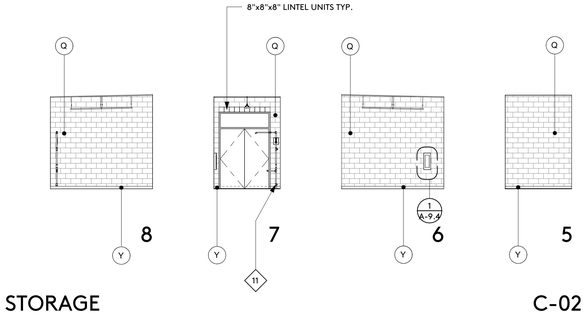

CHLORINE STORAGE

C-02

1/8" = 1'-0"

KEYNOTES

1. METAL LOCKERS
2. METAL LOCKERS EXPANSION TRIM
3. METAL LOCKERS SLOPING TOP PANEL
4. LOCKER ROOM BENCH
5. TOILET SEAT COVER DISPENSERS, SURFACE MOUNTED, SEE TOILET, BATH AND LAUNDRY ACCESSORIES
6. HAND DRYER, SURFACE MOUNTED, SEE TOILET, BATH AND LAUNDRY ACCESSORIES
7. SERVICE SINK, SEE PLUMBING
8. HVAC UNIT, SURFACE MOUNTED, SEE MECHANICAL
9. HVAC DUCT, PAINT FINISH, SEE MECHANICAL
10. ROOF DRAIN PIPES, PAINT FINISH, SEE PLUMBING
11. EMERGENCY SHOWER/EYEWASH STATION, SEE AQUATICS DRAWINGS
12. GUARDRAIL, SEE AQUATICS
13. REFRIGERATOR, OWNER FURNISHED - OWNER INSTALLED
14. STAINLESS STEEL COUNTERTOP
15. GRAB BAR, SEE TOILET, BATH AND LAUNDRY ACCESSORIES
16. WATER HEATER, SEE PLUMBING
17. PRESENTATION DRY ERASE WALL COVERING
18. MARKERBOARD, SURFACE MOUNTED
19. DISPLAY CASE
20. TOILET TISSUE DISPENSER, SURFACE MOUNTED, SEE TOILET, BATH AND LAUNDRY ACCESSORIES
21. SANITARY NAPKIN DISPOSAL, SEE TOILET, BATH AND LAUNDRY ACCESSORIES
22. SHOWER CURTAIN, SHOWER CURTAIN ROD, SHOWER CURTAIN HOOKS, SEE TOILET, BATH AND LAUNDRY ACCESSORIES

SYMBOLS

IDENTIFICATION STAMP
DIV. OF THE STATE ARCHITECT
APP: 03-122664 INC:
REVIEWED FOR
SS ☑ FLS ☑ ACS ☑
DATE: 05/12/2023

pjhm architects

LICENSED ARCHITECT
RICHARD W. PRIMUS
NO. C15585
REN. 02/25
STATE OF CALIFORNIA

HIGHLAND HIGH SCHOOL
50M POOL & AQUATICS CENTER

KERN HIGH SCHOOL DISTRICT

INTERIOR ELEVATIONS

A-9.2

OC Office: 24461 Ridge Route Drive #100, Laguna Hills, CA 92653 • OC Phone: 949.496.6191 • SD Office: 804 Pier View Way #103, Oceanside, CA 92054 • SD Phone: 760.730.5527 • LA Office: 837 Traction Avenue, #410, Los Angeles, CA 90013 • LA Phone: 213.278.0172 • Web: pjhm.com

4/13/2023 11:27:09 AM

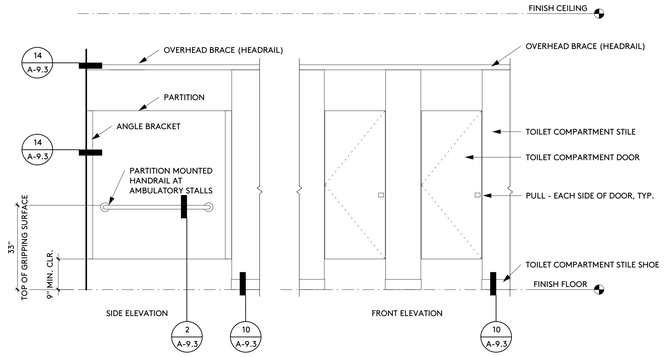

TOILET COMPARTMENTS 9

1/2" = 1'-0"

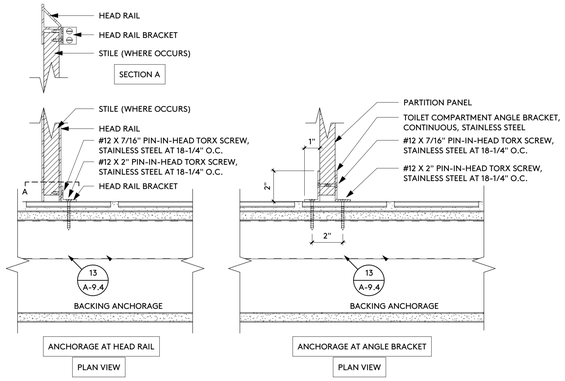

ANCHORAGE - TOILET COMPARTMENTS 14

3" = 1'-0"

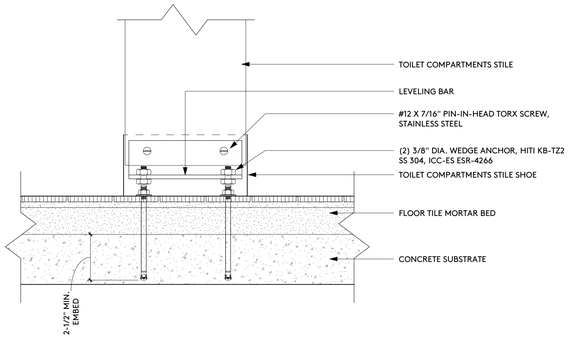

ANCHORAGE - TOILET COMPARTMENTS 10

3" = 1'-0"

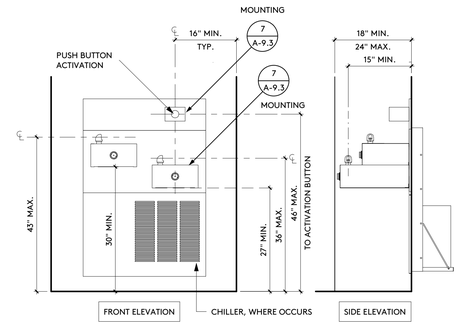

NOTE:
- DIMENSIONS ARE TO FACE OF FINISH U.O.N.
- FOR ADDITIONAL INFORMATION SEE SPECIFICATIONS

DRINKING FOUNTAIN 6

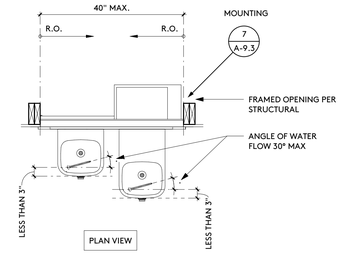

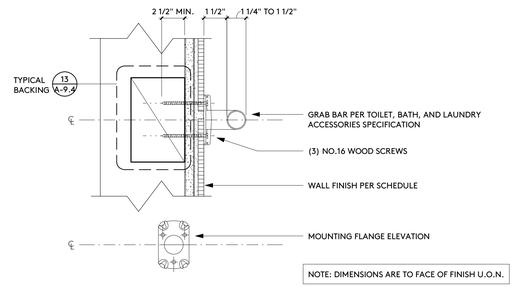

NOTE: DIMENSIONS ARE TO FACE OF FINISH U.O.N.

ANCHORAGE - GRAB BAR 1

3" = 1'-0"

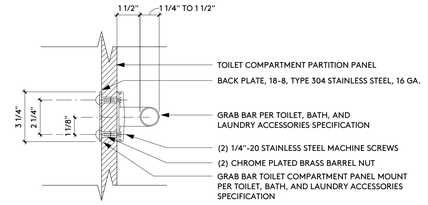

NOTE: DIMENSIONS ARE TO FACE OF FINISH U.O.N.

ANCHORAGE - GRAB BAR 2

3" = 1'-0"

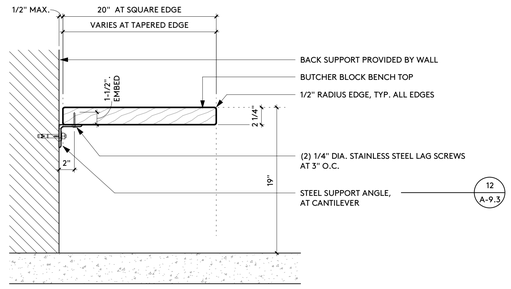

ANCHORAGE - LOCKER ROOM BENCH 15

1 1/2" = 1'-0"

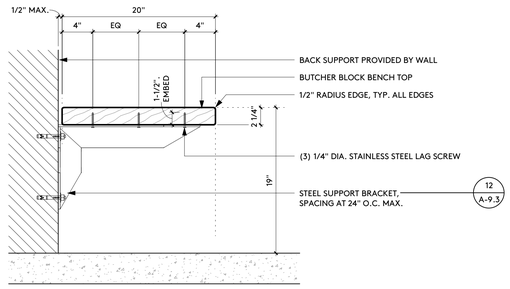

ANCHORAGE - LOCKER ROOM BENCH 11

1 1/2" = 1'-0"

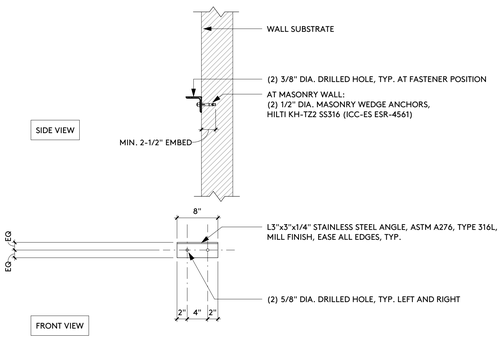

NOTE:
ALL STAINLESS STEEL BRACKET COMPONENTS SHALL BE A.E.S.S. LEVEL 3

BENCH SUPPORT ANGLE 16

1" = 1'-0"

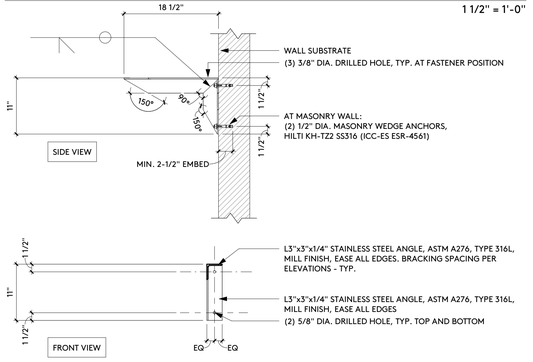

NOTE:
ALL STAINLESS STEEL BRACKET COMPONENTS SHALL BE A.E.S.S. LEVEL 3

BENCH SUPPORT BRACKET 12

1" = 1'-0"

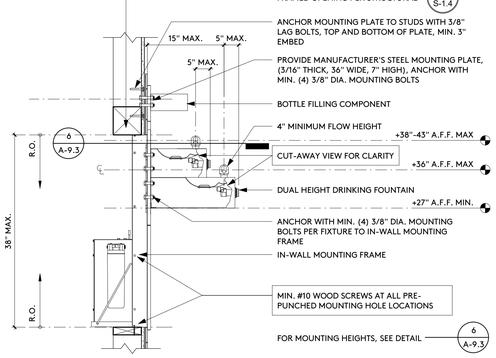

ANCHORAGE - DRINKING FOUNTAIN 7

3/4" = 1'-0"

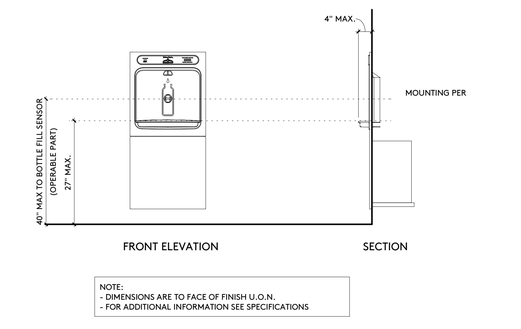

NOTE:
- DIMENSIONS ARE TO FACE OF FINISH U.O.N.
- FOR ADDITIONAL INFORMATION SEE SPECIFICATIONS

BOTTLE FILLING STATION 8

3/4" = 1'-0"

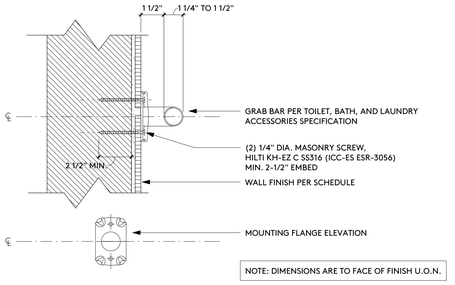

NOTE: DIMENSIONS ARE TO FACE OF FINISH U.O.N.

ANCHORAGE - GRAB BAR 3

3" = 1'-0"

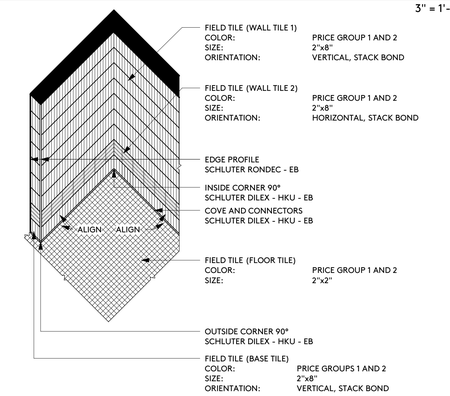

FIELD TILE LAYOUT 4

3/8" = 1'-0"

IDENTIFICATION STAMP
DIV. OF THE STATE ARCHITECT
APP: 03-122664 INC:
REVIEWED FOR
SS ☑ FLS ☑ ACS ☑
DATE: 05/12/2023

pjhm architects
LICENSED ARCHITECT
EDWARD W. PJHM
RENEWAL 08/31/2025
NO. C15585
REN. 02/25
STATE OF CALIFORNIA
SD Phone: 760.730.5527 • LA Office: 837 Traction Avenue, #410, Los Angeles, CA 90013 • LA Phone: 213.278.0172 • Web: pjhm.com
OC Office: 24461 Ridge Route Drive #100, Laguna Hills, CA 92653 • OC Phone: 949.496.6191 • SD Office: 804 Pier View Way #103, Oceanside, CA 92054

HIGHLAND HIGH SCHOOL
50M POOL & AQUATICS CENTER

KERN HIGH SCHOOL DISTRICT

INTERIOR ELEVATION DETAILS

A-9.3

4/13/2023 9:06:00 AM

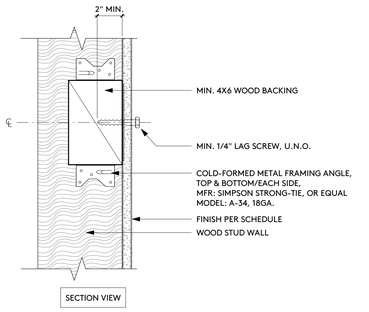

ANCHORAGE - TYPICAL BACKING 13

3" = 1'-0"

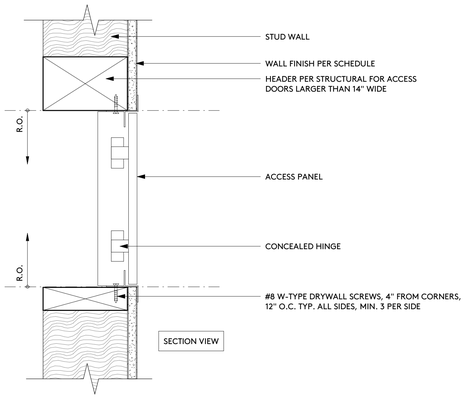

ANCHORAGE - WALL ACCESS PANEL 9

3" = 1'-0"

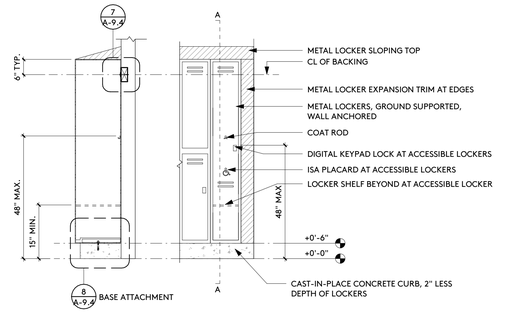

METALS LOCKERS - WALL MOUNTED 5

1/2" = 1'-0"

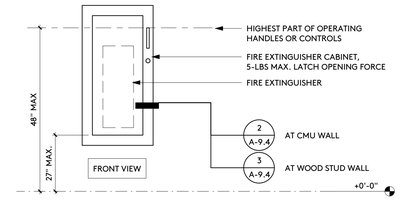

NOTE: FIRE EXTINGUISHER CABINET HANDLE SHALL NOT REQUIRE TIGHT GRASPING, PINCHING OR TWISTING OF THE WRIST

FIRE EXTINGUISHER CABINET 1

1" = 1'-0"

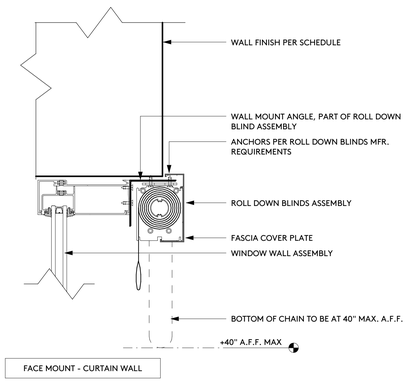

ANCHORAGE - ROLL DOWN BLINDS 14

3" = 1'-0"

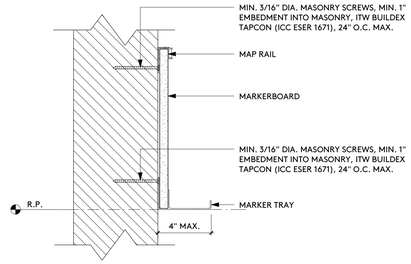

NOTE: DIMENSIONS ARE TO FACE OF FINISH U.O.N.

ANCHORAGE - GRAB BAR 6

3" = 1'-0"

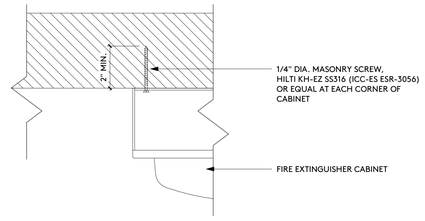

ANCHORAGE - FIRE EXTINGUISHER CABINET 2

3" = 1'-0"

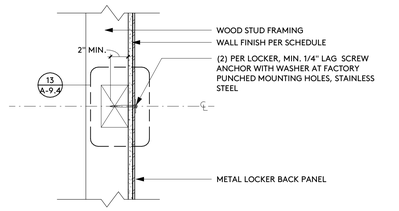

ANCHORAGE - METAL LOCKERS 7

1 1/2" = 1'-0"

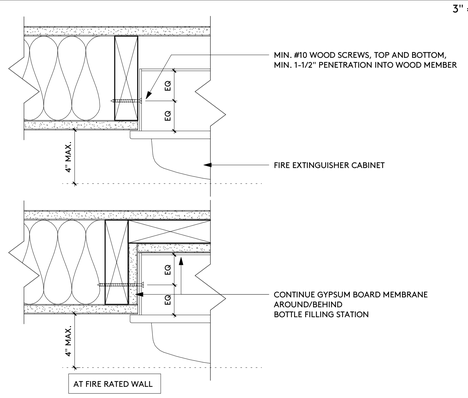

ANCHORAGE - FIRE EXTINGUISHER CABINET 3

3" = 1'-0"

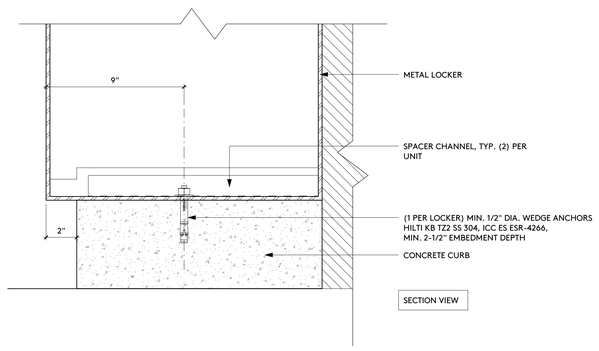

ANCHORAGE - METAL LOCKERS 8

3" = 1'-0"

IDENTIFICATION STAMP
DIV. OF THE STATE ARCHITECT
APP: 03-122664 INC:
REVIEWED FOR
SS ☑ FLS ☑ ACS ☑
DATE: 05/12/2023

pjhm architects

LICENSED ARCHITECT
RICHARD W. FRIEND
NO. C15585
REN. 02/25
STATE OF CALIFORNIA

OC Office: 24461 Ridge Route Drive #100, Laguna Hills, CA 92653 • OC Phone: 949.496.6191 • SD Office: 804 Pier View Way #103, Oceanside, CA 92054 • SD Phone: 760.730.5527 • LA Office: 837 Traction Avenue, #410, Los Angeles, CA 90013 • LA Phone: 213.278.0172 • Web: pjhm.com

HIGHLAND HIGH SCHOOL
50M POOL & AQUATICS CENTER

KERN HIGH SCHOOL DISTRICT

INTERIOR ELEVATION DETAILS

A-9.4

4/13/2023 9:06:01 AM

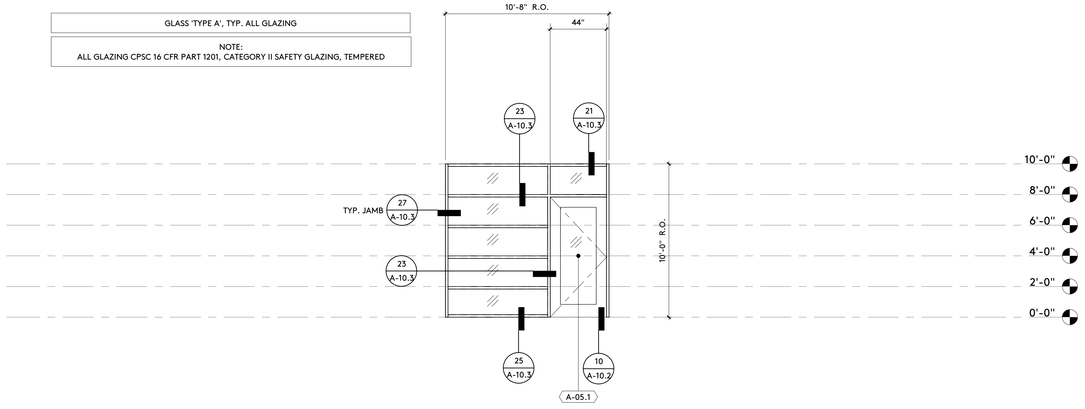

WINDOW WALL ELEVATION - WW-A5.1

G

1/4" = 1'-0"

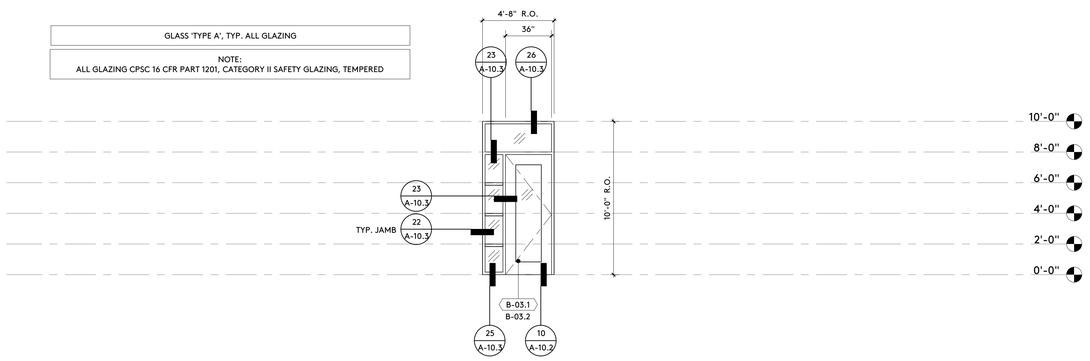

WINDOW WALL ELEVATION - WW-B3.1, WW-B3.2

J

1/4" = 1'-0"

OPENING NUMBER	ROOM NUMBER	OPENING FUNCTION	FRAME TYPE	FRAME MATERIAL	DOOR TYPE	DOOR MATERIAL	GLAZING, GLASS TYPE	FIRE RATINGS (IN MIN.)			EXIT DEVICE REQUIRED	DOOR HARDWARE GROUP	LOCKABLE INSIDE	OPENING DETAILS					OPENING DETAILS: SEE SHEETS: A-10.2, A-10.3, A-10.4 DOOR HARDWARE GROUP: SEE SPECIFICATION SECTION 08 71 00 GLAZING GLASS TYPE: SEE SPECIFICATION SECTION 08 80 00 NOTE! DOOR SHALL BE OPENABLE FROM INSIDE WITH A SINGLE MOTION WITHOUT THE USE OF ANY TOOLS, EFFORT, OR SPECIAL KNOWLEDGE. COMMENTS
								FRAME FIRE ASSEMBLY	DOOR FIRE ASSEMBLY	SIDELITE/TRANSOM GLASS FIRE ASSEMBLY				HEAD	JAMB	SILL	THRESHOLD	MULLION/TRANSOM	
A-01.1	A-01	EXTERIOR DOOR	A	HOLLOW METAL	1	HOLLOW METAL	A	-	-	-	NO	1	No	21	22	-	10	23	
A-02.1	A-02	EXTERIOR DOOR	A	HOLLOW METAL	1	HOLLOW METAL	B	-	-	-	NO	2	No	26	22	-	15	23	
A-02.2	A-02	EXTERIOR DOOR	A	HOLLOW METAL	1	HOLLOW METAL	B	-	-	-	NO	2	No	26	22	-	15	23	
A-03.1	A-03	INTERIOR DOOR	B	HOLLOW METAL	1	HOLLOW METAL	-	-	-	-	NO	3	Yes	2	2	-	5	-	
A-04.1	A-04	INTERIOR DOOR	C	HOLLOW METAL	1	HOLLOW METAL	-	-	-	-	NO	4	No	1	1	-	5	-	
A-04.2	A-04	EXTERIOR DOOR	C	HOLLOW METAL	1	HOLLOW METAL	-	-	-	-	NO	5	No	6	7	-	10	-	
A-05.1	A-05	WINDOW WALL	WW-A5.1	HOLLOW METAL	3	HOLLOW METAL	-	-	-	-	NO	5	No	-	-	-	-	-	SEE WINDOW WALL ELEVATIONS
A-07.1	A-07	INTERIOR DOOR	B	HOLLOW METAL	1	HOLLOW METAL	-	-	-	-	NO	3	Yes	2	2	-	5	-	
A-08.1	A-08	EXTERIOR DOOR	A	HOLLOW METAL	1	HOLLOW METAL	B	-	-	-	NO	2	No	26	22	-	15	23	
A-08.2	A-08	EXTERIOR DOOR	A	HOLLOW METAL	1	HOLLOW METAL	B	-	-	-	NO	2	No	26	22	-	15	23	
A-09.1	A-09	EXTERIOR DOOR	A	HOLLOW METAL	1	HOLLOW METAL	A	-	-	-	NO	1	No	21	22	-	10	23	

BUILDING A

B-01.1	B-01	EXTERIOR DOOR	A	HOLLOW METAL	1	HOLLOW METAL	B				NO	7		21	22	-	15	23	
B-02.1	B-02	EXTERIOR DOOR	A	HOLLOW METAL	1	HOLLOW METAL	B				NO	7		21	22	-	15	23	
B-03.1	B-03	WINDOW WALL	WW-B3.1	HOLLOW METAL	3	HOLLOW METAL	-	-	-	-	NO	8	Yes	-	-	-	-	-	SEE WINDOW WALL ELEVATIONS
B-03.2	B-03	WINDOW WALL	WW-B3.2	HOLLOW METAL	3	HOLLOW METAL	-	-	-	-	NO	8	Yes	-	-	-	-	-	SEE WINDOW WALL ELEVATIONS
B-03.3	B-03	EXTERIOR WINDOW	E	HOLLOW METAL			A					-		26	22	24	-	23	
B-03.4	B-03	EXTERIOR WINDOW	E	HOLLOW METAL			A					-		26	22	24	-	23	
B-03.5	B-03	EXTERIOR WINDOW	E	HOLLOW METAL			A					-		26	22	24	-	23	
B-04.1	B-04	INTERIOR DOOR	B	HOLLOW METAL	1	HOLLOW METAL	-				NO	9		1	1	-	5	-	
B-05.1	B-05	INTERIOR DOOR	B	HOLLOW METAL	1	HOLLOW METAL	-				NO	9		1	1	-	5	-	
B-06.1	B-06	EXTERIOR DOOR	A	HOLLOW METAL	1	HOLLOW METAL	A				NO	10		26	22	-	10	23	
B-07.1	B-07	EXTERIOR DOOR	A	HOLLOW METAL	1	HOLLOW METAL	B				NO	11		26	22	-	20	23	
B-08.1	B-08	EXTERIOR DOOR	A	HOLLOW METAL	1	HOLLOW METAL	B				NO	11		26	22	-	20	23	
B-09.1	B-09	EXTERIOR DOOR	A	HOLLOW METAL	3	HOLLOW METAL	A				NO	12		6	7	-	10	23	
B-09.2	B-09	EXTERIOR WINDOW	F	HOLLOW METAL			-					-		-	-	-	-	-	SEE FRAME TYPE 'F'
B-09.3	B-09	EXTERIOR WINDOW	F	HOLLOW METAL			-					-		-	-	-	-	-	SEE FRAME TYPE 'F'

BUILDING B

C-01.1	C-01	EXTERIOR DOOR	D	FIBERGLASS	2	FIBERGLASS	A	-	-	-	NO	14		41	42	-	45	43	
C-01.2	C-01	EXTERIOR DOOR	D	FIBERGLASS	2	FIBERGLASS	A	-	-	-	NO	13		41	42	-	45	43	
C-02.1	C-02	EXTERIOR DOOR	D	FIBERGLASS	2	FIBERGLASS	A	-	-	-	NO	13		41	42	-	44	43	
C-03.1	C-03	EXTERIOR DOOR	D	FIBERGLASS	2	FIBERGLASS	A	-	-	-	NO	13		41	42/47	-	44	43	

BUILDING C

OPENING SCHEDULE

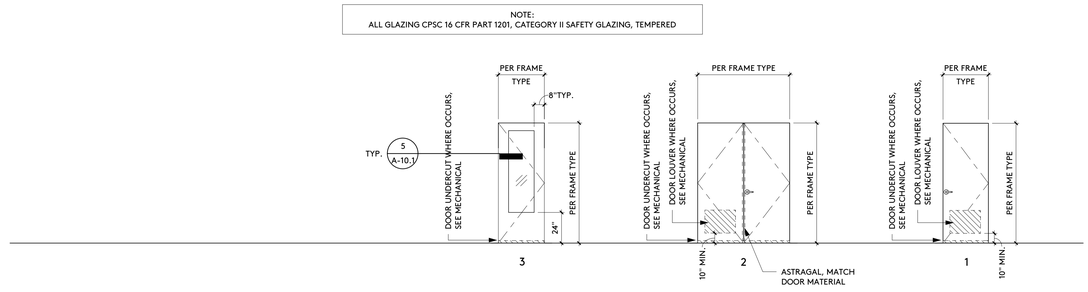

DOOR TYPES

1/4" = 1'-0"

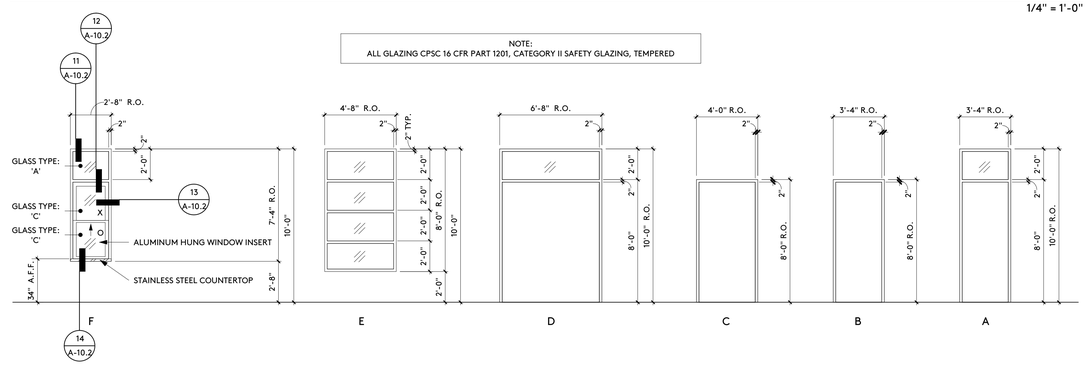

FRAME TYPES

1/4" = 1'-0"

IDENTIFICATION STAMP
DIV. OF THE STATE ARCHITECT
APP: 03-122664 INC:
REVIEWED FOR
SS ☑ FLS ☑ ACS ☑
DATE: 05/12/2023

pjhm architects

LICENSED ARCHITECT
RICHARD W. PRIEST
NO. C15585
REN. 02/25
STATE OF CALIFORNIA

OC Office: 24461 Ridge Route Drive #100, Laguna Hills, CA 92653 • OC Phone: 949.496.6191 • SD Office: 804 Pier View Way #103, Oceanside, CA 92054 • SD Phone: 760.730.5527 • LA Office: 837 Traction Avenue, #410, Los Angeles, CA 90013 • LA Phone: 213.278.0172 • Web: pjhm.com

HIGHLAND HIGH SCHOOL
50M POOL & AQUATICS CENTER

KERN HIGH SCHOOL DISTRICT

OPENING SCHEDULE/TYPES

A-10.0

4/13/2023 9:06:03 AM

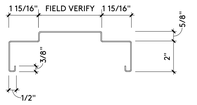

HOLLOW METAL FRAME PROFILE 12A

3" = 1'-0"

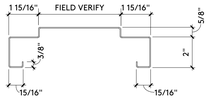

HOLLOW METAL FRAME PROFILE 12B

3" = 1'-0"

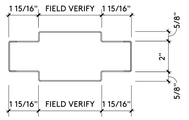

HOLLOW METAL FRAME PROFILE 13A

3" = 1'-0"

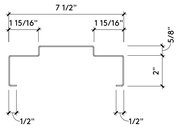

HOLLOW METAL FRAME PROFILE 13B

3" = 1'-0"

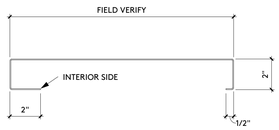

HOLLOW METAL FRAME PROFILE 14A

3" = 1'-0"

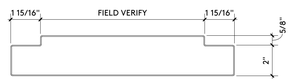

HOLLOW METAL FRAME PROFILE 14B

3" = 1'-0"

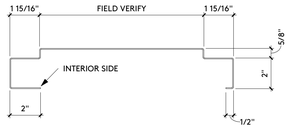

HOLLOW METAL FRAME PROFILE 15A

3" = 1'-0"

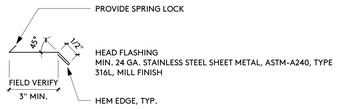

PROFILE 9A

6" = 1'-0"

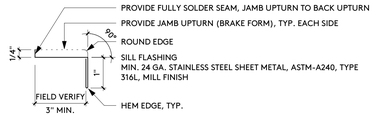

PROFILE 9B

6" = 1'-0"

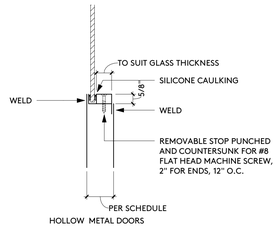

NOTE: DOOR LITE FRAMES WILL NOT BE ACCEPTED

DOOR LITE ANCHORAGE 5

3" = 1'-0"

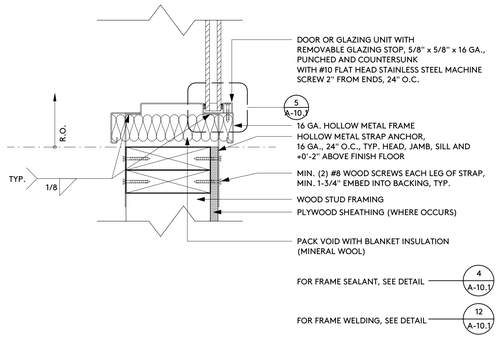

HM FRAME ANCHORAGE 1

3" = 1'-0"

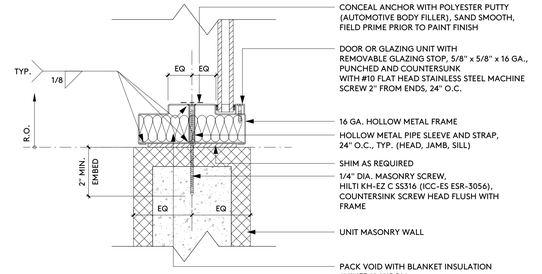

HOLLOW METAL FRAME ANCHORAGE 2

3" = 1'-0"

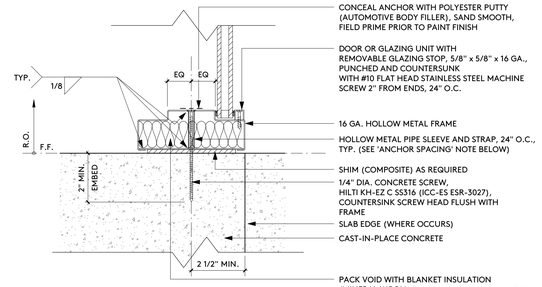

ANCHOR SPACING:
SILL DIMENSION ≤ 24" = 2 ANCHORS MINIMUM
SILL DIMENSION > 24" = 2 ANCHORS + 1 ANCHOR FOR EVERY 24" OF SILL LENGTH

HOLLOW METAL FRAME ANCHORAGE 3

3" = 1'-0"

NOTE:
1. ALL HOLLOW METAL FRAMES SHALL BE FULL PROFILE WELDED IN ACCORDANCE WITH ANSI A250.8 - CURRENT EDITION, SECTION 2.4.1.3
2. KNOCK-DOWN FRAMES WILL NOT BE PERMITTED
3. ALL FRAME ANCHORAGE MUST BE WELDED TO FRAME MEMBERS, 'TWIST-IN' STYLE OR LOOSE ANCHORS WILL NOT BE PERMITTED

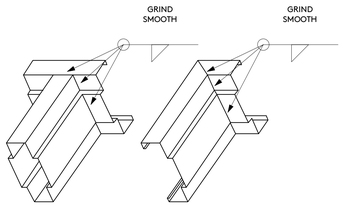

HOLLOW METAL FRAME WELDING 12

3" = 1'-0"

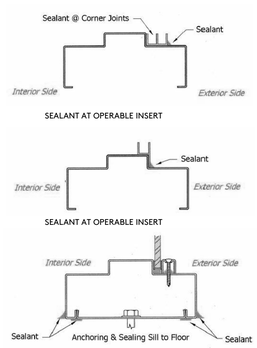

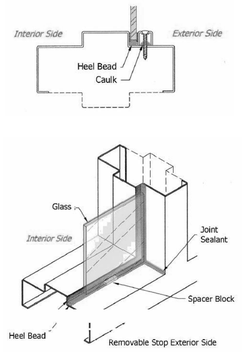

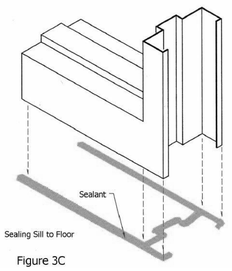

Figure 3C

HM FRAME SEALANT 4

SCALE: NO SCALE

IDENTIFICATION STAMP
DIV. OF THE STATE ARCHITECT
APP: 03-122664 INC:
REVIEWED FOR
SS ☑ FLS ☑ ACS ☑
DATE: 05/12/2023

pjhm architects
LICENSED ARCHITECT
RICHARD W. PRIMUS
NO. C15585
REN. 02/25
STATE OF CALIFORNIA
OC Office: 24461 Ridge Route Drive #100, Laguna Hills, CA 92653 • OC Phone: 949.496.6191 • SD Office: 804 Pier View Way #103, Oceanside, CA 92054 • SD Phone: 760.730.5527 • LA Office: 837 Traction Avenue, #410, Los Angeles, CA 90013 • LA Phone: 213.278.0172 • Web: pjhm.com

HIGHLAND HIGH SCHOOL
50M POOL & AQUATICS CENTER

KERN HIGH SCHOOL DISTRICT

OPENING DETAILS

A-10.1

4/13/2023 9:06:04 AM

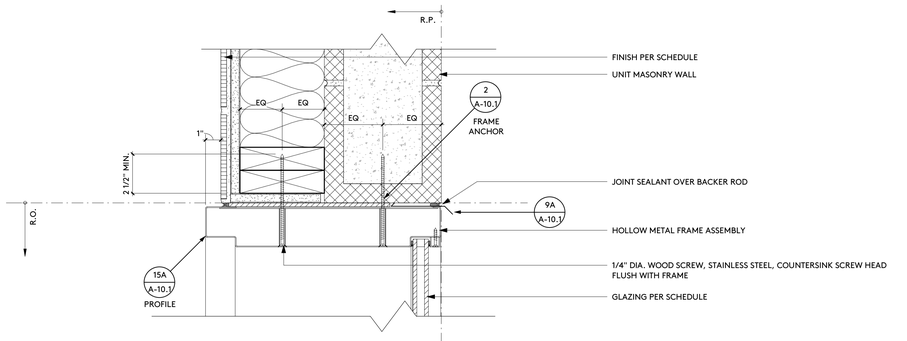

HEAD 11

3" = 1'-0"

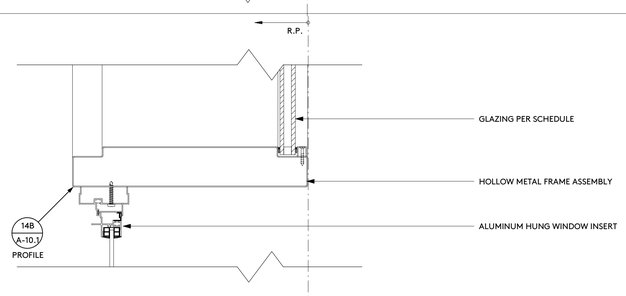

TRANSOM 12

3" = 1'-0"

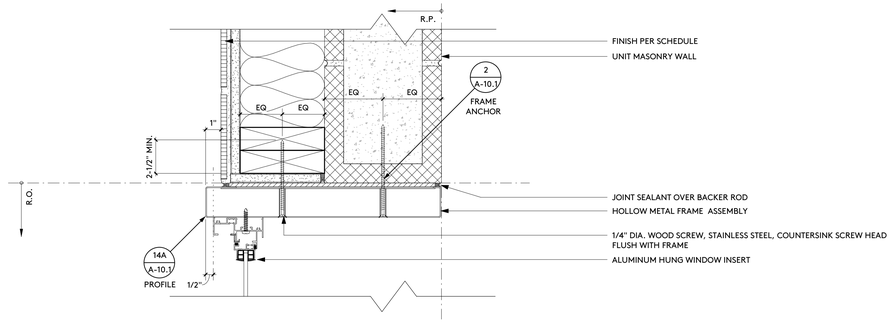

JAMB 13

3" = 1'-0"

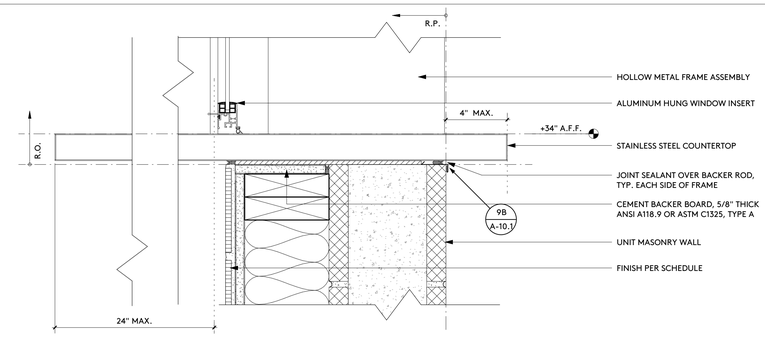

SILL 14

3" = 1'-0"

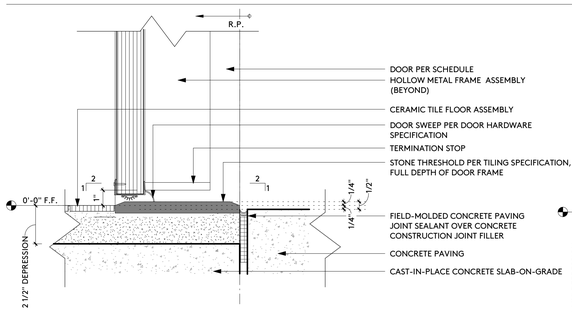

THRESHOLD 20

3" = 1'-0"

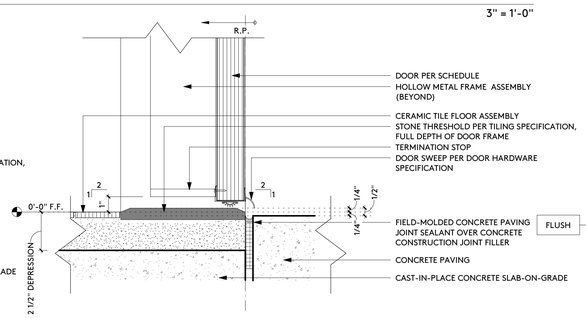

THRESHOLD 15

3" = 1'-0"

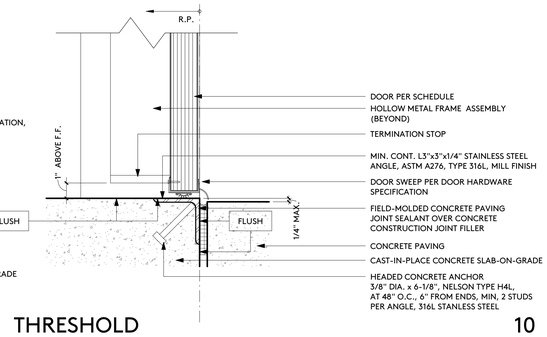

THRESHOLD 10

3" = 1'-0"

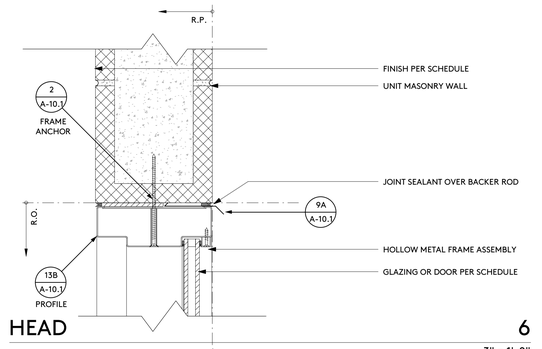

HEAD 6

3" = 1'-0"

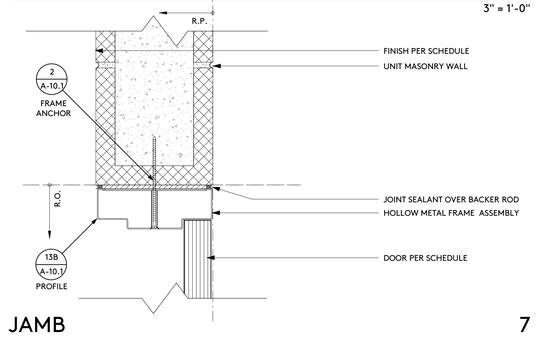

JAMB 7

3" = 1'-0"

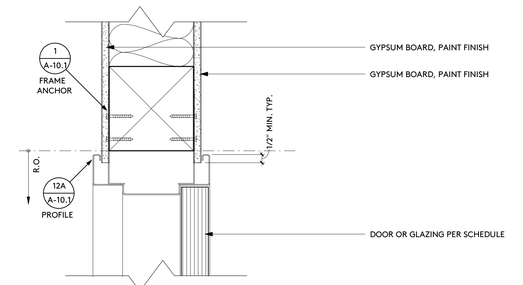

HEAD/JAMB 1

3" = 1'-0"

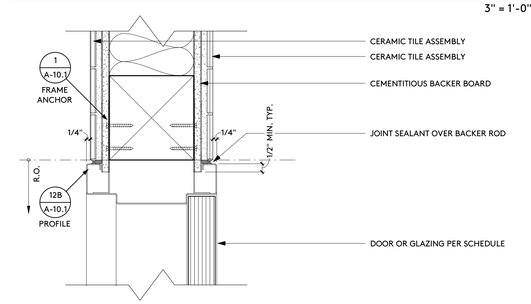

HEAD/JAMB 2

3" = 1'-0"

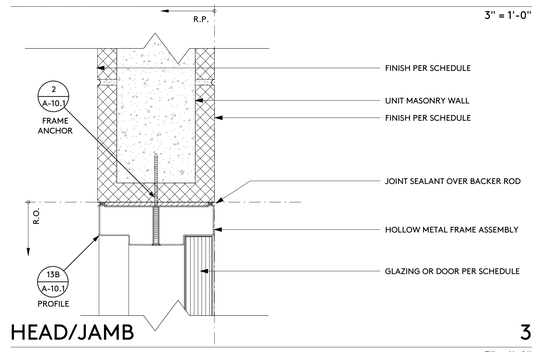

HEAD/JAMB 3

3" = 1'-0"

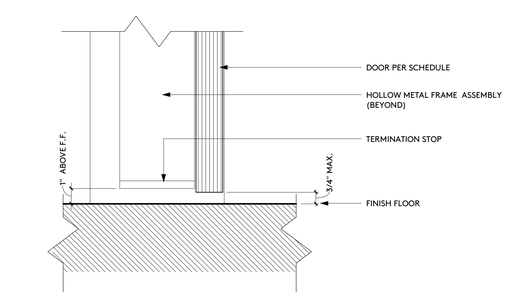

THRESHOLD 5

3" = 1'-0"

IDENTIFICATION STAMP
DIV. OF THE STATE ARCHITECT
APP: 03-122664 INC:
REVIEWED FOR
SS ☑ FLS ☑ ACS ☑
DATE: 05/12/2023

pjhm architects
LICENSED ARCHITECT
RICHARD W. PRIEBE
NO. C15585
REN. 02/25
STATE OF CALIFORNIA
OC Office: 24461 Ridge Route Drive #100, Laguna Hills, CA 92653 • SD Phone: 760.730.5527 • LA Office: 837 Traction Avenue, #410, Los Angeles, CA 90013 • OC Phone: 949.496.6191 • SD Office: 804 Pier View Way #103, Oceanside, CA 92054 • LA Phone: 213.278.0172 • Web: pjhm.com

HIGHLAND HIGH SCHOOL
50M POOL & AQUATICS CENTER

KERN HIGH SCHOOL DISTRICT

OPENING DETAILS

A-10.2

4/13/2023 9:06:05 AM

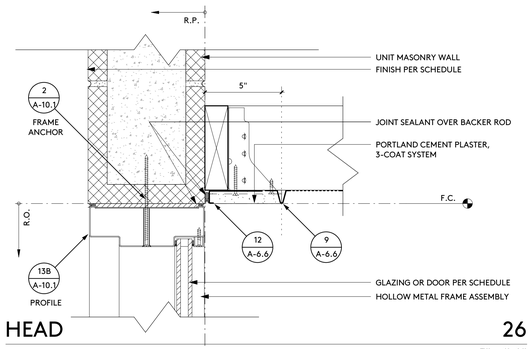

HEAD 26

3" = 1'-0"

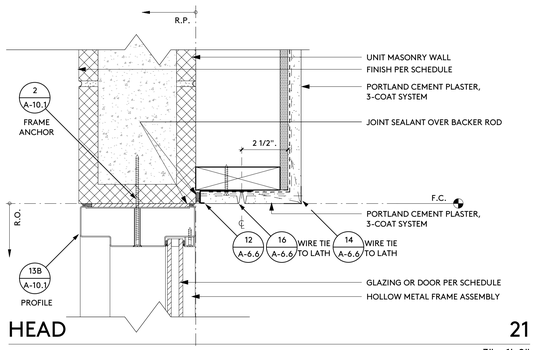

HEAD 21

3" = 1'-0"

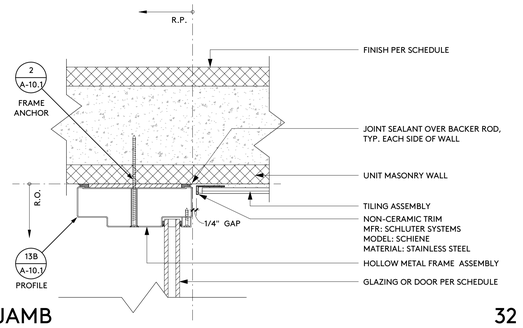

JAMB 32

3" = 1'-0"

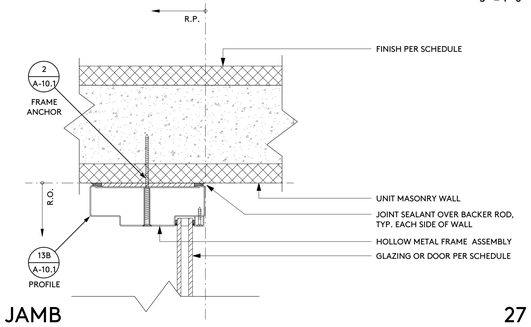

JAMB 27

3" = 1'-0"

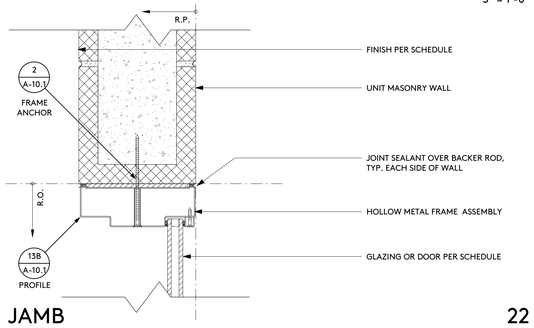

JAMB 22

3" = 1'-0"

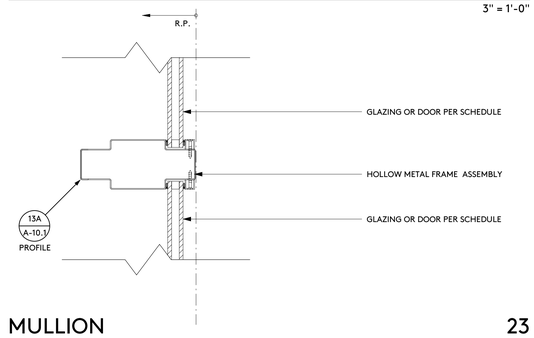

MULLION 23

3" = 1'-0"

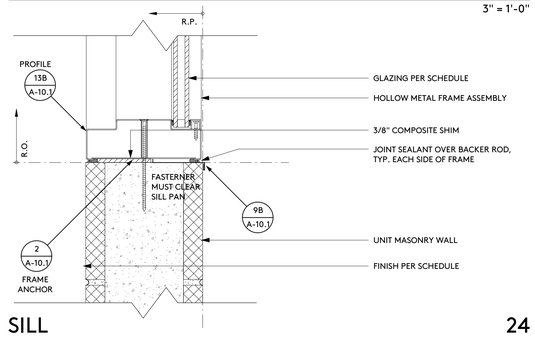

SILL 24

3" = 1'-0"

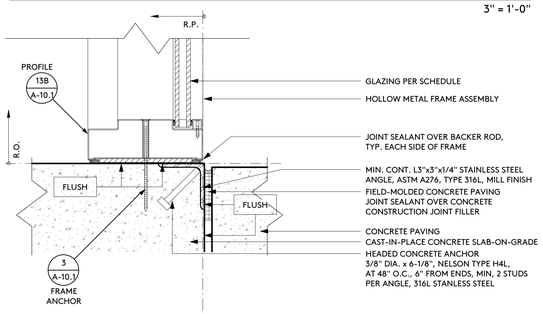

SILL 25

3" = 1'-0"

IDENTIFICATION STAMP
DIV. OF THE STATE ARCHITECT
APP: 03-122664 INC:
REVIEWED FOR
SS ☑ FLS ☑ ACS ☑
DATE: 05/12/2023

pjhm architects

LICENSED ARCHITECT
RICHARD W. FRIEND
NO. C15585
REN. 02/25
STATE OF CALIFORNIA

HIGHLAND HIGH SCHOOL
50M POOL & AQUATICS CENTER

KERN HIGH SCHOOL DISTRICT

OPENING DETAILS

A-10.3

OC Office: 24461 Ridge Route Drive #100, Laguna Hills, CA 92653 • OC Phone: 949.496.6191 • SD Office: 804 Pier View Way #103, Oceanside, CA 92054 • SD Phone: 760.730.5527 • LA Office: 837 Traction Avenue, #410, Los Angeles, CA 90013 • LA Phone: 213.278.0172 • Web: pjhm.com

4/13/2023 9:06:06 AM

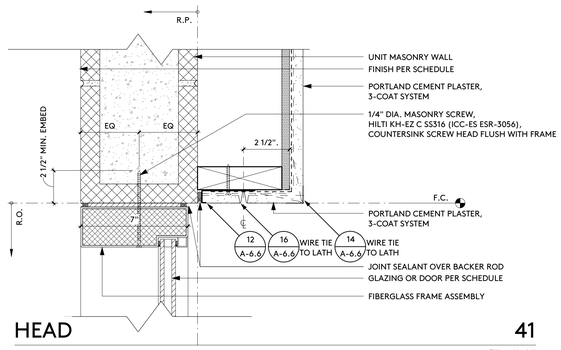

HEAD 41

3" = 1'-0"

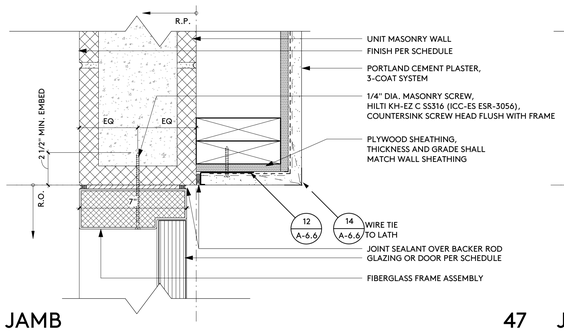

JAMB 47

3" = 1'-0"

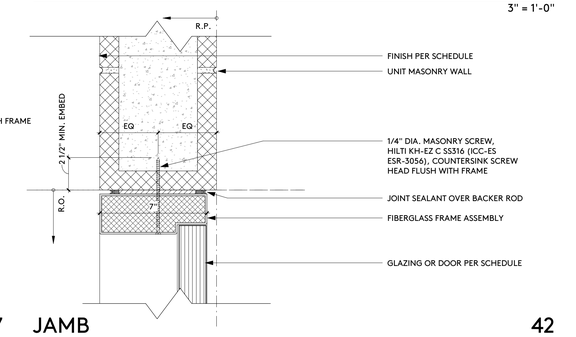

JAMB 42

3" = 1'-0"

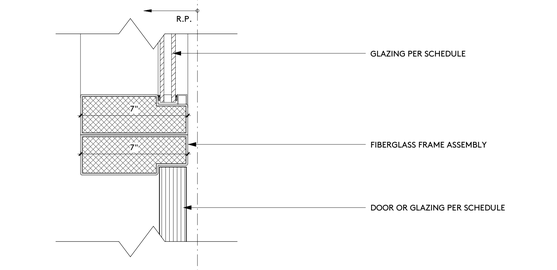

TRANSOM 43

3" = 1'-0"

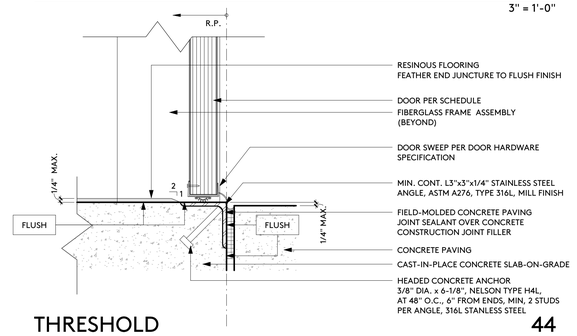

THRESHOLD 44

3" = 1'-0"

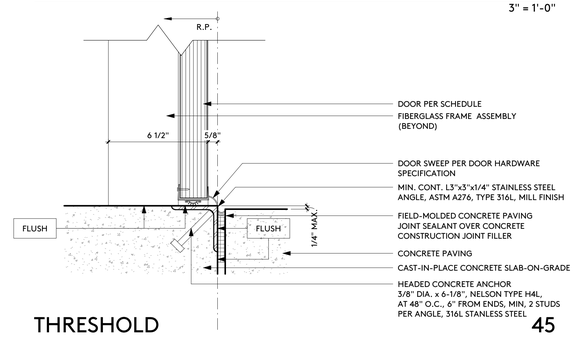

THRESHOLD 45

3" = 1'-0"

IDENTIFICATION STAMP
DIV. OF THE STATE ARCHITECT
APP: 03-122664 INC:
REVIEWED FOR
SS ☑ FLS ☑ ACS ☑
DATE: 05/12/2023

pjhm architects

LICENSED ARCHITECT
RICHARD W. FRIEND
NO. C15585
REN. 02/25
STATE OF CALIFORNIA

OC Office: 24461 Ridge Route Drive #100, Laguna Hills, CA 92653 • OC Phone: 949.496.6191 • SD Office: 804 Pier View Way #103, Oceanside, CA 92054 • SD Phone: 760.730.5527 • LA Office: 837 Traction Avenue, #410, Los Angeles, CA 90013 • LA Phone: 213.278.0172 • Web: pjhm.com

HIGHLAND HIGH SCHOOL
50M POOL & AQUATICS CENTER

KERN HIGH SCHOOL DISTRICT

OPENING DETAILS

A-10.4

4/13/2023 9:06:06 AM

OC Office: 24461 Ridge Route Drive #100, Laguna Hills, CA 92653 • OC Phone: 949.496.6191 • SD Office: 804 Pier View Way #103, Oceanside, CA 92054 • SD Phone: 760.730.5527 • LA Office: 837 Traction Avenue, #410, Los Angeles, CA 90013 • LA Phone: 213.278.0172 • Web: pjhm.com

IDENTIFICATION STAMP
DIV. OF THE STATE ARCHITECT
APP: 03-122664 INC: 1
REVIEWED FOR
SS ☑ FLS ☑ ACS ☑
DATE: 05/12/2023

pjhm architects

LICENSED ARCHITECT
MARSHALL R. GRIMM
No. C-15185
REN: 08/26
STATE OF CALIFORNIA

HIGHLAND HIGH SCHOOL
50M POOL & AQUATICS CENTER

KERN HIGH SCHOOL DISTRICT

1 ADDENDUM NO. 1

FINISH SCHEDULE

A-11.0

FINISH SCHEDULE

ROOM NUMBER	ROOM NAME	FLOORS													WALLS					BASE					CEILINGS						NOTE: ALL FINISHES, MUST COMPLY WITH THE 2019 C.B.C., C.F.C AND TITLE 19 REQUIREMENTS
		A	B	C	D	E	F	G	H	J	K	L	M	N	P	G	R	S	T	U	V	W	X	Y	Z	AA	BB	CC	DD	EE	FF	GG	HH	JJ	KK	LL	MM	
		EPOXY COATING	RESINOUS FLOORING	CERAMIC TILING	-	-	-	-	-	-	POLISHED CONCRETE FINISHING	-	-	GYPSUM BOARD - INTERIOR PAINT FINISH	CERAMIC TILING	CONCRETE UNIT MASONRY - INTERIOR PAINT FINISH	CONCRETE UNIT MASONRY - CRYSTALLINE WATERPROOFING FINISH	CAST-IN-PLACE CONCRETE - CRYSTALLINE WATERPROOFING FINISH	GYPSUM SHEATHING - INTERIOR PAINT FINISH	-	RESILIENT BASE	-	-	RESINOUS FLOORING	CERAMIC TILING	-	-	GYPSUM BOARD - INTERIOR PAINT FINISH	METAL ACOUSTICAL CEILING SUSPENSION ASSEMBLY, ACOUSTICAL CEILING PANEL/METAL PANEL, TNGS/GYP SOFFITS	METAL ACOUSTICAL CEILING SUSPENSION ASSEMBLY, ACOUSTICAL CEILING PANEL/METAL PANEL, TNGS/GYP SOFFITS	GYPSUM SHEATHING - INTERIOR PAINT FINISH	-	-	-	UNDERSIDE OF ROOF FRAMING - NO PAINT FINISH	-	
A-01	CUSTODIAL	●												●															-								
A-02	GIRLS RESTROOM			●											●	●	●								●				●								
A-03	GIRLS LOCKER ROOM			●											●	●	●								●				●								
A-04	STORAGE										●			-	●	●	-				●	●			●				-	●							
A-05	OFFICE										●			●	●	●	-				●	●			●				-	●							
A-06	BOYS LOCKER ROOM			●											●	●	●								●				●								
A-07	BOYS RESTROOM			●											●	●	●								●				●								
A-08	UTILITY		●																	●																
A-09	UTILITY																																				

ROOM NUMBER	ROOM NAME	FLOORS													WALLS					BASE					CEILINGS						NOTE: ALL FINISHES SHALL COMPLY W CBC, CFC, AND TITLE 19.
		A	B	C	D	E	F	G	H	J	K	L	M	N	P	G	R	S	T	U	V	W	X	Y	Z	AA	BB	CC	DD	EE	FF	GG	HH	JJ	KK	LL	MM	
		EPOXY COATING	RESINOUS FLOORING	CERAMIC TILING	-	-	-	-	-	-	POLISHED CONCRETE FINISHING	-	-	GYPSUM BOARD - INTERIOR PAINT FINISH	CERAMIC TILING	CONCRETE UNIT MASONRY - INTERIOR PAINT FINISH	CONCRETE UNIT MASONRY - CRYSTALLINE WATERPROOFING FINISH	CAST-IN-PLACE CONCRETE - CRYSTALLINE WATERPROOFING FINISH	GYPSUM SHEATHING - INTERIOR PAINT FINISH	-	RESILIENT BASE	-	-	RESINOUS FLOORING	CERAMIC TILING	-	-	GYPSUM BOARD - INTERIOR PAINT FINISH	METAL ACOUSTICAL CEILING SUSPENSION ASSEMBLY, ACOUSTICAL CEILING PANEL/METAL PANEL, TNGS/GYP SOFFITS	METAL ACOUSTICAL CEILING SUSPENSION ASSEMBLY, ACOUSTICAL CEILING PANEL/METAL PANEL, TNGS/GYP SOFFITS	GYPSUM SHEATHING - INTERIOR PAINT FINISH	-	-	-	UNDERSIDE OF ROOF FRAMING - NO PAINT FINISH	-	
B-01	RESTROOM			●										●		●					●				●				●								
B-02	RESTROOM			●												●					●				●				●								
B-03	CLASSROOM										●			●	●	●	-				●	●			●				-	●							
B-04	RESTROOM			●										●	●	●	-				●	●			●				-	●							
B-05	UTILITY		●											●							●	●			●				-	●							
B-06	ELECTRICAL/DATA		●											●							●	●			●				-	●							
B-07	RESTROOM			●											●	●	●								●				●								
B-08	RESTROOM			●											●	●	●								●				●								
B-09	1 HOUR SHAFT ENCLOSURE										●			-	●	●	●				-	-			●				-	●							

ROOM NUMBER	ROOM NAME	FLOORS													WALLS					BASE					CEILINGS						NOTE: ALL FINISHES, MUST COMPLY WITH THE 2019 C.B.C., C.F.C AND TITLE 19 REQUIREMENTS
		A	B	C	D	E	F	G	H	J	K	L	M	N	P	G	R	S	T	U	V	W	X	Y	Z	AA	BB	CC	DD	EE	FF	GG	HH	JJ	KK	LL	MM	
		EPOXY COATING	RESINOUS FLOORING	CERAMIC TILING	-	-	-	-	-	-	POLISHED CONCRETE FINISHING	-	-	GYPSUM BOARD - INTERIOR PAINT FINISH	CERAMIC TILING	CONCRETE UNIT MASONRY - INTERIOR PAINT FINISH	CONCRETE UNIT MASONRY - CRYSTALLINE WATERPROOFING FINISH	CAST-IN-PLACE CONCRETE - CRYSTALLINE WATERPROOFING FINISH	GYPSUM SHEATHING - INTERIOR PAINT FINISH	-	RESILIENT BASE	-	-	RESINOUS FLOORING	CERAMIC TILING	-	-	GYPSUM BOARD - INTERIOR PAINT FINISH	METAL ACOUSTICAL CEILING SUSPENSION ASSEMBLY, ACOUSTICAL CEILING PANEL/METAL PANEL, TNGS/GYP SOFFITS	METAL ACOUSTICAL CEILING SUSPENSION ASSEMBLY, ACOUSTICAL CEILING PANEL/METAL PANEL, TNGS/GYP SOFFITS	GYPSUM SHEATHING - INTERIOR PAINT FINISH	-	-	-	UNDERSIDE OF ROOF FRAMING - NO PAINT FINISH	-	
C-01	PUMP ROOM	●													●				●		●								-			●					
C-02	CHLORINE STORAGE	-	●												●				●		-			●					-			●					
C-03	ACID STORAGE	-	●												●				●		-			●					-			●					

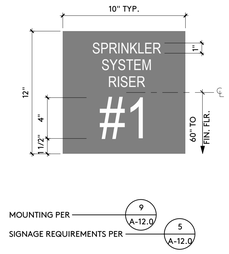

FIRE SPRINKLER RISER ROOM — L

1" = 0'-2"

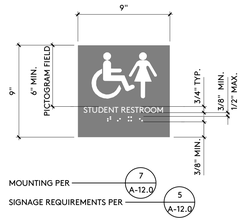

RESTROOM - UNISEX - ISA — M

1" = 0'-2"

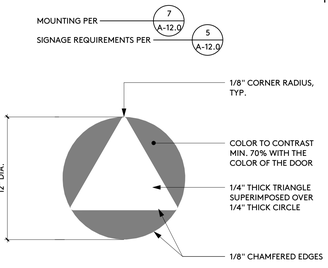

RESTROOM - DOOR - UNISEX — N

1" = 0'-2"

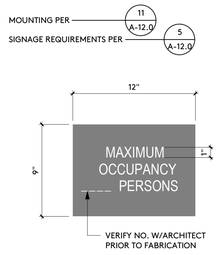

OCCUPANCY — P

1" = 0'-2"

1. ASSISTIVE-LISTENTING SYSTEMS SHALL BE PROVIDED IN ACCORDANCE WITH CBC SECTION 11B-219 AND SHALL COMPLY WITH CBC SECTION 11B-706.
2. THE MINIMUM NUMBER OF RECEIVERS TO BE PROVIDED SHALL BE EQUAL TO 4% OF THE TOTAL NUMBER OF SEATS, BUT IN NO CASE LESS THAN TWO. 25% MINIMUM OF THE RECEIVERS PROVIDED, BUT NO LESS THAN TWO, SHALL BE HEARING-AID COMPATIBLE IN ACCORDANCE WITH CBC SECTION 11B-706.3
3. IF THE SYSTEM PROVIDED IS LIMITED TO SPECIFIC AREAS OR SEATS, THEN SUCH AREAS OR SEATS SHALL BE WITHIN A 50-FOOT VIEWING DISTANCE OF, AND HAVE A COMPLETE VIEW OF, THE STAGE OR PLAYING AREA. CBC SECTION 11B-219.4

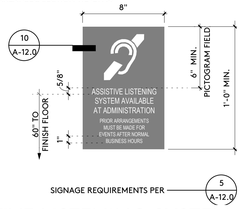

ASSISTIVE LISTENING SYSTEM — Q

1" = 0'-2"

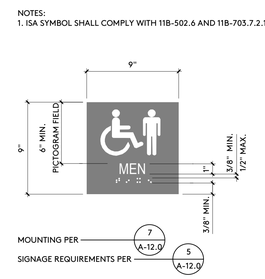

RESTROOM - MEN - ISA — F

1" = 0'-2"

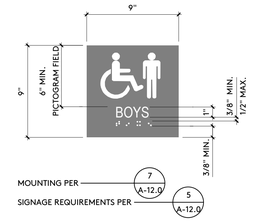

RESTROOM - BOYS - ISA — G

1" = 0'-2"

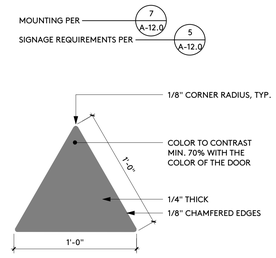

RESTROOM - DOOR - MALE — H

1" = 0'-2"

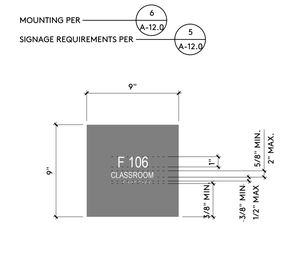

TYPICAL ROOM — J

1" = 0'-2"

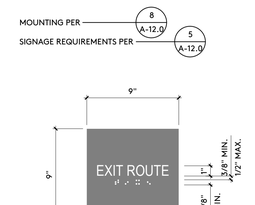

EXIT ROUTE — K

1" = 0'-2"

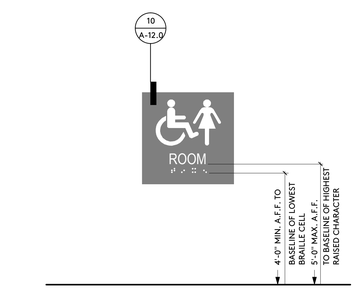

MOUNTING HEIGHTS — 11

1" = 0'-2"

RESTROOM - WOMEN - ISA — A

1" = 0'-2"

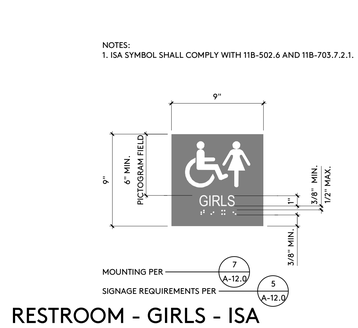

RESTROOM - GIRLS - ISA — B

1" = 0'-2"

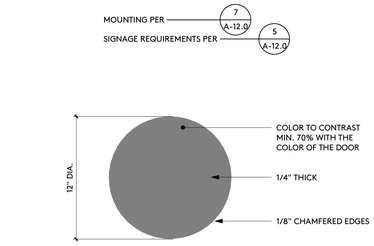

RESTROOM - DOOR - FEMALE — C

1" = 0'-2"

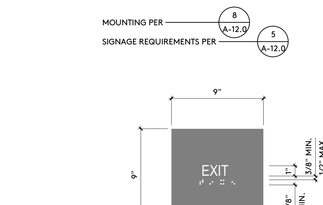

EXIT — E

1" = 0'-2"

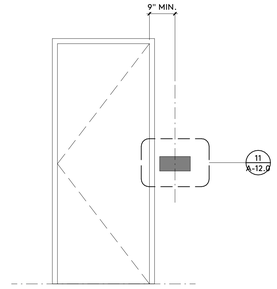

TYPICAL DOOR — 6

1/2" = 1'-0"

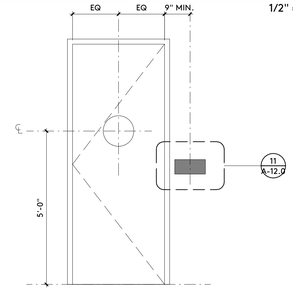

RESTROOM DOOR — 7

1/2" = 1'-0"

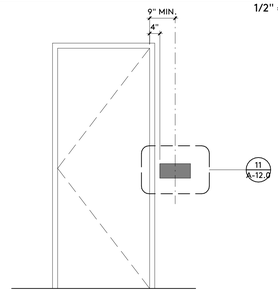

EXIT DOORS — 8

1/2" = 1'-0"

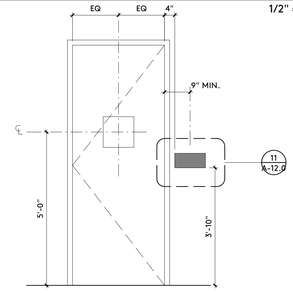

FIRE RISER DOOR — 9

1/2" = 1'-0"

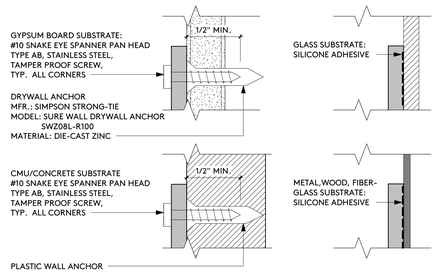

SIGN ANCHORAGE — 10

12" = 1'-0"

SIGNAGE NOTES:

1. ATTACH WITH (4) #10 TAMPER PROOF STAINLESS STEEL SCREWS.
2. PROVIDE METAL OR WOOD BACKING AT WALL SIGNS.
3. **RAISED CHARACTERS** SHALL COMPLY WITH **CBC SECTION 11B-703.2:**
   -DEPTH: IT SHALL BE 1/32 INCH (0.8MM) MINIMUM ABOVE THEIR BACKGROUND AND SHALL BE SANS SERIF UPPERCASE AND BE DUPLICATED IN BRAILLE.
   -HEIGHT: IT SHALL BE 5/8 INCH (15.9MM) MINIMUM AND 2 INCHES (51MM) MAXIMUM BASED ON THE HEIGHT OF THE UPPERCASE LETTER "I". CBC SECTION 11B-703.2.5
   -FINISH AND CONTRAST: CHARACTERS AND THEIR BACKGROUND SHALL HAVE A NON-GLARE FINISH. CHARACTER SHALL CONTRAST WITH THEIR BACKGROUND WITH EITHER LIGHT CHARACTERS ON A DARK BACKGROUND OR DARK CHARACTERS ON A LIGHT BACKGROUND. **CBC SECTION 11B-703.5.1.**
4. **PROPORTIONS:** IT SHALL BE SELECTED FROM FONTS WHERE THE WIDTH OF THE UPPERCASE LETTER "O" IS 60% MINIMUM AND 110% MAXIMUM OF THE HEIGHT OF THE UPPERCASE "I". STROKE THICKNESS OF THE UPPERCASE LETTER "I" SHALL BE 15% MAXIMUM OF THE HEIGHT OF THE CHARACTER. **CBC SECTIONS 11B-703.4 AND 11B-703.6**
5. **CHARACTER SPACING:** SPACING BETWEEN INDIVIDUAL TACTILE CHARACTERS SHALL COMPLY WITH **CBC SECTION 11B-703.2.7.**
6. **LINE SPACING:** SPACING BETWEEN INDIVIDUAL RAISED CHARACTERS SHALL COMPLY WITH **CBC SECTION 11B-703.2.8.**
7. **BRAILLE:** IT SHALL BE CONTRACTED (GRADE 2) AND SHALL COMPLY WITH **CBC SECTIONS 1B-703.3** AND **11B-703.4.** BRAILLE DOTS SHALL HAVE A DOMED AND ROUNDED SHAPE AND SHALL COMPLY WITH **CBC TABLE AND FIGURE 11B-703.3.1.**
8. **MOUNTING HEIGHT:** A TACTILE SIGN SHALL BE LOCATED 48" MINIMUM TO THE BASELINE OF THE LOWEST BRAILLE CELLS AND 60" MAXIMUM TO THE BASELINE OF THE HIGHEST LINE OF THE RAISED CHARACTERS ABOVE THE FINISH FLOOR OR GROUND SURFACE.
9. **MOUNTING LOCATION:** A TACTILE SIGN SHALL BE LOCATED ON THE APPROACH SIDE, AS ONE ENTERS OR EXITS ROOMS OS SPACE, AND BE REACHED WITHIN 0" OF THE REQUIRED CLEAR FLOOR SPACE PER **CBC SECTION AND FIGURE 11B-703.4.2** AS FOLLOWS:
   - A CLEAR FLOOR SPACE OF 18" X 18" MINIMUM, CENTERED ON THE TACTILE CHARACTERS, SHALL BE PROVIDED BEYOND THE ARC OF ANY DOOR SWINGS BETWEEN THE CLOSED POSITION AND 45 DEGREE OPEN POSITION.
   - ON THE WALL AT THE LATCH SIDE OF A SINGLE DOOR.
   - ON THE INACTIVE LEAF OF A DOUBLE DOOR WITH ONE ACTIVE LEAF.
   - ON THE WALL AT THE RIGHT SIDE OF A DOUBLE DOOR WITH TWO ACTIVE LEAFS.
   - ON THE NEAREST ADJACENT WALL WHERE THERE IS NO WALL SPACE AT THE LATCH SIDE OF A SINGLE DOOR OR NO SPACE AT THE RIGHT SIDE OF A DOUBLE DOOR WITH TWO ACTIVE LEAFS.
10. **VISUAL CHARACTERS** SHALL COMPLY WITH **CBC SECTION 11B-703.5**
    -VISUAL CHARACTERS SHALL BE 40" MINIMUM FINISH FLOOR OR GROUND.
    -CHARACTER HEIGHT SHALL BE DETERMINED BASED UPON HEIGHT ABOVE GROUND AND HORIZONTAL VIEWING DISTANCE PER CBC TABLE 11B-705.5.5.
    -PROPORTIONS FOR VISUAL CHARACTERS SHALL BE SELECTED FROM FONTS WHERE THE WIDTH OF THE UPPERCASE LETTER "O" IS 60% MINIMUM AND 110% MAXIMUM OF THE HEIGHT OF THE UPPERCASE LETTER "I". CBC SECTION 11B-703.5.4.
    -STROKE THICKNESS OF THE UPPERCASE LETTER "I" SHALL BE 10% MINIMUM AND 20% MAXIMUM OF THE HEIGHT OF THE CHARACTER. CBC SECTION 11B-703.5.7.
    -LINE SPACING BETWEEN THE BASELINES OF SEPARATE LINES OF CHARACTERS WITHIN A MESSAGE SHALL BE 135% MIN. AND 170% MAX. OF THE CHARACTER HEIGHT PER CBC SECTION 11B-703.5.9.
    -CHARACTER SPACING BETWEEN INDIVIDUAL ADJACENT CHARACTERS SHALL BE 10% MIN. AND 35% MAX. OF CHARACTER HEIGHT PER **CBC SECTION 11B-703.5.8.**
11. **PICTOGRAMS** SHALL COMPLY WITH **CBC SECTION 11B-703.6.**
12. **SYMBOL OF ACCESSIBILITY** SHALL COMPLY WITH **CBC SECTION 11B-703.7.**
    - THE SYMBOL SHALL CONSIST OF A LIGHT FIGURE ON A DARK BACKGROUND OR A DARK FIGURE ON A LIGHT BACKGROUND. **CBC SECTION 11B-703.7.2.1 EXCEPTION 1.**

TEMPLATE FOR CHECKING CHARACTER AND STROKE WIDTH TO HEIGHT PROPORTIONS

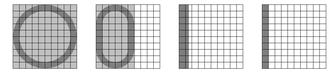

1:1:1 110% MAX. | 3:5 60% MIN. | 1.5:10 15% MAX. | 1:10 10% MIN.

13. **11B-703.3 BRAILLE.** BRAILLE SHALL BE CONTRACTED (GRADE 2) AND SHALL COMPLY WITH **CBC SECTIONS 11B-703.3 AND 11B-703.4.**
14. **11B-703.3.1 DIMENSIONS AND CAPITALIZATION.** BRAILLE DOTS SHALL HAVE A DOMED OR ROUNDED SHAPE AND SHALL COMPLY WITH TABLE 11B-703.3.1. THE INDICATION OF AN UPPERCASE LETTER OR LETTERS SHALL ONLY BE USED BEFORE THE FIRST WORD OF SENTENCES, PROPER NOUNS AND NAMES, INDIVIDUAL LETTERS OF THE ALPHABET, INITITALS, AND ACRONYMS.

MEASUREMENT RANGE	MINIMUM IN INCHES MAXIMUM IN INCHES
DOT BASE DIAMETER	0.059 (1.5 mm) TO 0.063 (1.6 mm)
DISTANCE BETWEEN TWO DOTS IN THE SAME CELL[1]	0.100 (2.5 mm)
DISTANCE BETWEEN CORRESPONDING DOTS IN ADJACENT CELLS[1]	0.300 (7.6 mm)
DOT HEIGHT	0.025 (0.6 mm) TO 0.037 (0.9 mm)
DISTANCE BETWEEN CORRESPONDING DOTS FROM ONE CELL DIRECTLY BELOW[1]	0.395 (10 mm) TO 0.400 (10.2 mm)

1. MEASURED CENTER TO CENTER

TABLE 11B-703.3.1
BRAILLE DIMENSIONS

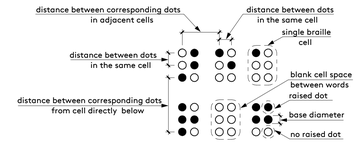

FIGURE 11B-703.3.1
BRAILLE MEASUREMENT

15. **11B-703.3.2 POSITION.** BRAILLE SHALL BE POSITIONED BELOW THE CORRESPONDING TEXT IN A HORIZONTAL FORMAT, FLUSH LEFT OR CENTERED. IF TEXT IS MULTI-LINED, BRAILLE SHALL BE PLACED BELOW THE ENTIRE TEXT. BRAILLE SHALL BE SEPARATED 3/8 INCH (9.5 mm) MINIMUM AND 1/2 INCH (12.7 mm) MAXIMUM FROM ANY OTHER TACTILE CHARACTERS AND 3/8 INCH (9.5 mm) MINIMUM FROM RAISED BORDERS AND DECORATIVE ELEMENTS.
16. **MATERIAL NOTES:**

SIZE:	AS INDICATED
FONT:	HELVETICA (OR SIMILAR, SANS SERIF STYLE, VERIFY WITH ARCHITECT)
SHEEN:	MATTE
GRAPHICS:	RAISED 1/32" PRINTED GRAPHICS ON CONTRASTING BACKGROUND
TEXT COLOR:	PER ARCHITECT
BACKGROUND COLOR:	PER ARCHITECT
MATERIAL THICKNESS:	1/4"

GENERAL NOTES — 5

1" = 0'-2"

IDENTIFICATION STAMP
DIV. OF THE STATE ARCHITECT
APP: 03-122664 INC:
REVIEWED FOR
SS ☑ FLS ☑ ACS ☑
DATE: 05/12/2023

pjhm architects
LA Phone: 213.278.0172 • Web: pjhm.com
LA Office: 837 Traction Avenue, #410, Los Angeles, CA 90013 • SD Phone: 760.730.5527
OC Office: 24461 Ridge Route Drive #100, Laguna Hills, CA 92653 • OC Phone: 949.496.6191 • SD Office: 804 Pier View Way #103, Oceanside, CA 92054

LICENSED ARCHITECT
RICHARD W. FRIEDMAN
NO. C15585
REN. 02/25
STATE OF CALIFORNIA

HIGHLAND HIGH SCHOOL
50M POOL & AQUATICS CENTER

KERN HIGH SCHOOL DISTRICT

TACTILE SIGNAGE DETAILS

A-12.0

4/13/2023 9:06:08 AM

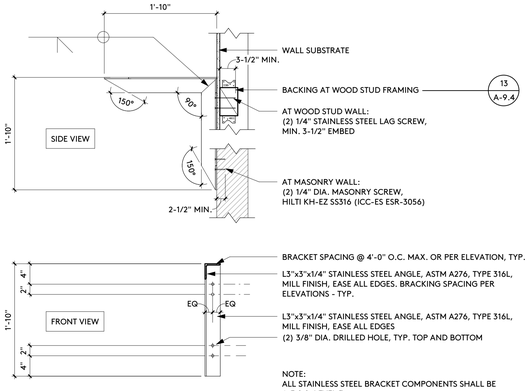

COUNTERTOP SUPPORT BRACKET 13

1" = 1'-0"

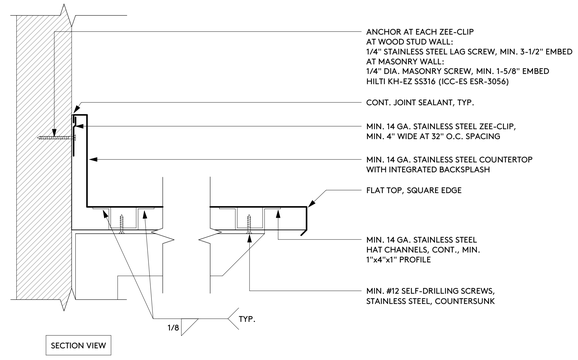

ANCHORAGE - COUNTERTOP 9

3" = 1'-0"

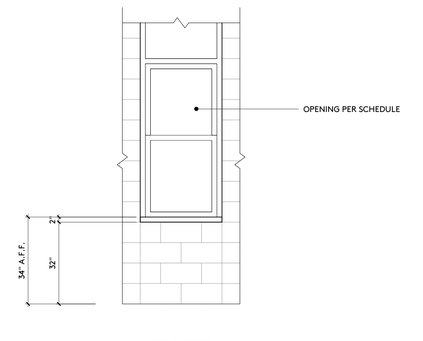

ELEVATION - COUNTERTOP 5

1/2" = 1'-0"

STAINLESS STEEL COUNTERTOP GENERAL NOTES

1. ALL MATERIAL SHALL BE MINIMUM 14 GAUGE TYPE 304 STAINLESS STEEL
2. SQUARE EDGE ON FRONT OF COUNTERTOP
3. COUNTERTOP ENDS TURNED DOWN 90 DEGREES
4. TOP SHALL BE REINFORCED WITH WELDED-ON HAT CHANNELS
5. COUNTERTOP SHALL HAVE INTEGRAL 6-INCH HIGH BACKSPLASH AND END SPLASH WHERE SHOWN
6. COUNTERTOP SHALL HAVE NSF CERTIFICATIONS/APPROVALS
7. COUNTERTOP SHALL INCLUDE INTEGRAL SINK BOWLS
8. COUNTERTOP SHALL HAVE LATEX SOUND DEADENING
9. NO TRIM PERMITTED, 1/8" MAX. TOLERANCE
10. HYDRAULIC KNOCK-OUTS FOR ALL UTILITIES AT COUNTERTOPS

WOOD PANELING EDGE DIAGRAM 1

3/8" = 1'-0"

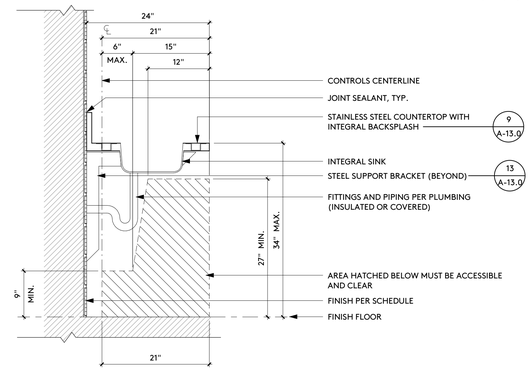

SECTION - COUNTERTOP 14

1" = 1'-0"

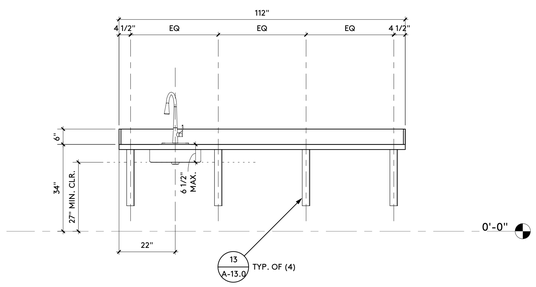

ELEVATION - COUNTERTOP 10

1/2" = 1'-0"

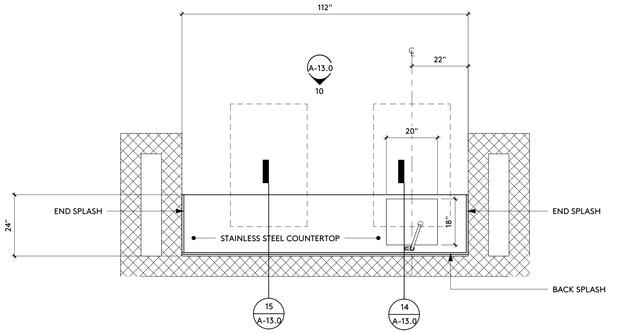

PLAN - COUNTERTOP

1/2" = 1'-0"

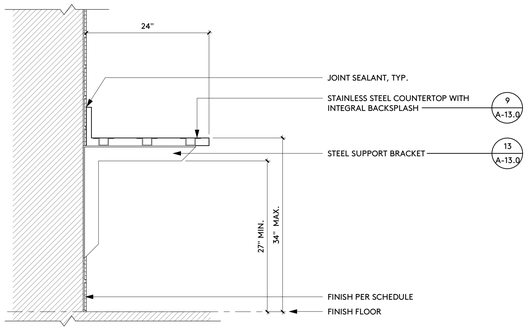

SECTION - COUNTERTOP 15

1" = 1'-0"

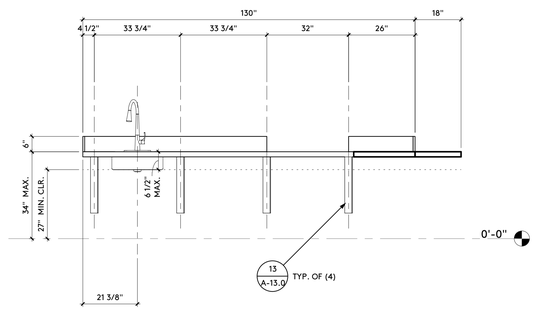

EMPLOYEE WORKSTATION SIDE

ELEVATION - COUNTERTOP 11

1/2" = 1'-0"

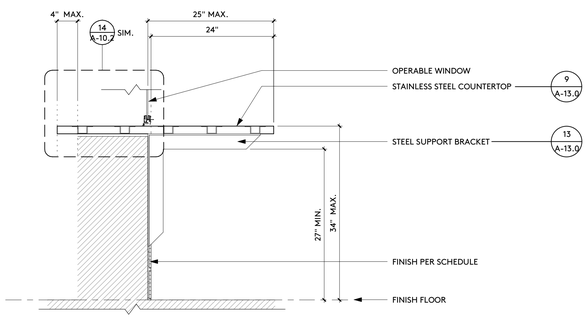

SECTION - COUNTERTOP 16

1" = 1'-0"

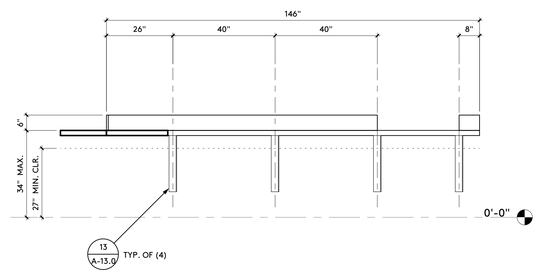

EMPLOYEE WORKSTATION SIDE

ELEVATION - COUNTERTOP 12

1/2" = 1'-0"

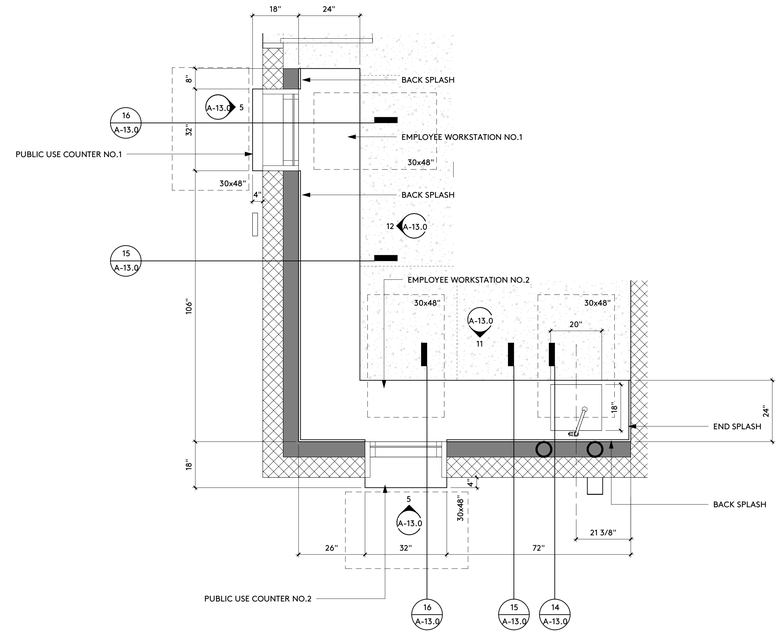

PLAN - COUNTERTOP 2

1/2" = 1'-0"

IDENTIFICATION STAMP
DIV. OF THE STATE ARCHITECT
APP: 03-122664 INC:
REVIEWED FOR
SS ☑ FLS ☑ ACS ☑
DATE: 05/12/2023

pjhm architects

LICENSED ARCHITECT
RICHARD W. PRIMM
NO. C15585
REN. 02/25
STATE OF CALIFORNIA

SD Phone: 760.730.5527 • LA Office: 837 Traction Avenue, #410, Los Angeles, CA 90013 • LA Phone: 213.278.0172 • Web: pjhm.com

OC Office: 24461 Ridge Route Drive #100, Laguna Hills, CA 92653 • OC Phone: 949.496.6191 • SD Office: 804 Pier View Way #103, Oceanside, CA 92054

HIGHLAND HIGH SCHOOL
50M POOL & AQUATICS CENTER

KERN HIGH SCHOOL DISTRICT

COUNTERTOP DETAILS

A-13.0

4/13/2023 9:06:09 AM

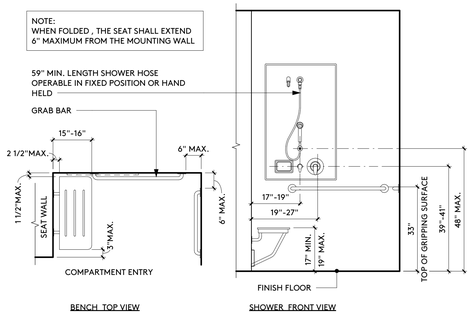

ACCESSIBLE SHOWER 9

1/2" = 1'-0"

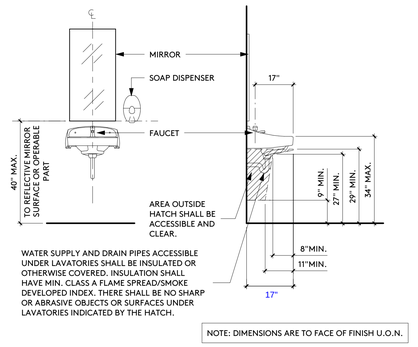

ACCESSIBLE RESTROOM - LAVATORY 5

1/2" = 1'-0"

	ADULT	AGES 3 - 4	AGES 5 - 8	AGES 9 - 12
TOILET OFFSET	17"-18"	12"	12"-15"	15"-18"
TOILET SEAT HEIGHT	17"-19"	11"-12"	12"-15"	15"-17"
TOP OF GRAB BAR GRIPPING SURFACE	33"-36"	18"-20"	20"-25"	25"-27"
T.P. DISPENSER OUTLET	19" MIN.	14"	14"-17"	17"-19"
FURTHEST T.P. DISPENSER IN FRONT OF W.C.	7"-9" TO CENTERLINE	7"-9" TO CENTERLINE	7"-9" TO CENTERLINE	7"-9" TO CENTERLINE
LAV/SINK RIM HEIGHT	34" MAX.	31" MAX.	31" MAX.	31" MAX.
LAV/SINK KNEE CLEARANCE	27" MIN. (29" MIN. AT APRON FOR AVATORY)	PARALLEL APPROACH PERMITTED	AGE 6-8, 24" MIN, AGE 5, PARALLEL APPROACH PERMITTED	24" MIN
URINAL HEIGHT	17" MAX.	17" MAX.	17" MAX.	17" MAX.
URINAL PROJECTION	13-1/2" MIN.	13-1/2" MIN.	13-1/2" MIN.	13-1/2" MIN.
URINAL FLUSH CONTROL HEIGHT	44" MAX.	44" MAX.	44" MAX.	44" MAX.
HIGH D.F. SPOUT HEIGHT	38"-43"	38"-43"	38"-43"	38"-43"
LOW D.F. APPROACH, SPOUT HEIGHT, AND SPOUT LOCATION FROM FRONT EDGE OF THE UNIT INCLUDING BUMPERS	FRONT APPROACH PER 11B-306, 36" MAX. A.F.F. & 5" MAX. FROM FRONT EDGE OF THE UNIT	PARALLEL APPROACH IS PERMITTED IF [OMIT] FRONT EDGE OF THE UNIT	PARALLEL APPROACH IS PERMITTED IF [OMIT] FRONT EDGE OF THE UNIT	PARALLEL APPROACH IS PERMITTED IF [OMIT] FRONT EDGE OF THE UNIT
D.F. OPERABLE PARTS	6" MAX. FROM FRONT EDGE OF THE UNIT	6" MAX. FROM FRONT EDGE OF THE UNIT	6" MAX. FROM FRONT EDGE OF THE UNIT	6" MAX. FROM FRONT EDGE OF THE UNIT
CANTILEVER D.F. PROJECTION	18"-19"	-	-	-
TOE CLEARANCE TO TOILET PARTITION	9" MIN.	12" MIN.	12" MIN.	12" MIN.
SHELF HEIGHT	40"-48"	40"-48"	40"-48"	40"-48"
MIRROR HEIGHT (BOTTOM EDGE OF REFLECTING SURFACE)	40" MAX. (ABOVE LAV OR COUNTERTOP) 35" MAX. (NOT ABOVE LAV NOR COUNTERTOP)	40" MAX. (ABOVE LAV OR COUNTERTOP) 35" MAX. (NOT ABOVE LAV NOR COUNTERTOP)	40" MAX. (ABOVE LAV OR COUNTERTOP) 35" MAX. (NOT ABOVE LAV NOR COUNTERTOP)	40" MAX. (ABOVE LAV OR COUNTERTOP) 35" MAX. (NOT ABOVE LAV NOR COUNTERTOP)
MIRROR HEIGHT (BOTTOM EDGE OF REFLECTING SURFACE) IN DRESSING, FITTING, & LOCKER ROOMS	20" MAX.	20" MAX.	20" MAX.	20" MAX.

NOTE: ALL HEIGHT DIMENSIONS ARE A.F.F. (OR A.F.G. FOR EXTERIOR).
ALL HORIZONTAL DIMENSIONS ARE TO FACE OF FINISH

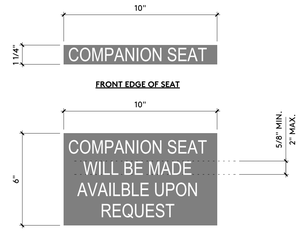

FONT: PER ARCHITECT (SANS SERIF STYLE)
SHEEN: MATTE
TEXT COLOR: WHITE
BACKGROUND COLOR: PER ARCHITECT

COMPANION SIGNAGE 6

3" = 1'-0"

ACCESSIBLE DIMENSIONS 2

12" = 1'-0"

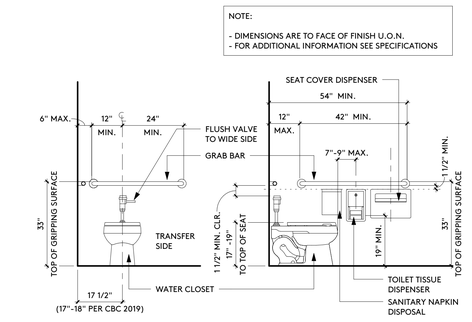

ACCESSIBLE WATER CLOSET 11

1/2" = 1'-0"

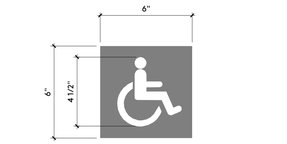

FONT: HELVETICA (OR SIMILAR, SANS SERIF STYLE, VERIFY WITH ARCHITECT)
SHEEN: MATTE
GRAPHICS: WHITE
BACKGROUND COLOR: BLUE FED. COLOR 15090 OF FED. STD. 595C

NOTE: WHERE USED, ISA SHALL MATCH COLOR AND PROPORTIONS PER FIG. 11B-703.7.2.1

ISA SIGNAGE 7

3" = 1'-0"

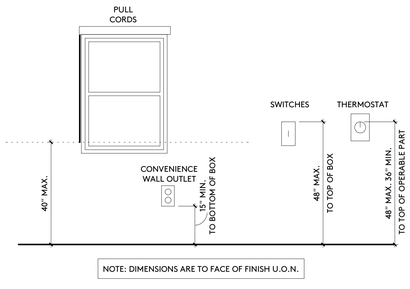

CONTROLS/SWITCHES/OUTLETS 3

1/2" = 1'-0"

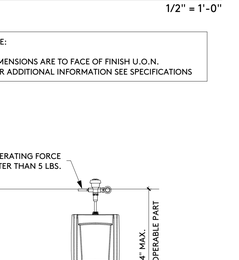

ACCESSIBLE URINAL 12

1/2" = 1'-0"

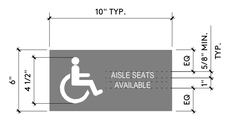

AISLE SEAT AVAILABILITY 8

1" = 0'-2"

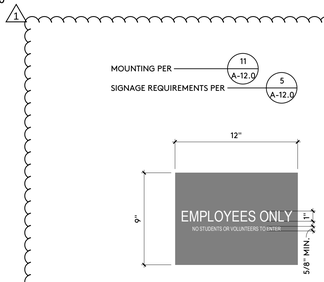

EMPLOYEES ONLY 4

1" = 0'-2"

pjhm architects
OC Office: 24461 Ridge Route Drive #100, Laguna Hills, CA 92653 • OC Phone: 949.496.6191 • SD Office: 804 Pier View Way #103, Oceanside, CA 92054 • SD Phone: 760.730.5527 • LA Office: 837 Traction Avenue, #410, Los Angeles, CA 90013 • LA Phone: 213.278.0172 • Web: pjhm.com

IDENTIFICATION STAMP
DIV. OF THE STATE ARCHITECT
APP: 03-122664 INC:
REVIEWED FOR
SS ☑ FLS ☑ ACS ☑
DATE: 05/12/2023

LICENSED ARCHITECT
RICHARD W. FRIEDMAN
NO. C15585
REN. 02/25
STATE OF CALIFORNIA

HIGHLAND HIGH SCHOOL
50M POOL & AQUATICS CENTER
KERN HIGH SCHOOL DISTRICT

1 ADDENDUM NO. 1

ACCESSIBILITY DETAILS

A-14.0

4/13/2023 9:06:10 AM

GENERAL NOTES:

1. DETAILS OF CONSTRUCTION NOT SHOWN SHALL BE OF SAME NATURE AS THOSE SHOWN FOR SIMILAR CONDITIONS. REFER TO THE TYPICAL DETAIL SHEETS FOR TYPICAL DETAILS OF CONSTRUCTION. TYPICAL DETAILS APPLY TO ALL CONSTRUCTION UNLESS SPECIFICALLY NOTED OR SHOWN OTHERWISE. WHERE CONDITIONS REQUIRE MODIFICATIONS OF A TYPICAL DETAIL, THE CONTRACTOR SHALL SUBMIT MODIFIED DETAIL FOR APPROVAL BY THE ENGINEER OF RECORD PRIOR TO FABRICATION AND INSTALLATION. DETAILS OF CONSTRUCTION NOT SHOWN SHALL BE OF SAME NATURE AS THOSE SHOWN FOR SIMILAR CONSTRUCTION.

2. CONTRACTOR SHALL CONSIDER THE PROJECT SPECIFICATIONS A PART OF THE CONTRACT DOCUMENTS. WHERE INFORMATION IS CONFLICTING, SPECIFIC DETAILS SHALL GOVERN OVER TYPICAL DETAILS WHICH SHALL GOVERN OVER THESE NOTES WHICH SHALL GOVERN OVER SPECIFICATIONS.

3. ALL DIMENSIONS ON STRUCTURAL DRAWINGS SHALL BE CHECKED AGAINST ARCHITECTURAL DIMENSIONS. DO NOT SCALE DRAWINGS. IF DIMENSIONS ARE OMITTED OR NOT CLEAR, CONTACT THE ARCHITECT (ARCH) OR STRUCTURAL ENGINEER OF RECORD (SEOR). ALL DIMENSIONS RELATED TO EXISTING CONDITIONS SHALL BE FIELD VERIFIED BY THE CONTRACTOR. DIMENSIONS ARE TO THE FACE OF STUDS, AND TO CENTERLINE OF COLUMNS UNO.

4. IT IS THE CONTRACTOR'S RESPONSIBILITY TO IMMEDIATELY NOTIFY THE SEOR OF ANY CONFLICTS BETWEEN THE STRUCTURAL DRAWINGS AND OTHER DRAWINGS; OR EXISTING CONDITIONS NOT SHOWN OR DIFFERENT FROM THOSE SHOWN ON DRAWINGS PRIOR TO COMMENCEMENT OF WORK. THE CONTRACTOR IS NOT TO ORDER MATERIAL OR CONSTRUCT ANY PORTION OF THE BUILDING THAT IS IN CONFLICT UNTIL THE CONFLICT IS RESOLVED WITH THE AFFECTED PARTIES.

5. THE STRUCTURAL DRAWINGS AND SPECIFICATIONS REPRESENT THE FINISHED STRUCTURE. UNLESS OTHERWISE SHOWN THEY DO NOT INDICATE METHOD OF CONSTRUCTION. THE CONTRACTOR SHALL PROVIDE ALL MEASURES NECESSARY TO PROTECT THE CONSTRUCTION AND ALL ADJACENT PROPERTIES DURING CONSTRUCTION. SUCH MEASURES SHALL INCLUDE BUT ARE NOT LIMITED TO BRACING, SHORING OF LOADS DUE TO CONSTRUCTION EQUIPMENT, ETC. OBSERVATION VISITS TO THE SITE BY THE ARCHITECT OR SEOR SHALL NOT INCLUDE OBSERVATION OF THE ABOVE ITEMS.

6. SUBSTITUTION REQUESTS FOR MATERIALS SPECIFIED ON THE STRUCTURAL DRAWINGS MAY BE CONSIDERED WITH MATERIALS HAVING EQUIVALENT OR GREATER CAPACITY AND PERFORMANCE. CURRENT EVALUATION REPORTS AND PRODUCT INFORMATION SHALL BE PROVIDED TO THE STRUCTURAL ENGINEER DEMONSTRATING THE RELATIVE CAPACITY AND PERFORMANCE OF THE MATERIAL TO BE SUBSTITUTED. WRITTEN APPROVAL FROM THE SEOR SHALL BE OBTAINED PRIOR TO THE SUBSTITUTION OF ANY MATERIAL SPECIFIED ON THE STRUCTURAL DOCUMENTS.

7. IT IS THE CONTRACTOR'S RESPONSIBILITY TO COMPLY WITH THE PERTINENT SECTIONS OF THE "CONSTRUCTION SAFETY ORDERS" ISSUED BY THE STATE OF CALIFORNIA, LATEST EDITION, AND ALL OSHA REQUIREMENTS AS THEY APPLY TO THIS PROJECT. THE ARCHITECT, SEOR, AND THE OWNER DO NOT ACCEPT ANY RESPONSIBILITY FOR THE CONTRACTOR'S FAILURE TO COMPLY WITH THESE REQUIREMENTS.

8. ALL WORK IS NEW (N) UNLESS INDICATED AS EXISTING (E).

9. CONSTRUCTION MATERIALS SHALL BE DISTRIBUTED WHEN PLACED ON THE STRUCTURE SUCH THAT LOADS DO NOT EXCEED DESIGN LIVE LOADS OR RESULT IN AN UNBALANCED CONDITION.

10. REFER TO THE PROJECT SPECIFICATIONS FOR SHOP DRAWING REQUIREMENTS AND SUBMITTALS.

STRUCTURAL DESIGN CRITERIA:

1. CODES:
   ALL WORK SHALL BE IN CONFORMANCE WITH THE CALIFORNIA BUILDING CODE (CBC) 2019 EDITION, INCLUDING ALL AMENDMENTS. ALL STANDARDS USED SHALL BE THE LATEST VERSION APPROVED BY THE CODE ENFORCEMENT AGENCY ON THE DATE OF THE PERMIT ISSUANCE UNLESS SPECIFICALLY NOTED OTHERWISE.

2. DESIGN LIVE LOAD

	LOAD
ROOF	20 PSF

3. WIND DESIGN INFORMATION

RISK CATEGORY = II	Kz = 0.98	Kd =0.85	Kzt = 1.0
BASIC WIND SPEED Vfm = 94 MPH (3 SEC GUST)			EXPOSURE = C
INTERNAL PRESSURE COEFF. = +/- 0.18			

4. SEISMIC DESIGN INFORMATION

I = 1.0	RISK CATEGORY = II			SITE CLASS = D
S_S = 0.916	S1 = 0.329	SDS = 0.692	SD1 = 0.432	
SEISMIC DESIGN CATEGORY = D				
ANALYSIS PROCEDURE = EQUIV. LATERAL FORCE PROCEDURE				
SLRS : A7: SPECIAL REINF. MASONRY SHEAR WALLS (BLDG A, B, C)				
Rho = 1.0	R = 5	Cd = 3.5	Ω = 2.0	Cs = 0.14
SLRS : STEEL ORDINARY CANTILEVERED COLUMN (CANOPY)				
Rho = 1.0	R = 1.25	Cd = 1.25	Ω = 1.25	Cs = 0.55
STRUCTURAL IRREGULARITY: NON-PARALLEL SYSTEM IRREGULARITY (BLDG A, B, C)				

EXISTING UNDERGROUND UTILITY NOTES:

1. THE ARCHITECT AND ENGINEERS ARE NOT RESPONSIBLE FOR THE LOCATIONS OF EXISTING UNDERGROUND UTILITIES WHETHER OR NOT SHOWN ON THE DRAWINGS. THE LOCATION OF ANY EXISTING UNDERGROUND UTILITIES SHOWN ON THE DRAWINGS ARE APPROXIMATE. THE CONTRACTOR SHALL IMMEDIATELY NOTIFY THE OWNER SHOULD ANY SUCH UNIDENTIFIED CONDITIONS BE DISCOVERED.

2. THE CONTRACTOR SHALL BE RESPONSIBLE FOR ANY DAMAGES WHICH MAY RESULT FROM HIS FAILURE TO EXACTLY LOCATE AND PRESERVE ALL EXISTING UNDERGROUND UTILITIES.

CONTRACTOR RESPONSIBILITY NOTE: (DSA)

1. EACH CONTRACTOR RESPONSIBLE FOR THE CONSTRUCTION OF A MAIN LATERAL-FORCE-RESISTING SYSTEM, DESIGNATED ON PLANS SHALL SUBMIT A WRITTEN STATEMENT OF RESPONSIBILITY TO THE BUILDING DSA OFFICIAL AND THE OWNER PRIOR TO THE COMMENCEMENT OF WORK ON THE SYSTEM OR COMPONENT. THE CONTRACTOR'S STATEMENT OF RESPONSIBILITY SHALL CONTAIN THE FOLLOWING:

   A. ACKNOWLEDGMENT OF AWARENESS OF THE SPECIAL REQUIREMENTS.

   B. ACKNOWLEDGMENT THAT CONTROL WILL BE EXERCISED TO OBTAIN CONFORMANCE WITH THE CONSTRUCTION DOCUMENTS APPROVED BY THE DSA BUILDING OFFICIAL.

   C. PROCEDURES FOR EXERCISING CONTROL WITHIN THE CONTRACTOR'S ORGANIZATION, THE METHOD AND FREQUENCY OF REPORTING AND THE DISTRIBUTION OF THE REPORTS.

   D. IDENTIFICATION AND QUALIFICATIONS OF THE PERSON(S) EXERCISING SUCH CONTROL AND THEIR POSITION(S) IN THE ORGANIZATION.

FOUNDATION AND SLAB ON GRADE NOTES:

1. SEE SOIL REPORT BY: SOILS ENGINEERING, INC.
   REPORT NO.: 22-18353 DATED: 04/22/2022

   SOILS REPORT SHALL BE CONSIDER A PART OF THESE CONSTRUCTION DOCUMENTS.

2. ALLOWABLE FTG VERTICAL BEARING PRESSURE
   DEAD LOAD + LIVE LOAD = ...2500 PSF
   DEAD LOAD + LIVE LOAD + LATERAL LOAD = ...3325 PSF

   ALLOWABLE FTG LATERAL BEARING PRESSURE IS 300 PSF PER FT OF DEPTH
   ALLOWABLE FTG COEFFICIENT OF FRICTION FOR SLIDING: 0.3

3. THE CONTRACTOR SHALL CONFORM TO ALL RECOMMENDATIONS AND CONDITIONS INDICATED IN THE SOIL REPORT. THE GEOTECHNICAL ENGINEER SHALL OBSERVE ALL FOOTING EXCAVATIONS PRIOR TO PLACING CONCRETE.

4. SUBSURFACE SOIL PREPARATION:
   A. ALL EXISTING UNDOCUMENTED FILL SHALL BE REMOVED AND RECOMPACTED. ALL TOPSOILS SHALL BE REMOVED AS REQUIRED BY THE GEOTECHNICAL ENGINEER.
   B. GEOTECHNICAL ENGINEER SHALL BE RETAINED DURING THE OVEREXCAVATION PROCESS. THE ACTUAL DEPTH OF REMOVAL WILL BE DETERMINED DURING GRADING OPERATIONS.
   C. OFFSITE FILL MATERIAL SHALL BE APPROVED BY THE GEOTECHNICAL ENGINEER PRIOR TO PLACEMENT.

5. SPREAD FOOTINGS ARE CENTERED UNDER WALLS AND COLUMNS, UNO.

6. FOOTING ELEVATIONS ARE NOTED ON THE PLANS AND DETAILS . IN ANY CASE, FOOTINGS SHALL BEAR ON FIRM UNDISTURBED SOIL OR ENGINEERED FILL OR BEDROCK , IN ACCORDANCE WITH THE SOIL REPORT AND DETAILS SHOWN.

7. CONTRACTOR SHALL PROTECT ALL UTILITY LINES, ETC. ENCOUNTERED DURING EXCAVATION AND BACKFILLING.

8. FOOTING BACKFILL AND UTILITY TRENCH BACKFILL WITHIN BUILDING AREA SHALL BE MECHANICALLY COMPACTED IN LAYERS WITH THE APPROVAL OF THE GEOTECHNICAL ENGINEER. FLOODING IS NOT PERMITTED.

9. ALL TRENCHES SHALL COMPLY WITH APPLICABLE OSHA REQUIREMENTS.

10. ALL EXCAVATIONS SHALL BE PROPERLY BACKFILLED WITH NON-EXPANSIVE SOIL BUT NOT BEHIND RETAINING WALLS BEFORE CONCRETE OR MASONRY ATTAINS ITS FULL DESIGN STRENGTH.

11. THE DESIGN OF ALL SITE RETAINING WALLS INDICATED ON THESE DRAWINGS IS BASED ON DRAINED SOILS.

12. CONSTRUCTION JOINTS (CJ) AND SAWCUT (SC) JOINTS IN SLABS SHALL OCCUR WHERE LOCATED ON PLANS AND DETAILS. CJ'S SHALL HAVE FORMED POUR STOPS. CONSTRUCTION JOINTS IN WALLS AND FOOTINGS NEED NOT OCCUR AT THE SAME LOCATION, UNO.

13. SEE ARCHITECTS PLANS FOR LOCATIONS OF SLAB SLOPES, DEPRESSIONS, CURBS, DRAINS, NON-STRUCTURAL PARTITIONS AND OTHER EMBEDDED ITEMS NOT SHOWN ON THE STRUCTURAL PLANS.

14. ALL GRADING, FOUNDATION FOOTINGS, AND DRAINAGE PLANS SHALL BE REVIEWED BY THE GEOTECHNICAL ENGINEER UPON SUBMITTAL. A CERTIFIED LETTER BY THE GEOTECHNICAL ENGINEER IS REQUESTED STATING THAT THE RECOMMENDATIONS CONTAINED WITHIN THE SOILS REPORT HAVE BEEN INCORPORATED INTO THE PROJECT PLANS AND SPECIFICATIONS PRIOR TO CONSTRUCTION.

15. PRIOR TO THE CONTRACTOR REQUESTING A DSA FOUNDATION INSPECTION, THE SOILS ENGINEER SHALL ADVISE THE DSA OFFICIAL IN WRITING THAT:
   A. THE BUILDING PAD WAS PREPARED IN ACCORDANCE WITH THE SOILS REPORT.
   B. THE UTILITY TRENCHES HAVE BEEN PROPERLY BACKFILLED AND COMPACTED.
   C. THE FOUNDATION EXCAVATIONS COMPLY WITH THE INTENT OF THE SOILS REPORT.

SHORING AND EXCAVATIONS NOTES:

1. THE CONTRACTOR SHALL PROVIDE FOR THE DESIGN, APPROVALS, PERMITS, INSTALLATION AND MONITORING OF ALL TEMPORARY SHORING AND BRACING AS REQUIRED TO SUPPORT EXISTING FRAMING WHERE SUPPORT ELEMENTS (BEAMS, COLUMNS, AND BEARING WALLS) ARE TO BE REMOVED.

2. ALL WORK SHALL BE PERFORMED IN ACCORDANCE WITH THE LATEST EDITION OF THE CALIFORNIA CONSTRUCTION SAFETY ORDERS (CAL-OSHA).

3. TEMPORARY CUTS SHALL NOT EXCEED SLOPES RECOMMENDED IN THE SOIL REPORT, NOR THOSE SHOWN ON THE SHORING DRAWINGS FOR CONSTRUCTION OF FOUNDATIONS.

4. THE INSTALLATION OF SHORING AND EXCAVATIONS SHALL BE PERFORMED UNDER THE CONTINUOUS INSPECTION AND APPROVAL OF THE GEOTECHNICAL ENGINEER.

5. THE DESIGN OF THE SHORING SYSTEM SHALL BE BASED UPON RECOMMENDATIONS CONTAINED IN THE SOIL REPORT. THE SHORING CONTRACTOR SHALL FAMILIARIZE HIMSELF WITH ALL DATA THEREIN AND SHALL KEEP A COPY OF THE REPORT AT THE JOB SITE AT ALL TIMES.

6. THE STRUCTURAL ENGINEER RESPONSIBLE FOR THE SHORING DESIGN (HEREAFTER CALLED THE SHORING ENGINEER) SHALL MAKE PERIODIC VISITS TO THE JOB SITE FOR THE PURPOSE OF OBSERVING THE INSTALLATION OF THE SHORING SYSTEM. OBSERVATIONS SHALL INCLUDE, BUT SHALL NOT BE LIMITED TO, THE FOLLOWING:

   A. PRIOR TO THE START OF INSTALLATION, MEET WITH THE GEOTECHNICAL ENGINEER AND SHORING CONTRACTOR TO REVIEW ALL ASPECTS OF THE DESIGN AND INSTALLATION OF THE SHORING.
   B. REVIEW OF CONDITIONS AT COMPLETION OF EXCAVATION. THE CONTRACTOR SHALL NOTIFY THE SHORING ENGINEER AT LEAST 48 HOURS PRIOR TO EACH OF THE ABOVE REQUIRED OBSERVATIONS.

7. CONTROL POINTS SHALL BE ESTABLISHED BY A LICENSED SURVEYOR TO MONITOR ANY HORIZONTAL AND VERTICAL MOVEMENTS OF THE SHORING. INITIAL READINGS SHALL BE SUBMITTED TO THE BUILDING OFFICIAL, AND WEEKLY DATA SHALL BE SUBMITTED AS EXCAVATION PROGRESSES AND THROUGHOUT THE CONSTRUCTION PERIOD. ADDITIONAL READINGS SHALL BE OBTAINED WHEN REQUESTED BY THE BUILDING OFFICIAL, SHORING ENGINEER OR GEOTECHNICAL ENGINEER. IF ANY HORIZONTAL OR VERTICAL MOVEMENT OCCURS, THE GEOTECHNICAL ENGINEER, THE SHORING ENGINEER AND THE STRUCTURAL ENGINEER SHALL EVALUATE SUCH MOVEMENT AND RECOMMEND CORRECTIVE MEASURES, IF NECESSARY BEFORE EXCAVATION IS CONTINUED.

REINFORCING STEEL NOTES:

1. REINFORCING GRADES FOR CONCRETE OR MASONRY:

ALL BARS EXCEPT THOSE TO BE WELDED	ASTM A615, GRADE 60
TIES AND STIRRUPS	ASTM A615, GRADE 60
WELDED WIRE FABRIC	ASTM A1064
ALL BARS TO BE WELDED	ASTM A706, GRADE 60
ALL BARS IN THE CONCRETE SHEARWALL INDICATED ON WALL ELEVATION INCLUDING SUPPORTING WALL FOOTING LONGITUDINAL BARS (WF), AND ALL GRADE BEAMS (GB)	A706, GRADE 60

2. MAINTAIN MINIMUM CONCRETE COVER FROM FACE OF CONCRETE TO EDGE OF ALL REINFORCEMENT AS FOLLOWS (U.N.O.):
   (SEE PLAN/ SECTION FOR CONCRETE W/ FIRE RATING.)

CONDITION	COVER
CONCRETE POURED AGAINST EARTH	3"
CONCRETE POURED IN FORMS AND EXPOSED TO WEATHER OR EARTH	
-#6 BARS AND LARGER	2"
-#5 BARS AND SMALLER	1 1/2"
INTERIOR COLUMNS AND BEAMS	1 1/2"
INTERIOR WALL FACES AND RAISED SLABS	1"
STRUCTURAL SLABS ON GRADE	
-FROM BOTTOM OF SLAB	2"
-FROM TOP OF SLAB	1 1/2"
OTHER CONCRETE NOT EXPOSED TO WEATHER OR EARTH FOR #11 BARS AND SMALLER	1"

   PROVIDE THE LARGEST COVER REQUIRED FOR ALL APPLICABLE CONDITIONS. WHERE #3 STIRRUPS OR TIES ARE USED, ENSURE THAT THE COVER FOR LONGITUDINAL BARS IS ADEQUATE.

3. REINFORCEMENT SHALL BE PLACED IN ACCORDANCE WITH THE CONCRETE REINFORCING STEEL INSTITUTE (CRSI) "MANUAL OF STANDARD PRACTICE". EACH REINFORCING BAR SHALL BE WIRED TO A CROSS BAR AT A MAXIMUM SPACING OF 24" O.C. PROVIDE ALL ACCESSORIES NECESSARY TO SUPPORT REINFORCING IN POSITIONS SHOWN ON THE PLANS.

4. SPLICES IN CONTINUOUS REINFORCEMENT AS USED IN WALLS, FOOTINGS, SLABS, ETC., SHALL HAVE A CLASS "B" LAP (1'- 6" MIN) AND THE SPLICES IN ADJACENT BARS SHALL BE NOT LESS THAN 5' - 0" APART. VERTICAL WALL BARS SHALL BE SPLICED AT OR NEAR FLOOR LINES. BARS MAY BE WIRED TOGETHER AT SPLICES OR LAPS EXCEPT FOR TOP REINFORCING OF BEAMS AND SLABS OR WHERE SPECIFICALLY DETAILED TO BE SEPARATED. WELDED WIRE FABRIC SHALL BE LAPPED 12" MINIMUM.

5. ALL DOWELS, ANCHOR BOLTS AND OTHER HARDWARE TO BE SET IN CONCRETE SHALL BE TIED IN PLACE PRIOR TO PLACEMENT OF CONCRETE. NO WET SETTING, STABBING, RODDING OR OTHER MOVEMENT OF EMBEDDED ITEMS SHALL BE PERFORMED DURING PLACEMENT OF CONCRETE.

6. BEND REINFORCING BARS COLD.

7. STEEL SHALL BE KEPT CLEAN AND FREE OF RUST.

8. DOWELS BETWEEN FOOTING AND WALLS OR COLUMNS SHALL BE THE SAME GRADE, SIZE AND SPACING AS THE MAIN REINFORCING U.N.O.

9. ALL BARS SHALL BE MARKED SO THEIR IDENTIFICATION CAN BE MADE WHEN THE FINAL IN PLACE INSPECTION IS MADE.

10. CHAIRS OR SPACERS FOR REINFORCING SHALL BE NON-FERROUS OR PLASTIC COATED WHEN RESTING ON EXPOSED SURFACES.

MASONRY NOTES:

1. MASONRY UNITS SHALL DEVELOP THE FOLLOWING MINIMUM 28 DAY PRISM COMPRESSIVE STRENGTHS IN ACCORDANCE WITH THE BUILDING CODE:

MINIMUM 28 DAY COMPRESSIVE STRENGTH			
LOCATION	f'm	TYPE S MORTAR PER ASTM C270	GROUT PER CBC 2103A.3
ALL MASONRY U.N.O	2500 PSI	2000 PSI	2000 PSI

2. CONCRETE BLOCK SHALL CONFORM TO ASTM C90 MEDIUM WEIGHT. CLAY BRICK LOCK SHALL CONFORM TO ASTM C652

3. PRISM TEST SHALL BE PERFORMED FOR MASONRY WITH f'm OVER 2000 PSI FOR CBC 2105A.2

4. VERTICAL REINFORCING SHALL BE FULL HEIGHT OF WALL AND SHALL BE BRACED AT 6' - 8" MAXIMUM TO PREVENT MOVEMENT WHILE GROUTING.

5. HORIZONTAL REINFORCING SHALL BE IN BOND BEAM UNITS AND TIED SECURELY TO VERTICAL REINFORCING.

6. DOWELS, ANCHORS, AND OTHER EMBEDDED ITEMS SHALL BE TIED SECURELY IN PLACE TO PREVENT MOVEMENT WHILE GROUTING. WET SETTING OR STABBING IS NOT ALLOWED.

7. MAXIMUM GROUT LIFTS SHALL NOT EXCEED 8' - 0" AND CLEANOUTS AT THE BOTTOM OF ALL CELLS SHALL BE USED UNLESS THE LIFT IS 4' - 0" OR LESS. THE CLEANOUTS SHALL BE SEALED BEFORE GROUTING. GROUT FOR EACH POUR SHALL BE STOPPED 1 1/2" BELOW THE TOP OF A BLOCK COURSE EXCEPT AT THE FINAL COURSE. ALL GROUT SHALL BE THOROUGHLY CONSOLIDATED BY VIBRATING IMMEDIATELY AFTER PLACING. SHAKING OR RODDING REBAR IS NOT ALLOWED. FILL ALL CELLS WITH GROUT.

8. BLOCK SHALL BE PLACED IN RUNNING BOND AND SHALL BE 8"x8"x16" NOMINAL UNITS, UNO. WHERE BLOCK IS REQUIRED TO BE PLACED IN STACK BOND (SEE ARCH), OPEN-ENDED UNITS (I.E., "SPEED BLOCK") SHALL BE USED.

9. THE CONTRACTOR IS RESPONSIBLE FOR DETERMINING THE SAFETY OF LIFT HEIGHT FOR OPEN ENDED OR FIELD MODIFIED BLOCKS.

10. LAYOUT OF MASONRY BLOCK UNITS SHALL BE RUNNING BOND, U.N.O. BLOCK MODULES/MORTAR JOINTS SHOWN ON THESE DRAWINGS ARE FOR PRESENTATION PURPOSES ONLY, AND NOT INTENDED TO SUPERSEDE ARCHITECTURAL DESIGN REQUIREMENTS.

11. WALL REINFORCEMENT SEE PLANS & ELEVATIONS

12. PROVIDE VERTICAL CONTROL JOINTS IN CMU WALLS AS SHOWN ON PLAN. UNLESS NOTED OTHERWISE VERTICAL CONTROL JOINTS SHALL OCCUR AT 25' - 0" O.C. MAXIMUM ALONG WALL LENGTH, AT FOUNDATION STEPS, FLOOR OR ROOF JOINTS, WALL HEIGHT CHANGES, AND 24" MINIMUM PAST ONE SIDE OF OPENINGS > 6' - 0" WIDE, U.N.O. ON PLANS

13. WHEN THE AMBIENT TEMPERATURE FALLS BELOW 40°F. OR EXCEEDS 100°F, PROVISIONS OF TMS602 / ACI 530 / ASCE6. ARTICLE 1.8C OR ARTICLE 1.8D SHALL BE IMPLEMENTED.

STRUCTURAL CONCRETE NOTES:

1. CONCRETE SHALL BE MIXED, PLACED AND CURED IN ACCORDANCE WITH ACI 318, 2014 EDITION, AND PROJECT SPECIFICATIONS.

2. CONCRETE SHALL NOT BE DROPPED THROUGH REINFORCING STEEL (AS IN WALLS) SO AS TO CAUSE SEGREGATION OF AGGREGATES. IN SUCH CASES, HOPPERS AND VERTICAL CHUTES OR TRUNKS SHALL BE USED. CHUTES OR TRUNKS SHALL BE OF VARIABLE LENGTHS SO THAT FREE UNCONFINED FALL OF CONCRETE SHALL NOT EXCEED SIX FEET. A SUFFICIENT NUMBER OF CHUTES OR TRUNKS SHALL BE USED TO ENSURE THE CONCRETE IS KEPT LEVEL AT ALL TIMES.

3. CONSTRUCTION JOINTS SHALL BE CLEANED AND ROUGHENED BY REMOVING THE ENTIRE SURFACE TO EXPOSE CLEAN AGGREGATE SOLIDLY EMBEDDED IN THE MORTAR MATRIX. SLUSH WITH A COAT OF NEAT CEMENT BEFORE PLACING CONCRETE. SEE PLANS AND DETAILS FOR LOCATION AND TYPE OF CONSTRUCTION JOINT. LOCATIONS OF ADDITIONAL CONSTRUCTION JOINTS NOT SHOWN ON THESE PLANS SHALL BE SUBMITTED FOR APPROVAL BY THE EOR PRIOR TO PLACING ANY CONCRETE.

4. STRUCTURAL CONCRETE SHALL MEET THE FOLLOWING DESIGN CRITERIA:

LOCATION	MIN 28-DAY COMP STRENGTH	CONC TYPE[a]	MAX AGGR. SIZE	MAX W/C RATIO	MAX SLUMP[b]	CEMENT TYPE
FOUNDATIONS STEM WALLS, PILASTER	4000 PSI	NWC	1 1/2"	0.45	4"	II / V
SLAB ON GRADE	4000 PSI	NWC	1"	0.45	4"	II / V
ALL OTHER STRUCTURAL CONCRETE NO NOTED..	4000 PSI	NWC	1"	0.50	6"	II / V

   a. SLUMP MEASURED PRIOR TO SUPERPLASTICIZER, WHERE OCCURS.

5. CONCRETE MIX DESIGN AND TESTING SHALL MEET THE REQUIREMENTS OF THE BUILDING CODE, AND SPECIFICATIONS. ALL CONCRETE MIXES SHALL BE DESIGNED BY A RECOGNIZED TESTING LAB STAMPED AND SEALED BY A LICENSED CALIFORNIA CIVIL ENGINEER AND SUBMITTED TO THE SEOR FOR REVIEW PRIOR TO CONCRETE PLACEMENT. STRUCTURAL CONCRETE MIXES SHALL CONSIST OF 5 SACK MINIMUM U.N.O.

6. AGGREGATES IN NORMAL WEIGHT CONCRETE SHALL CONFORM TO ASTM C-33 (HARDROCK). AGGREGATES IN LIGHT WEIGHT CONCRETE SHALL CONFORM TO ASTM C-330.

7. COMPRESSIVE STRENGTH TEST REPORTS SHALL BE SUBMITTED TO THE BUILDING DEPARTMENT AND THE SEOR.

8. PORTLAND CEMENT SHALL BE AS NOTED ABOVE FOR ALL CONCRETE CONFORMING TO ASTM C150, LOW ALKALI. MILL TESTS WITH CERTIFICATES OF COMPLIANCE SHALL BE SUBMITTED.

9. FLY ASH OR OTHER POZZOLANS CONFORMING TO ASTM C618 CLASS N OR F MAY BE USED AS A PARTIAL SUBSTITUTION FOR PORTLAND CEMENT UP TO A MAXIMUM OF 15% TOTAL CEMENTITIOUS MATERIALS BY WEIGHT IF THE MIX DESIGN IS PROPORTIONED PER ACI 318, SECTION 26.4.3.

10. CONCRETE MIXING OPERATIONS, ETC. SHALL CONFORM TO ASTM C94.

11. LEAN CONCRETE, WHERE SPECIFICALLY INDICATED, SHALL CONTAIN 2 SACKS OF CEMENT PER CUBIC YARD OF CONCRETE.

12. DRYPACK OR NONSHRINK GROUT SHALL HAVE A MINIMUM 28 DAY COMPRESSIVE STRENGTH OF 2 TIMES THE SUPPORTING CONCRETE STRENGTH, AND SHALL BE OF FIVE STAR GROUT, SIKA GROUT 212, OR APPROVED EQUAL WITH VALID CODE REPORT (LARR,ICC,ESR,IAPMO ER). FOR THICK GROUT LAYERS FOLLOW MANUFACTURER'S GUIDELINES TO ATTAIN THE REQUIRED STRENGTH, WHICH MAY INCLUDE THE ADDITION OF PEA GRAVEL.

13. DO NOT USE ANY CONCRETE OR GROUT CONTAINING CHLORIDES. WATER USED IN MIX SHALL BE CLEAN AND POTABLE.

14. FOR INTERIOR SLABS-ON-GRADE AND ALL OTHER SLABS RECEIVING ADHERED FLOORING FINISHES (I.E., GLUED, ETC.), THE MAXIMUM W/C RATIO SHALL NOT EXCEED 0.45. CURE SLABS-ON-GRADE PER ACI 318 26.5.3.

15. MAINTAIN CONCRETE ABOVE 50 DEGREES FAHRENHEIT AND IN A MOIST CONDITION FOR A MINIMUM OF 7 DAYS AFTER PLACEMENT UNLESS OTHERWISE ACCEPTED BY SEOR.

16. SEE ARCHITECTURAL DRAWINGS FOR WALL OPENINGS, WALL OFFSETS, CHAMFERS, KERFS, DRIPS AND FOR EXTENT OF DEPRESSIONS, RAMPS, ETC. PROVIDE SLEEVES FOR ALL PIPES THROUGH CONCRETE WALLS AND FOOTINGS WHERE SHOWN ON THESE DRAWINGS. CORING IS NOT PERMITTED WITHOUT PRIOR APPROVAL BY THE SEOR.

17. SEE ARCHITECT'S PLANS FOR LOCATIONS OF SLAB SLOPES, DEPRESSIONS, CURBS, DRAINS, NON-STRUCTURAL PARTITIONS AND OTHER EMBEDDED ITEMS NOT SHOWN ON THE STRUCTURAL PLANS.

18. EXPOSED CORNERS OF SLABS, BEAMS, WALLS, COLUMNS, ETC. SHALL BE FORMED WITH 3/4" CHAMFER, U.N.O.

19. CONSTRUCTION JOINTS (CJ) AND SAWCUT (SC) JOINTS IN SLABS SHALL OCCUR WHERE LOCATED ON PLANS AND DETAILS. CJ'S SHALL HAVE FORMED POUR STOPS. CONSTRUCTION JOINTS IN WALLS AND FOOTINGS NEED NOT OCCUR AT THE SAME LOCATION, U.N.O.

TYPICAL ABBREVIATIONS

A.B.	ANCHOR BOLT	KLF	KIPS PER LINEAR FOOT
ABV	ABOVE	KSL	KIPS PER SQUARE FOOT
ADDT'L	ADDITIONAL	KSI	KIPS PER SQUARE INCH
ADJ	ADJACENT	L	ANGLE
A.F.F.	ABOVE FINISH FLOOR	LBS	POUND
ALT	ALTERNATE	LFRS	LATERAL FORCE RESISTING SYSTEM
ARCH	ARCHITECT(URAL)		
A.T.R.	ALL THREADED ROD	LLBB	LONG LEG BACK TO BACK
BLDG	BUILDING	LLH	LONG LEG HORIZONTAL
BLK'G	BLOCKING	LLV	LONG LEG VERTICAL
BLW	BELOW	LONG.	LONGITUDINAL
BM	BEAM	LP	LOW POINT
BN	BOUNDARY NAILING	LWC	LIGHTWEIGHT CONCRETE
B.O.	BOTTOM OF	MAX	MAXIMUM
BOT	BOTTOM	M.B.	MACHINE BOLT
BRG	BEARING	MECH	MECHANICAL
B.S.	BOTH SIDES	MFR	MANUFACTURER
BTWN	BETWEEN	MIN	MINIMUM
C	CAMBER OR C-CHANNEL	MTL	METAL
		(N)	NEW
C.I.P.	CAST IN PLACE	NOM.	NOMINAL
CJ	CONTROL/ CONSTRUCTION JOINT	NS	NEAR SIDE OR NON-SHRINK
		NTS	NOT TO SCALE
CL	CENTERLINE	NWC	NORMAL WEIGHT CONCRETE
CLR	CLEAR	OD	OUTSIDE DIAMETER
CMU	CONCRETE MASONRY UNIT	O.C.	ON CENTER
COL	COLUMN	O.F.	OUTSIDE FACE
CONC	CONCRETE	OH	OPPOSITE HAND
CONN	CONNECTION	OPM	OSHPD PRE APPROVAL OF MANUFACTURER'S
CONT	CONTINUOUS		
CP	COMPLETE PENETRATION		CERTIFICATION
CSK	COUNTERSINK	OPN'G	OPENING
CTR(D)	CENTER(ED)	PDF	POWDER DRIVEN FASTENER
DB	BAR OR BOLT DIAMETER	PENE	PENETRATION
DBL	DOUBLE	PERF	PERFORATED
DC	DEMAND CRITICAL	PJ	PANEL JOIST
DEMO	DEMOLITION	PL	PLATE
DET	DETAIL	PLC(S)	PLACE(S)
DIA	DIAMETER	PLF	POUND PER LINEAR FOOT
DIAG	DIAGONAL	PLYWD	PLYWOOD
DIM	DIMENSION	PREFAB	PREFABRICATED
DIST	DISTANCE	PSF	POUND PER SQUARE FOOT
DO	DITTO	PSI	POUND PER SQUARE INCH
DWG	DRAWING	PT	PRESSURE TREATED OR POST TENSION
(E)	EXISTING		
EA	EACH	QTY	QUNATITY
E.F.	EACH FACE	RAD, R	RADIUS
EJ	EXPANSION JOIST	REF	REFERENCE
EMBED	EMBEDMENT	REINF	REINFORCING
ELEC	ELECTRICAL	REQ'D	REQUIRED
ELEV	ELEVATION	RJ	ROOF JOIST
EN	EDGE NAILING	R.O.	ROUGH OPENING
E.O.	EDGE OF	SB	SILL BOLT
EOR	ENGINEER OF RECORD	SC	SAW CUT OR SLIP CRITICAL
EQ	EQUAL	SCHED	SCHEDULE
EQUIP	EQUIPMENT	SEOR	STRUCTURAL ENGINEER ON RECORD
E.S.	EACH SIDE/ EDGE SCREW		
E.W.	EACH WAY	SF	SPREAD FOOTING
EXP	EXPANSION	SHT'G	SHEATHING
EXT	EXTERIOR	SIM	SIMILAR
FIN	FINISH	SLRS	SEISMIC LOAD RESISTING SYSTEM
FJ	FLOOR JOIST		
FLR	FLOOR	SMS	SHEET METAL SCREW
FN	FIELD NAILING	SN	SILL NAIL
FND	FOUNDATION	S.O.G.	SLAB ON GRADE
F.O.	FACE OF	SQ	SQUARE
FS	FAR SIDE OR FIELD SCREW	SS	STAINLESS STEEL
	FINISH SURFACE	STD	STANDARD
FRM'G	FRAMING	STAGG.	STAGGERED
FT	FOOT OR FEET	SITFF	STIFFENER
FTG	FOOTING	STL	STEEL
G	GIRDER	STRUCT	STRUCTURAL
GA	GAUGE	T&B	TOP AND BOTTOM
GALV	GALVANIZED	THK	THICK
GB	GRADE BEA

STRUCTURAL STEEL NOTES:

1. DESIGN, FABRICATION AND ERECTION OF STRUCTURAL STEEL SHALL CONFORM TO THE SPECIFICATIONS AND STANDARD OF THE AMERICAN INSTITUTE OF STEEL CONSTRUCTION (AISC), AS CONTAINED IN THE 15TH EDITION OF "AISC MANUAL OF STEEL CONSTRUCTION".

2. ALL STRUCTURAL STEEL SHALL BE ERECTED PLUMB AND TRUE TO LINE. TEMPORARY BRACING SHALL BE INSTALLED AND SHALL BE LEFT IN PLACE UNTIL OTHER MEANS IS PROVIDED TO ADEQUATELY BRACE THE STRUCTURE.

3. PROVIDE THE FOLLOWING MATERIALS FOR STRUCTURAL STEEL U.N.O.:

STRUCTURAL STEEL GRADES:		
A.	ALL WIDE FLANGE SECTIONS	ASTM A992
B.	SQUARE OR RECTANGULAR HOLLOW STRUCTURAL SECTIONS (HSS)	ASTM A500, GRADE C (F_y= 50 KSI)
C.	ROUND HOLLOW STRUCTURAL SECTION (HSS)	ASTM A500,GRADE C (F_y= 46KSI)
C.	PIPES	ASTM A53 TYPE E OR S, GRADE B (F_y=35 KSI)
E.	PLATES, ANGLES, CHANNELS & TEES	ASTM A36
F.	ALL PLATES PART OF SLRS	ASTM A572, GRADE 50
G.	MACHINE BOLTS (MB)	ASTM A307
H.	HIGH STRENGTH BOLTS (HSB)	ASTM F3125 GRADE A325 GRADE A490
I.	WELDED HEADED STUDS	ASTM A29
J.	THREADED RODS FOR ANCHOR BOLTS	ASTM F1554, GRADE 36

4. 1/8" THICK PLATES AND THICKER SHALL BE GAS CUT OR SAW CUT EXCEPT AS OTHERWISE NOTED, ALL BOLTS SHALL BE HIGH STRENGTH BOLTS. EXCEPT OTHERWISE NOTED, ALL BOLT HOLES SHALL BE STANDARD HOLES.

5. ALL CONNECTIONS NOT SHOWN SHALL CONFORM TO THE "AISC MANUAL OF STEEL CONSTRUCTION" AND SHALL BE SUBMITTED ON SHOP DRAWINGS FOR REVIEW BY SEOR PRIOR TO FABRICATION.

6. ALL WELDED HEADED STUDS, THREADED STUDS, AND DEFORMED BARS SHALL BE NELSON, OR EQUIVALENT, AND WELDED (IN ACCORDANCE WITH MANUFACTURER'S RECOMMENDATIONS BY CERTIFIED WELDERS) SO AS TO FULLY DEVELOP THE TENSILE CAPACITY OF THE CONNECTOR.

7. BOLTS WITH UPSET THREADS ARE NOT ALLOWED. USE THE APPROPRIATE NUT AND WASHER TYPE FOR THE SPECIFIED BOLT.

8. ALL STEEL FABRICATION SHALL BE PERFORMED BY A AISC OR CITY OF LOS ANGELES CERIFIED FABRICATOR.

9. ALL STRUCTURAL STEEL AND MISCELLANEOUS STEEL PERMANENTLY EXPOSED TO THE ELEMENTS SHALL BE HOT DIP GALVANIZED AFTER FABRICATION UNLESS A WEATHER PROOF COATING IS SPECIFIED BY THE ARCHITECT U.N.O. STAINLESS AND WEATHERING STEELS ARE EXCEPTED WHERE SPECIFIED.

   ALL STRUCTURAL STEEL SHALL BE SHOP PRIMED.
   EXCEPT
   1) STEEL IS EMBEDDED IN CONCRETE OR GROUTED MASONRY,
   2) STEEL IS HOT DIP GALVANIZED,
   3) STEEL IS STAINLESS STEEL,
   4) STEEL IS SCHEDULED TO RECEIVE SHOP APPLIED FINISHES.

10. SEE ARCHITECTURAL DRAWINGS FOR NAILER HOLES, WELDED STUDS OR OTHER ITEMS NOT SHOWN IN THESE DRAWINGS. WHERE STEEL IS EMBEDDED IN CONCRETE OR MASONRY, PROVIDE HOLES AS REQUIRED FOR PASSAGE OF CONTINUOUS REINFORCING BARS WHERE INDICATED ON DRAWINGS. DO NOT CUT HOLES IN STRUCTURAL STEEL WITHOUT PRIOR APPROVAL OF SEOR.

11. ALL ARCHITECTURALLY EXPOSED STRUCTURAL STEEL (AESS) SHALL COMPLY WITH AISC CODE OF STANDARD PRACTICE, SECTION 10.

12. PLACE NON-SHRINK OR DRYPACK GROUT UNDER ALL BASE PLATES AND ALLOW TO CURE BEFORE APPLYING LOADS.

13. ALL OPEN HSS ENDS SHALL BE CAPPED. MIN 1/4" STEEL CAP. PROVIDE SQUARE WELD ALL AROUND, CAP PLATE TO HSS.

14. FOR STRUCTURAL STEEL, IN ADDITION TO THE REQUIREMENTS OF SPECIFICATION SECTION A3.1c, HOT ROLLED SHAPES WITH FLANGES 1 1/2" THICK AND THICKER SHALL HAVE MINIMUM CHARPY V-NOTCH TOUGHNESS OF 20 FT-LB AT 70°F. PLATES 2" THICK AND THICKER SHALL HAVE A MINIMUM CHARPY V-NOTCH TOUGHNESS OF 20FT-LB AT 70°F.

WELDING NOTES:

1. WELDING PROCEDURES, ELECTRODES AND WELDER QUALIFICATIONS SHALL CONFORM TO THE "CODE FOR WELDING IN BUILDING CONSTRUCTION", AMERICAN WELDING SOCIETY (AWS), D1.1, D1.8 AND THE AISC "SPECIFICATIONS FOR THE DESIGN, FABRICATION AND ERECTION OF STRUCTURAL STEEL FOR BUILDINGS".

2. ALL WELDERS SHALL HAVE EVIDENCE OF PASSING THE AWS STANDARD QUALIFICATION TESTS, AND SHALL BE CERTIFIED FOR THE WORK THEY ARE PERFORMING.

3. PROJECT WELDING SHALL BE PERFORMED ONLY IN ACCORDANCE WITH WELDING PROCEDURE SPECIFICATIONS (WPS) SUBMITTED BY THE CONTRACTOR AND REVIEWED BY THE SEOR AND PROJECT WELDING INSPECTOR. THE WPS SHALL BE IN ACCORDANCE WITH AWS D1.1-D1.4 & D1.8 CURRENT EDITION.

4. ALL WELDS WITHIN MEMBERS DESIGNATED AS PART OF THE SEISMIC LOAD RESISTING SYSTEM (SLRS) SHALL CONFORM TO THE DETAILING, MATERIALS, WORKMANSHIP, TESTING, AND INSPECTION REQUIREMENTS PER AWS D1.8 AND MUST HAVE A MIN. CVN TOUGHNESS OF 20 FT-LB @ 0°F PER AISC 341 A3.4B.

5. WHERE WELDS ARE DESIGNATED AS DEMAND CRITICAL, THEY SHALL BE MADE WITH A FILLER METAL CAPABLE OF PROVIDING A MINIMUM CHARPY V-NOTCH (CVN) TOUGHNESS OF 20 FT-LB AT 0°F AND 40 FT-LB AT 70°F. SEE AISC 341-16 SECTION A3.4B FOR ADDITIONAL REQUIREMENTS.

6. WELDING OF STRUCTURAL STEEL SHALL BE PERFORMED PER AWS D1.1 & D1.8 USING E70XX ELECTRODES UNLESS OTHERWISED NOTED.

7. WELDING OF REINFORCING BARS SHALL BE PERFORMED PER AWS D1.4 USING E80XX ELECTRODES.

8. WELDING OF METAL DECK AND LIGHT GAGE STEEL SHALL BE IN ACCORDANCE WITH AWS D1.3.

9. ALL GROOVE OR BUTT WELDS SHALL BE COMPLETE PENETRATION WELDS. ALL EXPOSED BUTT WELDS SHALL BE GROUND SMOOTH.

10. ALL EXPOSED WELDS ON ARCHITECTURALLY EXPOSED STRUCTURAL STEEL (AESS) SHALL COMPLY WITH AISC CODE OF STANDARD PRACTICE, SECTION 10.

11. FIELD WELDS HAVE BEEN INDICATED WHERE THEY ARE EXPECTED TO OCCUR. THE CONTRACTOR SHALL DETERMINE THE ACTUAL FIELD WELDING NECESSARY TO COMPLETE THE PROJECT AND INCLUDE ALL ASSOCIATED COSTS WITHIN THE BASE BID.

12. ALL WELDS (SHOP AND FIELD) REQUIRE SPECIAL INSPECTION.

13. ALL FULL PENETRATION WELDS SHALL BE ULTRA-SONIC TESTED PER AWS D1.1 & AISC 341 J6.2.

MOMENT FRAME AND COMPLETE JOINT PENETRATION CONNECTION NOTES:

WELDING ELECTRODES
A. SMAW E8018*
B. FCAW E80 SERIES*

* WELD METAL SHALL BE CAPABLE OF DELIVERING A MINIMUM OF 20 FT-LBS AT -0°F AND 40FT-LBS @ 70°F AS MEASURED BY A CHARPY V-NOTCH IMPACT TEST PER AWS D1.1AND D1.8, APPENDIX III.

* BASE METAL FOR STRUCTURAL SHAPES IN SIZE GROUP 4 & 5 W/ t/f > 11/2" SHALL BE CAPABLE OF DELIVERING A MINIMUM OF 20 FT-LBS AT 70°. F AS MEASURED BY A CHARPY V-NOTCH IMPACT TEST PER A.I.S.C. MANUAL OF STEEL CONSTRUCTION, LATEST EDITION.

STRUCTURAL STEEL
1. ALL WELDING SHALL BE IN ACCORDANCE WITH THE AMERICAN WELDING SOCIETY (AWS) STRUCTURAL WELDING CODE FOR STEEL AWS D1.1-10 AND D1.8.
2. WELDING PROCEDURE SPECIFICATIONS (WPS) SHALL BE SUBMITTED TO THE ENGINEER FOR APPROVAL, PRIOR THE ENGINEER FOR APPROVAL, PRIOR TO THE BEGINNING OF WELDING OPERATIONS. THE WPS SHALL INCLUDE THE WELDING PARAMETERS RECOMMENDED BY THE ELECTRODE MANUFACTURER. SEE AWS D1.1 APPENDIX E, FORM E-1. JOINT DETAILS TO SUIT EXISTING CONDITIONS. THE WELDING ELECTRODE MANUFACTURER'S SPECIFICATIONS SHALL BE ATTACHED TO THE WPS. ALL WELDERS AND INSPECTORS SHALL BE INFORMED OF THE WPS AND SHALL RETAIN A COPY.
3. SEE AWS FOR PREQUALIFIED SMAW WPS'S.
4. SEE AWS FOR PREQUALIFIED FCAW WPS'S.
5. WELDING TO BE DONE BY WELDERS CERTIFIED BY AWS.
6. ONLY SHIELDED METAL ARC WELDING (SMAW) WITH LOW HYDROGEN ELECTRODES OR FLUX CORE ARC WELDING (FCAW), EITHER GAS SHIELDED OF SELF SHIELDED, SHALL BE USED. FOR SMAW, THE TYPICAL REQUIREMENTS SHALL BE ACCORDING TO NOTE #3 ABOVE. WELDING PROCEDURES SHALL MEET THE REQUIREMENTS OF AWS D1.1 4.6.2, OR SHALL BE QUALIFIED BY TEST. FOR FCAW, THE TYPICAL REQUIREMENTS SHALL BE ACCORDING TO NOTE #4 ABOVE. THE WELDING PROCEDURE SHALL MEET THE REQUIREMENTS OF AWS D1.1 4.14.1.6.
7. INDIVIDUAL WELDS SHALL BE CARRIED CONTINUOUSLY TO COMPLETION BEFORE THE JOINT IS ALLOWED TO COOL BELOW THE MINIMUM SPECIFIED PREHEAT AND INTERPASS TEMPERATURE.
8. AT ALL COMPLETE PENETRATION WELDS, WELD BEADS SHALL BE PEENED AFTER EACH PASS, WITH THE EXCEPTION OF THE ROOT PASS AND THE SURFACES PASSES, AS FOLLOWS: TURN SLAG GUN 90 DEG. AND MAKE A MINIMUM OF 4 PASSES WITH DULL CHISEL.
9. PREHEATING IS REQUIRED ON ALL TACK WELDS NOT INCORPORATED INTO FINAL WELDS. SEE AWS D1.1, SECTION 3.3.7.
10. FOR BEAM FLANGE REINFORCEMENT PLATES, THE ROLLING DIRECTION OF GRAIN SHALL BE INDICATED ON THE PLATE AND INSTALLED SO THAT THE GRAIN DIRECTION IS PARALLEL TO THE LONGITUDINAL AXIS OF THE MEMBER.
11. FULL TIME VISUAL INSPECTION BY AN AWS QC-1 QUALIFIED INSPECTOR IS REQUIRED FOR ALL WELDING.
12. 100% ULTRASONIC WELD TESTING BY THE INSPECTOR IS REQUIRED FOR ALL COMPLETE PENETRATION WELDS.
13. AMPEREAGE, VOLTAGE, POLARITY AND ELECTRODE STICK OUT SHALL BE VERIFIED TO BE IN COMPLIANCE WITH THE ELECTRODE MANUFACTURER'S RECOMMENDATIONS.
14. REMOVE B.U. BARS AND WELD TABS AT ALL FLANGE COMPLETE JOINT PENETRATION (CJP) WELDS AT DUCTILE MOMENT FRAME CONNECTIONS. TYPICAL UNLESS NOTED OTHERWISE.

METAL DECK NOTES (FILLED & UNFILLED):

1. MATERIAL FOR METAL DECK SHALL HAVE A MIN YIELD STRENGTH OF 50 KSI AND CONFORM TO ASTM A653-SS GRADE 33 WITH GALVANIZED G60 COATING COMPLYING WITH ASTM A525.

2. SEE TYPICAL DETAILS FOR REINFORCING OF DECK AROUND OPENINGS. CONTRACTOR SHALL COORDINATE SIZE AND LOCATIONS OF OPENINGS WITH THE VARIOUS TRADES. NO LOADS SHALL BE HUNG FROM DECK WITHOUT APPROVAL OF SEOR.

3. ROOF DECK IS DESIGNED FOR UNSHORED CONSTRUCTION, UNO. MAINTAIN 3 SPAN CONDITION WHEREVER POSSIBLE (2 SPAN MIN) EXCEPT AT STAIR LANDING AND WHERE NOTED OTHERWISE ON PLANS.

4. PROVIDE 2" MINIMUM BEARING AT ALL SUPPORTS. END LAPS OF METAL DECK SHALL BE A MINIMUM OF 2" AND SHALL OCCUR ONLY OVER SUPPORTS. DECK SHALL BE LAID OUT SO THAT A LOW FLUTE FALLS ON EACH PARALLEL SUPPORT.

5. INSTALL DECK BY WELDING. USE 3/4" DIAMETER PUDDLE WELDS OR WELDED STUDS TO SUPPORTS SPACED AS SHOWN ON CONSTRUCTION DRAWINGS. SPACING FOR TOP SEAM, SIDE SEAM, BUTTON PUNCH, OR PUNCHLOK CONNECTION SHALL BE IN ACCORDANCE WITH DRAWINGS. SEE TYPICAL METAL DECK DETAILS.

6. SUBMIT SHOP DRAWINGS FOR METAL DECK TO THE SEOR FOR REVIEW PRIOR TO FABRICATION. SHOP DRAWINGS SHALL SHOW TYPE OF DECK, LAYOUT OF DECK, THE SIZE AND LOCATION OF ANY OPENINGS OF WIDTH GREATER THAN 1'-0", AND ATTACHMENT METHOD.

7. ALTERNATES TO TYPE OF DECK AND FASTENING MAY BE USED WITH THE APPROVAL OF THE SEOR. DECK PROPERTIES SHALL BE EQUAL TO OR GREATER THAN THOSE SHOWN ON THE PLANS. ANY DECK OR METHOD OF FASTENING SHALL HAVE LATEST EVALUATION REPORT PER CURRENT CODE APPROVING THE DECK FOR THE APPLICATION.

ROUGH CARPENTRY/ WOOD NOTES:

1. ALL GRADES SPECIFIED ARE MINIMUM GRADES REQUIRED.

2. DOUGLAS FIR (DF) SHALL BE GRADED BY THE WESTERN WOOD PRODUCTS ASSOCIATION GRADING RULES, AND ASTM D245.

3. REDWOOD SHALL BE GRADED BY THE CALIFORNIA REDWOOD ASSOCIATION, REDWOOD INSPECTION SERVICE.

4. SILL PLATES SHALL BE PRESSURE-TREATED (PT) DOUGLAS FIR #1. REDWOOD IS PERMITTED WITH SEOR APPROVAL.

5. TOP PLATES, SILL PLATES, STUDS SHALL BE.....DF #1
   JOISTS, RAFTERS, PURLINS, BEAMS & POSTS SHALL BE .....DF #1 (U.N.O.)
   LOAD BEARING STUDS SHALL BE.....DF #1

6. MOISTURE CONTENT OF SAWN LUMBER SHALL NOT EXCEED 18% WHEN FRAMING STARTS OR SHEATHING IS APPLIED. ANY NONCOMPLIANT WORK SHALL BE REJECTED AND REFRAMED WITH ACCEPTABLE LUMBER.

7. TIMBERS 4" NOMINAL IN THE LEAST DIMENSION SHALL NOT CONTAIN BOXED HEART.

8. SILL PLATES SHALL BE PRESSURE-TREATED AND SHALL BE BOLTED TO CONCRETE WITH 5/8" DIAMETER ANCHOR BOLTS AT 48" O.C. MAX. U.N.O. WITH A BOLT BETWEEN 4" TO 12" FROM THE END OF EACH PIECE OF SILL (2 BOLTS MIN EACH PIECE). PIECE OF SILL SHALL BE CONSIDERED ENDED WHERE PLATE IS CUT OUT OVER ONE-THIRD OF CROSS-SECTION.

9. ANCHOR BOLTS FOR STRUCTURAL WALLS SHALL HAVE 12" EMBEDMENT (U.N.O.)
   MEASURED FROM TOP OF SLAB.

10. STUD BEARING WALLS AND PARTITIONS SHALL HAVE DOUBLE TOP PLATES LAPPED AT WALL AND PARTITION INTERSECTIONS. JOINTS IN UPPER AND LOWER MEMBERS OF DOUBLE TOP PLATES SHALL BE STAGGERED AT LEAST 4' - 0".

11. HOLES IN WOOD AND STEEL MEMBERS FOR BOLTS SHALL BE THE NOMINAL BOLT DIAMETER PLUS 1/16".

12. ALL BOLTS IN WOOD SHALL BE ASTM A307 STANDARD BOLTS, U.N.O. BOLTS AND SCREWS SHALL BE TIGHTENED AT TIME OF ERECTION AND RETIGHTENED BEFORE CLOSING IN OR AT THE COMPLETION OF THE JOB.

13. HOLES IN WOOD FOR LAG SCREW SHANK SHALL BE BORED TO THE SAME DIAMETER AND DEPTH AS THE SHANK, AND FOR THE THREADED PORTION BORED WITH A BIT NOT LARGER THAN 40% TO 70% OF THE SHANK DIAMETER.

14. LAG SCREWS AND SCREWS SHALL BE SCREWED AND NOT DRIVEN INTO PLACE. BOLT HOLES SHALL BE A MINIMUM OF 1/32" TO A MAXIMUM 1/16" LARGER THAN THE BOLT DIAMETER. HOLES SHALL BE ACCURATELY ALIGNED IN MAIN MEMBERS AND SIDE PLATES. BOLTS SHALL NOT BE FORCIBLY DRIVEN.

15. METAL FRAMING CONNECTORS SHALL BE MANUFACTURED BY SIMPSON STRONG TIE COMPANY (CURRENT CATALOG), OR "USP" WITH EQUIVALENT ICC PUBLISHED VALUES AND SHALL BE INSTALLED PER SPECIFICATIONS, NO EXCEPTIONS.

16. INSTALL WINDOWS AND DOORS IN STUD WALLS AFTER DEAD LOADS ARE APPLIED, AND PROVIDE A 1/2" SHIM SPACE AT THE HEAD CONDITION.

17. STEEL WASHERS SHALL BE PROVIDED UNDER HEADS AND NUTS OF ALL BOLTS AND LAG SCREWS WHICH BEAR ON WOOD. STANDARD CUT WASHERS MAY BE USED IN ALL CASES EXCEPT SILL PLATES AND WOOD LEDGERS AGAINST CONCRETE OR MASONRY. NOTE, WASHERS UNDER CARRIAGE BOLT HEADS SHALL BE LARGE ENOUGH TO ALLOW FOR SQUARE SHOULDERS.

18. ONLY LOAD BEARING AND/OR SHEAR WALLS ARE SHOWN
    SEE ARCHITECTURAL DRAWINGS FOR ALL OTHER PARTITIONS.

19. ELEVATIONS SHOWN ON PLANS ARE FROM FINISHED FIRST FLOOR, DATUM ELEVATION = 0' - 0".

20. ALL EXTERIOR WALLS AND INTERIOR BEARING WALLS ARE 2x6 STUDS @ 16" O.C. TYPICAL, U.N.O.

21. ALL EXTERIOR STUD WALLS SHALL BE COMPLETELY SHEATHED WITH 15/32" APA RATED SHEATHING, EXPOSURE-1 (32/16).

22. INTERIOR STRUCTURAL SHEATHED WALLS ARE SHOWN ON PLANS AND SHALL HAVE 15/32" APA RATED SHEATHING EXPOSURE-1, (32/16),TYPICAL U.N.O.

23. ALL STRUCTURAL WALL SHEATHING IS SPLICED ON 2" NOMINAL BLOCKING AT HORIZONTAL JOINTS, U.N.O.

24. STRUCTURAL ROOF SHEATHING SHALL BE AS ON PLAN AND SHALL BE APA RATED SHEATHING (32/16).
    NOTE: 1/8" GAP SHALL BE PROVIDED BETWEEN ADJACENT PANELS. PANELS WITH GRADE STAMP INDICATION "SIZED FOR SPACING" MAY BE USED TO FACILITATE THIS REQUIREMENT. SEE PLANS FOR REQUIRED BOUNDARY AND EDGE NAILING NOT LISTED BELOW. FLOOR SHEATHING SHALL BE GLUED AND NAILED PER PLAN.

    (* - SHEATHING @ EXTERIOR DECKS SHALL BE EXTERIOR RATED PLYWOOD.)

    BN = BOUNDARY NAILING
    EN = EDGE NAILING
    FN = FIELD NAILING

25. SEE PLANS FOR LOCATION OF NOMINAL 2X FLAT BLOCKING AT ROOF SHEATHING PANEL JOINTS. SEE THIS SHEET FOR PLY CLIP REQUIREMENTS AT UNBLOCKED ROOF PANEL JOINTS. T&G SHEATHING IS NOT REQUIRED WHERE JOINTS ARE BLOCKED.

26. FASTENERS, INCLUDING NAILS, NUTS AND WASHERS, IN CONTACT WITH PRESERVATIVE - TREATED WOOD SHALL BE OF HOT-DIPPED ZINC COATED GALVANIZED STEEL OR STAINLESS STEEL.

IDENTIFICATION STAMP
DIV. OF THE STATE ARCHITECT
APP: 03-122664 INC:
REVIEWED FOR
SS ☑ FLS ☑ ACS ☑
DATE: 05/12/2023

pjhm architects
LICENSED ARCHITECT
RICHARD W. KERN
No. C15585
REN. 02/25
STATE OF CALIFORNIA
VCA ENGINEERS, INC
2151 Michelson Dr, #240
Irvine, CA 92612
Tel. 949.679.0870
Fax. 949.679.9370
Project No.: 1747
PROFESSIONAL ENGINEER
RICHARD W. KERN
No. 54029
Exp. 9/30/24
CIVIL
STATE OF CALIFORNIA
LA Phone: 213.278.0172 • Web: pjhm.com
LA Office: 837 Traction Avenue, #410, Los Angeles, CA 90013
SD Phone: 760.730.5527 • SD Office: 804 Pier View Way #103, Oceanside, CA 92054
OC Office: 24461 Ridge Route Drive #100, Laguna Hills, CA 92653 • OC Phone: 949.496.6191

HIGHLAND HIGH SCHOOL
50M POOL & AQUATICS CENTER

KERN HIGH SCHOOL DISTRICT

GENERAL NOTES

S-0.2

4/7/2023 4:25:56 PM

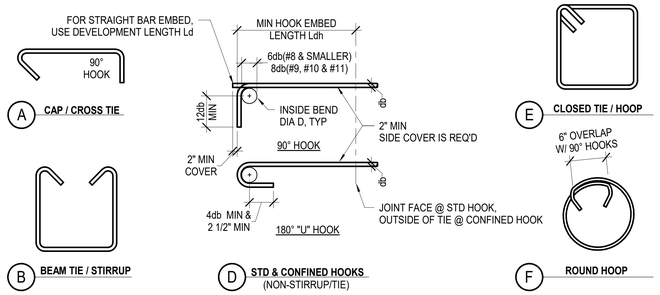

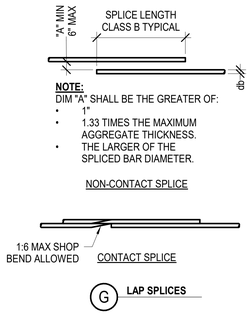

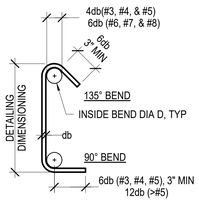

BAR SIZE	FINISHED BEND DIAMETER "D" IN INCHES
#3	2 1/4"
#4	3"
#5	3 3/4"
#6	4 1/2"
#7	5 1/4"
#8	8"
#9	9 1/2"
#10	10 3/4"
#11	12"
#14	18 1/4"
#18	24"

STANDARD HOOKS

	BAR SIZE	L_{dh}(in) STD HOOK	LAP SPLICE (in) CLASS B		L_d(in) DEVELOPMENT LENGTH	
			TOP	OTHER	TOP	OTHER
3000 PSI NWC	#3	6	29	23	22	17
	#4	8	38	29	29	22
	#5	10	47	37	36	28
	#6	12	56	43	43	33
	#7	14	82	63	63	48
	#8	16	94	72	72	55
	#9	18	106	81	81	62
	#10	20	119	91	91	70
	#11	22	132	102	101	78
4000 PSI NWC	#3	6	25	20	19	15
	#4	7	33	25	25	19
	#5	9	41	32	31	24
	#6	10	49	38	37	29
	#7	12	71	55	54	42
	#8	14	81	63	62	48
	#9	15	91	71	70	54
	#10	17	103	80	79	61
	#11	19	114	88	87	67

NOTES:
1. Ldh = HOOK DEVELOPMENT LENGTH.
2. Ld = DEVELOPMENT LENGTH.
3. db = REINFORCING BAR DIAMETER
4. SEE BUILDING CODE AND ACI 318-14 VERSION FOR ALL REQUIREMENTS NOT NOTED.
5. FOR LIGHTWEIGHT CONCRETE MULTIPLY Ldh AND Ld VALUES SHOWN BY 1.33.
6. TOP BARS ARE HORIZONTAL WITH MORE THAN 12" OF FRESH CONCRETE CAST BELOW BARS. ALL OTHER BARS ARE "OTHER" BARS.
7. STANDARD HOOK Ldh DOES NOT ACCOUNT FOR THE EFFECT OF TIES. CONFINED HOOK Ldh MAY BE USED WHERE ACI 318-14 25.4.3 APPLIES.
8. VALUES SHOWN ABOVE ARE FOR GRADE 60 (FY=60 KSI) REINFORCEMENT.
9. SPLICE LENGTHS SHOWN ARE FOR CLEAR SPACING NOT LESS THAN 2db, CONCRETE COVER NOT LESS THAN db.
10. IF EPOXY-COATED REINFORCEMENT IS USED, THE DEVELOPMENT/LAP SPLICE LENGTHS HEREIN SHALL BE MULTIPLIED BY APPLICABLE FACTORS IN ACI 318-14 SECTIONS 25.4.2.4 OR 25.4.3.2.
11. IN LIEU OF LAP SPLICES, PROVIDE TYPE 2 COUPLERS PER IAPMO ER 0129. STAGGER COUPLERS SO THAT COUPLERS DO NOT OCCUR IN ROW.

5 S-1.1 TYPICAL CONC REINFORCEMENT DETAILS AND DEVELOPMENT LENGTHS
SCALE: N.T.S.

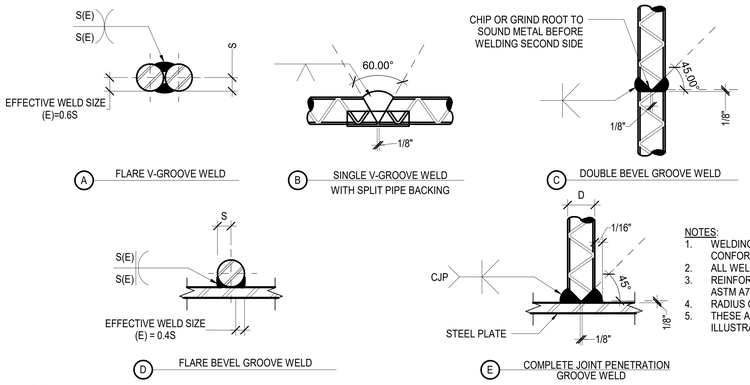

WELD SCHEDULE	
BAR SIZE	MIN WELD LENGTH
#3	3"
#4	3"
#5	3"
#6	4"
#7	5"
#8	5"
#9	6"
#10	6"

NOTES:
1. WELDING SHALL BE WITH LOW HYDROGEN ELECTRODES E90XX AND SHALL CONFORM TO AWS-D1.4.
2. ALL WELDING SHALL BE SUBJECT TO CONTINUOUS INSPECTION.
3. REINFORCING BARS TO BE WELDED SHALL MEET THE REQUIREMENT OF ASTM A706.
4. RADIUS OF REINFORCING BAR = S.
5. THESE ARE SECTIONAL VIEWS. BAR DEFORMATIONS ARE SHOWN ONLY FOR ILLUSTRATIVE PURPOSES.

3 S-1.1 TYPICAL REINFORCING BAR WELDING
SCALE: N.T.S.

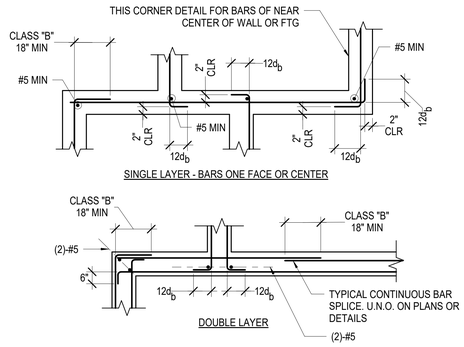

7 S-1.1 REINF BAR SPLICES AT CONT WALL FTGS INTERSECTIONS
SCALE: N.T.S.

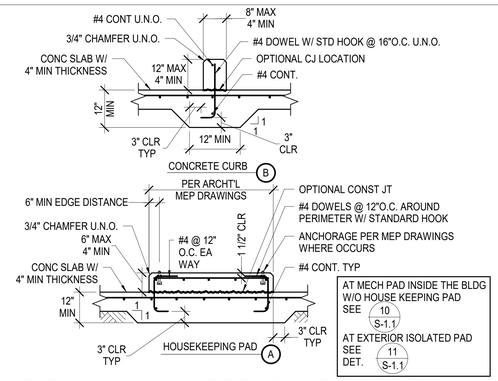

8 S-1.1 TYPICAL CONCRETE PAD AND CURB ON GRADE
SCALE: N.T.S.

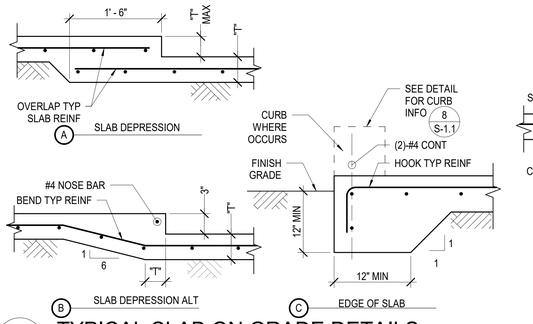

9 S-1.1 TYPICAL SLAB ON GRADE DETAILS
SCALE: N.T.S.

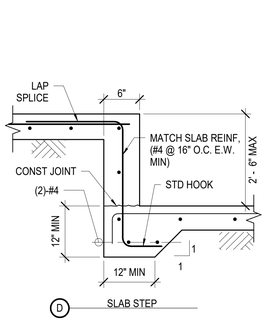

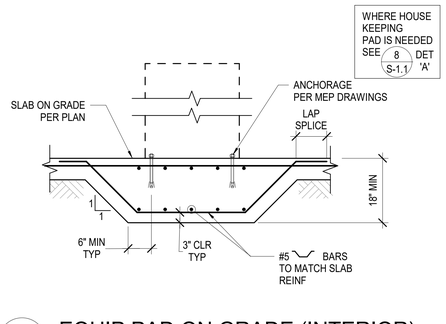

10 S-1.1 EQUIP PAD ON GRADE (INTERIOR)
SCALE: N.T.S.

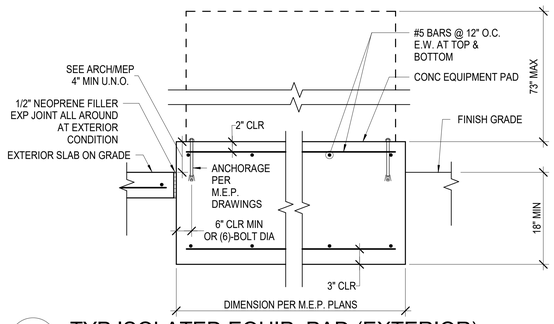

11 S-1.1 TYP ISOLATED EQUIP PAD (EXTERIOR)
SCALE: N.T.S.

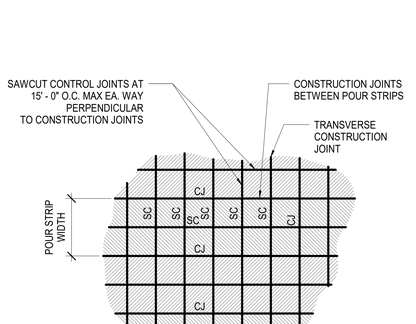

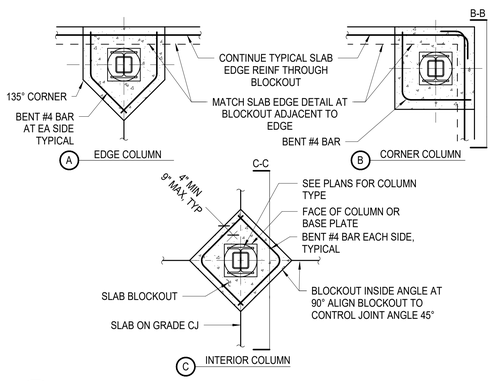

13 S-1.1 TYPICAL SLAB ON GRADE BLOCKOUT AT COLUMN
SCALE: N.T.S.

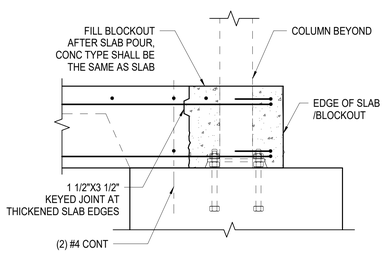

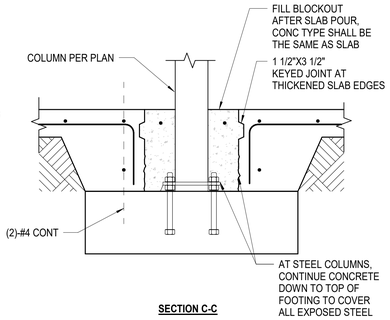

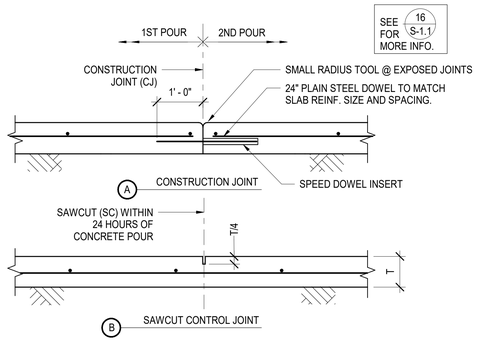

15 S-1.1 TYPICAL SLAB ON GRADE CONTROL JOINT (FOR SLAB THICKNESS 4" TO 6")
SCALE: N.T.S.

NOTES:
1. SEE ARCHITECTURAL PLANS FOR LOCATIONS OF VISUALLY EXPOSED CONTROL JOINTS.
2. FOR POURING SEQUENCE OTHER THAN THAT SHOWN ON THESE PLANS, SUBMIT SHOP DRAWINGS TO SEOR FOR REVIEW 7 DAYS PRIOR TO POUR.
3. FOR SAW CUT (SC) AND CONSTRUCTION JOINT (CJ) SEE DETAIL 15 / S-1.1
4. FOR TYPICAL SLAB EDGE AND STEPS IN SLAB SEE DETAIL 9 / S-1.1

16 S-1.1 TYP S.O.G. CONTROL JOINT
SCALE: N.T.S.

4/7/2023 4:25:59 PM

IDENTIFICATION STAMP
DIV. OF THE STATE ARCHITECT
APP: 03-122664 INC:
REVIEWED FOR
SS ☑ FLS ☑ ACS ☑
DATE: 05/12/2023

pjhm architects
LA Phone: 213.278.0172 • Web: pjhm.com
LICENSED ARCHITECT EDWARD W. FRIEND NO. C15585 REN. 02/25 STATE OF CALIFORNIA
VCA ENGINEERS, INC.
2151 Michelson Dr. #240
Irvine, CA 92612
Tel. 949.679.0870
Fax. 949.679.9370
Project No.: 1747
LA Office: 837 Traction Avenue, #410, Los Angeles, CA 90013 • SD Phone: 760.730.5527
PROFESSIONAL ENGINEER KEUN S. PARK No. 34029 Exp. 9/30/24 CIVIL STATE OF CALIFORNIA
OC Office: 24461 Ridge Route Drive #100, Laguna Hills, CA 92653 • OC Phone: 949.496.6191 • SD Office: 804 Pier View Way #103, Oceanside, CA 92054

HIGHLAND HIGH SCHOOL
50M POOL & AQUATICS CENTER
KERN HIGH SCHOOL DISTRICT

TYPICAL DETAILS-REBAR & S.O.G

S-1.1

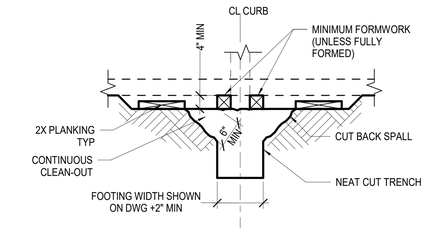

NOTES:
1. FOOTINGS POURED AGAINST EARTH ARE SUBJECT TO APPROVAL OF GEOTECH. ENGR.
2. FOOTING WIDTHS SHALL NOT BE MORE THAN 4" WIDER THAN SHOWN ON PLAN.
3. FORMWORK NOT PERMITTED BELOW GRADE UNLESS FULLY FORMED.
4. FOUNDATION CONCRETE MAY BE PLACED DIRECTLY INTO NEAT EXCAVATIONS PROVIDED THE FOUNDATION TRENCH WALLS ARE STABLE AS DETERMINED BY THE GEOTECHNICAL ENGINEER. THE MINIMUM FORMWORK SHOWN ON THE DRAWINGS IS MANDATORY TO ENSURE CLEAN EXCAVATIONS IMMEDIATELY PRIOR TO AND DURING THE PLACING OF CONCRETE.
5. CONT CLEAN-OUT STAKES NOT PERMITTED IN THE FTG AREA.
6. AFTER CONCRETE HAS SET, REMOVE LAITANCE AND SCUM.

1 S-1.2 FOOTING POURED AGAINST EARTH
SCALE: N.T.S.

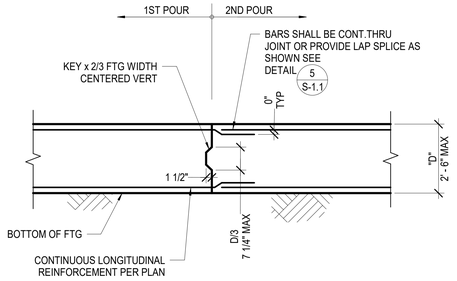

NOTES:
1. PROVIDE ADEQUATE SUPPORT FOR LONGITUDINAL REINFORCEMENT WITHIN 6" OF JOINT USING FOOTING TIES, VERTICAL DOWELS OR OTHER MEANS.
2. SECTIONS SHOWN ARE AT CENTER OF FOOTING IN LONGITUDINAL DIRECTION.

2 S-1.2 CONSTRUCTION JOINT AT FOOTING/ GRADE BEAM
SCALE: N.T.S.

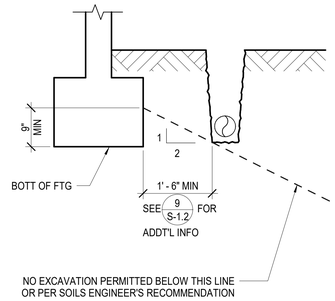

NOTE:
THE CONTRACTOR SHALL BE RESPONSIBLE FOR SHORING OR OTHERWISE MAINTAINING THE SIDES OF THE EXCAVATION FROM CAVE-INS UNTIL ALL BACKFILL IS COMPLETED PER SPECIFICATIONS AND GEOTECHNICAL REPORT.

3 S-1.2 TYPICAL EXCAVATION PARALLEL TO FOOTING
SCALE: N.T.S.

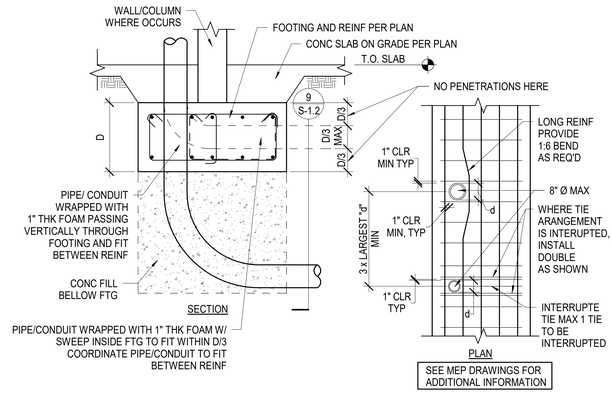

4 S-1.2 PIPE/ CONDUIT SWEEP THRU FOOTING
SCALE: N.T.S.

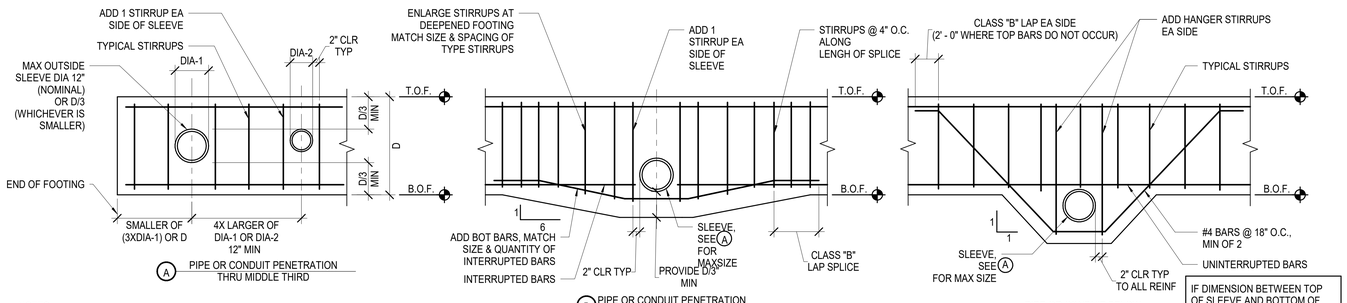

NOTES:
1. DO NOT CUT REINFORCING AT (A) OR (C) ONLY CUT INTERRUPTED REINFORCING AT (B) .
2. PROVIDE MINIMUM 2" CLEAR BETWEEN SLEEVE AND REINFORCING .
3. INSIDE Ø OF METAL SLEEVE SHALL BE 2" MIN LARGER THAN OUTSIDE Ø OF PIPE.
4. CAULK SEAL GAP AT SLEEVE-TO-PIPE/CONDUIT INTERFACE ON EXTERIOR SIDE OF FOOTING .
5. IF PIPE OR CONDUIT PENETRATION OCCURS AT EITHER TOP OR BOTTOM REBAR SPLICE LOCATION PROVIDE 2 ADDITIONAL SHEAR STIRRUPS FOR A TOTAL OF 4 SHEAR STIRRUPS ON EACH SIDE OF PENETRATION .

5 S-1.2 TYPICAL PIPE OR CONDUIT PENETRATIONS THRU CONTINUOUS FOOTINGS
SCALE: N.T.S.

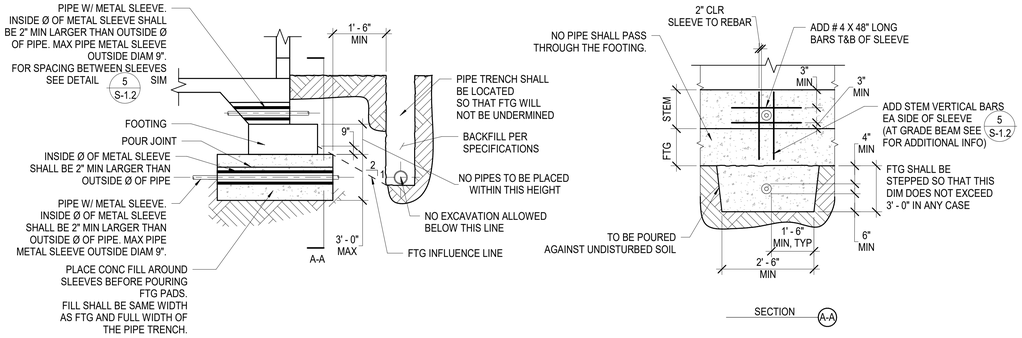

NOTES:
1. CONTRACTOR SHALL COORDINATE ALL PIPE LOCATIONS WITH BUILDING FOUNDATION REQUIREMENTS.
2. IF REQUIREMENTS AS SHOWN CANNOT BE MET, STEP FOOTING PER TYPICAL 'STEPPED FOOTING' DETAIL.
3. REFERENCE CBC SECTION 1809A.3.

9 S-1.2 PIPE TRENCH FOOTING DETAIL
SCALE: N.T.S.

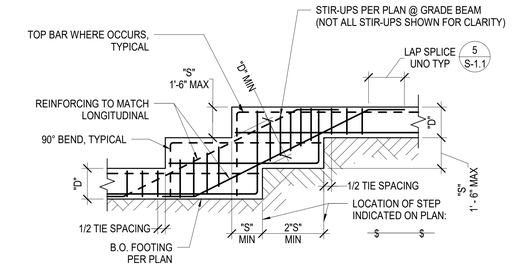

NOTES:
1. FOR FTG REINFORCING SEE PLANS AND DETAILS.
2. VERTICAL WALL DOWELS SHALL EXTEND TO BOTTOM OF FOOTING.
3. TRANSVERSE STEEL NOT SHOWN FOR CLARITY.
4. TWO STEPS ARE SHOWN, DETAIL FOR SINGLE STEP OR ADDITIONAL STEPS IS SIMILAR.

8 S-1.2 TYPICAL STEPPED FOOTING
SCALE: N.T.S.

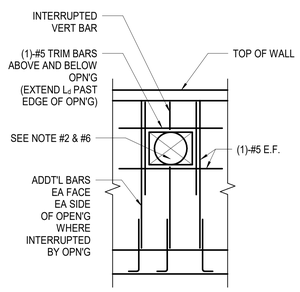

ELEVATION

NOTES:
1. FOR OPENINGS 12" OR LARGER IN WIDTH USE FULL HEIGHT JAMB BARS.
2. FOR MINOR OPENINGS THAT DO NOT INTERRUPT TYPICAL REINF, AND ARE AT LEAST 24" FROM ADJACENT OPENINGS OR WALL EDGE, NO ADDITIONAL REINF IS REQ'D UNO ON PLANS.
3. PROVIDE LAP SPLICE PER 5 / S-1.1
4. WHERE FULL EXTENSION IS NOT POSSIBLE, EXTEND BARS AS FAR AS POSSIBLE AND USE A STD HOOK.
5. EXTEND LINTEL AND SILL BARS Ld MINIMUM PAST EDGE OF OPENING.
6. WHERE VERTICAL BARS ARE INTERRUPTED BY A SMALL OR MINOR OPENING, IN ADDITION TO TRIM BARS, PLACE ADDITIONAL VERTICAL BARS EQUAL TO THE NUMBER OF INTERRUPTED BARS ON EACH SIDE OF OPENING.

11 S-1.2 TYP MINIMUM REINFORCEMENT FOR CONC WALL OPENINGS
SCALE: N.T.S.

IDENTIFICATION STAMP
DIV. OF THE STATE ARCHITECT
APP: 03-122664 INC:
REVIEWED FOR
SS ☑ FLS ☑ ACS ☑
DATE: 05/12/2023

pjhm architects

LICENSED ARCHITECT
RICHARD W. PJHM
No. C15585
REN. 02/25
STATE OF CALIFORNIA

VCA ENGINEERS, INC
CIVIL • STRUCTURAL
2151 Michelson Dr. #240
Irvine, CA 92612
Tel. 949.679.0870
Fax. 949.679.9370
Project No.: 1747

PROFESSIONAL ENGINEER
STEVEN J. KEUN
No. 54029
Exp. 9/30/24
CIVIL
STATE OF CALIFORNIA

LA Office: 837 Traction Avenue, #410, Los Angeles, CA 90013 • Web: pjhm.com
SD Phone: 760.730.5527 • LA Phone: 213.278.0172
OC Office: 24461 Ridge Route Drive #100, Laguna Hills, CA 92653 • OC Phone: 949.496.6191 • SD Office: 804 Pier View Way #103, Oceanside, CA 92054

HIGHLAND HIGH SCHOOL
50M POOL & AQUATICS CENTER

KERN HIGH SCHOOL DISTRICT

TYPICAL DETAILS- FOOTING AND EXCAVATION

S-1.2

4/7/2023 4:26:00 PM

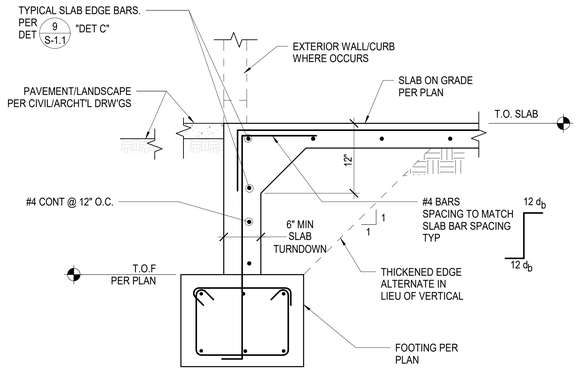

1 S-1.3 TYP SLAB TURNDOWN AT DEEPENED FOOTING

SCALE: N.T.S.

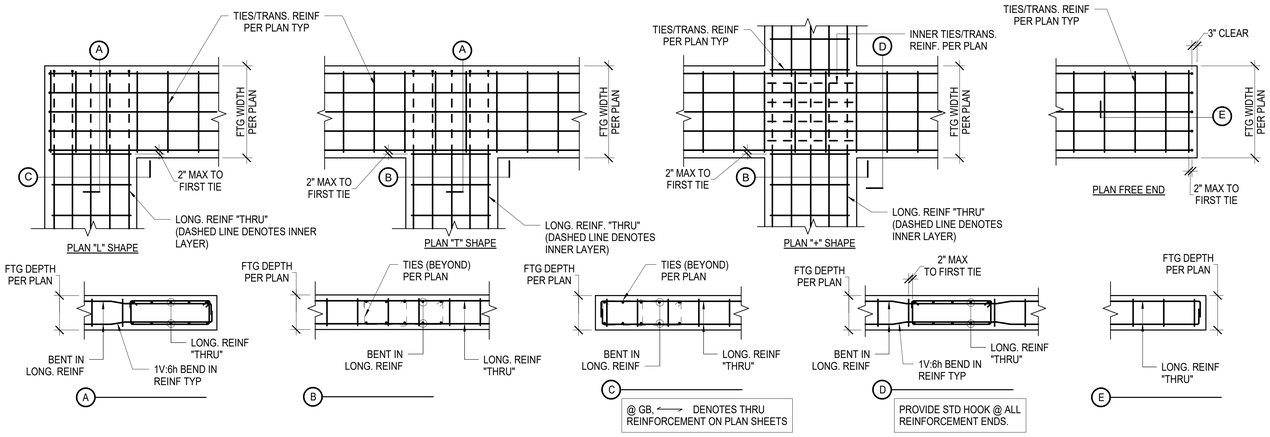

5 S-1.3 FOOTING INTERSECTION

SCALE: N.T.S.

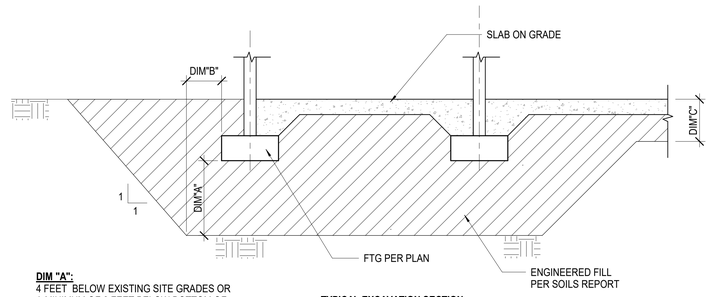

DIM "A":
4 FEET BELOW EXISTING SITE GRADES OR A MINIMUM OF 2 FEET BELOW BOTTOM OF FOOTINGS, WHICHEVER IS DEEPER.

DIM "B":
5 FEET MINIMUM BEYOND EDGE OF FOOTINGS

DIM "C":
12 INCHES MINIMUM BELOW BOTTOM OF SLAB ON GRADE.

TYPICAL EXCAVATION SECTION

NOTE:
BALANCE OF INFO SEE SOILS REPORT.

7 S-1.3 OVER EXCAVATION AT TYP FDN WHERE GRADE BEAM OCCURS

SCALE: N.T.S.

IDENTIFICATION STAMP
DIV. OF THE STATE ARCHITECT
APP: 03-122664 INC:
REVIEWED FOR
SS ☑ FLS ☑ ACS ☑
DATE: 05/12/2023

pjhm architects
LICENSED ARCHITECT RICHARD W. FRUIN NO. C15585 REN. 02/25 STATE OF CALIFORNIA
VCA ENGINEERS, INC. CIVIL • STRUCTURAL
2151 Michelson Dr. #240
Irvine, CA 92612
Tel. 949.679.0870
Fax. 949.679.9370
Project No.: 1747
PROFESSIONAL ENGINEER KEUN KIM No. 54029 Exp. 9/30/24 CIVIL STATE OF CALIFORNIA
OC Office: 24461 Ridge Route Drive #100, Laguna Hills, CA 92653 • OC Phone: 949.496.6191 • SD Office: 804 Pier View Way #103, Oceanside, CA 92054 • SD Phone: 760.730.5527 • LA Office: 837 Traction Avenue, #410, Los Angeles, CA 90013 • LA Phone: 213.278.0172 • Web: pjhm.com

HIGHLAND HIGH SCHOOL
50M POOL & AQUATICS CENTER

KERN HIGH SCHOOL DISTRICT

TYPICAL DETAILS- FOOTING AND EXCAVATION

S-1.3

4/7/2023 4:26:01 PM

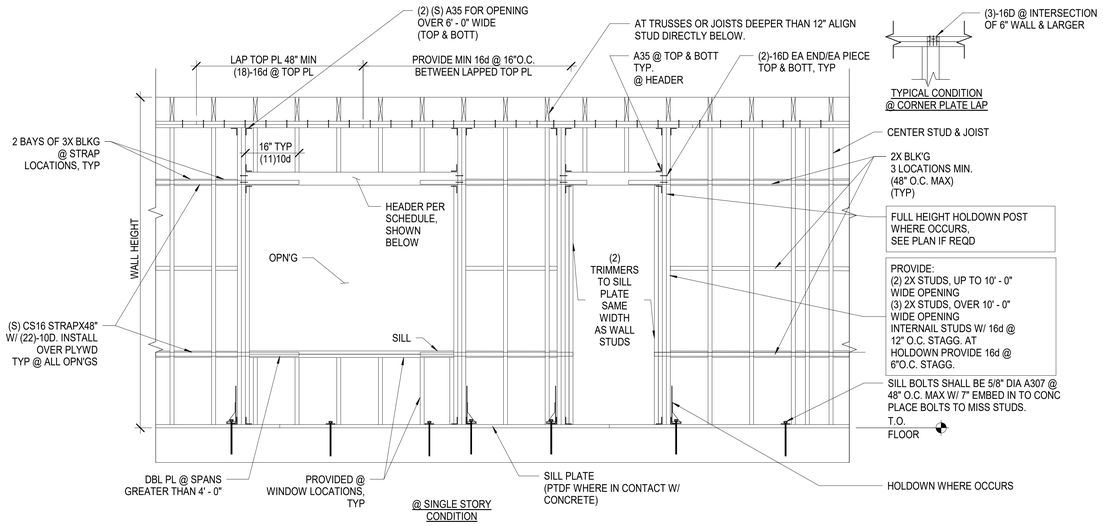

@ SINGLE STORY CONDITION

WALL STUD SCHEDULE				
EXTERIOR WALL (SPACING @ 16" O.C.) 6" WALL (U.N.O.)	INTERIOR BEARING WALL (SPACING @ 16" O.C.) 6" WALL	INTERIOR BEARING WALL (SPACING @ 16" O.C.) 4" WALL	SILL PLATE (@SHEAR WALL, SEE SHEAR WALL SCHEDULE FOR OTHER SIZE)	NON-BEARING WALL (SPACING @ 16" O.C.)
2X6	2X6	2X4	2X	2X4 MIN

HEADER NOTES:
1. SOLID HEADERS MAY BE USED W/ SAME THICKNESS & DEPTH AS BUILT UP HEADERS STATED ABOVE
2. WHERE DISCREPANCIES BETWEEN THE BEARING WALL HEADER SCHEDULE AND DRAWINGS OCCURS, DRAWINGS TAKE PRECEDENCE

BEARING WALL HEADERS		
SPAN	2X4 STUD WALL	2X6 STUD WALL
UP TO 3' - 6"	4x6	6x6
3' - 7" TO 9' - 0"	4X12	6x10
9' - 1" TO 10' - 6"	SEE PLAN	5 1/8 x 10 1/2 GLB

NON-BEARING PARTITION HEADERS		
SPAN	2X4 STUD WALL	2X6 STUD WALL
UP TO 6' - 0"	4X6	6X6
6' - 1" TO 10' - 0"	4X8	6X8
10' - 1" TO 12' - 0"	4X10	6X10

NOTE:
STUD SPACING = 16" O.C.
NAILING =
SEE SHEARWALL NAILING SCHEDULE ON DETAIL

5 S-1.4 TYP WALL AND OPENING FRAMING
SCALE: N.T.S.

BOLT DIAM. AND QUANTITY ON EA SIDE OF SPLICE	REMARKS
(4)-3/4" DIA	TYPICAL

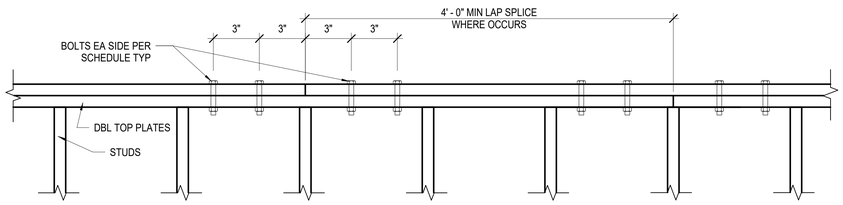

A SPLICE WITH BOLT

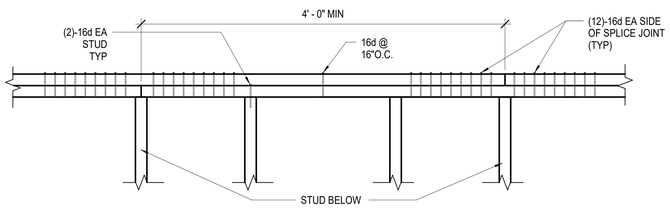

B SPLICE WITH NAILS

NOTE:
PROVIDE (3)-16d AT PLATE LAPS AT CORNERS & INTERSECTIONS.

9 S-1.4 DOUBLE PLATE SPLICE
SCALE: N.T.S.

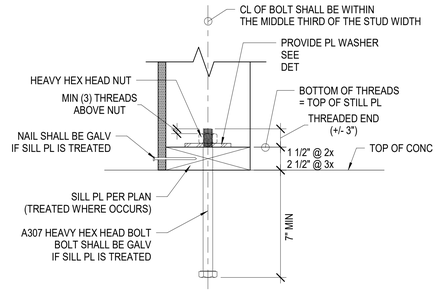

3 S-1.4 TYPICAL SILL BOLT DETAIL
SCALE: N.T.S.

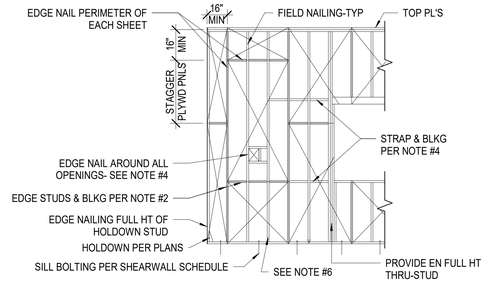

NOTES:
1. NAIL EDGE DISTANCE SHALL BE 3/8" FROM EDGE OF PLYWOOD AND EDGE OF 2x STUDS AND BLOCKING.
2. PROVIDE EDGE STUDS AND BLOCKING PER SHEARWALL SCHEDULE.
3. NAIL EDGE DISTANCE SHALL BE 5/8" FROM EDGE OF PLYWOOD AND EDGE OF 3x STUDS AND BLOCKING.
4. PROVIDE EDGE NAILING AROUND ALL OPENINGS. WHERE OPENING WIDTH EXCEEDS ONE STUD SPACE, PROVIDE CS16 COILED STRAP EACH SIDE OF OPENING WITH 10d @ 4" O.C. STRAP LENGTH SHALL EQUAL OPENING WIDTH/3 WITH STRAP CENTER AT JAMB STUD. STRAP LENGTH NEED NOT EXCEED 8' - 0" AND MAY BE OMITTED AT CORNER(END OF WALL) CONDITION. WHERE NON-CONT HEADERS OCCUR AT ADJACENT OPENINGS PROVIDE CS16 ACROSS HEADERS WITH LENGTH BASED ON LARGER OPENING (STRAP NOT REQ'D AT CONTINUOUS HEADERS).
5. ALL DEFECTIVE NAILING SHALL BE REMOVED AND REPLACED BY SOUND NAILING.
6. PROVIDE FULL HEIGHT EDGE NAILING WHERE POST OR STEEL COLUMN WITH NAILERS OCCURS WITHIN WALL.

4 S-1.4 PLYWOOD SHEARWALL DETAILS
SCALE: N.T.S.

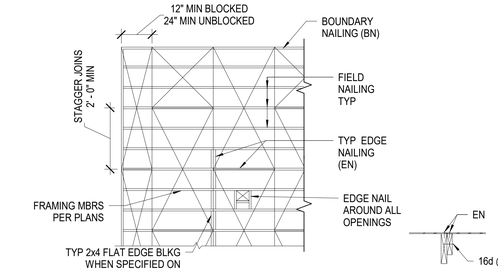

NOTES:
1. PLACE FACE GRAIN OR PLYWOOD PERPENDICULAR TO FRAMING UNLESS NOTED OTHERWISE.
2. NAIL EDGE DISTANCE SHALL BE 3/8" FROM EDGE OF PLYWOOD & 2x FRAMING MBR (3/4" @ 3x OR 4x FRAMING MBR).
3. WHERE BLKG IS SPECIFIED ON PLANS THE FOLLOWING MAY BE USED IN LIEU: 3/4"x3" WIDE PLYWOOD CLEATS W/ #10x1-1/4" FLAT HD WD SCREWS @ SAME SPACING SPECIFIED FOR EN CLEATS TO BE INSTALLED W/1/8" CLEAR EA END OF JOIST. ADD 3-8d @ 2" O.C. TO JOIST @ EA END OF CLEAT.
4. PROVIDE BOUNDARY NAILING (BN) AT DIAPHRAGM BOUNDARIES, CHORDS, STRUT TIES AND WHERE SPECIFIED.
5. WHERE JOIST LAP-SPLICE OCCURS AND PLYWOOD JOINT IS OFFSET ADD 2x4 OR 3x4 NAILER AS SHOWN:

12 S-1.4 PLYWOOD ROOF DETAILS
SCALE: N.T.S.

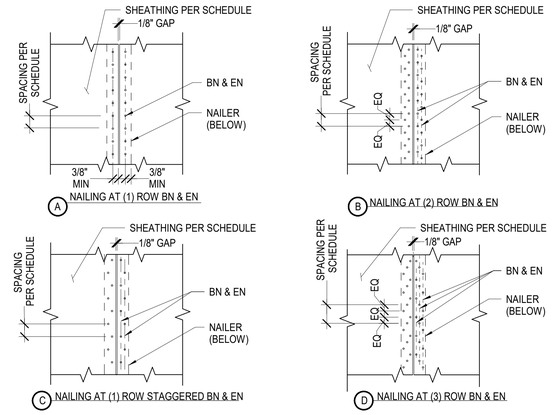

16 S-1.4 ROOF NAILING
SCALE: N.T.S.

4/7/2023 4:26:02 PM

IDENTIFICATION STAMP
DIV. OF THE STATE ARCHITECT
APP: 03-122664 INC:
REVIEWED FOR
SS ☑ FLS ☑ ACS ☑
DATE: 05/12/2023

pjhm architects

LICENSED ARCHITECT
RICHARD W. RUDOLF
No. C15585
REN. 02/25
STATE OF CALIFORNIA

VCA ENGINEERS, INC.
2151 Michelson Dr. #240
Irvine, CA 92612
Tel. 949.679.0870
Fax. 949.679.9370
Project No.: 1747

PROFESSIONAL ENGINEER
KEUN PARK
No. 54029
Exp. 9/30/24
STATE OF CALIFORNIA

pjhm.com • Web: • LA Phone: 213.278.0172 • LA Office: 837 Traction Avenue, #410, Los Angeles, CA 90013 • SD Office: 804 Pier View Way #103, Oceanside, CA 92054 • SD Phone: 760.730.5527 • OC Office: 24461 Ridge Route Drive #100, Laguna Hills, CA 92653 • OC Phone: 949.496.6191

HIGHLAND HIGH SCHOOL
50M POOL & AQUATICS CENTER

KERN HIGH SCHOOL DISTRICT

TYPICAL DETAILS - WOOD

S-1.4

MAX CEILING JOIST SPAN / VERT HANGER SPAN	JOIST SIZE AND SPACING	MAX CEILING WT
8' - 0"	2X4 @ 16" O.C. MAX	MAX 10 PSF DEAD LOAD
10' - 0"	2X6 @ 16" O.C. MAX	
12' - 0"	2X8 @ 16" O.C. MAX	

A **CEILING JOIST SCHEDULE**

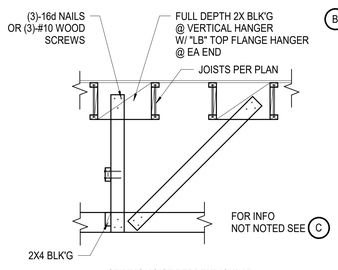

D **CEILING JOIST PERPENDICULAR TO FRAMING MEMBER**

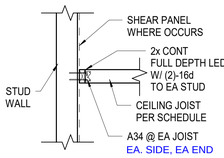

B **CEILING JOIST CONNECTION @ STUD WALL**

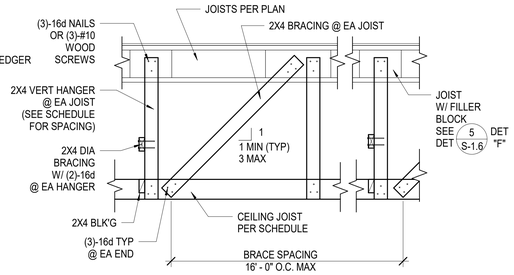

C **CEILING JOIST PARALLEL TO FRAMING MEMBER**

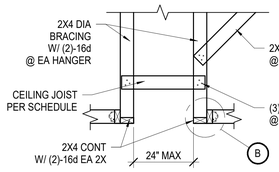

E **CEILING JOIST @ LIGHT POCKET**

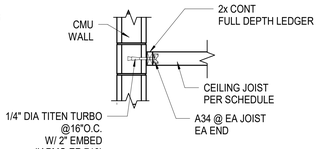

F **CEILING JOIST CONNECTION @ CMU WALL**

1 S-1.5 CEILING JOIST DETAIL

SCALE: N.T.S.

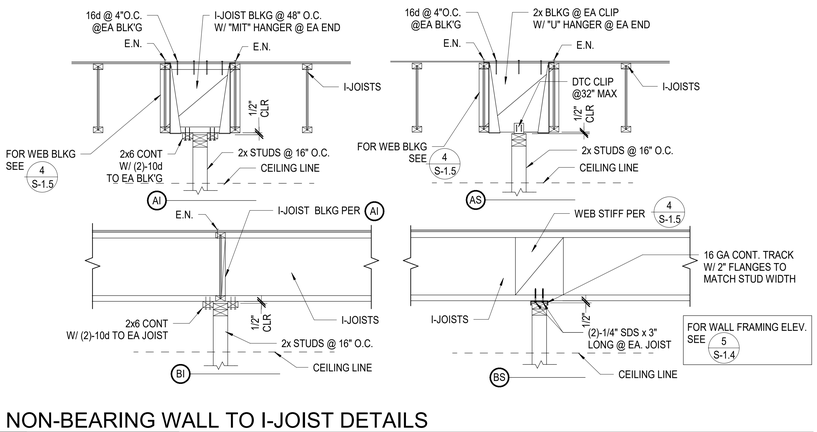

3 S-1.5 DOUBLE I-JOIST DETAIL

SCALE: N.T.S.

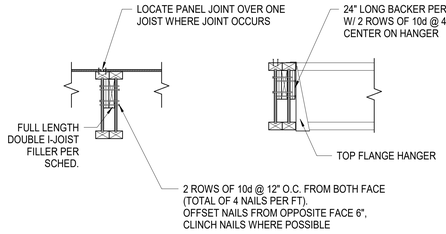

NOTE:
PLYWOOD FILEER/BACKER SHALL BEET THE REQUIREMENTS OF PS1 OR PS2.
2X FILLER/BACKER SHALL BE CONSTRUCTION GRADE OR BETTER.

FLANGE WIDTH	JOIST DEPTH	DOUBLE I-JOIST FILLER	BACKER AT TOP FLANGE HANGER
2 1/2"	11 7/8" & 16"	2X &1/2" PLY	1" PLY

4 S-1.5 I-JOIST STIFFENER DETAIL

SCALE: N.T.S.

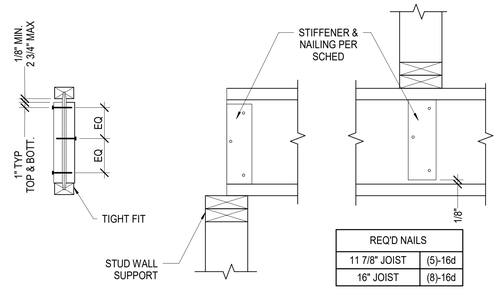

REQ'D NAILS	
11 7/8" JOIST	(5)-16d
16" JOIST	(8)-16d

FLANGE WIDTH	WEB STIFFENER SIZE
1 3/4"	5/8" X 2 5/16"
2 1/2"	1" X 2 5/16"
3 1/2"	2X4

NOTE:
PLYWOOD STIFFENER SHALL MEET THE REQUIREMENTS OF PS1 OR PS2 WITH FACE GRAIN VERTICAL.

5 S-1.5 NON-BEARING WALL TO I-JOIST DETAILS

SCALE: N.T.S.

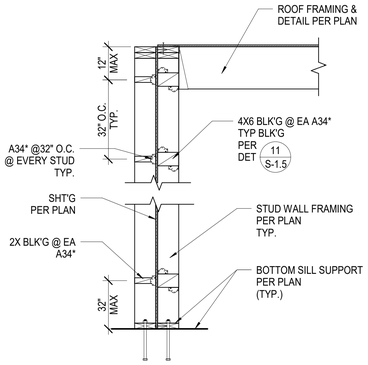

13 S-1.5 TYPICAL FURRED WALL AT EXTERIOR WALL

SCALE: N.T.S.

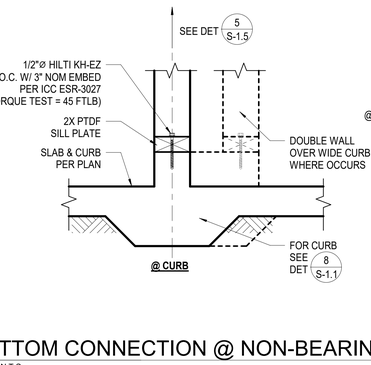

P.A.F. NOTE:
EMBEDMENT OF THE ANCHOR (2 7/8" SHANK LENGTH SHALL BE SUCH THAT THE WASHER BEARS FIRMLY AGAINST 2X SILL PLATE)

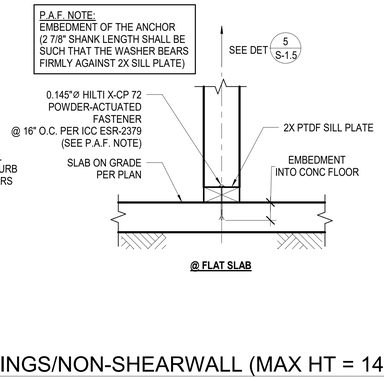

7 S-1.5 BOTTOM CONNECTION @ NON-BEARINGS/NON-SHEARWALL (MAX HT = 14 FT)

SCALE: N.T.S.

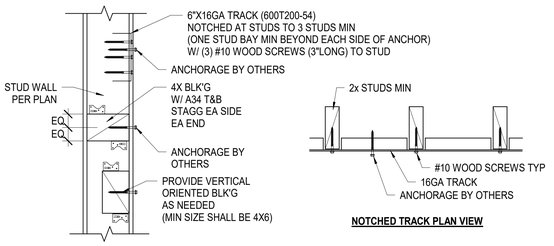

11 S-1.5 TYPICAL BLOCKING/BACKING DETAIL

SCALE: N.T.S.

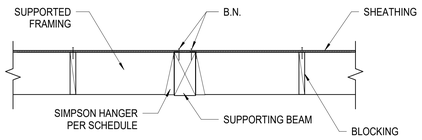

RAFTER/JOIST TO WOOD BEAM

SUPPORTED FRAMING	HGR TYPE
2x	"JB/LB"
SKEWED 2x	"BA"
MULTI 2x	"WP"
3x AND LARGER	"WP"
TJI/ MULTI TJI	"BA"
TJI W/ STIFF	"BA"
GLB	"HGLT"

12 S-1.5 HANGER SCHEDULE

SCALE: N.T.S.

4/7/2023 4:26:05 PM

IDENTIFICATION STAMP
DIV. OF THE STATE ARCHITECT
APP: 03-122664 INC:
REVIEWED FOR
SS ☑ FLS ☑ ACS ☑
DATE: 05/12/2023

pjhm architects
LA Phone: 213.278.0172 • Web: pjhm.com
LICENSED ARCHITECT RICHARD W. FRIEND REN. 02/25 STATE OF CALIFORNIA
VCA ENGINEERS, INC.
2151 Michelson Dr. #240
Irvine, CA 92612
Tel. 949.679.0870
Fax. 949.679.9370
Project No.: 1747
LA Office: 837 Traction Avenue, #410, Los Angeles, CA 90013
PROFESSIONAL ENGINEER KEVIN R. KUN No. 54029 Exp. 9/30/24 CIVIL STATE OF CALIFORNIA
SD Phone: 760.730.5527
OC Office: 24461 Ridge Route Drive #100, Laguna Hills, CA 92653 • OC Phone: 949.496.6191 • SD Office: 804 Pier View Way #103, Oceanside, CA 92054

HIGHLAND HIGH SCHOOL
50M POOL & AQUATICS CENTER

KERN HIGH SCHOOL DISTRICT

TYPICAL DETAILS - WOOD

S-1.5

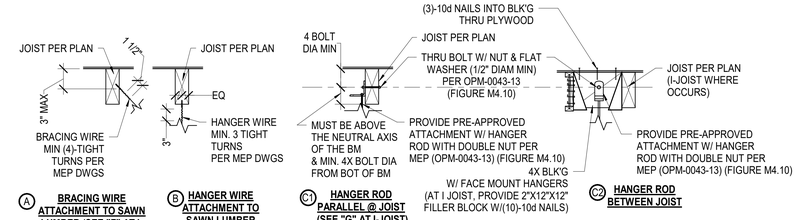

A **BRACING WIRE ATTACHMENT TO SAWN LUMBER (SEE "F" AT I-JOIST)**

B **HANGER WIRE ATTACHMENT TO SAWN LUMBER (SEE "F" AT I-JOIST)**

C1 **HANGER ROD PARALLEL @ JOIST (SEE "G" AT I-JOIST)**

C2 **HANGER ROD BETWEEN JOIST**

C3 **HANGER ROD & BRACE BETWEEN JOISTS FOR BLDG. C PIPE SUPPORT**

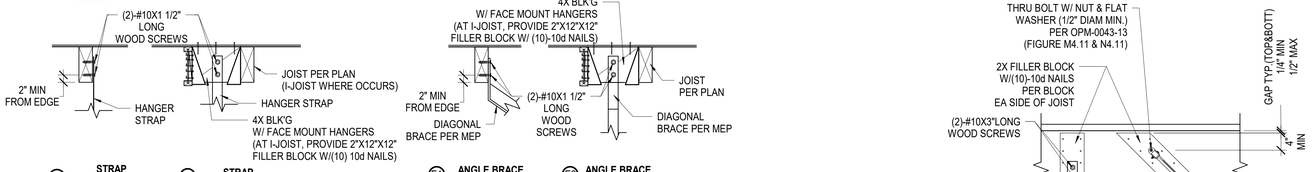

D1 **STRAP PARALLEL @ JOIST (SEE "G" AT I-JOIST)**

D2 **STRAP BETWEEN JOIST**

E1 **ANGLE BRACE PARALLEL @ JOIST (SEE "G" AT I-JOIST)**

E2 **ANGLE BRACE PERPENDICULAR @ JOIST**

G **HANGER/BRACE ROD ATTACHMENT TO JOIST**

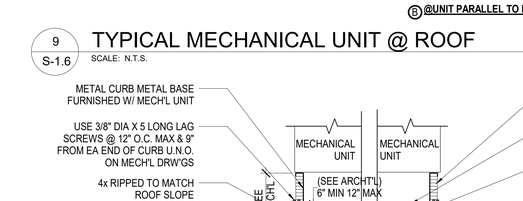

F1 **CEILING BRACING WIRE ATTACHED TO JOIST BOTTOM FLANGE**

F2 **HANGER WIRE CONNECTION TO WOOD I JOIST**

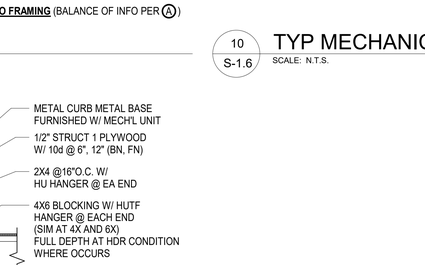

F3 **HANGER WIRE CONNECTION TO WOOD I JOIST**

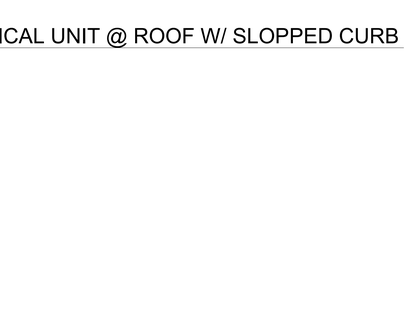

H **EYEBOLT BETWEEN JOIST**

NOTE:
SPACING OF SUPPORTS FOR MINOR MEP EQUIPMENT AND OTHER EQUIPMENT SHALL BE SUCH THAT THE MAXIMUM HANGER LOAD AT JOISTS OR PURLINS IS LIMITED TO 150 POUNDS, HANGERS FOR THE EQUIPMENT LINES SHALL NOT BE LOCATED AT THE SAME MEMBER AS HANGERS FOR OTHER ITEMS. DISTRIBUTE THE HANGER LOADS FROM THE VARIOUS TRADES UNIFORMLY THROUGHOUT THE ENTIRE FRAMING SYSTEM.

5 S-1.6 HANGER ROD, BRACE & WIRE SUPPORT AT JOIST

SCALE: N.T.S.

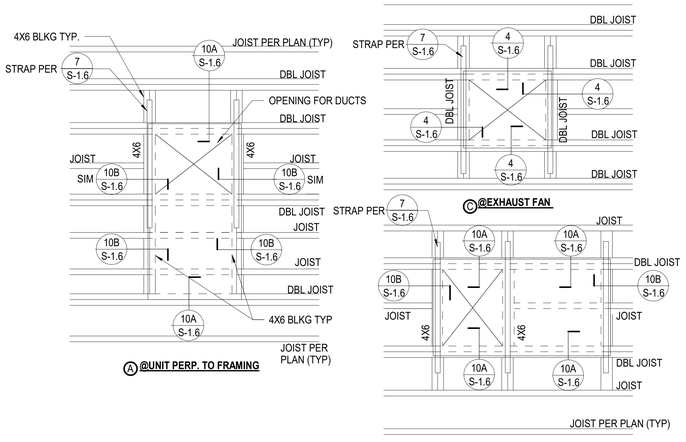

9 S-1.6 TYPICAL MECHANICAL UNIT @ ROOF

SCALE: N.T.S.

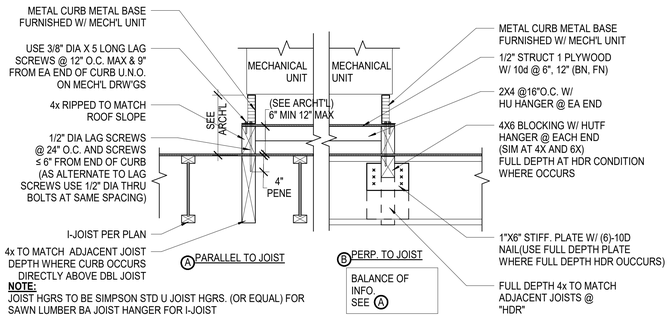

13 S-1.6 TYP MECHANICAL UNIT @ ROOF W/ LEVEL WOOD CURB

SCALE: N.T.S.

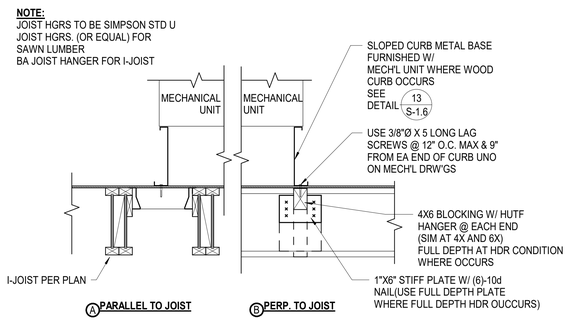

10 S-1.6 TYP MECHANICAL UNIT @ ROOF W/ SLOPPED CURB

SCALE: N.T.S.

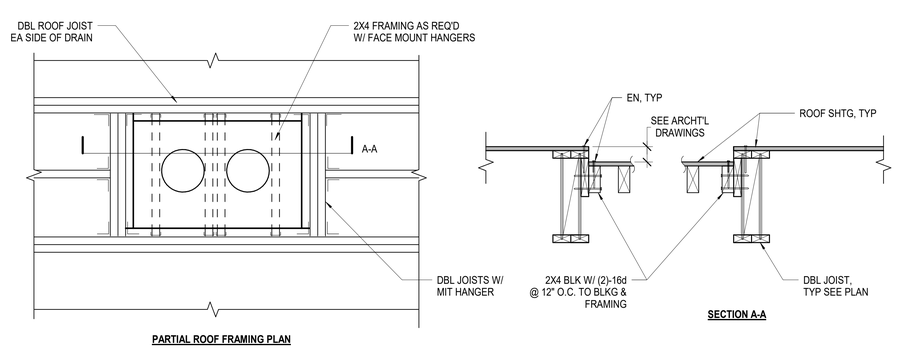

11 S-1.6 TYPICAL ROOF DRAIN FRAMING

SCALE: N.T.S.

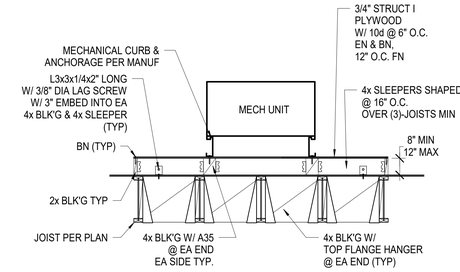

3 S-1.6 CONDENSING UNIT PLATFORM

SCALE: N.T.S.

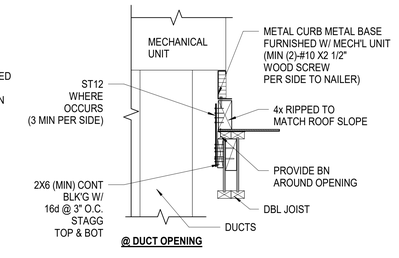

4 S-1.6 TYP FAN MOUNTING DETAIL

SCALE: N.T.S.

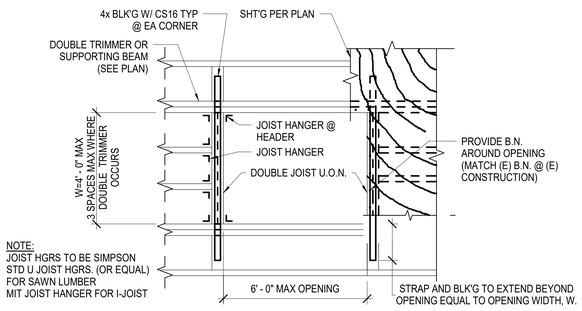

7 S-1.6 TYPICAL ROOF OPENING DETAIL

SCALE: N.T.S.

IDENTIFICATION STAMP
DIV. OF THE STATE ARCHITECT
APP: 03-122664 INC:
REVIEWED FOR
SS ☑ FLS ☑ ACS ☑
DATE: 05/12/2023

pjhm architects

LICENSED ARCHITECT RICHARD W. FRIDLEY No. C15585 REN. 02/25 STATE OF CALIFORNIA

VCA ENGINEERS, INC.
2151 Michelson Dr. #240
Irvine, CA 92612
Tel. 949.679.0870
Fax. 949.679.9370
Project No.: 1747

PROFESSIONAL ENGINEER KEUN KIM No. 54029 Exp. 9/30/24 CIVIL STATE OF CALIFORNIA

LA Phone: 213.278.0172 • Web: pjhm.com
LA Office: 837 Traction Avenue, #410, Los Angeles, CA 90013
SD Phone: 760.730.5527 • SD Office: 804 Pier View Way #103, Oceanside, CA 92054
OC Phone: 949.496.6191 • OC Office: 24461 Ridge Route Drive #100, Laguna Hills, CA 92653

HIGHLAND HIGH SCHOOL
50M POOL & AQUATICS CENTER

KERN HIGH SCHOOL DISTRICT

TYPICAL DETAILS - WOOD MEP SUPPORT

S-1.6

4/7/2023 4:26:06 PM

1 S-1.7 MTL DECK WELDING/SCREW PATTERNS

SCALE: N.T.S.

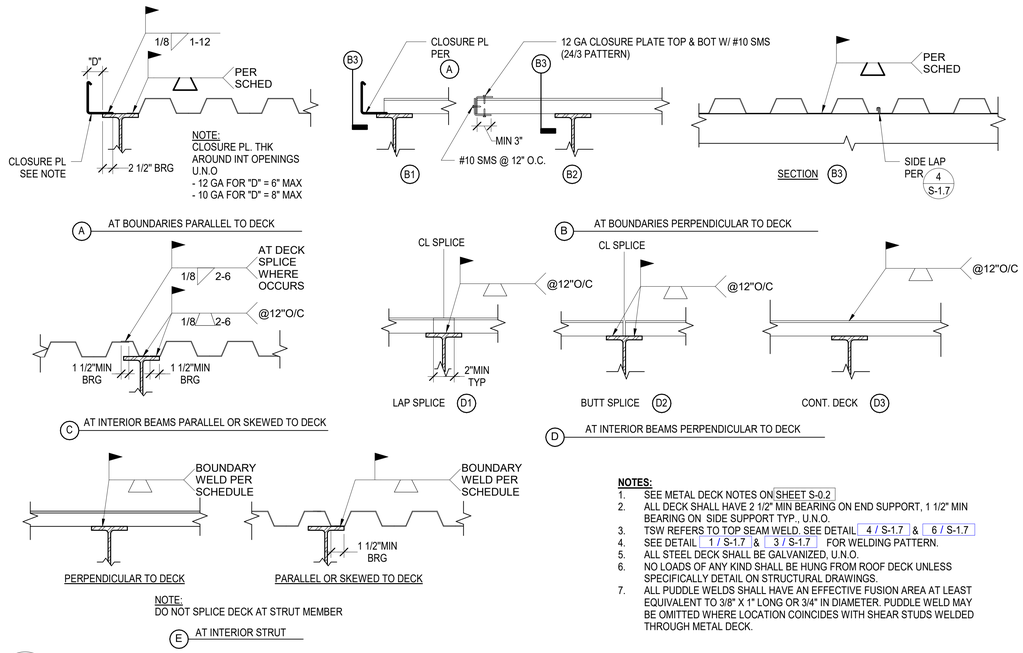

2 S-1.7 TYPICAL METAL DECK CONNECTION & PROPERTIES

SCALE: N.T.S.

NOTES:

1. SEE METAL DECK NOTES ON SHEET S-0.2
2. ALL DECK SHALL HAVE 2 1/2" MIN BEARING ON END SUPPORT, 1 1/2" MIN BEARING ON SIDE SUPPORT TYP., U.N.O.
3. TSW REFERS TO TOP SEAM WELD. SEE DETAIL 4 / S-1.7 & 6 / S-1.7
4. SEE DETAIL 1 / S-1.7 & 3 / S-1.7 FOR WELDING PATTERN.
5. ALL STEEL DECK SHALL BE GALVANIZED, U.N.O.
6. NO LOADS OF ANY KIND SHALL BE HUNG FROM ROOF DECK UNLESS SPECIFICALLY DETAIL ON STRUCTURAL DRAWINGS.
7. ALL PUDDLE WELDS SHALL HAVE AN EFFECTIVE FUSION AREA AT LEAST EQUIVALENT TO 3/8" X 1" LONG OR 3/4" IN DIAMETER. PUDDLE WELD MAY BE OMITTED WHERE LOCATION COINCIDES WITH SHEAR STUDS WELDED THROUGH METAL DECK.

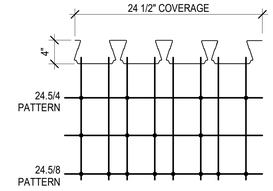

3 S-1.7 TYP DOVETAIL MTL DECK WELDING & SCREW PATTERNS

SCALE: 3/4" = 1'-0"

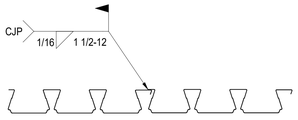

4 S-1.7 TYP DOVETAIL METAL DECK WELDING

SCALE: 3/4" = 1'-0"

5 S-1.7 HSS BEAM TO HSS BEAM CONNECTION

SCALE: N.T.S.

6 S-1.7 TYPICAL METAL DECK WELDING

SCALE: N.T.S.

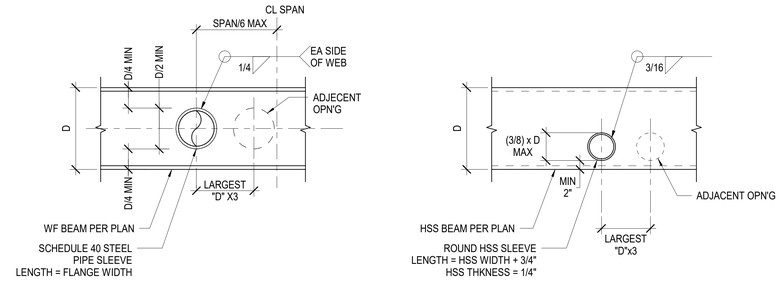

NOTES:

1. THIS DETAIL MAY NOT BE USED WITHOUT PRIOR WRITTEN APPROVAL OF SEOR & DSA.
2. CONTINUITY PLATES AND STIFFENERS SHALL BE 1/2 FLANGE WIDTH; GRADE SHALL MATCH BASE BEAM.
3. FLANGE & STIFFENER NOT REQD FOR 4" SQ HOLES & LESS IN W12 OR DEEPER.
4. WHERE ROUND OPENINGS ARE D/6 OR LESS, REINFORCING SHOWN IS NOT REQUIRED.

7 S-1.7 TYPICAL HOLE THRU STEEL BEAM WEB

SCALE: N.T.S.

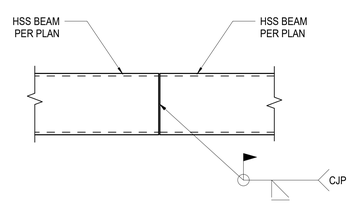

9 S-1.7 HSS BEAM SPLICE DETAIL

SCALE: N.T.S.

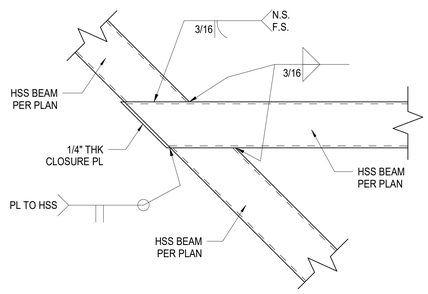

10 S-1.7 SKEWED HSS BEAM TO BEAM

SCALE: N.T.S.

4/7/2023 4:26:08 PM

IDENTIFICATION STAMP
DIV. OF THE STATE ARCHITECT
APP: 03-122664 INC:
REVIEWED FOR
SS ☑ FLS ☑ ACS ☑
DATE: 05/12/2023

pjhm architects
LA Phone: 213.278.0172 • Web: pjhm.com
LICENSED ARCHITECT RICHARD W. FRIEND NO. C15585 REN. 02/25 STATE OF CALIFORNIA
VCA ENGINEERS, INC
2151 Michelson Dr. #240
Irvine, CA 92612
Tel. 949.679.0870
Fax. 949.679.9370
Project No.: 1747
PROFESSIONAL ENGINEER KEVIN R. KUNZ No. 54029 Exp. 9/30/24 STATE OF CALIFORNIA
LA Office: 837 Traction Avenue, #410, Los Angeles, CA 90013 • SD Phone: 760.730.5527
OC Office: 24461 Ridge Route Drive #100, Laguna Hills, CA 92653 • OC Phone: 949.496.6191 • SD Office: 804 Pier View Way #103, Oceanside, CA 92054 • SD Phone: 760.730.5527

HIGHLAND HIGH SCHOOL
50M POOL & AQUATICS CENTER

KERN HIGH SCHOOL DISTRICT

TYPICAL DETAILS-METAL DECK

S-1.7

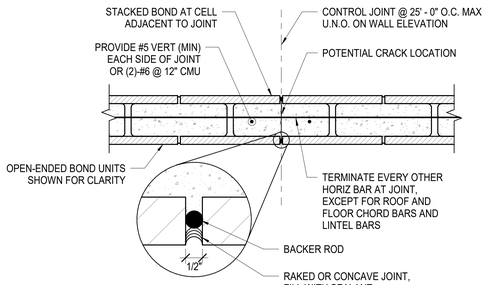

1 S-1.8 TYP CMU WALL CONTROL JOINT (C.J.)

SCALE: N.T.S.

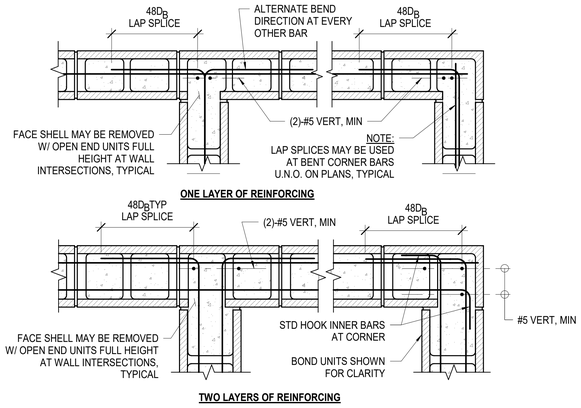

2 S-1.8 CONCRETE MASONRY WALL INTERSECTION

SCALE: N.T.S.

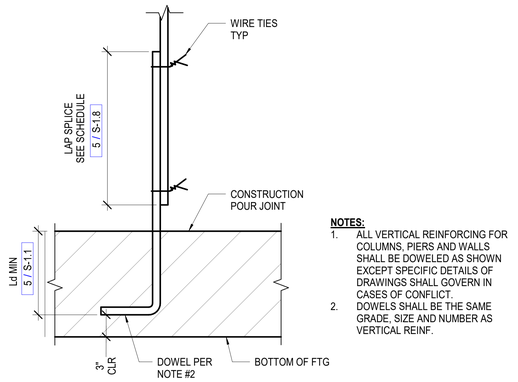

NOTES:
1. ALL VERTICAL REINFORCING FOR COLUMNS, PIERS AND WALLS SHALL BE DOWELED AS SHOWN EXCEPT SPECIFIC DETAILS OF DRAWINGS SHALL GOVERN IN CASES OF CONFLICT.
2. DOWELS SHALL BE THE SAME GRADE, SIZE AND NUMBER AS VERTICAL REINF.

3 S-1.8 TYPICAL DOWELS AT CMU WALL

SCALE: N.T.S.

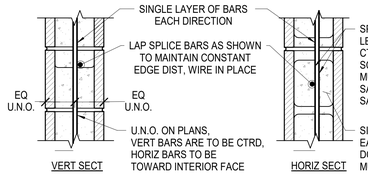

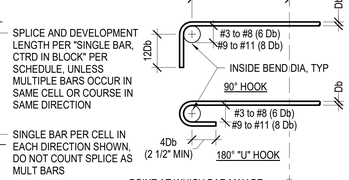

A REINFORCEMENT CENTERED IN CMU BLOCK

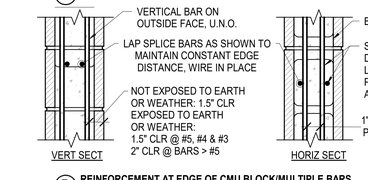

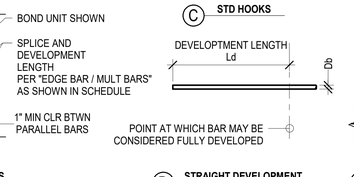

B REINFORCEMENT AT EDGE OF CMU BLOCK/MULTIPLE BARS

C STD HOOKS

D STRAIGHT DEVELOPMENT

BAR SIZE	STD HOOK Le (IN)	48 D_b (IN)	L_d (IN)	LAP SPLICE (IN) U.N.O.
#3	4	18	18	18
#4	6	24	30	30
#5	8	30	46	46
#6	9	36	64	54
#7	11	42	87	63
#8	12	48	114	72
#9	14	55	145	81

CMU WITH $f'm$=2,000 PSI (MIN)

NOTES:
1. VALUES SHOWN ARE FOR GRADE 60 REINF DEVELOPED IN CMU.
2. REFER TO TYPICAL REINFORCEMENT DETAILS FOR INFO NOT SHOWN, AND FOR DEVELOPMENT IN CONCRETE.
3. USE OF HYTEN COUPLER (OR EQ W/ ESR REPORT) IN LIEU OF LAP SPLICE @ CMU VERTICAL REINF ARE ACCEPTED. (ICC-ESR-4275)
4. WHERE NON-CONTACT SPLICES ARE USED, REINFORCEMENT SHALL NOT BE SPACED FARTHER APPART THAN ONE-FIFTH THE REQUIRED LAP SPLICE NOR MORE THAN 8 INCHES APPART.
   - L_e = HOOK LENGTH
   - L_d = DEVELOPED LENGTH
   - D_b = REINFORCING BAR DIAMETER

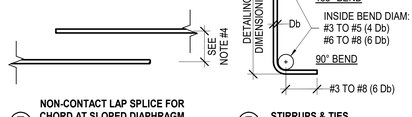

E NON-CONTACT LAP SPLICE FOR CHORD AT SLOPED DIAPHRAGM

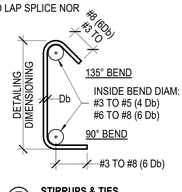

F STIRRUPS & TIES

5 S-1.8 MASONRY REINFORCEMENT DETAILS & DEVELOPMENT LENGTHS

SCALE: N.T.S.

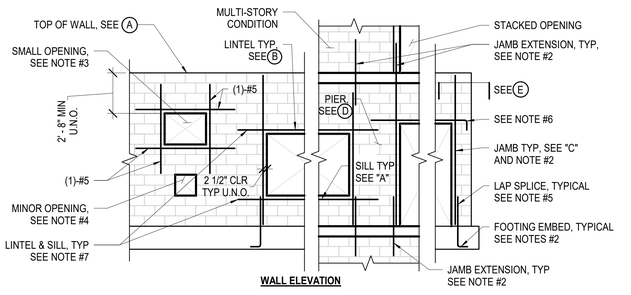

WALL ELEVATION

NOTES:
1. SEE PLANS FOR TYPICAL AND ADDITIONAL REINFORCEMENT.
2. FOR OPENINGS 36" OR LARGER IN WIDTH USE FULL HEIGHT JAMB BARS. EXTEND TO TOP OF WALL AT UPPER/SINGLE STORY. 48D MIN PAST FLOOR AND INTO FOOTING.
3. AT OPENINGS LESS THAN 36" IN WIDTH, EXTEND JAMB BARS 48D PAST EDGE OF OPENING.
4. FOR MINOR OPENINGS THAT DO NOT INTERRUPT TYPICAL REINFORCEMENT, ARE NO LARGER THAN 16" SQ, AND ARE AT LEAST 24" FROM ADJACENT OPENINGS OR WALL EDGE, NO ADDITIONAL REINFORCEMENT IS REQ'D U.N.O. ON PLANS.
5. USE A TYPICAL LAP SPLICE U.N.O. ON PLANS.
6. WHERE FULL EXTENSION IS NOT POSSIBLE, EXTEND BARS AS FAR AS POSSIBLE AND USE A STANDARD HOOK.
7. EXTEND LINTEL AND SILL BARS 48D MINIMUM PAST EDGE OF OPENING.
8. AT FULL HEIGHT JAMB BARS, THE WEB AND SHELL MAY BE REMOVED TO FACILITATE INSTALLATION. THE CONTRACTOR SHALL ENSURE THAT GROUTING WILL NOT BE COMPROMISED IF THIS OPTION IS USED.

7 S-1.8 TYPICAL MINIMUM REINFORCEMENT FOR MASONRY OPENINGS

SCALE: N.T.S.

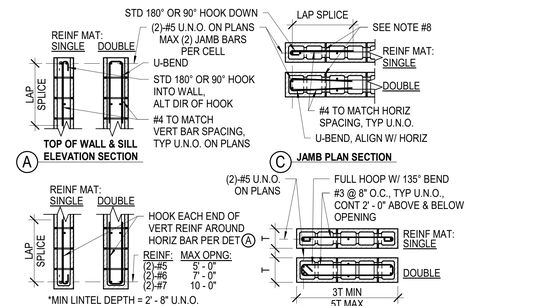

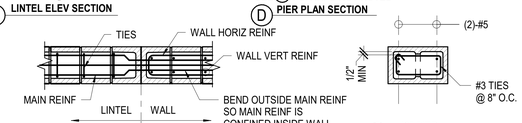

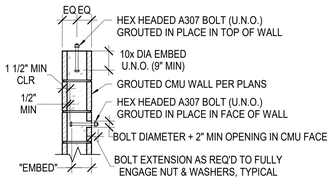

MINIMUM EMBEDMENT TABLE					
DIAMETER OF BOLTS IN INCHES	1/2	5/8	3/4	7/8	1
EMBEDMENT IN INCHES (EMBED)	4	5	6	7	8
MIN CMU WALL THICKNESS (INCHES)	6"	8"	10"	10"	12"

NOTES:
1. BOLTS CAST-IN MASONRY SHALL BE GROUTED IN PLACE WITH 1" OF GROUT BETWEEN BOLT AND MASONRY.
2. BOLTS SHALL BE A307 HEADED MACHINE BOLTS OR A36 ROD W/ TACK WELDED HEX NUT.
3. UNLESS DETAILED ON PLANS, DO NOT PLACE BOLTS IN FACE OF WALL < 12x DIA FROM OPENINGS OR EDGES WITHOUT APPROVAL FROM SEOR.

9 S-1.8 HEADED BOLT GROUTED IN CMU WALL

SCALE: N.T.S.

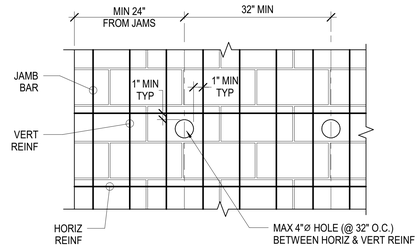

11 S-1.8 ALLOWED LOCATION OF HOLES FOR UTILITY, ETC.

SCALE: N.T.S.

IDENTIFICATION STAMP
DIV. OF THE STATE ARCHITECT
APP: 03-122664 INC:
REVIEWED FOR
SS ☑ FLS ☑ ACS ☑
DATE: 05/12/2023

pjhm architects
LA Phone: 213.278.0172 • Web: pjhm.com
LICENSED ARCHITECT RICHARD W. FRIEDMAN NO. C15585 REN. 02/25 STATE OF CALIFORNIA
VCA ENGINEERS, INC.
2151 Michelson Dr. #240
Irvine, CA 92612
Tel. 949.679.0870
Fax. 949.679.9370
Project No.: 1747
LA Office: 837 Traction Avenue, #410, Los Angeles, CA 90013 • SD Phone: 760.730.5527 • OC Office: 24461 Ridge Route Drive #100, Laguna Hills, CA 92653 • Oceanside, CA 92054

PROFESSIONAL ENGINEER KEVIN R. KERN No. 54029 Exp. 9/30/24 CIVIL STATE OF CALIFORNIA

HIGHLAND HIGH SCHOOL
50M POOL & AQUATICS CENTER

KERN HIGH SCHOOL DISTRICT

SD Office: 804 Pier View Way #103, Oceanside, CA 92054 • OC Phone: 949.496.6191

TYPICAL DETAILS-CMU

S-1.8

4/7/2023 4:26:10 PM

1 S-2.0

OVERALL PLAN

SCALE: 3/32" = 1'-0"

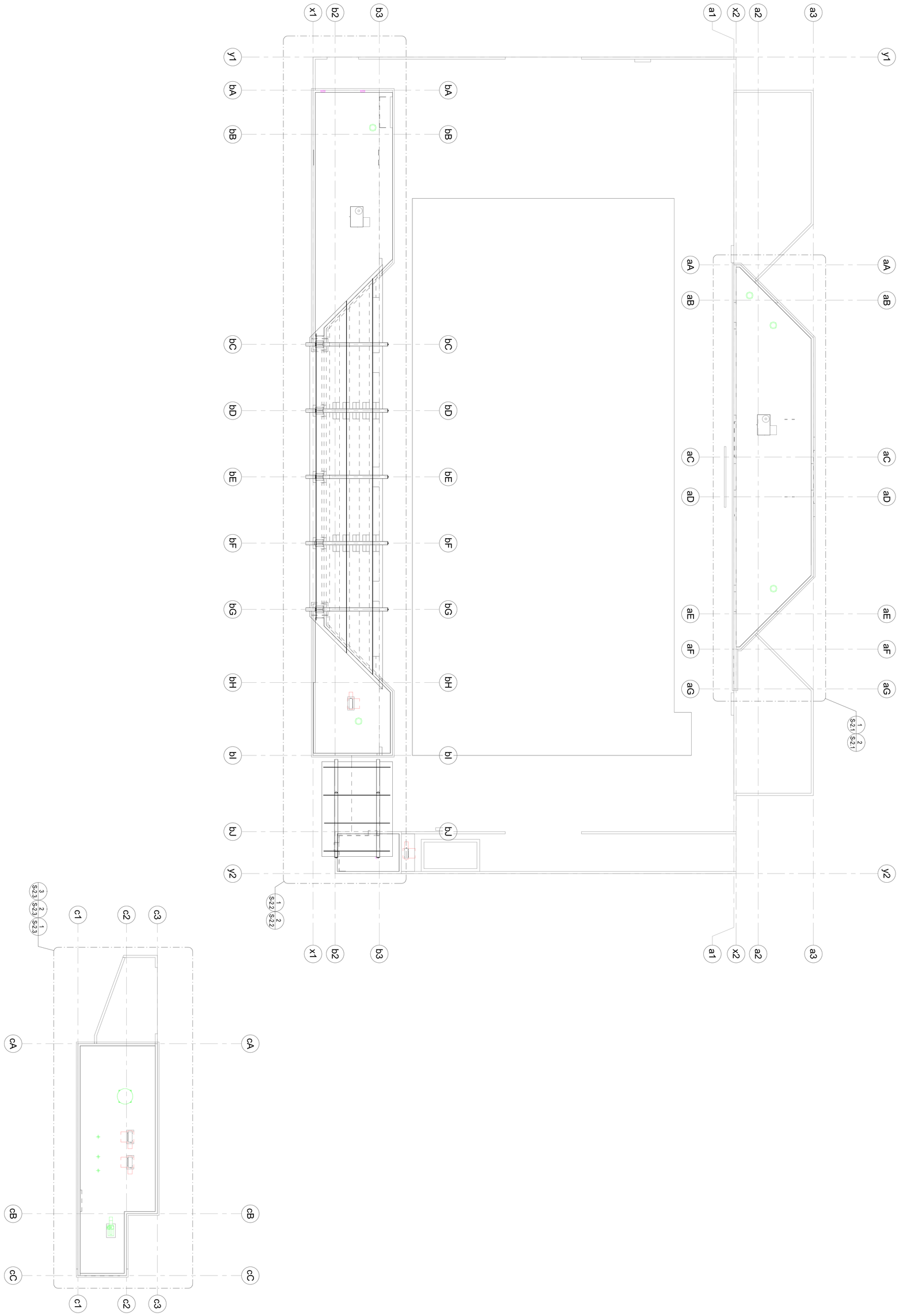

OVERALL PLAN

S-2.0

HIGHLAND HIGH SCHOOL
50M POOL & AQUATICS CENTER

KERN HIGH SCHOOL DISTRICT

VCA ENGINEERS INC
CIVIL • STRUCTURAL
2151 Michelson Dr. #240
Irvine, CA 92612
Tel. 949.679.0870
Fax. 949.679.9370
Project No.: i747

pjhm architects

IDENTIFICATION STAMP
DIV. OF THE STATE ARCHITECT
APP: 03-122664 INC:
SS ☑ REVIEWED FOR
FLS ☑ ACS ☑
DATE 05/12/2023

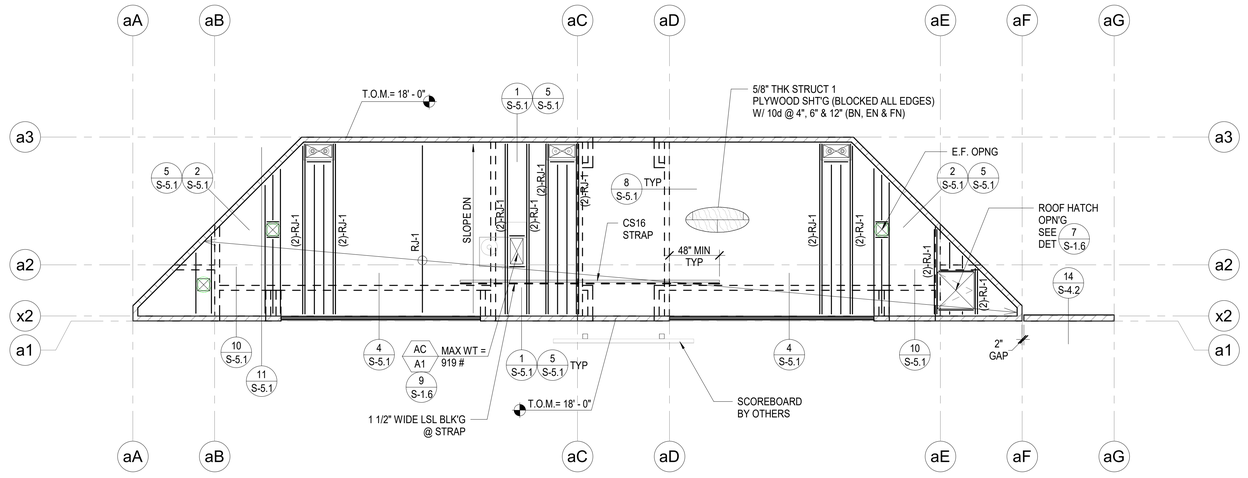

2 S-2.1 BLDG A - ROOF FRAMING PLAN

SCALE : 1/8" = 1'-0"

ROOF FRAMING NOTES:

1. FOR GENERAL NOTES, SEE S-0.0 SERIES.
2. FOR TYPICAL DETAILS, SEE S-1.0 SERIES.
3. INDICATES ROOF SHEATHING.
4. WALL LEGENDS
   - INDICATES 8" THK CMU WALL. SEE ELEVATIONS FOR ADDITIONAL INFORMATION. (MIN #5 @ 16" O.C.(VERT) & #4 @ 16"O.C.(HORIZ))
   - INDICATES 2x8 WOOD STUD WALL.
5. RJ-1 : 16" DEEP RED-I65 @ 16" O.C.

STRAP @ BLK'G

BLK'G PER PLAN

STRAP PER PLAN

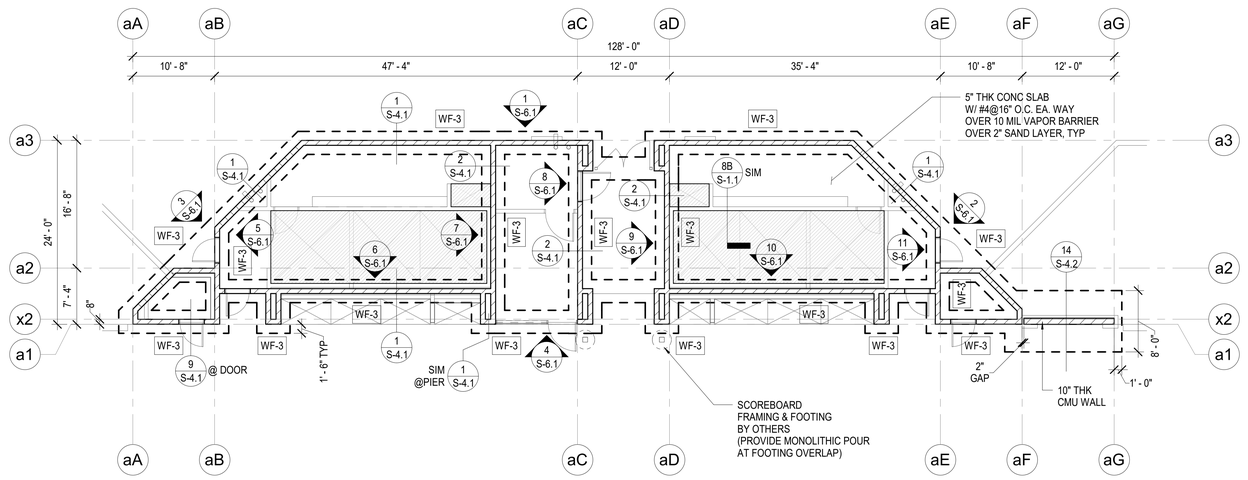

1 S-2.1 BLDG A - FOUNDATION PLAN

SCALE : 1/8" = 1'-0"

FOUNDATION NOTES:

1. FOR GENERAL NOTES, SEE S-0.0 SERIES.
2. FOR TYPICAL DETAILS, SEE S-1.0 SERIES.
3. WF-# INDICATES WALL FOOTING.

MARK	DIMENSIONS		REINFORCEMENT		#4 TIES @ 12" O.C., U.N.O.
	WIDTH	DEPTH	TOP BARS	BOTTOM BARS	ALT CAP
WF-3	3' - 0"	24"	(3)-#6 T&B	(3)-#6 T&B	
WF-5	5' - 0"	24"	(5)-#6 T&B	(5)-#6 T&B	

WALL FOOTING SCHEDULE

4. DENOTES DEPRESSED SLAB.
5. DENOTES STEPPED FOOTING PER 8 / S-1.2
6. WALL LEGENDS
   - INDICATES 8" THK CMU WALL. SEE ELEVATIONS FOR ADDITIONAL INFORMATION. (MIN #5 @ 16" O.C.(VERT) & #4 @ 16"O.C.(HORIZ))

IDENTIFICATION STAMP
DIV. OF THE STATE ARCHITECT
APP: 03-122664 INC:
REVIEWED FOR
SS ☑ FLS ☑ ACS ☑
DATE: 05/12/2023

pjhm architects

LICENSED ARCHITECT RICHARD W. FRUIN NO. C15585 REN. 02/25 STATE OF CALIFORNIA

VCA ENGINEERS, INC.
2151 Michelson Dr. #240
Irvine, CA 92612
Tel. 949.679.0870
Fax. 949.679.9370
Project No.: 1747

PROFESSIONAL ENGINEER KEUN H. PARK No. 54029 Exp. 9/30/24 CIVIL STATE OF CALIFORNIA

SD Phone: 760.730.5527 • LA Office: 837 Traction Avenue, #410, Los Angeles, CA 90013 • LA Phone: 213.278.0172 • Web: pjhm.com
OC Office: 24461 Ridge Route Drive #100, Laguna Hills, CA 92653 • OC Phone: 949.496.6191 • SD Office: 804 Pier View Way #103, Oceanside, CA 92054

HIGHLAND HIGH SCHOOL
50M POOL & AQUATICS CENTER

KERN HIGH SCHOOL DISTRICT

BLDG A - FOUNDATION & ROOF FRAMING PLAN

S-2.1

4/7/2023 4:26:14 PM

ROOF FRAMING NOTES:

1. FOR GENERAL NOTES, SEE S-0.0 SERIES.
2. FOR TYPICAL DETAILS, SEE S-1.0 SERIES.
3. INDICATES ROOF SHEATHING.
4. WALL LEGENDS
   - INDICATES 8" THK CMU WALL SEE ELEVATIONS FOR ADDITIONAL INFORMATION. (MIN #5 @ 16" O.C.(VERT) & #4 @ 16"O.C.(HORIZ))
   - INDICATES 2x8 WOOD STUD WALL.
5. RJ-1 : 16" DEEP RED-I65 @ 16" O.C.
   RJ-2 : 11 7/8" DEEP RED-I65 @ 16" O.C.

STRAP @ BLK'G

BLK'G PER PLAN

STRAP PER PLAN

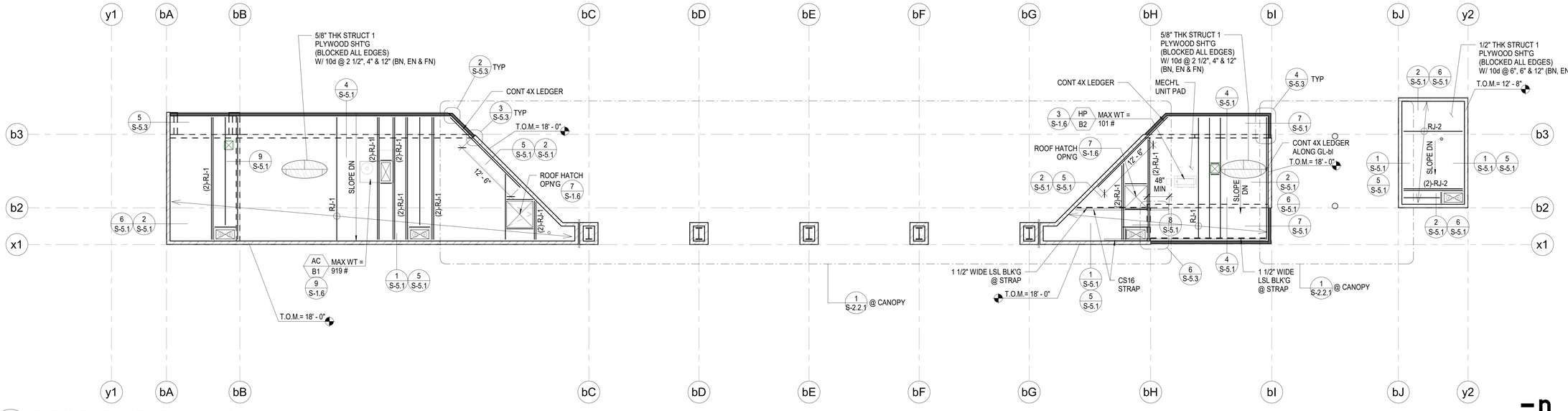

2 S-2.2 BLDG B - ROOF FRAMING PLAN

SCALE : 1/8" = 1'-0"

FOUNDATION NOTES:

1. FOR GENERAL NOTES, SEE S-0.0 SERIES.
2. FOR TYPICAL DETAILS, SEE S-1.0 SERIES.
3. WF-# INDICATES WALL FOOTING.

MARK	DIMENSIONS		REINFORCEMENT		#4 TIES @ 12" O.C., U.N.O.
	WIDTH	DEPTH	TOP BARS	BOTTOM BARS	ALT CAP
WF-3	3' - 0"	24"	(3)-#6 T&B	(3)-#6 T&B	
WF-5	5' - 0"	24"	(5)-#6 T&B	(5)-#6 T&B	

4. DENOTES DEPRESSED SLAB.
5. DENOTES STEPPED FOOTING PER 8 / S-1.2
6. WALL LEGENDS
   - INDICATES 8" THK CMU WALL. SEE ELEVATIONS FOR ADDITIONAL INFORMATION. (MIN #5 @ 16" O.C.(VERT) & #4 @ 16"O.C.(HORIZ))

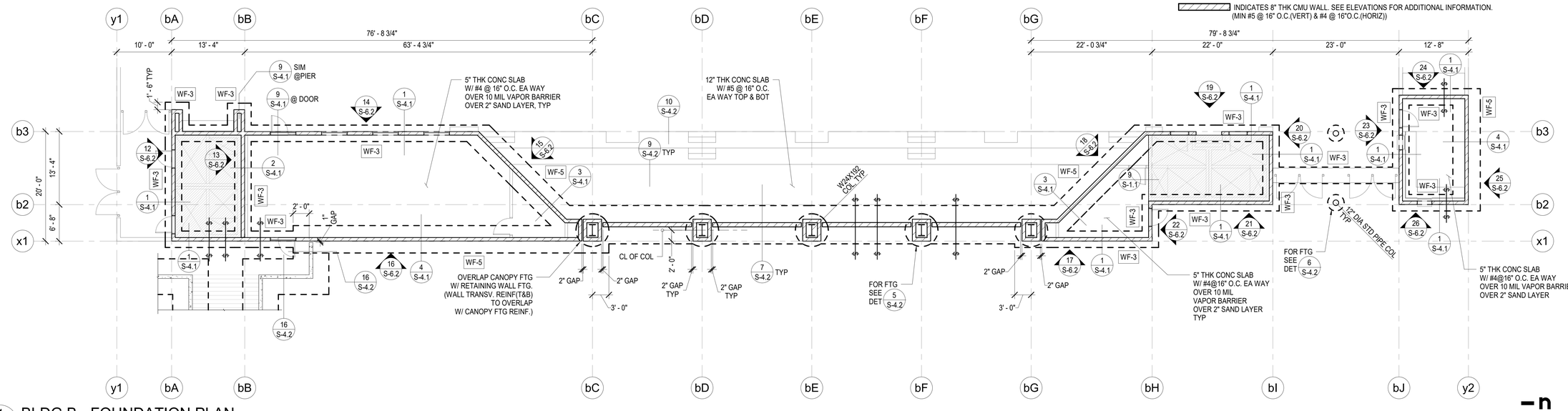

1 S-2.2 BLDG B - FOUNDATION PLAN

SCALE : 1/8" = 1'-0"

4/7/2023 4:26:15 PM

IDENTIFICATION STAMP
DIV. OF THE STATE ARCHITECT
APP: 03-122664 INC:
REVIEWED FOR
SS ☑ FLS ☑ ACS ☑
DATE: 05/12/2023

pjhm architects

LICENSED ARCHITECT
RICHARD W. FRUIN
No. C15585
REN. 02/25
STATE OF CALIFORNIA

VCA ENGINEERS, INC.
2151 Michelson Dr. #240
Irvine, CA 92612
Tel. 949.679.0870
Fax. 949.679.9370
Project No.: 1747

PROFESSIONAL ENGINEER
KEUN PARK
No. 34029
Exp. 9/30/24
STATE OF CALIFORNIA

HIGHLAND HIGH SCHOOL
50M POOL & AQUATICS CENTER

KERN HIGH SCHOOL DISTRICT

BLDG B - FOUNDATION & ROOF FRAMING PLAN

S-2.2

OC Office: 24401 Ridge Route Drive #100, Laguna Hills, CA 92653 • OC Phone: 949.496.6191 • SD Office: 804 Pier View Way #103, Oceanside, CA 92054 • SD Phone: 760.730.5527 • LA Office: 837 Traction Avenue, #410, Los Angeles, CA 90013 • LA Phone: 213.278.0172 • Web: pjhm.com

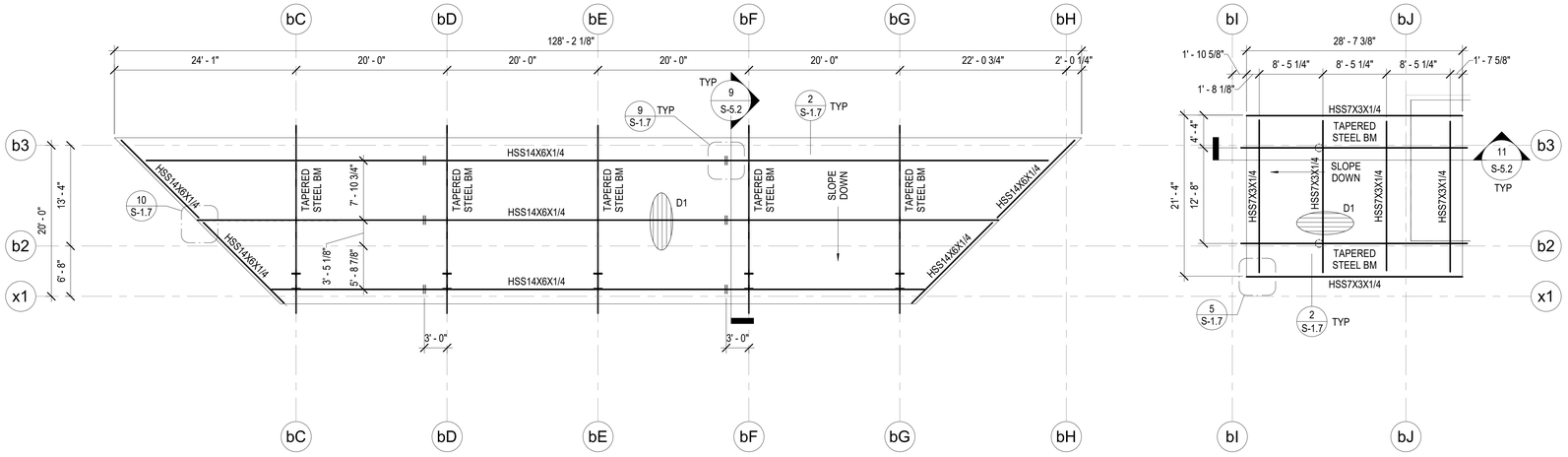

1 BLDG B CANOPY - ROOF FRAMING PLAN
S-2.2.1 SCALE : 1/8" = 1'-0"

CANOPY FRAMING NOTES:

1. FOR GENERAL NOTES, SEE S-0.0 SERIES.
2. FOR TYPICAL DETAILS, SEE S-1.0 SERIES.
3. DENOTES BEAM SPLICE PER 9 / S-1.7
4. SEE 5 / S-1.7 FOR HSS TO HSS CONNECTION.
5. DENOTES DECK PER SCHEDULE, SEE DET 2 / S-1.7

DECK SCHEDULE

DECK MARK	TYPE	GAGE	I (IN4/FT)	S (TOP+) (IN3/FT)	S (BOT-) (IN3/FT)	TOTAL DEPTH (IN)	CONC FILL TYPE	SIDE-SEAM ATTACHMENT	ATTACHMENT PATTERN
D1	VERCO 2.0D IAPMO UES ER-0423	18	0.612	0.463	0.450	2"	BARE DECK	SEE DET 4 S-1.7	24.5/4 1 S-1.7

IDENTIFICATION STAMP
DIV. OF THE STATE ARCHITECT
APP: 03-122664 INC:
REVIEWED FOR
SS ☑ FLS ☑ ACS ☑
DATE: 05/12/2023

pjhm architects

LICENSED ARCHITECT
THOMAS W. KRUSE
NO. C15585
REN. 02/25
STATE OF CALIFORNIA

VCA ENGINEERS, INC.
CIVIL • STRUCTURAL
2151 Michelson Dr. #240
Irvine, CA 92612
Tel. 949.679.0870
Fax. 949.679.9370
Project No.: i747

REGISTERED PROFESSIONAL ENGINEER
KEUN NA
No. S4029
Exp. 9/30/24
STATE OF CALIFORNIA

HIGHLAND HIGH SCHOOL
50M POOL & AQUATICS CENTER

KERN HIGH SCHOOL DISTRICT

CANOPY - FOUNDATION & FRAMING PLAN

S-2.2.1

OC Office: 24461 Ridge Route Drive #100, Laguna Hills, CA 92653 • OC Phone: 949.496.6191 • SD Office: 804 Pier View Way #103, Oceanside, CA 92054 • SD Phone: 760.730.5527 • LA Office: 837 Traction Avenue, #410, Los Angeles, CA 90013 • LA Phone: 213.278.0172 • Web: pjhm.com

4/7/2023 4:26:16 PM

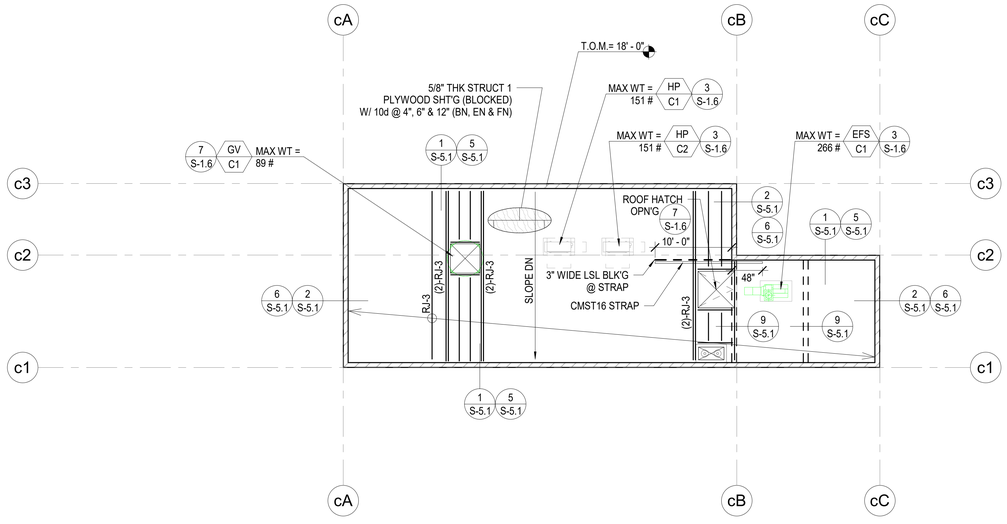

3 S-2.3 BLDG C - ROOF FRAMING PLAN
SCALE : 1/8" = 1'-0"

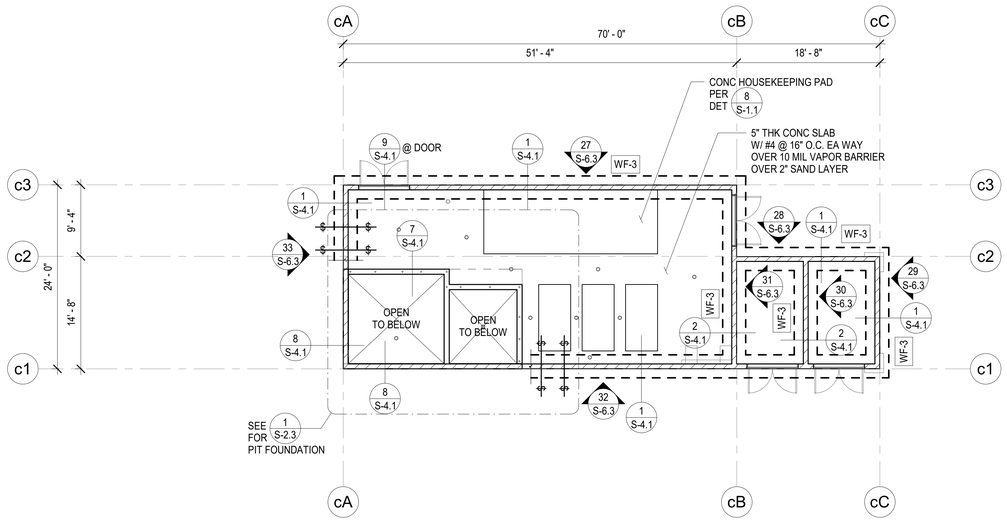

2 S-2.3 BLDG C - FOUNDATION PLAN
SCALE : 1/8" = 1'-0"

ROOF FRAMING NOTES:

1. FOR GENERAL NOTES, SEE S-0.0 SERIES.
2. FOR TYPICAL DETAILS, SEE S-1.0 SERIES.
3. INDICATES ROOF SHEATHING.
4. WALL LEGENDS
   INDICATES 8" THK CMU WALL SEE ELEVATIONS FOR ADDITIONAL INFORMATION. (MIN #5 @ 16" O.C.(VERT) & #4 @ 16"O.C.(HORIZ))
5. RJ-3 : 16" DEEP RED-I90HS @ 16" O.C. (FOR PIPE SUPPORT BELOW JOISTS @ BLDG C, PROVIDE SHOP DRAWING PRIOR TO INSTALL. MAX POINT LOAD PER EA. JOIST IS 1.5K.)

STRAP @ BLK'G

BLK'G PER PLAN

STRAP PER PLAN

FOUNDATION NOTES:

1. FOR GENERAL NOTES, SEE S-0.0 SERIES.
2. FOR TYPICAL DETAILS, SEE S-1.0 SERIES.
3. WF-# INDICATES WALL FOOTING.

WALL FOOTING SCHEDULE

MARK	DIMENSIONS		REINFORCEMENT		#4 TIES @ 12" O.C., U.N.O.
	WIDTH	DEPTH	TOP BARS	BOTTOM BARS	ALT CAP
WF-3	3' - 0"	24"	(3)-#6 T&B	(3)-#6 T&B	
WF-5	5' - 0"	24"	(5)-#6 T&B	(5)-#6 T&B	

4. DENOTES DEPRESSED SLAB.
5. DENOTES STEPPED FOOTING PER 8 / S-1.2
6. WALL LEGENDS
   INDICATES 8" THK CMU WALL. SEE ELEVATIONS FOR ADDITIONAL INFORMATION. (MIN #5 @ 16" O.C.(VERT) & #4 @ 16"O.C.(HORIZ))

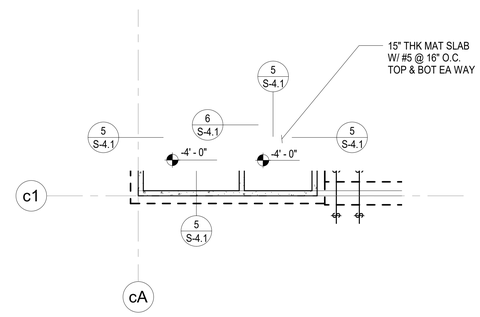

1 S-2.3 BLDG C - PIT FOUNDATION PLAN
SCALE : 1/8" = 1'-0"

IDENTIFICATION STAMP
DIV. OF THE STATE ARCHITECT
APP: 03-122664 INC:
REVIEWED FOR
SS ☑ FLS ☑ ACS ☑
DATE: 05/12/2023

pjhm architects

LICENSED ARCHITECT
THOMAS W. KRUSE
NO. C15585
REN. 02/25
STATE OF CALIFORNIA

VCA ENGINEERS, INC.
CIVIL • STRUCTURAL
2151 Michelson Dr. #240
Irvine, CA 92612
Tel. 949.679.0870
Fax. 949.679.9370
Project No.: i747

REGISTERED PROFESSIONAL ENGINEER
JOHN KEUN RA
No. S4029
Exp. 9/30/24
STRUCTURAL
STATE OF CALIFORNIA

HIGHLAND HIGH SCHOOL
50M POOL & AQUATICS CENTER

KERN HIGH SCHOOL DISTRICT

BLDG C - FOUNDATION & ROOF FRAMING PLAN

S-2.3

OC Office: 24461 Ridge Route Drive #100, Laguna Hills, CA 92653 • OC Phone: 949.496.6191 • SD Office: 804 Pier View Way #103, Oceanside, CA 92054 • SD Phone: 760.730.5527 • LA Office: 837 Traction Avenue, #410, Los Angeles, CA 90013 • LA Phone: 213.278.0172 • Web: pjhm.com

4/7/2023 4:26:18 PM

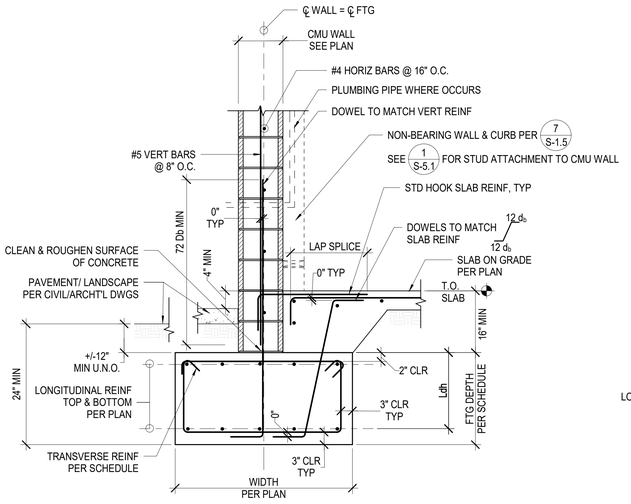

1 S-4.1 WALL FOOTING @ CONC WALL (BLDG EXTERIOR)

SCALE: N.T.S.

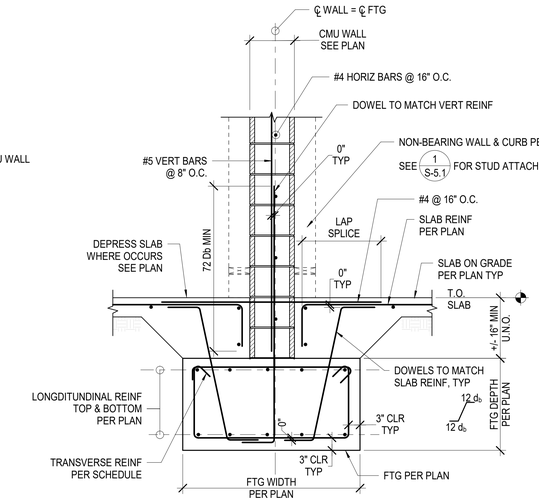

2 S-4.1 INTERIOR CMU WALL FOOTING DETAIL

SCALE: N.T.S.

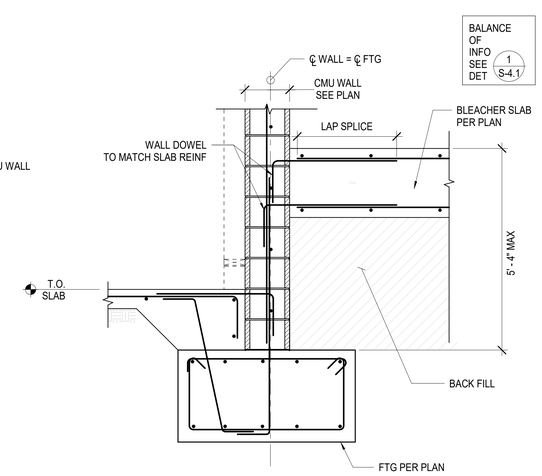

3 S-4.1 EXTERIOR CMU WALL FOOTING ALONG BLEACHER CONCRETE SLAB

SCALE: N.T.S.

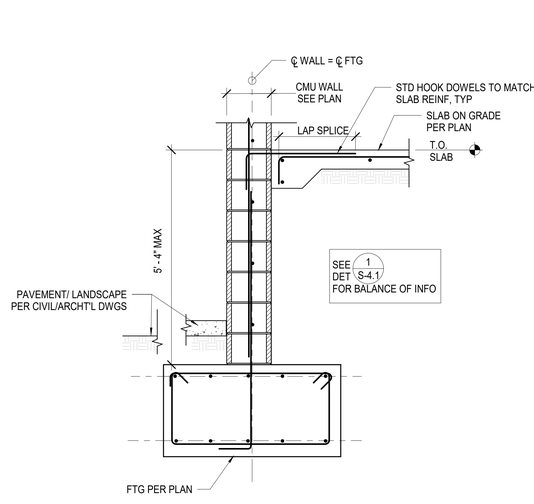

4 S-4.1 EXTERIOR CMU WALL FOOTING DETAIL

SCALE: N.T.S.

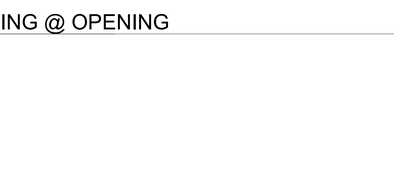

5 S-4.1 PIT FOUNDATION

SCALE: N.T.S.

6 S-4.1 CONC WALL @ PIT SLAB

SCALE: N.T.S.

7 S-4.1 TOP OF PIT WALL DETAIL

SCALE: N.T.S.

8 S-4.1 PIT WALL TRANSITION DETAIL

SCALE: N.T.S.

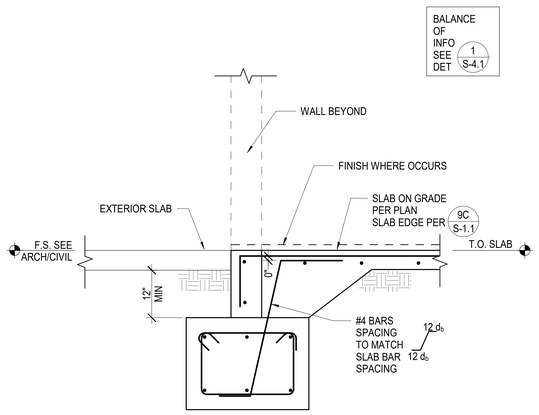

9 S-4.1 FOOTING @ OPENING

SCALE: N.T.S.

4/7/2023 4:26:19 PM

IDENTIFICATION STAMP
DIV. OF THE STATE ARCHITECT
APP: 03-122664 INC:
REVIEWED FOR
SS ☑ FLS ☑ ACS ☑
DATE: 05/12/2023

pjhm architects
LICENSED ARCHITECT RICHARD W. PRIBYL REN. 02/25 STATE OF CALIFORNIA
VCA ENGINEERS, INC.
2151 Michelson Dr. #240
Irvine, CA 92612
Tel. 949.679.0870
Fax. 949.679.9370
Project No.: 1747
PROFESSIONAL ENGINEER KEUN PARK No. 34029 Exp. 9/30/24 STATE OF CALIFORNIA
LA Phone: 213.278.0172 • Web: pjhm.com
LA Office: 837 Traction Avenue, #410, Los Angeles, CA 90013
SD Phone: 760.730.5527 • SD Office: 804 Pier View Way #103, Oceanside, CA 92054
OC Phone: 949.496.6191 • OC Office: 24461 Ridge Route Drive #100, Laguna Hills, CA 92653

HIGHLAND HIGH SCHOOL
50M POOL & AQUATICS CENTER

KERN HIGH SCHOOL DISTRICT

FOUNDATION DETAILS

S-4.1

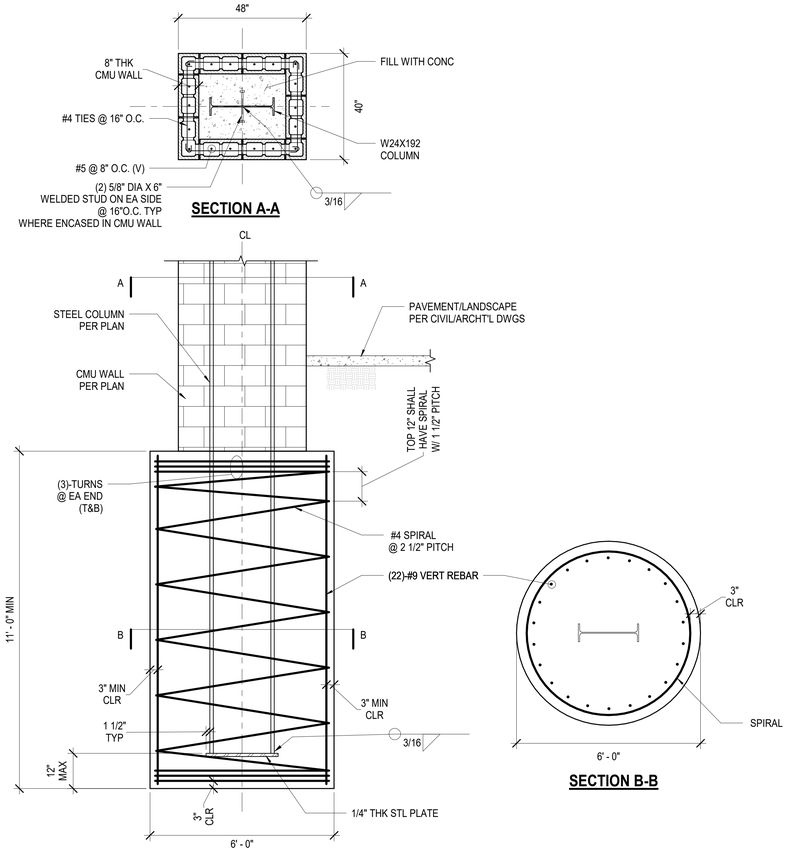

5 S-4.2 CANOPY FOOTING

SCALE: N.T.S.

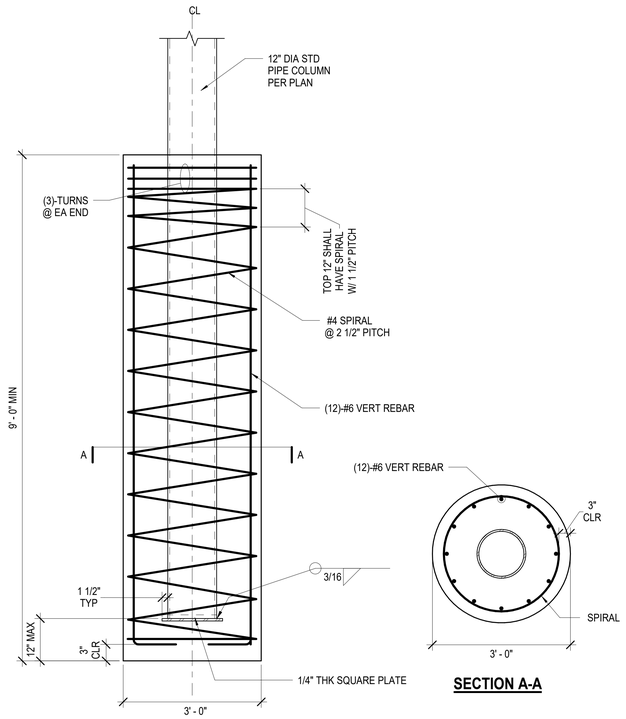

6 S-4.2 CANOPY FOOTING

SCALE: N.T.S.

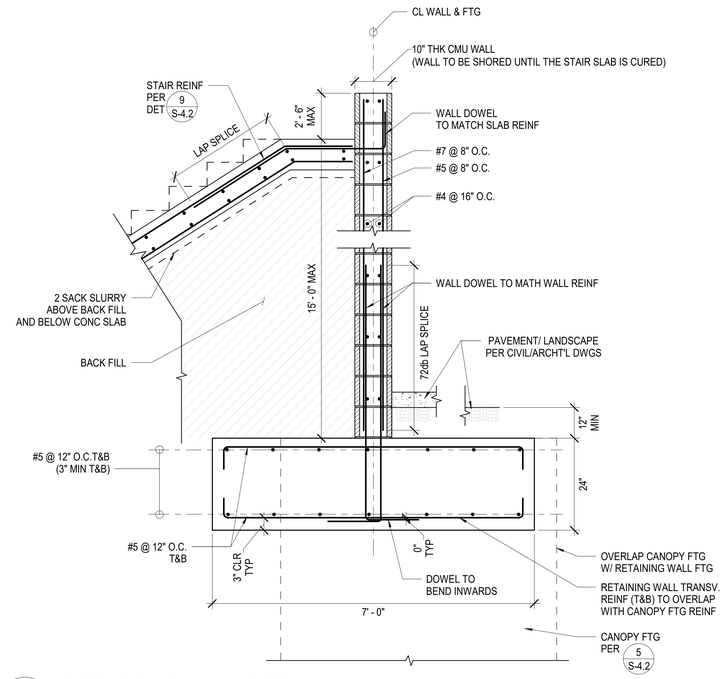

7 S-4.2 RETAINING WALL DETAIL

SCALE: 3/4" = 1'-0"

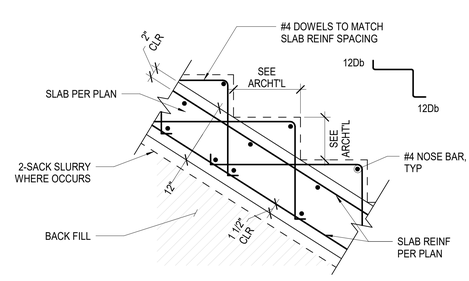

9 S-4.2 BLEACHER SEAT CONC SLAB SECTION

SCALE: N.T.S.

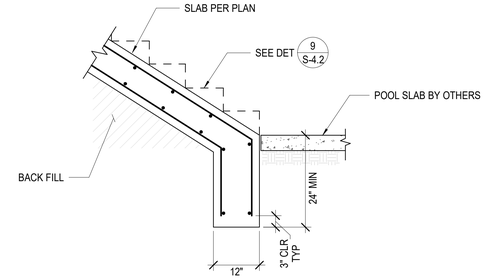

10 S-4.2 BLEACHER SEAT CONC SLAB EDGE

SCALE: 3/4" = 1'-0"

WALL INFO				FOOTING INFO			
HT MAX	W1	V1 BARS	H1 BARS	B	T	F1 BARS	F2 BARS
7' - 0"	8"	#5 @ 8" O.C.	#5 @ 12" O.C.	6' - 6"	18"	#5 @ 8" O.C.	#5 @ 12" O.C.
6' - 0"	8"	#5 @ 12" O.C.	#5 @ 12" O.C.	4' - 6"	18"	#5 @ 12" O.C.	#5 @ 12" O.C.
5' - 0"	8"	#5 @ 12" O.C.	#5 @ 12" O.C.	3' - 0"	18"	#5 @ 12" O.C.	#5 @ 12" O.C.
4' - 0"	8"	#5 @ 12" O.C.	#5 @ 12" O.C.	2' - 6"	18"	#5 @ 12" O.C.	#5 @ 12" O.C.

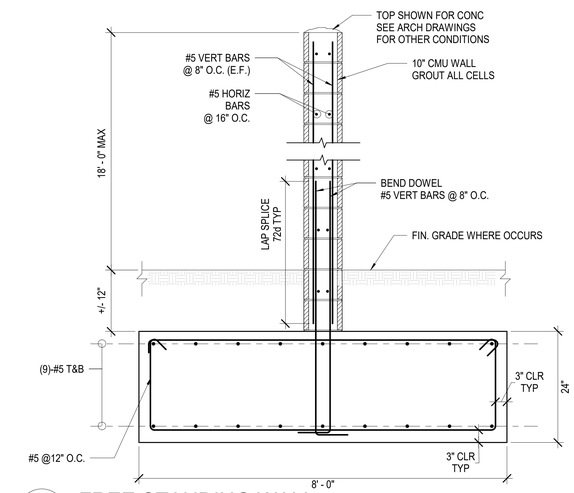

14 S-4.2 FREE STANDING WALL

SCALE: N.T.S.

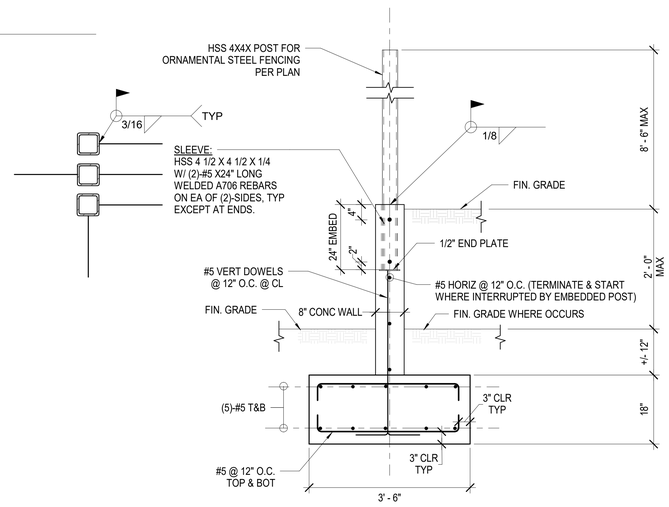

15 S-4.2 RETAINING WALL DETAIL WITH ORNAMENTAL STEEL FENCE POST EMBED

SCALE: N.T.S.

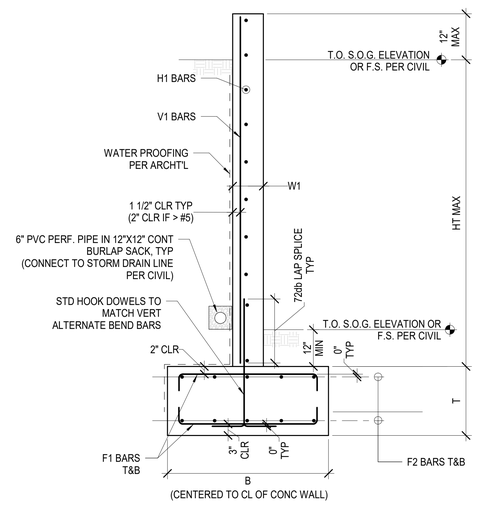

TYPICAL WALL DETAIL (HT ≤ 8'-0")

16 S-4.2 CONCRETE RETAINING WALL DETAIL

SCALE: 3/4" = 1'-0"

IDENTIFICATION STAMP
DIV. OF THE STATE ARCHITECT
APP: 03-122664 INC:
REVIEWED FOR
SS ☑ FLS ☑ ACS ☑
DATE: 05/12/2023

pjhm architects

LICENSED ARCHITECT RICHARD W. FRUIN NO. C15585 REN. 02/25 STATE OF CALIFORNIA

VCA ENGINEERS, INC.
2151 Michelson Dr. #240
Irvine, CA 92612
Tel. 949.679.0870
Fax. 949.679.9370
Project No.: 1747

PROFESSIONAL ENGINEER KEUN PARK No. 54029 Exp. 9/30/24 STATE OF CALIFORNIA

HIGHLAND HIGH SCHOOL
50M POOL & AQUATICS CENTER

KERN HIGH SCHOOL DISTRICT

FOUNDATION DETAILS

S-4.2

OC Office: 24461 Ridge Route Drive #100, Laguna Hills, CA 92653 • OC Phone: 949.496.6191 • SD Office: 804 Pier View Way #103, Oceanside, CA 92054
SD Phone: 760.730.5527 • LA Office: 837 Traction Avenue, #410, Los Angeles, CA 90013 • LA Phone: 213.278.0172 • Web: pjhm.com

4/7/2023 4:26:20 PM

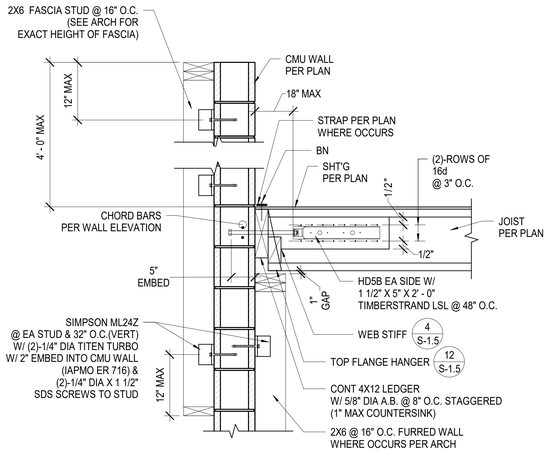

1 S-5.1 WALL TIE JOIST PERPENDICULAR TO CMU WALL
SCALE: N.T.S.

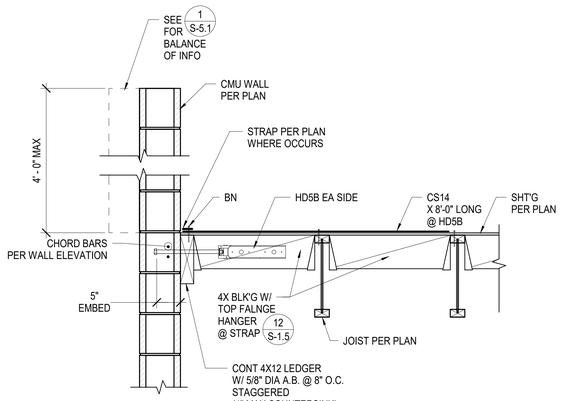

2 S-5.1 WALL TIE JOIST PARALLEL TO CMU WALL
SCALE: N.T.S.

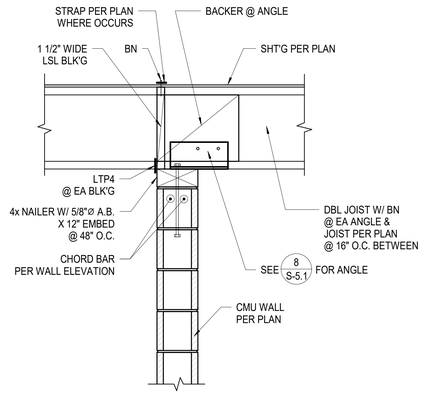

3 S-5.1 CANTILEVERED JOIST @ CMU WALL
SCALE: N.T.S.

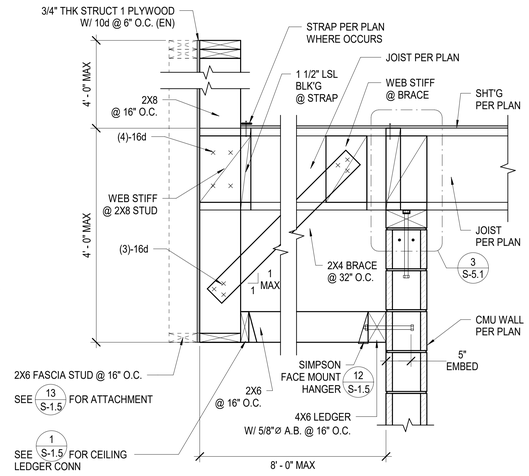

4 S-5.1 FASCIA PARAPET DETAIL
SCALE: N.T.S.

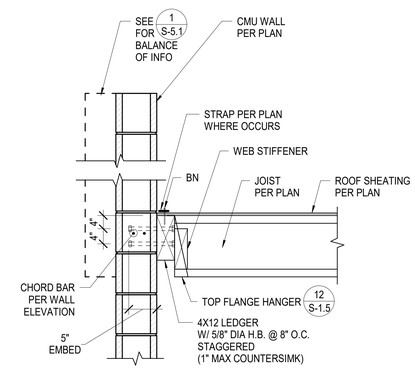

5 S-5.1 JOISTS PERPENDICULAR TO CMU WALL
SCALE: N.T.S.

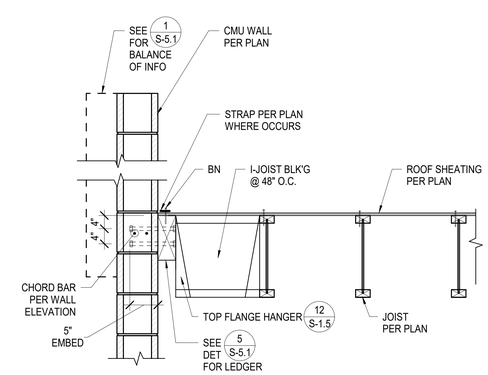

6 S-5.1 JOISTS PARALLEL TO CMU WALL
SCALE: N.T.S.

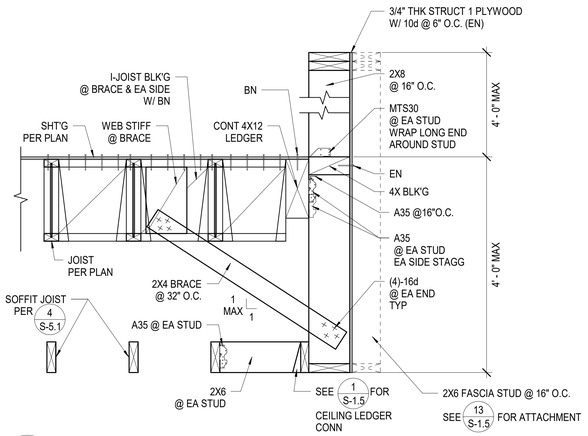

7 S-5.1 FASCIA PARAPET DETAIL
SCALE: N.T.S.

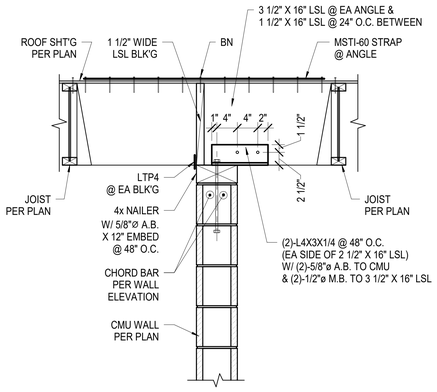

8 S-5.1 JOISTS PARALLEL TO CMU WALL BELOW
SCALE: N.T.S.

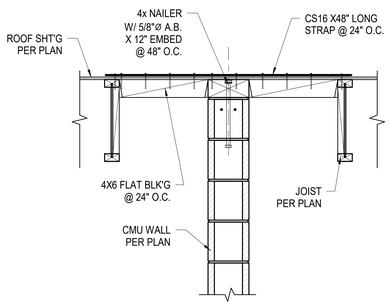

9 S-5.1 CMU WALL SECTION @ FIRE RATED WALL
SCALE: N.T.S.

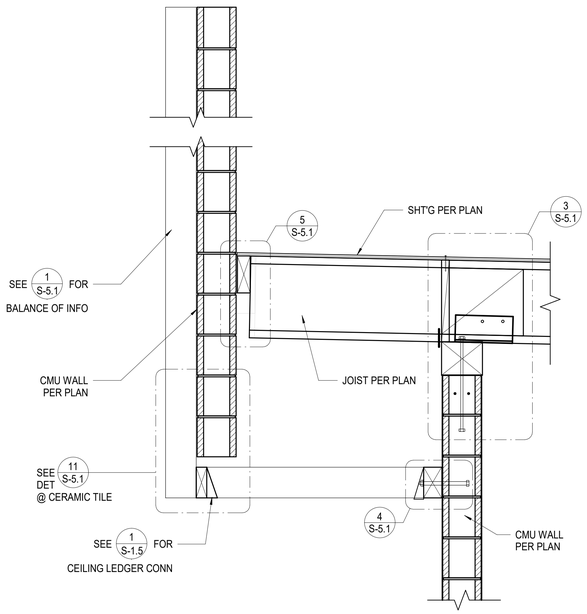

10 S-5.1 WALL TIE JOIST @ CMU WALL LINTEL CONDITION
SCALE: 1" = 1'-0"

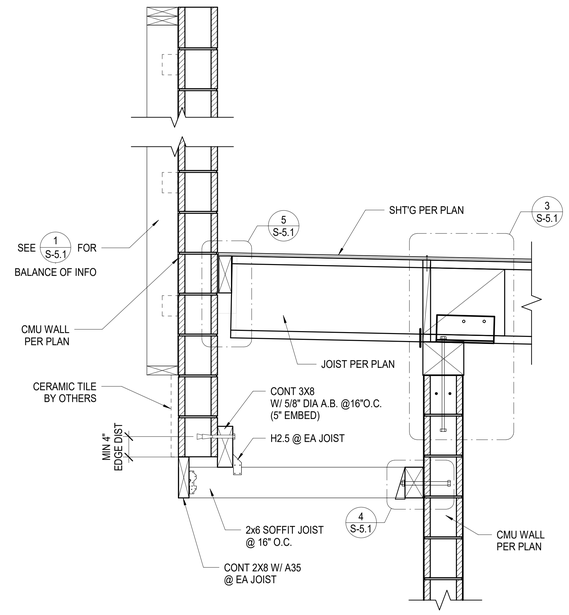

11 S-5.1 WALL TIE JOIST @ CMU WALL LINTEL CONDITION
SCALE: 1" = 1'-0"

4/7/2023 4:26:20 PM

IDENTIFICATION STAMP
DIV. OF THE STATE ARCHITECT
APP: 03-122664 INC:
REVIEWED FOR
SS ☑ FLS ☑ ACS ☑
DATE: 05/12/2023

pjhm architects

LICENSED ARCHITECT
RICHARD W. PJHM
No. C15585
REN. 02/25
STATE OF CALIFORNIA

VCA ENGINEERS, INC.
2151 Michelson Dr. #240
Irvine, CA 92612
Tel. 949.679.0870
Fax. 949.679.9370
Project No.: 1747

PROFESSIONAL ENGINEER
KEUN
No. 54029
Exp. 9/30/24
CIVIL
STATE OF CALIFORNIA

HIGHLAND HIGH SCHOOL
50M POOL & AQUATICS CENTER

KERN HIGH SCHOOL DISTRICT

FRAMING DETAILS

S-5.1

OC Office: 24461 Ridge Route Drive #100, Laguna Hills, CA 92653 • OC Phone: 949.496.6191 • SD Office: 804 Pier View Way #103, Oceanside, CA 92054 • SD Phone: 760.730.5527 • LA Office: 837 Traction Avenue, #410, Los Angeles, CA 90013 • LA Phone: 213.278.0172 • Web: pjhm.com

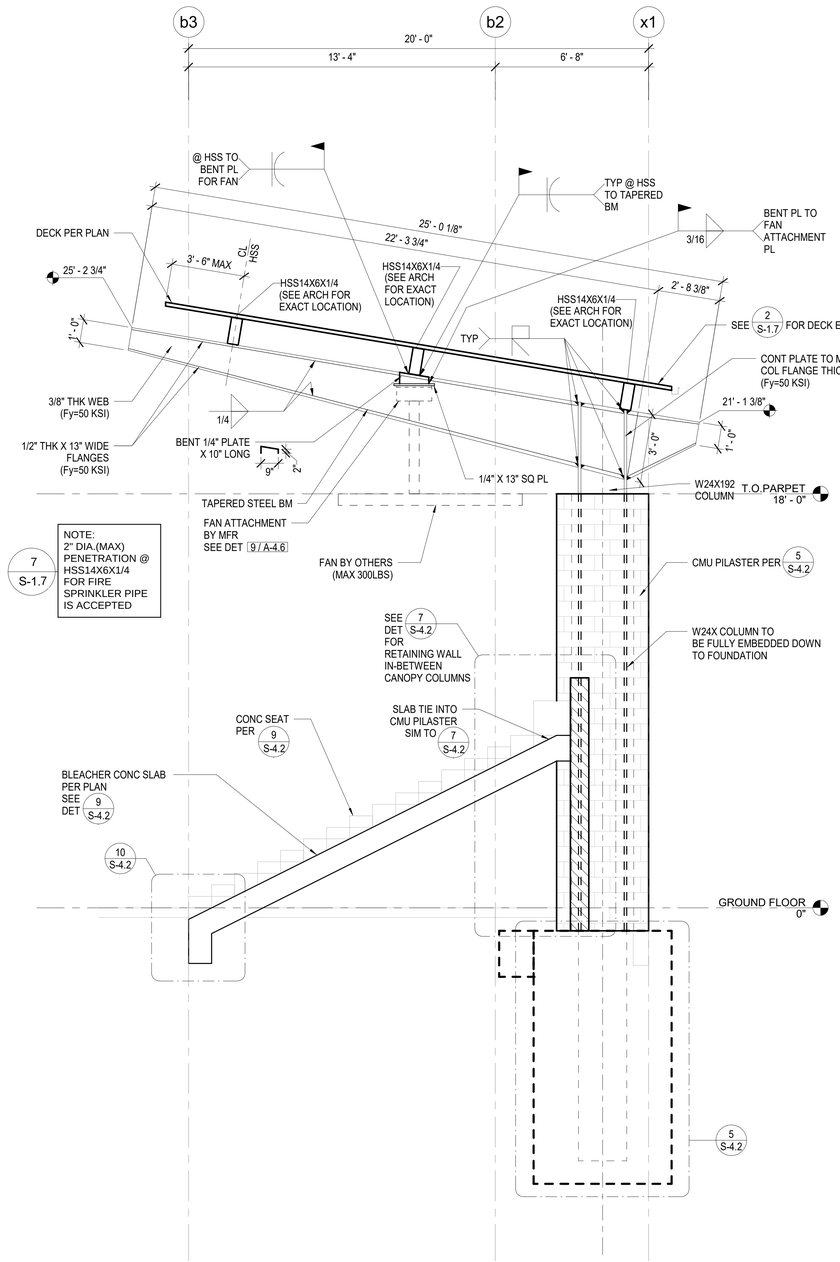

9 S-5.2 CANOPY SECTION

SCALE: 3/8" = 1'-0"

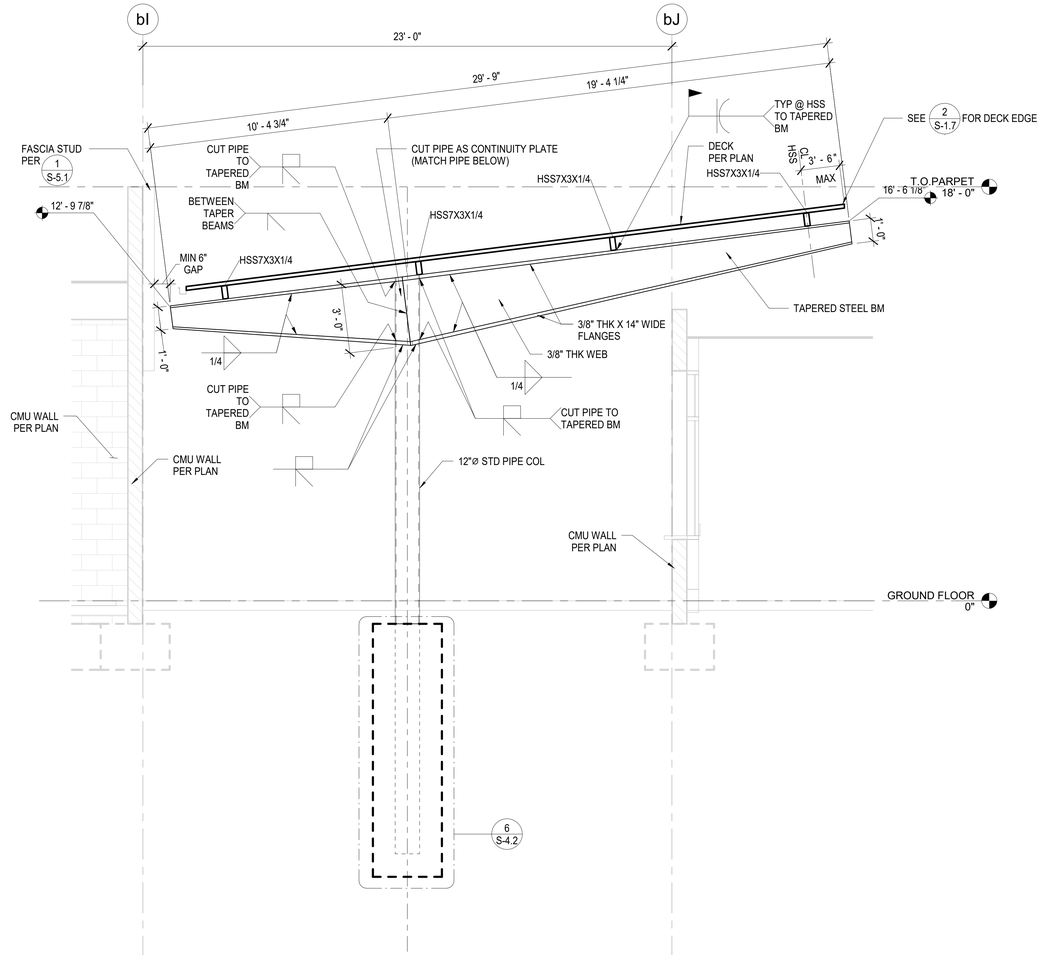

11 S-5.2 CANOPY SECTION

SCALE: 3/8" = 1'-0"

4/7/2023 4:26:22 PM

IDENTIFICATION STAMP
DIV. OF THE STATE ARCHITECT
APP: 03-122664 INC:
REVIEWED FOR
SS ☑ FLS ☑ ACS ☑
DATE: 05/12/2023

pjhm architects

LICENSED ARCHITECT
RICHARD W. KEUN
No. C15585
REN. 02/25
STATE OF CALIFORNIA

VCA ENGINEERS, INC
2151 Michelson Dr. #240
Irvine, CA 92612
Tel. 949.679.0870
Fax. 949.679.9370
Project No.: 1747

PROFESSIONAL ENGINEER
RICHARD W. KEUN
No. 54029
Exp. 9/30/24
CIVIL
STATE OF CALIFORNIA

LA Office: 837 Traction Avenue, #410, Los Angeles, CA 90013 • LA Phone: 213.278.0172 • Web: pjhm.com
SD Phone: 760.730.5527 • OC Office: 24461 Ridge Route Drive #100, Laguna Hills, CA 92653 • OC Phone: 949.496.6191 • SD Office: 804 Pier View Way #103, Oceanside, CA 92054 • SD Phone: 760.730.5527

HIGHLAND HIGH SCHOOL
50M POOL & AQUATICS CENTER

KERN HIGH SCHOOL DISTRICT

FRAMING DETAILS

S-5.2

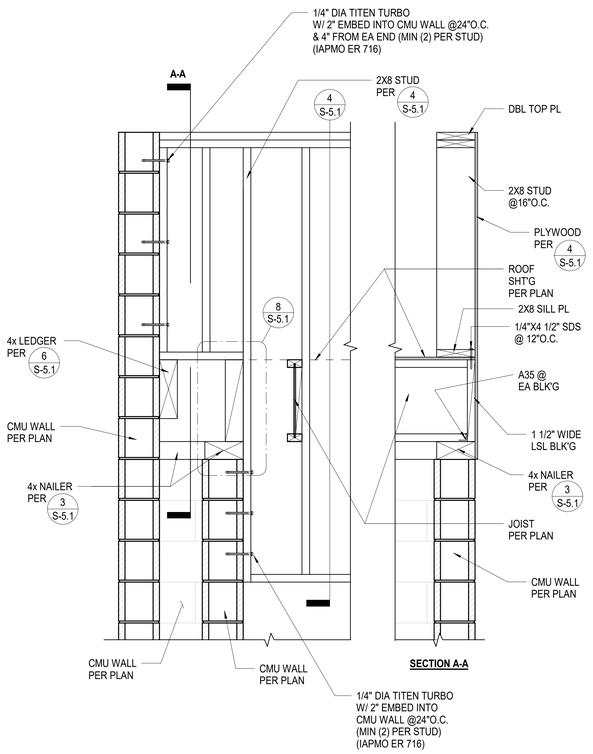

5 S-5.3 SECTION @ GRID - bA
SCALE : N.T.S.

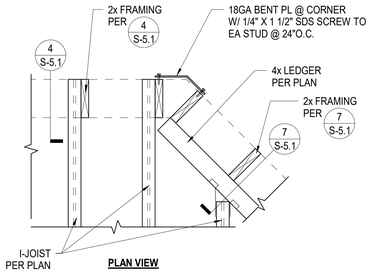

2 S-5.3 PARAPET CORNER DETAIL
SCALE : N.T.S.

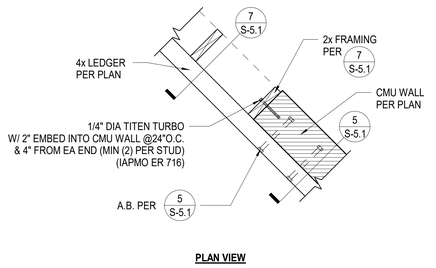

3 S-5.3 PARAPET DETAIL @ CMU WALL INTERSECTION
SCALE : N.T.S.

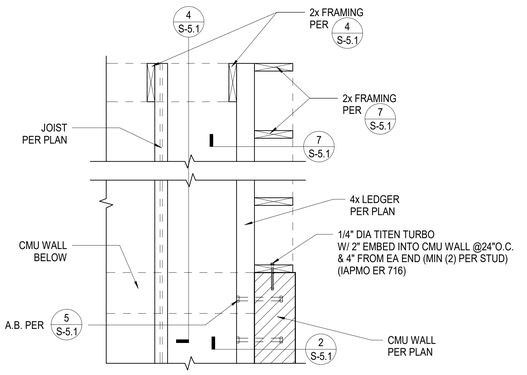

4 S-5.3 PARAPET DETAIL @ CMU WALL INTERSECTION
SCALE : N.T.S.

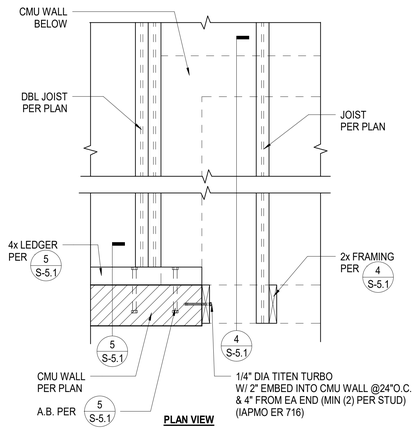

6 S-5.3 PARAPET DETAIL @ CMU WALL INTERSECTION
SCALE : N.T.S.

IDENTIFICATION STAMP
DIV. OF THE STATE ARCHITECT
APP: 03-122664 INC:
REVIEWED FOR
SS ☑ FLS ☑ ACS ☑
DATE: 05/12/2023

pjhm architects

LICENSED ARCHITECT
THOMAS W. KRUSE
NO. C15585
REN. 02/25
STATE OF CALIFORNIA

VCA ENGINEERS, INC.
CIVIL • STRUCTURAL • MECH • ARC • ARC
2151 Michelson Dr. #240
Irvine, CA 92612
Tel. 949.679.0870
Fax. 949.679.9370
Project No.: i747

REGISTERED PROFESSIONAL ENGINEER
YOUNG KEUN NA
No. S4029
Exp. 9/30/24
STRUCTURAL
STATE OF CALIFORNIA

HIGHLAND HIGH SCHOOL
50M POOL & AQUATICS CENTER

KERN HIGH SCHOOL DISTRICT

FRAMING DETAILS

S-5.3

OC Office: 24461 Ridge Route Drive #100, Laguna Hills, CA 92653 • OC Phone: 949.496.6191 • SD Office: 804 Pier View Way #103, Oceanside, CA 92054 • SD Phone: 760.730.5527 • LA Office: 837 Traction Avenue, #410, Los Angeles, CA 90013 • LA Phone: 213.278.0172 • Web: pjhm.com

4/7/2023 4:26:24 PM

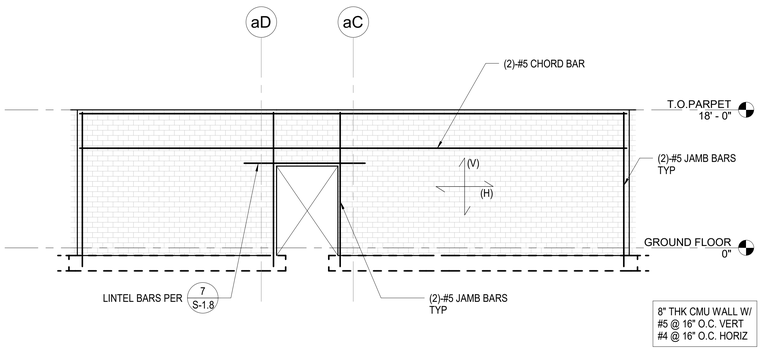

1 S-6.1 CMU WALL ELEVATION @ GL-a3

SCALE : 1/8" = 1'-0"

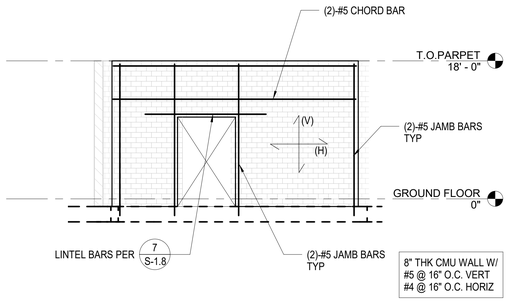

2 S-6.1 CMU WALL ELEVATION

SCALE : 1/8" = 1'-0"

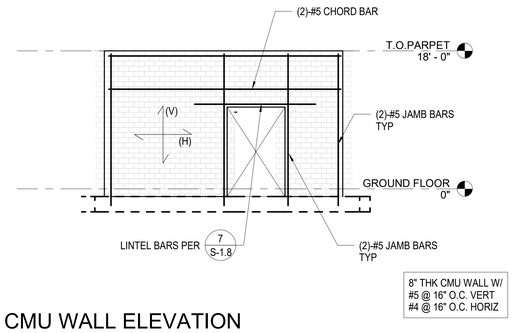

3 S-6.1 CMU WALL ELEVATION

SCALE : 1/8" = 1'-0"

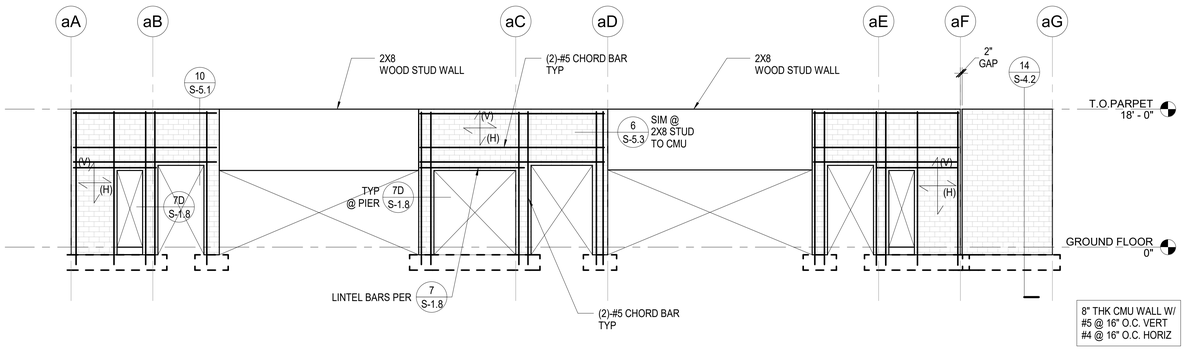

4 S-6.1 CMU WALL ELEVATION @ GL-a1

SCALE : 1/8" = 1'-0"

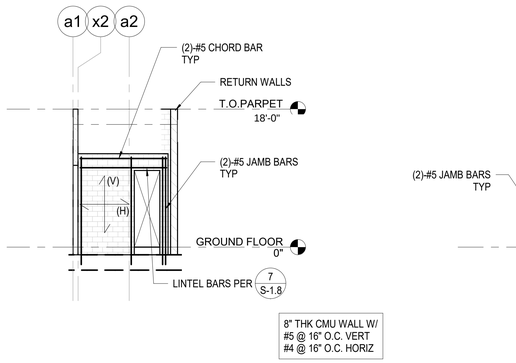

5 S-6.1 CMU WALL ELEVATION @ GL-aB

SCALE : 1/8" = 1'-0"

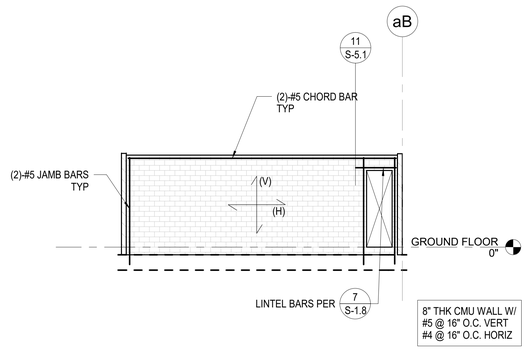

6 S-6.1 CMU WALL ELEVATION

SCALE : 1/8" = 1'-0"

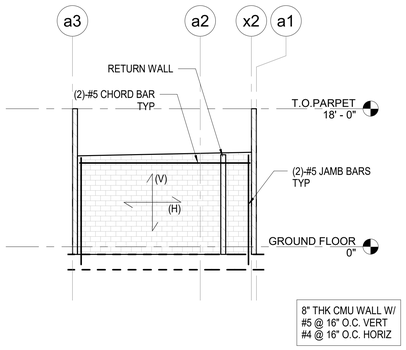

7 S-6.1 CMU WALL ELEVATION

SCALE : 1/8" = 1'-0"

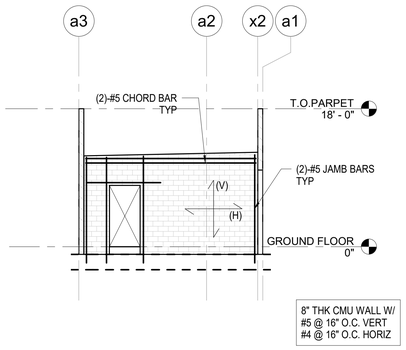

8 S-6.1 CMU WALL ELEVATION @ GL-aC

SCALE : 1/8" = 1'-0"

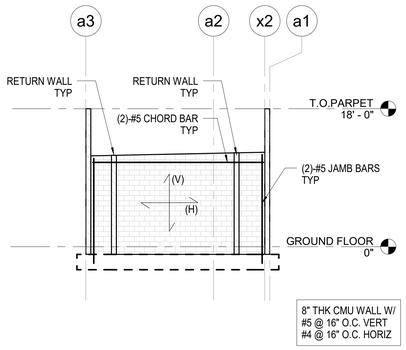

9 S-6.1 CMU WALL ELEVATION @ GL-aD

SCALE : 1/8" = 1'-0"

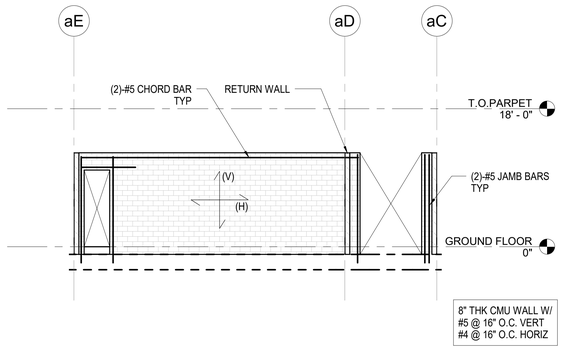

10 S-6.1 CMU WALL ELEVATION

SCALE : 1/8" = 1'-0"

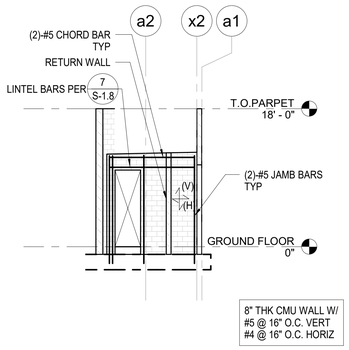

11 S-6.1 CMU WALL ELEVATION @ GL-aE

SCALE : 1/8" = 1'-0"

ELEVATION NOTES:

1. FOR TYPICAL REINFORCEMENT DETAIL SEE 7 / S-1.8
2. FOR TYPICAL JOINT DETAIL SEE 1 / S-1.8
3. FOR TYPICAL CORNER REINFORCEMENT DETAIL SEE 2 / S-1.8
4. FOR TYPICAL AND ADDITIONAL REINFORCEMENT SEE ELEVATIONS ON THIS SHEET.

IDENTIFICATION STAMP
DIV. OF THE STATE ARCHITECT
APP: 03-122664 INC:
REVIEWED FOR
SS ☑ FLS ☑ ACS ☑
DATE: 05/12/2023

pjhm architects
Web: pjhm.com
LA Phone: 213.278.0172 • LA Office: 837 Traction Avenue, #410, Los Angeles, CA 90013
SD Phone: 760.730.5527 • SD Office: 804 Pier View Way #103, Oceanside, CA 92054
OC Phone: 949.496.6191 • OC Office: 24461 Ridge Route Drive #100, Laguna Hills, CA 92653

LICENSED ARCHITECT
RICHARD W. FRIEDMAN
No. C15585
REN. 02/25
STATE OF CALIFORNIA

VCA ENGINEERS, INC.
2151 Michelson Dr. #240
Irvine, CA 92612
Tel. 949.679.0870
Fax. 949.679.9370
Project No.: 1747

PROFESSIONAL ENGINEER
KEVIN R. KUN
No. 54029
Exp. 9/30/24
CIVIL
STATE OF CALIFORNIA

HIGHLAND HIGH SCHOOL
50M POOL & AQUATICS CENTER

KERN HIGH SCHOOL DISTRICT

CMU WALL ELEVATIONS - BLDG A

S-6.1

4/7/2023 4:26:26 PM

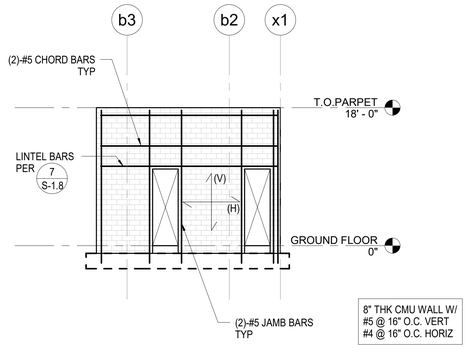

12 S-6.2 CMU WALL ELEVATION @ GL-bA

SCALE : 1/8" = 1'-0"

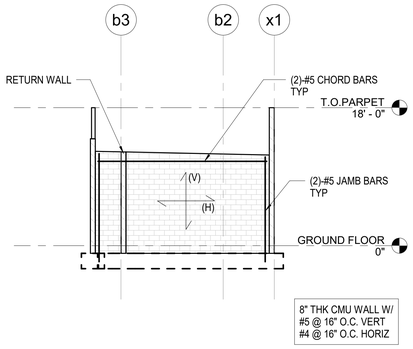

13 S-6.2 CMU WALL ELEVATION @ GL-bB

SCALE : 1/8" = 1'-0"

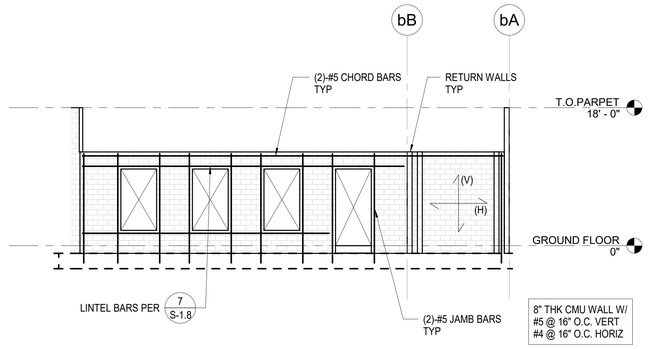

14 S-6.2 CMU WALL ELEVATION @ GL-b3

SCALE : 1/8" = 1'-0"

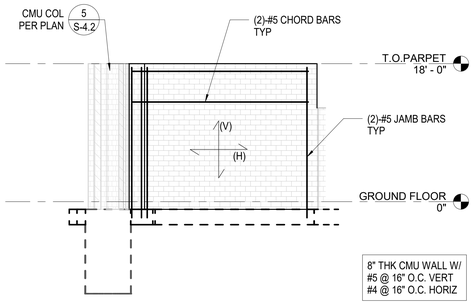

15 S-6.2 CMU WALL ELEVATION

SCALE : 1/8" = 1'-0"

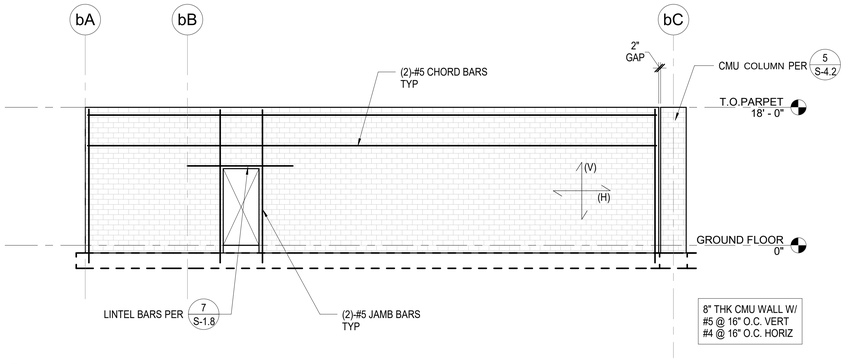

16 S-6.2 CMU WALL ELEVATION @ GL-x1

SCALE : 1/8" = 1'-0"

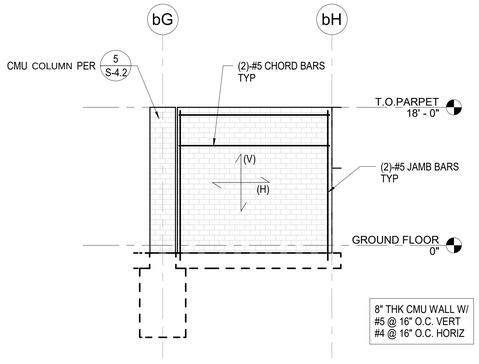

17 S-6.2 CMU WALL ELEVATION @ GL-x1

SCALE : 1/8" = 1'-0"

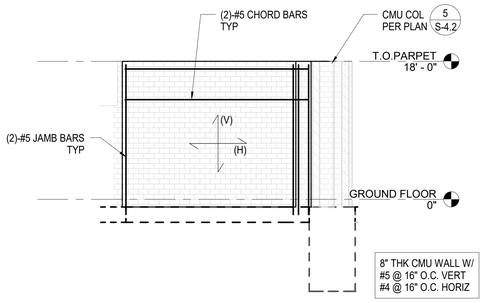

18 S-6.2 CMU WALL ELEVATION

SCALE : 1/8" = 1'-0"

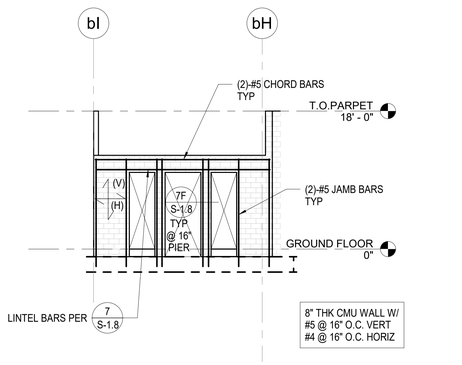

19 S-6.2 CMU WALL ELEVATION @ GL-b3

SCALE : 1/8" = 1'-0"

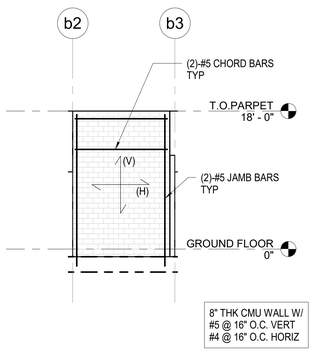

20 S-6.2 CMU WALL ELEVATION @ GL-bI

SCALE : 1/8" = 1'-0"

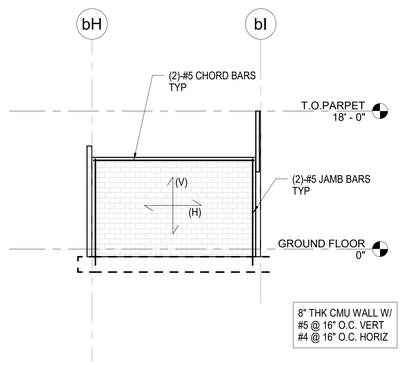

21 S-6.2 CMU WALL ELEVATION @ GL-b2

SCALE : 1/8" = 1'-0"

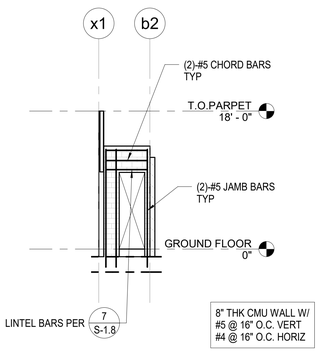

22 S-6.2 CMU WALL ELEVATION @ GL-bH

SCALE : 1/8" = 1'-0"

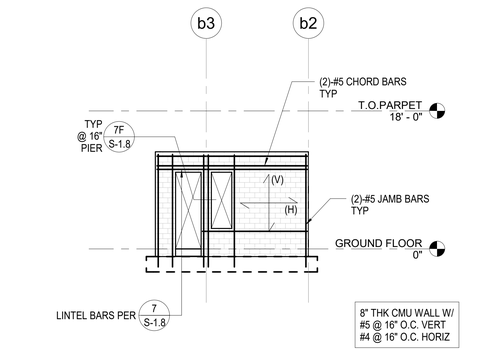

23 S-6.2 CMU WALL ELEVATION @ GL-bJ

SCALE : 1/8" = 1'-0"

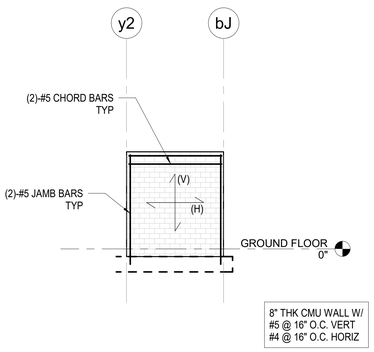

24 S-6.2 CMU WALL ELEVATION

SCALE : 1/8" = 1'-0"

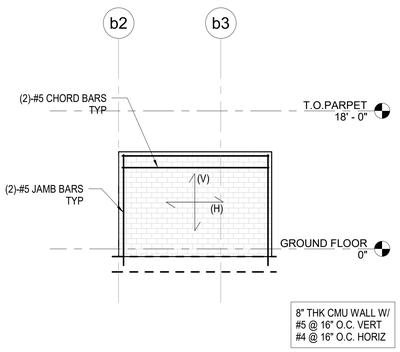

25 S-6.2 CMU WALL ELEVATION @ GL-y2

SCALE : 1/8" = 1'-0"

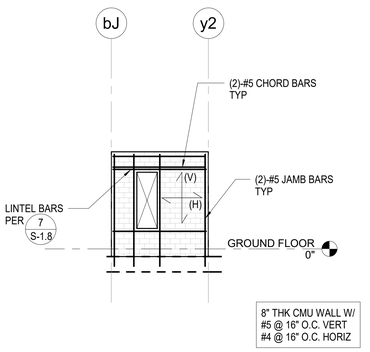

26 S-6.2 CMU WALL ELEVATION @ GL-b2

SCALE : 1/8" = 1'-0"

ELEVATION NOTES:

1. FOR TYPICAL REINFORCEMENT DETAIL SEE 7 / S-1.8
2. FOR TYPICAL JOINT DETAIL SEE 1 / S-1.8
3. FOR TYPICAL CORNER REINFORCEMENT DETAIL SEE 2 / S-1.8
4. FOR TYPICAL AND ADDITIONAL REINFORCEMENT SEE ELEVATIONS ON THIS SHEET.

IDENTIFICATION STAMP
DIV. OF THE STATE ARCHITECT
APP: 03-122664 INC:
REVIEWED FOR
SS ☑ FLS ☑ ACS ☑
DATE: 05/12/2023

pjhm architects

LICENSED ARCHITECT
RICHARD W. FRIEDMAN
No. C15585
REN. 02/25
STATE OF CALIFORNIA

VCA ENGINEERS, INC.
2151 Michelson Dr. #240
Irvine, CA 92612
Tel. 949.679.0870
Fax. 949.679.9370
Project No.: 1747

PROFESSIONAL ENGINEER
KEUN PARK
No. 34029
Exp. 9/30/24
CIVIL
STATE OF CALIFORNIA

pjhm architects
OC Office: 24461 Ridge Route Drive #100, Laguna Hills, CA 92653 • OC Phone: 949.496.6191 • SD Office: 804 Pier View Way #103, Oceanside, CA 92054
SD Phone: 760.730.5527 • LA Office: 837 Traction Avenue, #410, Los Angeles, CA 90013 • LA Phone: 213.278.0172 • Web: pjhm.com

HIGHLAND HIGH SCHOOL
50M POOL & AQUATICS CENTER

KERN HIGH SCHOOL DISTRICT

CMU WALL ELEVATIONS - BLDG B

S-6.2

4/7/2023 4:26:30 PM

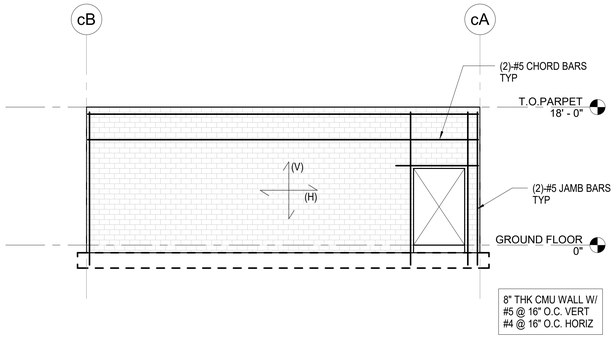

27 S-6.3 CMU WALL ELEVATION @ GL-c3

SCALE : 1/8" = 1'-0"

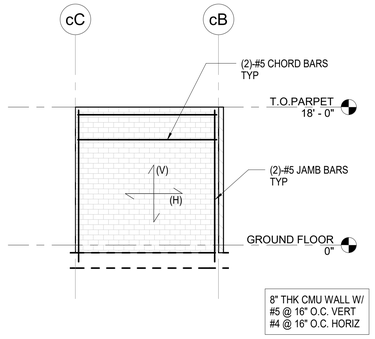

28 S-6.3 CMU WALL ELEVATION @ GL-c2

SCALE : 1/8" = 1'-0"

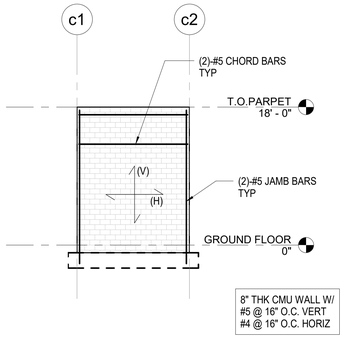

29 S-6.3 CMU WALL ELEVATION @ GL-cC

SCALE : 1/8" = 1'-0"

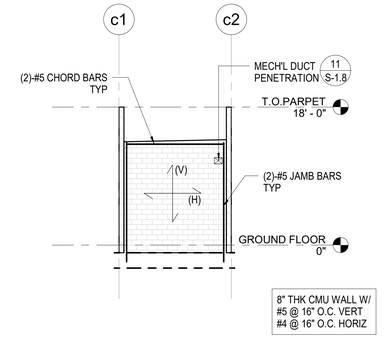

30 S-6.3 CMU WALL ELEVATION

SCALE : 1/8" = 1'-0"

31 S-6.3 CMU WALL ELEVATION @ GL-cB

SCALE : 1/8" = 1'-0"

32 S-6.3 CMU WALL ELEVATION @ GL-c1

SCALE : 1/8" = 1'-0"

33 S-6.3 CMU WALL ELEVATION @ GL-cA

SCALE : 1/8" = 1'-0"

ELEVATION NOTES:

1. FOR TYPICAL REINFORCEMENT DETAIL SEE 7 / S-1.8
2. FOR TYPICAL JOINT DETAIL SEE 1 / S-1.8
3. FOR TYPICAL CORNER REINFORCEMENT DETAIL SEE 2 / S-1.8
4. FOR TYPICAL AND ADDITIONAL REINFORCEMENT SEE ELEVATIONS ON THIS SHEET.

IDENTIFICATION STAMP
DIV. OF THE STATE ARCHITECT
APP: 03-122664 INC:
REVIEWED FOR
SS ☑ FLS ☑ ACS ☑
DATE: 05/12/2023

pjhm architects
OC Office: 24461 Ridge Route Drive #100, Laguna Hills, CA 92653 • OC Phone: 949.496.6191 • SD Office: 804 Pier View Way #103, Oceanside, CA 92054 • SD Phone: 760.730.5527 • LA Office: 837 Traction Avenue, #410, Los Angeles, CA 90013 • LA Phone: 213.278.0172 • Web: pjhm.com

LICENSED ARCHITECT RICHARD W. FRIEND REG. NO. C15585 REN. 02/25 STATE OF CALIFORNIA

VCA ENGINEERS, INC
2151 Michelson Dr. #240
Irvine, CA 92612
Tel. 949.679.0870
Fax. 949.679.9370
Project No.: 1747

REGISTERED PROFESSIONAL ENGINEER KEUN PARK No. 54029 Exp. 9/30/24 STRUCTURAL STATE OF CALIFORNIA

HIGHLAND HIGH SCHOOL
50M POOL & AQUATICS CENTER

KERN HIGH SCHOOL DISTRICT

CMU WALL ELEVATIONS - BLDG C

S-6.3

4/7/2023 4:26:32 PM

PLUMBING SYMBOLS AND ABBREVIATIONS

———	SOIL WASTE OR SEWER ABV GRADE	SS OR W
———	WASTE OR SEWER BELOW GRADE	SS OR W
——SD——	STORM DRAIN	S.D
— — — —	SANITARY VENT	V
——— — ———	COLD WATER	C.W.
—— — ——	HOT WATER	H.W.
—— — — — ——	HOT WATER RETURN	H.W.R.
——OD——	OVERFLOW STORM DRAIN	O.D
——GW——	GREASE WASTE	02
——CA——	COMPRESSED AIR LINE	CA
——F——	FILTERED WATER	F
——G——	FUEL GAS (LOW PRESSURE)	G.
——XG——	FUEL GAS (MEDIUM PRESSURE)	XG
——DI——	DEIONIZED WATER	DI
——LV——	LAB VACUUM	LV
	SHUT-OFF VALVE	S.O.V.
	PRESSURE REDUCING VALVE	P.R.V.
	PRESSURE-TEMPERATURE RELIEF VALVE	P-T REL. V.
	CHECK VALVE	C.V.
	SHUT-OFF VALVE IN BOX	
	CLEAN OUT TO GRADE	C.O.T.G.
	WALL CLEANOUT	W.C.O.
	FLOOR CLEANOUT	F.C.O.
	HOSE BIBB	H.B.
	DROP	
	RISE	
	FIRE SPRINKLER HEAD	
	UNION	
G.C./S.O.C.	GAS COCK/SHUT OFF COCK	
BEH.	BEHIND	
V.T.R	VENT THRU ROOF	
	VALVE IN RISER	
F.H.	FIRE HYDRANT	
ABV.	ABOVE	
HDR	HEADER	
BEL.	BELOW	
A.F.F.	ABOVE FINISHED FLOOR	
CLG	CEILING	
DN	DOWN	
F.D.	FLOOR DRAIN	
F.S.	FLOOR SINK	
S.B.	SERVICE BASIN	
S.S.	SERVICE SINK	
U.N.O.	UNLESS NOTED OTHERWISE	
CLG.	CEILING	
A.B.	ACCESS BOX	
A.P.	ACCESS PANEL	
I.E.	INVERT ELEVATION	
L.K.S.	LOOSE KEY STOP	
P.O.C.	POINT OF CONNECTION	
F.G.	FINISHED GRADE	
N.I.C.	NOT IN CONTRACT	
R.I.& C.	ROUGH-IN & CONNECT	
U.O.S.	UNDER OTHER SECTION	
W.H.A.	WATER HAMMER ARRESTER	
G.P.R.	GAS PRESSURE REGULATOR	
R.D./O.D.	ROOF DRAIN/OVERFLOW DRAIN	
GD	GUTTER DRAIN	
TPS	TRAP PRIMER SUPPLY	
ASR	AUTOMATIC FIRE SPRINKLER RISER	
——— GW ———	GREASE WASTE	
——— AW ———	ACID WASTE	
——— AV ———	ACID VENT	
SF	EMERGENCY SHOWER & EYEWASH	
AVTR	ACID VENT THRU ROOF	
	POC	
GHV	GARDEN HOSE VALVE	
DS	DOWNSPOUT	
B.G.	BELOW GRADE	
TMV	THERMOSTATIC MIXING VALVE	

LIST OF APPLICABLE CODES
2022 California Administrative Code (CAC), Part 1, Title 24 CCR
2019 California Building Code (CBC), Part 2, Title 24 CCR
2019 California Electrical Code (CEC), Part 3, Title 24 CCR
2019 California Mechanical Code (CMC), Part 4, Title 24 CCR
2019 California Plumbing Code (CPC), Part 5, Title 24 CCR
2019 California Energy Code, Part 6, Title 24 CCR
2019 California Fire Code (CFC), Part 9, Title 24 CCR
2019 California Existing Building Code (CEBC), Part 10, Title 24 CCR
2019 California Green Building Standards Code (CALGreen), Part 11, Title 24 CCR
2019 California Referenced Standards Code, Part 12, Title 24 CCR
Title 19 CCR, Public Safety, State Fire Marshal Regulations

APPLICABLE STANDARDS
For a list of applicable standards, including California amendments to the NFPA Standards, refer to CBC Chapter 35 and CFC Chapter 80.

GENERAL REQUIREMENTS

1. A. FURNISH ALL LABOR, SUPERVISION, MATERIALS, EQUIPMENT AND FACILITIES NECESSARY TO FURNISH, FABRICATE, DELIVER, STORE AND INSTALL ALL WORK NOTED ON THE DRAWINGS AND/OR SPECIFIED HEREIN.

B. THE CONTRACTOR SHALL FURNISH AND INSTALL ALL WORK NECESSARY TO MAKE A COMPLETE SYSTEM WHETHER OR NOT SUCH DETAILS ARE MENTIONED IN THESE SPECIFICATIONS OR SHOWN ON THE PLANS, BUT WHICH ARE OBVIOUSLY NECESSARY TO MAKE A COMPLETE SYSTEM, EXCEPTING ONLY THOSE PORTIONS THAT ARE SPECIFICALLY MENTIONED HEREIN OR PLAINLY MARKED ON THE ACCOMPANYING DRAWINGS AS BEING INSTALLED UNDER ANOTHER SECTION OF THE SPECIFICATIONS.

2. WORKMANSHIP: THE WORK SHALL BE ACCOMPLISHED IN A THOROUGH AND WORKMAN-LIKE MANNER SATISFACTORY TO AND MEETING THE APPROVAL OF THE OWNER AND ARCHITECT.

3. MATERIALS: ALL MATERIALS AND EQUIPMENT SHALL BE NEW AND THE BEST OF THEIR RESPECTIVE KIND, FREE FROM ALL DEFECTS AND OF THE MAKE AND QUALITY SPECIFIED.

4. SITE INSPECTION: CONTRACTOR SHALL VISIT THE SITE OF WORK PRIOR TO SUBMISSION OF HIS BID AND THOROUGHLY FAMILIARIZE HIMSELF WITH THE WORKING CONDITIONS AND EXACT NATURE OF THE WORK. SUBMISSION OF A BID ACKNOWLEDGES FULL RESPONSIBILITY FOR FURNISHING A COMPLETE AND FUNCTIONAL SYSTEM. NO CHANGES IN CONTRACT WILL BE MADE TO ACCOMMODATE OR ALLOW EXTRA FUNDS FOR ANY OMISSION WHICH RESULTS FROM A FAILURE TO THOROUGHLY MAKE THE EXAMINATION.

5. CODES AND PERMITS: ALL MECHANICAL EQUIPMENT, INSTALLATION, ETC., SHALL CONFORM WITH ALL APPLICABLE CODES AND ORDINANCES AS INTERPRETED BY THE LOCAL AUTHORITY HAVING JURISDICTION, INCLUDING CALIFORNIA TITLE 24.

6. COORDINATION: THE DRAWINGS ARE DIAGRAMMATIC AND INTENDED TO SHOW SCOPE. THE CONTRACTOR SHALL COORDINATE HIS WORK WITH OTHER TRADES TO PROVIDE BEST ARRANGEMENT OF ALL DUCTS, PIPES, CONDUIT, ETC.

7. INSULATION SHALL BE U.L. LISTED IN COMPLIANCE WITH FLAME-SPREAD RATING OF NOT MORE THAN 25 AND SMOKE DENSITY NOT EXCEEDING 50, PER THE CALIFORNIA MECHANICAL CODE. INSTALLATION SHALL BE IN ACCORDANCE WITH THE STATE OF CALIFORNIA ENERGY COMMISSION AND CPC REQUIREMENTS.

8. HORIZONTAL DRAINAGE PIPING SHALL BE RUN AT A UNIFORM SLOPE OF NOT LESS THAN 1/4" PER FOOT TOWARD THE POINT OF DISPOSAL. WHERE APPROVED BY THE LOCAL AUTHORITY OR INDICATED ON DRAWINGS, DRAINAGE PIPING 4 INCHES, OR LARGER, MAY BE RUN AT A UNIFORM SLOPE OF 1/8INCHES PER FOOT. ALL PIPING UNDER BUILDINGS SHALL BE SLOPED AT ¼ INCHES PER FOOT.

9. ALL FLOOR SINKS SHALL BE FLUSHED TO THE FLOOR. ALL LINES DRAINING TO THE FLOOR SINK SHALL SLOPE A MINIMUM OF 1/4" PER FOOT AND SHALL TERMINATE AT LEAST ONE INCH ABOVE THE RIM OF THE FLOOR SINK. ALL FLOOR SINKS AND FLOOR DRAINS SHALL BE PROVIDED WITH TRAP PRIMERS.

10. EACH PLUMBING VENT SHALL TERMINATE NOT LESS THAN TEN FEET FROM OR AT LEAST THREE FEET ABOVE ANY OPENABLE WINDOW, DOOR, OPENING, AIR INTAKE OR VENT SHAFT, AND SHALL TERMINATE NOT LESS THAN 6INCHES ABOVE THE ROOF OR 1 FOOT FROM ANY VERTICAL SURFACE.

11. CLEAN-OUTS SHALL BE INSTALLED AS PER CPC REQUIREMENTS.

12. PROTECT ROOF RECEPTORS FROM RAIN WATER BY ELEVATING THE RIM 2 INCHES ABOVE THE ROOF SURFACE.

13. COORDINATE LOCATIONS OF ALL ROOF/WALL OPENINGS WITH ALL RELEVANT TRADES AND PROVIDE WATERTIGHT FLASHINGS WHEREVER PENETRATIONS OCCUR. EXACT LOCATIONS AND SIZES MAY BE DEPENDENT UPON EQUIPMENT SELECTIONS; COORDINATE SIZES AND LOCATIONS OF ALL OPENINGS WITH APPROPRIATE EQUIPMENT REQUIREMENTS.

14. PENETRATIONS: PENETRATIONS IN WALLS REQUIRING PROTECTED OPENINGS SHALL BE FIRE-STOPPED. FIRE-STOPPING SHALL BE AN APPROVED MATERIAL SECURELY INSTALLED AND CAPABLE OF MAINTAINING ITS INTEGRITY WHEN SUBJECTED TO TEST TEMPERATURE PRESCRIBED IN THE C.B.C. FOR SPECIFIC WALL OR PARTITION TYPE.

15. PROVIDE FELT WITH METAL BACKING VIBRATION ISOLATION SLEEVES OR PADS AT ALL PIPE HANGERS OR SUPPORTS AND ALL POINTS WHERE PIPING COMES IN CONTACT WITH ANY PORTION OF THE STRUCTURE.

16. ROUGH-IN AND CONNECT EQUIPMENT PROVIDED UNDER OTHER SECTIONS OF THE WORK.

17. WATER HEATING SYSTEMS AND EQUIPMENT SHALL MEET OR EXCEED ALL APPLICABLE EFFICIENCY REQUIREMENTS AS INDICATED IN THE CALIFORNIA ENERGY COMMISSION.

18. HOT WATER CIRCULATING PUMPS SHALL HAVE A CONTROL CAPABLE OF AUTOMATICALLY TURNING OFF WHEN HOT WATER IS NOT REQUIRED.

19. GAS-FIRED EQUIPMENT SHALL BE EQUIPPED WITH A PILOTLESS ELECTRONIC INTERMITTENT IGNITION SYSTEM. GAS FIRED BOILER AND GAS FIRED AC UNITS SHALL MEET ALL SCAQMD LO-NOX REQUIREMENTS.

20. LAVATORIES IN RESTROOMS OF PUBLIC FACILITIES SHALL BE EQUIPPED WITH OUTLET DEVICES THAT LIMIT THE FLOW OF HOT WATER TO A MAXIMUM OF 0.5 GALLONS PER MINUTE AND WITH CONTROLS TO LIMIT THE OUTLET TEMPERATURE TO 110°F.

21. ALL EQUIPMENT SHALL BE SECURELY FASTENED TO THE BUILDING STRUCTURE.

22. INSULATION SHALL BE PROVIDED ON ALL HOT WATER LINES AND P-TRAPS SERVING HANDICAPPED LAVATORIES AND SINKS WITH HOT WATER SERVICE.

23. ALL ROOF OVERFLOW DRAINS SHALL SPILL BELOW SOFFIT ABOVE COVERED WALKWAY AREA WHERE POSSIBLY. DRAINS WHICH CANNOT SPILL TO SOFFIT AND ARE RUN DOWN IN EXTERIOR WALL SHALL TERMINATE MIN 9"MAX 12" ABOVE GRADE.

24. CONTRACTOR TO COORDINATE ROOF DRAIN OUTLET INVERT ELEVATIONS WITH CIVIL STORM DRAIN PIPING STUBBED TO BUILDING, AND MAKE FINAL CONNECTION AS REQUIRED.

Applicable Code: 2019 CBC 02-25-2020 Revised: 02/14/2020

All mechanical, plumbing, and electrical components shall be anchored and installed per the details on the DSA approved construction documents. Where no detail is indicated, the following components shall be anchored or braced to meet the force and displacement requirements prescribed in the 2019 CBC Sections 1617A.1.18 through 1617A.1.26 and ASCE 7-16 Chapter 13, 26 and 30.

1. All permanent equipment and components.
2. Temporary, movable or mobile equipment that is permanently attached (e.g. hard wired) to the building utility services such as electricity, gas or water. "Permanently attached" shall include all electrical connections except plugs for 110/220 volt receptacles having a flexible cable.
3. Temporary, movable or mobile equipment which is heavier than 400 pounds or has a center of mass located 4 feet or more above the adjacent floor or roof level that directly support the component is required to be restrained in a manner approved by DSA.

The following mechanical and electrical components shall be positively attached to the structure but need not demonstrate design compliance with the references noted above. These components shall have flexible connections provided between the component and associated ductwork, piping, and conduit. Flexible connections must allow movement in both transverse and longitudinal directions:

A. Components weighing less than 400 pounds and have a center of mass located 4 feet or less above the adjacent floor or roof level that directly support the component.

B. Components weighing less than 20 pounds, or in the case of distributed systems, less than 5 pounds per foot, which are suspended from a roof or floor or hung from a wall.

The anchorage of all mechanical, electrical and plumbing components shall be subject to the approval of the design professional in general responsible charge or structural engineer delegated responsibility and acceptance by DSA. The project inspector will verify that all components and equipment have been anchored in accordance with the above requirements.

Piping, Ductwork, and Electrical Distribution System Bracing Note

Piping, ductwork, and electrical distribution systems shall be braced to comply with the forces and displacements prescribed in ASCE 7-16 Section 13.3. as defined in ASCE 7-16 Section 13.6.5.6, 13.6.7, 13.6.8; and 2019 CBC, Sections 1617A.1.24, 1617A.1.25 and 1617A.1.26.

The method of showing bracing and attachments to the structure for the identified distribution system are as noted below. When bracing and attachments are based on a preapproved installation guide (e.g., OSHPD OPM for 2013 CBC or later), copies of the bracing system installation guide or manual shall be available on the jobsite prior to the start of and during the hanging and bracing of the distribution systems. The Structural Engineer of Record shall verify the adequacy of the structure to support the hanger and brace loads.

Mechanical Piping (MP), Mechanical Ducts (MD), Plumbing Piping (PP), Electrical Distribution Systems (E):

MP☐ MD☐ PP☒ E☐ - Option 1 : Detailed on the approved drawings with project specific notes and details.

MP☐ MD☐ PP☐ E☐ - Option 2 : Shall comply with the applicable OSHPD Pre-Approval (OPM#) #_____.

STANDARD PLUMBING FIXTURE MOUNTING HEIGHTS

SYMBOL	DESCRIPTION	INSTALLATION HEIGHT				REMARKS
		KIND	ELEM.	ADULT	MOUNTING HEIGHT	
WC	WATER CLOSET	10"	15"	15"	TOP OF SEAT	-
UR	URINAL	-	17"	24"	TOP OF LIP	-

(a) ABOVE FINISHED FLOOR; DUAL HEIGHT ASSEMBLY.

PLUMBING FIXTURE CONNECTION SCHEDULE

SYMBOL	DESCRIPTION	CONNECTION SIZE					REMARKS
		TRAP	W	V	CW	HW	
WC -	F.V. WATER CLOSET	INTEGRAL	4"	2"(a)	1"	-	FLUSH VALVE HANDLE TO BE ON WIDE SIDE OF WATER CLOSET
UR -	URINAL	INTEGRAL	2"	1 1/2"(a)	3/4"	-	FLUSH VALVE HANDLE
LV -	LAVATORY	(b)	2"	1-1/2"	1/2"	1/2"	COLD WATER ONLY FOR STUDENTS
SB -	SERVICE BASIN	3" (a)	3"(a)	2" (a)	3/4"	3/4"	
SH -	SHOWER	(b)	2"	1-1/2"	3/4"	3/4"(c) (d)	
DF -	DRINKING FOUNTAIN	(b)	2"	1-1/2"	1/2"		
SK -	SINK	1 1/2"(a)	2"	1-1/2"	3/4"	3/4"(c) (d)	
FD -	FLOOR DRAIN	2",3"	2",3"	1-1/2" / 2"	-	-	WITH TRAP PRIMER CONNECTION, EXCEPT SHOWER DRAIN, SEE PLANS FOR SIZES
FS -	FLOOR SINK	2"	2"	1-1/2"	-		WITH TRAP PRIMER CONNECTION

(a) UNLESS OTHERWISE INDICATED ON THE DRAWINGS
(b) 1-1/4"x 1-1/2"
(c) WHERE APPLICABLE
(d) HOT WATER OR TEMPERED WATER AS APPLICABLE

ACCESSIBLE PLUMBING FIXTURE MOUNTING HEIGHTS

SYMBOL	DESCRIPTION	MOUNTING HEIGHT	T-24 REQUIREMENTS
WC DH	WATER CLOSET (WALL MOUNTED) HS STUDENTS	17"-19" TO TOP OF SEAT	FLUSH VALVE HANDLE TO BE ON WIDE SIDE OF WATER CLOSET
UR DH	URINAL HS STUDENTS	17" TO TOP LIP; 17" MAX	FLUSH VALVE HANDLE TO BE ON WIDE SIDE OF URINAL
SH DH	SHOWER HS STUDENTS	40" TO TOP OF MIXING VALVE, 48" TO TOP OF HAND SHOWER	MINIMUM 60□ ADA COMPLIANT SHOWER HOSE
LV DH	LAVATORIES HS STUDENTS	34" TO TOP RIM	27" MIN. TO UNDERSIDE OF BOWL. WITH HOT & COLD WATER 10 SEC. MIN. OPERATION OF SELF-CLOSING FAUCETS
LV DH	LAVATORIES	34" TO TOP RIM	27" MIN. TO UNDERSIDE OF BOWL. WITH HOT & COLD WATER 10 SEC. MIN. OPERATION OF SELF-CLOSING FAUCETS
DF DH	DRINKING FOUNTAINS HS STUDENTS	36" TO BUBBLER OUTLET; 36" MAX.	WALL TYPE, BOTTLE FILLER, DUAL HEIGHT
SK DH	DOUBLE SINK HS STUDENTS		

GAS WATER HEATER & PUMPS

ITEM NO.	DESCRIPTION	MANUFACTUERER	MODEL	COMMENTS
CP-1	CIRCULATING PUMP	B & G	SERIES PR	BRONZE PUMP, 120V, 1 PH, 1/6 HP
CP-2	CIRCULATING PUMP	B & G	SERIES PR	BRONZE PUMP, 120V, 1 PH, 1/6 HP
EWH-1	INSTA-HOT	CHRONOMITE	SR-30	POWER REQ: 208V, 1 PH, 60 HZ., 9 KW.
WH-1	DOMESTIC WATER HEATER	A. O. SMITH	BTH-120	CONN. 1 1/4" H & CW & 1"G W/SOC TO WATER HEATER, 60 GALLON STORAGE, 120 CFH,OPERATING WEIGHT: 1000 LBS. 3"PVC INTAKE & EXHAUST THRU ROOF
WH-2	DOMESTIC WATER HEATER	A. O. SMITH	BTH-120	CONN. 1 1/4" H & CW & 1"G W/SOC TO WATER HEATER, 60 GALLON STORAGE, 120 CFH,OPERATING WEIGHT: 1000 LBS. 3"PVC INTAKE & EXHAUST THRU ROOF
WH-3	DOMESTIC WATER HEATER	A. O. SMITH	BTH-120	CONN. 1 1/4" H & CW & 1"G W/SOC TO WATER HEATER, 60 GALLON STORAGE, 120 CFH,OPERATING WEIGHT: 1000 LBS. 3"PVC INTAKE & EXHAUST THRU ROOF

IDENTIFICATION STAMP
DIV. OF THE STATE ARCHITECT
APP: 03-122664 INC:
REVIEWED FOR
SS ☑ FLS ☑ ACS ☑
DATE: 05/12/2023

pjhm architects
LICENSED ARCHITECT — RICHARD W. RUDOLF — NO. C15585 — REN. 02/25 — STATE OF CALIFORNIA
Engineous Group, Inc.
898 N. Fair Oaks Ave., Suite E Pasadena, CA 91103 Phone: (626) 696-3550
PROFESSIONAL ENGINEER — STUART C. TSUJIMOTO — No. 27963 — Exp. 6/30/24 — MECHANICAL — STATE OF CALIFORNIA

HIGHLAND HIGH SCHOOL
50M POOL & AQUATICS CENTER

KERN HIGH SCHOOL DISTRICT

PLUMBING FRONT SHEET

OC Office: 24461 Ridge Route Drive #100, Laguna Hills, CA 92653 • SD Phone: 760.730.5527 • LA Office: 837 Traction Avenue, #410, Los Angeles, CA 90013 • OC Phone: 949.496.6191 • SD Office: 804 Pier View Way #103, Oceanside, CA 92054 • LA Phone: 213.278.0172 • Web: pjhm.com

STATE OF CALIFORNIA
Domestic Water Heating System
NRCC-PLB-E (Created 11/19) CALIFORNIA ENERGY COMMISSION
CERTIFICATE OF COMPLIANCE NRCC-PLB-E
Project Name: HIGHLAND HIGH SCHOOL 50M POOL & AQUATICS CENTER Report Page: Page 4 of 6
Project Address: 2900 ROYAL SCOTTS WAY, BAKERSFIELD, CA 93306 Date Prepared: 10/21/2022

Table Continued

01	☑	☐	☐	Construction documents require manufacturer certification that service water-heating systems are equipped with automatic temperature controls capable of adjusting temperature settings per §110.3(c)
02	☑	☐	☐	Systems with capacity > 167,000 BTU/H equipped with outlet temperature controls per §110.3(c)1 unless covered by California Plumbing Code Section 613.0.
03	☑	☐	☐	Controls for circulating pumps or electrical heat trace systems are capable of automatically turning off the system per §110.3(c)2 unless system serves healthcare facility.
04	☐	☐	☑	For recirculation systems serving multiple dwelling units, design includes automatic pump controls per §150.1(c)8Bi, or §150.2 for additions or alterations
05	☐	☐	☑	For recirculation systems serving individual dwelling units, design includes manual on/off controls as specified in Reference Appendix RA 4.4.9 per §150.0(n)9.
06	☐	☐	☑	For replacement single heat pump water heaters serving individual dwelling units in climate zones 1-15, design includes communication interface that meets demand responsive control requirements of §110.12(a) per §150.2(b)1Bii.

I. DECLARATION OF REQUIRED CERTIFICATES OF INSTALLATION

Table Instructions: Selections have been made based on information provided in previous tables of this document. If any selection needs to be changed, please explain why in Table E. Additional Remarks. These documents must be provided to the building inspector during construction and can be found online at https://www.energy.ca.gov/title24/2019standards/2019_compliance_documents/Nonresidential_Documents/NRLV

YES	NO	Form/Title	Field Inspector Pass	Field Inspector Fail
☑	☐	NRCI-PLB-03-E - Must be submitted for all buildings	☐	☐
☐	☑	NRCI-PLB-02-E - Must be submitted for high-rise residential and hotel/ motel central hot water distribution systems to be recognized for compliance.	☐	☐
☐	☑	NRCI-PLB-03-E - Must be submitted for high-rise residential and hotel/ motel single dwelling unit hot water distribution systems to be recognized for compliance.	☐	☐

J. DECLARATION OF REQUIRED CERTIFICATES OF ACCEPTANCE

There are no Certificates of Acceptance applicable to service water heating requirements.

STATE OF CALIFORNIA
Domestic Water Heating System
NRCC-PLB-E (Created 11/19) CALIFORNIA ENERGY COMMISSION
CERTIFICATE OF COMPLIANCE NRCC-PLB-E
Project Name: HIGHLAND HIGH SCHOOL 50M POOL & AQUATICS CENTER Report Page: Page 1 of 6
Project Address: 2900 ROYAL SCOTTS WAY, BAKERSFIELD, CA 93306 Date Prepared: 10/21/2022

This document is used to demonstrate compliance for nonresidential occupancies with requirements in §110.1, §120.3, §120.5 and §140.9, and with requirements in §141.0 for additions and alterations, for domestic water heating scopes using the prescriptive path. For high-rise residential and hotel/motel occupancies, compliance is demonstrated with requirements in §110.1, §110.3, §120.5, §100.0 and §150.1(c)8, and with requirements in §150.2 for additions and alterations.

Project Name: HIGHLAND HIGH SCHOOL 50M POOL & AQUATICS CENTER Report Page: Page 1 of 6
Project Address: 2900 ROYAL SCOTTS WAY, BAKERSFIELD, CA 93306 Date Prepared: 10/21/2022

A. GENERAL INFORMATION

01	Project Location (city)	BAKERSFIELD	02 Climate Zone
03	Occupancy Types Within Project (select all that apply):		
☑ Nonresidential	☐ High-Rise Residential	☐ Hotel/ Motel	
☐ State Building	☐ Healthcare Facility	☐ Other (Write In):	

B. PROJECT SCOPE

Table Instructions: Include any domestic water heating systems that are within the scope of the permit application and are demonstrating compliance using the prescriptive paths outlined in §140.9, §150.1(c)8, and §141.0(b) or §141.0(b)2B for additions or alterations. Solar water heating systems should be documented on the NRCC-SRA compliance document. Combined hydronic water heating systems should be documented on the NRCC-MCH compliance document.

01	02	03
My project consists of (check all that apply):	System Type[1,2]	System Components
☑ New System (DHW system being installed for the first time in newly constructed building)	Central System (serving nonresidential spaces)	☑ Equipment ☑ Distribution ☑ Controls
☐ System Alteration (equipment, distribution or controls)		☐ Equipment ☐ Distribution ☐ Controls

[1] FOOTNOTE: Point of use water heaters, or other non-central systems used to serve nonresidential spaces, are considered individual systems.
[2] Dwelling units refers to hotel/ motel guest rooms and units in a high-rise residential occupancy.

C. COMPLIANCE RESULTS

Table Instructions: Table C will indicate if the project data input into the compliance document is compliant with water heating requirements. This table is not editable by the user. If this table says "DOES NOT COMPLY" or "COMPLIES with Exceptional Conditions" refer to Table D., or the table indicated as not compliant for guidance.

01	02	03	04
Domestic Hot Water Equipment	Distribution Systems	Controls	**Compliance Results**
(See Table F)	(See Table G)	(See Table H)	
Yes	Yes	Yes	**COMPLIES**

STATE OF CALIFORNIA
Domestic Water Heating System
NRCC-PLB-E (Created 11/19) CALIFORNIA ENERGY COMMISSION
CERTIFICATE OF COMPLIANCE NRCC-PLB-E
Project Name: HIGHLAND HIGH SCHOOL 50M POOL & AQUATICS CENTER Report Page: Page 5 of 6
Project Address: 2900 ROYAL SCOTTS WAY, BAKERSFIELD, CA 93306 Date Prepared: 10/21/2022

K. DECLARATION OF REQUIRED CERTIFICATES OF VERIFICATION

Table Instructions: Selections have been made based on information provided in previous tables of this document. If any selection needs to be changed, please explain why in Table E. Additional Remarks. These documents must be completed by a HERS Rater and provided to the building inspector during construction. The final documents must be created by a HERS Providers registry, but drafts can be found online at https://www.energy.ca.gov/title24/2019standards/2019_compliance_documents/Nonresidential_Documents/NRCVC

YES	NO	Form/Title	Field Inspector Pass	Field Inspector Fail
☐	☑	NRCV-PLB-21-H High-rise Residential Central Hot Water Distribution HERS Verification	☐	☐
☐	☑	NRCV-PLB-22-H High-rise Residential Individual Dwelling Unit Hot Water Distribution HERS Verification	☐	☐

STATE OF CALIFORNIA
Domestic Water Heating System
NRCC-PLB-E (Created 11/19) CALIFORNIA ENERGY COMMISSION
CERTIFICATE OF COMPLIANCE NRCC-PLB-E
Project Name: HIGHLAND HIGH SCHOOL 50M POOL & AQUATICS CENTER Report Page: Page 2 of 6
Project Address: 2900 ROYAL SCOTTS WAY, BAKERSFIELD, CA 93306 Date Prepared: 10/21/2022

D. EXCEPTIONAL CONDITIONS

This table is auto-filled with unedittable comments because of selections made or data entered in tables throughout the form.

No exceptional conditions apply to this project.

E. ADDITIONAL REMARKS

This table includes remarks made by the permit applicant to the Authority Having Jurisdiction.

F. DOMESTIC HOT WATER EQUIPMENT

Table Instructions: Complete the following table to demonstrate compliance with mandatory equipment requirements in §110.1 and §110.3. For high-rise residential and hotel/ motel occupancies, compliance with prescriptive requirements in §150.1(c)8 must also be demonstrated and with §150.2 for addition and alteration scopes.

Equipment Schedule: Central Systems

07	08	09	10	11	12	13	14	15
Name or Item Tag	Equipment Type	Volume (gal)	Rated Input Capacity (Btu/h)	Rated Efficiency	Minimum Efficiency Required	Efficiency Unit	Designed Standby Loss[1]	Maximum Standby Loss[1]
WH-1	Gas Storage Water Heater	69	120,000	96	80	%	1,196	3,945

[1] FOOTNOTE: For gas water heaters/ boilers, standby loss is in BTUH. For electric storage water heaters, standby loss is in %/hr.

Water Heating Equipment All Occupancies

	Yes	No	Not Applicable	Requirement
18	☐	☐	☑	Unfired storage tank insulation shall have Internal + External ≥ R-16 OR External ≥ R-12. Label required per §110.3(c)3
19	☐	☐	☑	New state buildings 60% of energy for service water heating from site solar energy or recovered energy per §110.3(c)5
20	☐	☐	☑	Isolation valves for instantaneous water heater with input rating > 6.8 kBTUH or 2 kW has been specified per §110.3(c)6

G. DOMESTIC HOT WATER DISTRIBUTION SYSTEM

Table Instructions: Complete the following table to demonstrate compliance for nonresidential occupancies with distribution requirements in §120.3 and §140.5. For high-rise residential and hotel/motel occupancies, compliance is demonstrated with requirements in §110.3(c), §120.3, §150.0, §150.1

Recirculation Loops in Central Systems Serving Dwelling Units or Nonresidential Spaces

Table Continued

STATE OF CALIFORNIA
Domestic Water Heating System
NRCC-PLB-E (Created 11/19) CALIFORNIA ENERGY COMMISSION
CERTIFICATE OF COMPLIANCE NRCC-PLB-E
Project Name: HIGHLAND HIGH SCHOOL 50M POOL & AQUATICS CENTER Report Page: Page 6 of 6
Project Address: 2900 ROYAL SCOTTS WAY, BAKERSFIELD, CA 93306 Date Prepared: 10/21/2022

DOCUMENTATION AUTHOR'S DECLARATION STATEMENT

I certify that this Certificate of Compliance documentation is accurate and complete

Documentation Author Name:	Bradley Severson	Documentation Author Signature:	
Company:	Engineous Group, Inc.	Signature Date:	2022-10-21
Address:	898 N. Fair Oaks, Suite E	CEA/ HERS Certification Identification (if applicable):	
City/State/Zip:	Pasadena/CA/91103	Phone:	626 696 3850

RESPONSIBLE PERSON'S DECLARATION STATEMENT

I certify the following under penalty of perjury, under the laws of the State of California:
1. The information provided on this Certificate of Compliance is true and correct.
2. I am eligible under Division 3 of the Business and Professions Code to accept responsibility for the building design or system design identified on this Certificate of Compliance (responsible designer)
3. The energy features and performance specifications, materials, components, and manufactured devices for the building design or system design identified on this Certificate of Compliance conform to the requirements of Title 24, Part 1 and Part 6 of the California Code of Regulations.
4. The building design features or system design features identified on this Certificate of Compliance are consistent with the information provided on other applicable compliance documents, worksheets, calculations, plans and specifications submitted to the enforcement agency for approval with this building permit application.
5. I will ensure that a completed signed copy of this Certificate of Compliance shall be made available with the building permit(s) issued for the building, and made available to the enforcement agency for all applicable inspections. I understand that a completed signed copy of this Certificate of Compliance is required to be included with the documentation the builder provides to the building owner at occupancy.

Responsible Designer Name:	Bradley Severson	Responsible Designer Signature:	
Company :	Engineous Group, Inc.	Date Signed:	2022-10-21
Address:	898 N. Fair Oaks, Suite E	License:	MZ7963
City/State/Zip:	Pasadena/CA/91103	Phone:	626 696 3850

STATE OF CALIFORNIA
Domestic Water Heating System
NRCC-PLB-E (Created 11/19) CALIFORNIA ENERGY COMMISSION
CERTIFICATE OF COMPLIANCE NRCC-PLB-E
Project Name: HIGHLAND HIGH SCHOOL 50M POOL & AQUATICS CENTER Report Page: Page 3 of 6
Project Address: 2900 ROYAL SCOTTS WAY, BAKERSFIELD, CA 93306 Date Prepared: 10/21/2022

Table Continued

	Yes	No	Not Applicable	Requirement
01	☑	☐	☐	*for release valve or vertical pump installation per* §110.3(c)4A
02	☑	☐	☐	Check valve or similar located between recirculation pump and water heating equipment to prevent backflow per §110.3(c)4B
03	☑	☐	☐	Hose bibb installed between pump and equipment and isolation valve between hose bibb and equipment per §110.3(c)4C
04	☑	☐	☐	Isolation valves on both sides of the pump per §110.3(c)4D
05	☑	☐	☐	Cold water and recirculation loop piping shall not be connected to the hot water storage tank drain port per §110.3(c)4E
06	☑	☐	☐	Check valve installed on cold water supply between hot water system and next closest tee on cold water supply per §110.3(c)4F
07	☐	☐	☑	For central systems serving multiple dwelling units, design includes two or more recirculation loops serving separate dwelling units per §150.1(c)8Bi unless building has ≤ 8 dwelling units.

Mandatory Pipe Insulation All Occupancies

12	☑	For systems serving nonresidential spaces, pipe insulation for the following applications is specified to comply with Table 120.3-A (see below) per §120.3: - Recirculating system piping, including supply and returns piping of the water heater - The first 8 ft of hot and cold outlet piping for a nonrecirculating storage system - Pipes that are externally heated
13	☑	Insulation shall be protected from damage, including that due to sunlight, moisture, equipment maintenance, and wind. Insulation exposed to weather shall be installed with a cover suitable for outdoor service per §110.3(b) and §150.0(j)3

TABLE 120.3-A PIPE INSULATION THICKNESS

Fluid Temperature Range (°F)	Conductivity Range (Btu-in per hour per ft² per °F)	Insulation Mean Rating Temp (°F)	Nominal Pipe Diameter (in)		
			<1	1 to < 1.5	1.5 to < 4
			Minimum Insulation Required		
105-140	0.22-0.28	100	**1.0 in or R-7.7**	**1.5 in or R-12.5**	**1.5 in or R-11**

H. DOMESTIC HOT WATER SYSTEM CONTROLS

Table Instructions: Complete the following table to demonstrate compliance with controls requirements in §110.3 for all occupancies. For high-rise residential and hotel/motel occupancies, compliance is demonstrated with requirements in §150.1(c)8.

	Yes	No	Not Applicable	Requirement

Table Continued

PLUMBING FIXTURE SCHEDULE

ITEM NO.	SUFFIX	DESCRIPTION	MANUFACTURER	MODEL	COMMENTS
3"OD	A1	OVERFLOW DRAIN	JR SMITH	1080-Y-CRU	CAST IRON, COMPLETE WITH CAST IRON FLASHING CLAMP, CAST IRON DOME STRAINER, EXTENSION AND SUMP RECEIVER AND 2" EXTERNAL WATER DAM WITH ZURN NOZZLE #199
3"RD	A1	ROOF DRAIN	JR SMITH	1010-Y-CRU	CAST IRON, COMPLETE WITH CAST IRON FLASHING CLAMP, CAST IRON DOME STRAINER, EXTENSION AND SUMP RECEIVER.
BF	A1	2 1/2" SIZE, REDUCED PRESSURE TYPE, COMPLETE WITH BALL VALVES, TEST COCKS AND DRAIN.	WATTS	957BFG	2 1/2" REDUCED PRESSURE BACKFLOW PREVENTOR
DF	CH	NON-COOLED	HALSEY TAYLOR	HTHBWF-HRFSEBP-I	ROUGH-IN: 2"W, 2"V, 1 1/4"P-TRAP, 3/4"CW; DUAL HEIGHT, SATIN STAINLESS STEEL AND BACKPLATE AND WATER BOTTLE FILLER
FD	A1	2"FLOOR DRAIN	JR SMITH	2005-AHP05NB	ROUGH-IN: 2"W, 2"PTRAP & 2"V, ROUGH-IN CONN'S: 2"SS, 2"V & 3/4"CW, WITH TRAP PRIMER CONNECTION. TRAP PRIMER MAY BE PROVIDED BY A FLUSH VALVE ATTACHMENT OR A "PPP" PR-500 RECESSED IN WALL BEHIND ACCESS PANEL WITH A 1/2" BALL VALVE PRECEEDING THE TRAP PRIMER, BOTH BEHIND ONE ACCESS PANEL.
FD	A2	2"SHOWER FLOOR DRAIN	JR SMITH	2005-AHP05NB	ROUGH-IN CONN'S: 2"SS, 2"V & 3/4"CW W/3"PTRAP, WITH NO TRAP PRIMER CONNECTION.
FD	A3	3"FLOOR DRAIN	JR SMITH	2005-AHP05NB	ROUGH-IN CONN'S: 2"CWV, 3"PTRAP & PROVIDE TRAP PRIMER CONNECTION AND TRANSITION TO 4"CWV.
FD	A4	SHOWER 2"FLOOR DRAIN	JR SMITH	2005-AHP05NB	ROUGH-IN CONN'S: 2"CWV, 3"PTRAP & WITHOUT TRAP PRIMER CONNECTION AND CONNECT TO 4"CWV MAIN LINE
FD	A5	FLOOR DRAIN	JR SMITH	3430-Y-C-10	ROUGH-IN: 6"W & 6"V, 6"PTRAP, 3/4 GRATE AND BEEHIVE STRAINER W/1/2"TRAP PRIMER CONNECTION
FSP	A1	6"FIRE HUB DRAIN	--	--	PROVIDE 6"HUB DRAIN WITH 4"W & 4"PTRAP WITH 2"V & 1/2"PL CONNECTION
FS	A1	FLOOR SINK	JR SMITH	3430-Y-C-10	ROUGH-IN: 2"W & 2"V, 2"PTRAP, 3/4 GRATE AND BEEHIVE STRAINER W/1/2"TRAP PRIMER CONNECTION
FS	A2	FLOOR SINK	JR SMITH	3430-Y-C-10	ROUGH-IN: 3"CWV & 4"PTRAP, 3/4 GRATE AND BEEHIVE STRAINER WITH EXPOSED TRAP PRIMER WITH SOV
GPR	A1	GAS PRESSURE REGULATOR	PIETRO FIORENTINI	30051 DC 1/2"	GAS PRESSURE REGULATOR - 175 CFH @ 50 FEET, 3/4"MPG W/SOC INLET, & 1"G OUTLET W/SOC, BLACK SPRING, 8"WC
GPR	A2	GAS PRESSURE REGULATOR	PIETRO FIORENTINI	30053 DC 1 1/4"	GAS PRESSURE REGULATOR - 4500 CFH @ 50 FEET, 3/4"MPG W/SOC INLET, & 1"G OUTLET W/SOC, BLACK SPRING, 8"WC
LV	DH	LAVATORY .5 GPM	AMERICAN STANDARD	0356.012	ROUGH-INS: 2"W, 2"V, 1 1/4"P-TRAP, 3/4"HW & CW,VITREOUS CHINA WALL HUNG, SIZE 20" X 18", CONCEALED ARMS, WHITE. CHICAGO FAUCET 802-VE2805-665ABCP, "MVP" TWO PUSH BUTTON METERED FAUCET , 4"CENTER, 4"SPOUT. CHICAGO 1013 ANGLESTOPS WITH STAINLESS STEEL BRAIDED SUPPLIES, 17 GAUGE TUBULAR P-TRAP, AND SUPPLY COVERS & ZURN INSULATED GUARD FOR SUPPLIES.
LV	D1	LAVATORY .5 GPM	AMERICAN STANDARD	0356.012	ROUGH-INS: 2"W, 2"V, 1 1/4"P-TRAP, 3/4"HW & CW,VITREOUS CHINA WALL HUNG, SIZE 20" X 18", CONCEALED ARMS, WHITE. CHICAGO FAUCET 802-VE2805-665ABCP, "MVP" TWO PUSH BUTTON METERED FAUCET , 4"CENTER, 4"SPOUT. CHICAGO 1013 ANGLESTOPS WITH STAINLESS STEEL BRAIDED SUPPLIES, 17 GAUGE TUBULAR P-TRAP, AND SUPPLY COVERS & ZURN INSULATED GUARD FOR SUPPLIES.
RHB	A1	STAINLESS STEEL RECESSED HOSEBIBB	ACORN	8151	3/4"CW RECESSED HOSE BIBB WITH VACUUM BREAKER AND STAINLESS STEEL COVER
SB	A1	MOPSINK	AMERICAN STANDARD	7740.020	ROUGH-IN CONN: 3"W, 3"PTRAP, 2"V & 3/4"HW & CW, ACID RESISTING ENAMELED CAST IRON CORNER MODEL FLOOR MOUNTED MOP SINK WITH CURVED FRONT. 7721.038 PERFORATED GRID STRAINER FOR 3-INCH CONNECTION. CHICAGO FAUCET MODEL NO. 897-CCP EXPOSED SUPPLY FITTING WITH INTEGRAL SCREWDRIVER STOPS IN SHANKS, VACUUM BREAKER, 4 FEET OF RUBBER HOSE, ADJUSTABLE FLANGES AND WALL NOOK 7745.011 REMOVABLE COATED RIM GUARD.
SH	C1	SHOWER	ACORN	111-W-F-BS-G	ROUGH-INS: 3/4"HW & CW, HIGH WALL IN-LINE SHOWER UNIT: ACORN 111-W-F-BS-G "ACME" SERIES VANDALPROOF ASSEMBLY WITH 14" HIGH 14 GAUGE TYPE 304 NO. 4 FINISH STAINLESS STEEL TOTALLY ENCLOSED HOUSING. TYUPE 304 STAINLESS STEEL INTERNAL SOAP TANK, "FLO-CLOZ" DOUBLE VALVES WITH INDIVIDUAL STOPS, FLANGELESS ADJUSTABLE SHOWER HEADS WITH 1.6 G.P.M. FLOW CONTROL FRONT MOUNTED LIQUID SOAP DISPENSERS AND VANDALPROOF STAINLESS STEEL SCREWS. NUMBER OF SHOWER STATIONS SHALL BE AS INDICATED ON THE DRAWINGS.
SH	CH	SHOWER ACCESSIBLE	ACORN	536-ADA-FH-F-H-HL-MSH-Y-LVR-PBH	ROUGH-INS: 3/4"TW, HIGH WALL INDIVIDUAL SHOWER UNIT: ACORN 536-ADA-FH-F-H-HL-MSH-Y-LVR-PBH "ZENITH" SERIES VANDALPROOF ASSEMBLY WITH SINGLE TEMPERATURE AIR CONTROL METERING VALVE ACCESSIBLE PUSH BUTTON WITH SINGLE STOPS. 1.6 GPM FLOW CONTROL FIXED SHOWERHEAD, LEVER HANDLE DIVERTER VALVE, SUPPLY ELBOW WITH ELEVATED VACUUM BREAKER, FIXED HEAD AT 48" AFF, 60"SHOWER HOSE, AND VANDALPROOF STAINLESS STEEL SCREWS. ASSEMBLY SHALL COMPLY WITH THE A.D.A./C.B.C. REQUIREMENTS FOR FIXTURES SERVING PERSONS WITH DISABILITIES. GRAB BARS AND FOLDING SEAT WILL BE FURNISHED AND INSTALLED UNDER THE SPECIALTIES DIVISION OF THE SPECIFICATIONS. PROVIDE SINGLE TEMPERATURE MIXING VALVE IN WALL FOR SHOWER BEHIND ACCESS PANEL
ST	A1	SINK TRIM	CHICAGO FAUCET	50-GN2FC317ABCP	ROUGH-IN: 2"W, 2"V, & 3/4"HW & CW, 1 1/2"P-TRAP, SINGLE HOLE PUNCH, LK-99 BASKET STRAINER WITH 1-1/2" TAILPIECE, LA PATTERN CAST BRASS P-TRAP "SPEEDWAY"SUPPLIES WITH LOOSE KEY ANGLESTOPS. CHICAGO FAUCET, 1.5 GPM, AERATOR AND TWO LEVER 4"WRISTBLADES
TMV	A1	THERMOSTATIC MIXING VALVE	LAWLER MFG	802	ROUGH-INS: 1 1/4"HW, CW, & TW, BRONZE BODY, SET AT 120 DEG. F. W/CABINET, THERMOMETER & HWR CONNECTIONS
UR	CH	URINAL .125 GPF	AMERICAN STANDARD	6590.525	ROUGH-IN CONN'S: 2"SS, 2"V & 3/4"CW, SIPHON JET ACTION, SLOAN MODEL "SOLIS" 8186-.13 SOLAR POWERED BATTERY OPERATED SENSOR FLUSH VALVE WITH VACUUM BREAKER SCREWDRIVER STOP, VITREOUS CHINA WATER SAVER SIPHON JET URINAL WITH FLUSHING RIM, 3/4" CONNECTION THREADED 2" INSIDE, WALL HANGER, INSTALL AT ACCESSIBLE HEIGHT WHERE INDICATED ON THE ARCHITECTURAL DWGS.
UR	C1	URINAL .125 GPF	AMERICAN STANDARD	6590.525	ROUGH-IN CONN'S: 2"SS, 2"V & 3/4"CW, SIPHON JET ACTION, SLOAN MODEL "SOLIS" 8186-.13 SOLAR POWERED BATTERY OPERATED SENSOR FLUSH VALVE WITH VACUUM BREAKER SCREWDRIVER STOP, VITREOUS CHINA WATER SAVER SIPHON JET URINAL WITH FLUSHING RIM, 3/4" CONNECTION THREADED 2" INSIDE, WALL HANGER, INSTALL AT ACCESSIBLE HEIGHT WHERE INDICATED ON THE ARCHITECTURAL DWGS.
WC	CH	WATER CLOSET 1.28 GPF	AMERICAN STANDARD	MADERA HET #3461.001	ROUGH-IN CONN: 4"SS, 2"V, 1 1/4"CW, ELONGATED BOWL, VITREOUS CHINA FLOOR MOUNTED WATER CLOSET WITH 1 1/2" TOP SPUD. BENEKE 527-SS OPENFRONT WHITE SEAT WITH "PERMA-BUMPER" AND SELF-SUSTAINING CHECK HINGE, SLOAN MODEL SLOAN MODEL "SOLIS" RESS-C-1.28 SOLAR POWERED BATTERY OPERATED SENSOR FLUSH VALVE WITH VACUUM BREAKER SCREWDRIVER STOP AND SEAT BUMPER J.R. SMITH FIG. 9230 BRONZE FLOOR FLANGE, 17" TO 19" ACCESSIBLE HEIGHT
WC	C1	WATER CLOSET 1.28 GPF	AMERICAN STANDARD	MADERA HET #3451.001	ROUGH-IN CONN: 4"SS, 2"V, 1 1/4"CW, SIPHON JET ACTION, 1.28 GPF, ELONGATED BOWL, VITREOUS CHINA FLOOR MOUNTED WATER CLOSET WITH 1 1/2" TOP SPUD. BENEKE 527-SS OPENFRONT WHITE SEAT WITH "PERMA-BUMPER" AND SELF-SUSTAINING CHECK HINGE, SLOAN MODEL "SOLIS" RESS-C-1.28 SOLAR POWERED BATTERY OPERATED SENSOR FLUSH VALVE WITH VACUUM BREAKER SCREWDRIVER STOP AND SEAT BUMPER J.R. SMITH FIG. 9230 BRONZE FLOOR FLANGE.

IDENTIFICATION STAMP
DIV. OF THE STATE ARCHITECT
APP: 03-122664 INC:
REVIEWED FOR
SS ☑ FLS ☑ ACS ☑
DATE: 05/12/2023

pjhm architects
LA Phone: 213.278.0172 • Web: pjhm.com
LICENSED ARCHITECT GEORGE W. YOUNG NO. C15585 REN. 02/25 STATE OF CALIFORNIA
Engineous Group, Inc.
898 N. Fair Oaks Ave., Suite E Pasadena, CA 91103 Phone: (626) 696-3850
LA Office: 837 Traction Avenue, #410, Los Angeles, CA 90013 • SD Office: 804 Pier View Way #103, Oceanside, CA 92054 • SD Phone: 760.730.5527 • OC Phone: 949.496.6191 • OC Office: 24461 Ridge Route Drive #100, Laguna Hills, CA 92653
PROFESSIONAL ENGINEER MECHANICAL No. M 27963 Exp. 6/30/24 STATE OF CALIFORNIA

HIGHLAND HIGH SCHOOL
50M POOL & AQUATICS CENTER
KERN HIGH SCHOOL DISTRICT

PLUMBING SCHEDULE & DETAILS

P0.1

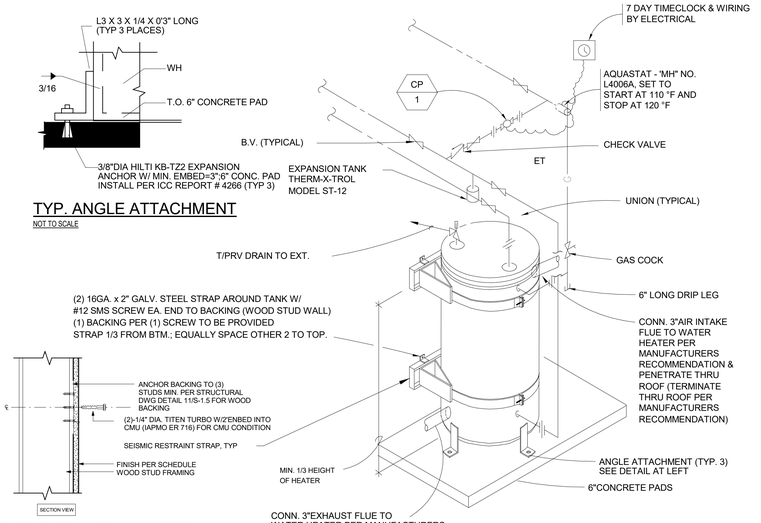

GAS WATER HEATER DETAIL

SCALE NONE | 6

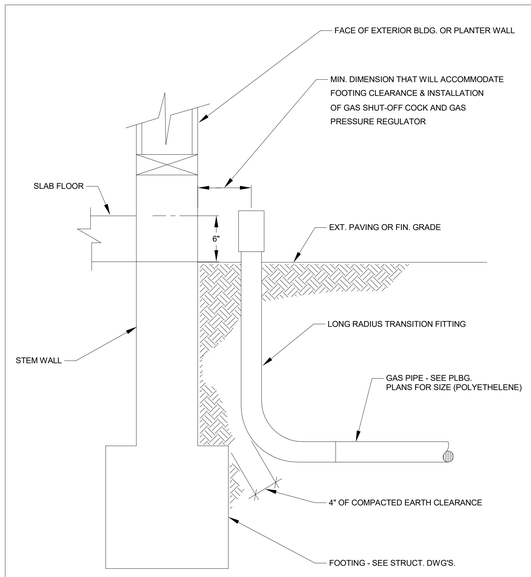

GAS RISER AT BUILDING DETAIL

SCALE NONE | 3

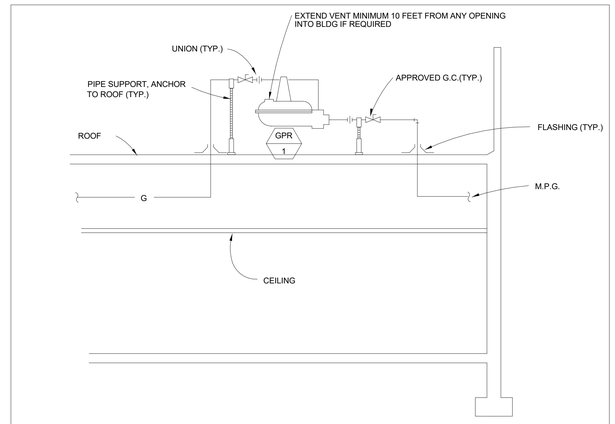

GAS PRESSURE REGULATOR ON ROOF DETAIL

SCALE NONE | 1

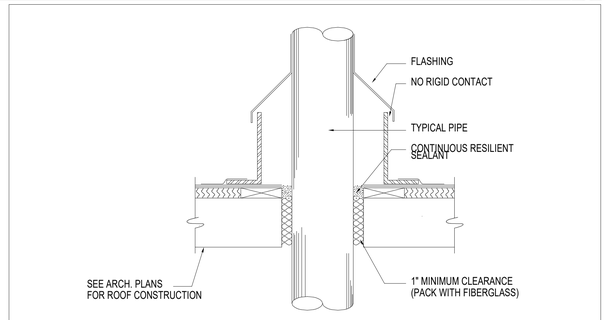

NOTE:
1. FLASHING, COUNTER FLASHING & ROOFING DETAILS ARE SCHEMATIC AND ARE TO INDICATE THE CONCEPT ONLY. SEE ARCHITECTURAL PLANS FOR DETAILS. (9,10 / A-5.5) (11,12 / A-5.5)

WATERPROOF PENETRATION DETAIL

SCALE NONE | 7

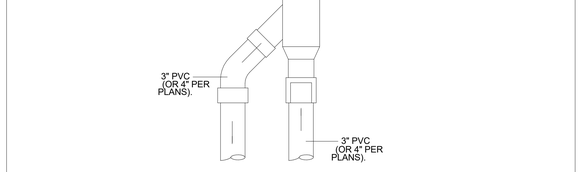

ROOF VENT WATER HEATERS

SCALE NONE | 4

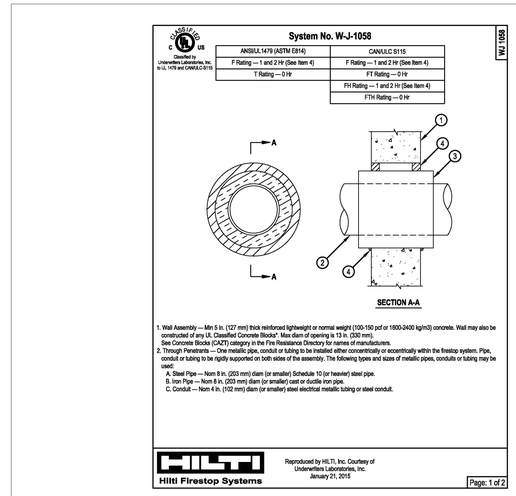

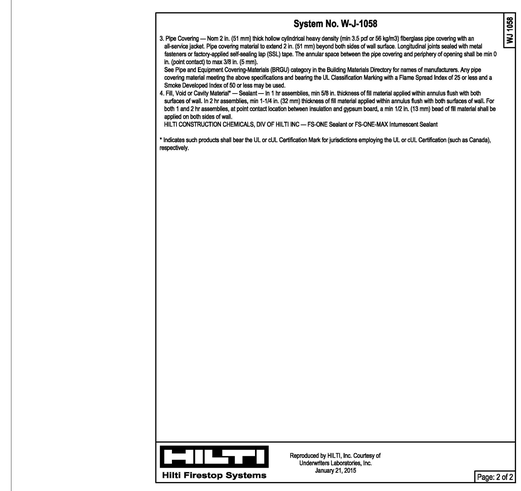

FIRE RATED PIPE PENETRATION

SCALE NONE | 2

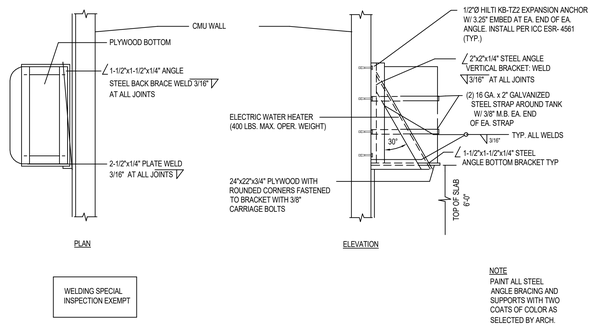

NOT TO SCALE

THERMAL EXPANSION TANK

8

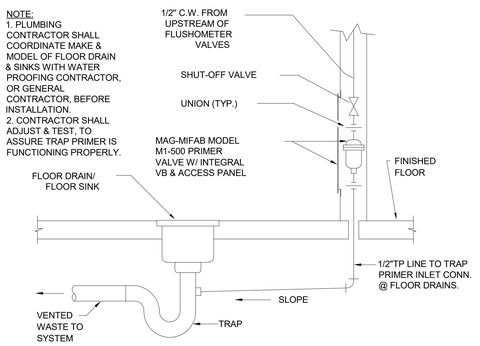

TRAP PRIMER DETAIL

SCALE NONE | 5

IDENTIFICATION STAMP
DIV. OF THE STATE ARCHITECT
APP: 03-122664 INC:
REVIEWED FOR
SS ☑ FLS ☑ ACS ☑
DATE: 05/12/2023

pjhm architects

LICENSED ARCHITECT
RICHARD W. RUDOLF
NO. C15585
REN. 02/25
STATE OF CALIFORNIA

Engineous Group, Inc.
808 N. Fair Oaks Ave., Suite E
Pasadena, CA 91103
Phone: (626) 696-3550

PROFESSIONAL ENGINEER
SCOTT T. SCHUMACHER
No. E 27963
Exp. 6/30/24
MECHANICAL
STATE OF CALIFORNIA

HIGHLAND HIGH SCHOOL
50M POOL & AQUATICS CENTER

KERN HIGH SCHOOL DISTRICT

PLUMBING DETAILS

OC Office: 24461 Ridge Route Drive #100, Laguna Hills, CA 92653 • **OC** Phone: 949.496.6191 • **SD** Office: 804 Pier View Way #103, Oceanside, CA 92054 • **SD** Phone: 760.730.5527 • **LA** Office: 837 Traction Avenue, #410, Los Angeles, CA 90013 • **LA** Phone: 213.278.0172 • Web: pjhm.com

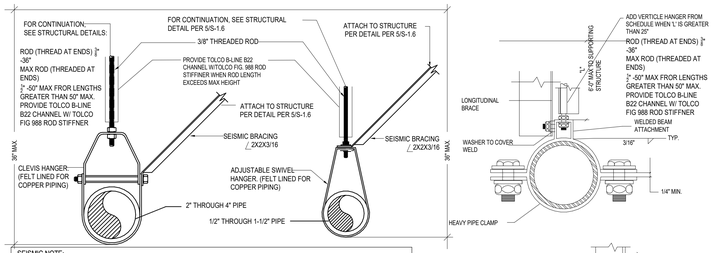

SEISMIC NOTE:
SEISMIC BRACING SHALL NOT BE REQUIRED FOR GAS PIPING 1" AND SMALLER AND OTHER PIPING <4" WHERE HANGER RODS ARE NOT EXCEEDING 12" FROM PIPE SUPPORT POINT TO THE CONNECTION AT THE SUPPORTING STRUCTURE AND PROVISIONS ARE MADE TO AVOID IMPACT WITH OTHER STRUCTURAL OR NON-STRUCTURAL COMPONENTS. TRANSVERSE BRACING TO BE PROVIDED AT THE BEGINNING AND END OF EACH RUN AND LONGITUDINAL BRACING SHALL OCCUR AT EACH RUN, REGARDLESS OF RUN LENGTH. ALL WORK TO BE IN ACCORDANCE WITH CBC 2019 SEC. 1617A.1.26. PIPE SIZE W/O SEISMIC BRACING NOT TO EXCEED 3" IN DIAMETER (1 INCH FOR GAS). ROD SIZE TO BE ⅜" OR ½" PER TABLE. WEIGHT ON HANGER NOT TO EXCEED 50 LBS.

HANGERS AND SUPPORT			
PIPE MATERIAL	TYPE OF JOINTS	HORIZONTAL SUPPORTS	VERTICAL SUPPORTS
CAST IRON HUBLESS	SHIELDED COUPLING	EVERY OTHER JOINT, UNLESS OVER 4 FT, THEN SUPPORT EACH JOINT.	BASE AND EACH FLOOR NOT TO EXCEED 15 FT
COPPER TUBE AND PIPE	SOLDERED OR BRAZED	1 1/2" AND SMALLER, 6 FT; 2" AND LARGER, 10'	EACH FLOOR, NOT TO EXCEED 10 FT.
STEEL PIPE FOR GAS	THREADED OR WELDED	1/2 IN., 6 FT. 3/4 IN. AND 1 IN. 8 FT. 1 1/4 IN. AND LARGER, 10 FT.	1/2 IN., 6 FT. 3/4 IN. AND 1 IN. 8 FT. 1 1/4 IN. AND LARGER, EVERY FLOOR LEVEL

1. SUPPORT ADJACENT TO JOINT, NOT TO EXCEED18 INCHES.
2. SEISMIC BRACE NOT TO EXCEED 40 FOOT INTERVALS FOR TRANSVERSE, AND 80 FT FOR LONGITUDINAL TO PREVENT HORIZONTAL MOVEMENT.
3. SUPPORT AT EACH HORIZONTAL BRANCH CONNECTION.
4. HANGERS SHALL NOT BE PLACED ON THE COUPLING.
5. ALL WORK TO BE IN ACCORDANCE WITH CBC 2019 SEC. 1617A.1.26.
6. PIPE SIZE W/O SEISMIC BRACING NOT TO EXCEED 3" IN DIAMETER (1 INCH FOR GAS). ROD SIZE TO BE ⅜" OR ½" PER TABLE.
7. WEIGHT ON HANGER NOT TO EXCEED 50 LBS.

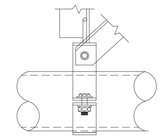

LONGITUDINAL BRACING FOR PIPES

HANGER ROD SIZES	
PIPE SIZE (INCHES)	ROD SIZE (INCHES)
1/2 - 4	3/8" (SEE NOTE A)

NOTE A: PROVIDE ½" DIA. WHERE REQUIRED BY ROD LENGTH AS NOTED IN THIS DETAIL

PIPE HANGING DETAIL

SCALE NONE — 1

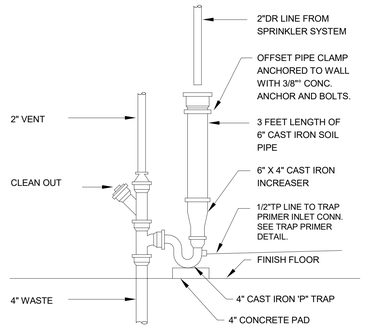

HUB DRAIN DETAIL

SCALE NONE — 2

IDENTIFICATION STAMP
DIV. OF THE STATE ARCHITECT
APP: 03-122664 INC:
REVIEWED FOR
SS ☑ FLS ☑ ACS ☑
DATE: 05/12/2023

pjhm architects
LA Phone: 213.278.0172 • Web: pjhm.com
LICENSED ARCHITECT — RICHARD W. RISHER — REN. 02/25 — STATE OF CALIFORNIA
Engineous Group, Inc. — 898 N. Fair Oaks Ave., Suite E Pasadena, CA 91103 Phone: (626) 696-3550
PROFESSIONAL ENGINEER — MECHANICAL — EXP. 6/30/24 — STATE OF CALIFORNIA
LA Office: 837 Traction Avenue, #410, Los Angeles, CA 90013 • SD Phone: 760.730.5527 • OC Office: 24461 Ridge Route Drive #100, Laguna Hills, CA 92653 • OC Phone: 949.496.6191 • SD Office: 804 Pier View Way #103, Oceanside, CA 92054

HIGHLAND HIGH SCHOOL
50M POOL & AQUATICS CENTER

KERN HIGH SCHOOL DISTRICT

PLUMBING DETAILS

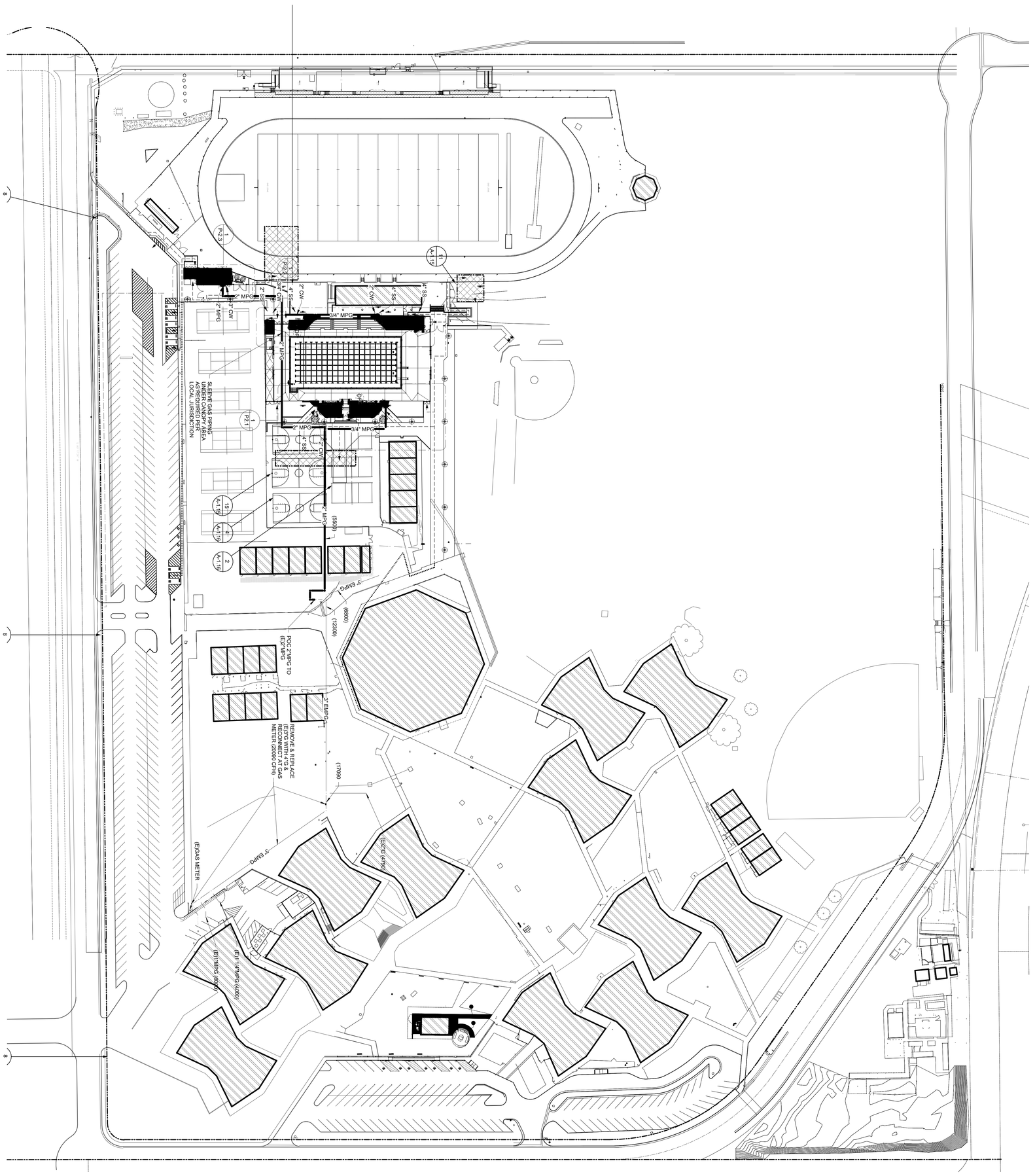

1 PLUMBING SITE PLAN
1" = 60'-0"

PLUMBING SITE PLAN

HIGHLAND HIGH SCHOOL
50M POOL & AQUATICS CENTER

KERN HIGH SCHOOL DISTRICT

P2.0

IDENTIFICATION STAMP
DIV. OF THE STATE ARCHITECT
APP: 03-122664 INC:
REVIEWED FOR
SS ☑ ACS ☑
FLS ☑
DATE: 05/12/2023

OC Office: 24461 Ridge Route Drive #100, Laguna Hills, CA 92653 • **OC** Phone: 949.496.6191 • **SD** Office: 804 Pier View Way #103, Oceanside, CA 92054 • **SD** Phone: 760.730.5527 • **LA** Office: 837 Traction Avenue, #410, Los Angeles, CA 90013 • **LA** Phone: 213.278.0172 • Web: pjhm.com

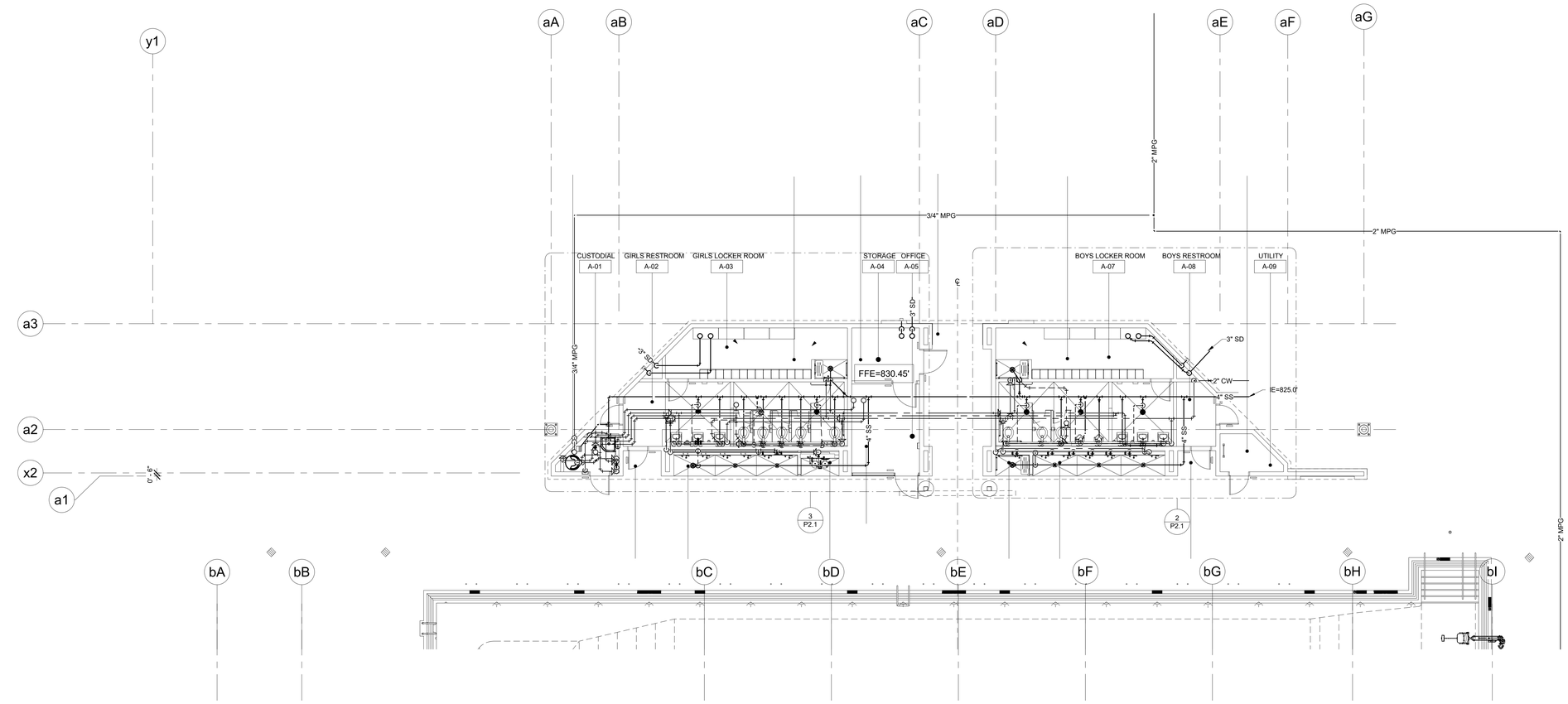

1 PLUMBING FLOOR PLAN - BUILDING A
1/8" = 1'-0"

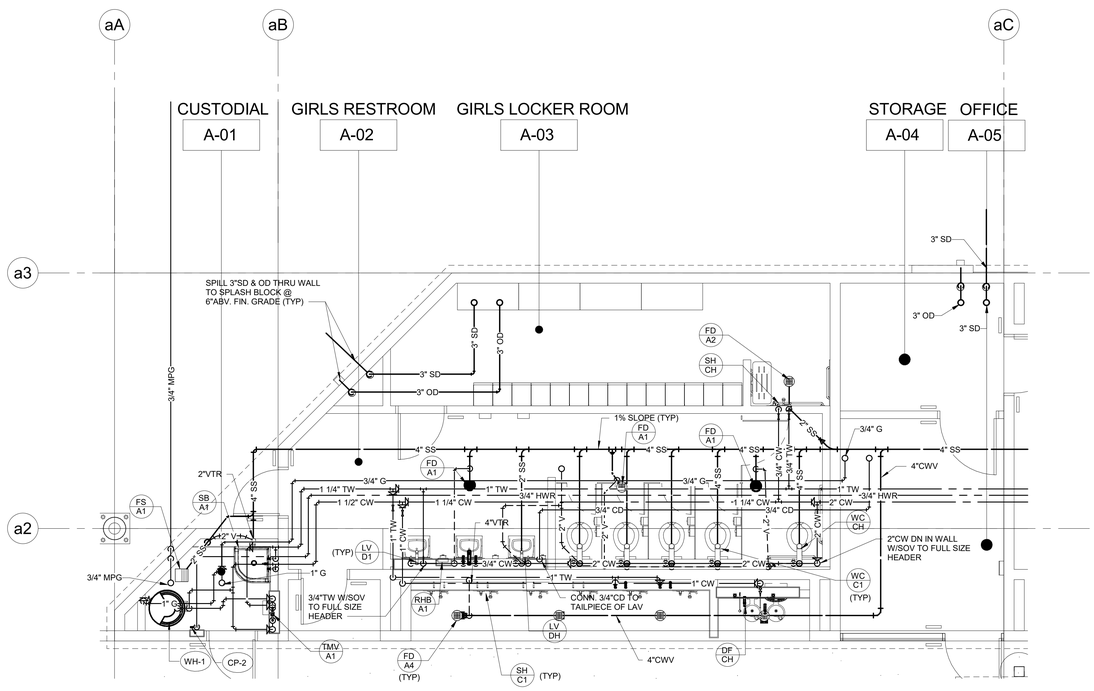

3 ENLARGED PLUMBING FLOOR PLAN - GIRLS LOCKER AREA
1/4" = 1'-0"

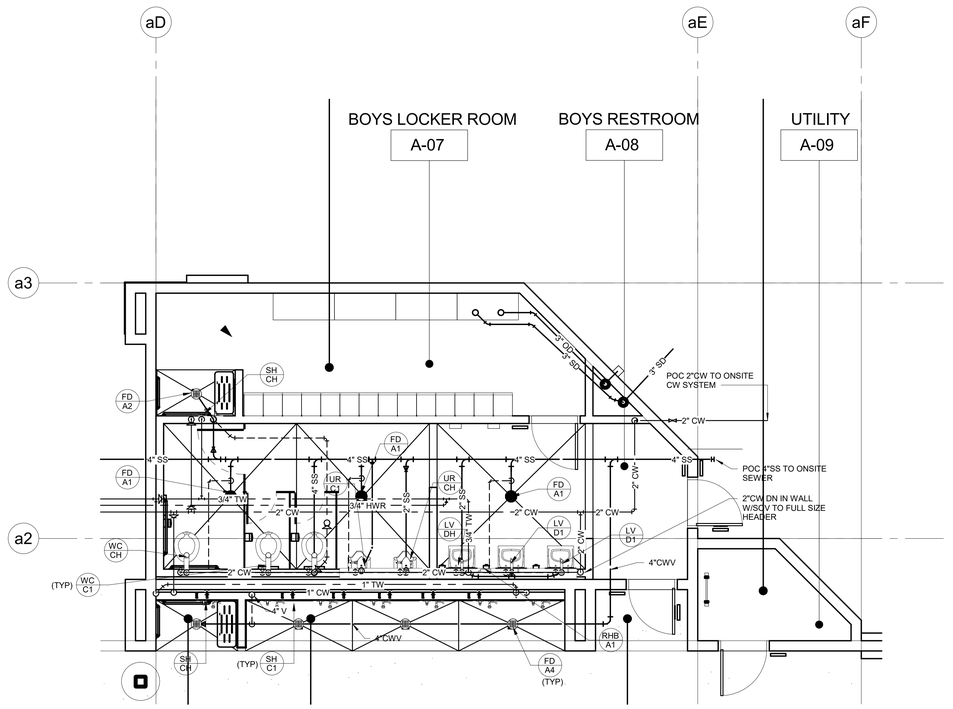

2 ENLARGED PLUMBING FLOOR PLAN - BOYS LOCKER AREA
1/4" = 1'-0"

IDENTIFICATION STAMP
DIV. OF THE STATE ARCHITECT
APP: 03-122664 INC:
REVIEWED FOR
SS ☑ FLS ☑ ACS ☑
DATE: 05/12/2023

pjhm architects

LICENSED ARCHITECT
RICHARD W. FRUIN
NO. C15585
REN. 02/25
STATE OF CALIFORNIA

Engineous Group, Inc.
898 N. Fair Oaks Ave., Suite E
Pasadena, CA 91103
Phone: (626) 696-3550

REGISTERED PROFESSIONAL ENGINEER
MARTY T. ESPINOSA JR.
NO. M 27963
Exp. 6/30/24
MECHANICAL
STATE OF CALIFORNIA

HIGHLAND HIGH SCHOOL
50M POOL & AQUATICS CENTER

KERN HIGH SCHOOL DISTRICT

PLUMBING FLOOR PLAN - BUILDING A

P2.1

LA Phone: 213.278.0172 • Web: pjhm.com
LA Office: 837 Traction Avenue, #410, Los Angeles, CA 90013
SD Phone: 760.730.5527 • SD Office: 804 Pier View Way #103, Oceanside, CA 92054
OC Phone: 949.496.6191 • OC Office: 24461 Ridge Route Drive #100, Laguna Hills, CA 92653

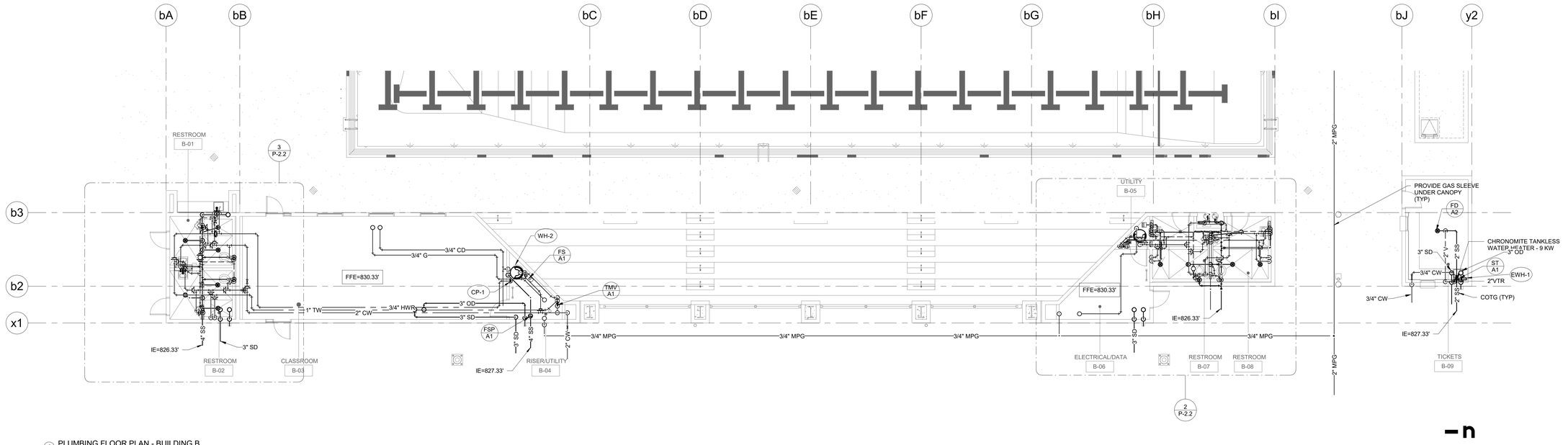

1 PLUMBING FLOOR PLAN - BUILDING B
1/8" = 1'-0"

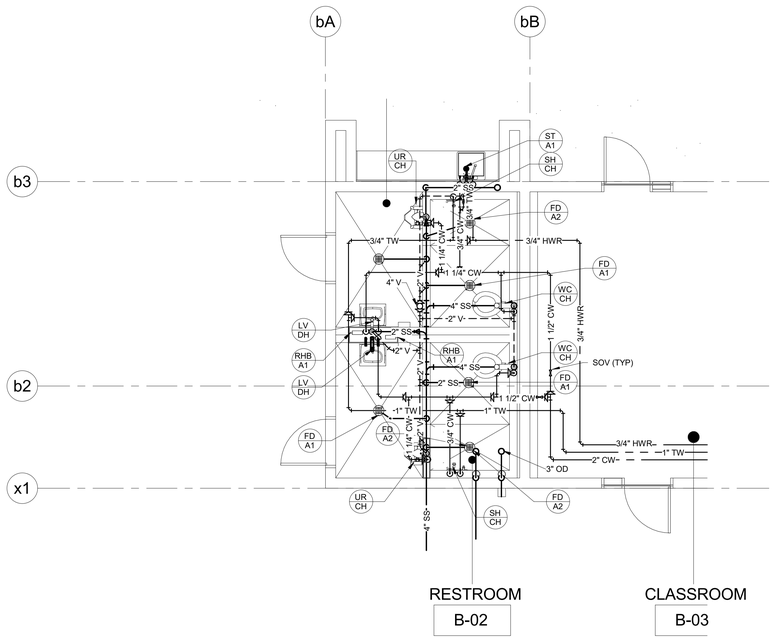

3 ENLARGED FLOOR PLANS - BUILDING
B101 & B102
1/4" = 1'-0"

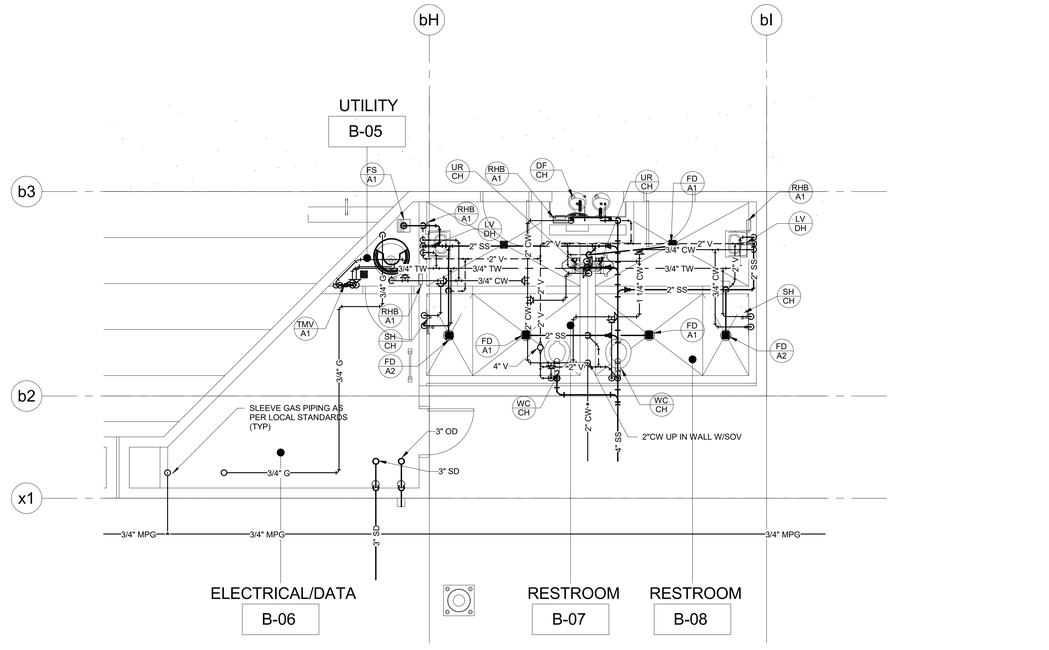

2 ENLARGED FLOOR PLAN - BUILDING B -
B-07 & B-08
1/4" = 1'-0"

IDENTIFICATION STAMP
DIV. OF THE STATE ARCHITECT
APP: 03-122664 INC:
REVIEWED FOR
SS ☑ FLS ☑ ACS ☑
DATE: 05/12/2023

pjhm architects

LICENSED ARCHITECT
RICHARD W. RISING
No. C15585
REN. 02/25
STATE OF CALIFORNIA

Engineous Group, Inc.
898 N. Fair Oaks Ave., Suite E
Pasadena, CA 91103
Phone: (626) 696-3550

REGISTERED PROFESSIONAL ENGINEER
STANLEY T. SUGIYAMA
No. M 27963
Exp. 6/30/24
MECHANICAL
STATE OF CALIFORNIA

pjhm.com · Web:
LA Phone: 213.278.0172 ·
LA Office: 837 Traction Avenue, #410, Los Angeles, CA 90013 ·
SD Office: 804 Pier View Way #103, Oceanside, CA 92054 ·
SD Phone: 760.730.5527 ·
OC Office: 24461 Ridge Route Drive #100, Laguna Hills, CA 92653 ·
OC Phone: 949.498.6191

HIGHLAND HIGH SCHOOL
50M POOL & AQUATICS CENTER

KERN HIGH SCHOOL DISTRICT

PLUMBING FLOOR PLAN -
BUILDING B

P-2.2

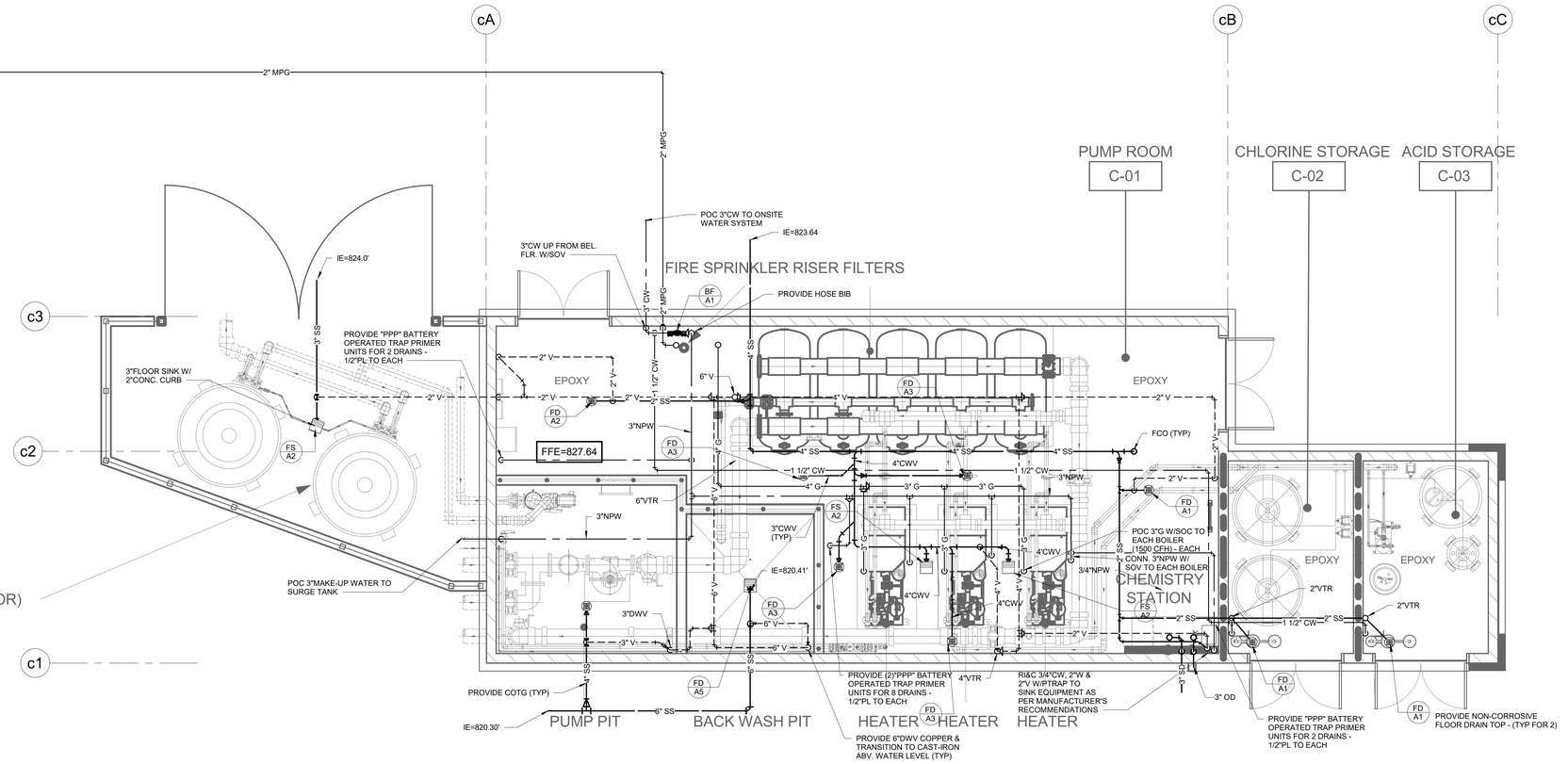

1 PLUMBING FLOOR PLAN - BUILDING C
1/4" = 1'-0"

IDENTIFICATION STAMP
DIV. OF THE STATE ARCHITECT
APP: 03-122664 INC:
REVIEWED FOR
SS ☑ FLS ☑ ACS ☑
DATE: 05/12/2023

pjhm architects

LICENSED ARCHITECT
RICHARD W. RUDOLF
NO. C15585
REN. 02/25
STATE OF CALIFORNIA

Engineous Group, Inc.
898 N. Fair Oaks Ave., Suite E
Pasadena, CA 91103
Phone: (626) 696-3550

PROFESSIONAL ENGINEER
MECHANICAL
M. 27963
Exp. 6/30/24
STATE OF CALIFORNIA

HIGHLAND HIGH SCHOOL
50M POOL & AQUATICS CENTER

KERN HIGH SCHOOL DISTRICT

PLUMBING FLOOR PLAN - BUILDING C

P-2.3

OC Office: 24461 Ridge Route Drive #100, Laguna Hills, CA 92653 • OC Phone: 949.496.6191 • SD Office: 804 Pier View Way #103, Oceanside, CA 92054 • SD Phone: 760.730.5527 • LA Office: 837 Traction Avenue, #410, Los Angeles, CA 90013 • LA Phone: 213.278.0172 • Web: pjhm.com

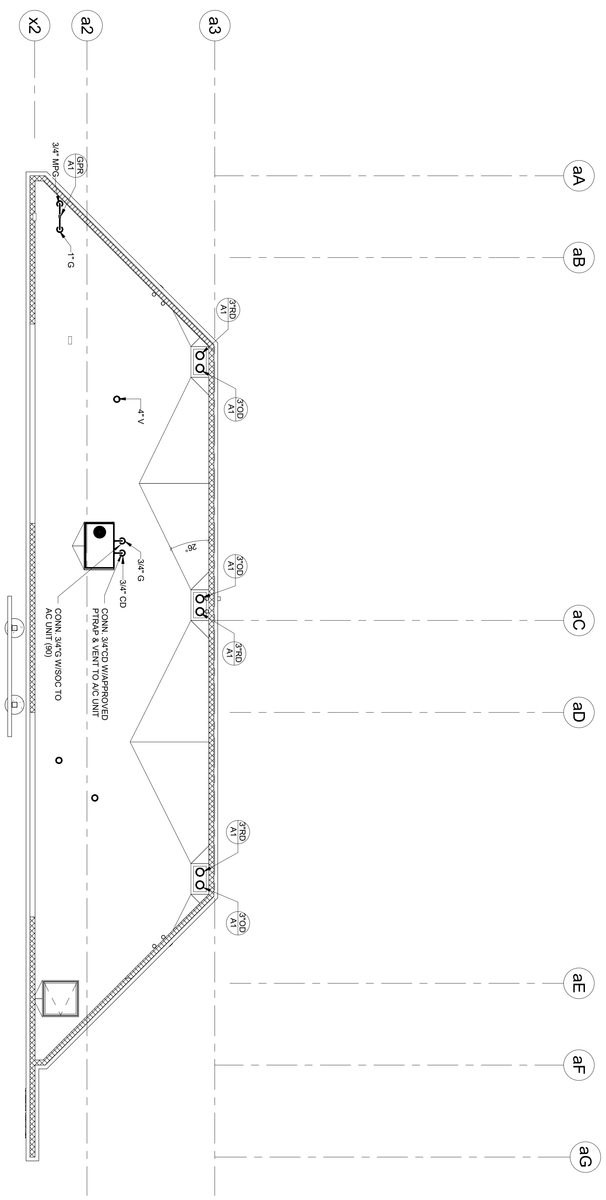

1 PLUMBING ROOF PLAN - BUILDING A
1/8" = 1'-0"

PLUMBING ROOF PLAN - BUILDING A

HIGHLAND HIGH SCHOOL
50M POOL & AQUATICS CENTER

KERN HIGH SCHOOL DISTRICT

Engineous Group, Inc.

pjhm architects

IDENTIFICATION STAMP
DIV. OF THE STATE ARCHITECT
APP: 03-122664 INC:
SS ☑ REVIEWED FOR
FLS ☑ ACS ☑
DATE 05/12/2023

OC Office: 24461 Ridge Route Drive #100, Laguna Hills, CA 92653 • **OC** Phone: 949.496.6191 • **SD** Office: 804 Pier View Way #103, Oceanside, CA 92054 • **SD** Phone: 760.730.5527 • **LA** Office: 837 Traction Avenue, #410, Los Angeles, CA 90013 • **LA** Phone: 213.278.0172 • Web: pjhm.com

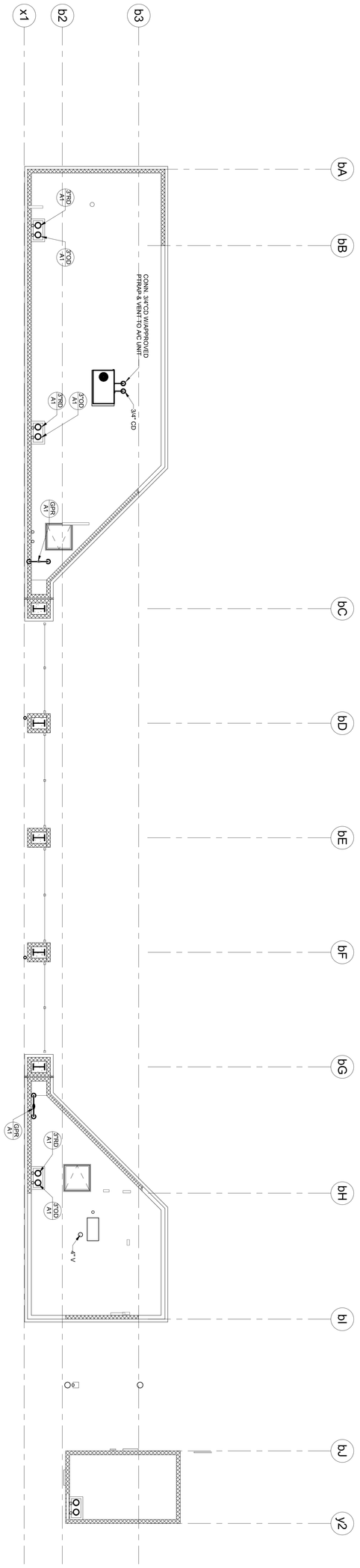

1 PLUMBING ROOF PLAN - BUILDING B
1/8" = 1'-0"

P-3.2

PLUMBING ROOF PLAN - BUILDING B

HIGHLAND HIGH SCHOOL
50M POOL & AQUATICS CENTER

KERN HIGH SCHOOL DISTRICT

Engineous Group, Inc.

pjhm architects

IDENTIFICATION STAMP
DIV. OF THE STATE ARCHITECT
APP: 03-122664 INC:
REVIEWED FOR
SS ☑ FLS ☑ ACS ☑
DATE: 05/12/2023

OC Office: 24461 Ridge Route Drive #100, Laguna Hills, CA 92653 • **OC** Phone: 949.496.6191 • **SD** Office: 804 Pier View Way #103, Oceanside, CA 92054 • **SD** Phone: 760.730.5527 • **LA** Office: 837 Traction Avenue, #410, Los Angeles, CA 90013 • **LA** Phone: 213.278.0172 • Web: pjhm.com

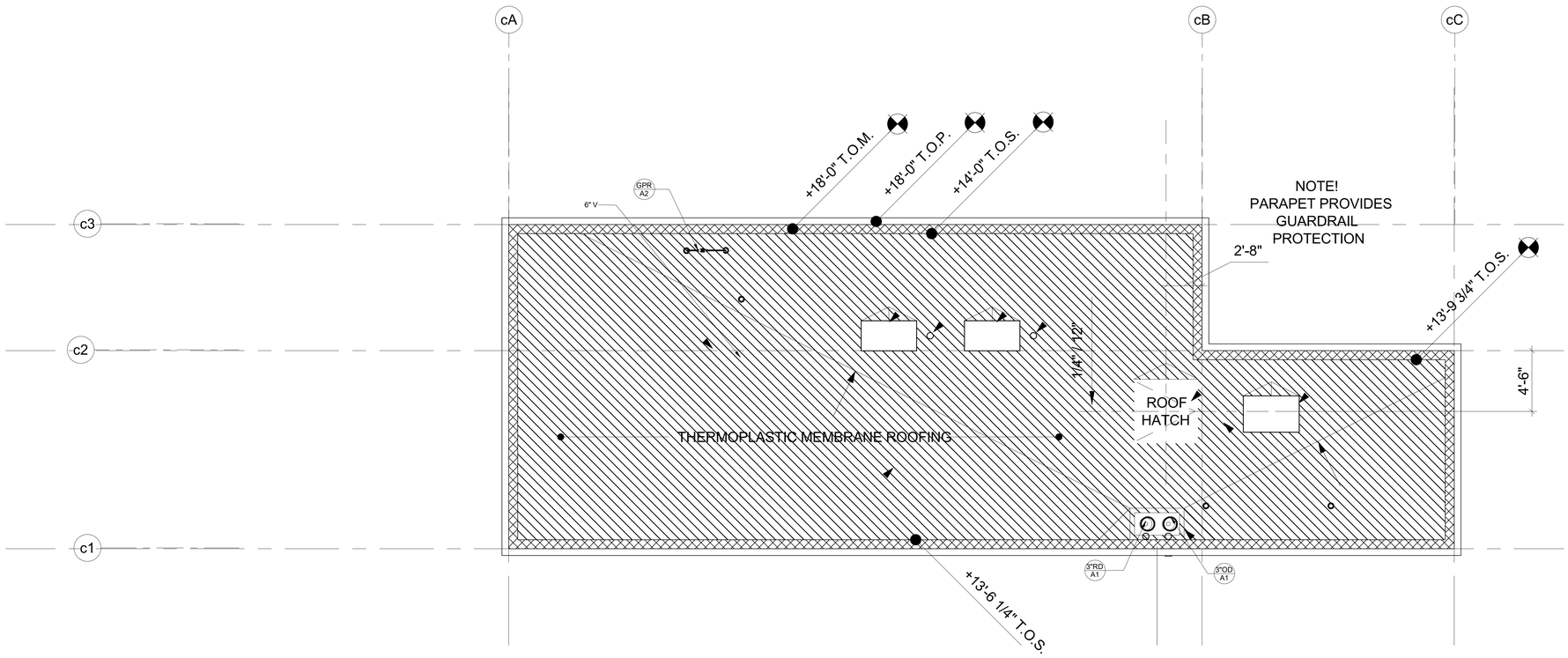

1 PLUMBING ROOF PLAN - BUILDING C
1/4" = 1'-0"

IDENTIFICATION STAMP
DIV. OF THE STATE ARCHITECT
APP: 03-122664 INC:
REVIEWED FOR
SS ☑ FLS ☑ ACS ☑
DATE: 05/12/2023

pjhm architects

LICENSED ARCHITECT
THOMAS W. KRUSE
NO. C15585
REN. 02/25
STATE OF CALIFORNIA

Engineous Group, Inc.
898 N. Fair Oaks Ave., Suite E
Pasadena, CA 91103
Phone: (626) 696-3850

REGISTERED PROFESSIONAL ENGINEER
CHARLEY E. STEVENSON
No. 27963
Exp. 6/30/24
MECHANICAL
STATE OF CALIFORNIA

HIGHLAND HIGH SCHOOL
50M POOL & AQUATICS CENTER

KERN HIGH SCHOOL DISTRICT

PLUMBING ROOF PLAN - BUILDING C

OC Office: 24461 Ridge Route Drive #100, Laguna Hills, CA 92653 • OC Phone: 949.496.6191 • SD Office: 804 Pier View Way #103, Oceanside, CA 92054 • SD Phone: 760.730.5527 • LA Office: 837 Traction Avenue, #410, Los Angeles, CA 90013 • LA Phone: 213.278.0172 • Web: pjhm.com

Project Name:	HIGHLAND HS POOL - BLDG A	NRCC-PRF-01-E	Page 1 of 11
Project Address:	39055 25th St W. PALMDALE 93551	Calculation Date/Time:	08:42, Thu, Mar 23, 2023
Input File Name:	Highland HS - Swimming Pool - Bldg A - Title 24.cibd19x		

A. GENERAL INFORMATION

1	Project Location (city)	PALMDALE	8	Standards Version	Compliance2019
2	CA Zip Code	93551	9	Compliance Software (version)	EnergyPro 8.3
3	Climate Zone	14	10	Weather File	PALMDALE_723820_CZ2010.epw
4	Total Conditioned Floor Area in Scope	788 ft²	11	Building Orientation (deg)	(N) 0 deg
5	Total Unconditioned Floor Area	3 ft²	12	Permitted Scope of Work	NewEnvelopeAndMechanical
6	Total # of Stories (Habitable Above Grade)	1	13	Building Type(s)	Nonresidential
7	Total # of dwelling units	0	14	Gas Type	NaturalGas

B. PROJECT SUMMARY

Table Instructions: Table B shows which building components are included in the performance calculation. If indicated as not included, the project must show compliance prescriptively if within permit application.

Building Components Complying via Performance					Building Components Complying Prescriptively	
Envelope (see Table G)	☒ Performance	Covered Process: Commercial Kitchens	☐ Performance		*The following building components are ONLY eligible for prescriptive compliance and should be documented on the NRCC form listed if within the scope of the permit application (i.e. compliance will not be shown on the NRCC-PRF-E).*	
	☐ Not Included		☒ Not Included			
Mechanical (see Table H)	☒ Performance	Covered Process: Computer Rooms	☐ Performance		Indoor Lighting (Unconditioned)§140.6	*NRCC-LTI-E*
	☐ Not Included		☒ Not Included		Outdoor Lighting §140.7	*NRCC-LTO-E*
Domestic Hot Water (see Table I)	☐ Performance	Covered Process: Laboratory Exhaust	☐ Performance		Sign Lighting §140.8	*NRCC -LTS-E*
	☒ Not Included		☒ Not Included		Mandatory Measures	
Lighting (Indoor Conditioned, see Table K)	☐ Performance				*Electrical power systems, commissioning, solar ready, elevator and escalator requirements are mandatory and should on the NRCC form listed if applicable (i.e. compliance will not be shown on the NRCC-PRF-E.)*	
	☒ Not Included				Electrical Power Distribution §110.11	*NRCC-ELC-E*
Solar Thermal Water Heating (see Table I)	☐ Performance				Commissioning §120.8	*NRCC-CXR-E*
	☒ Not Included				Solar Ready §110.10	*NRCC-SRA-E*

Project Name:	HIGHLAND HS POOL - BLDG A	NRCC-PRF-01-E	Page 2 of 11
Project Address:	39055 25th St W. PALMDALE 93551	Calculation Date/Time:	08:42, Thu, Mar 23, 2023
Input File Name:	Highland HS - Swimming Pool - Bldg A - Title 24.cibd19x		

C1. COMPLIANCE RESULTS FOR PERFORMANCE COMPONENTS (Annual TDV Energy Use, kBtu/ft ²-yr)

COMPLIES

Energy Component	Standard Design (TDV)	Proposed Design (TDV)	Compliance Margin (TDV)[1]
Space Heating	25.58	66.14	-40.56
Space Cooling	122.50	147.05	-24.55
Indoor Fans	200.64	125.88	74.76
Heat Rejection	--	--	--
Pumps & Misc.	--	--	--
Domestic Hot Water	171.23	171.23	--
Indoor Lighting	50.40	50.40	--
ENERGY STANDARDS COMPLIANCE TOTAL	**570.35**	**560.70**	**9.65 (1.7%)**

[1] *Notes: The number in parenthesis following the Compliance Margin in column 4, represents the Percent Better than Standard.*

C2. RESULTS FOR 'ABOVE CODE' QUALIFICATIONS[1]

☐ This project is pursuing CalGreen Tier 1 ☐ This project is pursuing CalGreen Tier 2

Miscellaneous Energy Component	Standard Design (TDV)	Proposed Design (TDV)	Compliance Margin (TDV)[1]
Receptacle	78.80	78.80	--
Process	--	--	--
Other Ltg	0.15	0.15	--
Process Motors	--	--	--
COMPLIANCE TOTAL PLUS MISCELLANEOUS COMPONENTS	**649.30**	**639.65**	**9.6 (1.5%)**

[1] *Notes: This table is used to document compliance with programs OTHER THAN Title 24 Part 6, if applicable.*

Project Name:	HIGHLAND HS POOL - BLDG A	NRCC-PRF-01-E	Page 3 of 11
Project Address:	39055 25th St W. PALMDALE 93551	Calculation Date/Time:	08:42, Thu, Mar 23, 2023
Input File Name:	Highland HS - Swimming Pool - Bldg A - Title 24.cibd19x		

C3. ENERGY USE SUMMARY

Energy Component	Standard Design Site (MWh)	Proposed Design Site (MWh)	Margin (MWh)	Standard Design Site (MBtu)	Proposed Design Site (MBtu)	Margin (MBtu)
Space Heating	--	--	--	9.8	25.2	-15.4
Space Cooling	2.2	2.4	-0.2	--	--	--
Indoor Fans	5.4	3.3	2.1	--	--	--
Heat Rejection	--	--	--	--	--	--
Pumps & Misc.	--	--	--	--	--	--
Domestic Hot Water	4.4	4.4	0.0	7.1	7.1	0.0
Indoor Lighting	1.3	1.3	0.0	--	--	-->
Compliance Total	**13.3**	**11.4**	**1.9**	**16.9**	**32.3**	**-15.4**
Receptacle	2.1	2.1	0.0	--	--	--
Process	--	--	--	--	--	--
Other Ltg	0.0	0.0	--	--	--	--
Process Motors	--	--	--	--	--	--
TOTAL	**15.4**	**13.5**	**1.9**	**16.9**	**32.3**	**-15.4**

D. EXCEPTIONAL CONDITIONS

This project includes partial performance compliance scope options. The building must show compliance with all other applicable compliance scope options (performance or prescriptively) before occupying.

The building does not include service water heating. Verify that service water heating is not required and is not included in the design.

This project uses the Simplified Geometry Performance Modeling Approach which is not capable of modeling daylighting controls and assumes the prescriptive Secondary Daylit Control requirements are met. PRESCRIPTIVE COMPLIANCE documentation (form NRCC-LTI-02-E) for the requirements of section 140.6(d) Automatic Daylighting Controls in Secondary Daylit Zones is required.

E. HERS VERIFICATION

This Section Does Not Apply

Project Name:	HIGHLAND HS POOL - BLDG A	NRCC-PRF-01-E	Page 4 of 11
Project Address:	39055 25th St W. PALMDALE 93551	Calculation Date/Time:	08:42, Thu, Mar 23, 2023
Input File Name:	Highland HS - Swimming Pool - Bldg A - Title 24.cibd19x		

G1. ENVELOPE GENERAL INFORMATION (conditioned spaces only)

1	2	3	4
Opaque Surfaces & Orientation	**Total Gross Surface Area (ft²)**	**Total Fenestration Area (ft²)**	**Window to Wall Ratio (%)**
North-Facing[1]	310 ft²	0 ft²	00.0%
East-Facing[2]	913 ft²	0 ft²	00.0%
South-Facing[3]	386 ft²	0 ft²	00.0%
West-Facing[4]	168 ft²	107 ft²	63.7%
Total	**1,777 ft²**	**107 ft²**	**06.0%**
Roof	788 ft²	0 ft²	00.0%

Notes:
[1] *North-Facing is oriented to within 45 degrees of true north, including 45°00'00" east of north (NE), but excluding 45°00'00" west of north (NW).*
[2] *East-Facing is oriented to within 45 degrees of true east, including 45°00'00" south of east (SE), but excluding 45°00'00" north of east (NE).*
[3] *South-Facing is oriented to within 45 degrees of true south, including 45°00'00" west of south (SW), but excluding 45°00'00" east of south (SE).*
[4] *West-Facing is oriented to within 45 degrees of true west, including 45°00'00" north of due west (NW), but excluding 45°00'00" south of west (SW).*

G3. OPAQUE SURFACE ASSEMBLY SUMMARY

1	2	3	4	5	6	7	8	9	10
Surface Name	**Surface Type**	**Area (ft²)**	**Framing Type**	**Cavity R-Value**	**Continuous R-Value**	**Units**	**Value**	**Description of Assembly Layers**	**Status[1]**
Slab On Grade7	UndergroundFloor	791	NA	0	NA	F-Factor	0.73	Slab Type = UnheatedSlabOnGrade Insulation Orientation = None Insulation R-Value = R0	N
8 CMU Wall9	ExteriorWall	1777	NA	0	NA	U-Factor	0.379	Concrete - Part Grouted and Empty - 125 lb/ft3 - 8 in.	N
R-21 Wall13	InteriorWall	792	Wood	21	NA	U-Factor	0.066	Stucco - 7/8 in. Vapor permeable felt - 1/8 in. Wood framed wall, 16in. OC, 5.5in., R-21 Gypsum Board - 1/2 in.	N

Project Name:	HIGHLAND HS POOL - BLDG A	NRCC-PRF-01-E	Page 5 of 11
Project Address:	39055 25th St W. PALMDALE 93551	Calculation Date/Time:	08:42, Thu, Mar 23, 2023
Input File Name:	Highland HS - Swimming Pool - Bldg A - Title 24.cibd19x		

G3. OPAQUE SURFACE ASSEMBLY SUMMARY

1	2	3	4	5	6	7	8	9	10
Surface Name	**Surface Type**	**Area (ft²)**	**Framing Type**	**Cavity R-Value**	**Continuous R-Value**	**Units**	**Value**	**Description of Assembly Layers**	**Status[1]**
R-30 Roof No Attic15	Roof	788	Wood	30	NA	U-Factor	0.034	Asphalt shingles - 1/4 in. Vapor permeable felt - 1/8 in. Plywood - 1/2 in. Air - Cavity - Wall Roof Ceiling - 4 in. or more Wood framed roof, 16in. OC, 11.25in., R-30 Gypsum Board - 1/2 in.	N

[1] *Status: N - New, A – Altered, E – Existing*

G4. OPAQUE DOOR SUMMARY

1	2	3
Assembly Name	**Overall U-factor**	**Status[1]**
Metal Door40	0.700	N

G5. FENESTRATION ASSEMBLY SUMMARY

1	2	3	4	5	6	7	8	9
Fenestration Assembly Name / Tag or I.D.	**Fenestration Type / Product Type / Frame Type**	**Certification Method[1]**	**Assembly Method**	**Area ft²**	**Overall U-factor**	**Overall SHGC**	**Overall VT**	**Status[2]**
NFRC Labeled Storefront (NEW)	VerticalFenestration CurtainWall N/A	NFRC Rated	SiteBuilt	107	0.41	0.26	0.46	N

[1] *Newly installed fenestration shall have a certified NFRC Label Certificate or use the CEC default tables found in Table 110.6-A and Table 110.6-B. Center of Glass (COG) values are for the glass-only, determined by the manufacturer, and are shown for ease of verification. Site-built fenestration values are calculated per Nonresidential Appendix NA6 and are used in the analysis.*
[2] *Status: N – New, A – Altered, E – Existing*

Project Name:	HIGHLAND HS POOL - BLDG A	NRCC-PRF-01-E	Page 6 of 11
Project Address:	39055 25th St W. PALMDALE 93551	Calculation Date/Time:	08:42, Thu, Mar 23, 2023
Input File Name:	Highland HS - Swimming Pool - Bldg A - Title 24.cibd19x		

H1. DRY SYSTEM EQUIPMENT (furnaces, air handling units, heat pumps, VRF, economizers etc.)

1	2	3	4	5	6	7	8	9	10	11	12
			Heating				Cooling				
Equipment Name	**Equipment Type**	**Qty**	**Total Heating Output (kBtu/h)**	**Supp Heat Output (kBtuh)**	**Efficiency Unit**	**Efficiency**	**Total Cooling Output (kBtu/h)**	**Efficiency Unit**	**Efficiency**	**Economizer Type (if present)**	**Status[1]**
AC-A1	SZVAVAC (Packaged3Phase)	1	73	0	AFUE	81.0	47	SEER/EER	17.50/13.00	DifferentialEnthalpy	N

[1] *Status: N - New, A – Altered, E – Existing*

H2. FAN SYSTEMS SUMMARY

1	2	3	4	5		6	7	8	9	10	11	12	13	14
		Design OA	Supply Fan						Return Fan					
Name or Item Tag	**Qty**	**CFM**	**CFM**	**Modeling Method**		**Power**	**Power Units**	**Control**	**CFM**	**Modeling Method**		**Power**	**Power Units**	**Control**	**Status[1]**
AC-A1	1	43	1400	BrakeHorsePower		0.500	bhp	VariableSpeedDrive	NA	NA		NA	NA	NA	N

[1] *Status: N - New, A – Altered, E – Existing*

H3. EXHAUST FAN SUMMARY

1	2	3	4	5	6	7	8
System ID	**Zone Name**	**Qty**	**CFM**	**Motor BHP**	**Power Per Flow (W/cfm)**	**Total Static Pressure (in. H_2O)**	**Status[1]**
GIRLS & MENS LOCKERS1	1-GIRLS & MENS LOCKERS	1	250	0.250	0.872	4.12	N

[1] *Status: N - New, A – Altered, E – Existing*

H4. Wet System Equipment(boilers,chillers,cooling towers,etc.)

This Section Does Not Apply

H5. PUMPS

This Section Does Not Apply

Project Name:	HIGHLAND HS POOL - BLDG A	NRCC-PRF-01-E	Page 7 of 11
Project Address:	39055 25th St W. PALMDALE 93551	Calculation Date/Time:	08:42, Thu, Mar 23, 2023
Input File Name:	Highland HS - Swimming Pool - Bldg A - Title 24.cibd19x		

H6. SYSTEM SPECIAL FEATURES

1	2	3	4
System Name	**Equipment Type**	**Window Interlocks per §140.4(n)**	**Other Special Features and Controls**
AC-A1	SZVAVAC	NA	Zones With CO2Sensor Vent. Control Differential Enthalpy Economizer

Notes: This table includes controls related to the performance path only. For projects using the prescriptive path, mandatory and prescriptive controls requirements are documented on the NRCC-MCH-E.

H7. NONRESIDENTIAL VENTILATION

1	2	3	4	5	6	7
	Mechanical Ventilation					
Zone Name	**Ventilation Function**	**# of people**	**Supply OA CFM**	**Exhaust CFM**	**Conditioned Area (sf)**	**DCV or Occupant Sensor Controls, or Both**
1-GIRLS & MENS LOCKERS	Exhaust - All other locker rooms Office - Office space Misc - All others	6.02	43	250	788	DCV

H8. HIGH-RISE RESIDENTIAL DWELLING UNIT AND HOTEL/MOTEL VENTILATION

This Section Does Not Apply

H9. ZONAL SYSTEM AND TERMINAL UNIT SUMMARY

1	2	3	4	5	6	7	8	9	10	11	12	13
				Rated Capacity (kBtuh)		Airflow (cfm)			Fan			
System ID	**Zone Name**	**System Type**	**Qty**	**Heating**	**Cooling**	**Design**	**Min.**	**Min. Ratio**	**Power**	**Power Units**	**Cycles**	**VSD**
1-GIRLS & MENS LOCKERS-Trm	1-GIRLS & MENS LOCKERS	VAVNoReheatBox	1	NA	NA	1400	462	0.33	0.500	bhp	NA	☐

H10. EVAPORATIVE COOLER SUMMARY

This Section Does Not Apply

H11. HEAT RECOVERY SUMMARY

This Section Does Not Apply

Project Name:	HIGHLAND HS POOL - BLDG A	NRCC-PRF-01-E	Page 8 of 11
Project Address:	39055 25th St W. PALMDALE 93551	Calculation Date/Time:	08:42, Thu, Mar 23, 2023
Input File Name:	Highland HS - Swimming Pool - Bldg A - Title 24.cibd19x		

Project Name:	HIGHLAND HS POOL - BLDG A	NRCC-PRF-01-E	Page 9 of 11
Project Address:	39055 25th St W. PALMDALE 93551	Calculation Date/Time:	08:42, Thu, Mar 23, 2023
Input File Name:	Highland HS - Swimming Pool - Bldg A - Title 24.cibd19x		

L. DECLARATION OF REQUIRED CERTIFICATES OF INSTALLATION

Table Instructions: Selections shall be made by Documentation Author to indicate which Certificates of Installation must be submitted for the features to be recognized for compliance. These documents bust be retained and provided to the building inspector during construction and can be found online at:
https://www.energy.ca.gov/title24/2019standards/2019_compliance_documents/Nonresidential_Documents/NRCI/

Building Component	Form/Title
Envelope	NRCI-ENV-01-E - Must be submitted for all buildings
Mechanical	NRCI-MCH-01-E - Must be submitted for all buildings

IDENTIFICATION STAMP
DIV. OF THE STATE ARCHITECT
APP: 03-122664 INC:
REVIEWED FOR
SS ☑ FLS ☑ ACS ☑
DATE: 05/12/2023

pjhm architects
LA Phone: 213.278.0172 • Web: pjhm.com
LA Office: 837 Traction Avenue, #410, Los Angeles, CA 90013
SD Phone: 760.730.5527 • SD Office: 804 Pier View Way #103, Oceanside, CA 92054
OC Phone: 949.496.6191 • OC Office: 24461 Ridge Route Drive #100, Laguna Hills, CA 92653

LICENSED ARCHITECT
ANDREW W. PHILLIPS
NO. C15585
REN. 02/25
STATE OF CALIFORNIA

REGISTERED PROFESSIONAL ENGINEER
MICHAEL E. [illegible]
NO. 27963
Exp. 6/30/24
MECHANICAL
STATE OF CALIFORNIA

Engineous Group, Inc.
896 N. Fair Oaks Ave., Suite E
Pasadena, CA 91103
Phone: (626) 696-3650

HIGHLAND HIGH SCHOOL
50M POOL & AQUATICS CENTER

KERN HIGH SCHOOL DISTRICT

HVAC TITLE 24 - BUILDING A

M-0.1

3/31/2023 7:45:37 AM

Project Name:	HIGHLAND HS POOL - BLDG A	NRCC-PRF-01-E	Page 10 of 11
Project Address:	39055 25th St W. PALMDALE 93551	Calculation Date/Time:	08:42, Thu, Mar 23, 2023
Input File Name:	Highland HS - Swimming Pool - Bldg A - Title 24.cibd19x		

M. DECLARATION OF REQUIRED CERTIFICATES OF ACCEPTANCE

Table Instructions: Selections shall be made by Documentation Author to indicate which Certificates of Acceptance must be submitted for the features to be recognized for compliance. These documents must be provided to the building inspector during construction and must be completed through an Acceptance Test Technician Certification Provider (ATTCP). For more information visit:https://www.energy.ca.gov/title24/2019standards/2019_compliance_documents/Nonresidential_Documents/NRCA/

Building Component	Form/Title
Envelope	NRCA-ENV-02-F - NRFC label verification for fenestration
Mechanical	NRCA-MCH-02-A Outdoor Air must be submitted for all newly installed HVAC units. Note: MCH02-A can be performed in conjunction with MCH-07-A Supply Fan VFD Acceptance (if applicable) since testing activities overlap
	NRCA-MCH-05-A Air Economizer Controls
	NRCA-MCH-06-A Demand Control Ventilation Systems Acceptance must be submitted for all systems required to employ demand controlled ventilation (refer to §120.1(c)3) can vary outside ventilation flow rates based on maintaining interior carbon dioxide (CO2) concentration setpoints
	NRCA-MCH-07-A Supply Fan Variable Flow Controls
	NRCA-MCH-11-A Automatic Demand Shed Controls
	NRCA-MCH-13-A Automatic FDD for Air Handling Units and Zone Terminal Units Acceptance
	NRCA-MCH-16-A Supply Air Temperature Reset Controls

Project Name:	HIGHLAND HS POOL - BLDG A	NRCC-PRF-01-E	Page 11 of 11
Project Address:	39055 25th St W. PALMDALE 93551	Calculation Date/Time:	08:42, Thu, Mar 23, 2023
Input File Name:	Highland HS - Swimming Pool - Bldg A - Title 24.cibd19x		

DOCUMENTATION AUTHOR'S DECLARATION STATEMENT

I certify that this Certificate of Compliance documentation is accurate and complete.

Documentation Author Name: Bradley Severson	Signature:
Company: Engineous Group, Inc.	
Address: 898 N Fair Oaks Ave, Suite E	Signature Date: 2023-03-23
City/State/Zip: Pasadena CA 91103	CEA/ HERS Certification Identification (if applicable):
Phone: 626 696 3850	

RESPONSIBLE PERSON'S DECLARATION STATEMENT

I certify the following under penalty of perjury, under the laws of the State of California:

1. The information provided on this Certificate of Compliance is true and correct.
2. I am eligible under Division 3 of the Business and Professions Code to accept responsibility for the building design or system design identified on this Certificate of Compliance (responsible designer)
3. The energy features and performance specifications, materials, components, and manufactured devices for the building design or system design identified on this Certificate of Compliance conform to the requirements of Title 24, Part 1 and Part 6 of the California Code of Regulations.
4. The building design features or system design features identified on this Certificate of Compliance are consistent with the information provided on other applicable compliance documents, worksheets, calculations, plans and specifications submitted to the enforcement agency for approval with this building permit application.
5. I will ensure that a completed signed copy of this Certificate of Compliance shall be made available with the building permit(s) issued for the building, and made available to the enforcement agency for all applicable inspections. I understand that a completed signed copy of this Certificate of Compliance is required to be included with the documentation the builder provides to the building owner at occupancy.

Responsible Envelope Designer Name:	Signature:	
Company: pjhm architects		
Address: 24461 Ridge Route Drive, Suite 100	Date Signed:	
City/State/Zip: Laguna Hills CA 92653		
Phone: 949 496 6191	Title:	License #:
Responsible Lighting Designer Name:	Signature: NOT IN SCOPE	
Company:		
Address:	Date Signed:	
City/State/Zip:		
Phone:	Title:	License #:
Responsible Mechanical Designer Name: Bradley Severson	Signature:	
Company: Engineous Group Inc.		
Address: 898 N. Fair Oaks, Suite E	Date Signed: 2023-03-23	
City/State/Zip: Pasadena CA 91103		
Phone: 626 714 7506	Title:	License #: M27963

CA Building Energy Efficiency Standards- 2019 Nonresidential Compliance Report Version: NRCC-PRF-01-E-12092021-6844 Report Generated at: 2023-03-23 08:44:37

IDENTIFICATION STAMP
DIV. OF THE STATE ARCHITECT
APP: 03-122664 INC:
REVIEWED FOR
SS ☑ FLS ☑ ACS ☑
DATE: 05/12/2023

pjhm architects
LA Office: 837 Traction Avenue, #410, Los Angeles, CA 90013 • LA Phone: 213.278.0172 • Web: pjhm.com
SD Phone: 760.730.5527 • OC Office: 24461 Ridge Route Drive #100, Laguna Hills, CA 92653 • OC Phone: 949.496.6191 • SD Office: 804 Pier View Way #103, Oceanside, CA 92054

LICENSED ARCHITECT
JAMES W. RAINES
NO. C15585
REN. 02/25
STATE OF CALIFORNIA

REGISTERED PROFESSIONAL ENGINEER
BRADLEY E. SEVERSON
NO. 27963
Exp. 6/30/24
MECHANICAL
STATE OF CALIFORNIA

Engineous Group, Inc.
898 N. Fair Oaks Ave., Suite E
Pasadena, CA 91103
Phone: (626) 696-3850

HIGHLAND HIGH SCHOOL
50M POOL & AQUATICS CENTER

KERN HIGH SCHOOL DISTRICT

HVAC TITLE 24 - BUILDING A

M-0.2

3/31/2023 7:45:43 AM

Project Name:	HIGHLAND HS POOL - BLDG B	NRCC-PRF-01-E	Page 1 of 11
Project Address:	39055 25th St W. PALMDALE 93551	Calculation Date/Time:	08:49, Thu, Mar 23, 2023
Input File Name:	Highland HS - Swimming Pool - Bldg B - Title 24.cibd19x		

A. GENERAL INFORMATION

1	Project Location (city)	PALMDALE	8	Standards Version	Compliance2019
2	CA Zip Code	93551	9	Compliance Software (version)	EnergyPro 8.3
3	Climate Zone	14	10	Weather File	PALMDALE_723820_CZ2010.epw
4	Total Conditioned Floor Area in Scope	961 ft²	11	Building Orientation (deg)	(N) 0 deg
5	Total Unconditioned Floor Area	3 ft²	12	Permitted Scope of Work	NewEnvelopeAndMechanical
6	Total # of Stories (Habitable Above Grade)	1	13	Building Type(s)	Nonresidential
7	Total # of dwelling units	0	14	Gas Type	NaturalGas

B. PROJECT SUMMARY

Table Instructions: Table B shows which building components are included in the performance calculation. If indicated as not included, the project must show compliance prescriptively if within permit application.

Building Components Complying via Performance					Building Components Complying Prescriptively	
Envelope (see Table G)	☒ Performance	Covered Process: Commercial Kitchens	☐ Performance		*The following building components are ONLY eligible for prescriptive compliance and should be documented on the NRCC form listed if within the scope of the permit application (i.e. compliance will not be shown on the NRCC-PRF-E).*	
	☐ Not Included		☒ Not Included			
Mechanical (see Table H)	☒ Performance	Covered Process: Computer Rooms	☐ Performance		Indoor Lighting (Unconditioned)§140.6	*NRCC-LTI-E*
	☐ Not Included		☒ Not Included		Outdoor Lighting §140.7	*NRCC-LTO-E*
Domestic Hot Water (see Table I)	☐ Performance	Covered Process: Laboratory Exhaust	☐ Performance		Sign Lighting §140.8	*NRCC -LTS-E*
	☒ Not Included		☒ Not Included		Mandatory Measures	
Lighting (Indoor Conditioned, see Table K)	☐ Performance				*Electrical power systems, commissioning, solar ready, elevator and escalator requirements are mandatory and should on the NRCC form listed if applicable (i.e. compliance will not be shown on the NRCC-PRF-E.)*	
	☒ Not Included				Electrical Power Distribution §110.11	*NRCC-ELC-E*
Solar Thermal Water Heating (see Table I)	☐ Performance				Commissioning §120.8	*NRCC-CXR-E*
	☒ Not Included				Solar Ready §110.10	*NRCC-SRA-E*

Project Name:	HIGHLAND HS POOL - BLDG B	NRCC-PRF-01-E	Page 2 of 11
Project Address:	39055 25th St W. PALMDALE 93551	Calculation Date/Time:	08:49, Thu, Mar 23, 2023
Input File Name:	Highland HS - Swimming Pool - Bldg B - Title 24.cibd19x		

C1. COMPLIANCE RESULTS FOR PERFORMANCE COMPONENTS (Annual TDV Energy Use, kBtu/ft ²-yr)

COMPLIES

Energy Component	Standard Design (TDV)	Proposed Design (TDV)	Compliance Margin (TDV)[1]
Space Heating	26.80	42.59	-15.79
Space Cooling	132.81	115.24	17.57
Indoor Fans	156.87	94.44	62.43
Heat Rejection	--	--	--
Pumps & Misc.	--	--	--
Domestic Hot Water	24.10	24.09	0.01
Indoor Lighting	41.46	41.46	--
ENERGY STANDARDS COMPLIANCE TOTAL	**382.04**	**317.82**	**64.22 (16.8%)**

[1] *Notes: The number in parenthesis following the Compliance Margin in column 4, represents the Percent Better than Standard.*

C2. RESULTS FOR 'ABOVE CODE' QUALIFICATIONS[1]

☐ This project is pursuing CalGreen Tier 1 ☐ This project is pursuing CalGreen Tier 2

Miscellaneous Energy Component	Standard Design (TDV)	Proposed Design (TDV)	Compliance Margin (TDV)[1]
Receptacle	76.50	76.50	--
Process	--	--	--
Other Ltg	0.07	0.07	--
Process Motors	--	--	--
COMPLIANCE TOTAL PLUS MISCELLANEOUS COMPONENTS	**458.61**	**394.39**	**64.2 (14.0%)**

[1] *Notes: This table is used to document compliance with programs OTHER THAN Title 24 Part 6, if applicable.*

Project Name:	HIGHLAND HS POOL - BLDG B	NRCC-PRF-01-E	Page 3 of 11
Project Address:	39055 25th St W. PALMDALE 93551	Calculation Date/Time:	08:49, Thu, Mar 23, 2023
Input File Name:	Highland HS - Swimming Pool - Bldg B - Title 24.cibd19x		

C3. ENERGY USE SUMMARY

Energy Component	Standard Design Site (MWh)	Proposed Design Site (MWh)	Margin (MWh)	Standard Design Site (MBtu)	Proposed Design Site (MBtu)	Margin (MBtu)
Space Heating	--	--	--	12.5	19.7	-7.2
Space Cooling	3.0	2.4	0.6	--	--	--
Indoor Fans	5.0	2.9	2.1	--	--	--
Heat Rejection	--	--	--	--	--	--
Pumps & Misc.	--	--	--	--	--	--
Domestic Hot Water	--	--	--	12.8	12.8	0.0
Indoor Lighting	1.4	1.4	0.0	--	--	-->
Compliance Total	**9.4**	**6.7**	**2.7**	**25.3**	**32.5**	**-7.2**
Receptacle	2.6	2.6	0.0	--	--	--
Process	--	--	--	--	--	--
Other Ltg	0.0	0.0	--	--	--	--
Process Motors	--	--	--	--	--	--
TOTAL	**12.0**	**9.3**	**2.7**	**25.3**	**32.5**	**-7.2**

D. EXCEPTIONAL CONDITIONS

This project includes partial performance compliance scope options. The building must show compliance with all other applicable compliance scope options (performance or prescriptively) before occupying.

The building does not include service water heating. Verify that service water heating is not required and is not included in the design.

This project uses the Simplified Geometry Performance Modeling Approach which is not capable of modeling daylighting controls and assumes the prescriptive Secondary Daylit Control requirements are met. PRESCRIPTIVE COMPLIANCE documentation (form NRCC-LTI-02-E) for the requirements of section 140.6(d) Automatic Daylighting Controls in Secondary Daylit Zones is required.

E. HERS VERIFICATION

This Section Does Not Apply

Project Name:	HIGHLAND HS POOL - BLDG B	NRCC-PRF-01-E	Page 4 of 11
Project Address:	39055 25th St W. PALMDALE 93551	Calculation Date/Time:	08:49, Thu, Mar 23, 2023
Input File Name:	Highland HS - Swimming Pool - Bldg B - Title 24.cibd19x		

G1. ENVELOPE GENERAL INFORMATION (conditioned spaces only)

1	2	3	4
Opaque Surfaces & Orientation	**Total Gross Surface Area (ft²)**	**Total Fenestration Area (ft²)**	**Window to Wall Ratio (%)**
North-Facing[1]	0 ft²	0 ft²	00.0%
East-Facing[2]	719 ft²	136 ft²	18.9%
South-Facing[3]	0 ft²	0 ft²	00.0%
West-Facing[4]	660 ft²	0 ft²	00.0%
Total	**1,379 ft²**	**136 ft²**	**09.9%**
Roof	961 ft²	0 ft²	00.0%

Notes:
[1] *North-Facing is oriented to within 45 degrees of true north, including 45°00'00" east of north (NE), but excluding 45°00'00" west of north (NW).*
[2] *East-Facing is oriented to within 45 degrees of true east, including 45°00'00" south of east (SE), but excluding 45°00'00" north of east (NE).*
[3] *South-Facing is oriented to within 45 degrees of true south, including 45°00'00" west of south (SW), but excluding 45°00'00" east of south (SE).*
[4] *West-Facing is oriented to within 45 degrees of true west, including 45°00'00" north of due west (NW), but excluding 45°00'00" south of west (SW).*

G3. OPAQUE SURFACE ASSEMBLY SUMMARY

1	2	3	4	5	6	7	8	9	10
Surface Name	**Surface Type**	**Area (ft²)**	**Framing Type**	**Cavity R-Value**	**Continuous R-Value**	**Units**	**Value**	**Description of Assembly Layers**	**Status[1]**
Slab On Grade6	UndergroundFloor	964	NA	0	NA	F-Factor	0.73	Slab Type = UnheatedSlabOnGrade Insulation Orientation = None Insulation R-Value = R0	N
8 CMU Wall8	ExteriorWall	1379	NA	0	NA	U-Factor	0.379	Concrete - Part Grouted and Empty - 125 lb/ft3 - 8 in.	N
R-21 Wall18	InteriorWall	270	Wood	21	NA	U-Factor	0.066	Stucco - 7/8 in. Vapor permeable felt - 1/8 in. Wood framed wall, 16in. OC, 5.5in., R-21 Gypsum Board - 1/2 in.	N

Project Name:	HIGHLAND HS POOL - BLDG B	NRCC-PRF-01-E	Page 5 of 11
Project Address:	39055 25th St W. PALMDALE 93551	Calculation Date/Time:	08:49, Thu, Mar 23, 2023
Input File Name:	Highland HS - Swimming Pool - Bldg B - Title 24.cibd19x		

G3. OPAQUE SURFACE ASSEMBLY SUMMARY

1	2	3	4	5	6	7	8	9	10
Surface Name	**Surface Type**	**Area (ft²)**	**Framing Type**	**Cavity R-Value**	**Continuous R-Value**	**Units**	**Value**	**Description of Assembly Layers**	**Status[1]**
R-30 Roof No Attic21	Roof	961	Wood	30	NA	U-Factor	0.034	Asphalt shingles - 1/4 in. Vapor permeable felt - 1/8 in. Plywood - 1/2 in. Air - Cavity - Wall Roof Ceiling - 4 in. or more Wood framed roof, 16in. OC, 11.25in., R-30 Gypsum Board - 1/2 in.	N

[1] *Status: N - New, A – Altered, E – Existing*

G4. OPAQUE DOOR SUMMARY

1	2	3
Assembly Name	**Overall U-factor**	**Status[1]**
Metal Door16	0.700	N

G5. FENESTRATION ASSEMBLY SUMMARY

1	2	3	4	5	6	7	8	9
Fenestration Assembly Name / Tag or I.D.	**Fenestration Type / Product Type / Frame Type**	**Certification Method[1]**	**Assembly Method**	**Area ft²**	**Overall U-factor**	**Overall SHGC**	**Overall VT**	**Status[2]**
NFRC Labeled Storefront (NEW)	VerticalFenestration CurtainWall N/A	NFRC Rated	SiteBuilt	136	0.41	0.26	0.46	N

[1] *Newly installed fenestration shall have a certified NFRC Label Certificate or use the CEC default tables found in Table 110.6-A and Table 110.6-B. Center of Glass (COG) values are for the glass-only, determined by the manufacturer, and are shown for ease of verification. Site-built fenestration values are calculated per Nonresidential Appendix NA6 and are used in the analysis.*
[2] *Status: N – New, A – Altered, E – Existing*

Project Name:	HIGHLAND HS POOL - BLDG B	NRCC-PRF-01-E	Page 6 of 11
Project Address:	39055 25th St W. PALMDALE 93551	Calculation Date/Time:	08:49, Thu, Mar 23, 2023
Input File Name:	Highland HS - Swimming Pool - Bldg B - Title 24.cibd19x		

H1. DRY SYSTEM EQUIPMENT (furnaces, air handling units, heat pumps, VRF, economizers etc.)

1	2	3	4	5	6	7	8	9	10	11	12
			Heating				Cooling				
Equipment Name	**Equipment Type**	**Qty**	**Total Heating Output (kBtu/h)**	**Supp Heat Output (kBtuh)**	**Efficiency Unit**	**Efficiency**	**Total Cooling Output (kBtu/h)**	**Efficiency Unit**	**Efficiency**	**Economizer Type (if present)**	**Status[1]**
AC-B1	SZVAVAC (Packaged3Phase)	1	49	0	AFUE	81.0	58	SEER/EER	17.50/12.90	DifferentialEnthalpy	N

[1] *Status: N - New, A – Altered, E – Existing*

H2. FAN SYSTEMS SUMMARY

1	2	3	4	5		6	7	8	9	10	11	12	13	14
		Design OA	Supply Fan						Return Fan					
Name or Item Tag	**Qty**	**CFM**	**CFM**	**Modeling Method**		**Power**	**Power Units**	**Control**	**CFM**	**Modeling Method**		**Power**	**Power Units**	**Control**	**Status[1]**
AC-B1	1	360	2000	BrakeHorsePower		0.810	bhp	VariableSpeedDrive	NA	NA		NA	NA	NA	N

[1] *Status: N - New, A – Altered, E – Existing*

H3. EXHAUST FAN SUMMARY

This Section Does Not Apply

H4. Wet System Equipment(boilers,chillers,cooling towers,etc.)

This Section Does Not Apply

H5. PUMPS

This Section Does Not Apply

Project Name:	HIGHLAND HS POOL - BLDG B	NRCC-PRF-01-E	Page 7 of 11
Project Address:	39055 25th St W. PALMDALE 93551	Calculation Date/Time:	08:49, Thu, Mar 23, 2023
Input File Name:	Highland HS - Swimming Pool - Bldg B - Title 24.cibd19x		

H6. SYSTEM SPECIAL FEATURES

1	2	3	4
System Name	**Equipment Type**	**Window Interlocks per §140.4(n)**	**Other Special Features and Controls**
AC-B1	SZVAVAC	NA	Zones With CO2Sensor Vent. Control Differential Enthalpy Economizer

Notes: This table includes controls related to the performance path only. For projects using the prescriptive path, mandatory and prescriptive controls requirements are documented on the NRCC-MCH-E.

H7. NONRESIDENTIAL VENTILATION

1	2	3	4	5	6	7
	Mechanical Ventilation					
Zone Name	**Ventilation Function**	**# of people**	**Supply OA CFM**	**Exhaust CFM**	**Conditioned Area (sf)**	**DCV or Occupant Sensor Controls, or Both**
1-CLASSROOM	Misc - All others	24.02	360	0	961	DCV

H8. HIGH-RISE RESIDENTIAL DWELLING UNIT AND HOTEL/MOTEL VENTILATION

This Section Does Not Apply

H9. ZONAL SYSTEM AND TERMINAL UNIT SUMMARY

1	2	3	4	5	6	7	8	9	10	11	12	13
				Rated Capacity (kBtuh)		Airflow (cfm)			Fan			
System ID	**Zone Name**	**System Type**	**Qty**	**Heating**	**Cooling**	**Design**	**Min.**	**Min. Ratio**	**Power**	**Power Units**	**Cycles**	**VSD**
1-CLASSROOM-Trm	1-CLASSROOM	VAVNoReheatBox	1	NA	NA	2000	660	0.33	0.810	bhp	NA	☐

H10. EVAPORATIVE COOLER SUMMARY

This Section Does Not Apply

H11. HEAT RECOVERY SUMMARY

This Section Does Not Apply

Project Name:	HIGHLAND HS POOL - BLDG B	NRCC-PRF-01-E	Page 8 of 11
Project Address:	39055 25th St W. PALMDALE 93551	Calculation Date/Time:	08:49, Thu, Mar 23, 2023
Input File Name:	Highland HS - Swimming Pool - Bldg B - Title 24.cibd19x		

Project Name:	HIGHLAND HS POOL - BLDG B	NRCC-PRF-01-E	Page 9 of 11
Project Address:	39055 25th St W. PALMDALE 93551	Calculation Date/Time:	08:49, Thu, Mar 23, 2023
Input File Name:	Highland HS - Swimming Pool - Bldg B - Title 24.cibd19x		

L. DECLARATION OF REQUIRED CERTIFICATES OF INSTALLATION

Table Instructions: Selections shall be made by Documentation Author to indicate which Certificates of Installation must be submitted for the features to be recognized for compliance. These documents bust be retained and provided to the building inspector during construction and can be found online at:
https://www.energy.ca.gov/title24/2019standards/2019_compliance_documents/Nonresidential_Documents/NRCI/

Building Component	Form/Title
Envelope	NRCI-ENV-01-E - Must be submitted for all buildings
Mechanical	NRCI-MCH-01-E - Must be submitted for all buildings

IDENTIFICATION STAMP
DIV. OF THE STATE ARCHITECT
APP: 03-122664 INC:
REVIEWED FOR
SS ☑ FLS ☑ ACS ☑
DATE: 05/12/2023

pjhm architects
LA Phone: 213.278.0172 • Web: pjhm.com
LA Office: 837 Traction Avenue, #410, Los Angeles, CA 90013
SD Phone: 760.730.5527 • OC Phone: 949.496.6191 • SD Office: 804 Pier View Way #103, Oceanside, CA 92054
OC Office: 24461 Ridge Route Drive #100, Laguna Hills, CA 92653

LICENSED ARCHITECT
ANDREW W. PARR
No. C15585
REN. 02/25
STATE OF CALIFORNIA

REGISTERED PROFESSIONAL ENGINEER
JEFFREY E. ERICKSON
No. 27963
Exp. 6/30/24
MECHANICAL
STATE OF CALIFORNIA

Engineous Group, Inc.
896 N. Fair Oaks Ave., Suite E
Pasadena, CA 91103
Phone: (626) 696-3650

HIGHLAND HIGH SCHOOL
50M POOL & AQUATICS CENTER

KERN HIGH SCHOOL DISTRICT

HVAC TITLE 24 - BUILDING B

M-0.3

3/31/2023 7:45:58 AM

Project Name:	HIGHLAND HS POOL - BLDG B	NRCC-PRF-01-E	Page 10 of 11
Project Address:	39055 25th St W. PALMDALE 93551	Calculation Date/Time:	08:49, Thu, Mar 23, 2023
Input File Name:	Highland HS - Swimming Pool - Bldg B - Title 24.cibd19x		

M. DECLARATION OF REQUIRED CERTIFICATES OF ACCEPTANCE

Table Instructions: Selections shall be made by Documentation Author to indicate which Certificates of Acceptance must be submitted for the features to be recognized for compliance. These documents must be provided to the building inspector during construction and must be completed through an Acceptance Test Technician Certification Provider (ATTCP). For more information visit:https://www.energy.ca.gov/title24/2019standards/2019_compliance_documents/Nonresidential_Documents/NRCA/

Building Component	Form/Title
Envelope	NRCA-ENV-02-F - NRFC label verification for fenestration
Mechanical	NRCA-MCH-02-A Outdoor Air must be submitted for all newly installed HVAC units. Note: MCH02-A can be performed in conjunction with MCH-07-A Supply Fan VFD Acceptance (if applicable) since testing activities overlap
	NRCA-MCH-05-A Air Economizer Controls
	NRCA-MCH-06-A Demand Control Ventilation Systems Acceptance must be submitted for all systems required to employ demand controlled ventilation (refer to §120.1(c)3) can vary outside ventilation flow rates based on maintaining interior carbon dioxide (CO2) concentration setpoints
	NRCA-MCH-07-A Supply Fan Variable Flow Controls
	NRCA-MCH-12-A FDD for Packaged Direct Expansion Units
	NRCA-MCH-13-A Automatic FDD for Air Handling Units and Zone Terminal Units Acceptance
	NRCA-MCH-16-A Supply Air Temperature Reset Controls

Project Name:	HIGHLAND HS POOL - BLDG B	NRCC-PRF-01-E	Page 11 of 11
Project Address:	39055 25th St W. PALMDALE 93551	Calculation Date/Time:	08:49, Thu, Mar 23, 2023
Input File Name:	Highland HS - Swimming Pool - Bldg B - Title 24.cibd19x		

DOCUMENTATION AUTHOR'S DECLARATION STATEMENT

I certify that this Certificate of Compliance documentation is accurate and complete.

Documentation Author Name: Bradley Severson	Signature:
Company: Engineous Group, Inc.	
Address: 898 N Fair Oaks Ave, Suite E	Signature Date: 2023-03-23
City/State/Zip: Pasadena CA 91103	CEA/ HERS Certification Identification (if applicable):
Phone: 626 696 3850	

RESPONSIBLE PERSON'S DECLARATION STATEMENT

I certify the following under penalty of perjury, under the laws of the State of California:

1. The information provided on this Certificate of Compliance is true and correct.
2. I am eligible under Division 3 of the Business and Professions Code to accept responsibility for the building design or system design identified on this Certificate of Compliance (responsible designer)
3. The energy features and performance specifications, materials, components, and manufactured devices for the building design or system design identified on this Certificate of Compliance conform to the requirements of Title 24, Part 1 and Part 6 of the California Code of Regulations.
4. The building design features or system design features identified on this Certificate of Compliance are consistent with the information provided on other applicable compliance documents, worksheets, calculations, plans and specifications submitted to the enforcement agency for approval with this building permit application.
5. I will ensure that a completed signed copy of this Certificate of Compliance shall be made available with the building permit(s) issued for the building, and made available to the enforcement agency for all applicable inspections. I understand that a completed signed copy of this Certificate of Compliance is required to be included with the documentation the builder provides to the building owner at occupancy.

Responsible Envelope Designer Name:	Signature:	
Company: pjhm architects		
Address: 24461 Ridge Route Drive, Suite 100	Date Signed:	
City/State/Zip: Laguna Hills CA 92653		
Phone: 949 496 6191	Title:	License #:
Responsible Lighting Designer Name:	Signature: NOT IN SCOPE	
Company:		
Address:	Date Signed:	
City/State/Zip:		
Phone:	Title:	License #:
Responsible Mechanical Designer Name: Bradley Severson	Signature:	
Company: Engineous Group Inc.		
Address: 898 N. Fair Oaks, Suite E	Date Signed: 2023-03-23	
City/State/Zip: Pasadena CA 91103		
Phone: 626 714 7506	Title:	License #: M27963

IDENTIFICATION STAMP
DIV. OF THE STATE ARCHITECT
APP: 03-122664 INC:
REVIEWED FOR
SS ☑ FLS ☑ ACS ☑
DATE: 05/12/2023

pjhm architects
LA Office: 837 Traction Avenue, #410, Los Angeles, CA 90013 • LA Phone: 213.278.0172 • Web: pjhm.com
SD Phone: 760.730.5527 • OC Office: 24461 Ridge Route Drive #100, Laguna Hills, CA 92653 • OC Phone: 949.496.6191 • SD Office: 804 Pier View Way #103, Oceanside, CA 92054

LICENSED ARCHITECT
JAMES W. RAINES
NO. C15585
REN. 02/25
STATE OF CALIFORNIA

REGISTERED PROFESSIONAL ENGINEER
BRADLEY E. SEVERSON
NO. 27963
Exp. 6/30/24
MECHANICAL
STATE OF CALIFORNIA

Engineous Group, Inc.
898 N. Fair Oaks Ave., Suite E
Pasadena, CA 91103
Phone: (626) 696-3850

HIGHLAND HIGH SCHOOL
50M POOL & AQUATICS CENTER

KERN HIGH SCHOOL DISTRICT

HVAC TITLE 24 - BUILDING B

M-0.4

3/31/2023 7:46:01 AM

ROOF MOUNTED AIR CONDITIONING UNIT SCHEDULE

UNIT	NOM. TONS	MAKE	MODEL	COOLING CAPACITY (BTUH)	EER	SEER	HEATING CAPACITY (BTUH)		SA CFM	ESP (IN)	RA CFM	MIN. OA CFM	MOTOR		ELECTRICAL DATA					UNIT WT. (LBS)	14" TALL CURB WT. (LBS)	REMARKS							
							INPUT	OUTPUT					HP	BHP	AC UNIT V	PH	HZ	MCA	MOP			1	2	3	4	5	6	7	8
AC-A1	4	TRANE	YHC047E3RYA	48850	-	17.5	90000	72900	1400	0.65	-	500	-	0.5	208	3	60	30	40	983	135	X	X	X		X	X	X	X
AC-B1	5	TRANE	YZC060E3RXA	60770	-	19.6	60000	49000	2000	0.65	-	400	-	0.81	208	3	60	26	40	892	135	X	X	X	X	X	X	X	X

REMARKS:

1. PROVIDE AC UNIT AUTOMATIC SHUTOFF VIA TOTAL AREA COVERAGE SMOKE DETECTION SYSTEM SIGNAL FROM FIRE ALARM CONTROL PANEL (PER 2019 CMC SECTION 608.1, EXCEPTION 1), SEE ELECTRICAL DRAWING.
2. ENTHALPY CONTROLLED ECONOMIZER
3. FACTORY MODULATING POWER EXHAUST
4. CO2 BASED DEMAND CONTROL VENTILATION
5. 14" HI FACTORY ROOF CURB
6. EMS - CONTROL W/ DISTRICT STANDARD EMS
7. W/ FAULT DETECTION & DIAGNOSTICS
8. PROVIDE HINGED ACCESS PANELS

EXHAUST FAN SCHEDULE

UNIT	MAKE	MODEL	FAN TYPE	ELECTRICAL DATA				TOTAL CFM	ESP (IN)	SONES	OPER. WT. (LBS)	REMARKS									
				HP	WATTS	V	PH					1	2	3	4	5	6	7	8	9	10
EF-A1	GREENHECK	G-099-VG	ROOFTOP	1/4	-	115	1	500	0.65	7.8	59	X	X	X	X	X					
EF-A2	GREENHECK	G-099-VG	ROOFTOP	1/4	-	115	1	500	0.65	7.8	59	X	X	X	X	X					
EF-A3	GREENHECK	G-097-VG	ROOFTOP	1/4	-	115	1	75	0.375	3.2	59	X	X	X	X	X					
EF-B1	GREENHECK	G-098-VG	ROOFTOP	1/4	-	115	1	300	0.5	5.7	59	X	X	X	X	X					
EF-B2	GREENHECK	G-098-VG	ROOFTOP	1/4	-	115	1	300	0.5	5.7	59	X	X	X	X	X					
EFS-C1	GREENHECK	USF-12	UTILITY SET UPBLAST	1/4	-	115	1	800	0.75	10.6	266						X	X	X		

1. PROVIDED W/ FACTORY FURNISHED ROOF CURB, BACKDRAFT DAMPER
2. WITH VARI-GREEN EC MOTOR
3. SEE DETAIL 1/M-4.3 FOR ANCHORAGE
4. RUN CONTINUOUSLY BASED ON BUILDING OPERATING HOURS ; CONNECT TO EMS TO VERIFY FAN STATUS
5. PROVIDE W/FACTORY SPEED CONTROL
6. SEE DETAIL 5/M-4.2 FOR ANCHORAGE
7. STAINLESS STEEL FAN, WITH VFD MOTOR, PERMATECTOR CONCRETE GRAY-RAL 7023 COATING, STAINLESS STEEL BACKDRAFT, DRAIN CONNECTION, STEEL WEATHERHOOD
8. RUN CONTINUOUSLY ; CONNECT TO EMS TO VERIFY FAN STATUS

Applicable Code: 2019 CBC 02-05-2020 Revised: 02/14/2020

All mechanical, plumbing, and electrical components shall be anchored and installed per the details on the DSA approved construction documents. Where no detail is indicated, the following components shall be anchored or braced to meet the force and displacement requirements prescribed in the 2019 CBC Sections 1617A.1.18 through 1617A.1.26 and ASCE 7-16 Chapter 13, 26 and 30.

1. All permanent equipment and components.
2. Temporary, movable or mobile equipment that is permanently attached (e.g. hard wired) to the building utility services such as electricity, gas or water. "Permanently attached" shall include all electrical connections except plugs for 110/220 volt receptacles having a flexible cable.
3. Temporary, movable or mobile equipment which is heavier than 400 pounds or has a center of mass located 4 feet or more above the adjacent floor or roof level that directly support the component is required to be restrained in a manner approved by DSA.

The following mechanical and electrical components shall be positively attached to the structure but need not demonstrate design compliance with the references noted above. These components shall have flexible connections provided between the component and associated ductwork, piping, and conduit. Flexible connections must allow movement in both transverse and longitudinal directions:

A. Components weighing less than 400 pounds and have a center of mass located 4 feet or less above the adjacent floor or roof level that directly support the component.

B. Components weighing less than 20 pounds, or in the case of distributed systems, less than 5 pounds per foot, which are suspended from a roof or floor or hung from a wall.

The anchorage of all mechanical, electrical and plumbing components shall be subject to the approval of the design professional in general responsible charge or structural engineer delegated responsibility and acceptance by DSA. The project inspector will verify that all components and equipment have been anchored in accordance with the above requirements.

Piping, Ductwork, and Electrical Distribution System Bracing Note

Piping, ductwork, and electrical distribution systems shall be braced to comply with the forces and displacements prescribed in ASCE 7-16 Section 13.3, as defined in ASCE 7-16 Section 13.6.5, 13.6.6, 13.6.7; and 2019 CBC, Sections 1617A.1.24, 1617A.1.25 and 1617A.1.26.

The method of showing bracing and attachments to the structure for the identified distribution system are as noted below. When bracing and attachments are based on a preapproved installation guide (e.g., OSHPD OPM for 2013 CBC or later), copies of the bracing system installation guide or manual shall be available on the jobsite prior to the start of and during the hanging and bracing of the distribution systems. The Structural Engineer of Record shall verify the adequacy of the structure to support the hanger and brace loads.

Mechanical Piping (MP), Mechanical Ducts (MD), Plumbing Piping (PP), Electrical Distribution Systems (E):

MP☒ MD☒ PP☐ E ☐ - Option 1 : Detailed on the approved drawings with project specific notes and details.

MP☐ MD☐ PP☐ E ☐ - Option 2 : Shall comply with the applicable OSHPD Pre-Approval (OPM#) #_____.

POWER EXHAUST ECONOMIZER

UNIT	ELECTRICAL DATA				
	V	PH	HP	FLA	WT (LBS.)
PE-A1	208-230	3	0.5	3.9	183
PE-B1	208-230	3	0.5	3.9	183

GENERAL REQUIREMENTS

1. A. FURNISH ALL LABOR, SUPERVISION, MATERIALS, EQUIPMENT AND FACILITIES NECESSARY TO FURNISH, FABRICATE, DELIVER, STORE AND INSTALL ALL WORK NOTED ON THE DRAWINGS AND/OR SPECIFIED HEREIN.

B. THE CONTRACTOR SHALL FURNISH AND INSTALL ALL WORK NECESSARY TO MAKE A COMPLETE SYSTEM WHETHER OR NOT SUCH DETAILS ARE MENTIONED IN THESE SPECIFICATIONS OR SHOWN ON THE PLANS, BUT WHICH ARE OBVIOUSLY NECESSARY TO MAKE A COMPLETE SYSTEM, EXCEPTING ONLY THOSE PORTIONS THAT ARE SPECIFICALLY MENTIONED HEREIN OR PLAINLY MARKED ON THE ACCOMPANYING DRAWINGS AS BEING INSTALLED UNDER ANOTHER SECTION OF THE SPECIFICATIONS.

2. WORKMANSHIP: THE WORK SHALL BE ACCOMPLISHED IN A THOROUGH AND WORKMAN-LIKE MANNER SATISFACTORY TO AND MEETING THE APPROVAL OF THE OWNER AND ARCHITECT.

3. MATERIALS: ALL MATERIALS AND EQUIPMENT SHALL BE NEW AND THE BEST OF THEIR RESPECTIVE KIND, FREE FROM ALL DEFECTS AND OF THE MAKE AND QUALITY SPECIFIED.

4. SITE INSPECTION: CONTRACTOR SHALL VISIT THE SITE OF WORK PRIOR TO SUB-MISSION OF HIS BID AND THOROUGHLY FAMILIARIZE HIMSELF WITH THE WORKING CONDITIONS & EXACT NATURE OF THE WORK. SUBMISSION OF A BID ACKNOWLEDGES FULL RESPONSIBILITY FOR FURNISHING A COMPLETE AND FUNCTIONAL SYSTEM. NO CHANGES IN CONTRACT WILL BE MADE TO ACCOMMODATE OR ALLOW EXTRA FUNDS FOR ANY OMISSION WHICH RESULTS FROM A FAILURE TO THOROUGHLY MAKE THE EXAMINATION.

5. CODES AND PERMITS: ALL MECHANICAL EQUIPMENT, INSTALLATION, ETC., SHALL CONFORM WITH ALL APPLICABLE CODES AND ORDINANCES AS INTERPRETED BY DSA, INCLUDING CALIFORNIA TITLE 24. CONTRACTOR SHALL OBTAIN AND PAY FOR ALL PERMITS AND INSPECTIONS. COPIES OF ALL PERMITS AND INSPECTION REPORTS SHALL BE SUBMITTED TO THE ARCHITECT.

6. COORDINATION: THE DRAWINGS ARE DIAGRAMMATIC AND INTENDED TO SHOW SCOPE. THE CONTRACTOR SHALL COORDINATE HIS WORK WITH OTHER TRADES TO PROVIDE BEST ARRANGEMENT OF ALL DUCTS, PIPES, CONDUIT, ETC.

7. INSULATION SHALL BE U.L. LISTED IN COMPLIANCE WITH FLAME-SPREAD RATING OF NOT MORE THAN 25 AND SMOKE DENSITY NOT EXCEEDING 50, PER THE CALIFORNIA MECHANICAL CODE. INSTALLATION SHALL BE IN ACCORDANCE WITH THE STATE OF CALIFORNIA ENERGY COMMISSION AND CMC REQUIREMENTS.

8. CONTRACTOR SHALL AFFIX A MAINTENANCE LABEL TO ALL EQUIPMENT REQUIRING ROUTINE MAINTENANCE AND SHALL PROVIDE THREE COPIES OF MAINTENANCE AND OPERATING MANUALS TO THE OWNER.

9. BALANCING AND ADJUSTING: ALL WATER SYSTEMS SHALL BE ADJUSTED BY AN INDEPENDENT BALANCING CONTRACTOR THAT IS A MEMBER OF THE ASSOCIATED AIR BALANCING COUNCIL (AABC). SUBMIT BALANCE REPORT TO OWNER PRIOR TO RECEIVING FINAL PAYMENT.

10. COORDINATE LOCATIONS OF ALL ROOF WALL OPENINGS WITH ALL RELEVANT TRADES, AND PROVIDE WATERTIGHT FLASHINGS WHEREVER PENETRATIONS OCCUR. EXACT LOCATIONS AND SIZES MAY BE DEPENDENT UPON EQUIPMENT SELECTIONS; COORDINATE SIZES AND LOCATIONS OF ALL OPENINGS WITH APPROPRIATE EQUIPMENT REQUIREMENTS.

11. PERMANENT ACCESS TO EQUIPMENT SHALL BE PROVIDED, AND A MINIMUM OF 30" CLEAR WORKING SPACE IN FRONT OF ACCESS PANELS TO THE EQUIPMENT SHALL BE PROVIDED.

12. ALL EQUIPMENT SHALL BE SECURELY FASTENED TO THE BUILDING STRUCTURE.

13. GAS-FIRED EQUIPMENT SHALL BE EQUIPPED WITH A PILOTLESS ELECTRONIC INTERMITTENT IGNITION SYSTEM. GAS FIRED BOILER AND GAS FIRED AC UNITS SHALL MEET ALL SQAMD LO-NOX REQUIREMENTS.

14. EACH PIECE OF EQUIPMENT AND ALL SYSTEMS SHALL BE ADJUSTED AND RE-ADJUSTED TO INSURE PROPER FUNCTION OF ALL CONTROLS, MAINTENANCE OF TEMPERATURE, ADEQUACY OF FLOWS AND CAPACITIES, ELIMINATION OF NOISE AND VIBRATION, AND SHALL BE LEFT IN PROPER OPERATING CONDITION.

15. AIR FILTERS SHALL BE A STATE FIRE MARSHAL APPROVED AND LISTED TYPE. PREFORMED FILTERS HAVING COMBUSTIBLE FRAMING SHALL BE TESTED AS A COMPLETE ASSEMBLY. AIR FILTERS IN ALL OCCUPANCIES SHALL BE CLASS 2 OR BETTER (AS SHOWN IN THE STATE FIRE MARSHAL LISTING). AIR FILTERS SHALL BE ACCESSIBLE FOR CLEANING OR REPLACEMENT.

16. VOLUME DAMPERS SHALL BE PROVIDE IN EACH BRANCH DUCT SERVING EACH REGISTER OR DIFFUSER (SEE SPECIFICATIONS FOR ADDITIONAL INFORMATION).

17. ALL DUCT DIMENSIONS ARE NET INSIDE DIMENSIONS.

APPLICABLE CODES

LIST OF APPLICABLE CODES
2022 CALIFORNIA ADMINISTRATIVE CODE (CAC), PART 1, TITLE 24 CCR
2019 CALIFORNIA BUILDING CODE (CBC), PART 2, TITLE 24 CCR
2019 CALIFORNIA ELECTRICAL CODE (CEC), PART 3, TITLE 24 CCR
2019 CALIFORNIA MECHANICAL CODE (CMC), PART 4, TITLE 24 CCR
2019 CALIFORNIA PLUMBING CODE (CPC), PART 5, TITLE 24 CCR
2019 CALIFORNIA ENERGY CODE, PART 6, TITLE 24 CCR
2019 CALIFORNIA FIRE CODE (CFC), PART 9, TITLE 24 CCR
2019 CALIFORNIA EXISTING BUILDING CODE (CEBC), PART 10, TITLE 24 CCR
2019 CALIFORNIA GREEN BUILDING STANDARDS CODE (CALGREEN), PART 11, TITLE 24 CCR
2019 CALIFORNIA REFERENCED STANDARDS CODE, PART 12, TITLE 24 CCR
TITLE 19 CCR, PUBLIC SAFETY, STATE FIRE MARSHAL REGULATIONS

APPLICABLE STANDARDS
FOR A LIST OF APPLICABLE STANDARDS, INCLUDING CALIFORNIA AMENDMENTS TO THE NFPA STANDARDS, REFER TO CBC CHAPTER 35 AND CFC CHAPTER 80.

HVAC SYMBOL AND ABBREVIATIONS

	SUPPLY AIR DUCT	
	RETURN, TRANSFER,EXHAUST OR BY-PASS AIR DUCT	
	SUPPLY AIR DIFFUSER	S.A
	RETURN AIR REGISTER	R.A.
	TRANSFER AIR REGISTER	T.A.
	EXHAUST AIR REGISTER	E.A
T	AC UNIT THERMOSTAT & ZONE	
	VOLUME DAMPER	V.D.
UC	UNDER CUT DOOR	
D.L.	DOOR LOUVER	D.L.
	DUCT TRANSITION	
CLG	CEILING	
O.A	OUTSIDE AIR	
C.D.	CEILING DIFFUSER	
D.C.D.	DECORATIVE CEILING DIFFUSER	
F.P.	FILLER PANEL	
R.C.G.	RETURN CEILING GRILLE	
R.C.R.	RETURN CEILING REGISTER	
D.R.C.G.	DECORATIVE RETURN CEILING GRILLE	
T.C.G.	TRANSFER CEILING GRILLE	
E.C.G.	EXHAUST CEILING GRILLE	
E.C.R.	EXHAUST CEILING REGISTER	
S.W.G.	SUPPLY WALL GRILLE	
S.W.R.	SUPPLY WALL REGISTER	
R.W.G.	RETURN WALL GRILLE	
R.W.R.	RETURN WALL REGISTER	
T.W.G.	TRANSFER WALL GRILLE	
E.W.G.	EXHAUST WALL GRILLE	
E.W.R.	EXHAUST WALL REGISTER	
F.L.F.D.	FUSIBLE LINK FIRE DAMPER	
A.P.	ACCESS PANEL	
U.L.A.P.	U.L. LISTED ACCESS PANEL	
A.C.	AIR CONDITIONING UNIT	
E.F.	EXHAUST FAN	
GV	GRAVITY VENTILATOR	
FEF	FUME HOOD EXHAUST FAN	
P.O.C.	POINT OF CONNECTION	
A.F.F.	ABOVE FINISHED FLOOR	
AC	AIR CONDITIONING UNIT	
FLR	FLOOR	
C.C.	COOLING UNIT	
HP	HEAT PUMP UNIT	
KEF	KITCHEN HOOD EXHAUST FAN	
KSF	KITCHEN HOOD SUPPLY FAN	
A	FURNISHED AND INSTALLED UNDER THE ARCHITECTURAL DIVISION OF THE SPECIFICATIONS.	
E	FURNISHED AND INSTALLED UNDER THE ELECTRICAL DIVISION OF THE SPECIFICATIONS.	
S	FURNISHED AND INSTALLED UNDER THE STRUCTURAL DIVISION OF THE SPECIFICATIONS.	
	COMBINATION SMOKE/FIRE DAMPER	CSFD
(L) OR	INTERNALLY LINED DUCTWORK	
CO2	CARBON DIOXIDE SENSOR	
OR	S.A. OR R.A. DUCT DROPS	
	E.A. DUCT DROP	

AIR DISTRIBUTION EQUIPMENT KEY

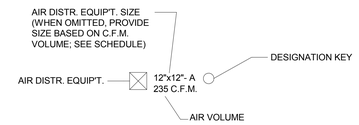

DESIG. KEY	AIR DISTR. EQUIP'T
A	C.D.
B	C.D.F.P.
C	C.D. W/ V.D.
D	C.D.F.P. W/ V.D.
E	S.W.G.
F	S.W.R.
G	D.C.D.
a	R.C.G.
b	R.C.G.F.P.
c	R.C.R.
e	R.W.G.
f	R.W.R.
g	D.R.C.G.
T1	T.C.G.
T2	T.C.G.F.P.
T3	T.W.G.
E1	E.C.G.
E2	E.C.G.F.P.
E3	E.C.R.
E4	E.W.G.
E5	E.W.R.

C.F.M. RANGE	CLG. MTD. EQUIP'T. (SUPPLY, RETURN, TRANSFER & EXHAUST) NECK SIZE	REMARKS
5-100	6"x6"	
105-150	8"x8"	
155-250	10"x10"	
255-400	12"x12"	
405-500	14"x14"	
505-700	16"x16"	
705-900	18"x18"	
905-1100	20"x20"	NOT FOR
1105-1500	22"x22"	C.D.F.P.

NOTE:
ALL CEILING DIFFUSERS ARE TO BE 4-W THROW UNITS UNLESS OTHERWISE NOTED ON DRAWINGS.

IDENTIFICATION STAMP
DIV. OF THE STATE ARCHITECT
APP: 03-122664 INC:
REVIEWED FOR
SS ☑ FLS ☑ ACS ☑
DATE: 05/12/2023

pjhm architects
LA Phone: 213.278.0172 • Web: pjhm.com
LA Office: 837 Traction Avenue, #410, Los Angeles, CA 90013 • SD Office: 804 Pier View Way #103, Oceanside, CA 92054 • SD Phone: 760.730.5527 • OC Phone: 949.496.6191 • OC Office: 24461 Ridge Route Drive #100, Laguna Hills, CA 92653

LICENSED ARCHITECT
THOMAS W. RINGER
NO. C15585
REN. 02/25
STATE OF CALIFORNIA

REGISTERED PROFESSIONAL ENGINEER
EXP. 6/30/24
MECHANICAL
STATE OF CALIFORNIA

Engineous Group, Inc.
896 N. Fair Oaks Ave., Suite E
Pasadena, CA 91103
Phone: (626) 696-3650

HIGHLAND HIGH SCHOOL
50M POOL & AQUATICS CENTER

KERN HIGH SCHOOL DISTRICT

HVAC EQUIP. SCHEDULE, LEGEND & NOTES

M-1.1

3/31/2023 7:46:02 AM

SPLIT SYSTEM OUTDOOR UNIT SCHEDULE

MARK	MAKE	MODEL	NOMINAL TONS	COOLING		HEATING		COMP HP	FAN RLA	ELECTRICAL DATA						OPER. WT. (LBS)	FAN COIL	REMARKS
				BTU/HR	SEER	BTU/HR	HSPF			V	PH	HZ	FLA	MCA	MOCP			
HP-B1	TRANE/MITSUBISHI	TRUZA0241HA70BA	2.0	24,000	21.4	26,000	11.0	-	-	208/230	1	60	-	19	26	153	FC-B1	1 2 3
HP-B2	TRANE/MITSUBISHI	TRUZA0181KA70BA	1.5	18,000	19.8	19,000	11.2	-	-	208/230	1	60	-	11	28	100	FC-B2	1 2 3
HP-C1	TRANE/MITSUBISHI	TRUZA0361KA70BA	3.0	36,000	18.8	38,000	9.2	-	-	208/230	1	60	-	25	31	214	FC-C1	1 2 3
HP-C2	TRANE/MITSUBISHI	TRUZA0361KA70BA	3.0	36,000	18.8	38,000	9.2	-	-	208/230	1	60	-	25	31	214	FC-C2	1 2 3

1. ON LEVEL PLATFORM, PROVIDE SEISMIC RESTRAINT
2. PROVIDE FACTORY RECOMMENDED ACCESSORIES INCLUDING BUT NOT LIMITED TO SIGHT GLASS, FILTER DRYER, TXV AND COMPRESSOR CRANKCASE HEATER
3. SEE DETAIL 9/M4.2 FOR ANCHORAGE

SPLIT SYSTEM FAN COIL UNIT SCHEDULE

MARK	UNIT CONFIG.	MAKE	MODEL	TONS	TOTAL CFM	MIN. OA CFM	ESP (IN)	COIL TYPE	ELECTRICAL DATA						OPER. WT. (LBS)	OUTDOOR UNIT	REMARKS
									MOTOR OUTPUT WATTS	V	PH	HZ	MCA	FLA			
FC-B1	WALL MOUNTED	TRANE/MITSUBISHI	TPKA0A0241KA70A	2.0	775	-	-	-	167	POWERED BY OUTDOOR UNIT			1.0	0.36	46	HP-B1	1 2 3 4
FC-B2	WALL MOUNTED	TRANE/MITSUBISHI	TPKA0A0181LA00A	1.5	455	-	-	-	167	POWERED BY OUTDOOR UNIT			1.0	0.19	28	HP-B2	1 2 3 4
FC-C1	WALL MOUNTED	TRANE/MITSUBISHI	TPKA0A0361KA70A	3.0	920	-	-	-	167	POWERED BY OUTDOOR UNIT			1.0	0.57	46	HP-C1	1 2 3 4
FC-C2	WALL MOUNTED	TRANE/MITSUBISHI	TPKA0A0361KA70A	3.0	920	-	-	-	167	POWERED BY OUTDOOR UNIT			1.0	0.57	46	HP-C2	1 2 3 4

1. PROVIDE WALL MOUNTED THERMOSTAT
2. SEE DETAIL 8/M4.2 FOR ANCHORAGE
3. CONTROL WITH EMS; PROVIDE WITH DISTRICT STANDARD THERMOSTAT
4. PROVIDE CONDENSATE PUMP.

GRAVITY VENT SCHEDULE

UNIT	MAKE	MODEL	TOTAL CFM	ESP (IN)	THROAT SIZE	HOOD SIZE	UNIT OPER. WT. (LBS)	CURB WT. (LBS)	REMARKS									
									1	2	3	4	5	6	7	8	9	10
GV-C1	GREENHECK	GRSR-36	-	-	36.5"x36.5"	56.75" ROUND	45	44	X	X								

1. WITH FACTORY ROOF CURB
2. SEE DETAIL 1/M-4.3 FOR ANCHORAGE

IDENTIFICATION STAMP
DIV. OF THE STATE ARCHITECT
APP: 03-122664 INC:
REVIEWED FOR
SS ☑ FLS ☑ ACS ☑
DATE: 05/12/2023

pjhm architects

LICENSED ARCHITECT
THOMAS W. RINNERT
NO. C15585
REN. 02/25
STATE OF CALIFORNIA

REGISTERED PROFESSIONAL ENGINEER
ROBERT E. MOSHER
NO. 27963
Exp. 6/30/24
MECHANICAL
STATE OF CALIFORNIA

Engineous Group, Inc.
896 N. Fair Oaks Ave., Suite E
Pasadena, CA 91103
Phone: (626) 696-3650

OC Office: 24461 Ridge Route Drive #100, Laguna Hills, CA 92653 • OC Phone: 949.496.6191 • SD Office: 804 Pier View Way #103, Oceanside, CA 92054 • SD Phone: 760.730.5527 • LA Office: 837 Traction Avenue, #410, Los Angeles, CA 90013 • LA Phone: 213.278.0172 • Web: pjhm.com

HIGHLAND HIGH SCHOOL
50M POOL & AQUATICS CENTER

KERN HIGH SCHOOL DISTRICT

HVAC EQUIP. SCHEDULE, LEGEND & NOTES

M-1.2

3/31/2023 7:46:02 AM

HVAC KEY NOTES

1. LINED SA & RA DUCTS FROM AC UNIT ON ROOF.
2. 6"x6" EXHAUST DUCT UP THROUGH ROOF.
3. 12"x12" EXHAUST DUCT UP THROUGH ROOF.

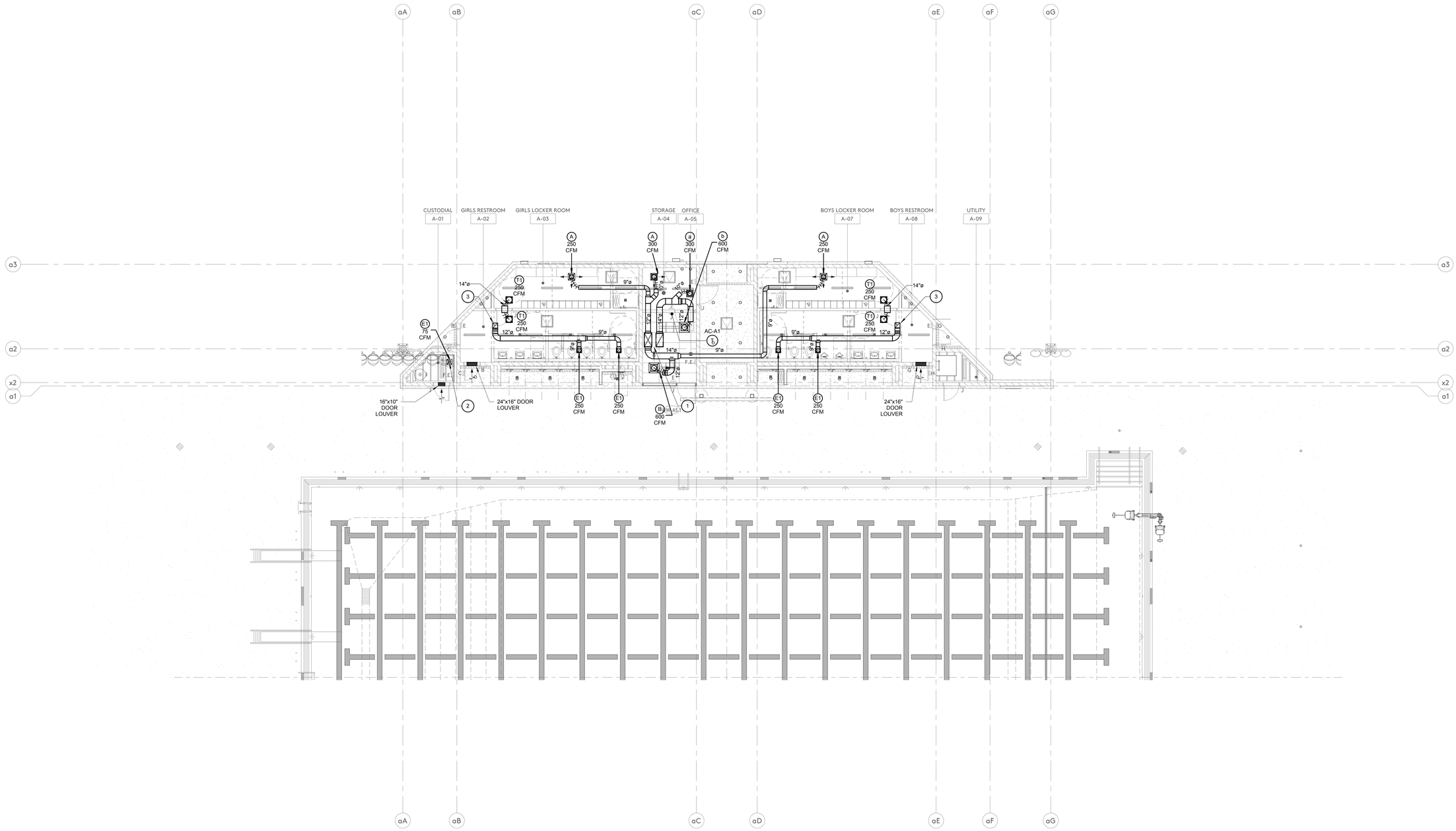

HVAC FLOOR PLAN - BUILDING A

1
1/8" = 1'-0"

IDENTIFICATION STAMP
DIV. OF THE STATE ARCHITECT
APP: 03-122664 INC:
REVIEWED FOR
SS ☑ FLS ☑ ACS ☑
DATE: 05/12/2023

pjhm architects

LICENSED ARCHITECT
THOMAS W. KRUSE
NO. C15585
REN. 02/25
STATE OF CALIFORNIA

REGISTERED PROFESSIONAL ENGINEER
RUDOLF E. STEVENSON
No. 27963
Exp. 6/30/24
MECHANICAL
STATE OF CALIFORNIA

Engineous Group, Inc.
898 N. Fair Oaks Ave., Suite E
Pasadena, CA 91103
Phone: (626) 696-3850

HIGHLAND HIGH SCHOOL
50M POOL & AQUATICS CENTER

KERN HIGH SCHOOL DISTRICT

HVAC FLOOR PLAN - BUILDING A

M-2.1

OC Office: 24461 Ridge Route Drive #100, Laguna Hills, CA 92653 • OC Phone: 949.496.6191 • SD Office: 804 Pier View Way #103, Oceanside, CA 92054 • SD Phone: 760.730.5527 • LA Office: 837 Traction Avenue, #410, Los Angeles, CA 90013 • LA Phone: 213.278.0172 • Web: pjhm.com

3/31/2023 7:46:10 AM

HVAC KEY NOTES

1. LINED SA & RA DUCTS FROM AC UNIT ON ROOF.
2. WALL MOUNTED FAN COIL UNIT. RUN REFRIGERANT PIPING THROUGH ROOF TO FC UNIT. SIZE THE REFRIGERANT PIPING PER MANUFACTURER'S RECOMMENDATION. SEE DETAIL 8/M-4.2
3. GROUND MOUNTED CONDENSING UNIT ON 6" HIGH LEVEL EQUIPMENT PAD. PROVIDE SEISMIC RESTRAINT. RUN REFRIGERANT PIPING DOWN THROUGH ROOF TO FC UNIT. SIZE THE REFRIGERANT PIPING PER MANUFACTURER'S RECOMMENDATION.
4. 10"x10" EXHAUST DUCT UP THROUGH ROOF.

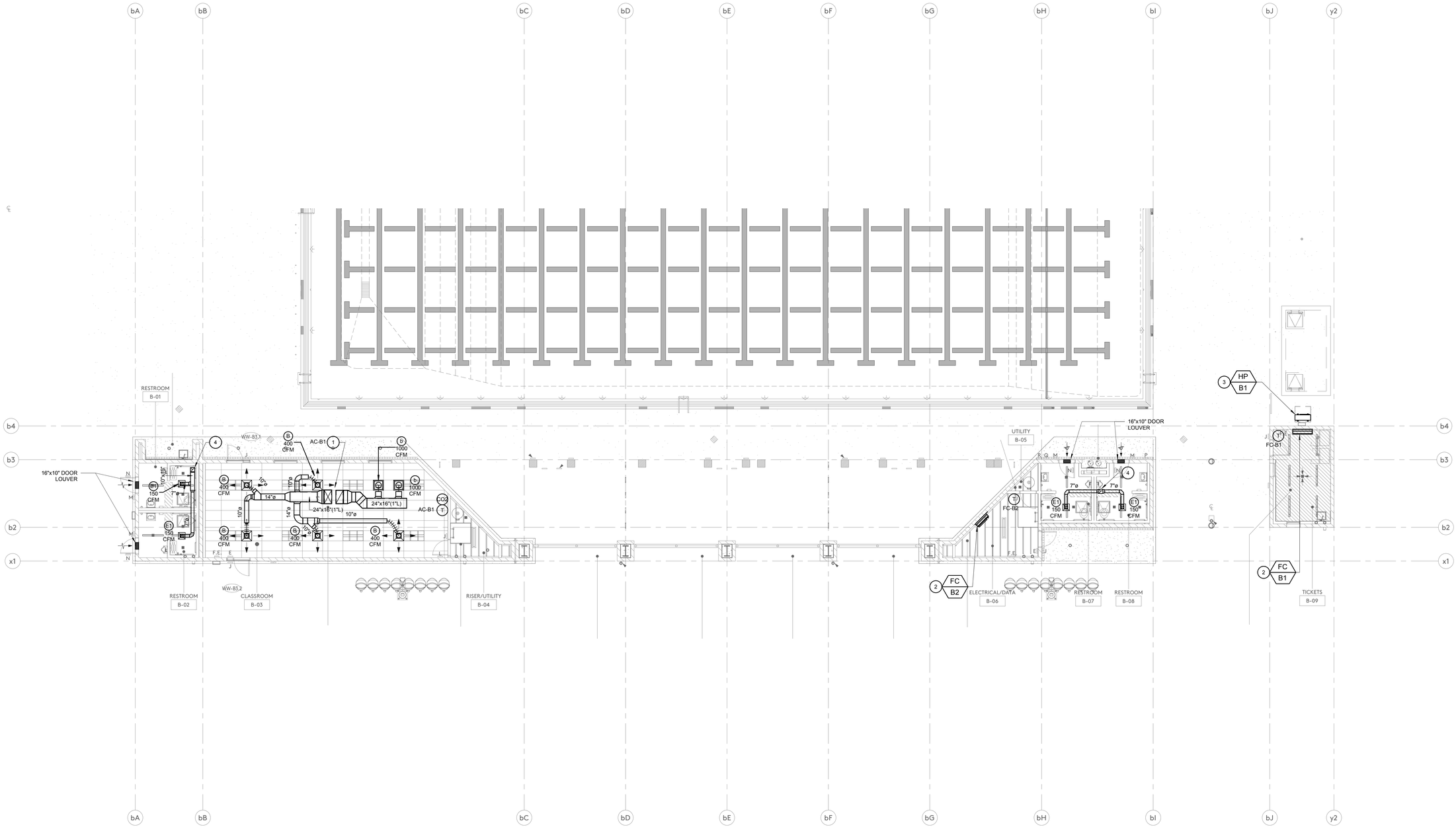

HVAC FLOOR PLAN - BUILDING B

1
1/8" = 1'-0"

IDENTIFICATION STAMP
DIV. OF THE STATE ARCHITECT
APP: 03-122664 INC:
REVIEWED FOR
SS ☑ FLS ☑ ACS ☑
DATE: 05/12/2023

pjhm architects

LICENSED ARCHITECT
THOMAS W. KRUSE
NO. C15585
REN. 02/25
STATE OF CALIFORNIA

REGISTERED PROFESSIONAL ENGINEER
BRADLEY E. STEVENSON
No. 27963
Exp. 6/30/24
MECHANICAL
STATE OF CALIFORNIA

Engineous Group, Inc.
898 N. Fair Oaks Ave., Suite E
Pasadena, CA 91103
Phone: (626) 696-3850

HIGHLAND HIGH SCHOOL
50M POOL & AQUATICS CENTER

KERN HIGH SCHOOL DISTRICT

HVAC FLOOR PLAN - BUILDING B

M-2.2

OC Office: 24461 Ridge Route Drive #100, Laguna Hills, CA 92653 • OC Phone: 949.496.6191 • SD Office: 804 Pier View Way #103, Oceanside, CA 92054 • SD Phone: 760.730.5527 • LA Office: 837 Traction Avenue, #410, Los Angeles, CA 90013 • LA Phone: 213.278.0172 • Web: pjhm.com

3/31/2023 7:46:16 AM

HVAC KEY NOTES

1. WALL MOUNTED FAN COIL UNIT. RUN REFRIGERANT PIPING THROUGH ROOF TO FC UNIT. SIZE THE REFRIGERANT PIPING PER MANUFACTURER'S RECOMMENDATION. SEE DETAIL 8/M-4.2
2. 8"∅ FLUE THRU ROOF OPENING, INSTALL AND TERMINATE PER MANUFACTURER'S INSTALLATION INSTRUCTIONS.
3. 36"x36" DUCT FROM ABOVE & DROP TO 6" BELOW ROOF. PROVIDE 1/2" WIRE MESH AT OPENING.
4. 12"x12" STAINLESS STEEL EXHAUST AIR DUCT UP THROUGH ROOF.
5. 8"x8" EA OPENING WITH 1/2" SS WIRE MESH & 8"x8" SS VOLUME DAMPER SET AT 200 CFM.
6. 8"x8" SS EA DUCT DROP TO 12" A.F.F. WITH 1/2" SS WIRE MESH & 8"x8" SS VOLUME DAMPER SET AT 200 CFM.

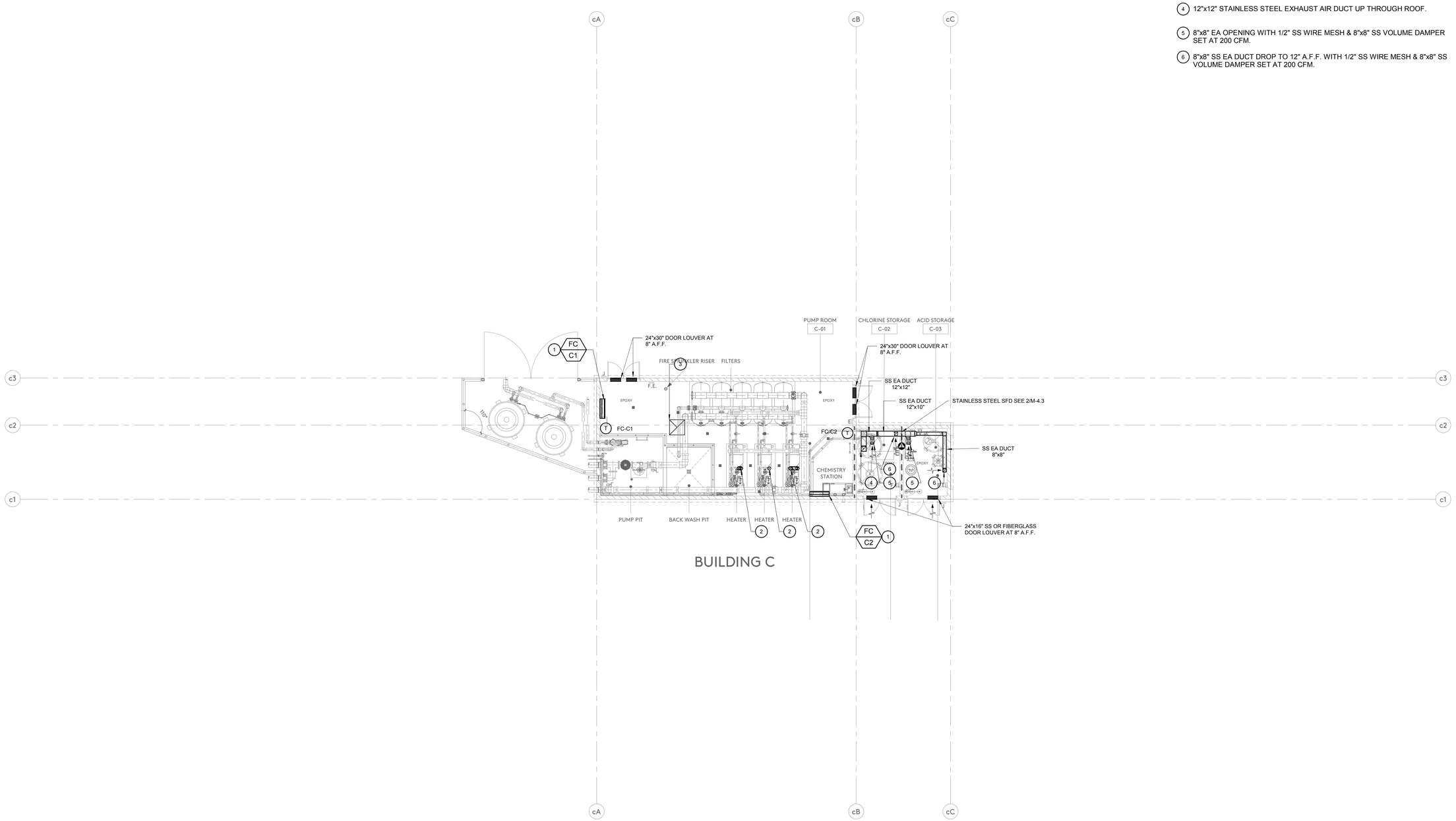

HVAC FLOOR PLAN - BUILDING C

1
1/8" = 1'-0"

IDENTIFICATION STAMP
DIV. OF THE STATE ARCHITECT
APP: 03-122664 INC:
REVIEWED FOR
SS ☑ FLS ☑ ACS ☑
DATE: 05/12/2023

pjhm architects

LICENSED ARCHITECT
THOMAS W. KRUSE
NO. C15585
REN. 02/25
STATE OF CALIFORNIA

REGISTERED PROFESSIONAL ENGINEER
BRADLEY E. STEVENSON
NO. 27963
Exp. 6/30/24
MECHANICAL
STATE OF CALIFORNIA

Engineous Group, Inc.
898 N. Fair Oaks Ave., Suite E
Pasadena, CA 91103
Phone: (626) 696-3850

HIGHLAND HIGH SCHOOL
50M POOL & AQUATICS CENTER

KERN HIGH SCHOOL DISTRICT

HVAC FLOOR PLAN - BUILDING C

M-2.3

OC Office: 24461 Ridge Route Drive #100, Laguna Hills, CA 92653 • OC Phone: 949.496.6191 • SD Office: 804 Pier View Way #103, Oceanside, CA 92054 • SD Phone: 760.730.5527 • LA Office: 837 Traction Avenue, #410, Los Angeles, CA 90013 • LA Phone: 213.278.0172 • Web: pjhm.com

3/31/2023 7:46:21 AM

HVAC KEY NOTES

1. FULL SIZE LINED SA & RA PLENUMS DOWN THROUGH ROOF FROM AC UNIT.
2. MOUNT EXHAUST FAN ON LEVEL FACTORY ROOF CURB. EXHAUST OUTLETS SHALL BE 10 FEET AWAY FROM INTAKE OPENINGS AND 10 FEET ABOVE ADJOINING GRADE.

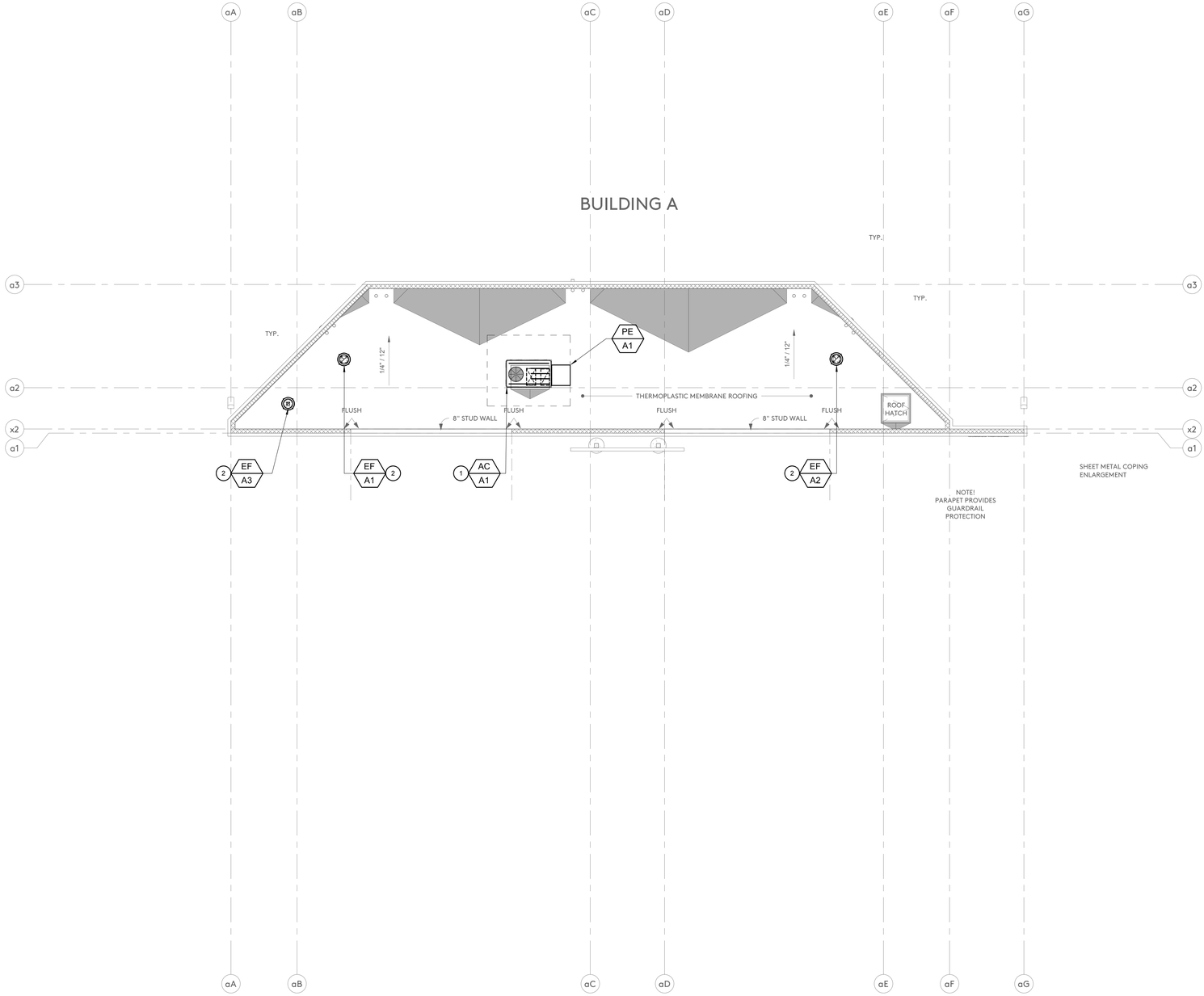

HVAC ROOF PLAN - BUILDING A

1
1/8" = 1'-0"

IDENTIFICATION STAMP
DIV. OF THE STATE ARCHITECT
APP: 03-122664 INC:
REVIEWED FOR
SS ☑ FLS ☑ ACS ☑
DATE: 05/12/2023

pjhm architects

LICENSED ARCHITECT
THOMAS W. KRUSE
NO. C15585
REN. 02/25
STATE OF CALIFORNIA

REGISTERED PROFESSIONAL ENGINEER
BUDLEY E. STEVENSON
No. 27963
Exp. 6/30/24
MECHANICAL
STATE OF CALIFORNIA

Engineous Group, Inc.
898 N. Fair Oaks Ave., Suite E
Pasadena, CA 91103
Phone: (626) 696-3850

HIGHLAND HIGH SCHOOL
50M POOL & AQUATICS CENTER

KERN HIGH SCHOOL DISTRICT

HVAC ROOF PLAN - BUILDING A

M-3.1

OC Office: 24461 Ridge Route Drive #100, Laguna Hills, CA 92653 • OC Phone: 949.496.6191 • SD Office: 804 Pier View Way #103, Oceanside, CA 92054 • SD Phone: 760.730.5527 • LA Office: 837 Traction Avenue, #410, Los Angeles, CA 90013 • LA Phone: 213.278.0172 • Web: pjhm.com

3/31/2023 7:46:23 AM

HVAC KEY NOTES

1. FULL SIZE LINED SA & RA PLENUMS DOWN THROUGH ROOF FROM AC UNIT.
2. ROOF MOUNTED CONDENSING UNIT ON 6" HIGH LEVEL EQUIPMENT PAD. PROVIDE SEISMIC RESTRAINT. RUN REFRIGERANT PIPING DOWN THROUGH ROOF TO FC UNIT. SIZE THE REFRIGERANT PIPING PER MANUFACTURER'S RECOMMENDATION.
3. MOUNT EXHAUST FAN ON LEVEL FACTORY ROOF CURB. EXHAUST OUTLETS SHALL BE 10 FEET AWAY FROM INTAKE OPENINGS AND 10 FEET ABOVE ADJOINING GRADE.

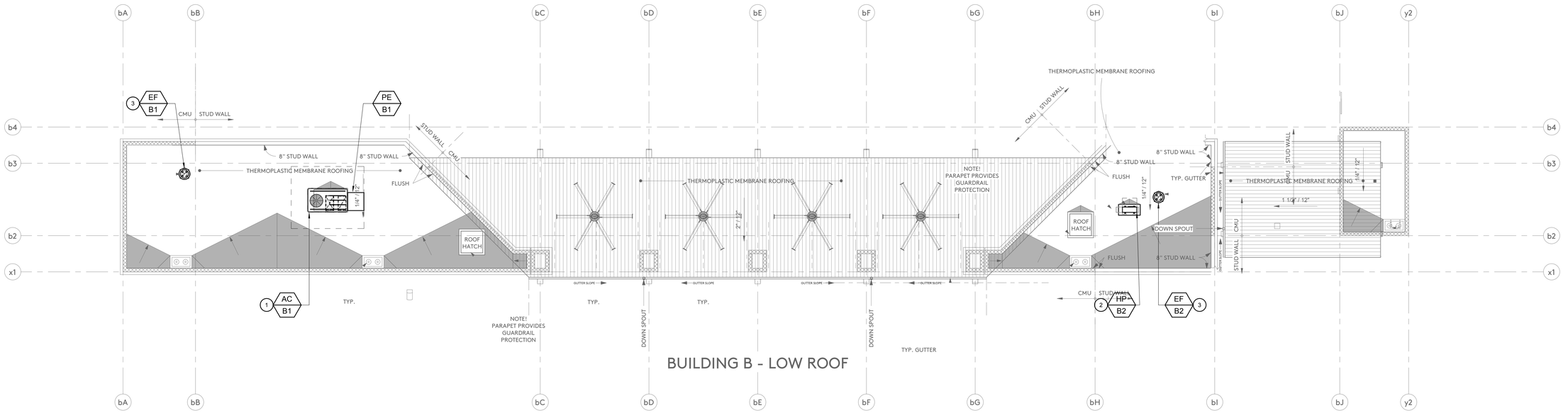

HVAC ROOF PLAN - BUILDING B

1
1/8" = 1'-0"

IDENTIFICATION STAMP
DIV. OF THE STATE ARCHITECT
APP: 03-122664 INC:
REVIEWED FOR
SS ☑ FLS ☑ ACS ☑
DATE: 05/12/2023

pjhm architects

LICENSED ARCHITECT
THOMAS W. KRUSE
NO. C15585
REN. 02/25
STATE OF CALIFORNIA

REGISTERED PROFESSIONAL ENGINEER
PHILLIP E. STEVENSON
No. 27963
Exp. 6/30/24
MECHANICAL
STATE OF CALIFORNIA

Engineous Group, Inc.
898 N. Fair Oaks Ave., Suite E
Pasadena, CA 91103
Phone: (626) 696-3850

HIGHLAND HIGH SCHOOL
50M POOL & AQUATICS CENTER

KERN HIGH SCHOOL DISTRICT

HVAC ROOF PLAN - BUILDING B

M-3.2

OC Office: 24461 Ridge Route Drive #100, Laguna Hills, CA 92653 • OC Phone: 949.496.6191 • SD Office: 804 Pier View Way #103, Oceanside, CA 92054 • SD Phone: 760.730.5527 • LA Office: 837 Traction Avenue, #410, Los Angeles, CA 90013 • LA Phone: 213.278.0172 • Web: pjhm.com

3/31/2023 7:46:26 AM

HVAC KEY NOTES

1. ROOF MOUNTED CONDENSING UNIT ON 6" HIGH LEVEL EQUIPMENT PAD. PROVIDE SEISMIC RESTRAINT. RUN REFRIGERANT PIPING DOWN THROUGH ROOF TO FC UNIT. SIZE THE REFRIGERANT PIPING PER MANUFACTURER'S RECOMMENDATION.
2. ROOF MOUNTED EXHAUST FAN ON 8" HIGH LEVEL EQUIPMENT PAD. PROVIDE SEISMIC RESTRAINT. EXHAUST OUTLETS SHALL BE 10 FEET AWAY FROM AIR INTAKE OPENINGS AND 10 FEET ABOVE ADJOINING GRADE AND MIN. 7 FEET ABOVE ROOF. SEE DETAIL 5/M-4.2
3. 12"x12" STAINLESS STEEL EXHAUST AIR DUCT DOWN THROUGH ROOF.
4. MOUNT GV-1 ON LEVEL FACTORY ROOF CURB. AIR INTAKE SHALL BE 10 FEET AWAY FROM EXHAUST AIR OPENINGS.
5. 8"Ø FLUE THRU ROOF OPENING, INSTALL AND TERMINATE PER MANUFACTURER'S INSTALLATION INSTRUCTIONS. PROVIDE 1/2" WIRE MESH AT OPENING.

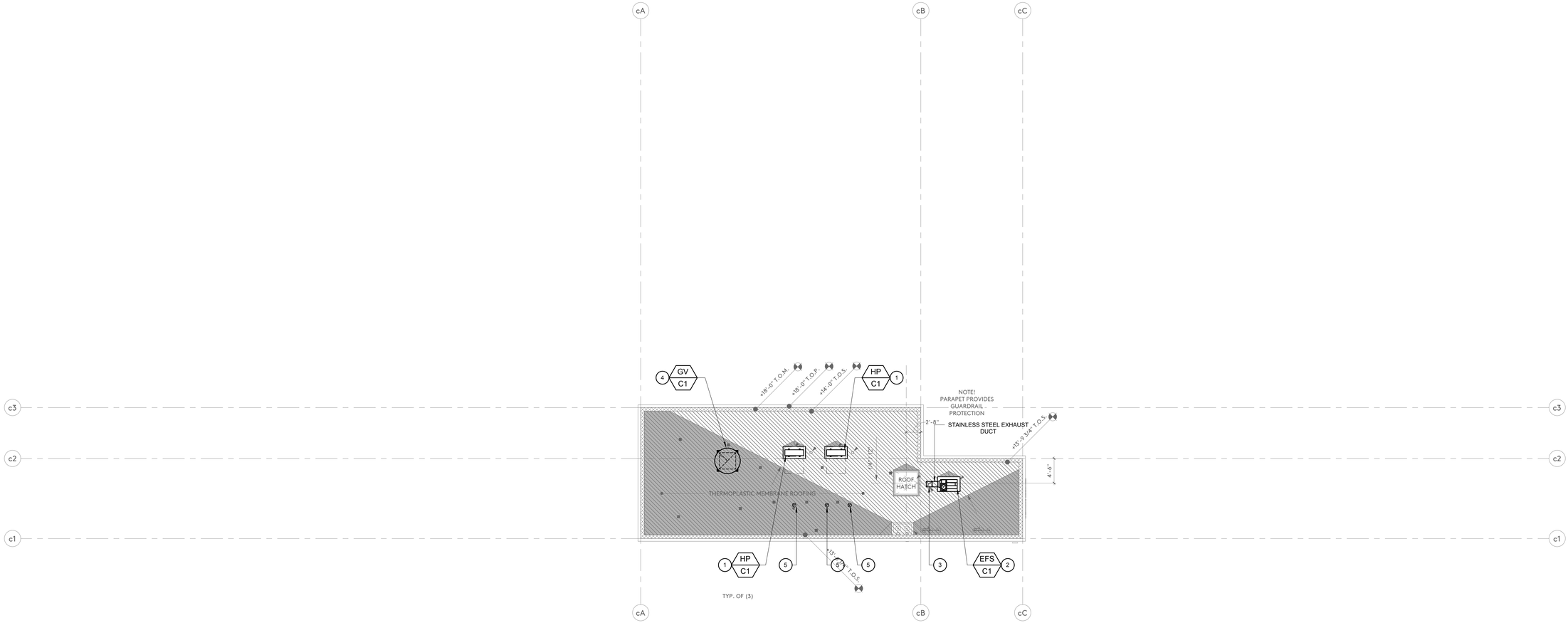

HVAC ROOF PLAN - BUILDING C

1
1/8" = 1'-0"

IDENTIFICATION STAMP
DIV. OF THE STATE ARCHITECT
APP: 03-122664 INC:
REVIEWED FOR
SS ☑ FLS ☑ ACS ☑
DATE: 05/12/2023

pjhm architects

LICENSED ARCHITECT
THOMAS W. KRUSE
NO. C15585
REN. 02/25
STATE OF CALIFORNIA

REGISTERED PROFESSIONAL ENGINEER
SHIRLEY E. STEVENSON
NO. 27963
Exp. 6/30/24
MECHANICAL
STATE OF CALIFORNIA

Engineous Group, Inc.
898 N. Fair Oaks Ave., Suite E
Pasadena, CA 91103
Phone: (626) 696-3850

HIGHLAND HIGH SCHOOL
50M POOL & AQUATICS CENTER

KERN HIGH SCHOOL DISTRICT

HVAC ROOF PLAN - BUILDING C

M-3.3

OC Office: 24461 Ridge Route Drive #100, Laguna Hills, CA 92653 • OC Phone: 949.496.6191 • SD Office: 804 Pier View Way #103, Oceanside, CA 92054 • SD Phone: 760.730.5527 • LA Office: 837 Traction Avenue, #410, Los Angeles, CA 90013 • LA Phone: 213.278.0172 • Web: pjhm.com

3/31/2023 7:46:29 AM

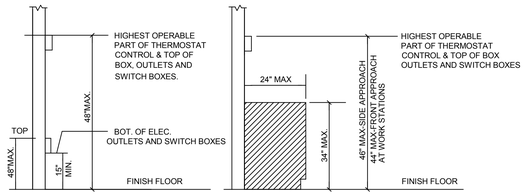

CBC 11B-308.2.1
CBC 11B-308.3.1

CBC 11B-308.2.2 & 11B-308.3.2

NOTE:
FORWARD OR FRONT APPROACH FOR DEVICES MOUNTED ABOVE COUNTERS ASSUMES THAT DIRECTLY BELOW THE DEVICE, THE COUNTER HAS A 30" MIN. WIDTH X 27" MIN. HIGH X 19" MIN. DEEP CLEAR OPENING.

MOUNTING HEIGHT OVER OBSTRUCTION

SCALE: NONE | 2

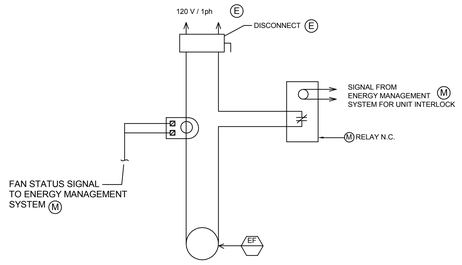

TYPICAL EXHAUST FAN CONTROL AND WIRING DIAGRAM

SCALE: NONE | 3

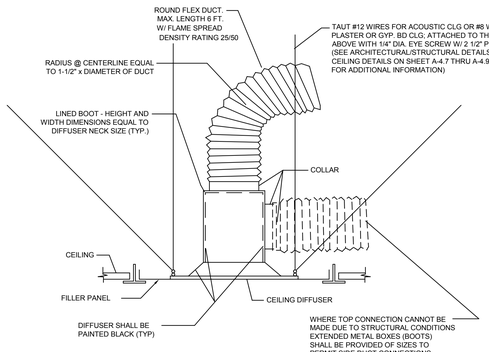

NOTES:
1. RETURN, TRANSFER AND EXHAUST CEILING GRILLES SIMILAR.

TYPICAL CEILING DIFFUSER

SCALE: NONE | 4

PLAN VIEW

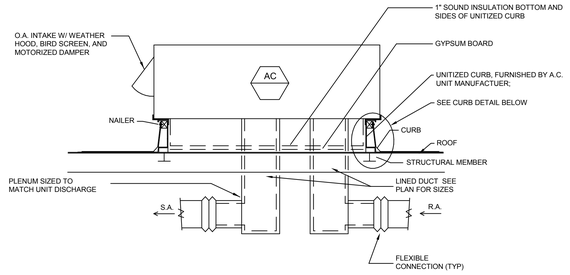

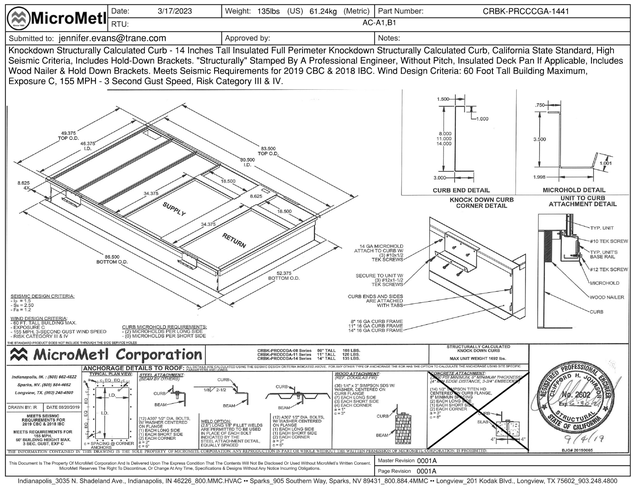

AC A1 | AC B1

NOTE
SEE STRUCTURAL PLANS 9/S-1.6 FOR ADDITIONAL INFORMATION

AIR CONDITIONING UNIT INSTALLATION

SCALE: NONE | 1

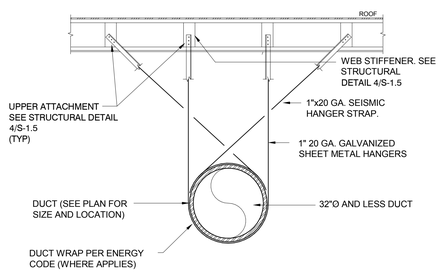

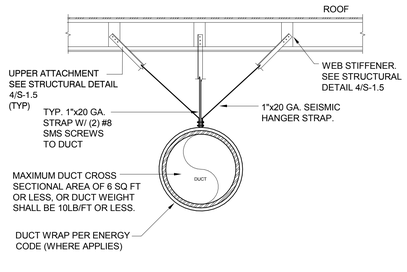

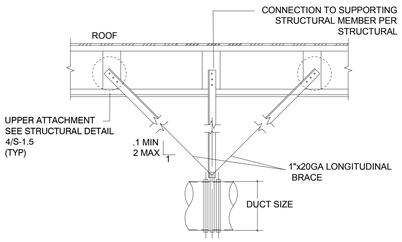

LONGITUDINAL BRACING

NOTES:

1. TRANSVERSE BRACING SHALL BE PROVIDED AT EVERY 30 FT OF DUCT RUN, OR AT BOTH ENDS IF DUCT RUN IS LESS THAN 30 FT., AT EACH DUCT TURN, WITH A MINIMUM OF ONE BRACE AT EACH END.

2. LONGITUDINAL BRACING SHALL BE PROVIDED AT EVERY 60 FT. OF DUCT RUN OR AT LEAST ONE BRACE PER DUCT RUN. TRANSVERSE BRACING FOR ONE DUCT SECTION MAY ALSO ACT AS LONGITUDINAL BRACING FOR DUCT SECTIONS OF 90° TURNS IF THE BRACING IS INSTALLED WITHIN TWO TIMES THE DUCT WIDTH OF THE INTERSECTION OF BOTH DUCTS AND BRACING IS SIZED FOR THE LARGER DUCT.

3. TRANSVERSE AND LONGITUDINAL BRACING SHALL NOT BE REQUIRED WHERE PROVISIONS ARE MADE TO AVOID IMPACT WITH OTHER DUCTS AND MECHANICAL COMPONENTS, OR TO PROTECT THE DUCTS IN THE EVENT OF SUCH IMPACT, THE DISTRIBUTION SYSTEM IS POSITIVELY ATTACHED TO THE STRUCTURE.

NOTES:

MAXIMUM SPACING FOR HANGERS SHALL BE 12'-0"

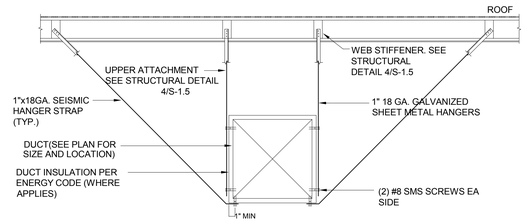

TYPICAL DUCT SUPPORT DETAILS (DUCTS <6 SF. F.A., <20LB/FT)

DUCT SUPPORT DETAILS

SCALE: NONE | 5

IDENTIFICATION STAMP
DIV. OF THE STATE ARCHITECT
APP: 03-122664 INC:
REVIEWED FOR
SS ☑ FLS ☑ ACS ☑
DATE: 05/12/2023

pjhm architects
LICENSED ARCHITECT
JAMES W. RUNSEY
NO. C15585
REN. 02/25
STATE OF CALIFORNIA

REGISTERED PROFESSIONAL ENGINEER
JAMES E. EVANS
No. 27963
Exp. 6/30/24
MECHANICAL
STATE OF CALIFORNIA

Engineous Group, Inc.
896 N. Fair Oaks Ave., Suite E
Pasadena, CA 91103
Phone: (626) 696-3650

LA Office: 837 Traction Avenue, #410, Los Angeles, CA 90013 • LA Phone: 213.278.0172 • Web: pjhm.com
SD Office: 804 Pier View Way #103, Oceanside, CA 92054 • SD Phone: 949.496.6191
OC Office: 24461 Ridge Route Drive #100, Laguna Hills, CA 92653 • OC Phone: 760.730.5527

HIGHLAND HIGH SCHOOL
50M POOL & AQUATICS CENTER

KERN HIGH SCHOOL DISTRICT

HVAC DETAILS

M-4.1

3/31/2023 7:46:30 AM

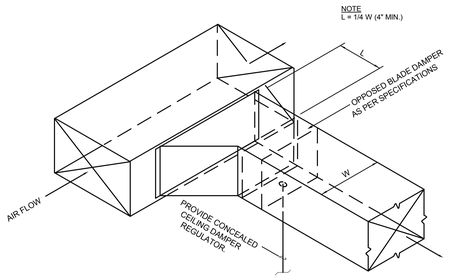

RECT. TO RECT. CONNECTION DETAIL | SCALE NONE | 1

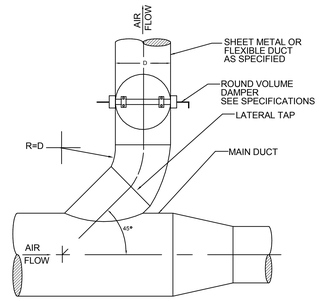

ROUND DUCT LATERAL TAP DETAIL | SCALE NONE | 2

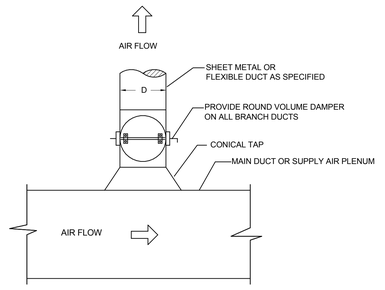

NOTES

1. DEPTH OF MAIN DUCT MUST BE 2" LARGER THAN CONICAL DIAMETER.

ROUND DUCT LATERAL TAP DETAIL | SCALE NONE | 3

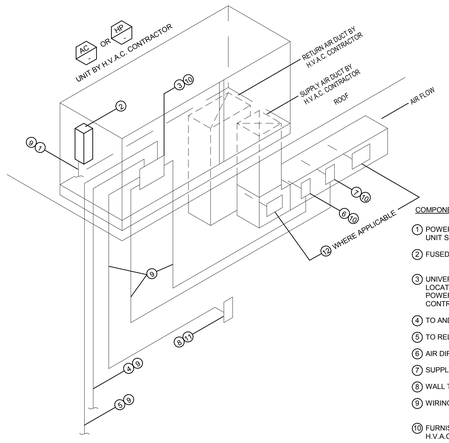

COMPONENT SCHEDULE

1. POWER SUPPLY; SEE AIR CONDITIONING UNIT SCHEDULE OR COOLING UNIT SCHEDULE.
2. FUSED DISCONNECT SWITCH.
3. UNIVERSAL UNITARY CONTROLLER, (U.U.C.) ONE EACH UNIT;CONTROLLER LOCATED IN CONTROL SECTION OF A.C. UNIT OR H.P. UNIT CABINET; POWER SUPPLY 5VA @ 24V; POWER OBTAINED FROM A.C. UNIT CONTROL CIRCUIT.
4. TO AND FROM OTHER U.U.C.
5. TO RELAY OR RELAYS FOR INTERLOCKED H.V.A.C. EQUIPMENT.
6. AIR DIFFERENTIAL PRESSURE SWITCH.
7. SUPPLY AIR TEMPERATURE SENSOR.
8. WALL THERMOSTAT.
9. WIRING AND CONDUIT.
10. FURNISHED BY THE CONTROL CONTRACTOR AND INSTALLED BY THE H.V.A.C. CONTRACTOR.
11. FURNISHED AND INSTALLED BY THE CONTROL CONTRACTOR.
12. SMOKE DETECTOR FURNISHED UNDER ELECTRICAL DIVISION OF THE SPECIFICATIONS AND INSTALLED BY THE H.V.A.C. CONTRACTOR.

ENERGY MANAGEMENT SYSTEM AND WIRING AT TYPICAL AIR CONDITIONING UNIT | SCALE NONE | 4

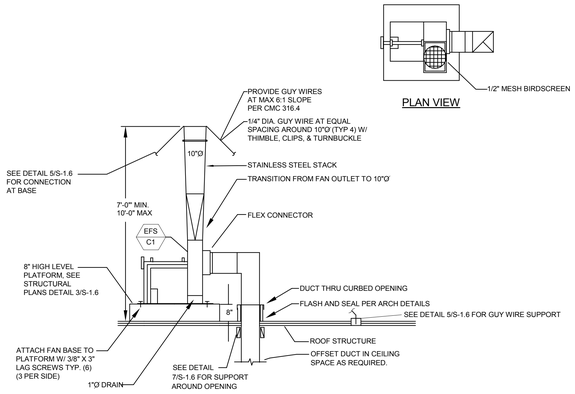

NOTE:
1. ALL DUCT WORK IS TO BE 18 GA. STAINLESS STEEL WITH WELDED JOINTS.

UTILITY EXHAUST FAN INSTALLATION DETAIL | SCALE NONE | 5

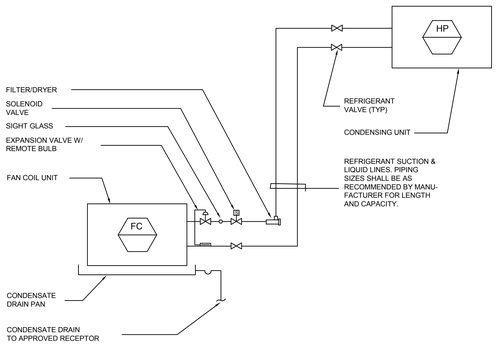

SPLIT SYSTEM PIPING DIAGRAM | SCALE NONE | 6

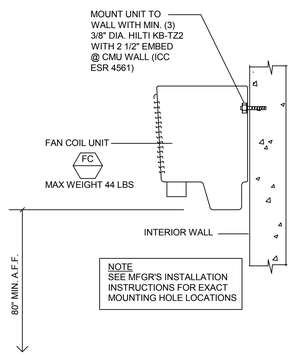

SIDEWALL FAN COIL UNIT MOUNTING DETAIL | SCALE NONE | 8

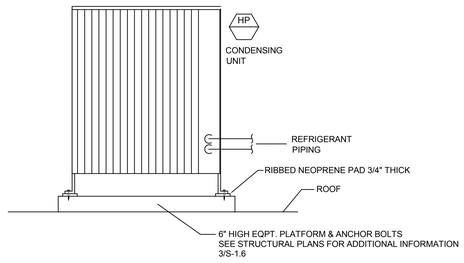

TYPICAL CONDENSING UNIT INSTALLATION DETAIL | SCALE NONE | 9

-

SCALE NONE | 7

3/31/2023 7:46:31 AM

IDENTIFICATION STAMP
DIV. OF THE STATE ARCHITECT
APP: 03-122664 INC:
REVIEWED FOR
SS ☑ FLS ☑ ACS ☑
DATE: 05/12/2023

pjhm architects
LA Phone: 213.278.0172 • Web: pjhm.com
LA Office: 837 Traction Avenue, #410, Los Angeles, CA 90013
SD Phone: 760.730.5527 • SD Office: 804 Pier View Way #103, Oceanside, CA 92054
OC Phone: 949.496.6191 • OC Office: 24461 Ridge Route Drive #100, Laguna Hills, CA 92653

LICENSED ARCHITECT
JAMES W. RUSH
NO. C15585
REN. 02/25
STATE OF CALIFORNIA

REGISTERED PROFESSIONAL ENGINEER
ROBERT E. LEE
No. 27963
Exp. 6/30/24
MECHANICAL
STATE OF CALIFORNIA

Engineous Group, Inc.
898 N. Fair Oaks Ave., Suite E
Pasadena, CA 91103
Phone: (626) 696-3650

HIGHLAND HIGH SCHOOL
50M POOL & AQUATICS CENTER

KERN HIGH SCHOOL DISTRICT

HVAC DETAILS

M-4.2

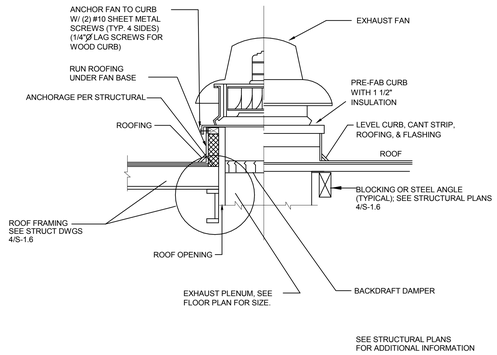

EXHAUST FAN & GRAVITY VENT MOUNTING DETAIL | SCALE NONE | 1

STAINLESS STEEL
FIRE SMOKE DAMPER
POTTORFF MODEL FSD-142

NOTES:

1. CSFM #3225-0368:0110
2. CSFM #3230-0368:0111
3. SMOKE FIRE DAMPER SHALL BE FIRE MARSHALL APPROVED AND INSTALLED STRICTLY PER MANUFACTURER'S PRINTED INSTRUCTIONS.
4. MANUFACTURER'S INSTALLATION INSTRUCTIONS SHALL BE MADE AVAILABLE TO THE INSPECTING AUTHORITIES.
5. SMOKE DAMPERS LOCATED IN MAIN SUPPLY OR RETURN DUCTS SHALL BE PROVIDED WITH CONTROLS TO SHUT DOWN CORRESPONDING AC UNIT WHEN DAMPERS ARE CLOSED.

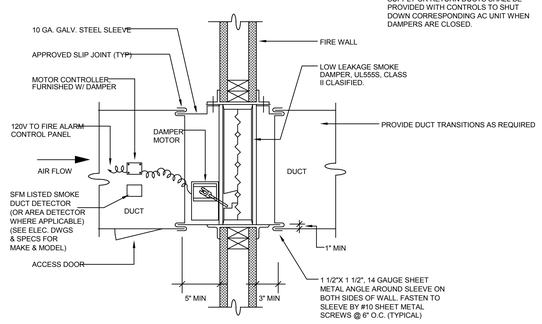

SMOKE/FIRE DAMPER DETAIL | SCALE NONE | 2

- | SCALE NONE | 3

- | SCALE NONE | 4

- | SCALE NONE | 5

- | SCALE NONE | 6

- | SCALE NONE | 7

- | SCALE NONE | 8

- | SCALE NONE | 9

IDENTIFICATION STAMP
DIV. OF THE STATE ARCHITECT
APP: 03-122664 INC:
REVIEWED FOR
SS ☑ FLS ☑ ACS ☑
DATE: 05/12/2023

pjhm architects

LICENSED ARCHITECT
THOMAS W. KRUSE
NO. C15585
REN. 02/25
STATE OF CALIFORNIA

REGISTERED PROFESSIONAL ENGINEER
RUDOLPH E. SANDERSON
NO. 27963
Exp. 6/30/24
MECHANICAL
STATE OF CALIFORNIA

Engineous Group, Inc.
898 N. Fair Oaks Ave., Suite E
Pasadena, CA 91103
Phone: (626) 696-3850

HIGHLAND HIGH SCHOOL
50M POOL & AQUATICS CENTER

KERN HIGH SCHOOL DISTRICT

HVAC DETAILS

M-4.3

OC Office: 24461 Ridge Route Drive #100, Laguna Hills, CA 92653 • OC Phone: 949.496.6191 • SD Office: 804 Pier View Way #103, Oceanside, CA 92054 • SD Phone: 760.730.5527 • LA Office: 837 Traction Avenue, #410, Los Angeles, CA 90013 • LA Phone: 213.278.0172 • Web: pjhm.com

3/31/2023 7:46:31 AM

HIGHLAND HIGH SCHOOL 50M POOL & AQUATICS CENTER

FIRE SPRINKLER SYSTEMS

2900 Royal Scots Way, Bakersfield, CA 93306

DSA UNDERGROUND NOTES

1. PRIOR TO INSTALLATION, ALL PLANS AND SPECIFICATIONS SHALL BE APPROVED BY DSA. REFER TO DSA IR A-25 FOR DESIGN, INSTALLATION AND MAINTENANCE GENERAL REQUIREMENTS.
2. INSPECTIONS ARE REQUIRED: 1) PRIOR TO POURING THRUST BLOCKS. 2) FOR HYDROSTATIC TESTING, AND 3) FOR FLUSH.
3. INSTALLATION, INSPECTION, AND TESTING SHALL CONFORM TO 2016 NFPA 13 AND 2016 NFPA 24 & CFC.
4. PRIVATE FIRE HYDRANTS SHALL BE APPROVED WET BARREL STYLE WITH A MINIMUM OF ONE 2 $\frac{1}{2}$" AND ONE 4" OUTLET. THE 4" OUTLET SHALL FACE THE FIRE DEPARTMENT ACCESS ROAD. ALL OUTLETS SHALL BE PROVIDED WITH NATIONAL STANDARD THREADS (NST). NFPA 24, 7.1.1.2.
5. FIRE HYDRANT SUPPLY PIPING SHALL BE A MINIMUM OF SIX INCHES IN DIAMETER. THE LOWEST OPERATING HOSE OUTLET SHALL BE A MINIMUM OF 18" ABOVE GRADE AND THE HYDRANT FLANGE SHALL BE A MINIMUM OF 2" ABOVE GRADE. NFPA 24, 5.2.1 & 7.3.3.
6. FIRE HYDRANTS SHALL BE A MINIMUM OF 40 FEET FROM ALL STRUCTURES. NFPA 24, 7.2.3.
7. A KEYED GATE VALVE SHALL BE PROVIDED FOR EACH HYDRANT IN AN ACCESSIBLE LOCATION. VALVES SHALL NOT BE LOCATED IN PARKING STALLS. NFPA 24, 7.1.1.1
8. ALL PIPING SHALL BE LISTED FOR USE IN FIRE PROTECTION SERVICE AND COMPLY WITH AWWA STANDARDS (CLASS 150 MINIMUM CLASS 200 PIPE SHALL BE USED WHERE THE PRESSURE MAY EXCEED 150 PSI. NFPA 24, 10.1.1 & 5.
9. ALL BOLTED JOINTS SHALL BE CLEANED AND THOROUGHLY COATED WITH ASPHALT OR OTHER CORROSION RETARDING MATERIAL AFTER INSTALLATION. NFPA 24, 10.3.5.2.
10. BACKFILL SHALL BE WELL TAMPED LAYERS TO CONSIST OF 6" MINIMUM BED OF CLEAN FILL SAND OR PEA GRAVEL BELOW AND 12" ABOVE THE PIPE (TOTAL 18" MINIMUM) . NFPA 24, 10.9.1.
11. FITTINGS SHALL BE OF AN APPROVED TYPE. NFPA 24, 10.2.1.
12. A MINIMUM OF 30" OF COVER, FROM FINISH GRADE TO THE TOP OF THE PIPE, SHALL BE PROVIDED. WHEN SURFACE LOADS ARE EXPECTED, A MINIMUM OF 36" COVER SHALL BE PROVIDED. NFPA 24, 10.4.4.
13. THRUST BLOCKS, OR OTHER APPROVED METHOD OF THRUST RESTRAINT, SHALL BE PROVIDED WHEREVER PIPE CHANGES DIRECTION. BACK-FILL BETWEEN THE JOINTS TO PREVENT MOVEMENT OF THE PIPE. PROVIDE DETAILS AND CALCULATIONS FOR SIZING THRUST BLOCKS BASE ON ACTUAL SOIL CONDITIONS. NFPA 24, 10.8.
14. A HYDROSTATIC TEST (200 PSI FOR TWO HOURS OR 50 PSI OVER MAXIMUM STATIC PRESSURE, WHICHEVER IS GREATER) SHALL BE PERFORMED. NFPA 24, 10.10.2.2.1.
15. THE SYSTEM SHALL BE THOROUGHLY FLUSHED BEFORE CONNECTION IS MADE TO OVERHEAD PIPING. FLOW SHALL BE THROUGH A MINIMUM OF 4" HOSE OF PIPE. NFPA 24, 10.10.2.1.
16. ALL CONTROL VALVES SHALL BE LOCKED IN THE OPEN POSITION. VALVES SHALL BE MONITORED IN ACCORDANCE WITH CBC/CFC 903.4.
17. ALL CONTROL VALVES SHALL BE LISTED INDICATING TYPE UNLESS A NON-INDICATING VALVE, SUCH AS AN UNDERGROUND GATE VALVE WITH APPROVED ROADWAY BOX COMPLETE WITH T-WRENCH, IS ACCEPTABLE TO AUTHORITY HAVING JURISDICTION (AHJ) . NFPA 24, 6.1.1.
18. POST INDICATING VALVES (PIV) SHALL BE TESTED TO INSURE THAT THE "TARGETS" (OPEN, CLOSED) ARE CLEARLY IDENTIFIED WHEN VALVE IS OPENED AND CLOSED. NFPA 24, 6.3.1, 10.10.1 & 14.1.
19. TESTS SHALL BE MADE BY THE INSTALLING CONTRACTOR IN THE PRESENCE OF THE (AHJ) . PROVIDE A COMPLETED CONTRACTORS'S MATERIAL AND TEST CERTIFICATE FOR UNDERGROUND PIPING TO DSA. NFPA 24, 10.10.1 & 14.1, CFC 901.5 & 6.

DSA BUILDING SYSTEM GENERAL NOTES

1. 2016 NFPA 13, 8.16.4.1.1: THE DESIGNER SHALL INDICATE ON THE PLANS ALL PIPING SUBJECT TO FREEZING (WHERE WATER TEMPERATURE CAN NOT BE MAINTAINED ABOUT 40 DEGREES FAHRENHEIT) AND PROVIDE APPROVED PROTECTION.
2. 2016 NFPA 13, 10.10.2.1.1: UNDERGROUND MAINS AND LEAD-IN CONNECTIONS TO SYSTEM RISERS SHALL BE COMPLETELY FLUSHED BEFORE CONNECTION IS MADE TO OVERHEAD SPRINKLER PIPING. WHERE UNDERGROUND PIPING IS FLUSHED AND NOT IMMEDIATELY CONNECTED TO OVERHEAD PIPING, THE RISER SHALL BE CAPPED OR OTHERWISE PROTECTED TO PREVENT DEBRIS, DIRT, OR ANIMALS FROM ENTERING INTO THE UNDERGROUND PIPING (WITNESSED BY THE PROJECT INSPECTOR) .
3. CERTIFIED OR WET-SIGNED WATER FLOW TEST DATA SHALL BE NO MORE THAN 12 MONTHS OLD AT THE TIME OF SUBMITTAL AND INDICATE THE LOCATIONS AND HEIGHT ELEVATIONS OF THE TEST AND RESIDUAL FLOW HYDRANTS. WATER FLOW TEST DATA MUCH BE PROVIDED BY OR WITNESSED BY THE LOCAL WATER PURVEYOR, UTILITIES COMPANY, OR LOCAL FIRE DEPARTMENT.
4. 2016 NFPA 13 FIGURE 10.10.1: A COPY OF COMPLETED AND SIGNED "CONTRACTOR'S MATERIALS & TEST CERTIFICATE FOR UNDERGROUND PIPING" SHALL BE INCLUDED IN THE CLOSE-OUT DOCUMENTS FOR BUILDING SYSTEM.
5. 2016 NFPA 13, 10.10.2.2.1: ALL PIPING AND ATTACHED APPURTENANCES SUBJECTED TO SYSTEM WORKING PRESSURE SHALL BE HYDROSTATICALLY TESTED AT 200 PSI, OR 50 PSI IN EXCESS OF THE SYSTEM WORKING PRESSURE, WHICHEVER IS GREATER, AND SHALL MAINTAIN THAT PRESSURE WITHOUT LOSS FOR 2 HOURS. (WITNESSED BY PROJECT INSPECTOR) .
6. 2016 NFPA 13, 6.2.9.1: PROVIDE SUPPLY OF SPARE SPRINKLERS IN A PROTECTIVE CABINET, INCLUDING SPRINKLER WRENCH FOR EACH TYPE INSTALLED. SUPPLY SHALL BE NO FEWER THAN 6 SPARE SPRINKLERS MATCHING THE TYPES AND TEMPERATURES RATING IN EACH PROTECTED AREA FOR SYSTEMS LESS THAN 300 SPRINKLERS. (12 SPARE SPRINKLER HEADS FOR SYSTEMS 300 TO 1000 SPRINKLERS.)
7. 2016 NFPA 13, 9.3.6.1: FURNISH RESTRAINT OF BRANCH LINES. THE END SPRINKLER ON EACH LINE SHALL BE RESTRAINED AGAINST EXCESSIVE VERTICAL AND LATERAL MOVEMENT (9.3.6.3) . BRANCH LINES SHALL BE LATERALLY RESTRAINED AT INTERVALS NOT EXCEEDING THOSE SPECIFIED IN Table 9.3.6.4 (a) and (b) (9.3.6.4) .
8. 2019 CBC 903.4.2 AND NFPA 13 8.17.4.2.3: THE INSPECTORS TEST VALVE LOCATION SHALL BE ACCESSIBLE. THE PIPE SHALL BE NO LESS THAN 1 INCH, WITH A SMOOTH BORE, CORROSION- RESISTANT ORIFICE, PROVIDING THE EQUIVALENT FLOW OF THE SMALLEST ORIFICE OF THE SPRINKLER TYPES INSTALLED WITHIN THE SYSTEM. THE DISCHARGE SHALL BE TO A DRAIN CONNECTION OR AN APPROVED LOCATION AT THE EXTERIOR OF THE BUILDING.
9. THE SPRINKLER FLOW SWITCH SHALL BE TESTED TO CONFIRM THAT WHEN THE INSPECTOR'S TEST VALVE IS ACTIVATED AN ALARM WILL SOUND NO MORE THAN 90 SECONDS AFTER INITIAL FLOW (WITNESSED BY THE PROJECT INSPECTOR)
10. 2019 CBC 904.4.2: CONNECTIONS TO PROTECTED PREMISES AND SUPERVISING STATION FIRE ALARM SYSTEMS SHALL BE TESTED TO VERIFY PROPER IDENTIFICATION AND TRANSMISSION OF ALARMS FROM AUTOMATIC FIRE EXTINGUISHING SYSTEMS (WITNESSED BY PROJECT INSPECTOR)
11. 2016 NFPA 13 SEC 25.6.1.1: SIGNAGE SHALL BE PROVIDED AS REQUIRED, INCLUDING RISER ROOM IDENTIFICATION. PER CBC 902.1.2, THE ACCESS DOOR FOR THE AUTOMATIC RISER ROOM SHALL HAVE A "FIRE RISER INSIDE" TEXT WITH A 2" MINIMUM HIGH AND A 3/8" MINIMUM STROKE. THE LETTERING SHALL BE IN CONTRASTING COLOR TO THE BACKGROUND.
12. 2019 CBC SEC 903.4.1: THE MAIN FIRE ALARM PANEL VALVE MONITORING AND WATER FLOW ALARM AND TROUBLE SIGNALS SHALL BE DISTINCTLY DIFFERENT AND SHALL BE AUTOMATICALLY TRANSMITTED TO AN APPROVED CENTRAL STATION MONITORING COMPANY.
13. 2016 NFPA 13 SEC 25.5.1: A PERMANENT HYDRAULIC CALCULATIONS DESIGN DATA PLACARD SHALL BE ATTACHED TO EACH RISER.
14. 2016 NFPA 13 SEC 6.9.1,AND 2019 CBC 903.4.2: FLOW SWITCH SHALL BE CONNECTED TO A 10 INCH OUTSIDE ALARM BELL OR OTHER AUDIBLE ALARM DEVICE AT EACH RISER. APPROVED IDENTIFICATION SIGNS SHALL BE PROVIDED ON THE OUTSIDE ALARM BELL , SPRINKLER FIRE ALARM- WHEN ALARM SOUNDS CALL 911/ FIRE DEPARTMENT.
15. TITLE 19 ARTICLE 906 (A) : A LABEL OF THE SELF-ADHESIVE TYPE SHALL BE PLACED ON THE FIRE DEPARTMENT CONNECTION OR ON THE RISER FOR FIRE SPRINKLER SYSTEM AND SHALL INCLUDE THE DATA OF INSTALLATION AND/ OR DATE SERVICE WAS PERFORMED AND LICENSE NUMBER OF PERSON PERFORMING SERVICE WORK.
16. 2016 NFPA 13 FIGURE 25.1: INSTALLING CONTRACTOR SHALL COMPLETE AND SIGN CONTRACTOR'S MATERIAL & TEST CERTIFICATE FOR THE ABOVEGROUND PIPING. THIS FORM SHALL BE GIVEN TO THE PROJECT INSPECTOR WHO WILL FORWARD TO DSA FOR FILING IN PROJECT RECORDS.

WATER DEPARTMENT NOTES

ARRANGEMENT OF FIRE PROTECTION WATER SUPPLY AND DEVICES SHALL STRICTLY CONFORM TO THE REQUIREMENTS OF CITY OF BAKERSFIELD WATER RESOURCES DEPARTMENT.

1. BACKFLOW PREVENTION DEVICE TO BE REDUCED PRESSURE DETECTOR ASSEMBLY (RPDA) . ASSEMBLY SHALL BE FURNISHED WITH 2 U.L. LISTED BUTTERFLY GATE VALVES, EQUIPPED WITH APPROVED TAMPER SWITCHES. BACKFLOW ASSEMBLY SHALL BE UL , CLASSIFIED, AND AWWA APPROVED FOR FIRE SERVICE INSTALLATIONS AND LISTED BY THE CROSS-CONNECTION INSTITUTE AT THE UNIVERSITY OF SOUTHERN CALIFORNIA.
2. BACKFLOW PREVENTION ASSEMBLY SHALL BE TESTED UPON INSTALLATION BY ACERTIFIED BACKFLOW TECHNICIAN, PRIOR TO ACCEPTANCE OF BACKFLOW ASSEMBLY BY THE WATER DEPARTMENT.
3. CONTRACTOR SHALL FURNISH VALVE SUPPORT STANDS AS REQUIRED AND SHALL MAINTAIN ALL INSTALLATION CLEARANCES AND HEIGHTS AS SHOWN ON THE DRAWINGS AND STANDARD DETAILS FOR THE SERVING WATER DEPARTMENT.
4. CONCRETE SLAB TO BE MINIMUM 4" THICK AND SLOPED TO DRAIN. PAD ELEVATION TO BE 1" ABOVE FINISH GRADE IN LAWN AREAS AND 2" ABOVE FINISH GRADE IN ALL OTHER AREAS. OVERALL ALL DIMENSIONS OF PAD SHALL BE AS SHOWN ON THE DRAWINGS AND STANDARD DETAILS FOR THE SERVING WATER AND FIRE DEPARTMENTS.

COORDINATION NOTES

1. THE FIRE SPRINKLER SYSTEM SUBMITTAL SHALL INCLUDE WORKING PLANS IN ACCORDANCE WITH NFPA13 SECTION 23.1 AND DSA AUTOMATIC FIRE SPRINKLER SYSTEMS PROJECT SUBMITTAL GUIDELINES. DEVIATION FROM APPROVED PLANS SHALL REQUIRE PERMISSION OF THE AUTHORITY HAVING JURISDICTION PER NFPA 13, 23.1.2.
2. CONFIGURATION OF PIPING AND SPRINKLERS SHOWN ON THESE PLANS SHALL BE USED AS A BASIS FOR LAYOUT AND INSTALLATION. OFFSETS OR CHANGES IN ELEVATION SHALL BE UNDERTAKEN BY THE INSTALLING CONTRACTOR AS REQUIRED TO EFFECT COORDINATION WITH OTHER TRADES AND/OR MAINTAIN PROPER CLEARANCES. ALL SUCH REVISIONS SHALL BE SHOWN ON CONTRACTOR'S WORKING PLANS.
3. ALL DIMENSIONS SHOWN ON THESE PLANS ARE CENTERLINE-TO-CENTERLINE. INSTALLING CONTRACTOR SHALL INSPECT AND CONFIRM THE ACTUAL AS-BUILT CONDITIONS OF ALL WORK AREAS AND SHALL COORDINATE THE INSTALLATION OF FIXED FIRE PROTECTION SYSTEMS WITH ALL WORK BY OTHER TRADES.

A. THE EXACT LOCATION AND ELEVATION OF INSTALLED PIPING AND THE CUT LENGTHS OF ALL PIPING AND HANGERS SHALL BE THE RESPONSIBILITY OF THE INSTALLING CONTRACTOR.

B. INSTALLING CONTRACTOR SHALL COORDINATE THE INSTALLATION WITH OBSTRUCTIONS SUCH AS STRUCTURE, DUCTWORK, CABLE TRAYS AND OTHER SUCH BUILDING UTILITY SYSTEMS AND WORK BY OTHER TRADES.

C. WHERE FIELD CONFLICTS REQUIRE THAT PIPING BE REVISED, SUCH CHANGES SHALL BE INCLUDED IN CONTRACTOR'S WORKING PLANS AND SUBMITTED TO ARCHITECT FOR REVIEW, TO ASSURE CONFORMANCE TO APPROVED DESIGN.

D. CONTRACTOR SHALL NOT SUBMIT COPIES OF APPROVED CONSTRUCTION DOCUMENTS PRIOR TO COORDINATION OR IN LIEU OF COORDINATED WORKING PLANS.

4. WHERE PENDENT SPRINKLERS ARE SHOWN IN OR NEAR THE EXACT CENTER OF SUSPENDED CEILING TILES, CONTRACTOR SHALL BE CONFIRM THE ACTUAL TILE PATTERN AND SPRINKLER LOCATIONS, SO THAT THE FINAL INSTALLATION IS EXACTLY CENTERED, WHERE CEILING TILES ARE 2'X4' "SECOND LOOK" TYPE WITH 2'X2' MODULES, SPRINKLERS SHALL BE SHALL BE IN THE EXACT CENTER OF THE 2'X2' MODULE. WHERE CEILING TILES ARE CONVENTIONAL 2'X4', SPRINKLERS SHALL BE CENTERED IN THE 2' DIRECTION AND SHALL BE LOCATED AT LEAST 6" CLEAR FROM ANY T-BAR.
5. CONTRACTOR SHALL FURNISH AND COORDINATE CONNECTION POINTS BETWEEN FIRE SPRINKLER SYSTEM SIGNALING DEVICES AND THE FIRE DETECTION AND ALARM SYSTEM. THIS SHALL INCLUDE BUT IS NOT LIMITED TO THE LOCATION OF ALL BELLS AND HORNS, FLOW SWITCHES AND TAMPER SWITCHES REQUIRING CONNECTION TO THE FIRE ALARM AND SUPERVISORY SYSTEMS.
6. CONTRACTOR SHALL UNDERTAKE MEETINGS AND CORRESPONDENCE WITH AUTHORITIES HAVING JURISDICTION, AS REQUIRED TO CONFIRM SPECIFIC REQUIREMENTS REGARDING LOCATIONS AND METHODS OF DISCHARGING WATER FROM TEST AND DRAIN LOCATIONS. WHERE SHOWN ON PLANS, ALL WASTEWATER SHALL DISCHARGE INTO DEDICATED RECEPTORS AND BE COORDINATED WITH THE PLUMBING AND SEWER DESIGNS.

GENERAL CODE DATA

GOVERNING CODES:
BUILDING CODE: CALIFORNIA BUILDING CODE, 2019 ED.
FIRE CODE: CALIFORNIA FIRE CODE, 2019 ED

TYPE OF CONSTRUCTION: TYPE VB
NUMBER OF STORIES: 1

Bldg. B:
BUILDING HEIGHT: 26'-4"
OCCUPANCY CLASS: E, A-4
TOTAL PROJECT AREA: 5, 426 SQ. FT.

Bldg. C:
BUILDING HEIGHT: 18'-0"
OCCUPANCY CLASS: S-2
TOTAL PROJECT AREA: 1,605 SQ. FT.

WATER FLOW DATA

LOCATION: 2900 Royal Scots Way, Bakersfield, CA 93306

DATE TAKEN: 8/16/2022

STATIC PSI: 74 PSI	LESS 10% STATIC PSI: 66.6 PSI
RESIDUAL PSI: 34 PSI	RESIDUAL PSI: 30.6 PSI
FURNISHED BY: Another in The Fire	REF. ELEV: -3.0 FT
TAKEN BY: David Holt & Robert Wroe	FLOW GPM: 2526.3 GPM AT 20 PSI

SCOPE OF WORK

FURNISH NEW PRIVATE FIRE MAIN SYSTEM AND WET-PIPE AUTOMATIC FIRE SPRINKLER SYSTEM PER N.F.P.A. 13 & 24 2016 ed. & AND THE DIVISION OF THE STATE ARCHITECT STANDARDS FOR THE HIGHLAND HIGH SCHOOL 50M POOL & AQUATICS CENTER, KERN HIGH SCHOOL DISTRICT

FIRE LEGEND

SYMBOL	ABBR	DESCRIPTION
		NEW PIPING
		EXISTING PIPING
		EXISTING PIPING TO BE REMOVED
		PIPE HANGER LOCATION
		PIPE HANGER RESTRAINT
		FLANGED CONNECTION
		"RIDGID" GRV COUPLING
		"FLEXIBLE" GRV COUPLING
		SCREWED CAP
		FIRE HYDRANT
#2(1'-2")		HANGER TYPE AND LENGTH
		SCREWED PLUG
	2-WAY	2-WAY SEISMIC BRACE
	4-WAY	4-WAY SEISMIC BRACE
	FDC	FIRE DEPT. CONN.
	TB	UNDERGROUND THRUST BLOCK
	RS	FIRE SPRINKLER RISER
		FIRE ALARM BELL
T		TAMPER SWITCH
		KEY VALVE
CL-800 AFF		PIPING ELEVATION
1		HYDRAULIC REF. POINT
L01		BRANCH LINE NUMBER
P01		WELDED BRANCH LINE PIECE NO.
M01		WELDED MAIN PIECE NO.
		WALL PENETRATION SLEEVE
	PIV/FDC	POST INDICATING VALVE W/ FIRE DEPT CONNECTION
	BFP	BACK FLOW PREVENTOR

ABBREVIATIONS

AHJ	AUTHORITY HAVING JURISDICTION
AWWA	AMERICAN WATER WORKS ASSOCIATION
BFP	BACK FLOW PREVENTER
CBC	CALIFORNIA BUILDING CODE
CFC	CALIFORNIA FIRE CODE
CPVC	CHLORINATED POLYVINYL CHLORIDE
DSA	DIVISION OF THE STATE ARCHITECT
FDC	FIRE DEPARTMENT CONNECTION
FM	FACTORY MUTUAL
IBC	INTERNATIONAL BUILDING CODE
N.F.P.A.	NATIONAL FIRE PROTECTION ASSOCIATION
PVC	POLYVINYL CHLORIDE
PIV	POST INDICATOR VALVE
PSI	PRESSURE PER SQUARE INCH
RPDA	REDUCED PRESSURE DETECTOR ASSEMBLY
SQ. IN.	SQUARE INCHES
SQ. FT.	SQUARE FEET
UL	UNDERWRITES LABRATORY

PIPE TABLES

C900, CLASS 150 PVC PIPE ID

NOMINAL	ACTUAL
4"	4.23
6"	6.09
8"	7.98
10"	9.79
12"	11.65

C151, CLASS 350 DUCTILE IRON PIPE ID

NOMINAL	ACTUAL
4"	4.300
6"	6.400
8"	8.550
10"	10.580
12"	12.640

SCH. 40 PIPE ID

NOMINAL	ACTUAL
3/4"	.824"
1"	1.049
1-1/4"	1.380
1-1/2"	1.610
2"	2.067
2-1/2"	2.469
3"	3.068
3-1/2"	3.548
4"	4.026
5"	5.047
6"	6.065
8"	7.981

SCH. 10 PIPE ID

NOMINAL	ACTUAL
1"	1.097
1-1/4"	1.442
1-1/2"	1.682
2"	2.157
2-1/2"	2.635
3"	3.260
3-1/2"	3.760
4"	4.260
5"	5.295
6"	6.357
8"	8.249
10"	10.370

DESIGN NOTES

1. SPRINKLERS
   A. LOCATION:
   DA-01 - BLDG. C
   HAZARD GROUP: ORDINARY HAZARD I & II
   DISCHARGE DENSITY: 0.15/0.20
   QR AREA REDUCTION: NO
   HOSE STREAM ALLOWANCE:
   OUTSIDE: 250 GPM
   INSIDE: 0
   COMBINED: 250 GPM
   DA-02 - BLDG. B
   HAZARD GROUP: LIGHT HAZARD
   DISCHARGE DENSITY: 0.10
   QR AREA REDUCTION: NO
   HOSE STREAM ALLOWANCE:
   OUTSIDE: 100 GPM
   INSIDE: 0
   COMBINED: 100 GPM
2. UNDERGROUND PIPE TYPES (SEE PIPE TABLES)
   A. UNDERGROUND MAINS: C-900 PVC, CLASS 200
   B. UNDERGROUND TRANSITIONS THROUGH WALLS AND UNDER FOOTINGS:
   AWWA C151 DUCTILE IRON, CLASS 350 OR TYPE 304 STAINLESS STEEL
3. BUILDING SYSTEM PIPE TYPES (SEE PIPE TABLES)
   A. MAIN PIPING: BLACK STEEL, SCHEDULE 10
   FITTINGS: GROOVED/WELDED
   B. BRANCH PIPING: BLACK STEEL, SCHEDULE 40
   FITTINGS: THREADED CAST/MALLEABLE IRON
4. SEE SPRINKLER LEGEND ON PLANS FOR SPACING OF SPRINKLERS AND FINISHES

IDENTIFICATION STAMP
DIV. OF THE STATE ARCHITECT
APP: 03-122664 INC:
REVIEWED FOR
SS ☑ FLS ☑ ACS ☑
DATE: 05/12/2023

pjhm architects
LICENSED ARCHITECT RICHARD W. RANDALL No. C15585 REN. 02/25 STATE OF CALIFORNIA
PROTECTION DESIGN AND CONSULTING
2851 Camino Del Rio S. # 210
San Diego, California 2108
www.protectiondesign.com
phone 619.255.8964
fax 619.255.9547
REGISTERED PROFESSIONAL ENGINEER JONATHAN C. MITCHELL FP 1559 Exp. 06/30/25 FIRE PROTECTION STATE OF CALIFORNIA
OC Office: 24461 Ridge Route Drive #100, Laguna Hills, CA 92653 • OC Phone: 949.498.6191 • SD Office: 804 Pier View Way #103, Oceanside, CA 92054 • SD Phone: 760.730.5527 • LA Office: 837 Traction Avenue, #410, Los Angeles, CA 90013 • LA Phone: 213.278.0172 • Web: pjhm.com

HIGHLAND HIGH SCHOOL
50M POOL & AQUATICS CENTER

KERN HIGH SCHOOL DISTRICT

GENERAL NOTES

FP-1.0

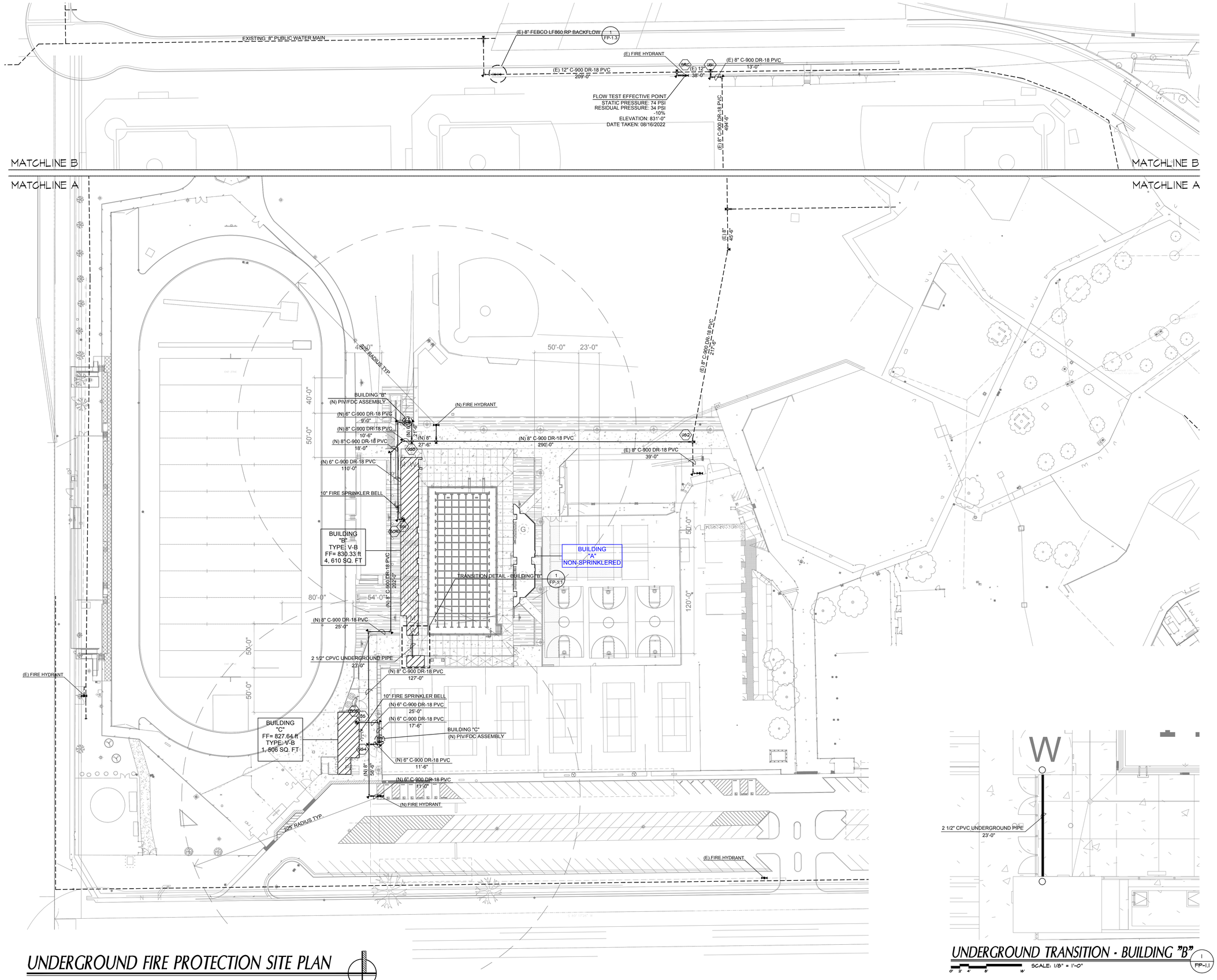

UNDERGROUND FIRE PROTECTION SITE PLAN

SCALE: 1" = 40'-0"

UNDERGROUND TRANSITION - BUILDING "B"

SCALE: 1/8" = 1'-0"

IDENTIFICATION STAMP
DIV. OF THE STATE ARCHITECT
APP: 03-122664 INC:
REVIEWED FOR
SS ☑ FLS ☑ ACS ☑
DATE: 05/12/2023

pjhm architects

LICENSED ARCHITECT
THOMAS W. KRUSE
NO. C15585
REN. 02/25
STATE OF CALIFORNIA

PROTECTION DESIGN AND CONSULTING
2851 Camino Del Rio S. # 210
San Diego, California 2108
www.protectiondesign.com
phone 619.255.8964
fax 619.255.9547

REGISTERED PROFESSIONAL ENGINEER
JONATHAN S. MITCHELL
FP 1559
Exp. 06/30/24
FIRE PROTECTION
STATE OF CALIFORNIA

HIGHLAND HIGH SCHOOL
50M POOL & AQUATICS CENTER

KERN HIGH SCHOOL DISTRICT

FIRE UNDERGROUND SITE PLAN

FP-1.1

OC Office: 24461 Ridge Route Drive #100, Laguna Hills, CA 92653 • OC Phone: 949.496.6191 • SD Office: 804 Pier View Way #103, Oceanside, CA 92054 • SD Phone: 760.730.5527 • LA Office: 837 Traction Avenue, #410, Los Angeles, CA 90013 • LA Phone: 213.278.0172 • Web: pjhm.com

IDENTIFICATION STAMP
DIV. OF THE STATE ARCHITECT
APP: 03-122664 INC:
REVIEWED FOR
SS ☑ FLS ☑ ACS ☑
DATE: 05/12/2023

pjhm architects

LICENSED ARCHITECT
THOMAS W. KRUSE
Lic.# C15585
02/21
Renewal Date
STATE OF CALIFORNIA

PROTECTION DESIGN AND CONSULTING
2851 Camino Del Rio S. # 210
San Diego, California 2108
www.protectiondesign.com
phone 619.255.8964
fax 619.255.9547

REGISTERED PROFESSIONAL ENGINEER
JOHN S. MILLER
FP 1559
Exp. 09/30/23
FIRE PROTECTION
STATE OF CALIFORNIA

SD Phone: 760.730.5527 • **LA** Office: 837 Traction Avenue, #410, Los Angeles, CA 90013 • **LA** Phone: 213.278.0172 • Web: pjhm.com
OC Office: 24461 Ridge Route Drive #100, Laguna Hills, CA 92653 • **OC** Phone: 949.496.6191 • **SD** Office: 804 Pier View Way #103, Oceanside, CA 92054

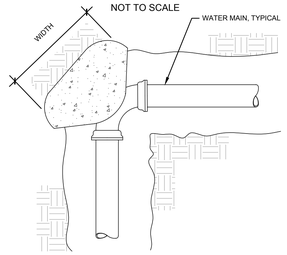

BEND

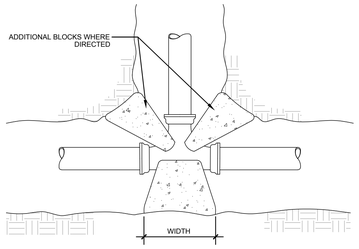

TEE - PLAN

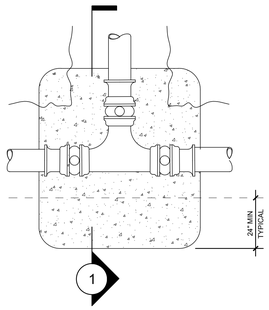

PLAN

VALVE SUPPORT BLOCK

VALVE SIZE	DIMENSION "A"	DIMENSION "B"
4"	12"	12"
6"	12"	12"
8"	13"	14"
10"	14"	16"
12"	15"	18"
DIMENSION "C" = TRENCH WIDTH PLUS TWO TIMES THE PIPE DIAMETER		

GENERAL UNDERGROUND PIPING NOTES

1. INSTALLATION SHALL CONFORM TO THE FOLLOWING CODES AND STANDARDS:
   A. N.F.P.A. 24, 2016 ed.
2. ALL MATERIALS INSTALLED SHALL BE UL LISTED AND/OR FM APPROVED FOR FIRE PROTECTION USE, WHERE SUCH A LISTING IS APPLICABLE.
3. PIPING SHALL BE C-900 PVC, DR-18 OR AWWA C151, CLASS 350 DUCTILE IRON AS SHOWN ON PLANS.
4. FITTINGS SHALL BE AWWA C153, CLASS 250 DUCTILE IRON WITH FLANGED OR MECHANICAL JOINT ENDS, AS REQUIRED.
5. MINIMUM COVER SHALL BE 3'-0" IN TRAFFIC ZONES AND 2'-6" IN PEDESTRIAN ZONES.
6. THRUST RESTRAINT PER N.F.P.A. 24, 2016 ed. SHALL BE PROVIDED AT ALL CHANGES OF DIRECTION AND/OR ELEVATION. THRUST BLOCKS SHALL BE OF MINIMUM SIZE AND BEARING AREA SHOWN ON PLANS.
7. PIPE SHALL BE INSTALLED WITH SAND OR NEUTRAL EQUIVALENT MATERIAL SURROUNDING PIPE ZONE, OR AS DIRECTED BY AUTHORITIES HAVING JURISDICTION.
8. ALL PIPE AND FITTINGS BELOW GRADE SHALL BE WRAPPED AND/OR COATED AGAINST CORROSION IN ACCORDANCE WITH FIRE AND WATER DEPARTMENT REQUIREMENTS.
9. ALL PIPE PENETRATING CONCRETE OR MASONRY BUILDING WALLS AND FLOOR SLABS SHALL BE PROVIDED WITH 2" CLEAR SPACE AROUND THE OUTSIDE DIAMETER OF PIPE. HOLES FOR PENETRATIONS SHALL BE SLEEVED OR CORED IN ACCORDANCE WITH THE REQUIREMENTS OF THE AUTHORITY HAVING JURISDICTION. WHERE REQUIRED, RATED FIRESTOP OR WATER SEAL ASSEMBLIES SHALL BE INSTALLED.
10. ALL VALVES CONTROLLING FIRE PROTECTION WATER SUPPLIES SHALL BE EQUIPPED WITH TAMPER SWITCHES AND CONNECTED TO AN APPROVED SUPERVISORY SYSTEM.
11. ALL PIPING AND FITTINGS SHALL BE HYDROSTATICALLY TESTED FOR A MINIMUM OF 2 HOURS AT 200 PSI. AFTER ACCEPTANCE OF THE PRESSURE TEST, ALL PIPING SHALL BE FLUSHED IN ACCORDANCE WITH N.F.P.A. 24 2016 ed.
12. ALL VISUAL INSPECTIONS, HYDROSTATIC TESTING AND FLUSHING OF THE UNDERGROUND PIPING SHALL BE PERFORMED OR WITNESSED BY THE AUTHORITIES HAVING JURISDICTION.

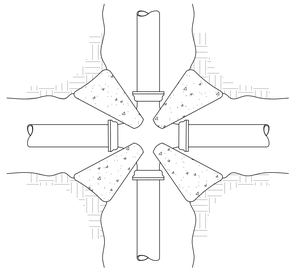

CROSS

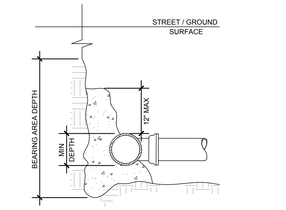

TEE - ELEVATION

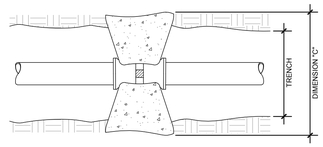

VALVE SUPPORT - PLAN

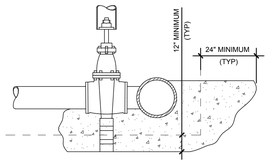

SECTION 1

THRUST BLOCK CALCULATIONS AND DETAILS ON SHEET FP-1.2 SHALL BE FOR THE FIRE SERVICE UNDERGROUND PIPING ONLY

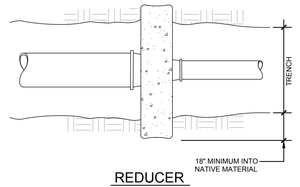

REDUCER

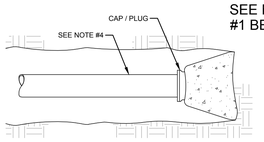

END CAP

SEE NOTE #1 BELOW

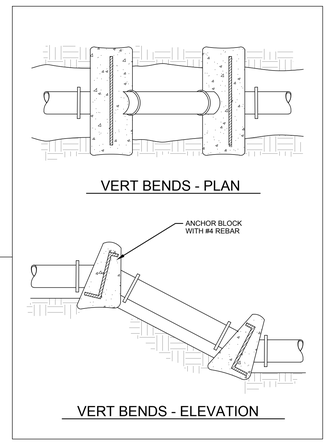

VERT BENDS - PLAN

VERT BENDS - ELEVATION

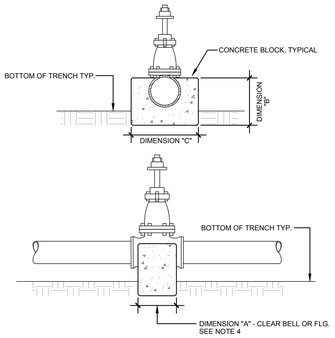

VALVE SUPPORT - ELEVATION

TEE WITH GATE VALES

NOTES:

1). THE ANCHOR BLOCKS ON VERTICAL BENDS REQUIRE ENGINEER APPROVAL.
2). A MINIMUM OF 6" OF CONCRETE SHALL BE POURED ON WETTED UNDISTURBED OR COMPACTED SOIL BENEATH EACH INSTALLATION.
3). TEE SHALL BE CONCRETE BLOCKED A MINIMUM OF 6" ON ALL THREE SIDES.
4). USE 12" - 18" LENGTH OF PIPE BETWEEN THE END CAP AND THE LAST JOINT AS A BOND BREAKER ON DEAD END BLOCKING.
5). BEARING AREA BASED ON SOIL BEARING VALUE OF 1500 PSF AND 225 PSI LINE PRESSURE AND A MINIMUM OF 36" COVER.
   -FOR BEARING = 1000 PSF, 1.5 X AREA SHOWN
   -FOR BEARING = 500 PSF, 3.0 X AREA SHOWN
6). ENGINEER SHALL DETERMINE SIZES, REFER TO SPECIFICATIONS FOR THRUST AND ANCHOR BLOCK SIZING.
7). THRUST BLOCKS SHALL BE CENTERED ON THE FITTING SO THAT THE BEARING AREA IS EXACTLY OPPOSITE THE RESULTANT DIRECTION OF THRUST.
8). CONCRETE SHALL BE PLACED SO THAT FITTINGS AND VALVES ARE ACCESSIBLE FOR REPAIR OR REPLACEMENT.
9). BEARING AREA "B" MUST BE EQUAL TO OR GREATER THAN THE AREA REQUIRED FOR A 90° ELBOW INSTALLATION.
10). INSTALL SAND BAGS AROUND BUTTERFLY VALVE ACTUATOR TO ISOLATE IT FROM CONCRETE.
11). BFV'S INSTALLED AT CROSSES OR TEES REQUIRE A FLANGED DUCTILE IRON SPOOL TO BE INSTALLED BETWEEN THE FITTING AND VALVE IN ACCORDANCE WITH THE SPECIFICATIONS.

THRUST BLOCK CALCULATIONS

INSTALLATION SHALL CONFORM TO N.F.P.A. 13 (2016 ED.), SECTION 10.6.1 (a) TO SOLVE FOR THRUST BLOCK BEARING AREA (A) IN SQUARE INCHES:

WHERE: $A_b = \frac{T}{S_b} \times S_f \times 144$

T = THRUST IN POUNDS FROM NFPA 13 TABLE A-10.6.1.(a)

S_b = SOIL BEARING STRENGTH FROM NFPA 13 TABLE A-10.6.1 (c)
(SEE MATERIALS SUBMITTAL FOR SOIL BEARING STRENGTH REFRENCES.)

(S_f) = SAFETY FACTOR OF 1.5

FITTING SIZE & TYPE MIN. A_b IN SQ. IN.	HEIGHT (h) MIN 1/2 PIPE OD	WIDTH (w) MIN (h) MAX. (2h)	A_b (ACTUAL)
8" 90° /TEE 982.48SQ. IN.	25	40	1000
8" 45° ELBOW 531.68SQ. IN.	20	30	600
6" 90° /TEE 571.10SQ. IN.	20	30	600
6" 45° ELBOW 309.10 SQ. IN.	15	25	375

FOR 8" 90° OR TEE:

$A_b = \frac{9097}{2000} \times 144 \times 1.5$ A_b = 982.48 SQ. IN.

FOR 8" 45° ELBOW:

$A_b = \frac{4923}{2000} \times 144 \times 1.5$ A_b = 531.68 SQ. IN.

FOR 6" 90° OR TEE:

$A_b = \frac{5288}{2000} \times 144 \times 1.5$ A_b = 571.10 SQ. IN.

FOR 6" 45° ELBOW:

$A_b = \frac{2862}{2000} \times 144 \times 1.5$ A_b = 309.10 SQ. IN.

CONCRETE THRUST AND ANCHOR BLOCK INSTALLATIONS

NOT TO SCALE

1
FP-1.2

HIGHLAND HIGH SCHOOL
50M POOL & AQUATICS CENTER

KERN HIGH SCHOOL DISTRICT

FIRE UNDERGROUND DETAILS

FP-1.2

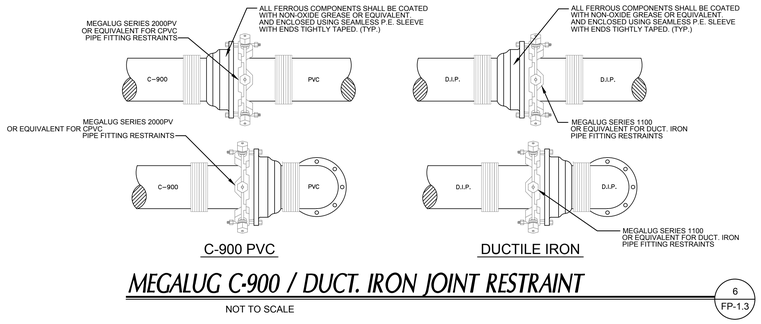

MEGALUG C-900 / DUCT. IRON JOINT RESTRAINT

NOT TO SCALE

6 FP-1.3

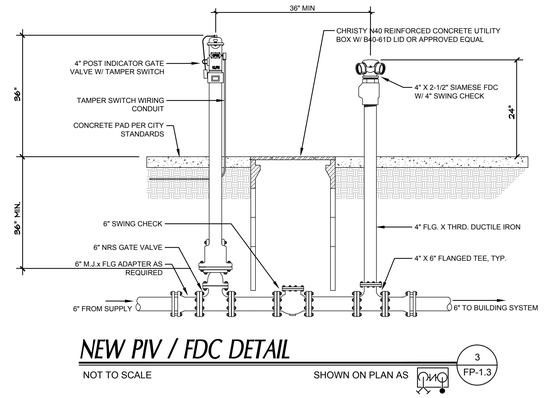

NEW PIV / FDC DETAIL

NOT TO SCALE

SHOWN ON PLAN AS PIV

3 FP-1.3

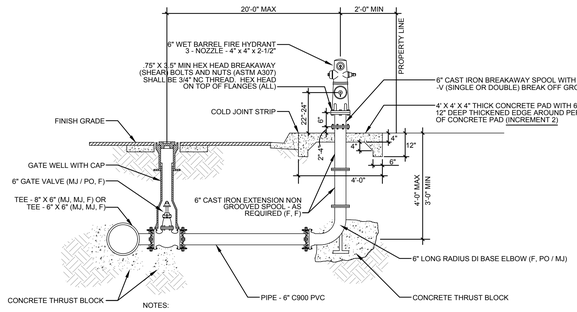

NEW FIRE HYDRANT DETAIL

NOT TO SCALE

SHOWN ON PLAN AS

5 FP-1.3

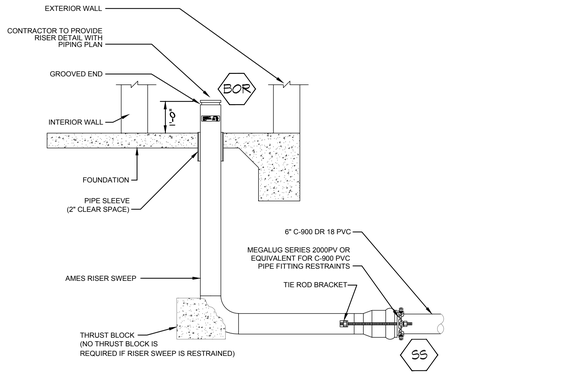

TYPICAL SERVICE ENTRY DETAIL

NOT TO SCALE

SHOWN ON PLAN AS

2 FP-1.3

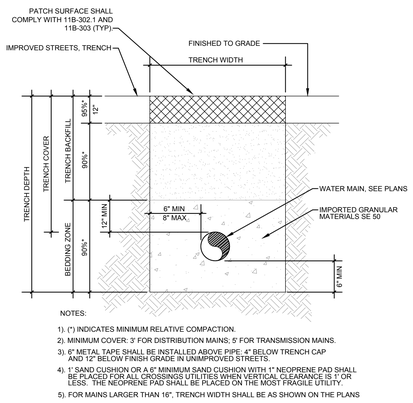

TYPICAL TRENCH SECTION DETAIL

NOT TO SCALE

4 FP-1.3

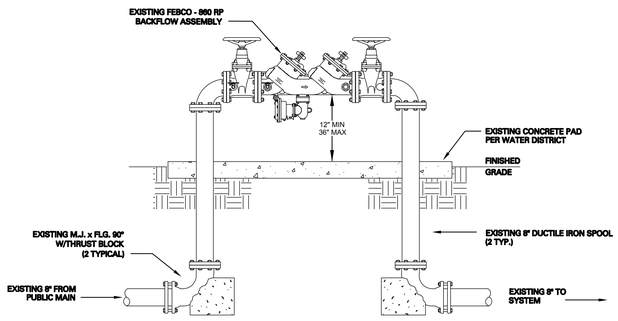

(E) 8" EXISTING FEBCO - 860 RP BACKFLOW DETAIL

NOT TO SCALE

SHOWN ON PLAN AS

1 FP-1.3

IDENTIFICATION STAMP
DIV. OF THE STATE ARCHITECT
APP: 03-122664 INC:
REVIEWED FOR
SS ☑ FLS ☑ ACS ☑
DATE: 05/12/2023

pjhm architects

LICENSED ARCHITECT
THOMAS W. KRUSE
Lic.# C15585
02/21
Renewal Date
STATE OF CALIFORNIA

PROTECTION
DESIGN AND
CONSULTING
2851 Camino Del Rio S. # 210
San Diego, California 2108
www.protectiondesign.com
phone 619.255.8964
fax 619.255.9547

REGISTERED PROFESSIONAL ENGINEER
JOHN S. MILLER
FP 1559
Exp. 04/30/21
FIRE PROTECTION
STATE OF CALIFORNIA

LA Office: 837 Traction Avenue, #410, Los Angeles, CA 90013 • **LA** Phone: 213.278.0172 • Web: pjhm.com

SD Office: 804 Pier View Way #103, Oceanside, CA 92054 • **SD** Phone: 760.730.5527

OC Office: 24461 Ridge Route Drive #100, Laguna Hills, CA 92653 • **OC** Phone: 949.496.6191

HIGHLAND HIGH SCHOOL
50M POOL & AQUATICS CENTER

KERN HIGH SCHOOL DISTRICT

FIRE UNDERGROUND DETAILS

FP-1.3

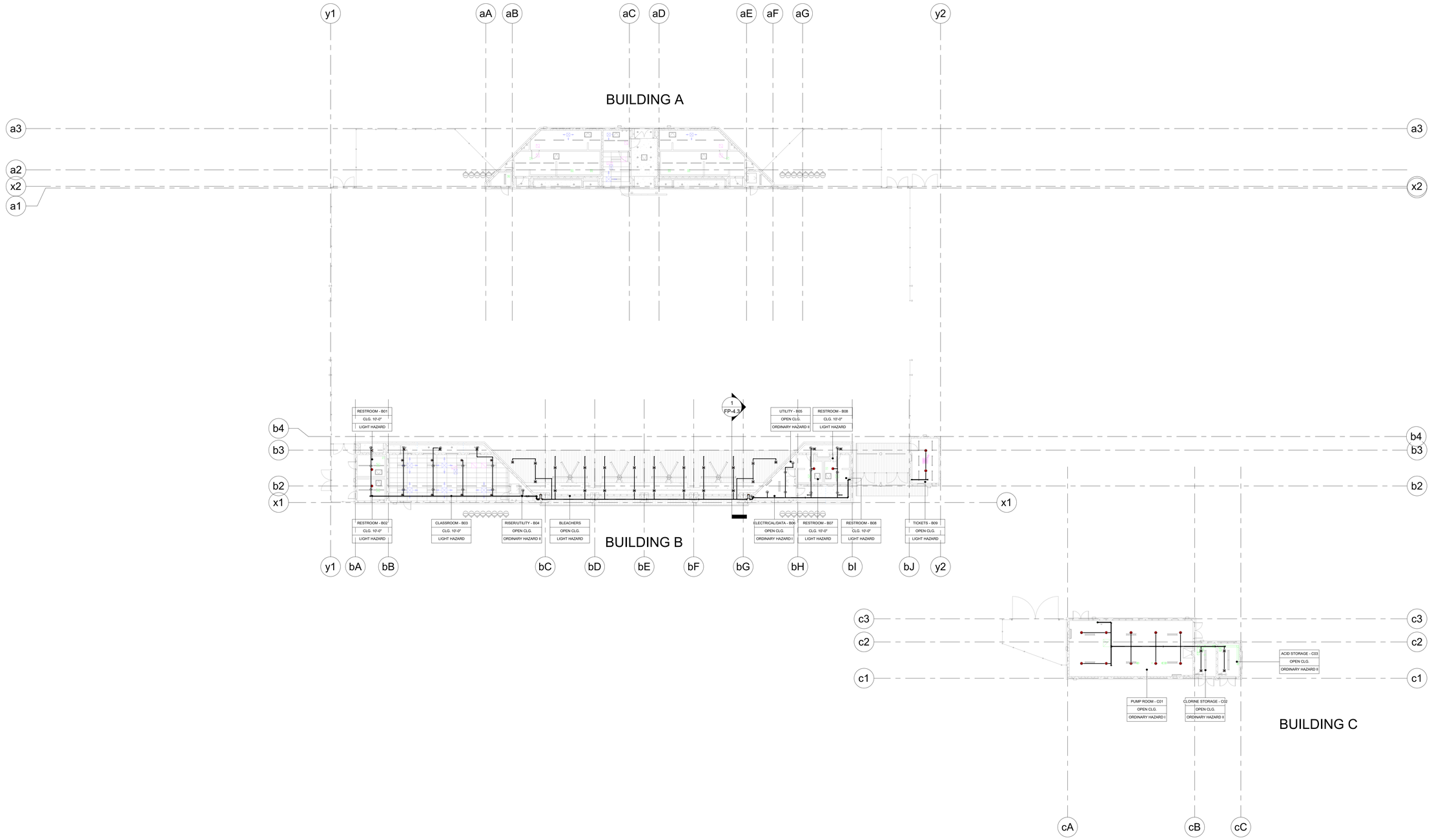

COMPOSITE FIRE SPRINKLER PIPING PLAN
1/16" = 1'-0"

0' 8' 16' 32' 64'

IDENTIFICATION STAMP
DIV. OF THE STATE ARCHITECT
APP: 03-122664 INC:
REVIEWED FOR
SS ☑ FLS ☑ ACS ☑
DATE: 05/12/2023

pjhm architects

LICENSED ARCHITECT
THOMAS W. KRUSE
NO. C15585
REN. 02/25
STATE OF CALIFORNIA

PROTECTION DESIGN AND CONSULTING
2851 Camino Del Rio S. # 210
San Diego, California 2108
www.protectiondesign.com
phone 619.255.8964
fax 619.255.9547

REGISTERED PROFESSIONAL ENGINEER
JONATHAN S. MITCHELL
FP 1559
Exp. 06/30/23
FIRE PROTECTION
STATE OF CALIFORNIA

HIGHLAND HIGH SCHOOL
50M POOL & AQUATICS CENTER

KERN HIGH SCHOOL DISTRICT

FIRE SPRINKLER PIPING PLAN - COMPOSITE

FP-2.0

OC Office: 24461 Ridge Route Drive #100, Laguna Hills, CA 92653 • OC Phone: 949.496.6191 • SD Office: 804 Pier View Way #103, Oceanside, CA 92054 • SD Phone: 760.730.5527 • LA Office: 837 Traction Avenue, #410, Los Angeles, CA 90013 • LA Phone: 213.278.0172 • Web: pjhm.com

3/31/2023 11:52:43 AM

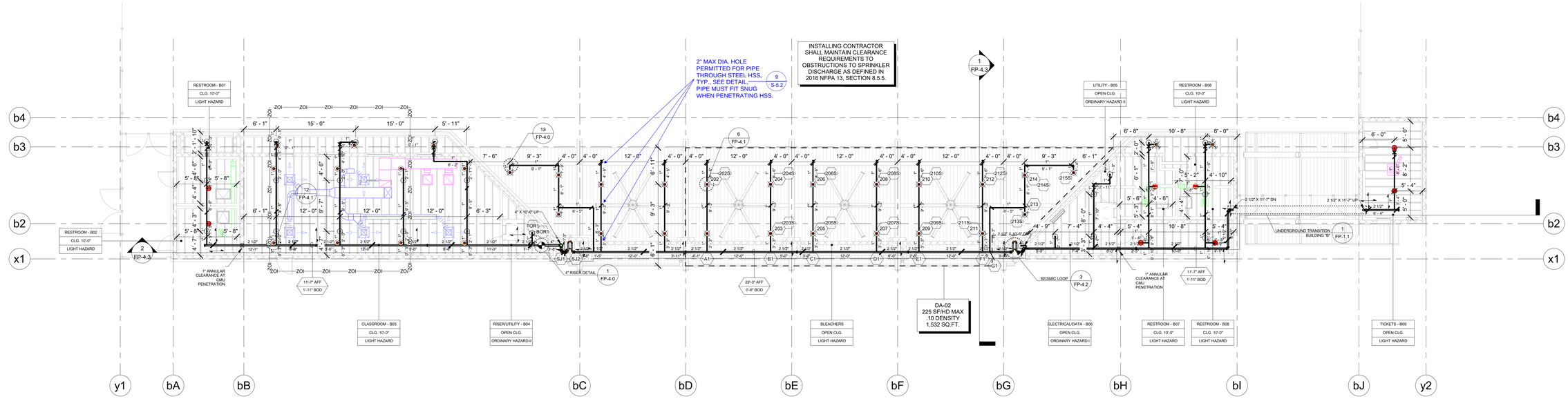

BLDG B - FIRE SPRINKLER PIPING PLAN
1/8" = 1'-0"

0' 4' 8' 16' 32'

FIRE SPRINKLER LEGEND											SPACING		ESCUTCHEON			
SYM	LOCATION	MRF	MODEL	SIN	SR/QR	K-FAC	TYPE	TEMP	FIN	THRD	MIN/MAX	AREA	TYPE	FIN	COMMENTS	TOTAL
◉	FINISHED CEILING	VIKING	MICROFAST	VK302	QR	5.6 K	SSP	200°	WHITE	1/2"	6'-0"	15'-0" 225 S.F.	RECESSED	WHITE	CORROSION RESISTANT	28
◉	FINISHED CEILING	VIKING	MICROFAST	VK302	QR	5.6 K	SSP	155°	WHITE	1/2"	6'-0"	15'-0" 225 S.F.	RECESSED	WHITE		8
●	FINISHED CEILING	VIKING	MICROFAST	VK462	QR	5.6K	SSP	155°	WHITE	1/2"	6'-0"	15'-0" 225 S.F.	CONCEALED	WHITE		6
○	OPEN CEILING	VIKING	MICROFAST	VK300	QR	5.6K	SSU	200°	WHITE	1/2"	6'-0"	15'-0" 225 S.F.	N/A	BRASS		26
															TOTAL THIS SHEET	68

PIPE TYPES

1. MAINS TO BE BLACK SCHEDULE 10 STEEL PIPE, U.O.N.
2. BRANCH LINES TO BE BLACK SCHEDULE 40 STEEL PIPE, U.O.N.

PIPE SIZES

1. MAINS TO BE **4"** NOMINAL DIAMETER PIPE, U.O.N.
2. BRANCH LINES TO BE **1 1/2", 1 1/4" & 1"** NOMINAL DIAMETER PIPE, U.O.N.
3. DROPS & ARM OVERS TO BE **1"** NOMINAL DIAMETER PIPE, U.O.N.

DENOTES FIRESTOP PER 1 / FP-4.2

INSTALLATION NOTES:

HANGERS

1. HANG LINES & MAINS TO WOOD STRUCTURE AT ELEVATIONS NOTED PER DETAIL 3-11 / FP-4.0
2. HANG LINES & MAINS TO STEEL STRUCTURE AT ELEVATIONS NOTED PER DETAIL 12 & 13 / FP-4.0

DENOTES HANGER LOCATION

3. FURNISH RESTRAINING TYPE HANGERS AT THE ENDS OF ALL BRANCHLINES AND AT EVERY **26** FT ALONG THE LINES

DENOTES LATERAL RESTRAINT 1-3 / FP-4.1

4. SEE SHEET **FP-4.1** FOR DETAILS

MAXIMUM SPACING OF RESTRAINTS (ft) STEEL PIPE					
HIGHLAND HS 50M POOL & AQUATICS CENTER					Cp = 0.48
	SEISMIC COEFFICIENT (Cp)				
PIPE SIZE	Cp < 0.50	0.5< Cp <0.71	0.71< Cp <1.40	Cp > 1.40	
1"	43'	36'	26'	22'	
1-1/4"	46'	39'	27'	24'	
1-1/2"	49'	41'	29'	25'	
2"	53'	45'	31'	27'	

SWAY BRACING

1. SWAY BRACING SHALL BE PER NFPA 13, 2016 EDITION AND CBC ED. 2019. SEE **FP-4.1** FOR THE DETAILS AND THE CALCULATIONS. WHERE HANGER RODS ARE LESS THAN 6" IN LENGHT, LATERAL SWAY BRACING MY BE OMITTED

DENOTES SWAY BRACE 8 & 9 / FP-4.1 and 4 & 5 / FP-4.2

DENOTES 4-WAY SWAY BRACE. A SWAY BRACE ASSEMBLY COULD INCLUDE A LATERAL & LONGITUDINAL BRACE IN COMBINATION. 7 / FP-4.1

HYDRAULIC SYSTEM

THIS BUILDING IS PROTECTED BY A HYDRUALICALLY DESIGNED AUTOMATIC SPRINKLER SYSTEM

Location	BLDG. B - DA-02
Sprinkler Information	
NUMBER OF FLOWING SPRINKLERS	15
MANUFACTURE	VIKING
MODEL	MICROFAST VK302
200°	QR
1/2 ORIFICE	5.6K
Basis of Design	
STANDARD	NFPA 13 2016
HAZARD GROUP	LIGHT HAZARD
DENSITY	0.10 GPM/SQ.FT.
DESIGNED AREA OF DISCHARGED	1,532 SQ. FT.
System Demand	
GPM DEMAND AT THE BASE OF THE RISER	339.4 GPM
RESIDUAL PRESSURE AT THE BASE OF THE RISER	52.4 PSI
GPM DEMAND AT THE WATER SUPPLY SOURCE	439.4 GPM
RESIDUAL PRESSURE AT THE WATER SUPPLY SOURCE	54.5 PSI
HOUSE STREAM ALLOWANCE	100 GPM OUTSIDE
REMOTE SPRINKLER FLOW	14.8 GPM @ 7.0 PSI

PROTECTION DESIGN AND CONSULTING
2851 Camino Del Rio S. # 210
San Diego, California 92108
www.protectiondesign.com
phone 619.255.8964
fax 619.255.9547

IDENTIFICATION STAMP
DIV. OF THE STATE ARCHITECT
APP: 03-122664 INC:
REVIEWED FOR
SS ☑ FLS ☑ ACS ☑
DATE: 05/12/2023

pjhm architects
LICENSED ARCHITECT
RICHARD W. KRAMER
NO. C15985
REN. 02/25
STATE OF CALIFORNIA
PROTECTION DESIGN AND CONSULTING
2851 Camino Del Rio S. # 210
San Diego, California 2108
www.protectiondesign.com
phone 619.255.8964
fax 619.255.9547
REGISTERED PROFESSIONAL ENGINEER
JONATHAN S. MITCHELL
FP 1559
Exp. 09/24
FIRE PROTECTION
STATE OF CALIFORNIA
OC Phone: 760.730.5527 • LA Office: 837 Traction Avenue, #410, Los Angeles, CA 90013 • LA Phone: 213.278.0172 • Web: pjhm.com
OC Office: 24461 Ridge Route Drive #100, Laguna Hills, CA 92653 • OC Phone: 949.496.6191 • SD Office: 804 Pier View Way #103, Oceanside, CA 92054 • SD Phone: 760.754.8383

HIGHLAND HIGH SCHOOL
50M POOL & AQUATICS CENTER

KERN HIGH SCHOOL DISTRICT

(N) BUILDING B - FIRE SPRINKLER PIPING PLAN

FP-2.1

3/31/2023 12:29:33 PM

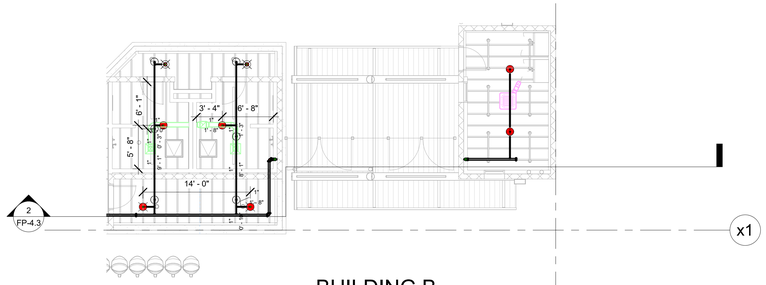

BUILDING B

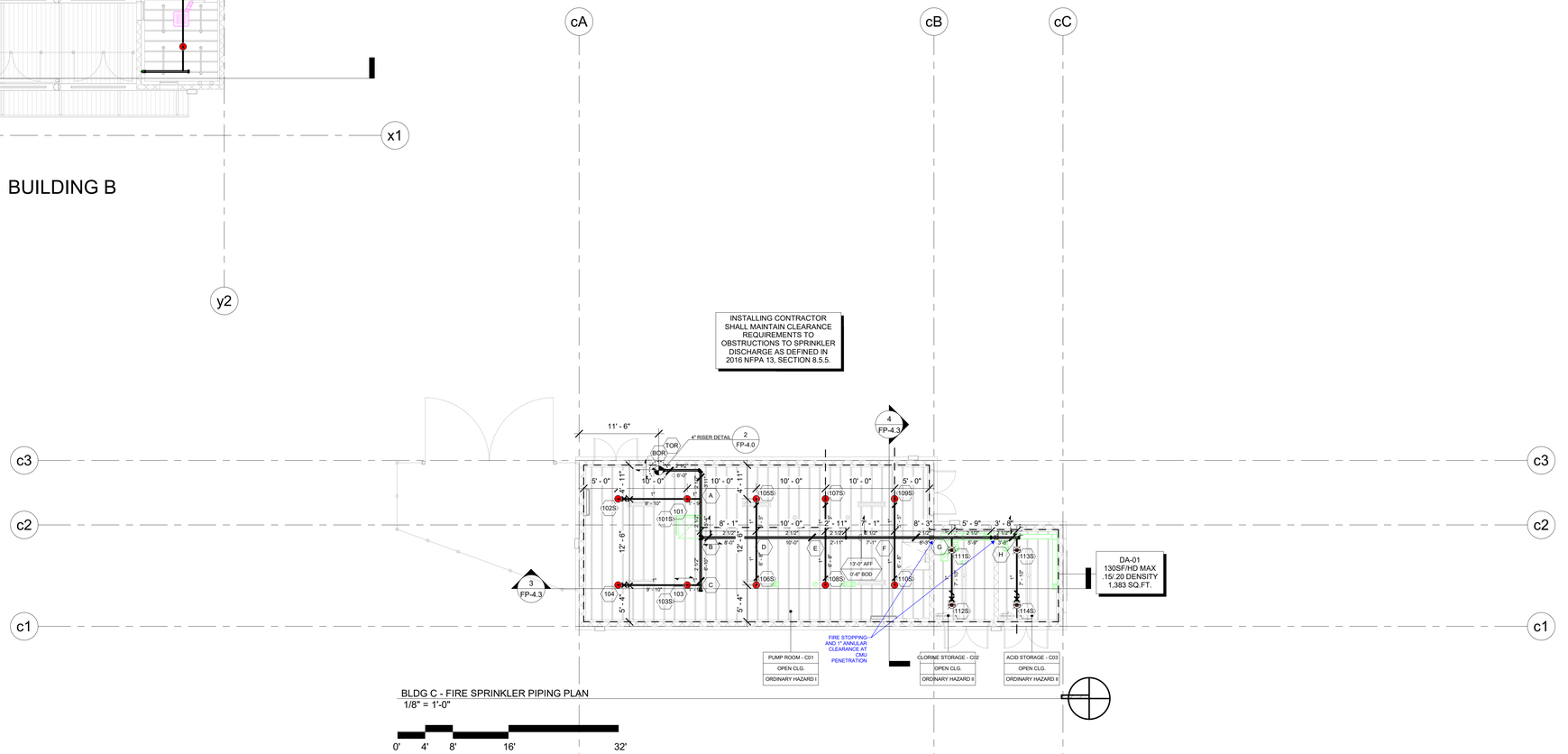

BLDG C - FIRE SPRINKLER PIPING PLAN
1/8" = 1'-0"

0' 4' 8' 16' 32'

FIRE SPRINKLER LEGEND											SPACING		ESCUTCHEON			
SYM	LOCATION	MRF	MODEL	SIN	SR/QR	K-FAC	TYPE	TEMP	FIN	THRD	MIN/MAX	AREA	TYPE	FIN	COMMENTS	TOTAL
	FINISHED CEILING	VIKING	MICROFAST	VK302	QR	5.6K	SSP	155°	WHITE	1/2"	6'-0"	15'-0"	130 S.F.	RECESSED	WHITE	CORROSION RESISTANT	4
	FINISHED CEILING	VIKING	MICROFAST	VK462	QR	5.6K	SSP	155°	WHITE	1/2"	6'-0"	15'-0"	130 S.F.	CONCEALED	WHITE		10
																TOTAL THIS SHEET	14

INSTALLATION NOTES:

PIPE TYPES

1. MAINS TO BE BLACK SCHEDULE 10 STEEL PIPE, U.O.N.
2. BRANCH LINES TO BE BLACK SCHEDULE 40 STEEL PIPE, U.O.N.

PIPE SIZES

1. MAINS TO BE **4"** NOMINAL DIAMETER PIPE, U.O.N.
2. BRANCH LINES TO BE **1 1/2", 1 1/4" & 1"** NOMINAL DIAMETER PIPE, U.O.N.
3. DROPS & ARM OVERS TO BE **1"** NOMINAL DIAMETER PIPE, U.O.N.

DENOTES FIRESTOP PER 1 / FP-4.2

HANGERS

1. HANG LINES & MAINS TO WOOD STRUCTURE AT ELEVATIONS NOTED PER DETAIL — 3-11 / FP-4.0
2. HANG LINES & MAINS TO STEEL STRUCTURE AT ELEVATIONS NOTED PER DETAIL — 12 & 13 / FP-4.0

DENOTES HANGER LOCATION

3. FURNISH RESTRAINING TYPE HANGERS AT THE ENDS OF ALL BRANCHLINES AND AT EVERY **26** FT ALONG THE LINES

DENOTES LATERAL RESTRAINT — 1-3 / FP-4.1

4. SEE SHEET **FP-4.1** FOR DETAILS

MAXIMUM SPACING OF RESTRAINTS (ft) STEEL PIPE					
HIGHLAND HS 50M POOL & AQUATICS CENTER				Cp = 0.48	
SEISMIC COEFFICIENT (Cp)					
PIPE SIZE	Cp < 0.50	0.5< Cp <0.71	0.71< Cp <1.40	Cp > 1.40	
1"	43'	36'	26'	22'	
1-1/4"	46'	39'	27'	24'	
1-1/2"	49'	41'	29'	25'	
2"	53'	45'	31'	27'	

SWAY BRACING

1. SWAY BRACING SHALL BE PER NFPA 13, 2016 EDITION AND CBC ED. 2019. SEE **FP-4.1** FOR THE DETAILS AND THE CALCULATIONS WHERE HANGER RODS ARE LESS THAN 6" IN LENGHT, LATERAL SWAY BRACING MY BE OMITTED

DENOTES SWAY BRACE — 8 & 9 / FP-4.1 — 4 & 5 / FP-4.2

DENOTES 4-WAY SWAY BRACE. A SWAY BRACE ASSEMBLY COULD INCLUDE A LATERAL & LONGITUDINAL BRACE IN COMBINATION. — 7 / FP-4.1

HYDRUALIC SYSTEM

THIS BUILDING IS PROTECTED BY A HYDRUALICALLY DESIGNED AUTOMATIC SPRINKLER SYSTEM

Location	BLDG. C - DA-01
Sprinkler Information	
NUMBER OF FLOWING SPRINKLERS	14
MANUFACTURE	VIKING
MODEL	MICROFAST VK302
155°	QR
1/2 ORIFICE	5.6K
Basis of Design	
STANDARD	NFPA 13 2016
HAZARD GROUP	ORDINARY HAZARD I & II
DENSITY	0.15/.20 GPM/SQ.FT.
DESIGNED AREA OF DISCHARGED	1,383 SQ. FT.
System Demand	
GPM DEMAND AT THE BASE OF THE RISER	360.4 GPM
RESIDUAL PRESSURE AT THE BASE OF THE RISER	43.4 PSI
GPM DEMAND AT THE WATER SUPPLY SOURCE	610.4 GPM
RESIDUAL PRESSURE AT THE WATER SUPPLY SOURCE	44.8 PSI
HOUSE STREAM ALLOWANCE	250 GPM OUTSIDE
REMOTE SPRINKLER FLOW	24.0 GPM @ 18.4 PSI

PROTECTION DESIGN AND CONSULTING
2851 Camino Del Rio S. # 210
San Diego, California 92108
www.protectiondesign.com
phone 619.255.8964
fax 619.255.9547

3/31/2023 12:30:52 PM

IDENTIFICATION STAMP
DIV. OF THE STATE ARCHITECT
APP: 03-122664 INC:
REVIEWED FOR
SS ☑ FLS ☑ ACS ☑
DATE: 05/12/2023

pjhm architects
LICENSED ARCHITECT RICHARD W. RANSOM NO. C15985 REN. 02/25 STATE OF CALIFORNIA
PROTECTION DESIGN AND CONSULTING
2851 Camino Del Rio S. # 210
San Diego, California 2108
www.protectiondesign.com
phone 619.255.8964
fax 619.255.9547
REGISTERED PROFESSIONAL ENGINEER JOHNNY J. MILLER FP 1559 Exp. 04/24/23 FIRE PROTECTION STATE OF CALIFORNIA
SD Phone: 760.730.5527 • **LA** Office: 837 Traction Avenue, #410, Los Angeles, CA 90013 • **LA** Phone: 213.278.0172 • Web: pjhm.com

HIGHLAND HIGH SCHOOL
50M POOL & AQUATICS CENTER

KERN HIGH SCHOOL DISTRICT

(N) BUILDING C - FIRE SPRINKLER PIPING PLAN

OC Office: 24461 Ridge Route Drive #100, Laguna Hills, CA 92653 • **OC** Phone: 949.496.6191 • **SD** Office: 804 Pier View Way #103, Oceanside, CA 92054

FP-2.2

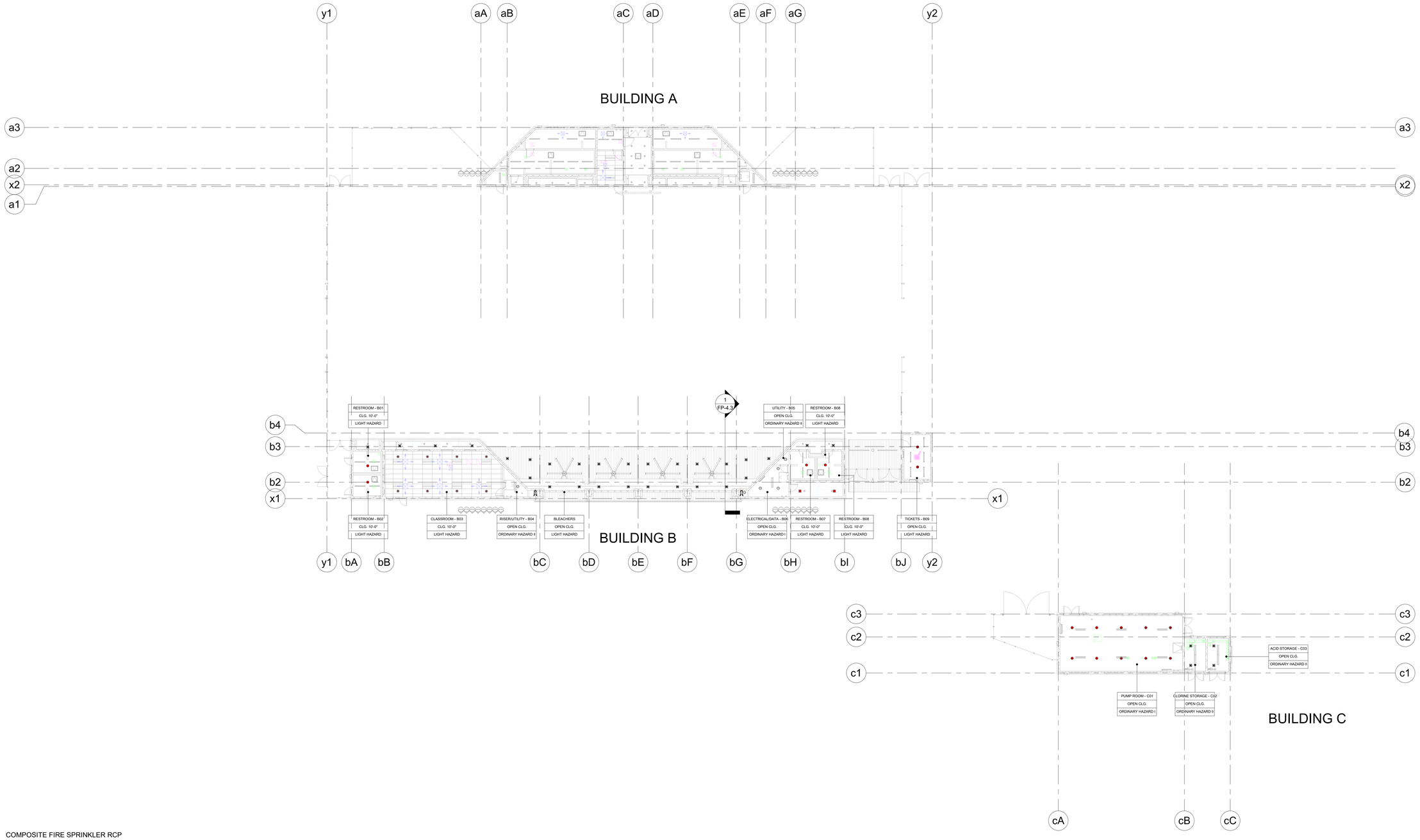

COMPOSITE FIRE SPRINKLER RCP PLAN
1/16" = 1'-0"

0' 8' 16' 32' 64'

IDENTIFICATION STAMP
DIV. OF THE STATE ARCHITECT
APP: 03-122664 INC:
REVIEWED FOR
SS ☑ FLS ☑ ACS ☑
DATE: 05/12/2023

pjhm architects

LICENSED ARCHITECT
THOMAS W. KRUSE
NO. C15585
REN. 02/25
STATE OF CALIFORNIA

PROTECTION DESIGN AND CONSULTING
2851 Camino Del Rio S. # 210
San Diego, California 2108
www.protectiondesign.com
phone 619.255.8964
fax 619.255.9547

REGISTERED PROFESSIONAL ENGINEER
JONATHAN S. MITCHELL
FP 1559
Exp. 06/30/24
FIRE PROTECTION
STATE OF CALIFORNIA

HIGHLAND HIGH SCHOOL
50M POOL & AQUATICS CENTER

KERN HIGH SCHOOL DISTRICT

FIRE SPRINKLER RCP PLAN - COMPOSITE

FP-3.0

OC Office: 24461 Ridge Route Drive #100, Laguna Hills, CA 92653 • OC Phone: 949.496.6191 • SD Office: 804 Pier View Way #103, Oceanside, CA 92054 • SD Phone: 760.730.5527 • LA Office: 837 Traction Avenue, #410, Los Angeles, CA 90013 • LA Phone: 213.278.0172 • Web: pjhm.com

3/31/2023 11:53:05 AM

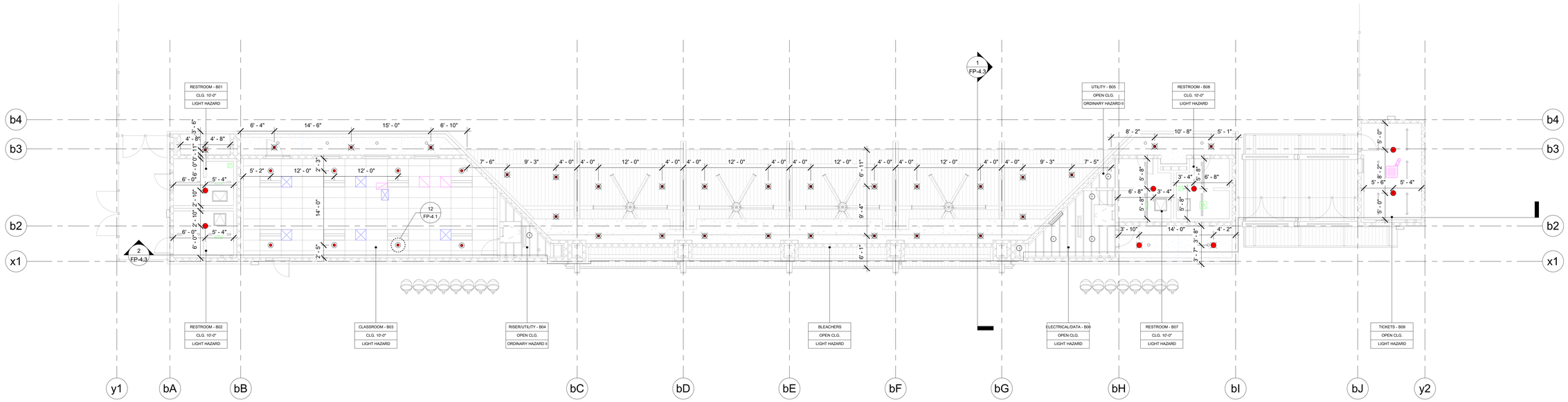

BLDG B - FIRE SPRINKLER RCP PLAN
1/8" = 1'-0"

0' 4' 8' 16' 32'

IDENTIFICATION STAMP
DIV. OF THE STATE ARCHITECT
APP: 03-122664 INC:
REVIEWED FOR
SS ☑ FLS ☑ ACS ☑
DATE: 05/12/2023

pjhm architects

LICENSED ARCHITECT
THOMAS W. KRUSE
NO. C15585
REN. 02/25
STATE OF CALIFORNIA

PROTECTION DESIGN AND CONSULTING
2851 Camino Del Rio S. # 210
San Diego, California 2108
www.protectiondesign.com
phone 619.255.8964
fax 619.255.9547

REGISTERED PROFESSIONAL ENGINEER
JONATHAN S. MITCHELL
FP 1559
Exp. 06/30/24
FIRE PROTECTION
STATE OF CALIFORNIA

HIGHLAND HIGH SCHOOL
50M POOL & AQUATICS CENTER

KERN HIGH SCHOOL DISTRICT

(N) BUILDING B - FIRE SPRINKLER RCP PLAN

FP-3.1

OC Office: 24461 Ridge Route Drive #100, Laguna Hills, CA 92653 • OC Phone: 949.496.6191 • SD Office: 804 Pier View Way #103, Oceanside, CA 92054 • SD Phone: 760.730.5527 • LA Office: 837 Traction Avenue, #410, Los Angeles, CA 90013 • LA Phone: 213.278.0172 • Web: pjhm.com

3/31/2023 11:53:09 AM

BLDG C - FIRE SPRINKLER RCP PLAN
1/8" = 1'-0"

0' 4' 8' 16' 32'

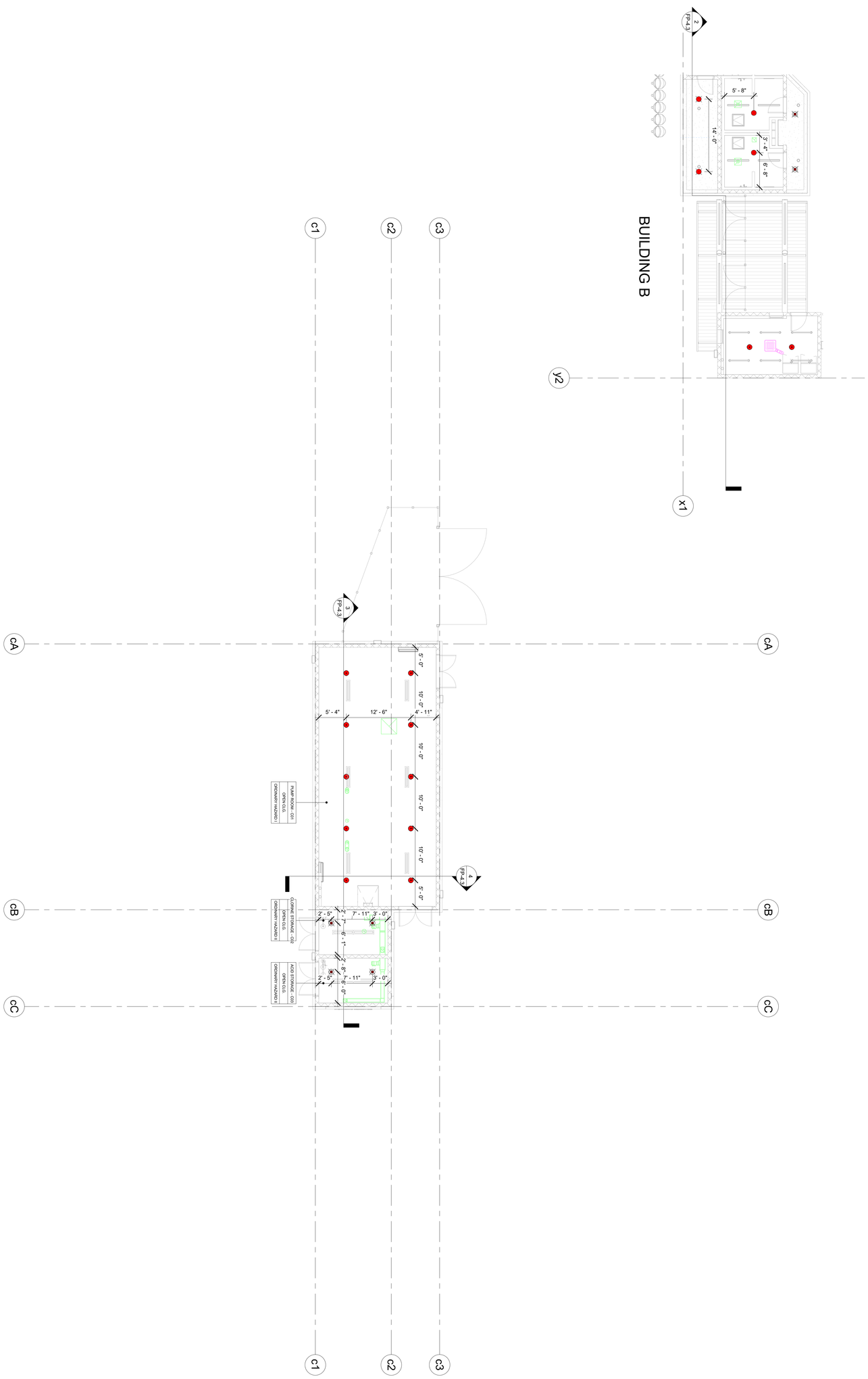

(N) - BUILDING C - FIRE SPRINKLER RCP PLAN

FP-3.2

HIGHLAND HIGH SCHOOL
50M POOL & AQUATICS CENTER

KERN HIGH SCHOOL DISTRICT

PROTECTION DESIGN AND CONSULTING
2901 Camino Del Rio S. # 210
San Diego, California 2108
www.protectiondesign.com
phone 619.255.6964
fax 619.255.5647

pjhm architects

OC Office: 24461 Ridge Route Drive #100, Laguna Hills, CA 92653 • **OC** Phone: 949.496.6191 • **SD** Office: 804 Pier View Way #103, Oceanside, CA 92054 • **SD** Phone: 760.730.5527 • **LA** Office: 837 Traction Avenue, #410, Los Angeles, CA 90013 • **LA** Phone: 213.278.0172 • Web: pjhm.com

IDENTIFICATION STAMP
DIV. OF THE STATE ARCHITECT
APP: 03-122664 INC:
REVIEWED FOR
SS ☑ FLS ☑ ACS ☑
DATE 05/12/2023

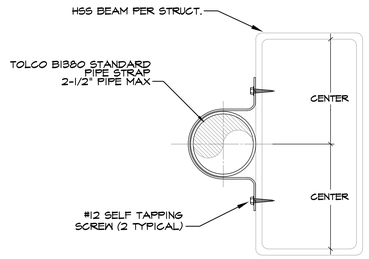

HSS BOX BEAM HANGER DETAIL

NO SCALE — SHOWN ON PLAN AS — 13 / FP-4.0

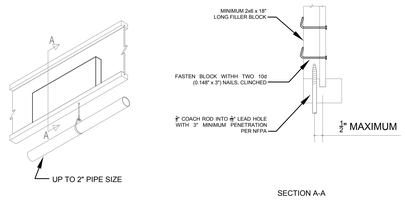

VERTICAL MOUNT

NOT TO SCALE — SHOWN ON PLAN AS — 9 / FP-4.0

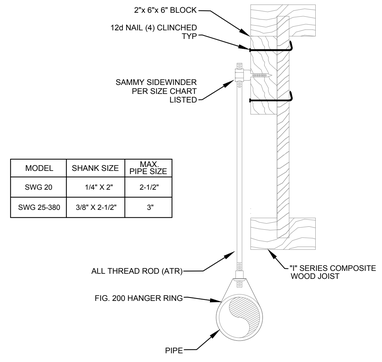

MODEL	SHANK SIZE	MAX. PIPE SIZE
SWG 20	1/4" X 2"	2-1/2"
SWG 25-380	3/8" X 2-1/2"	3"

SAMMY SIDEWINDER

NOT TO SCALE — SHOWN ON PLAN AS — 5 / FP-4.0

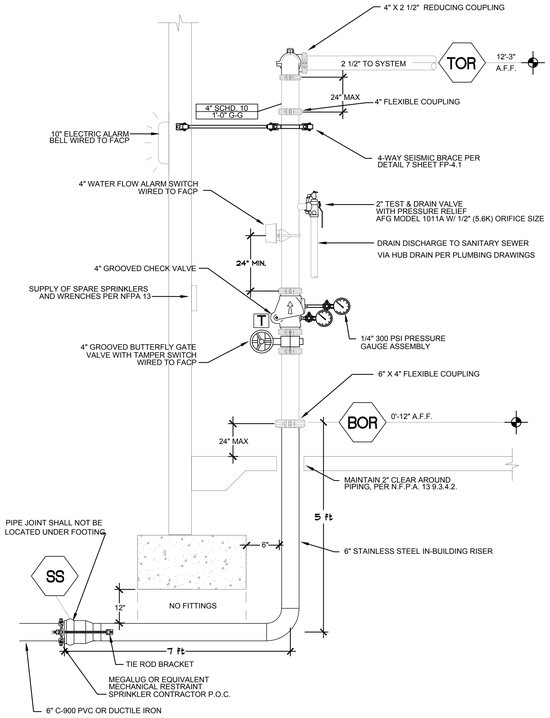

RISER DETAIL BLDG. C

NOT TO SCALE — SHOWN ON PLANS AS — 2 / FP-4.0

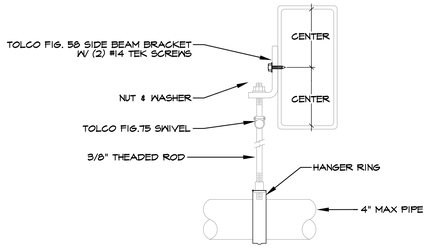

HSS BOX BEAM HANGER DETAIL

NO SCALE — SHOWN ON PLAN AS — 12 / FP-4.0

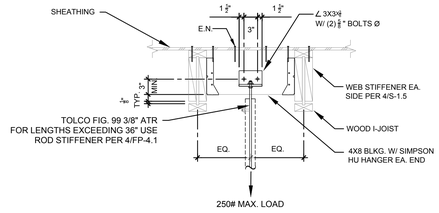

ROD HANGER AT WOOD I-JOIST

NOT TO SCALE — SHOWN ON PLAN AS — 8 / FP-4.0

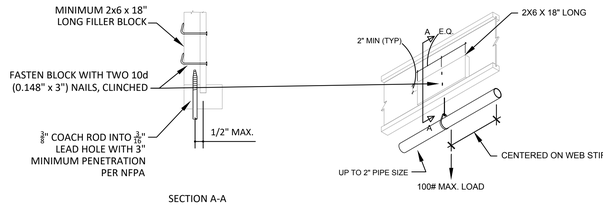

Screw penetration into web is allowed

VERTICAL MOUNT (MANUFACTURER'S DETAIL)

NOT TO SCALE — SHOWN ON PLAN AS — 4 / FP-4.0

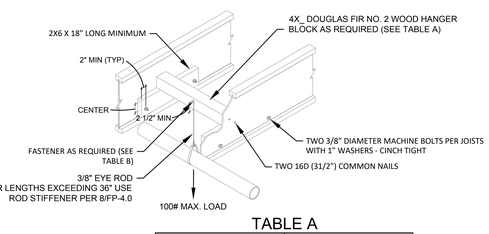

TABLE A

DISTANCE BETWEEN JOISTS	WOOD HANGER BLOCK SIZE
48" or less	4x6
96"	4x8

TABLE B

PIPE SIZE	FASTENER
3"	¼" x 3" lag screw
5"	¼" x 4" lag screw
6"	⅜" diameter bolt

COMPOSITE WOOD JOIST TRAPEZE

NOT TO SCALE — SHOWN ON PLAN AS — 11 / FP-4.0

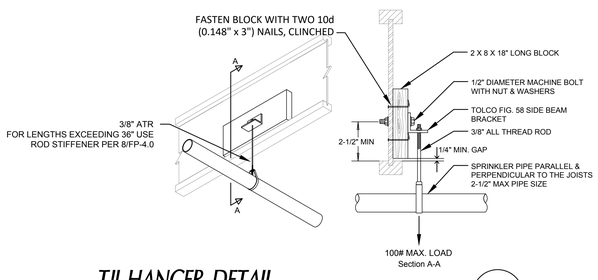

TJI HANGER DETAIL

NOT TO SCALE — SHOWN ON PLAN AS — 7 / FP-4.0

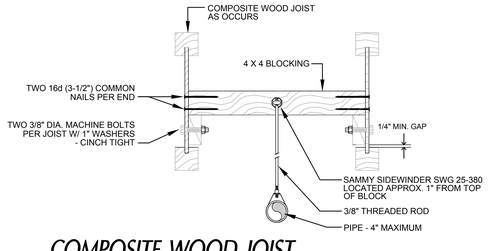

COMPOSITE WOOD JOIST TRAPEZE FOR 4" PIPE

NOT TO SCALE — SHOWN ON PLAN AS — 10 / FP-4.0

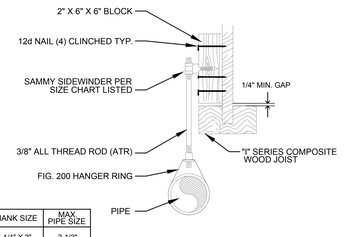

MODEL	SHANK SIZE	MAX. PIPE SIZE
SWG 20	1/4" X 2"	2-1/2"
SWG 25-380	3/8" X 2-1/2"	3"

SAMMY SIDEWINDER (I-JOIST STRUCTURE)

NOT TO SCALE — SHOWN ON PLAN AS — 6 / FP-4.0

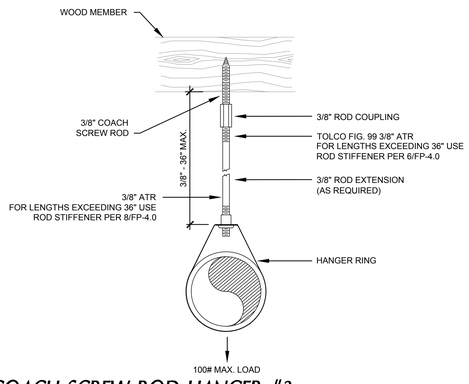

COACH SCREW ROD HANGER #3

NO SCALE — SHOWN ON PLAN AS — 3 / FP-4.0

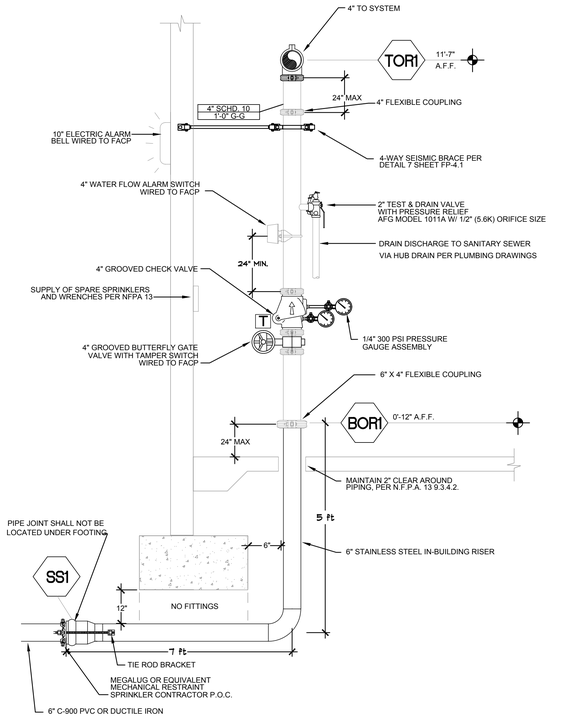

RISER DETAIL BLDG. B

NOT TO SCALE — SHOWN ON PLANS AS — 1 / FP-4.0

IDENTIFICATION STAMP
DIV. OF THE STATE ARCHITECT
APP: 03-122664 INC:
REVIEWED FOR
SS ☑ FLS ☑ ACS ☑
DATE: 05/12/2023

pjhm architects
LICENSED ARCHITECT
RICHARD W. RANDALL
REN. 02/25
STATE OF CALIFORNIA
PROTECTION DESIGN AND CONSULTING
2851 Camino Del Rio S. # 210
San Diego, California 2108
www.protectiondesign.com
phone 619.255.8964
fax 619.255.9547
REGISTERED PROFESSIONAL ENGINEER
JONATHAN S. MILLARD
FP 1559
Exp. 08/31/24
FIRE PROTECTION
STATE OF CALIFORNIA
LA Phone: 213.278.0172 • Web: pjhm.com
LA Office: 837 Traction Avenue, #410, Los Angeles, CA 90013 • SD Phone: 760.730.5527
SD Office: 804 Pier View Way #103, Oceanside, CA 92054 • OC Phone: 949.496.6191
OC Office: 24461 Ridge Route Drive #100, Laguna Hills, CA 92653

HIGHLAND HIGH SCHOOL
50M POOL & AQUATICS CENTER

KERN HIGH SCHOOL DISTRICT

DETAILS

FP-4.0

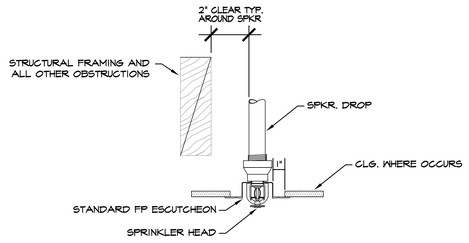

FIRE SPRINKLER CEILING DETAIL

NOT TO SCALE — 12 / FP-4.1

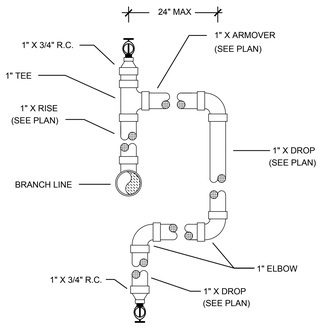

PEND. SPRIG ARM BACK DET.

NOT TO SCALE — 11 / FP-4.1

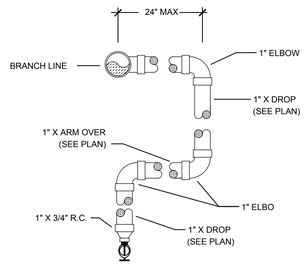

DROP PENDANT ARM BACK DET.

NOT TO SCALE — 10 / FP-4.1

FOR LOADS PERPENDICULAR TO I-JOIST

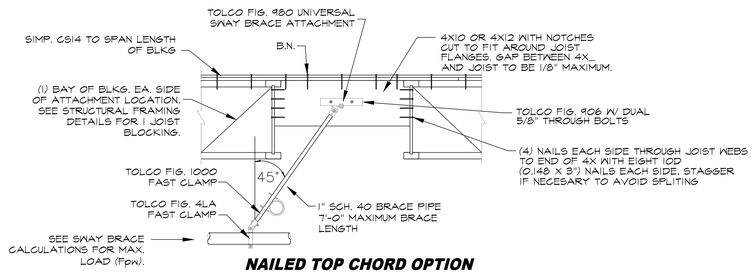

NAILED TOP CHORD OPTION

ALLOWABLE HORIZONTAL SEISMIC LOADS (lbs)

ANGLE TO VERTICAL (α)		
30°	45°	60°
340	590	600

(1) 600 IF CONNECTIONS IS CENTERED ON THE 4X

* LOADS ARE BASED ON THE CONTROLLING CONNECTION TO THE JOIST.
* THE CAPACITY OF THE BRACE FASTENER TO THE WOOD BLOCK MAY LIMIT OF THE CAPACITY OF THE DETAIL (see NFPA 13).
* LOADS INCLUDE A 1.60 DURATION FACTOR ADJUSTMENT.

LONGITUDINAL AND LATERAL SEISMIC BRACE AT I-JOIST

SHOWN ON PLAN AS — 9 / FP-4.1

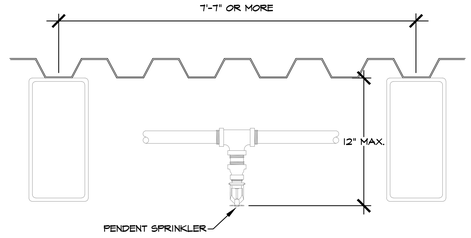

UNOBSTRUCTED CONSTRUCTION SPRINKLER CLEARANCES

NOT TO SCALE — 6 / FP-4.1

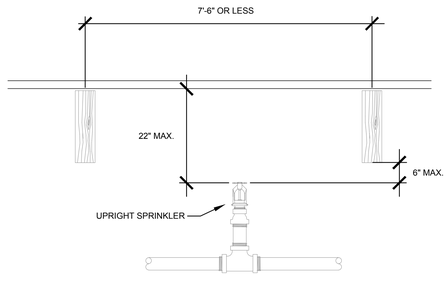

OBSTRUCTED CONSTRUCTION SPRINKLER CLEARANCES

NOT TO SCALE — 5 / FP-4.1

FOR LOADS PARALLEL TO I-JOIST JOIST

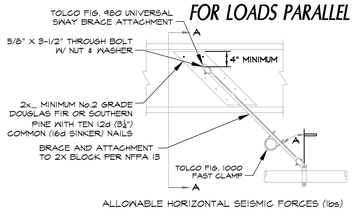

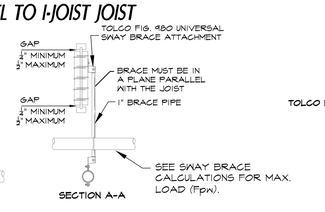

ALLOWABLE HORIZONTAL SEISMIC FORCES (lbs)

BLOCKING CONDITION	ANGLE TO VERTICAL (α)		
	30°	45°	60°
2x_ ON ONE SIDE	440	620	760
2x_ ON BOTH SIDES	520	730	900

* THE LOADS ARE BASED ON THE CONTROLLING CONNECTION TO THE JOIST.
* LOADS INCLUDE A 1.60 DURATION FACTOR ADJUSTMENT.

SWAY BRACE AT I-JOIST

NOT TO SCALE — SHOWN ON PLAN AS — 8 / FP-4.1

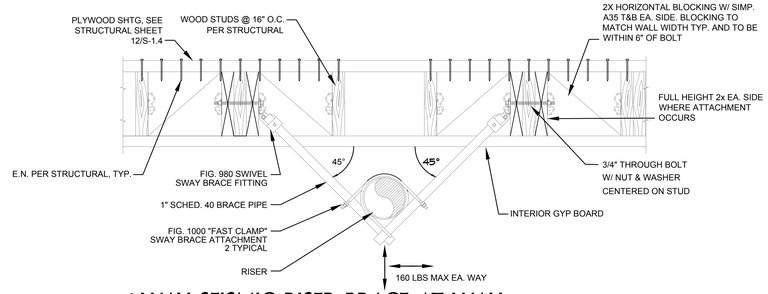

4-WAY SEISMIC RISER BRACE AT WALL

NOT TO SCALE — SHOWN ON PLAN AS — 7 / FP-4.1

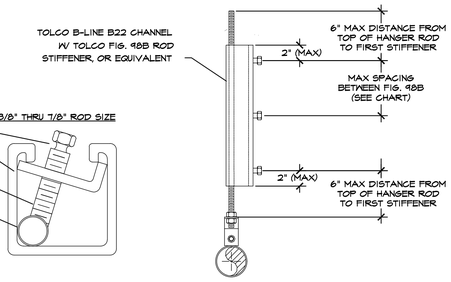

ROD SIZE	MAX. ROD LENGTH WITHOUT ROD STIFFENER	MAX. SPACING BETWEEN TOLCO FIG. 98
3/8"	36"	18"

COMPRESSION STRUT FOR ROD HANGER

NOT TO SCALE — 4 / FP-4.1

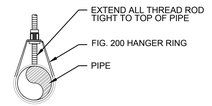

ROD STIFFENER DETAIL

NOT TO SCALE — SHOWN ON PLAN AS — 3 / FP-4.1

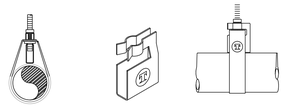

TOLCO FIG. 25 SURGE RESTRAINT

TYPE 1- FOR 1" AND 1-1/4" PIPE AND HANGER
TYPE 2 - FOR 1-1/2" AND 2" PIPE AND HANGER

TOLCO FIG. 25 IS DESIGNED TO BE USED ONLY WITH TOLCO BAND HANGERS FIG. 200 TO RESTRAIN THE UPWARD MOVEMENT OF PIPE AS IT OCCURS DURING SPRINKLER HEAD ACTIVATION OR SEISMIC ACTIVITY

LATERAL RESTRAINTS SHALL BE LOCATED WITHIN 2'-0" OF HANGER. THIS HANGER SHALL BE USED ALONG WITH VERTICAL RESTRAINTS.

VERTICAL RESTRAINT

NOT TO SCALE — SHOWN ON PLAN AS — 2 / FP-4.1

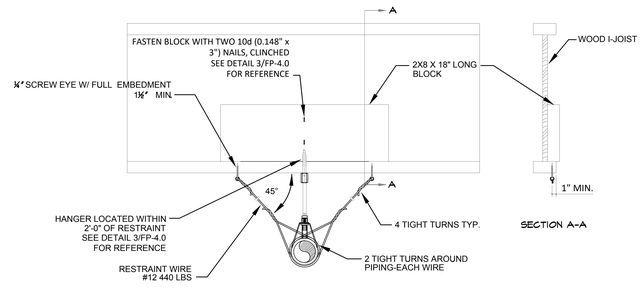

PIPE PERPENDICULAR TO I-JOIST

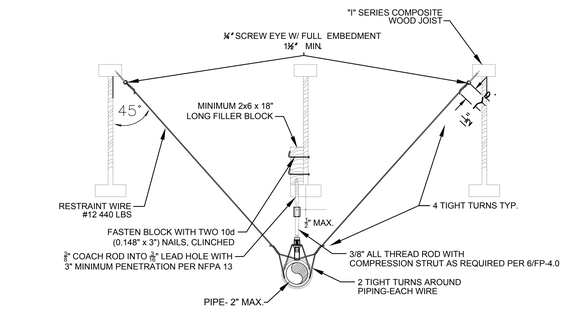

PIPE PARALLEL TO I-JOIST

SPLAY-WIRE LATERAL DETAIL (I-JOIST STRUCTURE)

NOT TO SCALE — SHOWN ON PLAN AS — 1 / FP-4.1

IDENTIFICATION STAMP
DIV. OF THE STATE ARCHITECT
APP: 03-122664 INC:
REVIEWED FOR
SS ☑ FLS ☑ ACS ☑
DATE: 05/12/2023

pjhm architects

LICENSED ARCHITECT
RICHARD W. RINNERT
No. C15985
REN. 02/25
STATE OF CALIFORNIA

PROTECTION
DESIGN AND
CONSULTING
2851 Camino Del Rio S. # 210
San Diego, California 2108
www.protectiondesign.com
phone 619.255.8964
fax 619.255.9547

REGISTERED PROFESSIONAL ENGINEER
JOHN A. MILLER
FP 1559
Exp. 09/30/23
FIRE PROTECTION
STATE OF CALIFORNIA

pjhm architects
OC Office: 24461 Ridge Route Drive #100, Laguna Hills, CA 92653 • OC Phone: 949.498.6191 • SD Office: 804 Pier View Way #103, Oceanside, CA 92054
SD Phone: 760.730.5527 • LA Office: 837 Traction Avenue, #410, Los Angeles, CA 90013 • LA Phone: 213.278.0172 • Web: pjhm.com

HIGHLAND HIGH SCHOOL
50M POOL & AQUATICS CENTER

KERN HIGH SCHOOL DISTRICT

DETAILS

FP-4.1

TOLBrace™ Seismic Bracing Calculations

V8.8.118

Project Address: 22-27 Highland HS Aquatic
2900 Royal Scots Way
Bakersfield, CA 93306
Job # 20-27

Contractor:
Address:
Phone:
Licence:

Calculations based on 2016 NFPA Pamphlet #13

Brace Information

Maximum Brace Length	7' 0" (2.134 m)
Diameter of Brace	1"
Type of Brace	Sch.40
Angle of Brace	45° Min.
Least Rad. of Gyration	0.42" (11 mm)
L/R Value	200
Max Horizontal Load	1310 lbs (594 kg)
Other Requirements - FM Approved Loads	

Fastener Information

Orientation to Connecting Surface	NFPA Type H
Fastener	
Type	5/8in. x 3 1/2in. Thru Bolt
Diameter	5/8in.
Length	3 1/2in.
Maximum Load	405 lbs (184 kg)
Prying Factor	N/A

TOLCO™ Brace Components

TOLCO™ Component	Listed Load	Adjusted Load
Fig. 1001 Clamp	1130 lbs (513 kg)	1130 lbs (513 kg)
Fig.980 - 5/8" Universal Swive	2790 lbs (1266 kg)	2790 lbs (1266 kg)
See Fastener Information		

*Calculation Based on CONCENTRIC Loading
*Please Note: These calculations are for TOLCO™ components only. Use of any other components voids these calculations and the listing of the assembly.

Seismic Brace Assembly Detail

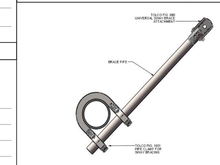

Brace Identification on Plans Lateral Sway Brace-H
Brace Type Lateral [X] Longitudinal [ ] 4-Way [ ]

Sprinkler System Load Calculation (Fpw = CpWp)

Cp = 0.4848

Diameter	Type	Length	Total Length	Weight Per Unit Length	Total Weight
2.5" (65 mm)	Sch. 10	25 ft (7.6 m)	25 ft (7.6 m)	5.89 lb/ft (8.77 kg/m)	147 lbs (67 kg)
1" (25 mm)	Sch. 40	65.5 ft (20 m)	65.5 ft (20 m)	2.05 lb/ft (3.05 kg/m)	134 lbs (61 kg)

Subtotal Weight	281 lbs (127 kg)
Wp (incl. 15%)	323 lbs (147 kg)
Total (Fpw)	157 lbs (71 kg)
Maximum Fpw per 9.3.5.5.2 (if applicable)	513 lb (232 kg)

Main Size	Type/Sch.	Spacing (ft)
2.5"	Sch. 10	25

(TOLBrace™ Version 8) Use of TOLBrace™ is subject to terms and conditions per the end user license agreement

2 1/2" LATERAL I-JOIST EQB CALC - TYPE H

TOLBrace™ Seismic Bracing Calculations

V8.8.118

Project Address: 22-27 Highland HS Aquatic
2900 Royal Scots Way
Bakersfield, CA 93306
Job # 20-27

Contractor:
Address:
Phone:
Licence:

Calculations based on 2016 NFPA Pamphlet #13

Brace Information

Maximum Brace Length	7' 0" (2.134 m)
Diameter of Brace	1"
Type of Brace	Sch.40
Angle of Brace	45° Min.
Least Rad. of Gyration	0.42" (11 mm)
L/R Value	200
Max Horizontal Load	1310 lbs (594 kg)
Other Requirements - FM Approved Loads	

Fastener Information

Orientation to Connecting Surface	NFPA Type B
Fastener	
Type	5/8in. x 3 1/2in. Thru Bolt
Diameter	5/8in.
Length	3 1/2in.
Maximum Load	285 lbs (129 kg)
Prying Factor	N/A

TOLCO™ Brace Components

TOLCO™ Component	Listed Load	Adjusted Load
Fig. 1001 Clamp	1130 lbs (513 kg)	1130 lbs (513 kg)
Fig.980 - 5/8" Universal Swive	2790 lbs (1266 kg)	2790 lbs (1266 kg)
See Fastener Information		

*Calculation Based on CONCENTRIC Loading
*Please Note: These calculations are for TOLCO™ components only. Use of any other components voids these calculations and the listing of the assembly.

Seismic Brace Assembly Detail

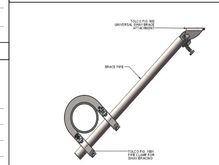

Brace Identification on Plans Lateral Sway Brace
Brace Type Lateral [X] Longitudinal [ ] 4-Way [ ]

Sprinkler System Load Calculation (Fpw = CpWp)

Cp = 0.4848

Diameter	Type	Length	Total Length	Weight Per Unit Length	Total Weight
2.5" (65 mm)	Sch. 10	25 ft (7.6 m)	25 ft (7.6 m)	5.89 lb/ft (8.77 kg/m)	147 lbs (67 kg)
1" (25 mm)	Sch. 40	65.5 ft (20 m)	65.5 ft (20 m)	2.05 lb/ft (3.05 kg/m)	134 lbs (61 kg)

Subtotal Weight	281 lbs (127 kg)
Wp (incl. 15%)	323 lbs (147 kg)
Total (Fpw)	157 lbs (71 kg)
Maximum Fpw per 9.3.5.5.2 (if applicable)	513 lb (232 kg)

Main Size	Type/Sch.	Spacing (ft)
2.5"	Sch. 10	25

(TOLBrace™ Version 8) Use of TOLBrace™ is subject to terms and conditions per the end user license agreement

2 1/2" LATERAL I-JOIST EQB CALC - TYPE B

TOLBrace™ Seismic Bracing Calculations

V8.8.118

Project Address: 22-27 Highland HS Aquatic
2900 Royal Scots Way
Bakersfield, CA 93306
Job # 20-27

Contractor:
Address:
Phone:
Licence:

Calculations based on 2016 NFPA Pamphlet #13

Brace Information

Maximum Brace Length	7' 0" (2.134 m)
Diameter of Brace	1"
Type of Brace	Sch.40
Angle of Brace	45° Min.
Least Rad. of Gyration	0.42" (11 mm)
L/R Value	200
Max Horizontal Load	1310 lbs (594 kg)
Other Requirements - FM Approved Loads	

Fastener Information

Orientation to Connecting Surface	NFPA Type H
Fastener	
Type	5/8in. x 3 1/2in. Thru Bolt
Diameter	5/8in.
Length	3 1/2in.
Maximum Load	405 lbs (184 kg)
Prying Factor	N/A

TOLCO™ Brace Components

TOLCO™ Component	Listed Load	Adjusted Load
Fig. 4L Clamp	650 lbs (295 kg)	650 lbs (295 kg)
Fig.980 - 5/8" Universal Swive	2790 lbs (1266 kg)	2790 lbs (1266 kg)
See Fastener Information		

*Calculation Based on CONCENTRIC Loading
*Please Note: These calculations are for TOLCO™ components only. Use of any other components voids these calculations and the listing of the assembly.

Seismic Brace Assembly Detail

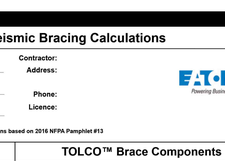

Brace Identification on Plans Longitudinal Sway Brace-H
Brace Type Lateral [ ] Longitudinal [X] 4-Way [ ]

Sprinkler System Load Calculation (Fpw = CpWp)

Cp = 0.4848

Diameter	Type	Length	Total Length	Weight Per Unit Length	Total Weight
2.5" (65 mm)	Sch. 10	75 ft (22.9 m)	75 ft (22.9 m)	5.89 lb/ft (8.77 kg/m)	442 lbs (200 kg)

Subtotal Weight	442 lbs (200 kg)
Wp (incl. 15%)	508 lbs (231 kg)
Total (Fpw)	246 lbs (112 kg)
Maximum Fpw per 9.3.5.5.2 (if applicable)	N/A

Main Size	Type/Sch.	Spacing (ft)
2.5"	Sch. 10	75

(TOLBrace™ Version 8) Use of TOLBrace™ is subject to terms and conditions per the end user license agreement

2 1/2" LONGITUDINAL I-JOIST EQB CALC - TYPE H

TOLBrace™ Seismic Bracing Calculations

V8.8.118

Project Address: 22-27 Highland HS Aquatic
2900 Royal Scots Way
Bakersfield, CA 93306
Job # 20-27

Contractor:
Address:
Phone:
Licence:

Calculations based on 2016 NFPA Pamphlet #13

Brace Information

Maximum Brace Length	7' 0" (2.134 m)
Diameter of Brace	1"
Type of Brace	Sch.40
Angle of Brace	45° Min.
Least Rad. of Gyration	0.42" (11 mm)
L/R Value	200
Max Horizontal Load	1310 lbs (594 kg)
Other Requirements - FM Approved Loads	

Fastener Information

Orientation to Connecting Surface	NFPA Type E
Fastener	
Type	1/2in. Unfinished Steel Bolt
Diameter	1/2in.
Length	N/A
Maximum Load	2050 lbs (930 kg)
Prying Factor	N/A

TOLCO™ Brace Components

TOLCO™ Component	Listed Load	Adjusted Load
Fig. 4L Clamp	650 lbs (295 kg)	650 lbs (295 kg)
Fig.980 - 5/8" Universal Swive	2790 lbs (1266 kg)	2790 lbs (1266 kg)
See Fastener Information		

*Calculation Based on CONCENTRIC Loading
*Please Note: These calculations are for TOLCO™ components only. Use of any other components voids these calculations and the listing of the assembly.

Seismic Brace Assembly Detail

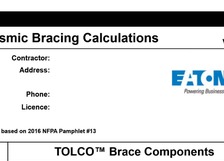

Brace Identification on Plans Longitudinal Sway Brace-E-1
Brace Type Lateral [ ] Longitudinal [X] 4-Way [ ]

Sprinkler System Load Calculation (Fpw = CpWp)

Cp = 0.4848

Diameter	Type	Length	Total Length	Weight Per Unit Length	Total Weight
2.5" (65 mm)	Sch. 10	75 ft (22.9 m)	75 ft (22.9 m)	5.89 lb/ft (8.77 kg/m)	442 lbs (200 kg)

Subtotal Weight	442 lbs (200 kg)
Wp (incl. 15%)	508 lbs (231 kg)
Total (Fpw)	246 lbs (112 kg)
Maximum Fpw per 9.3.5.5.2 (if applicable)	N/A

Main Size	Type/Sch.	Spacing (ft)
2.5"	Sch. 10	75

(TOLBrace™ Version 8) Use of TOLBrace™ is subject to terms and conditions per the end user license agreement

2 1/2" LONGITUDINAL HSS EQB CALC - TYPE E

TOLBrace™ Seismic Bracing Calculations

V8.8.118

Project Address: 22-27 Highland HS Aquatic
2900 Royal Scots Way
Bakersfield, CA 93306
Job # 20-27

Contractor:
Address:
Phone:
Licence:

Calculations based on 2016 NFPA Pamphlet #13

Brace Information

Maximum Brace Length	7' 0" (2.134 m)
Diameter of Brace	1"
Type of Brace	Sch.40
Angle of Brace	45° Min.
Least Rad. of Gyration	0.42" (11 mm)
L/R Value	200
Max Horizontal Load	1310 lbs (594 kg)
Other Requirements - FM Approved Loads	

Fastener Information

Orientation to Connecting Surface	NFPA Type E
Fastener	
Type	1/2in. Unfinished Steel Bolt
Diameter	1/2in.
Length	N/A
Maximum Load	2050 lbs (930 kg)
Prying Factor	N/A

TOLCO™ Brace Components

TOLCO™ Component	Listed Load	Adjusted Load
Fig. 4L Clamp	650 lbs (295 kg)	650 lbs (295 kg)
Fig.980 - 1/2" Universal Swive	2790 lbs (1266 kg)	2790 lbs (1266 kg)
See Fastener Information		

*Calculation Based on CONCENTRIC Loading
*Please Note: These calculations are for TOLCO™ components only. Use of any other components voids these calculations and the listing of the assembly.

Seismic Brace Assembly Detail

Brace Identification on Plans Lateral Sway Brace Steel-E
Brace Type Lateral [X] Longitudinal [ ] 4-Way [ ]

Sprinkler System Load Calculation (Fpw = CpWp)

Cp = 0.4848

Diameter	Type	Length	Total Length	Weight Per Unit Length	Total Weight
2.5" (65 mm)	Sch. 10	25 ft (7.6 m)	25 ft (7.6 m)	5.89 lb/ft (8.77 kg/m)	147 lbs (67 kg)
1" (25 mm)	Sch. 40	65.5 ft (20 m)	65.5 ft (20 m)	2.05 lb/ft (3.05 kg/m)	134 lbs (61 kg)

Subtotal Weight	281 lbs (127 kg)
Wp (incl. 15%)	323 lbs (147 kg)
Total (Fpw)	157 lbs (71 kg)
Maximum Fpw per 9.3.5.5.2 (if applicable)	513 lb (232 kg)

Main Size	Type/Sch.	Spacing (ft)
2.5"	Sch. 10	25

(TOLBrace™ Version 8) Use of TOLBrace™ is subject to terms and conditions per the end user license agreement

2 1/2" LATERAL HSS EQB CALC - TYPE E

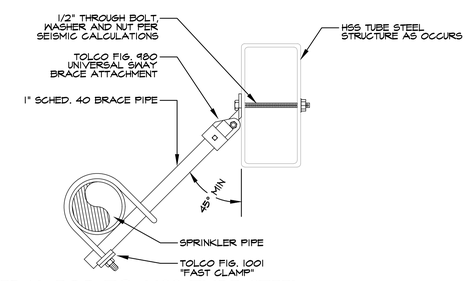

LATERAL EQB TO HSS TUBE STEEL

NOT TO SCALE — SHOWN ON PLAN AS — 5 FP-4.2

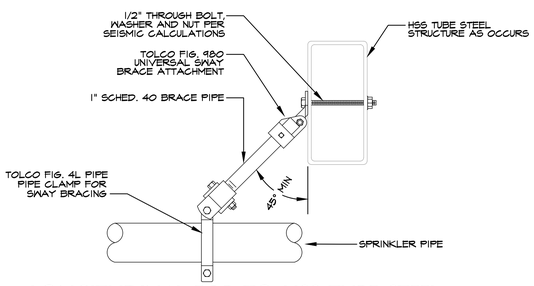

LONGITUDINAL EQB TO HSS TUBE STEEL

NOT TO SCALE — SHOWN ON PLAN AS — 4 FP-4.2

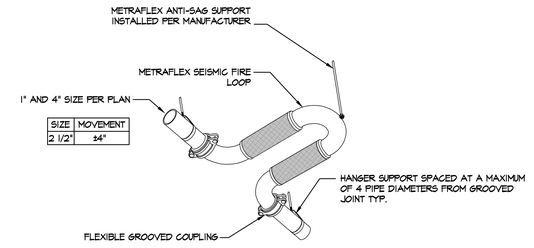

METRAFLEX SEISMIC LOOP

NOT TO SCALE — 3 FP-4.2

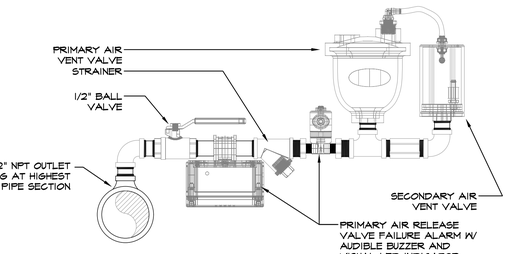

AUTOMATIC DUAL AIR-RELEASE VALVE DETAIL

NOT TO SCALE — SHOWN ON PLAN AS — 2 FP-4.2

SYSTEM NO. C - AJ - 1154
F - RATINGS - 3 HOUR
T RATING - 1/4 HOUR
L RATING AT AMBIENT - LESS THAN 1 CFM / SQ. FT.
L RATING AT 400° F - 4 CFM / SQ. FT.

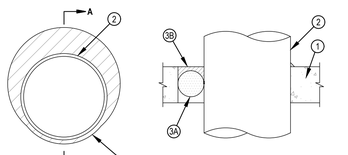

SECTION A-A

1. FLOOR OR WALL ASSEMBLY - MINIMUM 4-1/2" THICK REINFORCED LIGHTWEIGHT OR NORMAL WEIGHT (100-150 PCF) CONCRETE. WALL MAY ALSO BE CONSTRUCTED OF ANY UL CLASSIFIED CONCRETE BLOCKS. MAXIMUM DIAMETER OF OPENING IS 14".

3. THROUGH PENETRANTS - ONE METALLIC PIPE, TUBING OR CONDUIT TO BE INSTALLED CONCENTRICALLY OR ECCENTRICALLY WITHIN THE FIRESTOP SYSTEM. THE ANNULAR SPACE SHALL BE MINIMUM 0" TO MAXIMUM 3-1/4". PIPE, CONDUIT OR TUBING TO BE RIGIDLY SUPPORTED ON BOTH SIDES OF WALL ASSEMBLY. THE FOLLOWING TYPES AND SIZES OF METALLIC PIPS, CONDUITS OR TUBING MAY BE USED:

   A. STEEL PIPE - NOMINAL 10" DIAMETER (OR SMALLER) SCHEDULE 10 (OR HEAVIER) STEEL PIPE.
   B. CONDUIT - NOMINAL 4" DIAMETER (OR SMALLER) ELECTRICAL METALLIC TUBING OR RIGID STEEL CONDUIT.
   C. COPPER TUBING - NOMINAL 4" DIAMETER (OR SMALLER) TYPE L (OR HEAVIER) COPPER TUBE.
   D. COPPER PIPE - NOMINAL 4" DIAMETER (OR SMALLER) REGULAR (OR HEAVIER) COPPER PIPE.

4. FIRESTOP SYSTEM - THE FIRESTOP SYSTEM SHALL CONSIST OF THE FOLLOWING:

   A. PACKING MATERIAL - MINERAL WOOL BATT INSULATION FIRMLY PACKED INTO OPENINGS AS A PERMANENT FORM. PACKING MATERIAL TO BE RECESSED FROM THE TOP SURFACE OF THE FLOOR OR FROM BOTH SURFACES OF A WALL AS REQUIRED TO ACCOMMODATE THE REQUIRED THICKNESS OF FILL MATERIAL. AS AN OPTION TO THE ABOVE, BACKER ROD AND / OR FOAMED PLASTIC BACKER MATERIAL MAY BE USED.

   B. FILL VOID OR CAVITY MATERIALS - SEALANT - MIN 1/2" THICKNESS OF FILL MATERIAL APPLIED WITHIN THE ANNULUS, FLUSH WITH TOP SURFACE OF FLOOR OR BOTH SURFACES OF WALL. AT THE POINT CONTACT LOCATION BETWEEN PIPE AND CONCRETE, A MINIMUM 1/2" DIAMETER BEAD OF FILL MATERIAL SHALL BE APPLIED AT THE CONCRETE / PIPE INTERFACE ON THE TOP SURFACE OF FLOOR AND BOTH SURFACES OF A WALL.

HILTI CONSTRUCTION CHEMICALS, DIV OF HILTI INC. - FS-ONE SEALANT
*BEARING THE UL CLASSIFICATION MARK

CAJ 1154
HILTI FIRESTOP SYSTEMS c UL us

CONCRETE FIRE STOP PENETRATION

NOT TO SCALE — SHOWN ON PLAN AS — 1 FP-4.2

IDENTIFICATION STAMP
DIV. OF THE STATE ARCHITECT
APP: 03-122664 INC:
REVIEWED FOR
SS ☑ FLS ☑ ACS ☑
DATE: 05/12/2023

pjhm architects
LA Phone: 213.278.0172 • Web: pjhm.com
LICENSED ARCHITECT RICHARD W. RANDALL REN. 02/25 STATE OF CALIFORNIA
PROTECTION DESIGN AND CONSULTING
2851 Camino Del Rio S. # 210
San Diego, California 2108
www.protectiondesign.com
phone 619.255.8964
fax 619.255.9547
REGISTERED PROFESSIONAL ENGINEER JONATHAN J. MILLARD FP 1559 Exp. 09/24 FIRE PROTECTION STATE OF CALIFORNIA
LA Office: 837 Traction Avenue, #410, Los Angeles, CA 90013 • SD Office: 804 Pier View Way #103, Oceanside, CA 92054 • OC Phone: 949.496.6191 • SD Phone: 760.730.5527 • OC Office: 24461 Ridge Route Drive #100, Laguna Hills, CA 92653

HIGHLAND HIGH SCHOOL
50M POOL & AQUATICS CENTER

KERN HIGH SCHOOL DISTRICT

DETAILS

FP-4.2

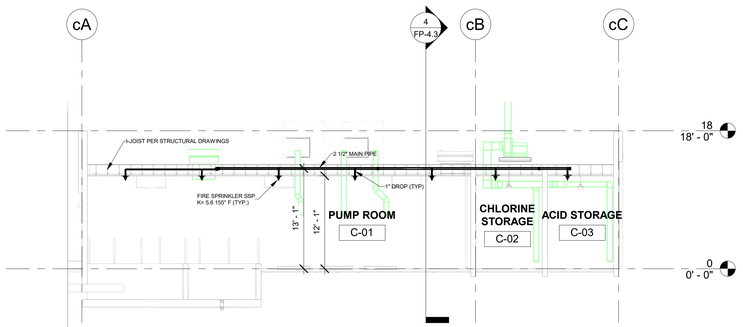

Building C - Section 3
1/8" = 1'-0"

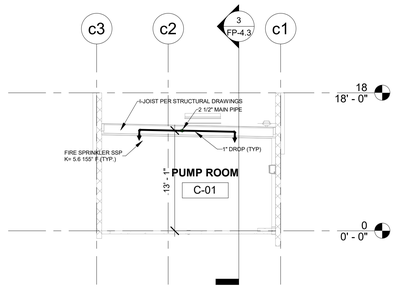

Building C - Section 4
1/8" = 1'-0"

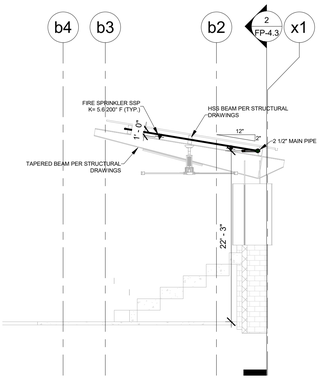

Building B - Section 1
1/8" = 1'-0"

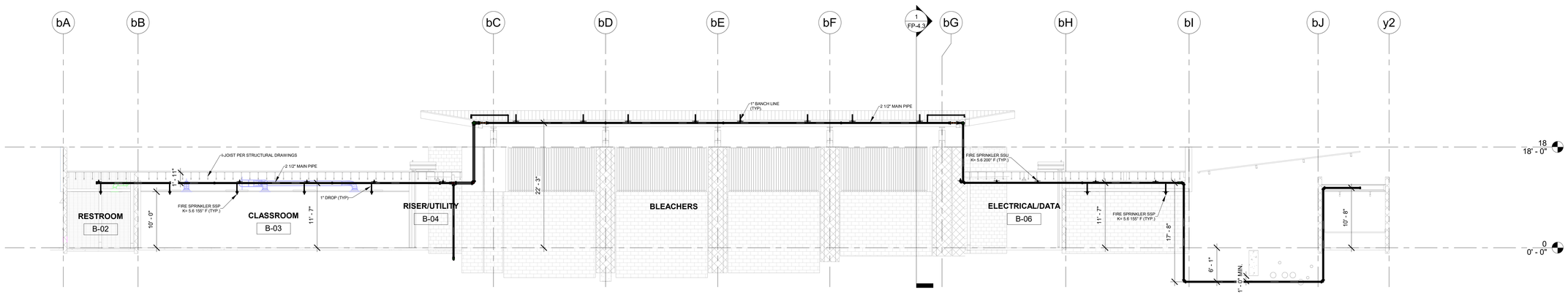

Building B - Section 2
1/8" = 1'-0"

0' 4' 8' 16' 32'

3/31/2023 11:56:24 AM

IDENTIFICATION STAMP
DIV. OF THE STATE ARCHITECT
APP: 03-122664 INC:
REVIEWED FOR
SS ☑ FLS ☑ ACS ☑
DATE: 05/12/2023

pjhm architects

LICENSED ARCHITECT
THOMAS W. KRUSE
NO. C15585
REN. 02/25
STATE OF CALIFORNIA

PROTECTION
DESIGN AND
CONSULTING
2851 Camino Del Rio S. # 210
San Diego, California 2108
www.protectiondesign.com
phone 619.255.8964
fax 619.255.9547

REGISTERED PROFESSIONAL ENGINEER
JONATHAN S. MITCHELL
FP 1559
Exp. 06/30/24
FIRE PROTECTION
STATE OF CALIFORNIA

HIGHLAND HIGH SCHOOL
50M POOL & AQUATICS CENTER

KERN HIGH SCHOOL DISTRICT

SECTIONS

FP-4.3

OC Office: 24461 Ridge Route Drive #100, Laguna Hills, CA 92653 • OC Phone: 949.496.6191 • SD Office: 804 Pier View Way #103, Oceanside, CA 92054 • SD Phone: 760.730.5527 • LA Office: 837 Traction Avenue, #410, Los Angeles, CA 90013 • LA Phone: 213.278.0172 • Web: pjhm.com

ABBREVIATIONS

4S/DP	4" SQUARE BY 2-1/8" DEEP BOX	GFCI	GROUND FAULT CIRCUIT INTERRUPTER	NO	NORMALLY OPENED
ADA	AMERICAN WITH DISABILITIES ACT	GFP	GROUND FAULT PROTECTION	NF	NON-FUSED
A.F.F.	ABOVE FINISH FLOOR	GE or GEC	GROUNDING ELECTRODE CONDUCTOR	NIC	NOT IN CONTRACT
A.F.G.	ABOVE FINISH GRADE	HACR	HEATING AIR CONDITIONING	N.T.S.	NOT TO SCALE
AWG	AMERICAN WIRE GAUGE		REFRIGERATION	NL	NIGHT LIGHT
AMP, A	AMPERE	HOA	HAND-OFF-AUTO	NO. or #	NUMBER
A.I.C. or AIC	AMPERES INTERRUPTING CAPACITY (SYMMETRICAL)	HVAC	HEATING, VENTILATING AND AIR CONDITIONING	OFCI	OWNER FURNISHED, CONTRACTOR INSTALLED
A.F.C. or AFC	AVAILABLE FAULT CURRENT	H.,W.,D.,L.	HEIGHT, WIDTH, DEPTH, LENGTH	%Z	PERCENT IMPEDANCE
AF/AT	AMP FRAME, AMP TRIP	HID	HIGH INTENSITY DISCHARGE	PH. or ø	PHASE
AHJ	AUTHORITY HAVING JURISDICTION	HP	HORSEPOWER	PC	PHOTOCELL
AS/AF	AMP SWITCH, AMP FUSE	HPS	HIGH PRESSURE SODIUM	P.C.	PLUMBING CONTRACTOR
ATS	AUTOMATIC TRANSFER SWITCH	IN. or "	INCHES	P	POLE
AVG	AVERAGE	I/G	ISOLATED GROUND	PVC	POLY VINYL CHLORIDE
BJ	BONDING JUMPER	IBC	INTERNATIONAL BUILDING CODE	PDU	POWER DISTRIBUTION UNIT
BDF	BUILDING DISTRIBUTION FRAME	I.D.C.S.	INTEGRATED DIMMING CONTROL PANEL	PRIMARY	OVER 600 VOLTS
BR	BRANCH	IDF	INTERMEDIATE DISTRIBUTION FRAME	PROVIDE	FURNISH, INSTALL AND CONNECT
BLDG	BUILDING	JBOX	JUNCTION BOX	PT	POTENTIAL TRANSFORMER
CBC	CALIFORNIA BUILDING CODE	K	DEGREE KELVIN	PA	PUBLIC ADDRESS
CEC	CALIFORNIA ELECTRICAL CODE	KCMIL	THOUSAND CIRCULAR MILS	(R)	DENOTES RELOCATED DEVICE
CIRC., CKT.	CIRCUIT	KVA	KILOVOLT AMPERES		LOCATION.
CB	CIRCUIT BREAKER	KW	KILOWATT	REC, RECEPT	RECEPTACLE
CSFD	COMBINATION SMOKE FIRE DAMPER	KWH	KILOWATT HOUR	REF	REFRIGERATOR
C	CONDUIT	LCL	LONG CONTINUOUS LOAD	RGS	RIGID GALVANIZED STEEL
C.O.	CONDUIT ONLY, COMPLETE WITH PULLSTRING	LF., L.F.	LINEAR FEET	RMS	ROOT MEAN SQUARE
		LTG, LTS	LIGHTING	SCC	SHORT CIRCUIT CURRENT
CONN	CONNECTED	LPS	LOW PRESSURE SODIUM	SCCR	SHORT CIRCUIT CURRENT RATING
CPT	CONTROL POWER TRANSFORMER	MAX.	MAXIMUM	SCS	STRUCTURED CABLING SYSTEM
CLCB	CURRENT LIMITING CIRCUIT BREAKER	MBJ	MAIN BONDING JUMPER	SFD	SMOKE FIRE DAMPER
CLF	CURRENT LIMITING FUSE	MDF	MAIN DISTRIBUTION FRAME	SECONDARY	600 VOLTS AND LESS
CT	CURRENT TRANSFORMER	MOCP	MAXIMUM OVERCURRENT PROTECTION	SMACNA	SHEET METAL AND AIR COND. CONTRACTOR'S NAT'L ASSOC.
(D)	EXISTING DEVICE TO BE DEMOLISHED	MCB	MAIN CIRCUIT BREAKER		
DAS	DISTRIBUTED ANTENNA SYSTEM	MLO	MAIN LUGS ONLY	SQ.	SQUARE
DIA	DIAMETER	M.C.	MECHANICAL CONTRACTOR	SSBJ	SUPPLY SIDE BONDING JUMPER
DISC	DISCONNECT	M	METER	SBJ	SYSTEM BONDING JUMPER
DIST	DISTRIBUTION	M/M	METER MAIN	TC	TIMECLOCK
D.P.C.S.	DIMMING PANEL CONTROL STATION	MV	MERCURY VAPOR	TEL/DATA	TELEPHONE AND DATA
E.C.	ELECTRICAL CONTRACTOR	MH	METAL HALIDE	TV	TELEVISION
EMS	ENERGY MANAGEMENT CONTROL SYSTEM	MIN.	MINIMUM	T.V.S.S.	TRANSIENT VOLTAGE SURGE SUPPRESSION
EMT	ELECTRICAL METALLIC TUBING	MCA	MINIMUM CIRCUIT AMPS		
ENT	ELECTRICAL NON-METALLIC TUBING	MCC	MOTOR CONTROL CENTER	TYP	TYPICAL
EWC	ELECTRIC WATER COOLER	MCM	THOUSAND CIRCULAR MILS	U.G.P.S.	UNDERGROUND PULL SECTION
E.P.O.	EMERGENCY POWER OFF	MCP	MOTOR CIRCUIT PROTECTOR	U.O.N.	UNLESS OTHERWISE NOTED
E-O-L	END-OF-LINE CIRCUIT TERMINATOR	MFR.	MANUFACTURER	U.P.S., or UPS	UNINTERRUPTABLE POWER SYSTEM
EF	EXHAUST FAN	MTD	MOUNTED	VAV	VARIABLE AIR VOLUME
EGC or EG or E/G	EQUIPMENT GROUND (GREEN)	MW	MICROWAVE	V	VOLTS
(E)	EXISTING DEVICE TO REMAIN	NATS	NON AUTOMATIC DISCONNECT	VA	VOLT AMPERES
EP	EXPLOSION PROOF	NEC	NATIONAL ELECTRICAL CODE	VD	VOLTAGE DROP
(ER)	EXISTING DEVICE TO BE RELOCATED	NEMA	NATIONAL ELECTRICAL MANUFACTURER'S ASSOCIATION	WP	WEATHERPROOF
FT or '	FEET	NC	NORMALLY CLOSED	W	WIRE
FA or F.A.	FIRE ALARM			XFMR	TRANSFORMER
FLA	FULL LOAD AMPS				
GRD	GROUND				

FIRE ALARM SYSTEM SYMBOLS

SEE FIRE ALARM OR CENTRAL MONITORING SYSTEM DRAWINGS FOR FIRE ALARM SYMBOLS.

SIGNAL SYSTEM SYMBOLS

- B — WALL MOUNTED CLOCK. FIELD VERIFY MOUNTING HEIGHT PRIOR TO INSTALLATION. "B" INDICATES BATTERY OPERATED CLOCK. "D" INDICATES DIGITAL CLOCK, "NO LETTER" INDICATES ANALOG CLOCK. REFER TO SPECIFICATIONS.
- —— C —— CONCEALED CLOCK CONDUIT RUN 1/2" CONDUIT, OR AS NOTED, WITH CONDUCTORS PER SPECIFICATIONS.
- HTV — TV OUTLET, WALL MOUNTED. STUB A 3/4" C.O. UP 6" ABOVE THE ACCESSIBLE CEILING AND PROVIDE BUSHING.
- TV — TV OUTLET FLUSH CEILING MOUNTED.
- —— TV —— CONCEALED TELEVISION CONDUIT RUN, 3/4" CONDUIT, OR AS NOTED, WITH CONDUCTORS. REFER TO SPECIFICATIONS.
- HM — MICROPHONE OUTLET, WALL MOUNTED. PROVIDE 3/4" C.O. (WITH PULL ROPE) UP TO 6" ABOVE ACCESSIBLE CEILING SPACE. PROVIDE BUSHING AT EACH END.
- M — MICROPHONE OUTLET, FLUSH CEILING MOUNTED.
- —— M —— CONCEALED MICROPHONE CONDUIT RUN, 3/4" CONDUIT, OR AS NOTED, WITH CONDUCTORS. REFER TO SPECIFICATIONS.
- HS V — SURFACE WALL MOUNTED SPEAKER. "V" INDICATES VOLUME CONTROL.
- S V — SURFACE MOUNTED SPEAKER. "V" INDICATES VOLUME CONTROL.
- HS V — FLUSH WALL MOUNTED SPEAKER. "V" INDICATES VOLUME CONTROL.
- S V — CEILING FLUSH MOUNTED SPEAKER. "V" INDICATES VOLUME CONTROL.
- SM V — ABOVE CEILING MOUNTED SPEAKER. "V" INDICATES VOLUME CONTROL.
- HV — VOLUME CONTROL, WALL MOUNTED.
- —— S —— CONCEALED SPEAKER CONDUIT RUN 3/4" CONDUIT, OR AS NOTED, WITH CONDUCTORS. REFER TO SPECIFICATIONS.

SECURITY ALARM SYSTEM SYMBOLS

- SACP — SECURITY ALARM CONTROL PANEL. SEE SPECIFICATIONS.
- SPS — SECURITY SYSTEM POWER SUPPLY. SEE SPECIFICATIONS.
- MT — SECURITY ALARM DUAL TECHNOLOGY MOTION SENSOR. SEE SPECIFICATIONS.
- DC — SECURITY ALARM DOOR CONTACT. SEE SPECIFICATIONS.
- KP — SECURITY ALARM KEY PAD. SEE SPECIFICATIONS.
- IKP — INTRUSION ALARM KEY PAD, SEE SPECIFICATIONS.
- —— SA —— SECURITY ALARM SYSTEM BRANCH CIRCUIT PER SECURITY ALARM RISER DIAGRAM AND/OR SPECIFICATIONS.

ACCESS CONTROL SYSTEM SYMBOLS

- ACCP — ACCESS CONTROL PANEL. SEE SPECIFICATIONS.
- APS — ACCESS CONTROL SYSTEM POWER SUPPLY. SEE SPECIFICATIONS.
- LPS — ACCESS CONTROL SYSTEM LOCK POWER SUPPLY. SEE SPECIFICATIONS.
- CR — ACCESS CONTROL CARD READER. SEE SPECIFICATIONS.
- —— AC —— ACCESS CONTROL SYSTEM BRANCH CIRCUIT PER ACCESS CONTROL RISER DIAGRAM AND/OR SPECIFICATIONS.

ANNOTATIONS

- A — PANEL CALLOUT, "A" INDICATES PANELBOARD OR EQUIPMENT DESIGNATION.
- AC / 2 — MECHANICAL EQUIPMENT CALLOUT, "AC" INDICATES UNIT TYPE AND "2" INDICATES UNIT NUMBER. REFER TO MECHANICAL DRAWINGS FOR EXACT LOCATION AND ELECTRICAL REQUIREMENTS.
- 3 / E-1 — DETAIL CALLOUT, "3" INDICATES DETAIL NUMBER "E-1" INDICATES SHEET NUMBER.
- 2 — PLAN NOTE REFERENCE, REFER TO NOTES ON SHEET, OR AS DIRECTED.
- 4 — REVISION REFERENCE.
- WYE CONFIGURATION — DELTA CONFIGURATION — GROUND

CCTV SYSTEM SYMBOLS

- CCVMS — VIDEO MANAGEMENT SYSTEM, CCTV HEADEND. SEE SPECIFICATIONS.
- CCWS — CCTV WORKSTATION AND MONITOR. SEE SPECIFICATIONS.
- CCTV FIXED POSITION CAMERA. SEE SPECIFICATIONS.
- CCTV PAN/TILT CAMERA. SEE SPECIFICATIONS.
- —— CC —— CCTV SYSTEM BRANCH CIRCUIT PER CCTV SYSTEM RISER DIAGRAM AND/OR SPECIFICATIONS.

TELEPHONE/DATA SYMBOLS

- TELEPHONE OUTLET BOX, WALL MOUNTED. STUB A 1"C.O. UP 6" ABOVE THE ACCESSIBLE CEILING AND PROVIDE A BUSHING. 4S/DP MINIMUM WITH SINGLE GANG RING.
- DATA OUTLET BOX, WALL MOUNTED. STUB A 1"C.O. UP 6-INCHES ABOVE THE ACCESSIBLE CEILING AND PROVIDE A BUSHING. 4S/DP MINIMUM WITH SINGLE GANG RING.
- COMBINATION TELEPHONE AND DATA OUTLET BOX, WALL MOUNTED. STUB A 1"C.O. UP 6-INCHES ABOVE THE ACCESSIBLE CEILING AND PROVIDE A BUSHING. 4S/DP MINIMUM WITH SINGLE GANG RING.
- TELEPHONE OUTLET BOX, FLUSH MOUNTED IN CEILING. MOUNT FLUSH IN FLOOR WHEN INDICATED IN A FLOOR BOX SYMBOL.
- DATA OUTLET BOX FLUSH MOUNTED IN CEILING. MOUNT FLUSH IN FLOOR WHEN INDICATED IN A FLOOR BOX SYMBOL.
- COMBINATION TELEPHONE AND DATA OUTLET BOX FLUSH MOUNTED IN CEILING. MOUNT FLUSH IN FLOOR WHEN INDICATED IN A FLOOR BOX SYMBOL.
- TELEPHONE OUTLET BOX, WALL MOUNTED 6-INCHES ABOVE COUNTER OR SPLASH. STUB A 1"C.O. UP 6-INCHES ABOVE THE ACCESSIBLE CEILING AND PROVIDE A BUSHING. 4S/DP MINIMUM WITH SINGLE GANG RING.
- DATA OUTLET BOX, WALL MOUNTED 6-INCHES ABOVE COUNTER OR SPLASH. STUB A 1"C.O. UP 6-INCHES ABOVE THE ACCESSIBLE CEILING AND PROVIDE A BUSHING. 4S/DP MINIMUM WITH SINGLE GANG RING.
- COMBINATION TELEPHONE AND DATA OUTLET BOX, WALL MOUNTED 6-INCHES ABOVE COUNTER OR SPLASH. STUB A 1"C.O. UP 6-INCHES ABOVE THE ACCESSIBLE CEILING AND PROVIDE A BUSHING. 4S/DP MINIMUM WITH SINGLE GANG RING.
- COMBINATION TELEPHONE AND DATA OUTLET BOX MOUNTED IN ACCESSIBLE CEILING SPACE OR IN FLOOR BOX PER PLAN FOR FLEXIBLE CONNECTION TO FURNITURE SYSTEM. VERIFY CONNECTION REQUIREMENTS WITH MANUFACTURER PRIOR TO ROUGH-IN. MOUNT FLUSH IN FLOOR WHEN INDICATED IN A FLOOR BOX SYMBOL.
- COMBINATION TELEPHONE AND DATA OUTLET, WALL MOUNTED AT +18-INCHES A.F.F. FOR FLEXIBLE CONNECTION TO FURNITURE SYSTEM. PROVIDE THE FOLLOWING:
  - IN A NON-RATED INSULATED WALL, OR NON-RATED UNINSULATED WALL, PROVIDE A 2-GANG MUD RING OR CADDY #RBS SERIES BOX MOUNTING BRACKET (EQUAL BY B-LINE OR RAYCO) WITH (2) 1-1/2"C.O. WITH PULL STRING TO ACCESSIBLE CEILING. PROVIDE 1-1/2" BUSHINGS AT CONDUIT ENDS. REFER TO ARCHITECTURAL PLANS FOR WALL CONSTRUCTION/TYPE AND CEILING CONDITIONS.
  - IN A RATED WALL, PROVIDE (1) 4S/DP BOX WITH (2) 1-1/4"C.O. AND (1) 4S/DP BOX WITH (1) 1-1/4"C.O. WITH PULL STRINGS IN EACH CONDUIT TO ACCESSIBLE CEILING. PROVIDE 1-1/4" BUSHINGS AT CONDUIT ENDS. UTILIZE CADDY #RBS SERIES BOX MOUNTING BRACKET TO MAINTAIN BOX ALIGNMENT (EQUAL BY B-LINE OR RAYCO). UTILIZE FIRESTOPPING SYSTEM PADS RATED FOR USE ON THE INSIDE OR OUTSIDE OF THE BOX (STI OR EQUAL) AS REQUIRED TO MAINTAIN RATING OF WALL OR MEMBRANE. REFER TO ARCHITECTURAL PLANS FOR WALL CONSTRUCTION/TYPE AND CEILING CONDITIONS.
- —— T1 —— CONCEALED TELEPHONE/DATA CONDUIT RUN, 1-INCH CONDUIT ONLY (MIN). SEE TABLE FOR CONDUIT SIZE VARIATIONS.
  T2 = 1-1/4"C.O. T3 = 1-1/2"C.O. T4 = 2"C.O.
- FLUSH MOUNTED, LOCKABLE TERMINAL CABINET WITH TERMINAL STRIPS AS REQUIRED.
- SURFACE MOUNTED, LOCKABLE TERMINAL CABINET WITH TERMINAL STRIPS AS REQUIRED.
- TELEPHONE TERMINAL BACKBOARD SIZED AS NOTED. REFER TO SYSTEM GROUND DETAIL.

LIGHTING SYMBOLS

SITE LIGHTING FIXTURE SYMBOLS DEPICTED WITH CAPITAL LETTER(S) ADJACENT TO RESPECTIVE SYMBOL(S) INDICATE(S) LIGHT FIXTURE MOUNTING BASE DETAIL(S). SEE LIGHTING FIXTURE SCHEDULE FOR FIXTURE SYMBOL INFORMATION.

- 1a — LIGHTING FIXTURE CALL OUT, NUMBER(S) AND/OR UPPER CASE LETTER(S) (i.e. "1") INDICATES FIXTURE TYPE (REFER TO LIGHTING FIXTURE SCHEDULE). LOWER CASE LETTER (i.e. "a") ADJACENT TO FIXTURE TYPE INDICATES BALLAST OPTION (SEE GENERAL LIGHTING FIXTURE SCHEDULE NOTES).
- INDICATES FINAL CONNECTION TO A LIGHTING FIXTURE, NUMBER OF CONDUCTORS AS REQUIRED.

LIGHTING CONTROL SYMBOLS

SEE THE DISTRIBUTED LIGHTING CONTROL (DLCS) SPECIFICATIONS AND SEQUENCE OF OPERATIONS (SOO) FOR MORE INFORMATION.

- —·—·—·— LOW VOLTAGE WIRING INTERCONNECTING DLCS COMPONENTS AS REQUIRED. SEE DLCS SPECIFICATIONS FOR MORE INFORMATION.
- HO_y — WALL MOUNTED STAND ALONE OCCUPANCY SENSOR.
- HO_y^H — WALL MOUNTED SYSTEM-BASED OCCUPANCY SENSOR.
- $O_y^{H,AV,DM,P}$ — 1-WAY DIRECTIONAL CEILING MOUNTED, SYSTEM-BASED OCCUPANCY SENSOR.
- $\langle O \rangle_y^{H,AV,DM,P}$ — 2-WAY DIRECTIONAL CEILING MOUNTED, SYSTEM-BASED OCCUPANCY SENSOR.
- $HO_y^{K,V}$ — LOW VOLTAGE MOMENTARY SWITCHES, WALL MOUNTED, FOR MANUAL ON/OFF SWITCHING, DIMMING, AND OVERRIDE CONTROL OF LIGHTING.

LIGHTING CONTROL SYMBOL SUPERSCRIPT & SUBSCRIPT KEY:

1. "y" INDICATES THAT SWITCH LEG "y" TO BE CONFIGURED PER THE SOO. ADJACENT LOWER CASE LETTERS INDICATES QUANTITY OF SWITCHLEGS TO BE CONTROLLED. EXACT CONTROL FUNCTION IS DETERMINED BY THE BALLAST/DRIVER/FIXTURE TYPE.
2. ADJACENT UPPER CASE LETTER(S) INDICATE THE FOLLOWING:
   - AV INDICATES CONNECTION TO A/V CONTROL SYSTEM.
   - DM INDICATES DUAL MODE CONTROL AT CORRIDORS, STAIRWELLS AND WAREHOUSE AISLEWAYS
   - H INDICATES CONNECTION TO HVAC SYSTEM CONTROLS VIA CONTROLLED DRY-CONTACT CLOSURE.
   - K INDICATES LOCKING SWITCH FOR THE SUBSEQUENT LOWER CASE LETTER.
   - P INDICATES CONNECTION TO MOVEABLE PARTITION INTERFACE, SENSOR AND STATUS INDICATOR.
   - V INDICATES VANDAL RESISTANT SWITCH.
3. ADJACENT LOWER CASE LETTER(S) INDICATE SWITCH LEG(S) CONTROLLED EXCEPT WHERE "DM" INDICATES DUAL MODE CONTROL SWITCH.
4. ADJACENT "+, ++ AND +" INDICATES PORTION OF SWITCHLEG CONTROLLED BY SENSOR WHERE "+" INDICATES PRIMARY SIDELIT DAYLIT ZONE, "++" INDICATES SECONDARY SIDELIT DAYLIT ZONE, AND "+" INDICATES SKYLIT DAYLIT ZONE.

BRANCH CIRCUIT SYMBOLS

- A-1,3,5 (///) — HOME RUN TO PANEL. LETTER DESIGNATES PANEL, NUMBERS INDICATE CIRCUITS. HASH MARKS INDICATE NUMBER OF CONDUCTORS IN CONDUIT RUN, #12 AWG MINIMUM UNLESS OTHERWISE NOTED.
- A-1&3&5 (###) — HOME RUN TO PANEL. LETTER DESIGNATES PANEL, NUMBERS INDICATE CIRCUITS WITH SEPARATE NEUTRALS. "&" INDICATES SEPARATE NEUTRALS.
- A-1+3+5 (#/#/#) — HOME RUN TO PANEL. LETTER DESIGNATES PANEL, NUMBERS INDICATE CIRCUITS. "+" INDICATES SEPARATE #10 NEUTRAL THROUGHOUT BRANCH CIRCUIT. HASH MARK "/" INDICATES AN ISOLATED GROUND CONDUCTOR.
- CONCEALED CONDUIT OR BRANCH CIRCUIT UNLESS OTHERWISE NOTED. 3/4" CONDUIT MINIMUM, (2) #12 AWG CONDUCTORS MINIMUM.
- CONDUIT OR BRANCH CIRCUIT CONCEALED BELOW GRADE, 3/4" CONDUIT MINIMUM WITH (2) #12 AWG CONDUCTORS MINIMUM AND A CODE SIZED EQUIPMENT GROUND.
- SURFACE-MOUNTED CONDUIT OR BRANCH CIRCUIT UNLESS OTHERWISE NOTED. 1/2" CONDUIT MINIMUM, (2) #12 AWG CONDUCTORS MINIMUM.
- TANDEM WIRING CONNECTION.
- CONDUIT STUB OUT, CAP, MARK AND RECORD ON AS-BUILT DRAWINGS.
- CONDUIT CONTINUATION.
- FLEXIBLE CONNECTION AS REQUIRED. NUMBER OF CONDUCTORS AS REQUIRED. VERIFY CONNECTION REQUIREMENTS WITH MANUFACTURER PRIOR TO ROUGH-IN.
- CONDUIT / BRANCH CIRCUIT / FEEDER CONTINUATION DOWN WALL TO FLOOR BELOW.
- CONDUIT / BRANCH CIRCUIT / FEEDER CONTINUATION UP WALL TO FLOOR ABOVE.

FLOOR BOX / SPECIALTY WALL BOX / PEDESTAL BOX SYMBOLS

- HMV — RECESSED, ADJUSTABLE DEPTH, FLAT PANEL TV/DISPLAY WALL BOX WITH FLUSH GROMMETED COVER PAEL (CHIEF #PAC525F) AND MINIMUM OF (1) 1-1/4"C.O. FROM TOP-MOUNTED L.V. CONDUIT ENTRY BOX TO ACCESSIBLE CEILING. SEE PLANS FOR ANY ADDITIONAL CONDUIT REQUIREMENTS. PROVIDE ADDITIONAL L.V. AND LINE VOLTAGE CONDUIT ENTRY BOXES AS REQUIRED TO ACCOMPLISH WALL BOX CONFIGURATION DEPICTED ON PLANS. FLUSH GROMMETED COVER SHALL BE WHITE, BLACK OR CUSTOM COLOR PER ARCHITECT. WHEN FIELD CONDITIONS PROHIBIT INSTALLATION OF THIS DEVICE (SUCH AS WALL STUD/CAVITY DEPTH OF LESS THAN 2.5" ETC), CONFIRM VIA WRITTEN RFI THE INSTALLATION OF A TRADITIONAL POWER AND DATA RECEPTACLE INSTALLATION ALONG SIDE CCTV/AV JUNCTION BOX CONSISTING OF 2-GANG DEEP JUNCTION BOX/2-GANG RING WITH 1-1/4"C.O. TO ACCESSIBLE CEILING IN ADDITION TO ANY OTHER CONDUIT REQUIREMENTS DEPICTED ON PLANS. REFER TO ARCHITECTURAL PLANS AND ELEVATIONS FOR MOUNTING HEIGHT.
- SINGLE OR DUAL SERVICE RECESSED EXTERIOR WALL BOX, TYPE "WP-A". PROVIDE DEVICES PER PLAN. EACH LV OR UNUSED COMPARTMENT SHALL BE EQUIPPED WITH A 1"C.O. TO THE NEAREST ACCESSIBLE CEILING SPACE U.O.N. SEE EXTERIOR DETAILS AND SPECIFICATIONS FOR MORE INFORMATION.
- SINGLE OR DUAL SERVICE EXTERIOR PEDESTAL, TYPE "WP-C". PROVIDE DEVICES PER PLAN. SEE EXTERIOR DETAILS AND SPECIFICATIONS FOR MORE INFORMATION. ARROW DENOTES DEVICE DOOR LOCATION.

MEP EQUIPMENT ANCHORAGE NOTE:

ALL MECHANICAL, ELECTRICAL AND PLUMBING COMPONENTS SHALL BE ANCHORED AND INSTALLED PER THE DETAILS ON THE DSA APPROVED CONSTRUCTION DOCUMENTS. THE FOLLOWING COMPONENTS SHALL BE ANCHORED OR BRACED TO MEET THE FORCE AND DISPLACEMENT REQUIREMENTS PRESCRIBED IN THE 2019 CBC, SECTIONS 1617A.1.18 THROUGH 1617A.1.26 AND ASCE 7-16, CHAPTERS 13, 26 AND 30.

A. ALL PERMANENT EQUIPMENT AND COMPONENTS.

B. TEMPORARY OR MOVABLE EQUIPMENT THAT IS PERMANENTLY ATTACHED (EG. HARD WIRED) TO THE BUILDING UTILITY SERVICES SUCH AS ELECTRICITY, GAS OR WATER. "PERMANENTLY ATTACHED" SHALL INCLUDE ALL ELECTRICAL CONNECTIONS EXCEPT PLUGS FOR 110/220V RECEPTACLES HAVING A FLEXIBLE CABLE.

C. TEMPORARY, MOVABLE OR MOBILE EQUIPMENT WHICH IS HEAVIER THAN 400 POUNDS OR HAS A CENTER OF MASS LOCATED 4 FEET OR MORE ABOVE THE ADJACENT FLOOR OR ROOF LEVEL THAT DIRECTLY SUPPORT THE COMPONENT IS REQUIRED TO BE RESTRAINED IN A MANNER APPROVED BY THE DSA.

THE FOLLOWING MECHANICAL AND ELECTRICAL COMPONENTS SHALL BE POSITIVELY ATTACHED TO THE STRUCTURE BUT NEED NOT DEMONSTRATE DESIGN COMPLIANCE WITH THE REFERENCES NOTED ABOVE. THESE COMPONENTS SHALL HAVE FLEXIBLE CONNECTIONS PROVIDED BETWEEN THE COMPONENT AND ASSOCIATED DUCTWORK, PIPING, AND CONDUIT. FLEXIBLE CONNECTIONS MUST ALLOW MOVEMENT IN BOTH TRANSVERSE AND LONGITUDINAL DIRECTIONS:

A. COMPONENTS WEIGHING LESS THAN 400 POUNDS AND HAVING A CENTER OF MASS LOCATED 4 FEET OR LESS ABOVE THE ADJACENT FLOOR OR ROOF LEVEL THAT DIRECTLY SUPPORT THE COMPONENT.

B. COMPONENTS WEIGHING LESS THAN 20 POUNDS, OR IN THE CASE OF DISTRIBUTED SYSTEMS, LESS THAN 5 POUNDS PER FOOT, WHICH ARE SUSPENDED FROM A ROOF OR FLOOR OR HUNG FROM A WALL.

THE ANCHORAGE OF ALL MECHANICAL, ELECTRICAL AND PLUMBING COMPONENTS SHALL BE SUBJECT TO THE APPROVAL OF THE DESIGN PROFESSIONAL IN GENERAL RESPONSIBLE CHARGE OR STRUCTURAL ENGINEER DELEGATED RESPONSIBILITY AND ACCEPTANCE BY DSA. THE PROJECT INSPECTOR WILL VERIFY THAT ALL COMPONENTS AND EQUIPMENT HAVE BEEN ANCHORED IN ACCORDANCE WITH THE ABOVE REQUIREMENTS.

PIPING, DUCTWORK AND ELECTRICAL DISTRIBUTION SYSTEM BRACING NOTE:

PIPING, DUCTWORK AND ELECTRICAL DISTRIBUTION SYSTEMS SHALL BE BRACED TO COMPLY WITH THE FORCES AND DISPLACEMENTS PRESCRIBED IN ASCE 7-16 SECTION 13.3 AS DEFINED IN ASCE 7-16 SECTION 13.6.5, 13.6.6, 13.6.7, 13.6.8; AND 2019 CBC, SECTIONS 1617A.1.24, 1617A.1.25 AND 1616A.1.26.

THE METHOD OF SHOWING BRACING AND ATTACHMENTS TO THE STRUCTURE FOR THE IDENTIFIED DISTRIBUTION SYSTEM ARE AS NOTED BELOW. WHEN BRACING AND ATTACHMENTS ARE BASED ON A PREAPPROVED INSTALLATION GUIDE (E.G. OSHPD OPM FOR 2013 CBC OR LATER), COPIES OF THE BRACING SYSTEM INSTALLATION GUIDE OR MANUAL SHALL BE AVAILABLE ON THE JOBSITE PRIOR TO THE START OF AND DURING THE HANGING AND BRACING OF THE DISTRIBUTION SYSTEMS. THE STRUCTURAL ENGINEER OF RECORD SHALL VERIFY THE ADEQUACY OF THE STRUCTURE TO SUPPORT THE HANGER AND BRACE LOADS.

MECHANICAL PIPING (MP), MECHANICAL DUCTS (MD), PLUMBING PIPING (PP), ELECTRICAL DISTRIBUTION SYSTEMS (E):

- MP☐ MD☐ PP☐ E☒ — OPTION 1: DETAILED ON THE APPROVED DRAWINGS WITH PROJECT SPECIFIC NOTES AND DETAILS.
- MP☐ MD☐ PP☐ E☐ — OPTION 2: SHALL COMPLY WITH THE APPLICABLE OSHPD PRE-APPROVAL (OPM#) #0052-13 & #0043-13.

POWER SYMBOLS

- DUPLEX RECEPTACLE, WALL MOUNTED.
- DOUBLE DUPLEX RECEPTACLE, WALL MOUNTED.
- DUPLEX, GFCI RECEPTACLE, WALL MOUNTED. WP INDICATES WEATHERPROOF, A, B OR C INDICATES THE TYPE OF COVER, REFER TO THE GENERAL PRODUCT SPECIFICATIONS.
- DOUBLE DUPLEX, WALL MOUNTED, WITH (1) GFCI RECEPTACLE AND (1) DUPLEX RECEPTACLE CONNECTED ON LOAD SIDE OF GFCI. WP INDICATES WEATHERPROOF, A, B OR C INDICATES THE TYPE OF COVER, REFER TO THE GENERAL PRODUCT SPECIFICATIONS.
- DUPLEX RECEPTACLE, ONE HALF SWITCHED, WALL MOUNTED.
- DUPLEX, ISOLATED GROUND RECEPTACLE, WALL MOUNTED.
- 3 — COMBINATION DOUBLE DUPLEX: ONE ISOLATED GROUND DUPLEX RECEPTACLE AND ONE DUPLEX RECEPTACLE, WALL MOUNTED.
- COMBINATION DOUBLE DUPLEX: TWO ISOLATED GROUND RECEPTACLES, WALL MOUNTED.
- SIMPLEX RECEPTACLE, WALL MOUNTED.
- SPECIAL RECEPTACLE, WALL MOUNTED. REFER TO PLAN NOTES.
- DUPLEX RECEPTACLE FLUSH IN CEILING. MOUNT FLUSH IN FLOOR WHEN INDICATED IN A FLOOR BOX SYMBOL.
- DOUBLE DUPLEX RECEPTACLE FLUSH IN CEILING. MOUNT FLUSH IN FLOOR WHEN INDICATED IN A FLOOR BOX SYMBOL.
- DUPLEX RECEPTACLE, ONE HALF SWITCHED, FLUSH IN CEILING. MOUNT FLUSH IN FLOOR WHEN INDICATED IN A FLOOR BOX SYMBOL.
- DUPLEX, ISOLATED GROUND RECEPTACLE, FLUSH IN CEILING. MOUNT FLUSH IN FLOOR WHEN INDICATED IN A FLOOR BOX SYMBOL.
- 3 — COMBINATION DOUBLE DUPLEX: ONE ISOLATED GROUND DUPLEX RECEPTACLE AND ONE DUPLEX RECEPTACLE, MOUNTED FLUSH IN CEILING. MOUNT FLUSH IN FLOOR WHEN INDICATED IN FLOOR BOX SYMBOL.
- COMBINATION DOUBLE DUPLEX FLUSH IN CEILING: TWO ISOLATED GROUND RECEPTACLES. MOUNT FLUSH IN FLOOR WHEN INDICATED IN FLOOR BOX SYMBOL.
- SIMPLEX RECEPTACLE FLUSH IN CEILING. MOUNT FLUSH IN FLOOR WHEN INDICATED IN A FLOOR BOX SYMBOL.
- SPECIAL RECEPTACLE FLUSH IN CEILING. MOUNT FLUSH IN FLOOR WHEN INDICATED IN A FLOOR BOX SYMBOL.
- DUPLEX RECEPTACLE, WALL MOUNTED AT 6-INCHES ABOVE COUNTER OR SPLASH.
- DOUBLE DUPLEX RECEPTACLE, WALL MOUNTED AT 6-INCHES ABOVE COUNTER OR SPLASH.
- DUPLEX, GFCI RECEPTACLE, WALL MOUNTED AT 6-INCHES ABOVE COUNTER OR SPLASH. WP INDICATES WEATHERPROOF, A, B OR C INDICATES THE TYPE OF COVER, REFER TO THE GENERAL PRODUCT SPECIFICATIONS.
- DOUBLE DUPLEX, WALL MOUNTED 6-INCHES ABOVE COUNTER OR SPLASH, WITH (1) GFCI RECEPTACLE AND (1) DUPLEX RECEPTACLE CONNECTED ON LOAD SIDE OF GFCI. WP INDICATES WEATHERPROOF, A, B OR C INDICATES THE TYPE OF COVER, REFER TO THE GENERAL PRODUCT SPECIFICATIONS.
- DUPLEX RECEPTACLE, BOTTOM HALF SWITCHED, WALL MOUNTED AT 6-INCHES ABOVE COUNTER OR SPLASH.
- DUPLEX, ISOLATED GROUND RECEPTACLE, WALL MOUNTED AT 6-INCHES ABOVE COUNTER OR SPLASH.
- 3 — COMBINATION DOUBLE DUPLEX: ONE ISOLATED GROUND DUPLEX RECEPTACLE AND ONE DUPLEX RECEPTACLE, WALL MOUNTED AT 6-INCHES ABOVE COUNTER OR SPLASH.
- COMBINATION DOUBLE DUPLEX: TWO ISOLATED GROUND DUPLEX RECEPTACLES, WALL MOUNTED AT 6-INCHES ABOVE COUNTER OR SPLASH.
- SIMPLEX RECEPTACLE, WALL MOUNTED AT 6-INCHES ABOVE COUNTER OR SPLASH.
- SPECIAL RECEPTACLE, WALL MOUNTED AT 6-INCHES ABOVE COUNTER OR SPLASH. REFER TO PLAN NOTES.
- WP-B — WET LOCATION-LISTED (RAINTITE-IN-USE) RECEPTACLE. SEE ELECTRICAL SPECIFICATION FOR ADDITIONAL INFORMATION.
- WP-D — DAMP LOCATION-LISTED (NOT-RAINTITE-IN-USE) RECEPTACLE. SEE ELECTRICAL SPECIFICATION FOR ADDITIONAL INFORMATION.
- J — JUNCTION BOX, WALL MOUNTED AT +18-INCHES A.F.F. OR AS NOTED. 4S/DP MINIMUM OR AS REQUIRED BY CEC.
- J — JUNCTION BOX, MOUNTED IN ACCESSIBLE CEILING FOR APPLICATION DENOTED ON PLAN. 4S/DP MINIMUM OR AS REQUIRED BY CEC.
- HJ — JUNCTION BOX, WALL MOUNTED AT 6-INCHES ABOVE COUNTER OR SPLASH. 4S/DP MINIMUM OR AS REQUIRED BY CEC.
- J — JUNCTION BOX, 4S MINIMUM OR AS REQUIRED BY CEC. MOUNT FLUSH IN FLOOR WHEN INDICATED IN A FLOOR BOX SYMBOL.
- FJ — JUNCTION BOX, WALL MOUNTED AT +18-INCHES A.F.F., 4S/DP MINIMUM OR AS REQUIRED BY CEC FOR FLEXIBLE CONN

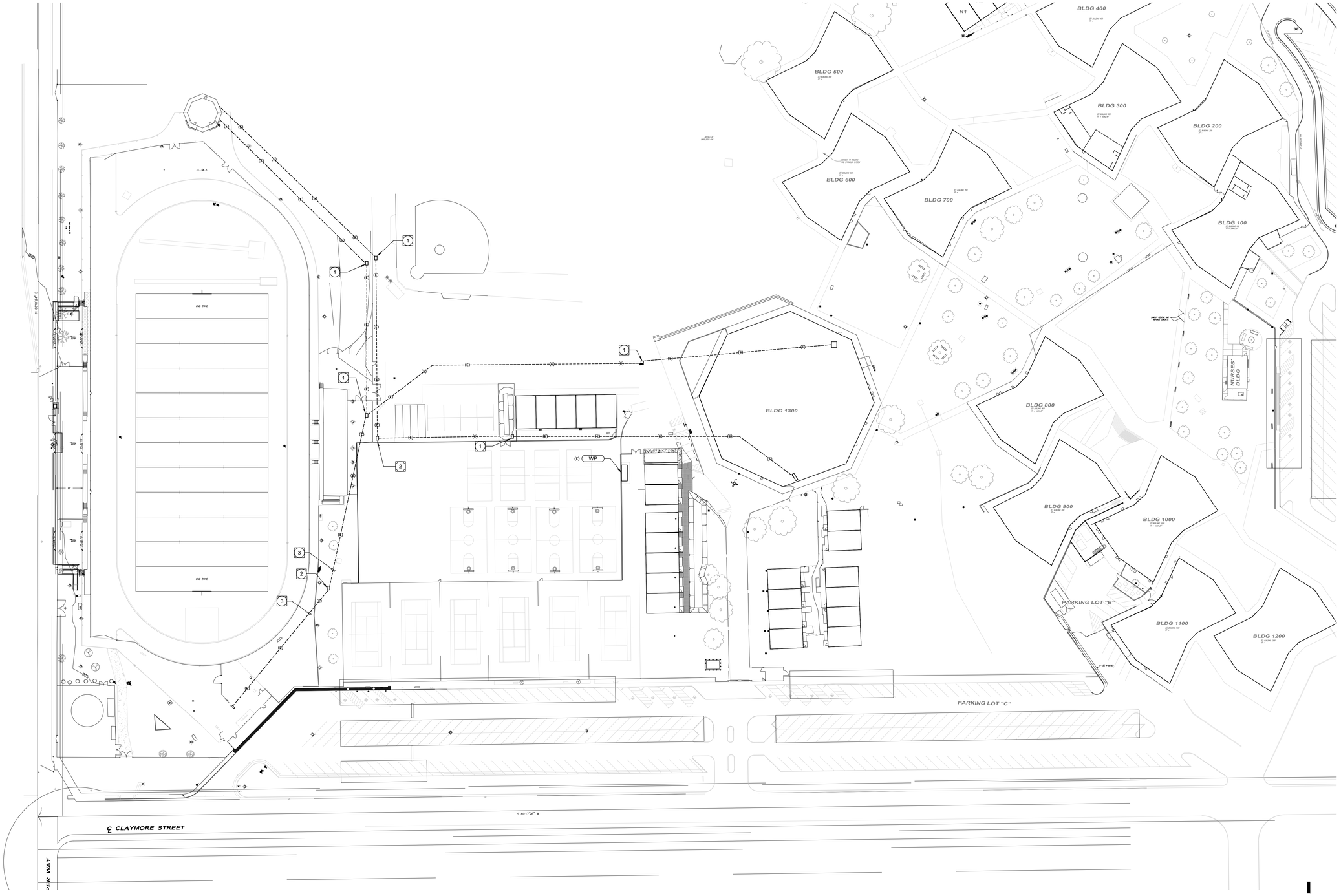

DEMOLITION SITE PLAN OVERALL

1/60" = 1'-0"

GENERAL DEMOLITION NOTES:

1. THE ELECTRICAL DRAWINGS ARE DIAGRAMMATIC ONLY. DO NOT SCALE THE ELECTRICAL DRAWINGS TO DETERMINE THE LOCATION OF EQUIPMENT OR OUTLETS. SEE ARCHITECTURAL PLANS, WHERE PROVIDED ON PROJECT, FOR EXTENT OF DEMOLITION.
2. THE EXISTING CONDITIONS SHOWN ARE FROM AVAILABLE RECORD DRAWINGS AND SHOWN FOR REFERENCE ONLY. CONTRACTOR SHALL VERIFY ACTUAL EXISTING CONDITIONS AT SITE PRIOR TO SUBMITTING BID. ALL DEMOLITION, ALTERATION, EXTENSION, RELOCATION, REHABILITATION WORK SHALL BE INCLUDED IN CONTRACT. NO ADDITIONAL ALLOWANCE OR CHANGE ORDERS WILL BE ACCEPTED.
3. CONTRACTOR IS RESPONSIBLE TO RELOCATE OR REMOVE FROM WALLS, CEILINGS, FLOOR SPACES, ETC. ANY EXISTING CONDUITS, WIRES, BOXES, FITTINGS, FIXTURES OR OTHER ELECTRICAL EQUIPMENT WHICH INTERFERES WITH PLANNED REMODEL WORK. PROVIDE CIRCUIT CONTINUATION REQUIRED FOR ALL EXISTING OUTLETS, FIXTURES, EQUIPMENT, ETC. SCHEDULED TO REMAIN.
4. NOTIFY THE ENGINEER IMMEDIATELY WHEREVER EXISTING EQUIPMENT IS ENCOUNTERED WHICH MUST BE RELOCATED DUE TO THE NEW CONSTRUCTION, OR NOT INDICATED ON "AS-BUILT" DRAWINGS OR WAS BURIED UNDERGROUND OR EMBEDDED IN STRUCTURE WALLS.
5. CAREFULLY PROTECT ALL WALLS, TRIM, FLOORS, EQUIPMENT, UTILITY LINES AND MATERIALS. WHEN WORKING ON FINISHED SURFACES, LIMIT DAMAGE TO THE SMALLER AREA IF POSSIBLE AND RESTORE TO THE ORIGINAL CONDITION ALL SURFACES WHICH ARE DAMAGED BECAUSE OF THE INSTALLATION OF THIS WORK.
6. EQUIPMENT, MATERIALS AND SUPPLIES TEMPORARILY REMOVED FOR PROTECTION SHALL BE REPLACED IN ORIGINAL LOCATIONS. ANY MATERIALS DAMAGED SHALL BE REPLACED WITH NEW MATERIALS OF LIKE KIND AND QUALITY.
7. DEMOLITION WORK SHALL BE DONE IN A MANNER WHICH WILL NOT CAUSE UNNECESSARY INCONVENIENCE OR DANGER TO USERS OF THE PREMISES AND ADJACENT SITE, AND NOT INTERFERE WITH ITS OPERATION. ANY DEMOLITION WORK TO BE PERFORMED MUST BE PLANNED IN ADVANCE.
8. DO ALL DRILLING, CUTTING, ETC. REQUIRED TO DEMOLISH ELECTRICAL WORK AS INDICATED OR PROVIDE BLANK COVER PLATE ON ALL OUTLETS EXPOSED BY REMOVAL OF FIXTURE OR DEVICES.
9. RESEAL ALL PENETRATIONS OR OPENING THROUGH WALLS, CEILING, FLOORS, ETC., TO MAINTAIN THE RATING OF STRUCTURE.
10. ALL REMOVED MATERIALS AND EQUIPMENT WHICH IS SALVAGED MATERIALS SHALL REMAIN IN THE PROPERTY OF THE OWNER. DELIVER SUCH SALVAGED MATERIALS AND EQUIPMENT ON THE PREMISES AS DIRECTED BY OWNER AND NEATLY PILE OR STORE THEM AND PROTECT FROM DAMAGED. DISPOSE OF ALL HAZARDOUS MATERIAL PER GUIDELINE OF THE STATE OF CALIFORNIA, DEPARTMENT OF HEALTH SERVICES AND OTHER AGENCIES HAVING JURISDICTION.
11. CONTRACTOR SHALL FIELD VERIFY EXISTING CONDUIT/WIRING RUNS, REUSE AS REQUIRE AND REMOVED ALL UNUSED CONDUIT/WIRING. UNUSED CONDUIT IN INACCESSIBLE LOCATIONS (WALLS TO REMAIN) CAN BE ABANDONED IN PLACE. REMOVE UNUSED WIRING.
12. CONTRACTOR TO VERIFY CIRCUIT NUMBER AND LOADS FOR ALL EXISTING EQUIPMENT PRIOR TO INSTALLATION OF NEW OR RELOCATED ELECTRICAL EQUIPMENT. REASSIGN CIRCUITS AND LOADS ACCORDINGLY. PROVIDE COMPLETE "AS BUILT" DRAWINGS AND TYPEWRITTEN DIRECTORIES FOR PANELS.
13. WHERE NECESSARY TO SHUT OFF UTILITY SERVICES OR CAUSE INTERRUPTION TO POWER OR SIGNAL SYSTEMS WHILE A BUILDING IS OCCUPIED OR THAT EFFECT ADJACENT BUILDINGS, SCHEDULE OUTAGES OR INTERRUPTIONS WITH THE OWNER, BUILDING OCCUPANTS AND/OR ADJACENT BUILDING OWNER(S) AND OCCUPANTS PRIOR TO CONDUCTING OUTAGE(S) OR INTERRUPTIONS.
14. REFER TO ARCHITECTURAL DEMOLITION DRAWING FOR DEMOLITION AREAS. THE SCOPE OF THE DEMOLITION SHALL INCLUDE ALL LABOR, EXISTING ELECTRICAL EQUIPMENT. VERIFY EXACT SCOPE PRIOR TO COMMENCING WORK. REFER TO DEMO PLAN FOR SPECIFIC AREAS NOT IN SCOPE THE SCOPE INCLUDES, BUT IS NOT LIMITED TO THE FOLLOWING:
    - A. LIGHTING: CONTRACTOR TO DEMOLISH ALL EXISTING LIGHTING FIXTURES AND ASSOCIATED CONTROLS, U.O.N.
    - B. POWER: EXISTING POWER SHALL REMAIN, U.O.N.
    - C. ALL EXISTING ELECTRICAL SWITCHGEAR, PANELBOARDS, PULLBOXES, ETC. SHALL REMAIN, U.O.N.
    - D. SIGNAL: CONTRACTOR TO DEMOLISH ALL EXISTING SIGNAL SYSTEMS (CLOCKS, DATA OUTLETS, TELEPHONE OUTLETS, TELEVISION OUTLETS, SPEAKERS, ETC.)
    - E. FIRE ALARM: CONTRACTOR TO DEMOLISH ALL EXISTING FIRE ALARM DEVICES, U.O.N.
    - F. EXTERIOR LIGHTING: CONTRACTOR SHALL DEMOLISH ALL EXISTING EXTERIOR LIGHTING FIXTURES AND ASSOCIATED CONTROLS, U.O.N.
    - G. EXTERIOR POWER, SIGNAL AND FIRE ALARM: CONTRACTOR SHALL DEMOLISH ALL EXISTING EXTERIOR POWER, SIGNAL AND FIRE ALARM DEVICES, U.O.N.
15. WHERE NEW PARTITIONS OR OTHER CONSTRUCTION WILL COVER EXISTING, REMAINING OUTLETS MAKING THEM INACCESSIBLE, RELOCATE THESE OUTLETS AS REQUIRED, OR MAKE OTHER PROVISIONS SO THAT THE OUTLETS WILL REMAIN ACCESSIBLE AND OPERATIONAL.
16. WHERE EXISTING WALLS AND CEILINGS ARE TO REMAIN, PROVIDE BLANK COVER PLATES FOR OUTLETS WHERE EQUIPMENT OR DEVICES ARE REMOVED UNDER THIS CONTRACT. PRIME BLANK PLATES AND PAINT TO MATCH SURROUNDING AREA.
17. WHERE FIXTURES, EQUIPMENT, DEVICES, ETC. ARE SPECIFIED BY THE CONTRACT DOCUMENTS FOR REMOVAL, THE CONTRACTOR SHALL REMOVE ALL CIRCUIT CONDUCTORS/CABLING BACK TO THE NEAREST REMAINING JUNCTION BOX AND/OR POINT OF TERMINATION.
18. RELOCATE EXISTING CONDUITS AND/OR CONDUCTORS/CABLING ROUTING THROUGH AREAS WHERE NEW/REMOVED WALLS ARE SPECIFIED.
19. RELOCATION AND/OR REMOVAL OF EXISTING EQUIPMENT, DEVICES, OUTLETS BOXES, CONDUIT, WIRING, ETC. MAY AFFECT THE OPERATION OF EXISTING, REMAINING ELECTRICAL EQUIPMENT/DEVICES, THE CONTRACTOR SHALL PROVIDE ADDITIONAL MATERIALS AS REQUIRED TO MAINTAIN AND/OR RESTORE CONTINUITY OF SERVICES TO EXISTING REMAINING ELECTRICAL/DEVICES.
20. DISCONNECT ABANDONED CIRCUITS AT EXISTING PANEL BOARDS AND REMOVE WIRE TO LAST REMAINING DEVICES. LABEL ALL ABANDONED CIRCUIT BREAKERS "SPARE".
21. ALL DEMOLITION SHALL COMPLY WITH CBC CHAPTER 33 CBC AND CFC CHAPTER 33.

PLAN NOTES:

1. EXISTING PULLBOX TO BE PROTECTED IN PLACE.
2. EXISTING PULLBOX IN THE WAY OF PROPOSED NEW CONSTRUCTION. CONTRACTOR SHALL DEMOLISH AND REROUTE CONDUITS TO NEW PULL BOX LOCATION OUTSIDE OF PROPOSED CONSTRUCTION SCOPE. SEE E1.0 FOR PROPOSED NEW LOCATION.
3. EXISTING 1-1/4"C 2#4 CU TO BE SPLICED AND EXTENDED TO NEW PULLBOX LOCATION.
4. EXISTING LOW VOLTAGE CONDUIT DUCTBANK TO NORTH RESTROOM BUILDING. CONDUIT TO BE RE-ROUTED TO NEW PULLBOX LOCATION. ALL CABLES TO BE REPLACED LIKE FOR LIKE FROM TERMINATION POINT TO TERMINATION POINT AND TESTED. SPLICING WILL NOT. FOR LIKE AND TESTED. CONDUIT BANK CONTAINS:
   (1)1"C – 4#10, 4#12, 4#14 (FIRE ALARM)
   (2)1"C SPARE
   (1)1"C – (2) '/' CABLES (TELEPHONE)

IDENTIFICATION STAMP
DIV. OF THE STATE ARCHITECT
APP: 03-122664 INC:
REVIEWED FOR
SS ☑ FLS ☑ ACS ☑
DATE: 05/12/2023

pjhm architects
LICENSED ARCHITECT
RICHARD W. SWARTZ
NO. C15585
REN. 02/25
STATE OF CALIFORNIA
tk1sc COLLABORATIVE
11870 Pierce Street, Suite 160
Riverside, California 92505
951.299.4160 www.tk1sc.com
Project Leader - Nikolas Bruno
Electrical Lead - Nikolas Bruno
tk1sc Job #: B2202744.000
REGISTERED PROFESSIONAL ENGINEER
RICHARD W. SWARTZ
No. E15610
EXP. 12-31-2024
ELECTRICAL
STATE OF CALIFORNIA

HIGHLAND HIGH SCHOOL
50M POOL & AQUATICS CENTER
KERN HIGH SCHOOL DISTRICT

OC Office: 24461 Ridge Route Drive #100, Laguna Hills, CA 92653 Phone: 949.496.6155 SD Office: 804 Pier View Way #103, Oceanside, CA 92054 Phone: 760.730.5527 LA Office: 837 Traction Avenue, #410, Los Angeles, CA 90013 Phone: 213.278.0112 Web: pjhm.com

DEMOLITION SITE PLAN OVERALL

ED-1.0

8/2/2022 11:34:37 AM

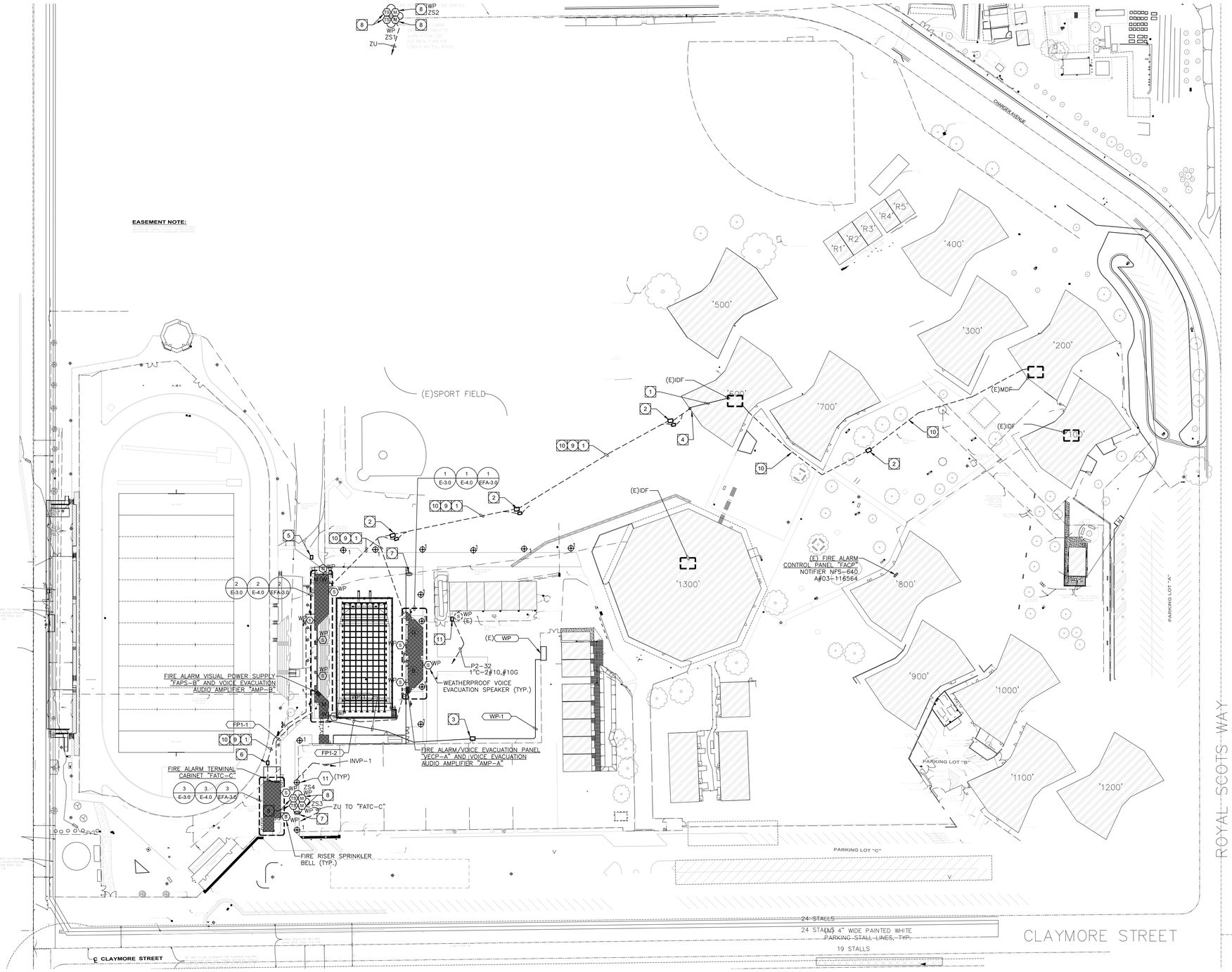

SITE PLAN OVERALL

1/60" = 1'-0"

SITE PLAN GENERAL NOTES:

1. CONTRACTOR SHALL EXERCISE EXTREME CAUTION IN EXCAVATING AND TRENCHING ON THIS SITE TO AVOID EXISTING DUCTS, PIPING OR CONDUITS, ETC., AND TO PREVENT HAZARDS TO PERSONNEL AND/OR DAMAGE TO EXISTING UNDERGROUND UTILITIES OR STRUCTURES WHETHER OR NOT SHOWN AND INSTALLED BY ANY OTHER CONTRACTS. THE ENGINEER IS NOT RESPONSIBLE FOR THE LOCATION OF UNDERGROUND UTILITIES OR STRUCTURES WHETHER OR NOT SHOWN OR DETAILED AND INSTALLED BY ANY OTHER CONTRACTS. THE CONTRACTOR SHALL IMMEDIATELY NOTIFY THE ENGINEER SHOULD SUCH UNIDENTIFIED CONDITIONS BE DISCOVERED. THESE DRAWINGS AND SPECIFICATIONS DO NOT INCLUDE THE NECESSARY ELEMENTS FOR CONSTRUCTION SAFETY.
2. CALL UNDERGROUND SERVICE ALERT (USA) AT 1 (800) 422-4133 OR APPLICABLE STATE AND LOCAL DIG SAFE OR UNDERGROUND ALERT HOTLINES PRIOR TO CONSTRUCTION START.
3. MINIMUM CONDUIT SIZE SHALL BE 3/4" – U.O.N.
4. MINIMUM CONDUCTOR SIZE SHALL BE #10 AWG. – U.O.N.
5. ALL SITE BRANCH CIRCUITS SHALL INCLUDE AN EQUIPMENT GROUND CONDUCTOR THAT, AT MINIMUM, MATCHES THE SIZE OF THE ASSOCIATED BRANCH CIRCUIT CONDUCTOR. WHERE MULTIPLE BRANCH CIRCUITS ARE ROUTED/GROUPED TOGETHER, THE EQUIPMENT GROUNDING CONDUCTOR SHALL MATCH THE SIZE OF THE LARGEST BRANCH CIRCUIT CONDUCTOR IN THE GROUP.
6. ALL ELECTRICAL EQUIPMENT MOUNTED OUTDOORS SHALL BE WEATHERPROOF (NEMA #3R).
7. ALL CONDUIT ONLY SHALL BE PROVIDED WITH A NYLON PULL STRING.
8. SEE ARCHITECTURAL/LANDSCAPE ARCHITECTURAL PLANS FOR EXACT LOCATIONS OF FIXTURES, PULLBOXES, MANHOLES, OTHER ELECTRICAL DEVICES, ETC. COORDINATE ALL UNDERGROUND STRUCTURES AND CONDUIT ROUTING WITH LANDSCAPE ARCHITECT PRIOR TO ROUGH-IN TO ENSURE THAT SUCH ITEMS ARE NOT PLACED IN CRITICAL LANDSCAPE PLANTING/HARDSCAPE AREAS.
9. UNLESS SPECIFICALLY SHOWN AS (E), (R), (ER), (D), EXISTING OR NON-BOLD, ALL ELECTRICAL DEVICES SHOWN ARE NEW.

(1) NOTE: LIGHT FIXTURE TYPE, TYPICAL. REFER TO LIGHTING FIXTURE SCHEDULE ON SHEET E-7.0.

PLAN NOTES:

(1) PROVIDE THE FOLLOWING SIGNAL SYSTEM CONDUITS BELOW GRADE WITH SPECIFIED SYSTEM CONDUCTORS, U.O.N.:
- (1)4"C. DATA/VOIP
- (1)3"C. PUBLIC ADDRESS
- (1)3"C. SECURITY
- (2)2"C. SPARE
- (1)2"C. FIRE ALARM-ROUTE TO FA PULL BOXES

(2) FURNISH AND INSTALL NEW 2'x3'xDEPTH AS REQUIRED FLUSH-IN-GRADE PULL BOX WITH TRAFFIC RATED COVER LABELED 'SIGNAL', AND NEW 18"X24"XDEPTH AS REQUIRED FLUSH-IN-GRADE PULL BOX WITH TRAFFIC RATED COVER LABELED 'FIRE'. COORDINATE FINAL LOCATION IN FIELD WITH LANDSCAPE. TERMINATE FIRE ALARM CONDUITS INTO FIRE ALARM PULL BOXES ONLY.

(3) FURNISH AND INSTALL NEW 2'x3'xDEPTH AS REQUIRED FLUSH-IN-GRADE PULL BOX WITH TRAFFIC RATED COVER LABELED 'POWER'. COORDINATE FINAL LOCATION IN FIELD WITH LANDSCAPE.

(4) ROUTE FIRE ALARM CONDUIT TO FIRE ALARM CONTROL PANEL, ROUTE ALL OTHER SIGNAL CONDUITS TO ASSOCIATED SYSTEMS' HEADEND EQUIPMENT.

(5) FURNISH AND INSTALL NEW 2'x3'xDEPTH AS REQUIRED FLUSH-IN-GRADE PULL BOX WITH TRAFFIC RATED COVER LABELED 'POWER'. COORDINATE FINAL LOCATION IN FIELD WITH LANDSCAPE. THIS NEW PULLBOX IS INTENDED TO REPLACE THE EXISTING PULLBOX SHOWN ON ED1.0 SITE DEMOLITION PLAN. REROUTE EXISTING CONDUIT AND WIRES TO PROPOSED NEW LOCATION.

(6) FURNISH AND INSTALL NEW 2'x3'xDEPTH AS REQUIRED FLUSH-IN-GRADE PULL BOX WITH TRAFFIC RATED COVER LABELED 'SIGNAL'. COORDINATE FINAL LOCATION IN FIELD WITH LANDSCAPE. THIS NEW PULLBOX IS INTENDED TO REPLACE THE EXISTING PULLBOX SHOWN ON ED1.0 SITE DEMOLITION PLAN. REROUTE EXISTING CONDUIT AND WIRES TO PROPOSED NEW LOCATION.

(7) ACCESS CONTROL CARD READER WITH 3/4" CONDUIT AND CONDUCTORS ROUTED TO NEAREST ACCESS CONTROL HEAD END. CONTRACTOR SHALL COORDINATE DOOR HARDWARE WITH ARCHITECT PRIOR TO ROUGH IN.

(8) CONNECT ALL REQUIRED FIRE ALARM DEVICES TO FIRE WATER LINE OSY/PIV/DOUBLE BACK CHECK VALVES ETC. TO FIRE ALARM SYSTEM. PROVIDE 3/4"C WITH REQUIRED CONDUCTORS. SEE FIRE ALARM SYSTEM SPECIFICATIONS FOR ADDITIONAL REQUIREMENTS. VERIFY EXACT LOCATIONS WITH CIVIL AND ARCHITECT PRIOR TO TRENCHING OR ROUGH-IN.

(9) 12-STRAND SINGLE MODE FIBER CONNECTION FROM (E) IDF IN BLDG 600 TO (N) IDF CABINET IN POOL BLDG(S).

(10) 25-PAIR COPPER CONNECTION FROM TELCO HEADEND IN (E) MDF IN BLDG 200, PASS-THROUGH (E) IDF IN BLDG 600, TO (N) IDF CABINET IN POOL BLDG(S).

(11) PROVIDE 120V 20A CONNECTION FOR IRRIGATION CONTROLLER. REFERENCE IRRIGATION PLANS FOR EXACT LOCATION. VERIFY CONNECTION REQUIREMENTS WITH MANUFACTURER.

8/2/2022 11:34:37 AM

IDENTIFICATION STAMP
DIV. OF THE STATE ARCHITECT
APP: 03-122664 INC:
REVIEWED FOR
SS ☑ FLS ☑ ACS ☑
DATE: 05/12/2023

pjhm architects

LICENSED ARCHITECT
RAYMOND W. STRATTE
No. C15585
REN. 02/25
STATE OF CALIFORNIA

tk|sc COLLABORATIVE
11870 Pierce Street, Suite 160
Riverside, California 92505
951.299.4160 www.tk1sc.com
Project Leader - Nikolas Bruno
Electrical Lead - Nikolas Bruno
tk1sc Job #: B2202744.000

REGISTERED PROFESSIONAL ENGINEER
RAYMOND W. STRATTE
No. E15610
EXP. 12/31/2024
ELECTRICAL
STATE OF CALIFORNIA

OC Office: 24461 Ridge Route Drive #100, Laguna Hills, CA 92653 Phone: 949.496.6161
LA Office: 837 Traction Avenue, #410, Los Angeles, CA 90013 Phone: 213.278.0112
SD Office: 804 Pier View Way #103, Oceanside, CA 92054 Phone: 760.730.5547
Web: pjhm.com

HIGHLAND HIGH SCHOOL
50M POOL & AQUATICS CENTER
KERN HIGH SCHOOL DISTRICT

SITE PLAN OVERALL

E-1.0

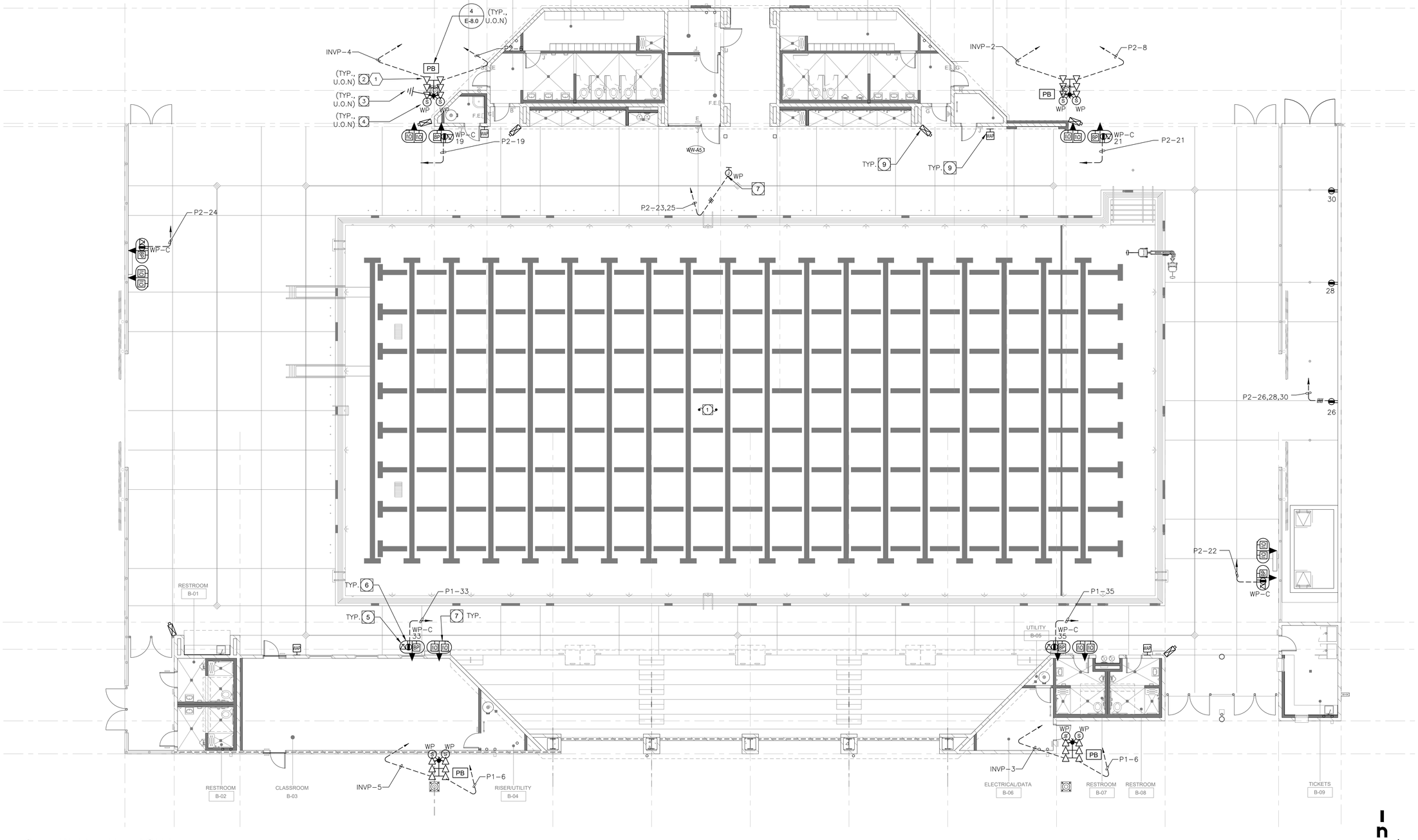

SITE PLAN ENLARGED

1/8" = 1'-0"

SITE PLAN GENERAL NOTES:

1. CONTRACTOR SHALL EXERCISE EXTREME CAUTION IN EXCAVATING AND TRENCHING ON THIS SITE TO AVOID EXISTING DUCTS, PIPING OR CONDUITS, ETC., AND TO PREVENT HAZARDS TO PERSONNEL AND/OR DAMAGE TO EXISTING UNDERGROUND UTILITIES OR STRUCTURES WHETHER OR NOT SHOWN AND INSTALLED BY ANY OTHER CONTRACTS. THE ENGINEER IS NOT RESPONSIBLE FOR THE LOCATION OF UNDERGROUND UTILITIES OR STRUCTURES WHETHER OR NOT SHOWN OR DETAILED AND INSTALLED BY ANY OTHER CONTRACTS. THE CONTRACTOR SHALL IMMEDIATELY NOTIFY THE ENGINEER SHOULD SUCH UNIDENTIFIED CONDITIONS BE DISCOVERED. THESE DRAWINGS AND SPECIFICATIONS DO NOT INCLUDE THE NECESSARY ELEMENTS FOR CONSTRUCTION SAFETY.
2. CALL UNDERGROUND SERVICE ALERT (USA) AT 1 (800) 422-4133 OR APPLICABLE STATE AND LOCAL DIG SAFE OR UNDERGROUND ALERT HOTLINES PRIOR TO CONSTRUCTION START.
3. MINIMUM CONDUIT SIZE SHALL BE 3/4" – U.O.N.
4. MINIMUM CONDUCTOR SIZE SHALL BE #10 AWG. – U.O.N.
5. ALL SITE BRANCH CIRCUITS SHALL INCLUDE AN EQUIPMENT GROUND CONDUCTOR THAT, AT MINIMUM, MATCHES THE SIZE OF THE ASSOCIATED BRANCH CIRCUIT CONDUCTOR. WHERE MULTIPLE BRANCH CIRCUITS ARE ROUTED/GROUPED TOGETHER, THE EQUIPMENT GROUNDING CONDUCTOR SHALL MATCH THE SIZE OF THE LARGEST BRANCH CIRCUIT CONDUCTOR IN THE GROUP.
6. ALL ELECTRICAL EQUIPMENT MOUNTED OUTDOORS SHALL BE WEATHERPROOF (NEMA #3R).
7. ALL CONDUIT ONLY SHALL BE PROVIDED WITH A NYLON PULL STRING.
8. SEE ARCHITECTURAL/LANDSCAPE ARCHITECTURAL PLANS FOR EXACT LOCATIONS OF FIXTURES, PULLBOXES, MANHOLES, OTHER ELECTRICAL DEVICES, ETC. COORDINATE ALL UNDERGROUND STRUCTURES AND CONDUIT ROUTING WITH LANDSCAPE ARCHITECT PRIOR TO ROUGH-IN TO ENSURE THAT SUCH ITEMS ARE NOT PLACED IN CRITICAL LANDSCAPE PLANTING/HARDSCAPE AREAS.
9. UNLESS SPECIFICALLY SHOWN AS (E), (R), (ER), (D), EXISTING OR NON-BOLD, ALL ELECTRICAL DEVICES SHOWN ARE NEW.
10. CONTRACTOR SHALL PROVIDE CONDUIT AND WIRE FOR ALL DEVICES TO PANELBOARD(S) INDICATED ON PLANS FOR A COMPLETE AND OPERABLE SYSTEM.
11. CONTRACTOR SHALL PROVIDE MINIMUM 2#12, 1#12G IN ½" CONDUIT UNLESS OTHERWISE NOTED. REFERENCE WIRE SIZE TABLE CHART ON DETAIL #2, SHEET E-6.0. WHERE REQUIRED, CONDUIT AND WIRE SHALL BE UPSIZED TO MEET THE REQUIREMENT OF THE DEVICE BEING SERVED BY THE BRANCH CIRCUIT. WHERE CONDUIT AND WIRING IS INDICATED AT THE HOME RUN, WIRING AND CONDUIT SHALL CONTINUE AT THAT SIZE FOR THE ENTIRE LENGTH OF THE CIRCUIT.
12. CONTRACTOR SHALL FURNISH ADDITIONAL SWITCHLEGS OR HOT WIRES AS REQUIRED TO MEET THE CONTROL INTENT OF THE DOCUMENTS AND AS REQUIRED BY CODE (I.E. EMERGENCY LIGHTING AND SWITCHED RECEPTACLES).
13. MULTIPLE CIRCUITS MAY BE USED IN A SINGLE RACEWAY. NO MORE THAN (3) DEDICATED CIRCUITS OR (4) CURRENT CARRYING CONDUCTORS SHALL BE INSTALLED IN ANY RACEWAY UNLESS OTHERWISE NOTED. WHERE A COMMON GROUNDED CONDUCTOR IS USED FOR MULTIPLE INDIVIDUAL BRANCH CIRCUITS, PER SECTIONS CEC 200.4, 250.122, 310.15(B)(2), CONDUIT SIZE SHALL BE INCREASED AS REQUIRED FOR THE CONDUCTORS INCLUDING TEMPERATURE DERATING PER CEC TABLE C1.
14. FURNISH AND INSTALL JUNCTION BOXES AS REQUIRED TO MEET MAXIMUM BEND REQUIREMENTS FOR PULLING WIRES PER CEC 358.26. JUNCTION BOXES SHALL BE SIZED AS REQUIRED PER CEC 314.28 UNLESS OTHERWISE NOTED.

PLAN NOTES:

1. REFER TO POOL CONSULTANT PLANS FOR POOL EQUIPMENT/DEVICE LAYOUTS, UNDERWATER LIGHTING LAYOUT, AND ALL ASSOCIATED ELECTRICAL PATHWAYS AND CONNECTIONS.
2. MUSCO LIGHTING AND ACCESSORIES MOUNTED ON 50' POLE. PROVIDE FLOOD LIGHTING ON NORMAL POWER, AND DECK LIGHTING ON EMERGENCY POWER AS INDICATED. PROVIDE ALL REQUIRED EQUIPMENT, ACCESSORIES AND BRACKETS FOR INSTALLATION. REFERENCE LIGHTING FIXTURE SCHEDULE ON SHEET E-7.0 AND MUSCO DRAWINGS FOR ADDITIONAL INFORMATION.
3. PROVIDE GROUNDING TO POLE LIGHTING PER MANUFACTURER'S REQUIREMENTS. CONNECT 1#6CU WIRE TO REBAR SYSTEM. TEST RESISTIVITY PRIOR TO CONCRETE POUR.
4. PROVIDE (2) WEATHERPROOF POLE MOUNTED SPEAKERS FOR POOL AUDIO/VISUAL SYSTEM. REFERENCE MUSCO DRAWINGS FOR MORE INFORMATION. ANY CABLING AND/OR RIGGING UTILIZED TO ATTACH THE SPEAKER CLUSTER SHALL BE MOUNTED IN A METHOD TO AVOID CONTACT WITH THE LIGHT POLE. HOMERUN 1" CONDUIT TO AV RACK LOCATED IN NEW POOL BUILDING. SEE AV WIRING DIAGRAM AND SPECIFICATION FOR ADDITIONAL INFORMATION.
5. PEDESTAL MOUNTED NEMA RECEPTACLE (HUBBELL #2610A).
6. COLE LIGHTING TL410-WCS-PED. PEDESTAL MOUNTED I/O PANEL WITH (1) LINE LEVEL 1/8" CONNECTOR, (2) MICROPHONE LEVEL XLR, AND (1) BLUETOOTH IN. (1) LINE LEVEL OUTPUT 1/8". HOMERUN 1" CONDUIT TO AV RACK LOCATED IN NEW POOL BUILDING. SEE AV WIRING DIAGRAM AND SPECIFICATION FOR ADDITIONAL INFORMATION. PROVIDE (1) 2-PORT DATA PORT WITH (2) CAT6 CABLES. HOMERUN 1" CONDUIT TO IDF RACK LOCATED IN NEAREST POOL BLDG.
7. PEDESTAL MOUNTED BUTTON CONTROL PANEL. HOMERUN (1) CAT6 CABLE, PER SPECIFICATIONS, IN 1" CONDUIT TO AV RACK LOCATED IN NEW POOL BUILDING. SEE AV WIRING DIAGRAM AND SPECIFICATION FOR ADDITIONAL INFORMATION.
8. PROVIDE (2)120V 20A CIRCUITS FOR SCOREBOARD DISPLAY AND (1)1"C FOR CONTROL. VERIFY CONNECTION REQUIREMENTS WITH SCOREBOARD MANUFACTURER DRAWINGS.
9. DEVICE TO BE MOUTNED AT 9'-8" AFG U.O.N. DEVICE(S) ARE O.F.O.I. PROVIDE DATA AT THE INDICATED LOCATIONS.

IDENTIFICATION STAMP
DIV. OF THE STATE ARCHITECT
APP: 03-122664 INC:
REVIEWED FOR
SS ☑ FLS ☑ ACS ☑
DATE: 05/12/2023

pjhm architects
LICENSED ARCHITECT
RICHARD W. SWARTZ
No. C15585
REN. 02/25
STATE OF CALIFORNIA
tk1sc COLLABORATIVE
11870 Pierce Street, Suite 160
Riverside, California 92505
951.299.4160 www.tk1sc.com
Project Leader - Nikolas Bruno
Electrical Lead - Nikolas Bruno
tk1sc Job #: B2202744.000
REGISTERED PROFESSIONAL ENGINEER
RAYMOND W. SWARTZ
No. E15610
ELECTRICAL
STATE OF CALIFORNIA
OC Office: 24461 Ridge Route Drive #100, Laguna Hills, CA 92653 Phone: 949.496.6133 SD Office: 804 Pier View Way #103, Oceanside, CA 92054 Phone: 760.730.5527 LA Office: 837 Traction Avenue, #410, Los Angeles, CA 90013 Phone: 213.278.0172 Web: pjhm.com

HIGHLAND HIGH SCHOOL
50M POOL & AQUATICS CENTER
KERN HIGH SCHOOL DISTRICT

SITE PLAN ENLARGED
E-1.1

8/2/2022 11:34:37 AM

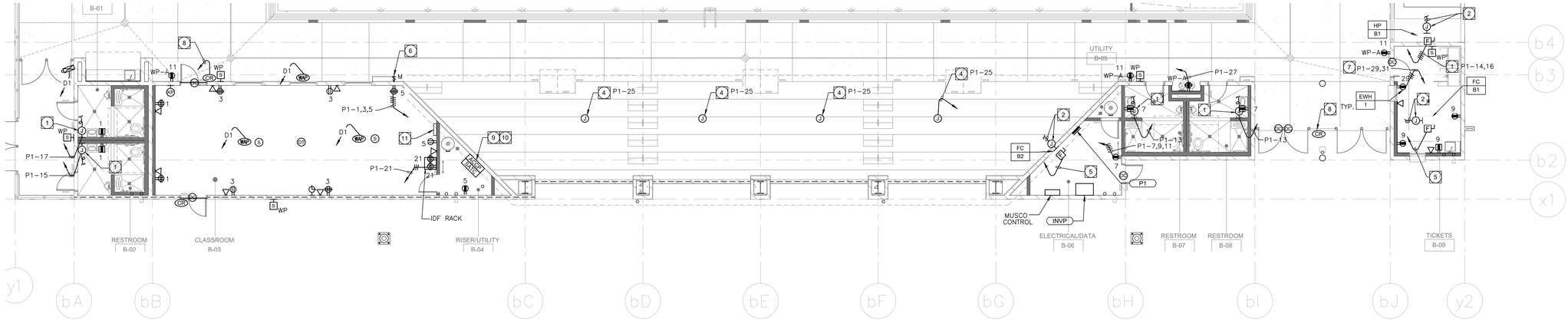

POOL BUILDING B - ELECTRICAL PLAN

1/8" = 1'-0"

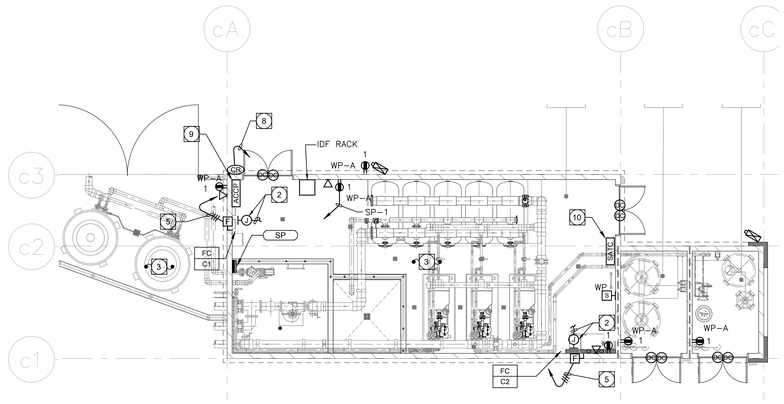

POOL BUILDING C - ELECTRICAL PLAN

1/8" = 1'-0"

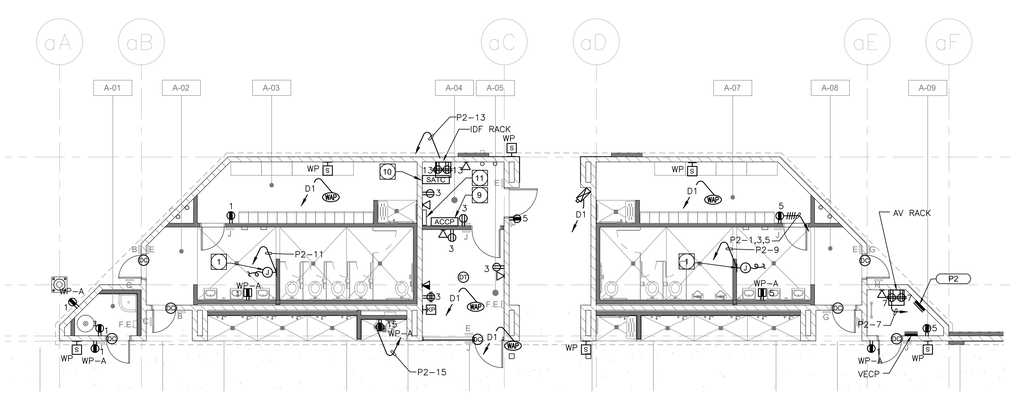

POOL BUILDING A - ELECTRICAL PLAN

1/8" = 1'-0"

POWER PLAN GENERAL NOTES:

1. ALL RECEPTACLES ON COMMON WALLS SHALL BE SEPARATE BOXES AND OFFSET 24-INCHES MINIMUM.
2. ALL PENETRATIONS THROUGH FIRE RATED WALLS SHALL BE PROTECTED FROM THE SPREAD OF FIRE WITH AN APPROVED FIRESTOP SYSTEM EQUAL OR GREATER THAN THE FIRE RATING OF THE WALL.
3. ALL WALL-MOUNTED DEVICE HEIGHTS SHALL BE VERIFIED WITH THE ARCHITECT PRIOR TO ROUGH-IN.
4. ALL FURNITURE FEED LOCATIONS TO BE VERIFIED WITH ARCHITECT AND FURNITURE VENDOR PRIOR TO ROUGH-IN.
5. ALL FURNITURE WHIPS SHALL BE TRIMMED TO REDUCE EXCESS WHIP LENGTH.
6. WHEN EXPOSED CEILINGS OR OPEN GRID CONDITIONS OCCUR, THE CONTRACTOR WILL NEED TO PROVIDE THE FOLLOWING ITEMS:
   a. ALL BRANCH CIRCUITS SHALL BE EMT.
   b. ALL BRANCH CIRCUITS SHALL BE ROUTED ORTHOGONALLY, NEATLY TRAINED, IN PARALLEL TO STRUCTURES OR DUCTWORK. THE TERM "TRAINED" MEANS ALL PARALLEL CONDUITS SHALL MAINTAIN THE SAME SPATIAL RELATIONSHIP WITH EACH OTHER FOR ENTIRE RUN TO INCLUDE RADIUS BENDS AND SWEEPS.
   c. VISUALLY OBJECTIONABLE BRANCH CIRCUITS WILL BE REROUTED AT THE REQUEST OF THE ARCHITECT AT NO ADDITIONAL COST.
7. EXPOSED CABLE/CONDUCTORS INSTALLED IN A PLENUM SPACE SHALL CONFORM TO NEC, OR CEC WHERE ADOPTED, **ARTICLE 300.22(C)**.
8. PROVIDE G.F.C.I. TYPE RECEPTACLE(S) OR RECEPTACLE(S) PROTECTED BY A GFCI CIRCUIT BREAKER(S) WHEN RECEPTACLES ARE 50A OR LESS, 150V TO GROUND OR LESS AND ARE LOCATED WITHIN 6-FEET OF ANY SINK OR THERAPEUTIC TUB, LAUNDRY AREA, SERVING ANY DRINKING FOUNTAIN OR VENDING MACHINE, WITHIN ANY KITCHEN SPACE, LOCKER ROOM AREA, GARAGE AND BATHROOM SPACE AND/OR LOCATED OUTDOORS. WHERE RECEPTACLES ARE NOT READILY ACCESSIBLE, PROVIDE GFCI CIRCUIT BREAKER(S) TO PROTECT THE RESPECTIVE BRANCH CIRCUIT AND PROVIDE ADDITIONAL NEUTRAL CONDUCTORS IN THE BRANCH CIRCUITING AS REQUIRED TO ENSURE PROPER GFCI FUNCTION.
9. PROVIDE OCCUPANCY SENSOR/LIGHTING CONTROL SYSTEM CONTROLLED RECEPTACLE RELAY(S) AS REQUIRED TO SWITCH CONTROLLED RECEPTACLES. CONNECT BRANCH CIRCUITRY AND CONTROL WIRING AS REQUIRED TO ALLOW OCCUPANCY SENSOR/LIGHTING CONTROL SYSTEM RELAY TO SWITCH STANDALONE AND/OR SYSTEMS FURNITURE CONTROLLED RECEPTACLES AS INDICATED ON PLANS. PROVIDE ADDITIONAL CONDUIT, WIRING AND PATHWAYS NECESSARY TO CONNECT BRANCH CIRCUITRY AND CONTROL WIRING TO REMOTE RELAYS TO INCLUDE RELAY(S) LOCATED ON ALTERNATE FLOORS, IN ELECTRICAL ROOMS, ETC.
10. PROVIDE ADDITIONAL J-BOX NEAR PANEL FOR MULTIPLE HOMERUN CIRCUITRY.
11. UNLESS SPECIFICALLY SHOWN AS (E), (R), (ER), (D), EXISTING OR NON-BOLD, ALL ELECTRICAL DEVICES SHOWN ARE NEW.
12. PROVIDE REDUNDANT GROUND PATH IN ALL BRANCH CIRCUITS SERVING PATIENT CARE AREAS CONSISTING OF A SEPARATE, INSULATED EQUIPMENT GROUNDING CONDUCTOR PER NEC, OR CEC WHERE ADOPTED, ART **517.13**.

COMMUNICATIONS PATHWAYS GENERAL NOTES:

1. CONDUITS SHALL (a) CONTAIN NO CONTINUOUS SECTIONS LONGER THAN 30M (98 FT.), AND (b) CONTAIN NO MORE THAN (2) 90° BENDS OR (1) REVERSE BEND WITHOUT INSTALLING A PULL BOX. SPLIT CONDUITS IN PLACE OF PULL BOXES ARE UNACCEPTABLE.
2. CONDUITS SHALL CONTAIN PLASTIC OR NYLON PULL TAPE RATED AT 200 LBS. WITH A MINIMUM OF 5 FEET OF EXTRA PULL TAPE COILED AT EACH END.
3. CONDUIT BEND RADIUS SHALL BE (a) A MINIMUM OF 6 TIMES THE INTERNAL CONDUIT DIAMETER FOR CONDUITS 2-INCHES IN DIAMETER OR LESS, AND (b) 10 TIMES THE INTERNAL CONDUIT DIAMETER FOR CONDUITS MORE THAN 2-INCHES IN DIAMETER.
4. TERMINATE CONDUIT STUBS AND SLEEVES THAT PROTRUDE THROUGH STRUCTURAL FLOORS 2-INCHEST TO 3-INCHES ABOVE THE FLOOR SURFACE.
5. INSTALL BUSHINGS OR BELL ENDS AS REQUIRED ON ALL CONDUITS.
6. FLEX CONDUIT IS UNACCEPTABLE FOR USE AS A COMMUNICATIONS CONDUIT EXCEPT AT SEISMIC JOINTS AND/OR IF APPROVED IN WRITING BY THE ENGINEER.
7. ALL UNDER SLAB OR IN-SLAB CONDUITS SHALL BE INSTALLED IN A MANNER THAT PREVENTS WATER INFILTRATION OF THE CONDUIT. IT IS THE CONTRACTOR'S RESPONSIBILITY TO ENSURE GROUND WATER, RAIN WATER OR CONSTRUCTION WATER IS PREVENTED FROM ENTERING AND/OR REMOVED FROM THE CONDUITS PRIOR TO PLACEMENT OF COMMUNICATIONS CABLES. SEE ELECTRICAL SPECIFICATIONS, DETAILS AND PLANS FOR ADDITIONAL CONDUIT SEALING REQUIREMENTS.
8. ALL PULL BOXES SHALL BE SIZED AND INSTALLED PER ANSI-TIA-569-C. PULL BOXES FOR IN/UNDER SLAB CONDUIT RUNS ARE NOT PERMITTED UNLESS OTHERWISE NOTED. PULL BOXES FOR OVERHEAD CONDUIT RUNS SHALL BE LOCATED ABOVE ACCESSIBLE CEILINGS WITHIN THE ACCESSIBLE CEILING SPACE AND SUPPORTED INDEPENDENTLY FROM THE STRUCTURE AND CONDUIT SUPPORTS. PULL BOXES FOR ROOF MOUNTED OR EXTERIOR ABOVE GRADE APPLICATIONS SHALL BE NEMA 3R RATED. PULL BOXES SHALL BE SIZED ACCORDING TO THE FOLLOWING:

CONDUIT SIZE	WIDTH	LENGTH	DEPTH	WIDTH INCREASE PER ADDITIONAL CONDUIT
1"	4"	16"	3"	2"
2"	8"	36"	4"	5"
3"	12"	48"	5"	6"
4"	15"	60"	8"	8"

FOR OTHER CONDUIT SIZES REFER TO ANSI/TIA-569-C TABLE 12. - LATEST PUBLISHED EDITION.

9. CONDUIT(S) SHALL EXIT A PULL BOX ON THE WALL OPPOSITE THE WALL ENTERED.
10. PROVIDE LABELING OF EACH CONDUIT PER GENERAL ELECTRICAL SPECIFICATIONS.
11. PROVIDE INTERNAL/EXTERNAL GAS AND WATER TIGHT MECHANICAL SEALING/PLUGGING OF EACH BUILDING ENTRY CONDUIT AS SPECIFIED ELSEWHERE IN THE DRAWINGS AND SPECIFICATIONS.
12. MC CABLE IS NOT ALLOWED ON THIS PROJECT. CONTRACTOR SHALL NOT USE MC CABLE.

PLAN NOTES:

1. CONNECT COMPLETE TO ELECTRIC HAND DRYER(S) PER MANUFACTURER'S REQUIREMENTS.
2. PROVIDE 3/4" C.O.(S) TO RESPECTIVE CONTROL DEVICE(S) FOR CONTROL WIRING. REFER TO THE EQUIPMENT CONTROL WIRING DIAGRAMS FOR ADDITIONAL INFORMATION.
3. ALL CONDUIT AND BOXES EXPOSED TO POOL CHEMICALS SHALL BE PVC COATED PER NEC TO PREVENT CORROSION.
4. CONNECT COMPLETE TO CEILING FANS PER MANUFACTURER'S REQUIREMENTS.
5. INDOOR UNIT POWERED THROUGH OUTDOOR UNIT. REFER TO MECHANICAL PLANS FOR ADDITIONAL INFORMATION.
6. SWITCH FOR CEILING FANS IN A LOCKABLE AND WEATHERPROOF ENCLOSURE.
7. CONNECT COMPLETE TO WATER HEATER AS REQUIRED. PROVIDE CODE SIZED DISCONNECT AS REQUIRED. REFER TO PLUMBING DRAWINGS FOR MORE INFORMATION AND EXACT MOUNTING LOCATION.
8. PROXIMITY CARD READER WITH 3/4" C. WITH CONDUCTORS BACK TO HEADEND LOCATION.
9. ACCESS CONTROL HEAD END PER DISTRICT STANDARDS. CONTRACTOR SHALL CONFIRM ALL DISTRICT APPROVED ACCESS CONTROL EQUIPMENT PRIOR TO PROCUREMENT.
10. SECURITY TERMINAL CABINET.
11. CROSS-CONNECTION BLOCKS FOR ANALOG TELEPHONE SYSTEM. MOUNT TO BACKBOARD IN FIELD. PROVIDE ALL CROSS-CONNECT TO ANALOG TELEPHONE SYSTEM DIAGRAM FOR ADDITIONAL REQUIREMENTS.

IDENTIFICATION STAMP
DIV. OF THE STATE ARCHITECT
APP: 03-122664 INC:
REVIEWED FOR
SS ☑ FLS ☑ ACS ☑
DATE: 05/12/2023

pjhm architects

LICENSED ARCHITECT
RICHARD W. RISHEL
No. C15585
REN. 02/25
STATE OF CALIFORNIA

tk|sc COLLABORATIVE
11870 Pierce Street, Suite 160
Riverside, California 92505
951.299.4160 www.tk1sc.com
Project Leader - Nikolas Bruno
Electrical Lead - Nikolas Bruno
tk1sc Job #: B2202744.000

REGISTERED PROFESSIONAL ENGINEER
RAYMOND W. SWARTZ
No. E15610
12-31-2024
ELECTRICAL
STATE OF CALIFORNIA

HIGHLAND HIGH SCHOOL
50M POOL & AQUATICS CENTER
KERN HIGH SCHOOL DISTRICT

POOL BUILDING - ELECTRICAL PLAN
E-3.0

OC Office: 24461 Ridge Route Drive #100, Laguna Hills, CA 92653 Phone: 949.496.6135
LA Office: 837 Traction Avenue, #410, Los Angeles, CA 90013 Phone: 213.278.0172
SD Office: 804 Pier View Way #103, Oceanside, CA 92054 Phone: 760.730.5557
Web: pjhm.com

8/2/2022 11:34:37 AM

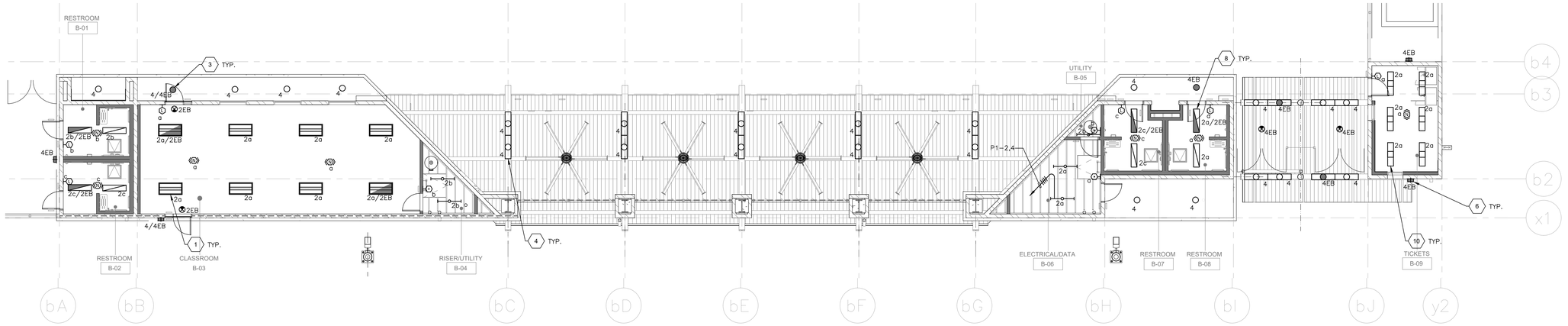

POOL BUILDING B - LIGHTING PLAN

1/8" = 1'-0"

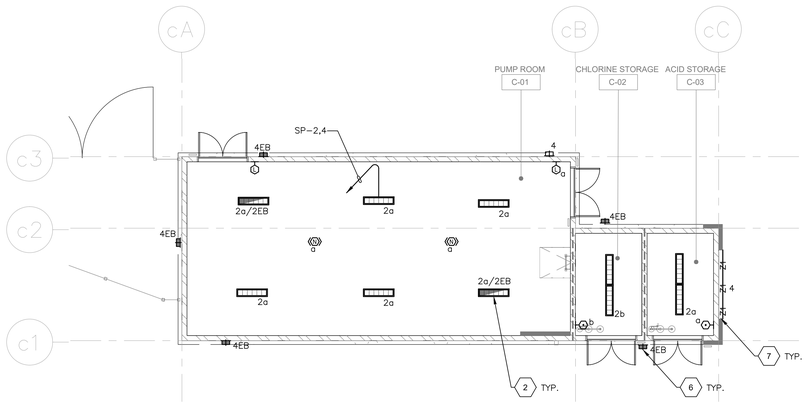

POOL BUILDING C - LIGHTING PLAN

1/8" = 1'-0"

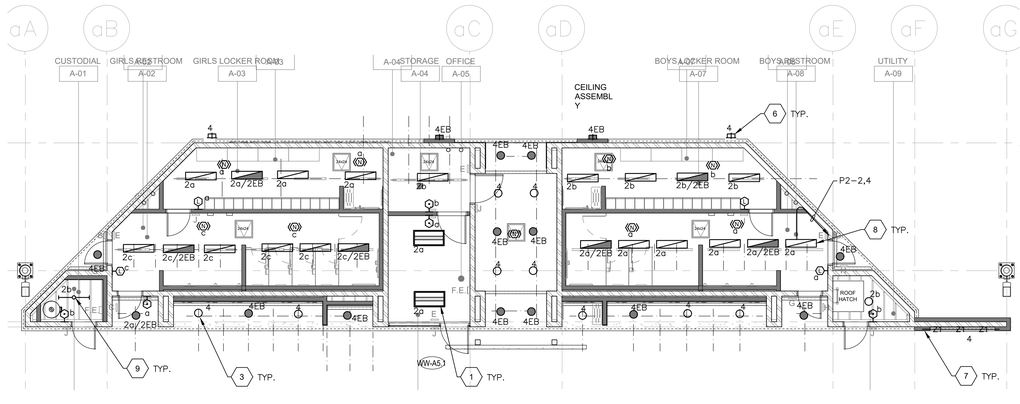

POOL BUILDING A - LIGHTING PLAN

1/8" = 1'-0"

LIGHTING PLAN GENERAL NOTES:

1. REFER TO ARCHITECTURAL PLANS FOR EXACT LOCATION AND ELEVATION OF ALL LIGHTING FIXTURES AND ALL DEVICES. ALL WALL-MOUNTED DEVICE HEIGHTS SHALL BE VERIFIED WITH THE ARCHITECT PRIOR TO ROUGH-IN.
2. VERIFY EXACT CEILING CONSTRUCTION WITH ARCHITECTURAL REFLECTED CEILING PLAN AND SPECS. PROVIDE LIGHTING FIXTURES WITH ALL NECESSARY MOUNTING HARDWARE.
3. ALL RECESSED FIXTURES SHALL BE PROVIDED WITH ALL STRUCTURAL SUPPORTS AS REQUIRED BY THE IBC, OR CBC WHERE ADOPTED, IN ADDITION TO ANY LOCAL CODES.
4. ALL PERIMETER AND COVE LIGHTING SHALL EXTEND THE FULL LENGTH OF THE WALLS OR COVE. CONTRACTOR TO FIELD MEASURE COVE LENGTH AND ORDER QUANTITY OF FIXTURES AS REQUIRED.
5. ALL LINE VOLTAGE DIMMING BRANCH CIRCUITS SHALL BE PROVIDED WITH A DEDICATED NEUTRAL CONDUCTOR FOR EACH ZONE/CHANNEL.
6. RECESSED FIXTURES LOCATED IN A FIRE-RATED CEILING OR WALL SHALL BE PROVIDED WITH A 5-SIDED, RATED ENCLOSURE SO CONSTRUCTED AS TO ALLOW CODE AND MANUFACTURER-REQUIRED CLEARANCES BETWEEN THE FIXTURE AND THE ENCLOSURE.
7. REFER TO ARCHITECTURAL REFLECTED CEILING PLANS FOR EXIT SIGN CHEVRONS AND NUMBER OF FACES PER EXIT SIGN. ANY DISCREPANCIES BETWEEN EXIT SIGNS SHOWN ON THE ELECTRICAL AND ARCHITECTURAL PLANS SHALL BE BROUGHT TO THE ATTENTION OF THE ARCHITECT PRIOR TO ORDERING EXIT SIGNS.
8. WHEN EXPOSED CEILINGS OR OPEN GRID CONDITIONS OCCUR, THE CONTRACTOR WILL NEED TO PROVIDE THE FOLLOWING ITEMS:
   a. ALL BRANCH CIRCUITS SHALL BE EMT.
   b. ALL BRANCH CIRCUITS SHALL BE ROUTED ORTHOGONALLY, NEATLY TRAINED, IN PARALLEL TO STRUCTURES OR DUCTWORK. THE TERM "TRAINED" MEANS ALL PARALLEL CONDUITS SHALL MAINTAIN THE SAME SPATIAL RELATIONSHIP WITH EACH OTHER FOR ENTIRE RUN TO INCLUDE RADIUS BENDS AND SWEEPS.
   c. VISUALLY OBJECTIONABLE BRANCH CIRCUITS WILL BE REROUTED AT THE REQUEST OF THE ARCHITECT AT NO ADDITIONAL COST.
9. ALL LED REMOTE INDICATORS FOR DUCT DETECTORS AND FIRE/SMOKE DAMPERS REQUIRED BY THE LOCAL AHJ SHALL BE LOCATED IN CEILINGS IN COORDINATION WITH ARCHITECT PRIOR TO ANY ROUGH-IN.
10. PROVIDE ADDITIONAL J-BOX NEAR PANEL FOR MULTIPLE HOMERUN CIRCUITRY.
11. UNLESS SPECIFICALLY SHOWN AS (E), (R), (ER), (D), EXISTING OR NON-BOLD, ALL ELECTRICAL DEVICES SHOWN ARE NEW.
12. REFER TO GENERAL POWER PLAN NOTES AND COMMUNICATIONS PATHWAYS GENERAL NOTE FOR ADDITIONAL REQUIREMENTS WHEN POWER AND/OR DATA DEVICES ARE SHOWN ON THIS PLAN.
13. ALL PENETRATIONS THROUGH FIRE RATED WALLS SHALL BE PROTECTED FROM THE SPREAD OF FIRE WITH AN APPROVED FIRESTOP SYSTEM EQUAL OR GREATER THAN THE FIRE RATING OF THE WALL.
14. PROVIDE REDUNDANT GROUND PATH IN ALL BRANCH CIRCUITS SERVING PATIENT CARE AREAS CONSISTING OF A SEPARATE, INSULATED EQUIPMENT GROUNDING CONDUCTOR PER NEC, OR CEC WHERE ADOPTED, ART **517.13.**

PLAN NOTES:

1. MUSCO LIGHTING AND ACCESSORIES MOUNTED ON 50' POLE. PROVIDE FLOOD LIGHTING ON NORMAL POWER, AND DECK LIGHTING ON EMERGENCY POWER AS INDICATED. PROVIDE ALL REQUIRED EQUIPMENT, ACCESSORIES AND BRACKETS FOR INSTALLATION. REFERENCE LIGHTING FIXTURE SCHEDULE ON SHEET E-7.0 AND MUSCO DRAWINGS FOR ADDITIONAL INFORMATION.
2. REFER TO POOL CONSULTANT PLANS FOR POOL EQUIPMENT/DEVICE LAYOUTS; UNDERWATER LIGHTING LAYOUT, AND ALL ASSOCIATED ELECTRICAL PATHWAYS AND CONNECTIONS.

1. NOTE:
   LIGHT FIXTURE TYPE, TYPICAL.
   REFER TO LIGHTING FIXTURE SCHEDULE ON SHEET E-7.0.

IDENTIFICATION STAMP
DIV. OF THE STATE ARCHITECT
APP: 03-122664 INC:
REVIEWED FOR
SS ☑ FLS ☑ ACS ☑
DATE: 05/12/2023

pjhm architects
LICENSED ARCHITECT
RICHARD W. SWARTZ
No. C15585
REN. 02/25
STATE OF CALIFORNIA
tk|sc COLLABORATIVE
11870 Pierce Street, Suite 160
Riverside, California 92505
951.299.4160 www.tk1sc.com
Project Leader - Nikolas Bruno
Electrical Lead - Nikolas Bruno
tk1sc Job #: B2202744.000
REGISTERED PROFESSIONAL ENGINEER
RICHARD W. SWARTZ
No. E15610
EXP. 12-31-2024
ELECTRICAL
STATE OF CALIFORNIA
OC Office: 24461 Ridge Route Drive #100, Laguna Hills, CA 92653 Phone: 949.496.6135 SD Office: 804 Pier View Way #103, Oceanside, CA 92054 Phone: 760.730.5527 LA Office: 837 Traction Avenue, #410, Los Angeles, CA 90013 Phone: 213.278.0112 Web: pjhm.com

HIGHLAND HIGH SCHOOL
50M POOL & AQUATICS CENTER
KERN HIGH SCHOOL DISTRICT

POOL BUILDING - LIGHTING PLAN
E-4.0

8/2/2022 11:34:37 AM

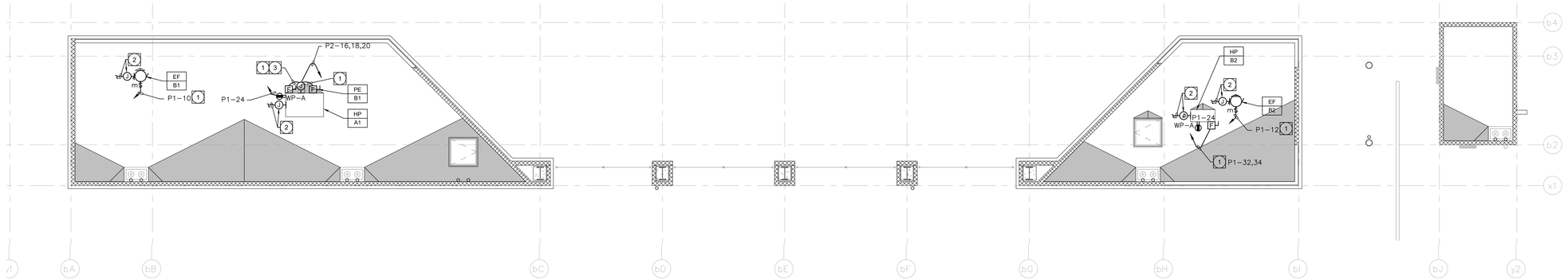

POOL BUILDING B - ROOF PLAN

1/8" = 1'-0"

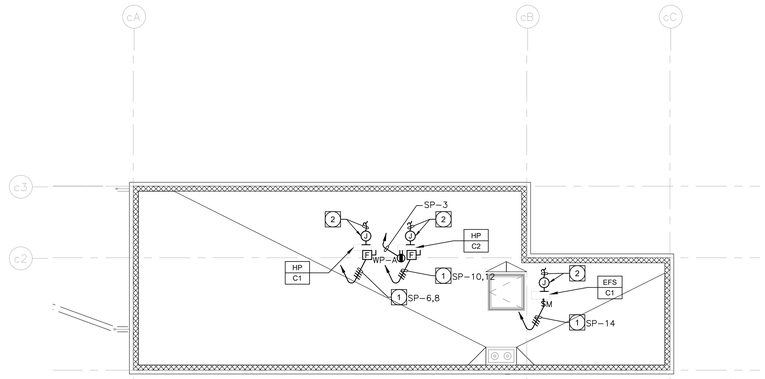

POOL BUILDING C - ROOF PLAN

1/8" = 1'-0"

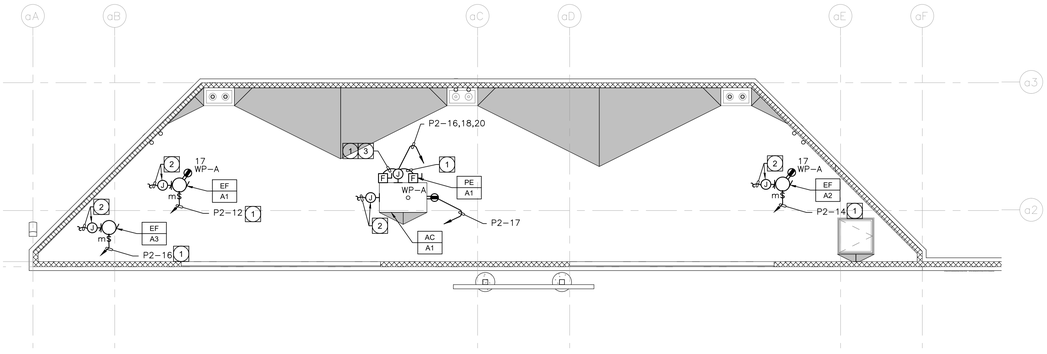

POOL BUILDING A - ROOF PLAN

1/8" = 1'-0"

ROOF PLAN GENERAL NOTES:

1. ELECTRICAL CONTRACTOR SHALL REFER TO MECHANICAL/PLUMBING AND ARCHITECTURAL DRAWINGS FOR EXACT LOCATIONS AND CHARACTERISTICS OF ALL EQUIPMENT LISTED IN SCHEDULE. ANY MODIFICATIONS AND/OR ADDITIONAL WORK NECESSARY SHALL BE INCLUDED IN THE BASE BID.
2. ALL TEMPERATURE CONTROL AND INTERLOCK CONDUIT AND WIRING SHALL BE BY ELECTRICAL CONTRACTOR UNLESS OTHERWISE NOTED. SEE MECHANICAL/PLUMBING DRAWINGS FOR ALL INFORMATION.
3. ELECTRICAL CONTRACTOR SHALL VERIFY THE EXACT LOCATION OF ALL CONNECTION POINTS WITH THE EQUIPMENT INSTALLER PRIOR TO ROUGH–IN.
4. ELECTRICAL CONTRACTOR SHALL PROVIDE LOCAL REMOTE DISCONNECTING MEANS FOR ALL ELECTRIC HEATING EQUIPMENT IF REQUIRED BY THE LOCAL ELECTRICAL CODE.
5. ELECTRICAL CONTRACTOR SHALL COORDINATE THE ROUTING OF CONDUIT/WIRING TO ROOF–MOUNTED EQUIPMENT WITH EQUIPMENT INSTALLER PRIOR TO ROUGH–IN. WHERE ROOF–MOUNTED EQUIPMENT IS MANUFACTURED TO BE FED FROM WITHIN MECHANICAL CURB ASSEMBLY – SEPARATE ROOF PENETRATIONS FOR WIRING CONNECTIONS SHALL NOT BE PERMITTED. ALL WIRING SHALL BE BELOW THE ROOF IN AN ACCESSIBLE CEILING SPACE LOCATION.
6. ALL ROOF MOUNTED EQUIPMENT SHALL BE NEMA 3R RATED.
7. UNLESS SPECIFICALLY SHOWN AS (E), (R), (ER), (D), EXISTING OR NON–BOLD, ALL ELECTRICAL DEVICES SHOWN ARE NEW.
8. CONTRACTOR SHALL PROVIDE CONDUIT AND WIRE FOR ALL DEVICES TO PANELBOARD(S) INDICATED ON PLANS FOR A COMPLETE AND OPERABLE SYSTEM.
9. CONTRACTOR SHALL PROVIDE MINIMUM 2#12, 1#12G IN ½" CONDUIT UNLESS OTHERWISE NOTED. REFERENCE WIRE SIZE TABLE CHART ON DETAIL #2, SHEET E–6.0. WHERE REQUIRED, CONDUIT AND WIRE SHALL BE UPSIZED TO MEET THE REQUIREMENT OF THE DEVICE BEING SERVED BY THE BRANCH CIRCUIT. WHERE CONDUIT AND WIRING IS INDICATED AT THE HOME RUN, WIRING AND CONDUIT SHALL CONTINUE AT THAT SIZE FOR THE ENTIRE LENGTH OF THE CIRCUIT.
10. CONTRACTOR SHALL FURNISH ADDITIONAL SWITCHLEGS OR HOT WIRES AS REQUIRED TO MEET THE CONTROL INTENT OF THE DOCUMENTS AND AS REQUIRED BY CODE (I.E. EMERGENCY LIGHTING AND SWITCHED RECEPTACLES).
11. MULTIPLE CIRCUITS MAY BE USED IN A SINGLE RACEWAY. NO MORE THAN (3) DEDICATED CIRCUITS OR (4) CURRENT CARRYING CONDUCTORS SHALL BE INSTALLED IN ANY RACEWAY UNLESS OTHERWISE NOTED. WHERE A COMMON GROUNDED CONDUCTOR IS USED FOR MULTIPLE INDIVIDUAL BRANCH CIRCUITS, PER SECTIONS CEC 200.4, 250.122, 310.15(B)(2), CONDUIT SIZE SHALL BE INCREASED AS REQUIRED FOR THE CONDUCTORS INCLUDING TEMPERATURE DERATING PER CEC TABLE C1.
12. FURNISH AND INSTALL JUNCTION BOXES AS REQUIRED TO MEET MAXIMUM BEND REQUIREMENTS FOR PULLING WIRES PER CEC 358.26. JUNCTION BOXES SHALL BE SIZED AS REQUIRED PER CEC 314.28 UNLESS OTHERWISE NOTED.

MOTORIZED EQUIPMENT SCHEDULE SPECIFIC NOTES:

A. FUSED AS RECOMMENDED BY MANUFACTURER.

B. INDOOR UNIT POWERED THROUGH OUTDOOR UNIT. REFER TO MECHANICAL PLANS FOR ADDITIONAL INFORMATION.

C. REFER TO 'AC UNIT POWER EXHAUST – 1HP' FOR MODULATING POWER EXHAUST EQUIPMENT RATING INFORMATION.

MOTORIZED EQUIPMENT SCHEDULE GENERAL NOTES:

1. ALL BRANCH CIRCUIT DATA IS BASED UPON METALLIC CONDUITS. IF THE CONTRACTOR ELECTS TO USE NONMETALLIC CONDUITS, AN EQUIPMENT GROUNDING CONDUCTOR SHALL BE INSTALLED PER NEC, OR CEC WHERE ADOPTED, TABLE **250.122** AND THE CONDUIT SIZE SHALL BE INCREASED ACCORDINGLY.
2. ELECTRICAL CONTRACTOR SHALL REFER TO ALL DOCUMENTS RELATED TO THE EQUIPMENT (I.E. SHOP DRAWINGS, CONSTRUCTION DOCUMENTS, ETC.) IN REGARDS TO ELECTRICAL CHARACTERISTICS OF ALL EQUIPMENT LISTED IN THE SCHEDULE. ANY MODIFICATION AND/OR ADDITIONAL WORK NECESSARY SHALL BE INCLUDED IN THE BASE BID.
3. ELECTRICAL CONTRACTOR SHALL CHECK THE ROTATION OF ALL THREE PHASE MOTORS AND CORRECT THE ROTATION IF REVERSED.
4. ELECTRICAL CONTRACTOR SHALL PROVIDE FUSES SIZED PER THE EQUIPMENT NAMEPLATE INFORMATION.
5. DISCONNECT SWITCHES SHALL BE HEAVY DUTY TYPE, EXTERNALLY OPERATED, QUICK MAKE QUICK BREAK AND SHALL BE FUSIBLE OR NON FUSIBLE AS INDICATED. A MAXIMUM VOLTAGE, CURRENT AND HORSEPOWER SHALL BE CLEARLY MARKED ON SWITCH ENCLOSURE. SWITCHES HAVING DUAL RATINGS (HIGHER RATINGS WHEN USED WITH DUAL ELEMENT FUSES) SHALL HAVE RATINGS INDICATED ON METAL PLATES RIVETED OR OTHERWISE PERMANENTLY ATTACHED TO THE ENCLOSURE. WHEN INDICATED, TOGGLE SWITCHES SHALL BE MOTOR RATED FOR THE APPLICATION.
6. STARTERS SHALL BE FULL VOLTAGE, REDUCED VOLTAGE OR COMBINATION DISCONNECT AND STARTER, WITH CONTROL VOLTAGE AS REQUIRED, AS INDICATED ON THE DOCUMENTS RELATED TO THE EQUIPMENT, SUCH AS SHOP DRAWINGS, CONSTRUCTION DOCUMENTS, ETC. STARTERS SHALL INCLUDE MOTOR OVERLOAD PROTECTION, PHASE LOSS AND PHASE UNBALANCE PROTECTION AS REQUIRED.
7. ALL TERMINATIONS AND ENCLOSURES SHALL BE RATED FOR USE WITH 75 DEGREE C CONDUCTORS.
8. COMPLETE INSTALLATION SHALL CONFORM TO THE REQUIREMENTS OF NEC (OR CEC WHERE ADOPTED) ARTICLES **430 AND 440.**
9. CONTRACTOR TO COORDINATE WITH ALL OTHER PROJECT TRADES AND WITH OWNER/ TENANT FOR TO OBTAIN RESPECTIVE EQUIPMENT SCCR AND PROVIDE APPROPRIATE PROTECTIVE DEVICES TO LIMIT AVAILABLE FAULT CURRENT TO LESS THAN THE EQUIPMENT NAMEPLATE SCCR PER NEC (OR CEC WHERE ADOPTED) **110.10.** SEE POWER SYSTEM STUDY SPECIFICATIONS FOR ADDITIONAL REQUIREMENTS.
10. UNLESS OTHERWISE NOTED, MOCP VALUES FOR VFD–EQUIPPED DEVICE ARE SIZED PER NEC (OR CEC WHERE ADOPTED) **430.130(A).1.** CONTRACTOR SHALL COORDINATE WITH ALL OTHER PROJECT TRADES AND WITH OWNER/ TENANT (IF PROVIDING EQUIPMENT ON PROJECT) TO OBTAIN NAMEPLATE VFD–EQUIPPED DEVICE MOCP VALUE FROM MANUFACTURER INSTALLATION INSTRUCTIONS AND PROVIDE APPROPRIATE PROTECTIVE DEVICES TO COMPLY WITH NEC (OR CEC WHERE ADOPTED) **430.130(A).2.**

PLAN NOTES:

1. REFER TO MOTORIZED EQUIPMENT SCHEDULE FOR MOTOR FEEDER/ BRANCH CIRCUIT INFORMATION.
2. PROVIDE 3/4" C.O.(S) TO RESPECTIVE CONTROL DEVICE(S) FOR CONTROL WIRING. REFER TO THE EQUIPMENT CONTROL WIRING DIAGRAMS FOR ADDITIONAL INFORMATION.
3. CONNECT TO AC UNIT MODULATING POWER EXHAUST AS REQUIRED. REFER TO MECHANICAL DRAWINGS AND CONTROL DIAGRAMS.

MOTORIZED EQUIPMENT SCHEDULE

ITEM	DESCRIPTION	EQUIPMENT RATING							DISC. SW. SIZE STARTER SIZE	CIRCUIT DATA CONDUIT – WIRE	SPECIFIC NOTES
				MOTOR		VFD					
		VOLTS	PH.	HP	FLA	FLA	MCA	MOCP	SCCR		
EF A1	EXHAUST FAN	115	1	.25	5.8	–	7.3	15	–	30AS/1P – –	3/4"C.–2#12,1#12GND. – –
EF A2	EXHAUST FAN	115	1	.25	5.8	–	7.3	15	–	30AS/1P – –	3/4"C.–2#12,1#12GND. – –
EF A3	EXHAUST FAN	115	1	.25	5.8	–	7.3	15	–	30AS/1P – –	3/4"C.–2#12,1#12GND. – –
EF B1	EXHAUST FAN	115	1	.25	5.8	–	7.3	15	–	30AS/1P – –	3/4"C.–2#12,1#12GND. – –
EF B2	EXHAUST FAN	115	1	.25	5.8	–	7.3	15	–	30AS/1P – –	3/4"C.–2#12,1#12GND. – –
EFS C1	EXHAUST FAN	115	1	.25	5.8	–	7.3	15	–	30AS/1P – –	3/4"C.–2#12,1#12GND. – –
HP B1	HEAT PUMP (OUTDOOR)	208	1	–	–	–	19	26	–	30AS/2P – –	3/4"C.–3#10,1#10GND. – –	A
HP B2	HEAT PUMP (OUTDOOR)	208	1	–	–	–	11	28	–	30AS/2P – –	3/4"C.–3#10,1#10GND. – –	A
HP C1	HEAT PUMP (OUTDOOR)	208	1	–	–	–	25	31	–	60AS/2P – –	1"C.–3#8,1#8GND. – –	A
HP C2	HEAT PUMP (OUTDOOR)	208	1	–	–	–	25	31	–	60AS/2P – –	1"C.–3#8,1#8GND. – –	A
FC B1	FAN COIL (INDOOR)	208	1	–	–	–	0.2	15	–	30AS/2P – –	3/4"C.–3#12,1#12GND. – –	A,B
FC B2	FAN COIL (INDOOR)	208	1	–	–	–	0.2	15	–	30AS/2P – –	3/4"C.–3#12,1#12GND. – –	A,B
FC C1	FAN COIL (INDOOR)	208	1	–	–	–	0.63	15	–	30AS/2P – –	3/4"C.–3#12,1#12GND. – –	A,B
FC C2	FAN COIL (INDOOR)	208	1	–	–	–	0.63	15	–	30AS/2P – –	3/4"C.–3#12,1#12GND. – –	A,B
AC A1	AIR CONDITIONER	208	3	–	–	–	30	40	–	60AS/3P – –	1"C.–4#8,1#8GND. – –	A,C
AC B1	AIR CONDITIONER	208	3	–	–	–	26	40	–	60AS/3P – –	1"C.–4#8,1#8GND. – –	A,C
	POWER EXHAUST (1HP)	460	3	1.0	1.8	–	2.3	15	–	30AS/3P – –	3/4"C.–4#12,1#12GND. – –	A

IDENTIFICATION STAMP
DIV. OF THE STATE ARCHITECT
APP: 03-122664 INC:
REVIEWED FOR
SS ☑ FLS ☑ ACS ☑
DATE: 05/12/2023

pjhm architects
LICENSED ARCHITECT
RICHARD W. SWARTZ
NO. C15585
REN. 02/25
STATE OF CALIFORNIA
tk|sc COLLABORATIVE
11870 Pierce Street, Suite 160
Riverside, California 92505
951.299.4160 www.tk1sc.com
Project Leader - Nikolas Bruno
Electrical Lead - Nikolas Bruno
tk1sc Job #: B2202744.000
REGISTERED PROFESSIONAL ENGINEER
RICHARD W. SWARTZ
No. E15610
EXP. 12/31/2024
ELECTRICAL
STATE OF CALIFORNIA
OC Office: 24461 Ridge Route Drive #100, Laguna Hills, CA • 92653 Phone: 949.496.6100 SD Office: 804 Pier View Way #103, Oceanside, CA • 92054 Phone: 760.730.5527 LA Office: 837 Traction Avenue, #410, Los Angeles, CA • 90013 Phone: 213.278.0172 Web: pjhm.com

HIGHLAND HIGH SCHOOL
50M POOL & AQUATICS CENTER
KERN HIGH SCHOOL DISTRICT

ROOF PLAN

E–5.0

8/2/2022 11:34:37 AM

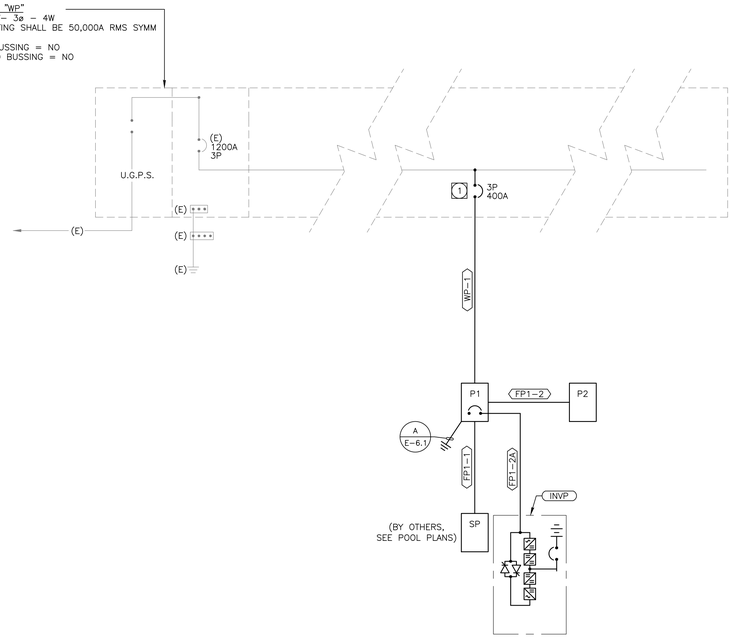

SINGLE LINE DISTRIBUTION DIAGRAM

SCALE: N.T.S.

1

VOLTAGE DROP WORKSHEET: REFERENCE ONLY

1. ALL BRANCH CIRCUITS ARE DESIGNED TO LIMIT VOLTAGE DROP 3% OR LESS USING THE FOLLOWING CRITERIA:

277 VOLT, 1 PHASE LOAD:

LOAD (VA)	DISTANCE	CU CONDUCTOR SIZE
0–4432 VA 0–16 AMPS	0–158 FT	#12
	159–250 FT	#10
	251–397 FT	#8

480 VOLT, 3 PHASE LOAD:

LOAD (VA)	DISTANCE	CU CONDUCTOR SIZE
0–13,296 VA (4,432 PER PHASE) 0–16 AMPS	0–45 FT	#12
	46–72 FT	#10
	73–114 FT	#8
13,297–19,994 VA (6,648 PER PHASE) 16–24 AMPS	0–30 FT	#12
	31–48 FT	#10
	49–76 FT	#8

208 VOLT, 1 PHASE LOAD:

LOAD (VA)	DISTANCE	CU CONDUCTOR SIZE
0–1000 VA (500 PER PHASE) 0–4.8 AMPS	0–225 FT	#12
	226–360 FT	#10
	361–572 FT	#8
1001–2000 VA (1,000 PER PHASE) 4.8–9.6 AMPS	0–151 FT	#12
	152–240 FT	#10
	241–380 FT	#8
	381–604 FT	#6
2001–3,328 VA (1,664 PER PHASE) 9.6–16 AMPS	0–78 FT	#12
	79–125 FT	#10
	126–198 FT	#8
3329–4,992 VA (2,496 PER PHASE) 16–24 AMPS	0–52 FT	#12
	53–83 FT	#10
	84–132 FT	#8

120 VOLT, 1 PHASE LOAD:

LOAD (VA)	DISTANCE	CU CONDUCTOR SIZE
0–1000 VA 0–8 AMPS	0–130 FT	#12
	131–205 FT	#10
	205–330 FT	#8
1001–1500 VA 8–12.5 AMPS	0–87 FT	#12
	88–138 FT	#10
	139–219 FT	#8
	220–350 FT	#6
1501–1920 VA 12.5–16 AMPS	0–68 FT	#12
	69–108 FT	#10
	109–172 FT	#8
	173–273 FT	#6
1921–2880 VA 16–24 AMPS	0–72 FT	#10
	73–114 FT	#8
	115–182 FT	#6

ANY 3 PHASE LOADS GREATER THAN 30 AMPS ARE SHOWN ON THE FEEDER SCHEDULE OR MOTORIZED EQUIPMENT SCHEDULE WITH ASSOCIATED VOLTAGE DROP LIMITED TO 2% OR LESS.

WIRE SIZE TABLE CHART

SCALE: N.T.S.

2

GENERAL SINGLE LINE DIAGRAM NOTES:

1. ALL SWITCHGEAR SHALL BE SQUARE D OR EQUAL BY CUTLER–HAMMER, RSE–SIERRA, G.E., SIEMENS, OR Z–POWER AND DISTRIBUTION.
2. ALL ITEMS DEPICTED ON THE SINGLE LINE DRAWINGS SHALL BE ASSUMED AS NEW U.O.N.
3. ALL OVERCURRENT DEVICES IN AN INDIVIDUAL PIECE OF EQUIPMENT SHALL HAVE AN AIC RATING EQUAL TO THE OVERALL RATING OF THE EQUIPMENT–SERIES RATING OF DEVICES WITHIN A PIECE OF EQUIPMENT IS NOT ALLOWED. SEE SPECIFICATIONS FOR MORE INFORMATION.
4. SERIES RATED DEVICES SHALL HAVE BEEN INVESTIGATED BY U.L. IN COMBINATION WITH THE END USE EQUIPMENT AND IN THE EQUIPMENT IN WHICH THESE DEVICES ARE USED AND SHALL BE MARKED WITH A SERIES RATING. ALL EQUIPMENT SHALL BE MARKED IN ACCORDANCE WITH NEC (OR CEC–WHERE ADOPTED) REQUIREMENTS. SEE SPECIFICATIONS FOR MORE INFORMATION. WHERE SERIES RATINGS ARE ALLOWED, THE EQUIPMENT SHALL BE LEGIBLY MARKED IN THE FIELD TO INDICATE A SERIES COMBINATION RATING WHICH SHALL BE READILY VISIBLE AND STATE THE FOLLOWING:

   **CAUTION – SERIES COMBINATION SYSTEM RATED AT ??,???
   AMPERES. USE ONLY IDENTIFIED REPLACEMENT COMPONENTS
   IN THIS SYSTEM.**

   WHERE ??,??? REPRESENTS AVAILABLE FAULT CURRENT. SEE SPECIFICATIONS FOR PLACARD REQUIREMENTS.
5. ALL TERMINATIONS AND ENCLOSURES SHALL BE RATED FOR USE WITH 75 DEGREE CELSIUS CONDUCTORS.
6. ALL SERVICE ENTRANCE EQUIPMENT RATED AT 400A OR GREATER SHALL BE PROVIDED WITH A BACKFEED–RATED, SOLID STATE MAIN OVERCURRENT DEVICE AND BUSSING RATED AT 100% OPERATION (1000A/sq.in. FOR CU, 750A/sq.in. FOR AL). NO HEAT RISE RATED BUSSING ALLOWED. NON–SERVICE ENTRANCE SWITCHBOARDS AND DISTRIBUTION BOARDS LARGER THAN 600A SHALL BE PROVIDED WITH BUSSING RATED FOR 100% OPERATION – SEE SPECIFICATION FOR CIRCUIT BREAKER REQUIREMENTS. ALL NON–SERVICE ENTRANCE SWITCHBOARDS AND DISTRIBUTION BOARD MAIN OVERCURRENT DEVICES SHALL BE BACKFEED–RATED. BACKFEED RATINGS SHALL COMPLY WITH NEC, OR CEC WHERE ADOPTED, **710.15 (E) AND 705.12(B)(4).** SEE SPECIFICATIONS FOR ADDITIONAL REQUIREMENTS REGARDING CIRCUIT BREAKERS.
7. PROVIDE CIRCUIT BREAKER ARC ENERGY REDUCTION MAINTENANCE SWITCHING PER NEC, OR CEC WHERE ADPOPTED, **240.87(B)(3)** FOR ANY CIRCUIT BREAKER, 1200A FRAME AND LARGER. SEE SPECIFICATIONS FOR ADDITIONAL REQUIREMENTS.
8. ALL SWITCHBOARDS AND DISTRIBUTION BOARDS SHALL HAVE:
   a. **TIN–PLATED ALUMINUM** BUSSING WITH RECTANGULAR CROSS SECTION. HORIZONTAL AND VERTICAL BUSSING SHALL BE FULL LENGTH AND SHALL HAVE PROVISIONS FOR FUTURE EXTENSIONS. ALL BUSSING SHALL HAVE MINIMUM WITHSTAND RATING EQUAL TO THE AVAILABLE FAULT CURRENT INDICATED. ALL VERTICAL AND HORIZONTAL BUSSING SHALL BE RATED AT FULL CAPACITY IN ALL SWITCHBOARD AND DISTRIBUTION BOARD SECTIONS. PROVIDE 100% NEUTRAL BUSSING MINIMUM UNLESS OTHERWISE NOTED. PROVIDE FULL LENGTH GROUND BUS AND, WHERE INDICATED ON PLANS, ISOLATED GROUND BUSSING. PROVIDE REAR WIRE WAY IN ALL SWITCHBOARD SECTIONS.
   b. LUGS SUITABLE FOR USE WITH COPPER OR ALUMINUM CONDUCTORS LISTED FOR USE WITH 75 DEGREE CELSIUS AMPACITY CONDUCTORS.
   c. PERMANENT PLACARD(S) MARKED PER THE SPECIFICATIONS AND PER NEC (OR CEC–WHERE ADOPTED) SECTIONS **225.37, 230.2(E), 690.56, 692.56, 700.7, 701.7, 702.7,** AND **705.10** AND IFC (OR CFC – WHERE ADOPTED) SECTION **608.2.6.1**. DENOTING THE PRESENCE OF ADDITIONAL SERVICES, PHOTOVOLTAIC SYSTEMS, FUEL CELLS, EMERGENCY, STATIONARY BATTERY STORAGE SYSTEMS, OR STAND–BY POWER SOURCES AS APPLICABLE.
9. CONTRACTOR SHALL SUBMIT SWITCHBOARD SHOP DRAWINGS TO THE SERVING UTILITY FOR APPROVAL PRIOR TO FABRICATION. CONTRACTOR SHALL SECURE CONFIRMATION THAT THE PROPOSED SWITCHBOARD COMPLIES WITH ELECTRIC UTILITY COMPANY REGULATIONS.
10. CONTRACTOR SHALL SUBMIT SHOP DRAWINGS PER THE SPECIFICATIONS FOR SWITCHBOARDS, DISTRIBUTION BOARDS, TRANSFORMERS, PANEL BOARDS, AND ALL OTHER DEVICES SHOWN ON THE SINGLE LINE, PRIOR TO FABRICATION.
11. ALLOWABLE DIMENSIONS IN MAIN ELECTRICAL ROOM ARE A CRITICAL COORDINATION ITEM. CONTRACTOR SHALL PROVIDE 1/4"= 1'–0" SCALE DRAWINGS WITH SWITCHGEAR SUBMITTALS SHOWING THAT ALL PROPOSED EQUIPMENT WILL FIT IN THE SPACE PROVIDED. SUBMITTALS WITHOUT THIS DRAWING SHALL BE REJECTED AS INCOMPLETE.
12. UNLESS SPECIFICALLY SHOWN AS (E), (R), (ER), (D), EXISTING OR NON–BOLD, ALL ELECTRICAL DEVICES SHOWN ARE NEW.
13. WHERE REQUIRED BY THE LOCAL AUTHORITY HAVING JURISDICTION OR WHERE A NEW GROUND FAULT PROTECTIVE DEVICE IS BEING INSTALLED, A GROUND FAULT SYSTEM TEST SHALL BE CONDUCTED BY AN INDEPENDENT TESTING AGENCY PER NEC (OR CEC–WHERE ADOPTED) **230.95(C).** THE GROUND FAULT SYSTEM TEST SHALL BE PERFORMED IN THE PRESENCE OF THE LOCAL AUTHORITY HAVING JURISDICTION. VERIFICATION OF DEVICE SETTINGS PER THE POWER SYSTEMS STUDY SPECIFICATION SHALL BE PERFORMED BY THE SAME INDEPENDENT TESTING AGENCY. THE GROUND FAULT TEST RESULTS SHALL BE DELIVERED TO THE ENGINEER OF RECORD. DURING THE CONSTRUCTION PHASE OF THE PROJECT, ALL NEW GROUND FAULT RELAYS SHALL BE SET AT THE LOWEST AVAILABLE TIME DELAY AND PICK–UP SETTINGS.
14. SEE POWER SYSTEMS STUDY SPECIFICATION FOR ADDITIONAL REQUIREMENTS. ALL REQUIRED POWER SYSTEMS STUDIES MUST BE COMPLETED AND SUBMITTED WITH ELECTRICAL POWER DISTRIBUTION EQUIPMENT SUBMITTAL. FAILURE TO DO SO WILL PREVENT THE ENGINEER FROM EFFECTIVELY EVALUATING THE SUBMITTAL AND SHALL RESULT IN REJECTION OF THE ELECTRICAL POWER DISTRIBUTION EQUIPMENT SUBMITTAL AS INCOMPLETE.

SPECIFIC SINGLE LINE NOTES:

1. PROVIDE NEW OVERCURRENT PROTECTIVE DEVICE COMPATIBLE WITH EXISTING SWITCHBOARD. PROVIDE AIC RATING OF NEW DEVICE TO MATCH EXISTING RATING.

FEEDER SCHEDULE

FEEDER	CONDUIT AND CONDUCTORS	LOAD	DISTANCE	V.D. (%)	A.I.C.	NOTES
WP–1	(2)[4"C – 4–500MCM, #1/0G] –	(320)	450'	2.68	<10K	TO PANEL PHL1 –
FP1–1	3"C. – 4#4/0, #2GRD –	(160)	40'	0.34	<10K	TO PANEL SP (SEE PANEL SCHEDULE)
FP1–2	3"C. – 4#4/0, #2GRD –	(160)	20'	0.17	<10K	TO PANEL P2 (SEE PANEL SCHEDULE)
FP1–2A	1"C. – 3#10, 1#10GRD. –	(14.4)	20'	0.36	<10K	TO INVERTER INVP (SEE PANEL SCHEDULE)
–	– –	–	–	–	–	– –

GENERAL FEEDER SCHEDULE NOTES:

1. ALL FEEDERS SHOWN, UNLESS SPECIFICALLY NOTED OTHERWISE, ARE PRESUMED TO BE ROUTED IN METAL RACEWAYS. IF P.V.C. CONDUITS ARE UTILIZED, THE CONTRACTOR SHALL PROVIDE AN EQUIPMENT GROUND PER NEC, OR CEC WHERE ADOPTED, **TABLE 250.122** OR, WHERE REQUIRED, PROVIDE A MAIN BONDING JUMPER PER **TABLE 250.66** AND INCREASE THE CONDUIT SIZE ACCORDINGLY.
2. LOADS INDICATED WITH " ( ) " REPRESENT WORST CASE LOAD IN AMPS.
3. DISTANCE SHOWN IS FOR DESIGN PURPOSES ONLY. IT IS NOT A MATERIAL TAKEOFF.
4. VOLTAGE DROP VALUE INDICATED IS AT THE END OF THE FEEDER.
5. AVAILABLE FAULT CURRENT VALUE AT THE END OF THE FEEDER INDICATED. CALCULATIONS ARE BASED UPON INITIAL VALUES RECEIVED FROM THE SERVING UTILITY AND THE LENGTH AND IMPEDANCE OF THE FEEDER. THE SHORT CIRCUIT CURRENT RATING, EQUIPMENT BUS BRACING, AND/OR AMP INTERRUPTING CURRENT OF EQUIPMENT CONNECTED ON THE LOAD SIDE OF THE FEEDER SHALL BE GREATER THAN THE AVAILABLE FAULT CURRENT.

IDENTIFICATION STAMP
DIV. OF THE STATE ARCHITECT
APP: 03-122664 INC:
REVIEWED FOR
SS ☑ FLS ☑ ACS ☑
DATE: 05/12/2023

pjhm architects
LICENSED ARCHITECT
RICHARD W. RISHEL
NO. C15585
REN. 02/25
STATE OF CALIFORNIA
tk|sc COLLABORATIVE
11870 Pierce Street, Suite 160
Riverside, California 92505
951.299.4160 www.tksc.com
Project Leader - Nikolas Bruno
Electrical Lead - Nikolas Bruno
tk1sc Job #: B2202744.000
REGISTERED PROFESSIONAL ENGINEER
RAYMOND W. SIMPSON
NO. E15610
EXP. 12/31/2024
ELECTRICAL
STATE OF CALIFORNIA

HIGHLAND HIGH SCHOOL
50M POOL & AQUATICS CENTER
KERN HIGH SCHOOL DISTRICT

SINGLE LINE DIAGRAM
E–6.0

OC Office: 24461 Ridge Route Drive #100, Laguna Hills, CA • 92653 Phone: 949.496.6161 SD Office: 804 Pier View Way #103, Oceanside, CA • 92054 Phone: 760.730.5527 LA Office: 837 Traction Avenue, #410, Los Angeles, CA • 90013 Phone: 213.278.0112 Web: pjhm.com

8/2/2022 11:34:37 AM

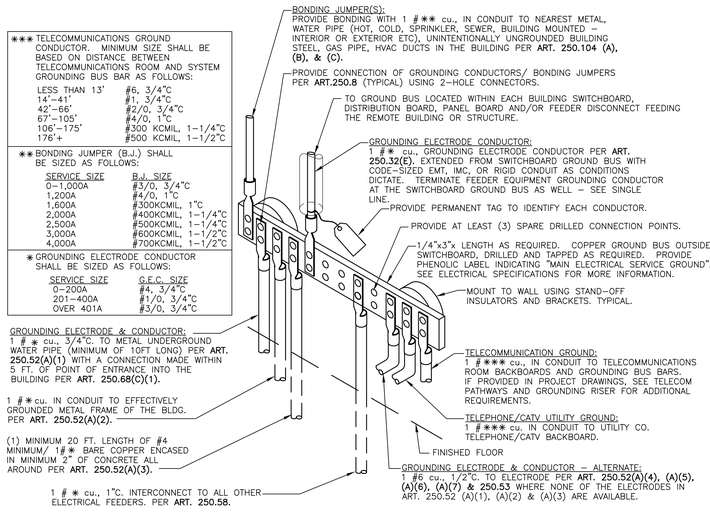

THIS DETAIL APPLIES TO BUILDINGS OR STRUCTURES SUPPLIED BY FEEDERS OR BRANCH CIRCUITS GOVERNED BY ART. 250.32 AND SPECIFICALLY BY ART. 250.32(B)(1) WHERE THE GROUNDED CONDUCTOR IS NOT CONNECTED TO THE GEC IN THE SUPPLIED BUILDING DUE TO THE POSSIBILITY OF PARALLEL CIRCUIT PATHS FOR NEUTRAL CURRENT. WHERE THE STUCTURE OR BUILDING SUPPLIED IS EXISTING, CONTRACTOR SHALL MAKE EVERY EFFORT TO EXTEND/RECONNECT EXISTING GROUNDING ELECTRODE(S)/SYSTEM.

FEEDER TO REMOTE BUILDING / STRUCTURE GROUNDING DETAIL (A)

SCALE: NTS

POWER SYSTEMS STUDY SPECIFICATIONS:

THE CONTRACTOR SHALL PROVIDE, WITH THE ASSISTANCE OF THE SWITCHGEAR MANUFACTURER, POWER SYSTEMS STUDIES CONSISTING OF A SHORT CIRCUIT STUDY, A COORDINATION STUDY, AND AN ARC FLASH STUDY – ALL PER LATEST PUBLISHED EDITIONS OF THE FOLLOWING STANDARDS: ANSI C37, IEEE 141, IEEE 242, IEEE 399 – BROWN BOOK, NFPA 70E AND IEEE STD 1584/1584a. ADDITIONALLY:

a. CONTRACTOR SHALL PERFORM STUDY USING SKM "SYSTEMS ANALYSIS POWER TOOLS FOR WINDOWS" COMPUTER SOFTWARE PROGRAM – LATEST AVAILABLE VERSION OR EQUAL BY ETAP.

b. CONTRACTOR SHALL FURNISH/OBTAIN ALL DATA REQUIRED FOR POWER SYSTEMS STUDIES. DATA COLLECTION EFFORT SHALL BE PERFORMED IN AN EXPEDITIOUS MANNER AND AS SOON AS POSSIBLE AFTER CONTRACT AWARD TO ENSURE STUDY COMPLETION FOR SUBMISSION AS PART OF THE ELECTRICAL DISTRIBUTION EQUIPMENT SHOP DRAWINGS AND SUBMITTALS. DATA COLLECTION EFFORTS MAY INCLUDE, BUT ARE NOT LIMITED TO, CALCULATED UTILITY COMPANY FAULT VALUES, SERVICE TRANSFORMER PRIMARY PROTECTIVE DEVICE AND APPLIED VOLTAGE, ELECTRICAL CHARACTERISTICS AND FAULT CONTRIBUTION FROM EXISTING MOTORS/GENERATORS, EXISTING CONDUCTOR QUANTITIES, SIZE AND LENGTHS, EXISTING/ NEW OVERCURRENT PROTECTIVE DEVICE SPECIFICATIONS AND PART NUMBERS, TRANSFER SWITCH CHARACTERISTICS AND SHORT CIRCUIT CURRENT RATINGS IN ADDITION TO ANY OTHER DATA REQUIRED TO PERFORM COMPREHENSIVE POWER SYSTEM STUDIES. RANGES OF FAULT CURRENT VALUES OR GENERIC FAULT CURRENT VALUES PROVIDED BY THE UTILITY COMPANY ARE UNACCEPTABLE AS ARE ANY FAULT CURRENT VALUES SHOWN ON THE SINGLE LINE DIAGRAM OR FEEDER SCHEDULE.

DATA GATHERING SHALL BE CONDUCTED IN A SAFE MANNER WITH 1) EQUIPMENT COMPLETELY DE-ENGERIZED IN COORDINATION WITH THE OWNER DURING A SCHEDULED POWER SHUTDOWN OR 2) UTILIZING A LICENSED ELECTRICIAN WEARING APPROPRIATE PERSONNEL PROTECTIVE EQUIPMENT PER NFPA 70E STANDARDS.

CONTRACTOR IS SOLELY RESPONSIBLE FOR OBTAINING UTILITY DATA FROM THE UTILITY COMPANY – INCLUDE ALL COSTS IN BASE BID FOR ANY UTILITY COMPANY FEES FOR PROVIDING NECESSARY DATA. WHERE THE PROJECT IS LOCATED ON A CAMPUS WITH AN OWNER-FURNISHED ELECTRICAL DISTRIBUTION SYSTEM, CONTRACTOR SHALL BE RESPONSIBLE TO OBTAIN SUFFICIENT ELECTRICAL SYSTEM DATA TO DEMONSTRATE COORDINATION OF THE PROJECT'S ELECTRICAL SYSTEM WITH CAMPUS DISTRIBUTION SYSTEM. THIS DATA MAY BE AVAILABLE IN THE FORM OF AN OWNER-PROVIDED CAMPUS POWER SYSTEM STUDY. WHERE SUCH STUDIES ARE NOT AVAILABLE, THE CONTRACTOR SHALL INCLUDE ALL COSTS IN BASE BID TO PERFORM NECESSARY FIELD INVESTIGATION OF CAMPUS DISTRIBUTION SYSTEM INCLUDING CAMPUS SERVICE ENTRANCE AND SERVING UTILITY DATA AS REQUIRED TO DEMONSTRATE COORDINATION OF THE PROJECT'S ELECTRICAL SYSTEM WITH CAMPUS DISTRIBUTION SYSTEM. INCLUDE ALL COSTS FOR RECOMMENDING ADJUSTMENTS TO EXISTING CAMPUS DISTRIBUTION SYSTEM SETTINGS DISCOVERED TO BE INCORRECT. OWNER SHALL BE RESPONSIBLE TO UNDERTAKE ANY PHYSICAL ADJUSTMENTS TO EXISTING MEDIUM OR HIGH VOLTAGE DISTRIBUTION EQUIPMENT WITH THE EXCEPTION OF FUSES, RELAYS OR OTHER CIRCUIT PROTECTIVE DEVICES LOCATED IN EXISTING DISTRIBUTION EQUIPMENT THAT ARE DEDICATED TO SERVE ONLY THIS PROJECT'S ELECTRICAL SYSTEM.

CONTRACTOR IS SOLELY RESPONSIBLE FOR OBTAINING EQUIPMENT SCCR RATING FROM ALL OTHER PROJECT TRADES AND FOR ANY OWNER-FURNISHED OR TENANT-FURNISHED EQUIPMENT CONNECTED TO THE ELECTRICAL SYSTEM IN ORDER TO VALIDATE AVAILABLE FAULT CURRENT AT THE EQUIPMENT CONNECTIONS IS LESS THAN THE RESPECTIVE EQUIPMENT SCCR.

c. THE SHORT CIRCUIT STUDY SHALL INCLUDE CALCULATED SHORT-CIRCUIT MOMENTARY AND INTERRUPTING DUTIES FOR 3-PHASE BOLTED FAULTS AND LINE-TO-GROUND FAULTS THROUGHOUT THE SINGLE LINE TO INCLUDE UTILITY SERVICE SUPPLY, GENERATORS AND TRANSFER SWITCHES, SUBSTATIONS, SWITCHGEAR, PANEL BOARDS ETC. STUDY SHALL EVALUATE ALL ELECTRICAL DISTRIBUTION EQUIPMENT AND PROTECTIVE DEVICES AGAINST SHORT CIRCUIT CURRENT RATINGS. THIS STUDY EFFORT SHALL EXTEND TO SCCR RATINGS OF EQUIPMENT, EQUIPMENT CONTROL PANELS, VARIABLE FREQUENCY DRIVES ETC PROVIDED BY OTHER TRADES THAT ARE CONNECTED TO THE ELECTRICAL SYSTEM. NOTE ANY EXISTING CIRCUIT PROTECTIVE DEVICE(S)/ ELECTRICAL DISTRIBUTION THAT IS INADEQUATELY RATED TO WITHSTAND CALCULATED FAULT VALUES OR WHERE EQUIPMENT SCCR IS EXCEEDED. WHERE THE UTILITY COMPANY PROVIDES MULTIPLE FAULT CURRENT VALUES REFLECTING INITIAL TRANSFORMER CAPACITY AND WORST CASE TRANSFORMER CAPACITY, THE CONTRACTOR SHALL PROVIDE SHORT CIRCUIT ANALYSIS PRIMARILY BASED ON WORST CASE TRANSFORMER CAPACITY. ALL SERVICE EQUIPMENT SHALL BE LABELED WITH THE MAXIMUM AVAILABLE FAULT CURRENT AND FAULT CURRENT CALCULATION DATE PER CEC **110.24**. SEE LABELING SPECIFICATION FOR ADDITIONAL REQUIREMENTS.

d. THE COORDINATION STUDY SHALL INCLUDE TIME-CURRENT CURVES (TCC) FOR OVER CURRENT PROTECTIVE DEVICES (OCPDs) ALONG WITH TRANSFORMER FULL-LOAD CURRENT, INRUSH CURRENT, AND THROUGH-FAULT PROTECTION CURVES, CONDUCTOR DAMAGE CURVES, GROUND FAULT PROTECTIVE DEVICE CURVES, MOTOR STARTING CURVE(S)/DAMAGE POINT(S), GENERATOR SHORT-CIRCUIT CURVE(S) /DAMAGE POINT(S) ETC. – CLEARLY IDENTIFIED AND PLOTTED ON LOG-LOG SCALE GRAPH(S). TCC GRAPH(S) SHALL INCLUDE A ONE-LINE DIAGRAM IDENTIFYING THE SPECIFIC PORTION COVERED BY THE GRAPH. DEMONSTRATE THAT ADEQUATE CLEARING TIME/SELECTIVE OPERATION EXISTS BETWEEN PROTECTIVE DEVICES WHILE PROVIDING PROPER SYSTEM PROTECTION & COORDINATION. STUDY SHALL INCLUDE ALL MAIN AND FEEDER OCPDs INCLUDING SECONDARY SIDE OF EACH TRANSFORMER DOWN TO BREAKERS IN PANEL BOARDS AND INDIVIDUAL BREAKERS IN DISTRIBUTION BOARDS. IN ALL CASES, SOLID STATE AND/OR ADJUSTABLE OCPDs SHALL BE ANALYZED WITH UPSTREAM AND DOWNSTREAM OCPDs AS REQUIRED TO ESTABLISH PROPER COORDINATION SETTINGS. SPECIAL EMPHASIS SHALL BE PLACED ON ANALYZING PORTIONS OF THE ELECTRICAL SYSTEM REQUIRING SELECTIVE COORDINATION WHICH INCLUDE, BUT ARE NOT LIMITED TO, CEC **ARTICLES 517, 620, 700, 701 & 708**, ALONG WITH ANY **ARTICLE 702** OPTIONAL STANDBY SYSTEMS SERVING SERVER ROOMS/DATA CENTERS OR OTHER AREAS REQUIRING HIGH AVAILABILITY/PROPER COORDINATION SUCH AS MANUFACTURING, CLEAN ROOM OR LAB FACILITIES. CONTRACTOR SHALL BE RESPONSIBLE TO RECOMMEND SETTINGS OF ALL DEVICES, TO INCLUDE GROUND FAULT SETTINGS, TO ACHIEVE SYSTEM COORDINATION. THE CONTRACTOR SHALL FIELD ADJUST NEW AND EXISTING DEVICES ACCORDINGLY UTILIZING A QUALIFIED MANUFACTURER'S REPRESENTATIVE OR A THIRD-PARTY ELECTRICAL TESTING AGENCY.

e. THE ARC FLASH ANALYSIS SHALL BE BASED ON THE INCIDENT ENERGY ANALYSIS METHOD (NFPA 70E 130.5). THE ARC FLASH ANALYSIS SHALL DETERMINE THE FLASH BOUNDARY, THE WORKING DISTANCE, THE INCIDENT ENERGY AND MINIMUM ARC RATING OF CLOTHING(CAL/CM^2) AT LOCATIONS IN THE ELECTRICAL SYSTEM WHERE WORK CAN OR MIGHT BE PERFORMED ON ENERGIZED COMPONENTS WHERE MULTIPLE SYSTEM CONFIGURATION SCENARIOS ARE POSSIBLE, THE CONFIGURATION WITH GREATEST INCIDENT ENERGY MUST BE SHOWN. DECREMENT FAULT CONTRIBUTIONS FROM MOTOR(S) AND GENERATOR(S) BASED ON INDUSTRY STANDARDS. THE CONTRACTOR SHALL MAKE RECOMMENDATIONS WITH REGARD TO SYSTEM ADJUSTMENTS OR OTHER MITIGATION MEASURES TO OPTIMIZE THE RESULTS OF THE STUDY AS IT RELATES TO SAFE AND RELIABLE ELECTRICAL SYSTEM OPERATION (E.G. OVERCURRENT DEVICE SETTINGS, WORKING DISTANCES, CURRENT LIMITING DEVICES). THIS INCLUDES MITIGATION, WHERE POSSIBLE, OF INCIDENT ENERGY LEVELS THAT EXCEED 40 CAL/CM^2. PERFORM ITERATIVE CALCULATIONS TO DEMONSTRATE EFFECTS OF OPENING PROTECTIVE DEVICES UTILIZING A VARIETY OF DIFFERENT SETTINGS TO BEST MITIGATE ARC FLASH ENERGY WHILE MAINTAINING AN ACCEPTABLE LEVEL OF SYSTEM COORDINATION. WHERE SUCH RECOMMENDATIONS COMPROMISE SELECTIVE COORDINATION SETTINGS, SO STATE IN THE ANALYSIS.
INCLUDE INCIDENT ENERGY/FLASH PROTECTION BOUNDARY CALCULATIONS FOR BOTH LINE/LOAD SIDE OF ALL SEPARATELY ENCLOSED MAIN CIRCUIT BREAKERS. ALL CALCULATIONS SHALL BE BASED ON ACTUAL OVERCURRENT DEVICE CLEARING TIMES.

f. BASED ON THE RESULTS OF THE ARC FLASH ANALYSIS, THE CONTRACTOR SHALL PRODUCE AND INSTALL A WARNING LABEL (ORANGE <40 CAL/CM2) OR DANGER LABEL (RED > 40 CAL/CM2) FOR EACH PIECE OF EQUIPMENT PER CEC **110.16** AND IN ACCORDANCE WITH ANSI Z535.4-2007 OR LATEST PUBLISHED EDITION. THE LABEL MUST BE READABLE IN BOTH INDOOR AND OUTDOOR ENVIRONMENTS FOR AT LEAST 3 YEARS AND CONTAIN THE FOLLOWING INFORMATION: NOMINAL SYSTEM VOLTAGE, ARC HAZARD BOUNDARY (INCHES), WORKING DISTANCE (INCHES), AVAILABLE ARC FLASH INCIDENT ENERGY AT THE WORKING DISTANCE (CAL/CM^2), MINIMUM ARC RATING OF CLOTHING, EQUIPMENT/BUS NAME, DATE PREPARED, SUPPLIER'S NAME AND ADDRESS. PROVIDE LABEL AS MANUFACTURED BY BRADY OR EQUAL. PRIOR TO PLACING ARC FLASH LABELS, CONTRACTOR SHALL SET ALL PROTECTIVE DEVICE SETTINGS PER THE APPROVED COORDINATION STUDY.

g. DURING THE CONSTRUCTION PHASE OF THE PROJECT, ALL GROUND FAULT RELAYS SHALL BE SET AT THE LOWEST AVAILABLE TIME DELAY AND PICK-UP SETTINGS.

h. POWER SYSTEMS STUDIES SHALL BE SUBMITTED AS PART OF THE OVERALL SWITCHGEAR SUBMITTAL. THE RESULTS OF THE POWER SYSTEMS STUDY SHALL BE PRESENTED IN A COMPREHENSIVE REPORT THAT INCLUDES:

- REPORT SUMMARY WITH ANALYSIS METHODOLOGY, FINDINGS AND RECOMMENDATIONS
- SUMMARY OF INPUT DATA FOR UTILITY SOURCE, EQUIPMENT AND CABLES
- AVAILABLE FAULT CURRENT AT EACH EQUIPMENT LOCATION WITH COMPARISON TO EQUIPMENT RATING
- OVERCURRENT DEVICE SETTINGS (E.G. PICK-UP, TIME DELAY, CURVE), "AS FOUND" AND "AS RECOMMENDED"
- OVERCURRENT DEVICE COORDINATION CURVES INCLUDING RELATED SECTION OF THE SINGLE-LINE DIAGRAM
- COMPLETE SYSTEM SINGLE-LINE DIAGRAM FOR THE SYSTEM ANALYZED
- INCIDENT ENERGY LEVEL (CAL/CM^2) FOR EACH EQUIPMENT LOCATION, RECOMMENDED PPE AND SAMPLE ARC FLASH WARNING LABELS
- A DVD OR CD CONTAINING ELECTRONIC PROJECT FILES USED TO DEVELOP THE STUDY TO INCLUDE SKM OR ETAP PROJECT AND REFERENCE LIBRARY FILES. ALL FILES SHALL BE AVAILABLE FOR REVIEW AND/OR FUTURE MODIFICATION WITHOUT LIMITATION. LOCKING OR SECURING FILES BY OTHER MEANS IS NOT ACCEPTABLE. FAILURE TO SUBMIT COMPLETE STUDIES AND FULLY ACCESSIBLE FILES SHALL RESULT IN THE REJECTION OF THE ENTIRE SWITCHGEAR SUBMITTAL.

i. AS A PART OF A CLOSEOUT SUBMITTAL TO BE SUBMITTED TO THE ENGINEER PRIOR TO FINAL PROJECT CONSTRUCTION OBSERVATIONS, CONTRACTOR SHALL PROVIDE PHOTOS OF ALL ADJUSTABLE CIRCUIT BREAKERS DEPICTING THEIR FINAL SETTINGS BASED ON THE POWER SYSTEMS STUDY. SUBMITTAL SHALL BE ORGANIZED WITH OCPD IDENTIFICATION, OCPD PHOTO IMAGE AND RESPECTIVE POWER SYSTEM STUDY OCPD SETTING REQUIREMENTS TO ALLOW EFFICIENT CONFIRMATION OF RECORD SETTINGS. PLEASE NOTE THAT IMAGES MAY NEED TO BE TAKEN PRIOR TO INSTALLATION OF EQUIPMENT COVERS/EQUIPMENT ENERGIZATION SINCE OCPD SETTINGS MAY BE OBSTRUCTED BY EQUIPMENT COVERS.

j. THE STUDY SHALL INCLUDE ALL PORTIONS OF ELECTRICAL SINGLE LINE DIAGRAM TO INCLUDE UPSTREAM OR DOWNSTREAM ELEMENTS THAT MAY NOT BE SHOWN INCLUDING, BUT NOT LIMITED TO, UTILITY SOURCE CONTRIBUTION, RELEVANT PORTIONS OF THE EXISTING ELECTRICAL DISTRIBUTION SYSTEM WITHIN A BUILDING AND/OR CAMPUS ELECTRICAL DISTRIBUTION SYSTEMS AS DESCRIBED ABOVE.

IDENTIFICATION STAMP
DIV. OF THE STATE ARCHITECT
APP: 03-122664 INC:
REVIEWED FOR
SS ☑ FLS ☑ ACS ☑
DATE: 05/12/2023

pjhm architects
LICENSED ARCHITECT
RICHARD W. RISHEL
No. C15585
REN. 02/25
STATE OF CALIFORNIA
tk|sc COLLABORATIVE
11870 Pierce Street, Suite 160
Riverside, California 92505
951.299.4160 www.tk1sc.com
Project Leader - Nikolas Bruno
Electrical Lead - Nikolas Bruno
tk1sc Job #: B2202744.000
REGISTERED PROFESSIONAL ENGINEER
RICHARD W. RISHEL
No. E15610
ELECTRICAL
STATE OF CALIFORNIA

HIGHLAND HIGH SCHOOL
50M POOL & AQUATICS CENTER
KERN HIGH SCHOOL DISTRICT

POWER SYSTEM STUDY AND GROUNDING
E-6.1

OC Office: 24461 Ridge Route Drive #100, Laguna Hills, CA 92653 Phone: 949.496.6191 SD Office: 804 Pier View Way #103, Oceanside, CA 92054 Phone: 760.730.5527 LA Office: 837 Traction Avenue, #410, Los Angeles, CA 90013 Phone: 213.278.0172 Web: pjhm.com

8/2/2022 11:34:37 AM

PANEL P2

MOUNTING SURFACE | DOUBLE LUG NO | VOLTS 120/208 | MAIN M.L.O.
NEMA 3R NO | 200% NEUTRAL NO | PHASE 3 | BUS 225A
FEED THRU NO | I/G BUS NO | WIRE 4 | A.I.C. 10,000

NOTES	LOCATION	A	B	C	LTG	CONV	KIT	RECP	MISC	BKR	CIRC		CIRC	BKR	MISC	RECP	KIT	CONV	LTG	A	B	C	LOCATION	NOTES
	POOL BLDG A RECEPT	1080						6	20/1	1		2	20/1							705			POOL BLDG A LTG.	
	POOL BLDG A RECEPT		1080					6	20/1	3		4	20/1								563		EXTERIOR POOL A LTG.	
	POOL BLDG A RECEPT			540				3	20/1	5		6	40/1									3560	MUSCO LTG 'P1'	
	AV RACK	1000						4	20/1	7		8	40/1							3560			MUSCO LTG 'P2'	
	HAND DRYER		1000						20/1	9		10	15/1								670		EF-A1	
	HAND DRYER			1000					20/1	11		12	15/1									670	EF-A2	
	IDF RACK	1000							20/1	13		14	15/1							670			EF-A3	
	WATER FOUNTAIN		1000						20/1	15		16	40/3								3103		AC-A1 W/1 HP PE	
	ROOF RECEPT			540					20/1	17		18	--									3103	----	
	EXT PEDESTAL REC	3000							30/1	19		20	--							4179			----	
	EXT PEDESTAL REC		3000						30/1	21		22	20/1								500		EXT. PED. RECEPT	
	SCOREBOARD			500					20/1	23		24	20/1									500	EXT. PED. RECEPT	
	SCOREBOARD	500							20/1	25		26	20/1							500			STORAGE YARD	
AE	VECP		500						20/1	27		28	20/1								500		STORAGE YARD	
AE	AMP-A			500					20/1	29		30	20/1									500	STORAGE YARD	
	SPARE								20/1	31		32	20/1										SPARE	
	SPARE								20/1	33		34	20/1										SPARE	
	SPARE								20/1	35		36	20/1										SPARE	
	SPACE									37		38											SPACE	
	SPACE									39		40											SPACE	
	SPACE									41		42											SPACE	

A= 16194 VA | B= 11916 VA | C= 11413 VA
PHASE A LCL= 0 VA | PHASE B LCL= 0 VA | PHASE C LCL= 0 VA
PHASE A W/LCL= 16194 VA | PHASE B W/LCL= 11916 VA | PHASE C W/LCL= 11413 VA
TOTAL VA= 39523 | TOTAL LCL= 0 | TOTAL VA W/LCL= 39523
AMPS= **110** | HIGH PHASE AMPS= **135**

PANEL P1

MOUNTING SURFACE | DOUBLE LUG NO | VOLTS 120/208 | MAIN 400A M.C.B
NEMA 3R NO | 200% NEUTRAL NO | PHASE 3 | BUS 400A
FEED THRU NO | I/G BUS NO | WIRE 4 | A.I.C. 10,000

NOTES	LOCATION	A	B	C	LTG	CONV	KIT	RECP	MISC	BKR	CIRC		CIRC	BKR	MISC	RECP	KIT	CONV	LTG	A	B	C	LOCATION	NOTES
	POOL BLDG B RECEPT	1080						6	20/1	1		2	20/1						15	335			POOL BLDG B LTG.	
	POOL BLDG B RECEPT		1080					6	20/1	3		4	20/1						30		1541		EXTERIOR POOL BLDG B	
	POOL BLDG B RECEPT			720				4	20/1	5		6	40/1						1			3560	MUSCO LTG P3'	
	POOL BLDG B RECEPT	900						5	20/1	7		8	40/1						1	3560			MUSCO LTG P4'	
	POOL BLDG B RECEPT		720					4	20/1	9		10	15/1								670		EF-B1	
	POOL BLDG B EXT REC			540				3	20/1	11		12	15/1									670	EF-B2	
	HAND DRYER	1000							20/1	13		14	30/2							1581			HP-B1	
	HAND DRYER		1000						20/1	15		16	--								1581		----	
	HAND DRYER			1000					20/1	17		18	40/3						-			2719	AC-B1 W/1 HP PE	
	HAND DRYER	1000							20/1	19		20	--						-	2719			----	
	IDF RACK		1000						20/1	21		22	--						-		3103		----	
	AV RACK			1000					20/1	23		24	20/1									180	ROOF RECEPT	
	CEILING FANS	600							20/1	25		26	20/1							500			FAPS-B	AE
	WATER FOUNTAIN		500						20/1	27		28	20/1								500		AMP-B	AE
	EWH-1			2300					30/2	29		30	20/1									100	SPRINKLER BELL	AE
	----	2300							--	31		32	30/2							915			HP-B2	
	EXT PEDESTAL REC		3000						30/1	33		34									915		----	
	EXT PEDESTAL REC			3000					30/1	35		36											SPACE	
	PANEL "SP"	4086							200/3	37		38	200/3							16194			PANEL "P2"	
	----		3554						--	39		40	--								11916		----	
	------			4260					--	41		42	--									11413	----	

A= 36770 VA | B= 31080 VA | C= 31462 VA
PHASE A LCL= 1654 VA | PHASE B LCL= 1161 VA | PHASE C LCL= 1570 VA
PHASE A W/LCL= 38424 VA | PHASE B W/LCL= 32241 VA | PHASE C W/LCL= 33031 VA
TOTAL VA= 99312 | TOTAL LCL= 4384 | TOTAL VA W/LCL= 103696
AMPS= **288** | HIGH PHASE AMPS= **320**

PANEL SP

MOUNTING SURFACE | DOUBLE LUG NO | VOLTS 120/208 | MAIN M.L.O.
NEMA 3R NO | 200% NEUTRAL NO | PHASE 3 | BUS 225A
FEED THRU NO | I/G BUS NO | WIRE 4 | A.I.C. 10,000

NOTES	LOCATION	A	B	C	LTG	CONV	KIT	RECP	MISC	BKR	CIRC		CIRC	BKR	MISC	RECP	KIT	CONV	LTG	A	B	C	LOCATION	NOTES
	POOL BLDG C RECEPT	1080						6	20/1	1		2	20/1						8	256			POOL BLDG A LTG.	
	ROOF C RECEPT		180					1	20/1	3		4	20/1						9		294		EXTERIOR POOL A LTG.	
AE	SPRINKLER BELL			100					20/1	5		6	35/2						-			2080	HP-C1	
	SPARE								20/1	7		8	--						-	2080			----	
	IDF RACK		1000						20/1	9		10	35/2								2080		HP-C2	
	SPARE								20/1	11		12	--									2080	----	
	SPARE								20/1	13		14	15/1							670			EFS-C1	
	SPARE								20/1	15		16	20/1										SPARE	
	SPARE								20/1	17		18	20/1										SPARE	
	SPARE								20/1	19		20	20/1										SPACE	
	SPACE									21		22											SPACE	
	SPACE									23		24											SPACE	
	SPACE									25		26											SPACE	
	SPACE									27		28											SPACE	
	SPACE									29		30											SPACE	
	SPACE									31		32											SPACE	
	SPACE									33		34											SPACE	
	SPACE									35		36											SPACE	
	SPACE									37		38											SPACE	
	SPACE									39		40											SPACE	
	SPACE									41		42											SPACE	

A= 4086 VA | B= 3554 VA | C= 4260 VA
PHASE A LCL= 584 VA | PHASE B LCL= 74 VA | PHASE C LCL= 520 VA
PHASE A W/LCL= 4670 VA | PHASE B W/LCL= 3628 VA | PHASE C W/LCL= 4780 VA
TOTAL VA= 11900 | TOTAL LCL= 1178 | TOTAL VA W/LCL= 13078
AMPS= **36** | HIGH PHASE AMPS= **40**

GENERAL PANEL SCHEDULE NOTES:

1. WHERE PANEL IS INDICATED TO INCLUDE FEED THRU LUGS, PROVIDE FEED THROUGH LUGS AT THE OPPOSITE END OF THE PANELBOARD FROM THE PANELBOARD MAIN LUGS.
2. WHERE PANEL IS INDICATED TO INCLUDE DOUBLE LUGS, PROVIDE A DOUBLE LUG KIT AT THE SAME END OF THE PANELBOARD AS THE PANELBOARD MAIN LUGS.
3. WHERE PANEL IS INDICATED TO INCLUDE 200% NEUTRAL, PROVIDE PANELBOARDS UL LISTED AS HAVING NEUTRAL BUSSES RATED TO CARRY 200 PERCENT OF THE CURRENT CARRYING CAPACITY OF THE PHASE BUSSING. OTHERWISE, NEUTRAL BUSSING TO BE FULL SIZE AND RECTANGULAR.
4. WHERE PANEL IS INDICATED TO INCLUDE AN I/G BUS, PROVIDE PANELBOARDS WITH AN ISOLATED GROUND BUS, DRILLED AND TAPPED FOR NUMBER OF ISOLATED GROUND CONDUCTORS SHOWN, AS WELL AS FOR ALL SPARES AND SPACES SHOWN ON THE PANELBOARD.
5. WHERE PANEL CIRCUIT BREAKER RATING IS SHOWN AS SERIES RATED, PROVIDE CIRCUIT BREAKERS IN PANELBOARD WHICH ARE SERIES RATED WITH THE UPSTREAM SYSTEM FOR THE AVAILABLE FAULT CURRENT. THE PANELBOARD SHALL BE MARKED WITH THE SERIES CONNECTED RATINGS, AS WELL AS ALL MARKING AS REQUIRED BY THE CEC **240.86(B).**
6. WHERE PANEL IS INDICATED AS RECESSED OR FLUSH MOUNTED, PROVIDE SPARE CONDUITS STUBBED UP INTO THE ACCESSIBLE CEILING SPACE. PROVIDE ONE (1) 3/4" CONDUIT ONLY FOR EACH THREE (3) SPARES OR SPACES, MINIMUM OF TWO (2). EACH CONDUIT SHALL BE TAGGED, CAPPED AND MARKED FOR FUTURE USE.
7. ALL BUSSING SHALL BE **TIN PLATED ALUMINUM.**
8. ALL CIRCUIT BREAKERS USED AS SWITCHES SHALL BE UL LISTED AND LABELED "SWD" FOR SWITCHING DUTY.
9. PROVIDE BREAKER INTERLOCK WITH ADJACENT BREAKER(S) FOR ANY MULTI-WIRE BRANCH CIRCUIT. BREAKER INTERLOCK GROUPING SHALL BE BY BRANCH CIRCUIT GROUP (i.e. MULTIPLE CIRCUITS SHARING A COMMON NEUTRAL (CEC **210.4(B).**) COMMON YOKE (CEC **210.7**), OR FURNITURE SYSTEM CEC **605.5** AND **605.7**). WHERE AN EXISTING PANEL IS BEING ALTERED OR MODIFIED IN ANY WAY, CONTRACTOR SHALL INCLUDE ALL COSTS IN BASE BID TO ADD BREAKER INTERLOCKS TO EXISTING MULTI-WIRE BRANCH CIRCUITS BASED ON CONTRACTOR'S INVESTIGATION OF EXISTING CONDITIONS.
10. PROVIDE BREAKER LOCK OFF DEVICE ON ANY CIRCUIT BREAKER FEEDING A TRANSFORMER AS REQUIRED, PER CEC **450.14**. WHERE AN EXISTING PANEL IS BEING ALTERED OR MODIFIED IN ANY WAY, CONTRACTOR SHALL INCLUDE ALL COSTS IN BASE BID TO ADD BREAKER LOCK-OFF DEVICES TO EXISTING TRANSFORMER CIRCUIT BREAKERS BASED ON CONTRACTOR'S INVESTIGATION OF EXISTING CONDITIONS.
11. ALL CIRCUIT BREAKERS SHALL BE BOLT-ON TYPE AND SHALL BE SUITABLE FOR 75 DEGREE AMPACITY CONDUCTORS.
12. PANELS SHALL BE OF THE DEAD FRONT SAFETY TYPE. PANELS SHALL BE MINIMUM 20" WIDE AND 5-3/4" DEEP UNLESS OTHERWISE NOTED ON PLAN.
13. COORDINATE WITH APPLICABLE TRADE TO INSURE RECESSED MOUNTED PANELBOARDS WILL SEAT FLUSH IN THE WALLS PROVIDED. PANEL TRIMS SHALL HAVE CONCEALED DOORS AND FASTENERS WITH FLUSH TYPE COMBINATION LOCK AND CATCH, TWO MILLED TYPE KEYS SUPPLIED WITH EACH PANEL. ALL LOCKS SHALL BE KEYED ALIKE AND EACH DOOR SHALL HAVE A PLASTIC COVERED DIRECTORY FRAME WITH A TYPED IDENTIFICATION CARD OF ALL CIRCUIT AND PANEL NUMBERS FOR BRANCH CIRCUIT PANELBOARDS.
14. UPON PROJECT COMPLETION, CONTRACTOR SHALL INSTALL TYPED AS-BUILT PANEL DIRECTORIES IN EACH PANEL WITHIN THE MFGR-PROVIDED DIRECTORY HOLDER. THE DIRECTORY SHALL CLEARLY IDENTIFY EACH CIRCUIT TO ITS CLEAR, EVIDENT, AND SPECIFIC PURPOSE OR USE. EACH CIRCUIT IDENTITY SHALL INCLUDE SUFFICIENT DETAIL TO ALLOW EACH CIRCUIT TO BE DISTINGUISHED FROM ALL OTHERS PER CEC ART **408.1** AND **408.4**. HANDWRITTEN DIRECTORIES ARE UNACCEPTABLE. COPIES OF AS-BUILT PANEL SCHEDULES SHALL BE PLACED IN PANEL DIRECTORIES. E.C. TO INCLUDE ALL COSTS REQUIRED FOR LARGER-THAN-STANDARD CUSTOM PANEL DIRECTORY HOLDERS TO ACCOMMODATE COPIES OF AS-BUILT PANEL SCHEDULES.
15. PANELBOARDS SHALL BE MANUFACTURED BY G.E., CUTLER-HAMMER, SIEMENS, OR SQUARE "D". FUSED PANEL BOARDS SHALL BE BY COOPER BUSSMANN.
16. PROVIDE SHOP DRAWING SUBMITTAL PER THE ELECTRICAL SPECIFICATION SUBMITTAL REQUIREMENTS FOR EACH PANEL DEPICTING CONFORMANCE WITH THE ABOVE NOTES AND SCHEDULES.

SPECIFIC PANEL SCHEDULE NOTES:

"A" PROVIDE LOCK-ON DEVICE.

"B" PROVIDE PERMANENT LOCK-OFF DEVICE THAT SHALL REMAIN IN PLACE WITH OR WITHOUT THE LOCK INSTALLED, PER CEC SECTION **110.25.**

"C" PROVIDE SHUNT TRIP DEVICE.

"D" PROVIDE GFCI TYPE DEVICE.

"E" PROVIDE A RED CIRCUIT BREAKER.

"F" PROVIDE A NEW BREAKER TO MATCH THE EXISTING IN PANEL.

"G" EXISTING BREAKER WITH NEW LOAD.

"H" PROVIDE AFCI TYPE DEVICE COMPLYING WITH CEC **210.12(A),(B),(C).**

PANEL SCHEDULE INDEX

-	P2	P1
-	-	SP
-	-	

AS-BUILT PANEL DIRECTORY NOTE:

BRANCH CIRCUIT LOCATIONS NOTED WITH "(E)" INDICATE EXISTING CIRCUIT(S). THE IDENTITIES OF THESE CIRCUITS ARE BASED ON EXISTING PANEL DIRECTORIES AND/OR LIMITED AS-BUILT INFORMATION. CONTRACTOR SHALL FIELD VERIFY EACH BRANCH CIRCUIT AND PROVIDE COMPLETE, TYPED AS-BUILT PANEL DIRECTORIES AS REQUIRED THAT DISTINGUISH EACH CIRCUIT PER CEC ART **408.1** AND **408.4**. COMPLETED DIRECTORIES SHALL BE SUBMITTED TO THE ELECTRICAL INSPECTOR PRIOR TO FINAL ELECTRICAL INSPECTION. INCLUDE ALL COSTS IN BID.

EXISTING CIRCUIT BREAKER NOTE:

PROVIDE BREAKER INTERLOCK WITH ADJACENT BREAKER(S) FOR ANY MULTI-WIRE BRANCH CIRCUIT. BREAKER INTERLOCK GROUPING SHALL BE BY BRANCH CIRCUIT GROUP (i.e. MULTIPLE CIRCUITS SHARING A COMMON NEUTRAL (CEC **210.4(B).**) COMMON YOKE (CEC **210.7**) OR FURNITURE SYSTEM CEC **605.5** AND **605.7**). WHERE AN EXISTING PANEL IS BEING ALTERED OR MODIFIED IN ANY WAY, CONTRACTOR SHALL INCLUDE ALL COSTS IN BASE BID TO ADD BREAKER INTERLOCKS TO EXISTING MULTI-WIRE BRANCH CIRCUITS BASED ON CONTRACTOR'S INVESTIGATION OF EXISTING CONDITIONS.

8/2/2022 11:34:37 AM

IDENTIFICATION STAMP
DIV. OF THE STATE ARCHITECT
APP: 03-122664 INC:
REVIEWED FOR
SS ☑ FLS ☑ ACS ☑
DATE: 05/12/2023

pjhm architects
LICENSED ARCHITECT RAYMOND W. SIMPSON No. C15585 REN. 02/25 STATE OF CALIFORNIA
tk|sc COLLABORATIVE
11870 Pierce Street, Suite 160
Riverside, California 92505
951.299.4160 www.tk1sc.com
Project Leader - Nikolas Bruno
Electrical Lead - Nikolas Bruno
tk1sc Job #: B2202744.000
REGISTERED PROFESSIONAL ENGINEER RAYMOND W. SIMPSON No. E15610 EXP. 08/31/2024 ELECTRICAL STATE OF CALIFORNIA
OC Office: 24461 Ridge Route Drive #100, Laguna Hills, CA 92653 Phone: 949.496.6135 LA Office: 837 Traction Avenue, #410, Los Angeles, CA 90013 Phone: 213.278.0172 SD Office: 804 Pier View Way #103, Oceanside, CA 92054 Phone: 760.730.5507 Web: pjhm.com

HIGHLAND HIGH SCHOOL
50M POOL & AQUATICS CENTER
KERN HIGH SCHOOL DISTRICT

PANEL SCHEDULES

E-6.2

INVERTER SYSTEM SCHEMATIC:

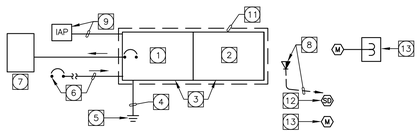

INVERTER SYSTEM PLAN NOTES:

1. INVERTER ELECTRONICS CABINET PER INVERTER SCHEDULE AND SYSTEM SPECIFICATIONS.

2. INVERTER BATTERY STRING CABINET(S) – NUMBER AS REQUIRED TO PROVIDE CODE REQUIRED BACK–UP TIME. INDIVIDUAL BATTERY STRINGS SHALL BE CONNECTED IN PARALLEL FOR ADDED REDUNDANCY.

3. PROVIDE ALL REQUIRED SEISMIC BRACING, AS REQUIRED BY STATE AND LOCAL CODES. IF LOCATED ON A RAISED FLOOR, PROVIDE CUSTOM MOUNTING FRAME SUCH THAT THE RAISED FLOOR DOES NOT SUPPORT THE INVERTER EQUIPMENT.

4. WHERE THE INVERTER SYSTEM IS CONSIDERED A SEPARATELY DERIVED SYSTEM, PROVIDE GROUNDING ELECTRODE CONDUCTOR(S) PER CEC **ARTICLE 250.30.** SEE THE INVERTER SCHEDULE FOR SIZING.

5. WHERE THE INVERTER SYSTEM IS CONSIDERED A SEPARATELY DERIVED SYSTEM, A CONNECTION SHALL BE MADE TO THE GROUNDING ELECTRODE PER CEC **ARTICLE 250.30.** SEE SEPARATELY DERIVED SYSTEM GROUNDING DETAIL FOR ADDITIONAL REQUIREMENTS.

6. INVERTER INPUT – SEE SINGLE LINE DIAGRAM AND INVERTER SCHEDULE(S). PROVIDE INPUT CIRCUIT BREAKERS OR INPUT CIRCUIT BREAKER TYPE AS RECOMMENDED BY THE MANUFACTURER.

7. TO EITHER 1) EMERGENCY INVERTER OUTPUT BRANCH CIRCUIT PANEL FROM INVERTER OUTPUT CIRCUIT BREAKER OR 2) TO INTEGRAL OUTPUT BRANCH CIRCUIT BREAKERS LOCATED WITHIN INVERTER– SEE SINGLE LINE DIAGRAM AND INVERTER SCHEDULE(S) FOR ADDITIONAL INFORMATION.

8. PROVIDE DATA OUTLET BOX, 4S/DP MINIMUM WITH SINGLE GANG RING, WITH A 3/4" C. UP 6" ABOVE THE ACCESSIBLE CEILING AND PROVIDE A BUSHING. MOUNT 12" ABOVE EACH INVERTER MODULE TO ALLOW ANALOG COMMUNICATIONS. SEE ADDITIONAL CABLING REQUIREMENTS IN INVERTER SYSTEMS SPECIFICATIONS.

9. REMOTE INVERTER ALARM PANEL WITH CONDUIT AND CONDUCTORS, SIZE AND QTY AS REQUIRED, LOCATED IN NORMALLY OCCUPIED AREA. (MAXIMUM OF 1000' FROM INVERTER). SEE INVERTER SCHEDULE AND INVERTER SYSTEM SPECIFICATIONS FOR MORE INFORMATION.

11. INVERTER ROOM SHALL BE PROVIDED WITH U.L.–LISTED SPILL CONTROL ACCESSORIES THAT MEET REQUIREMENTS OF 2019 CFC **SECTION 1206.2.11.5** AND AMENDMENTS, OSHA (STATE OR LOCAL AS APPLICABLE), NFPA, UL, AND THE LOCAL AUTHORITY HAVING JURISDICTION. AT MINIMUM PROVIDE THE FOLLOWING ACCESSORIES:

   – SPILL CLEANUP AND DISPOSAL KIT CONTAINING 5 D.O.T. GALLON CONTAINER, ELECTROLYTE NEUTRALIZER, PH TEST KIT, GLOVES, EYE PROTECTION, TYVEK COVERALL, AND COMPLETE INSTRUCTIONS. QUANTITY SHALL BE CAPABLE OF NEUTRALIZING SPILLED ELECTROLYTE TO A PH BETWEEN 5.0 AND 9.0. FOR VRLA BATTERIES, THE AMOUNT OF NEUTRALIZER SHALL BE SUFFICIENT TO ACCOMMODATE A SPILL OF 3% OF THE CAPACITY OF THE LARGEST VRLA CELL OR BLOCK. PROVIDE A SPILL CONTAINMENT SIGN ON WALL ABOVE LOCATION OF SPILL CLEANUP AND DISPOSAL KIT.

   – BOTH BATTERY WARNING AND CHEMICAL HAZARD IDENTIFICATION SYSTEM SIGNAGE AT EACH DOOR TO THE ROOM WHERE THE BATTERIES ARE LOCATED AND WHERE BATTERY ELECTROLYTE EXCEEDS 10 GALLONS. CONFORM TO CFC **SECTION 1206.2.8.6** IN ADDITION TO ANY LOCAL AHJ REQUIREMENTS/MODIFICATIONS TO THIS ARTICLE.

   – ROOMS CONTAINING BATTERY SYSTEMS WITH 70 KWH OR MORE OF ENERGY CAPACITY PER **CFC SECTION 1206** OR 50 GALLONS OR MORE OF ELECTROLYTE PER **CBC SECTION 1206** SHALL BE PROVIDED WITH AN EYE WASH STATION THAT COMPLIES WITH **OSHA 1926.441 (a)(6)** AND LATEST EDITION OF ANSI Z358.1. STATION SHALL BE SELF–CONTAINED PORTABLE, WALL–HUNG UNIT WITH A FLOW RATE OF 0.4 GALLONS/MINUTE FOR 15 MINUTES AND SHALL HOLD A MINIMUM OF 6 GALLONS OF NON–TOXIC, BACTERIOSTATICALLY–TREATED WATER. (ENVIROGUARD 1–800–206–9884). IF PERMANENTLY PLUMBED SHOWER IS PROVIDED IN EACH BATTERY ROOM, THAN AN EYEWASH STATION IS NOT REQUIRED. WHEN AN EYE WASH STATION OF ANY KIND IS INSTALLED, "EMERGENCY EYE WASH STATION" SIGNAGE SHALL BE PROVIDED ABOVE THE EYE WASH STATION.

   – PROVIDE START–UP TRAINING FOR SAFETY, MAINTENANCE, AND CARE OF ALL BATTERY–RELATED SAFETY EQUIPMENT FOR UP TO 10 PERSONS ACCESSING THE ROOM CONTAINING THE BATTERIES. TRAINING SHALL BE A MINIMUM OF 4 HOURS AND COVER BATTERY ROOM SAFETY, SPILL RESPONSE AWARENESS, ELECTRICAL SAFETY AND OTHER INDUSTRY BEST PRACTICE TRAINING TOPICS.

12. SMOKE OR HEAT DETECTORS (QTY AS REQUIRED FOR FIRE CODE COMPLIANCE) CONNECTED TO A CENTRAL MONITORING SYSTEM OR FIRE ALARM SYSTEM. INCLUDE ALL COSTS TO CONNECT TO NEW SYSTEM OR EXISTING SYSTEM AS REQUIRED BY PROJECT SCOPE.

13. PER CFC **SECTION 1206.2.11.4.1** WHERE BATTERY ENERGY CAPACITY EXCEEDS 70 KWH (OR 50 GALLONS OF ELECTROLYTE WHERE CBC OR OTHER LOCAL CODE IS ADOPTED). PROVIDE SUPERVISORY SIGNAL TO FIRE ALARM SYSTEMS VIA CURRENT MONITORING SWITCH. ROUTE 1 PHASE CONDUCTOR OF EACH INVERTER ROOM EXHAUST FAN BRANCH CIRCUIT THROUGH/ AROUND A DEDICATED, CURRENT–OPERATED LOAD MONITORING SWITCH THAT DETECTS OVERLOADS AND UNDERLOADS (INCLUDING FAN BELT BREAKAGE) WITHIN +/– 15 PERCENT OF AVERAGE CURRENT DRAW. LOCATE IN BARRIERED PULL BOX – NEMA 3R FOR WET LOCATIONS – AND CONNECT N.O. CONTACT TO FIRE ALARM MONITORING MODULE (SUPERVISORY SIGNAL). ADDITIONALLY CONNECT INVERTER THERMAL RUNAWAY DEVICE OUTPUT CONTACT TO FIRE ALARM MONITOR MODULE AND PROGRAM TO INDICATE THERMAL RUNAWAY/INVERTER SHUTDOWN (SUPERVISORY SIGNAL) LOCATE PULL BOX WITH DEVICES INDOORS WHERE POSSIBLE AND ADJACENT TO THE SERVING ELECTRICAL DISTRIBUTION EQUIPMENT. PROVIDE LABEL "INVERTER 1 BATTERY EX. FAN & THERMAL RUNAWAY/INVERTER SHUTDOWN MONITOR" PER LABELING SPECIFICATIONS. (NK TECHNOLOGIES #ASM–NOU–OU–FT – www.nktechnologies.com).

INVERTER SYSTEM REQUIREMENTS:

1. THE CONTRACTOR SHALL BE RESPONSIBLE FOR THE FURNISHING OF ALL MATERIAL, LABOR, EQUIPMENT, AND SERVICES, IN CONNECTION WITH THE INSTALLATION OF A COMPLETE AND FULLY FUNCTIONING AND CODE COMPLIANT INSTALLATION.

2. IT IS THE INTENT OF THE CONTRACT DOCUMENTS, WHICH ARE PRESENTED IN A DIAGRAMMATIC FORMAT, TO PROVIDE CONTRACTOR INFORMATION THAT SUPPLEMENTS AND ENHANCES THE GENERALLY ACCEPTED CONSTRUCTION MEANS, METHODS, TECHNIQUES, SEQUENCES AND PROCEDURES EMPLOYED IN CONNECTION WITH INSTALLATION OF THIS TYPE OF PRODUCT/SYSTEM.

3. THE CONTRACTOR SHALL ALSO INCORPORATE THE REQUIREMENTS OF THE MANUFACTURER'S INSTALLATION INSTRUCTIONS/WARRANTY REQUIREMENTS AS PART OF THE REQUIREMENTS OF THE CONSTRUCTION DOCUMENTS. IN THE EVENT OF A CONFLICT BETWEEN THE CONTRACT DOCUMENT REQUIREMENTS AND THE MANUFACTURER'S INSTALLATION REQUIREMENTS, THE MORE STRINGENT REQUIREMENTS SHALL APPLY – UNLESS THE MORE STRINGENT REQUIREMENT VOIDS APPLICABLE WARRANTIES OR VIOLATES THE REQUIREMENTS OF THE LOCAL AUTHORITY HAVING JURISDICTION. ANY SUCH CONFLICT SHALL IMMEDIATELY BE BROUGHT TO THE ATTENTION OF THE ENGINEER IN WRITING THROUGH THE FORMAL RFI PROCESS.

4. REFER TO THE ASSOCIATED SCHEDULES, SCHEMATICS, DRAWINGS, AND SPECIFICATIONS FOR DETAILED INFORMATION/REQUIREMENTS ON THIS PRODUCT/SYSTEM.

INVERTER SYSTEM SPECIFICATIONS

1. THE INVERTER SYSTEM SHALL HAVE A TWO YEAR WARRANTY ON CABINET AND ELECTRONICS AFTER INITIAL START–UP. THE INVERTER SHALL HAVE A TEN YEAR BATTERY WARRANTY, ONE–YEAR FULL REPLACEMENT AND PRO–RATA THEREAFTER.

2. THE INVERTER SYSTEM SHALL BE FACTORY ASSEMBLED AND SHALL HAVE THE FOLLOWING LISTINGS AND CERTIFICATIONS:

   – 1998 U.L. 924 (EMERGENCY LIGHTING).
   – 1998 U.L. 924A (AUXILIARY EQUIPMENT FOR USE WITH GENERATORS).
   – REQUIREMENTS OF N.E.C.(OR CEC, WHERE ADOPTED), O.S.H.A., AND THE LIFE SAFETY CODE(NFPA 101).
   – SPECIAL SEISMIC CERTIFICATION – CA OSHPD OSP CERTIFICATION SHALL BE PROVIDED AS EVIDENCE OF COMPLIANCE REGARDLESS OF PROJECT LOCATION.

3. THE INVERTER SYSTEM SHALL HAVE THE FOLLOWING CHARACTERISTICS:

   – MAXIMUM SOUND LEVEL OF 45dBA AS MEASURED 1 METER FROM THE INVERTER SYSTEM WHILE IT IS IN EMERGENCY OPERATION. INVERTER SYSTEM SHALL BE INAUDIBLE AT 1 METER FROM THE INVERTER SYSTEM WHEN IN NON–EMERGENCY MODE.
   – RATED AND BRACED AS APPROPRIATE TO WITHSTAND THE AVAILABLE FAULT CURRENT AT THE INPUT TERMINALS OF THE INVERTER. SEE FEEDER SCHEDULE FOR AIC VALUES.
   – 100% COMPATIBLE WITH ALL LIGHTING LOADS – REGARDLESS OF BALLAST TYPE.
   – CAPABLE OF SUPPORTING SMALL MOTOR LOADS.
   – COMPATIBLE WITH ALL ELECTRONIC SYSTEM LOADS.
   – MICROPROCESSOR–BASED, SOFTWARE–CONTROLLED, BT PWM DESIGN WITH IGBT TECHNOLOGY FOR A TRUE "NO–BREAK" SINE WAVE OUTPUT.
   – MINIMUM 97% EFFICIENCY. SYSTEM SHALL NOT REQUIRE AIR FILTERS.
   – SEALED MAINTENANCE–FREE LEAD CALCIUM BATTERIES WITH FRONT ACCESS TERMINALS AND A 10 YEAR LIFE EXPECTANCY.
   – SELF–TESTING, SELF–DIAGNOSTIC, AND SELF–EXERCISING FUNCTIONS WITH A LOG OF THE LAST 75 ALARM/INVERTER EVENTS.
   – STANDARD RS232 COMMUNICATIONS INTERFACE.
   – AUTOMATIC–OVERLOAD PROTECTION, SHORT CIRCUIT PROTECTION, LIGHTING AND SURGE PROTECTION, AS WELL AS A BACK–FEED RELAY AND/OR SCR FOR PREVENTION OF INADVERTENT LINE ENERGIZATION.
   – 14 STANDARD FUNCTION ALARMS, INCLUDING "OPEN OUTPUT CIRCUIT BREAKER" ALARM AND LOAD REDUCTION ALARM (10% DECREASE IN INVERTER LOAD) AS REQUIRED TO MEET UNIT SELF–TESTING REQUIREMENTS OF THE CURRENTLY–ADOPTED VERSION OF NFPA 101.
   – 10 STANDARD DIGITAL METER DISPLAYS.
   – SELF TESTING AND SELF DIAGNOSTIC FUNCTIONS WITH SEPARATE EVENT ALARM AND TEST LOGS, EVENT MEMORY CAPABLE OF LOGGING 225 DISTINCT EVENTS.
   – 90 MINUTES OF BATTERY CAPACITY AT FULL LOAD OUTPUT.
   – UNITY POWER FACTOR WHERE KVA = KW.
   – AN INTERNAL BREAK–BEFORE–MAKE MAINTENANCE BYPASS SWITCH SHALL BE PROVIDED.

4. THE INVERTER SYSTEM SHALL PROVIDE OUTPUT POWER WITH THE FOLLOWING CHARACTERISTICS:

   – CONTINUOUS LINE CONDITIONED COMPUTER QUALITY POWER.
   – SPIKE AND SURGE PROTECTION.
   – DYNAMIC BROWNOUT PROTECTION.
   – VOLTAGE REGULATION OF 10% NOMINAL.
   – LESS THAN 3% TOTAL HARMONIC DISTORTION AT 100% LINEAR LOAD.

5. THE INVERTER SHALL BE PROVIDED WITH A PROGRAMMABLE EMAIL/PRE–RECORDED VOICE MESSAGE ANALOG MODEM COMMUNICATING WITH INVERTER MFGR–MAINTAINED AUTOMATED CALL CENTER. INVERTER SYSTEM SHALL BE CONFIGURED/PROGRAMMED TO SEND EMAIL ALERT NOTIFICATIONS OR PRE–RECORDED VOICE MESSAGES AS REQUIRED BY OWNER'S REPRESENTATIVE. E.C. SHALL INCLUDE ALL COSTS TO PROVIDE A PLENUM–RATED CATEGORY 6 DATA CABLE AND RJ45 JACK LOCATED IN A RECESSED TELECOMMUNICATIONS OUTLET TO EACH INVERTER LOCATION. CATEGORY 6 CABLE SHALL BE EXTENDED TO NEAREST TELEPHONE BACKBOARD AND TERMINATED. SHELL PROJECT DESTINATION MAY BE THE MAIN TELEPHONE BACKBOARD. TENANT IMPROVEMENT PROJECT DESTINATION MAY BE THE NEAREST TELECOMMUNICATIONS CLOSET OR IDF. IN EITHER CASE, E.C. SHALL OBTAIN OWNER APPROVAL FOR CABLE ROUTING AND TERMINATION LOCATION PRIOR TO ROUGH–IN.

6. WHEN THE INVERTER SCHEDULE INDICATES OUTPUT CONTACTS ARE REQUIRED, PROVIDE AS FOLLOWS:

   "STD" – PROVIDE SUMMARY ALARM RELAY/CONTACT AND "INVERTER ON" RELAY/CONTACT

   "MULTI" – PROVIDE MULTI–OUTPUT CONTACT BOARD THAT PROVIDES STATUS CONTACTS FOR INVERTER ON, INVERTER OFF, AC PRESENT, SUMMARY FAULT, THERMAL ALARM, SYSTEM ON BYPASS, INTERNAL MAINTENANCE BYPASS SWITCH POSITION

   "BMS" – PROVIDE BACNET MS/TP COMMUNICATIONS CARD (BTL–LISTED) PROVIDING, AT MINIMUM, THE SAME POINTS AS THE MULTI–OUTPUT CONTACT BOARD. WHERE THE "BMS" OPTION IS SPECIFIED AND AN ALTERNATE/EQUAL PRODUCT IS USED THAT IS NOT CAPABLE OF BACNET COMMUNICATIONS, INCLUDE ALL COST IS BACK BID TO PROVIDE A MUTIL–OUTPUT CONTACT CARD WITH A SEPARATE, EXTERNAL BACNET MS/TP I/O MODULE WITH POWER SUPPLY LOCATED IN A HINGED NEMA WALL–MOUNTED BOX. PROVIDE 120V CIRCUIT AS REQUIRED.

7. ALL INVERTER BATTERIES SHALL BE VALVE REGULATED, ABSORBENT GLASS MAT, LEAD–ACID TYPE (VRLA) DESIGNED FOR A 10 YEAR LIFE AND SHALL BE EQUIPPED WITH SELF–RESEALING FLAME–ARRESTING SAFETY VENTS PER CFC **ART 1206.2.10.6**.

8. FOR EACH INVERTER WITH A TOTAL BATTERY ELECTROLYTE CAPACITY 50 GALLONS OR GREATER (PER IFC) OR WITH AN ENERGY CAPACITY OF 70KWH OR GREATER PROVIDE THE FOLLOWING:

   a. A LISTED DEVICE OR OTHER AHJ–APPROVED METHOD TO PRECLUDE, DETECT AND CONTROL THERMAL RUNAWAY PER CFC **ART 1206.2.10.7**. EACH BATTERY STRING/DC DISCONNECT COMBINATION SHALL BE PROVIDED WITH CPI #BTM BATTERY THERMAL MANAGEMENT DEVICE OR EQUAL – FULLY CONNECTED /CONFIGURED – TO DISCONNECT ITS RESPECTIVE BATTERY DISCONNECT AND ITS RESPECTIVE BATTERY STRING. ADDITIONALLY, THE SYSTEM SHALL PROVIDE AN ALARM OUTPUT AT AN AVAILABLE INVERTER CUSTOMER ALARM INPUT CARD. INVERTER SHALL BE CONFIGURED TO REFLECT A HIGH PRIORITY ALARM "BATTERY THERMAL RUNAWAY" INDICATION VIA BUILDING FIRE ALARM AND, IF PROVIDED ON PROJECT, BUILDING AUTOMATION SYSTEM.

   b. ALL VRLA BATTERIES SHALL BE HOUSED IN LOCKABLE CABINETS. BATTERY CABINETS SHALL LIMIT THE MAXIMUM CONCENTRATION OF HYDROGEN TO 1.0 PERCENT OF THE TOTAL VOLUME OF THE CABINET DURING THE WORST CASE EVENT OF SIMULTANEOUS "BOOST" CHARGING OF ALL THE BATTERIES IN THE CABINET.

   c. BATTERY CABINETS SHALL HAVE EXTERIOR LABELS IDENTIFYING THE MANUFACTURER AND MODEL NUMBER OF THE SYSTEM AND ELECTRICAL RATING (VOLTAGE AND CURRENT) OF THE CONTAINED BATTERY SYSTEM. THERE SHALL ALSO BE SIGNS WITHIN THE CABINET TO INDICATE THE RELEVANT ELECTRICAL, CHEMICAL AND FIRE HAZARDS. CFC **ART 1206.2.8.6**.

9. WHEN THE INVERTER SCHEDULE INDICATES A "REMOTE ALARM", A REMOTE ALARM PANEL SHALL BE PROVIDED PER THE FLOOR PLAN. WHEN A REMOTE ALARM PANEL IS NOT SHOWN ON FLOOR PLANS, THE E.C. SHALL INCLUDE ALL COSTS TO PROVIDE 1 REMOTE ALARM PANEL PER INVERTER WITH CONDUIT AND CONDUCTORS AS REQUIRED TO LOCATE REMOTE ALARM PANEL(S) A MINIMUM OF 200 FT. FROM THE INVERTER(S).

10. WHEN THE INVERTER SCHEDULE INDICATES A "GEC SIZE", THE INVERTER(S) IS CONSIDERED TO BE A SEPARATELY DERIVED SYSTEM, PROVIDE CONDUIT AND COPPER GROUNDING ELECTRODE CONDUCTOR – SIZES AS INDICATED.

11. AN INTERNAL MAINTENANCE BYPASS SWITCH SHALL BE PROVIDED.

12. THE INVERTER SYSTEM SHALL BE PROVIDED WITH FACTORY STARTUP BY A MANUFACTURER APPROVED TECHNICIAN.

13. ALL INVERTERS SHALL BE SEISMICALLY CERTIFIED ASSUMING A COMPONENT IMPORTANCE FACTOR, I_p = 1.5). SEE STRUCTURAL PLANS FOR SITE SPECIFIC S_{DS} VALUES AND ADDITIONAL SEISMIC DESIGN CRITERIA. WHERE STRUCTURAL PLANS ARE UNAVAILABLE, CONTRACTOR SHALL RETAIN THE SERVICES OF A STRUCTURAL ENGINEER LICENSED IN THE STATE IN WHICH THE PROJECT OCCURS TO PROVIDE/VALIDATE SITE SPECIFIC SEISMIC DESIGN CRITERIA USING USGS US SEISMIC DESIGN MAP TOOLS OR OTHER INDUSTRY RECOGNIZED MAPPING TOOLS AS REQUIRED. WHERE SOIL CONDITIONS ARE UNKNOWN, USE CONDITIONS THAT RESULT IN THE HIGHEST S_{DS} FOR THE PROJECT LOCATION. ADDITIONALLY, INCLUDE ALL COSTS IN BASE BID ASSOCIATED WITH PROVIDING SPECIAL SEISMIC CERTIFICATION AND SPECIAL PERIODIC INSPECTIONS PER CBC CHAPTER 17A. SEE ELECTRICAL SPECIFICATIONS FOR ADDITIONAL REQUIREMENTS.

    SPECIAL SEISMIC CERTIFICATION SHALL BE PROVIDED BY THE INVERTER MANUFACTURER/VENDOR VIA 3RD PARTY ACCREDITED LISTING AGENCY'S CERTIFICATE OF COMPLIANCE. CERTIFICATION SHALL BE BASED ON TESTING – NOT ANALYSIS. THIS SPECIFICATION FURTHER REQUIRES ALL INVERTER(s) RECEIVE A STATE OF CALIFORNIA OFFICE OF STATEWIDE PLANNING AND DEVELOPMENT (OSHPD) SPECIAL SEISMIC CERTIFICATION PRE–APPROVAL (OSP) REGARDLESS OF INTENDED USE AND/OR LOCATION OF PROJECT.

    THE CONTRACTOR SHALL BE RESPONSIBLE FOR THE DESIGN AND INSTALLATION OF SEISMIC RESTRAINT/ATTACHMENT SYSTEMS VIA LICENSED STRUCTURAL ENGINEER IN THE STATE IN WHICH THE PROJECT OCCURS.

14. SHOP DRAWINGS SHALL BE SUBMITTED PER THE GENERAL SPECIFICATION REQUIREMENTS SHOWING CONFORMANCE TO THESE SPECIFICATIONS.

15. THE INVERTER SYSTEM SHALL BE A SEISMICALLY–CERTIFIED MEYERS–CPI ILLUMINATOR "E" OR "CII" SERIES – EQUAL BY ISOLITE #E3MAC SERIES, EVENLITE #LITEMINDER MODULAR SERIES OR HUBBELL. MYERS–CPI INVERTER SYSTEMS SERVE AS THE DESIGN–BASIS FOR THE INVERTER(S) ON THIS PROJECT. WHILE ISOLITE & EVENLITE SEISMICALLY–CERTIFIED INVERTER(S) AND HUBBELL/DUALITE LSN SEISMICALLY–CERTIFIED INVERTERS ARE CONSIDERED EQUAL TO MEYERS–CPI, USE OF THE ISOLITE, EVENLITE OR HUBBELL/DUALITE INVERTERS MAY REQUIRE ADDITIONAL SPACE, ROOM RECONFIGURATION, COOLING, ELECTRICAL INFRASTRUCTURE ETC. ANY ADDITIONAL CONSTRUCTION COST(S), INCLUDING RE–DESIGN/DOCUMENTATION COSTS, FOR USE OF ISOLITE, EVNLITE OR HUBBELL/DUALITE INVERTER(S) SHALL BE INCLUDED IN BASE BID. NO OTHER INVERTER PRODUCTS ARE KNOWN EQUALS TO THE MEYERS–CPI, ISOLITE, EVENELITE, AND HUBBELL PRODUCTS AT THIS TIME.

DESIGNATED SEISMIC SYSTEM:

EVERY INVERTER ON THIS PROJECT IS A PART OF A DESIGNATED SEISMIC SYSTEM (COMPONENT IMPORTANCE FACTOR, I_p = 1.5). SEE INVERTER SPECIFICATIONS FOR ADDITIONAL REQUIREMENTS.

INVERTER "INVP"

INPUT VOLTAGE	120/208			OUTPUT VOLTAGE	120/208				KW	3.0			GEC/BJ SIZE	NOT APPLICABLE								
INPUT PHASE	1			OUTPUT PHASE	1				OUTPUT CONTACTS	STD												
INPUT WIRE	3			OUTPUT WIRE	3				REMOTE ALARM	YES			AIC	PER SINGLE LINE								

NOTES	DESCRIPTION	WATTS ØA	WATTS ØB	LTG	GEN	KIT	LCL	MIS	BKR	CPSC	PHASE	CPSC	BKR	MIS	LCL	KIT	GEN	LTG	WATTS ØA	WATTS ØB	DESCRIPTION	NOTES
–	SITE LIGHTING	930		11	–	–	–	–	20/1	1	A	2	20/1	–	–	–	–	2	1290		MUSCO EM LTG "P2"	–
–	MUSCO EM LTG "P3"		1290	2	–	–	–	–	20/1	3	B	4	20/1	–	–	–	–	2		3560	MUSCO EM LTG "P1"	–
–	MUSCO EM LTG "P4"	3560		2	–	–	–	–	40/1	5	A	6	20/1	–	–	–	–	–	310		SPARE	–
–	SPARE		–	–	–	–	–	–	20/1	7	B	8	20/1	–	–	–	–	–		155	SPARE	–
–	SPARE	–		–	–	–	–	–	20/1	9	A	10	20/1	–	–	–	–	–	620		SPARE	–
	TOTAL WATTS = 2881							AMPS = 14										LCL = 576				

INVERTER BATTERY SCHEDULE

1. BATTERY TYPE: DRY
2. CHEMICALS IN BATTERIES:

COMMON NAME	CHEMICAL NAME	%	CAS #	MATERIAL FORM	QUANTITY STORED	QUANTITY IN USE	LOCATION	HAZARD CLASSES
GRID	LEAD	34%	7439–921	SOLID	N/A	CLOSED	–	TARGET ORGAN
LEAD OXIDE	LEAD DIOXIDE	31%	1309–60–0	SOLID	N/A	CLOSED	–	CORROSIVE / TOXIC/ TARGET ORGAN / CLASS 1 WATER REACTIVE
ANGLESITE	LEAD SULFATE	<1%	7446–14–2	SOLID	N/A	CLOSED	–	CORROSIVE / TOXIC/ TARGET ORGAN / CLASS 1 WATER REACTIVE
BATTERY ELECTROLYTE	SULFURIC ACID	34%	7446–93–9	LIQUID	N/A	CLOSED	–	CORROSIVE / TOXIC/ TARGET ORGAN / CLASS 1 WATER REACTIVE

3. NUMBER OF BATTERIES: 8 BATTERIES
4. LIQUID GALLON CAPACITY OF EACH BATTERY: 1.42 GALLONS
5. a. TOTAL SYSTEM GALLON CAPACITY: 11.36 GALLONS
   b. TOTAL SYSTEM ENERGY CAPACITY: 10.08 KWH
6. BATTERY STORAGE LOCATION / METHOD: IN INVERTER / METAL CABINET
7. REASON FOR BATTERY USE: ALTERNATE POWER SOURCE

INVERTER DIMENSIONS: 47"H X 30"W X 25"D. TOTAL WEIGHT = 827 POUNDS. FOR MOUNTING REQUIREMENTS SEE DETAIL 1 ON THIS SHEET.

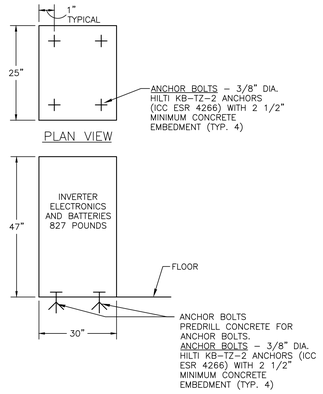

INVERTER "INVP" MOUNTING DETAIL 1

SCALE: N.T.S.

IDENTIFICATION STAMP
DIV. OF THE STATE ARCHITECT
APP: 03-122664 INC:
REVIEWED FOR
SS ☑ FLS ☑ ACS ☑
DATE: 05/12/2023

pjhm architects
Web: pjhm.com
OC Office: 24461 Ridge Route Drive #100, Laguna Hills, CA 92653 Phone: 949.496.6161
SD Office: 804 Pier View Way #103, Oceanside, CA 92054 Phone: 760.730.5527
LA Office: 837 Traction Avenue, #410, Los Angeles, CA 90013 Phone: 213.278.0172

LICENSED ARCHITECT
RICHARD W. SIMPSON
No. C15585
REN. 02/25
STATE OF CALIFORNIA

tk|sc COLLABORATIVE
11870 Pierce Street, Suite 160
Riverside, California 92505
951.299.4160 www.tk1sc.com
Project Leader - Nikolas Bruno
Electrical Lead - Nikolas Bruno
tk1sc Job #: B2202744.000

REGISTERED PROFESSIONAL ENGINEER
RICHARD W. SIMPSON
No. E15610
ELECTRICAL
STATE OF CALIFORNIA

HIGHLAND HIGH SCHOOL
50M POOL & AQUATICS CENTER
KERN HIGH SCHOOL DISTRICT

INVERTER SCHEDULE

E–6.3

8/2/2022 11:34:37 AM

LIGHTING FIXTURE SCHEDULE NOTES:

A. GENERAL NOTES:

1. THE LIGHTING FIXTURES, LAMPS, BALLASTS, POWER SUPPLIES, DRIVERS AND TRANSFORMERS FOR THIS PROJECT HAVE BEEN SPECIFIED TO ENSURE THAT SPECIFIC AESTHETIC AND PERFORMANCE REQUIREMENTS WILL BE SATISFIED. THESE PRODUCTS HAVE BEEN CAREFULLY RESEARCHED AND EACH SPECIFIED ITEM HAS UNIQUE QUALITIES WHICH WERE DETERMINED TO BE ESSENTIAL IN SATISFYING THE OWNER'S, ARCHITECT'S, ENGINEER'S AND LIGHTING CONSULTANT'S DESIGN CRITERIA.
2. CONTRACTOR SHALL PROVIDE ALL MATERIALS AS DETAILED ON DRAWINGS AND/OR SCHEDULES, AND LABOR AS REQUIRED TO ACHIEVE A COMPLETE AND OPERATING LIGHTING SYSTEM.
3. CONTRACTOR SHALL NOTIFY THE ELECTRICAL ENGINEER AND/OR LIGHTING CONSULTANT OF ANY PROVISIONS OF THE SPECIFICATION THAT IS IN CONFLICT WITH LOCALLY ENFORCED CODES.
4. CONTRACTOR SHALL IMMEDIATELY NOTIFY THE ARCHITECT OF ANY REQUIRED MODIFICATIONS THAT ARE NOT SHOWN ON THE DRAWINGS.
5. ALL ELECTRICAL MATERIAL SHALL BE IN NEW & UNDAMAGED CONDITION WHEN INSTALLED. ALL EQUIPMENT SHALL BE LISTED BY A NATIONALLY RECOGNIZED TESTING LABORATORY.
6. ALL DIMENSIONS & MEASUREMENTS FOUND ON PLANS ARE APPROXIMATE. CONTRACTOR SHALL VALIDATE ALL DIMENSIONS PRIOR TO ORDERING MATERIAL TO INCLUDE MAKING FIELD MEASUREMENTS BASED ON ACTUAL SITE CONDITIONS TO DEVELOP COMPLETE ORDERS AND INSTALL SYSTEMS PER DRAWINGS AND SPECIFICATIONS.
7. REFER TO ARCHITECTURAL PLANS FOR EXACT LOCATION AND ELEVATION OF ALL LIGHTING FIXTURES AND ASSOCIATED DEVICES AND EQUIPMENT.
8. PRIOR TO AIMING/ADJUSTING ACTIVITIES, COMMISSIONING OR PUNCHWALK COMMENCEMENT, CONTRACTOR SHALL PROPERLY TEST AND VERIFY ALL CIRCUITRY AND CONTROL WIRING AND IMPLEMENT ALL CONTROLS PROGRAMMING.

B. INSTALLATION:

1. LOCATIONS OF THE FIXTURES SHALL BE PER THE ARCHITECTURAL REFLECTED CEILING PLAN(S) AND SHALL BE COORDINATED AT TIME OF ROUGH IN. CONFLICTS BETWEEN THE ARCHITECTURAL REFLECTED CEILING PLAN(S) AND THE ELECTRICAL/LIGHTING DESIGN PLAN(S) SHALL BE BROUGHT TO THE ATTENTION OF THE ARCHITECT IN WRITING PRIOR TO ORDERING FIXTURES.
2. LIGHTING DRAWINGS REPRESENT THE DESIGN INTENT OF THE EQUIPMENT, DEVICES, ETC. TO BE CONNECTED AND THE CIRCUITS TO WHICH THEY ARE TO BE CONNECTED. CONTRACTOR SHALL INSTALL ALL CONDUIT, J-BOXES AND ADDITIONAL HARDWARE AND DEVICES AS REQUIRED FOR A COMPLETE AND OPERATING SYSTEM.
3. ALL LIGHTING FIXTURES SHALL BE MOUNTED AND INDIVIDUALLY SUPPORTED IN ACCORDANCE WITH APPLICABLE CODES. FIXTURES SHALL BE FURNISHED AND INSTALLED WITH ALL REQUIRED MOUNTING DEVICES, HARDWARE AND ACCESSORIES.
4. CONTRACTOR TO VERIFY LIGHTING FIXTURE MOUNTING HARDWARE IS COMPATIBLE WITH APPROVED MOUNTING CONDITIONS. MOUNTING CONDITIONS MUST ALLOW FOR AIMING AND ADJUSTING OF LIGHTING FIXTURES ON SITE.
5. CONTRACTOR TO INCLUDE AIMING/ADJUSTING LABOR AFTER DARK AS REQUIRED FOR ANY ADJUSTABLE LIGHTING FIXTURE AND FOR EACH INDIVIDUAL LIGHTING FIXTURE HEAD OR LAMP HOLDER IN A MULTI-FIXTURE/MULTI-LAMP ASSEMBLY. LIGHTING FIXTURES TO BE AIMED/ADJUSTED PER THE DIRECTION OF OWNER, ARCHITECT AND/OR LIGHTING CONSULTANT.
6. CONTRACTOR TO SUPPLY ADEQUATE SUPPORT INCLUDING LADDERS, LIFTS OR OTHER EQUIPMENT REQUIRED TO ACCESS LIGHTING FIXTURES AT THE TIME OF FOCUS, INCLUDING EVENING OR NIGHT WORK AS MAY BE REQUIRED DUE TO SCHEDULE CONFLICT OR DAYLIGHT IMPACT. AIMING/ADJUSTING LABOR SHALL BE PREPARED FOR WORK WITH COMMON HAND TOOLS TO MAKE ADJUSTMENTS AND MINOR REPAIRS DURING AIMING.
7. ALL COVE MOUNTED LIGHTING FIXTURES SHALL EXTEND THE FULL LENGTH OF THE COVE. CONTRACTOR TO FIELD MEASURE COVE LENGTH AND ORDER QUANTITY OF LIGHTING FIXTURES AS REQUIRED. PROVIDE COMPLETE MANUFACTURER SHOP DRAWINGS OF BUILT-IN COVE OR LINEAR LIGHTING SYSTEMS.
8. CONTRACTOR TO REPLACE ALL INOPERATIVE LAMPS, LED ARRAYS OR SYSTEMS AT THE END OF THE CONSTRUCTION PHASE PRIOR TO THE FOCUS AND PROGRAMMING PHASE AND AGAIN PRIOR TO OWNER OCCUPANCY OR PROJECT OPENING.
9. ALL POLE MOUNTED FIXTURES, POST MOUNTED FIXTURES AND BOLLARDS SHALL BE PROVIDED WITH A STRUCTURAL FOOTING AS DETAILED ELSEWHERE IN THE DRAWINGS. FOOTING SIZE TO BE PROVIDED BY STRUCTURAL ENGINEER. REFERENCE FIXTURE SCHEDULE AND DETAILS FOR MORE INFORMATION.
10. ALL EXIT SIGNS SHALL BE INSTALLED IN STRICT ACCORDANCE WITH THE LOCAL FIRE PREVENTION CODE AUTHORITY. THE CONTRACTOR IS RESPONSIBLE FOR PROVIDING ALL NECESSARY HARDWARE SUCH THAT ALL EXIT SIGNS ARE INSTALLED IN AN APPROVED VISIBLE LOCATION. THE CONTRACTOR SHALL VERIFY CHEVRONS AND NUMBER OF FACES PER EXIT SIGN WITH ARCHITECTURAL REFLECTED CEILING PLAN(S). ANY DISCREPANCIES BETWEEN EXIT SIGNS DEPICTED ON ARCHITECTURAL AND ELECTRICAL PLANS SHALL BE BROUGHT TO THE ATTENTION OF THE ARCHITECT PRIOR TO ORDERING EXIT SIGNS.

C. SUBMITTALS AND SUBSTITUTIONS:

1. CONTRACTOR TO SUBMIT FOR APPROVAL ON THE PRODUCTS THEY INTEND TO FURNISH WITHIN TEN (10) DAYS OF AWARD OF CONTRACT. FAILURE TO SUBMIT WITHIN DEADLINE CONSTITUTES A GUARANTEE THAT ONLY THE BASE SPECIFIED PRODUCTS WILL BE SUPPLIED AND THAT NO OTHER PRODUCTS, WHETHER LISTED AS ALTERNATES OR NOT, WILL BE CONSIDERED.
2. CONTRACTOR TO PROVIDE A SUBMITTAL/SHOP DRAWING SUBMITTAL FOR EACH LIGHTING FIXTURE TYPE INCLUDING ACCESSORIES, BALLAST(S), POWER SUPPLIES, DRIVER(S) TRANSFORMER(S), AND INTEGRAL EMERGENCY BATTERIES AND TEST SWITCHES. ANY LIGHTING FIXTURE SUBMITTAL PROVIDED WITHOUT SPECIFIC LIGHTING FIXTURE'S ACCESSORIES, BALLAST, POWER SUPPLY, DRIVER, TRANSFORMER OR BATTERY INFORMATION SHALL BE REJECTED AS INCOMPLETE.
3. SUBSTITUTIONS OF THE SPECIFIED PRODUCTS ARE STRICTLY PROHIBITED – UNLESS APPROVED AS STATED HEREIN. LIGHTING FIXTURE SUBSTITUTIONS SHALL BE FORMALLY PRESENTED TO THE ELECTRICAL ENGINEER AND/OR LIGHTING CONSULTANT, BY APPOINTMENT ONLY, AT LEAST TEN (10) WORKING DAYS PRIOR TO BID TIME. THE SUBMITTAL MATERIAL SHALL INCLUDE THE FOLLOWING ITEMS.
   a. A COMPLETE AND OPERATING SAMPLE, WIRED FOR 120V OPERATION, WITH LAMP, CORD AND PLUG.
   b. A COMPLETE PHOTOMETRIC REPORT, FOR THE PROPOSED SUBSTITUTE PRODUCT, USING THE SPECIFIED LAMP OR LED TYPE AND WATTAGE, INCLUDING TABULATED CANDLEPOWER VALUES, COEFFICIENT OF UTILIZATION, AND AN ISO-FOOT-CANDLE DIAGRAM. PRORATED DATA WILL NOT BE ACCEPTABLE. THE PHOTOMETRIC REPORT MUST BE DONE IN ACCORDANCE WITH PUBLISHED I.E.S. TESTING PROCEDURES AND CERTIFIED BY A REGISTERED ELECTRICAL ENGINEER.
   c. A CURRENT ORIGINAL CATALOG DATA SHEET WITH LIGHTING FIXTURE CATALOG NUMBERS. MODIFIED DATA SHEETS WILL NOT BE ACCEPTABLE.
   d. A SIGNED COPY OF THE "SUBSTITUTION COMPLIANCE FORM", LOCATED IN THE DIVISION 1 SPECIFICATION, STATING THAT IF THE PROPOSED SUBSTITUTION IS ACCEPTED, THE PROJECT SCHEDULE WILL NOT BE NEGATIVELY AFFECTED. IF THE COMPLETION OF THE PROJECT IS DELAYED BECAUSE OF THE APPROVED SUBSTITUTION, THE CONTRACTOR WILL BE RESPONSIBLE FOR PAYMENT OF ANY ESTABLISHED LIQUIDATED DAMAGES.
   e. FOR SPECIFIC INTERIOR FIXTURE SUBSTITUTIONS, WHEN DIRECTED BY THE ELECTRICAL ENGINEER AND/OR LIGHTING CONSULTANT, A POINT-BY-POINT SCALED COMPUTER PRINTOUT SHALL BE PROVIDED VERIFYING THE ILLUMINATION LEVELS FOR THE SPECIFIC INTERIOR AREA. IF THE SUBSTITUTED FIXTURE IS AN EMERGENCY FIXTURE, THE REPORT SHALL BE RUN IN BOTH NORMAL AND EMERGENCY MODES. THIS REPORT SHALL BE CONFIGURED WITH SPECIFIC CONSTRAINTS, AS DIRECTED BY THE ENGINEER OF RECORD. THE REPORT MUST SHOW THAT THE SUBSTITUTED FIXTURE PROVIDES PERFORMANCE EQUAL TO OR BETTER THAN THE LIGHTING LEVELS OF THE SPECIFIED PRODUCT.
   f. FOR ALL EXTERIOR FIXTURE SUBSTITUTIONS, A POINT-BY-POINT SCALED COMPUTER PRINTOUT SHALL BE PROVIDED VERIFYING THE ILLUMINATION LEVELS FOR THE ENTIRE SITE PLAN BASED ON USING THE PROPOSED ALTERNATIVE FIXTURES. THE REPORT MUST SHOW THAT THE SUBSTITUTED FIXTURE PROVIDES PERFORMANCE EQUAL TO, OR BETTER THAN THE LIGHTING LEVELS AND UNIFORMITY RATIOS (MAX:MIN AND AVG:MIN) OF THE SPECIFIED PRODUCT. THIS REPORT SHALL BE CONFIGURED WITH THE FOLLOWING CONSTRAINTS.
      i. THE SPACING INCREMENT OR POINTS ON THE VERIFICATION REPORT SHALL NOT EXCEED TEN (10) FEET IN EITHER DIRECTION.
      ii. THE PHOTOMETRIC CALCULATION SHALL BE BASED ON PROVIDING MAINTAINED FOOT-CANDLE LEVELS USING MEAN LAMP LUMENS AND A LIGHT LOSS FACTOR, AS DIRECTED BY THE ENGINEER OF RECORD.
      iii. THE PHOTOMETRIC CALCULATION SHALL SHOW ANY ADDITIONAL ENERGY AND/OR ENERGY COSTS, FOR A TEN YEAR PERIOD, AS COMPARED TO THE ORIGINALLY SPECIFIED ITEM. THE TOTAL COSTS FOR THESE EXPENSES WILL BE DEDUCTED FROM THE CONTRACT COST.
4. DURING THE BIDDING PROCESS, THE CONTRACTOR SHALL REFER TO THE LIGHTING FIXTURE SCHEDULES ON THE ARCHITECTURAL PLANS (IF PROVIDED ON PROJECT), LIGHTING DESIGN PLANS/SPECIFICATIONS (IF PROVIDED ON PROJECT), AND THE ELECTRICAL PLANS. ANY DISCREPANCIES BETWEEN THEM INCLUDING, BUT NOT LIMITED TO, PART NUMBERS AND FIXTURE DESCRIPTIONS SHALL BE BROUGHT TO THE ATTENTION OF THE ARCHITECT, ELECTRICAL ENGINEER, AND LIGHTING DESIGNER WITH PRE-BID RFI(S). WHERE DISCREPANCIES ARE DISCOVERED WHEN THERE IS INSUFFICIENT TIME TO ISSUE PRE-BID RFI(S), THE BASE BID SHALL INCORPORATE THE MOST COSTLY VERSION OF THE DISCREPANCY AND SHALL BE MEMORIALIZED IN AN RFI OR AS A BID CLARIFICATION. PROVIDING A VOLUNTARY DEDUCTIVE ALTERNATE BID CLARIFYING FIXTURE SCHEDULE DISCREPANCIES IS ALSO AN ACCEPTABLE FORM OF DISCREPANCY DOCUMENTATION.
5. FIXTURE FINISHES:
   a. ALL FIXTURE FINISHES AND COLORS, UNLESS NOTED AS PREMIUM OR CUSTOM, SHALL BE SELECTED FROM THE MANUFACTURERS STANDARD COLOR OPTIONS AS LISTED ON THE FIXTURE SPECIFICATION SHEET. STANDARD FINISH SHALL BE SELECTED BY THE ARCHITECT, INTERIOR DESIGNER OR OWNER. THIS DIRECTION WILL BE PROVIDED IN THE SHOP DRAWING REVIEW PROCESS.
   b. ALL FIXTURES INDICATED WITH A PREMIUM OR CUSTOM COLOR SHALL BE ASSIGNED A CUSTOM COLOR REFERENCE NUMBER (SUCH AS RAL#) OR PROVIDE FIVE (5) PAINT CHIPS FOR MANUFACTURER TO USE TO MATCH COLOR. PREMIUM OR CUSTOM FINISH SHALL BE SELECTED BY THE ARCHITECT, INTERIOR DESIGNER OR OWNER. THIS DIRECTION WILL BE PROVIDED IN THE SHOP DRAWING REVIEW PROCESS.
6. THE LIGHTING FIXTURE MODEL NUMBER MAY INDICATE A FIXTURE OPTION THAT THE CONTRACTOR MUST IDENTIFY PRIOR TO ORDERING/PROVIDING SUBMITTALS, INCLUDING, BUT NOT LIMITED TO: VOLTAGE, MOUNTING CONDITION/HARDWARE, FINISH, DIMMING REQUIREMENTS/BALLAST INFORMATION. GENERALLY, CONTRACTOR-SELECTED OPTIONS ARE DENOTED IN THE PART NUMBER WITH BRACKETS EX: [VOLTS?]
   a. CONTRACTOR SHALL BE RESPONSIBLE FOR VERIFYING AND PROVIDING ALL HANGERS, CLIPS AND NECESSARY HARDWARE TO INSTALL THE FIXTURE IN THE ENVIRONMENT AS SHOWN ON THE ARCHITECTURAL PLANS. ALL FIXTURES SHALL BE PROVIDED WITH ALL REQUIRED STRUCTURAL SUPPORTS AS REQUIRED BY THE CURRENTLY ADOPTED CODES.
   b. VOLTAGES SHALL BE VERIFIED BY THE CONTRACTOR PRIOR TO ORDERING – SEE ELECTRICAL DRAWINGS FOR BRANCH CIRCUIT INFORMATION. IT IS POSSIBLE THAT FIXTURES WILL BE REQUIRED IN VARIOUS VOLTAGES.
7. "NO KNOWN EQUAL" LIGHTING FIXTURE PRICING/BIDDING NOTES:
   a. EACH FIXTURE IDENTIFIED AS "NO KNOWN EQUAL" ON THIS PROJECT SHALL BE BID IN A "LINE ITEM" FORMAT. A PER UNIT MATERIAL COST SHALL BE PROVIDED FOR EACH "NO KNOWN EQUAL" FIXTURE. THIS PRICE SHALL INCLUDE LAMPS AS WELL AS ALL OTHER REQUIRED MATERIALS REQUIRED FOR INSTALLATION. THE FIXTURE PRICE QUOTED WILL BE UTILIZED, PRIOR TO SHOP DRAWING APPROVAL, FOR "ADDING" AND/OR "DELETING" ANY QUANTITY OF THE FIXTURE.
   b. A UNIT COST SHALL BE SUBMITTED FOR EACH "NO KNOWN EQUAL" FIXTURE. SUBMIT THE PRICING AS PART OF THE BID FORM ON A SEPARATE 8 1/2" X 11" SHEET.
   c. FAILURE TO SUBMIT A LINE ITEM FOR EACH "NO KNOWN EQUAL" FIXTURE MAY RESULT IN THE REJECTION, REFUSAL, OR NON-ACCEPTANCE OF THE CONTRACTOR'S BID.
8. FIXTURES IDENTIFIED AS "NO KNOWN EQUAL – OWNER STANDARD" OR "CAMPUS STANDARD" ARE TO BE PROVIDED AS SPECIFIED, WITH SUBSTITUTIONS STRICTLY PROHIBITED. SEE ADDITIONAL NOTES FOR "NO KNOW EQUAL" BIDDING REQUIREMENTS.

D. LIGHTING FIXTURE SPECIFICATIONS:

1. ALL EXTERIOR LIGHTING EQUIPMENT SHALL BE RATED FOR WET LOCATION AND THE IP RATING OF ALL EQUIPMENT, INCLUDING BALLAST, POWER SUPPLY AND TRANSFORMER ENCLOSURES SHALL CONFORM TO THE CONDITIONS IN WHICH THE LIGHTING FIXTURE IS MOUNTED.
2. ALL BALLASTS, POWER SUPPLIES, DRIVERS AND/OR TRANSFORMERS THAT ARE REMOTELY LOCATED SHALL BE INSTALLED AS NEAR TO THE LIGHTING FIXTURE(S) AS POSSIBLE, HIDDEN FROM PUBLIC VIEW IN AN ACCESSIBLE COMPARTMENT THAT IS WELL VENTILATED. CONTRACTOR TO COORDINATE LOCATION(S) WITH ARCHITECT PRIOR TO ROUGH-IN.
3. ALL TRANSFORMERS SHALL BE FUSED ON THE SECONDARY SIDE.
4. COLOR FILTERS SHALL BE GLASS OR DICHROIC UNLESS OTHERWISE INDICATED ON DRAWINGS.
5. CONTRACTOR TO PROVIDE 20% ADDITIONAL COLOR FILTERS FOR EACH COLOR AND SIZE.
6. CONTRACTOR TO VERIFY THAT ALL LIGHTING FIXTURES SPECIFIED WITH A COLOR FILTER ARE SUPPLIED WITH ANY AND ALL ATTACHMENT DEVICES FOR THE FILTER.
7. ALL TRACK LIGHTING FIXTURES SHALL BE PROVIDED WITH THE APPROPRIATE TRACK SYSTEM WHICH SHALL INCLUDE ALL MISCELLANEOUS COMPONENTS REQUIRED, AS WELL A ANY REQUIRED CIRCUIT LIMITERS FOR A COMPLETE INSTALLATION. TRACK LENGTH(S) SHALL BE PER DRAWINGS.

E. DRIVERS / TRANSFORMERS:

1. [OPTION?] IN FIXTURE MODEL NUMBER INDICATE THAT THE FIXTURE DRIVER TYPE AND QUANTITY MUST BE VERIFIED BY THE CONTRACTOR USING FIXTURE CALLOUT INFORMATION AND FIXTURE SWITCHING CONFIGURATION INFORMATION.
2. CONTINUOUS DIMMING AND CONTROLLABLE LED:
   a. PROVIDE CONTROLLABLE LED DIMMING DRIVERS (INTEGRAL OR REMOTE) WITH POWER FACTOR GREATER THAN 0.85 AND MAXIMUM THD OF 20% AT FULL LOAD.
   b. PRIOR TO BID CONTRACTOR TO VERIFY DRIVER COMPATIBILITY WITH DIMMERS, DIMMING CONTROL SYSTEM(S) AND DISTRIBUTED LIGHTING CONTROL SYSTEM(S) WITH RESPECTIVE LIGHTING MANUFACTURER(S) AND LIGHTING/DIMMING CONTROL SYSTEM MANUFACTURERS. IF COMPATIBILITY DOCUMENTATION IS UNAVAILABLE FOR A GIVEN LED FIXTURE/LIGHTING CONTROL SYSTEM COMBINATION, CONTRACTOR SHALL INCLUDE COSTS IN THE BASE BID FOR RESPECTIVE LIGHTING MANUFACTURER AND LIGHTING CONTROLS MANUFACTURER TO TEST/WARRANT COMPATIBILITY OF SAID COMBINATIONS.
   c. CONTINUOUS LED DIMMING DRIVERS SHALL BE AT MINIMUM 4-WIRE 0-10V 10% DIMMING (HOT, NEUTRAL, DIM+, DIM-).

F. EMERGENCY FIXTURES / BATTERY PACKS:

1. LIGHT FIXTURES INDICATED AS EMERGENCY SHALL BE IDENTIFIED / PROVIDED AS FOLLOWS:
   a. INTEGRAL BATTERY PACK (EB):
      3a/3EB – FIXTURE CONNECTED TO CIRCUIT "3", CONTROL SWITCHLEG "a" – WITH THE BATTERY CHARGING LEAD CONNECTED TO A CONSTANT HOT CIRCUIT "3".
      3NL/3EB – FIXTURE CONNECTED TO A CONSTANT HOT CIRCUIT "#3". BATTERY CHARGING LEAD CONNECTED TO A CONSTANT HOT CIRCUIT "3".
   b. REMOTE BACK-UP SOURCE (EM):
      3a/3EM – ROUTED THROUGH A U.L. LISTED TRANSFER RELAY (LC & D #GR-2001E/S) FOR SWITCHED CONTROLS OR A U.L. LISTED TRANSFER SWITCH (BODINE #GTD SERIES DEVICE) FOR DIMMING CONTROLS. CONNECTED TO A CONSTANT HOT EMERGENCY CIRCUIT "3". SEE DISTRIBUTED LIGHTING CONTROL SPECIFICATIONS FOR DEVICE REQUIREMENTS WHEN CONTROLLED BY OCCUPANCY SENSORS.
      3NL/3EM – FIXTURE CONNECTED TO A CONSTANT HOT EMERGENCY CIRCUIT "3".
   c. REMOTE BACK-UP SOURCE (EM) NOTES:
      – ALL REMOTE BACK UP SOURCE (EM) FIXTURES SHALL BE PROVIDED WITH AN IN LINE FUSE. PROVIDE ADDITIONAL LABELING TO INDICATE FIXTURE IS PROTECTED BY A FUSE.
2. EMERGENCY BATTERY PACK NOTES:
   a. PROVIDE INTEGRAL TEST SWITCH / CHARGE LIGHT OPTION FOR ALL EMERGENCY BATTERY PACKS INSTALLED IN LIGHT FIXTURES.
   b. ALL RECESSED DOWNLIGHTS SUPPLIED WITH A BATTERY PACK SHALL BE PROVIDED WITH AN INTEGRAL COMBINATION TEST SWITCH / CHARGING INDICATOR LIGHT- MOUNTED INSIDE THE REFLECTOR. REMOTE TEST SWITCH / CHARGING LIGHTS ARE NOT ALLOWED. THE TEST SWITCH / CHARGING INDICATOR LIGHT SHALL BE SECURELY ATTACHED TO THE REFLECTOR WITH 18" OF SLACK LEADS, FOR EASY REMOVAL OF THE REFLECTOR ASSEMBLY.
   c. ALL BATTERY PACKS AND ALL COMBINATION LED BATTERY PACK/EMERGENCY DRIVERS SHALL BE UL924 LISTED.
   d. PRIOR TO BID, CONTRACTOR SHALL VERIFY WITH FIXTURE MANUFACTURER(S) THAT EMERGENCY BATTERY PACKS ARE MANUFACTURED TO BE INTEGRAL TO FIXTURE HOUSINGS.
   e. SHOULD THE SPECIFIED LED EMERGENCY BATTERY PACK(S) NOT FIT WITHIN A GIVEN FIXTURE(S) OR SHOULD THE FIXTURE NOT BE MANUFACTURED TO ACCOMMODATE A BATTERY PACK, CONTRACTOR SHALL INCLUDE ALL COSTS IN BASE BID TO LOCATE/CONNECT SELF-TESTING MINI INVERTER(S) (IOTA #ILS SERIES OF BODINE#ELI-S-[WATT?]) REMOTELY FROM THE FIXTURE(S) IN THE NEAREST ELECTRICAL ROOM OR TO LOCATE EMERGENCY BATTERY PACK(S) REMOTELY FROM THE FIXTURE ABOVE THE NEAREST ACCESSIBLE CEILING.
   f. LED BATTERY PACKS SHALL PROVIDE A MINIMUM OF 90 MINUTES OF EMERGENCY ILLUMINATION, AND SHALL BE RATED AT A MINIMUM OF 10 WATTS, OR AS SPECIFIED. WHERE A FIXTURE TYPE IS UNAVAILABLE WITH A 10W BATTERY PACK OR WHERE THE WATTAGE IS NOT SPECIFIED ON THE PLANS, INCLUDE ALL COST IN BASE BID TO PROVIDE THE HIGHEST WATTAGE AVAILABLE ON THE FIXTURE CUTSHEET. ANY LISTED EQUAL FIXTURE OR ANY SUBSTITUTION OFFERED BY THE CONTRACTOR MUST ALSO HAVE BATTERY PACKS CAPABLE OF PRODUCING THE SAME OR MORE LUMENS WHEN ON BATTERY AS OUTLINED ABOVE. ACCEPTABLE MANUFACTURES: BODINE OR IOTA.
   g. TO MAINTAIN UL LISTING OF LED FIXTURE, FIXTURE MANUFACTURER(S) SHALL INSTALL LED EMERGENCY BATTERY PACKS AT THE FACTORY AND OBTAIN A UL LISTING FOR THE FIXTURE WITH EMERGENCY BATTERY PACK. FIELD-INSTALLATION OF LED EMERGENCY BATTERY PACK(S) IS PROHIBITED.
   h. PROVIDE DAMP LOCATION VERSION IN ALL DAMP LABEL INSTALLATIONS.

LIGHTING FIXTURE SCHEDULE

SYMBOL	TYPE	MANUFACTURER AND MODEL NUMBER	FIXTURE VA/ WATTS	LAMP/ LAMP OPTION	GENERAL DESCRIPTION
	1	FOCAL POINT EQUATION 2 FE02-24-MG-5500LH-35K-1C-UNV-L11-G-WH EQUAL BY: LITHONIA OR PRUDENTIAL	53	LED/3500K	2' X 4' RECESSED, LED FIXTURE WITH CENTER DIFFUSER, 0-10V DIMMING TO 1% INTEGRAL DRIVER, 5500 LUMENS OUTPUT. (OFFICE AND CLASSROOM) – –
	2	LITHONIA FEM-L48-4000LM-IMAFL-WD-MVOLT-GZ10 3500K-80CRI EQUAL BY: LITHONIA OR PRUDENTIAL	32	LED/3500K	4' LONG LINEAR LED WITH OPAL SMOOTH POLYCARBONATE LENS, PENDANT MOUNT. VANDAL RESISTANT, 0-10V DIMMING. CHEMICAL RESISTANT. (CHEMICAL ROOMS) – –
	3	PORTFOLIO LD6B-30-D010-EU6B-3040-80-35 NOTE: 6LB-W-1-H-[ACCESSORIES?] EQUAL BY: LITHONIA OR PRUDENTIAL	28	LED/3500K	RECESSED FIXED DOWNLIGHT FOR USE WITH 28W, 3000-LUMEN LED AT 3500K. 6-INCH ROUND NOMINAL APERTURE. 0-10V DIMMING TO 1% STANDARD. WIDE 75-DEG DISTRIBUTION. SPUN ALUMINUM REFLECTOR. SELF-FLANGED. SEMI-SPECULAR CLEAR FINISH. CONTRACTOR TO CONFIRM TRIM/REFLECTOR FINISH WITH ARCHITECT AND VERIFY MOUNTING CONDITIONS PRIOR TO RELEASE OF ORDER.
	4	BIRCHWOOD – BRANDI LED BRA-LED-HLO-35-(LENGTH)-(FINISH)-TD-FW-SM EQUAL BY: LITHONIA OR PRUDENTIAL	40	LED/3500K	4' LONG LINEAR SURFACE MOUNTED FIXTURE WITH SOFT GLOW FROSTED LENS. MIN 3500 DELIVERED LUMEN OUTPUT, CONTINUOUS ROW RUNS AS SHOWN ON PLANS, INTEGRAL DIMMING DRIVER TO 1%, FINISH AS SELECTED BY ARCHITECT. PROVIDE WITH 90 MINUTE BATTERY PACK WHERE INDICATED AS EMERGENCY. (EXTERIOR CANOPIES)
	5	MUSCO SPORTS LIGHTING REFERENCE MUSCO DRAWINGS – EQUAL BY: N/A	–	LED/3500K	MUSCO SPORTS LIGHTING ON 50' POLE. REFERENCE MUSCO DRAWINGS FOR MORE INFORMATION. – – (SPORTS LIGHTING)
	6	LITHONIA WDGE4LED WDGE3-P1LED-40K-80CRI-R3-MVOLT-SRM-PE-DS-PIR-(FINISH) EQUAL BY: LITHONIA OR PRUDENTIAL	15	LED/4000K	WALL MOUNTTED LED FIXTURE FULL CUTOFF. MINIMUM 2000 LUMEN OUTPUT. MOUNT AT 8'-0" AFF ON WALL. FINISH AS SELECTED BY ARCHITECT. PROVIDE WITH INTERGRAL OCCUPANCY SENSOR. – (EXTERIOR WALL LIGHT)
	Z1	MODALIGHT 4T1100H27WH – EQUAL BY: LITHONIA OR PRUDENTIAL	34/34	LED/4000K	DIMMABLE LED FLEXIBLE LIGHT, DELIVERED OUTPUT OF 200 LUMENS /FT 2700K, CRI 90 2600 LUMEN OUTPUT. PROVIDE WITH 277V TO 24V DIMMING DRIVERS FOR COMPLETE INSTALLATION. LENGTH AS INDICATED ON PLANS.WET LOCATION LISTED. – (EXTERIOR ACCENT LIGHT)
	8	ALW LIGHTING – LIGHTPLANE 2 LP2RT-PRY-S(LENGTH)-MED-80-3500K 0/10V/S EQUAL BY: LITHONIA OR PRUDENTIAL	24	LED/3500K	RECESSED LINEAR LED FIXTURE WITH 2" APERATURE. FROSTED LENS LENGTH AS INDICATED ON PLANS. 3500K 80 CRI. ALUMINUM HOUSING DAMP LOCATION LISTED. 0-10V DIMMING. 870 LUMENS/FT. PROVIDE WIH 90 MINUTE EMERGENCY BATTERY WHERE INDICATED. (RESTROOMS AND LOCKER ROOMS)
	9	METALUX ST SERIES 2L2040-4000K-80-19 – EQUAL BY: LITHONIA OR PRUDENTIAL	19	LED/4000K	LINEAR 4'-0" SURFACE MOUNTED LED FIXTURE. 4000K TEMPERATURE 117 LUMENS PER WATT. 2000 LUMEN OUTPUT MINIMUM. 0-10V DIMMING PROVIDE WITH 90 MINUTE EMERGENCY BATTERY WHERE INDICATED. – (BACK OF HOUSE STORAGE AND UTILITY)
	10	ALW LIGHTING HBEAM2 HB2S-S(LENGTH)-MED-80-4000K-0/10V/S – EQUAL BY: –	24	LED/4000K	LINEAR SUSPENDED LED FIXTURE WITH 2" APERATURE MOUNT AT 9'-0" AFF. DIRECT OUTPUT ONLY. MINIMUM OUTPUT 800LUMENS/FT LENGTH AS INDICATED ON PLANS PROVIDE CONTINUOUS RUN. PROVIDE WITH 90 MINUTE BATTERY WHERE INDICATED. (TICKET BOOTH)
	11	KIM LIGHTING UR28-96L-155-4K8-4W-UNV-PT34-[FINISH] EQUAL BY: EATON OR LITHONIA	155	LED/4000K	ROUND POST TOP LED, 20,000 LUMENS, 28" DIAMETER. 0-10V DIMMING. 120-277V. TYPE IV WIDE DISTRIBUTION. 80 CRI. INTEGRAL MOTION SENSOR. 4" ROUND POLE. VERIFY FIXTURE AND POLE FINISH WITH ARCHITECT. PROVIDE WITH 90MINUTE BATTERY BACKUP. (EXTERIOR POST TOP)
OR	X	SURE-LITES CAX SERIES – – EQUAL BY: MC PHILBEN OR LITHONIA	4	LED	DIE-CAST ALUMINUM EXIT SIGN WITH HINGED AND LATCHED BRUSHED ALUMINUM STENCIL FACEPLATE AND BLACK HOUSING, RED LETTERING, SINGLE OR DOUBLE FACE AND DIRECTIONAL ARROWS AS INDICATED ON DRAWINGS. UNIVERSAL MOUNTING. –

SEE GENERAL LIGHTING FIXTURE SCHEDULE NOTES FOR CRITICAL FIXTURE SPECIFICATION AND ORDERING INFORMATION.

IDENTIFICATION STAMP
DIV. OF THE STATE ARCHITECT
APP: 03-122664 INC:
REVIEWED FOR
SS ☑ FLS ☑ ACS ☑
DATE: 05/12/2023

pjhm architects
Web: pjhm.com
OC Office: 24461 Ridge Route Drive #100, Laguna Hills, CA • 92653 Phone: 949.496.6159
LA Office: 837 Traction Avenue, #410, Los Angeles, CA • 90013 Phone: 213.278.0112
SD Office: 804 Pier View Way #103, Oceanside, CA • 92054 Phone: 760.730.5557

LICENSED ARCHITECT
RICHARD W. SWARTZ
No. C15585
REN. 02/25
STATE OF CALIFORNIA

tk|sc COLLABORATIVE
11870 Pierce Street, Suite 160
Riverside, California 92505
951.299.4160 www.tk1sc.com
Project Leader - Nikolas Bruno
Electrical Lead - Nikolas Bruno
tk1sc Job #: B2202744.000

REGISTERED PROFESSIONAL ENGINEER
RICHARD W. SWARTZ
No. E15610
ELECTRICAL
STATE OF CALIFORNIA

HIGHLAND HIGH SCHOOL
50M POOL & AQUATICS CENTER
KERN HIGH SCHOOL DISTRICT

LIGHTING FIXTURE SCHEDULE
E-7.0

8/2/2022 11:34:37 AM

DLCS SCHEDULE

SYSTEM TOPOLOGY	COMMUNICATION TOPOLOGY	FIXTURE INTEGRATED SENSING	BAS INTEGRATION	WIRELESS DLCS COMPONENT BATTERY USAGE	REMARKS
STAND ALONE	WIRED	NO	NO	NONE	

DISTRIBUTED LIGHTING CONTROL SYSTEM REQUIREMENTS:

1. THE CONTRACTOR SHALL BE RESPONSIBLE FOR THE FURNISHING OF ALL MATERIAL, LABOR, EQUIPMENT, AND SERVICES, IN CONNECTION WITH THE INSTALLATION OF A COMPLETE AND FULLY FUNCTIONING AND CODE COMPLIANT INSTALLATION.
2. IT IS THE INTENT OF THE CONTRACT DOCUMENTS, WHICH ARE PRESENTED IN A DIAGRAMMATIC FORMAT, TO PROVIDE CONTRACTOR INFORMATION THAT SUPPLEMENTS AND ENHANCES THE GENERALLY ACCEPTED CONSTRUCTION MEANS, METHODS, TECHNIQUES, SEQUENCES AND PROCEDURES EMPLOYED IN CONNECTION WITH INSTALLATION OF THIS TYPE OF PRODUCT/SYSTEM.
3. THE CONTRACTOR SHALL ALSO INCORPORATE THE REQUIREMENTS OF THE MANUFACTURER'S INSTALLATION INSTRUCTIONS/WARRANTY REQUIREMENTS AS PART OF THE REQUIREMENTS OF THE CONSTRUCTION DOCUMENTS. IN THE EVENT OF A CONFLICT BETWEEN THE CONTRACT DOCUMENT REQUIREMENTS AND THE MANUFACTURER'S INSTALLATION REQUIREMENTS, THE MORE STRINGENT REQUIREMENTS SHALL APPLY – UNLESS THE MORE STRINGENT REQUIREMENT VOIDS APPLICABLE WARRANTIES OR VIOLATES THE REQUIREMENTS OF THE LOCAL AUTHORITY HAVING JURISDICTION. ANY SUCH CONFLICT SHALL IMMEDIATELY BE BROUGHT TO THE ATTENTION OF THE ENGINEER IN WRITING THROUGH THE FORMAL RFI PROCESS.
4. REFER TO THE ASSOCIATED SCHEDULES, SCHEMATICS, DRAWINGS, AND SPECIFICATIONS FOR DETAILED INFORMATION/REQUIREMENTS ON THIS PRODUCT/SYSTEM.
5. CONTRACTOR IS RESPONSIBLE TO VERIFY LIGHT FIXTURE DIMMING PROTOCOLS ARE COMPATIBLE WITH THE DLCS.
6. SECURITY STANDARD CERTIFICATIONS, SHOP DRAWINGS AND COMPONENT SUBMITTALS SHALL BE SUBMITTED PER THE GENERAL SPECIFICATION REQUIREMENTS SHOWING ALL COMPONENTS, WIRING CONFIGURATIONS AND PROGRAMMING SCHEDULES. SCALED SHOP DRAWINGS DEPICTING/IDENTIFYING ALL SYSTEM COMPONENT LOCATIONS SHALL BE PROVIDED. SUBMITTALS SHALL BE MADE SPECIFIC TO THE PROJECT – GENERIC SUBMITTALS AND SUBMITTALS WITHOUT SCALED SHOP DRAWINGS SHALL BE REJECTED.

nLIGHT:

WALL BOX SENSORS:	
STANDALONE SINGLE RELAY =	#WSXA-PDT
STANDALONE DUAL RELAY =	#WSXA-PDT-2P
SYSTEM-BASED DIMMING CONTROL =	#nWSXA-PDT-LV-DX
CEILING SENSORS:	
ONE-WAY DIRECTIONAL =	(WIRED) #NRM-PDT-9 W/MASKING AS REQUIRED (WIRELESS/LOW VOLTAGE) #RCMS-PDT-9-G2 W/ MASKING AS REQUIRED (WIRELESS/BATTERY) #RCMSB-7/45/45A-G2
360 DEGREE COVERAGE =	#NRM-PDT-9 STANDARD RANGE #(WIRED) NRM-PDT-10 EXTENDED RANGE/CORRIDOR #RCMS-PDT-9-G2 (WIRELESS/LOW VOLTAGE) #RCMS-PDT-10 EXTENDED RANGE/ CORRIDOR
EMBEDDED FIXTURE SENSOR =	(WIRELESS/LOW VOLTAGE) #RES7-PDT-G2 INDOOR (WIRELESS/LOW VOLTAGE) #RMSOD, RSDGR-127-G2 (WIRELESS/LOW VOLTAGE) RSBOR EXTERIOR (WIRELESS/BATTERY) #RCMSB-7/45/45A-G2
DAYLIGHT SENSORS:	
CLOSED LOOP SENSOR =	(WIRED) #NES-ADCX OR #NRM-ADCX (ONLY IF REQUIRED BY CLG. TYPE)
ONE-WAY DIRECTIONAL =	(WIRELESS) #RCMS-G2
EMBEDDED FIXTURE SENSOR =	(WIRELESS) #RES7
CONTROL UNITS:	
SWITCH / STEPPED DIMMING =	(WIRED) #NPP-16/#NSP-16 (WIRELESS) #RPP20-G2 NUMBER OF RELAYS AS REQUIRED.
CONTINUOUS DIMMING (0-10V) =	(WIRED) #NPP16-D (WIRELESS) #RPP20-D-G2 NUMBER OF RELAYS AS REQUIRED.
CONTINUOUS DIMMING (UNIVERSAL) =	(WIRED) #NSP5-PCD, NUMBER OF RELAYS AS REQUIRED. (WIRELESS) UTILIZE 0-10V PHASE DIMMING ADAPTER.
AUXILIARY INPUT/ OUTPUT CONTROL =	#NAR-40
RECEPTACLE CONTROL =	(WIRED) #NPP20 PL (WIRELESS) #RPP20-G2
AV SYSTEM SERIAL INTERFACE =	#nIO X (SCREENS / AV SYSTEM INTEGRATION)
HVAC CONTROL =	#NAR-40
MOVEABLE PARTITION INTERFACE & SENSOR =	#FRESCO TOUCH PANEL #NFCS-7TSN (PER SPACE), #NIO-1S POWER PACK (SENSOR POWER), & #ENTERTAINMENT NETWORKS PARTITION SENSOR W/BOTTOM COVER (www.entertainmentworks.com).
DUAL MODE CORRIDOR/STAIRWAY/AISLEWAY CONTROL INPUT =	#NDTC
WALL CONTROLS:	
DIMMING =	(WIRED) #NPODMA-DX SERIES (WIRELESS) #RPODB-DX (# OF DIMMERS AS REQUIRED – 4 / YOKE MAX)
KEYED SWITCH =	#NIO INPUT INTERFACE W/LEVITON #1221-2L-? KEYED SWITCH
TOUCH SCREEN =	7-INCH CAPACITIVE TOUCH #FCS-7TSN-[DMX?]-[FINISH?] W/ ACUITY FCS-PS10 24V POWER SUPPLY 3.5-INCH CAPACITIVE TOUCH #NPOD TOUCH INCLUDES ACUITY PS150 24V POWER SUPPLY
NETWORK COMM COMPONENTS:	
GATEWAY =	#NECY-MVOLT BAC ADR ENC GFXK WITH ENCLOSURE
BRIDGE =	#NBRG-8-KIT
NETWORK RELAY PANELS:	ARP INTENCXX NLT XXFCR MVOLT, QTY AS REQUIRED, TO INCLUDE SPARE RELAYS SHOWN IN SCHEDULES.
EMERGENCY POWER INTERFACE:	
SWITCHING / STEP DIMMING =	(WIRED) NPP16-ER (WIRELESS) #RPP20-ER-G2 NUMBER OF RELAYS AS REQUIRED, NORMAL CIRCUIT REQUIRED.
SWITCH / STEPPED DIMMING =	(WIRELESS) #RPP20-EM-G2, NUMBER OF RELAYS AS REQUIRED, NORMAL CIRCUIT NOT REQUIRED, GENERATOR AND DELAYED TRANSFER INVERTER ONLY.
CONTINUOUS DIMMING =	(WIRED) #NPP16-D-ER
CONTINUOUS DIMMING (0-10V) =	(WIRELESS) #RPP20-D-ER-G2. NUMBER OF RELAYS AS REQUIRED, NORMAL CIRCUIT REQUIRED. (WIRELESS) #RPP20-D-EM-G2. NUMBER OF RELAYS AS REQUIRED, NORMAL CIRCUIT REQUIRED EXCEPT WHERE GENERATOR AND DELAYED TRANSFER INVERTER POWER IS USED.
LOAD INTERFACE DEVICE:	
LUTRON COMPONENTS =	LUTRON #BCI-0-10.
REVERSE PHASE DIMMING COMPONENTS =	(WIRED) #NSP5-PCD-ELV120 OR LUTRON #PHPM-PA-DV-WH (WIRELESS) #PCDM & RPP20DG2/
FORWARD PHASE DIMMING COMPONENTS =	(WIRED) #NSP5-PCD-MLV OR LUTRON #PHPM-PA-DV-WH (WIRELESS) LUTRON #BCI-0-10/LUTRON #PHPM-PA-DV-WH
2 & 3 WIRE DIMMING COMPONENTS =	(WIRED) #NSP5-PCD-2W/3W OR LUTRON #PHPM-PA-DV-WH

WATTSTOPPER:

WALL BOX SENSORS:	
STANDALONE SINGLE RELAY =	#DW-100
STANDALONE 0-10V DIMMING WITH SINGLE RELAY =	#PW-311
STANDALONE DUAL RELAY =	#DW-200
SYSTEM-BASED DIMMING CONTROL =	#LMDW-102
CEILING SENSORS:	
ONE-WAY DIRECTIONAL =	(WIRED) #LMDC-100 WITH MASKING AS REQUIRED (PIR-ONLY WIRELESS) #LMPC-600 SERIES WITH MASKING AS REQUIRED.
360 DEGREE COVERAGE =	(WIRED) #LMDC-100 (PIR-ONLY WIRELESS) #LMPC-600 SERIES
DAYLIGHT SENSORS:	
OPEN LOOP SENSOR =	(WIRED) #LMLS-500 (1-3 ZONE) (WIRELESS) #LMDL-600 (1-3 ZONE)
CLOSED LOOP SENSOR =	(WIRED) #LMLS-400 (1 ZONE ONLY)
REMOTE CONTROL =	#LMCT-100 (HAND TO OWNER AT COMPLETION OF PROJECT.)
CONTROL UNITS:	
SWITCHED =	(WIRED) #LMRC-10? (NUMBER OF RELAYS AS REQUIRED) (WIRELESS) #LMRC-6??MCC
CONTINUOUS DIMMING (0-10V, WIRED) =	#LMRC-21? (NUMBER OF RELAYS AS REQUIRED).
CONTINUOUS DIMMING (0-10V, WIRELESS) =	#LMRC-6??MCC (NUMBER OF RELAYS AS REQUIRED).
CONTINUOUS DIMMING (UNIVERSAL, WIRED) =	#LMRC-22? (NUMBER OF RELAYS AS REQUIRED).
RECEPTACLE CONTROL =	#LMPL-101 OR LMPL-201 (WHERE MORE THAN 4 RECEPTACLE CONTROL UNIT SARE TIED TOGETHER) #BZ-250 (WHEN USING WIRELESS CONTROL UNIT) #LMPL-6?? (WHEN AVAILABLE)
HVAC CONTROL =	(WIRED) #LMRL-100 (WIRELESS) #LMRC-6??MCC
AV SYSTEM SERIAL INTERFACE =	(WIRED) #LMDI-100 ADD WIRELESS BRIDGE FOR WIRELESS SYSTEM.
MOVEABLE PARTITION INTERFACE & SENSOR =	PARTITION INTERFACE – #LMIO-102 PARTITION SWITCH/STATUS INDICATOR – #LMPS-104 POWER PACK – #BZ-50 (SENSOR POWER) PARTITION SENSOR – #ENTERTAINMENT NETWORKS SENSOR W/ BOTTOM COVER (www.entertainmentworks.com). ADD WIRELESS BRIDGE FOR WIRELESS SYSTEM.
DUAL MODE CORRIDOR/STAIRWAY/AISLEWAY CONTROL INPUT =	#LMZC-301, UNLESS OTHERWISE NOTED.
WALL CONTROLS:	
DIMMING =	(WIRED) #LMSW-101/102/103/104/108 (# OF SWITCHES AS REQUIRED 4/YOKE MAX) (WIRELESS) #LMDM-601 (# OF SWITCHES AS REQUIRED 4/YOKE MAX)
KEYED SWITCH =	#LMIO-101 INPUT INTERFACE W/ LEVITON #1221-2L-? KEYED SWITCH
TOUCH SCREEN =	4.3-INCH CAPACITIVE TOUCH #LMEQ-41 W/ WATTSTOPPER #LMTI-100-[VOLT] INJECTOR
NETWORK COMM COMPONENTS:	
ZONE SEGMENT MANAGER =	(WIRED OR WIRELESS) #LMSM-3E/#LMSM-6E W/#LMSM-ENC1 ENCLOSURE.
NETWORK BRIDGE / ROUTER / SWITCH =	(WIRED) #LMBC-300/#NB-ROUTER/#NB-SWITCH (WIRELESS) #LMBC-600/#LMBR-650/#NB-SWITCH
NETWORK WIRING =	(WIRED) #LM-MSTP.
NETWORK RELAY PANEL:	LMCP8, 24, OR 48
EMERGENCY POWER INTERFACE:	
POWER FAILURE ONLY:	
SWITCHING / STEP DIMMING =	#ELCU-200 BYPASS DEVICE.
CONTINUOUS DIMMING =	#ELCU-200 BYPASS DEVICE.
POWER FAILURE OR FIRE ALARM ACTIVATION:	
SWITCHING / STEP DIMMING =	LVS #EPC2 BYPASS DEVICE W/ LVS REMOTE POWER SUPPLY (#TR-A-2)
0-10V DIMMING =	LVS #EPC2D BYPASS DEVICE W/ LVS REMOTE POWER SUPPLY (#TR-A-2)
REVERSE/FORWARD PHASE DIMMING =	LVS #EPCDFATS BRANCH CIRCUIT EMERGENCY TRANSFER SWITCH (BCELTS)
REMOTE POWER SUPPLY SHALL UTILIZE UNSWITCHED EMERGENCY CIRCUIT SERVING RESPECTIVE EMERGENCY FIXTURES.	
LOAD INTERFACE DEVICE:	
LUTRON COMPONENTS =	LUTRON #BCI-0-10.
REVERSE/FORWARD PHASE DIMMING COMPONENTS =	LUTRON #PHPM-PA-DV-WH.

LUTRON CONTROLS (VIVE):

WALL BOX SENSORS:	
STANDALONE SINGLE RELAY (DUAL TECH) =	#MS-A102-XX
STANDALONE DUAL RELAY (DUAL TECH) =	#MS-A202-XX
SYSTEM-BASED DIMMING CONTROL =	(0-10V) #MS-Z101-XX (FORWARD PHASE) #MSCL-OP153M-XX
OCCUPANCY SENSORS:	
WALL MOUNT HALLWAY COVERAGE =	#LRF2-OHLB-P-WH
WALL MOUNT 180 DEGREE ONE-WAY DIRECTIONAL =	#LRF2-OWLB-P-WH (1500 S.F. MAXIMUM)
WALL MOUNT 90 DEGREE (CORNER) COVERAGE =	#LRF2-OKLB-P-WH (1225 S.F. MAXIMUM)
CEILING MOUNT 360 DEGREE COVERAGE =	#LRF2-OCR2B-P-WH (600 S.F. MAXIMUM)
DAYLIGHT SENSORS:	
OPEN LOOP SENSOR =	#LRF2-DCRB-WH
RF CONTROL UNITS:	
8A, 0-10V ZONE CONTROLLER =	#RMJS-8T-DV-B
5A, SWITCHING ZONE CONTROLLER =	#RMJS-5R-DV-B
16A, SWITCHING ZONE CONTROLLER =	#RMJS-16R-DV-B
20A, SWITCHING RECEPTACLE CONTROLLER =	#RMJS-20R-DV-B
20A WIRELESS RECEPTACLE (SPLIT) =	#CAR2S-20-STR
20A WIRELESS RECEPTACLE (DUAL) =	#CAR2S-20-DTR
0-10V FIXTURE CONTROLLER =	#FCJS-010
ECOSYSTEM DIGITAL FIXTURE CONTROLLER =	#FCJS-ECO
MAESTRO RF 6A SWITCH (120V) =	#MRF2S-6ANS-XX
MAESTRO RF 8A SWITCH (DUAL VOLTAGE) =	#MRF2S-8S-DV-XX
MAESTRO RF DIMMER (CFL/LED/INC/HAL FORWARD PHASE =	#MRF2S-6CL-XX
MAESTRO RF DIMMER (ELV REVERSE PHASE) =	#MRF2S-6ELV-XX
MAESTRO RF DIMMER (INC/MLV) =	#MRF2S-6ND-120-XX
ACCESSORY DIMMER (MULTI-LOCATION, 3-WAY, 4-WAY) =	#MA-R-XX
CONTACT CLOSURE OUTPUT DEVICE =	#RMJS-CCO1-24-B
WALL CONTROLS:	
WIRELESS 4 BUTTON, ENGRAVABLE =	#PJ2-4B (# OF DIMMERS AS REQUIRED – 4 / YOKE MAX)
WIRELESS BASIC ZONE/SCENE CONTROL =	#PJ2-2BRL- (# OF DIMMERS AS REQUIRED)
NON-ENGRAVABLE	#PJ2-3BRL- (# OF DIMMERS AS REQUIRED)
TOUCH SCREEN =	EXTRON 5-INCH TOUCH SCREEN #EO-1561-[FINISH?] W/ REMOTE IP LINK PROCESSOR #IPL-T-SI
NETWORK COMM COMPONENTS:	
VIVE WIRELESS HUB (WITH BACNET) =	#CPN-IRV-5 (HJS-2-FM)
NETWORK RELAY PANEL:	NOT AVAILABLE
LOAD INTERFACE DEVICE:	
0-10V TO 3-WIRE FLUORESCENT INTERFACE =	#BCI-0-10
PHASE ADAPTIVE DIMMING INTERFACE (REVERSE/FORWARD PHASE) =	LUTRON #PHPM-PA-DV-WH
3-WIRE FLUORESCENT TO PHASE ADAPTIVE INTERFACE =	#PHPM-WBX-DV-WH
ECOSYSTEM DIGITAL TO 0-10V INTERFACE =	#TVI-LMF-2A

COOPER LIGHTING SOLUTIONS NETWORK LIGHTING CONTROL (WaveLinx Wired/Wireless):

WALL BOX SENSORS:	
STANDALONE SINGLE RELAY =	#ONW-D-1001-MV-N SERIES
STANDALONE DUAL RELAY =	#ONW-D-1001-DMV-N SERIES
STANDALONE SINGLE RELAY WITH 0-10VDC =	#OSW-D-010 SERIES
SYSTEM-BASED WALLBOX =	NOT AVAILABLE
CEILING SENSORS:	
ONE-WAY DIRECTIONAL =	(WIRED) #OAC-DT-501 & SPP-MV (WIRED DIGITAL PIR) #MTS6 (MASKING) (PIR BATTERY WIRELESS) #CWPD-1500 (MASKING) (PIR LINE-POWERED WIRELESS)#WTA
360 DEG COVERAGE =	(WIRED) #OAC-DT-1000/OAC-DT-2000 & SPP-MV (WIRED DIGITAL PIR) #MTS6/MTS12 (PIR BATTERY WIRELESS) #CWPD-1500 (PIR LINE POWERED WIRELESS) #WTA (WIRELESS FIXTURE) #SWPD1 (<15FT) #SWPD2 (7-15FT) #SWPD3 (15-40FT)
DAYLIGHT SENSORS:	
OPEN LOOP SENSOR =	(WIRED DIGITAL) #MTS6/MTS12 (WIRELESS-BATTERY) #CWPD-1500 (WIRELESS LINE-POWERED) #WTA (WIRELESS FIXTURE) #SWPD1 (<15FT) #SWPD2 (7-15FT) #SWPD3 (15-40FT) #WOLC-7P-10A (7PIN EXTERIOR)
CONTROL UNITS:	
SWITCH/CONTINUOUS DIMMING (0-10V) =	(DIGITAL) #DAC-DC1 OR DAC-DC2 (ONE PER ZONE) (WIRELESS) #WSP-MV-010/#WSP-CA-010 (ONE PER ZONE)
CONTINUOUS DIMMING (UNIVERSAL) =	ONE OF THE ABOVE PLUS #LDCM-PL/#PD216
AUXILIARY INPUT =	(DIGITAL) #UIM (WIRELESS) #WSP-CA-010
OUTPUT CONTROL =	(DIGITAL) #RI-2-NA
RECEPTACLE CONTROL =	(DIGITAL) #HPRS-MV-DC1 (WIRELESS) #WSP-MV-010 (WIRELESS RECEPTACLE) #WR20
HVAC CONTROL =	#TRELLIX BACNET (OPTIONAL) #-R OPTION ON OCCUPANCY SENSOR.
AV SYSTEM INTERFACE =	#TRELLIX API
MOVEABLE PARTITION INTERFACE & SENSOR =	(DIGITAL) #UIM/IRTR (WIRELESS) #NA
DUAL MODE COORIDOR/STAIRWAY/AISLEWAY CONTROL INPUT =	PROGRAMMING THROUGH SYSTEM DEMAND RESPONSE. #TRELLIX SERVER LICENSE ADR-2.0b
WALL CONTROLS:	
DIMMING =	(DIGITAL) #DW-TSB-RL (WIRELESS-BATTERY) #WB-RL SERIES (WIRELESS LINE POWERED) #W-RL SERIES. ALL DEVICES ARE UP TO 5 ZONE/SCENE OR MIX WITH DIMMING
TOUCH SCREEN =	(DIGITAL) #TSE-55 OR #TSC-80 (WIRELESS) #TSE-57
KEYED SWITCH =	(DIGITAL) #UIM (WIRELESS) #WSP-CA-010 ALL USE LEVITON #1221-2L-? KEYED SWITCH
NETWORK COMM COMPONENTS:	
NETWORK ADAPTER =	(WIRED) #EG2 (WIRELESS/WIRED) #TRELLIX SERVER
NETWORK RELAY PANELS:	ILUMIN PLUS SERIES 12, 24, OR 48
EMERGENCY POWER INTERFACE:	
SWITCH / CONTINUOUS DIMMING (0-10V) =	(DIGITAL) #DACI-DC1 OR DAC-DC2 (WIRELESS) #WSP/CEPC-2-D
POWER FAILURE ONLY:	
SWITCHING / STEP DIMMING =	#ELCU-200 BYPASS DEVICE.
CONTINUOUS DIMMING =	#ELCU-200 BYPASS DEVICE.
POWER FAILURE OR FIRE ALARM ACTIVATION:	
SWITCHING / STEP DIMMING =	LVS #EPC2 BYPASS DEVICE W/ LVS REMOTE POWER SUPPLY (#TR-A-2)
0-10V DIMMING =	LVS #EPC2D BYPASS DEVICE W/ LVS REMOTE POWER SUPPLY (#TR-A-2)
REVERSE/FORWARD PHASE DIMMING =	LVS #EPCDFATS BRANCH CIRCUIT EMERGENCY TRANSFER SWITCH (BCELTS)
REMOTE POWER SUPPLY SHALL UTILIZE UNSWITCHED EMERGENCY CIRCUIT SERVING RESPECTIVE EMERGENCY FIXTURES	
LOAD INTERFACE DEVICE:	
FORWARD PHASE DIMMING =	(ALL SYSTEMS) PD216-120or277
REVERSE PHASE DIMMING COMPONENTS =	(ALL SYSTEMS) LDCM-PL
NETWORK INTERFACE:	(WIRED) #EG2 (WIRELESS/WIRED) #TRELLIX SERVER
STAND ALONE ROOM CONTROLLER:	WHEN REQUIRED TO HAVE NON NETWORK CONTROL, USE ROOM CONTROLLER RC3D-PL OR RC3DE-PL AND ASSOCIATED SYSTEM COMPONENTS

IDENTIFICATION STAMP
DIV. OF THE STATE ARCHITECT
APP: 03-122664 INC:
REVIEWED FOR
SS ☑ FLS ☑ ACS ☑
DATE: 05/12/2023

pjhm architects
LICENSED ARCHITECT
RICHARD W. RISHEL
NO. C15585
REN. 02/25
STATE OF CALIFORNIA
tk|sc COLLABORATIVE
11870 Pierce Street, Suite 160
Riverside, California 92505
951.299.4160 www.tklsc.com
Project Leader - Nikolas Bruno
Electrical Lead - Nikolas Bruno
tk1sc Job #: B2202744.000
REGISTERED PROFESSIONAL ENGINEER
RICHMOND W. SHRIEVE
NO. E15610
REV 12/31/2024
ELECTRICAL
STATE OF CALIFORNIA
OC Office: 24461 Ridge Route Drive #100, Laguna Hills, CA 92653 Phone: 949.496.6135
LA Office: 837 Traction Avenue, #410, Los Angeles, CA 90013 Phone: 213.278.0172
SD Office: 804 Pier View Way #103, Oceanside, CA 92054 Phone: 760.730.5557
Web: pjhm.com

HIGHLAND HIGH SCHOOL
50M POOL & AQUATICS CENTER
KERN HIGH SCHOOL DISTRICT

DISTRIBUTED LIGHTING CONTROL SPECIFICATIONS

E-7.1

8/2/2022 11:34:37 AM

DISTRIBUTED LIGHTING CONTROLS SYSTEM SPECIFICATIONS (OCCUPANCY / VACANCY SENSORS AND DAYLIGHTING CONTROLS):

1. SEE LIGHTING PLAN DRAWINGS FOR DISTRIBUTED LIGHTING CONTROL SYSTEM (DLCS) SPECIFICS, SPACE SPECIFIC CONFIGURATIONS/REQUIREMENTS, AS WELL AS FIXTURE BALLAST/DRIVER CONFIGURATIONS.

2. ALL PRODUCTS SHALL BE BACKED BY A FIVE YEAR MANUFACTURER'S WARRANTY.

3. ALL PRODUCTS LISTED IN THIS SPECIFICATION ARE BASED UPON PRODUCTS LISTED ON THIS SHEET. THE FEATURES AND CHARACTERISTICS OF THE PRODUCT LITERATURE AND SPECIFICATION SHEETS AVAILABLE ON THE VARIOUS MANUFACTURER'S WEB-SITES ARE INCLUDED IN THE REQUIREMENT OF THESE SPECIFICATIONS. ALL DLCS NETWORKED/NON-NETWORKED SYSTEM-BASED AND STANDALONE COMPONENTS SHALL BE PROVIDED BY A SINGLE MANUFACTURER.

4. DLCS COMPONENTS SHALL BE COMPLIANT WITH ALL APPLICABLE FEDERAL, STATE AND LOCAL ENERGY CODES.

5. ALL NETWORKED AND NON-NETWORKED SYSTEM-BASED DLCS SYSTEMS SHALL BE COMPLIANT WITH AND CERTIFIED TO THE FOLLOWING SECURITY STANDARDS SET FORTH IN THE LATEST PUBLISHED VERSION OF THE DESIGNLIGHTS CONSORTIUM'S "NETWORKED LIGHTING CONTROL SYSTEM TECHNICAL REQUIREMENTS" DOCUMENT (VERSION 4.0 OR LATEST PUBLISHED VERSION):

   – DLCS COMPONENTS: UL2900-1 UL STANDARD FOR SOFTWARE CYBER SECURITY FOR NETWORK-CONNECTABLE PRODUCTS.

   – DLCS DESIGN PROCESS: UL 2900-1 UL STANDARD FOR SOFTWARE CYBER SECURITY FOR NETWORK-CONNECTABLE PRODUCTS AND/OR ISO/IEC 27001 STANDARD FOR INFORMATION SECURITY MANAGEMENT SYSTEMS.

   – DLCS CLOUD SERVICES: ANY ASSOCIATED DLCS CLOUD SERVICES SHALL MEET THE REQUIREMENTS OF ISO/IEC 27017 (WITH ISO/IEC 27001) STANDARD FOR CODE OF PRACTICE FOR INFORMATION SECURITY CONTROLS FOR CLOUD SERVICES.

   WHERE THE MANUFACTURER CANNOT DEMONSTRATE COMPLIANCE WITH THE ABOVE REQUIREMENTS, THE DLCS MANUFACTURER SHALL PROVIDE A COMPREHENSIVE PRODUCT-SPECIFIC IT SECURITY STATEMENT FOR REVIEW BY THE OWNER. THE DLCS SHALL NOT BE CONNECTED TO AN OWNER-FURNISHED NETWORK WITHOUT PRIOR WRITTEN PERMISSION BY THE OWNER.

   ADDITIONALLY, WHERE INSTALLED IN THE STATE OF CALIFORNIA, SYSTEM-BASED DLCS SYSTEMS SHALL BE COMPLIANT WITH CA STATE ASSEMBLY BILL NO. 375 CALIFORNIA PRIVACY ACT OF 2018 AND CA STATE SENATE BILL NO 327 INFORMATION PRIVACY FOR CONNECTED DEVICES.

6. WHERE THE DLCS SCHEDULE INDICATES A SPECIFIC "SYSTEM TOPOLOGY" OPTION, PROVIDE ONE OF THE FOLLOWING:

   "NETWORKED" – PROVIDE A SYSTEM-BASED DLCS THAT COMMUNICATES USING A MANUFACTURER-SPECIFIC DLCS NETWORK ALLOWING BI-DIRECTIONAL FLOW OF INFORMATION BETWEEN DEVICES SUCH AS ROOM CONTROLLERS, SENSORS, RELAY PANELS AND NETWORK CONTROLLERS. PROVIDE A DLCS GUI AND RELATED SOFTWARE TO FACILITATE REMOTE DLCS DEVICE PARAMETERS CHANGES, REMOTE CONTROL ANY DLCS ELEMENT OR DEVICE, REMOTE SCHEDULE CHANGES/IMPLEMENTATIONS, AND REMOTE DLCS COMMISSIONING AND TROUBLESHOOTING. A NETWORKED SYSTEM TOPOLOGY SHALL BE CONFIGURED TO RESPOND TO LOCAL UTILITY DEMAND RESPONSE SIGNALS.

   "NON-NETWORKED" – PROVIDE A SYSTEM-BASED DLCS THAT COULD BE MADE TO COMMUNICATE USING A MANUFACTURER-SPECIFIC DLCS NETWORK, BUT FOR THIS PROJECT IS CONFIGURED WITHOUT ANY NETWORK CONNECTIVITY OR NETWORK COMPONENTS, EXCEPT FOR ANY NETWORK COMPONENTS REQUIRED FOR DUAL MODE CONTROL FOR CORRIDORS, WAREHOUSE AISLES ETC OR WHERE SYSTEM FOR BAS INTEGRATION REQUIRED IN THE DLCS SCHEDULE OR ELSEWHERE IN THE DRAWINGS AND SPECIFICATIONS. IN A "NON-NETWORKED" DLCS, DEMAND RESPONSE CAPABILITY IS NOT REQUIRED.

   "STAND ALONE" – PROVIDE INDIVIDUAL WALL SENSORS/CONTROLS – OPERATING AT 120V OR 277V. GENERALLY, STANDALONE COMPONENT INSTALLATIONS ARE TO BE AVOIDED AND ARE LIMITED TO USE IN SMALL ROOMS WHERE ADVANCED CONTROLS, DIMMING CAPABILITY, DEMAND RESPONSE, DUAL MODE CONTROL AND/OR NETWORK CONNECTIVITY ARE NOT REQUIRED BY APPLICABLE ENERGY CODE AND WHERE ACCEPTABLE TO AN END-USER.

7. WHERE THE DLCS SCHEDULE INDICATES A SPECIFIC "COMMUNICATIONS TOPOLOGY" OPTION, PROVIDE ONE OF THE FOLLOWING:

   "WIRED" – PROVIDE WIRING, AS REQUIRED, TO INTERCONNECT DLCS DEVICES. WIRING MAY BE A COMBINATION OF LOW AND LINE VOLTAGE CONDUCTORS BASED ON SPECIFIC MANUFACTURER REQUIREMENTS.

   "WIRELESS" – PROVIDE WIRELESS CONNECTIVITY BETWEEN WALL CONTROLS, WALL CEILING OR FIXTURE-INTEGRATED SENSORS, ROOM CONTROLLER(S), WIRELESS ROUTER(S), AND WIRELESS NETWORK BRIDGES. CONTRACTOR SHALL PROVIDE WIRELESS ROUTERS, QTY AS REQUIRED, TO MAINTAIN ROBUST COMMUNICATIONS WITH ALL WIRELESS DEVICES. ROBUST MEANS THAT A CHANGE OF VALUE FROM OR TO ANY DLCS SYSTEM COMPONENT FROM OR TO AN APPLICABLE WIRELESS ROUTER/BRIDGE OCCURS IN LESS THAN 3 SECONDS.

   "HYBRID" – WHERE A SOLELY WIRELESS DLCS TOPOLOGY IS DEEMED INADEQUATE BASED ON OPERATIONAL OR AESTHETIC REASONS, A WIRELESS TOPOLOGY SHALL BE AUGMENTED WITH WIRED SYSTEM TO CREATE A HYBRID COMMUNICATIONS TOPOLOGY. AREAS REQUIRING WIRED CONNECTIVITY SHALL BE OUTLINED ON THE LIGHTING PLANS AND UNLESS OTHERWISE INDICATED, ALL RESTROOMS SHALL BE PROVIDED WITH DUAL TECHNOLOGY OCCUPANCY SENSORS WHICH REQUIRE WIRED CONNECTIVITY AND WIRED POWER SUPPLY. A NETWORKED, SYSTEM-BASED DLCS INSTALLED WITH A HYBRID COMMUNICATIONS TOPOLOGY SHALL APPEAR IN THE USER GUI/SOFTWARE AS A SINGLE UNIFIED SYSTEM. SEPARATE GUI SOFTWARE INTERFACES FOR THE WIRED AND WIRELESS PORTIONS OF THE DLCS ARE UNACCEPTABLE.

9. WHERE THE DLCS SCHEDULE REQUIRES FIXTURE-INTEGRATED SENSORS, PROVIDE OCCUPANCY AND/OR DAYLIGHT SENSORS INTEGRATED WITHIN SPECIFIED FIXTURE TYPE THAT ALSO INTEGRATE INTO THE DLCS. SEE THE LIGHTING FIXTURE SCHEDULE FOR AFFECTED FIXTURE TYPE(S). WHERE INTEGRATED SENSORS DO NOT MEET OCCUPANCY/DAYLIGHT SENSOR COVERAGE REQUIREMENTS, CONTRACTOR SHALL AUGMENT COVERAGE WITH ADDITIONAL CEILING MOUNTED SENSORS AS REQUIRED AND AS A PART OF THE BASE BID.

10. WHERE THE DLCS SCHEDULE REQUIRES THE DLCS TO INTEGRATE WITH THE PROJECT'S BUILDING AUTOMATION SYSTEM (BAS) – SEE THE DLCS START-UP, BUILDING AUTOMATION SYSTEM (BAS) INTEGRATION, COMMISSIONING, & TRAINING PORTION OF THIS SPECIFICATION FOR ADDITIONAL REQUIREMENTS.

11. WHERE THE DLCS SCHEDULE INDICATES "WIRELESS" OR "HYBRID" COMMUNICATIONS TOPOLOGIES AND ALSO ALLOWS WIRELESS DLCS COMPONENT BATTERY USAGE, PROVIDE BATTERIES WITHIN THE WIRELESS DLCS COMPONENTS INDICATED IN LIEU OF LINE OR LOW VOLTAGE POWER SOURCES.

12. DLCS COMPONENTS SHALL BE BE PROVIDED AS FOLLOWS:

    a. STANDALONE: WALL MOUNTED OCCUPANCY SENSORS SHALL BE UL LISTED AND HAVE A MINIMUM LOAD CAPACITY OF 800 WATTS AT 120 VOLTS AND 1200 WATTS AT 277 VOLTS. WALL SENSORS SHALL ALSO BE DECORA STYLE, WITH A LOW-PROFILE APPEARANCE AND A HARD LENS FOR DURABILITY. SENSOR SHALL UTILIZE PASSIVE INFRARED TECHNOLOGY (PIR) AND ULTRASONIC/MICROPHONIC TECHNOLOGY. UNIT SHALL BE RATED FOR 120/277 VOLT WITH NO MINIMUM LOAD, COMPATIBLE WITH ALL THE SPECIFIED BALLASTS, PROVIDED WITH A NEUTRAL CONNECTION (NO LEAKAGE TO GROUND) AND NO LEAKAGE TO LOAD IN THE "OFF" MODE. SENSOR SHALL BE UTILIZED IN SPACES NOT EXCEEDING 150 SQ.FT. SINGLE RELAY SENSORS SHALL BE CONFIGURED WITH THE RELAY IN A "MANUAL ON/ AUTO OFF" SETTING. DUAL RELAY SENSORS SHALL BE CONFIGURED WITH THE FIRST RELAY IN A "AUTOMATIC ON/ AUTOMATIC OFF" SETTING AND THE SECOND RELAY IN A "MANUAL ON/ AUTOMATIC OFF" SETTING. FACTORY STANDARD COLOR TO BE APPROVED BY ARCHITECT.

    b. SYSTEM-BASED (NETWORK OR NON-NETWORK): THE OCCUPANCY SENSOR SYMBOL SHALL REPRESENT A LOW VOLTAGE, WALL MOUNTED OCCUPANCY SENSOR CONNECTED TO A CONTROL UNIT(S) AS REQUIRED. SENSOR SHALL BE DECORA STYLE WITH A LOW-PROFILE APPEARANCE, HAVE ON/OFF/RAISE/LOWER BUTTONS, AND A HARD LENS FOR DURABILITY. FACTORY STANDARD COLOR TO BE APPROVED BY ARCHITECT.

       SYSTEM-BASED (NETWORK OR NON-NETWORK) OR STANDALONE CEILING MOUNTED OCCUPANCY SENSORS SHALL SHALL REPRESENT A LOW VOLTAGE, CEILING-MOUNTED OCCUPANCY SENSOR WITH A LOW-PROFILE APPEARANCE AND SHALL BE CONFIGURED IN ONE OF THE FOLLOWING WAYS AS INDICATED ON THE DRAWINGS:

       – AUTO ON: a/b

       – SWITCHED: AUTO ON a / MANUAL ON b

       – CONTINUOUS DIMMED: AUTO ON 50% a / MANUAL ON 100% a

    c. SENSOR(S) SHALL UTILIZE DUAL TECHNOLOGY (PIR AND ULTRASONIC/MICROPHONIC TECHNOLOGY) WITH 360 DEGREE COVERAGE. IN SPACES WITH DESKTOP ACTIVITIES, THE COVERAGE SHALL BE "HAND MOTION" AND SHALL NOT EXCEED 500 SQ. FT. AT A MAXIMUM CEILING HEIGHT OF 10 FT. IN CORRIDORS, STORAGE ROOMS AND OTHER SPACES WITH NON-DESKTOP ACTIVITIES, COVERAGE SHALL BE "HALF-STEP, WALKING MOTION" AND SHALL NOT EXCEED 1200 SQ. FT. AT A MAXIMUM CEILING HEIGHT OF 10 FT. PIR-ONLY WIRELESS OCCUPANCY SENSORS SHALL NOT BE UTILIZED IN RESTROOMS OR LOCKER ROOMS.

    d. "H" AT THE OCCUPANCY SENSOR INDICATES CONNECTION TO AUXILIARY OUTPUT CONTROL DEVICE FOR CONTROL OF A THIRD PARTY DEVICE VIA LOW-VOLTAGE CONTACT CLOSURES – 1 AMP @ 24V AC/DC. NC/NO RELAYS SHALL BE CONNECTED TO A CONTROLLER TO PERFORM THE AUXILIARY CONTROL REQUIREMENTS INDICATED BY THE DRAWINGS.

    e. OCCUPANCY SENSORS LOCATED WITHIN CORRIDORS, HALLWAYS, STAIRWAYS/WELLS, AISLEWAYS WITHIN WAREHOUSE SPACES, AND IN OTHER AREAS PER PLANS AND/OR SOO SHALL BE CONFIGURED TO CREATE DUAL MODE CONTROL FUNCTIONALITY PER THE SOO/ZONE SCHEDULE. CONTRACTOR SHALL BE RESPONSIBLE FOR PROVIDING ALL DEVICES AND WIRING REQUIRED FOR DUAL MODE OPERATIONS AND ANY PROGRAMMING/CONFIGURATION OF TIME-BASED OPERATING PARAMETERS. COORDINATE WITH OWNER TO DETERMINE BUSINESS HOUR/AFTER BUSINESS HOUR MODES. IF THE PLANS IDENTIFY A NEW OR EXISTING LIGHTING CONTROL PANEL AS THE SOURCE OF DUAL MODE TIMING, E.C. SHALL INCLUDE ALL COSTS TO INSTALL ANY NECESSARY I/O TERMINALS, CARDS, ETC. TO MAKE THE SYSTEM FULLY FUNCTIONAL.

    f. NETWORK SYSTEM-BASED DLCS SYSTEMS SHALL PROVIDE/RESULT IN "LADDERLESS COMMISSIONING" OF DAYLIGHT CONTROLS. AT A MINIMUM, NETWORK ACQUIRED DATA SHALL PROVIDE CT-BASED LIGHTING POWER (WATTS) MEASUREMENTS PER THE COMMISSIONING PORTION OF THESE REQUIREMENTS. PROVIDE NETWORKED CONTROL UNITS/POWER PACKS/INTERFACES AND MISCELLANEOUS EQUIPMENT AS FOLLOWS:

       1) NETWORK SEGMENT MANAGER OR BORDER ROUTER WITH NATIVE BACnet IP – QUANTITY AS REQUIRED BASED UPON A MAXIMUM OF 100 LOCAL ROOM NETWORKS PER SEGMENT AND A MINIMUM OF ONE SEGMENT MANAGER PER FLOOR. THIS EQUIPMENT SHALL BE LOCATED IN THE TYPICAL FLOOR ELECTRICAL ROOM.

       2) NETWORK BRIDGE CONNECTING THE SEGMENT MANAGER TO THE CONTROLLER SUB/LOCAL NETWORK.

       3) ALL CORRIDORS, WAREHOUSE AISLE WAYS, AND STAIRWELLS SHALL BE PROVIDED WITH DUAL MODE CORRIDOR/STAIRWAY CONTROLS TO INCLUDE CEC-LISTED TIME CLOCK(S), ROUTERS, OR SYSTEM GATEWAYS, INTERPOSING RELAYS (WHEN INTERFACING WITH EXISTING CEC-LISTED RELAY PANELS), WIRING, 120V POWER, PROGRAMMING, ETC. NECESSARY FOR A COMPLETE AND FUNCTIONING CONTROL SYSTEM.

       4) INCLUDE ALL COSTS IN BASE BID TO PROVIDE 120V CIRCUIT(S) AND RECEPTACLE(S) NECESSARY TO POWER ALL DEMAND RESPONSE EQUIPMENT.

       5) PROVIDE DATA OUTLET/PATHWAY, DATA CABLING (IF REQUIRED ELSEWHERE BY PROJECT DOCUMENTS), AND CONNECTION TO THE PROJECT'S LOCAL AREA NETWORK.

       6) INCLUDE ALL COSTS IN BASE BID TO PROVIDE 120V CIRCUIT(S) AND RECEPTACLE(S) NECESSARY TO POWER ALL NETWORK SEGMENT MANAGERS, SWITCHES AND ROUTERS.

       7) DEMONSTRATE DLCS RESPONSE TO A SIMULATED DEMAND RESPONSE REQUEST AS PART OF THE LIGHTING COMMISSIONING PROCESS. WHERE MORE THAN ONE WIRING TOPOLOGY AND/OR ZONE IS REQUIRED TO ACCOMMODATE DEMAND RESPONSE, ALL WIRING TOPOLOGIES AND ZONES SHALL BE TESTED ACCORDINGLY. SEE DLCS SOO FOR POWER REDUCTION PERCENTAGES BY ROOM TYPE THAT SHALL BE UTILIZED IN THE SIMULATED DEMAND RESPONSE TESTING.

    g. WHERE INDICATED ON DRAWINGS, PROVIDE DLCS DAYLIGHTING CONTROLS AS FOLLOWS:

       1) AUTOMATIC SWITCHING DAYLIGHTING CONTROLS SHALL BE PROVIDED TO SWITCH SELECTED FIXTURES AND/OR LAMPS OFF AND ON BASED UPON LIGHTING LEVELS PRESENT IN THE CONTROLLED SPACE. THE DAYLIGHTING CONTROLS SHALL BE CONNECTED TO THE CONTROL UNIT. THE SENSOR SHALL UTILIZE AN INTEGRAL PHOTO DIODE TO MEASURE AMBIENT LIGHT LEVELS. CONTROLS SHALL BE FULLY ADJUSTABLE FROM 1 TO 6,500 FOOTCANDLES AND SHALL BE PROVIDED WITH AN ADJUSTABLE TIME DELAY AND ADJUSTABLE DEAD BAND SETTINGS.

       2) AUTOMATIC DIMMING DAYLIGHTING CONTROLS SHALL BE PROVIDED TO CONTINUOUSLY DIM SELECTED FIXTURES/LAMPS UP AND DOWN BASED UPON LIGHTING LEVELS PRESENT IN THE CONTROLLED SPACE. THE SENSOR SHALL UTILIZE AN INTERNAL PHOTO DIODE TO MEASURE AMBIENT LIGHT LEVELS. 0-10 VOLT DIMMING CONTROLS SHALL RANGE FROM 0.2 VOLTS TO 10 VOLTS, WITH AMBIENT LIGHTING SET POINTS FROM 1-6,500 FOOTCANDLES.

       3) AUTOMATIC DAYLIGHTING CONTROLS SHALL BE CONNECTED TO CONTROL UNITS TO PERFORM THE FIXTURE SWITCHING/DIMMING REQUIREMENTS INDICATED BY THE DRAWINGS – CONNECTIONS DIRECTLY TO A BALLAST ARE NOT ALLOWED.

       4) DAYLIGHT SENSOR SHALL PROVIDE CONTROLS FOR UP TO THREE DISTINCT LIGHTING ZONES TO ALLOW SEPARATE CONTROL OF PRIMARY DAYLIT, SECONDARY DAYLIT, AND SKYLIT ZONES.

    h. PROVIDE CONTROL UNITS AND SYSTEM FUNCTIONALITY AS FOLLOWS:

       1) CONTINUOUS DIMMING CONTROLS: SYSTEM-BASED WALL OR CEILING MOUNTED OCCUPANCY SENSORS (CONTINUOUS DIMMED – AUTO ON 50%/MANUAL ON 100%) SHALL BE PROVIDED WITH CONTROL UNITS TO PERFORM THE FIXTURE DIMMING REQUIREMENTS INDICATED BY THE BALLAST AND FIXTURE TYPE. SWITCH LEG(S) ASSOCIATED OUTSIDE THE PARENTHESIS TO BE CONFIGURED AS "AUTO ON 50%/MANUAL ON 100%" FOR CONTINUOUS DIMMED. SWITCH LEGS INSIDE PARENTHESIS INDICATES A MANUAL ACTION REQUIRED TO INCREASE LIGHTING LEVELS ABOVE 50%. CONTROL UNITS WITH INTEGRAL TRANSFORMERS SHALL BE UTILIZED TO PROVIDE POWER TO OCCUPANCY SENSORS AND OTHER CONTROL DEVICES. CONTROL UNITS SHALL BE LOCATED WITHIN JUNCTION BOXES AND NOT EXPOSED IN THE CEILING SPACE. CONTROL UNIT SHALL BE 120/277 VOLT RATED WITH NO MINIMUM LOAD, COMPATIBLE WITH ALL THE SPECIFIED BALLASTS, PROVIDED WITH A NEUTRAL CONNECTION (NO LEAKAGE TO GROUND) AND NO LEAKAGE TO LOAD IN THE "OFF" MODE. ADDITIONAL RELAY ZONES MAY BE REQUIRED FOR THE ADDITION OF PRIMARY DAYLIT, SECONDARY DAYLIT, AND PRIMARY SKYLIT UTILIZING THE SAME CONTROL CHANNEL. (I.E. EVEN THOUGH A SINGLE LETTER "a" IS INDICATED AT THE PRIMARY SENSOR), ADDITIONAL RELAYS WOULD BE REQUIRED FOR THE "a+" (PRIMARY SIDELIT DAYLIT ZONE), "a++" (SECONDARY SIDELIT DAYLIT ZONE), AND "a+++" (SKYLIT DAYLIT ZONE). WHERE MORE THAN ONE CIRCUIT PER SWITCH LEG/PHOTOCELL IS REQUIRED, ADDITIONAL RELAY PANELS SHALL BE PROVIDED AS REQUIRED.

       2) WHERE ADDITIONAL 120/ 277 VOLT DEVICES, RECEPTACLES, OR BRANCH CIRCUITS ARE BEING CONTROLLED BY THE ROOM CONTROLLER, AN ADDITIONAL CONTROL UNIT SHALL BE PROVIDED AS REQUIRED.

       3) THE OCCUPANCY SENSOR CONTROLLED RECEPTACLE BRANCH CIRCUIT RELAY, CONNECTED TO THE SPACE'S DISTRIBUTED LIGHTING CONTROL OCCUPANCY SENSOR RELAY, SHALL TURN ON WHEN THE ROOM IS OCCUPIED, REGARDLESS OF THE CONFIGURATION OF THE LIGHTING CONTROL STATE – I.E. AUTO ON/MANUAL ON. SEE THE DISTRIBUTED LIGHTING CONTROL SPECIFICATION FOR MORE INFORMATION. EVEN THOUGH A SINGLE SYMBOL IS INDICATED, MULTIPLE RELAYS MAY BE REQUIRED TO CONTROL THE REQUIRED NUMBER OF SWITCHLEGS/CIRCUITS.

       4) LOW VOLTAGE WALL CONTROLS SHALL BE DECORA STYLE, LOW-VOLTAGE, MOMENTARY SWITCHES WITH COLOR TO MATCH OTHER WALL DEVICES/SWITCHES. LOWER CASE LETTERS INDICATE SWITCHING CONFIGURATION. PROVIDE SWITCHING OR DIMMING CONTROL DEVICES AS REQUIRED BY DRAWINGS.

       DIMMING – NUMBER OF SWITCHES AS REQUIRED – 4 ZONES/YOKE MAX. EACH CONTROL ZONE TO HAVE A DEDICATED RAISE AND LOWER BUTTONS. FACTORY STANDARD COLOR BY ARCHITECT. EACH MULTI-ZONE DIMMING CONTROL STATION SHALL BE PROVIDED WITH MASTER ON AND MASTER OFF BUTTON IN ADDITION TO THE INDIVIDUAL CONTROL ZONE BUTTONS.

       WHERE INDICATED, PROVIDE VANDAL RESISTANT, HIGH ABUSE SWITCH CONNECTED TO THE DLCS INPUT/OUTPUT INTERFACE DEVICE FOR ON/ OFF AND DIMMING CONTROLS. SWITCHES LOCATED IN HIGH ABUSE AREAS (EXTERIOR AREAS OR AREAS SUBJECT TO WASH-DOWN ETC.) OR IDENTIFIED ON PLANS AS HIGH-ABUSE SWITCHES SHALL BE VANDAL RESISTANT, STAINLESS STEEL, TOUCH SENSITIVE AND AVAILABLE WITH UP TO TWO BUTTONS IN A SINGLE GANG. EACH HIGH ABUSE SWITCH SHALL BE ABLE TO BE PROGRAMMED FOR ON, OFF, TOGGLE OR MAINTAIN OPERATION. SWITCHES MUST BE CAPABLE OF HANDLING ELECTROSTATIC DISCHARGES OF AT LEAST 30,000 VOLTS (10MSPARK) WITHOUT ANY INTERRUPTION OR FAILURE IN OPERATION.

       WHERE INDICATED, PROVIDE A LOCKING SINGLE POLE SWITCH CONNECTED TO THE ROOM CONTROLLER VIA A INPUT/OUTPUT INTERFACE DEVICE FOR ON/OFF CONTROLS. DIRECT CONNECTION OF THE KEYED SWITCH ON THE LOAD SIDE OF THE CONTROLLER IS PROHIBITED. PROVIDE AT LEAST THREE (3) KEYS TO OWNER AT CONCLUSION OF PROJECT. ADJACENT SWITCH SHALL ONLY BRING LIGHTS FULL ON. KEYED SWITCH ALLOWS MANUAL OFF FUNCTIONALITY. DIMMER SWITCH ALLOWS AUTO-ON 50% OVERRIDE TO 100% ALL-ON AND SHALL NOT ALLOW LIGHTING LEVELS TO DECREASE IN ANY WAY.

    i. WHEN LIGHTING SYSTEM IS INDICATED WITH A CONNECTION TO A REMOTE EMERGENCY POWER SOURCE (I.E. AN INVERTER OR GENERATOR) PROVIDE UL924 LISTED INTERFACE EQUIPMENT TO ALLOW THE OVERRIDE OF THE LOCAL SWITCHING AND/OR DIMMING CONTROLS DURING A POWER OUTAGE.

    j. WHEN LIGHTING FIXTURES/CONTROLS ARE PROVIDED WITH LUTRON 3-WIRE DIMMING BALLASTS, AN INTERFACE DEVICE SHALL BE PROVIDED TO ALLOW 0-10V CONTROL OF LUTRON 3-WIRE DIMMING BALLASTS. MOUNT INTERFACE IN A NEMA1 ENCLOSURE IN ACCESSIBLE CEILING SPACE ADJACENT TO ITS ASSOCIATED CONTROL UNIT.

    k. WHEN LIGHTING FIXTURES/CONTROLS ARE LINE VOLTAGE DIMMED OR PROVIDED ELECTRONIC LOW-VOLTAGE, MAGNETIC LOW-VOLTAGE, NEON/COLD CATHODE, LUTRON "TU-WIRE" DIMMING BALLASTS, AN INTERFACE DEVICE SHALL BE PROVIDED TO ALLOW LINE VOLTAGE CONTROL. MOUNT INTERFACE IN A NEMA1 ENCLOSURE IN ACCESSIBLE CEILING SPACE ADJACENT TO ITS ASSOCIATED CONTROL UNIT.

    l. WHEN AV SYSTEM INTERFACE IS INDICATED, PROVIDE TWO-WAY CAPABLE RS-232 COMMUNICATIONS INTERFACE TO ALLOW AV CONTROL SYSTEM TO CALL ADDRESSABLE LIGHTING/ROOM SCENES. COMMUNICATIONS INTERFACE SHALL PROVIDE FEEDBACK TO THE AV CONTROL SYSTEM FOR LIGHT LEVEL STATUS.

    m. WHEN MOVEABLE PARTITION INTERFACE IS INDICATED, PROVIDE ALL COMPONENTS, SENSORS, WIRING, POWER SUPPLIES AND PROGRAMMING NECESSARY TO MONITOR AND REPORT MOVEABLE PARTITION(S) OPEN/CLOSED STATUS. DLCS SYSTEM SHALL AUTOMATICALLY ADOPT SINGLE ROOM OR MULTI-ROOM CONTROL PROFILES AS REQUIRED BY PARTITION STATUS.

    n. WHEN NETWORKED LIGHTING CONTROL RELAY PANEL(S) ARE INDICATED, PROVIDE ALL COMPONENTS, WIRING, AND PROGRAMMING NECESSARY TO INTEGRATE RELAY PANELS WITHIN THE DLCS SYSTEM.

13. GENERAL SYSTEM REQUIREMENTS:

    a. ALL EQUIPMENT SHALL FEATURE A PRE-SET DEFAULT OPERATION. UPON INITIAL POWER UP, THE SYSTEM SHALL AUTOMATICALLY IDENTIFY THE DEVICES ON THE LOCAL NETWORK, THEN ENTERS THE PRE-SET CONFIGURATION TO ALLOW BASIC OPERATION OF ALL DEVICES. IN MOST APPLICATIONS THE RELATIONSHIP BETWEEN QUANTITY OF LOADS, SWITCHES AND OCCUPANCY SENSORS WILL NOT REQUIRE ANY ADJUSTMENTS – ALTHOUGH AN ADJUSTMENT TO THE AUTOMATIC SETTINGS SHALL BE INCLUDED IN THE BASE BID.

    b. ALL EQUIPMENT SHALL FEATURE A CONFIGURATION (CONFIG) BUTTON ON MOST DEVICES THAT ALLOWS EASY ACCESS TO THE INTEGRATED AUTO-CONFIGURATION TECHNOLOGY TO MODIFY SYSTEM OPERATION. FUNCTIONALITY OF THE CONFIG BUTTON SHALL BE STANDARDIZED THROUGHOUT THE PRODUCT LINE, AS IS THE OPERATION OF THE CONFIG LED INDICATORS.

    c. NETWORK DLCS SYSTEM CONTROL/CONFIGURATION SOFTWARE SHALL BE PRE-CONFIGURED TO THE MAXIMUM EXTENT POSSIBLE OFF-SITE AT THE DLCS FACTORY OR ENGINEERING FACILITY. THE CONTRACTOR SHALL DOCUMENT EVERY NETWORK COMPONENT'S LOCATION (ROOM AND FLOOR NUMBER) AND ITS' RESPECTIVE SERIAL NUMBER OR OTHER DEVICE IDENTIFIER ON A FULL SIZE FLOOR PLAN IN PDF FORMAT. HANDWRITTEN DOCUMENTATION IS UNACCEPTABLE. THE PREFERRED ACCEPTABLE METHOD OF NETWORK COMPONENT DOCUMENTATION IS COLLECTION OF FACTORY-PROVIDED, SELF-ADHESIVE, BAR-CODE IDENTIFIERS DESIGNED TO BE REMOVED FROM NETWORK COMPONENTS AS THEY ARE INSTALLED IN THE FIELD. BAR CODES IDENTIFIERS SHALL BE APPLIED TO A PAPER COPY OF A FLOOR PLAN WHICH SHALL BE PROVIDED TO THE FACTORY FOR USE IN OFF-SITE DLCS NETWORK PROGRAMMING AND CONFIGURATION. THE RESULTS OF EITHER METHOD SHALL BE SCANNED AND SUBMITTED AS A PART OF THE PROJECT CLOSEOUT DOCUMENTATION.

    d. NETWORK SYSTEMS SHALL BE INSTALLED BY VENDOR-CERTIFIED CONTRACTOR FIELD PERSONNEL TO PERFORM NETWORK INSTALLATIONS INCLUDING ACCURATE, REPEATABLE COMMUNICATIONS CABLING TERMINATIONS (BOTH LAN AND MS/TP TYPE). INCLUDE CERTIFICATES FOR EACH CERTIFIED INSTALLER TO BE UTILIZED ON THE PROJECT AS A PART OF THE PROJECT SUBMITTALS. A CERTIFIED FIELD INSTALLER SHALL BE ON-SITE SUPERVISING COMMUNICATIONS CABLING AND CABLING TERMINATIONS AT ALL TIMES WHEN THIS WORK IS OCCURRING ON THE PROJECT.

    e. ANY BATTERY-POWERED DLCS COMPONENTS SHALL BE PROVIDED WITH A 10 YEAR EXPECTED BATTERY LIFE. EACH COMPONENT SHALL BE PROVIDED WITH BOTH A LOCAL LOW BATTERY INDICATION ON EACH DEVICE AND A SOFTWARE-BASED LOW BATTERY ALARM. WHERE A WIRELESS DLCS SYSTEM COMPONENT IS AVAILABLE EITHER AS A BATTERY POWERED DEVICE OR A LINE/LOW VOLTAGE POWERED DEVICE, PROVIDE THE LINE/LOW VOLTAGE VERSION ALONG WITH ANY LINE OR LOW VOLTAGE WIRING, CONDUIT AND BACK BOXES TO LIMIT THE NUMBER OF BATTERIES WITHIN THE DLCS INSTALLATION TO A MINIMUM.

14. INSTALLATION OF CONTROL UNITS, OCCUPANCY/VACANCY SENSORS AND DAYLIGHTING CONTROLS:

    a. IT SHALL BE THE CONTRACTOR'S RESPONSIBILITY TO LOCATE AND AIM SENSORS IN THE CORRECT LOCATION REQUIRED FOR COMPLETE AND PROPER VOLUMETRIC COVERAGE PER THE MANUFACTURER'S RECOMMENDATIONS. ROOMS SHALL HAVE NINETY (90) TO ONE HUNDRED (100) PERCENT COVERAGE AND SHALL ACCOMMODATE ALL HABITS OF SINGLE OCCUPANTS LOCATED ANYWHERE WITHIN THE ROOM. THE LOCATIONS AND QUANTITIES OF SENSORS SHOWN ON THE DRAWINGS ARE DIAGRAMMATIC AND INDICATE ONLY THE ROOMS THAT ARE TO BE PROVIDED WITH SENSORS. THE CONTRACTOR SHALL PROVIDE ADDITIONAL SENSORS AS REQUIRED TO PROPERLY SENSE OCCUPANCY WITHIN THE RESPECTIVE ROOM. WHERE PIR-ONLY WIRELESS CEILING OR FIXTURE-INTEGRAL OCCUPANCY SENSORS ARE UTILIZED, PROVIDE QUANTITY AS REQUIRED TO MAINTAIN THE SAME COVERAGE AND SAME MOVEMENT DETECTION SENSITIVITY AS PROVIDED BY WIRED DUAL TECHNOLOGY SENSORS. ADDITIONALLY, IT MAY BE NECESSARY FOR THE CONTRACTOR TO MAKE ADJUSTMENTS, CHANGE THE LOCATION OR TYPE OF SENSOR TO OBTAIN PROPER OPERATION IN A SPECIFIC ROOM. THE USE OF FACTORY-SUPPLIED INTERNAL MASKING (PIR) SHALL BE PROVIDED/INSTALLED AS REQUIRED TO LIMIT DETECTION TO THE CONTROLLED SPACE ONLY. WHERE MASKING IS NOT AVAILABLE AS A FACTORY-SUPPLIED ITEM, ALTERNATE FACTORY-SUPPLIED MEANS OF COMPLIANCE OR METHODS MAY BE ACCEPTABLE. THE CONTRACTOR SHALL HAVE FINAL RESPONSIBILITY FOR PROPER OPERATION OF THE SYSTEM IN EACH ROOM AND SHOULD THEREFORE MAKE LABOR ALLOWANCES FOR CHANGES AND ADJUSTMENTS.

    b. CEILING MOUNTED SENSORS SHOULD BE LOCATED IN THE SPACE TO BE COVERED, A MINIMUM OF 4', PREFERABLY 5', AWAY FROM THE LATCH SIDE OF THE DOOR, 2" TO 3" AWAY FROM THE WALL AND 3' TO 4' FROM AN AIR SUPPLY REGISTER. DO NOT MOUNT SENSORS OVER A DOORWAY OR BEHIND A FULL HEIGHT DOOR. SENSORS SHALL BE AIMED IN THE DIRECTION OF THE SPACE TO BE COVERED. DO NOT AIM SENSORS TOWARD A DOORWAY. THE USE OF FACTORY SUPPLIED INTERNAL MASKING (PIR) SHALL BE PROVIDED/INSTALLED AS REQUIRED TO LIMIT DETECTION TO THE CONTROLLED SPACE ONLY.

    c. ALL SENSORS SHALL BE ADJUSTED PER THE DLCS SOO/ZONE SCHEDULE. WHERE A ROOM TYPE IS NOT INDICATED ON THE DLCS SOO, ADJUST FOR FOR A TIME DELAY OF TWENTY (20) MINUTES.

    d. EACH DAYLIGHTING CONTROL SYSTEM/ZONE SHALL BE INSTALLED/ADJUSTED AS FOLLOWS:

       1) AUTOMATIC SWITCHING/DIMMING CONTROL PLACEMENT: IT IS IMPORTANT TO SELECT A LOCATION IN THE DAYLIGHTING ZONE WHERE THE DAYLIGH

AREA TYPE	OCC SENSOR					INTERIOR DAYLIGHT SENSOR			EXTERIOR PHOTOCELL		ASTRONOMICAL TIME CLOCK CONTROLS			LOCAL CONTROL			SYSTEM		NOTES	REMARKS
ALL VALUES ARE BASED ON CALIFORNIA TITLE 24 2019	AUTO ON (PERCENTAGE OF NOMINAL FC)	(WHEN SWITCH/ BUTTON IS PRESSED) MANUAL ON	REDUCED OUTPUT OR OFF	REDUCED OUTPUT OR OFF DURING NORMAL HOURS	REDUCED OUTPUT OR OFF AFTER NORMAL HOURS	AUTO OFF AT TARGET FC FIXTURES DIM TO OFF	AUTO DIM AT TARGET FC FIXTURES REMAIN ON AT LOWEST LEVEL	TARGET ILLUMINATION LEVEL NOMINAL FOOTCANDLE & METER HEIGHT	EXTERIOR PHOTOCELL ON	EXTERIOR PHOTOCELL OFF	BEGIN NORMAL OPERATING HOURS (ASTRONOMICAL TIME CLOCK TURN ON)	END NORMAL OPERATING HOURS (ASTRONOMICAL TIME CLOCK TURN OFF)	AFTER NORMAL HOURS OVERRIDE CANNOT EXCEED 2 HOURS PER §130.1(c)3.B	ON / OFF	ON / OFF / RAISE / LOWER DIMMING	SCENE SELECTOR	PLUG LOAD CONTROL	DEMAND RESPONSE LIGHTING REDUCTION MIN. 15% COMMERCIAL BLDG >10,000 SQ FT	PROGRAMMING NOTES PLEASE SEE BELOW	
Interior Lighting																				
CLOSET	ON AT 100%	ON AT 100%	OFF AFTER 5 MIN.	-	-	-	-	-	-	-	-	-	-	●	-	-	-	-	-	§130.1(b) EXCEPTION 1 - AN AREA ENCLOSED BY CEILING HEIGHT PARTITIONS THAT HAS ONLY ONE LUMINAIRE WITH NO MORE THAN TWO LAMP DOES NOT REQUIRE MULTI-LEVEL CONTROLS.
ELECTRICAL ROOM, MECHANICAL ROOM, TELECOMMUNICATIONS ROOM	-	-	-	-	-	-	-	'10 FC +5' AFF	-	-	-	-	-	●	-	-	-	-	-	LOCAL TOGGLE SWITCH ONLY
OFFICE, SMALL ≤250 SQ FT	ON AT 70%	ON AT 100%	OFF AFTER 20 MIN.			○	●	40-50 FC +30" AFF	-	-	-	-	-		●	○	●	●	A,B,D,F	
RESTROOMS (2) OR MORE STALLS	ON AT 100%	-	5 MIN. TO OFF	-	-	-	-	20-30 FC	-	-	-	-	-	●	-	-	-	-	-	§130.1(b) EXCEPTION 2 - DIMMABLE LUMINAIRES NOT REQUIRED. §130.1(c)5 - [DUAL MODE] OCCUPANCY SENSORS REQUIRED. §130.1(a)1 EXCEPTION 1 - MANUAL CONTROL MAY BE LOCATED IN A SEPARATE, SECURED LOCATION.
RESTROOMS (1) STALL	ON AT 100%	-	5 MIN. TO OFF	-	-	-	-	20-30 FC	-	-	-	-	-	●	-	-	-	-	-	§130.1(b) EXCEPTION 2 - DIMMABLE LUMINAIRES NOT REQUIRED. §130.1(c)5 - OCCUPANCY SENSORS REQUIRED. §130.1(a) - PROVIDE MANUAL AREA CONTROL IN RESTROOM.
Exterior Lighting, Timeclock / Photocell Control																				
EXTERIOR LIGHTING >24 FT TALLER THAN 24 FT	-	-	-	-	-	-	-	-	●	-	PERIOD 1: ON 100% AT DUSK - PERIOD 2: DIM 80% AT 24:00	OFF AT DAWN	●	-	-	-	-	-	J, L, M	§130.2(c) LIGHTS SHALL BE OFF DURING DAYTIME; LIGHTS SHALL BE AUTOMATICALL CONTROLLED BY TIME-BASED SCHEDULING CONTROLS. §130.2(c)2B - AUTOMATIC SCHEDULING CONTROLS SHALL ALLOW SCHEDULING OF MIN. OF TWO NIGHTTIME PERIODS WITH INDEPENDENT LIGHTING LEVELS.... OCCUPANCY SENSOR NOT REQUIRED
EXTERIOR LIGHTING ≤24 FT & >40W 24 FT OR SHORTER 40W OR MORE	ON AT 100%	ON AT 100%	PERIOD 1: 50% 10 MIN. PERIOD 2: 40% 10 MIN.	-	-	-	-	-	●	-	PERIOD 1: ON 100% AT DUSK - PERIOD 2: DIM 40% AT 24:00	OFF AT DAWN	●	-	-	-	-	-	B,J, M	§130.2(c) LIGHTS SHALL BE OFF DURING DAYTIME; LIGHTS SHALL BE AUTOMATICALL CONTROLLED BY TIME-BASED SCHEDULING CONTROLS. §130.2(c)2B - AUTOMATIC SCHEDULING CONTROLS SHALL ALLOW SCHEDULING OF MIN. OF TWO NIGHTTIME PERIODS WITH INDEPENDENT LIGHTING LEVELS.... §130.2(c)3Di - FACADE, ORNAMENTAL HARDSCAPE, OUTDOOR DINING AND SALES FRONTAGE LIGHTING ARE EXEMPT FROM MOTION SENSOR REQUIREMENT. OCCUPANCY SENSOR REQUIRED; LIGHTING SHALL REMAIN ON FROM DUSK UNTIL DAWN, REDUCED OUTPUT BETWEEN 40% AND 80% WHEN VACANT OR AFTER LOCAL CURFEW, IF REQUIRED. NO MORE THAN 1,500W OF LIGHTING CONTROLLED TOGETHER.
EXTERIOR LIGHTING ≥24 FT & <40W 24 FT OR SHORTER 40W OR LESS	-	-	-	-	-	-	-	-	●	●	PERIOD 1: ON 100% AT DUSK - PERIOD 2: DIM 50% AT 24:00	OFF AT DAWN	●	-	-	-	-	-	J,L,M	§130.2(c) LIGHTS SHALL BE OFF DURING DAYTIME; LIGHTS SHALL BE AUTOMATICALL CONTROLLED BY TIME-BASED SCHEDULING CONTROLS. §130.2(c)2B - AUTOMATIC SCHEDULING CONTROLS SHALL ALLOW SCHEDULING OF MIN. OF TWO NIGHTTIME PERIODS WITH INDEPENDENT LIGHTING LEVELS.... §130.2(c)3 - LUMINAIRES WITH A MAXIMUM RATED WATTAGE OF 40W EACH ARE NOT REQUIRED TO HAVE MOTION SENSING CONTROLS.
EXTERIOR FAÇADE & OUTDOOR DINING	-	-	-	-	-	-	-	-	●	●	PERIOD 1: ON 100% AT DUSK - PERIOD 2: DIM 50% AT 02:30	OFF AT DAWN	●	-	-	-	-	-	J,L,M	§130.2(C) LIGHTS SHALL BE OFF DURING DAYTIME; LIGHTS SHALL BE AUTOMATICALLY CONTROLLED BY TIME-BASED SCHEDULING CONTROLS. §130.2(c) 3 NO MORE THAN 1,500W OF LIGHTING CONTROLLED FROM A SINGLE SENSOR. §130.2(c)3Di - EXTERIOR FACADE & OUTDOOR DINIUNG ARE EXEMPT FROM MOTION SENSOR REQUIREMENT.
EXTERIOR SIGNAGE	-	-	-	-		-	-	-	●	-	ON AT DUSK	OFF AT DAWN	-	-	-	-	-	-	J	§130.3(a)2 PHOTO CONTROL PLUS TIME SWITCH OR ASTRONOMICAL CLOCK ARE REQ'D; SIGNS ILLUMINATED 24/7/365 MUST DIM MIN. 65% DURING DAYLIGHT HOURS

PROGRAMMING NOTES

NOTES: A. PROVIDE DAYLIGHTING CONTROL FOR PRIMARY AND SECONDARY DAYLIT OR SKYLIT ZONES WERE REQUIRED. DAYLIGHTING IS NOT NECESSARY WHEN AREAS DO NOT INCLUDE SKYLIGHTS OR GLAZING < 24 SQ FT OR SKYLIT+PRIMARY SIDELIT ZONE IS LESS THAN 120W. LUMINAIRES IN OR AT LEAST 50% WITHIN DAYLIGHTING ZONES MUST BE CONTROLLED.

B. CONTROLLED BY OCCUPANCY SENSOR: AUTO AND / OR MANUAL ON UNLESS OVERRIDDEN BY DAYLIGHTING SENSORS.

C. MANUAL CONTROL WALL STATIONS FOR THESE AREAS SHALL BE LOCATED IN THE NEAREST BACK OF HOUSE CLOSET, CONTROL BOOTH, ELECTRICAL ROOM, ETC. TO PREVENT UNAUTHORIZED USERS FROM ADJUSTING LIGHTING LEVELS.

D. CONFIGURE LIGHTING CONTROL TO PROVIDE PROPORTIONATE RAISE / LOWER OF ALL ROOM LIGHTING TOGETHER, REGARDLESS OF LOCATION IN DAYLIGHTING AND NON-DAYLIGHTING ZONES WHERE THEY OCCUR.
E. PROVIDE RS-232 OR ETHERNET CONNECTION TO AV SYSTEM TO ALLOW RECALL OF LIGHTING PRESETS BY AV SYSTEM WITHIN THIS ROOM, IF REQUESTED BY OWNER.
F. PROVIDE CONTROLLED RECEPTACLES IN THIS ROOM AS REQUIRED. CONTROLLED RECEPTACLE MUST BE WITHIN 6'-0" OF UNCONTROLLED RECEPTACLE.
G. PROVIDE MOMENTARY CONTACT CLOSURE FROM FACP TO FORCE ALL LIGHTING IN THIS AREA TO 100% DURING AN ALARM EVENT. AUTOMATICALLY RESTORE LIGHTING TO NORMAL WHEN EVENT HAS CLEARED.
H. LIGHTING IN THIS SPACE MAY BE CONTROLLED FROM A STAGE LIGHTING SYSTEM. THE STAGE LIGHTING SYSTEM SHALL BE PROVIDED WITH A TITLE 24 COMPLIANT LIGHTING CONTROL PROCESSOR AND COMPATIBLE OCCUPANCY AND DAYLIGHT SENSORS AS REQUIRED FOR
I. NOT USED
J. CONFIRM OPERATING HOURS WITH OWNER PRIOR TO FINAL PROGRAMMING.
K. REQUIRES CONNECTION TO BUILDING AUTOMATION SYSTEM (BAS) WHEN SUCH SYSTEM IS PRESENT.
L. FIXTURES WITHOUT OCCUPANCY SENSORS SHALL HAVE LOW END TRIM ADJUSTED TO MAINTAIN MINIMUM ILLUMINATION LEVELS.
M. LIGHTING CONTROL SYSTEM SHALL HAVE ASTRONOMICAL TIME CLOCK AND DUAL MODE CAPABILITY FOR "AFTER HOURS" CONTROL OF LIGHTING.
N. PERFORMANCE SPACE, NO DAYLIGHTING REQUIRED. TARGET ILLUMINATION LISTED ONLY FOR REFERENCE IN THIS COLUMN.

IDENTIFICATION STAMP
DIV. OF THE STATE ARCHITECT
APP: 03-122664 INC:
REVIEWED FOR
SS ☑ FLS ☑ ACS ☑
DATE: 05/12/2023

pjhm architects
LICENSED ARCHITECT RICHARD W. SIMPSON NO. C15585 REN. 02/25 STATE OF CALIFORNIA
tk1sc COLLABORATIVE
11870 Pierce Street, Suite 160
Riverside, California 92505
951.299.4160 www.tk1sc.com
Project Leader - Nikolas Bruno
Electrical Lead - Nikolas Bruno
tk1sc Job #: B2202744.000
REGISTERED PROFESSIONAL ENGINEER RICHARD W. SIMPSON No. E15610 ELECTRICAL STATE OF CALIFORNIA

HIGHLAND HIGH SCHOOL
50M POOL & AQUATICS CENTER
KERN HIGH SCHOOL DISTRICT

DISTRIBUTED LIGHTING CONTROL SOO

E-7.3

OC Office: 24461 Ridge Route Drive #100, Laguna Hills, CA • 92653 Phone: 949.496.6161 SD Office: 804 Pier View Way #103, Oceanside, CA • 92054 Phone: 760.730.5557 LA Office: 837 Traction Avenue, #410, Los Angeles, CA • 90013 Phone: 213.278.0172 Web: pjhm.com

8/2/2022 11:34:37 AM

STATE OF CALIFORNIA
Indoor Lighting
NRCC-LTI-E
CALIFORNIA ENERGY COMMISSION

CERTIFICATE OF COMPLIANCE		NRCC-LTI-E
This document is used to demonstrate compliance with requirements in §110.9, §110.12(c), §130.0, §130.1, §140.6 and §141.0(b)2 for indoor lighting scopes using the prescriptive path.		
Project Name:	Highland HS 50M Pool and Aquatics Center	**Report Page:** (Page 1 of 7)
Project Address:	39055 25th St W	**Date Prepared:** 8/17/2022

A. GENERAL INFORMATION

01	Project Location (city)	Palmdale	04	Total Conditioned Floor Area (ft²)	3,195
02	Climate Zone	14	05	Total Unconditioned Floor Area (ft²)	0
03	Occupancy Types Within Project (select all that apply):		06	# of Stories (Habitable Above Grade)	1

● Classroom ● Office ● Support Areas ● : See Table I

B. PROJECT SCOPE

This table includes any lighting systems that are within the scope of the permit application and are demonstrating compliance using the prescriptive path outlined in §140.6 or §141.0(b)2 for alterations.

Scope of Work	Conditioned Spaces		Unconditioned Spaces	
01	02	03	04	05
My Project Consists of (check all that apply):	Calculation Method	Area (ft²)	Calculation Method	Area (ft²)
☒ New Lighting System	Area Category Method	3195	Area Category Method	0
☐ New Lighting System - Parking Garage				
Total Area of Work (ft²)	3195		0	

C. COMPLIANCE RESULTS

If any cell on this table says "DOES NOT COMPLY" or "COMPLIES with Exceptional Conditions" refer to Table D. for guidance.

Lighting in conditioned and unconditioned spaces must not be combined for compliance per §140.6(b)1	Allowed Lighting Power per §140.6(b) (Watts)						Adjusted Lighting Power per §140.6(a) (Watts)					Compliance Results
	01	02	03	04	05		06	07		08		09
	Complete Building §140.6(c)1 (See Table I)	Area Category §140.6(c)2 (See Table I)	Area Category Additional §140.6(c)2G (+) (See Table J)	Tailored §140.6(c)3 (+) (See Table K)	**Total Allowed** (Watts)		Total Designed (Watts) (See Table F)	Adjustments PAF Lighting Control Credits §140.6(a)2 (-) (See Table P)		**Total Adjusted** (Watts) *Includes Adjustments		**05 must be >= 08 §140.6**
Conditioned		2,012.4	0		2,012	≥	1,042	0	=	1042	=	COMPLIES
Unconditioned						≥			=		=	

Registration Number: | Registration Date/Time: | Registration Provider: Energysoft

CA Building Energy Efficiency Standards - 2019 Nonresidential Compliance | Report Version: 2019.1.003 Schema Version: rev 20200601 | Report Generated: 2022-08-17 15:55:38

STATE OF CALIFORNIA
Indoor Lighting
NRCC-LTI-E
CALIFORNIA ENERGY COMMISSION

CERTIFICATE OF COMPLIANCE		NRCC-LTI-E
Project Name:	Highland HS 50M Pool and Aquatics Center	**Report Page:** (Page 2 of 7)
Project Address:	39055 25th St W	**Date Prepared:** 8/17/2022

C. COMPLIANCE RESULTS

Controls Compliance (See Table H for Details)	COMPLIES
Rated Power Reduction Compliance (See Table Q for Details)	

D. EXCEPTIONAL CONDITIONS

This table is auto-filled with uneditable comments because of selections made or data entered in tables throughout the form.

E. ADDITIONAL REMARKS

This table includes remarks made by the permit applicant to the Authority Having Jurisdiction.

F. INDOOR LIGHTING FIXTURE SCHEDULE

This table includes all permanent designed lighting and all portable lighting in offices.

Designed Wattage: Conditioned Spaces

01	02	03	04	05	06	07	08	09	10	
Name or Item Tag	Complete Luminaire Description	Modular (Track) Fixture	Small Aperture & Color Change[1]	Watts per luminaire[2]	How is Wattage determined	Total Number of Luminaires	Excluded per §140.6(a)3	Design Watts	Field Inspector	
									Pass	Fail
2	2 - 4' LONG X 4"WIDE, LINEAR LED FIXTURE	No	No	23.5	Mfr. Spec	16	No	376	☐	☐
3	3 - RECESSED FIXED DOWNLIGHT	No	No	28	Mfr. Spec	1	No	28	☐	☐
6	6 - 4" WIDE RECESSED LED LINEAR FIXTURE	No	No	22	Mfr. Spec	29	No	638	☐	☐
					Total Designed Watts: CONDITIONED SPACES			1,042		

[1]*FOOTNOTE: Design Watts for small aperture and color changing luminaires which qualify per §140.6(a)4B is adjusted to be 75% of their rated wattage. Table F automatically makes this adjustment, the permit applicant should enter full rated wattage in column 05.*

[2]*Authority Having Jurisdiction may ask for Luminaire cut sheets to confirm wattage used for compliance per §130.0(c) Wattage used must be the maximum rated for the luminaire, not the lamp.*

Registration Number: | Registration Date/Time: | Registration Provider: Energysoft

CA Building Energy Efficiency Standards - 2019 Nonresidential Compliance | Report Version: 2019.1.003 Schema Version: rev 20200601 | Report Generated: 2022-08-17 15:55:38

STATE OF CALIFORNIA
Indoor Lighting
NRCC-LTI-E
CALIFORNIA ENERGY COMMISSION

CERTIFICATE OF COMPLIANCE		NRCC-LTI-E
Project Name:	Highland HS 50M Pool and Aquatics Center	**Report Page:** (Page 3 of 7)
Project Address:	39055 25th St W	**Date Prepared:** 8/17/2022

G. MODULAR LIGHTING SYSTEMS

This section does not apply to this project.

H. INDOOR LIGHTING CONTROLS (Not including PAFs)

*This table includes lighting controls for conditioned and unconditioned spaces. When a control having a * is shown, the notes section of this table provides more detail on how compliance is achieved. The lighting controls section of the Compliance Summary Table on the first page will show "DOES NOT COMPLY" if the notes are left blank.*

Building Level Controls

01	02	03	
		Field Inspector	
Mandatory Demand Response §110.12(c)	Shut-off controls §130.1(c)	Pass	Fail
Required > 10,000 SF	Whole Building Auto Time Switch	☐	☐

Area Level Controls

04	05	06	07	08	09	10	11	12	
Area Description	Complete Building or Area Category Primary Function Area	Area Controls §130.1(a)	Multi-Level Controls §130.1(b)	Shut-Off Controls §130.1(c)	Primary/Sky lit Daylighting §130.1(d)	Secondary Daylighting §140.6(d)	Interlocked Systems §140.6(a)1	Field Inspector	
								Pass	Fail
Storage	All Other Space Types	Manual ON/OFF	Dimmer	Occupancy Sensor	Included	Included	No	☐	☐
Restrooms	Restrooms	Manual ON/OFF	Dimmer	Occupancy Sensor	Included	Included	No	☐	☐
Locker Rooms	Locker Dressing Room	Manual ON/OFF	Dimmer	Occupancy Sensor	Included	Included	No	☐	☐
Office < 250	Office 250 square feet or less	Manual ON/OFF	Dimmer	Occupancy Sensor	Included	Included	No	☐	☐
Lobby	Main Entry Lobby	Manual ON/OFF	Dimmer	Occupancy Sensor	Included	Included	No	☐	☐
Classroom	Classroom, Lecture, or Training Vocational Area	Manual ON/OFF	Dimmer	Occupancy Sensor	Included	Included	No	☐	☐

Registration Number: | Registration Date/Time: | Registration Provider: Energysoft

CA Building Energy Efficiency Standards - 2019 Nonresidential Compliance | Report Version: 2019.1.003 Schema Version: rev 20200601 | Report Generated: 2022-08-17 15:55:38

STATE OF CALIFORNIA
Indoor Lighting
NRCC-LTI-E
CALIFORNIA ENERGY COMMISSION

CERTIFICATE OF COMPLIANCE		NRCC-LTI-E
Project Name:	Highland HS 50M Pool and Aquatics Center	**Report Page:** (Page 4 of 7)
Project Address:	39055 25th St W	**Date Prepared:** 8/17/2022

H. INDOOR LIGHTING CONTROLS (Not including PAFs)

Electrical Room	Electrical Mechancial Telephone Room	Manual ON/OFF	Dimmer	Occupancy Sensor	Included	Included	No	☐	☐
Concession	Kitchen/ Food Preparation Area	Manual ON/OFF	Dimmer	Occupancy Sensor	Included	Included	No	☐	☐

*NOTES: Controls with a * require a note in the space below explaining how compliance is achieved.*
EX: Conference 1: Primary/Skylight Daylighting: Exempt because less than 120 watts of general lighting; EXCEPTION 1 to §130.1(d)2

13

Plan Sheet Showing Daylit Zones:

I. LIGHTING POWER ALLOWANCE: COMPLETE BUILDING OR AREA CATEGORY METHODS

Each area complying using the Complete Building or Area Category Methods per §140.6(b) are included in this table. Column 06 indicates if additional lighting power allowances per §140.6(c) or adjustments per §140.6(a) are being used .

Conditioned Spaces

01	02	03	04	05	06	
Area Description	Complete Building or Area Category Primary Function Area	Allowed Density (W/ft²)	Area (ft²)	Allowed Wattage (Watts)	Additional Allowance / Adjustment	
					Area Category	PAF
Storage	All Other Space Types	0.4	195	78	No	No
Restrooms	Restrooms	0.65	978	635.7	No	No
Locker Rooms	Locker Dressing Room	0.45	564	253.8	No	No
Office < 250	Office 250 square feet or less	0.7	149	104.3	No	No
Lobby	Main Entry Lobby	0.85	163	138.5	No	No
Classroom	Classroom, Lecture, or Training Vocational Area	0.7	867	606.9	No	No
Electrical/ Data Room	Electrical Mechancial Telephone Room	0.4	127	50.8	No	No
Concession	Kitchen/ Food Preparation Area	0.95	152	144.4	No	No
	TOTALS:		3,195	2,012.4	See Tables J, or P for detail	

J. ADDITIONAL ALLOWANCE: AREA CATEGORY METHOD QUALIFYING LIGHTING SYSTEM

This section does not apply to this project.

Registration Number: | Registration Date/Time: | Registration Provider: Energysoft

CA Building Energy Efficiency Standards - 2019 Nonresidential Compliance | Report Version: 2019.1.003 Schema Version: rev 20200601 | Report Generated: 2022-08-17 15:55:38

STATE OF CALIFORNIA
Indoor Lighting
NRCC-LTI-E
CALIFORNIA ENERGY COMMISSION

CERTIFICATE OF COMPLIANCE		NRCC-LTI-E
Project Name:	Highland HS 50M Pool and Aquatics Center	**Report Page:** (Page 5 of 7)
Project Address:	39055 25th St W	**Date Prepared:** 8/17/2022

K. TAILORED METHOD GENERAL LIGHTING POWER ALLOWANCE

This section does not apply to this project.

L. ADDITIONAL LIGHTING ALLOWANCE: TAILORED WALL DISPLAY

This section does not apply to this project.

M. ADDITIONAL LIGHTING ALLOWANCE: TAILORED FLOOR AND TASK LIGHTING

This section does not apply to this project.

N. ADDITIONAL LIGHTING ALLOWANCE: TAILORED ORNAMENTAL/SPECIAL EFFECTS

This section does not apply to this project.

O. ADDITIONAL LIGHTING ALLOWANCE: TAILORED VERY VALUABLE MERCHANDISE

This section does not apply to this project.

P. POWER ADJUSTMENT: LIGHTING CONTROL CREDIT (POWER ADJUSTMENT FACTOR (PAF))

This section does not apply to this project.

Q. RATED POWER REDUCTION COMPLIANCE FOR ALTERATIONS

This section does not apply to this project.

R. 80% LIGHTING POWER FOR ALL ALTERATIONS - CONTROLS EXCEPTIONS

This section does not apply to this project.

S. DAYLIGHT DESIGN POWER ADJUSTMENT FACTOR (PAF)

This section does not apply to this project.

Registration Number: | Registration Date/Time: | Registration Provider: Energysoft

CA Building Energy Efficiency Standards - 2019 Nonresidential Compliance | Report Version: 2019.1.003 Schema Version: rev 20200601 | Report Generated: 2022-08-17 15:55:38

STATE OF CALIFORNIA
Indoor Lighting
NRCC-LTI-E
CALIFORNIA ENERGY COMMISSION

CERTIFICATE OF COMPLIANCE		NRCC-LTI-E
Project Name:	Highland HS 50M Pool and Aquatics Center	**Report Page:** (Page 6 of 7)
Project Address:	39055 25th St W	**Date Prepared:** 8/17/2022

T. DECLARATION OF REQUIRED CERTIFICATES OF INSTALLATION

Selections have been made based on information provided in this document. If any selection have been changed by permit applicant, an explanation should be included in Table E. Additional Remarks. These documents must be provided to the building inspector during construction and can be found online at https://www.energy.ca.gov/title24/2019standards/2019_compliance_documents/Nonresidential_Documents/NRCI/

Form/Title	Field Inspector	
	Pass	Fail
NRCI-LTI-01-E - Must be submitted for all buildings	☐	☐

U. DECLARATION OF REQUIRED CERTIFICATES OF ACCEPTANCE

Selections have been made based on information provided in this document. If any selection have been changed by the permit applicant, an explanation should be included in Table E. Additional Remarks. These documents must be provided to the building inspector during construction and any with "-A" in the form name must be completed through an Acceptance Test Technician Certification Provider (ATTCP). For more information visit: http://www.energy.ca.gov/title24/attcp/providers.html

Form/Title	Systems/Spaces To Be Field Verified	Field Inspector	
		Pass	Fail
NRCA-LTI-02-A - Must be submitted for occupancy sensors and automatic time switch controls.	☐	☐	
NRCA-LTI-03-A - Must be submitted for automatic daylight controls.	☐	☐	
NRCA-LTI-04-A - Must be submitted for demand responsive lighting controls.	☐	☐	

Registration Number: | Registration Date/Time: | Registration Provider: Energysoft

CA Building Energy Efficiency Standards - 2019 Nonresidential Compliance | Report Version: 2019.1.003 Schema Version: rev 20200601 | Report Generated: 2022-08-17 15:55:38

STATE OF CALIFORNIA
Indoor Lighting
NRCC-LTI-E
CALIFORNIA ENERGY COMMISSION

CERTIFICATE OF COMPLIANCE		NRCC-LTI-E
Project Name:	Highland HS 50M Pool and Aquatics Center	**Report Page:** (Page 7 of 7)
Project Address:	39055 25th St W	**Date Prepared:** 8/17/2022

DOCUMENTATION AUTHOR'S DECLARATION STATEMENT

I certify that this Certificate of Compliance documentation is accurate and complete.

Documentation Author Name:	Documentation Author Signature:
Company: tk1sc	Signature Date: 2022-08-17
Address:	CEA/ HERS Certification Identification (if applicable):
City/State/Zip:	Phone:

RESPONSIBLE PERSON'S DECLARATION STATEMENT

I certify the following under penalty of perjury, under the laws of the State of California:

1. The information provided on this Certificate of Compliance is true and correct.
2. I am eligible under Division 3 of the Business and Professions Code to accept responsibility for the building design or system design identified on this Certificate of Compliance (responsible designer)
3. The energy features and performance specifications, materials, components, and manufactured devices for the building design or system design identified on this Certificate of Compliance conform to the requirements of Title 24, Part 1 and Part 6 of the California Code of Regulations.
4. The building design features or system design features identified on this Certificate of Compliance are consistent with the information provided on other applicable compliance documents, worksheets, calculations, plans and specifications submitted to the enforcement agency for approval with this building permit application.
5. I will ensure that a completed signed copy of this Certificate of Compliance shall be made available with the building permit(s) issued for the building, and made available to the enforcement agency for all applicable inspections. I understand that a completed signed copy of this Certificate of Compliance is required to be included with the documentation the builder provides to the building owner at occupancy.

Responsible Designer Name: Ray W. Swartz	Responsible Designer Signature:
Company: tk1sc	Date Signed: 2022-08-17
Address: 15231 Laguna Canyon Road	License: E15610
City/State/Zip: Irvine CA 92618	Phone:

Registration Number: | Registration Date/Time: | Registration Provider: Energysoft

CA Building Energy Efficiency Standards - 2019 Nonresidential Compliance | Report Version: 2019.1.003 Schema Version: rev 20200601 | Report Generated: 2022-08-17 15:55:38

TITLE 24 PROCEDURES FOR TESTING AND ADJUSTING

CONTRACTOR SHALL BE RESPONSIBLE FOR ALL WORK ASSOCIATED WITH FINAL INSPECTION AND APPLICABLE ACCEPTANCE REQUIREMENT PROCEDURES. INCLUDE ALL COSTS IN THE BASE BID. THIS SHALL INCLUDE, BUT NOT BE LIMITED TO, CONSTRUCTION INSPECTION, MEASUREMENTS, MONITORING, FUNCTIONAL TESTING, CALIBRATING, ETC. CONTRACTOR SHALL ASSUME THE ROLE OF "FIELD TECHNICIAN" AND "RESPONSIBLE PERSON" AS DEFINED IN STATE OF CALIFORNIA 2019 BUILDING ENERGY EFFICIENCY STANDARDS NONRESIDENTIAL COMPLIANCE MANUAL SECTIONS 13.1.2.2 AND 13.1.2.3.

LIGHTING CONTROL ACCEPTANCE TESTING AND ADJUSTING PROCEDURES – REFER TO **NRCA–LTI–02–A** DOCUMENTS.

AUTOMATIC DAYLIGHT CONTROL ACCEPTANCE TESTING AND ADJUSTING PROCEDURES – REFER TO **NRCA–LTI–03–A** DOCUMENTS.

DEMAND RESPONSE LIGHTING CONTROL ACCEPTANCE TESTING AND ADJUSTING PROCEDURES – REFER TO **NRCA–LTI–04–A** DOCUMENTS.

INSTITUTIONAL TUNING PAF ACCEPTANCE TESTING AND ADJUSTING PROCEDURES – REFER TO **NRCA–LTI–05–A** DOCUMENTS.

OUTDOOR LIGHTING CONTROL ACCEPTANCE TESTING AND ADJUSTING PROCEDURES – REFER TO **NRCA–LTO–02–A** DOCUMENTS.

ALL LIGHTING CONTROLS TESTING AND ADJUSTING DOCUMENTS NOTED ABOVE ARE AVAILABLE FROM THE CALIFORNIA ENERGY COMMISSION WEB SITE AT: https://ww2.energy.ca.gov/title24/2019standards/2019_compliance_documents/Nonresidential_Documents/NRCA/

TITLE 24 GENERAL NOTE

CONTRACTOR SHALL BE RESPONSIBLE FOR ALL WORK ASSOCIATED WITH FINAL INSPECTION AND APPLICABLE ACCEPTANCE REQUIREMENT PROCEDURES. INCLUDE ALL COSTS IN THE BASE BID. THIS SHALL INCLUDE, BUT NOT BE LIMITED TO, CONSTRUCTION INSPECTION, MEASUREMENTS, MONITORING, FUNCTIONAL TESTING, CALIBRATING, ETC. CONTRACTOR SHALL ASSUME THE ROLE OF "FIELD TECHNICIAN" AND "RESPONSIBLE PERSON" AS DEFINED IN STATE OF CALIFORNIA 2019 BUILDING ENERGY EFFICIENCY STANDARDS NONRESIDENTIAL COMPLIANCE MANUAL SECTIONS 13.1.2.2 AND 13.1.2.3.

SEE STATE OF CALIFORNIA 2019 BUILDING ENERGY EFFICIENCY STANDARDS SECTIONS 10-103(a)3A AND 10-103(a)3B AND SECTION 130.4 FOR MORE INFORMATION.

SEE STATE OF CALIFORNIA 2019 BUILDING ENERGY EFFICIENCY STANDARDS NONRESIDENTIAL COMPLIANCE MANUAL CHAPTER 13 FOR MORE DETAILED REQUIREMENTS / INFORMATION.

SEE STATE OF CALIFORNIA 2019 BUILDING ENERGY EFFICIENCY STANDARDS RESIDENTIAL COMPLIANCE MANUAL CHAPTER 2 FOR MORE DETAILED REQUIREMENTS / INFORMATION.

PROVIDE COMPLETED INSTALLATION CERTIFICATE(S) AND CERTIFICATE(S) OF ACCEPTANCE AS REQUIRED TO THE SATISFACTION OF THE ENFORCEMENT AGENCY.

IDENTIFICATION STAMP
DIV. OF THE STATE ARCHITECT
APP: 03-122664 INC:
REVIEWED FOR
SS ☑ FLS ☑ ACS ☑
DATE: 05/12/2023

pjhm architects
Web: pjhm.com
OC Office: 24461 Ridge Route Drive #100, Laguna Hills, CA • 92653 Phone: 760.730.5557
LA Office: 837 Traction Avenue, #410, Los Angeles, CA • 90013 Phone: 213.278.0112

LICENSED ARCHITECT
RICHARD W. RIDDELL
REN. 02/25
STATE OF CALIFORNIA

tk1sc COLLABORATIVE
11870 Pierce Street, Suite 160
Riverside, California 92505
951.299.4160 www.tk1sc.com
Project Leader - Nikolas Bruno
Electrical Lead - Nikolas Bruno
tk1sc Job #: B2202744.000

REGISTERED PROFESSIONAL ENGINEER
RAYMOND W. SWARTZ
No. E15610
ELECTRICAL
STATE OF CALIFORNIA

HIGHLAND HIGH SCHOOL
50M POOL & AQUATICS CENTER
KERN HIGH SCHOOL DISTRICT
SD Office: 804 Pier View Way #103, Oceanside, CA • 92054 Phone: 949.496.6195

TITLE 24 - INTERIOR
E-7.4

8/2/2022 11:34:37 AM

STATE OF CALIFORNIA
Indoor Lighting
NRCC-LTI-E — CALIFORNIA ENERGY COMMISSION

CERTIFICATE OF COMPLIANCE			NRCC-LTI-E
Project Name:	Highland HS 50M Pool and Aquatics Center	Report Page:	(Page 5 of 7)
Project Address:	39055 25th St W	Date Prepared:	9/12/2022

O. ADDITIONAL LIGHTING ALLOWANCE: TAILORED VERY VALUABLE MERCHANDISE

This section does not apply to this project.

P. POWER ADJUSTMENT: LIGHTING CONTROL CREDIT (POWER ADJUSTMENT FACTOR (PAF))

This section does not apply to this project.

Q. RATED POWER REDUCTION COMPLIANCE FOR ALTERATIONS

This section does not apply to this project.

R. 80% LIGHTING POWER FOR ALL ALTERATIONS - CONTROLS EXCEPTIONS

This section does not apply to this project.

S. DAYLIGHT DESIGN POWER ADJUSTMENT FACTOR (PAF)

This section does not apply to this project.

T. DECLARATION OF REQUIRED CERTIFICATES OF INSTALLATION

Selections have been made based on information provided in this document. If any selection have been changed by permit applicant, an explanation should be included in Table E. Additional Remarks. These documents must be provided to the building inspector during construction and can be found online at https://www.energy.ca.gov/title24/2019standards/2019_compliance_documents/Nonresidential_Documents/NRCI/

Form/Title	Field Inspector	
	Pass	Fail
NRCI-LTI-01-E - Must be submitted for all buildings	☐	☐

STATE OF CALIFORNIA
Indoor Lighting
NRCC-LTI-E — CALIFORNIA ENERGY COMMISSION

CERTIFICATE OF COMPLIANCE			NRCC-LTI-E
Project Name:	Highland HS 50M Pool and Aquatics Center	Report Page:	(Page 3 of 7)
Project Address:	39055 25th St W	Date Prepared:	9/12/2022

H. INDOOR LIGHTING CONTROLS (Not including PAFs)

*This table includes lighting controls for conditioned and unconditioned spaces. When a control having a * is shown, the notes section of this table provides more detail on how compliance is achieved. The lighting controls section of the Compliance Summary Table on the first page will show "DOES NOT COMPLY" if the notes are left blank.*

Building Level Controls

01	02	03	
Mandatory Demand Response §110.12(c)	Shut-off controls §130.1(c)	Field Inspector	
		Pass	Fail
Required > 10,000 SF	Whole Building Auto Time Switch	☐	☐

Area Level Controls

04	05	06	07	08	09	10	11	12	
Area Description	Complete Building or Area Category Primary Function Area	Area Controls §130.1(a)	Multi-Level Controls §130.1(b)	Shut-Off Controls §130.1(c)	Primary/Sky lit Daylighting §130.1(d)	Secondary Daylighting §140.6(d)	Interlocked Systems §140.6(a)1	Field Inspector	
								Pass	Fail
Storage	All Other Space Types	Manual ON/OFF	Dimmer	Occupancy Sensor	Included	Included	No	☐	☐
Restrooms	Restrooms	Manual ON/OFF	Dimmer	Occupancy Sensor	Included	Included	No	☐	☐
Locker Rooms	Locker Dressing Room	Manual ON/OFF	Dimmer	Occupancy Sensor	Included	Included	No	☐	☐
Office < 250	Office 250 square feet or less	Manual ON/OFF	Dimmer	Occupancy Sensor	Included	Included	No	☐	☐
Lobby	Main Entry Lobby	Manual ON/OFF	Dimmer	Occupancy Sensor	Included	Included	No	☐	☐
Classroom	Classroom, Lecture, or Training Vocational Area	Manual ON/OFF	Dimmer	Occupancy Sensor	Included	Included	No	☐	☐
Electrical Room	Electrical Mechancial Telephone Room	Manual ON/OFF	Dimmer	Occupancy Sensor	Included	Included	No	☐	☐
Concession	Kitchen/ Food Preparation Area	Manual ON/OFF	Dimmer	Occupancy Sensor	Included	Included	No	☐	☐

STATE OF CALIFORNIA
Indoor Lighting
NRCC-LTI-E — CALIFORNIA ENERGY COMMISSION

CERTIFICATE OF COMPLIANCE			NRCC-LTI-E
Project Name:	Highland HS 50M Pool and Aquatics Center	Report Page:	(Page 1 of 7)
Project Address:	39055 25th St W	Date Prepared:	9/12/2022

This document is used to demonstrate compliance with requirements in §110.9, §110.12(c), §130.0, §130.1, §140.6 and §141.0(b)2 for indoor lighting scopes using the prescriptive path.

A. GENERAL INFORMATION

01	Project Location (city)	Palmdale	04	Total Conditioned Floor Area (ft²)	1,440
02	Climate Zone	14	05	Total Unconditioned Floor Area (ft²)	0
03	Occupancy Types Within Project (select all that apply):		06	# of Stories (Habitable Above Grade)	1

● : See Table I

B. PROJECT SCOPE

This table includes any lighting systems that are within the scope of the permit application and are demonstrating compliance using the prescriptive path outlined in §140.6 or §141.0(b)2 for alterations.

Scope of Work	Conditioned Spaces		Unconditioned Spaces	
01	02	03	04	05
My Project Consists of (check all that apply):	Calculation Method	Area (ft²)	Calculation Method	Area (ft²)
☒ New Lighting System	Area Category Method	1440	Area Category Method	0
☐ New Lighting System - Parking Garage				
Total Area of Work (ft²)	1440		0	

C. COMPLIANCE RESULTS

If any cell on this table says "DOES NOT COMPLY" or "COMPLIES with Exceptional Conditions" refer to Table D. for guidance.

	Allowed Lighting Power per §140.6(b) (Watts)						Adjusted Lighting Power per §140.6(a) (Watts)					Compliance Results
Lighting in conditioned and unconditioned spaces must not be combined for compliance per §140.6(b)1	01 Complete Building §140.6(c)1 (See Table I)	02 Area Category §140.6(c)2 (See Table I)	03 Area Category Additional §140.6(c)2G (+) (See Table J)	04 Tailored §140.6(c)3 (+) (See Table K)	=	05 **Total Allowed** (Watts)	≥	06 Total Designed (Watts) (See Table F)	07 Adjustments PAF Lighting Control Credits §140.6(a)2 (-) (See Table P)	=	08 **Total Adjusted** (Watts) *Includes Adjustments	09 **05 must be >= 08 §140.6**
Conditioned		576	0		=	576	≥	120	0	=	120	COMPLIES
Unconditioned					=		≥			=		

STATE OF CALIFORNIA
Indoor Lighting
NRCC-LTI-E — CALIFORNIA ENERGY COMMISSION

CERTIFICATE OF COMPLIANCE			NRCC-LTI-E
Project Name:	Highland HS 50M Pool and Aquatics Center	Report Page:	(Page 6 of 7)
Project Address:	39055 25th St W	Date Prepared:	9/12/2022

U. DECLARATION OF REQUIRED CERTIFICATES OF ACCEPTANCE

Selections have been made based on information provided in this document. If any selection have been changed by the permit applicant, an explanation should be included in Table E. Additional Remarks. These documents must be provided to the building inspector during construction and any with "-A" in the form name must be completed through an Acceptance Test Technician Certification Provider (ATTCP). For more information visit: http://www.energy.ca.gov/title24/attcp/providers.html

Form/Title	Systems/Spaces To Be Field Verified		Field Inspector	
			Pass	Fail
NRCA-LTI-02-A - Must be submitted for occupancy sensors and automatic time switch controls.	☐	☐		
NRCA-LTI-03-A - Must be submitted for automatic daylight controls.	☐	☐		
NRCA-LTI-04-A - Must be submitted for demand responsive lighting controls.	☐	☐		

STATE OF CALIFORNIA
Indoor Lighting
NRCC-LTI-E — CALIFORNIA ENERGY COMMISSION

CERTIFICATE OF COMPLIANCE			NRCC-LTI-E
Project Name:	Highland HS 50M Pool and Aquatics Center	Report Page:	(Page 4 of 7)
Project Address:	39055 25th St W	Date Prepared:	9/12/2022

H. INDOOR LIGHTING CONTROLS (Not including PAFs)

*NOTES: Controls with a * require a note in the space below explaining how compliance is achieved. *EX: Conference 1: Primary/Skylight Daylighting: Exempt because less than 120 watts of general lighting; EXCEPTION 1 to §130.1(d)2*	13 Plan Sheet Showing Daylit Zones:

I. LIGHTING POWER ALLOWANCE: COMPLETE BUILDING OR AREA CATEGORY METHODS

Each area complying using the Complete Building or Area Category Methods per §140.6(b) are included in this table. Column 06 indicates if additional lighting power allowances per §140.6(c) or adjustments per §140.6(a) are being used .

Conditioned Spaces

01	02	03	04	05	06	
Area Description	Complete Building or Area Category Primary Function Area	Allowed Density (W/ft²)	Area (ft²)	Allowed Wattage (Watts)	Additional Allowance / Adjustment	
					Area Category	PAF
Storage	All Other Space Types	0.4	1,440	576	No	No
		TOTALS:	1,440	576	See Tables J, or P for detail	

J. ADDITIONAL ALLOWANCE: AREA CATEGORY METHOD QUALIFYING LIGHTING SYSTEM

This section does not apply to this project.

K. TAILORED METHOD GENERAL LIGHTING POWER ALLOWANCE

This section does not apply to this project.

L. ADDITIONAL LIGHTING ALLOWANCE: TAILORED WALL DISPLAY

This section does not apply to this project.

M. ADDITIONAL LIGHTING ALLOWANCE: TAILORED FLOOR AND TASK LIGHTING

This section does not apply to this project.

N. ADDITIONAL LIGHTING ALLOWANCE: TAILORED ORNAMENTAL/SPECIAL EFFECTS

This section does not apply to this project.

STATE OF CALIFORNIA
Indoor Lighting
NRCC-LTI-E — CALIFORNIA ENERGY COMMISSION

CERTIFICATE OF COMPLIANCE			NRCC-LTI-E
Project Name:	Highland HS 50M Pool and Aquatics Center	Report Page:	(Page 2 of 7)
Project Address:	39055 25th St W	Date Prepared:	9/12/2022

C. COMPLIANCE RESULTS

Controls Compliance (See Table H for Details)	COMPLIES
Rated Power Reduction Compliance (See Table Q for Details)	

D. EXCEPTIONAL CONDITIONS

This table is auto-filled with uneditable comments because of selections made or data entered in tables throughout the form.

E. ADDITIONAL REMARKS

This table includes remarks made by the permit applicant to the Authority Having Jurisdiction.

F. INDOOR LIGHTING FIXTURE SCHEDULE

This table includes all permanent designed lighting and all portable lighting in offices.

Designed Wattage: Conditioned Spaces

01	02	03	04	05	06	07	08	09	10	
Name or Item Tag	Complete Luminaire Description	Modular (Track) Fixture	Small Aperture & Color Change[1]	Watts per luminaire[2]	How is Wattage determined	Total Number of Luminaires	Excluded per §140.6(a)3	Design Watts	Field Inspector	
									Pass	Fail
2	2 - Pendant	No	No	40	Mfr. Spec	2	No	80	☐	☐
6	2 - Pendant	No	No	40	Mfr. Spec	1	No	40	☐	☐
					Total Designed Watts: CONDITIONED SPACES			120		

[1] *FOOTNOTE: Design Watts for small aperture and color changing luminaires which qualify per §140.6(a)4B is adjusted to be 75% of their rated wattage. Table F automatically makes this adjustment, the permit applicant should enter full rated wattage in column 05.*

[2] *Authority Having Jurisdiction may ask for Luminaire cut sheets to confirm wattage used for compliance per §130.0(c) Wattage used must be the maximum rated for the luminaire, not the lamp.*

G. MODULAR LIGHTING SYSTEMS

This section does not apply to this project.

STATE OF CALIFORNIA
Indoor Lighting
NRCC-LTI-E — CALIFORNIA ENERGY COMMISSION

CERTIFICATE OF COMPLIANCE			NRCC-LTI-E
Project Name:	Highland HS 50M Pool and Aquatics Center	Report Page:	(Page 7 of 7)
Project Address:	39055 25th St W	Date Prepared:	9/12/2022

DOCUMENTATION AUTHOR'S DECLARATION STATEMENT

I certify that this Certificate of Compliance documentation is accurate and complete.

Documentation Author Name:	Documentation Author Signature:
Company: tk1sc	Signature Date: 2022-09-12
Address:	CEA/ HERS Certification Identification (if applicable):
City/State/Zip:	Phone:

RESPONSIBLE PERSON'S DECLARATION STATEMENT

I certify the following under penalty of perjury, under the laws of the State of California:

1. The information provided on this Certificate of Compliance is true and correct.
2. I am eligible under Division 3 of the Business and Professions Code to accept responsibility for the building design or system design identified on this Certificate of Compliance (responsible designer)
3. The energy features and performance specifications, materials, components, and manufactured devices for the building design or system design identified on this Certificate of Compliance conform to the requirements of Title 24, Part 1 and Part 6 of the California Code of Regulations.
4. The building design features or system design features identified on this Certificate of Compliance are consistent with the information provided on other applicable compliance documents, worksheets, calculations, plans and specifications submitted to the enforcement agency for approval with this building permit application.
5. I will ensure that a completed signed copy of this Certificate of Compliance shall be made available with the building permit(s) issued for the building, and made available to the enforcement agency for all applicable inspections. I understand that a completed signed copy of this Certificate of Compliance is required to be included with the documentation the builder provides to the building owner at occupancy.

Responsible Designer Name: Ray W. Swartz	Responsible Designer Signature:
Company: tk1sc	Date Signed: 2022-09-12
Address: 15231 Laguna Canyon Road	License: E15610
City/State/Zip: Irvine CA 92618	Phone:

8/2/2022 11:34:37 AM

TITLE 24 PROCEDURES FOR TESTING AND ADJUSTING

CONTRACTOR SHALL BE RESPONSIBLE FOR ALL WORK ASSOCIATED WITH FINAL INSPECTION AND APPLICABLE ACCEPTANCE REQUIREMENT PROCEDURES. INCLUDE ALL COSTS IN THE BASE BID. THIS SHALL INCLUDE, BUT NOT BE LIMITED TO, CONSTRUCTION INSPECTION, MEASUREMENTS, MONITORING, FUNCTIONAL TESTING, CALIBRATING, ETC. CONTRACTOR SHALL ASSUME THE ROLE OF "FIELD TECHNICIAN" AND "RESPONSIBLE PERSON" AS DEFINED IN STATE OF CALIFORNIA 2019 BUILDING ENERGY EFFICIENCY STANDARDS NONRESIDENTIAL COMPLIANCE MANUAL SECTIONS 13.1.2.2 AND 13.1.2.3.

LIGHTING CONTROL ACCEPTANCE TESTING AND ADJUSTING PROCEDURES – REFER TO **NRCA-LTI-02-A** DOCUMENTS.

AUTOMATIC DAYLIGHT CONTROL ACCEPTANCE TESTING AND ADJUSTING PROCEDURES – REFER TO **NRCA-LTI-03-A** DOCUMENTS.

DEMAND RESPONSE LIGHTING CONTROL ACCEPTANCE TESTING AND ADJUSTING PROCEDURES – REFER TO **NRCA-LTI-04-A** DOCUMENTS.

INSTITUTIONAL TUNING PAF ACCEPTANCE TESTING AND ADJUSTING PROCEDURES – REFER TO **NRCA-LTI-05-A** DOCUMENTS.

OUTDOOR LIGHTING CONTROL ACCEPTANCE TESTING AND ADJUSTING PROCEDURES – REFER TO **NRCA-LTO-02-A** DOCUMENTS.

ALL LIGHTING CONTROLS TESTING AND ADJUSTING DOCUMENTS NOTED ABOVE ARE AVAILABLE FROM THE CALIFORNIA ENERGY COMMISSION WEB SITE AT:
https://ww2.energy.ca.gov/title24/2019standards/2019_compliance_documents/Nonresidential_Documents/NRCA/

TITLE 24 GENERAL NOTE

CONTRACTOR SHALL BE RESPONSIBLE FOR ALL WORK ASSOCIATED WITH FINAL INSPECTION AND APPLICABLE ACCEPTANCE REQUIREMENT PROCEDURES. INCLUDE ALL COSTS IN THE BASE BID. THIS SHALL INCLUDE, BUT NOT BE LIMITED TO, CONSTRUCTION INSPECTION, MEASUREMENTS, MONITORING, FUNCTIONAL TESTING, CALIBRATING, ETC. CONTRACTOR SHALL ASSUME THE ROLE OF "FIELD TECHNICIAN" AND "RESPONSIBLE PERSON" AS DEFINED IN STATE OF CALIFORNIA 2019 BUILDING ENERGY EFFICIENCY STANDARDS NONRESIDENTIAL COMPLIANCE MANUAL SECTIONS 13.1.2.2 AND 13.1.2.3.

SEE STATE OF CALIFORNIA 2019 BUILDING ENERGY EFFICIENCY STANDARDS SECTIONS 10-103(a)3A AND 10-103(a)3B AND SECTION 130.4 FOR MORE INFORMATION.

SEE STATE OF CALIFORNIA 2019 BUILDING ENERGY EFFICIENCY STANDARDS NONRESIDENTIAL COMPLIANCE MANUAL CHAPTER 13 FOR MORE DETAILED REQUIREMENTS / INFORMATION.

SEE STATE OF CALIFORNIA 2019 BUILDING ENERGY EFFICIENCY STANDARDS RESIDENTIAL COMPLIANCE MANUAL CHAPTER 2 FOR MORE DETAILED REQUIREMENTS / INFORMATION.

PROVIDE COMPLETED INSTALLATION CERTIFICATE(S) AND CERTIFICATE(S) OF ACCEPTANCE AS REQUIRED TO THE SATISFACTION OF THE ENFORCEMENT AGENCY.

IDENTIFICATION STAMP
DIV. OF THE STATE ARCHITECT
APP: 03-122664 INC:
REVIEWED FOR
SS ☑ FLS ☑ ACS ☑
DATE: 05/12/2023

pjhm architects
Web: pjhm.com
Phone: 213.278.0112
Oceanside, CA 92054 Phone: 760.730.5557 LA Office: 837 Traction Avenue, #410, Los Angeles, CA 90013

LICENSED ARCHITECT
RICHARD W. RIDDELL
No. C15585
REN. 02/25
STATE OF CALIFORNIA

tk1sc COLLABORATIVE
11870 Pierce Street, Suite 160
Riverside, California 92505
951.299.4160 www.tk1sc.com
Project Leader - Nikolas Bruno
Electrical Lead - Nikolas Bruno
tk1sc Job #: B2202744.000

REGISTERED PROFESSIONAL ENGINEER
RAYMOND W. SWARTZ
No. E15610
REV 2 MAY 12, 2023
ELECTRICAL
STATE OF CALIFORNIA

HIGHLAND HIGH SCHOOL
50M POOL & AQUATICS CENTER
KERN HIGH SCHOOL DISTRICT
SD Office: 804 Pier View Way #103, Oceanside, CA 92054 Phone: 949.496.6135
OC Office: 24461 Ridge Route Drive #100, Laguna Hills, CA 92653 Phone: 760.215.3507

TITLE 24 – INTERIOR
E-7.5

STATE OF CALIFORNIA
Outdoor Lighting
NRCC-LTO-E — CALIFORNIA ENERGY COMMISSION

CERTIFICATE OF COMPLIANCE		NRCC-LTO-E
Project Name:	Highland HS 50M Pool and Aquatics Center	Report Page: (Page 1 of 6)
Project Address:	39055 25th St W	Date Prepared: 8/17/2022

A. GENERAL INFORMATION

01	Project Location (city)	Palmdale	04	Total Illuminated Hardscape Area (ft²)	1687
02	Climate Zone	14			
03	Outdoor Lighting Zone per Title 24 Part 1 §10.114 or as designated by Authority Having Jurisdiction (AHJ):				

☐ LZ-0: Very Low - Undeveloped Parkland ☐ LZ-2: Moderate - Rural Areas ☐ LZ-4: High - Must be reviewed by CA Energy Commission for Approval
☐ LZ-1: Low - Developed Parkland ☒ LZ-3: Moderately High - Urban Areas

B. PROJECT SCOPE

This table includes outdoor lighting systems that are within the scope of the permit application and are demonstrating compliance using the prescriptive path outlined in §140.7 or §141.0(b)2L for alterations.

My Project Consists of:

01	02
☒ New Lighting System	Must Comply with Allowances from §140.7
☐ Altered Lighting System	Is your alteration increasing the connected lighting load (Watts)? ○ Yes ○ No

03	04	05
% of Existing Luminaires Being Altered[1]	Sum Total of Luminaires Being Added or Altered	Calculation Method
☐ < 10% ☐ >= 10% and < 50% ☐ >= 50%		

Please proceed to Table F. Outdoor Lighting Fixture Schedule to define the project's luminaires.

[1] *FOOTNOTES: % of Existing Luminaires Being Altered = (Sum Total of Luminaires Being Added or Altered / Existing Luminaires within the Scope of the Permit Application) x 100.*

Registration Number: | Registration Date/Time: | Registration Provider: Energysoft

CA Building Energy Efficiency Standards - 2019 Nonresidential Compliance | Report Version: 2019.1.003 Schema Version: rev 20200601 | Report Generated: 2022-08-17 16:34:07

STATE OF CALIFORNIA
Outdoor Lighting
NRCC-LTO-E — CALIFORNIA ENERGY COMMISSION

CERTIFICATE OF COMPLIANCE		NRCC-LTO-E
Project Name:	Highland HS 50M Pool and Aquatics Center	Report Page: (Page 2 of 6)
Project Address:	39055 25th St W	Date Prepared: 8/17/2022

C. COMPLIANCE RESULTS

Results in this table are automatically calculated from data input and calculations in Tables F through I. Note: If any cell on this table says "COMPLIES with Exceptional Conditions" refer to Table D. Exceptional Conditions for guidance or see applicable Table referenced below.

Calculations of Total Allowed Lighting Power (Watts) §140.7 or §141.0(b)2L												Compliance Results		
01		02		03		04		05		06		07	08	09
General Hardscape Allowance §140.7(d)1 (See Table I)	+	Per Application §140.7(d)2 (See Table J)	+	Sales Frontage §140.7(d)2 (See Table K)	+	Ornamental §140.7(d)2 (See Table L)	+	Per Specific Area §140.7(d)2 (See Table M)	OR	Existing Power Allowance §141.0(b)2L (See Table N)	=	Total Allowed (Watts)	≥	Total Actual (Watts)	07 must be >= 08
456.18	+	---	+	---	+	---	+	---	OR	---	=	456.18	≥	160	COMPLIES
Cutoff Compliance (See Table G for Details)															N/A
Controls Compliance (See Table H for Details)															COMPLIES

D. EXCEPTIONAL CONDITIONS

This table is auto-filled with uneditable comments because of selections made or data entered in tables throughout the form.

E. ADDITIONAL REMARKS

This table includes remarks made by the permit applicant to the Authority Having Jurisdiction.

Registration Number: | Registration Date/Time: | Registration Provider: Energysoft

CA Building Energy Efficiency Standards - 2019 Nonresidential Compliance | Report Version: 2019.1.003 Schema Version: rev 20200601 | Report Generated: 2022-08-17 16:34:07

STATE OF CALIFORNIA
Outdoor Lighting
NRCC-LTO-E — CALIFORNIA ENERGY COMMISSION

CERTIFICATE OF COMPLIANCE		NRCC-LTO-E
Project Name:	Highland HS 50M Pool and Aquatics Center	Report Page: (Page 3 of 6)
Project Address:	39055 25th St W	Date Prepared: 8/17/2022

F. OUTDOOR LIGHTING FIXTURE SCHEDULE

For new or altered lighting systems demonstrating compliance with §140.7 all new luminaires being installed and any existing luminaires remaining or being moved within the spaces covered by the permit application are included in the Table below. For altered lighting systems using the Existing Power method per §141.0(b)2L only new luminaires being installed and replacement luminaires being installed as part of the project scope are included (ie, existing luminaires remaining or existing luminaires being moved are not included).

Designed Wattage:

01	02		03	04	05	06	07	08	09	10	
Name or Item Tag	Complete Luminaire Description		Watts per luminaire[1,2]	How is Wattage determined	Total number luminaires[2]	Luminaire Status[3]	Excluded per §140.7(a)	Design Watts	Cutoff Req. > 6,200 initial lumen output §130.2(b)[4]	Field Inspector	
										Pass	Fail
5	5 - 4' LONG LINEAR, SURFACE MOUNTED FIXT	☐ Linear	40	Mfr. Spec	4	New	☐	160	NA: < 6200 lumens	☐	☐
							Total Design Watts:		160		

[*] *NOTES: Selections with a * require a note in the space below explaining how compliance is achieved.*
EX: Luminaire is lighting a statue; EXCEPTION 2 to §130.2(b)

[1] *FOOTNOTES: Authority Having Jurisdiction may ask for Luminaire cut sheets to confirm wattage used for compliance per §130.0(c)*
[2] *For linear luminaires, wattage should be indicated as W/lf instead of Watts/luminaire. Total linear feet should be indicated in column 05 instead of number of luminaires.*
[3] *Select "New" for new luminaires in a new outdoor lighting project, or for added luminaires in an alteration. Select "Altered" for replacement luminaires in an alteration. Select "Existing to Remain" for existing luminaires within the project scope that are not being altered and are remaining. Select "Existing Reinstalled" for existing luminaires which are being removed and reinstalled as part of the project scope.*
[4] *Compliance with mandatory cutoff requirements is required for luminaires with initial lumen output >= 6,200 unless exempted by §130.2(b)*

G. CUTOFF REQUIREMENTS (BUG)

This section does not apply to this project.

Registration Number: | Registration Date/Time: | Registration Provider: Energysoft

CA Building Energy Efficiency Standards - 2019 Nonresidential Compliance | Report Version: 2019.1.003 Schema Version: rev 20200601 | Report Generated: 2022-08-17 16:34:07

STATE OF CALIFORNIA
Outdoor Lighting
NRCC-LTO-E — CALIFORNIA ENERGY COMMISSION

CERTIFICATE OF COMPLIANCE		NRCC-LTO-E
Project Name:	Highland HS 50M Pool and Aquatics Center	Report Page: (Page 6 of 6)
Project Address:	39055 25th St W	Date Prepared: 8/17/2022

DOCUMENTATION AUTHOR'S DECLARATION STATEMENT

I certify that this Certificate of Compliance documentation is accurate and complete.

Documentation Author Name:	Documentation Author Signature:
Company: tk1sc	Signature Date:
Address:	CEA/ HERS Certification Identification (if applicable):
City/State/Zip:	Phone:

RESPONSIBLE PERSON'S DECLARATION STATEMENT

I certify the following under penalty of perjury, under the laws of the State of California:

1. The information provided on this Certificate of Compliance is true and correct.
2. I am eligible under Division 3 of the Business and Professions Code to accept responsibility for the building design or system design identified on this Certificate of Compliance (responsible designer)
3. The energy features and performance specifications, materials, components, and manufactured devices for the building design or system design identified on this Certificate of Compliance conform to the requirements of Title 24, Part 1 and Part 6 of the California Code of Regulations.
4. The building design features or system design features identified on this Certificate of Compliance are consistent with the information provided on other applicable compliance documents, worksheets, calculations, plans and specifications submitted to the enforcement agency for approval with this building permit application.
5. I will ensure that a completed signed copy of this Certificate of Compliance shall be made available with the building permit(s) issued for the building, and made available to the enforcement agency for all applicable inspections. I understand that a completed signed copy of this Certificate of Compliance is required to be included with the documentation the builder provides to the building owner at occupancy.

Responsible Designer Name: Ray W. Swartz	Responsible Designer Signature:
Company: tk1sc	Date Signed: 2022-08-17
Address: 15231 Laguna Canyon Road	License: E15610
City/State/Zip: Irvine CA 92618	Phone:

Registration Number: | Registration Date/Time: | Registration Provider: Energysoft

CA Building Energy Efficiency Standards - 2019 Nonresidential Compliance | Report Version: 2019.1.003 Schema Version: rev 20200601 | Report Generated: 2022-08-17 16:34:07

STATE OF CALIFORNIA
Outdoor Lighting
NRCC-LTO-E — CALIFORNIA ENERGY COMMISSION

CERTIFICATE OF COMPLIANCE		NRCC-LTO-E
Project Name:	Highland HS 50M Pool and Aquatics Center	Report Page: (Page 5 of 6)
Project Address:	39055 25th St W	Date Prepared: 8/17/2022

J. LIGHTING ALLOWANCE: PER APPLICATION

This section does not apply to this project.

K. LIGHTING ALLOWANCE: SALES FRONTAGE

This section does not apply to this project.

L. LIGHTING ALLOWANCE: ORNAMENTAL

This section does not apply to this project.

M. LIGHTING ALLOWANCE: PER SPECIFIC AREA

This section does not apply to this project.

N. EXISTING CONDITIONS POWER ALLOWANCE (alterations only)

This section does not apply to this project.

O. DECLARATION OF REQUIRED CERTIFICATES OF INSTALLATION

Selections have been made based on information provided in this document. If any selection have been changed by permit applicant, an explanation should be included in Table E. Additional Remarks. These documents must be provided to the building inspector during construction and can be found online at https://www.energy.ca.gov/title24/2019standards/2019_compliance_documents/Nonresidential_Documents/NRCI/

Form/Title	Field Inspector Pass	Field Inspector Fail
NRCI-LTO-01-E - Must be submitted for all buildings	☐	☐

P. DECLARATION OF REQUIRED CERTIFICATES OF ACCEPTANCE

There are no NRCA forms required for this project.

Registration Number: | Registration Date/Time: | Registration Provider: Energysoft

CA Building Energy Efficiency Standards - 2019 Nonresidential Compliance | Report Version: 2019.1.003 Schema Version: rev 20200601 | Report Generated: 2022-08-17 16:34:07

STATE OF CALIFORNIA
Outdoor Lighting
NRCC-LTO-E — CALIFORNIA ENERGY COMMISSION

CERTIFICATE OF COMPLIANCE		NRCC-LTO-E
Project Name:	Highland HS 50M Pool and Aquatics Center	Report Page: (Page 4 of 6)
Project Address:	39055 25th St W	Date Prepared: 8/17/2022

H. OUTDOOR LIGHTING CONTROLS

This table demonstrates compliance with controls requirements for all new or altered luminaires installed as part of the permit application. For alteration projects, luminaires which are existing to remain (ie untouched) and luminaires which are removed and reinstalled (wiring only) do not need to be included in this table even if they are within the spaces covered by the permit application.
*When an option having a * is selected, the notes section of this table must be completed. The lighting controls section of the Compliance Summary Table on the first page will show "DOES NOT COMPLY" if the notes are left blank.*

Mandatory Controls

01	02	03	04	05	
Area Description	Shut-Off §130.2(c)1	Auto-Schedule §130.2(c)2	Motion Sensor §130.2(c)3	Field Inspector Pass	Field Inspector Fail

[*] *NOTES: Controls with a * require a note in the space below explaining how compliance is achieved.*
EX: Not permitted by health & safety to be turned off; EXCEPTION 1 to §130.2(c)

I. LIGHTING POWER ALLOWANCE (per §140.7)

This table includes areas using allowance calculations per §140.7. General Hardscape Allowance is per Table 140.7-A while "Use it or lose it" Allowances are per Table 140.7-B . Indicate which allowances are being used to expand sections for user input. Luminaires that qualify for one of the "Use it or lose it" allowances shall not qualify for another "Use it or lose it" allowance.

	01			
☒ General Hardscape Allowance Table I (below)	"Use it or lose it" Allowance (select all that apply) (select all that apply) ☐ Per Application Table J	☐ Sales Frontage Table K	☐ Ornamental Table L	☐ Per Specific Area Table M

Calculated General Hardscape Lighting Power Allowance per Table 140.7-A (LZ 0, 1 & 4)

Calculated General Hardscape Lighting Power Allowance per Table 140.7-A (LZ 2 & 3)

02	03	04	05	06	07	08	9	10
		Area Wattage Allowance (AWA)			Area Wattage Allowance (AWA)			
Area Description	Surface Type	Illuminated Area (ft²)	Allowed Density (W/ft²)	Area Allowance (Watts)	Perimeter Length (lf)	Allowed Density (W/lf)	Linear Allowance (Watts)	Total General AWA + LWA (Watts)
Exterior	Asphalt	1687	0.025	42.2	256	0.2	64	106
							Initial Wattage Allowance for Entire Site (Watts):	350
							Total General Hardscape Allowance (Watts):	456

Registration Number: | Registration Date/Time: | Registration Provider: Energysoft

CA Building Energy Efficiency Standards - 2019 Nonresidential Compliance | Report Version: 2019.1.003 Schema Version: rev 20200601 | Report Generated: 2022-08-17 16:34:07

TITLE 24 PROCEDURES FOR TESTING AND ADJUSTING

CONTRACTOR SHALL BE RESPONSIBLE FOR ALL WORK ASSOCIATED WITH FINAL INSPECTION AND APPLICABLE ACCEPTANCE REQUIREMENT PROCEDURES. INCLUDE ALL COSTS IN THE BASE BID. THIS SHALL INCLUDE, BUT NOT BE LIMITED TO, CONSTRUCTION INSPECTION, MEASUREMENTS, MONITORING, FUNCTIONAL TESTING, CALIBRATING, ETC. CONTRACTOR SHALL ASSUME THE ROLE OF "FIELD TECHNICIAN" AND "RESPONSIBLE PERSON" AS DEFINED IN STATE OF CALIFORNIA 2019 BUILDING ENERGY EFFICIENCY STANDARDS NONRESIDENTIAL COMPLIANCE MANUAL SECTIONS 13.1.2.2 AND 13.1.2.3.

LIGHTING CONTROL ACCEPTANCE TESTING AND ADJUSTING PROCEDURES – REFER TO **NRCA–LTI–02–A** DOCUMENTS.

AUTOMATIC DAYLIGHT CONTROL ACCEPTANCE TESTING AND ADJUSTING PROCEDURES – REFER TO **NRCA–LTI–03–A** DOCUMENTS.

DEMAND RESPONSE LIGHTING CONTROL ACCEPTANCE TESTING AND ADJUSTING PROCEDURES – REFER TO **NRCA–LTI–04–A** DOCUMENTS.

INSTITUTIONAL TUNING PAF ACCEPTANCE TESTING AND ADJUSTING PROCEDURES – REFER TO **NRCA–LTI–05–A** DOCUMENTS.

OUTDOOR LIGHTING CONTROL ACCEPTANCE TESTING AND ADJUSTING PROCEDURES – REFER TO **NRCA–LTO–02–A** DOCUMENTS.

ALL LIGHTING CONTROLS TESTING AND ADJUSTING DOCUMENTS NOTED ABOVE ARE AVAILABLE FROM THE CALIFORNIA ENERGY COMMISSION WEB SITE AT:
https://ww2.energy.ca.gov/title24/2019standards/2019_compliance_documents/Nonresidential_Documents/NRCA/

TITLE 24 GENERAL NOTE

CONTRACTOR SHALL BE RESPONSIBLE FOR ALL WORK ASSOCIATED WITH FINAL INSPECTION AND APPLICABLE ACCEPTANCE REQUIREMENT PROCEDURES. INCLUDE ALL COSTS IN THE BASE BID. THIS SHALL INCLUDE, BUT NOT BE LIMITED TO, CONSTRUCTION INSPECTION, MEASUREMENTS, MONITORING, FUNCTIONAL TESTING, CALIBRATING, ETC. CONTRACTOR SHALL ASSUME THE ROLE OF "FIELD TECHNICIAN" AND "RESPONSIBLE PERSON" AS DEFINED IN STATE OF CALIFORNIA 2019 BUILDING ENERGY EFFICIENCY STANDARDS NONRESIDENTIAL COMPLIANCE MANUAL SECTIONS 13.1.2.2 AND 13.1.2.3.

SEE STATE OF CALIFORNIA 2019 BUILDING ENERGY EFFICIENCY STANDARDS SECTIONS 10–103(a)3A AND 10–103(a)3B AND SECTION 130.4 FOR MORE INFORMATION.

SEE STATE OF CALIFORNIA 2019 BUILDING ENERGY EFFICIENCY STANDARDS NONRESIDENTIAL COMPLIANCE MANUAL CHAPTER 13 FOR MORE DETAILED REQUIREMENTS / INFORMATION.

SEE STATE OF CALIFORNIA 2019 BUILDING ENERGY EFFICIENCY STANDARDS RESIDENTIAL COMPLIANCE MANUAL CHAPTER 2 FOR MORE DETAILED REQUIREMENTS / INFORMATION.

PROVIDE COMPLETED INSTALLATION CERTIFICATE(S) AND CERTIFICATE(S) OF ACCEPTANCE AS REQUIRED TO THE SATISFACTION OF THE ENFORCEMENT AGENCY.

IDENTIFICATION STAMP
DIV. OF THE STATE ARCHITECT
APP: 03-122664 INC:
REVIEWED FOR
SS ☑ FLS ☑ ACS ☑
DATE: 05/12/2023

pjhm architects
LICENSED ARCHITECT RAYMOND W. SWARTZ NO. C15585 REN. 02/25 STATE OF CALIFORNIA
tk1sc COLLABORATIVE
11870 Pierce Street, Suite 160
Riverside, California 92505
951.299.4160 www.tk1sc.com
Project Leader - Nikolas Bruno
Electrical Lead - Nikolas Bruno
tk1sc Job #: B2202744.000
REGISTERED PROFESSIONAL ENGINEER RAYMOND W. SWARTZ No. E15610 ELECTRICAL STATE OF CALIFORNIA
OC Office: 24461 Ridge Route Drive #100, Laguna Hills, CA • 92653 Phone: 949.496.6100 SD Office: 804 Pier View Way #103, Oceanside, CA • 92054 Phone: 760.730.5557 LA Office: 837 Traction Avenue, #410, Los Angeles, CA • 90013 Phone: 213.278.0172 Web: pjhm.com

HIGHLAND HIGH SCHOOL
50M POOL & AQUATICS CENTER
KERN HIGH SCHOOL DISTRICT

TITLE 24 – EXTERIOR

E–7.6

8/2/2022 11:34:37 AM

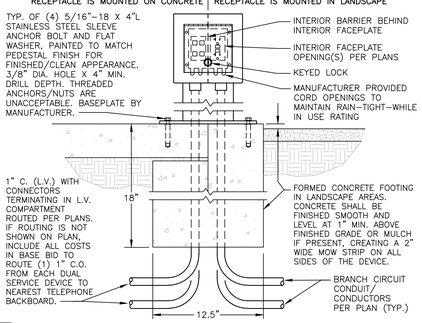

• DUAL SERVICE 'WP-C' SITE RECEPTACLE DETAIL 8

SCALE: N.T.S.

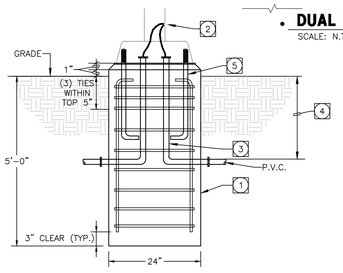

NOTE: MAX HEIGHT OF LIGHT POLE = 14'-0". MAX WEIGHT OF LIGHT FIXTURE = 35 LBS.

1. 2"-0" ø x 5'-0" EMBED. CONC. FTG. WITH (10) #6 VERT. AND #3 TIES @ 6" O.C.
2. BOND EQUIPMENT GROUND TO POLE.
3. BRANCH CIRCUIT CONDUIT PER SITE PLAN.
4. PROVIDE MINIMUM COVER OF 24" FROM FINISH GRADE.
5. POLE ANCHOR BOLTS PER MANUFACTURER SPEC'S.

POLE BASE 'A' DETAIL 10

SCALE: N.T.S. (NOT A PART OF DSA APPROVAL)

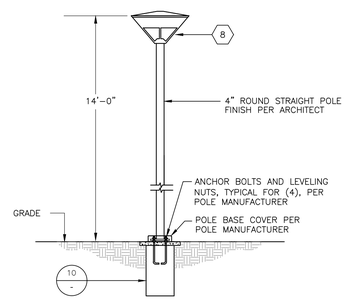

NOTE: POLES WITH TOTAL HEIGHTS LESS THAN 35' HIGH ARE NOT REQUIRED TO BE REVIEWED BY DSA.

POST TOP FIXTURE DETAIL 9

SCALE: N.T.S. (NOT A PART OF DSA APPROVAL)

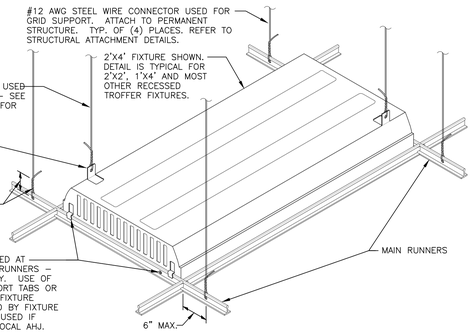

GENERAL NOTES:

1. INSTALLATION SHALL COMPLY WITH LATEST PUBLISHED EDITION OF THE "INTERPRETATION OR REGULATION MANUAL". IR 25-2 AS ISSUED BY THE DIVISION OF THE STATE ARCHITECT.
2. ATTACHMENT TO CEILING / STRUCTURE SHALL NOT AFFECT ASSEMBLY RATING.
3. FIXTURES @ LESS THAN 56 LBS: INSTALL 2#12 GA. SAFETY WIRES (SLACK). ONE ON EACH END OF FIXTURE DIAGONALLY OPPOSED AND CONNECTED TO STRUCTURE ABOVE.
4. FIXTURES @ 56 LBS OR GREATER: INSTALL 4#12 GA. SUPPORT WIRES (TAUT). ONE ON EACH CORNER OF FIXTURE CONNECTED TO STRUCTURE. WIRES SHALL SUPPORT (4) TIMES THE WEIGHT OF THE FIXTURE.
5. FIXTURES @ LESS THAN 56 LBS AND 4'X4' MIN IN SIZE: INSTALL 4#12 GA. SAFETY WIRES (SLACK) AT EACH CORNER OF THE FIXTURE.

FIXTURE SUPPORT DETAIL 11

SCALE: N.T.S.

EQUIPMENT MOUNTING SCHEDULE

NAME	NEMA/ MNTG.	DIMENSIONS H	W	D	WEIGHT POUNDS	MINIMUM NUMBER OF ANCHORS	SIZE OF ANCHORS *	MINIMUM EMBEDMENT
PANEL-BOARDS	1/W	48	20	6	200	PER DETAIL 3/E-8.0		
INVP	1/W	47	30	25	827	PER DETAIL 1/E-6.3		
MUSCO CNTRL CAB	1/W	48	24	12	140	PER DETAIL 3/E-8.0		
MUSCO AUX CAB	1/W	16	21	12	60	PER DETAIL 3/E-8.0		
SOUND SYS RACK	1/W	36	22	25	150	PER DETAIL 3/E-8.0		

* HILTI KWIK BOLT KB-TZ2 (ICC ESR 4266) USE EQUIVALENT STAINLESS STEEL ANCHOR AT EXTERIOR OR WET LOCATIONS

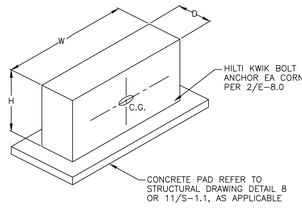

EQUIPMENT MOUNTING DETAIL 5

SCALE: N.T.S.

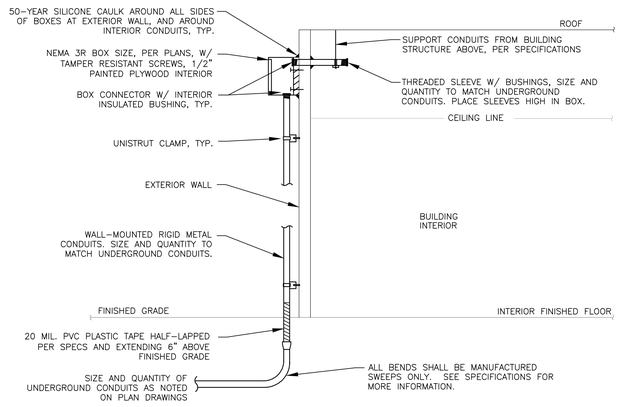

NOTES:

1. ALL BOXES/PLYWOOD TO BE SECURED TO BUILDING STRUCTURE USING MIN. ⅜" X 2" WALL ANCHORS/LAG BOLTS.
2. 50-YEAR SILICONE CAULK AROUND ALL PENETRATIONS, BOXES AND ALL THREADS AS REQUIRED.
3. SEAL ALL UNDERGROUND CONDUITS PER COMMUNICATION PATHWAY NOTES, GENERAL PROJECT NOTES, AND PROJECT SPECIFICATIONS.
4. SEE SPECIFICATIONS FOR MORE INFORMATION.

TYPICAL EXTERIOR JUNCTION BOX DETAIL 6

SCALE: N.T.S.

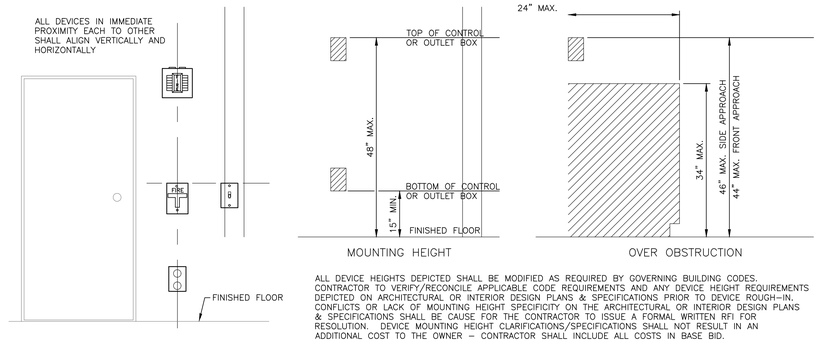

ALL DEVICE HEIGHTS DEPICTED SHALL BE MODIFIED AS REQUIRED BY GOVERNING BUILDING CODES. CONTRACTOR TO VERIFY/RECONCILE APPLICABLE CODE REQUIREMENTS AND ANY DEVICE HEIGHT REQUIREMENTS DEPICTED ON ARCHITECTURAL OR INTERIOR DESIGN PLANS & SPECIFICATIONS PRIOR TO DEVICE ROUGH-IN, CONFLICTS OR LACK OF MOUNTING HEIGHT SPECIFICITY ON THE ARCHITECTURAL OR INTERIOR DESIGN PLANS & SPECIFICATIONS SHALL BE CAUSE FOR THE CONTRACTOR TO ISSUE A FORMAL WRITTEN RFI FOR RESOLUTION. DEVICE MOUNTING HEIGHT CLARIFICATIONS/SPECIFICATIONS SHALL NOT RESULT IN AN ADDITIONAL COST TO THE OWNER - CONTRACTOR SHALL INCLUDE ALL COSTS IN BASE BID.

DEVICE ALIGNMENT & MOUNTING HEIGHT DETAILS 1

SCALE: N.T.S.

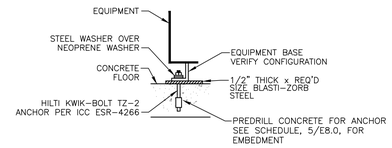

TYPICAL EQUIPMENT FLOOR MOUNTING DETAIL 2

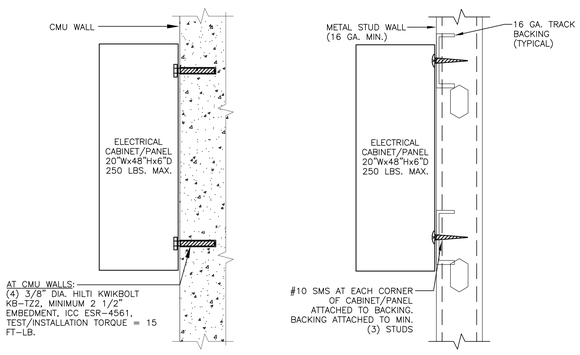

SURFACE PANEL MOUNTING 3

SCALE: N.T.S.

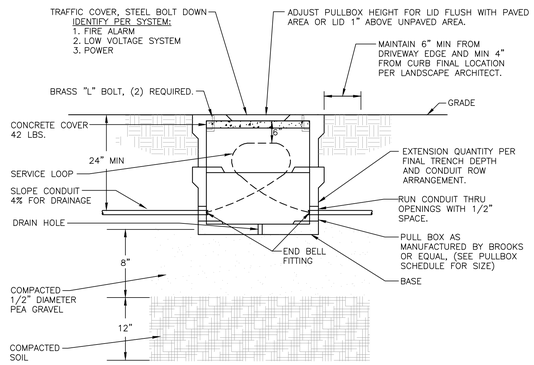

PULL BOX NOTES

1. ALL BOXES SHALL BE SET ON A MINIMUM 8" GRAVEL BASE WITH 1/2" DIAMETER PEA GRAVEL.
2. ALL INCIDENTAL CONCRETE SHALL BE REMOVED FROM BOXES.
3. PROVIDE WATERTIGHT SPLICES AND CAPS FOR POWER CONDUCTORS.
4. PROVIDE SEALING GEL IN ALL CONDUITS (BOTH W/ CONDUCTORS AND IN EMPTY SPARE CONDUITS.) THE GEL SHALL BE INSERTED IN THE CONDUIT TO A DEPTH OF 6" AND FLUSH W/ THE END OF THE CONDUIT. THE GEL SHALL BE MANUFACTURED BY 3M #4442 RE-ENTERABLE ENCAPSULANT.
5. PROVIDE IDENTIFYING TAGS ON ALL POWER AND COMMUNICATION CONDUCTORS IN PULLBOXES.
6. PULLBOX SHALL BE SIZED PER N.E.C. REQUIREMENTS.

PULL BOX DETAIL 4

SCALE: N.T.S.

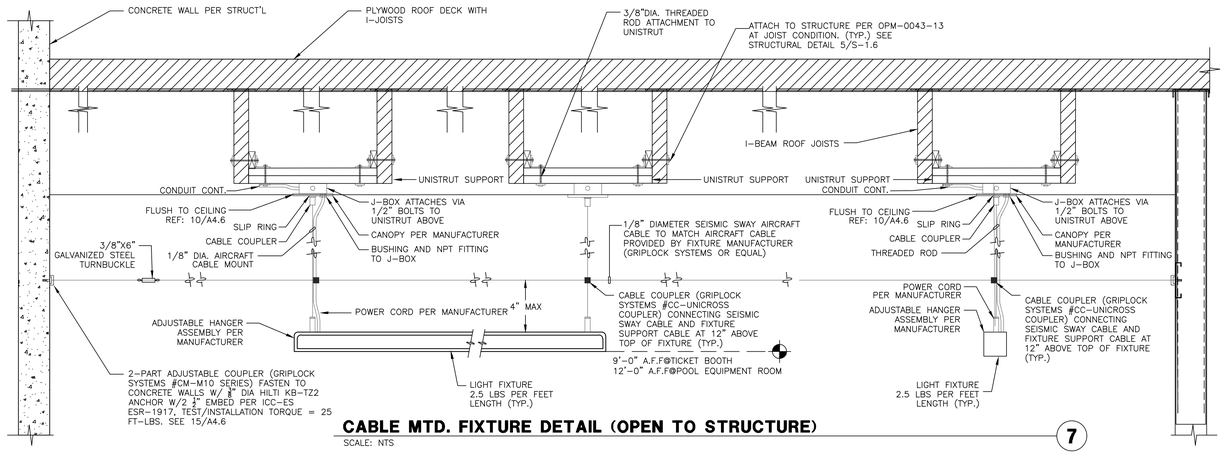

CABLE MTD. FIXTURE DETAIL (OPEN TO STRUCTURE) 7

SCALE: NTS

IDENTIFICATION STAMP
DIV. OF THE STATE ARCHITECT
APP: 03-122664 INC:
REVIEWED FOR
SS ☑ FLS ☑ ACS ☑
DATE: 05/12/2023

pjhm architects

LICENSED ARCHITECT RAYMOND W. SWARTZ No. C15585 REN. 02/25 STATE OF CALIFORNIA

tk|sc COLLABORATIVE
11870 Pierce Street, Suite 160
Riverside, California 92505
951.299.4160 www.tk1sc.com
Project Leader - Nikolas Bruno
Electrical Lead - Nikolas Bruno
tk1sc Job #: B2202744.000

REGISTERED PROFESSIONAL ENGINEER RAYMOND W. SWARTZ E15610 05/31/23 ELECTRICAL STATE OF CALIFORNIA

pjhm architects
OC Office: 24461 Ridge Route Drive #100, Laguna Hills, CA 92653 Phone: 949.496.6161
LA Office: 837 Traction Avenue, #410, Los Angeles, CA 90013 Phone: 213.278.0172
SD Office: 804 Pier View Way #103, Oceanside, CA 92054 Phone: 760.730.5557
Web: pjhm.com

HIGHLAND HIGH SCHOOL
50M POOL & AQUATICS CENTER
KERN HIGH SCHOOL DISTRICT

DETAILS

E-8.0

8/2/2022 11:34:37 AM

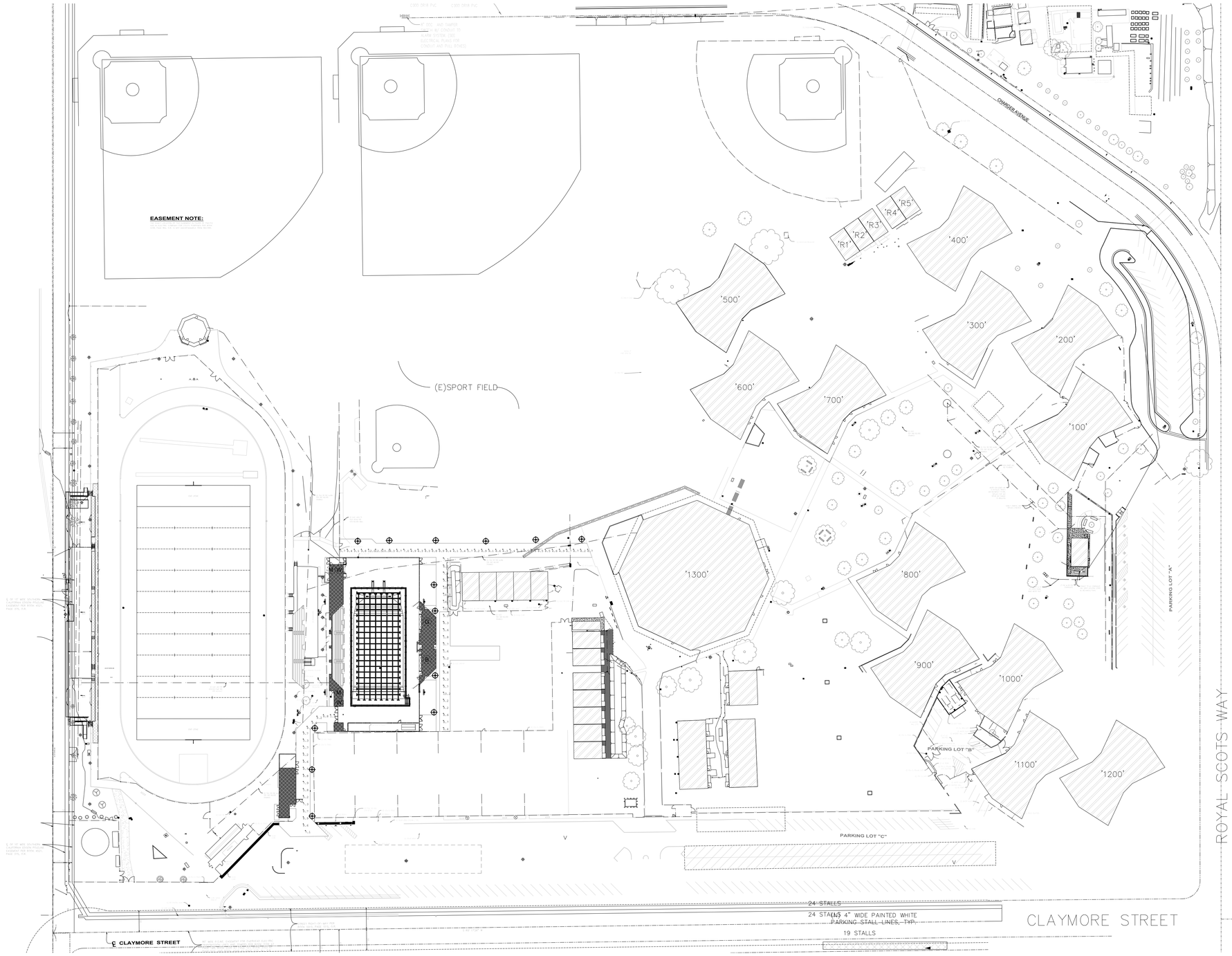

N

1/60" = 1'-0"

SITE EGRESS PHOTOMETRICS

Calculation Summary						
Label	CalcType	Units	Avg	Max	Min	Max/Min
Egress East	Illuminance	Fc	8.09	14.7	0.7	21.00
Egress North	Illuminance	Fc	7.79	12.5	3.4	3.68
Egress South	Illuminance	Fc	7.30	9.7	1.7	5.71

NOTE:

THIS LIGHTING CALCULATION REPRESENTS ILLUMINATION LEVELS CALCULATED FROM LABORATORY DATA TAKEN UNDER CONTROLLED CONDITIONS IN ACCORDANCE WITH ILLUMINATING ENGINEERING SOCIETY (IES) APPROVED METHODS.

8/2/2022 11:34:37 AM

IDENTIFICATION STAMP
DIV. OF THE STATE ARCHITECT
APP: 03-122664 INC:
REVIEWED FOR
SS ☑ FLS ☑ ACS ☑
DATE: 05/12/2023

pjhm architects

LICENSED ARCHITECT
RAYMOND W. SWARTZ
No. C15585
REN. 02/25
STATE OF CALIFORNIA

tk|sc COLLABORATIVE
11870 Pierce Street, Suite 160
Riverside, California 92505
951.299.4160 www.tk1sc.com

Project Leader - Nikolas Bruno
Electrical Lead - Nikolas Bruno
tk1sc Job #: B2202744.000

REGISTERED PROFESSIONAL ENGINEER
RAYMOND W. SWARTZ
No. E15610
EXP. 12/31/2024
ELECTRICAL
STATE OF CALIFORNIA

OC Office: 24461 Ridge Route Drive #100, Laguna Hills, CA • 92653 Phone: 949.496.6159 SD Office: 804 Pier View Way #103, Oceanside, CA • 92054 Phone: 760.730.5507 LA Office: 837 Traction Avenue, #410, Los Angeles, CA • 90013 Phone: 213.278.0172 Web: pjhm.com

HIGHLAND HIGH SCHOOL
50M POOL & AQUATICS CENTER

KERN HIGH SCHOOL DISTRICT

SITE EGRESS PHOTOMETRICS

E-8.1

FIRE ALARM GENERAL NOTES

1. WALL MOUNTED, AUDIBLE NOTIFICATION DEVICES SHALL HAVE THEIR TOPS MOUNTED AT 90" MINIMUM AND 100" MAXIMUM ABOVE THE FINISHED FLOOR, AND NO CLOSER THAN 6" TO A HORIZONTAL STRUCTURE. (NFPA 72, SECTION 18.4.8.1). ALL WALL MOUNTED VISUAL APPLIANCES AND COMBINATION AUDIBLE/VISUAL APPLIANCES SHALL HAVE THEIR BOTTOMS MOUNTED AT 80" MINIMUM AND 96" MAXIMUM ABOVE FINISHED FLOOR AS MEASURED TO THE LENS. (NFPA 72, SECTION 18.5.5.1)
2. ALL EQUIPMENT SHALL BE U.L. AND CSFM LISTED.
3. ALL FIRE ALARM WIRING SHALL BE FLP (FIRE POWER LIMITED) OR FPLP (FIRE POWER LIMITED PLENUM) AS REQUIRED FOR APPLICATION. WIRING IN CONDUIT ABOVE GROUND MAY BE THHN OR THWN.
4. PER THE CEC, ALL WIRING IS TO BE PULLED THROUGH EACH JUNCTION BOX AND CONNECTED DIRECTLY TO EACH FIRE DEVICE. DO NOT SPLICE THE WIRE. THERE MUST BE AT LEAST 6' OF LEAD WIRE FROM THE BOX TO THE DEVICE. ALL BOXES TO BE SIZED PER CEC AND SHALL HAVE THEIR COVERS PAINTED RED WHERE APPLICABLE.
5. DO NOT DEVIATE FROM CONDUIT RUNS AS SHOWN ON FLOOR PLANS WITHOUT PRIOR APPROVAL FROM ELECTRICAL ENGINEER. FACTORS SUCH AS EXCESSIVE VOLTAGE DROP, ADDITIONAL PARTS, ENGINEERING, ETC., THAT ARE A RESULT OF CONDUIT RUN DEVIATIONS SHALL BE THE SOLE RESPONSIBILITY OF THE ELECTRICAL CONTRACTOR.
6. ALL FAN SHUTDOWN FUNCTIONS, DAMPER CLOSURES AND ASSOCIATED MECHANICAL SYSTEM FIRE ALARM INTERFACE SHALL BE BY MECHANICAL CONTRACTOR, AND SHALL BE COORDINATED WITH FIRE ALARM SYSTEM.
7. ALL FIRE ALARM DEVICE BACKBOXES, FIRE ALARM TERMINAL CABINETS, GUTTERS, JUNCTION BOXES AND ASSOCIATED CONDUITS SHALL BE FURNISHED AND INSTALLED BY ELECTRICAL CONTRACTOR UNLESS OTHERWISE NOTED. REFER TO FIRE ALARM SYMBOL LIST AND/OR MOUNTING DETAILS FOR ADDITIONAL INFORMATION. SYSTEM SUPPLIER PROVIDED BACKBOXES SHALL BE INSTALLED BY ELECTRICAL CONTRACTOR UNLESS OTHERWISE NOTED.
8. SMOKE DETECTOR TESTING SHALL BE PERFORMED TO ENSURE THAT EACH DETECTOR IS WITHIN ITS LISTED AND MARKED SENSITIVITY RANGE USING THE METHODS RECOMMENDED PER CFC, SECTION 907.8.4 AND NFPA 72, SECTION 14.4.4.3.4.
9. ALL WIRING, INITIATING DEVICES AND ANNUNCIATOR PANEL SHALL BE SUPERVISED TO THE PRINCIPAL POINT OF ANNUNCIATION. THE FIRE ALARM CONTROL PANEL TO SUPERVISE THE ANNUNCIATOR PANEL, ALL INITIATING AND INDICATING DEVICE CIRCUITS.
   A. INITIATING DEVICE CIRCUITS (IDC): CLASS B
   B. SIGNALING LINE CIRCUITS (SLC): CLASS B
   C. NOTIFICATION APPLIANCE CIRCUITS (NAC): CLASS B
10. ALL WIRING SHALL BE CUT FOR IN AND OUT. WIRING SHALL NOT BE LOOPED THROUGH DEVICES.
11. POINT AND COMMON ANNUNCIATION AND T-TAPPING ARE PROHIBITED. (T-TAPPING IS ALLOWABLE ON STYLE 4 SLC LOOPS).
12. PROVIDE 3/4" CONDUIT FROM FIRE ALARM CONTROL PANEL TO TELEPHONE BACKBOARD FOR OWNER PROVIDED CENTRAL STATION MONITORING.
13. CONTRACTOR TO FIELD VERIFY AND PROVIDE DECIBEL METER FOR TESTING OF AMBIENT NOISE LEVELS AUDIBLE DEVICES TO BE AT LEAST 15 DBA ABOVE THE AVERAGE AMBIENT SOUND LEVEL BUT NOT LESS THAN 75 DBA AT 10 FEET OR 5 DBA ABOVE THE MAXIMUM SOUND LEVEL BUT NOT MORE THAN 110 DBA AT THE MINIMUM HEARING DISTANCE. SOUND LEVEL SHALL BE MAINTAINED FOR DURATION OF AT LEAST 60 SECONDS (CFC, SECTION 907.5.2.1.1). THE CONTRACTOR SHALL ADJUST/INSTALL ALL DEVICES TO MAXIMIZE PERFORMANCE AND TO MINIMIZE FALSE ALARMS. PROVIDE UPDATED PLANS AND CALCULATIONS THROUGH THE "CHANGE ORDER" PROCESS WHEN INSTALLING ADDITIONAL DEVICES.
14. VISUAL DEVICES SHOULD NOT EXCEED 2 FLASHES PER SECOND AND SHOULD NOT BE SLOWER THAN 1 FLASH EVERY SECOND. THE DEVICE SHALL HAVE A PULSING LIGHT SOURCE NOT LESS THAN 15-CANDELA. VISUAL DEVICES WITHIN SAME VIEW FROM EACH OTHER SHALL BE SYNCHRONIZED.
15. ALL FIRE ALARM CIRCUITS SHALL BE IN CONDUIT, APPROVED SURFACE RACEWAY OR OPEN RUN ABOVE CEILINGS, UNDER FLOORS AND IN WALLS IN A NEAT AND PROTECTED MANNER AS INDICATED ON THE DESIGN DOCUMENTS. EXPOSED CIRCUITS ARE ONLY PERMITTED WHEN NOTED AS EXPOSED ON DESIGN DOCUMENTS. ALL CONDUITS SHALL BE 3/4" MINIMUM. CONTRACTOR TO VERIFY CONDUIT FILL PRIOR TO INSTALLATION.
16. ALL FLOW SWITCHES SHALL BE 2 WIRE WITH NON-ELECTRONIC RETARD TYPE SIMILAR TO THE SYSTEM SENSOR MODEL "WFD SERIES" ONLY.
17. ALL DEVICES IN THE ALARM SYSTEM SHALL BE COMPATIBLE AND INSTALLED PER MANUFACTURER'S SPECIFICATIONS.
18. SYSTEM SHALL BE FURNISHED AND INSTALLED BY AN AUTHORIZED DISTRIBUTOR.
19. FIRE ALARM SYSTEM INSTALLATION COMPANY SHALL BE UL LISTED (UUJS).
20. FIRE ALARM PANEL, REMOTES, AND COMPONENTS SHALL BE SECURED TO MOUNTING SURFACES PER MANUFACTURER'S SPECIFICATIONS. NO SINGLE DEVICE SHALL EXCEED THE WEIGHT OF 20 LBS. WITHOUT SPECIAL MOUNTING DETAILS.
21. SMOKE DETECTOR SHALL NOT BE ANY CLOSER THAN 1 FOOT FROM FIRE SPRINKLERS OR 3 FEET FROM ANY SUPPLY DIFFUSER. IN THE AREA OF CONSTRUCTION OR WHERE POSSIBLE DAMAGE/CONTAMINATION COULD OCCUR ON NEWLY INSTALLED FIRE ALARM DEVICES, DEVICES SHALL BE COVERED UNTIL THAT AREA IS READY TO BE TURNED OVER TO THE OWNER. DETECTORS THAT HAVE BEEN INSTALLED PRIOR TO FINAL CLEAN-UP BY ALL TRADES SHALL BE CLEANED OR REPLACED IN ACCORDANCE WITH CFC, SECTION 907. CLEANING OR REPLACEMENT OF DEVICES THAT WERE MOUNTED AT THE REQUEST OF THE CONTRACTOR WILL NOT BE PERFORMED WITHOUT WRITTEN AUTHORIZATION THAT ASSUMES FINANCIAL RESPONSIBILITY FOR COSTS INCURRED. TESTING OF DETECTORS SHALL BE PERFORMED PER NFPA 72, SECTION 14.4.5.3 AND CFC, SECTION 907.8.4.
22. PER CBC, SECTION 11B-309 ACTIVATION OF INITIATING DEVICE SHALL NOT REQUIRE MORE THAN 5 LBS. (22.2N) OF FORCE OR REQUIRE TIGHT GRASPING PINCHING, OR TWISTING OF WRIST.
23. THE SYSTEM SHALL CONFORM TO CALIFORNIA CODE OF REGULATIONS (CCR) TITLES 19 AND 24 AS APPLICABLE TO THIS PROJECT.
24. THE VOICE/ALARM COMMUNICATION SYSTEM VOICE MESSAGE SHALL COMPLY WITH NFPA 72, SECTIONS 18.4 AND 24.4 FOR GENERAL REQUIREMENTS, INTELLIGIBILITY, AUDIBILITY, MESSAGE PRIORITY, TONES, ETC.
25. A DEDICATED 120V BRANCH CIRCUIT SHALL BE PROVIDED FOR FIRE ALARM EQUIPMENT. THIS CIRCUIT SHALL BE ENERGIZED FROM THE COMMON USE AREA PANEL AND SHALL HAVE NO OTHER OUTLETS. PROVIDE A LABEL WITHIN THE FACP AND EACH POWER SUPPPLY WITH THE PANEL NUMBER AND CIRCUIT NUMBER OF THE 120 VOLT POWER SOURCE. THE BREAKER SHALL HAVE A RED LOCKING DEVICE TO BLOCK THE HANDLE IN THE "ON" POSITION AND BE LABELED AS FOLLOWS:
   A. "FIRE ALARM" FOR FIRE ALARM SYSTEMS.
   B. "EMERGENCY COMMUNICATIONS" FOR EMERGENCY COMMUNICATION SYSTEMS, OR
   C. "FIRE ALARM/ECS" FOR COMBINATION FIRE ALARM AND COMMUNICATIONS SYSTEMS.
26. WHERE A DETECTOR IS INSTALLED ABOVE THE CEILING, THE DETECTOR SHALL BE EASILY ACCESSIBLE AND THE LOCATION OF THE DETECTOR SHALL BE CLEARLY MARKED. FOR DUCT SMOKE DETECTORS A REMOTE TEST STATION SHALL BE PROVIDED. ELECTRICAL CONTRACTOR SHALL FURNISH ACCESS PANELS TO AREAS THAT REQUIRE SERVICING, TROUBLE SHOOTING, ETC.
27. THE "END OF LINE RESISTANCE" OF EACH CIRCUIT SHALL BE TESTED IN THE PRESENCE OF THE I.O.R. AND SHALL NOT EXCEED THE LISTED MANUFACTURER'S MINIMUM OPERATING VOLTAGE.
28. UNDERGROUND AND EXTERIOR CONDUITS TO HAVE WATERTIGHT FITTINGS AND WIRE LISTED FOR WET LOCATIONS, IN ACCORDANCE WITH CEC, SECTIONS 110.11, 300.5(B), 300.6, 300.9, 310.10, AND 760.3(D).
29. FIRE ALARM SYSTEM IS A FULLY AUTOMATIC SYSTEM. CONTRACTOR TO UTILIZE AREA COVERAGE SMOKE DETECTORS AND ADDRESSABLE CONTROL RELAYS FOR THE SHUTDOWN AND/OR CLOSURE OF HVAC UNITS AND COMBINATION SMOKE/FIRE DAMPERS. CONTROL RELAYS TO BE LOCATED WITHIN 3FT OF THE CONTROLLED CIRCUIT OR APPLIANCE PER NFPA 72, SECTION 21.2.4.
30. PROVIDE (VIA CHANGE ORDER PROCESS) APPROPRIATE MANUFACTURER PRODUCT DATA SHEETS AND APPLICABLE CSFM LISTINGS FOR ALL SUBSTITUTED MANUFACTURER'S MATERIAL, EQUIPMENT OR APPLIANCES, TO DSA PRIOR TO START OF INSTALLATION.
31. CONTRACTOR SHALL PROVIDE FIRE WATCH FOR ALL OCCUPIED AREAS OF WORK WHERE THE REQUIRED FIRE ALARM SYSTEM IS OUT OF SERVICE FOR THE DURATION OF THE SYSTEM OUTAGE. FIRE WATCH AND SYSTEM/EQUIPMENT SHALL BE PER CFC, SECTION 901.7.
32. EMERGENCY VOICE/ALARM COMMUNICATION SYSTEMS SHALL BE DESIGNED AND INSTALLED IN ACCORDANCE WITH NFPA 72. THE OPERATION OF ANY AUTOMATIC FIRE DETECTOR, SPRINKLER WATERFLOW DEVICE OR MANUAL FIRE ALARM BOX SHALL AUTOMATICALLY SOUND AN ALERT TONE FOLLOWED BY VOICE INSTRUCTIONS GIVING APPROVED INFORMATION AND DIRECTIONS FOR A GENERAL OR STAGED EVACUATION IN ACCORDANCE WITH THE FIRE SAFETY EVACUATION PLANS REQUIRED BY CFC, SECTION 404 PER CBC/CFC, SECTION 907.5.2.2
33. EMERGENCY VOICE/ALARM COMMUNICATION SYSTEMS SHALL HAVE THE CAPABILITY TO BROADCAST LIVE VOICE MESSAGES BY PAGING ZONES ON A SELECTIVE AND ALL-CALL BASIS PER CBC/CFC, SECTION 907.5.2.2.2.
34. EMERGENCY VOICE/ALARM COMMUNICATION SYSTEMS SHALL BE PROVIDED WITH AN APPROVED EMERGENCY POWER SOURCE PER CBC/CFC, SECTION 907.5.2.2.5.
35. ALL MEMBRANE AND THROUGH-PENETRATIONS OF RATED ASSEMBLIES SHALL BE PROTECTED BY AN APPROVED FIRE STOP SYSTEM AS IDENTIFIED IN CBC, CHAPTER 7, UL OR OTHER LAB TESTING CRITERIA. APPROVED TYPES OF MATERIALS SHALL BE IDENTIFIED WITHIN THE FIRE ALARM SECTION OF THE PROJECT SPECIFICATIONS.
36. CONTROL PANELS AND REMOTE ANNUNCIATORS SHALL BE INSTALLED WITH THEIR BOTTOMS MOUNTED AT 48" ABOVE THE FINISHED FLOOR.
37. THE EXISTING CAMPUS FIRE ALARM SYSTEM SHALL BE MAINTAINED AND OPERATIONAL AT ALL TIMES DURING ALTERATIONS AND CONSTRUCTION. WHEN PORTIONS OF THE SYSTEM REQUIRE ALTERATIONS, THE REMAINDER OF THE SYSTEM SHALL BE KEPT IN SERVICE. IF NECESSARY TO SHUT DOWN ENTIRE FIRE ALARM SYSTEM, CONTRACTOR SHALL PROVIDE FIREWATCH FOR ALL OCCUPIED AREAS OF WORK UNTIL THE FIRE ALARM SYSTEM IS RETURNED TO OPERATIONAL SERVICE. FIREWATCH AND SYSTEM/EQUIPMENT IDENTIFICATION SHALL BE PER THE 2019 CFC, CHAPTER 33. LOCAL FIRE AUTHORITY AND OWNER SHALL BE NOTIFIED 48 HOURS IN ADVANCE OF ANY SHUT DOWN.

FIRE ALARM SYSTEM TESTING NOTES

1. INSTALLATION OF THE SYSTEMS SHALL NOT BE STARTED UNTIL DETAILED DESIGN DOCUMENTS AND SPECIFICATIONS, INCLUDING STATE FIRE MARSHAL LISTING NUMBERS FOR EACH COMPONENT OF THE SYSTEM HAS BEEN APPROVED BY DSA.
2. A STAMPED SET OF APPROVED FIRE ALARM DESIGN DOCUMENTS SHALL BE ON THE JOB SITE AND USED FOR INSTALLATION.
3. DISTRICT SHALL PROVIDE A CERTIFIED IMPARTIAL FIRE ALARM INSPECTOR. DSA, ARCHITECT/ ENGINEER AND OWNER SHALL BE NOTIFIED A MINIMUM OF 48 HOURS PRIOR TO THE FINAL INSPECTION AND/OR TESTING.
4. 100% OF THE SYSTEM IN CONTRACT WILL BE TESTED AND INSPECTED WITH THE CONTRACTOR OR CONTRACTOR'S SUB AND DISTRICT'S ETS STAFF MEMBER PRESENT. INSPECTION WILL INCLUDE, BUT NOT BE LIMITED TO, REMOVING STROBES/HORNS TO CHECK FOR "T-TAPS", REMOVING J-BOX COVERS TO CHECK WIRE GAGE AND SPLICES.
5. FOLLOW ALL REQUIREMENTS AND INSTRUCTIONS PROVIDED BY MANUFACTURER UPON INSTALLATION OF MANUFACTURER'S PRODUCTS AND DEVICES.
6. PRIOR TO REQUESTING FINAL APPROVAL OF THE INSTALLATION, THE INSTALLING CONTRACTOR SHALL FURNISH A WRITTEN STATEMENT TO THE FIRE CODE OFFICIAL THAT THE SUBJECT FIRE PROTECTION SYSTEM HAS BEEN INSTALLED IN ACCORDANCE WITH APPROVED PLANS AND HAS BEEN TESTED IN ACCORDANCE WITH THE MANUFACTURER'S SPECIFICATIONS AND THE APPROPRIATE INSTALLATION STANDARD. ANY DISCREPANCIES BETWEEN THE DRAWINGS AND THE CODE OR RECOGNIZED STANDARDS SHALL BE BROUGHT TO THE ATTENTION OF DSA AND THE ARCHITECT/ENGINEER OF THE PROJECT. ANY DEVIATIONS FROM THE DESIGN STANDARDS SHALL BE NOTED AND COPIES OF THE APPROVALS FOR SUCH DEVIATIONS SHALL BE ATTACHED TO THE WRITTEN STATEMENT. (CFC, SECTION 901.2.1)
7. UPON COMPLETION OF SYSTEM INSTALLATION, THE SYSTEM SHALL BE TESTED IN THE PRESENCE OF AND IN A MANNER ACCEPTABLE TO DSA/I.O.R. CONTRACTOR SHALL SUPPLY NECESSARY TESTING EQUIPMENT, INCLUDING A "SOUND LEVEL METER" TO CHECK ACCEPTABLE NOISE LEVELS OF AUDIBLE DEVICES. PROVIDE TEST RESULTS PER NFPA 72 TO ARCHITECT, D.S.A., I.O.R. AND TO LOCAL FIRE AUTHORITY, PER CFC, SECTION 907.8.2.
8. INSPECTION, TESTING AND MAINTENANCE SHALL BE IN COMPLIANCE WITH NFPA 72, CHAPTER 14, REACCEPTANCE TESTING SHALL BE IN COMPLIANCE WITH NFPA 72, SECTION 14.4.2.
9. LOCAL FIRE AUTHORITY NOTIFICATION TO BE DOCUMENTED AND RECORDED AS "UNAVAILABLE" OR "CONFIRM WHEN PRESENT".
10. PRIOR TO COMPLETION OF FIRE ALARM SYSTEM THE TWO WAY COMMUNICATION SYSTEM SHALL BE TESTED AND CERTIFIED VIA NFPA 72 EMERGENCY COMMUNICATION SYSTEM SUPPLEMENTARY RECORD OF INSPECTION AND TESTING FORM.
11. THE INSTALLING CONTRACTOR SHALL PROVIDE A COMPLETED RECORD OF COMPLETION PER NFPA 72, FIGURE 7.8.2(A) THROUGH (I) AS APPLICABLE. A COMPLETE RECORD OF THE TESTS AND OPERATIONS OF EACH SYSTEM SHALL BE KEPT UNTIL THE NEXT TEST AND FOR ONE YEAR AFTER PER NFPA 72, SECTION 7.7.1.
12. FIRE ALARM SYSTEM DOCUMENTS SHALL BE HOUSED IN THE DOCUMENT CABINET. THE DOCUMENT CABINET SHALL BE INSTALLED AT THE SYSTEM CONTROL UNIT OR AT ANOTHER APPROVED LOCATION AT THE PROTECTED PREMISES AS REQUIRED BY NFPA 72, SECTION 7.7.2.
13. THE INSTALLING CONTRACTOR SHALL PROVIDE SYSTEM PROGRAMMING FOR SUPERVISORY MONITORING PER CFC, SECTION 907.6.6. SUPERVISORY MONITORING SHALL BE TESTED AND VERIFIED AS SENDING CORRECT SIGNALS IN CONJUNCTION WITH FINAL ACCEPTANCE TEST. OWNER SHALL BE RESPONSIBLE FOR ESTABLISHING AND MAINTAINING A FIRE ALARM SYSTEM MONITORING CONTRACT.
14. THE VOICE/ALARM COMMUNICATION SYSTEM VOICE MESSAGE SHALL COMPLY WITH NFPA 72 SECTIONS 18.4 AND 24.4 FOR GENERAL REQUIREMENTS, INTELLIGIBILITY, AUDIBILITY, MESSAGE PRIORITY, TONES, ETC. REFER TO NFPA 72 ANNEX D, D.1 THROUGH D.6 FOR DETERMINING THE FUNDAMENTALS OF TEST PROTOCOL AND METHOD OF MEASURING INTELLIGIBILITY.

FIRE ALARM SYMBOLS LIST

SYMBOL	DESCRIPTION	MODEL	MANUFACTURER	BACKBOX	MOUNTING HEIGHT	C.S.F.M. NUMBER
FACP	EXISTING FIRE ALARM CONTROL PANEL AMD3-116564	NFS2-640	NOTIFIER	EXISTING	EXISTING	7165-0028:0243
VECP	FIRE/ALARM VOICE EVACUATION SYSTEM CONTROL PANEL WITH NETWORK MODULE	NFS2-3030/ DVC-EM NCA-2 (DISPLAY) HS-NCM (NETWORK)	NOTIFIER	PROVIDED	5'-6" A.F.F. TO TOP	7165-0028:0224
AMP	VOICE EVACUATION AUDIO AMPLIFIER	DAA2 SERIES	NOTIFIER	PROVIDED	5'-6" A.F.F. TO TOP	7165-0028:0224
FAPS	FIRE ALARM POWER SUPPLY	ACPS-610	NOTIFIER	PROVIDED	5'-6" A.F.F. TO TOP	7315-0028:0248
FATC	FIRE ALARM TERMINAL CABINET	N/A	BY ELECTRICIAN	18"SQ. x 6"D U.N.O. (RED)	VERIFY IN FIELD	N/A
MS	MANUAL PULL STATION (ADDRESSABLE)	NBG-12LX	NOTIFIER	4S DEEP BOX W/ SINGLE GANG RING	48" A.F.F. TO TOP OF ACTIVATING HANDLE	7150-0028:0199
SD	AREA SMOKE DETECTOR (ADDRESSABLE PHOTO)	FSP-951 B300-6 (BASE)	NOTIFIER	4S DEEP BOX W/ 3-0 RING	CEILING	7272-0028:0503 7300-1653:0109
MD	MULTI-CRITERIA DETECTOR (ADDRESS PHOTO/HEAT/IR)	FPTI-951 B300-6 (BASE)	NOTIFIER	4S DEEP BOX W/ 3-0 RING	CEILING	7272-0028:0510 7300-1653:0109
HD B	AREA HEAT DETECTOR (ADDRESSABLE FIXED 135°F)	FST-951 B300-6 (BASE)	NOTIFIER	4S DEEP BOX W/ 3-0 RING	CEILING, U.O.N.	7270-0028:0502 7300-1653:0109
HD	AREA HEAT DETECTOR (ADDRESSABLE FIXED 190°F)	FST-951H B300-6 (BASE)	NOTIFIER	4S DEEP BOX W/ 3-0 RING	ABOVE ACCESSIBLE CEILING, U.O.N.	7270-0028:0502 7300-1653:0109
CR	FIRE ALARM RELAY CONTROL MODULE	FRM-1	NOTIFIER	4S DEEP BOX	VERIFY IN FIELD	7300-0028:0219
M	FIRE ALARM MONITOR MODULE	FMM-1	NOTIFIER	4S DEEP BOX	VERIFY IN FIELD	7300-0028:0219
S WP	FIRE ALARM SPEAKER (WEATHERPROOF/WALL)	SPRK (RED)	SYSTEM SENSOR	WP BACKBOX PROVIDED	90" A.F.F. TO TOP	7320-1653:0201
SP cd	FIRE ALARM SPEAKER/STROBE (CEILING)	SPSCWL (WHITE)	SYSTEM SENSOR	4S DEEP BOX W/ 4S EXTENSION	CEILING	7320-1653:0505
F cd	FIRE ALARM STROBE (CEILING)	SCWL (WHITE)	SYSTEM SENSOR	4S DEEP BOX W/ 4S EXTENSION	CEILING	7125-1653:0504
SYNC	AUDIBLE/VISUAL SYNC MODULE	MDL3	SYSTEM SENSOR	5S DEEP BOX W/ 5S EXTENSION	VERIFY IN FIELD	7300-1653:0202
WF	SPRINKLER RISER WATERFLOW DETECTOR	WFDN SERIES	SAFE SIGNAL	VERIFY IN FIELD	VERIFY IN FIELD	7770-0328:0527
TS	SPRINKLER RISER TAMPER SWITCH	OSY2 SERIES	SAFE SIGNAL	VERIFY IN FIELD	VERIFY IN FIELD	7770-0328:0524
B WP	SPRINKLER RISER BELL (WEATHERPROOF) (120VAC)	SSV120-10	SYSTEM SENSOR	WBB WP BACKBOX	90" A.F.F. TO TOP	7135-1653:0100
J	FIRE ALARM JUNCTION BOX	N/A	BY ELECTRICIAN	4S BOX, U.N.O.	VERIFY IN FIELD	N/A

A.F.F.	ABOVE FINISHED FLOOR	N/A	NOT APPLICABLE
E.O.L.	END OF LINE RESISTOR	U.N.O.	UNLESS NOTED OTHERWISE
(E)	EXISTING DEVICE	VL	VERIFY LOCATION IN FIELD
F.B.O.	FURNISHED BY OTHERS	WP	WEATHERPROOF DEVICE
TSP	TWISTED SHIELDED PAIR	cd	INDICATED CANDELA RATING OF STROBE DEVICE

SEQUENCE OF OPERATIONS

ACTION	120 VOLT POWER FAILURE	SYSTEM TROUBLE, WIRING FAULT OR OPEN, GROUND FAULT, LOW BATTERY, CIRCUIT SHORT	MANUAL PULL STATION	AREA SMOKE DETECTOR	AREA OF ATTIC HEAT DETECTOR	SPRINKLER WATER FLOW SWITCH	SPRINKLER VALVE TAMPER SWITCH (SUPERVISORY)
SOUND CONTROL PANEL TROUBLE BUZZER	YES	YES	NO	NO	NO	NO	NO
SOUND CONTROL PANEL SUPERVISORY BUZZER	NO	NO	NO	NO	NO	NO	YES
SOUND CONTROL PANEL ALARM BUZZER	NO	NO	YES	YES	YES	YES	NO
ACTIVATE RELAY FOR CENTRAL STATION MONITORING	YES	YES	YES	YES	YES	YES	YES
ANNUNCIATE AT FIRE ALARM CONTROL PANEL (ALARM)	NO	NO	YES	YES	YES	YES	NO
ANNUNCIATE AT FIRE ALARM CONTROL PANEL (TROUBLE)	YES	YES	NO	NO	NO	NO	NO
ANNUNCIATE AT REMOTE ANNUNCIATOR PANEL (ALARM)	NO	NO	YES	YES	YES	YES	NO
ANNUNCIATE AT REMOTE ANNUNCIATOR PANEL (TROUBLE)	YES	YES	NO	NO	NO	NO	NO
ACTIVATE AUDIBLE NOTIFICATION ALARM SIGNAL THROUGHOUT CAMPUS	NO	NO	YES	YES	YES	YES	NO
ACTIVATE VISUAL NOTIFICATION ALARM SIGNAL THROUGHOUT CAMPUS	NO	NO	YES	YES	YES	YES	NO
ACTIVATE AUDIBLE NOTIFICATION ALARM SIGNAL THROUGHOUT BLDG	NO	NO	YES	YES	YES	YES	NO
ACTIVATE VISUAL NOTIFICATION ALARM SIGNAL THROUGHOUT BLDG	NO	NO	YES	YES	YES	YES	NO
SOUND SPRINKLER BELL ALARM —	NO	NO	NO	NO	NO	YES	NO
SHUT DOWN ASSOCIATED AIR HANDLING (HVAC) THROUGHOUT BUILDING	NO	NO	NO	YES	NO	YES	NO
NOTIFY FIRE DEPARTMENT VIA MONITORING STATION —	NO	NO	YES	YES	YES	YES	NO
RETURN LIGHTING TO 100% OF LUMEN OUTPUT UPON ACTIVATION OF SYSTEM	NO	NO	YES	YES	YES	YES	NO
SHUTDOWN AUTONOMOUS PUBLIC ADDRESS SYSTEM UPON ACTIVATION OF SYSTEM	NO	NO	YES	YES	YES	YES	NO
SOUND AN ALERT TONE FOLLOWED BY VOICE INSTRUCTION	NO	NO	YES	YES	YES	YES	NO

PLAN REVIEW REQUIREMENTS AND APPLICABLE CODES AND STANDARDS

1.0 FIRE ALARM PLAN REVIEW

A. FIRE ALARM PLAN REVIEW

1. AS PART OF THE FIRE ALARM PLAN REVIEW, PLANS AND SPECIFICATIONS FOR THE FIRE ALARM SYSTEM HAVE BEEN INCLUDED FOR REVIEW AND COMMENT BY THE DIVISION OF THE STATE ARCHITECT, FIRE & LIFE SAFETY.
2. THE FLOOR PLANS AND SPECIFICATIONS INCLUDE THE FOLLOWING: LOCATIONS OF ALL ALARM-INITIATING AND SIGNALING DEVICES, CONTROL AND TROUBLE SIGNALING EQUIPMENT (FIRE ALARM CONTROL PANEL, BUILDING ANNUNCIATION (FIRE ALARM ANNUNCIATOR).

B. FIRE ALARM COMPONENTS

1. PROVIDE CALIFORNIA STATE FIRE MARSHAL LISTING SHEETS AND U.L. LISTING NUMBERS FOR EACH COMPONENT.
2. EQUIPMENT POWER CONNECTIONS.
3. RISER DIAGRAM SHOWING EACH COMPONENT.
4. VOLTAGE DROP CALCULATIONS.
5. POWER CONNECTIONS TO APPLICABLE COMPONENTS.
6. WIRE AND/OR CABLING TYPES AND SIZES.
7. PROVIDE CATALOG DATA SHEETS FOR ALL FIRE ALARM SYSTEM COMPONENTS.
8. CONTRACTOR TO FURNISH STATEMENT OF COMPLIANCE BEFORE REQUESTING FINAL APPROVAL OF INSTALLATION IN ACCORDANCE WITH CFC, SECTION 901.2.1.
9. A SATISFACTORY TEST OF THE ENTIRE SYSTEM SHALL BE MADE IN THE PRESENCE OF THE PROJECT INSPECTOR AND, IF APPLICABLE, LOCAL FIRE AUTHORITY.
10. THE INSTALLER SHALL SUPPLY THE OWNER WITH A WRITTEN OPERATING, TESTING AND MAINTENANCE INSTRUCTIONS, POINT-TO-POINT AS BUILT DRAWINGS AND EQUIPMENT SPECIFICATIONS. AS BUILT RECORDS SHALL BE MAINTAINED ON PREMISES FOR A MINIMUM OF THREE YEARS PER CFC, SECTION 901.6.3.

C. SCOPE OF WORK

1. INSTALL A FULLY AUTOMATIC, ADDRESSABLE, FIRE ALARM SYSTEM WITH AN EMERGENCY VOICE/ALARM COMMUNICATION SYSTEM WITHIN ALL BUILDINGS IN SCOPE OF PROJECT AS DEFINED PER CFC, SECTION 907.2.3 AND NFPA 72.
2. FIRE ALARM SYSTEM SHALL TRANSMIT THE ALARM, SUPERVISORY AND TROUBLE SIGNALS TO AN APPROVED SUPERVISING STATION IN ACCORDANCE WITH NFPA 72. THE SUPERVISING STATION SHALL BE U.L. LISTED AS UUFX (CENTRAL STATION) PER CFC, SECTION 907.6.6.3.
3. FIRE SPRINKLER SYSTEM UTILIZED FOR HEAT DETECTION IN ALL ABOVE CEILING, ATTIC SPACES AND CONCEALED COMBUSTIBLE AREAS. PROVIDE HEAT DETECTORS WHERE FIRE SPRINKLERS HAVE BEEN OMITTED PER NFPA 72 AND NFPA 13.

2.0 LIST OF CURRENT CALIFORNIA CODE OF REGULATIONS

APPLICABLE CODES AS OF MARCH 5, 2022

2022 California Administrative Code (CAC), Part 1, Title 24, C.C.R.

2019 California Building Code (CBC), Volumes 1 & 2, Part 2, Title 24, C.C.R. (2018 International Building Code of the International Code Council, with California Amendments.)

2019 California Electrical Code (CEC), Part 3, Title 24, C.C.R. (2017 National Electric Code of the National Fire Protection Assoc., NFPA)

2019 California Mechanical Code (CMC), Part 4, Title 24, C.C.R. (2018 Uniform Mechanical Code of the International Association of Plumbing and Mechanical Officials, IAPMO.)

2019 California Plumbing Code (CPC), Part 5, Title 24, C.C.R. (2018 Uniform Plumbing Code of the International Association of Plumbing and Mechanical Officials, IAPMO.)

2019 California Energy Code, Part 6, Title 24, C.C.R.

2019 California Historical Building Code, Title 24, C.C.R.

2019 California Fire Code (CFC), Part 9, Title 24, C.C.R. (2018 International Fire Code with California Amendments)

2019 California Existing Building Code (CEBC), Part 10, Title 24, C.C.R. (2018 International Existing Building Code of the International Code Council, with amendments)

2019 California Green Building Standards Code (CALGreen), Part 11, Title 24, C.C.R.

2019 California Referenced Standards Code, Part 12, Title 24, C.C.R.

LIST OF FEDERAL CODES AND STANDARDS (if applicable)

Americans with Disabilities Act (ADA), Title II or Title III

For Title II: Uniform Federal Accessibility Standards (UFAS) or ADA Standards for Accessible Design (Appendix A of 28 CFR Part 36.)

For Title III: ADA Standards for Accessible Design (Appendix A of 28 CFR Part 36.)

Americans with Disabilities Act Accessibility Guidelines (ADAAG) (with amendments through September 2002)

PARTIAL LIST OF APPLICABLE NFPA STANDARDS:

NFPA 13-Automatic Sprinkler Systems (CA Amended)	2016 Edition
NFPA 14-Standpipes Systems (CA Amended)	2016 Edition
NFPA 17-Standard for Dry Chemical Extinguishing Systems	2017 Edition
NFPA 17a-Standard for Wet Chemical Systems	2017 Edition
NFPA 20-Installation Stationary Pumps for Fire Protection	2016 Edition
NFPA 22-Water tanks for Private Fire Protection	2013 Edition
NFPA 24-Installation of Private Fire Service Mains (CA Amended)	2016 Edition
NFPA 72-National Fire Alarm and Signaling Code (CA Amended)	2016 Edition
NFPA 80-Fire Door and Other Opening Protectives	2016 Edition
NFPA 92-Standard for Smoke Control Systems	2015 Edition
NFPA 253-Critical Radiant Flux of Floor Covering Systems	2015 Edition
NFPA 720-Carbon Monoxide (CO) Detection and Warning	2015 Edition
NFPA 2001-Clean Agent Fire Extinguishing Systems (CA Amended)	2015 Edition
ICC 300-ICC Standards on Bleachers, Folding and Telescoping Seating and Grandstands	2017 Edition
UL 38-Manual Operating Signal Boxes (with revisions through February 2, 2005 as amended)	1999 Edition
UL 268-Smoke Detectors for Fire Alarm Systems	2009 Edition
UL 268A-Smoke Detectors Duct Applications (with revisions through October 22, 2003 as amended)	2009 Edition
UL 300-Fire Testing of Fire Extinguishing Systems for Protection Of Restaurant Cooking Areas (with revisions through December 2014 as amended)	2005 Edition
UL 464-Audible Signal Appliances (with revisions through October 10, 2003 as amended)	2003 Edition
UL 521-Heat Detectors for Fire Protective Signaling Systems (with revisions through July 20, 2005 as amended)	1999 Edition
UL 864-Control Units for Fire Protective Signaling Systems (with revisions through December 2014)	2003 Edition

Reference code section for NFPA Standards-2019 CBC (SFM) Chapter 35

See Chapter 35 for State of California amendments to NFPA Standards.

COMPLETE FIRE ALARM SUBMITTAL

AUTOMATIC ADDRESSABLE FIRE ALARM SYSTEM WITH EMERGENCY VOICE/ALARM COMMUNICATION SYSTEM

IDENTIFICATION STAMP
DIV. OF THE STATE ARCHITECT
APP: 03-122664 INC:
REVIEWED FOR
SS ☑ FLS ☑ ACS ☑
DATE: 05/12/2023

pjhm architects

LICENSED ARCHITECT RICHARD

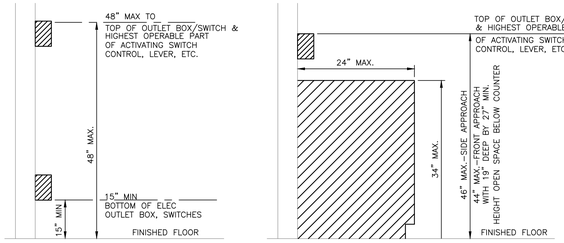

ALL DEVICE HEIGHTS DEPICTED SHALL BE MODIFIED AS REQUIRED BY GOVERNING BUILDING CODES. CONTRACTOR TO VERIFY/RECONCILE APPLICABLE CODE REQUIREMENTS AND ANY DEVICE HEIGHT REQUIREMENTS DEPICTED ON ARCHITECTURAL OR INTERIOR DESIGN PLANS & SPECIFICATIONS PRIOR TO DEVICE ROUGH-IN. CONFLICTS OR LACK OF MOUNTING HEIGHT SPECIFICITY ON THE ARCHITECTURAL OR INTERIOR DESIGN PLANS & SPECIFICATIONS SHALL BE CAUSE FOR THE CONTRACTOR TO ISSUE A FORMAL WRITTEN RFI FOR RESOLUTION. DEVICE MOUNTING HEIGHT CLARIFICATIONS/SPECIFICATIONS SHALL NOT RESULT IN AN ADDITIONAL COST TO THE OWNER – CONTRACTOR SHALL INCLUDE ALL COSTS IN BASE BID.

MOUNTING HEIGHT OVER OBSTRUCTION DETAIL 11

SCALE: NTS

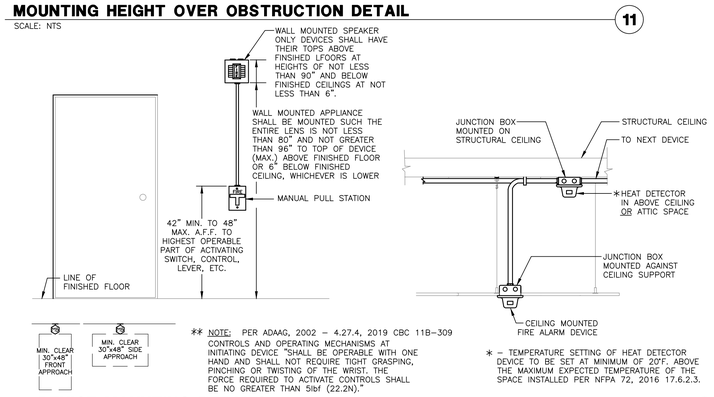

** NOTE: PER ADAAG, 2002 – 4.27.4, 2019 CBC 11B–309 CONTROLS AND OPERATING MECHANISMS AT INITIATING DEVICE "SHALL BE OPERABLE WITH ONE HAND AND SHALL NOT REQUIRE TIGHT GRASPING, PINCHING OR TWISTING OF THE WRIST. THE FORCE REQUIRED TO ACTIVATE CONTROLS SHALL BE NO GREATER THAN 5lbf (22.2N)."

* – TEMPERATURE SETTING OF HEAT DETECTOR DEVICE TO BE SET AT MINIMUM OF 20°F, ABOVE THE MAXIMUM EXPECTED TEMPERATURE OF THE SPACE INSTALLED PER NFPA 72, 2016 17.6.2.3.

DEVICE MOUNTING DETAILS 10

SCALE: N.T.S.

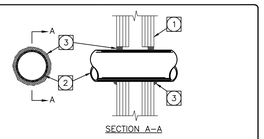

SECTION A–A

PENETRATION THRU GYPSUM BOARD WALL

NO SCALE

System No.W-L-1252
January 22, 2015
F Ratings – 1, 2, 3 and 4 Hr (See Items 1 and 3)
T Ratings – 0 Hr
L Rating At Ambient – less than 1 CFM/sq ft
L Rating At 400 F – less than 1 CFM/sq ft

1. Wall Assembly – The 1, 2, 3 or 4 hr fire-rated gypsum wallboard/stud wall assembly shall be constructed of the materials and in the manner described in the individual U400, V400 or W400 Series Wall or Partition Designs in the UL Fire Resistance Directory and shall include the following construction features:
   A. Studs – Wall framing may consist of steel channel studs. Steel studs to be min 3-1/2 in. (89 mm) wide by 1-3/8 in. (35 mm) deep channels spaced max 24 in. (610 mm) OC.
   B. Gypsum Board* – Nom 1/2 or 5/8 in. (13 or 16 mm) thick, 4 ft. (122 cm) wide sheets with square or tapered edges. The gypsum wallboard type, thickness, number of layers, fastener type and sheet orientation shall be as specified in the individual U300 or U400 Series Design in the UL Fire Resistance Directory. Max diam of opening is 28 in. (680 mm).
   The hourly F and FH Ratings of the firestop system are equal to the hourly fire rating of the wall assembly in which it is installed.

2. Through Penetrant – One metallic pipe, conduit or tube to be installed either concentrically or eccentrically within the firestop system. The annular space between the pipe, conduit or tube and periphery of opening shall be min 0 in. (point contact) to max 7/8 in. (22 mm). Pipe, conduit or tube to be rigidly supported on both sides of wall assembly.
   A. Steel Pipe – Nom 4 in. (102 mm) diam (or smaller) Schedule 10 (or heavier) steel pipe.
   B. Iron Pipe – Nom 4 in. (102 mm) diam (or smaller) cast or ductile iron pipe.
   C. Conduit – Nom 4 in. (102 mm) diam (or smaller) rigid steel conduit.
   D. Conduit – Nom 4 in. (102 mm) diam (or smaller) steel electrical metallic conduit.
   E. Copper Tubing – Nom 4 in. (102 mm) diam (or smaller) Type L (or heavier) copper tubing.
   F. Copper Pipe – Nom 4 in. (102 mm) diam (or smaller) Regular (or heavier) copper pipe.

3. Fill, Void or Cavity Material* – Sealant – 1. Fill material applied within annulus , flush with both surfaces of wall. Type and thickness of sealant is dependent on F and FH Ratings as indicated in Table below. An additional 1/2 in. (13 mm) diameter bead of sealant applied at penetrant/gypsum board interface at point contact location on both surfaces of wall.
HILTI CONSTRUCTION CHEMICALS, DIV OF HILTI INC –– FS-ONE Sealant, FS-ONE MAX Intumescent Sealant or CP 606 Sealant

F, FH RATINGS (HR)	SEALANT TYPE	SEALANT THICKNESS, IN. (MM)
1,2	FS–ONE, FS–ONE MAX OR CP 606	5/8 (16)
3	FS–ONE, FS–ONE MAX OR CP 606	1 (25)
4	FS–ONE, FS–ONE MAX	1 (25)

*Bearing the UL Classification Marking

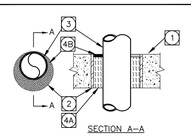

SECTION A–A

PENETRATION THRU CONCRETE WALL OR FLOOR

NO SCALE

System No. C-AJ-1630
DECEMBER 20, 2013
F Ratings – 2, 3, and 4 Hr (See Item 4)
T Rating – 0 Hr
L Rating At Ambient – less than 1 CFM/sq ft
L Rating At 400 F – less than 1 CFM/sq ft
W Rating – Class 1 (See Item 4)

1. Floor or Wall Assembly – 1. See Configuration A above. Reinforced lightweight or normal weight (100–150 pcf or 1600–2400 kg/cu meter) concrete as specified in the Table in Item 4 below. Wall may also be constructed of any UL Classified Concrete Blocks*. Max diam of sleeved opening is 32 in. (813 mm).
See Concrete Blocks (CAZT) category in the Fire Resistance Directory for names of manufacturers.

1A. Floor Assembly – See Configuration B above. Min 6 in. (152 mm) thick UL Classified hollow-core Precast Concrete Units*. Max diam of opening is 7 in. (178 mm).
See Precast Concrete Units (QTIV) category in the Fire Resistance Directory for names of manufacturers.

2. Steel Sleeve (Optional) – Nom 32 in. (813 mm) diam (or smaller) Schedule 10 (or heavier) steel pipe sleeve cast or grouted into floor or wall assembly flush with both surfaces of floor or wall. As an option, sleeve may extend max 1 in. (25 mm) above top surface of floor or beyond one or both surfaces of wall. Steel sleeve may be used in 2 and 3 hr F Rated systems only.

3. Through Penetrants – One metallic pipe, conduit or tubing to be installed either concentrically or eccentrically within the firestop system. Pipe, conduit or tubing to be rigidly supported on both sides of floor or wall assembly. See Table in Item 4 for sizes of penetrants A, B, D and E that may be used. See Item 3C below for size of conduit that may be used. The annular space shall be as specified in the Table in Item 4 below. The following types and sizes of metallic pipes, conduits or tubing may be used:
   A. Steel Pipe – –– Schedule 10 (or heavier) steel pipe.
   B. Iron Pipe – Cast or ductile iron pipe.
   C. Conduit – Nom 4 in. (102 mm) diam (or smaller) steel electrical metallic tubing or nom 6 in. (152 mm) diam (or smaller) steel conduit.
   D. Copper Tubing – Nom 4 in. (102 mm) diam (or smaller) copper tubing.
   E. Copper Pipe – Nom 4 in. (102 mm) diam (or smaller) Regular (or heavier) copper pipe.

4. Firestop System – The F Rating of the system is dependent upon the type of concrete, thickness of concrete, annular space, fill and packing material thickness, packing material density and penetrant size as shown in the Table below. W Rating applies to annular spaces of min 0 in. (point contact) to max 1–7/8 in. and to Configuration A detail only.

F RATING HR	MIN THICK CONCRETE IN.	ANNULAR SPACE IN.	MIN THICK PACKING MTL IN.	MIN DENSITY PACKING MTL PCF KG/CU MTR	MIN THICK FILL MTL IN.	PENETRANT SIZE IN. DIAM (OR SMALLER) COPPER	STEEL, IRON
2	5–1/2(140)	0 TO 1–7/8 (0 TO 48)	5 (127)	4 (64)	1/2 (13)	4 (102)	16 (406)
3	4–1/2(114)	0 TO 2–1/8 (0 TO 54)	4–1/4 (108)	4 (64)	1/4 (6)	6 (152)	30 (762)
4	5–1/2(140)	0 TO 1–7/8 (0 TO 48)	5 (127)	4 (64)	1/2 (13)	4 (102)	8 (203)

A. Packing Material –– Min 4–1/4 or 5 in. (108 or 127 mm) thickness of min 4.0 pcf (64 kg/cu meter) mineral wool batt insulation firmly packed into opening as a permanent form as specified in the Table above. Packing material to be recessed from top surface of floor or top and of sleeve, or from both surfaces of wall or ends of sleeve, as required to accommodate the required thickness of fill material. In 3 hr F Rated systems, packing material to be recessed 1/4 in. (6 mm) from top surface. The thickness of mineral wool packing material shall be installed flush with the bottom surface of the floor and the remaining half of the mineral wool packing material installed at the top of the opening and recessed from the top surface of the floor to accommodate the required thickness of the fill material.

B. Fill, Void or Cavity Material* –– Caulk –– Min 1/4 or 1/2 in. (6 or 13 mm) thickness of fill material as specified in the Table above applied within the annulus, flush with top surface of floor or top and bottom surfaces of wall. In 3 hr F Rated systems, a 1/4 in. (6 mm) depth of fill material shall be applied to the steel pipe and concrete or sleeve, a min 1/2 in. (13 mm) diam bead of fill material shall be applied. As an option, for hollow-core floors, the packing material (Item 4A) on the bottom surface of the floor may be recessed to accommodate a 1/4 in. (6 mm) depth of fill material installed flush with bottom surface of floor.
HILTI CONSTRUCTION CHEMICALS, DIV OF HILTI INC –– CFS–S SIL GG (floors or walls) and CFS–S SIL SL (floors only)

*Bearing the UL Classification Mark

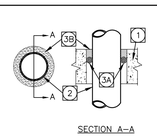

SECTION A–A

PENETRATION THRU CONCRETE FLOOR

NO SCALE

SYSTEM NO. C-AJ-1276
April 20, 2012
F RATING–3 HR
T RATING–0 HR

Floor or Wall Assembly – 1. Floor or Wall Assembly –– Min 4–1/2 in. (114 mm) thick reinforced lightweight or normal weight (100–150 pcf or 1600–2400 kg/m3) concrete. Wall may also be constructed of any UL Classified Concrete Blocks*. Max diam of opening is 9 in. (152 mm).

See Concrete Blocks (CAZT) category in the Fire Resistance Directory for names of manufacturers.

2. Through Penetrants – One metallic pipe, conduit or tubing to be centered within the firestop system. A nom annular space of 3/4 in. (19 mm) is required within the firestop system. Pipe, conduit or tubing to be rigidly supported on both sides of floor or wall assembly. The following types and sizes of metallic pipes, conduits or tubing may be used:

   A. Steel Pipe – Nom 4 in. (102 mm) diam (or smaller) Schedule 10 (or heavier) steel pipe.
   B. Conduit – Nom 4 in. (102 mm) diam (or smaller) steel electrical metallic tubing or steel conduit.

3. Firestop System – The firestop system shall consist of the following:
A. Packing or Forming Materials –– Optional –– One of the following packing or forming materials may be used:

A1. Foam Backer Rod –– Foam backer rod tightly packed into the opening as a permanent form. Packing material to be recessed from the top surface of floor or both surfaces of wall as required to accommodate the required thickness of putty.

A2. Mineral Wool Batt Insulation –– Min 4 pcf (64 kg/m3), tightly packed into the opening as a permanent form. Packing material to be recessed from the top surface of floor or both surfaces of wall as required to accommodate the required thickness of putty.

A3. Forming Material* –– Forming material to be foamed into the opening as a permanent form. Forming material to be recessed from the top surface of floor or both surfaces of wall as required to accommodate the required thickness of fill material.
HILTI CONSTRUCTION CHEMICALS, DIV OF HILTI INC –– CP812 or CP-45 CJP Foam Sealant

B. Fill, Void or Cavity Material* –– Putty –– Min 1 in. (25 mm) thickness of putty applied within the annulus, flush with top surface of floor or with both surfaces of wall.
HILTI CONSTRUCTION CHEMICALS, DIV OF HILTI INC –– CP 618 Firestop Putty Stick

*Bearing the UL Classification Mark

THROUGH RATED WALL OR FLOOR PENETRATIONS (U.L. LISTINGS) 9

SCALE: N.T.S.

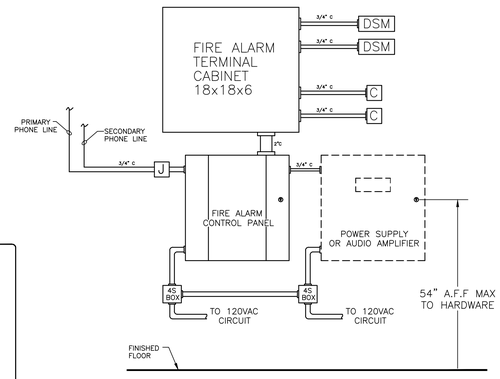

FIRE ALARM PANEL/POWER SUPPLY MOUNTING ELEVATION 6

SCALE: N.T.S.

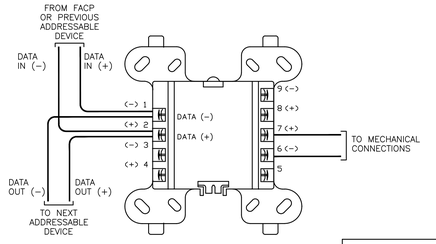

CONTROL MODULE WIRING

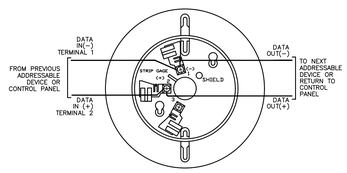

ADDRESSABLE SMOKE/HEAT DETECTOR

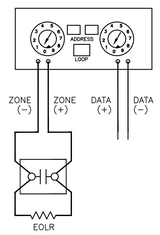

MANUAL PULL STATION

DEVICE WIRING DETAILS 5

SCALE: N.T.S.

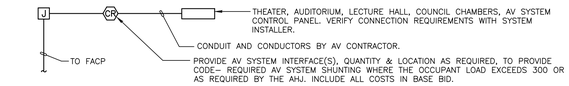

AUDIO VISUAL SYSTEM SHUNT SCHEMATIC 12

SCALE: N.T.S.

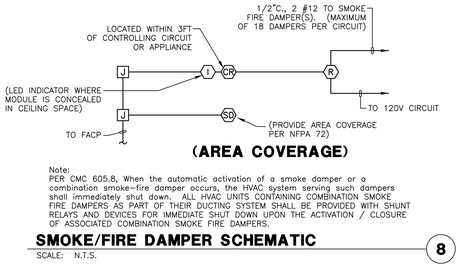

(AREA COVERAGE)

Note:
PER CMC 605.8, When the automatic activation of a smoke damper or a combination smoke–fire damper occurs, the HVAC system serving such dampers shall immediately shut down. ALL HVAC UNITS CONTAINING COMBINATION SMOKE FIRE DAMPERS AS PART OF THEIR DUCTING SYSTEM SHALL BE PROVIDED WITH SHUNT RELAYS AND DEVICES FOR IMMEDIATE SHUT DOWN UPON THE ACTIVATION / CLOSURE OF ASSOCIATED COMBINATION SMOKE FIRE DAMPERS.

SMOKE/FIRE DAMPER SCHEMATIC 8

SCALE: N.T.S.

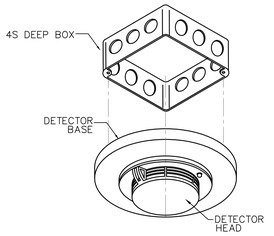

DETECTOR MOUNTING DETAIL 7

SCALE: N.T.S.

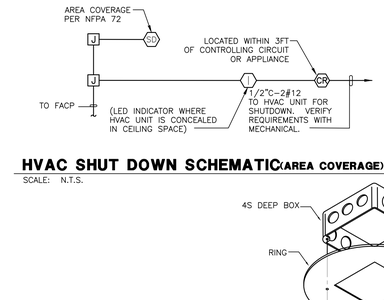

HVAC SHUT DOWN SCHEMATIC (AREA COVERAGE) 4

SCALE: N.T.S.

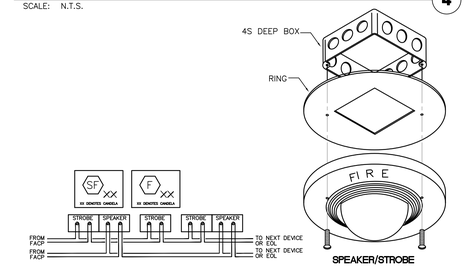

SPEAKER/STROBE

CEILING MTD. AUDIBLE/VISUAL 3

SCALE: N.T.S.

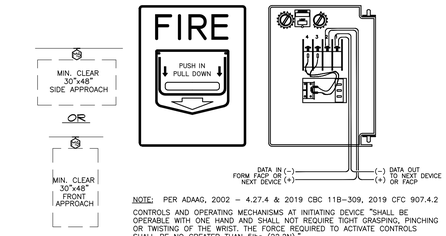

NOTE: PER ADAAG, 2002 – 4.27.4 & 2019 CBC 11B–309, 2019 CFC 907.4.2
CONTROLS AND OPERATING MECHANISMS AT INITIATING DEVICE "SHALL BE OPERABLE WITH ONE HAND AND SHALL NOT REQUIRE TIGHT GRASPING, PINCHING OR TWISTING OF THE WRIST. THE FORCE REQUIRED TO ACTIVATE CONTROLS SHALL BE NO GREATER THAN 5lbs (22.2N)."

PULL STATION DETAIL 2

SCALE: N.T.S.

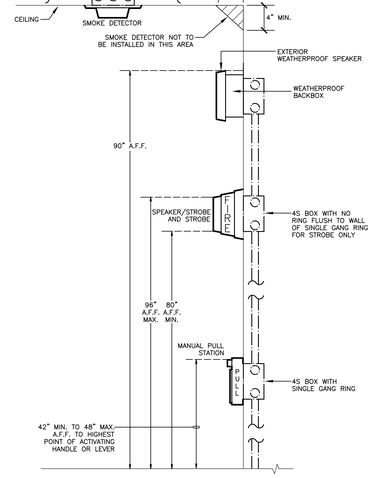

GENERAL NOTES:

1. THE ENTIRE LENS OF STROBE LIGHTS MUST BE BETWEEN 80" AND 96" ABOVE FLOOR FINISH. (2016 NFPA 72 18.5.5)
2. MANUAL FIRE ALARM BOXES SHALL BE INSTALLED IN ACCORDANCE WITH 2019 CFC SECTION 907.4.2.
3. WHEN APPLICABLE, MANUAL FIRE ALARM BOXES SHALL BE LOCATED NOT MORE THAN 5 FEET FROM THE ENTRANCE TO EACH EXIT. ADDITIONAL MANUAL FIRE ALARM BOXES SHALL BE LOCATED SO THAT TRAVEL DISTANCE TO THE NEAREST BOX DOES NOT EXCEED 200 FEET. (2019 CFC 907.4.2.1)

MOUNTING HEIGHT DETAIL 1

SCALE: N.T.S.

COMPLETE FIRE ALARM SUBMITTAL
AUTOMATIC ADDRESSABLE FIRE ALARM SYSTEM WITH EMERGENCY VOICE/ALARM COMMUNICATION SYSTEM

IDENTIFICATION STAMP
DIV. OF THE STATE ARCHITECT
APP: 03-122664 INC:
REVIEWED FOR
SS ☑ FLS ☑ ACS ☑
DATE: 05/12/2023

pjhm architects

LICENSED ARCHITECT
RICHARD W. RINNE
No. C15585
REN. 02/25
STATE OF CALIFORNIA

tk|sc COLLABORATIVE

11870 Pierce Street, Suite 160
Riverside, California 92505
951.299.4160 www.tk1sc.com

Project Leader - Nikolas Bruno
Electrical Lead - Nikolas Bruno
tk1sc Job #: B2202744.000

REGISTERED PROFESSIONAL ENGINEER
RICHARD W. SIMPSON
No. E15610
EXP. 12/31/2024
ELECTRICAL
STATE OF CALIFORNIA

OC Office: 24461 Ridge Route Drive #100, Laguna Hills, CA 92653 Phone: 949.496.6191 LA Office: 837 Traction Avenue, #410, Los Angeles, CA 90013 Phone: 213.278.0172 Web: pjhm.com
SD Office: 804 Pier View Way #103, Oceanside, CA 92054 Phone: 760.730.5527

HIGHLAND HIGH SCHOOL
50M POOL & AQUATICS CENTER
KERN HIGH SCHOOL DISTRICT

FIRE ALARM DETAILS

EFA–1.0

8/2/2022 11:34:37 AM

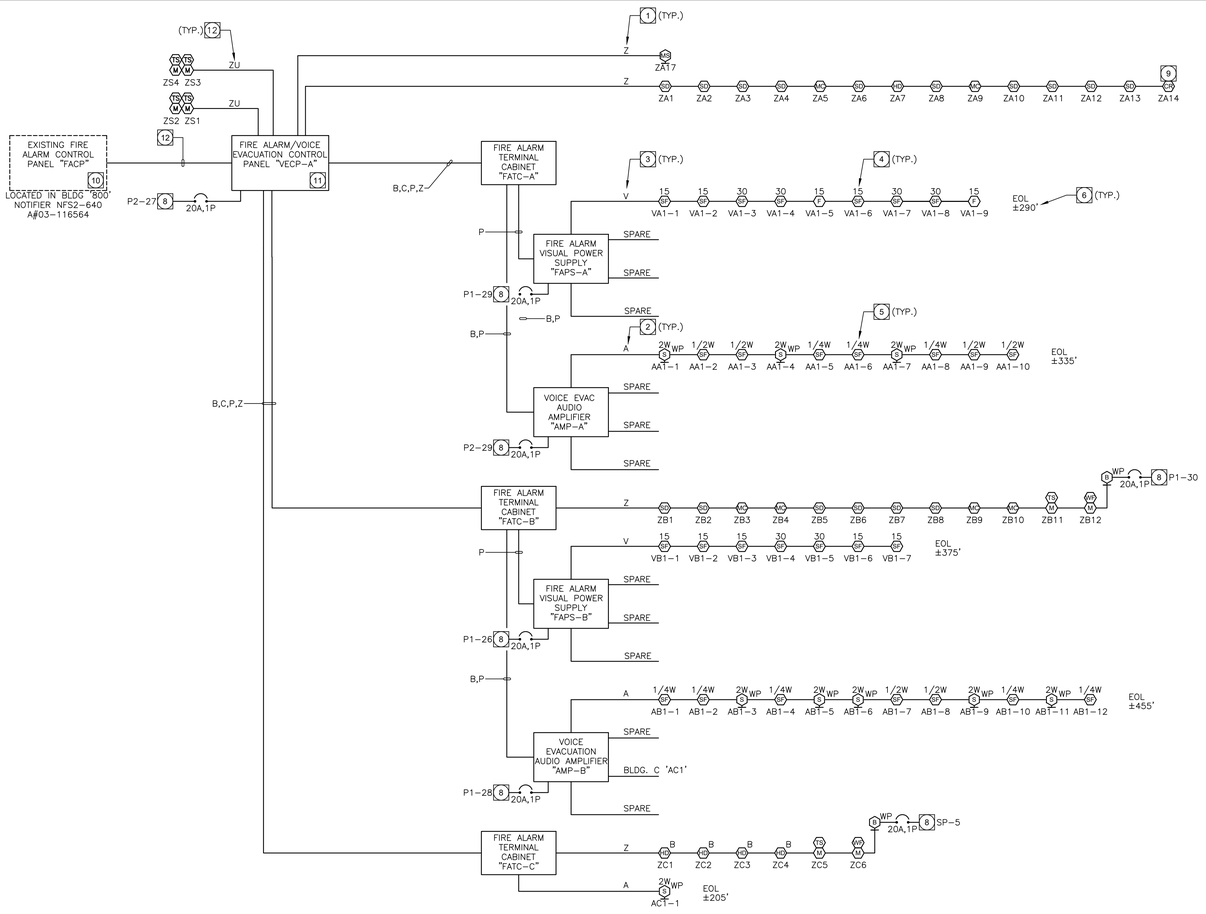

FIRE ALARM RISER DIAGRAM

SCALE: N.T.S.

1

RISER DIAGRAM SPECIFIC NOTES:

1. 'Z' INDICATES ZONABLE/ADDRESSABLE CIRCUIT, PROVIDE 2#16 TWISTED PAIR PER CIRCUIT, TYPICAL. SEE WIRE LEGEND FOR ADDITIONAL INFORMATION.
2. A – AUDIBLE NOTIFICATION CIRCUIT, PROVIDE 2#14 PER CIRCUIT, TYPICAL. SEE WIRE LEGEND FOR ADDITIONAL INFORMATION.
3. V – VISUAL NOTIFICATION CIRCUIT, PROVIDE 2#12 PER CIRCUIT, TYPICAL. SEE WIRE LEGEND FOR ADDITIONAL INFORMATION.
4. CANDELA RATING OF STROBE DEVICE, TYPICAL.
5. TAPPED WATTAGE FOR SPEAKER, TYPICAL.
6. DISTANCE TO END OF LINE (EOL) DEVICE, TYPICAL.
7. PROVIDE 2"C. WITH CABLING PER MANUFACTURERS REQUIREMENTS.
8. PROVIDE 3/4"C. WITH 2#12, 1#12 GRD. TO 120V DEDICATED CIRCUIT FOR POWER. PROVIDE 20AMP, 1–POLE CIRCUIT BREAKER WITH APPROVED LOCK–ON DEVICE, RED INDICATOR AND IDENTIFIED AS "FIRE ALARM CONTROL CIRCUIT" (NFPA 72, 10.5.5.2). CONNECT AS REQUIRED. PROVIDE ALL REQUIRED MOUNTING HARDWARE. MATCH A.I.C. RATING OF DEVICES USED.
9. CONTRACTOR TO PROVIDE RELAY MODULE FOR AUTONOMOUS SOUND SYSTEM. RELAY TO TURN "OFF" AUTONOMOUS SOUND SYSTEM DURING AN ALARM. CONTRACTOR TO VERIFY EXACT LOCATION OF SYSTEM ON SITE. A QUALIFIED PUBLIC ADDRESS CONTRACTOR IS TO BE UTILIZED TO INTERFACE FIRE ALARM SYSTEM WITH SOUND SYSTEM.
10. MODIFY EXISTING FIRE ALARM CONTROL PANEL/EQUIPMENT AS REQUIRED TO SERVE THE NEW CONSTRUCTION. PROVIDE NETWORK MODULE AND ADDITIONAL HARDWARE, CABLING, CONNECTIONS, PROGRAMMING, ETC. AS REQUIRED FOR A COMPLETE AND OPERABLE SYSTEM.
11. PROVIDE NETWORK MODULE AND PROGRAMMING AS REQUIRED FOR CONNECTION TO EXISTING CAMPUS FIRE ALARM SYSTEM.
12. PROVIDE 6–STRAND 50 MICRON OM4 CABLING TO INTERCONNECT NEW FIRE ALARM CONTROL PANEL TO EXISTING FIRE ALARM CONTROL PANEL ON CAMPUS FOR SYSTEM INTERFACE. PROVIDE ALL NECESSARY RELAYS, MODULES, CABINETS, ETC. FOR A COMPLETE AND OPERABLE SYSTEM. PER CFC 907.17, NFPA 10.4.1.2–10.4.1.2.2: "RE–ACCEPTANCE TESTING TO BE PERFORMED ON EXISTING PANEL TO VERIFY COMPLIANCE AND OPERATION.

FIRE ALARM GENERAL NOTES:

1. NOTIFICATION DEVICES IN ROOMS CONTAINING (2) OR MORE AUDIBLE AND/OR (2) OR MORE VISUAL DEVICES SHALL BE SYNCHRONIZED PER NFPA 72. THIS SHALL INCLUDE AUDIBLE AND VISUAL DEVICES LOCATED IN ADJACENT/ADJOINING SPACES.
2. DO NOT DEVIATE FROM CONDUIT RUNS AS SHOWN ON FLOOR PLANS WITHOUT PRIOR APPROVAL FROM SYSTEM SUPPLIER / ENGINEER. FACTORS SUCH AS EXCESSIVE VOLTAGE DROP, ADDITIONAL PARTS, ENGINEERING, ETC. THAT ARE A RESULT OF CONDUIT RUN DEVIATIONS SHALL BE THE SOLE RESPONSIBILITY OF THE CONTRACTOR.
3. DETECTORS SHALL NOT BE LOCATED IN A DIRECT AIR–FLOW, NOR CLOSER THAN 3 FEET (915 mm) FROM ANY AIR SUPPLY DIFFUSER.
4. THE AUDIBLE ALARM NOTIFICATION APPLIANCES SHALL PROVIDE A SOUND PRESSURE LEVEL OF 15 dBA ABOVE THE AVERAGE AMBIENT SOUND LEVEL OR 5 dBA ABOVE THE MAXIMUM SOUND LEVEL HAVING DURATION OF AT LEAST 60 SECONDS, WHICHEVER IS GREATER, IN EVERY OCCUPIED SPACE WITHIN THE BUILDING PER CFC SECTION 907.5.2.1.1. THE MINIMUM SOUND PRESSURE LEVEL SHALL BE 60 dBA PER NFPA 72, TABLE A.18.4.3.
5. THE AUDIBLE ALARM SIGNAL SHALL BE THE STANDARD FIRE ALARM EVACUATION SIGNAL, ANSI S34.1 AUDIBLE EMERGENCY EVACUATION SIGNAL, "THREE PULSE TEMPORAL PATTERN", AS DESCRIBED IN NFPA 72. EXCEPTION: THE USE OF THE EXISTING EVACUATION SIGNALING SCHEME SHALL BE PERMITTED WHERE APPROVED BY THE ENFORCING AGENT. (CFC, SECTION 907.5.2.1.3)
6. THE EXISTING CAMPUS FIRE ALARM SYSTEM SHALL BE MAINTAINED AND OPERATIONAL AT ALL TIMES DURING ALTERATIONS AND CONSTRUCTION. WHEN PORTIONS OF THE SYSTEM REQUIRE ALTERATIONS, THE REMAINDER OF THE SYSTEM SHALL BE KEPT IN SERVICE. IF NECESSARY TO SHUT DOWN ENTIRE FIRE ALARM SYSTEM, CONTRACTOR SHALL PROVIDE FIREWATCH FOR ALL OCCUPIED AREAS OF WORK UNTIL THE FIRE ALARM SYSTEM IS RETURNED TO OPERATIONAL SERVICE. FIREWATCH AND SYSTEM/EQUIPMENT IDENTIFICATION SHALL BE PER THE 2019 CFC, CHAPTER 33. LOCAL FIRE AUTHORITY AND OWNER SHALL BE NOTIFIED 48 HOURS IN ADVANCE OF ANY SHUT DOWN.
7. EMERGENCY VOICE/ALARM COMMUNICATION SYSTEMS SHALL BE DESIGNED AND INSTALLED IN ACCORDANCE WITH NFPA 72. THE OPERATION OF ANY AUTOMATIC FIRE DETECTOR, SPRINKLER WATERFLOW DEVICE OR MANUAL FIRE ALARM BOX SHALL AUTOMATICALLY SOUND AN ALERT TONE FOLLOWED BY VOICE INSTRUCTIONS GIVING APPROVED INFORMATION AND DIRECTIONS FOR A GENERAL OR STAGED EVACUATION IN ACCORDANCE WITH THE FIRE SAFETY EVACUATION PLANS REQUIRED BY SECTION 404 PER CBC/CFC, SECTION 907.5.2.2.
8. EMERGENCY VOICE/ALARM COMMUNICATION SYSTEMS SHALL HAVE THE CAPABILITY TO BROADCAST LIVE VOICE MESSAGES BY PAGING ZONES ON A SELECTIVE AND ALL–CALL BASIS PER CBC/CFC, SECTION 907.5.2.2.2.
9. EMERGENCY VOICE/ALARM COMMUNICATION SYSTEMS SHALL BE PROVIDED WITH AN APPROVED EMERGENCY POWER SOURCE PER CBC/CFC, SECTION 907.5.2.2.5.

BATTERY SIZING CALCULATION

PROJECT NAME: HIGHLANDS HS AQUATICS FACILITY
PANEL LOCATION: BUILDING A
DATE PERFORMED: March 31, 2023

VECP-A

QTY.	DEVICE NAME	STD-BY (AMPS)		ALARM (AMPS)	
1	CONTROL PANEL	0.3400	0.3400	0.3400	0.3400
1	VOICE COMMAND	0.3000	0.3000	0.3000	0.3000
1	MICROPHONE MODULE	0.0200	0.0200	0.0660	0.0660
1	NETWORK DISPLAY	0.4000	0.4000	0.4000	0.4000
1	NETWORK MODULE	0.4000	0.4000	0.4000	0.4000
1	PULL STATION	0.0004	0.0004	0.0050	0.0050
16	SMOKE DETECTOR/BASE	0.0002	0.0032	0.0002	0.0032
6	MULTI-CRITERIA DET/BASE	0.0002	0.0012	0.0002	0.0012
5	HEAT DET (HI-TEMP)/BASE	0.0002	0.0010	0.0002	0.0010
1	CONTROL RELAY MODULE	0.0003	0.0003	0.0003	0.0003
0	MONITOR MODULE	0.0004	0.0000	0.0004	0.0000
8	SPRINKLER MONITORING	0.0004	0.0032	0.0004	0.0032
1	COMMUNICATOR	0.0520	0.0520	0.0870	0.0870
		0.0000	0.0000	0.0000	0.0000
		0.0000	0.0000	0.0000	0.0000
	TOTALS =		1.5213		1.6069

STAND-BY LOAD = 1.5213 ALARM LOAD = 1.6069 AMPS
STAND-BY TIME = 24 ALARM TIME = 15 / 60 HRS
STAND-BY = 36.5112 ALARM = 0.4017 AMP HRS
TOTAL = STAND-BY + ALARM
= 36.51 + 0.40
= 36.91 Ah (AMP HRS)
MULTIPLY BY DERATING FACTOR OF 1.25 = 46.14 Ah (AMP HRS)
MINIMUM BATTERY SIZE = 46.14 AMPERE HOURS
PROVIDE MIN. (2) 55.00 Ah 12VDC BATTERIES AS REQUIRED FOR 24VDC OPERATION

BATTERY SIZING CALCULATION

PROJECT NAME: HIGHLANDS HS AQUATICS FACILITY
PANEL LOCATION: BUILDING A
DATE PERFORMED: March 31, 2023

FAPS-A

QTY.	DEVICE NAME	STD-BY (AMPS)		ALARM (AMPS)	
1	POWER SUPPLY	0.0910	0.0910	0.1450	0.1450
5	15cd STROBE (CEILING)	0.0000	0.0000	0.0410	0.2050
4	30cd STROBE (CEILING)	0.0000	0.0000	0.0630	0.2520
0	75cd STROBE (CEILING)	0.0000	0.0000	0.1100	0.0000
0	95cd STROBE (CEILING)	0.0000	0.0000	0.1340	0.0000
1	SYNC MODULE	0.0000	0.0000	0.0120	0.0120
		0.0000	0.0000	0.0000	0.0000
		0.0000	0.0000	0.0000	0.0000
		0.0000	0.0000	0.0000	0.0000
	TOTALS =		0.0910		0.6140

STAND-BY LOAD = 0.0910 ALARM LOAD = 0.6140 AMPS
STAND-BY TIME = 24 ALARM TIME = 15 / 60 HRS
STAND-BY = 2.1840 ALARM = 0.1535 AMP HRS
TOTAL = STAND-BY + ALARM
= 2.18 + 0.15
= 2.34 Ah (AMP HRS)
MULTIPLY BY DERATING FACTOR OF 1.25 = 2.92 Ah (AMP HRS)
MINIMUM BATTERY SIZE = 2.92 AMPERE HOURS
PROVIDE MIN. (2) 7.00 Ah 12VDC BATTERIES AS REQUIRED FOR 24VDC OPERATION

BATTERY SIZING CALCULATION

PROJECT NAME: HIGHLANDS HS AQUATICS FACILITY
PANEL LOCATION: BUILDING A
DATE PERFORMED: March 31, 2023

AMP-A

QTY.	DEVICE NAME	STD-BY (AMPS)		ALARM (AMPS)	
1	AUDIO AMPLIFIER	0.4000	0.4000	0.5500	0.5500
4	SPEAKER (1/4W)	0.0000	0.0000	0.0035	0.0140
4	SPEAKER (1/2W)	0.0000	0.0000	0.0071	0.0284
0	SPEAKER (1W)	0.0000	0.0000	0.0143	0.0000
3	WP SPEAKER (2W)	0.0000	0.0000	0.0283	0.0849
1	SYNC MODULE	0.0000	0.0000	0.0120	0.0120
		0.0000	0.0000	0.0000	0.0000
		0.0000	0.0000	0.0000	0.0000
		0.0000	0.0000	0.0000	0.0000
	TOTALS =		0.4000		0.6893

STAND-BY LOAD = 0.4000 ALARM LOAD = 0.6893 AMPS
STAND-BY TIME = 24 ALARM TIME = 15 / 60 HRS
STAND-BY = 9.6000 ALARM = 0.1723 AMP HRS
TOTAL = STAND-BY + ALARM
= 9.60 + 0.17
= 9.77 Ah (AMP HRS)
MULTIPLY BY DERATING FACTOR OF 1.25 = 12.22 Ah (AMP HRS)
MINIMUM BATTERY SIZE = 12.22 AMPERE HOURS
PROVIDE MIN. (2) 18.00 Ah 12VDC BATTERIES AS REQUIRED FOR 24VDC OPERATION

BATTERY SIZING CALCULATION

PROJECT NAME: HIGHLANDS HS AQUATICS FACILITY
PANEL LOCATION: BUILDING B
DATE PERFORMED: March 31, 2023

FAPS-B

QTY.	DEVICE NAME	STD-BY (AMPS)		ALARM (AMPS)	
1	POWER SUPPLY	0.0910	0.0910	0.1450	0.1450
5	15cd STROBE (CEILING)	0.0000	0.0000	0.0410	0.2050
2	30cd STROBE (CEILING)	0.0000	0.0000	0.0630	0.1260
0	75cd STROBE (CEILING)	0.0000	0.0000	0.1100	0.0000
0	95cd STROBE (CEILING)	0.0000	0.0000	0.1340	0.0000
1	SYNC MODULE	0.0000	0.0000	0.0120	0.0120
		0.0000	0.0000	0.0000	0.0000
		0.0000	0.0000	0.0000	0.0000
		0.0000	0.0000	0.0000	0.0000
	TOTALS =		0.0910		0.4880

STAND-BY LOAD = 0.0910 ALARM LOAD = 0.4880 AMPS
STAND-BY TIME = 24 ALARM TIME = 15 / 60 HRS
STAND-BY = 2.1840 ALARM = 0.1220 AMP HRS
TOTAL = STAND-BY + ALARM
= 2.18 + 0.12
= 2.31 Ah (AMP HRS)
MULTIPLY BY DERATING FACTOR OF 1.25 = 2.88 Ah (AMP HRS)
MINIMUM BATTERY SIZE = 2.88 AMPERE HOURS
PROVIDE MIN. (2) 7.00 Ah 12VDC BATTERIES AS REQUIRED FOR 24VDC OPERATION

BATTERY SIZING CALCULATION

PROJECT NAME: HIGHLANDS HS AQUATICS FACILITY
PANEL LOCATION: BUILDING B
DATE PERFORMED: March 31, 2023

AMP

QTY.	DEVICE NAME	STD-BY (AMPS)		ALARM (AMPS)	
1	AUDIO AMPLIFIER	0.4000	0.4000	0.5500	0.5500
5	SPEAKER (1/4W)	0.0000	0.0000	0.0035	0.0175
2	SPEAKER (1/2W)	0.0000	0.0000	0.0071	0.0142
0	SPEAKER (1W)	0.0000	0.0000	0.0143	0.0000
6	WP SPEAKER (2W)	0.0000	0.0000	0.0283	0.1698
2	SYNC MODULE	0.0000	0.0000	0.0120	0.0240
		0.0000	0.0000	0.0000	0.0000
		0.0000	0.0000	0.0000	0.0000
		0.0000	0.0000	0.0000	0.0000
	TOTALS =		0.4000		0.7755

STAND-BY LOAD = 0.4000 ALARM LOAD = 0.7755 AMPS
STAND-BY TIME = 24 ALARM TIME = 15 / 60 HRS
STAND-BY = 9.6000 ALARM = 0.1939 AMP HRS
TOTAL = STAND-BY + ALARM
= 9.60 + 0.19
= 9.79 Ah (AMP HRS)
MULTIPLY BY DERATING FACTOR OF 1.25 = 12.24 Ah (AMP HRS)
MINIMUM BATTERY SIZE = 12.24 AMPERE HOURS
PROVIDE MIN. (2) 18.00 Ah 12VDC BATTERIES AS REQUIRED FOR 24VDC OPERATION

BATTERY CALCULATIONS GENERAL NOTE:

1. CONTRACTOR TO PROVIDE BATTERY MANUFACTURER DATE STAMP PER NFPA 72. TYPICAL FOR ALL CONTROL PANELS, POWER SUPPLY PANELS AND AUDIO AMPLIFIER PANELS.

VOLTAGE DROP CALCULATIONS

HIGHLANDS HS AQUATICS FACILITY

DEVICE	UL MAX. CURRENT		VISUAL CIRCUIT		VISUAL CIRCUIT		VISUAL CIRCUIT		VISUAL CIRCUIT		VISUAL CIRCUIT		VISUAL CIRCUIT		VISUAL CIRCUIT	
	AMPS	NO	VA1	NO	SPARE	NO	SPARE	NO	SPARE	NO	VB1	NO	SPARE	NO	SPARE	NO	SPARE
STROBE (CEILING) 15 CD	0.041	5	0.205		0.000		0.000	5	0.205		0.000		0.000		0.000	
STROBE (CEILING) 30 CD	0.063	4	0.252		0.000		0.000	2	0.126		0.000		0.000		0.000	
STROBE (CEILING) 75 CD	0.111		0.000		0.000		0.000		0.000		0.000		0.000		0.000	
STROBE (CEILING) 95 CD	0.134		0.000		0.000		0.000		0.000		0.000		0.000		0.000	
			0.000		0.000		0.000		0.000		0.000		0.000		0.000	
			0.000		0.000		0.000		0.000		0.000		0.000		0.000	
TOTAL CURRENT ON CIRCUIT			0.457 AMPS		0.000 AMPS		0.000 AMPS		0.331 AMPS		0.000 AMPS		0.000 AMPS		0.000 AMPS	
TOTAL WIRE LENGTH IN FEET			290						375							
% VOLTAGE DROP			**2.15**		**0.00**		**0.00**		**0.00**		**2.01**		**0.00**		**0.00**		**0.00**
WIRE SIZE			#12		#12		#12		#12		#12		#12		#12		#12
CIRCUIT LOCATION			VECP-A		VECP-A		VECP-A		VECP-A		FAPS-B		FAPS-B		FAPS-B		FAPS-B
VOLTS DROPPED			**0.44**		**0.00**		**0.00**		**0.00**		**0.41**		**0.00**		**0.00**		**0.00**

VOLTAGE DROP CALCULATIONS

HIGHLANDS HS AQUATICS FACILITY

DEVICE	UL MAX. CURRENT		AUDIBLE CIRCUIT		AUDIBLE CIRCUIT		AUDIBLE CIRCUIT		AUDIBLE CIRCUIT		AUDIBLE CIRCUIT		AUDIBLE CIRCUIT		AUDIBLE CIRCUIT	
	AMPS	NO	AA1	NO	SPARE	NO	SPARE	NO	SPARE	NO	AB1	NO	SPARE	NO	AC1	NO	SPARE
SPEAKER 1/4W	0.004	3	0.011		0.000		0.000	5	0.018		0.000		0.000		0.000	
SPEAKER 1/2W	0.007	4	0.028		0.000		0.000	2	0.014		0.000		0.000		0.000	
SPEAKER 1W	0.014		0.000		0.000		0.000		0.000		0.000		0.000		0.000	
SPEAKER 2W (WEATHERPROOF)	0.028	3	0.085		0.000		0.000	5	0.141		0.000	1	0.028		0.000	
TOTAL CURRENT ON CIRCUIT			0.085 AMPS		0.000 AMPS		0.000 AMPS		0.141 AMPS		0.000 AMPS		0.028 AMPS		0.000 AMPS	
TOTAL WIRE LENGTH IN FEET			220						455				205			
% VOLTAGE DROP			**0.77**		**0.00**		**0.00**		**2.64**		**0.00**		**0.24**		**0.00**	
WIRE SIZE			#16		#16		#16		#16		#16		#16		#16	
CIRCUIT LOCATION			AMP-A		AMP-A		AMP-A		AMP-B		AMP-B		AMP-B		AMP-B	
VOLTS DROPPED			**0.16**		**0.00**		**0.00**		**0.54**		**0.00**		**0.05**		**0.00**	

FIRE ALARM SYSTEM CALCULATIONS

SCALE: N.T.S.

2

VOLTAGE DROP CALCULATIONS GENERAL NOTES:

1. THE LISTED MANUFACTURER OPERATING VOLTAGE RANGE FOR EQUIPMENT AND DEVICES ARE AS FOLLOWS:

   DEVICES = 16 – 33 VDC
   EQUIPMENT = +24VDC FILTERED, REGULATED
   BATTERY = 20.4 VDC END OF USEFUL LIFE PER NFPA 72 HANDBOOK AND UL 864.

2. VOLTAGE DROP PERCENT FORMULA:

$$\frac{\text{WIRE LENGTH} \times \text{TOTAL CURRENT AMPS} \times 21.6}{\text{CIRCULAR MILS}} \times \frac{100}{20.4}$$

21.6 = CONSTANT (RESISTANCE OF CONDUCTOR)

CIRCULAR MILS:
#12AWG = 6530 #16AWG = 2580
#14AWG = 4110 #18AWG = 1620

IDENTIFICATION STAMP
DIV. OF THE STATE ARCHITECT
APP: 03-122664 INC:
REVIEWED FOR
SS ☑ FLS ☑ ACS ☑
DATE: 05/12/2023

pjhm architects
LICENSED ARCHITECT RICHARD W. RISBERG NO. C15585 REN. 02/25 STATE OF CALIFORNIA
tk|sc COLLABORATIVE
11870 Pierce Street, Suite 160
Riverside, California 92505
951.299.4160 www.tk1sc.com
Project Leader - Nikolas Bruno
Electrical Lead - Nikolas Bruno
tk1sc Job #: B2202744.000
REGISTERED PROFESSIONAL ENGINEER RICHARD W. SIMPSON NO. E15610 EXP. 12/31/2024 ELECTRICAL STATE OF CALIFORNIA
pjhm architects 837 Traction Avenue, #410, Los Angeles, CA 90013 Phone: 213.278.0172 Web: pjhm.com
OC Office: 24461 Ridge Route Drive #100, Laguna Hills, CA 92653 Phone: 760.730.5527 LA Office: 804 Pier View Way #103, Oceanside, CA 92054 Phone: 949.496.6163 SD Office:

HIGHLAND HIGH SCHOOL
50M POOL & AQUATICS CENTER
KERN HIGH SCHOOL DISTRICT

FIRE ALARM RISER DIAGRAM AND CALCULATIONS

EFA–2.0

8/2/2022 11:34:37 AM

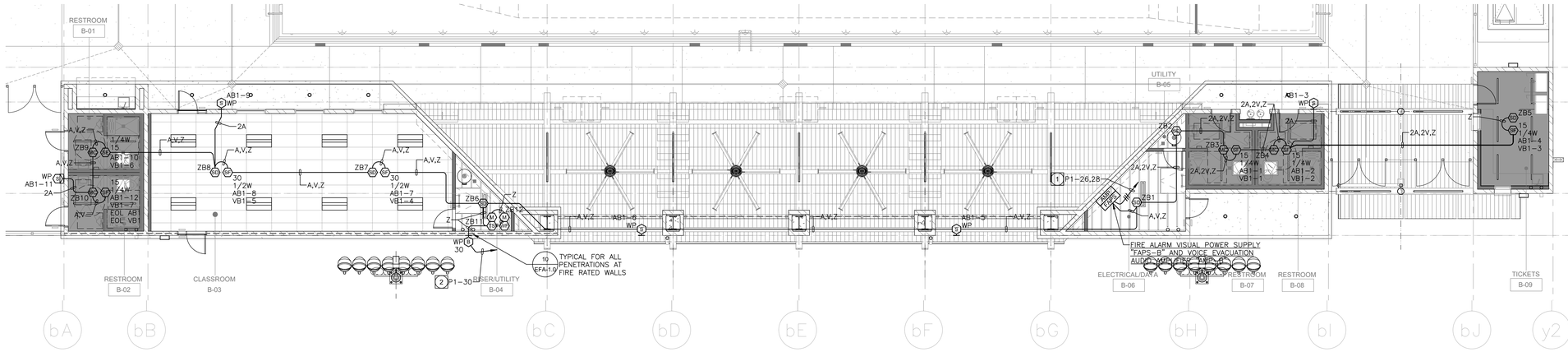

POOL BUILDING B - FIRE ALARM PLAN

1/8" = 1'-0"

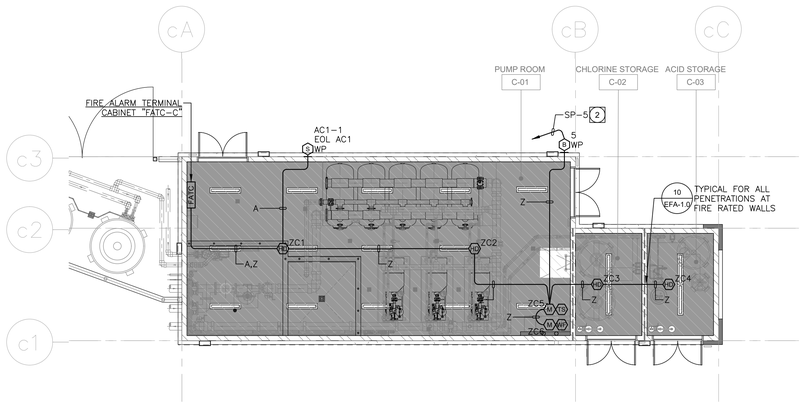

POOL BUILDING C - FIRE ALARM PLAN

1/8" = 1'-0"

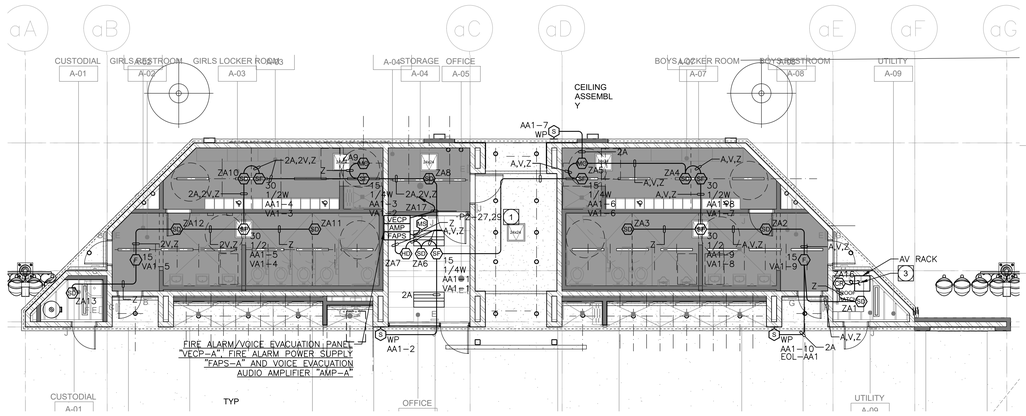

POOL BUILDING A - FIRE ALARM PLAN

1/8" = 1'-0"

VOICE EVACUATION SPEAKER NOTE:
- ALL INTERIOR SPEAKERS SHALL BE TAPPED AT 1 WATT, U.O.N.
- ALL EXTERIOR SPEAKERS SHALL BE TAPPED AT 2 WATTS, U.O.N.

FIRE ALARM PLAN GENERAL NOTES:

1. NOTIFICATION DEVICES IN ROOMS CONTAINING (2) OR MORE AUDIBLE AND/OR (2) OR MORE VISUAL DEVICES SHALL BE SYNCHRONIZED PER NFPA 72. THIS SHALL INCLUDE AUDIBLE AND VISUAL DEVICES LOCATED IN ADJACENT/ADJOINING SPACES.
2. DO NOT DEVIATE FROM CONDUIT RUNS AS SHOWN ON FLOOR PLANS WITHOUT PRIOR APPROVAL FROM SYSTEM SUPPLIER / ENGINEER. FACTORS SUCH AS EXCESSIVE VOLTAGE DROP, ADDITIONAL PARTS, ENGINEERING, ETC. THAT ARE A RESULT OF CONDUIT RUN DEVIATIONS SHALL BE THE SOLE RESPONSIBILITY OF THE CONTRACTOR.
3. DETECTORS SHALL NOT BE LOCATED IN A DIRECT AIR-FLOW, NOR CLOSER THAN 3 FEET (915 mm) FROM ANY AIR SUPPLY DIFFUSER.
4. THE AUDIBLE ALARM NOTIFICATION APPLIANCES SHALL PROVIDE A SOUND PRESSURE LEVEL OF 15 dBA ABOVE THE AVERAGE AMBIENT SOUND LEVEL OR 5 dBA ABOVE THE MAXIMUM SOUND LEVEL HAVING DURATION OF AT LEAST 60 SECONDS, WHICHEVER IS GREATER, IN EVERY OCCUPIED SPACE WITHIN THE BUILDING PER CFC SECTION 907.5.2.1.1. THE MINIMUM SOUND PRESSURE LEVEL SHALL BE 60 dBA PER NFPA 72, TABLE A.18.4.3.
5. THE VOICE/ALARM COMMUNICATION SYSTEM VOICE MESSAGE SHALL COMPLY WITH NFPA 72, SECTIONS 18.4 AND 24.4 FOR GENERAL REQUIREMENTS, INTELLIGIBILITY, AUDIBILITY, MESSAGE PRIORITY, TONES, ETC.
6. REFER TO ARCHITECTURAL EXTERIOR ELEVATIONS FOR PRECISE DEVICE LOCATIONS.
7. REFER TO ARCHITECTURAL REFLECTED CEILING PLAN FOR EXACT LOCATION OF ALL CEILING MOUNTED DEVICES.
8. IF SHIELDED WIRE IS USED, THE FOLLOWING MUST BE OBSERVED.
   A. METALLIC CONTINUITY OF THE SHIELD MUST BE MAINTAINED AND INSULATED THROUGHOUT THE ENTIRE LENGTH OF THE CABLE.
   B. THE ENTIRE LENGTH OF THE CABLE MUST HAVE A RESISTANCE GREATER THAN 1 MEGOHM TO EARTH.
9. ALL PENETRATIONS THROUGH FIRE RATED WALLS SHALL BE PROTECTED FROM THE SPREAD OF FIRE WITH AN APPROVED FIRE STOP SYSTEM EQUAL TO OR GREATER THAN THE FIRE RATING OF THE STRUCTURE / SURFACE BEING PENETRATED AS IDENTIFIED IN CBC CHAPTER 7, UL OR OTHER LAB TESTING CRITERIA. APPROVED TYPES OF MATERIALS SHALL BE IDENTIFIED WITHIN THE FIRE ALARM SECTION OF THE PROJECT SPECIFICATIONS.
10. A SYSTEM GROUND MUST BE PROVIDED FOR EARTH DETECTION AND LIGHTNING PROTECTION DEVICES. THIS CONNECTION SHALL BE MADE TO AN APPROVED DEDICATED EARTH CONNECTION PER CEC, ARTICLE 250.
11. WIRING IN DUCTS, PLENUMS AND OTHER AIR HANDLING SPACES MUST BE INSTALLED IN ACCORDANCE WITH CEC.
12. UNDERGROUND WIRING MUST BE FREE OF ALL WATER.
13. ALL FIRE ALARM SYSTEM CONDUCTORS SHALL BE RUN IN A DEDICATED FIRE ALARM CONDUIT SYSTEM.
14. WHERE A DETECTOR IS INDICATED TO BE INSTALLED ABOVE THE CEILING AND NO ACCESS TO THE CEILING SPACE EXISTS, THE ELECTRICAL CONTRACTOR SHALL FURNISH ACCESS PANELS. THE DETECTOR SHALL BE EASILY ACCESSIBLE AND THE LOCATION OF THE DETECTOR SHALL BE CLEARLY MARKED.
15. COORDINATE ALL FIRE ALARM DEVICES, ESPECIALLY REMOTE LED'S FOR DUCT SMOKE DETECTORS, WITH ARCHITECT PRIOR TO ROUGH-IN.
16. WIRING OTHER THAN THAT CONNECTED TO ELEVATOR CABS MUST NOT BE RUN IN ELEVATOR SHAFTS (REF. CEC, ARTICLE 620).
17. FIRE ALARM SYSTEM UTILIZES A COMPLETE COVERAGE, FULLY AUTOMATIC SYSTEM. PROVIDE RELAY MODULE(S) AT FATC/FACP LOCATIONS FOR CONTROL OF HVAC SHUT DOWN, SMOKE/FIRE DAMPER CLOSURE AND DOOR HOLD RELEASES.
18. WHERE NEW DEVICES (AND ASSOCIATED CONDUIT) CANNOT PHYSICALLY BE MOUNTED CONCEALED IN WALLS, RUN IN PANDUIT SURFACE RACEWAY/WIREWAY (AND DEVICES SHALL BE MOUNTED ON SURFACE OUTLET BOXES). REFER TO SPECIFICATIONS. PROVIDE SIZE OF RACEWAY TO ACCOMMODATE THE REQUIRED CONDUCTORS. WHERE CONDUIT IS INDICATED, PROVIDE SURFACE RACEWAY WITH AN EQUAL CROSS SECTION TO THE DIAMETER OF THE CONDUIT INDICATED.
19. DETECTOR SENSITIVITY SHALL BE TESTED USING MANUFACTURER'S CALIBRATED SENSITIVITY INSTRUMENT OR OTHER CALIBRATED TESTING METHOD. (CFC, SECTIONS 907.8.3 AND 907.8.4)
20. THE VOICE/ALARM COMMUNICATION SYSTEM VOICE MESSAGE SHALL COMPLY WITH NFPA 72 SECTIONS 18.4 AND 24.4 FOR GENERAL REQUIREMENTS, INTELLIGIBILITY, AUDIBILITY, MESSAGE PRIORITY, TONES, ETC. REFER TO NFPA 72 ANNEX D, D.1 THROUGH D.6 FOR DETERMINING THE FUNDAMENTALS OF TEST PROTOCOL AND METHOD OF MEASURING INTELLIGIBILITY.
21. THE EXISTING CAMPUS FIRE ALARM SYSTEM SHALL BE MAINTAINED AND OPERATIONAL AT ALL TIMES DURING ALTERATIONS AND CONSTRUCTION. WHEN PORTIONS OF THE SYSTEM REQUIRE ALTERATIONS, THE REMAINDER OF THE SYSTEM SHALL BE KEPT IN SERVICE. IF NECESSARY TO SHUT DOWN ENTIRE FIRE ALARM SYSTEM, CONTRACTOR SHALL PROVIDE FIREWATCH FOR ALL OCCUPIED AREAS OF WORK UNTIL THE FIRE ALARM SYSTEM IS RETURNED TO OPERATIONAL SERVICE. FIREWATCH AND SYSTEM/EQUIPMENT IDENTIFICATION SHALL BE PER THE 2019 CFC CHAPTER 33. LOCAL FIRE AUTHORITY AND OWNER SHALL BE NOTIFIED 48 HOURS IN ADVANCE OF ANY SHUT DOWN. REFER TO DSA IR F-2 FOR ADDITIONAL REQUIREMENTS.

PLAN NOTES:

1. PROVIDE 3/4"C. WITH 3#12, 1#12 GRD. TO TWO (2) 120V DEDICATED CIRCUITS FOR POWER. PROVIDE TWO (2) 20AMP, 1-POLE CIRCUIT BREAKERS WITH APPROVED LOCK-ON DEVICES. RED INDICATORS AND IDENTIFIED AS "FIRE ALARM CONTROL CIRCUIT" (NFPA 72, 10.6). CONNECT AS REQUIRED. PROVIDE ALL REQUIRED MOUNTING HARDWARE. MATCH A.I.C. RATING OF DEVICES USED.
2. PROVIDE 3/4"C. WITH 2#12, 1#12 GRD. TO 120V DEDICATED CIRCUIT FOR POWER. PROVIDE 20AMP, 1-POLE CIRCUIT BREAKER WITH APPROVED LOCK-ON DEVICE, RED INDICATOR AND IDENTIFIED AS "FIRE ALARM CONTROL CIRCUIT" (NFPA 72, 10.6). CONNECT AS REQUIRED. PROVIDE ALL REQUIRED MOUNTING HARDWARE. MATCH A.I.C. RATING OF DEVICES USED.
3. CONTRACTOR TO PROVIDE RELAY MODULE AT AUTONOMOUS SOUND SYSTEM TO TURN "OFF" AUTONOMOUS SOUND SYSTEM DURING AN ALARM. CONTRACTOR TO VERIFY EXACT LOCATION OF AUTONOMOUS SOUND SYSTEM ON SITE. A QUALIFIED PUBLIC ADDRESS CONTRACTOR IS TO BE UTILIZED TO INTERFACE FIRE ALARM SYSTEM WITH SOUND SYSTEM.

WALL LEGEND

CONCRETE MASONRY UNIT WALL ASSEMBLY, 1-HOUR FIRE RATED

COMPLETE FIRE ALARM SUBMITTAL

AUTOMATIC ADDRESSABLE FIRE ALARM SYSTEM WITH EMERGENCY VOICE/ALARM COMMUNICATION SYSTEM

IDENTIFICATION STAMP
DIV. OF THE STATE ARCHITECT
APP: 03-122664 INC:
REVIEWED FOR
SS ☑ FLS ☑ ACS ☑
DATE: 05/12/2023

pjhm architects

LICENSED ARCHITECT
RICHARD W. SWARTZ
No. C15585
REN. 02/25
STATE OF CALIFORNIA

tk|sc COLLABORATIVE
11870 Pierce Street, Suite 160
Riverside, California 92505
951.299.4160 www.tk1sc.com
Project Leader - Nikolas Bruno
Electrical Lead - Nikolas Bruno
tk1sc Job #: B2202744.000

REGISTERED PROFESSIONAL ENGINEER
RICHARD W. SWARTZ
No. E15610
ELECTRICAL
STATE OF CALIFORNIA

OC Office: 24461 Ridge Route Drive #100, Laguna Hills, CA 92653 Phone: 949.496.6161 SD Office: 804 Pier View Way #103, Oceanside, CA 92054 Phone: 760.730.5527 LA Office: 837 Traction Avenue, #410, Los Angeles, CA 90013 Phone: 213.278.0112 Web: pjhm.com

HIGHLAND HIGH SCHOOL
50M POOL & AQUATICS CENTER
KERN HIGH SCHOOL DISTRICT

POOL BUILDING
FIRE ALARM

EFA-3.0

8/2/2022 11:34:37 AM

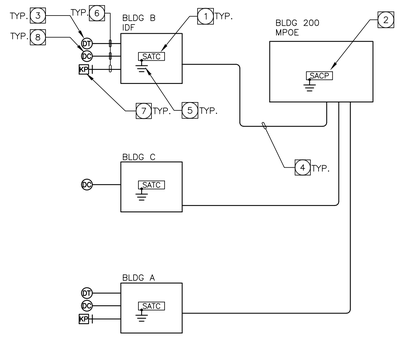

SECURITY SYSTEM SPECIFIC NOTES:

1. PROVIDE NEW DMP SECURITY ALARM TERMINAL CABINET. PROVIDE ZONE EXPANSION MODULES, BUS SPLITTER/REPEATER MODULES, TERMINAL STRIPS, TRANSFORMERS, POWER SUPPLIES, ETC. FOR A COMPLETE AND OPERABLE SYSTEM.
2. EXISTING DMP SACP TO REMAIN AND PROTECTED IN PLACE. PROVIDE ZONE EXPANSION MODULES, BUS SPLITTER/REPEATER MODULES, TERMINAL STRIPS, TRANSFORMERS, POWER SUPPLIES, ETC. FOR A COMPLETE AND OPERABLE SYSTEM.
3. PROVIDE MOTION DETECTOR PER SPECIFICATIONS. QUANTITY PER PLAN DRAWINGS.
4. PROVIDE NEW SECURITY SYSTEM BACKBONE CABLING PER MANUFACTURER'S SPECIFICATIONS.
5. PROVIDE GROUNDING AT EACH SECURITY SYSTEM TERMINAL CABINET PER SPECIFICATIONS.
6. PROVIDE NEW SECURITY SYSTEM DEVICE CABLING PER MANUFACTURER'S RECOMMENDATIONS AND SPECIFICATIONS.
7. PROVIDE NEW KEYPAD PER SPECIFICATIONS. QUANTITY PER PLAN DRAWINGS.
8. PROVIDE NEW DOOR CONTACTS PER SPECIFICATIONS. QUANTITY PER PLAN DRAWINGS.

SECURITY SYSTEM GENERAL NOTES:

1. ALL NEW CABLE TO BE COMPLETE WITH ALL TERMINATIONS AND TESTING FOR COMPLETE AND OPERABLE SYSTEM.
2. LOCATE EQUIPMENT IN LOCKABLE ENCLOSURE INSIDE EXISTING BUILDING.
3. ALL DEVICES ARE TO BE WIRED INDEPENDENTLY, NO LOOPS FOR DATA, DEVICE OR POWER.
4. LABEL ALL CABLES WITH SCHOOL'S DESIGNATED ZONE NUMBER / LOCATION ON PLASTIC COATED CABLE MARKERS WRAPPED AROUND CABLE AT EACH END AND IN EACH TERMINAL CABINET AND JUNCTION BOX. DISTRICT M&O DEPT. TO SUPPLY CONTRACTOR WITH ZONE NUMBERS.
5. PROVIDE "CADDY" HANGERS FOR ALL CABLE TO BE RUN ABOVE ACCESSIBLE CEILING. SUPPORT CABLES SEPERATE FROM CEILING SYSTEM AND OTHER SUB-SYSTEM CABLING. PROVIDE CONDUIT FOR ALL CABLES ABOVE NON-ACCESSIBLE CEILING SPACE.
6. PROVIDE "CADDY" HANGERS FOR ALL CABLE TO BE RUN ABOVE ACCESSIBLE CEILING. SUPPORT CABLES SEPERATE FROM CEILING SYSTEM AND OTHER SUB-SYSTEM CABLING. PROVIDE CONDUIT FOR ALL CABLES ABOVE NON-ACCESSIBLE CEILING SPACE.
7. SECURITY SYSTEM SHALL NOT IN ANY WAY LIMIT OR COMPROMISE EXITING THROUGH ALL REQUIRED EXIT ACCESS AND EXIT DISCHARGE SYSTEMS.
8. ANY SECURITY SYSTEM PENETRATION THROUGH RATED ASSEMBLIES SHALL BE PROPERLY PROTECTED WITH A UL LISTED FIRE-STOP INSTALLATION MATCHING THE RATING OF THE ASSEMBLY.

SECURITY ALARM SYSTEM BLOCK DIAGRAM

SCALE: N.T.S.

2

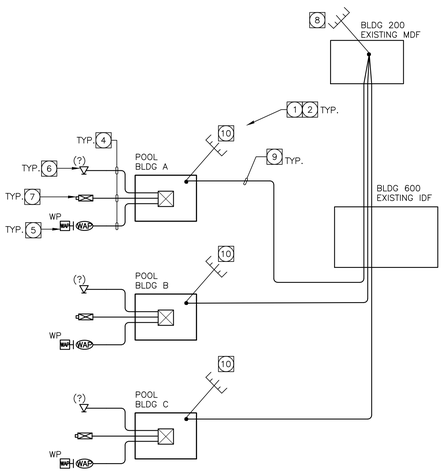

BLOCK DIAGRAM DETAIL NOTES:

1. PROVIDE IDF RACK. COMPLETE WITH ALL PATCH PANELS, CAT-6 PATCH CORDS, GROUNDING, ETC. FOR A COMPLETE AND OPERABLE SYSTEM. SEE E-SHEETS FOR EXACT LOCATIONS. SEE DISTRICT SPECIFICATIONS FOR MORE INFORMATION. TERMINATE ALL CAT-6 CABLES IN RACK-MOUNTED CAT-6 PATCH PANELS. NETWORK ELECTRONICS ARE PROVIDED/INSTALLED BY OTHERS.
2. ROUTE AND TERMINATE ALL CAT-6 DATA CABLES IN IDF RACK. LABEL ALL CABLES AND PATCH PANELS.
3. BACKBONE CABLE FROM MDF TO IDF, TYPICAL. SEE FIBER OPTIC CABLE BACKBONE BLOCK DIAGRAM DETAIL 1 THIS SHEET FOR MORE INFORMATION.
4. PROVIDE CATEGORY-6 UTP 4-PAIR DATA CABLE(S) PER SPECIFICATIONS. CABLE QUANTITIES AT EACH DEVICE PER PLAN DRAWINGS AND FACEPLATE DETAILS. TERMINATE IN FACEPLATE(S) AT DEVICE LOCATION AND ON CATEGORY-6 RACK-MOUNTED PATCH PANEL(S) IN IDF RACK/CABINETS UNLESS OTHERWISE NOTED. SEE PLAN DRAWINGS FOR LOCATIONS AND QUANTITIES.
5. PROVIDE WIRELESS ACCESS POINT CAT-6 DATA OUTLET AND CABLING. SEE FACEPLATE DETAILS FOR MORE INFORMATION. QUANTITY AND LOCATIONS PER PLAN DRAWINGS. ACCESS POINT (RUCKUS T710) IS OWNER FURNISHED CONTRACTOR INSTALLED.
6. PROVIDE CAT-6 DATA OUTLET WALL MOUNTED. NUMBER IN PARENTHESES (?) INDICATES REQUIRED QUANTITY OF CABLES AND OUTLETS. SEE FACEPLATE DETAILS FOR MORE INFORMATION. QUANTITY AND LOCATIONS PER PLAN DRAWINGS.
7. PROVIDE CAT-6 DATA OUTLET AND OWNER FURNISHED CONTRACTOR INSTALLED CCTV SECURITY CAMERA (SAMSUNG SNO-L6083R). PROVIDE 1"C. TO IDF RACK. QUANTITY AND LOCATIONS PER PLAN DRAWINGS.
8. RACK-MOUNTED FIBER ENCLOSURE IN MDF RACK. TERMINATE ALL FIBER OPTIC BACKBONE CABLES IN RACK-MOUNTED FIBER ENCLOSURE(S). PROVIDE ALL FIBER ENCLOSURES, FAN OUT KITS, SPLICE TRAYS, PANELS, ADAPTERS, CONNECTORS, FIBER PATCH CORDS, LABELING, ETC. AS REQUIRED TO TERMINATE ALL STRANDS FOR A COMPLETE SYSTEM PER DISTRICT'S SPECIFICATIONS. SEE DISTRICT SPECIFICATIONS FOR MDF RACK AND FIBER PATCH CORD REQUIREMENTS. COORDINATE FIBER ENCLOSURE LOCATIONS WITH DISTRICT PRIOR TO CABLE ROUGH-IN.
9. 12-STRAND SINGLEMODE, TIGHT BUFFERED INDOOR/OUTDOOR RATED FIBER OPTIC CABLE, UNLESS OTHERWISE NOTED IN DISTRICT SPECIFICATIONS. PROVIDE PLENUM RATED CABLING IN PLENUM RATED SPACES.
10. RACK-MOUNTED FIBER CONNECTOR HOUSING IN IDF RACK. PROVIDE ALL FIBER ENCLOSURES, FAN OUT KITS, SPLICE TRAYS, PANELS, ADAPTERS, CONNECTORS, FIBER PATCH CORDS, LABELING, ETC. AS REQUIRED TO TERMINATE ALL STRANDS FOR A COMPLETE SYSTEM PER DISTRICT'S SPECIFICATIONS. SEE DISTRICT SPECIFICATIONS FOR IDF RACK AND FIBER PATCH CORD REQUIREMENTS.

HORIZONTAL CATEGORY-6 CABLING SYSTEM NOTES:

1. IT IS THE INTENT OF THE DRAWINGS AND SPECIFICATIONS, WHICH ARE PRESENTED IN A "DESIGN-BUILD" FORMAT, FOR THE CONTRACTOR TO DESIGN, PROVIDE AND INSTALL A COMPLETE, FULLY OPERATIONAL AND TESTED STRUCTURED CABLING SYSTEM, INCLUDING ALL FINAL DESIGN, MATERIAL, EQUIPMENT, LABOR, SUPPLIES, TESTING AND ACCESSORIES REQUIRED TO FURNISH AND INSTALL A COMPLETE CONNECTION TO ALL LOCATIONS AS INDICATED ON THE DRAWINGS AND SPECIFICATIONS.
2. CONTRACTOR TO PROVIDE ALL CABLES, JACKS, FACE PLATES, PATCH PANELS, WIRE MANAGERS, CABLE SUPPORTS, PATCH CORDS, RACKS, CABINETS, LADDER TRAY, GROUNDING, AND ANY ADDITIONAL HARDWARE AND COMPONENTS FOR A COMPLETE AND OPERABLE SYSTEM.
3. CONTRACTOR TO INSTALL CAT-6 UTP 4-PAIR CABLE FROM DEVICE TO PATCH PANEL IN IDF/MDF ROOMS IN THE QUANTITIES AND LOCATIONS SHOWN ON THE PLAN DRAWINGS AND SPECIFICATIONS.
4. TERMINATE ALL CAT-6 CABLES ON CATEGORY-6 PATCH PANELS(S) IN IDF RACK/CABINET(S). PROVIDE SUFFICIENT PATCH PANELS TO TERMINATE ALL CABLES.
5. CONTRACTOR TO PROVIDE AND INSTALL ALL CONDUIT SLEEVES AND FIRESTOP SYSTEMS AS NEEDED AND AS REQUIRED BY CODE AND DISTRICT STANDARDS.
6. PROVIDE ALL NECESSARY CABLE SUPPORTS, HANGER WIRE/ROD, SLEEVES, RACKS, LADDER TRAY, D-RINGS, WIRE MANAGERS, RACK AND LADDER GROUNDING, LABELS, AND ANY ADDITIONAL EQUIPMENT AND HARDWARE FOR A COMPLETE AND OPERABLE SYSTEM.
7. CONTRACTOR TO ROUTE AND SUPPORT CABLE RUNS VIA J-HOOKS LOCATED ABOVE ACCESSIBLE CEILING SPACES. J-HOOKS SHALL NOT BE SPACED FURTHER THAN 48" FROM EACH OTHER. INSTALL CABLES IN CONDUIT WHEN TRAVELING ACROSS INACCESSIBLE CEILINGS, HARD LID CEILINGS, AND OPEN CEILINGS. PAINT CONDUIT TO MATCH SURROUNDING SURFACES WHEN INSTALLED IN OPEN CEILINGS AND EXPOSED AREAS.
8. VERIFY ALL QUANTITIES AND LOCATIONS WITH PLAN DRAWINGS AND DISTRICT SPECIFICATIONS PRIOR TO ROUGH-IN.
9. PROVIDE ALL NECESSARY CAT-6 PATCH CORDS, LABELS AND ANY ADDITIONAL HARDWARE AND EQUIPMENT FOR A COMPLETE AND OPERABLE SYSTEM.
10. TEST CABLES WITH THE APPROPRIATE PERMANENT LINK TEST UTILIZING A LEVEL III CABLE ANALYZER (FLUKE DTX OR EQUAL) PRIOR TO SYSTEM ACTIVATION, OR AS DIRECTED IN DISTRICT SPECIFICATIONS.
11. PROVIDE ALL PATCH CORDS IN THE COLORS, LENGTHS AND QUANTITIES AS INDICATED IN DISTRICT SPECIFICATIONS.
12. WIRELESS ACCESS POINT ELECTRONICS OWNER PROVIDED AND INSTALLED BY THE CONTRACTOR
13. CONTRACTOR SHALL LABEL ALL PATCH PANELS, TERMINAL BLOCKS, FACEPLATES AND BOTH ENDS OF EVERY CABLE WITH MACHINE GENERATED PLASTIC LABELS. HAND WRITTEN LABELS ARE PROHIBITED. REFER TO DISTRICT SPECIFICATIONS FOR PROPER LABELING SCHEME. PROVIDE LABEL SAMPLES FOR DISTRICT REVIEW AND APPROVAL PRIOR TO INSTALLATION.
14. CONTRACTOR SHALL COORDINATE SYSTEM CUT OVER AND TESTING WITH DISTRICT'S PROJECT MANAGER.
15. PROVIDE MANUFACTURER'S EXTENDED CABLE WARRANTY ACCORDING TO DISTRICT SPECIFICATIONS.
16. CONTRACTOR SHALL EXERCISE EXTREME CAUTION TO NOT DISRUPT OTHER SYSTEMS DURING INSTALLATION.
17. REFERENCE SPECIFICATIONS FOR ADDITIONAL INFORMATION AND REQUIREMENTS.
18. DRAWINGS AND LAYOUTS ARE PRIMARILY DIAGRAMMATIC, CONTRACTOR IS RESPONSIBLE FOR FINAL FOOTAGES AND EXACT LOCATIONS.
19. DISTRICT TO CONFIGURE CAMERAS AND PROCURE APPROPRIATE LICENSES TO INTEGRATE INTO EXISTING ONSSI OCULARIS VMS.
20. PROVIDE ALL NEW FIBER OPTIC CABLING TO PROVIDE DATA CONNECTIVITY TO THE NEW IDF(S).
21. CONTRACTOR TO PROVIDE ALL FIBER PATCH PANELS, BREAKOUT KITS, PIGTAILS, PANELS, CONNECTORS, COUPLERS, ADAPTERS, SPLICE TRAYS, FIBER PATCH CORDS, GROUNDING CONNECTIONS, LABELING, AND ALL OTHER COMPONENTS NECESSARY FOR A COMPLETE AND OPERABLE SYSTEM.
22. ALL FIBER SHALL BE 9-MICRON SINGLEMODE INDOOR OUTDOOR RATED TIGHT BUFFERED CABLE, IN STRAND COUNTS AS INDICATED.
23. ALL FIBER SHALL BE INSTALLED INSIDE 1" MINIMUM DIAMETER INNERDUCT, MAXIMUM 40 PERCENT FILL RATIO, WHEN NOT INSTALLED IN METALLIC OR PVC CONDUIT. ONLY USE PLENUM RATED INNERDUCT IN PLENUM RATED SPACES.
24. ALL ACTIVE ELECTRONICS (DATA SWITCHES, GBIC MODULES, HUBS, ROUTERS, ETC) SHALL BE PROVIDED BY OTHERS.
25. PROVIDE ALL FIBER OPTIC PATCH CORDS IN QUANTITIES AND LENGTHS PER DISTRICT SPECIFICATIONS. CONTRACTOR RESPONSIBLE TO NEATLY INSTALL ALL FIBER PATCH CORDS TO THE OWNER'S SATISFACTION.
26. FIBER OPTIC CABLES SHALL NOT BE INSTALLED IN ELECTRICAL CONDUIT BODIES OR CONDULETS NOT SPECIFICALLY MANUFACTURED FOR FIBER OPTIC CABLES AND PRE-APPROVED BY ARCHITECT.
27. PROVIDE TWENTY (20) FEET OF NEATLY COILED FIBER BACKBONE SLACK LOOPS AND SECURED AT EACH MDF AND IDF LOCATION. CONFIRM MOUNTING LOCATIONS WITH DISTRICT'S ENGINEER PRIOR TO INSTALLATION.
28. CONTRACTOR SHALL COORDINATE SYSTEM CUT OVER AND TESTING WITH DISTRICT'S PROJECT MANAGER AND WITH DISTRICT'S SCHEDULE.
29. ATTACH METALLIC CABLE SHIELD(S) TO FIBER ENCLOSURE GROUND LUG ACCORDING TO MANUFACTURERS INSTRUCTIONS. INSTALL #6 AWG GREEN GROUND CONDUCTOR FROM ENCLOSURE GROUND LUG TO NEAREST TELECOM GROUND BUSBAR, EFFECTIVELY GROUNDED BUILDING STEEL, OR NEAREST ELECTRICAL PANEL GROUND POINT. INSIDE THE FIBER ENCLOSURE, INSTALL GROUND TAG ATTACHED TO GROUND CONDUCTOR INDICATING LOCATION OF THE GROUND POINT.
30. PROVIDE WEATHERPROOF PLASTIC FIBER OPTIC WARNING LABELS ON EACH CABLE IDENTIFYING LOCATION OF BOTH ENDS, STRAND COUNT AND FIBER TYPE, (E.G.: BLDG-B IDF-1 TO BLDG-A MDF, 12MM), AT EVERY VAULT, PULLBOX, HANDHOLE, AND AT TEN (10) FOOT INTERVALS WHERE CABLE IS VISIBLE AND ACCESSIBLE. HAND WRITTEN LABELS ARE PROHIBITED.
31. ALL FIBER OPTIC CABLES SHALL BE CONTINUOUS. SPLICING OF FIBER OPTIC CABLE IS PROHIBITED, UNLESS OTHERWISE NOTED IN DISTRICT STANDARDS AND SPECIFICATIONS.
32. DRAWINGS AND LAYOUTS ARE PRIMARILY DIAGRAMMATIC, CONTRACTOR IS RESPONSIBLE FOR FINAL FOOTAGES AND EXACT LOCATIONS.

LAN/VOIP SYSTEMS BLOCK DIAGRAM

SCALE: NTS

3

8/2/2022 11:34:37 AM

GENERAL NOTES

1. IT IS THE INTENT OF THESE DRAWINGS WHICH ARE PRESENTED IN A DESIGN-BUILD FORMAT, FOR THE CONTRACTOR TO DESIGN, PROVIDE AND INSTALL A COMPLETE, FULLY OPERATIONAL AND TESTED SYSTEMS.
2. INSTALLATION OF EQUIPMENT AND WIRING MUST MEET ALL APPLICABLE CODES AND STANDARDS INCLUDING BUT NOT LIMITED TO CEC, NFPA, ANSI/EIA/TIA AND ISO 9001.
3. EQUIPMENT AND MATERIALS MUST COMPLY WITH UL LISTING AND EACH ITEM STAMPED OR LABELED AS SUCH.
4. COMPLIANCE WITH ANSI/TIA/EIA 569-C. COMMERCIAL BUILDING STANDARDS FOR TELECOMMUNICATIONS PATHWAYS AND SPACES.
5. COMPLIANCE WITH ANSI/TIA/EIA 568-D. COMMERCIAL BUILDING TELECOMMUNICATIONS CABLING STANDARDS.
6. DRAWINGS AND LAYOUTS ARE PRIMARILY DIAGRAMMATIC, CONTRACTOR IS RESPONSIBLE FOR FINAL FOOTAGES AND EXACT LOCATIONS.
7. CONTRACTOR SHALL NOTE IN WRITING, ANY DISCREPANCIES BETWEEN DRAWINGS AND SPECIFICATIONS. AS SUCH DISCREPANCIES ARISE, THE MORE STRINGENT SHALL TAKE PRECEDENCE.
8. COMMUNICATIONS CABLES (ANY TYPE) ROUTED THRU FURNITURE SYSTEMS SHALLBE ROUTED VIA DEDICATED COMMUNICATIONS PATHWAY, WHEN AVAILABLE. WHEN DEDICATED COMMUNICATIONS PATHWAY IS UNAVAILABLE, THE ABOVE-MENTIONED CABLES SHALL BE ROUTED IN A BARRIERED SYSTEMS FURNITURE RACEWAY SEPARATE FROM POWER CONDUCTORS PER EIA/TIA STANDARDS AND NEC REQUIREMENTS.
9. CONTRACTOR SHALL VERIFY SYSTEMS FURNITURE TYPE AND CABLE ROUTING/FACEPLATE LOCATION WITHIN SYSTEMS FURNITURE PRIOR TO BID. INCLUDE ALL COSTS IN BASE BID.
10. REFERENCE ALL ELECTRICAL DRAWINGS.
11. REFERENCE ALL TECHNOLOGY DRAWINGS.
12. REFERENCE ALL ARCHITECTURAL DRAWINGS.
13. REFERENCE ALL ELECTRICAL AND STRUCTURED CABLING SYSTEM SPECIFICATIONS.
14. CONTRACTOR SHALL UTILIZE CONDUIT(S)/SLEEVE(S) SEQUENTIALLY, MAXIMIZING THE CABLE FILL IN EACH BEFORE UTILIZING THE NEXT CONDUIT(S)/SLEEVE(S). MAXIMUM ALLOWABLE CONDUIT FILL SHALL BE BASED ON NEC TABLES FOR CONDUIT FILL.
15. CONTRACTOR IS RESPONSIBLE TO FIELD VERIFY ALL EXISTING CONDITIONS PRIOR TO BID. FAILURE TO DO SO WILL NOT RESULT IN ADDITIONAL PAYMENTS TO CONTRACTOR. CONTRACTOR IS RESPONSIBLE FOR FINAL FOOTAGES AND EXACT LOCATIONS.
16. CONTRACTOR IS RESPONSIBLE TO VERIFY ALL PATHWAY ROUTES, DISTANCES AND CONDITIONS PRIOR TO ORDERING AND INSTALLING MATERIALS. CONTRACTOR IS REQUIRED TO MANDREL, SWAB AND MULE TAPE MEASURE EACH CONDUIT PATHWAY PRIOR TO USE.
17. INSTALLATION, RELOCATION AND TESTING OF ALL EQUIPMENT SHALL BE INCLUDED IN BID. IT IS THE CONTRACTOR'S RESPONSIBILITY TO PROVIDE ALL NECESSARY LABOR AND MATERIALS FOR COMPLETE AND FULLY OPERATIONAL SYSTEMS AT NO ADDITIONAL COST TO THE DISTRICT.

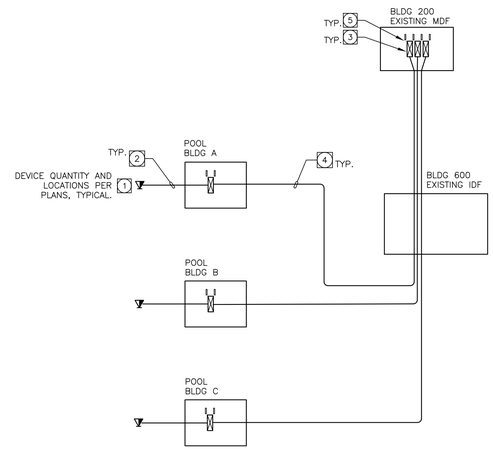

TELEPHONE SYSTEM BLOCK DIAGRAM

SCALE: N.T.S.

2

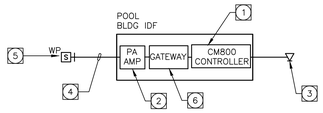

BLOCK DIAGRAM DETAIL NOTES:

1. PROVIDE FRONTROW NETWORK CONTROLLER (FRONTROW CM800). COMPLETE WITH ALL TERMINATION PUNCHBLOCKS, GROUNDING, AMPLIFIERS ETC. FOR A COMPLETE AND OPERABLE SYSTEM. SEE FLOOR PLANS FOR EXACT LOCATIONS. CONFIGURE ALL SPEAKERS INTO THE CAMPUSWIDE FRONTROW CONDUCTOR SYSTEM.
2. PROVIDE PAGING AMPLIFIER
3. PROVIDE CAT-6 DATA OUTLET FOR FRONTROW NETWORK CONTROLLER.
4. PROVIDE PAGING SPEAKER CABLING PER MANUFACTURERS REQUIREMENTS. ALL SPEAKERS TO RECEIVE INDIVIDUAL CABLES TO TERMINATION LOCATION. CABLE QUANTITIES AT EACH DEVICE PER PLAN DRAWINGS AND FACEPLATE DETAILS. SEE PLAN DRAWINGS FOR LOCATIONS AND QUANTITIES.
5. PROVIDE WEATHER PROOF PUBLIC ADDRESS SYSTEM SPEAKER. PROVIDE 1"C. TO ACCESSIBLE CEILING SPACE OR PAGING AMP WITH CONDUCTORS. SEE FACEPLATE DETAILS FOR MORE INFORMATION. QUANTITY AND LOCATIONS PER PLAN DRAWINGS.
6. PROVIDE COPPER TO IP GATEWAY.

PUBLIC ADDRESS SYSTEMS BLOCK DIAGRAM

SCALE: NTS

1

SYSTEM BLOCK DIAGRAM KEY NOTES:

1. COMBINATION TELEPHONE/DATA DEVICE. SEE FACEPLATE DETAILS FOR MORE INFORMATION.
2. **CATEGORY-6** UTP 4-PAIR CABLE PER SPECIFICATIONS. TERMINATE AT DEVICE AND AT 66M BLOCKS.
3. PROVIDE WALL MOUNT CROSS CONNECTION 66M SPLIT BLOCKS WITH 89B STAND-OFF BRACKETS, QUANTITY AS REQUIRED FOR TERMINATION OF ALL CABLES. TERMINATE CABLES IN NUMERICAL SEQUENCE. TERMINATE UNDERGROUND BACKBONE CABLE ON LEFT SIDE OF BLOCK, AND ALL STATION CABLES OR RIGHT SIDE OF BLOCK. PROVIDE MACHINE GENERATED LABELS WITH CIRCUIT NUMBERS AND A PLASTIC COVER FOR EACH 66M BLOCK. PROVIDE WALL MOUNTED D-RINGS AND JUMPER WIRE TO CROSS CONNECT INCOMING DIAL TONE TO THE STATION CABLES.
4. **25-PAIR CATEGORY-5E** OSP-RATED COPPER BACKBONE CABLE. TERMINATE ALL PAIRS AT BOTH ENDS. BOND CABLE SHIELD TO TELECOM BUSBAR IN IDF/MDF ROOM. SEE SPECIFICATIONS FOR ADDITIONAL INFORMATION. INSTALL IN UNDERGROUND CONDUIT. LABEL ALL CABLES WITH LOCATION OF BOTH ENDS.
5. WALL MOUNTED METAL D-RINGS ON EACH SIDE OF EVERY 66M PUNCH BLOCK FOR ROUTING OF JUMPER WIRES.

ANALOG TELEPHONE SYSTEM GENERAL NOTES:

1. CONTRACTOR'S WORK INCLUDES ALL MATERIAL, LABOR, EQUIPMENT, SUPPLIES, TESTING AND ACCESSORIES REQUIRED TO PROVIDE NEW MULTIPAIR COPPER CABLES AND ALL OTHER COMPONENTS NECESSARY TO ESTABLISH CONNECTION FROM THE PBX SYSTEM HEADEND LOCATION TO THE IDF ROOM(S) IN EACH CAMPUS BUILDING.
2. DRAWINGS AND LAYOUTS ARE PRIMARILY DIAGRAMMATIC IN NATURE. CONTRACTOR IS RESPONSIBLE FOR FINAL FOOTAGES AND EXACT LOCATIONS.
3. SEE LAN/WAN CABLING BLOCK DIAGRAM FOR HORIZONTAL CABLING AND DEVICE REQUIREMENTS.
4. ALL CABLES SHALL BE RATED FOR THE ENVIRONMENT IN WHICH THEY ARE INSTALLED, PER CODE.
5. PROVIDE ASP SHEATH, SOLID COPPER CONDUCTOR UNDERGROUND OSP CABLE CONTAINING "FLEXGEL III" FILLING COMPOUND, 24 AWG, IN PAIR COUNTS AND QUANTITIES AS INDICATED ON DRAWINGS. SEE SPECIFICATIONS FOR MORE INFORMATION.
6. GROUNDING AND BONDING OF ALL RISER AND BACKBONE CABLE SHIELD(S) IS REQUIRED. FOR CABLES SMALLER THAN 1 INCH IN DIAMETER, CONTRACTOR SHALL USE "STUD-COIN" TYPE BONDING CONNECTORS ON THE CABLES AND THE APPROPRIATE CONNECTOR AT THE GROUND POINT. FOR CABLES LARGER THAN 1.4 INCHES IN DIAMETER, CONTRACTOR SHALL USE (2) "BULLET BOND" CONNECTORS ON OPPOSING SIDES OF THE SHEATH. USE OF "PAIR SAVERS" IS REQUIRED ON ALL CABLES UNDER THE BONDING CLIP.
7. CONTRACTOR SHALL CROSS CONNECT ALL CABLE PAIRS FROM TELEPHONE HEAD-END TO TELEPHONE HANDSETS AS REQUIRED BY OWNER. SEE OWNER FOR CROSS CONNECT PLAN.
8. CONTRACTOR SHALL TEST ALL PAIRS OF ALL CABLES. CONTRACTOR SHALL RECORD ALL TESTS AND PROVIDE WRITTEN TEST RESULTS PER SPECIFICATIONS TO OWNER FOR REVIEW PRIOR TO COMPLETION OF PROJECT.
9. UNLESS OTHERWISE NOTED, PROVIDE TEN (10) FEET SLACK LOOP OF COPPER BACKBONE CABLE NEATLY COILED AND SECURED TO IDF BACKBOARDS AND TWENTY (20) FEET SLACK COIL OF COPPER BACKBONE CABLE NEATLY COILED AND SECURED ON HEAD-END BACKBOARD. VERIFY EXACT LOCATION OF SLACK COILS WITH PROJECT ENGINEER PRIOR TO FINAL INSTALLATION.
10. PROVIDE WEATHERPROOF PLASTIC LABELS ON EACH CABLE IDENTIFYING LOCATION OF BOTH ENDS AND PAIR COUNT, (I.E. IDF-1 TO MDF, 25-PR). PROVIDE WEATHERPROOF PLASTIC LABELS ON EACH CABLE AT EVERY VAULT, PULLBOX, HANDHOLE, AND AT TWENTY (20) FOOT INTERVALS WHERE CABLE IS VISIBLE AND ACCESSIBLE.
11. LABEL ALL CABLES, PROTECTORS, CROSS CONNECT BLOCKS, ETC. WITH MACHINE GENERATED LABELS PER SPECIFICATIONS. HAND WRITTEN LABELS ARE PROHIBITED. PROVIDE SAMPLE OF ALL LABELS FOR OWNER'S REVIEW PRIOR TO INSTALLATION.
12. THIS PROJECT WILL BE PERFORMED IN A PHASED CONSTRUCTION FORMAT, INCLUDING DEMOLITION PORTIONS. EACH PHASE OF CONSTRUCTION WILL BE COMPLETELY INSTALLED, LABELED AND TESTED, TO THE GREATEST EXTENT PHYSICALLY POSSIBLE, BEFORE MOVING TO THE NEXT PHASE.
13. CONTRACTOR SHALL EXERCISE EXTREME CAUTION TO NOT DISRUPT OTHER EXISTING SYSTEMS DURING INSTALLATION.
14. REFERENCE SPECIFICATIONS FOR ADDITIONAL INFORMATION AND REQUIREMENTS.

PAGING/PUBLIC ADDRESS SYSTEM NOTES:

1. IT IS THE INTENT OF THE DRAWINGS AND SPECIFICATIONS, WHICH ARE PRESENTED IN A "DESIGN-BUILD" FORMAT, FOR THE CONTRACTOR TO DESIGN, PROVIDE AND INSTALL A COMPLETE, FULLY OPERATIONAL AND TESTED STRUCTURED CABLING SYSTEM, INCLUDING ALL FINAL DESIGN, MATERIAL, EQUIPMENT, LABOR, SUPPLIES, TESTING AND ACCESSORIES REQUIRED TO FURNISH AND INSTALL A COMPLETE CONNECTION TO ALL LOCATIONS AS INDICATED ON THE DRAWINGS AND SPECIFICATIONS.
2. CONTRACTOR TO PROVIDE ALL CABLES, PUNCHBLOCKS, CABLE SUPPORTS, CABLE JUMPERS, CABINETS, GROUNDING, AND ANY ADDITIONAL HARDWARE AND COMPONENTS FOR A COMPLETE AND OPERABLE SYSTEM.
3. CONTRACTOR TO PROVIDE AND INSTALL ALL CONDUIT SLEEVES AND FIRESTOP SYSTEMS AS NEEDED AND AS REQUIRED BY CODE AND DISTRICT STANDARDS.
4. PROVIDE ALL NECESSARY CABLE SUPPORTS, HANGER WIRE/ROD, SLEEVES, RACKS, LADDER TRAY, D-RINGS, WIRE MANAGERS, RACK AND LADDER GROUNDING, LABELS, AND ANY ADDITIONAL EQUIPMENT AND HARDWARE FOR A COMPLETE AND OPERABLE SYSTEM.
5. CONTRACTOR TO ROUTE AND SUPPORT CABLE RUNS VIA J-HOOKS LOCATED ABOVE ACCESSIBLE CEILING SPACES. J-HOOKS SHALL NOT BE SPACED FURTHER THAN 48" FROM EACH OTHER. INSTALL CABLES IN CONDUIT WHEN TRAVELING ACROSS INACCESSIBLE CEILINGS, HARD LID CEILINGS, AND OPEN CEILINGS. PAINT CONDUIT TO MATCH SURROUNDING SURFACES WHEN INSTALLED IN OPEN CEILINGS AND EXPOSED AREAS.
6. VERIFY ALL QUANTITIES AND LOCATIONS WITH PLAN DRAWINGS AND DISTRICT SPECIFICATIONS PRIOR TO ROUGH-IN.
7. DRAWINGS AND LAYOUTS ARE PRIMARILY DIAGRAMMATIC, CONTRACTOR IS RESPONSIBLE FOR FINAL FOOTAGES AND EXACT LOCATIONS.

IDENTIFICATION STAMP
DIV. OF THE STATE ARCHITECT
APP: 03-122664 INC:
REVIEWED FOR
SS ☑ FLS ☑ ACS ☑
DATE: 05/12/2023

pjhm architects
LICENSED ARCHITECT
RICHARD W. RISLEY
No. C15585
REN. 02/25
STATE OF CALIFORNIA

tk|sc COLLABORATIVE
11870 Pierce Street, Suite 160
Riverside, California 92505
951.299.4160 www.tk1sc.com
Project Leader - Nikolas Bruno
Electrical Lead - Nikolas Bruno
tk1sc Job #: B2202744.000

REGISTERED PROFESSIONAL ENGINEER
RICHARD W. STRIEFF
No. E15610
DEC 31, 2024
ELECTRICAL
STATE OF CALIFORNIA

OC Office: 24461 Ridge Route Drive #100, Laguna Hills, CA 92653 Phone: 949.496.6161 SD Office: 804 Pier View Way #103, Oceanside, CA 92054 Phone: 760.730.5557 LA Office: 837 Traction Avenue, #410, Los Angeles, CA 90013 Phone: 213.278.0172 Web: pjhm.com

HIGHLAND HIGH SCHOOL
50M POOL & AQUATICS CENTER
KERN HIGH SCHOOL DISTRICT

TECHNOLOGY
RISER
DIAGRAMS

T-1.0

WHERE THE FOLLOWING SYMBOLS ARE INDICATED ON THE ELECTRICAL DRAWINGS ARCHITECTURAL DRAWINGS AND/OR STRUCTURED CABLING SYSTEM DRAWINGS:

THE FOLLOWING SHALL BE PROVIDED, AS DEPICTED IN THE FOLLOWING DIAGRAMMATIC CONNECTIVITY DETAIL.

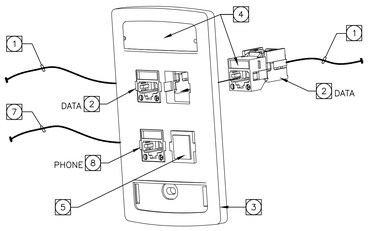

COMBINATION TELEPHONE AND DATA DEVICE 3

SCALE: N.T.S.

WHERE THE FOLLOWING SYMBOLS ARE INDICATED ON THE ELECTRICAL DRAWINGS ARCHITECTURAL DRAWINGS AND/OR STRUCTURED CABLING SYSTEM DRAWINGS:

WAP

THE FOLLOWING SHALL BE PROVIDED, AS DEPICTED IN THE FOLLOWING DIAGRAMMATIC CONNECTIVITY DETAIL.

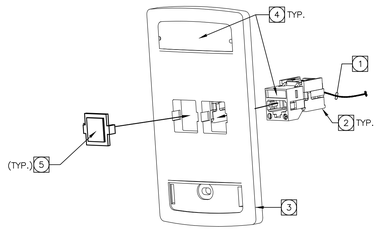

WIRELESS ACCESS POINT DUAL DATA DEVICE 2

SCALE: N.T.S.

WHERE THE FOLLOWING SYMBOLS ARE INDICATED ON THE ELECTRICAL DRAWINGS ARCHITECTURAL DRAWINGS AND/OR STRUCTURED CABLING SYSTEM DRAWINGS:

THE FOLLOWING SHALL BE PROVIDED, AS DEPICTED IN THE FOLLOWING DIAGRAMMATIC CONNECTIVITY DETAIL.

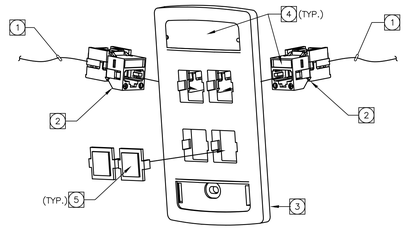

DUAL DATA DEVICE 1

SCALE: N.T.S.

WHERE THE FOLLOWING SYMBOLS ARE INDICATED ON THE ELECTRICAL DRAWINGS ARCHITECTURAL DRAWINGS AND/OR STRUCTURED CABLING SYSTEM DRAWINGS:

WP

THE FOLLOWING SHALL BE PROVIDED, AS DEPICTED IN THE FOLLOWING DIAGRAMMATIC CONNECTIVITY DETAIL.

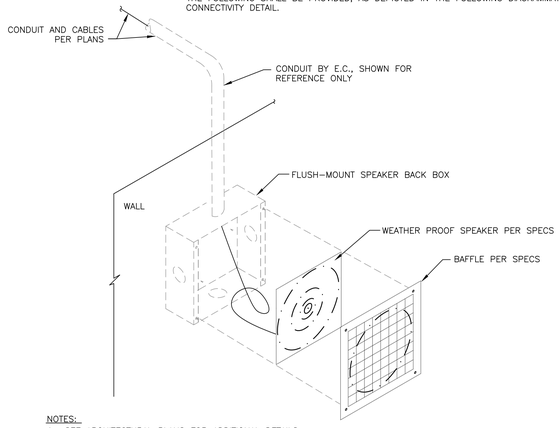

NOTES:

1. SEE ARCHITECTURAL PLANS FOR ADDITIONAL DETAILS.
2. MOUNT SPEAKER BAFFLE FLUSH TO WALL. PROVIDE WEATHERPROOF SEAL.
3. CONTRACTOR SHALL PAINT BAFFLE TO MATCH SURROUNDING SURFACES.
4. PROVIDE CABLING PER SYSTEM SPECIFICATIONS.
5. VERIFY FINAL MOUNTING HEIGHT WITH OWNER IN FIELD PRIOR TO ROUGH-IN.
6. MAX. INSTALLED WEIGHT 6.5 POUNDS.

PUBLIC ADDRESS SPEAKER - FLUSH MOUNT DETAIL 5

SCALE: NTS

WHERE THE FOLLOWING SYMBOLS ARE INDICATED ON THE ELECTRICAL DRAWINGS ARCHITECTURAL DRAWINGS AND/OR STRUCTURED CABLING SYSTEM DRAWINGS:

WP

THE FOLLOWING SHALL BE PROVIDED, AS DEPICTED IN THE FOLLOWING DIAGRAMMATIC CONNECTIVITY DETAIL.

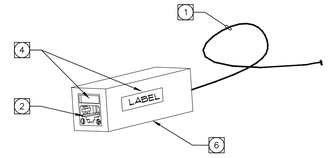

SINGLE VOICE OR DATA DEVICE 4

SCALE: N.T.S.

FACEPLATE NOTES:

1. PROVIDE (1) CAT-6, 4-PAIR UTP CABLE(S) TO RESPECTIVE IDF RACK. TERMINATE STATION END(S) IN STATION CONNECTOR(S) PER SPECIFICATIONS. TERMINATE RACK END(S) ON CAT-6 PATCH PANEL(S) PER SPECIFICATIONS. COLOR OF CABLE(S) PER DISTRICT STANDARDS.
2. PROVIDE CAT-6 4-PAIR STATION CONNECTOR PER SPECIFICATIONS. COLOR PER DISTRICT STANDARDS.
3. PROVIDE FACEPLATE PER SPECIFICATIONS. FACEPLATE MATERIAL AND FINISH SHALL MATCH ADJACENT/NEARBY POWER FACEPLATES, U.O.N. IN SPECIFICATIONS. PROVIDE FLOOR BOX, POWER POLE AND MODULAR FURNITURE DEVICE BRACKETS/CUSTOM ADAPTERS AS REQUIRED FOR A COMPLETE INSTALLATION. INCLUDE ALL COSTS IN BASE BID.
4. PROVIDE FACEPLATE LABELING PER SPECIFICATIONS. SEE SPECIFICATIONS FOR ALL OTHER LABELING REQUIREMENTS.
5. BLANK INSERT. ALL UNUSED OPENINGS SHALL BE COVERED WITH A BLANK INSERT MATCHING THE COLOR OF THE FACEPLATE.
6. PROVIDE (1) SURFACE MOUNT, ONE-PORT HOUSING PER SPECIFICATION.
7. PROVIDE (1) CAT 6, 4 PAIR UTP CABLE(S) FOR ANALOG TELEPHONE. TERMINATE STATION END(S) IN STATION CONNECTOR(S) PER SPECIFICATIONS. TERMINATE RACK END(S) ON PATCH PANEL(S).
8. PROVIDE (1) CAT 6, 4-PAIR 8P8C STATION CONNECTOR FOR ANALOG TELEPHONE. COLOR PER DISTRICT STANDARDS

GENERAL NOTES:

1. INSTALLATION OF EQUIPMENT AND WIRING MUST MEET ALL APPLICABLE CODES AND STANDARDS INCLUDING BUT NOT LIMITED TO CEC, NFPA, ANSI/EIA/TIA AND ISO 9001.
2. EQUIPMENT AND MATERIALS MUST COMPLY WITH UL LISTING AND EACH ITEM STAMPED OR LABELED AS SUCH.
3. COMPLIANCE WITH ANSI/TIA/EIA 569-C. COMMERCIAL BUILDING STANDARDS FOR TELECOMMUNICATIONS PATHWAYS AND SPACES.
4. COMPLIANCE WITH ANSI/TIA/EIA 568-D. COMMERCIAL BUILDING TELECOMMUNICATIONS CABLING STANDARDS.
5. DRAWINGS AND LAYOUTS ARE PRIMARILY DIAGRAMMATIC. CONTRACTOR IS RESPONSIBLE FOR FINAL FOOTAGES AND EXACT LOCATIONS.
6. CONTRACTOR SHALL NOTE IN WRITING, ANY DISCREPANCIES BETWEEN DRAWINGS AND SPECIFICATIONS. AS SUCH DISCREPANCIES ARISE, THE MORE STRINGENT SHALL TAKE PRECEDENCE.
7. COMMUNICATIONS CABLES (ANY TYPE) ROUTED THRU FURNITURE SYSTEMS SHALLBE ROUTED VIA DEDICATED COMMUNICATIONS PATHWAY, WHEN AVAILABLE. WHEN DEDICATED COMMUNICATIONS PATHWAY IS UNAVAILABLE, THE ABOVE-MENTIONED CABLES SHALL BE ROUTED IN A BARRIERED SYSTEMS FURNITURE RACEWAY SEPARATE FROM POWER CONDUCTORS PER EIA/TIA STANDARDS AND NEC REQUIREMENTS.
8. CONTRACTOR SHALL VERIFY SYSTEMS FURNITURE TYPE AND CABLE ROUTING/FACEPLATE LOCATION WITHIN SYSTEMS FURNITURE PRIOR TO BID. INCLUDE ALL COSTS IN BASE BID.
9. REFERENCE ALL ELECTRICAL DRAWINGS.
10. REFERENCE ALL STRUCTURED CABLING SYSTEM DRAWINGS.
11. REFERENCE ALL ARCHITECTURAL DRAWINGS.
12. REFERENCE ALL ELECTRICAL AND STRUCTURED CABLING SYSTEM SPECIFICATIONS.
13. CONTRACTOR SHALL UTILIZE CONDUIT(S)/SLEEVE(S) SEQUENTIALLY, MAXIMIZING THE CABLE FILL IN EACH BEFORE UTILIZING THE NEXT CONDUIT(S)/SLEEVE(S). MAXIMUM ALLOWABLE CONDUIT FILL SHALL BE BASED ON NEC TABLES FOR CONDUIT FILL.
14. IT IS THE INTENT OF THESE DRAWINGS WHICH ARE PRESENTED IN A DESIGN-BUILD FORMAT, FOR THE CONTRACTOR TO DESIGN, PROVIDE AND INSTALL A COMPLETE, FULLY OPERATIONAL AND TESTED SYSTEMS.
15. CONTRACTOR IS RESPONSIBLE TO FIELD VERIFY ALL EXISTING CONDITIONS PRIOR TO BID. FAILURE TO DO SO WILL NOT RESULT IN ADDITIONAL PAYMENTS TO CONTRACTOR. CONTRACTOR IS RESPONSIBLE FOR FINAL FOOTAGES AND EXACT LOCATIONS.
16. CONTRACTOR IS RESPONSIBLE TO VERIFY ALL PATHWAY ROUTES, DISTANCES AND CONDITIONS PRIOR TO ORDERING AND INSTALLING MATERIALS. CONTRACTOR IS REQUIRED TO MANDREL, SWAB AND MULE TAPE MEASURE EACH CONDUIT PATHWAY PRIOR TO USE.
17. INSTALLATION, RELOCATION AND TESTING OF ALL EQUIPMENT SHALL BE INCLUDED IN BID. IT IS THE CONTRACTOR'S RESPONSIBILITY TO PROVIDE ALL NECESSARY LABOR AND MATERIALS FOR COMPLETE AND FULLY OPERATIONAL SYSTEMS AT NO ADDITIONAL COST TO THE DISTRICT.

IDENTIFICATION STAMP
DIV. OF THE STATE ARCHITECT
APP: 03-122664 INC:
REVIEWED FOR
SS ☑ FLS ☑ ACS ☑
DATE: 05/12/2023

pjhm architects
LICENSED ARCHITECT RICHARD W. SIMPSON NO. C15585 REN. 02/25 STATE OF CALIFORNIA
tk|sc COLLABORATIVE
11870 Pierce Street, Suite 160
Riverside, California 92505
951.299.4160 www.tk1sc.com
Project Leader - Nikolas Bruno
Electrical Lead - Nikolas Bruno
tk1sc Job #: B2202744.000
REGISTERED PROFESSIONAL ENGINEER RICHARD W. SIMPSON No. E15610 EXP. 12/31/2024 ELECTRICAL STATE OF CALIFORNIA
OC Office: 24461 Ridge Route Drive #100, Laguna Hills, CA • 92653 Phone: 949.496.6150 SD Office: 804 Pier View Way #103, Oceanside, CA • 92054 Phone: 760.730.5527 LA Office: 837 Traction Avenue, #410, Los Angeles, CA • 90013 Phone: 213.278.0172 Web: pjhm.com

HIGHLAND HIGH SCHOOL
50M POOL & AQUATICS CENTER
KERN HIGH SCHOOL DISTRICT

TECHNOLOGY
FACEPLATE DETAILS

T-3.0

8/2/2022 11:34:37 AM

RECEPTACLE MOUNTING KEY NOTES:

1. 4S DEEP NEMA JUNCTION BOX WITH RECEPTACLES PER PLAN ATTACHED SECURELY TO LADDER RUNWAY. VERIFY CORRECT SIDE OF LADDER RUNWAY/EXACT MOUNTING LOCATION ON LADDER RUNWAY WITH OWNER AND SCS CONTRACTOR PRIOR TO ROUGH-IN. E.C. TO INSTALL JUNCTION BOX ON SIDE OF LADDER RUNWAY ONLY WITH RECEPTACLE PERPENDICULAR TO FLOOR. JUNCTION BOX SHALL NOT BE INSTALLED ON TOP OR BOTTOM OF LADDER RUNWAY.
2. PERMANENT LABELS INDICATING PANEL ID, CIRCUIT NUMBER(S) AND NEMA/IEC RECEPTACLE TYPE. PROVIDE LABELS ON FACE OF BOX.
3. CONDUIT AND BRANCH CIRCUIT PER PLAN. ROUTE CONDUITS TO PANEL(S) ABOVE ACCESSIBLE CEILING—IF PROVIDED ON PROJECT. IN NO CASE, SHALL CONDUITS BE ROUTED THROUGH/WITHIN LADDER RUNWAY VERTICAL WIRE MANAGERS OR OTHERWISE OBSTRUCT USE OF RACKS BY COMMUNICATIONS EQUIPMENT OR CABLING.
4. LADDER RUNWAY SYSTEM SHOWN HERE FOR REFERENCE ONLY. SEE LADDER RUNWAY SYSTEM DETAIL ON THIS SHEET FOR LADDER RUNWAY REQUIREMENTS.
5. EQUIPMENT RACK AND VERTICAL WIRE MANAGER BY SCS CONTRACTOR. SHOWN FOR REFERENCE ONLY. EXACT EQUIPMENT CONFIGURATION MAY VARY.
6. JUNCTION BOX SHALL NOT OBSTRUCT VERTICAL WIRE MANAGERS OR EQUIPMENT RACK MOUNTING PLATES.

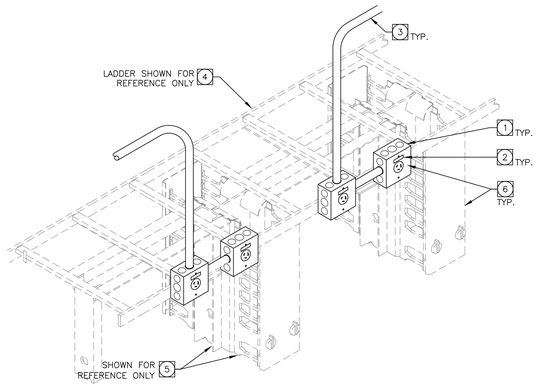

MDF/IDF ROOM LADDER TRAY RECEPTACLE MOUNTING DETAIL 3

SCALE: NTS

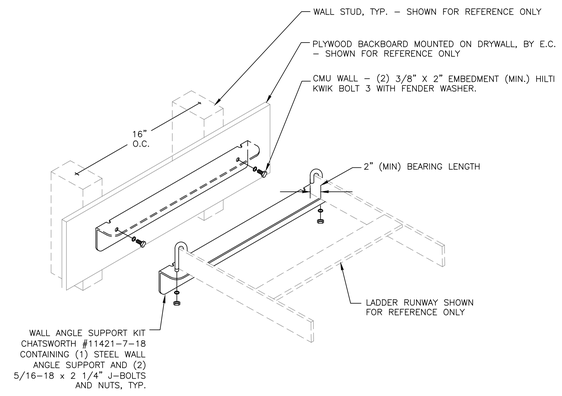

LADDER TRAY WALL ANGLE SUPPORT 2

SCALE: N.T.S.

BACKBOARD AND GROUNDING DETAIL NOTES:

A. WHITE ENAMEL PAINTED A/C GRADE FIRE RATED PLYWOOD TELECOM BACKBOARD, (8' HIGH x 3/4" THICK x WIDTH PER PLANS) BY E.C. LEAVE ONE FIRE MARSHAL STAMP UNPAINTED ON EACH SHEET. MOUNT 6" ABOVE FINISHED FLOOR.

– ANCHOR TO CMU WALL WITH 1/4" x 1-5/8" EMBED HILTI KWIK HUS EZ SCREW ANCHOR (ICC ESR 3056) AT 16" ON CENTER.
– RECESS ALL SCREWS/BOLTS.

B. U.L. LISTED TELECOMMUNICATIONS GROUND BUS BAR (TMGB AND TGB). IN IDF AND MDF ROOMS PROVIDE TGB, CHATSWORTH #40153-012. IN MPOE ROOMS PROVIDE TMGB CHATSWORTH #40153-020, U.O.N. ON PLANS.

C. REFER TO TELECOM RISER AND GROUNDING DIAGRAM FOR CONNECTION OF TMGB TO MAIN ELECTRICAL SERVICE GROUND. CONNECT TGB'S TO ELECTRICAL PANEL GROUND BUS WITH 3/4"C. AND #6AWG GROUND CONDUCTOR. ALL CONNECTIONS SHALL BE WITH 2-HOLE COMPRESSION LUGS.

D. INDIVIDUAL #6AWG GROUND CONDUCTORS TO EACH CABINET, RACK, LADDER TRAY, CONDUIT, ETC. BY SCS CONTRACTOR. CONNECT TO EQUIPMENT AND TO GROUND BUS BAR VIA 2-HOLE COMPRESSION LUGS ONLY. DAISY-CHAINING OF GROUND CONDUCTOR TO MORE THAN ONE PIECE OF EQUIPMENT IS PROHIBITED.

E. INCOMING FEED CONDUITS AND INNER-BUILDING CONDUITS. QUANTITY AND SIZE PER PLANS.

F. INNER-BUILDING CONDUITS AND SLEEVES. QUANTITY AND SIZE PER PLANS.

G. TELECOM BONDING BACKBONE CONDUCTOR BETWEEN TMGB AND ALL TGB'S. REFER TO SITE AND FLOOR PLANS FOR MORE INFORMATION.

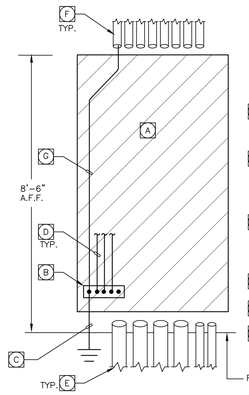

TELECOM BACKBOARD AND GROUND BUS BAR 1

SCALE: NTS

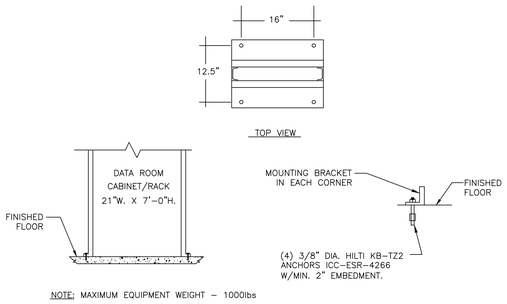

NOTE: MAXIMUM EQUIPMENT WEIGHT – 1000lbs

DATA CABINET/RACK FLOOR-MOUNTING DETAIL 6

SCALE: N.T.S.

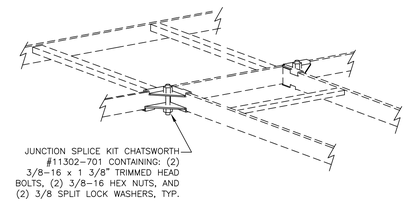

JUNCTION SPLICE DETAIL 5

SCALE: N.T.S.

LADDER TRAY SCHEDULE

CABLE TRAY STYLE	TRAY WIDTH	SIDE RAIL HEIGHT	RUNG SPACING	LOAD DEPTH	RADIUSED FITTINGS INSIDE BEND RADIUS	SYSTEM LOAD	TRAY COLOR	REMARKS
LADDER	12"	1-1/2"	9"	NA	NA	30 LBS/LF	BLACK	LENGTH PER PLANS

LADDER TRAY SPECIFICATIONS:

1. CABLE TRAY DESIGN
   U.L. LISTED LADDER TRAY SYSTEM SHALL BE MADE OF STRAIGHT SECTIONS, FITTINGS, AND ALL ACCESSORIES. STANDARD LADDER TRAYS SHALL BE U.L. CLASSIFIED AS EQUIPMENT GROUNDING CONDUCTORS.
2. CABLE TRAY MATERIALS
   STRAIGHT SECTIONS SHALL BE CONSTRUCTED OF 3/8" X 1-1/2" X .065 WALL RECTANGULAR STEEL TUBING. CROSS MEMBERS SHALL BE CONSTRUCTED OF 1/2" X 1" X .065" RECTANGULAR STEEL TUBING AND WELDED AT 9" INTERVALS.
3. CABLE TRAY SEISMIC BRACING REQUIREMENTS
   LADDER TRAY SYSTEM LOCATED IN SEISMIC DESIGN CATEGORY C, D, E OR F AS DEFINED BY THE CALIFORNIA BUILDING CODE SHALL BE SUPPORTED AND BRACED IN ACCORDANCE WITH THE CALIFORNIA BUILDING CODE AND.
4. LADDER TRAY FITTINGS AND ACCESSORIES
   ALL FITTINGS ACCESSORIES SHALL BE FURNISHED AS REQUIRED TO PROTECT, SUPPORT AND INSTALL A COMPLETE LADDER TRAY SYSTEM.
5. LADDER TRAY ROUTING REQUIREMENTS
   LADDER TRAY SHALL BE ROUTED AROUND OBSTRUCTIONS AS REQUIRED, BUT IN NO CASE SHALL TRAY PREVENT REMOVAL OF CEILING TILES OR PANELS, NOR BLOCK ACCESS TO ELECTRICAL, PLUMBING OR MECHANICAL EQUIPMENT.
6. LADDER TRAY SEPARATION REQUIREMENTS
   TRAY USED FOR SUPPORTING COMMUNICATION CABLING SHALL BE SEPARATED FROM ANY ELECTRICAL BRANCH CIRCUIT BY 3" AND ANY ELECTRICAL FEEDER BY 18".
7. THIS DETAIL IS GENERIC IN NATURE AND IS INTENDED TO DEPICT A VARIETY OF LADDER TRAY INSTALLATION SCENARIOS – NOT ALL OF WHICH APPLY TO A GIVEN PROJECT. IT IS THE CONTRACTOR'S RESPONSIBILITY TO EXAMINE ALL PROJECT PLANS AND PROVIDE A LADDER TRAY INSTALLATION APPROPRIATE TO THE SITUATION, UTILIZING PORTIONS OF THIS DETAIL AS APPLICABLE, THAT RESULT IN NEAT WORKMANSHIP AND COMPLY WITH ANSI/EIA/TIA STANDARDS.
8. FIRE STOPPING REQUIREMENTS
   FIRE STOPPING OF THRU PENETRATIONS WHERE THE TRAY OR ITS CONTENTS PENETRATE A FIRE RATED WALL, FLOOR, ETC., SHALL BE ACCOMPLISHED BY THE E.C. UTILIZING U.L. LISTED FIRE STOPPING METHODS. E.C. SHALL VERIFY TYPES/QUANTITIES OF CABLES TO BE UTILIZED BY THE OWNER AT EACH THRU PENETRATION CONDITION AND PROVIDE A SUITABLE REENTERABLE FIRESTOP SYSTEM LISTED FOR EACH FIRESTOP CONDITION.
9. RADIUS CABLE DROPS
   PROVIDE RADIUS CABLE DROPOUT(S) MEETING EIA/TIA CABLE BENDING CRITERIA AT TRAY STOPPING POINT WITHIN A TELECOMMUNICATIONS CLOSET OR ANY DISCONTINUITY IN TRAY PATH.
10. LADDER TRAY COORDINATION REQUIREMENTS
    CONTRACTOR SHALL COORDINATE TRAY SYSTEM INSTALLATION WITH ALL TRADES PRIOR TO ORDERING AND AGAIN PRIOR TO INSTALLING TRAY SYSTEM.
11. LADDER TRAY LOADING CAPACITIES
    INSTALLED LADDER TRAY SHALL SUPPORT SYSTEM LOAD AS DEFINED IN LADDER TRAY SCHEDULE.
12. LADDER TRAY MANUFACTURERS
    MANUFACTURED BY CHATSWORTH OR EQUAL BY COOPER B-LINE, CABLOFIL, AND MONSYSTEMS.

LADDER TRAY INSTALLATION REQUIREMENTS:

1. THE CONTRACTOR SHALL BE RESPONSIBLE FOR THE FURNISHING OF ALL MATERIAL, LABOR, EQUIPMENT, AND SERVICES, IN CONNECTION WITH THE INSTALLATION OF A COMPLETE AND FULLY FUNCTIONING AND CODE COMPLIANT INSTALLATION.
2. IT IS THE INTENT OF THE CONTRACT DOCUMENTS, WHICH ARE PRESENTED IN A DIAGRAMMATIC FORMAT, TO PROVIDE CONTRACTOR INFORMATION THAT SUPPLEMENTS AND ENHANCES THE GENERALLY ACCEPTED CONSTRUCTION MEANS, METHODS, TECHNIQUES, SEQUENCES AND PROCEDURES EMPLOYED IN CONNECTION WITH INSTALLATION OF THIS TYPE OF PRODUCT / SYSTEM.
3. THE CONTRACTOR SHALL ALSO INCORPORATE THE REQUIREMENTS OF THE MANUFACTURER'S INSTALLATION INSTRUCTIONS / WARRANTY REQUIREMENTS AS PART OF THE REQUIREMENTS OF THE CONSTRUCTION DOCUMENTS. IN THE EVENT OF A CONFLICT BETWEEN THE CONTRACT DOCUMENT REQUIREMENTS AND THE MANUFACTURER'S INSTALLATION REQUIREMENTS, THE MORE STRINGENT REQUIREMENTS SHALL APPLY – UNLESS THE MORE STRINGENT REQUIREMENT VOIDS APPLICABLE WARRANTIES OR VIOLATES THE REQUIREMENTS OF THE LOCAL AUTHORITY HAVING JURISDICTION. ANY SUCH CONFLICT SHALL IMMEDIATELY BE BROUGHT TO THE ATTENTION OF THE ENGINEER IN WRITING THROUGH THE FORMAL RFI PROCESS.
4. REFER TO THE ASSOCIATED SCHEDULES, SCHEMATICS, DRAWINGS, AND SPECIFICATIONS FOR DETAILED INFORMATION / REQUIREMENTS ON THIS PRODUCT / SYSTEM.

LADDER TRAY NOTES:

1. END CLOSING KIT. LADDER TRAY TERMINATIONS NOT ADJACENT TO A WALL OR JUNCTION SHALL BE COVERED BY AN END CLOSING KIT OR PROTECTIVE GROMMETS.
2. TRIANGULAR SUPPORT BRACKET. (CHATSWORTH #11312-712) WITH (2) 3/8" X 2" EMBEDMENT (MIN.) HILTI KWIK BOLT 3 WITH FENDER WASHER INTO CMU WALL. REQUIRED IN EVERY TRIANGLE SUPPORT BRACKET. PROVIDE TRIANGLE SUPPORT BRACKET AT 48" INTERVALS. MAX WEIGHT PER BRACKET IS 120 LBS.
3. CABLE DROPOUTS SHALL BE USED WHEREVER CABLES LEAVE LADDER TRAY.
4. LADDER TRAY. SIZE AND LENGTH PER PLANS.
5. FIREWALL PENETRATION SLEEVE(S) WITH BUSHINGS BY E.C. SIZE AND QUANTITY PER PLANS. SCS CONTRACTOR TO FIRESEAL INSIDE OF SLEEVE AFTER CABLE INSTALLATION.
6. CABLE SPILLWAY/WATERFALL. TYPICAL AT ALL CONDUITS, INCOMING CABLE TRAY, OR FIREWALL PENETRATIONS.
7. PLYWOOD BACKBOARD OR WALL.
8. BUTT SPLICE.
9. JUNCTION SPLICE.
10. WALL ANGLE SUPPORT KIT. (CHATSWORTH #11421-712).
11. SPLICE/JUNCTION GROUNDING KIT SHALL BE USED TO BOND SECTIONS OF TRAY TOGETHER FOR GROUNDING PURPOSES.
12. LADDER TRAY SHALL BE GROUNDED TO BUSBAR WITH #6 AWG SOLID WIRE WITH GREEN INSULATION AND (2) HOLE GROUNDING LUG.

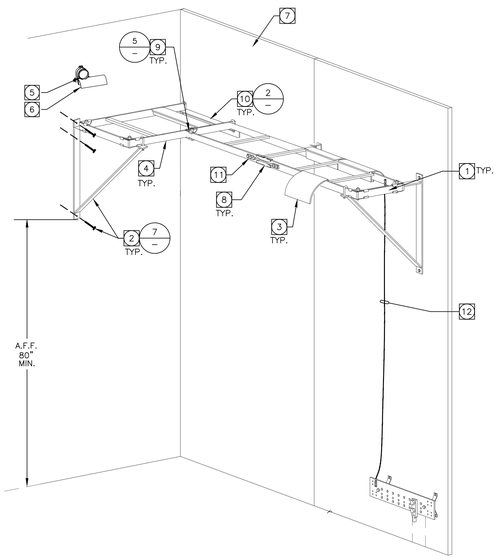

LADDER RUNWAY SYSTEM DETAIL 4

SCALE: NTS

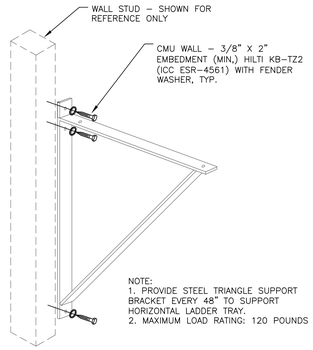

TRIANGLE SUPPORT BRACKET DETAIL 7

SCALE: N.T.S.

IDENTIFICATION STAMP
DIV. OF THE STATE ARCHITECT
APP: 03-122664 INC:
REVIEWED FOR
SS ☑ FLS ☑ ACS ☑
DATE: 05/12/2023

pjhm architects
Web: pjhm.com
Phone: 213.278.0112
LA Office: 837 Traction Avenue, #410, Los Angeles, CA 90013
OC Office: 24461 Ridge Route Drive #100, Laguna Hills, CA 92653 Phone: 760.730.5527

LICENSED ARCHITECT
RICHARD W. SIMPSON
No. C15585
REN. 02/25
STATE OF CALIFORNIA

tk|sc COLLABORATIVE
11870 Pierce Street, Suite 160
Riverside, California 92505
951.299.4160 www.tk1sc.com
Project Leader - Nikolas Bruno
Electrical Lead - Nikolas Bruno
tk1sc Job #: B2202744.000

REGISTERED PROFESSIONAL ENGINEER
RICHARD W. SIMPSON
No. E15610
EXP. 12/31/2024
ELECTRICAL
STATE OF CALIFORNIA

HIGHLAND HIGH SCHOOL
50M POOL & AQUATICS CENTER
KERN HIGH SCHOOL DISTRICT

TECHNOLOGY DETAILS

T-3.1

8/2/2022 11:34:37 AM

CAMERA MOUNTING DETAILS GENERAL NOTES:

1. THE MOUNTING DETAILS ON THIS PAGE ARE DIAGRAMMATIC AND ARE ONLY INTENDED TO CONVEY THE GENERAL SCOPE INVOLVED IN MOUNTING A CAMERA.
2. CONTRACTOR SHALL BE RESPONSIBLE TO CREATE AND FULLY DESIGN ALL MOUNTING DETAILS REQUIRED ON THIS PROJECT INCLUDING ALL COSTS TO COMPLETE THE INSTALLATION.
3. CONTRACTOR SHALL BE RESPONSIBLE TO PROVIDE AND INSTALL ALL FASTENERS, BRACKETS, ATTACHMENTS, ETC. PER MANUFACTURER'S REQUIREMENTS.
4. CONDUIT SHALL BE CONCEALED IN BUILDING STRUCTURE ELEMENTS. ALL POTENTIALLY EXPOSED CONDUIT SHALL BE APPROVED BY THE OWNER PRIOR TO ROUGH-IN, AND PAINTED TO MATCH SURROUNDING SURFACE COLOR.
5. CUTTING OF STRUCTURAL MEMBERS SHALL NOT BE DONE WITHOUT NOTIFYING AND OBTAINING PRIOR WRITTEN APPROVAL FROM THE STRUCTURAL ENGINEER.
6. ALL METALLIC CONDUIT (EMT), SUPPORTS, BOLTS, STRAPS, AND FASTENERS INSTALLED ON EXTERIOR OF ANY STRUCTURE SHALL BE CORROSION-RESISTANT. CONNECTORS AND COUPLERS SHALL BE RAIN-TIGHT COMPRESSION FITTINGS.
7. CONTRACTOR SHALL PROVIDE 30-YEAR WEATHERPROOF SEALANT (CLEAR) BETWEEN ALL CAMERA ENCLOSURES AND BUILDING STRUCTURES, AND AT CONDUIT PENETRATIONS THROUGH STRUCTURE EXTERIORS. PROVIDE A CONTINUOUS BEAD OF SEALANT COMPLETELY AROUND THE EDGE OF THE CAMERA ENCLOSURE AND THE STRUCTURE.

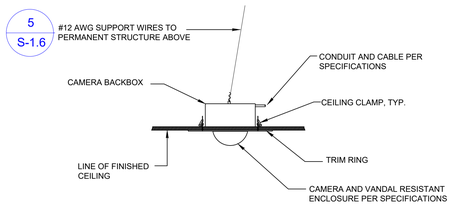

NOTE:
1. CONTRACTOR SHALL INSTALL ACCORDING TO MANUFACTURER'S INSTRUCTIONS.
2. CAMERA AND ENCLOSURE TOTAL WEIGHT 15 POUNDS MAXIMUM.

INTERIOR CAMERA DETAIL - CEILING MOUNTED (5)
SCALE: N.T.S

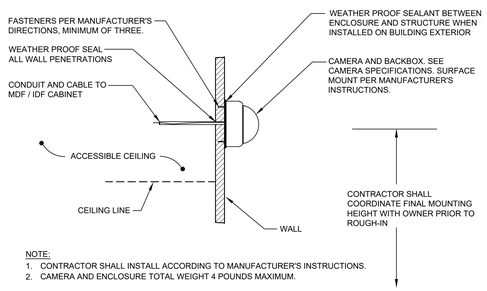

NOTE:
1. CONTRACTOR SHALL INSTALL ACCORDING TO MANUFACTURER'S INSTRUCTIONS.
2. CAMERA AND ENCLOSURE TOTAL WEIGHT 4 POUNDS MAXIMUM.

CAMERA - WALL MOUNT (6)
SCALE: N.T.S

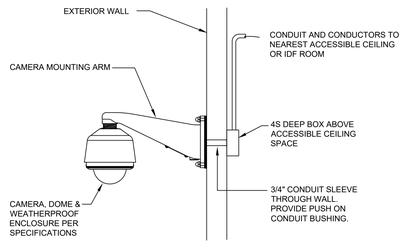

NOTE:
1. CONTRACTOR SHALL INSTALL ACCORDING TO MANUFACTURER'S INSTRUCTIONS.
2. CAMERA AND ENCLOSURE TOTAL WEIGHT 15 POUNDS MAXIMUM.

PENDANT CAMERA - WALL MOUNT (7)
SCALE: N.T.S

EQUIPMENT LIST:
2 – DOOR CONTACTS

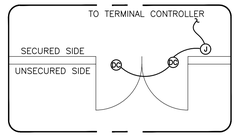

PLAN VIEW

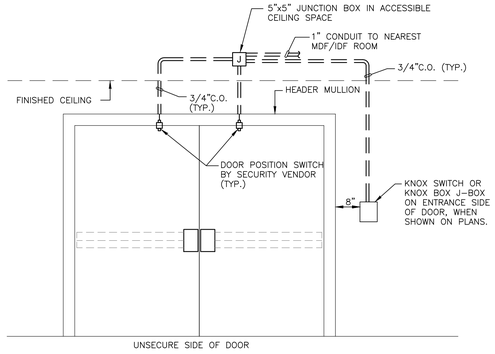

ELEVATION VIEW

DOUBLE DOOR WITH CONTACTS (3)
SCALE: N.T.S

EQUIPMENT LIST:
1 – DOOR CONTACT

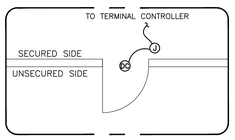

PLAN VIEW

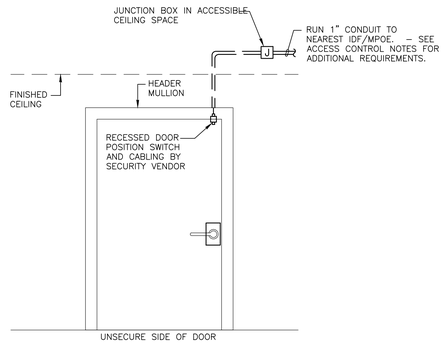

ELEVATION VIEW

SINGLE DOOR WITH CONTACT (4)
SCALE: N.T.S

ACCESS CONTROL PORTAL SEQUENCE OF OPERATIONS

1. DOOR IS LOCKED ON THE NON-SECURE SIDE.
2. TO OPEN DOOR FROM NON-SECURE SIDE, A VALID CARD MUST BE PRESENTED AT THE CARD READER TO SHUNT THE ALARM AND UNLOCK THE DOOR.
3. DOOR IS UNLOCKED ON THE SECURE SIDE AT ALL TIMES.
4. ON THE SECURED SIDE, REQUEST TO EXIT MOTION DETECTOR BYPASSES ALARM UPON EXIT AND A FORCE NOT MORE THAN 15 POUNDS APPLIED TO PANIC DEVICE OPENS THE DOOR AT ALL TIMES.

CODE NOTE:

1. ALL REQUIRED EGRESS DOORS SHALL BE OPENABLE WITHOUT USE OF ANY KEY OR SPECIAL KNOWLEDGE, TYPICAL WHERE APPLICABLE CBC 1010.1.9.

COORDINATION NOTE:

1. COORDINATE WITH ARCHITECT AND DOOR HARDWARE VENDOR PRIOR TO ROUGH-IN AND INSTALLATION.
2. REFER TO ARCHITECT DOOR SCHEDULE AND DIV 8 SPEC FOR DOOR HARDWARE INFORMATION.

EMERGENCY OPERATION NOTE:

1. DOOR MUST REMAIN UNLOCKED ON THE SECURE SIDE AT ALL TIMES.
2. PANIC HARDWARE SHALL STAY OPERATIONAL IN THE EVENT OF A LOCKDOWN.

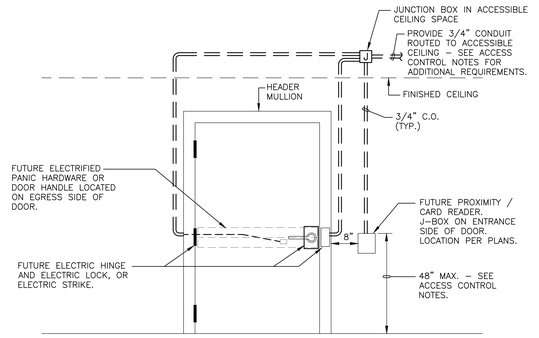

SINGLE DOOR WITH CARD READER & ELECTRIC LOCK (1)
SCALE: N.T.S

ACCESS CONTROL PORTAL SEQUENCE OF OPERATIONS

1. DOOR IS LOCKED ON THE NON-SECURE SIDE.
2. TO OPEN DOOR FROM NON-SECURE SIDE, A VALID CARD MUST BE PRESENTED AT THE CARD READER TO SHUNT THE ALARM AND UNLOCK THE DOOR.
3. DOOR IS UNLOCKED ON THE SECURE SIDE AT ALL TIMES.
4. ON THE SECURED SIDE, REQUEST TO EXIT MOTION DETECTOR BYPASSES ALARM UPON EXIT AND A FORCE NOT MORE THAN 15 POUNDS APPLIED TO PANIC DEVICE OPENS THE DOOR AT ALL TIMES.

CODE NOTE:

1. ALL REQUIRED EGRESS DOORS SHALL BE OPENABLE WITHOUT USE OF ANY KEY OR SPECIAL KNOWLEDGE, TYPICAL WHERE APPLICABLE CBC 1010.1.9.

COORDINATION NOTE:

1. COORDINATE WITH ARCHITECT AND DOOR HARDWARE VENDOR PRIOR TO ROUGH-IN AND INSTALLATION.
2. REFER TO ARCHITECT DOOR SCHEDULE AND DIV 8 SPEC FOR DOOR HARDWARE INFORMATION.

EMERGENCY OPERATION NOTE:

1. DOOR MUST REMAIN UNLOCKED ON THE SECURE SIDE AT ALL TIMES.
2. PANIC HARDWARE SHALL STAY OPERATIONAL IN THE EVENT OF A LOCKDOWN.

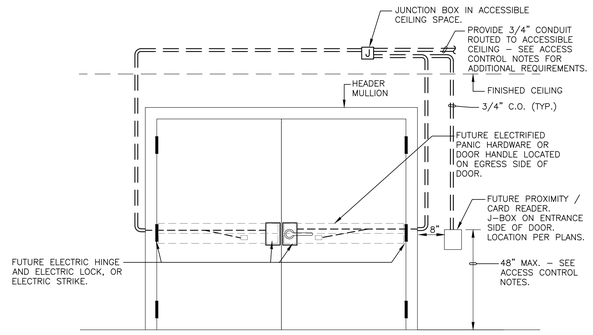

DOUBLE DOOR WITH CARD READER & ELECTRIC LOCK (2)
SCALE: N.T.S

IDENTIFICATION STAMP
DIV. OF THE STATE ARCHITECT
APP: 03-122664 INC:
REVIEWED FOR
SS ☑ FLS ☑ ACS ☑
DATE: 05/12/2023

pjhm architects
LICENSED ARCHITECT RAYMOND W. SIMPSON JR. No. C15585 REN. 02/25 STATE OF CALIFORNIA
tk|sc COLLABORATIVE
11870 Pierce Street, Suite 160
Riverside, California 92505
951.299.4160 www.tklsc.com
Project Leader - Nikolas Bruno
Electrical Lead - Nikolas Bruno
tk1sc Job #: B2202744.000
REGISTERED PROFESSIONAL ENGINEER RAYMOND W. SIMPSON JR. No. E15610 EXP. 12-31-2024 ELECTRICAL STATE OF CALIFORNIA
OC Office: 24461 Ridge Route Drive #100, Laguna Hills, CA 92653 Phone: 949.496.6161 LA Office: 837 Traction Avenue, #410, Los Angeles, CA 90013 Phone: 213.278.0172 SD Office: 804 Pier View Way #103, Oceanside, CA 92054 Phone: 760.730.5527 Web: pjhm.com

HIGHLAND HIGH SCHOOL
50M POOL & AQUATICS CENTER
KERN HIGH SCHOOL DISTRICT

TECHNOLOGY DETAILS
T–3.2

8/2/2022 11:34:37 AM

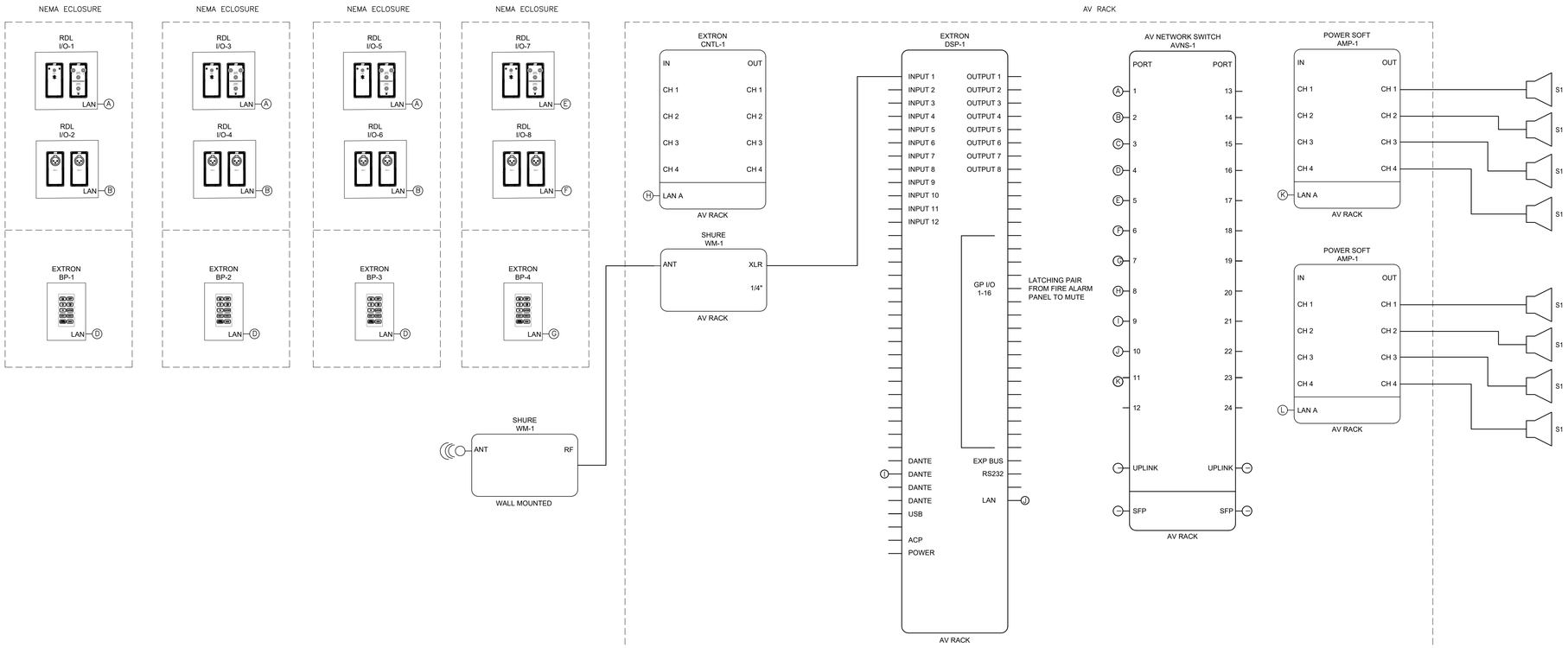

AV SINGLE LINE - POOL AREA

SCALE: N.T.S.

1

IDENTIFICATION STAMP
DIV. OF THE STATE ARCHITECT
APP: 03-122664 INC:
REVIEWED FOR
SS ☑ FLS ☑ ACS ☑
DATE: 05/12/2023

pjhm architects

LICENSED ARCHITECT
THOMAS W. KRUSE
NO. C15585
REN. 02/25
STATE OF CALIFORNIA

tk1sc COLLABORATIVE
11870 Pierce Street, Suite 160
Riverside, California 92505
951.299.4160 www.tk1sc.com
Project Leader - Nikolas Bruno
Electrical Lead - Nikolas Bruno
tk1sc Job #: B2202744.000

REGISTERED PROFESSIONAL ENGINEER
RAYMOND W. SWARTZ
No. E15610
Exp. 12/31/2023
ELECTRICAL
STATE OF CALIFORNIA

HIGHLAND HIGH SCHOOL
50M POOL & AQUATICS CENTER

KERN HIGH SCHOOL DISTRICT

AV SINGLE LINE
AND DETAILS

T-4.0

OC Office: 24461 Ridge Route Drive #100, Laguna Hills, CA 92653 Phone: 949.496.6191 SD Office: 804 Pier View Way #103, Oceanside, CA 92054 Phone: 760.730.5527 LA Office: 837 Traction Avenue, #410, Los Angeles, CA 90013 Phone: 213.278.0172 Web: pjhm.com

8/2/2022 11:34:37 AM

SWIMMING POOL DATA

SURFACE AREA	=	12,369 SQ. FT.
PERIMETER	=	488 FT.
DEPTH	=	3-6" TO 12'-3"
VOLUME	=	691,976 GAL.
6 HR TURNOVER	=	1,922 GPM

NOTE:
A PORTABLE VACUUM CLEANING SYSTEM HAS BEEN PROVIDED FOR THE POOL. REFER TO SPECIFICATION SECTION 13 11 06, 2.2, A,B,C,D, AND H.

LEGEND

EJ	=	EXPANSION JOINT (5A SP.12, 5C SP.12)
CJ	=	CONTROL JOINT (5B SP.12)
TSD	=	TOP OF SLOT DRAIN (4 SP.12)
TCO	=	TOP OF CLEAN-OUT (4 SP.12)
AL	=	ACCESSIBLE LIFT (1 SP.8)
HB	=	HOSE BIBB (6 SP.12)
SCA	=	SURGE CHAMBER ACCESS COVER (2 SP.7)
TAD	=	TOP OF AREA DRAIN (8 SP.10)
CW	=	COLD WATER
SL	=	SLOPE DIRECTION
WL	=	WATERLEVEL
TAD	=	TOP OF AREA DRAIN
TFF	=	TOP OF FINISHED FLOOR
FS	=	FINISHED SURFACE
TD	=	TOP OF DECK
I.E.	=	INVERT ELEVATION
P.O.C.	=	POINT OF CONNECTION
SD	=	STORM DRAIN
(E)	=	EXISTING

NOTES:

1. COORDINATE SIGNAGE PLACEMENT AND COLOR SCHEME WITH OWNER PRIOR TO INSTALLATION. (7 SP.12)
2. DECKS SHALL HAVE 1% MIN. SLOPE AND 1.8% MAX. SLOPE TO DRAINS.
3. ALL POOL DECKING SHALL BE NON-SLIP AND NON-ABRASIVE MEDIUM BROOM FINISH WITH NATURAL GRAY CONCRETE UNLESS OTHERWISE NOTED.
4. REFER TO ARCHITECTURAL PLANS FOR LOCATIONS AND QUANTITY OF REQUIRED EXITS, DRINKING FOUNTAINS, AND SANITARY FIXTURES.
5. THE POOL CANNOT BE WITHOUT AN APPROVED POOL ENCLOSURE AT ANY TIME, INCLUDING DURING CONSTRUCTION AND INSTALLATION OF THE NEW POOL ENCLOSURE.
6. SEE SHEET A-0.2 WITH ALL REQUIRED EXIT SIGNS, ROOM SIGNS, ETC.

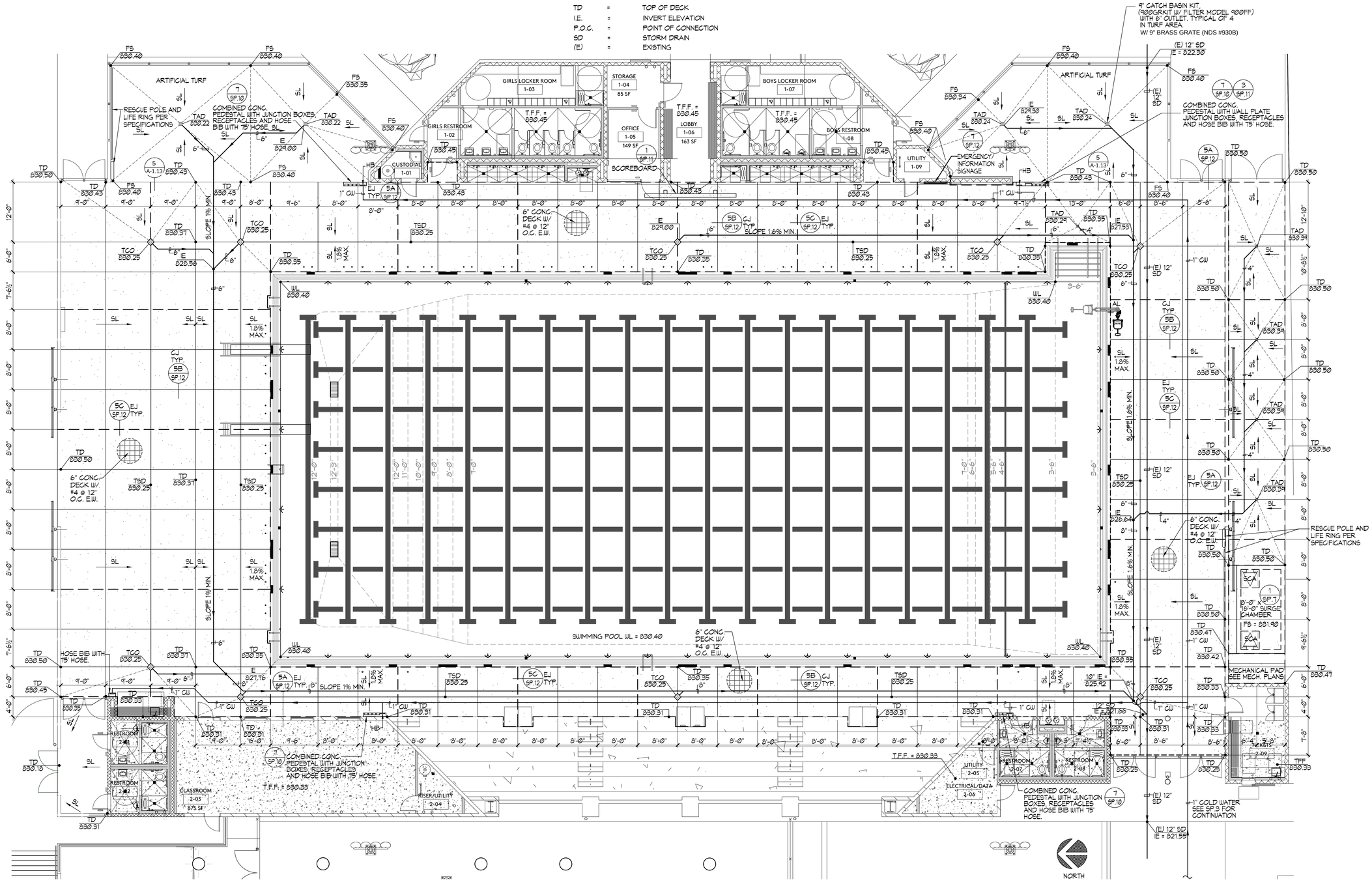

1 SWIMMING POOL DECK PLAN 1/8"=1'-0"

IDENTIFICATION STAMP
DIV. OF THE STATE ARCHITECT
APP: 03-122664 INC:
REVIEWED FOR
SS ☑ FLS ☑ ACS ☑
DATE: 05/12/2023

pjhm architects

LICENSED ARCHITECT THOMAS W. KRUSE NO. C15585 REN. 02/25 STATE OF CALIFORNIA

AQUATIC DESIGN GROUP
2226 Faraday Ave. Carlsbad, CA 92008
AquaticDesignGroup.com
760.438.8400

LICENSED ARCHITECT GEORY S. FERRELL C-35802 REN. 07/31/23 STATE OF CALIFORNIA

HIGHLAND HIGH SCHOOL
50M POOL & AQUATICS CENTER

KERN HIGH SCHOOL DISTRICT

SWIMMING POOL DECK PLAN

DP.1

OC Office: 24461 Ridge Route Drive #100, Laguna Hills, CA 92653 • OC Phone: 949.496.6191 • SD Office: 804 Pier View Way #103, Oceanside, CA 92054 • SD Phone: 760.730.5527 • LA Office: 837 Traction Avenue, #410, Los Angeles, CA 90013 • LA Phone: 213.278.0172 • Web: pjhm.com

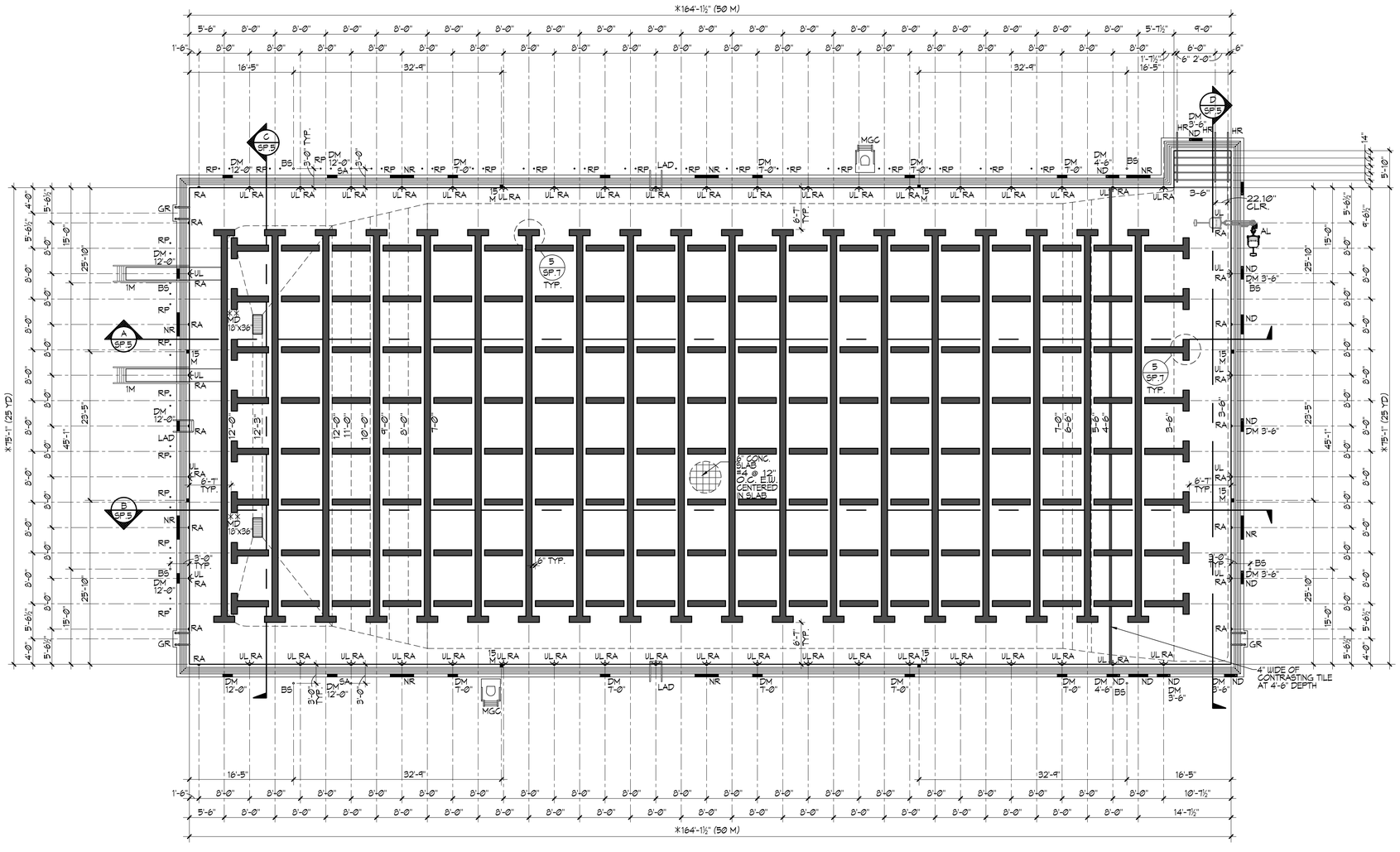

SWIMMING POOL DATA

SURFACE AREA	=	12,369 SQ. FT.
PERIMETER	=	488 FT.
DEPTH	=	3'-6" TO 12'-3"
VOLUME	=	691,976 GALLONS
6 HR TURNOVER	=	1,922 GPM

LEGEND

**MD	=	MAIN DRAIN	6 SP.9
GR	=	GRABRAIL	1 SP.9
DM	=	DEPTH MARKER	6 SP.7
NR	=	'NO RUNNING'	7 SP.7
ND	=	'NO DIVING'	7,8 SP.7
RA	=	ROPE ANCHOR	3 SP.9
RP	=	RACING PLATFORM	7 SP.8
BS	=	BACKSTROKE STANCHION	3 SP.8
MGC	=	MOVEABLE GUARD CHAIR	5 SP.8
UL	=	UNDERWATER LIGHT	2 SP.11
AL	=	ACCESSIBLE LIFT	1 SP.8
HR	=	HANDRAIL	4 SP.8
15M	=	15 METER MARKER	7 SP.6
1M	=	ONE METER DIVE STAND	2 SP.9
LAD	=	LADDER	4 SP.9
SA	=	STANCHION ANCHOR	3 SP.8

CERTIFICATION REQUIREMENTS

*THE CONTRACTOR SHALL RETAIN AN INDEPENDENT LICENSED SURVEYOR TO PROVIDE PROOF OF COMPLIANCE FOR REQUIRED POOL LENGTHS AS FOLLOWS: (RECOMMEND PATRELL ENG. GROUP (626) 335-4362)

LONG COURSE-50M: (ALLOWS FOR TOUCH PADS AT BOTH ENDS) 164'-1⅛" MIN.; 164'-11⅛" MAX.

SHORT COURSE-25YDS: (ALLOWS FOR TOUCH PADS AT ONE END) 75'-0 3/16" MIN.; 75'-1 3/16" MAX.

TOLERANCE AGAINST LENGTH SHALL EXTEND IN A VERTICAL PLANE @ 3M (12') ABOVE AND @ 0.6M. (2'-7½") BELOW THE SURFACE OF THE WATER AT ALL POINTS OF BOTH END WALLS TYP. OF ALL COURSES.

THE INDEPENDENT LICENSED SURVEYOR SHALL FILL OUT, NOTARIZE AND FILE OFFICIAL CERTIFICATION FORM(S) WITH USA SWIMMING.

**CONTRACTOR SHALL RETAIN A LICENSED ENGINEER TO CERTIFY THE FIELD BUILT MAIN DRAIN SYSTEMS AS V.G.B. COMPLIANT.

POOL DESIGN CRITERIA

POOL DESIGN CODES

CALIFORNIA BUILDING CODE 2019
ASCE 7-16

POOL DESIGN CRITERIA

PER GEOTECHNICAL REPORT BY: SOILS ENGINEERING, INC., DATED AUGUST 5, 2022 SEI FILE 22-18353

UNDRAINED CONDITIONS:

ACTIVE PRESSURE:	50 pcf	DRAINED CONDITION
AT-REST PRESSURE:	60 pcf	DRAINED CONDITION
APPROX. SOIL UNIT WT.:	110 pcf	
BEARING PRESSURE:	2500 psf	
PASSIVE PRESSURE:	300 pcf	(FOR PIER FOOTINGS: 150 pcf + 1/3 INCREASE FOR WIND/SEISMIC)
COEFF. OF FRICTION:	0.30	
SEISMIC PRESSURE:	13 H^2 @ 0.6H NPER SEI EMAIL RESPONSE	

SURCHARGE AT DECK

1) ASSUME 50% OF VERTICALLY APPLIED SURCHARGE TO ACT AS HORIZONTAL UNIFORM LOAD ON POOL WALL.
2) DL = WEIGHT OF 8" MAX. CONCRETE DECK SLAB ABOVE.
3) LL DESIGN CASE = POOL EMPTY DURING CONSTRUCTION OR FOR SHORT TERM MAINTENANCE. NO 100 psf LL FOR FULL CROWD OPERATING CONDITION WHEN EMPTY.

CONCRETE DESIGN

f'c = 4,000 psi MIN.
fy = 60 ksi

NOTE:

1. HYDROSTATIC PRESSURE RELIEF VALVES ARE PROVIDED IN POOL FLOOR SLABS TO ESTABLISH A "DRAINED CONDITION" (WHEN THE POOL IS EMPTY) IN THE PRESENCE OF A GROUND WATER TABLE, A PERCHED GROUND WATER CONDITION, OR POOR SITE DRAINAGE.

1 **SWIMMING POOL LAYOUT PLAN (SWIMMING)** ⅛"=1'-0"

IDENTIFICATION STAMP
DIV. OF THE STATE ARCHITECT
APP: 03-122664 INC:
REVIEWED FOR
SS ☑ FLS ☑ ACS ☑
DATE: 05/12/2023

pjhm architects

LICENSED ARCHITECT RICHARD W. RIDDELL No. C35385 REN. 02/25 STATE OF CALIFORNIA

AQUATIC DESIGN GROUP
2226 Faraday Ave, Carlsbad, CA 92008
AquaticDesignGroup.com
760.438.8400

LICENSED ARCHITECT GREGORY S. [illegible] C35802 REN. 07/31/23 STATE OF CALIFORNIA

HIGHLAND HIGH SCHOOL
50M POOL & AQUATICS CENTER

KERN HIGH SCHOOL DISTRICT

SWIMMING POOL LAYOUT PLAN (SWIMMING)

SP.1

OC Office: 24461 Ridge Route Drive #100, Laguna Hills, CA 92653 • OC Phone: 949.496.6191 • SD Office: 804 Pier View Way #103, Oceanside, CA 92054 • SD Phone: 760.730.5527 • LA Office: 837 Traction Avenue, #410, Los Angeles, CA 90013 • LA Phone: 213.278.0172 • Web: pjhm.com

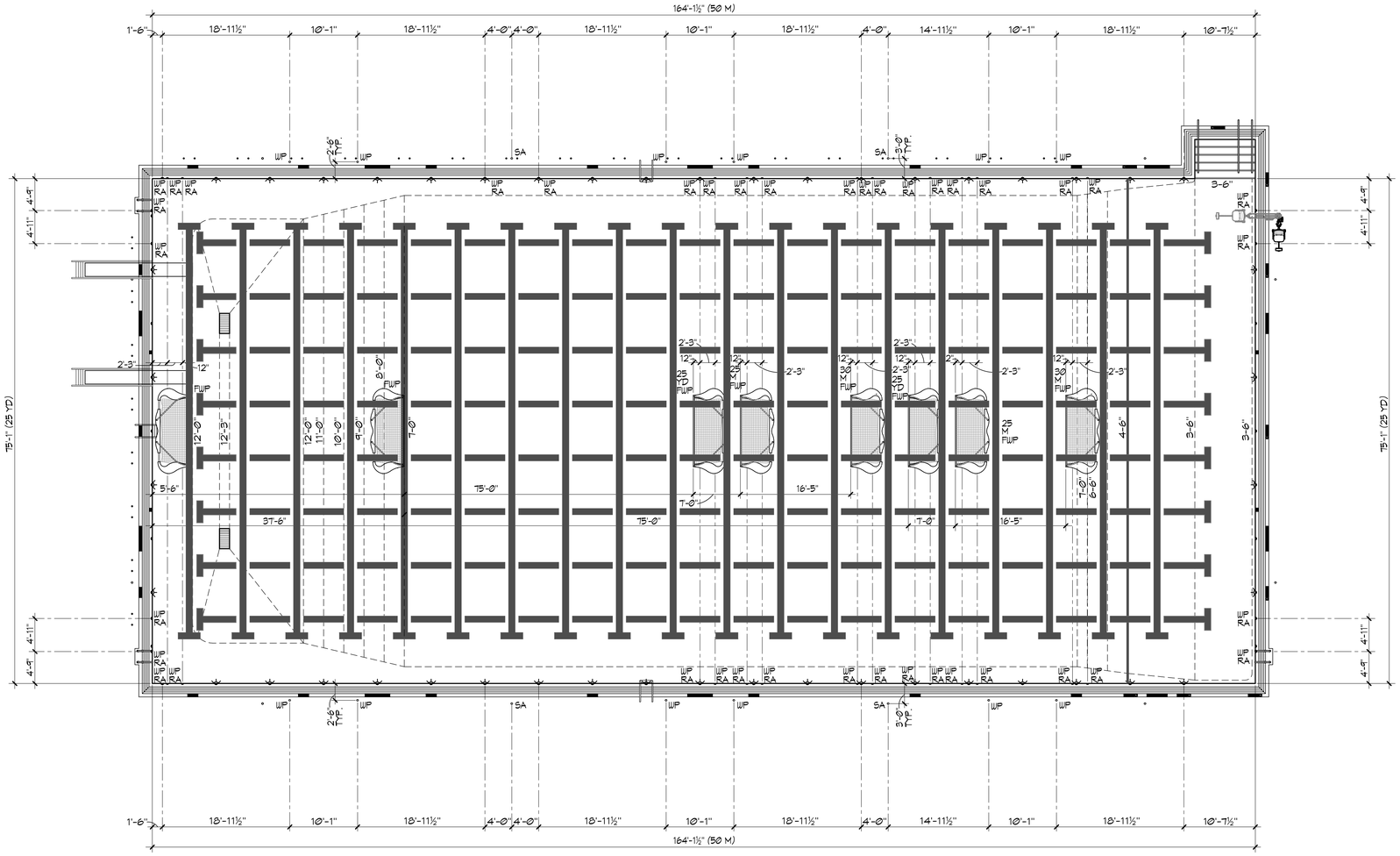

SWIMMING POOL DATA

SURFACE AREA	=	12,369 SQ. FT.
PERIMETER	=	488 FT.
DEPTH	=	3'-6" TO 12'-3"
VOLUME	=	691,976 GALLONS
6 HR TURNOVER	=	1,922 GPM

LEGEND

SA	=	STANCHION ANCHOR	3 SP.8
FWP	=	FLOATING WATERPOLO	6 SP.8
WP	=	WATERPOLO (STATIONARY)	2 SP.8
RA	=	ROPE ANCHOR	3 SP.9

NORTH

1 SWIMMING POOL LAYOUT PLAN (WATERPOLO) ⅛"=1'-0"

IDENTIFICATION STAMP
DIV. OF THE STATE ARCHITECT
APP: 03-122664 INC:
REVIEWED FOR
SS ☑ FLS ☑ ACS ☑
DATE: 05/12/2023

pjhm architects

LICENSED ARCHITECT
THOMAS W. KRUSE
NO. C15585
REN. 02/25
STATE OF CALIFORNIA

AQUATIC DESIGN GROUP
2226 Faraday Ave. Carlsbad, CA 92008
AquaticDesignGroup.com
760.438.8400

LICENSED ARCHITECT
GREGORY S. FERRELL
C-35802
REN. 07/31/23
STATE OF CALIFORNIA

HIGHLAND HIGH SCHOOL
50M POOL & AQUATICS CENTER

KERN HIGH SCHOOL DISTRICT

SWIMMING POOL LAYOUT PLAN (WATERPOLO)

SP.2

OC Office: 24461 Ridge Route Drive #100, Laguna Hills, CA 92653 • OC Phone: 949.496.6191 • SD Office: 804 Pier View Way #103, Oceanside, CA 92054 • SD Phone: 760.730.5527 • LA Office: 837 Traction Avenue, #410, Los Angeles, CA 90013 • LA Phone: 213.278.0172 • Web: pjhm.com

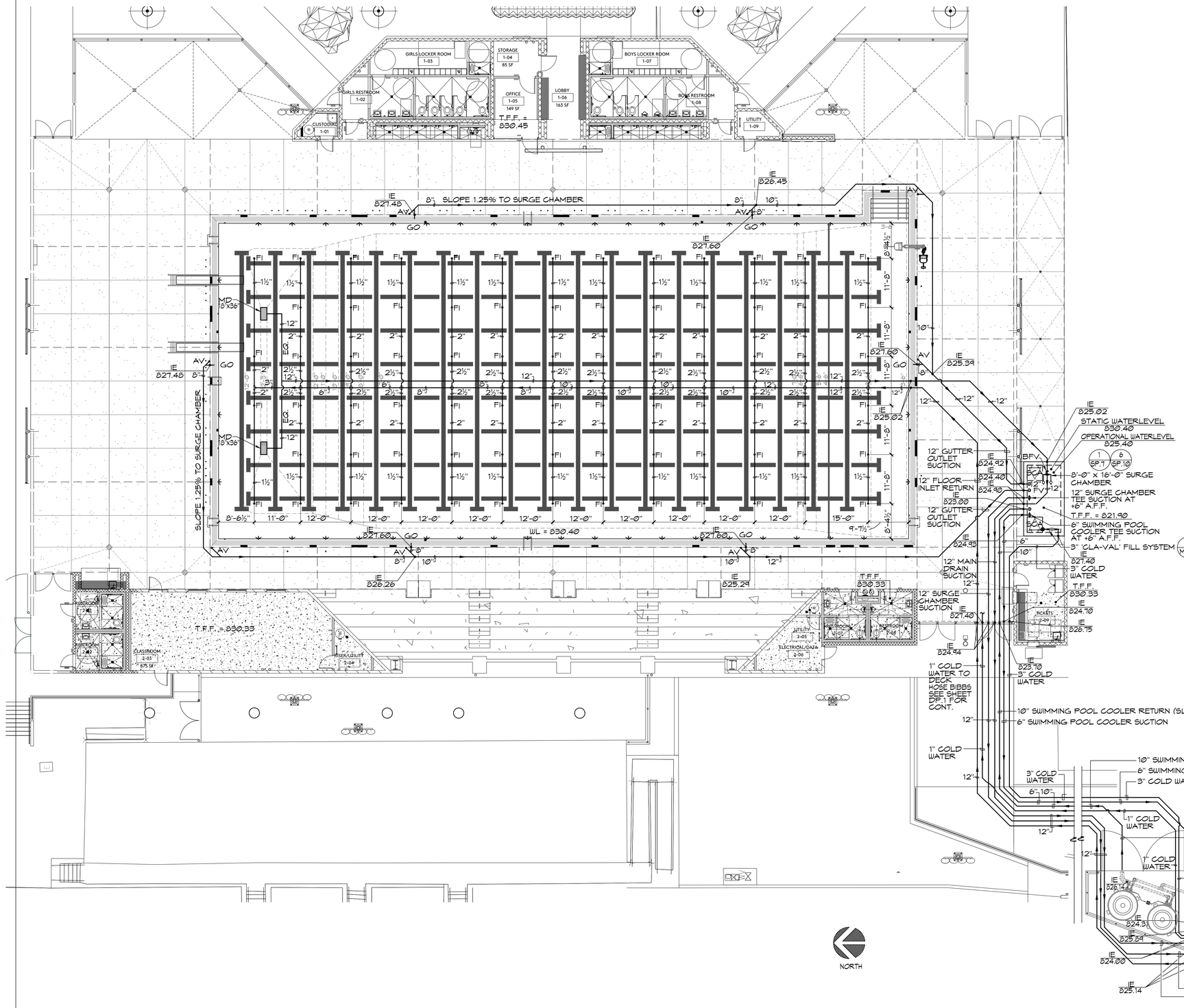

SWIMMING POOL DATA

SURFACE AREA	=	12,369 SQ. FT.
PERIMETER	=	488 FT.
DEPTH	=	3'-6" TO 12'-3"
VOLUME	=	691,976 GALLONS
6 HR TURNOVER	=	1,922 GPM

SWIMMING POOL SURGE DATA

REQUIRED SURGE CAPACITY	=	12,369 GAL.
SURGE IN PERIMETER GUTTER	=	5,482 GAL.
SURGE IN GUTTER PIPING	=	1,842 GAL.
8' x 16' SURGE IN SURGE CHAMBER	=	5,272 GAL.
TOTAL SUPPLIED SURGE	=	12,596 GAL.

∴ 12,597 GAL. > 12,369 GAL. + 2% OK

LEGEND

MD	=	MAIN DRAIN — 6 / SP.9
FI	=	FLOOR INLET — 2 / SP.10
GO	=	GUTTER OUTLET — 1 / SP.10
AV	=	AIR VENT — 5 / SP.9
SCA	=	SURGE CHAMBER ACCESS — 2 / SP.7
BFV	=	BUTTERFLY VALVE — 4 / SP.10
FV	=	FLOAT VALVE
A.F.F.	=	ABOVE FINISH FLOOR
WL	=	WATERLEVEL
T.F.F.	=	TOP OF FINISHED FLOOR
IE	=	INVERT ELEVATION

5 / SP.10

NOTES:

1. PIPING ROUTES ARE SCHEMATIC IN NATURE AND SHOWN ON PLANS FOR CLARITY. CONTRACTOR SHALL ROUTE PIPING ACCORDINGLY TO MEET NOTED INVERT ELEVATIONS. REFER TO REFERENCED DETAIL FOR PIPE SPACING REQUIREMENTS.
2. ALL BELOW GRADE POOL PIPING SHALL BE SCHEDULE 40 PVC AND ALL ABOVE GRADE POOL PIPING SHALL BE SCHEDULE 80 PVC.
3. COORDINATE ALL PIPING WITH SITE AND BUILDING UTILITIES INCLUDING PIPING, CONDUITS / STRUCTURES AND THE LIKE. COORDINATE ROUTING OF PIPING THROUGH STRUCTURAL SLAB. ALL PIPING SHALL HAVE UNIFORM SLOPE IN ONE DIRECTION.
4. SURGE CHAMBER TEE SUCTION SHALL BE SET AT +6" A.F.F. MAINTAIN MAXIMUM SEPARATION BETWEEN SUCTION AND INFLUENT PIPING WITHIN THE SURGE CHAMBER.
5. EACH MAIN DRAIN SHALL BE EQUIPPED WITH HYDROSTATIC RELIEF VALVE PER RECOMMENDATIONS OF GEOTECHNICAL REPORT

1 **SWIMMING POOL PIPING PLAN** 1"=10'-0"

IDENTIFICATION STAMP
DIV. OF THE STATE ARCHITECT
APP: 03-122664 INC:
REVIEWED FOR
SS ☑ FLS ☑ ACS ☑
DATE: 05/12/2023

pjhm architects
LA Phone: 213.278.0172 • Web: pjhm.com
LICENSED ARCHITECT RICHARD W. RIDDELL C 35585 REN. 02/25 STATE OF CALIFORNIA
AQUATIC DESIGN GROUP
2226 Faraday Ave, Carlsbad, CA 92008
AquaticDesignGroup.com
760.438.8400
LICENSED ARCHITECT JEFFERY S. [illegible] C35802 REN. 07/31/23 STATE OF CALIFORNIA
LA Office: 837 Traction Avenue, #410, Los Angeles, CA 90013 • SD Phone: 760.730.5527
OC Office: 24461 Ridge Route Drive #100, Laguna Hills, CA 92653 • OC Phone: 949.496.6191 • SD Office: 804 Pier View Way #103, Oceanside, CA 92054

HIGHLAND HIGH SCHOOL
50M POOL & AQUATICS CENTER

KERN HIGH SCHOOL DISTRICT

SWIMMING POOL PIPING PLAN

SP.3

LEGEND

UL	=	UNDERWATER LIGHT
JB	=	JUNCTION BOX
RP	=	RACING PLATFORM
WP	=	WALL PLATE
DP	=	DECK PLATE

KEY NOTES

	DESCRIPTION	QUANTITY	UNIT
▼	ETHERNET DROP-BY OTHERS	4	COUNT
F4	WALL PLATE FIBER CONNECTION	1	COUNT
5	WALL PLATE SCOREBOARD NODE	4	COUNT
6	WALL PLATE TIMER NODE	5	COUNT
D	TIMING DECK NODE (4'x4'x6" PVC BOX)	25	COUNT
2	START DECK NODE (4'x4'x6" PVC BOX)	3	COUNT
5	SCOREBOARD DECK NODE (4'x4'x6" PVC BOX)	3	COUNT
6	TITANIUM TIMER CONNECT DECK PLATE (4'x4'x6" PVC BOX)	5	COUNT
F	TIMING SYSTEM WALL INTERFACE WPI W/ 12"x12"x6" PVC BOX	3	COUNT
4	CABLE HARNESS CONNECTION NODE	1	COUNT

TIMING SYSTEM NOTES/EQUIPMENT

NOTE: THE CONTRACTOR SHALL SUPPLY AND INSTALL DECK PLATE BOXES, WALL PLATE BOXES, WALL PLATE JUNCTION BOXES, CONDUIT, WIRING, SCOREBOARD AND ALL TIMING EQUIPMENT AS SHOWN FOR THE 'COLORADO' TIME SYSTEM OR EQUAL.

TIMING SYSTEM

QTY	MODEL	DESCRIPTION
1	GENT-TMR	INTUITIVE SOFTWARE INTERFACE WITH MODERN WINDOWS USER INTERFACE AND TOUCHSCREEN FRIENDLY. FLEXIBLE USER INTERFACE OPTIONS WITH ETHERNET CONNECTIVITY TO THE TIMER. ADVANCED DIAGNOSTICS, INTELLIGENT BUS SYSTEM, ROBUST SAFEGUARDS. TIMER WILL CONTINUE TO RUN AND FINISH RACE WITHOUT USER INTERFACE. WET-PLUGGABLE TITANIUM CONNECTIONS. INTEGRATED 2.4 GHz WIRELESS TO SCOREBOARDS, FACILITY NETWORK CONNECTIVITY.
1	R-600-302	GENT LAPTOP

START SYSTEM

QTY	MODEL	DESCRIPTION
2	SS	CHAMPION SERIES START SYSTEM WITH WIRED MICROPHONE, VOLUME CONTROL ON EACH MICROPHONE INPUT, EXTERNAL CONNECTIONS FOR ADDITIONAL STROBE LIGHTS, LED BATTERY INDICATION LIGHT, AC/DC POWER CAPABILITIES AND AN EXTERNAL 360° STROBE. TRIPOD OR TABLE TOP OPTIONS.
2	START-FPM-2	FLAG POLE MOUNTING KIT FOR STARTER
17	SP-6/45	6 WATT INDIVIDUAL BLOCK SPEAKER

TOUCHPADS

QTY	MODEL	DESCRIPTION
18	TP-RDG	AQUAGRIP GUTTERHUNG TOUCHPADS (90° x 22") US PATENT 5,702,799
2	CAD-TP96	TOUCHPAD CADDY FOR GUTTERHUNG TOUCHPADS. HOLDS UP TO TEN TOUCHPADS. SOME ASSEMBLY REQUIRED.
18	4000-0040	SPECIAL SIZE TOUCHPAD BRACKETS

GENT TOUCHPAD SYSTEM

QTY	MODEL	DESCRIPTION
1	TP-GENT-10	TEN-LANE TOUCHPAD SYSTEM FOR THE GEN 7 TIMING SYSTEM (SERIAL) INCLUDES AN TEN-LANE CABLE HARNESS, ONE PUSHBUTTON PER LANE+ ONE SPARE, VACUUM PUMP, AND TOUCHPAD METER.

GENT CABLE

QTY	MODEL	DESCRIPTION
1	R-015-107-8	SCOREBOARD CABLE, 8 METER
1	R-015-115-8	TIMER CABLE, 8 METER
1	R-015-106-8	STARTER CABLE, 8 METER
1	R-015-115-15	TIMER CABLE, 15 METER

GENT IN DECK

QTY	MODEL	DESCRIPTION
D 25	TDPI-D	TITANIUM DOMED DECK PLATE-INTELLIGENT TITANIUM DECK PLATES REQUIRE A 4" SQUARE OR 4.125" DIAMETER CIRCULAR OPENING AT A MINIMUM. WRITTEN VERIFICATION AND SIGN OFF REQUIRED FROM CUSTOMER. NOTE: INCLUDES 5 YEAR WARRANTY. GTS IS THE ONLY MANUFACTURER OF TITANIUM DECK PLATE.
2 2	TDPI-S2	START DECK NODE
5 3	TDPI-SCS	SCOREBOARD DECK NODE
F 3	R-1004-054R	GENT WALL PLATE (15X15)
1	TDPI-K1	KIT-SCOREBOARD BUS HEAD & TAIL NODE INSTALLATION
1	TDPI-K1	KIT-TIMING BUS HEAD & TAIL NODE INSTALLATION
1	WPI-F4	WP-YDS FIBER & LEGACY CONNECT
6 5	TDPI-T1	TIMER DECK NODE

GENT CABLE

QTY	MODEL	DESCRIPTION
1200'	R-015-137	TIMING BUS CABLE- 7 CONDUCTOR
1200'	R-015-126	SCOREBOARD BUS CABLE- 4 CONDUCTOR

PACE CLOCK

QTY	MODEL	DESCRIPTION
1	PC-PRO-R	PACE CLOCK - PRO/WATER POLO SHOT CLOCK
1	DC-1500	SPECIFICATIONS: • 4 DIGIT PACE CLOCK • 18" RED DIGITS - VIEWABLE UP TO 400 FEET • HIGH INTENSITY LED - INDOOR/OUTDOOR • "SPLASH-PROOF" PROTECTIVE LENS • INTERNAL RECHARGEABLE BATTERY • INTERNAL HORN • FEET AND HANDLE
1 PC-PRO AND 1 DC 1500 DECK CLOCKS PER OWNER APPROVAL		FUNCTIONS: • SIMPLE PACE CLOCK • CUMULATIVE SPLIT DISPLAY • LAP SPLIT DISPLAY • LAP COUNTER • LAP SPLIT DISPLAY WITH TURN SPEED • RELAY EXCHANGES DISPLAY • START REACTION DISPLAY • HAND TURN SPEED • BREAK OUT SPEED DISPLAY • BREAK OUT SPEED DISPLAY WITH START REACTION • TIME DISPLAY FOR REPETITIVE SETS • SINGLE LANE TIMER • MID-RACE TIMING DISPLAY • WATERPOLO SHOT CLOCK • WATERPOLO GAME CLOCK

NOTE: MOST FUNCTIONS REQUIRE ADDITIONAL INPUT DEVICES, I.E. TOUCHPAD, RELAY JUDGING PLATFORM, START SYSTEM, PUSHBUTTON

CONTROLLER

QTY	MODEL	DESCRIPTION
1	WTTC-2	WIRELESS TABLE TOP CONTROLLER
1	CASE-WTTC	CASE FOR THE WIRELESS TABLE TOP CONTROLLER
1	WHC-1	WIRELESS HANDHELD CONTROLLER

ADAPTER

QTY	MODEL	DESCRIPTION
1	WA-3	WIRELESS ADAPTER, 2.4 GHz

RELAY JUDGING PLATFORM

QTY	MODEL	DESCRIPTION
16	RJPL-24X32	CTS RELAY JUDGING PLATFORM 24'X32' W/ BUILT-N LED LIGHT FOR START
1	CAD-RJPL-2	CADDY- 24' WIDTH RELAY JUDGING PLATFORMS (HOLDS 16)

FULL COLOR VIDEO DISPLAY

QTY	MODEL	DESCRIPTION
4 1	SCOREBOARD	(4) PROVIDE LED MATRIX DISPLAY SCOREBOARD INCLUDING ALL POWER REQUIREMENTS, BONDING AND STRUCTURAL SUPPORTS. THE SCOREBOARD SHALL HAVE FULL COLOR AND VIDEO CAPABILITIES. Y3C 12mm 256H x 448W SMD, FA, OD 2PM DISPLAY ACTIVE AREA: 120.4(H) x 211.7(W) (5) PROVIDE TEN (10) DEDICATED 20 AMP CIRCUIT TO BE TERMINATED INTO SCOREBOARD LOAD CENTER (6) MASTER ON/OFF SCOREBOARD SWITCH WITH PILOT LIGHT W/ LOCKABLE ENCLOSURE. (7) SCOREBOARD DATA CONNECTION BOX CONNECT TO TIMING/WALL BOX LOCATION W/ 1" PVC CONDUIT. NON-ILLUMINATED FACILITY IDENTIFICATION PANEL WITH ARTWORK.

ID PANEL

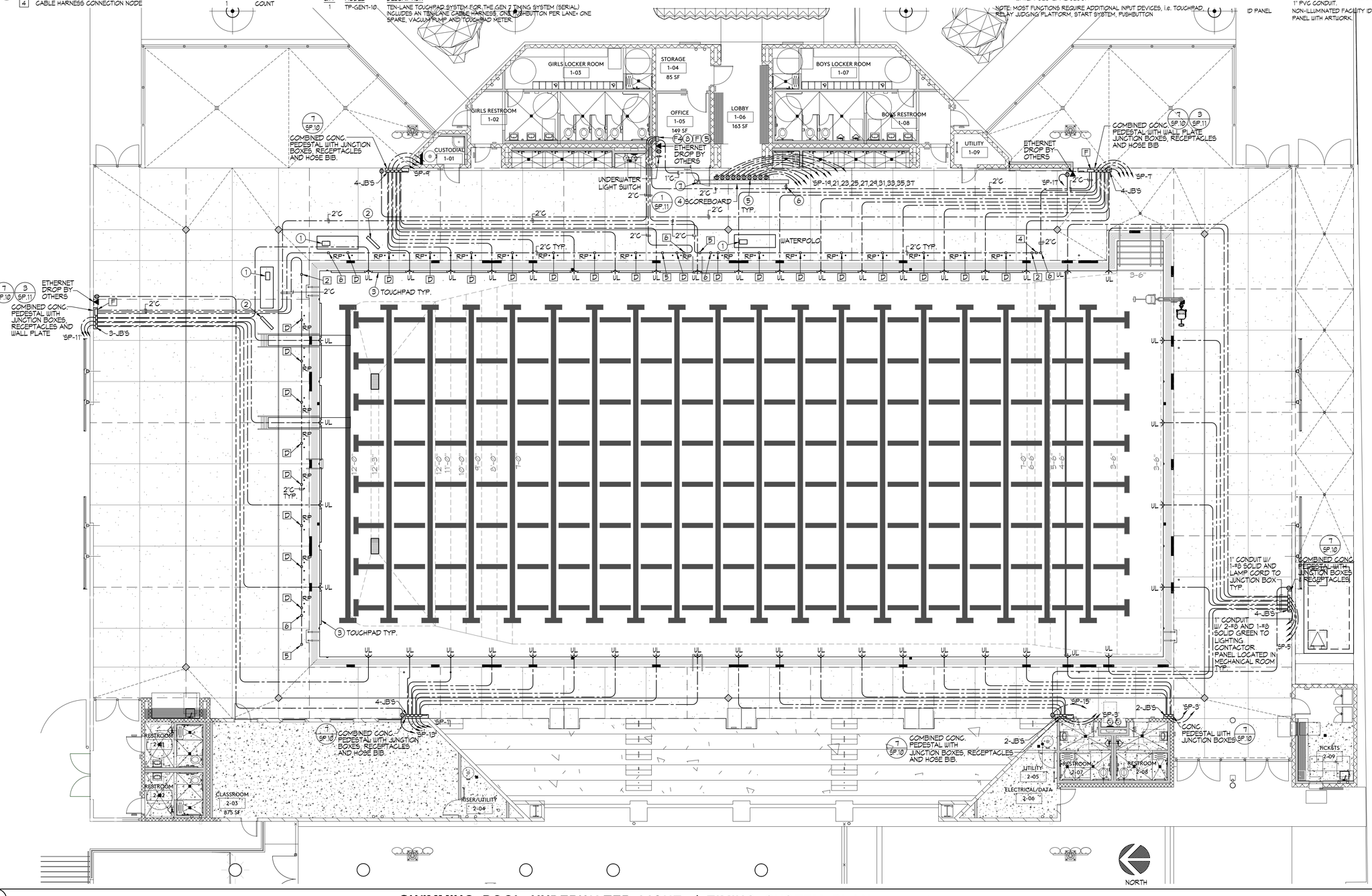

1 SWIMMING POOL UNDERWATER LIGHT / TIMING SYSTEM PLAN ⅛"=1'-0"

IDENTIFICATION STAMP
DIV. OF THE STATE ARCHITECT
APP: 03-122664 INC:
REVIEWED FOR
SS ☑ FLS ☑ ACS ☑
DATE: 05/12/2023

pjhm architects

LICENSED ARCHITECT RICHARD W. RANSOM No. C35585 REN. 02/25 STATE OF CALIFORNIA

AQUATIC DESIGN GROUP
2226 Faraday Ave, Carlsbad, CA 92008
AquaticDesignGroup.com
760.438.8400

LICENSED ARCHITECT JERRY S. [illegible] C35802 REN. 07/31/23 STATE OF CALIFORNIA

SD Phone: 760.730.5527 • OC Office: 24461 Ridge Route Drive #100, Laguna Hills, CA 92653 • OC Phone: 949.496.6191 • SD Office: 804 Pier View Way #103, Oceanside, CA 92054 • LA Office: 837 Traction Avenue, #410, Los Angeles, CA 90013 • LA Phone: 213.278.0172 • Web: pjhm.com

HIGHLAND HIGH SCHOOL
50M POOL & AQUATICS CENTER

KERN HIGH SCHOOL DISTRICT

SWIMMING POOL UNDERWATER LIGHT / TIMING SYSTEM PLAN

SP.4

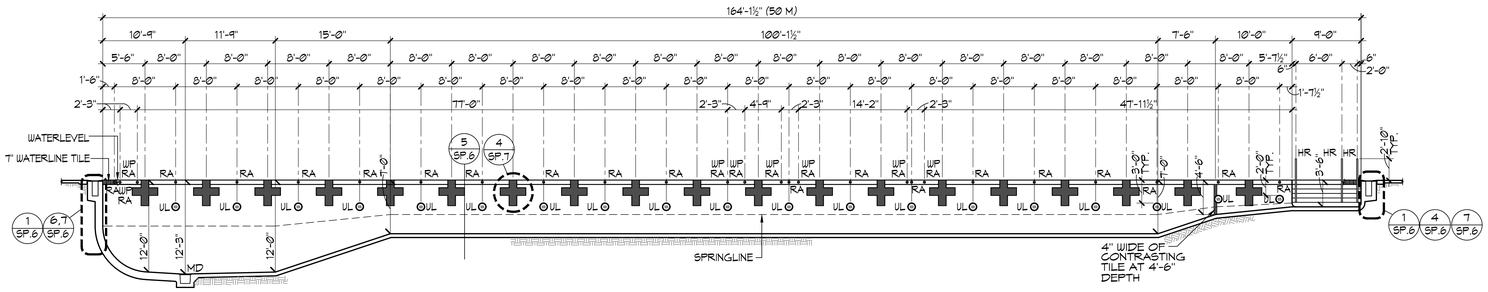

A SWIMMING POOL SECTION ⅛"=1'-0"

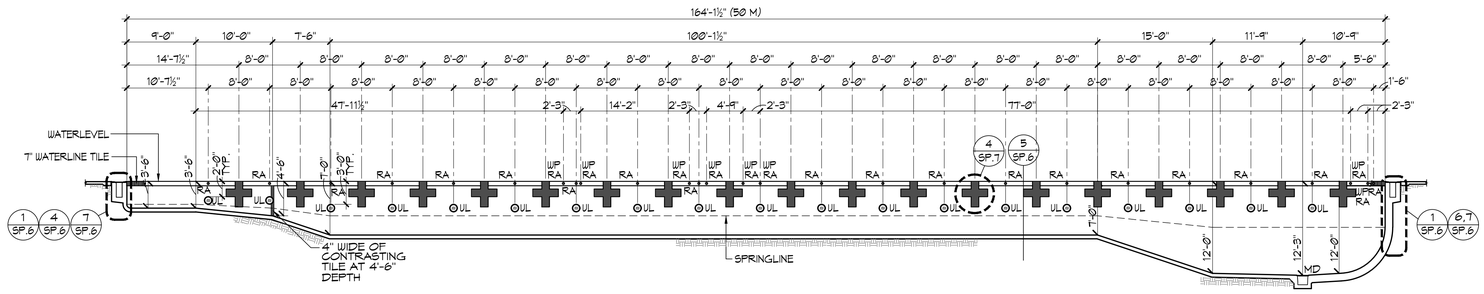

B SWIMMING POOL SECTION ⅛"=1'-0"

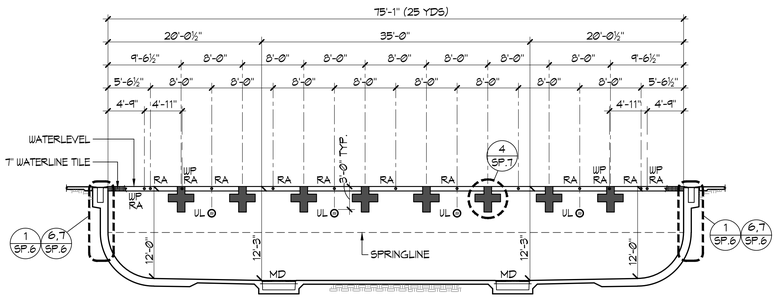

C SWIMMING POOL SECTION ⅛"=1'-0"

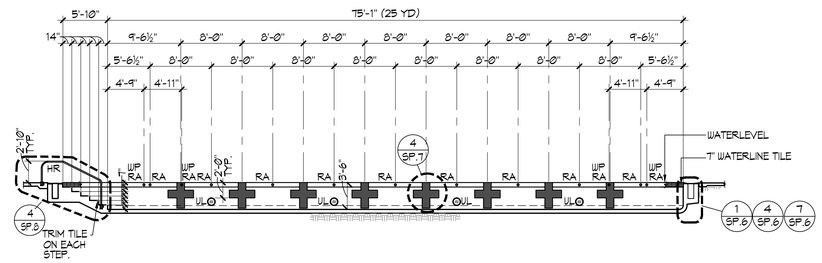

D SWIMMING POOL SECTION ⅛"=1'-0"

IDENTIFICATION STAMP
DIV. OF THE STATE ARCHITECT
APP: 03-122664 INC:
REVIEWED FOR
SS ☑ FLS ☑ ACS ☑
DATE: 05/12/2023

pjhm architects

LICENSED ARCHITECT
THOMAS W. KRUSE
NO. C15585
REN. 02/25
STATE OF CALIFORNIA

AQUATIC DESIGN GROUP
2226 Faraday Ave. Carlsbad, CA 92008
AquaticDesignGroup.com
760.438.8400

LICENSED ARCHITECT
GEORGY S. FERRELL
C-35802
REN. 07/31/23
STATE OF CALIFORNIA

HIGHLAND HIGH SCHOOL
50M POOL & AQUATICS CENTER

KERN HIGH SCHOOL DISTRICT

SWIMMING POOL SECTIONS

SP.5

OC Office: 24461 Ridge Route Drive #100, Laguna Hills, CA 92653 • OC Phone: 949.496.6191 • SD Office: 804 Pier View Way #103, Oceanside, CA 92054 • SD Phone: 760.730.5527 • LA Office: 837 Traction Avenue, #410, Los Angeles, CA 90013 • LA Phone: 213.278.0172 • Web: pjhm.com

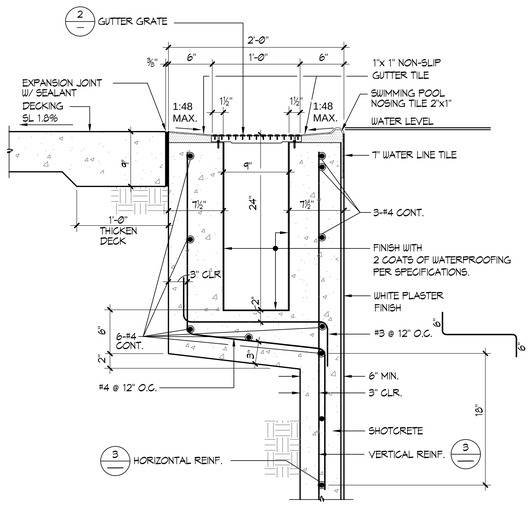

1 RIM FLOW GUTTER 1½"=1'-0"

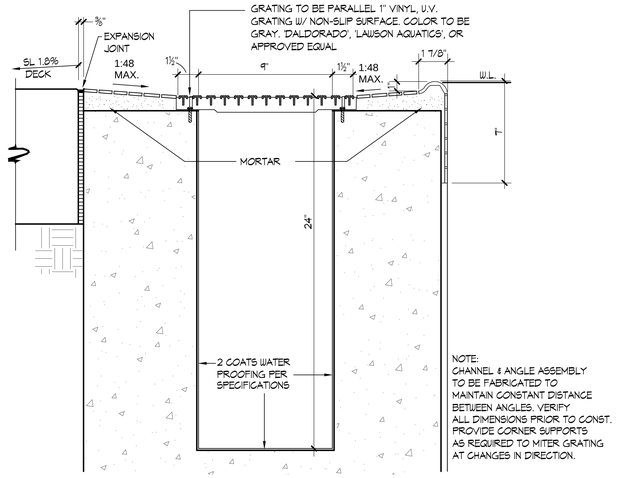

2 RIM FLOW GUTTER/GRATE 3"=1'-0"

REINFORCEMENT TABLE

WATER DEPTH	"t"	"ds"	RADIUS	VERTICAL REINF.	HORIZONTAL REINF.	TRANSITION TO FLOOR REINF. BEYOND END RADIUS
3'-6"	6"	3"	6"	#4 @ 12" O.C.	#4 @ 12" O.C.	24"
3'-7" TO 5'-0"	7"	4"	6" TO 18"	#4 @ 12" O.C.	#4 @ 12" O.C.	24"
5'-1" TO 7'-0"	8"	5"	18" TO 2'-6"	#4 @ 6" O.C.	#4 @ 12" O.C.	24"
7'-1" TO 10'-0"	11"	8"	2'-6" TO 5'-0"	#5 @ 6" O.C.	#4 @ 8" O.C.	24"
10'-1" TO 12'-3"	13"	10"	5'-0" TO 6'-0"	#5 @ 4" O.C. REAR FACE #4 @ 12" O.C. FRONT FACE	#4 @ 12" O.C. REAR FACE #4 @ 12" O.C. FRONT FACE	24"

CONCRETE NOTES:

1. THE MINIMUM ULTIMATE COMPRESSIVE STRENGTH AT 28 DAYS WITH A Ø.40-Ø.45 MAX. WATER/CEMENT RATIO
   POOL FLOOR = 4000 PSI
   SLAB-ON-GRADE = 4000 PSI (POOL DECKS)
2. CONTINUOUS INSPECTION BY AN APPROVED INSPECTOR IS REQUIRED OF ALL CONCRETE PLACEMENT.
3. ALL CEMENT USED SHALL CONFORM TO A.S.T.M. C-150 TYPE II
4. FINE AND COARSE AGGREGATE SHALL CONFORM TO A.S.T.M. C-33. MAXIMUM SIZE OF AGGREGATE TO BE 1".
5. CONCRETE MIX DESIGNS SHALL BE BASED UPON ACI-318 SECTIONS 19.3.2 AND 26.4.2.
6. CONCRETE SHALL BE TESTED AND INSPECTED PER SECTION CBC 1705A.3 AND 1905A.1.15.
7. REMOVAL OF FORMS SHALL COMPLY WITH ACI-318 SECTION 26.11.2.
8. ALL REINFORCING SHALL BE ASTM A-615, GRADE 60, UNLESS OTHERWISE NOTED. LAPS SHALL BE 64 BAR DIA.

SHOTCRETE NOTES:

1. SHOTCRETE SHALL HAVE A MINIMUM COMPRESSIVE STRENGTH OF 4,000 PSI AT 28 DAYS. SHOTCRETE MATERIAL SHALL HAVE A WATER/CEMENT RATIO OF Ø.40-Ø.45 PER ACI 506R, PART 2, PRODUCTS, SECTION 2.5.3.3, WET-MIX PROCESS.
2. CONTINUOUS INSPECTION BY AN D.S.A. APPROVED INSPECTOR IS REQUIRED OF ALL SHOTCRETE PLACEMENT.
3. ALL CEMENT USED SHALL CONFORM TO A.S.T.M. C-150 TYPE II
4. FINE AND COARSE AGGREGATE SHALL CONFORM TO A.S.T.M. C-33, AND SHALL CONFORM TO COARSE AGGREGATE GRADING NO. 2 PER ACI 506R TABLE 1.1.1. MAXIMUM SIZE OF AGGREGATE TO BE ⅜".
5. SHOTCRETE MIX DESIGNS SHALL BE PER CBC SECTION 1908A.2.
6. SHOTCRETE SHALL BE TESTED AND INSPECTED PER CBC SECTION 1908A.10 AND 1705A.3.
7. ANCHOR BOLTS, ANCHORS, DOWELS, INSERTS, ETC. SHALL BE SECURELY TIED IN PLACE PRIOR TO PLACING OF SHOTCRETE.
8. ALL REINFORCEMENT WITHIN SHOTCRETE SHALL MAINTAIN MINIMUM 2" CLEAR NON-CONTACT SPLICES.
9. THE FILM OF LAITANCE WHICH FORMS ON THE SURFACE OF THE SHOTCRETE SHALL BE REMOVED WITHIN APPROXIMATELY TWO HOURS AFTER APPLICATION BY BRUSHING WITH A STIFF BROOM. IF THIS IS NOT REMOVED WITHIN TWO HOURS, IT SHALL BE REMOVED BY THOROUGH WIRE BRUSHING OR SAND BLASTING. CONSTRUCTION JOINTS OVER EIGHT HOURS OLD SHALL BE THOROUGHLY CLEANED WITH AIR AND WATER PRIOR TO RECEIVING SHOTCRETE.
10. ALL REINFORCING SHALL BE ASTM A-615, GRADE 60, UNLESS OTHERWISE NOTED. LAPS SHALL BE 64 BAR DIA.

3 REINFORCEMENT TABLE

4 POOL WALL 3'-6" TO 5'-0" ¾" = 1'-0"

5 POOL WALL 5'-1" TO 10'-0" ¾"=1'-0"

6 POOL WALL 10'-1" TO 12'-3" ½" = 1'-0"

7 TYPICAL RIM FLOW GUTTER PERSPECTIVE NO SCALE

IDENTIFICATION STAMP
DIV. OF THE STATE ARCHITECT
APP: 03-122664 INC:
REVIEWED FOR
SS ☑ FLS ☑ ACS ☑
DATE: 05/12/2023

pjhm architects

LICENSED ARCHITECT
JAMES W. ARUNE
No. C15585
REN. 02/25
STATE OF CALIFORNIA

AQUATIC DESIGN GROUP
2226 Faraday Ave. Carlsbad, CA 92008
AquaticDesignGroup.com
760.438.8400

LICENSED ARCHITECT
JEFFREY S. [illegible]
C-36802
REN. 07/31/23
STATE OF CALIFORNIA

LA Phone: 213.278.0172 • Web: pjhm.com
LA Office: 837 Traction Avenue, #410, Los Angeles, CA 90013 • SD Phone: 760.730.5527 • SD Office: 804 Pier View Way #103, Oceanside, CA 92054 • OC Phone: 949.496.6191 • OC Office: 24461 Ridge Route Drive #100, Laguna Hills, CA 92653

HIGHLAND HIGH SCHOOL
50M POOL & AQUATICS CENTER

KERN HIGH SCHOOL DISTRICT

DETAILS

SP.6

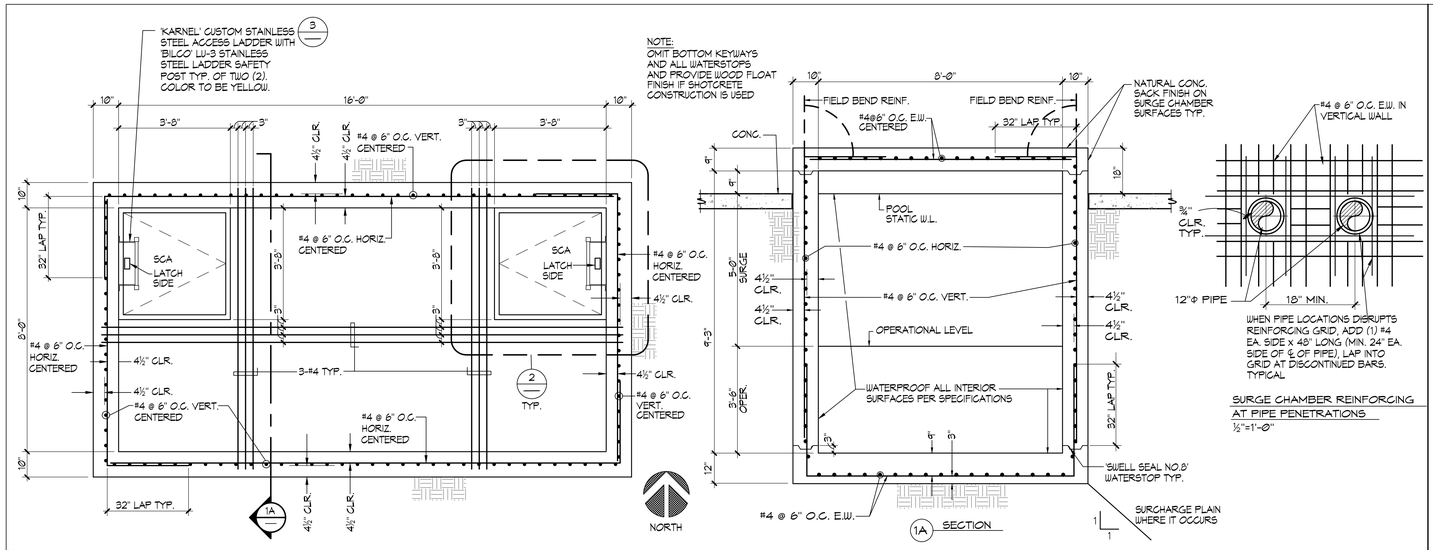

1 SURGE CHAMBER ½"=1'-0"

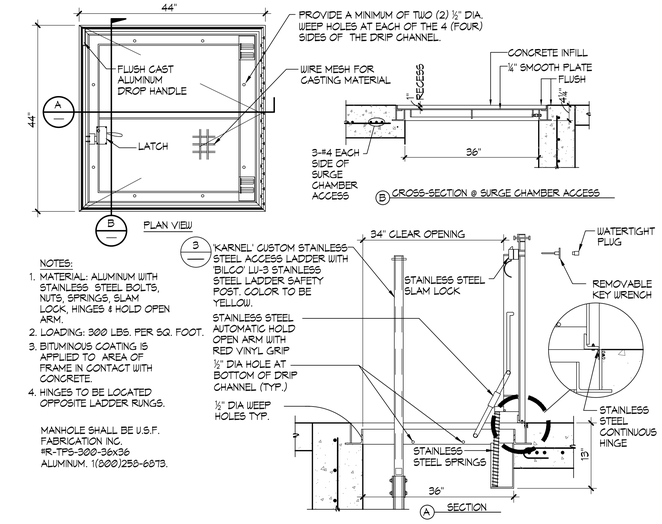

2 SURGE CHAMBER ACCESS COVER ¾"=1'-0"

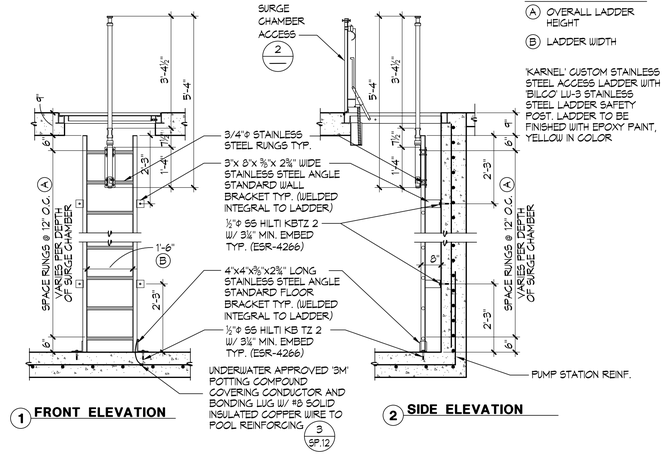

3 SURGE CHAMBER ACCESS LADDER ½" = 1'-0"

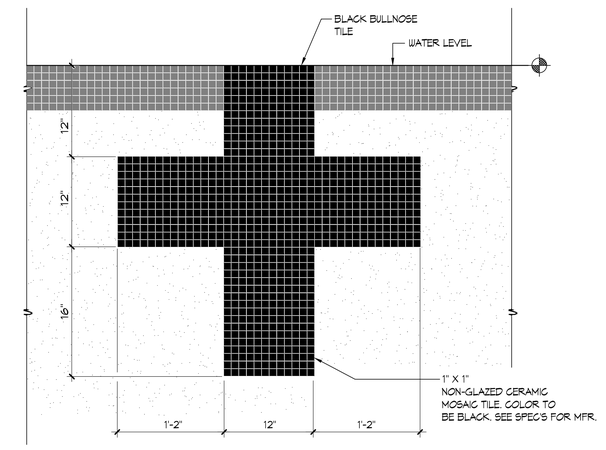

4 END WALL TARGETS 1½" = 1'-0"

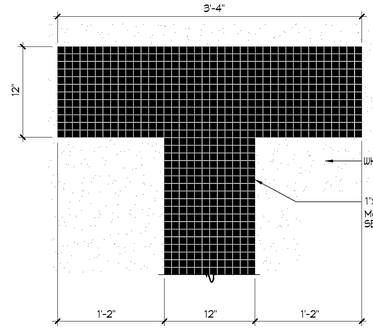

PLAN VIEW

5 RACING LANE LINE 1½"=1'-0"

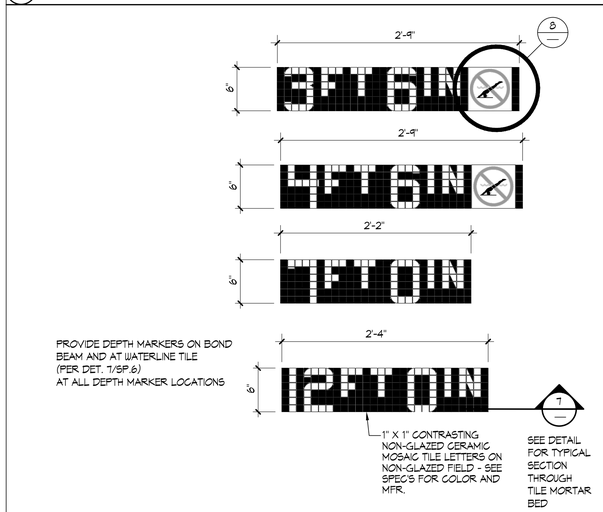

6 DEPTH MARKERS 1½" = 1'-0"

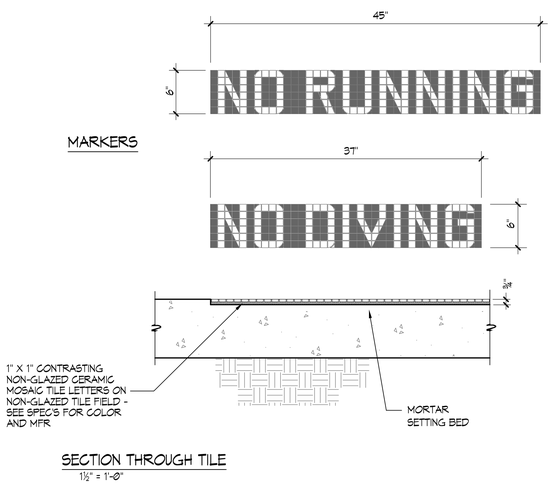

SECTION THROUGH TILE
1½" = 1'-0"

7 "NO RUNNING" / "NO DIVING" MARKERS 1½" = 1'-0"

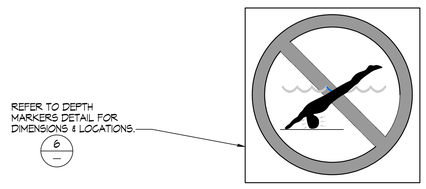

8 INTERNATIONAL "NO DIVING" MARKER 3" = 1'-0"

IDENTIFICATION STAMP
DIV. OF THE STATE ARCHITECT
APP: 03-122664 INC:
REVIEWED FOR
SS ☑ FLS ☑ ACS ☑
DATE: 05/12/2023

pjhm architects

LICENSED ARCHITECT RICHARD W. KRIEG REG. C15585 REN. 02/25 STATE OF CALIFORNIA

AQUATIC DESIGN GROUP
2226 Faraday Ave, Carlsbad, CA 92008
AquaticDesignGroup.com
760.438.8400

LICENSED ARCHITECT GREGORY S. ROSE C-25802 REN. 07/31/25 STATE OF CALIFORNIA

HIGHLAND HIGH SCHOOL
50M POOL & AQUATICS CENTER

KERN HIGH SCHOOL DISTRICT

DETAILS

SP.7

OC Office: 24461 Ridge Route Drive #100, Laguna Hills, CA 92653 • OC Phone: 949.496.6191 • SD Office: 804 Pier View Way #103, Oceanside, CA 92054 • SD Phone: 760.730.5527 • LA Office: 837 Traction Avenue, #410, Los Angeles, CA 90013 • LA Phone: 213.278.0172 • Web: pjhm.com

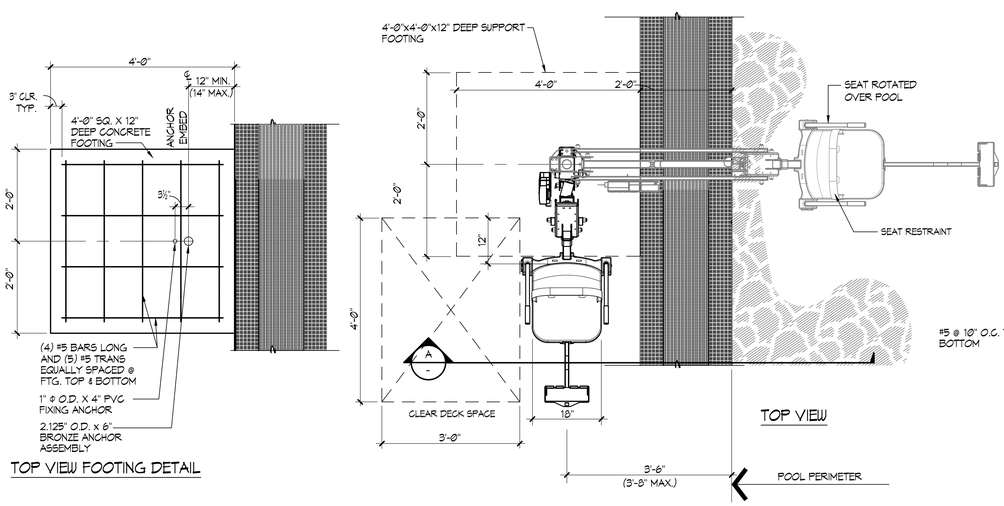

NOTES:

1. "AQUA CREEK" MIGHTY 400 F-MTY-400 (350 lbs. MIN. LIVE LOAD AND 400 lbs. MAX. LIFTING CAPACITY)
2. GUSSET COVER PLATE TO BE ATTACHED REQUIRING A TOOL FOR REMOVAL.
3. CONTRACTOR SHALL PROVIDE COVER FOR LIFT 'SPECTRUM' #21365; EXTRA BATTERY PACK 'SPECTRUM' #13257; AND TRANSPORTER CART 'SPECTRUM' #26060.
4. UTILIZE OUTLET IN POOL IDF ROOM FOR POOL LIFT BATTERY CHARGE STATION.
5. POOL LIFT SHALL BE LOCATED WHERE THE WATER LEVEL IS AT LEAST 36" AND DOES NOT EXCEED 48" DEEP , UNLESS ENTIRE POOL IS GREATER THAT 48" DEEP. (CBC SECTION 11B-1009.2.1)
6. ON THE RAISED POSITION, THE CENTERLINE OF THE SEAT SHALL BE LOCATED OVER THE DECK AND 16" MINIMUM FROM THE EDGE OF THE POOL. THE DECK SURFACE BETWEEN THE CENTERLINE OF THE SEAT AND THE POOL EDGE SHALL HAVE A 2% MAX. SLOPE. (CBC SECTION 11B-1009.2.2)
7. CLEAR DECK SPACE SHALL BE PROVIDED ON SIDE OF SEAT OPPOSITE THE WATER PARALLEL TO THE WATER 36" WIDE X 48" MINIMUM FROM A LINE LOCATED 12" BEHIND THE REAR EDGE OF THE SEAT. THE CLEAR SPACE SHALL HAVE A 2% MAX. SLOPE. (CBC SECTION 11B-1009.2.3)
8. THE HEIGHT OF THE LIFT SEAT SHALL BE DESIGNED TO ALLOW A STOP AT 17" MIN. TO 19" MAX. MEASURED FROM THE DECK TO THE TOP OF THE SEAT SURFACE WHEN IN THE RAISED POSITION. (CBC SECTION 11B-1009.2.4)
9. THE SEAT SHALL BE RIGID AND 17" MIN. TO 19" MAX. WIDE. THE LIFT SEAT SHALL HAVE A BACK SUPPORT 12" MIN. TALL. (CBC SECTION 11B-1009.2.4)
10. FOOTRESTS SHALL BE PROVIDED, EXCEPT FOR SPA LIFTS, AND SHALL MOVE WITH THE SEAT. LIFT SHALL HAVE TWO ARMRESTS. THE ARMREST POSITIONED OPPOSITE THE WATER SHALL BE REMOVABLE OR SHALL FOLD CLEAR OF THE SEAT WHEN THE SEAT IS IN THE RAISED POSITION. (CBC SECTION 11B-1009.2.6)
11. THE LIFT SHALL BE CAPABLE OF UNASSISTED OPERATION FROM BOTH THE DECK AND WATER LEVELS. CONTROLS AND OPERATING MECHANISMS SHALL BE OPERABLE WITH ONE HAND AND SHALL BE UNOBSTRUCTED WHEN THE LIFT IS IN USE (CBC SECTION 11B-309.4). LIFT MUST BE STABLE AND NOT PERMIT UNINTENDED MOVEMENT WHEN A PERSON IS GETTING INTO OR OUT OF THE SEAT. (CBC SECTION 11B-1009.2.7)
12. THE LIFT SHALL BE DESIGNED SO THAT THE SEAT WILL SUBMERGE TO A WATER DEPTH OF 18" MIN. BELOW THE STATIONARY WATER LEVEL. (CBC SECTION 11B-1009.2.8)
13. LIFT SEAT MUST HAVE AN OCCUPANT RESTRAINT FOR USE BY THE OCCUPANT OF THE SEAT AND THE RESTRAINT MUST MEET THE STANDARDS FOR OPERABLE CONTROLS IN COMPLIANCE WITH CBC SECTION 11B-1009.2.4 AND SECTION 11B-309.

1 ACCESSIBLE LIFT

¾" = 1'-0"

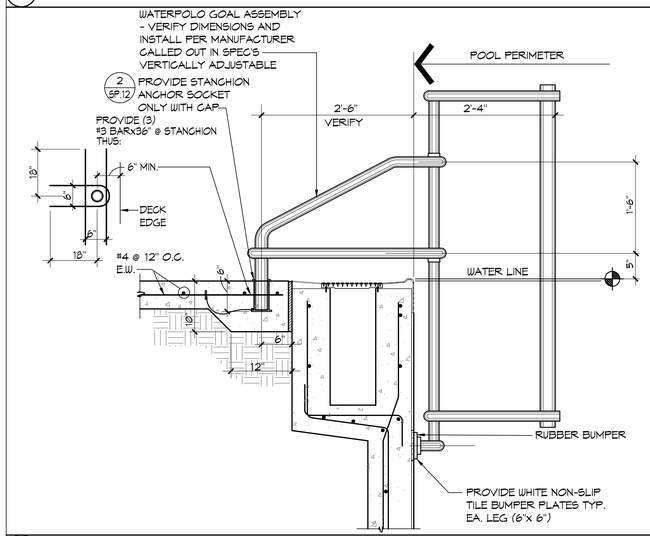

2 WATERPOLO GOAL

1"=1'-0"

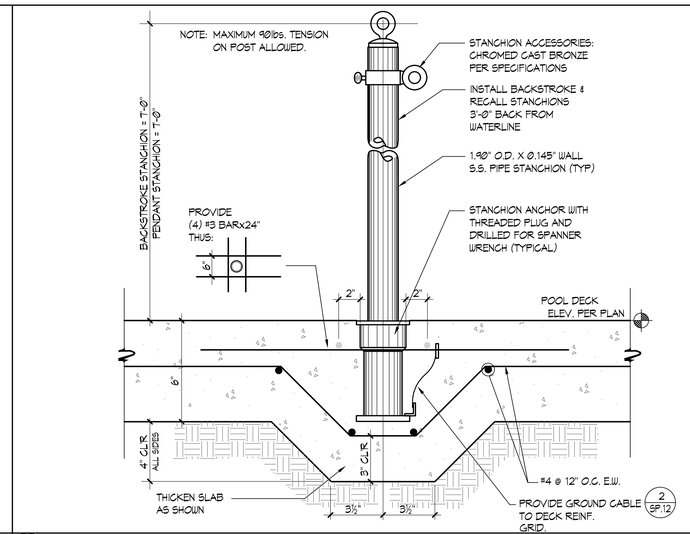

3 STANCHION POST/ANCHOR

3"=1'-0"

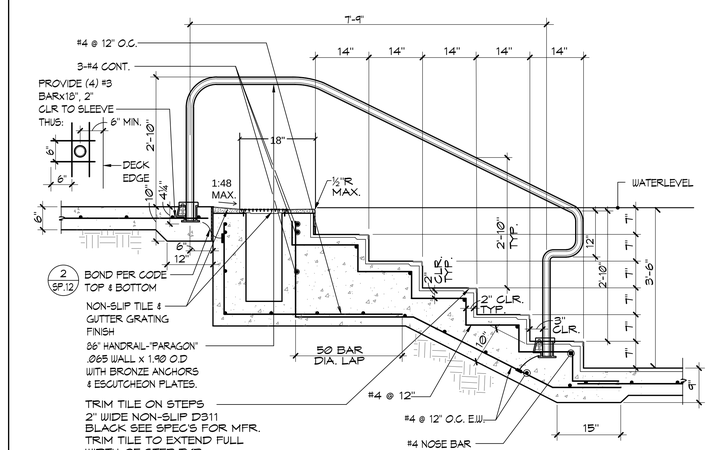

4 HANDRAIL DETAIL

¾"=1'-0"

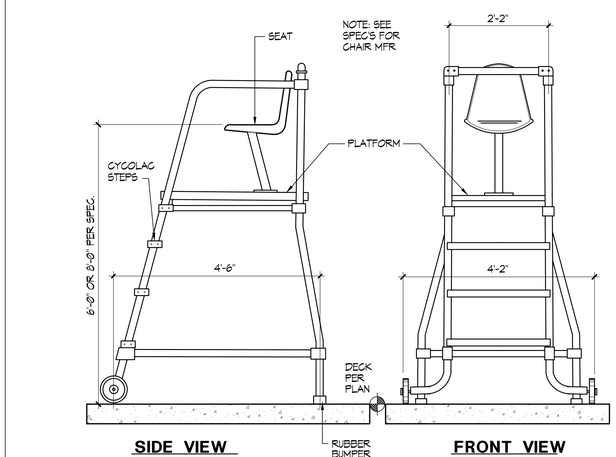

5 MOVEABLE LIFEGUARD CHAIR

¾"=1'-0"

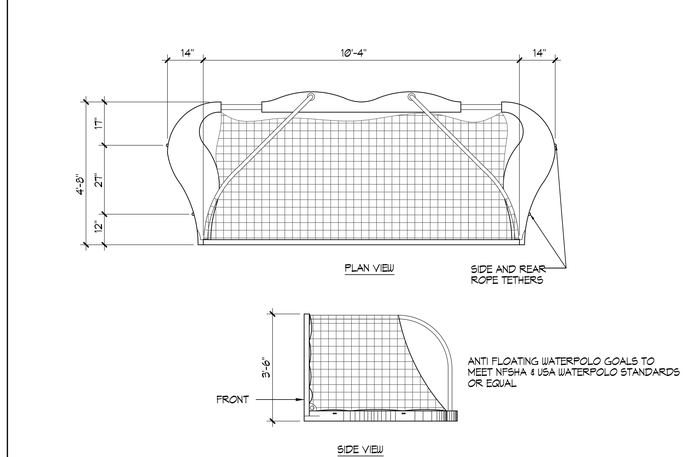

6 FLOATING WATER POLO GOALS

½"=1'-0"

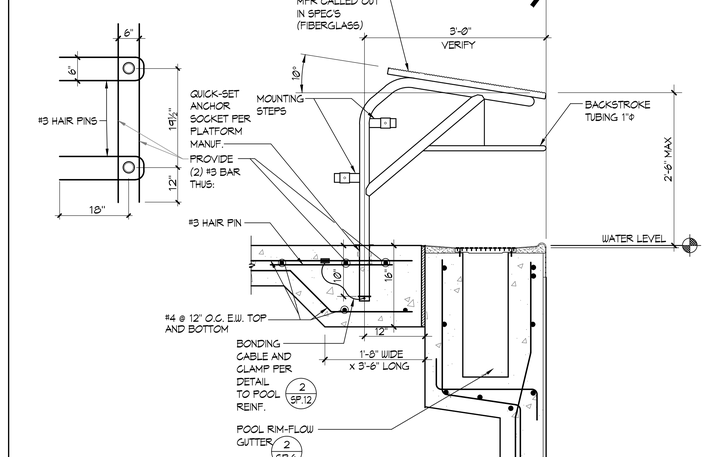

7 RACING PLATFORM

1"=1'-0"

IDENTIFICATION STAMP
DIV. OF THE STATE ARCHITECT
APP: 03-122664 INC:
REVIEWED FOR
SS ☑ FLS ☑ ACS ☑
DATE: 05/12/2023

pjhm architects

LICENSED ARCHITECT GEORG W. KRUSE No. C15585 REN. 02/25 STATE OF CALIFORNIA

AQUATIC DESIGN GROUP
2226 Faraday Ave. Carlsbad, CA 92008
AquaticDesignGroup.com
760.438.8400

LICENSED ARCHITECT GREGORY S. ATKINS C-25802 REN. 07/31/25 STATE OF CALIFORNIA

HIGHLAND HIGH SCHOOL
50M POOL & AQUATICS CENTER

KERN HIGH SCHOOL DISTRICT

DETAILS

SP.8

OC Office: 24461 Ridge Route Drive #100, Laguna Hills, CA 92653 • OC Phone: 949.496.6191 • SD Office: 804 Pier View Way #103, Oceanside, CA 92054 • SD Phone: 760.730.5527 • LA Office: 837 Traction Avenue, #410, Los Angeles, CA 90013 • LA Phone: 213.278.0172 • Web: pjhm.com

5/24/2023 7:57:55 AM

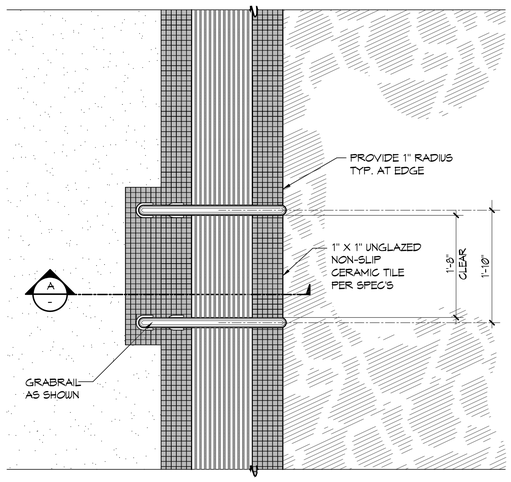

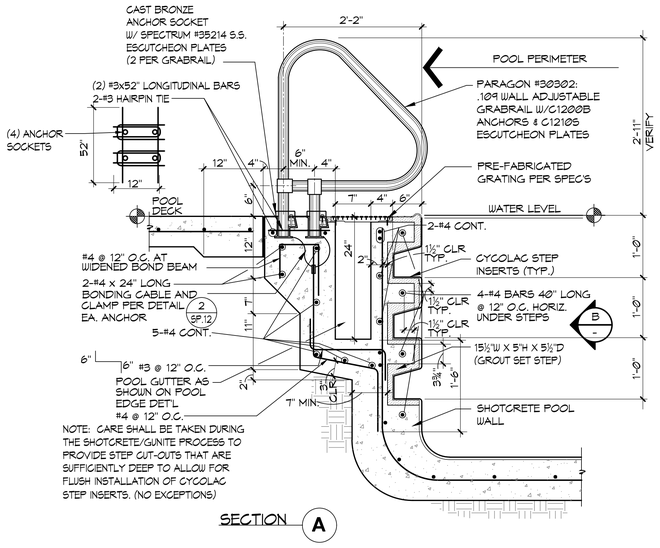

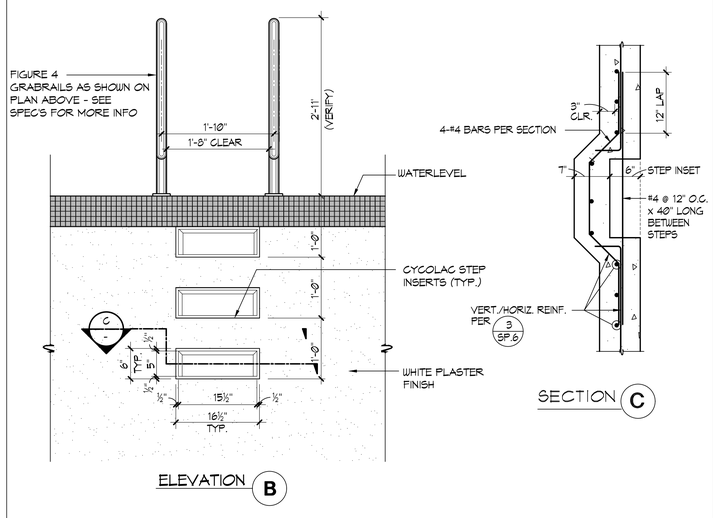

1 GRABRAIL WITH STEPS 1"=1'-0"

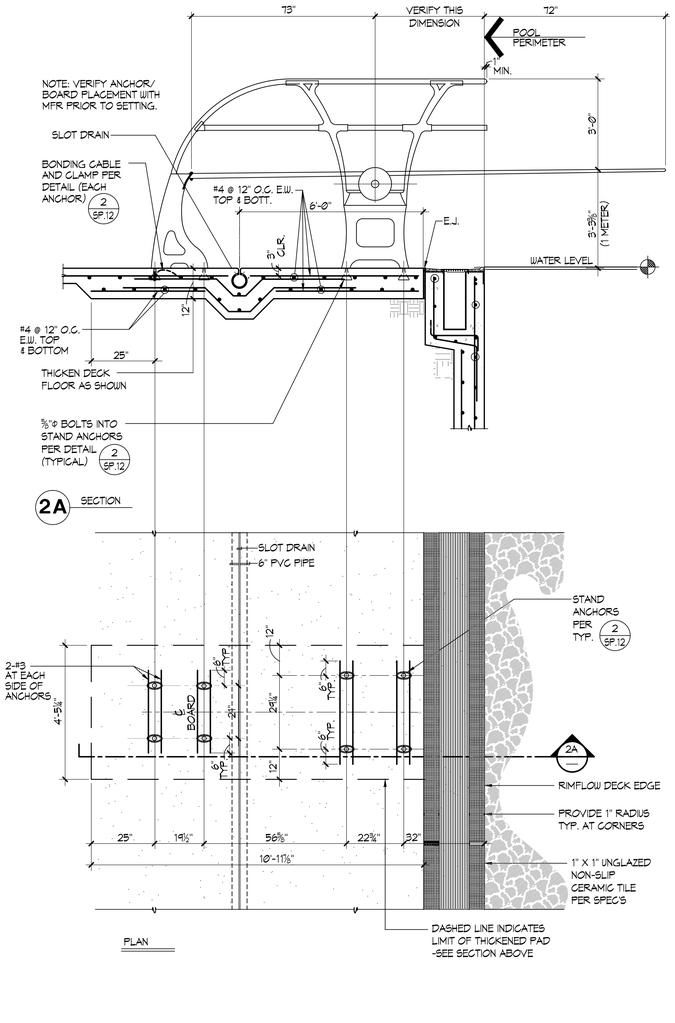

2 ONE METER DIVE STAND ½"=1'-0"

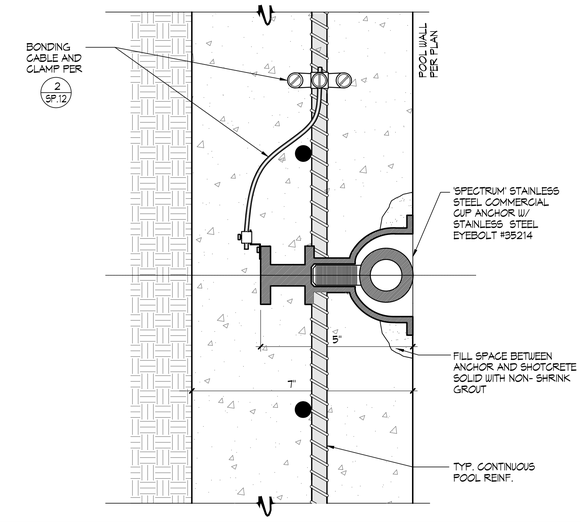

3 ROPE ANCHOR ½" = 1"

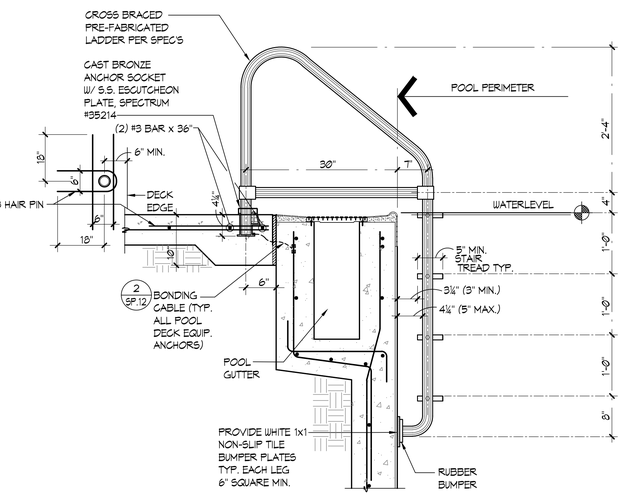

4 POOL LADDER 1"=1'-0"

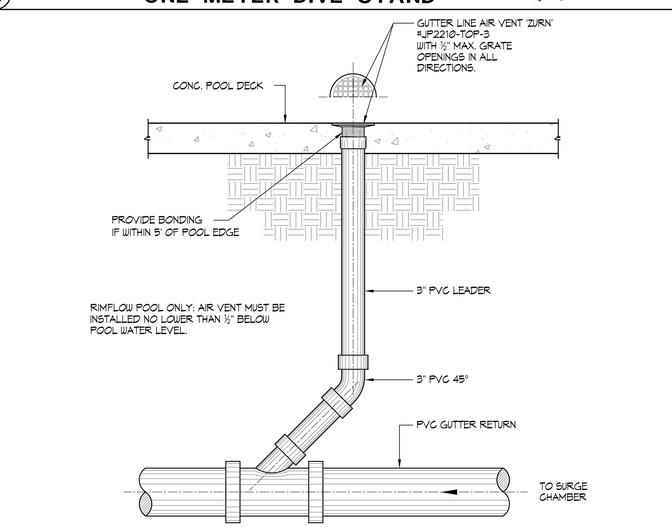

5 AIR VENT 1"=1'-0"

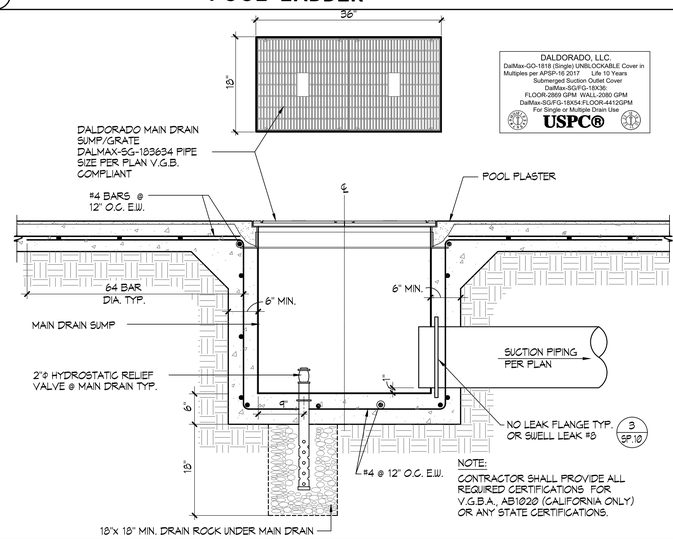

6 MAIN DRAIN 1" = 1'-0"

IDENTIFICATION STAMP
DIV. OF THE STATE ARCHITECT
APP: 03-122664 INC:
REVIEWED FOR
SS ☑ FLS ☑ ACS ☑
DATE: 05/12/2023

pjhm architects

LICENSED ARCHITECT RICHARD W. RIDDELL No. C15585 REN. 02/25 STATE OF CALIFORNIA

AQUATIC DESIGN GROUP
2226 Faraday Ave. Carlsbad, CA 92008
AquaticDesignGroup.com
760.438.8400

LICENSED ARCHITECT GARY S. FERGUSON C-25802 REN. 07/31/23 STATE OF CALIFORNIA

HIGHLAND HIGH SCHOOL
50M POOL & AQUATICS CENTER

KERN HIGH SCHOOL DISTRICT

DETAILS

SP.9

OC Office: 24461 Ridge Route Drive #100, Laguna Hills, CA 92653 • SD Phone: 760.750.5527 • OC Phone: 949.496.6191 • SD Office: 804 Pier View Way #103, Oceanside, CA 92054 • LA Office: 837 Traction Avenue, #410, Los Angeles, CA 90013 • LA Phone: 213.278.0172 • Web: pjhm.com

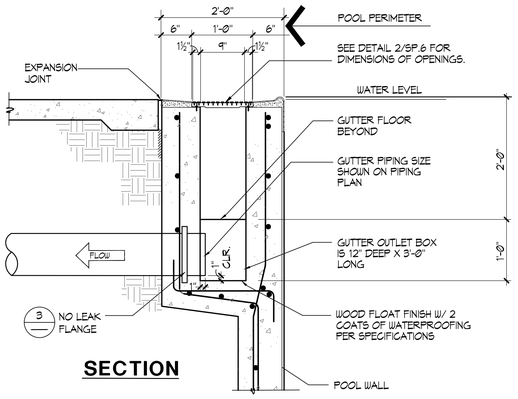

SECTION

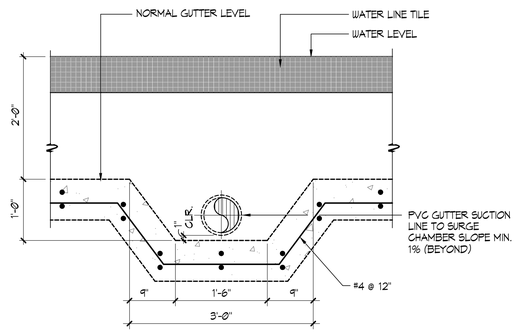

ELEVATION

1 GUTTER OUTLET 1"=1'-Ø"

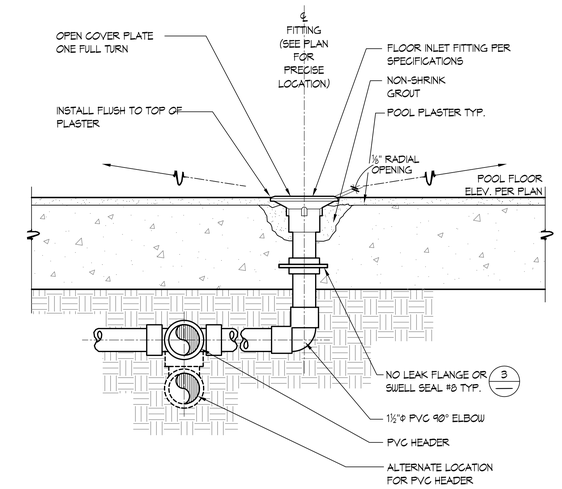

2 FLOOR INLET 3"=1'-Ø"

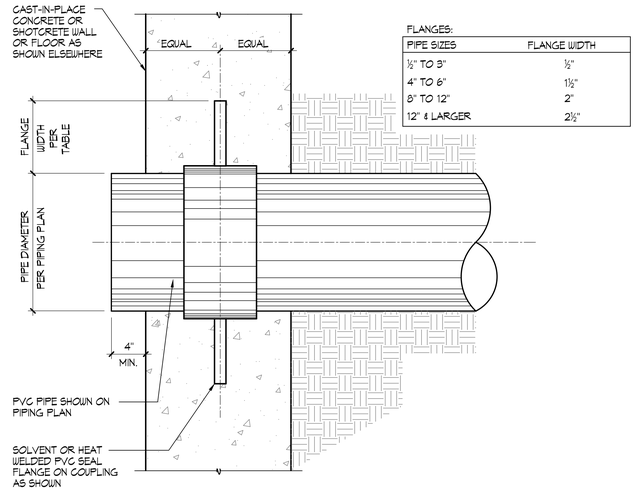

3 WATER STOP DETAIL NO SCALE

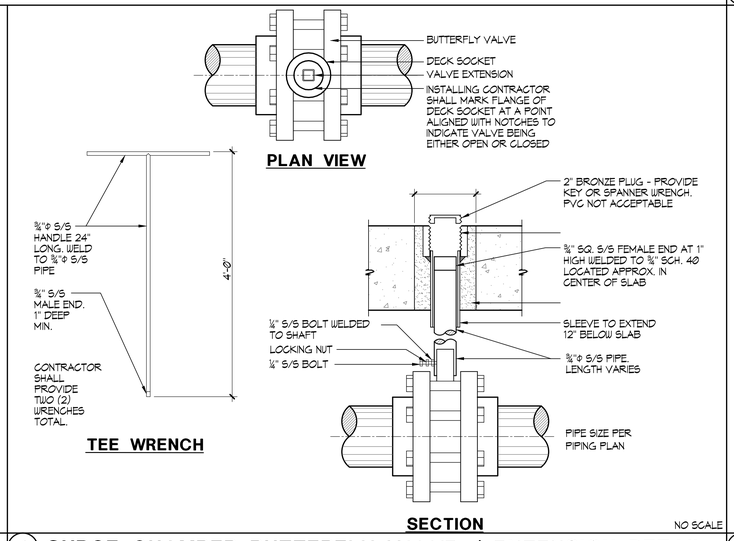

PLAN VIEW

TEE WRENCH

SECTION

4 SURGE CHAMBER BUTTERFLY VALVE / EXTENSION DETAIL NO SCALE

NOTE:
COORDINATE ALL PIPING WITH SITE UTILITIES INCLUDING PIPING, CONDUITS/STRUCTURES AND THE LIKE. COORDINATE ALL PIPING ELEVATIONS WITH ALL SITE UTILITIES.

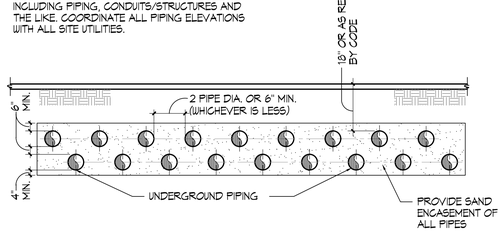

5 STACKED UNDERGROUND PIPING NO SCALE

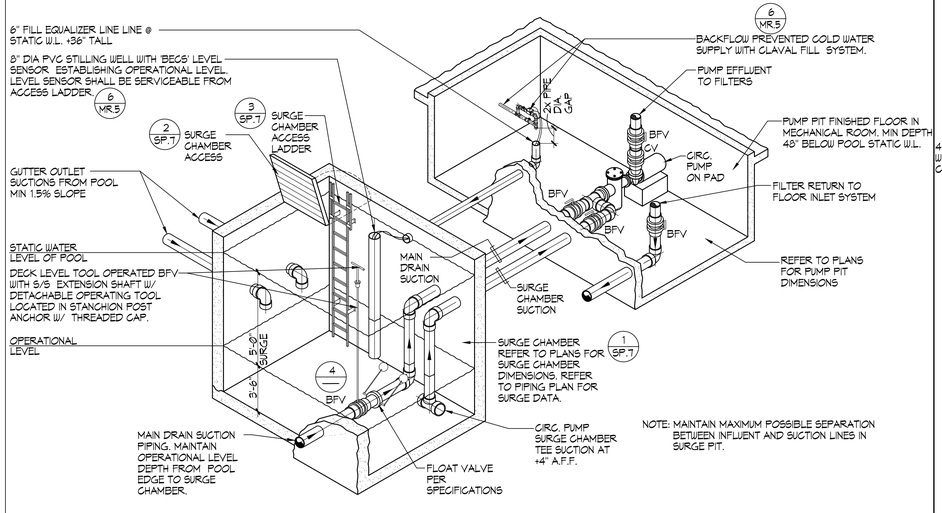

6 SURGE CHAMBER PIPING SCHEMATIC NO SCALE

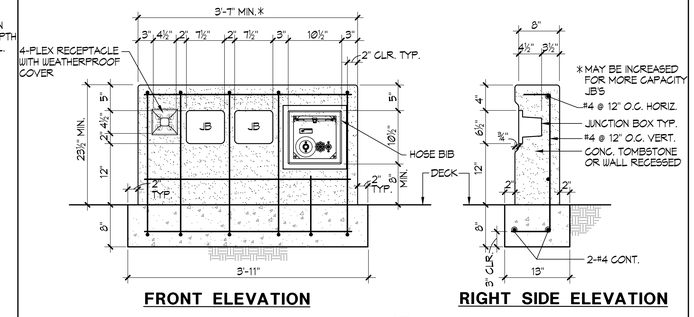

1"=1'-Ø"

7 UNDERWATER LIGHT JUNCTION BOX / HOSE BIB CONCRETE SURROUND DETAIL

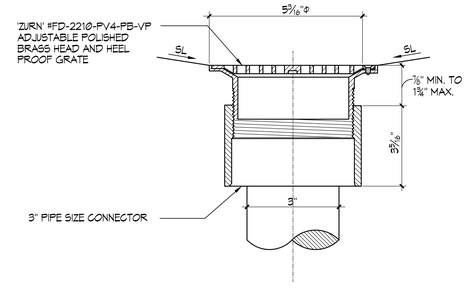

8 DECK AREA DRAIN ½"=1"

IDENTIFICATION STAMP
DIV. OF THE STATE ARCHITECT
APP: 03-122664 INC:
REVIEWED FOR
SS ☑ FLS ☑ ACS ☑
DATE: 05/12/2023

pjhm architects
LICENSED ARCHITECT THOMAS W. KRUSE No. C15585 REN. 02/25 STATE OF CALIFORNIA
AQUATIC DESIGN GROUP
2226 Faraday Ave, Carlsbad, CA 92008
AquaticDesignGroup.com
760.438.8400
LICENSED ARCHITECT GREGORY S. [illegible] C25802 REN. 07/31/25 STATE OF CALIFORNIA
OC Office: 24461 Ridge Route Drive #100, Laguna Hills, CA 92653 • OC Phone: 949.496.6191 • SD Office: 804 Pier View Way #103, Oceanside, CA 92054 • SD Phone: 760.730.5527 • LA Office: 837 Traction Avenue, #410, Los Angeles, CA 90013 • LA Phone: 213.278.0172 • Web: pjhm.com

HIGHLAND HIGH SCHOOL
50M POOL & AQUATICS CENTER

KERN HIGH SCHOOL DISTRICT

DETAILS

SP.10

8/30/2022 11:07:55 AM

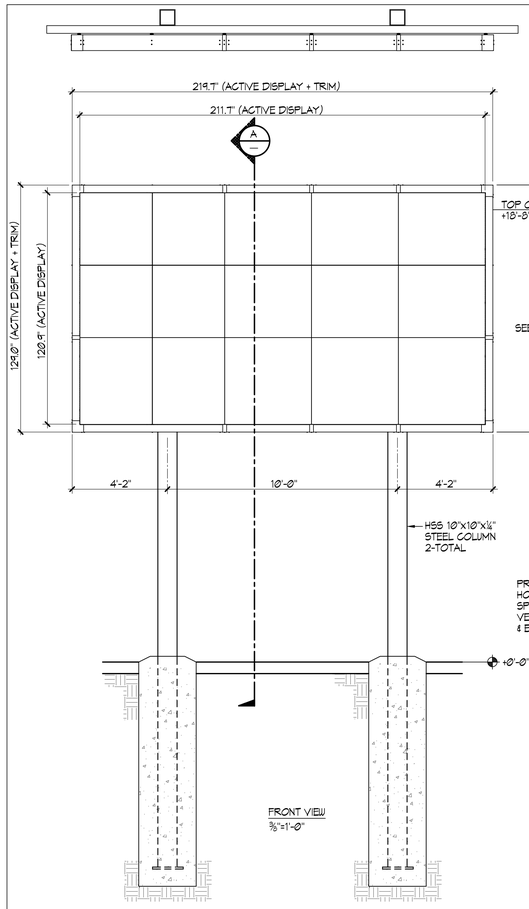

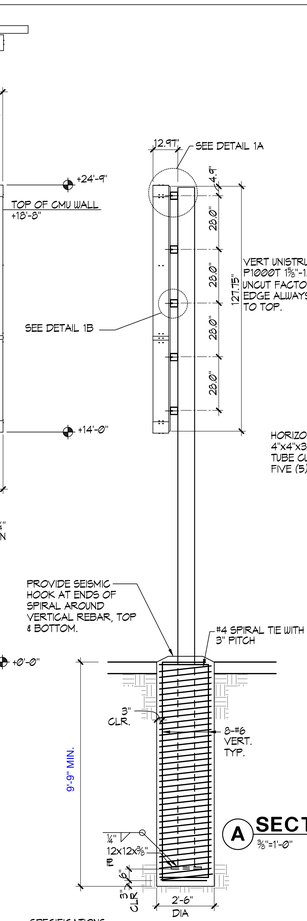

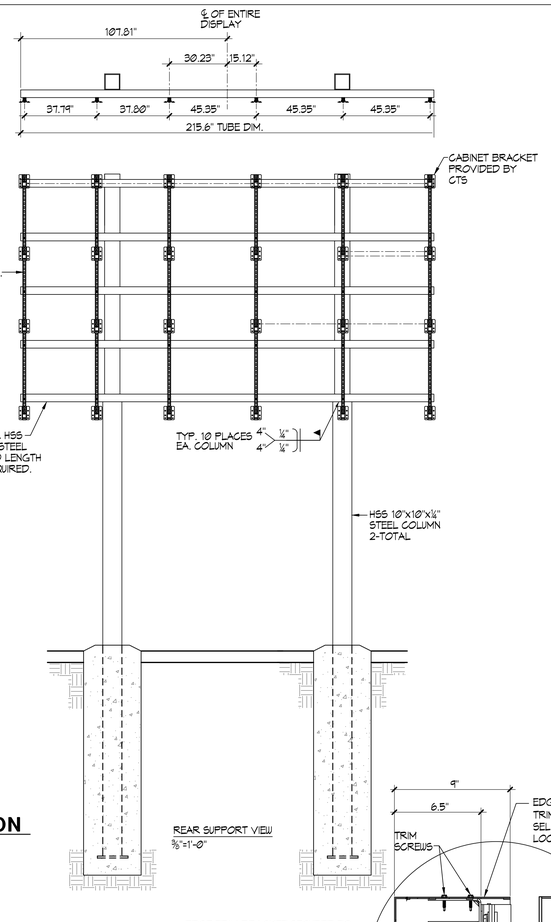

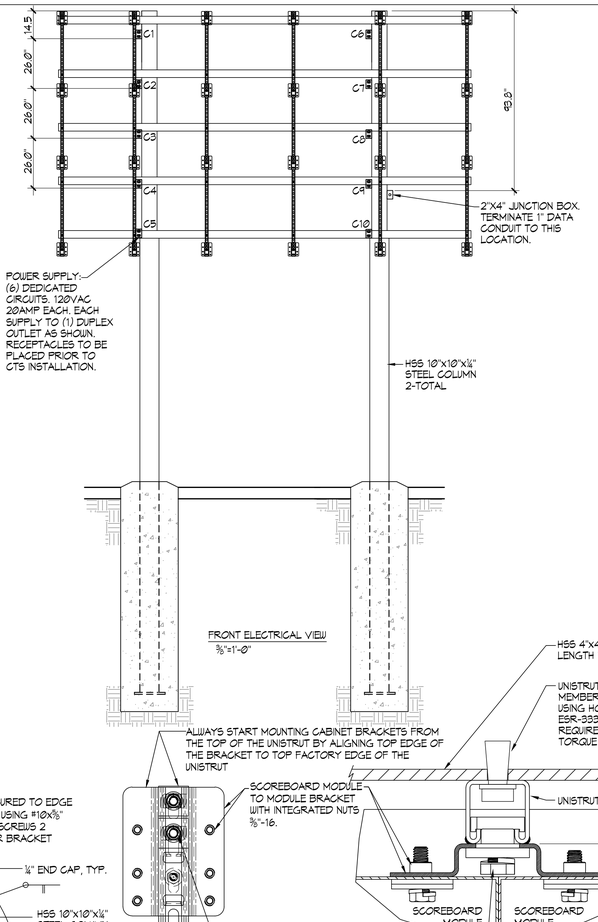

E - EACH 2-PLEX RECEPTACLE SHALL BE 120V MIN. 20 AMP
C - RECEPTACLES TO BE PLACED BEFORE CTS INSTALLATION.

- SINGLE GANG WALL BOX WITH BLANK PLATE FOR DATA CABLE. ONE PER DISPLAY.
- EACH CIRCUIT SHALL BE DEDICATED 120V, MIN. 20 AMPS. CALIFORNIA ELECTRIC CODE REQUIRES A MEANS OF DISCONNECTING SIGNS AT THE LOCATION OF THE SIGN. SCOREBOARD SHALL BE WIRED IN ACCORDANCE WITH NATIONAL ELECTRIC CODE ART. 600-6.
- IT IS EXTREMELY IMPORTANT THAT THE CIRCUITS USED TO POWER THE SCOREBOARD NOT BE SHARED WITH OTHER DEVICES. THE SCOREBOARD IS SENSITIVE TO "NOISE" ON AC POWER LINES.
- DISPLAY SHALL BE EARTH GROUNDED. NUMBER AND LENGTHS OF RODS SHALL MEET CALIFORNIA ELECTRIC CODE.
- DISPLAY MAXIMUM POWER CONSUMPTION: 12,400 WATTS

SPECIFICATIONS:

GENERAL:

- ALL STEEL CONSTRUCTION
- FINISH TO BE BLACK POWDER COAT / ENAMEL PAINT
- DIMENSIONS ARE SUBJECT TO CHANGE DUE TO DETAILED DESIGN CONSIDERATIONS. ONLY APPROVED SHOP DRAWINGS SHALL BE USED FOR CONSTRUCTION.
- DISPLAY MUST BE EARTH GROUNDED. NUMBER AND LENGTHS OF RODS SHALL MEET CALIFORNIA ELECTRIC CODE.
- DESIGN AND CONSTRUCTION OF FRAME MOUNTING STRUCTURE IS TO BE DONE BY OTHERS AND MUST MEET ALL STATE BUILDING CODES.

SYSTEM WEIGHTS:

- DISPLAY - APPROXIMATELY 2,420 LBS.
- FRAME AND EDGE TRIM - APPROXIMATELY 260 LBS.
- DISPLAY MOUNTING CHANNELS SHALL BE ALIGNED USING TEMPLATE.

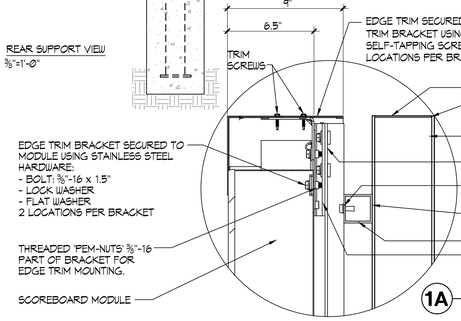

1A **DETAIL**
NO SCALE

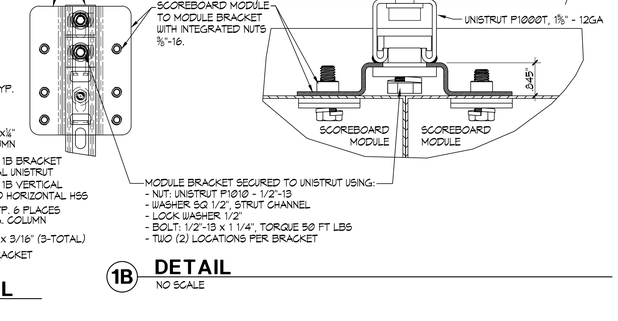

1B **DETAIL**
NO SCALE

1 **SCOREBOARD DETAILS** ⅜"=1'-0"

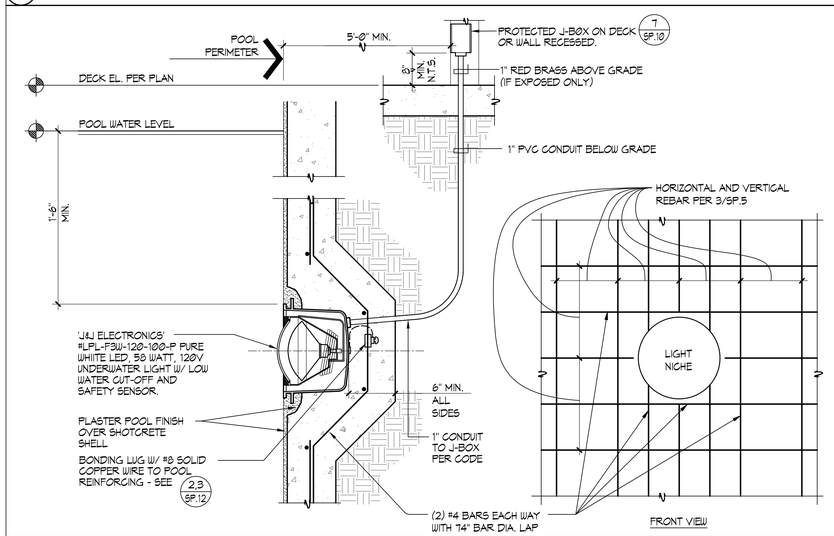

UNDERWATER LIGHT NOTES:

1. ALL CONDUITS IN POOL LIGHTING SYSTEM TO BE A MINIMUM OF 1".
2. (3 SP.12) CONDUCTORS TO POOL, J-BOXES SHALL BE MINIMUM 2-#8 & 1#8 (SEE UNDERWATER LIGHT PLAN) SOLID UNBROKEN TO MAIN PANEL ISOLATED GROUND BUSS. THIS BUSS IS TO BE CONNECTED WITH SOLID INSULATED #8 COPPER WIRE TO UFER & COLDWATER GROUNDING LUG ON GROUNDING BUSS. UPSIZE CONDUCTORS AS REQUIRED FOR HOMERUNS EXCEEDING 100'.
3. (7 SP.10) ALL BRASS POOL J-BOXES SHALL BE FLUSH MOUNTED IN WALLS. IF FLUSH MOUNTING IS NOT POSSIBLE THEN MOUNTING SHALL BE SURFACE MOUNTED AND CONCRETE ENGASED.
4. CONDUITS WHERE ALLOWED BY CODE SHALL BE P.V.C. (POLYVINYL CHLORIDE) FROM WET NICHES TO BRASS J-BOXES TO LIGHTING PANEL. ALL CONDUITS IN FREE AIR SPACE AND ALL RISERS SHALL BE RED BRASS TYPICAL. PVC CONDUITS SHALL BE SOLVENT WELDED WITH PURPLE PRIMER AND GRAY HEAVY BODIED GLUE.
5. LIGHTING CONTACTORS SHALL BE "ALLEN-BRADLEY" #500 L, OR EQUAL MOUNTED IN A NEMA 12 HINGED COVER - LOCKABLE ENCLOSURE. CONTACTORS TO BE SWITCHED BY MOMENTARY SWITCH EQUAL TO "HUBBELL" #1551 MOUNTED IN J-BOX IN MECHANICAL EQUIPMENT ROOM. REFER TO ELECTRICAL PLANS FOR LOCATION OF OWNER COORDINATED REMOTE UNDERWATER LIGHT SWITCH.
6. BRASS POOL J-BOXES SHALL BE "HYDREL" #1719 ; W/ 1" HUBS OR EQUAL. (NO DIE CAST BOXES).
7. STRINGS SHALL BE PULLED IN ALL CONDUITS PRIOR TO PLACEMENT OF CONCRETE.
8. STATE CODES SHALL BE ADHERED TO, SPECIFICATIONS TO BE IN ACCORDANCE WITH SECTION 680 OF 2019 C.E.C. BOOK.
9. PROVIDE PULL BOXES AS MAY BE REQUIRED FOR RUNS EXCEEDING 150 FT. OR DUE TO CHANGES IN GRADE OR DIRECTION.
10. CONTRACTOR SHALL TEST UNDERWATER POOL LIGHT GFIC CIRCUITS AND PROVIDE LETTER TO OWNER/DSA UPON SUCCESSFUL TEST.
11. SEAL CONDUIT OPENING IN LIGHT NICHE WITH SILICON CAULKING AFTER LIGHT IS INSTALLED.
12. PRIOR TO LIGHT INSTALLATION, PROVIDE MINIMUM 10 PSI PRESSURE TEST ON ALL POOL LIGHT CONDUITS FOR FOUR (4) HOURS OBSERVED BY INSPECTOR OF RECORD. MAINTAIN PRESSURE UNTIL ALL DECKS ARE POURED.

2 **UNDERWATER LED LIGHT** 1½"=1'-0"

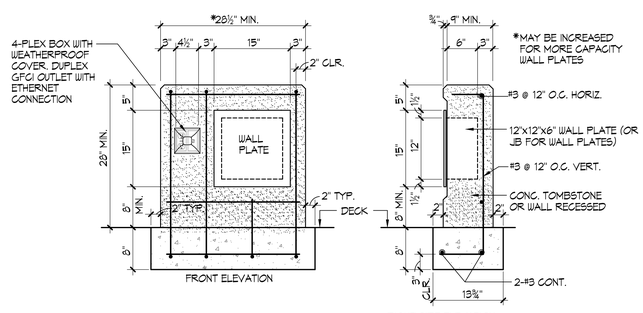

NOTE:
PROVIDE ¾" CHAMFER ON ALL CONCRETE CORNERS.

3 **TIMING SYSTEM WALL PLATE CONCRETE SURROUND DETAIL** 1"=1'-0"

IDENTIFICATION STAMP
DIV. OF THE STATE ARCHITECT
APP: 03-122664 INC:
REVIEWED FOR
SS ☑ FLS ☑ ACS ☑
DATE: 05/12/2023

pjhm architects

LICENSED ARCHITECT RICHARD W. RIDDELL No. C15585 REN. 02/25 STATE OF CALIFORNIA

AQUATIC DESIGN GROUP
2226 Faraday Ave. Carlsbad, CA 92008
AquaticDesignGroup.com
760.438.8400

LICENSED ARCHITECT GREGORY S. KELLY C-35802 REN. 07/31/25 STATE OF CALIFORNIA

HIGHLAND HIGH SCHOOL
50M POOL & AQUATICS CENTER

KERN HIGH SCHOOL DISTRICT

DETAILS

SP.11

OC Office: 24461 Ridge Route Drive #100, Laguna Hills, CA 92653 • OC Phone: 949.496.6191 • SD Office: 804 Pier View Way #103, Oceanside, CA 92054 • SD Phone: 760.730.5527 • LA Office: 837 Traction Avenue, #410, Los Angeles, CA 90013 • LA Phone: 213.278.0172 • Web: pjhm.com

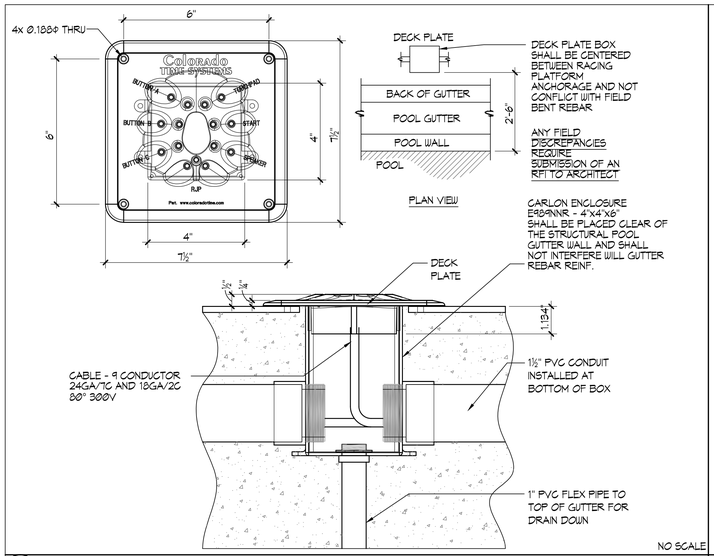

NO SCALE

1 TITANIUM DECK PLATE DETAIL (LOCATED UNDER RACING PLATFORM)

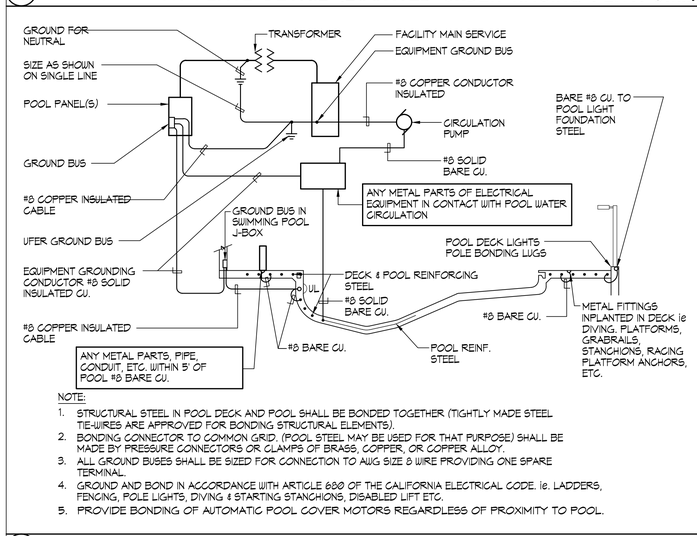

NOTE:

1. STRUCTURAL STEEL IN POOL DECK AND POOL SHALL BE BONDED TOGETHER (TIGHTLY MADE STEEL TIE-WIRES ARE APPROVED FOR BONDING STRUCTURAL ELEMENTS).
2. BONDING CONNECTOR TO COMMON GRID. (POOL STEEL MAY BE USED FOR THAT PURPOSE) SHALL BE MADE BY PRESSURE CONNECTORS OR CLAMPS OF BRASS, COPPER, OR COPPER ALLOY.
3. ALL GROUND BUSES SHALL BE SIZED FOR CONNECTION TO AWG SIZE 8 WIRE PROVIDING ONE SPARE TERMINAL.
4. GROUND AND BOND IN ACCORDANCE WITH ARTICLE 680 OF THE CALIFORNIA ELECTRICAL CODE. Ie. LADDERS, FENCING, POLE LIGHTS, DIVING & STARTING STANCHIONS, DISABLED LIFT ETC.
5. PROVIDE BONDING OF AUTOMATIC POOL COVER MOTORS REGARDLESS OF PROXIMITY TO POOL.

2 BONDING DETAILS

NO SCALE

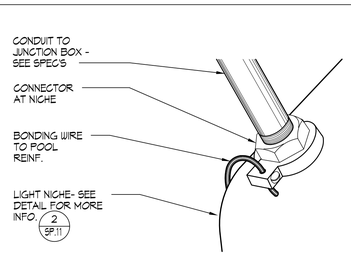

NICHE CONNECTOR

NO SCALE

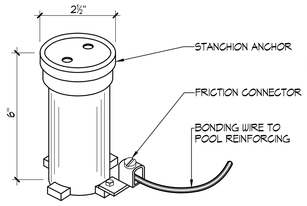

STANCHION ANCHOR

NO SCALE

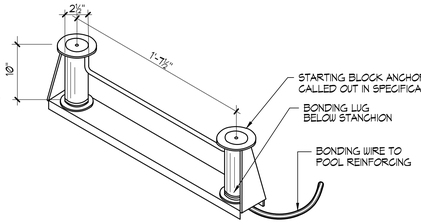

STARTING BLOCK ANCHOR

NO SCALE

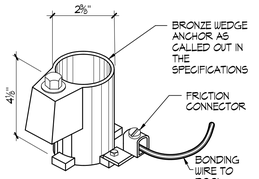

WEDGE ANCHOR

NO SCALE

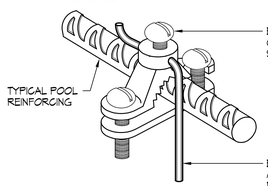

BONDING CLAMP

NO SCALE

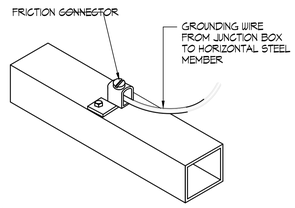

SCOREBOARD ELEC. GROUNDING

NO SCALE

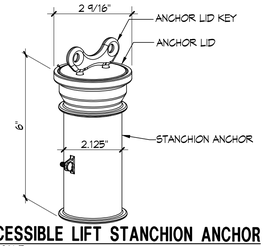

ACCESSIBLE LIFT STANCHION ANCHOR

NO SCALE

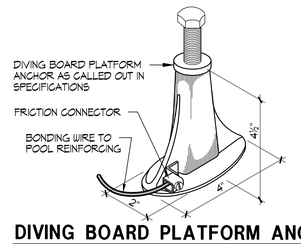

DIVING BOARD PLATFORM ANCHOR

NO SCALE

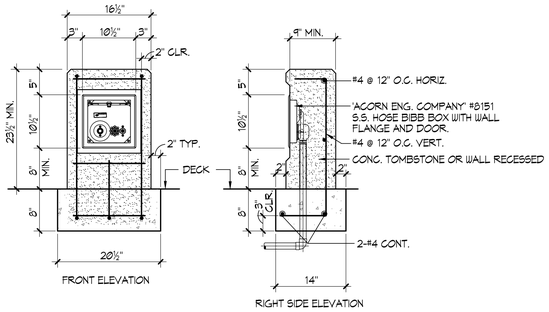

NOTE:
PROVIDE ¾" CHAMFER ON ALL CONCRETE CORNERS. SACK & PATCH ALL EXPOSED SURFACES.

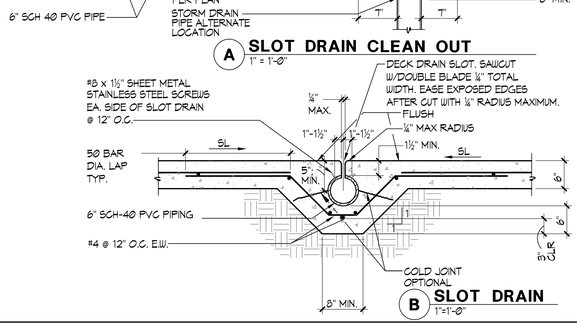

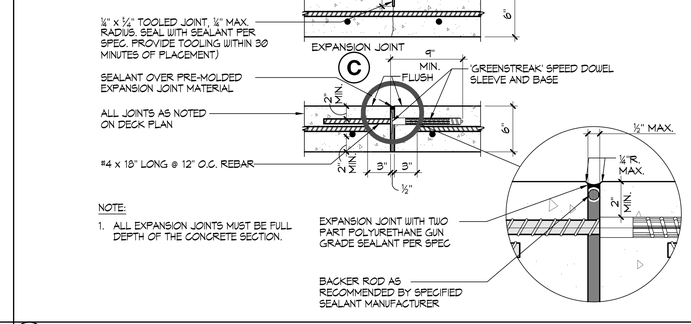

NOTE:

1. ALL EXPANSION JOINTS MUST BE FULL DEPTH OF THE CONCRETE SECTION.

3 TYPICAL POOL BONDING AND GROUND DETAIL

NO SCALE

4 SLOT DRAIN

1"=1'-0"

5 CONCRETE DECK JOINT DETAILS

1½"=1'-0"

6 HOSE BIBB

1"=1'-0"

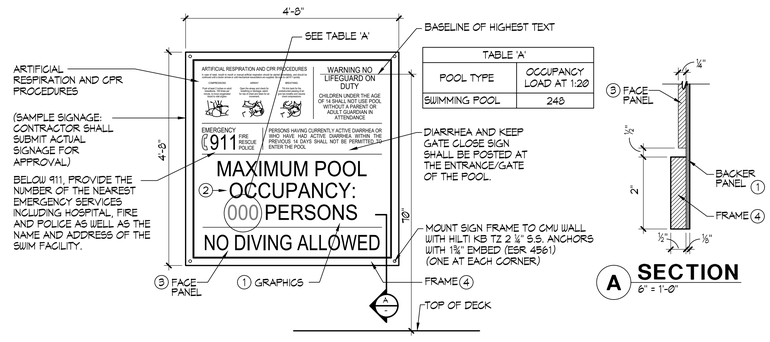

NOTES:

1. COORDINATE SIGNAGE PLACEMENT AND COLOR SCHEME WITH ARCHITECT/OWNER PRIOR TO INSTALLATION.
2. CONTRACTOR TO PROVIDE SHOP DRAWINGS OF PROPOSED SIGNAGE FOR REVIEW.
3. CHARACTER FONT STYLE SHALL BE CONVENTIONAL AND NOT UNUSUAL AND SHALL BE EASY TO READ.
4. MINIMUM CHARACTER HEIGHT = ⅝"

SIGNAGE NOTES AND SPECIFICATIONS:

1. ⅛" THICK PAINTED ALUMINUM BACKER PANEL.
2. SILKSCREENED COPY/GRAPHICS WITH NON GLARE FINISH.
3. ¼" THICK PAINTED ALUMINUM FACE PANEL WITH SILKSCREENED COPY/GRAPHICS. ATTACH TO ⅛" THICK PAINTED ALUMINUM BACKER PANEL USING 'VHB' TAPE AND SILICONE ADHESIVE.
4. 2" WIDE x ½" THICK PAINTED ALUMINUM SIGN FRAME ADHERED TO ⅛" THICK PAINTED ALUMINUM BACKER USING 'LORDS' ADHESIVE AS REQUIRED. VERTICAL SECTIONS OF FRAME TO BE RECTANGULAR TUBE. FILL AND SAND SEAM ALONG EDGE AND FACE PRIOR TO PAINTING.

REQUIRED SIGNAGE:

1. ALL SIGNS SHALL HAVE CLEARLY LEGIBLE LETTERS OR NUMBERS NOT LESS THAN 4 INCHES HIGH, UNLESS OTHERWISE NOTED, AFFIXED TO A WALL, POLE, GATE, OR SIMILAR PERMANENT STRUCTURE IN A LOCATION VISIBLE TO ALL POOL USERS.
   - A. POOL USER CAPACITY SIGN; A SIGN SHALL INDICATE THE MAXIMUM NUMBER OF POOL USERS PERMITTED FOR EACH POOL. SEE TABLE 'A'.
   - B. NO DIVING SIGN; SIGNS SHALL BE POSTED IN CONSPICUOUS PLACES AND SHALL STATE 'NO DIVING' AT POOLS WITH A MAXIMUM WATER DEPTH OF 6 FEET OR LESS.
   - C. NO LIFEGUARD SIGN; WHERE NO LIFEGUARD SERVICE IS PROVIDED, A WARNING SIGN SHALL BE POSTED STATING, 'NO LIFEGUARD ON DUTY.' THE SIGN ALSO SHALL STATE IN LETTERS AT LEAST 1 INCH HIGH, "CHILDREN SHOULD NOT USE POOL WITHOUT ADULT SUPERVISION."
   - D. ARTIFICIAL RESPIRATION AND CPR SIGN; AN ILLUSTRATED DIAGRAM WITH TEXT AT LEAST ⅛ INCH HIGH OF ARTIFICIAL RESPIRATION AND CPR PROCEDURES SHALL BE POSTED.
   - E. EMERGENCY SIGN; THE EMERGENCY TELEPHONE NUMBER 911. WITH NUMBERS NOT LESS THAN 4", THE NUMBER OF THE NEAREST EMERGENCY SERVICES AND THE NAME AND STREET ADDRESS OF THE POOL FACILITY SHALL BE POSTED.
   - F. NO USE AFTER DARK; WHERE POOLS WERE CONSTRUCTED FOR WHICH LIGHTING WAS NOT REQUIRED A SIGN SHALL BE POSTED AT EACH POOL ENTRANCE ON THE OUTSIDE OF THE GATE(S) STATING, "NO USE OF POOL ALLOWED AFTER DARK."
   - G. KEEP CLOSED; A SIGN SHALL BE POSTED ON THE EXTERIOR SIDE OF GATES AND DOORS LEADING INTO THE POOL ENCLOSURE AREA STATING, "KEEP GATE CLOSED" OR "KEEP DOOR CLOSED".
   - H. DIARRHEA; A SIGN IN LETTERS AT LEAST 1"INCH HIGH AND IN A LANGUAGE OR DIAGRAM THAT IS CLEARLY STATED SHALL BE POSTED AT THE ENTRANCE AREA OF A PUBLIC POOL WHICH STATES THAT PERSONS HAVING CURRENTLY ACTIVE DIARRHEA OR WHO HAVE HAD ACTIVE DIARRHEA WITHIN THE PREVIOUS 14 DAYS SHALL NOT BE ALLOWED TO ENTER THE POOL WATER.
2. DIRECTION OF FLOW SIGNAGE AND LABELS.
   - A. THE DIRECTION OF FLOW FOR THE RECIRCULATION EQUIPMENT SHALL BE LABELED CLEARLY WITH DIRECTIONAL SYMBOLS SUCH AS ARROWS ON ALL PIPING IN THE EQUIPMENT AREA.
   - B. WHERE THE RECIRCULATION EQUIPMENT FOR MORE THAN ONE POOL IS LOCATED ON SITE, THE EQUIPMENT SHALL BE MARKED AS TO WHICH POOL THE SYSTEM SERVES.
   - C. VALVES AND PLUMBING LINES SHALL BE LABELED CLEARLY WITH THE SOURCE OR DESTINATION DESCRIPTIONS.

7 POOL SIGNAGE DETAIL

¾"=1'-0"

IDENTIFICATION STAMP
DIV. OF THE STATE ARCHITECT
APP: 03-122664 INC:
REVIEWED FOR
SS ☑ FLS ☑ ACS ☑
DATE: 05/12/2023

pjhm architects

LICENSED ARCHITECT
REGINALD W. ARNOLD
No. C15585
REN. 02/25
STATE OF CALIFORNIA

AQUATIC DESIGN GROUP
2226 Faraday Ave. Carlsbad, CA 92008
AquaticDesignGroup.com
760.438.8400

LICENSED ARCHITECT
GREGORY S. ATKINS
C-25802
REN. 07/31/23
STATE OF CALIFORNIA

LA Phone: 213.278.0172 • Web: pjhm.com
LA Office: 837 Traction Avenue, #410, Los Angeles, CA 90013 • SD Office: 804 Pier View Way #103, Oceanside, CA 92054 • SD Phone: 760.730.5527
OC Office: 24461 Ridge Route Drive #100, Laguna Hills, CA 92653 • OC Phone: 949.496.6191

HIGHLAND HIGH SCHOOL
50M POOL & AQUATICS CENTER

KERN HIGH SCHOOL DISTRICT

DETAILS

SP.12

PLOT DATE: 7/27/2023 11:51:33 AM

EQUIPMENT LIST

(1) SWIMMING POOL STRAINER: 'MER-MADE' F.O. SERIES FRP REDUCING BASKET STRAINER: ONE (1) 12"x10" STANDARD, WITH ACRYLIC LID AND TWO (2) STAINLESS STEEL STRAINERS EA. (150lbs.)

(5 MR.3)(7 MR.4)(6-8 MR.8)(1,2 MR.1) (2) SWIMMING POOL CIRCULATION PUMP: 'PACO' #3015-3; 8"x10"x15" TYPE 'KPV' END SUCTION CENTRIFUGAL PUMP; 1150 RPM 460V, 3PH; 50HP; RATED AT 1,975 GPM @ 60 FT. TDH; 90% EFFICIENT; PREMIMUM EFFICIENCY TEFC MOTOR; EPOXY COAT ALL WET SURFACES. 'PACO', 'AURORA' OR EQUAL. (2,300 lbs.) PROVIDE SPCS EKO-FLEX PUMP CONTROL SYSTEM. VARIABLE SPEED DRIVE MODEL SPCS2532EF4 SYSTEM 21"x41"x11" DEEP. COORDINATE MOUNTING LOCATION TO MAINTAIN DESIRED CLEARANCES, 460V 3PH. (1171 lbs.)

(1 MR.3)(7 MR.4)(4 MR.6) (3) SWIMMING POOL FILTERS: 'EKO' SYSTEMS GEN 2' #EKO-42260-1206-T-S AUTOMATIC FILTER CONTROL (AFC) FULLY AUTOMATIC HI-RATE PERMANENT MEDIA FILTER WITH 130 SQ. FT. OF FILTER AREA RATED AT 2,080 GPM AT 16 GPM/SQ. FT. COMPLETE WITH 12" FACE PIPING, 6" BACKWASH, SEISMIC ANCHORAGE. PROVIDE ALL UTILITIES, PIPING, VALVING ETC. (8,660 lbs EACH TANK) 'EKO' SYSTEMS GEN 2' OR EQUAL. PROVIDE SIGNET P51530-PX FLOSENSOR WITH DIGITAL READ-OUT. ONE (1) SYSTEM TOTAL.

(2 MR.3)(7 MR.4) (4) SWIMMING POOL HEATER(S): INDIRECT FIRED POOL HEATING PACKAGE SYSTEM; 'AQUA5' CREST WITH SMARTTOUCH CONTROL CONDENSING MODULATING BOILER, TITANIUM PLATE AND FRAME HEAT EXCHANGER WITH CPVC CONNECTIONS, FACTORY ASSEMBLED SKID MOUNTED PACKAGE, CALIFORNIA CODE CONTROLS, 1½" NATURAL GAS CONNECTION 3" WATER CONNECTIONS, 8" DIAMETER VENT SIZE, 8" AIR INLET, PVC VENTED; 1,500,000 BTU PER HOUR INPUT, 97% EFFICIENT, PROVIDE ¾" COLD WATER TO EACH UNIT WITH ADJACENT FLOOR SINK FOR CONDENSATE. 'LOCHINVAR AP01500N', WEIGHT = 3,091 lbs. EA. THREE (3) TOTAL.

(3 MR.3)(7 MR.5)(12 MR.4)(7 MR.4) (5) CHLORINE STORAGE/FEED SYSTEM: PROVIDE 'CHEM-TAINER' 500 GALLON #TC5911DC; DUAL STORAGE/CONTAINMENT TANK WITH LID SEISMICALLY RESTRAINED; OPERATING WEIGHT = (4,165lbs). TWO (2) TOTAL. COMPLIES WITH FED. REG #40CFR-264-193. FEED PUMP(S) SHALL BE 'LMI' #SD43-88P-KSI; 288 GPD @ 55 PSI WITH FRP SHELF BRACKETS. TWO (2) TOTAL. HARD PIPE TO POINT OF INJECTION.

(4 MR.3)(6,7 MR.5)(12 MR.4)(7 MR.4) (6) ACID STORAGE/FEED SYSTEM: PROVIDE 'CHEM-TAINER' 350 GALLON #TC5256DC; DUAL STORAGE/CONTAINMENT TANK WITH LID SEISMICALLY RESTRAINED; OPERATING WEIGHT =(2,915 lbs.). COMPLIES WITH FED. REG #40CFR-264-193. PROVIDE 60 GALLON ACID VAPOR RECOVERY SYSTEM. ONE (1) TOTAL.

(7 MR.3)(2-5 MR.4)(7 MR.4) (7) CARBON DIOXIDE STORAGE FEED SYSTEM: PROVIDE ONE (1) 'NOVO-750', 750 lb. CRYOGENIC LIQUID CO2 STORAGE TANK WITH REMOTE FILL PORT. 594 LIQUID lbs., (5,195 CUBIC FEET OF GASEOUS CO2 AT NTP) ONE (1) TOTAL. PROVIDE EKO3PH-MTS CO2 HIGH EFFIGIENCY FEED SYSTEM WITH ALKALINITY CONTROL, @ TO 160 SCFH FEED CAPACITY BOOSTER PUMP, PIPING INJECTOR, FLOWMETER, RELAYS AND ACID FEED ALKALINITY CONTROL. ONE (1) SYSTEM TOTAL (92lbs. EA.) PROVIDE HARD WIRED 'ANALOX' #API KIT CO2 DIETECTOR WITH AUDIBLE AND VISUAL ALARMS IN EACH CHEMICAL ROOM, UL 1971 STANDARD LISTED, ONE (1) TOTAL.

(7,8 MR.4)(2 MR.5)(4,5 MR.5) (8) WATER CHEMISTRY CONTROLLER: PROVIDE ETHERNET CONNECTION TO 'BECSYS' CS-BECSYS1-BP-E WATER CHEMISTRY CONTROLLER. PROVIDE COMPLETE SYSTEM CONTROL PACKAGE. 'BECSYS SYSTEM 7', 'IMPACT', 'WALLACE & TIERNAN' OR APPROVED EQUAL.

(7 MR.4)(7 MR.5) (9) ELECTRICAL: PROVIDE ALL ELECTRICAL WIRING, CONDUIT, PANEL(S), STARTER/DISCONNECT INTERCONNECT(S) ETC. AS REQUIRED FOR PROPER EQUIPMENT INSTALLATION PER MANUFACTURERS RECOMMENDATIONS AND SHOP DRAWINGS. COORDINATE ALL WORK WITH OTHER TRADES AS REQUIRED. REFER TO ELEC. PLANS FOR ALL ADDITIONAL INFO.

(1,2 MR.6) (10) PUMP PIT: 11'-8"X12'-6"X4'-0" DEEP. PROVIDE 2"Ø GALV. STANDARD STEEL PIPE GUARDRAIL. PROVIDE FLOOR DRAIN TO WASTE. PROVIDE WATERPROOFING PER SPECIFICATIONS. ACCESS LADDER TO BE 'KARNEL' CUSTOM STAINLESS STEEL OR EQUAL.

(2 MR.6) (11) BACKWASH PIT: 8'-8" X 8'-10" X 4'-0" DEEP WITH 6"Ø P-TRAP OUTLET TO SEWER. PROVIDE 2"Ø GALV. STANDARD PIPE GUARDRAIL AND 'KARNEL' CUSTOM STAINLESS STEEL LADDER. PROVIDE WATERPROOFING PER SPECIFICATIONS. COORDINATE WITH STRUCTURAL AND PLUMBING PLANS.

(6 MR.5)(4 MR.6) (12) FILL SYSTEM: 3" 'CLA-VAL' FILL SYSTEM TO INCLUDE 3" 'CLA-VAL' SOLENOID CONTROL VALVE #136-01BY, 3" DUCT IRON, EPOXY COATED BODY WITH CAST IRON DISC RETAINER AND DIAPHRAGM WASHER, BRONZE TRIM, FLANGED GLOBE PATTERN, 120V AT 60HZ. SOLENOID WIRING SHALL BE WIRED TO WATER CHEMISTRY CONTROLLER. PROVIDE 6" AIR GAP AT FILL POINT .

(8 MR.5) (13) EYEWASH/SHOWER: HAWS MODEL #8300-8304CRP BARRIER FREE COMBINATION SHOWER AND EYE/FACE WASH WITH CORROSION RESISTANT PROTECTION. SEE MEP SHEETS FOR SUPPLY PIPING. TWO (2) TOTAL.

(1 MR.8) (14) LIGHTING CONTACTOR PANEL: 'ALLEN BRADLEY #500L', OR APPROVED EQUAL. PANEL SHALL BE MOUNTED IN A NEMA 12 HINGED COVER - LOCKABLE ENCLOSURE. CONTACTORS TO BE SWITCHED BY MOMENTARY SWITCH EQUAL TO 'HUBBELL' #1851 MOUNTED IN L-BOX IN MECHANICAL EQUIPMENT ROOM. REFER TO ELECTRICAL PLANS FOR LOCATION OF OWNER COORDINATED REMOTE UNDERWATER LIGHT SWITCH.

(6 MR.8) (15) POOL OPERATOR WORKSTATION DESK: 'DIVERSIFIED WOODCRAFTS, INC.' MODEL #1214K-L-ADA LAB INSTRUCTORS WITH PHENOLIC TOP AND SINK. SEE MEP PLANS FOR WATER SUPPLY PIPING.

(5 MR.8)(1 MR.5) (16) SWIMMING POOL COOLER: 'GLACIER POOL COOLER' MODEL GPC-280 TWO (2) TOTAL. 237 GPM @ 6.6 FT TDH, 2HP FANS WITH 4" INFLUENT/EFFLUENT PIPING, ½HP SUMP PUMP TO SURGE CHAMBER AND 1" DRAIN DOWN. 86" DIA. x 99" TALL, 1,588 lbs. OPERATION WEIGHT.

(4 MR.7) (17) SWIMMING POOL COOLER BOOSTER PUMP: 'PENTAIR' EQ SERIES; EQUK-500; 208-230/460V; 5 HP; #340029, 6" x 4"; NSF LISTED, 574 GPM @ 27 FT TDH. ONE (1) TOTAL.

HEATER/GAS PIPING INSTALLATION NOTE

GAS FIRED POOL HEATER(S) INSTALLED ON A GAS SUPPLY SYSTEM UTILIZING A 2 PSI OR 5 PSI SUPPLY. GAS PRESSURE SHALL REQUIRE A REGULATOR TO REDUCE THE SUPPLY PRESSURE. A PROPERLY SIZED AND INSTALLED LOCK-UP-TYPE HIGH GAS PRESSURE REGULATOR (HGPR) SHALL BE USED TO REDUCE THE GAS PRESSURE AT THE UNIT INLET TO A MINIMUM OF 4" TO A MAXIMUM OF 11" WATER COLUMN.

'LOCHINVAR' RECOMMENDS THAT ANY REQUIRED LINE LOCK-UP-TYPE HIGH GAS PRESSURE REGULATOR BE INSTALLED WITH A MINIMUM OF 5 FEET TO 10 FEET OF PIPE FROM ITS DISCHARGE TO THE UNIT'S GAS INLET. IF A STRAIGHT DISTANCE OF GAS PIPE IS NOT AVAILABLE THE ADDITION OF A VERTICAL 'U' IN THE GAS PIPING DOWN STREAM FROM THE 'HGPR' CAN BE USED TO ACHIEVE THE 5 FEET TO 10 FEET OF DISTANCE.

CONTRACTOR IS RESPONSIBLE FOR HEATER VENTING, EXHAUST DUCTING, FLUE TERMINUS AND PENETRATION(S) THROUGH BUILDING STRUCTURE.

LEGEND

BV = BALL VALVE
BFV = BUTTERFLY VALVE
CV = CHECK VALVE
FM = FLOWMETER
BW = BACKWASH
FS = FLOOR SINK
AI = ACID INJECTION
CI = CHLORINE INJECTION
PH / PS = PIPE HANGER / PIPE SUPPORT (3,4 MR.8)(6 S-1.5)
PG/VG = VACUUM / PRESSURE GAUGE (3 MR.5)(5 MR.6)
FD = FLOOR DRAIN
RPBFP = REDUCED PRESSURE BACKFLOW PREVENTOR

GENERAL NOTES

1. THE PIPING SYSTEM SHALL HAVE DIRECTION OF FLOW ARROWS INDICATED ON THE PIPES.
2. PUBLIC POOLS SHALL HAVE A FLOW DIAGRAM OF THE POOL'S PIPING SYSTEM WITH OPERATION INSTRUCTIONS.
3. THE FLOW DIAGRAM AND INSTRUCTIONS SHALL BE AVAILABLE ON THE PREMISES AT ALL TIME
4. ALL MECHANICAL ROOM FLOORS SHALL BE SLOPED A MIN ¼" PER FOOT TO A DRAIN PER CBC 3122B. SEE ARCHITECTURAL SHEETS FOR SPOT ELEVATIONS AND SLOPES.
5. ALL ELECTRICAL CONDUITS WITHIN MECHANICAL ROOM AND CHEMICAL ROOMS SHALL BE RIDGID NEMA 3R SUITABLE FOR CORROSIVE ATMOSPHERE.

THREE PHASE MOTOR LOADS AT 460V

SWIMMING POOL CIRCULATION PUMP: 50 HP @ 460V = 65 AMPS
SWIMMING POOL COOLER BOOSTER PUMP: 5 HP @ 460V = 7.6 AMPS
SWIMMING POOL COOLER FAN MOTORS TWO (2) @ 2 HP @ 460V = 7.0 AMPS

MEP COMPONENT ANCHORAGE NOTE

ALL MECHANICAL, PLUMBING, AND ELECTRICAL COMPONENTS SHALL BE ANCHORED AND INSTALLED PER THE DETAILS ON THE DSA - APPROVED CONSTRUCTION DOCUMENTS. THE FOLLOWING COMPONENTS SHALL BE ANCHORED OR BRACED TO MEET THE FORCE AND DISPLACEMENT REQUIREMENTS PRESCRIBED IN THE 2019 CBC SECTIONS 1617A.1.18 THROUGH 1617A.1.26 AND ASCE 7-16 CHAPTERS 13, 26 AND 30.

1. ALL PERMANENT EQUIPMENT AND COMPONENTS.
2. TEMPORARY, MOVABLE OR MOBILE EQUIPMENT THAT IS PERMANENTLY ATTACHED (E.G. HARD WIRED) TO THE BUILDING UTILITY SERVICES SUCH AS ELECTRICITY, GAS OR WATER. "PERMANENTLY ATTACHED" SHALL INCLUDE ALL ELECTRICAL CONNECTIONS EXCEPT PLUGS FOR 110/220 VOLT RECEPTACLES HAVING A FLEXIBLE CABLE.
3. TEMPORARY, MOVABLE OR MOBILE EQUIPMENT WHICH IS HEAVIER THAN 400 POUNDS OR HAS A CENTER OF MASS LOCATED 4 FEET OR MORE ABOVE THE ADJACENT FLOOR OR ROOF LEVEL THAT DIRECTLY SUPPORT THE COMPONENT IS REQUIRED TO BE RESTRAINED IN A MANNER APPROVED BY DSA.

THE FOLLOWING MECHANICAL AND ELECTRICAL COMPONENTS SHALL BE POSITIVELY ATTACHED TO THE STRUCTURE, BUT NEED NOT DEMONSTRATE DESIGN COMPLIANCE WITH THE REFERENCES NOTED ABOVE. THESE COMPONENTS SHALL HAVE FLEXIBLE CONNECTIONS PROVIDED BETWEEN THE COMPONENT AND ASSOCIATED DUCTWORK, PIPING, AND CONDUIT. FLEXIBLE CONNECTIONS MUST ALLOW MOVEMENT IN BOTH TRANSVERSE AND LONGITUDINAL DIRECTIONS:

A. COMPONENTS WEIGHING LESS THAN 400 POUNDS AND HAVING A CENTER OF MASS LOCATED 4 FEET OR LESS ABOVE THE ADJACENT FLOOR OR ROOF LEVEL THAT DIRECTLY SUPPORT THE COMPONENT.
B. COMPONENTS WEIGHING LESS THAN 20 POUNDS, OR IN THE CASE OF DISTRIBUTED SYSTEMS, LESS THAN 5 POUNDS PER FOOT, WHICH ARE SUSPENDED FROM A ROOF OR FLOOR OR HUNG FROM A WALL.

THE ANCHORAGE OF ALL MECHANICAL, ELECTRICAL AND PLUMBING COMPONENTS SHALL BE SUBJECT TO THE APPROVAL OF DESIGN PROFESSIONAL IN GENERAL RESPONSIBLE CHARGE OR STRUCTURAL ENGINEER DELEGATED RESPONSIBILITY AND ACCEPTANCE BY DSA. THE PROJECT INSPECTOR WILL VERIFY THAT ALL COMPONENTS AND EQUIPMENT HAVE BEEN ANCHORED IN ACCORDANCE WITH ABOVE REQUIREMENTS.

PIPING, DUCTWORK, AND ELECTRICAL DISTRIBUTION SYSTEM BRACING NOTE

PIPING, DUCTWORK, AND ELECTRICAL DISTRIBUTION SYSTEMS SHALL BE BRACED TO COMPLY WITH THE FORCES AND DISPLACEMENTS PRESCRIBED IN ASCE 7-16 SECTION 13.3 AS DEFINED IN ASCE 7-16 SECTION 13.6.5, 13.6.6, 13.6.7, 13.6.8; AND 2019 CBC, SECTIONS 1617A.1.24, 1617A.1.25, 1617A.1.26.

THE METHOD OF SHOWING BRACING AND ATTACHMENTS TO THE STRUCTURE FOR THE IDENTIFIED DISTRIBUTION SYSTEM ARE AS NOTED BELOW. WHEN BRACING AND ATTACHMENTS ARE BASED ON A PREAPPROVED INSTALLATION GUIDE (E.G., OSHPD OPM FOR 2019 CBC OR LATER) COPIES OF THE BRACING SYSTEM INSTALLATION GUIDE OR MANUAL SHALL BE AVAILABLE IN THE JOBSITE PRIOR TO THE START OF AND DURING THE HANGING AND BRACING OF THE DISTRIBUTION SYSTEMS. THE STRUCTURAL ENGINEER OF RECORD SHALL VERIFY THE ADEQUACY OF THE STRUCTURE TO SUPPORT THE HANGER AND BRACE LOADS.

MECHANICAL PIPING (MP), MECHANICAL DUCTS (MD), PLUMBING PIPING (PP), ELECTRICAL DISTRIBUTION SYSTEMS (E):
MP ☒ MD☐ PP☒ E☐ 1. SHALL COMPLY WITH THE APPLICABLE OSHPD PRE-APPROVAL (OPM #) OPM #0043-13

MECHANICAL ANCHORAGE

1. EXPANSION OR WEDGE ANCHORS INTO CONCRETE: HILTI KB TZ 2 (ICC ESR-4266) TO BE INSTALLED IN ACCORDANCE WITH ICC REPORT AND MANUFACTURER'S RECOMMENDATIONS.
2. EXPANSION OR WEDGE ANCHORS INTO MASONRY: HILTI KB TZ 2 (ICC ESR-4561) TO BE INSTALLED IN ACCORDANCE WITH ICC REPORT AND MANUFACTURER'S RECOMMENDATIONS.
3. FASTENERS SHALL BE STAINLESS STEEL FOR EXTERIOR USE OR WHEN EXPOSED TO WEATHER. PROVIDE GALVANIZED CARBON STEEL ANCHORS AT OTHER LOCATIONS, UNLESS OTHERWISE NOTED.
4. IF REINFORCEMENT IS ENCOUNTERED DURING DRILLING, ABANDON AND SHIFT THE HOLE LOCATION TO AVOID THE REINFORCEMENT. PROVIDE A MINIMUM OF 2 ANCHOR DIAMETERS OR 1 INCH, WHICHEVER IS LARGER, OF SOUND CONCRETE BETWEEN THE DOWEL AND THE ABANDONED HOLE. FILL THE ABANDONED HOLE WITH NON-SHRINK GROUT WITH CONCRETE STRENGTH EQUAL TO OR GREATER THAN BASE MATERIAL. IF THE ANCHOR OR DOWEL MAY NOT BE SHIFTED AS NOTED ABOVE, THE STRUCTURAL ENGINEER WILL DETERMINE A NEW LOCATION.
5. LOCATE REINFORCEMENT AND CONFIRM FINAL ANCHOR LOCATIONS PRIOR TO FABRICATING PLATES, MEMBERS, OR OTHER STEEL ASSEMBLIES ATTACHED WITH MECHANICAL ANCHORS.
6. ANCHORS SHALL BE PROOF-TESTED BY OWNER'S TESTING AND INSPECTION AGENCY.
7. TEST ANCHORS NO SOONER THAN 24 HOURS AFTER INSTALLATION.
8. APPLY TEST LOAD BY ANY METHOD THAT WILL EFFECTIVELY MEASURE THE TENSION OF THE ANCHOR SUCH AS DIRECT PULL WITH A HYDRAULIC JACK, TORQUE WRENCH, OR CALIBRATED SPRING LOADING DEVICES, ETC.
9. REACTION LOADS FROM TEST FIXTURES MAY BE APPLIED CLOSE TO THE ANCHOR BEING TESTED, PROVIDED THE ANCHOR IS NOT RESTRAINED FROM WITHDRAWING BY A BASE PLATE OR OTHER FIXTURE. IF RESTRAINT IS FOUND, LOOSEN AND SHIM OR REMOVE THE FIXTURE PRIOR TO TESTING.
10. UNLESS OTHERWISE NOTED, PROVIDE MINIMUM EMBEDMENT OF ANCHORS AS SHOWN IN TABLES BELOW.
11. TEST 50% OF ANCHORS PER ONE OF THE FOLLOWING METHODS AND IN ACCORDANCE WITH THE VALUES SHOWN IN THE TABLE:
    A. HYDRAULIC RAM METHOD: APPLY PROOF TEST LOAD WITHOUT REMOVING THE NUT. IF IT IS NOT POSSIBLE TO TEST WITH THE NUT INSTALLED, REPLACE THE NUT WITH A THREADED COUPLER TO THE LOAD. ANCHOR IS ACCEPTABLE IF NO MOVEMENT IS OBSERVED AT THE TEST LOAD. MOVEMENT MAY BE DETERMINED WHEN THE WASHER UNDER THE NUT BECOMES LOOSE.
    B. TORQUE WRENCH METHOD: TEST ANCHORS TO THE TORQUE LOAD INDICATED IN THE TABLE WITH ONE-HALF TURN OF THE NUT.
12. IF ANY ANCHOR FAILS TESTING, REPLACE ANCHOR AND TEST ADDITIONAL ANCHORS OF THE SAME CATEGORY NOT PREVIOUSLY TESTED UNTIL TWENTY (20) CONSECUTIVE TESTS PASS, THEN RESUME INITIAL TESTING FREQUENCY. CCD WILL BE REQUIRED.

WEDGE, EXPANSION OR ADHESIVE ANCHOR EMBEDMENT DEPTH AND TEST LOAD

SIZE	MIN. EMBED	HILTI KB TZ 2 (SS) ANCHORS IN CONCRETE		KB TZ 2 (SS) ANCHORS IN CMU			HILTI HIT-HY 200 ADHESIVE ANCHORS IN CONCRETE		
		TENSION LOAD (LBS)	TORQUE LOAD (FT-LBS)	MIN. EMBED	TENSION LOAD (LBS)	TORQUE LOAD (FT-LBS)	MIN. EMBED	PULL TEST LOAD (LBS)	TORQUE LOAD (FT-LBS)
¼" DIA.	1½"	800	10	1¾"	145	6	-	-	-
⅜" DIA.	2½"	1,500	25	3"	540	15	3"	2,910	15
½" DIA.	3¼"	3,000	40	3¾"	640	25	4"	5,165	30
⅝" DIA.	3¼"	4,900	60	4½"	940	35	5"	8,245	60
¾" DIA.	3¾"	6,300	110	5½"	1,385	50	6"	10,150	100

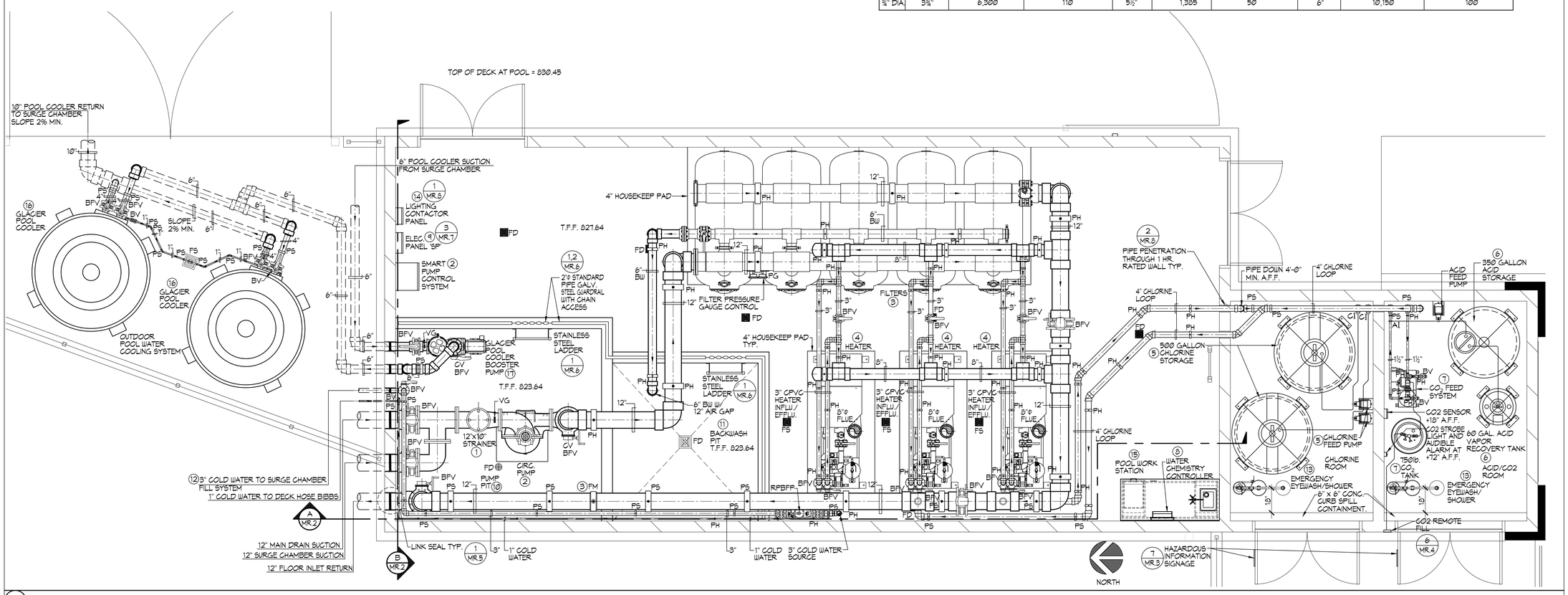

1 **MECHANICAL ROOM LAYOUT PLAN** ⅜"=1'-0"

IDENTIFICATION STAMP
DIV. OF THE STATE ARCHITECT
APP: 03-122664 INC:
REVIEWED FOR
SS ☑ FLS ☑ ACS ☑
DATE: 05/12/2023

pjhm architects
LICENSED ARCHITECT RICHARD W. RIVES No. C-25185 REN. 02/28 STATE OF CALIFORNIA

AQUATIC DESIGN GROUP
2226 Faraday Ave, Carlsbad, CA 92008
AquaticDesignGroup.com
760.438.8400

LICENSED ARCHITECT GREGORY S. GRAHAM C-33802 REN. 07/31/23 STATE OF CALIFORNIA

LA Phone: 213.278.0172 • Web: pjhm.com
LA Office: 857 Traction Avenue, #410, Los Angeles, CA 90013
SD Phone: 760.730.5527 • SD Office: 804 Pier View Way #103, Oceanside, CA 92054
OC Phone: 949.496.6191 • OC Office: 24461 Ridge Route Drive #100, Laguna Hills, CA 92653

HIGHLAND HIGH SCHOOL
50M POOL & AQUATICS CENTER

KERN HIGH SCHOOL DISTRICT

MECHANICAL ROOM LAYOUT PLAN

MR.1

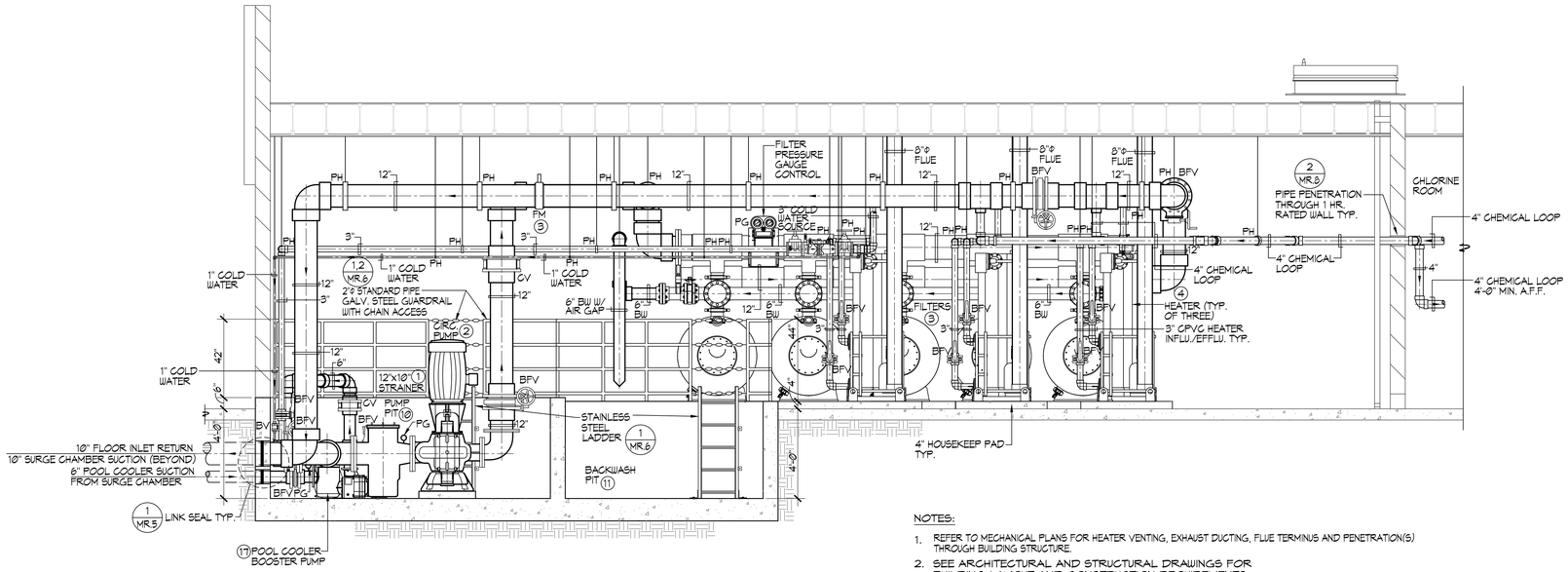

NOTES:

1. REFER TO MECHANICAL PLANS FOR HEATER VENTING, EXHAUST DUCTING, FLUE TERMINUS AND PENETRATION(S) THROUGH BUILDING STRUCTURE.
2. SEE ARCHITECTURAL AND STRUCTURAL DRAWINGS FOR BUILDING LAYOUT AND CONSTRUCTION REQUIREMENTS.
3. SEE SHEET MR.1 FOR EQUIPMENT LIST.

A **MECHANICAL ROOM SECTION** 3/8"=1'-0"

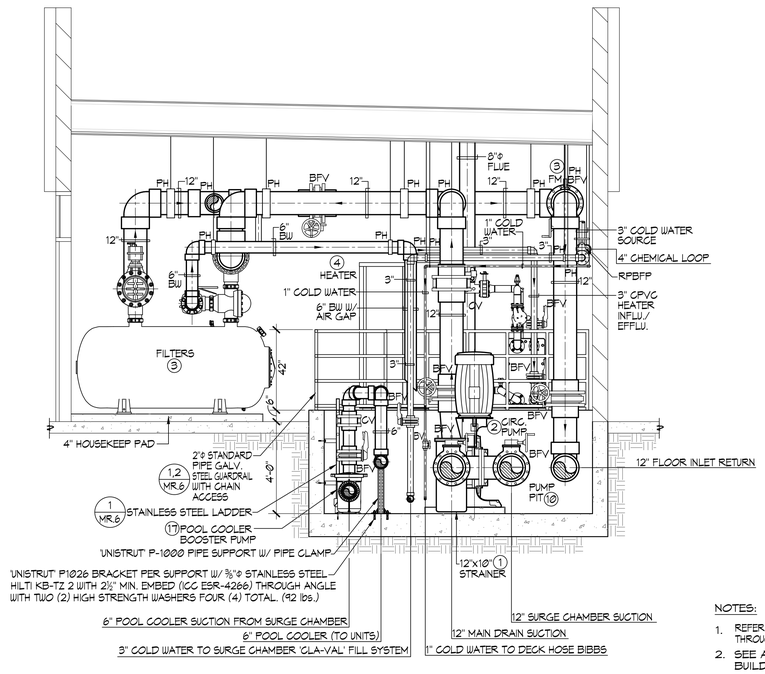

NOTES:

1. REFER TO MECHANICAL PLANS FOR HEATER VENTING, EXHAUST DUCTING, FLUE TERMINUS AND PENETRATION(S) THROUGH BUILDING STRUCTURE.
2. SEE ARCHITECTURAL AND STRUCTURAL DRAWINGS FOR BUILDING LAYOUT AND CONSTRUCTION REQUIREMENTS.
3. SEE SHEET MR.1 FOR EQUIPMENT LIST.

B **MECHANICAL ROOM SECTION** 3/8"=1'-0"

IDENTIFICATION STAMP
DIV. OF THE STATE ARCHITECT
APP: 03-122664 INC:
REVIEWED FOR
SS ☑ FLS ☑ ACS ☑
DATE: 05/12/2023

pjhm architects

LICENSED ARCHITECT THOMAS W. KRUSE NO. C15585 REN. 02/25 STATE OF CALIFORNIA

AQUATIC DESIGN GROUP
2226 Faraday Ave. Carlsbad, CA 92008
AquaticDesignGroup.com
760.438.8400

LICENSED ARCHITECT GEORGY S. FERRELL C-35802 REN. 07/31/23 STATE OF CALIFORNIA

HIGHLAND HIGH SCHOOL
50M POOL & AQUATICS CENTER

KERN HIGH SCHOOL DISTRICT

MECHANICAL ROOM SECTIONS

MR.2

OC Office: 24461 Ridge Route Drive #100, Laguna Hills, CA 92653 • OC Phone: 949.496.6191 • SD Office: 804 Pier View Way #103, Oceanside, CA 92054 • SD Phone: 760.730.5527 • LA Office: 837 Traction Avenue, #410, Los Angeles, CA 90013 • LA Phone: 213.278.0172 • Web: pjhm.com

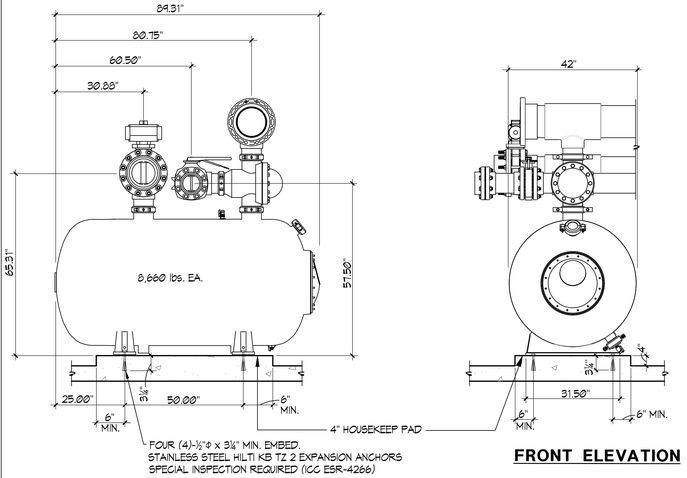

SIDE ELEVATION | **FRONT ELEVATION**

1 FILTER ANCHORAGE NO SCALE

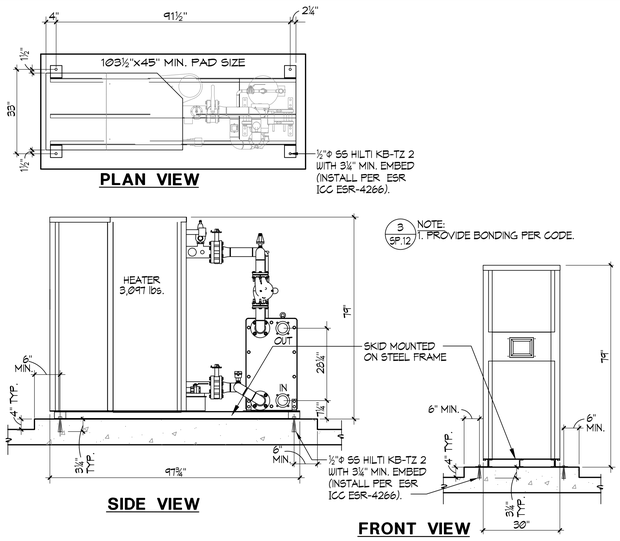

PLAN VIEW

SIDE VIEW | **FRONT VIEW**

2 HEATER ANCHORAGE NO SCALE

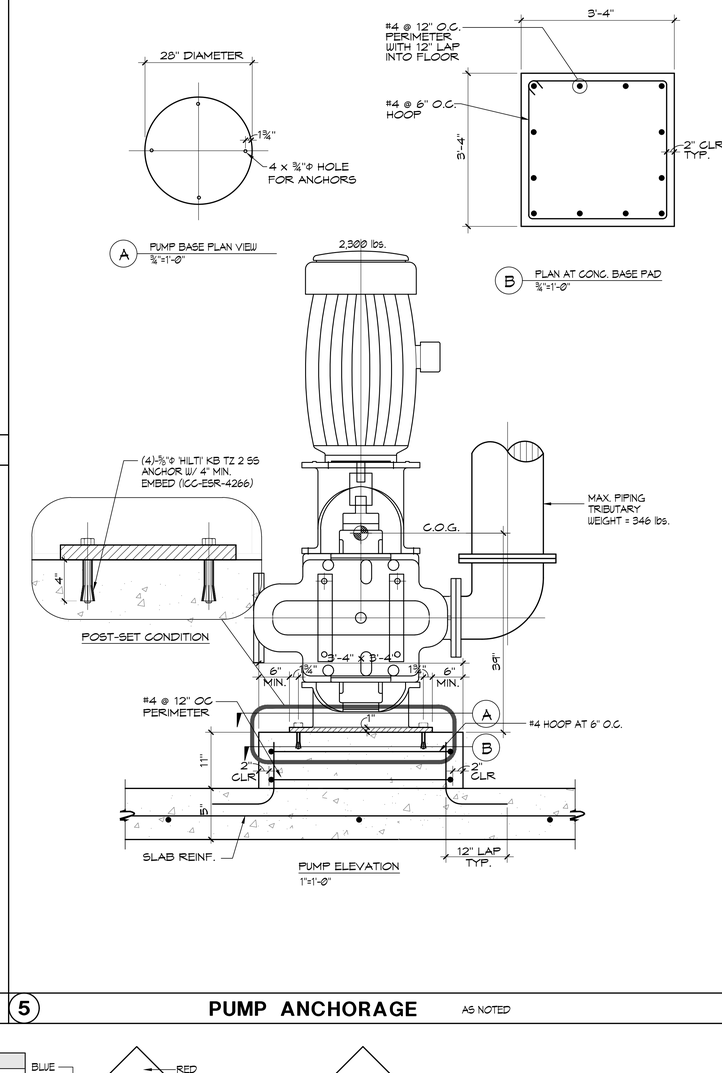

5 PUMP ANCHORAGE AS NOTED

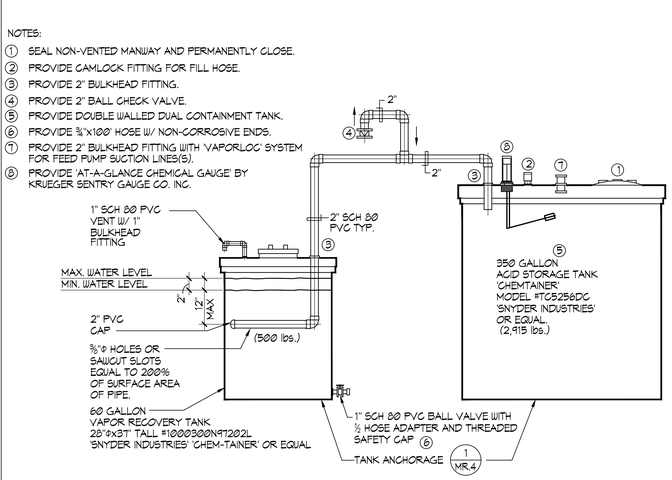

3 SODIUM HYPOCHLORITE FEED SCHEMATIC NO SCALE

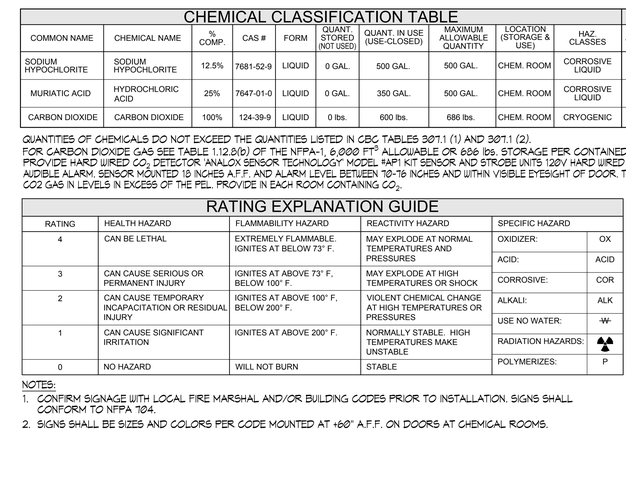

4 MURIATIC ACID FEED SCHEMATIC NO SCALE

NOTES:
1. SEAL NON-VENTED MANWAY AND PERMANENTLY CLOSE.
2. PROVIDE CAMLOCK FITTING FOR FILL HOSE.
3. PROVIDE 2" BULKHEAD FITTING.
4. PROVIDE 2" BALL CHECK VALVE.
5. PROVIDE DOUBLE WALLED DUAL CONTAINMENT TANK.
6. PROVIDE ¾"x100' HOSE W/ NON-CORROSIVE ENDS.
7. PROVIDE 2" BULKHEAD FITTING WITH 'VAPORLOC' SYSTEM FOR FEED PUMP SUCTION LINES(5).
8. PROVIDE 'AT-A-GLANCE CHEMICAL GAUGE' BY KRUEGER SENTRY GAUGE CO. INC.

6 VAPOR RECOVERY TANK NO SCALE

CHEMICAL CLASSIFICATION TABLE

COMMON NAME	CHEMICAL NAME	% COMP.	CAS #	FORM	QUANT STORED (NOT USED)	QUANT. IN USE (USE-CLOSED)	MAXIMUM ALLOWABLE QUANTITY	LOCATION (STORAGE & USE)	HAZ. CLASSES	JUSTIFICATION
SODIUM HYPOCHLORITE	SODIUM HYPOCHLORITE	12.5%	7681-52-9	LIQUID	0 GAL.	500 GAL.	500 GAL.	CHEM. ROOM	CORROSIVE LIQUID	MSDS
MURIATIC ACID	HYDROCHLORIC ACID	25%	7647-01-0	LIQUID	0 GAL.	350 GAL.	500 GAL.	CHEM. ROOM	CORROSIVE LIQUID	MSDS
CARBON DIOXIDE	CARBON DIOXIDE	100%	124-39-9	LIQUID	0 lbs.	600 lbs.	686 lbs.	CHEM. ROOM	CRYOGENIC	MSDS

QUANTITIES OF CHEMICALS DO NOT EXCEED THE QUANTITIES LISTED IN CBC TABLES 307.1 (1) AND 307.1 (2).
FOR CARBON DIOXIDE GAS SEE TABLE 1.12.8(b) OF THE NFPA-1, 6,000 FT^3 ALLOWABLE OR 686 lbs. STORAGE PER CONTAINED AREA
PROVIDE HARD WIRED CO_2 DETECTOR 'ANALOX SENSOR TECHNOLOGY' MODEL #AP1 KIT SENSOR AND STROBE UNITS 120V HARD WIRED W/ STROBE LIGHT AND AUDIBLE ALARM. SENSOR MOUNTED 18 INCHES A.F.F. AND ALARM LEVEL BETWEEN 70-76 INCHES AND WITHIN VISIBLE EYESIGHT OF DOOR. TO BE SET TO DETECT CO2 GAS IN LEVELS IN EXCESS OF THE PEL. PROVIDE IN EACH ROOM CONTAINING CO_2.

RATING EXPLANATION GUIDE

RATING	HEALTH HAZARD	FLAMMABILITY HAZARD	REACTIVITY HAZARD	SPECIFIC HAZARD	
4	CAN BE LETHAL	EXTREMELY FLAMMABLE. IGNITES AT BELOW 73° F.	MAY EXPLODE AT NORMAL TEMPERATURES AND PRESSURES	OXIDIZER:	OX
				ACID:	ACID
3	CAN CAUSE SERIOUS OR PERMANENT INJURY	IGNITES AT ABOVE 73° F, BELOW 100° F.	MAY EXPLODE AT HIGH TEMPERATURES OR SHOCK	CORROSIVE:	COR
2	CAN CAUSE TEMPORARY INCAPACITATION OR RESIDUAL INJURY	IGNITES AT ABOVE 100° F, BELOW 200° F.	VIOLENT CHEMICAL CHANGE AT HIGH TEMPERATURES OR PRESSURES	ALKALI:	ALK
				USE NO WATER:	W
1	CAN CAUSE SIGNIFICANT IRRITATION	IGNITES AT ABOVE 200° F.	NORMALLY STABLE. HIGH TEMPERATURES MAKE UNSTABLE	RADIATION HAZARDS:	☢
				POLYMERIZES:	P
0	NO HAZARD	WILL NOT BURN	STABLE		

NOTES:
1. CONFIRM SIGNAGE WITH LOCAL FIRE MARSHAL AND/OR BUILDING CODES PRIOR TO INSTALLATION. SIGNS SHALL CONFORM TO NFPA 704.
2. SIGNS SHALL BE SIZES AND COLORS PER CODE MOUNTED AT +60" A.F.F. ON DOORS AT CHEMICAL ROOMS.

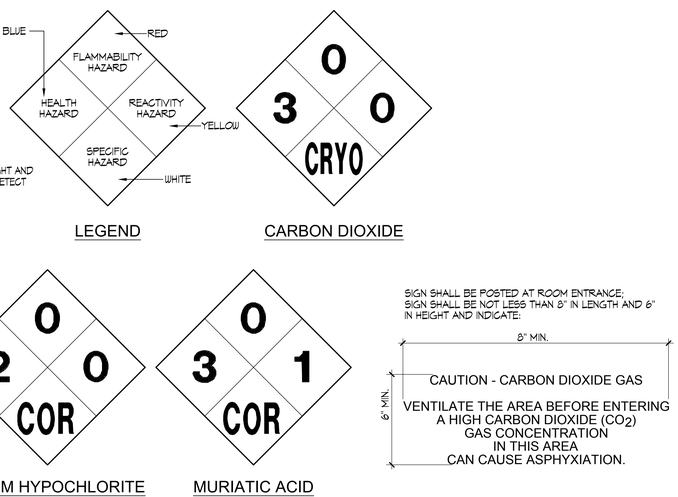

7 HAZARDOUS INFORMATION SIGNAGE NO SCALE

IDENTIFICATION STAMP
DIV. OF THE STATE ARCHITECT
APP: 03-122664 INC:
REVIEWED FOR
SS ☑ FLS ☑ ACS ☑
DATE: 05/12/2023

pjhm architects
LICENSED ARCHITECT THOMAS W. KRUSE No. C15585 REN. 02/25 STATE OF CALIFORNIA
AQUATIC DESIGN GROUP
2226 Faraday Ave. Carlsbad, CA 92008
AquaticDesignGroup.com
760.438.8400
LICENSED ARCHITECT GREGORY S. ATKINS C-25802 REN. 07/31/23 STATE OF CALIFORNIA
OC Office: 24461 Ridge Route Drive #100, Laguna Hills, CA 92653 • OC Phone: 949.496.6191 • SD Office: 804 Pier View Way #103, Oceanside, CA 92054 • SD Phone: 760.730.5527 • LA Office: 837 Traction Avenue, #410, Los Angeles, CA 90013 • LA Phone: 213.278.0172 • Web: pjhm.com

HIGHLAND HIGH SCHOOL
50M POOL & AQUATICS CENTER
KERN HIGH SCHOOL DISTRICT

DETAILS

MR.3

8/29/2023 7:57:55 AM

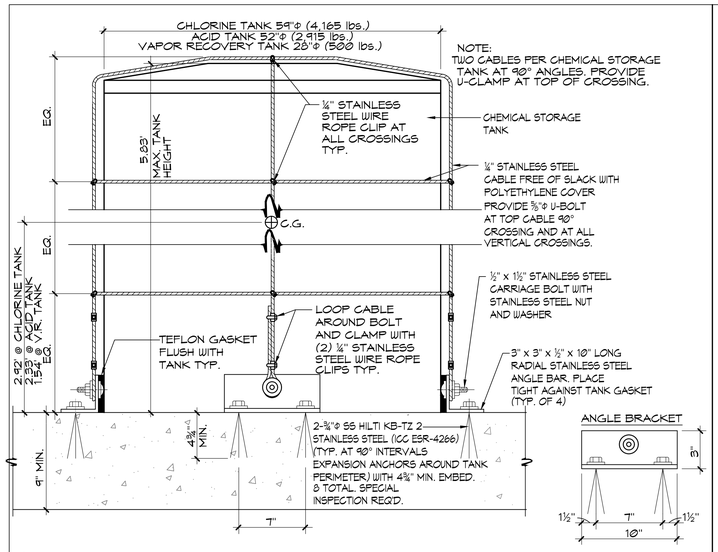

1 CHEMICAL TANK ANCHOR (TYP. 3 TANKS) NO SCALE

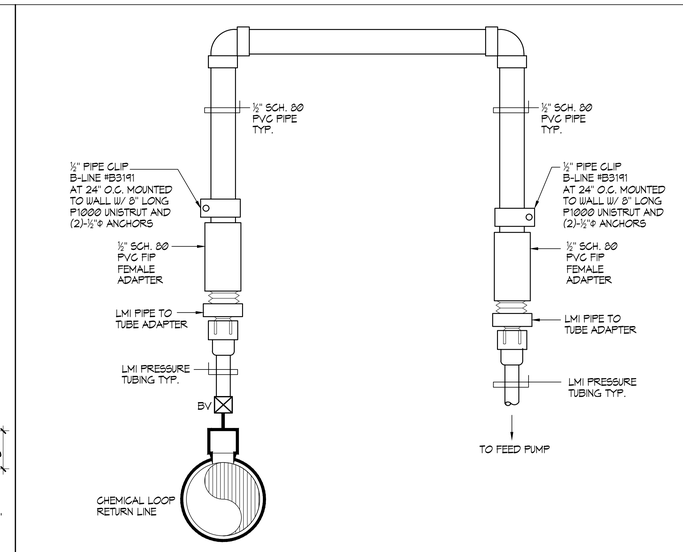

2 CHEMICAL FEED PIPING DETAIL NO SCALE

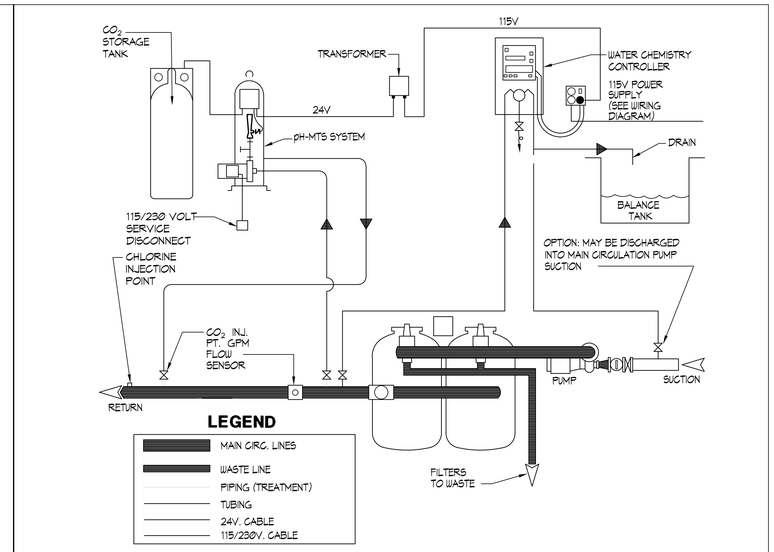

3 TYPICAL CARBON DIOXIDE pH-MTS INSTALLATION NO SCALE

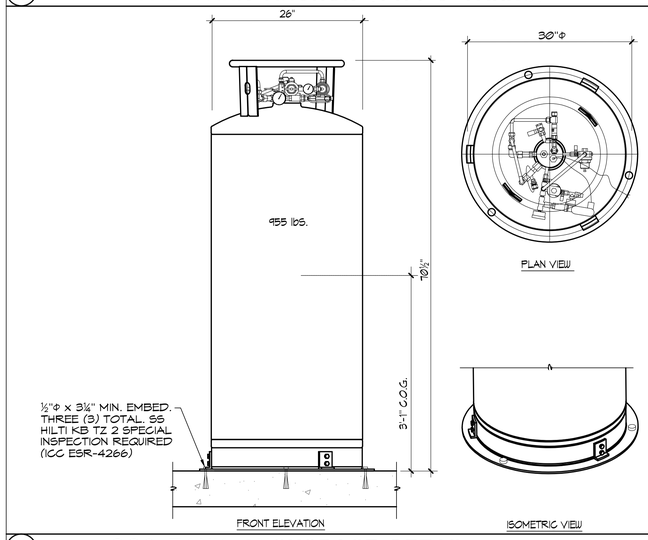

4 CO2 TANK ANCHORAGE DETAIL NO SCALE

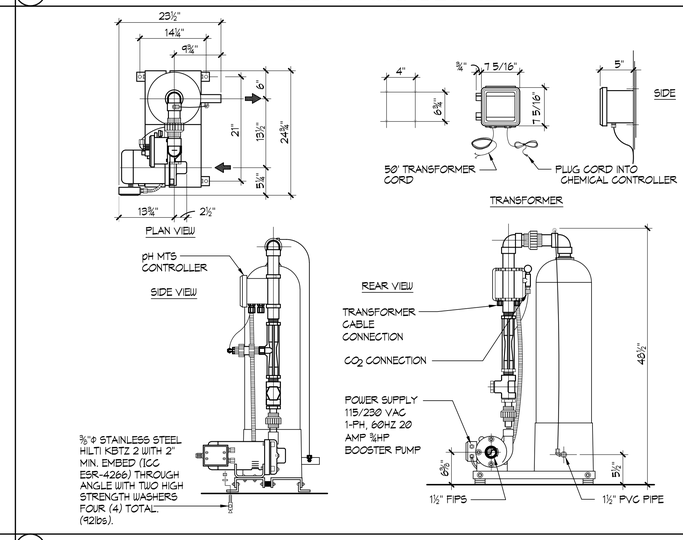

5 CARBON DIOXIDE pH MTS CONTROLLER NO SCALE

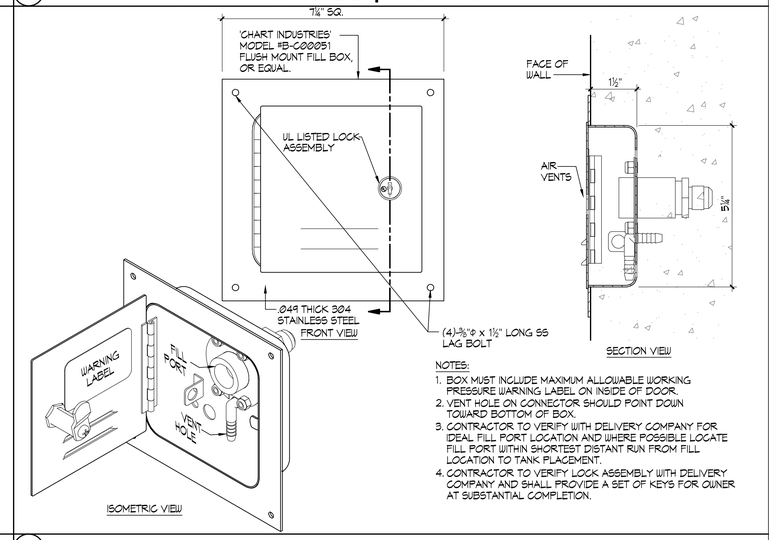

6 C02 FLUSH MOUNT FILL BOX ½"=1"

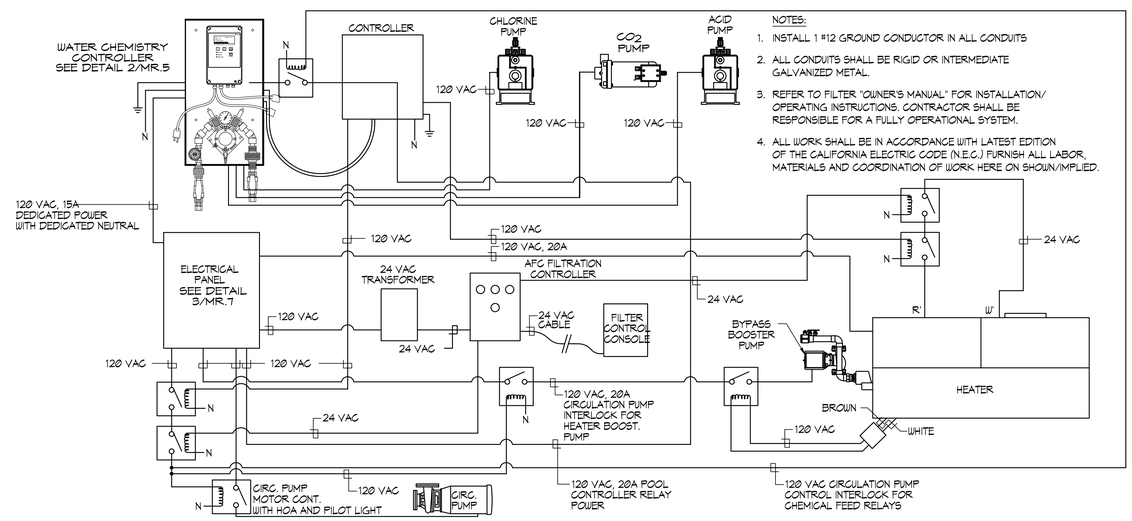

7 POOL MECHANICAL ELECTRICAL INTERCONNECTION DIAGRAM NO SCALE

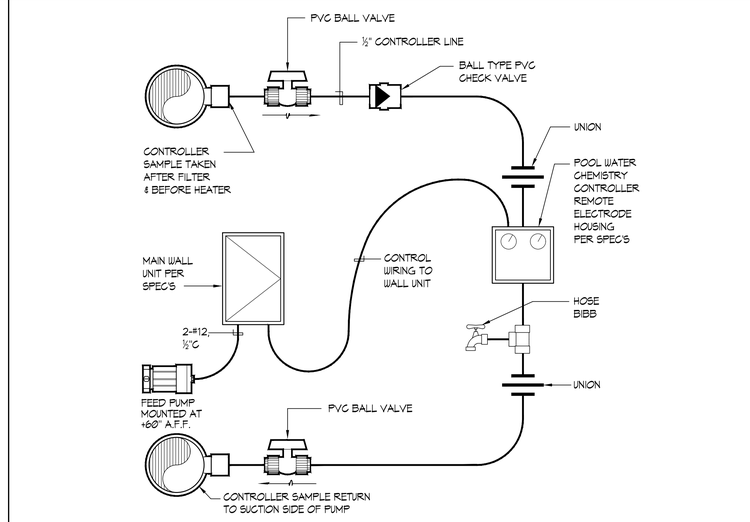

8 WATER CHEMISTRY CONTROLLER SCHEMATIC NO SCALE

IDENTIFICATION STAMP
DIV. OF THE STATE ARCHITECT
APP: 03-122664 INC:
REVIEWED FOR
SS ☑ FLS ☑ ACS ☑
DATE: 05/12/2023

pjhm architects

LICENSED ARCHITECT
THOMAS W. KRUSE
No. C15585
REN. 02/25
STATE OF CALIFORNIA

AQUATIC DESIGN GROUP
2226 Faraday Ave. Carlsbad, CA 92008
AquaticDesignGroup.com
760.438.8400

LICENSED ARCHITECT
GREGORY S. ATKINS
C-25802
REN. 07/31/25
STATE OF CALIFORNIA

HIGHLAND HIGH SCHOOL
50M POOL & AQUATICS CENTER
KERN HIGH SCHOOL DISTRICT

DETAILS

MR.4

OC Office: 24461 Ridge Route Drive #100, Laguna Hills, CA 92653 • OC Phone: 949.496.6191 • SD Office: 804 Pier View Way #103, Oceanside, CA 92054 • SD Phone: 760.730.5527 • LA Office: 837 Traction Avenue, #410, Los Angeles, CA 90013 • LA Phone: 213.278.0172 • Web: pjhm.com

6/30/2023 11:51:17 AM

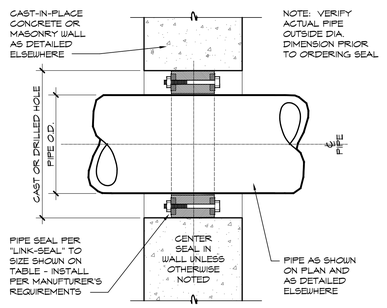

PIPE SIZE (NOMINAL)	OUTSIDE DIAMETER (PIPE O.D.)	SLEEVE WALL THICKNESS (SCHEDULE 40)	LINK SEAL SIZE NO.	NO. OF LINKS PER SEAL
½"	0.840	2.0	LS-200	4
¾"	1.050	2.5	LS-275	5
1"	1.315	3.0	LS-300	4
1¼"	1.660	3.0	LS-275	7
1½"	1.900	3.5	LS-300	5
2"	2.375	4.0	LS-300	6
2½"	2.875	4.0	LS-300	8
3"	3.50	5.0	LS-300	8
3½"	4.00	6.0	LS-325	5
4"	4.50	6.0	LS-300	10
5"	5.563	6.0	LS-425	6
6"	6.625	10.0	LS-475	10
8"	8.625	12.0	LS-475	12
10"	10.75	14.0	LS-400	10
12"	12.75	16.0	LS-400	12
14"	14.00	16.0	LS-325	15
16"	16.00	16.0	LS-325	17
18"	18.00	23.0	LS-500	16
20"	20.00	25.0	LS-500	18
22"	22.00	27.0	LS-500	19
24"	24.00	29.0	LS-500	21
26"	26.00	31.0	LS-500	23
28"	28.00	33.0	LS-500	24
30"	30.00	35.0	LS-500	26
32"	32.00	37.0	LS-500	28
34"	34.00	39.0	LS-500	29
36"	36.00	41.0	LS-500	30

1 PIPE SEAL TO WALL / FLOOR

NO SCALE

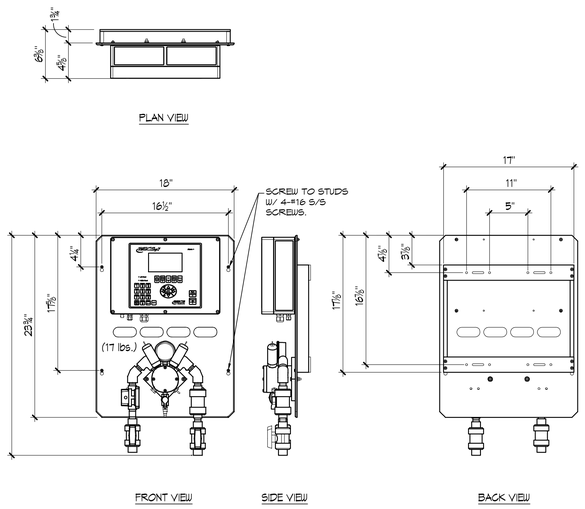

2 BECSYS 7 WATER CHEMISTRY CONTROLLER

1½"=1'-0"

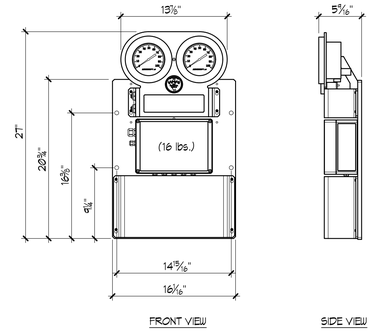

3 BECSYS FILTER INTERFACE SYSTEM

1½"=1'-0"

RELAY LEGEND
RELAY 1 = pH FEED
RELAY 2 = CHLORINE FEED
RELAY 3 = ALARM OUTPUT
RELAY 4 = HEATER
RELAY 5 = SENSOR WASH
RELAY 6 = FILTER BACKWASH OUTPUT
RELAY 7 = RECIRC PUMP

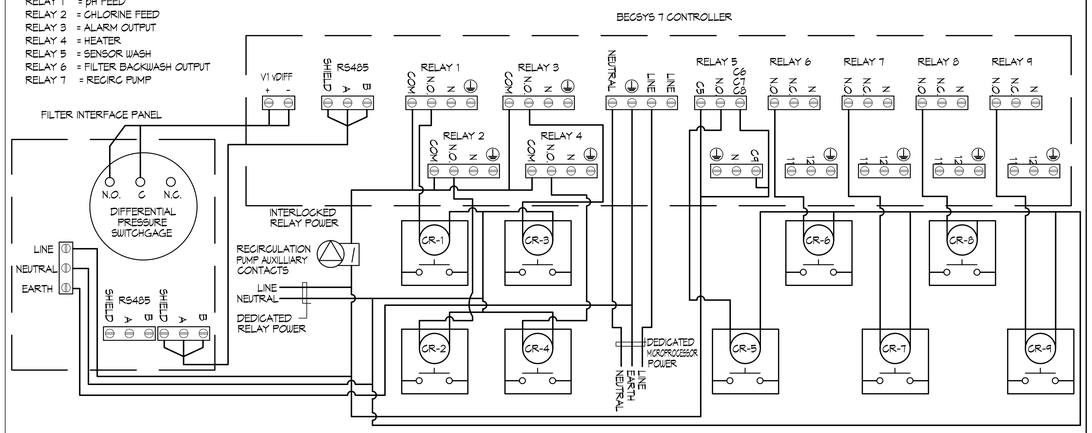

4 BECSYS 7 CONTROLLER

NO SCALE

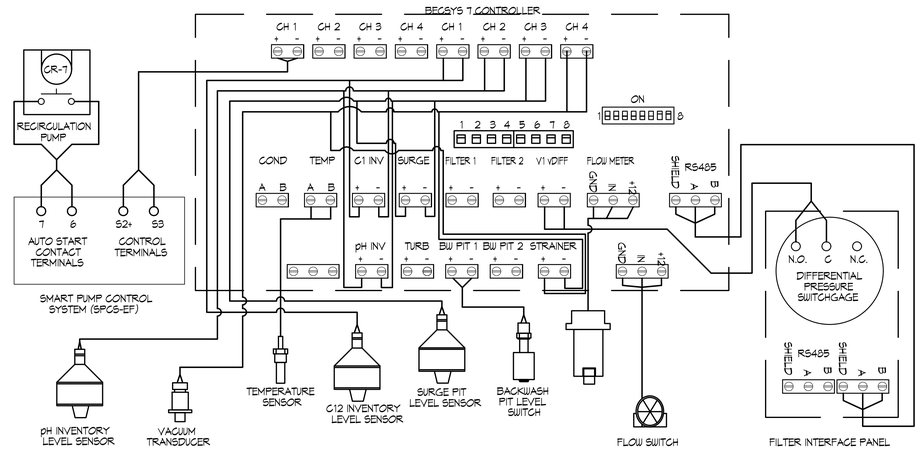

5 BECSYS 7 CONTROLLER

NO SCALE

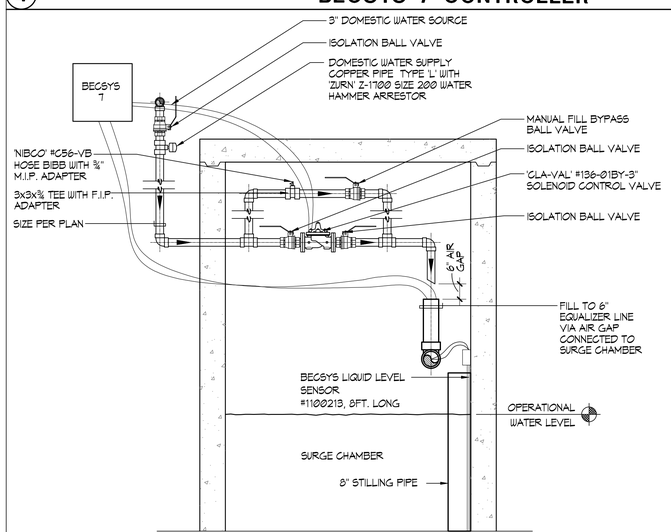

6 AUTOMATIC/MANUAL WATER MAKE-UP SCHEMATIC

NO SCALE

DESIGNATION: 'SP'
VOLTAGE: 120/208V 3PH 4W
200AMP ☒MAIN BREAKER ☐MAIN LUG
☐RECESSED ☒SURFACE
LOCATION: MECHANICAL EQUIP. RM.
MINIMUM DEVICE ☒10,000 ☐14,000
A.I.C. RATING
PANELBOARD KEY NOTES ① ○ ○ ○

DESCRIPTION:	C/B	CIR NO.	φ A	φ B	φ C	CIR NO.	C/B	DESCRIPTION:
SP UNDERWATER LIGHTS	① 20/1	1	696 1200			2	20/1	SP FILTER AFC
		3		696 1200		4		SP FILTER PRESS. AMP.
		5			696 1200	6		SP WATER CHEM. CONTROL
		7	696 360			8		SP WATER CHEM. RELAY
		9		696 360		10		SP CIRC. PUMP INTERCON.
		11			522 360	12		SP CIRC. PUMP MTR. CONT.
SP TIMING SYS. DECK RECEPT.		13	720 1440			14		SP HEATER
		15		720 1440		16		SP HEATER
		17			720 1440	18		SP HEATER
SP TIMING SYS. SCOREBOARD		19	720 720			20		SP FILTER PRIORITY VALVE
		21		720 960		22		SP CHLORINE FEED
		23			720 960	24		▼
		25	720 1056			26	20/2	SP CO2 FEED
		27		720 1056		28		▼
		29			720 720	30	20/1	SPARE ①
		31	720			32		SPACE
		33		720		34		▼
		35			720	36		
		37	720			38		
POOL COOLER SUMP		39		720		40		
POOL COOLER SUMP		41			720	42		
TOTAL PER PHASE			9,768	10,008	9,498			11,556 ÷ 120V = 97 AMPS
+ 25% L.C.L.			1,728	1,548	1,684			
TOTAL			11,496	11,556	11,182			

① GFI CIRCUIT SP = SWIMMING POOL

7 PANEL SCHEDULE

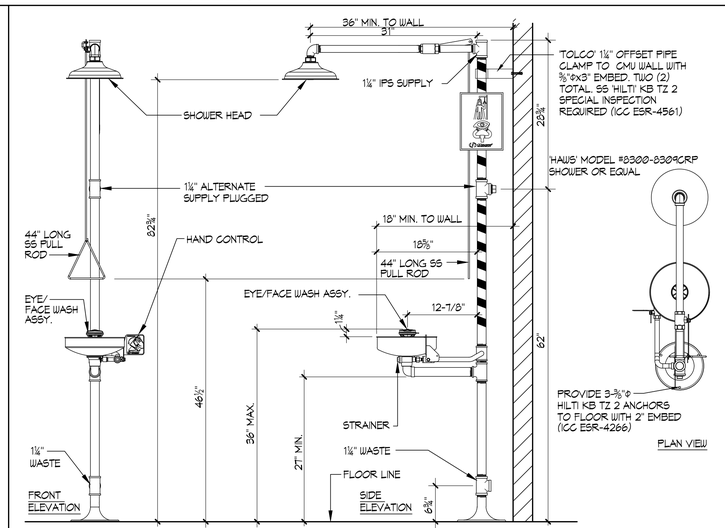

8 TYPICAL EYEWASH/SHOWER DETAIL

NO SCALE

IDENTIFICATION STAMP
DIV. OF THE STATE ARCHITECT
APP: 03-122664 INC:
REVIEWED FOR
SS ☑ FLS ☑ ACS ☑
DATE: 05/12/2023

pjhm architects
LICENSED ARCHITECT GEORG W. KRUG No. C15585 REN. 02/25 STATE OF CALIFORNIA
AQUATIC DESIGN GROUP
2226 Faraday Ave. Carlsbad, CA 92008
AquaticDesignGroup.com
760.438.8400
LICENSED ARCHITECT GREGORY S. ATKINS C-25802 REN. 07/31/25 STATE OF CALIFORNIA
LA Office: 837 Traction Avenue, #410, Los Angeles, CA 90013 • LA Phone: 213.278.0172 • Web: pjhm.com
SD Office: 804 Pier View Way #103, Oceanside, CA 92054 • SD Phone: 949.496.6191 • OC Phone: 760.730.5527
OC Office: 24461 Ridge Route Drive #100, Laguna Hills, CA 92653

HIGHLAND HIGH SCHOOL
50M POOL & AQUATICS CENTER

KERN HIGH SCHOOL DISTRICT

DETAILS

MR.5

10/30/2023 7:10:32 AM

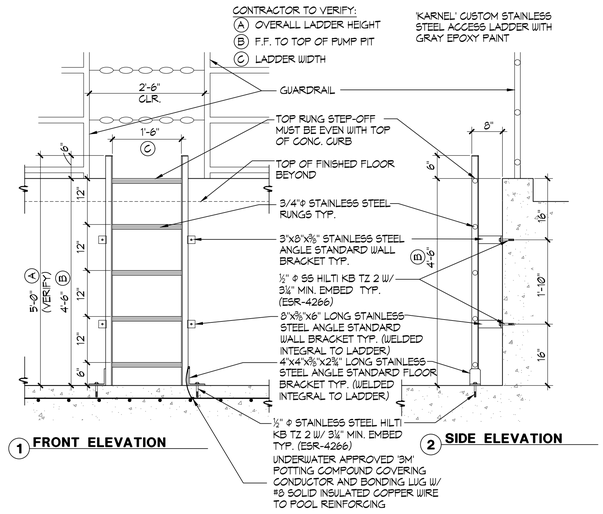

1 PUMP PIT ACCESS LADDER ¾"=1'-0"

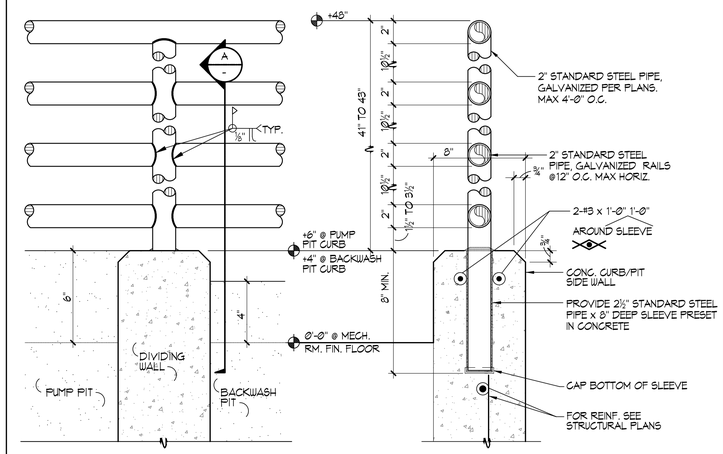

ELEVATION AT PIT DIVIDING WALL

A GUARD RAIL SECTION

2 PIT GUARD RAIL 3"=1'-0"

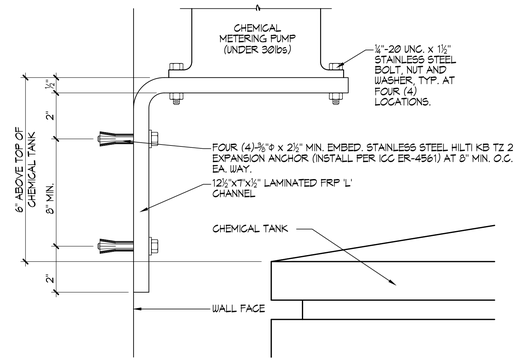

3 CHEMICAL PUMP SHELF 6"=1'-0"

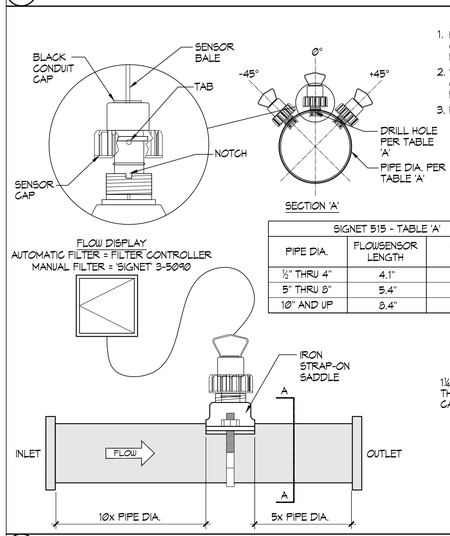

NOTES:
1. HORIZONTAL PIPE RUNS: MOUNT SENSOR IN -45°, 0°, OR +45° POSITION PER MANUFACTURER'S RECOMMENDATIONS.
2. VERTICAL PIPE RUNS: MOUNT SENSOR IN ANY ORIENTATION PER MANUFACTURER'S RECOMMENDATIONS.
3. FLOW SENSOR LOCATION PER PLAN

SIGNET 515 - TABLE 'A'		
PIPE DIA.	FLOWSENSOR LENGTH	DRILL HOLE
½" THRU 4"	4.1"	1⅞"
5" THRU 8"	5.4"	2¼"
10" AND UP	8.4"	2¼"

4 SIGNET FLOWMETER NO SCALE

4½" S/S CASED LIQUID FILLED PRESSURE GAUGES SHALL HAVE A DIAL RANGE PRESSURE OF 60psi AND VACUUM RANGE OF 30" Hg THE MINOR GRADUATIONS SHALL HAVE A PRESSURE OF 2psi AND VACUUM OF 2" Hg, ¼" NPT PER SPECIFICATIONS.

SNUBBER

'PETCOCK' MODEL #A10, BRASS

NOTES:
1. PRESSURE GAUGES SHALL BE INSTALLED BY MEANS OF DRILLING AND TAPPING PIPE TO BE MONITORED. THE GAUGE SHALL THEN BE THREADED INTO THE PIPE. PROVIDE WITH SNUBBER AND PET COCK.
2. GAUGE MAY BE USED WHEREVER CRUCIAL VACUUM OR PRESSURE READINGS ARE ESSENTIAL.

5 PRESSURE/VACUUM GAUGE 6"=1'-0"

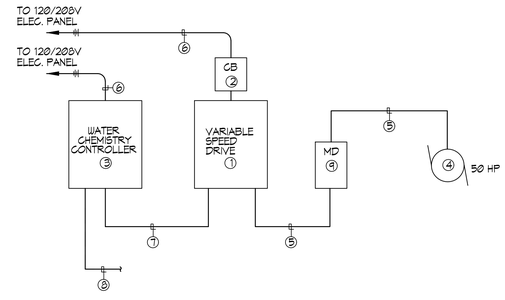

NOTES:
1. VARIABLE SPEED DRIVE MOTOR CONTROL CABINET, SEE PLANS AND SPECIFICATIONS.
2. ENCLOSED CIRCUIT BREAKER, SEE SINGLE LINE DIAGRAM.
3. WATER CHEMISTRY/FILTER CONTROL UNIT, SEE PLANS.
4. CONNECT TO CIRCULATION PUMP MOTOR, SEE PLANS.
5. MOTOR FEEDERS, SEESINGLE LINE DIAGRAM.
6. 120 VOLT BRANCH CIRCUITS, SEE PLANS.
7. ¾"C, (4) #12, (1) #12 GND. (120 VOLT CONTROL WIRING)
8. 24 VOLT SIGNAL AND SENSOR CABLING, SEE SPECIFICATIONS AND INSTALLATION INSTRUCTIONS FOR ADDITIONAL REQUIREMENTS.
9. MOTOR DISCONNECT, SEE PLANS.

6 TYPICAL WIRING SCHEMATIC AT SPCS UNIT NO SCALE

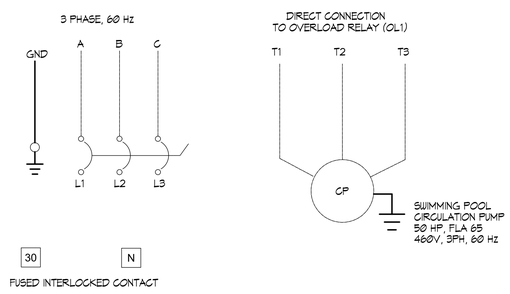

7 'SPCS' EKO-FLEX FIELD CONNECTION DIAGRAM NO SCALE

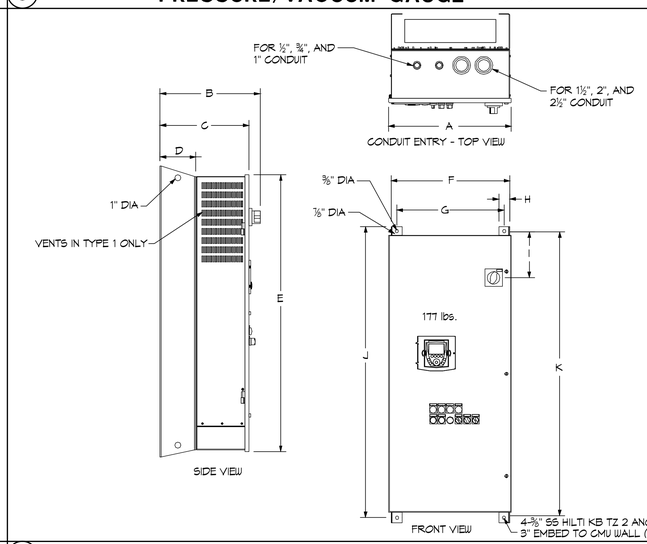

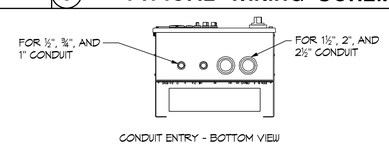

NOTE:
PROVIDE AT LEAST 3" OF MOUNTING CLEARANCE ON EACH SIDE OF THE DRIVE CONTROLLER.
PROVIDE AT LEAST 6" OF MOUNTING CLEARANCE ON EACH TOP AND BOTTOM OF THE DRIVE CONTROLLER

'SPCS' EKO-FLEX SIZING TABLE												
HP	HP	WEIGHT	DIMENSIONS									
460V	208/230V	LBS	A	B	C	D	E	F	G	H	I	J	K
30 TO 50	15 TO 25	177	20.65"	16.83"	14.83"	6.00"	46.64"	20.00"	18.04"	1.86"	7.75"	49.02"	47.83"

8 'SPCS' EKO-FLEX ENCLOSURE DIMENSIONS NO SCALE

IDENTIFICATION STAMP
DIV. OF THE STATE ARCHITECT
APP: 03-122664 INC:
REVIEWED FOR
SS ☑ FLS ☑ ACS ☑
DATE: 05/12/2023

LICENSED ARCHITECT
GREGORY S. PINHEIRO
No. C35802
REN. 07/31/25
STATE OF CALIFORNIA

pjhm architects
LA Phone: 213.278.0172 • Web: pjhm.com
LA Office: 837 Traction Avenue, #410, Los Angeles, CA 90013 • SD Phone: 760.730.5527 • OC Phone: 949.496.6191 • SD Office: 804 Pier View Way #103, Oceanside, CA 92054 • OC Office: 24461 Ridge Route Drive #100, Laguna Hills, CA 92653

LICENSED ARCHITECT
GEORG W. KRUG
No. C35585
REN. 02/25
STATE OF CALIFORNIA

AQUATIC DESIGN GROUP
2226 Faraday Ave. Carlsbad, CA 92008
AquaticDesignGroup.com
760.438.8400

HIGHLAND HIGH SCHOOL
50M POOL & AQUATICS CENTER
KERN HIGH SCHOOL DISTRICT

DETAILS

MR.6

8/9/2023 7:17:11 AM CDT

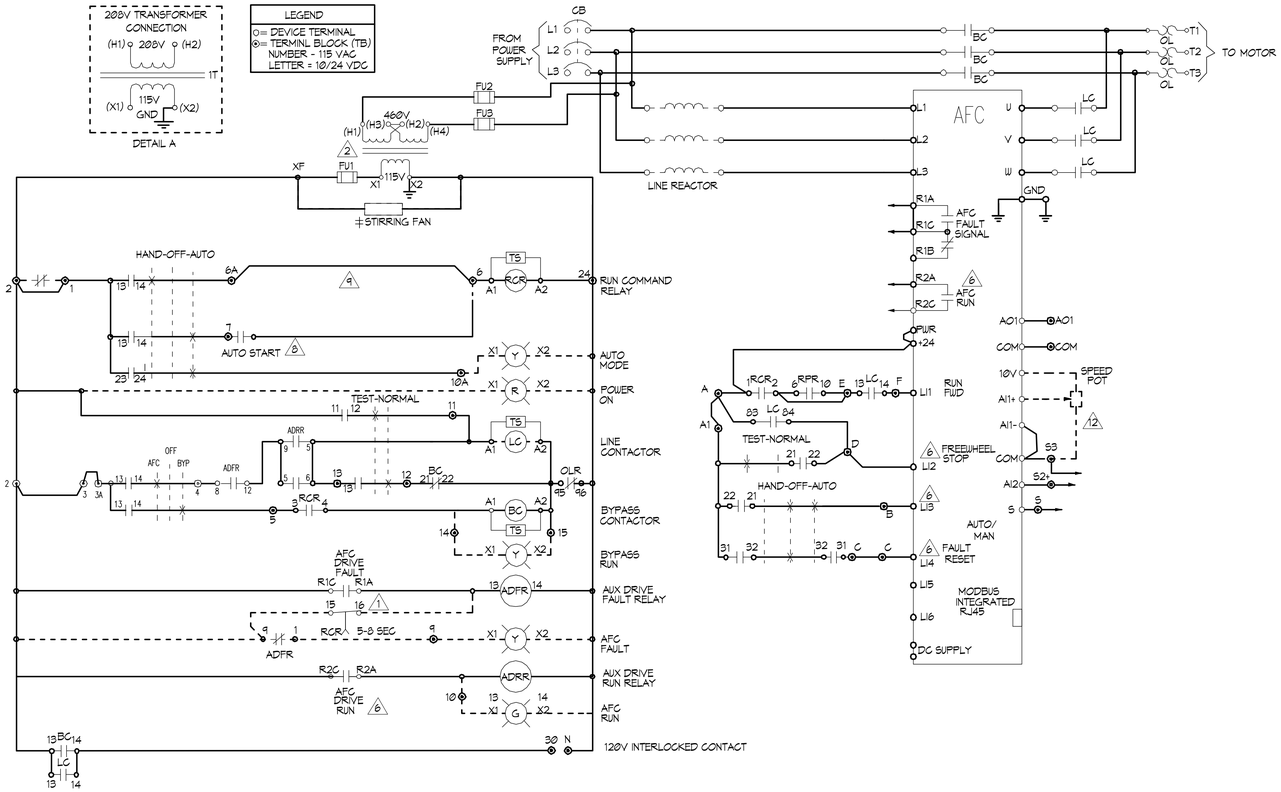

EKO-FLEX ATV61 FACTORY CONFIGURATION					
MENU	No	SUB-MENU	DESCRIPTION	CODE	ADJ.
SIM	1.1	————	2/3 WIRE CONTROL	tCC	2C
SIM	1.1	————	PUMPS FANS	CFG	PnF
SIM	1.1	————	STANDARD MOT. FREQ (HZ)	bFr	60
SIM	1.1	————	ACCELERATION (SEC)	ACC	10
SIM	1.1	————	DECELERATION (SEC)	dEC	10
SIM	1.1	————	LOW SPEED (HZ)	LSP	3
SIM	1.3	————	SWITCHING FREQ. (HZ)	SCr	8
I - O	1.5	————	2 WIRE TYPE	tCt	LEL
I - O	1.5	AI2 CONFIG.	AI2 MIN. VALUE (mA)	CrI2	4
I - O	1.5	R2 CONFIG.	R2 ASSIGN - DRIVE RUNNING	r2C	rUn
CtL	1.6	————	REF. 1 CHAN	FR1	HMI
CtL	1.6	————		FR1	AI1
CtL	1.6	————	PROFILE	CHCF	SEP
FUn	1.7	STOP CONFIG.	FREEWHEEL STOP ASSIGN	nST	LI2
FUn	1.7	REFERENCE SWITCH	REF. 1B SWITCHING	rCb	LI3
FUn	1.7	REFERENCE SWITCH	REF. 1B CHAN	Frlb	AI2
FLt	1.8	FAULT RESET	FAULT RESET	rSF	LI4
FLt	1.8	CATCH ON THE FLY	CATCH ON THE FLY	FLR	YES
FLt	1.8	OUTPUT PHASE LOSS	OUTPHASE LOSS	PDL	NO
COM	1.9	FORCED LOCAL	FORCED LOCAL ASSIGN.	FLt	LI4

DESCRIPTION	TYPE 1	TYPE 12K	TYPE 3R
‡ STIRRING FANS	10-100 HP 460V, 7.5-50HP 208/230V	10-100 HP 460V, 7.5-50HP 208/230V	NA
‡ VENTILIATION FAN	NA	NA	ALL HP
‡ SPACE HEATER	NA	NA	ALL HP

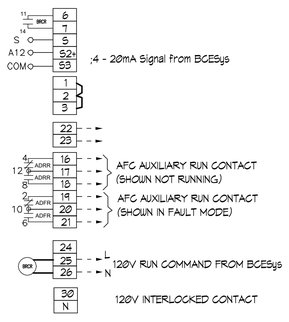

NOTES:

1. RCR TIMED CONTACT USED ONLY IF LINE CONTACTOR IS SUPPLIED
2. CONTROL TRANSFORMER SHOWN FOR 460V PRIMARY. FOR 230V PRIMARY, JUMPER H2-H3 IS
6. PROGRAMMED I/O SEE CONTROLLER FUNCTION CONFIGURATION TABLE.
8. BECs RUN COMMAND RELAY (BRCR)
9. JUMPER USED WHEN START-STOP PUSH BUTTONS NOT USED.

1 'SPCS' EKO-FLEX VARIABLE FREQUENCY DRIVE SYSTEM SCHEMATIC NO SCALE

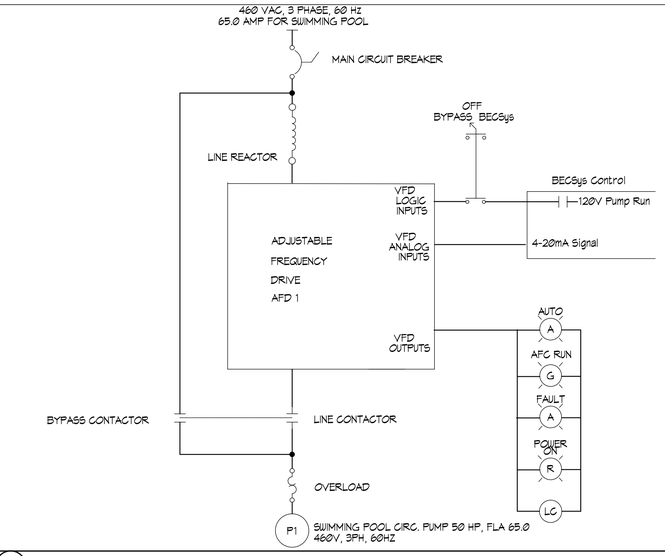

2 'SPCS' EKO-FLEX SINGLE LINE DIAGRAM NO SCALE

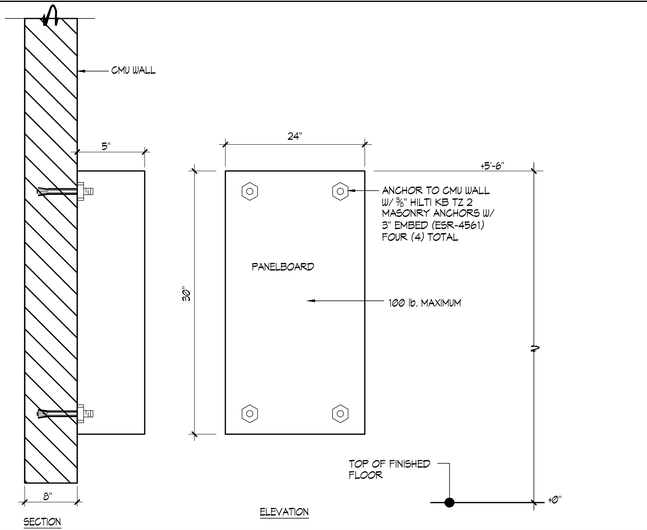

3 PANELBOARD MOUNTING DETAIL NO SCALE

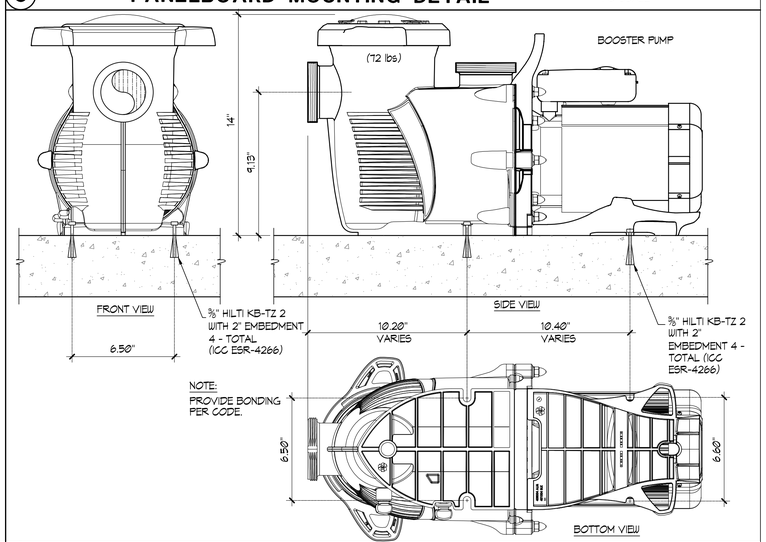

4 POOL COOLER BOOSTER PUMP ANCHORAGE 3" = 1'-0"

IDENTIFICATION STAMP
DIV. OF THE STATE ARCHITECT
APP: 03-122664 INC:
REVIEWED FOR
SS ☑ FLS ☑ ACS ☑
DATE: 05/12/2023

pjhm architects
LICENSED ARCHITECT GEORG W. KRUSE No. C13585 REN. 02/25 STATE OF CALIFORNIA
AQUATIC DESIGN GROUP
2226 Faraday Ave. Carlsbad, CA 92008
AquaticDesignGroup.com
760.438.8400
LICENSED ARCHITECT GREGORY S. ATKINS C-25802 REN. 07/31/25 STATE OF CALIFORNIA
OC Office: 24461 Ridge Route Drive #100, Laguna Hills, CA 92653 • OC Phone: 949.496.6191 • SD Office: 804 Pier View Way #103, Oceanside, CA 92054 • SD Phone: 760.730.5527 • LA Office: 837 Traction Avenue, #410, Los Angeles, CA 90013 • LA Phone: 213.278.0172 • Web: pjhm.com

HIGHLAND HIGH SCHOOL
50M POOL & AQUATICS CENTER
KERN HIGH SCHOOL DISTRICT

DETAILS

MR.7

MAY 2023 / ITEM 7.7 / 10 / 8

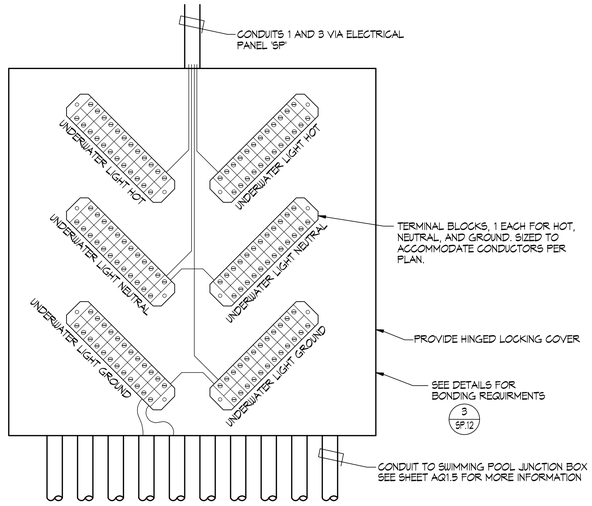

1 UNDERWATER LIGHT CONTACTOR PANEL

NO SCALE

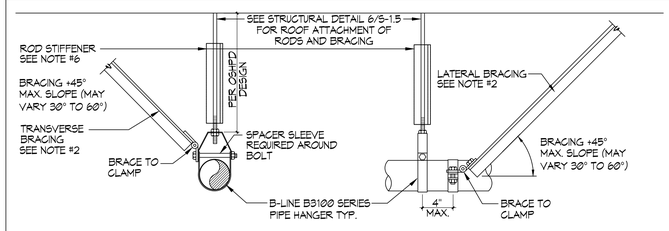

HANGER/BRACE PERPENDICULAR

HANGER/BRACE LONGITUDINAL

HANGER ROD SIZES/TABLE

⅜"ø AT 3" PIPING MAX. ROD LENGTH = 158" MAX PER OPM PG. C1.22
⅝"ø AT 4" PIPING MAX. ROD LENGTH = 158" MAX PER OPM PG. C1.34
¾"ø AT 6" PIPING MAX. ROD LENGTH = 158" MAX PER OPM PG. C1.44
¾"ø AT 8" PIPING MAX. ROD LENGTH = 158" MAX PER OPM PG. C1.44
¾"ø AT 12" PIPING MAX. ROD LENGTH = 158" MAX PER OPM PG. C1.44

MAX. PIPE HANGER SPACING

4" PIPING OR SMALLER = 6'-0" O.C.
6" PIPING = 6'-0" O.C.
8" PIPING = 6'-0" O.C.
10" PIPING = 6'-0" O.C.

NOTES:

1. REFER TO OSHPD (OPM #0043-13) FOR PIPE HANGER HARDWARE & INSTALLATION. INSTALLATION SHALL SATISFY ANCHORAGE REQUIREMENTS OF ACI 318 CHAPTER 17.
2. PROVIDE BRACING FOR EACH PIPE HANGER IN TWO DIRECTIONS AT THE FOLLOWING CONDITIONS.
   - AT EACH CHANGE IN PIPE RUN DIRECTION
   - MID LENGTH OF PIPE RUN
   - SPACING NOT TO EXCEED 12'-0" O.C.

   1⅝"x1⅝"x12GA SINGLE STRUT (5'-0" LENGTH MAX)
   1⅝"x1⅝"x12GA DOUBLE STRUT (14'-6" LENGTH MAX)
3. ALL HARDWARE SHALL BE STAINLESS STEEL OR GALVANIZED SEE SPECIFICATION FOR ADDITIONAL INFORMATION.
4. FOR COPPER TUBING USE COPPER PLATED OR PAINTED B3104GT, FELT LINED B3100F, OR PLASTIC COATED B3100C.
5. REFER TO MR.1 FOR PIPE HANGER LOCATIONS.
6. PROVIDE ROD STIFFENER WHEN TRANSVERSE OR LONGITUDINAL BRACING IS USED AND ROD LENGTHS EXCEEDS 3'T, SEE OPM DESIGN

3 'UNISTRUT' PIPING HANGER / SUPPORT DETAILS

NO SCALE

SYSTEM NO. C-AJ-2109

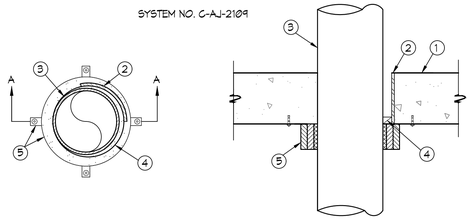

1. FLOOR OR WALL ASSEMBLY - MIN. 4½" THICK REINFORCED LIGHTWEIGHT OR NORMAL WEIGHT (100-150 pcf) CONCRETE. WALL MAY ALSO BE CONSTRUCTED OF ANY UL CLASSIFIED CONCRETE BLOCKS. MAX. DIAM. OF OPENING IS 12" SEE CONCRETE BLOCKS (CAZT) CATEGORY IN THE FIRE RESISTANCE DIRECTORY FOR NAMES OF MANUFACTURES.
2. STEELE SLEEVE - (OPTIONAL) - NOM. 12" DIAM SCHEDULE 40 (OR HEAVIER) STEEL PIPE CAST OR GROUTED INTO FLOOR OR WALL ASSEMBLY, FLUSH WITH FLOOR OR WALL SURFACES A MAX. OF 3" ABOVE THE FLOOR. IF THE STEEL SLEEVE EXTENDS ABOVE THE FLOOR, THE T RATING OF THE FIRESTOP SYSTEM IS Ø HR AND A MIN ½" ANNULAR SPACE IS REQUIRED BETWEEN THE THROUGH PENETRANT (ITEM 3) AND THE PERIPHERY OF THE OPENING. THE W RATING DOES NOT APPLY WHEN THE STEEL SLEEVE IS USED.
3. THROUGH PENETRANTS - ONE NONMETALLIC PIPE TO BE INSTALLED EITHER CONCENTRICALLY OR ECCENTRICALLY WITHIN THE FIRESTOP SYSTEM. FOR MAX. 6" DIAM. PIPES, THE ANNULAR SPACE BETWEEN THE PIPE AND THE PERIPHERY OF OPENING SHALL BE MIN. 0" TO MAX. ½". FOR NOM. 8" AND 10" DIAM. PIPES THE ANNULAR SPACE BETWEEN THE PIPE AND THE PERIPHERY OF OPENING SHALL BE MIN. Ø" TO MAX. 1⅛". IF THE STEEL SLEEVE EXTENDS ABOVE THE FLOOR (ITEM 2), A MIN. ½" ANNULAR SPACE IS REQUIRED BETWEEN THE THROUGH PENETRANT (ITEM 3) AND THE PERIPHERY OF THE OPENING. PIPE TO BE RIGIDLY SUPPORTED ON BOTH SIDES OF FLOOR OR WALL ASSEMBLY. FOR SYSTEMS WITH A W RATING, THE MAX. ANNULAR SPACE IS ½". THE T RATINGS ARE DEPENDENT ON THE SIZE AND/OR TYPE OF PIPE AS SHOWN IN THE TABLE BELOW. THE FOLLOWING TYPES AND SIZES OF NONMETALLIC PIPES MAY BE USED.
   A. POLYVINYL CHLORIDE PIPE (PVC) - NOM. 10" DIAM. (OR SMALLER) SCHEDULE 40 SOLID CORE OR CELLULAR CORE PVC PIPE FOR USE IN CLOSED (PROCESS OR SUPPLY) OR VENTED (DRAIN, WASTE OR VENT) PIPING SYSTEMS. FOR SYSTEMS WITH A W RATING, THE NOM. DIAM. OF PIPE SHALL NOT EXCEED 6".
   B. CHLORINATED POLYVINYL CHLORIDE (CPVC) PIPE - NOM. 10" DIAM. (OR SMALLER) SDR13.5 CPVC PIPE FOR USE IN CLOSED (PROCESS OR SUPPLY) PIPING SYSTEMS. FOR SYSTEMS WITH A W RATING, THE NOM. DIAM. OF PIPE SHALL NOT EXCEED 6".
   C. ACRYLONITRATE BUTADIENE STYRENE (ABS) PIPE - NOM. 6" DIAM. (OR SMALLER) SCHEDULE 40 SOLID-CORE OR CELLULAR CORE ABS PIPE FOR USE IN CLOSED (PROCESS OR SUPPLY) OR VENTED (DRAIN, WASTE OR VENT) PIPING SYSTEM.
   D. FLAME RESISTANT POLYPROPYLENE (FRPP) PIPE - NOM. 6" DIAM. (OR SMALLER) SCHEDULE 40 FRPP PIPE FOR USE IN CLOSED (PROCESS OR SUPPLY) OR VENTED (DRAIN, WASTE OR VENT) PIPING SYSTEMS.

PVC PIPE	NOM. PIPE DIAM. IN	F RATING HR
PVC, CPVC	GREATER THAN 6	2
PVC, CPVC, ABS, FRPP	6 OR SMALLER	3
PVC PIPE	NOM. PIPE DIAM. IN	T RATING HR
PVC, CPVC, ABS, FRPP	1½, 2, 3,	2
PVC, CPVC, ABS, FRPP	4	3
PVC, CPVC, ABS+, FRPP	6	3
PVC, CPVC	GREATER THAN 6	Ø
ABS ++	6	Ø

\+ INDICATES SOLID CORE ABS ONLY
++ INDICATES CELLULAR CORE ABS ONLY

4. FILL, VOID OR CAVITY MATERIAL* - SEALANT - MIN. ¼" THICKNESS OF FILL MATERIAL APPLIED WITHIN THE ANNULUS, FLUSH WITH TOP OR BOTTOM SURFACE OF FLOOR OR BOTH SURFACES OF WALL. SEALANT IS OPTIONAL FOR PIPES HAVING A MAX. DIAM. OF 6" IN UNSLEEVED OPENINGS. FOR SYSTEMS WITH W RATING AND/OR L RATING MIN. ½" THICKNESS OF CP 601S, CFS-S SIL SL (FLOORS ONLY) SEALANT SHALL BE APPLIED WITHIN THE ANNULUS, FLUSH WITH TOP OR BOTTOM SURFACE OF FLOOR. HILTI CONSTRUCTION CHEMICALS, DIV. OF HILTI INC. - FS-ONE MAX INTUMESCENT SEALANT, CP 601S SEALANT, CFS-S SIL GG, CFS-S SIL SL (FLOORS ONLY) SEALANT.

4A. PACKING MATERIAL - (NOT SHOWN) - MIN. ¼" THICKNESS OF 4 pcf MINERAL WOOL BATT INSULATION FIRMLY PACKED INTO ANNULAR SPACE AND RECESSED FROM THE TOP SURFACE OF FLOOR TO ACCOMODATE THE REQUIRED THICKNESS OF FILL MATERIAL. REQUIRED ONLY WHEN CP 604 SEALANT IS USED.

5. FIRESTOP DEVICE - FIRESTOP COLLAR - FIRESTOP COLLAR SHALL BE INSTALLED IN ACCORDANCE WITH THE ACCOMPANYING INSTRUCTIONS. COLLAR TO BE INSTALLED AND LATCHED AROUND THE PIPE AND SECURED TO UNDERSIDE OF FLOOR OR BOTH SIDES OF WALL USING THE ANCHOR HOOKS PROVIDED WITH THE COLLAR. MINIMUM TWO ANCHOR HOOKS FOR NOM. 1½" AND 2" DIAM. PIPES. MINIMUM THREE ANCHOR HOOKS REQUIRED FOR NOM. 3" AND 4" DIAM. PIPES. MINIMUM FOUR ANCHOR HOOKS REQUIRED FOR NOM. 6" DIAM. PIPES. MINIMUM 10 ANCHOR HOOKS REQUIRED FOR NOM. 8" DIAM. PIPES. MINIMUM TWELVE ANCHOR HOOKS REQUIRED FOR NOM. 10" DIAM. PIPES. THE ANCHOR HOOKS ARE TO BE SECURED WITH MIN. ¼" DIAM. BY MIN. 1⅛" LONG STEEL EXPANSION BOLTS OR MIN. Ø.145" DIAM. BY 1¼" LONG POWDER ACTUATED FASTENERS UTILIZING A 1 7/16" DIAM. BY 1/16" THICK STEEL WASHER. AS ALTERNATES TO THE ANCHORS SPECIFIED ABOVE, HILTI ¼" DIAM. BY 1¼" LONG KWIK-CON II + CONCRETE SCREW ANCHOR, HILTI ¼" DIAM. BY 1⅜" LONG KWIK-BOLT 3 STEEL EXPANSION ANCHOR OR HILTI X-DNI 21 P8 S15 POWDER ACTUATED FLOOR PIN WITH INTEGRAL NOM. 9/16" DIAM. WASHER MAY BE USED.
HILTI CONSTRUCTION CHEMICALS, DIV. OF HILTI INC. - CP 643N 50/1.5", CP 643N 63/2", CP 643N 90/3", CP 643N 110/4", CP 643 160/6", CP 644-200/8" OR US OR CP 644-250/10" US FIRESTOP COLLAR.

* INDICATES SUCH PRODUCTS SHALL BEAR THE UL CERTIFICATION MARK FOR JURISDICTIONS EMPLOYING THE UL.

2 PIPE PENETRATION THRU 1-HR OR 2-HR WALL DETAIL

NO SCALE

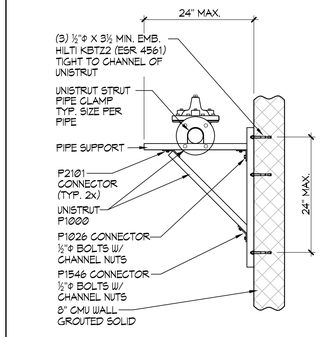

EXTENDED WALL MOUNTED PIPE SUPPORT

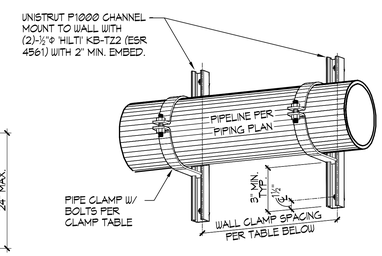

WALL MOUNTED PIPE SUPPORT

MAX. PIPE HANGER SPACING

4" PIPING OR SMALLER = 6'-0" O.C.
6" PIPING = 6'-0" O.C.
8" PIPING = 6'-0" O.C.
12" PIPING = 4'-0" O.C.
14" PIPING = 4'-0" O.C.

CLAMP SIZES		
PIPE SIZE	MAX. SPACG	CLAMP MODEL
1½"	4'-0"	P1115
2"	4'-0"	P1117
2½"	4'-0"	P1118
3"	4'-0"	P1119
4"	6'-0"	P1121
6"	8'-0"	P1124
8"	8'-0"	P1126

4 WALL MOUNTED PIPE SUPPORT

NO SCALE

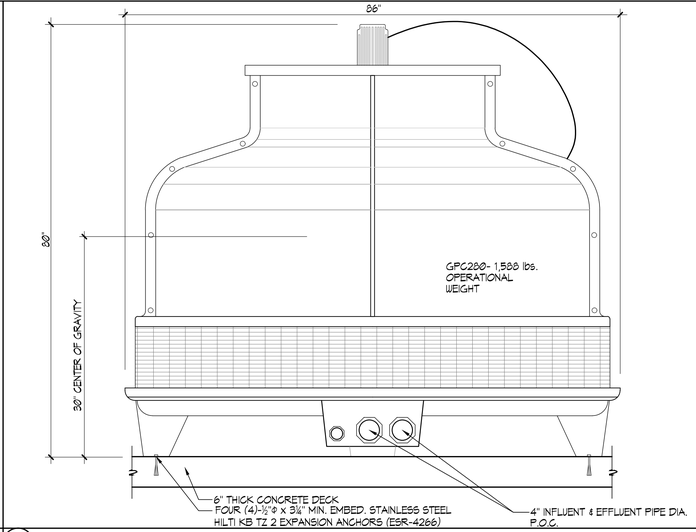

5 POOL CHILLER DETAIL

NO SCALE

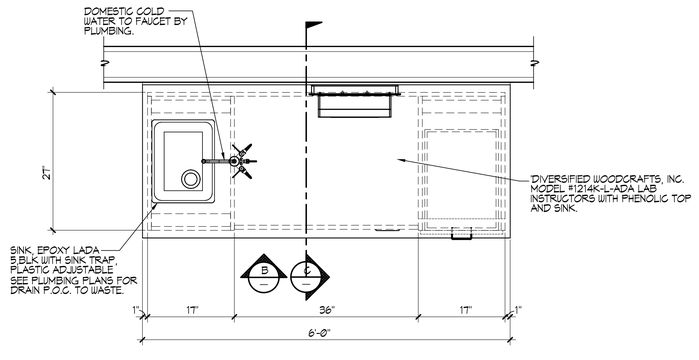

A PLAN VIEW

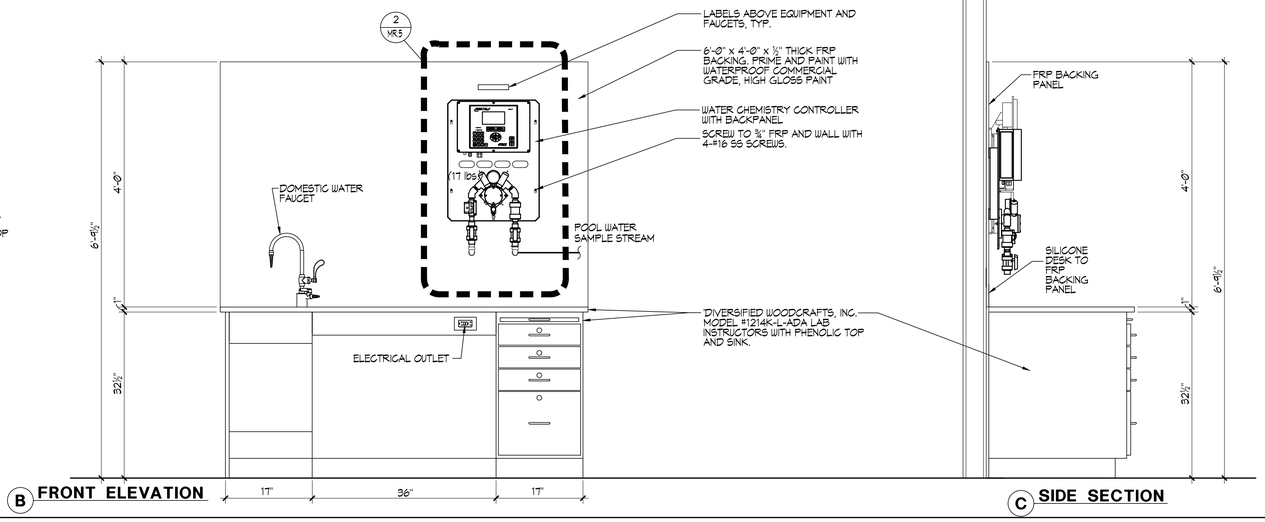

B FRONT ELEVATION

C SIDE SECTION

6 POOL OPERATOR WORKSTATION DESK DETAIL

1"=1'-0"

IDENTIFICATION STAMP
DIV. OF THE STATE ARCHITECT
APP: 03-122664 INC:
REVIEWED FOR
SS ☑ FLS ☑ ACS ☑
DATE: 05/12/2023

pjhm architects

LICENSED ARCHITECT
GREGORY S. REED
No. C15585
REN. 02/25
STATE OF CALIFORNIA

AQUATIC DESIGN GROUP
2226 Faraday Ave, Carlsbad, CA 92008
AquaticDesignGroup.com
760.438.8400

LICENSED ARCHITECT
GREGORY S. REED
C-15802
REN. 07/31/25
STATE OF CALIFORNIA

OC Office: 24461 Ridge Route Drive #100, Laguna Hills, CA 92653 • OC Phone: 949.496.6191 • SD Office: 804 Pier View Way #103, Oceanside, CA 92054 • SD Phone: 760.730.5527 • LA Office: 837 Traction Avenue, #410, Los Angeles, CA 90013 • LA Phone: 213.278.0172 • Web: pjhm.com

HIGHLAND HIGH SCHOOL
50M POOL & AQUATICS CENTER

KERN HIGH SCHOOL DISTRICT

DETAILS

MR.8

10/30/2023 7:11:11 AM

NOTE:

THERMOSTAT PROBE GOES INTO A DRYWELL, THEN IS PLACED DIRECTLY INTO INLINE PIPING OR PVC FITTING BEFORE CHILLER INLET. T-STAT ELEC. WIRING GOES TO CONRTACTOR TO THE SINGLE POLE PORT. FAN WIRING IS CONNECTED TO THE 3-POLE PORT. THE T-STAT CONTROLS THE POWER TO THE FAN (ONLY) FOR COOLING. THE T-STAT REQUIRES 115 LEG FROM 1 PH BREAKER. REFER TO CHILLER TECHNICAL SPECIFICATION FOR ADDITIONAL INFORMATION.

ELECTRICAL WITHOUT SUMP PUMP SYSTEM

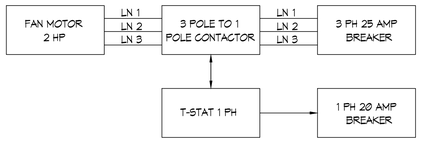

1 POOL COOLER ELECTRICAL DIAGRAM

NO SCALE

IDENTIFICATION STAMP
DIV. OF THE STATE ARCHITECT
APP: 03-122664 INC:
REVIEWED FOR
SS ☑ FLS ☑ ACS ☑
DATE: 05/12/2023

pjhm architects

LICENSED ARCHITECT
THOMAS W. KRUSE
No. C35585
REN. 02/25
STATE OF CALIFORNIA

AQUATIC DESIGN GROUP
2226 Faraday Ave. Carlsbad, CA 92008
AquaticDesignGroup.com
760.438.8400

LICENSED ARCHITECT
GREGORY S. [illegible]
C35802
REN. 07/31/23
STATE OF CALIFORNIA

OC Office: 24461 Ridge Route Drive #100, Laguna Hills, CA 92653 • OC Phone: 949.496.6191 • SD Office: 804 Pier View Way #103, Oceanside, CA 92054 • SD Phone: 760.730.5527 • LA Office: 837 Traction Avenue, #410, Los Angeles, CA 90013 • LA Phone: 213.278.0172 • Web: pjhm.com

HIGHLAND HIGH SCHOOL
50M POOL & AQUATICS CENTER

KERN HIGH SCHOOL DISTRICT

DETAILS

MR.9

8/3/2023 11:11:20 AM

GENERAL NOTES:

APPLICABLE BUILDING CODE

All construction and workmanship shall conform to the 2019 California Building Code, California Code of Regulations – Title 24, Parts 1 & 2.

This pole and foundation standard has been designed for lateral loads on the completed structure as follows:

Wind Design Data:
- Vult = 94 MPH (Exposure C); Vasd = 73 MPH (Exposure C)
- Risk Category = II
- See Pole Foundation Schedule for maximum pole wind forces.

Seismic Design Data:
- Ie = 1.0
- Risk Category = II (Self Supporting Poles)
- Ss = 0.916
- S1 = 0.329
- Site Class = D
- Sds = 0.693
- Sd1 = 0.432
- Seismic Design Category = D
- Basic Seismic-Force-Resisting System = Non-Building Structure, not similar to buildings
- Cs = 0.330 (STRENGTH LEVEL)
- R = 1.5
- Ω = 1.5
- Analysis Procedure = Equivalent Lateral Force Procedure
- See Pole Foundation Schedule for maximum pole seismic forces.

GENERAL CONSTRUCTION

These notes shall be used in conjunction with the plans and any discrepancies shall be brought to the attention of the Registered Design Professional (RDP) in Responsible Charge.

Contractor must check all dimensions, clearances and job conditions before starting work. The RDP in Responsible Charge shall be notified immediately of any discrepancies or possible deficiencies.

The drawings and specifications represent the finished structure. All bracing, temporary supports, shoring, etc., is the sole responsibility of the Contractor. Observation visits to the job site by the RDP in Responsible Charge do not include inspection of construction procedures. The Contractor is solely responsible for all construction methods and for safety conditions at the worksite. These visits by RDP in Responsible Charge shall not be construed as continuous and detailed inspections.

Design, material, equipment, and products other than those described below or indicated on the drawings may be considered for use, provided prior approval is obtained from the School District, the RDP in Responsible Charge, and DSA.

All changes to the approved plans after a contract for construction has been awarded, affecting structural, access or life-safety portions of the project, shall be made by means of construction change documents (CCD) approved by DSA, as required by Section 4-338, Part 1, Title 24, CCR. All CCD shall be prepared and signed by the RDP in general Responsible Charge.

Substitutions shall be considered as a CCD and shall be approved by DSA prior to fabrication or use.

A Class 1 or Class 2 Project Inspector employed by the School District (Owner) and approved by DSA shall provide continuous inspection of the work, the duties of the Inspector are defined in Section 4-342, Part 1, Title 24, CCR.

All Tests And Inspections shall be performed by an Independent lab employed by the School District and approved by DSA.

Reference pole location on the Architectural, Structural, and/or Electrical drawings for actual pole placement and site location. Pole shall be located 5'-0" min. from adjacent structures below 50'-0" A.G.L., unless noted otherwise.

LIGHT POLE FOUNDATIONS

Reference geotechnical report prepared by Soils Engineering, Inc., Dated August 5, 2022; Project no. 22-18353.

Allowable Vertical soil Capacity – 3,000 PSF (End Bearing), 300 PSF (Skin Friction), neglect top 1 FT of soil.

Allowable Lateral Bearing capacity: 150 PSF/FT to maximum 2,250 PSF. Values may be doubled for piers not affected by half-inch motions at the ground.

A representative of Soils Engineering, Inc. should be available at the time of the foundation installation to verify the soil design parameters and to provide assistance if any problems arise in foundation installation.

The Contractor must familiarize himself with the complete geotechnical report, and borings and contact the above firm to understand the soil conditions and the possibility of ground water pumping and excavation stabilization or bracing during the foundation installation and placement of concrete.

Soil formations that will require special design considerations or excavation procedures may exist. Pole foundations may need to be reanalyzed according to the soil conditions that exist.

If any discrepancies or inconsistencies arise, notify the RDP in Responsible Charge of such discrepancies.

All piers and concrete must bear on and against firm undisturbed soil as determined by the Geotechnical Engineer.

Place plywood collar around perimeter at the top of foundation excavation to prevent soil from entering pier.

All excavations must be free of loose soil, and debris prior to foundation installation and placement of concrete. Casing or drilling slurry may be required if caving occurs. Review and approval of the Geotechnical Engineer and DSA is required.

All excavations must be free of water or concrete shall be placed by the Tremie Method in accordance with ACI standard 336. Concrete placed by the Tremie Method shall have a minimum ultimate strength of 1,000 PSI greater than required under "Concrete Cast-in-Place' and a maximum slump of 8".

CONCRETE (CAST-IN-PLACE)

Concrete pier foundations with steel reinforcement shall attain a minimum ultimate compressive strength at 28 day test of 3,000 psi. Batch plant inspection not required.

All concrete shall attain a minimum strength of 2,500 psi prior to steel pole erection.

Use Type II/V Portland cement or as directed by the Geotechnical Engineer.

Portland Cement ASTM C-150.

Aggregate ASTM C-33. 1" maximum aggregate size. ⅜" max agg. size not permitted.

Mix in conformance with ASTM C-94, ACI 318 SECTIONS 19.2 and 26.4.

Place concrete immediately after completion of excavation and inspection by the Geotechnical Engineer and the DSA Inspector. Under no circumstances shall piers be allowed to remain open for more than 12 hours without the approval of the Geotechnical Engineer. Excavations shall be covered and protected until filled with concrete.

Concrete shall be placed in one continuous operation (no construction joint) with special equipment to assure a maximum freefall of 5 ft and to prevent concrete from striking the sides of the excavation. Freefall of concrete is unacceptable through water or drilling slurry.

Vibrate concrete full depth, except for concrete with slump greater than 6", then vibrate only upper 10'-0". Concrete placed under water shall have a slump of 6"-8".

STEEL POLE

Steel pole sections conform to the California Code of Regulations T.24, Part 2, Chapter 22A.

All steel conforms to referenced ASTM specifications. (See Pole Data Table for each pole type).

All weldment conforms with AWS D1.1-15 specification for GMAW fillet utilizing E70S-X filler metal or SAW fillet utilizing F7XX-EXXX or F8XX-EXXX filler metal.
GMAW procedure conforms to AWS A5.18.
SAW procedure conforms to AWS A5.23.

Longitudinal seam welds for pole sections shall have 60% minimum penetration; Except longitudinal seam welds on the female section of telescopic field splices shall be full penetration groove welds for a length equal to the minimum splice length plus 6 inches. See drawing number MD1 for seam weld details.

Pole sections hot dipped galvanized to ASTM A123 latest standards.

All miscellaneous structural steel items conform to AISC 360-16.

Steel pole sections shall be assembled in the field by attaching two 1.5 ton "come alongs" to jacking ears, using full effort on each simultaneously, to ensure minimum overlaps as indicated on the "MS" sheet(s) and detail G/MD1.

PRECAST BASE

The precast concrete base conforms to California Code of Regulations, T.24, part 2, Chapter 19A and to Building Code Requirements for Reinforced Concrete, ACI 318-14.

See detail "A" on "MS" sheet(s) for material strengths and specifications.

TESTING AND INSPECTION

Testing and inspection in accordance with Title 24, Part 1 & Part 2 & project DSA 103 form.

EXCAVATIONS & FOUNDATIONS:
Inspection of cast-in-place deep foundations – 1705A.8 & Table 1705A.8

CONCRETE MATERIALS: 1903A.1
Portland cement – 1910A.1
Concrete aggregates – 1903A.5
Reinforcing bars – 1910A.2 & DSA IR 17-10
Prestressing steel and anchorages – 1910A.3

CONCRETE QUALITY:
Proportions of concrete – Reference ACI 318 Section 26.4.3.1 Through 26.4.4.1.
Strength tests of concrete – 1905A.1.15 and ACI 318 Section 26.12 & 26.5.3.2.

CONCRETE INSPECTION: 1705A.3 & Table 1705A.3
Job site – Reference ACI 318 Section 26.5.1,26.5.2.1(a) & (b),26.6.1.2(d), 26.11.1.1(a).
Batch Plant Inspection Not Required – 1705A.3.3.2
Prestressed concrete – 1704A.2.5, 1705A.3.4

STEEL MATERIALS:
Structural steel – 2202A.1 & 2205A.1
Cold formed steel – 2210A.1
Identification – 2202A.1

STEEL QUALITY:
Tests of structural steel & cold formed steel – 2202A.1

STRUCTURAL STEEL INSPECTIONS: Table 1705A.2.1
Shop fabrication inspection – 1704A2.5
Welding – 1705A.2.5, DSA IR 17-3 and AWS D1.1.
(NOTE: ALL WELDING SHALL BE CONTINUOUSLY INSPECTED BY AN AWS CWI CERTIFIED INSPECTOR APPROVED BY DSA)

These plans are for construction approval. An application number and approval of these drawings by the Division of The State Architect of California must be secured to build from these plans.

INDEX OF SHEETS

MT1	NOTES, FOUNDATION DETAIL
MS1	50B POLE DETAILS
MD1	ATTACHMENT DETAILS
MD2	ATTACHMENT DETAILS
MD3	ATTACHMENT DETAILS

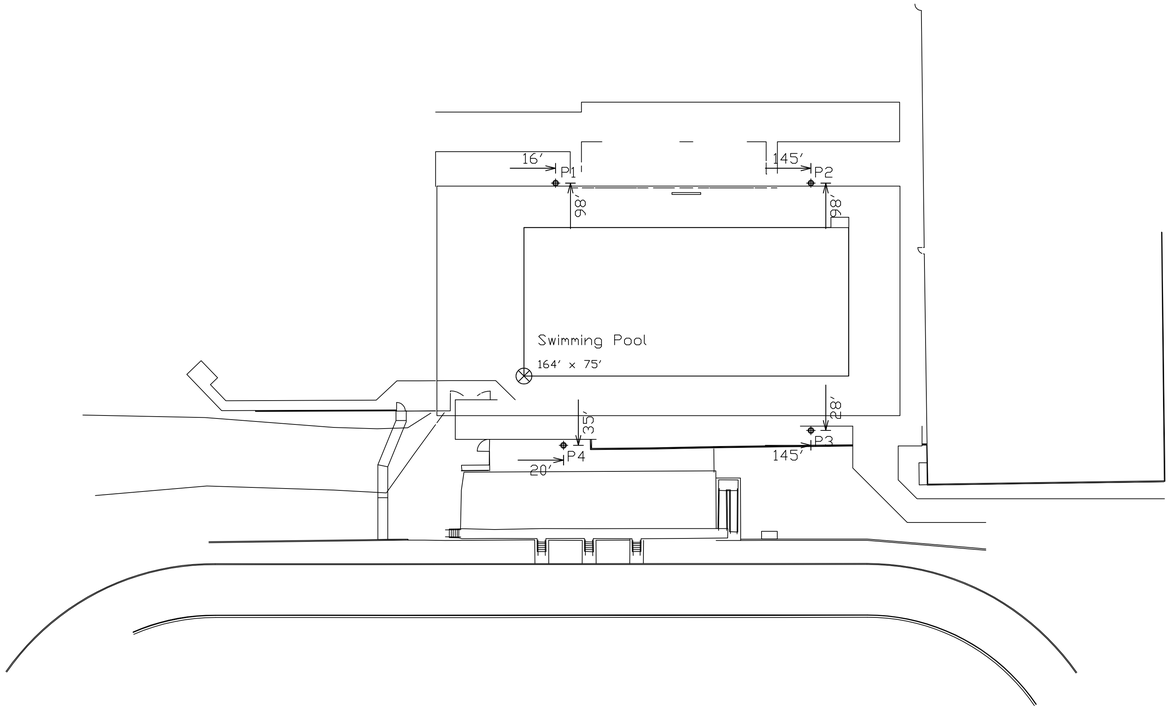

POLE ORIENTATION PLAN
N.T.S.

NOTE: THIS PLAN IS A PICTORAL REPRESENTATION OF THE SITE LAYOUT. REFERENCE APPROPRIATE ARCHITECTURAL SITE PLAN FOR ALL NECESSARY INFORMATION.

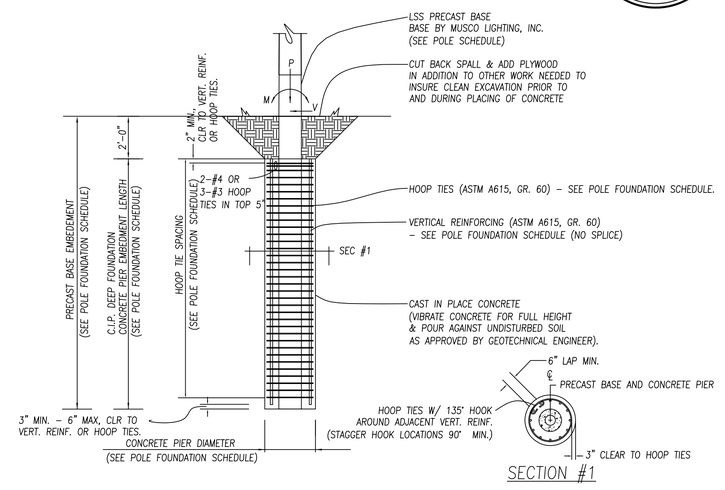

SECTION #1

A REINFORCED FOUNDATION DETAIL
N.T.S. DSA-A2-CASFND_A

POLE FOUNDATION SCHEDULE

POLE TYPE-# OF FIXTURES (MAX) (LSS=LIGHT STRUCTURE)	MARK (SEE POLE ORIENTATION PLAN)	WIND OR SEISMIC (SEISMIC FORCE INCLUDES OVERSTRENGTH FACTOR=1.5)	ASD LEVEL FORCES (MAX)			C.I.P. DEEP FOUNDATION				PRECAST BASE
			MOMENT (M) FT-LBS*	SHEAR (V) LBS	VERTICAL (P) LBS**	DIAMETER INCHES	EMBEDMENT FEET (SEE NOTE BELOW)	VERTICAL REINFORCING (ASTM A615, GR 60)	HOOP TIE SIZE & SPACING (ASTM A615, GR 60)	EMBEDMENT FEET
LSS50B-4	P1-P4	SEISMIC	21,600	669	1,930	36"	8'-0"	8-#8	#4 @ 6" O.C.	10'-0"
		WIND	27,300	822	1,153					

*Moment (M) computed below grade at Shear (V) = 0.
**Vertical (P) load includes steel pole, light fixtures, and attachments. Vertical (P) load for wind is the dressed pole weight for erection purposes. Vertical (P) load for seismic also includes weight of precast base above groundline. Reference Detail "A" on MS Sheet(s) for precast base weight.
Note:
Final Embedment to be determined in the field by the Geotechnical Engineer of Record

Information contained herein is the confidential property of Musco Sports Lighting, LLC and/or its parent companies, affiliates, successors and assigns. Reproduction, distribution, or use of the information other than its limited, intended purpose without express written permission is prohibited.
Musco products referenced or shown are protected by one or more of the following patents. U.S. Patents: 4947303; 4994718; 5075828; 5134557; 5161883; 5211473; 5229681; 5377611; 5398478; 5423281; 5426577; 5600537; 5794387; 5856721; 6036338; 6203176; 6250596; 6340790; 6398392; 6681110; 6833675; 6929385; 6969034; 6988697; 7059572; D337168; D353797; D353911; D411096. Other patents pending.

DSA-TITLE1_E

IDENTIFICATION STAMP
DIV. OF THE STATE ARCHITECT
APP: 03-122664 INC:
REVIEWED FOR
SS ☑ FLS ☑ ACS ☑
DATE: 05/12/2023

Highland HS Pool
FIELD LIGHTING
Bakersfield,CA

LICENSED ARCHITECT
THOMAS W. KRAUS
No. C15585
REN. 02/25
STATE OF CALIFORNIA

REGISTERED PROFESSIONAL ENGINEER
No. 4506
Exp. 6-30-23
STRUCTURAL
STATE OF CALIFORNIA

CONSULTANT
KNA STRUCTURAL ENGINEERS
9931 Irvine Center Drive, Irvine, CA 92618
TEL (949) 460-2020 FAX (949) 460-2021
www.KNAstructural.com
KNA JOB NO.: 463.116

musco Lighting
CORPORATE OFFICE:
P.O. Box 808
100 1st Avenue West
Oskaloosa, Iowa 52577
800/825-6020

DRAWING TITLE: NOTES, FOUNDATION DETAIL
SCALE: SEE PLAN
REVISIONS:
REFERENCE:

PROJECT NO. 221419

DATE: 10/18/2022

DRAWN BY: C.Hensley

DRAWING NO. MT1
1 OF 5

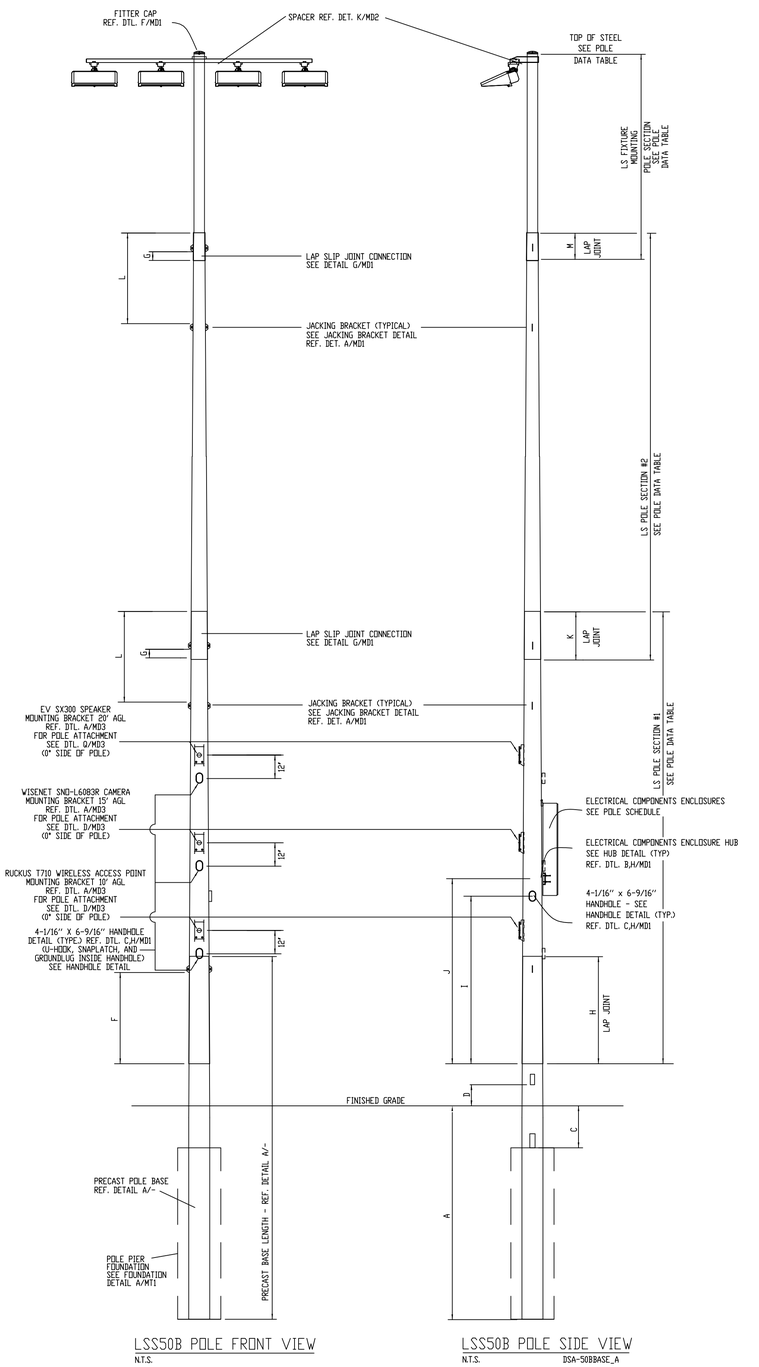

LSS50B POLE FRONT VIEW
N.T.S.

LSS50B POLE SIDE VIEW
N.T.S. DSA-50BBASE_A

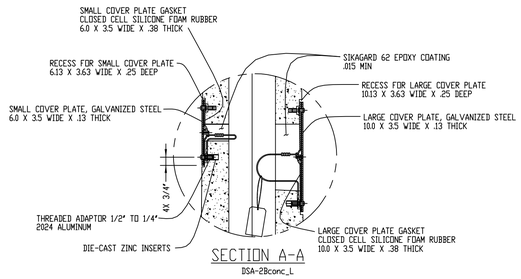

SECTION A-A
DSA-2Bconc_L

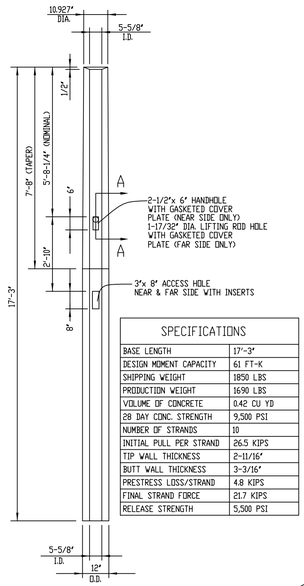

SPECIFICATIONS	
BASE LENGTH	17'-3"
DESIGN MOMENT CAPACITY	61 FT-K
SHIPPING WEIGHT	1850 LBS
PRODUCTION WEIGHT	1690 LBS
VOLUME OF CONCRETE	0.42 CU YD
28 DAY CONC. STRENGTH	9,500 PSI
NUMBER OF STRANDS	10
INITIAL PULL PER STRAND	26.5 KIPS
TIP WALL THICKNESS	2-11/16"
BUTT WALL THICKNESS	3-3/16"
PRESTRESS LOSS/STRAND	4.8 KIPS
FINAL STRAND FORCE	21.7 KIPS
RELEASE STRENGTH	5,500 PSI

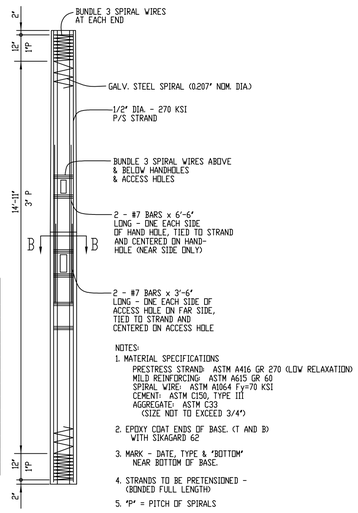

NOTES:
1. MATERIAL SPECIFICATIONS
   PRESTRESS STRAND: ASTM A416 GR 270 (LOW RELAXATION)
   MILD REINFORCING: ASTM A615 GR 60
   SPIRAL WIRE: ASTM A1064 Fy=70 KSI
   CEMENT: ASTM C150, TYPE III
   AGGREGATE: ASTM C33
   (SIZE NOT TO EXCEED 3/4")
2. EPOXY COAT ENDS OF BASE. (T AND B)
   WITH SIKAGARD 62
3. MARK - DATE, TYPE & "BOTTOM"
   NEAR BOTTOM OF BASE.
4. STRANDS TO BE PRETENSIONED -
   (BONDED FULL LENGTH)
5. "P" = PITCH OF SPIRALS
6. EPOXY COAT INSIDE SURFACES AT EACH HOLE
   WITH SIKAGARD 62 .015 MIN.

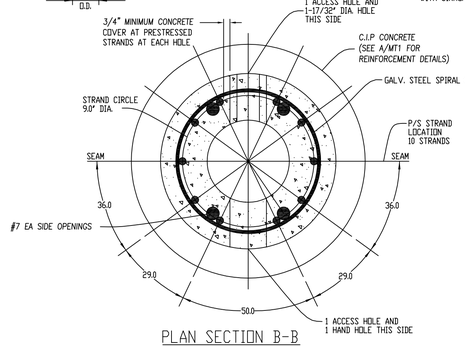

PLAN SECTION B-B

A TYPE 2B PRECAST BASE DETAIL
N.T.S. DSA-2Bconc_L

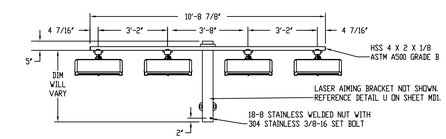

B 4 FIXTURE CONFIGURATION
N.T.S. DSA-4C-WEDGE4_A

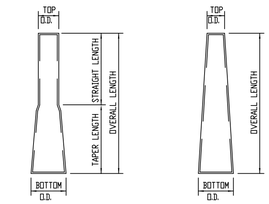

FIXTURE MOUNTING POLE SECTION

TOP/MIDDLE/BOTTOM POLE SECTION

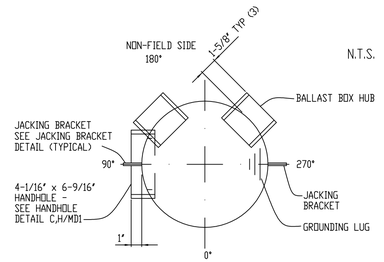

POLE ORIENTATION
N.T.S.

NOTATION	DIMENSION LSS50B
A	10'-0"
C	2'-0" NOM.
D	1'-0" NOM.
F	4'-4" NOM.
G	1'-6"
H	5'-1 1/4" NOM. 4'-7 3/8" MIN.
I	7'-7 1/2" NOM.
J	8'-9 1/2" NOM.
K	3'-7 1/4" NOM. 1'-10 1/4" MIN.
L	4'-7" NOM.
M	1'-10" NOM. 1'-3" MIN.

1. CONTAINS COMBINED EPA OF LIGHT FIXTURES, CROSS ARM AND MISCELLANEOUS FIXTURE MOUNTING APPARATUS.

FIXTURE WEIGHT 528 LBS. THIS INCLUDES THE WEIGHT OF FIXTURE, CROSS ARM & MISC. MOUNTING APPARATUS. ELECTRICAL BALLAST BOX WEIGHT 20 LBS PER FIXTURE SERVICED

POLE SCHEDULE

SITE LOCATION	POLE MARK	REFERENCE LOCATION	POLE TYPE	FIXTURE CONFIGURATION	TOTAL EPA[1]	BALLAST BOX REQUIREMENTS
SEE SITE PLAN (BY OTHERS)	P1-P4	SEE POLE ORIENTATION PLAN	LSS50B	4 - SEE DETAIL B/MS1	10.74	SEE DETAIL 0,0,/MD1

DSA-POLESCHE_C

POLE DATA TABLE

POLE TYPE	PIECE MARK	MAX NUMBER of X-Arms	POLE SECTION	TOP O.D. (INCHES)	BTM. O.D. (INCHES)	OVERALL LENGTH	STRAIGHT LENGTH	TAPER LENGTH	THICKNESS (INCHES)	TOP OF STEEL NOMINAL	ASTM REFERENCE
LSS50B	LS-2009	1	FIXTURE MOUNTING	6.000"	6.505"	5'-3"	3'-5"	1'-10"	.120	50'-0 7/8"	A513 (Fy=38ksi)
	MP-1TTDSA-2		#2	5.980"	9.630"	26'-0 7/8"	-----	26'-0 7/8"	.120	-----	A595A (Fy=55 ksi) or A572, Gr 55 or 65
	MP-1BT-D		#1	8.886"	12.000"	22'-2 7/8"	-----	22'-2 7/8"	.179	-----	A595A (Fy=55 ksi) or A572, Gr 55 or 65
	MP-2BDSA		PRECAST BASE			FOR PRECAST MEMBER PROPERTIES SEE PRECAST BASE DETAIL A/-					

DSA-50BDT_H

DSA-50_A

IDENTIFICATION STAMP
DIV. OF THE STATE ARCHITECT
APP: 03-122664 INC:
REVIEWED FOR
SS ☑ FLS ☑ ACS ☑
DATE: 05/12/2023

Highland HS Pool
FIELD LIGHTING
Bakersfield,CA

REGISTERED PROFESSIONAL ENGINEER
No. 4506
Exp. 6-30-23
STRUCTURAL
STATE OF CALIFORNIA

CONSULTANT
KNA STRUCTURAL ENGINEERS
9931 Muirfield Drive, Irvine, CA 92618
Tel (949) 462-2200 • Fax (949) 462-2301
www.knastructural.com
KNA JOB NO.: 463.116

musco Lighting
CORPORATE OFFICE:
P.O. Box 808
100 1st Avenue West
Oskaloosa, Iowa 52577
800/825-6020

LICENSED ARCHITECT
THOMAS W. ARNOLD
No. 61585
REN. 02/25
STATE OF CALIFORNIA

DRAWING TITLE: POLE DETAIL
SCALE: SEE PLAN
REVISIONS:
REFERENCE:

PROJECT NO. 221419

DATE: 10/18/2022

DRAWN BY: C.Hensley

DRAWING NO. MS1

2 OF 5

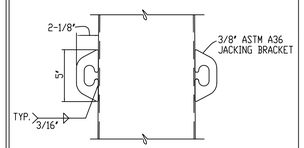

A JACKING BRACKET DETAIL
N.T.S. DSA-3RDSHEET_T

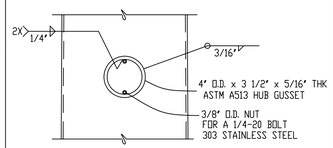

B HUB DETAIL
N.T.S. DSA-3RDSHEET_T

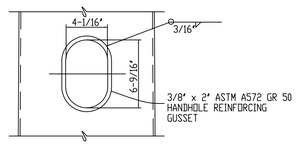

C HANDHOLE SLEEVE DETAIL
N.T.S. DSA-3RDSHEET_T

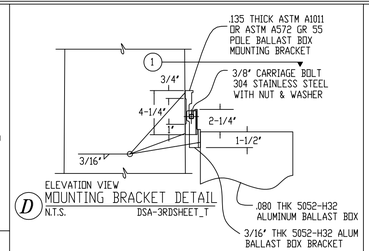

ELEVATION VIEW
D MOUNTING BRACKET DETAIL
N.T.S. DSA-3RDSHEET_T

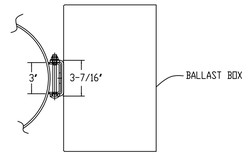

PLAN VIEW 1

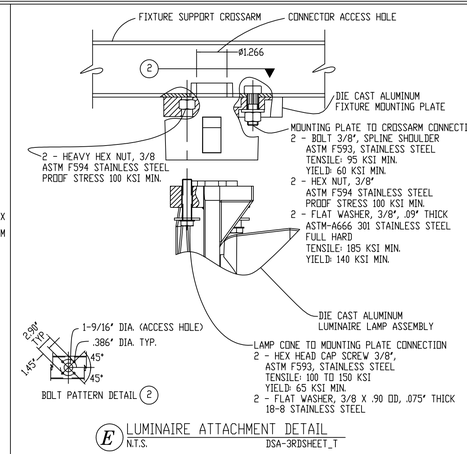

E LUMINAIRE ATTACHMENT DETAIL
N.T.S. DSA-3RDSHEET_T

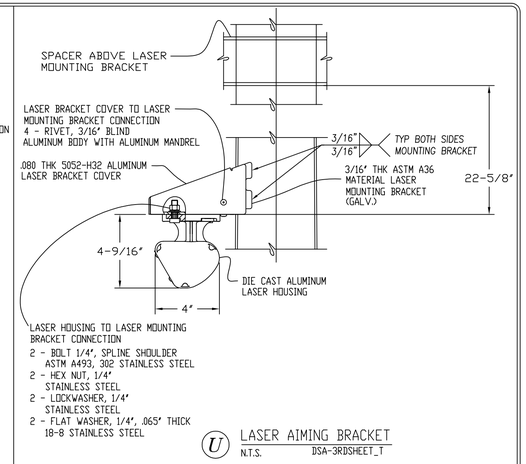

U LASER AIMING BRACKET
N.T.S. DSA-3RDSHEET_T

G SLIP JOINT CONNECTION DETAIL
N.T.S. DSA-LAP

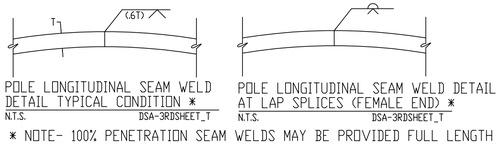

POLE LONGITUDINAL SEAM WELD
DETAIL TYPICAL CONDITION *
N.T.S. DSA-3RDSHEET_T

POLE LONGITUDINAL SEAM WELD DETAIL
AT LAP SPLICES (FEMALE END) *
N.T.S. DSA-3RDSHEET_T

* NOTE- 100% PENETRATION SEAM WELDS MAY BE PROVIDED FULL LENGTH OF POLE SHAFTS PROVIDED WPS'S ARE QUALIFIED BY TEST.

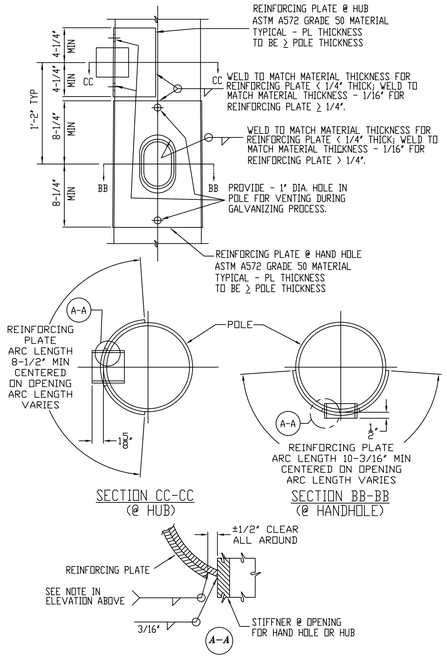

SECTION CC-CC
(@ HUB)

SECTION BB-BB
(@ HANDHOLE)

H HANDHOLE/HUB REINFORCING GUSSET
N.T.S.

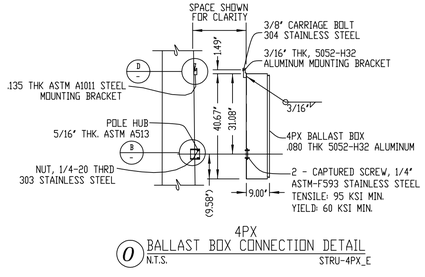

4PX
O BALLAST BOX CONNECTION DETAIL
N.T.S. STRU-4PX_E

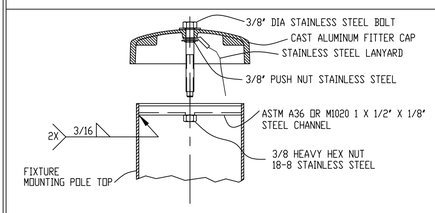

F FITTER CAP DETAIL
N.T.S. DSA-3RDSHEET_T

Information contained herein is the confidential property of Musco Sports Lighting, LLC and/or its parent companies, affiliates, successors and assigns. Reproduction, distribution, or use of the information other than its limited, intended purpose without express written permission is prohibited. Musco products referenced or shown are protected by one or more of the following patents. U.S. Patents: 4947303; 4994718; 5075828; 5134557; 5161883; 5211473; 5229681; 5377611; 5398478; 5423281; 5426577; 5600537; 5794387; 5856721; 6036338; 6203176; 6250596; 6340790; 6398392; 6681110; 6833675; 6929385; 6969034; 6988697; 7059572; D337168; D353797; D353911; D411096. Other patents pending.

IDENTIFICATION STAMP
DIV. OF THE STATE ARCHITECT
APP: 03-122664 INC:
REVIEWED FOR
SS ☑ FLS ☑ ACS ☑
DATE: 05/12/2023

Highland HS Pool
FIELD LIGHTING
Bakersfield,CA

LICENSED ARCHITECT
THOMAS W. FRUSH
No. C15585
REN. 02/25
STATE OF CALIFORNIA

REGISTERED ENGINEER
CIVIL
No. 4506
Exp. 6-30-23
STRUCTURAL
STATE OF CALIFORNIA

CONSULTANT
KNA STRUCTURAL ENGINEERS
9931 Mulhall Boulevard, Irvine, CA 92618
Tel (949) 453-2200 Fax (949) 453-2201
www.knastructural.com
KNA JOB NO.: 453.116

musco Lighting
CORPORATE OFFICE:
P.O. Box 808
100 1st Avenue West
Oskaloosa, Iowa 52577
800/825-6020

DRAWING TITLE: ATTACHMENT DETAILS
SCALE: SEE PLAN
REVISIONS:
REFERENCE:

PROJECT NO. 221419

DATE: 10/18/2022

DRAWN BY: C.Hensley

DRAWING NO. MD1
3 OF 5

STRU-MDS

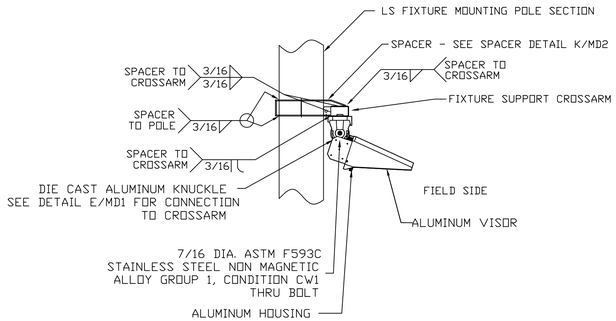

J LIGHT FIXTURE (TYPICAL)
N.T.S. DSA-WEDGE4-WELDON_A

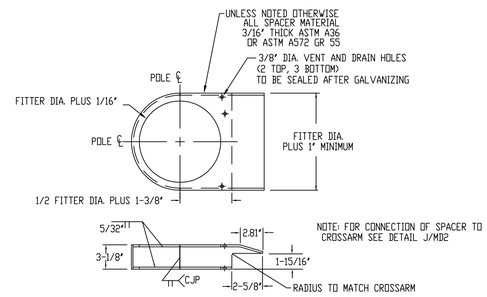

K SPACER DETAIL
N.T.S. DSA-SPACERWELDON_K

Information contained herein is the confidential property of Musco Sports Lighting, LLC and/or its parent companies, affiliates, successors and assigns. Reproduction, distribution, or use of the information other than its limited, intended purpose without express written permission is prohibited. Musco products referenced or shown are protected by one or more of the following patents. U.S. Patents: 4947303; 4994718; 5075828; 5134557; 5161883; 5211473; 5229681; 5377611; 5398478; 5423281; 5426577; 5600537; 5794387; 5856721; 6036338; 6203176; 6250596; 6340790; 6398392; 6681110; 6833675; 6929385; 6969034; 6988697; 7059572; D337168; D353797; D353911; D411096. Other patents pending.

IDENTIFICATION STAMP
DIV. OF THE STATE ARCHITECT
APP: 03-122664 INC:
REVIEWED FOR
SS ☑ FLS ☑ ACS ☑
DATE: 05/12/2023

Highland HS Pool
FIELD LIGHTING
Bakersfield,CA

REGISTERED PROFESSIONAL ENGINEER
STRUCTURAL
No. 4506
Exp. 6-30-23
STATE OF CALIFORNIA

CONSULTANT
KNA STRUCTURAL ENGINEERS
9931 Muirlands Boulevard, Irvine, CA 92618
Tel (949) 462-3200 • Fax (949) 462-3201
www.knastructural.com
KNA JOB NO.: 463.116

musco Lighting
CORPORATE OFFICE:
P.O. Box 808
100 1st Avenue West
Oskaloosa, Iowa 52577
800/825-6020

DRAWING TITLE: ATTACHMENT DETAILS
SCALE: SEE PLAN
REVISIONS:
REFERENCE:

PROJECT NO. 221419
DATE: 10/18/2022
DRAWN BY: C.Hensley
DRAWING NO. MD2
4 OF 5
STRU-MD2

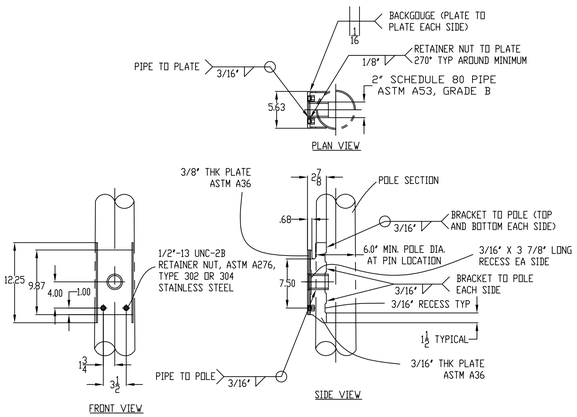

A BRACKET DETAIL
N.T.S. DSA-Brk-Dtl-L_A

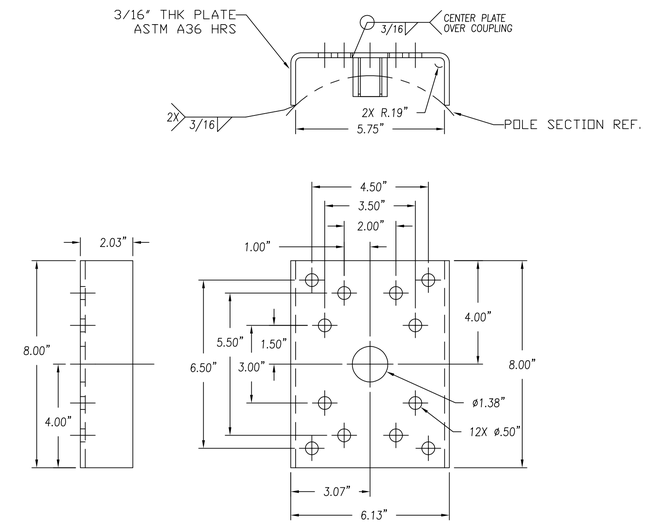

D 1P CAMERA CHANNEL
N.T.S.

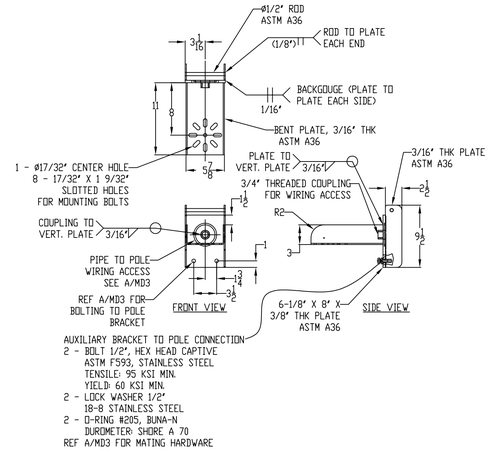

Q 1P INVERTED TRUNNION MOUNT
N.T.S. DSA-1P INV TRUNNION_A

LICENSED ARCHITECT
THOMAS W. KRUSE
NO. C15585
REN. 02/25
STATE OF CALIFORNIA

Information contained herein is the confidential property of Musco Sports Lighting, LLC and/or its parent companies, affiliates, successors and assigns. Reproduction, distribution, or use of the information other than its limited, intended purpose without express written permission is prohibited. Musco products referenced or shown are protected by one or more of the following patents. U.S. Patents: 4947303; 4994718; 5075828; 5134557; 5161883; 5211473; 5229681; 5377611; 5398478; 5423281; 5426577; 5600537; 5794387; 5856721; 6036338; 6203176; 6250596; 6340790; 6398392; 6681110; 6833675; 6929385; 6969034; 6988697; 7059572; D337168; D353797; D353911; D411096. Other patents pending.

IDENTIFICATION STAMP
DIV. OF THE STATE ARCHITECT
APP: 03-122664 INC:
REVIEWED FOR
SS ☑ FLS ☑ ACS ☑
DATE: 05/12/2023

Highland HS Pool
FIELD LIGHTING
Bakersfield,CA

REGISTERED PROFESSIONAL ENGINEER
JOSHUA M. KRAVOLIN
No. 4506
Exp. 6-30-23
STRUCTURAL
STATE OF CALIFORNIA

CONSULTANT
KNA STRUCTURAL ENGINEERS
9931 Muirlands Boulevard, Irvine, CA 92618
Tel (949) 462-3200 • Fax (949) 462-3201
www.knastructural.com
KNA JOB NO.: 463.116

MUSCO Lighting
CORPORATE OFFICE:
P.O. Box 808
100 1st Avenue West
Oskaloosa, Iowa 52577
800/825-6020

DRAWING TITLE: ATTACHMENT DETAILS
SCALE: SEE PLAN
REVISIONS:
REFERENCE:

PROJECT NO. 221419
DATE: 10/18/2022
DRAWN BY: C.Hensley
DRAWING NO. MD3
5 OF 5

STRU-MD1