US Army Corps
of Engineers
Sacramento District

GROUND TRANSPORT EQUIPMENT BUILDING

FT. HUACHUCA, AZ

PN 90315

RTA

DISTRIBUTION STATEMENT A
Approved for public release; distribution is unlimited.

US Army Corps
of Engineers ®

THIS PROJECT WAS DESIGNED BY THE SACRAMENTO DISTRICT OF THE U.S. ARMY CORPS OF ENGINEERS. THE INITIALS OR SIGNATURES AND REGISTRATION DESIGNATIONS OF INDIVIDUALS APPEAR ON THESE PROJECT DOCUMENTS WITHIN THE SCOPE OF THEIR EMPLOYMENT AS REQUIRED BY ER 1110-1-8152

Approved:
/s/ Rick Poeppelman, P.E. JUL 2020
Chief, Programs Branch Date
Prepared Under the Direction of:
COL JAMES J. HANOURA JUL 2020
Col., Corps of Engineers, District Engineer Date

Drawing Code:
RTA

Designed by:
MVALENTINE

Drawn by:
MZV

Spec No.
2145

Design File No.
223-25-0665

Approved Functional Adequacy:
/s/ James F. Noble, R.A. JUL 2020
Chief, Military Design Branch Date

Prepared by:
SACRAMENTO DISTRICT
DESIGN BRANCH

/s/ Matthew Z. Valentine, R.A. JUL 2020
Chief, Arch-Struct Section Date

FT. HUACHUCA AZ

GROUND TRANSPORT EQUIPMENT BUILDING

COVER SHEET

SHEET IDENTIFICATION
G-001

INDEX OF DRAWINGS - G-002

Sheet Number	Sheet Name
GENERAL	
G-001	COVER SHEET
G-002	SHEET INDEX
G-003	SHEET INDEX
G-101	VICINITY MAP
G-102	BASE MAP / CONTRACTOR HAUL ROUTE
5	
CIVIL	
CD101	SHEET LAYOUT PLAN - DEMOLITION PLAN
CD102	DEMOLITION PLAN 1
CD103	DEMOLITION PLAN 2
CD104	DEMOLITION PLAN - EXIST. VEHICLE MAINT. FACILITY
C-101	PROJECT LOCATION MAP
CS101	SHEET LAYOUT PLAN - SITE, GRADING, UTILITIES
CS102	SITE PLAN - OVERALL
CS102A	SITE PLAN - BID OPTIONS
CS103	SITE PLAN A
CS103A	BID OPTION 5 SITE PLAN A
CS104	SITE PLAN B
CS104A	BID OPTIONS 3, 4, 6, 7, AND 8 SITE PLAN B
CS105	SITE PLAN C
CS106	SITE PLAN D
CS107	SITE PLAN E
CS108	SITE PLAN F
CS109	PARKING LAYOUT PLAN
CS109A	BID OPTIONS PARKING LAYOUT PLAN
CS601	HORIZONTAL ALIGNMENT DATA - ROADS, SIDEWALKS, SEWER LINES
CS602	HORIZONTAL ALIGNMENT DATA - STORM DRAINAGE
CG101	GRADING PLAN - OVERALL
CG102	GRADING PLAN A
CG102A	BID OPTION 5 GRADING PLAN A
CG103	GRADING PLAN B
CG103A	BID OPTIONS 3, 4, 6, 7, 8 GRADING PLAN B
CG104	GRADING PLAN C
CG105	GRADING PLAN D
CG106	GRADING PLAN E
CG107	GRADING PLAN F
CG401	ENLARGED PLAN - WASH PADS
CU101	UTILITY PLAN - OVERALL
CU101A	BID OPTIONS UTILITY PLAN – OVERALL
CU102	UTILITY PLAN B
CU102A	BID OPTPIONS UTILITY PLAN B
CU103	UTILITY PLAN E
CU104	UTILITY PLAN D
C-201	PROFILES - ALIGN. A & B
C-202	PROFILES - ALIGN. C & D
C-203	PROFILES - ALIGN. D, E, F & G
C-204	PROFILE - ALIGN.H
C-205	PROFILES - ALIGN. J, K, L, M, JJ & KK
C-206	PROFILES - ALIGN. N, P, Q, R, S & T
C-207	PROFILES - ALIGN. U, V, W, R, & Z
C-208	PROFILE - ALIGN.X
C-209	PROFILE - ALIGN.Y
C-210	PROFILE - ALIGN. AA, BB, EE, DD
C-211	PROFILE - ALIGN.CC
C-212	PROFILES - ALIGN. FF, GG & HH
C-501	WASH RAMPS
C-502	VEHICLE LOADING DOCK
C-503	PEDESTRIAN BRIDGE
C-504	BOX CULVERT HEADWALL DETAILS
C-505	HEADWALLS, SURFACE INLET DETAILS
C-506	SITE DETAILS
C-507	SITE DETAILS
C-508	WATER LINE DETAILS
C-509	GAS SERVICE AND SANITARY SEWER DETAILS
C-510	CHAIN LINK FENCE DETAILS
C-511	CHAIN LINK FENCE GATE DETAILS
C-512	MOTOR OPERATED GATE DETAILS
C-513	ROAD CLOSURE GATE DETAILS
C-514	FUEL TANK CONTAINMENT
C-515	DETENTION POND DETAILS
C-516	GRADING DETAILS
C-517	RIPRAP DETAILS
B-101	PAVEMENT PLAN BASE BID - OVERALL
B101.OP	PAVEMENT PLAN - OVERALL OPTIONS
B-301	TYPICAL PAVEMENT SECTION AND DETAILS
B-302	TYPICAL PAVEMENT SECTION AND DETAILS
B-501	PCC JOINT DETAILS
70	
STRUCTURAL	
S-001	GENERAL STRUCTURAL NOTES, DESIGN LOADS & ABBREVIATIONS
S-002	GENERAL STRUCTURAL NOTES
S-101	OVERALL FOUNDATION PLAN (BASE BID)
S-102	OVERALL FOUNDATION PLAN (BID OPTION 3)
S-103	FOUNDATION PLAN AREA A
S-104	FOUNDATION PLAN AREA B
S-105	FOUNDATION PLAN AREA C (OPTION 3)
S-106	ROOF FRAMING PLAN AREA A
S-107	ROOF FRAMING PLAN AREA B
S-108	ROOF FRAMING PLAN AREA C (OPTION 3)
S-109	ORG. STORAGE BLDG. FOUNDATION PLAN (OPTION 8)
S-110	ORG. STORAGE BLDG. ROOF FRAMING PLAN (OPTION 8)
S-111	POL & HAZMAT BLDG FOUNDATION & ROOF FRAMING PLAN (OPTIONS 6 & 7)
S-301	PEMB FOUNDATION SECTIONS
S-302	JOIST AND DECK TO WALL CONNECTION SECTIONS
S-303	FRAMING SECTIONS THROUGH GTEB BLDG
S-401	ENLARGED PLANS
S-501	TYP FOUNDATION DETAILS
S-502	TYP FOUNDATION DETAILS
S-503	TYP FOUNDATION BOLLARD AND BLOCKOUT DETAILS
S-504	TYP FOUNDATION PEDESTAL DETAILS
S-505	TYP REINFORCEMENT DETAILS
S-506	TYP SLAB AND DETAILS
S-507	TYP MASONRY DETAILS
S-508	COLD FORMED ROOF FRAMIMG TYP. DETAILS
S-509	CANOPY FRAMING DETAILS
S-510	TYP STRUCTURAL DETAILS
S-511	TYP STRUCTURAL STEEL DETAILS
S-512	LOADING RAMP
S-513	BOX CULVERT
S-601	SCHEDULES AND DIAGRAMS
31	
ARCHITECTURE	
AD101	DEMOLITION - EXISTING MOTOR POOL SITE
A-001	ARCHITECTURAL NOTES & ABBREVIATIONS
A-002	ARCHITECTURAL GENERAL NOTES
A-010	PROJECT WALL TYPES
A-011	PROJECT WALL TYPES
A-100	GTEB OVERALL FIRST FLOOR PLAN
A-101	GTEB FLOOR PLAN - AREA 'A'
A-102	GTEB FLOOR PLAN - AREA 'B'
A-103	GTEB FLOOR PLAN - AREA 'C' (OPTION 3)
A-104	GTEB FLOOR PLAN - AREA 'B' DIMENSION PLAN
A-105	GTEB FLOOR PLAN - AREA 'C' DIMENSION PLAN
A-106	GTEB REFLECTED CEILING PLAN - AREA 'A'
A-107	GTEB REFLECTED CEILING PLAN - AREA 'B'
A-108	GTEB REFLECTED CEILING PLAN - AREA 'C' (OPTION 3)
A-109	GTEB ROOF PLAN
A-110	ORG STORAGE FLOOR PLAN & SECTIONS (OPTION 8)
A-111	ORG STORAGE ROOF PLAN (OPTION 8)
A-120	POL & HAZMAT PLANS, ELEVATIONS, SECTIONS (OPTIONS 6 & 7)
A-130	NEW FLOOR PLAN W/O OPTION 3
A-140	GTEB AIR BARRIER BOUNDARY
A-201	GTEB NORTH AND SOUTH ELEVATIONS - OVERALL
A-202	GTEB NORTH ELEVATION
A-203	GTEB SOUTH ELEVATION
A-204	GTEB EAST AND WEST ELEVATIONS
A-210	ORG STORAGE ELEVATIONS (OPTION 8)
A-301	GTEB LONGITUDINAL SECTION
A-302	GTEB CROSS SECTION
A-310	WALL SECTIONS
A-401	INTERIOR ELEVATIONS LEGEND
A-402	ENLARGED FLOOR PLAN - AREA 'B'
A-403	ENLARGED FLOOR PLAN - AREA 'C' (OPTION 3)
A-501	ROOF DETAILS
A-502	ROOF DETAILS
A-503	ROOF DETAILS
A-505	EXPANSION JOINT DETAILS
A-510	CEILING DETAILS
A-520	DOOR DETAILS
A-521	DOOR DETAILS
A-525	WINDOW AND LOUVER DETAILS
A-530	LADDER DETAILS
A-531	MECHANICAL YARD GATE DETAILS
A-540	SIGN DETAILS
A-541	SIGN DETAILS
A-550	WALL DETAILS
A-560	CASEWORK DETAILS
A-570	RESTROOM DETAILS
A-571	RESTROOM DETAILS
A-580	MISCELLANEOUS DETAILS
A-582	AIR BARRIER DETAILS
A-590	SEALANT DETAILS
A-601	EXTERIOR COLOR / FINISH SCHEDULE
A-620	DOOR SCHEDULE - GTEB
A-621	WINDOW AND LOUVER SCHEDULE - GTEB
A-625	DOOR AND LOUVER SCHEDULE (OPTIONS 6, 7, & 8)
A-640	SIGN SCHEDULE
55	
INTERIOR DESIGN	
I-101	FIRST FLOOR FINISH PLAN - OVERALL
I-102	GTEB - FLOOR FINISH PLAN - AREA A
I-103	GTEB - FLOOR FINISH PLAN - AREA B
I-104	GTEB - FLOOR FINISH PLAN - AREA C (OPTION 3)
I-111	ORG STORAGE - FLOOR FINISH PLAN (OPTION 8)
I-401	GTEB - INTERIOR ELEVATIONS (OPTION 3)
I-402	GTEB - INTERIOR ELEVATIONS
I-403	GTEB - DETAILS
I-610	GTEB INTERIOR FINISH SCHEDULE
I-611	ORG STORAGE - INTERIOR FINISH SCHEDULE (OPTION 8)
IF101	FIRST FLOOR FURNITURE PLAN - OVERALL
IF102	GTEB - FIRST FLOOR FURNITURE PLAN - AREA A
IF103	GTEB - FIRST FLOOR FURNITURE PLAN - AREA B
IF104	GTEB - FIRST FLOOR FURNITURE PLAN - AREA C (OPTION 3)
IF111	ORG STORAGE - FURNITURE PLAN (OPTION 8)
15	
LIFE SAFETY	
F-101	GTEB LIFE SAFETY - FIRST FLOOR
1	
FIRE ALARM	
FA101	GTEB FIRE ALARM/MNS PLAN
FA102	GTEB FIRE ALARM/MNS PLAN
FA103	GTEB FIRE ALARM/MNS PLAN (OPTION 3)
FA111	ORG STORAGE FIRE ALARM/MNS PLAN (OPTION 8)
FA501	FIRE ALARM/MNS TABLES
FA601	FIRE ALARM/MNS RISER DIAGRAMS
6	
FIRE PROTECTION	
FX001	FIRE SUPPRESSION LEGEND
FX101	FIRE SUPPRESSION PLAN - AREA A
FX102	FIRE SUPPRESSION PLAN - AREA B
FX103	FIRE SUPPRESSION PLAN - AREA C (OPTION 3)
FX111	FIRE SUPPRESSION PLAN (OPTION 8)
FX501	FIRE SUPPRESSION DETAILS
6	
PLUMBING	
P-001	PLUMBING LEGEND
P-101	DOMESTIC WATER & GAS PLUMBING PLAN - AREA A
P-102	DOMESTIC WATER & GAS PLUMBING PLAN - AREA B
P-103	DOMESTIC WATER & GAS PLUMBING PLAN - AREA C (OPTION 3)
P-104	WASTE & VENT PLUMBING FLOOR PLAN - AREA A
P-105	WASTE & VENT PLUMBING FLOOR PLAN - AREA B
P-106	WASTE & VENT PLUMBING FLOOR PLAN - AREA C (OPTION 3)
P-107	POL & COMPRESSED AIR PLUMBING PLAN - AREA A
P-111	ORGANIZATIONAL STORAGE BUILDING (OPTION 8)
P-112	ORGANIZATIONAL STORAGE BUILDING (OPTION 8)
P-301	PLUMBING BUILDING SECTION
P-401	ENLARGED PLUMBING PLAN
P-402	ENLARGED PLUMBING PLAN
P-403	ENLARGED PLUMBING PLAN
P-404	ENLARGED PLUMBING PLAN
P-501	PLUMBING DETAILS
P-502	PLUMBING DETAILS
P-503	PLUMBING DETAILS
P-504	PLUMBING DETAILS
P-601	PLUMBING SCHEDULES
P-602	PLUMBING SCHEDULES
P-611	PLUMBING SCHEDULES (OPTION 8)
P-701	DOMESTIC WATER & GAS RISER DIAGRAM - AREA A
P-702	DOMESTIC WATER & GAS RISER DIAGRAM - AREA B
P-703	DOMESTIC WATER & GAS RISER DIAGRAM - AREA C (OPTION 3)
P-704	WASTE & VENT RISER DIAGRAM - AREA A
P-705	WASTE & VENT RISER DIAGRAM - AREA B
P-706	WASTE & VENT RISER DIAGRAM - AREA C (OPTION 3)
P-707	POL & COMPRESSED AIR RISER DIAGRAM
P-711	DOMESTIC WATER & GAS RISER DIAGRAM - ORG STORAGE BUILDING (OPTION 8)
P-712	WASTE & VENT RISER DIAGRAM - ORG STORAGE BUILDING (OPTION 8)
P-713	COMPRESSED AIR RISER DIAGRAM - ORG STORAGE BUILDING (OPTION 8)
32	

US Army Corps of Engineers ®

MARK	DESCRIPTION	DATE	APPR.

Designed by: MVALENTINE | Drawn By: MZV
Submittal Status: RTA
Reviewed by: O'AQUINO
Submitted by: Maj. Matthew J Merritte
Chief, Engineering Design Section

Date: 13 JUL 2020
Spec No: 2145
File No: 223-25-0665
Size:22" x 34"
Plot Scale: 1:1
Plot Date:7/13/2020 11:45:52 AM

Rev:
Project No:
File Name: W85A_GTEB

US ARMY CORPS OF ENGINEERS

SACRAMENTO DISTRICT
1325 J STREET
SACRAMENTO, CA 95814

FT. HUACHUCA AZ

GROUND TRANSPORT EQUIPMENT BUILDING

SHEET INDEX

SHEET IDENTIFICATION
G-002

INDEX OF DRAWINGS - G-003

Sheet Number	Sheet Name
MECHANICAL	
M-001	HVAC LEGEND
M-101	GTEB HVAC PLAN - AREA A
M-102	GTEB HVAC PLAN - AREA A
M-103	GTEB HVAC PLAN - AREA B
M-104	GTEB HVAC PLAN - AREA C (OPTION 3)
M-105	GTEB HYDRONIC PLAN - AREA B
M-106	GTEB HYDRONIC PLAN - AREA C (OPTION 3)
M-111	HVAC FLOOR PLAN (OPTIONS 6, 7, & 8)
M-301	GTEB HVAC SECTION
M-302	GTEB HVAC SECTION
M-311	HVAC SECTION VIEW (OPTION 8)
M-401	ENLARGED HVAC DUCT FLOOR PLAN
M-402	ENLARGED HVAC HYDRONIC FLOOR PLAN
M-501	HVAC DETAILS
M-502	HVAC DETAILS
M-503	HVAC DETAILS
M-504	HVAC DETAILS
M-505	HVAC DETAILS
M-506	HVAC DETAILS
M-507	HVAC DETAILS
M-508	HVAC DETAILS
M-509	HVAC DETAILS
M-601	HVAC SCHEDULES
M-602	HVAC SCHEDULES
M-603	HVAC SCHEDULES
M-611	HVAC SCHEDULES (OPTION 6, 7, & 8)
M-801	HVAC CONTROLS - LEGEND
M-802	HVAC CONTROLS - POINT SCHEDULE INSTRUCTIONS
M-803	HVAC CONTROLS
M-804	HVAC CONTROLS
M-805	HVAC CONTROLS
M-806	HVAC CONTROLS
M-807	HVAC CONTROLS
M-808	HVAC CONTROLS
M-809	HVAC CONTROLS
M-810	HVAC CONTROLS
M-811	HVAC CONTROLS
M-812	HVAC CONTROLS
M-813	HVAC CONTROLS
M-814	HVAC CONTROLS
M-815	HVAC CONTROLS
M-816	HVAC CONTROLS
M-817	HVAC CONTROLS
M-818	HVAC CONTROLS
M-819	HVAC CONTROLS

45

INDEX OF DRAWINGS - G-003

Sheet Number	Sheet Name
ELECTRICAL	
ED101	ELECTRICAL DEMOLITION PLAN
E-001	LEGEND AND ABBREVIATIONS
ES100	ELECTRICAL SITE PLAN - OVERALL
ES101	ELECTRICAL SITE PLAN
ES102	ELECTRICAL SITE PLAN
ES103	ELECTRICAL SITE PLAN
ES104	ELECTRICAL SITE PLAN - GROUNDING
EL101	GTEB LIGHTING PLAN
EL102	GTEB LIGHTING PLAN
EL103	GTEB LIGHTING PLAN (OPTION 3)
EL111	STORAGE BUILDINGS LIGHTING PLANS (OPTIONS 6, 7, & 8)
EL501	LUMINAIRE SCHEDULE AND DETAILS
EL502	LUMINAIRE DETAILS
EL503	LIGHT POLE DETAILS
EL504	LIGHTING CONTROLS TABLES
EL505	LIGHTING AND RECEPTACLE CONTROL DETAILS
EP101A	GTEB POWER PLAN
EP101B	GTEB POWER PLAN
EP101C	GTEB POWER PLAN
EP102	GTEB POWER PLAN
EP103	GTEB POWER PLAN (OPTION 3)
EP111	STORAGE BUILDINGS POWER PLANS (OPTIONS 6, 7, & 8)
EG101	GTEB GROUNDING PLAN
EG102	GTEB GROUNDING PLAN
EG103	GTEB GROUNDING PLAN (OPTION 3)
EG111	LIGHTNING PROTECTION PLAN
EG112	LIGHTNING PROTECTION ELEVATIONS AND SECTIONS
EG121	ORG STORAGE LIGHTNING PROTECTION PLAN (OPTION 8)
EG122	POL/HAZMAT LIGHTNING PROTECTION PLAN (OPTIONS 6 & 7)
EG501	GROUNDING DETAILS
EG502	GROUNDING DETAILS
EG601	GROUNDING SYSTEM DIAGRAM
E-401	ENLARGED ELECTRICAL PLANS
E-402	ENLARGED ELECTRICAL PLANS
E-501	MOTOR SCHEDULE
E-502	MOTOR SCHEDULE - STORAGE BUILDINGS (OPTIONS 6, 7, & 8)
E-503	TRANSFORMER DETAILS
E-504	DETAIL - POWER/COMM OUTLETS
E-505	DETAILS
E-510	HANDHOLE AND PULL BOX DETAILS
E-511	COMMUNICATIONS MANHOLE DETAIL
E-512	DUCTBANK DETAILS
E-601	SINGLE LINE DIAGRAM
E-602	FEEDER SCHEDULE
E-603	CALCULATIONS AND TABLES
E-605	SOLAR PV SYSTEM (OPTION 2)
E-606	SOLAR PV CIRCUIT DIAGRAMS (OPTION 2)
E-607	SOLAR PV CIRCUIT DIAGRAMS (OPTION 2)
E-608	SOLAR PV CIRCUIT DIAGRAMS (OPTION 2)
E-611	PANEL SCHEDULES
E-612	PANEL SCHEDULES
E-613	PANEL SCHEDULES
E-614	PANEL SCHEDULES
E-615	PANEL SCHEDULES
E-616	PANEL SCHEDULES
E-617	PANEL SCHEDULES (OPTIONS 6, 7, & 8)

56

INDEX OF DRAWINGS - G-003

Sheet Number	Sheet Name
TELECOMM	
T-101	GTEB TELECOMMUNICATIONS PLAN
T-102	GTEB TELECOMMUNICATIONS PLAN
T-103	GTEB TELECOMMUNICATIONS PLAN (OPTION 3)
T-201	GTEB TELECOMMUNICATIONS SECTIONS
T-501	SYSTEMS DETAIL
T-502	COMMUNICATIONS CIRCUIT DIAGRAMS
T-601	SYSTEMS RISERS

7

EQUIPMENT	
Q-101	COORDINATION PLAN VIEWS
Q-102	COORDINATION PLAN VIEWS
Q-103	COORDINATION PLAN VIEWS (OPTION 3)
Q-201	COORDINATION ELEVATIONS
Q-202	COORDINATION ELEVATIONS
Q-203	COORDINATION ELEVATIONS
Q-204	COORDINATION ELEVATIONS
Q-301	COORDINATION SECTIONS
Q-302	COORDINATION SECTIONS
Q-303	COORDINATION SECTIONS
Q-601	EQUIPMENT SCHEDULES
Q-901	COORDINATION PERSPECTIVE VIEWS

12

GRAND TOTAL: 341

US Army Corps of Engineers ®

MARK	DESCRIPTION	DATE	APPR

US ARMY CORPS OF ENGINEERS

SACRAMENTO DISTRICT
1325 J STREET
SACRAMENTO, CA 95814

Designed by: MVALENTINE | Drawn By: MZ/
Submittal Status: RTA
Reviewed By: O'AQUINO
Submitted by: Matthew Valentine
Chief, Engineering Design Section

Date: 13 JUL 2020
Spec No: 2145
File No: 223-25-0665
Size/2" x 34" Plot Scale: 1:1
Plot Date:7/13/2020 11:45:52 AM

Rev:
Project No:
File Name: W85A_GTEB

FT. HUACHUCA AZ

GROUND TRANSPORT EQUIPMENT BUILDING

SHEET INDEX

SHEET IDENTIFICATION
G-003

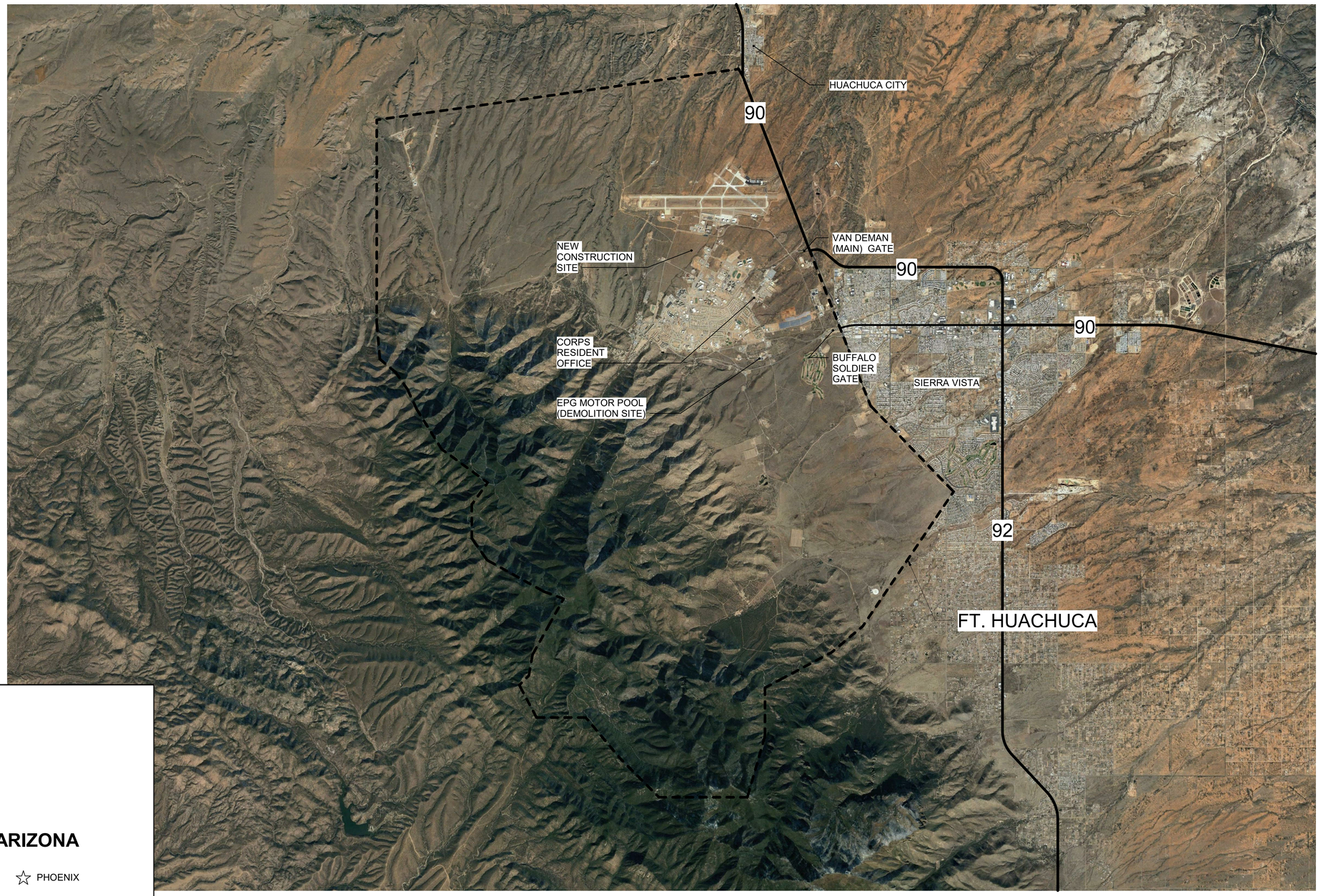

VICINITY MAP

NOT TO SCALE

PLAN NORTH

US Army Corps of Engineers ®

MARK	DESCRIPTION	DATE	APPD

Designed by: MVALENTINE Drawn By: MZV
Submittal Status: RTA
Reviewed: O AQUINO
Submitted by: Sr. Matthew Valentine, Chief, Design Branch, Design Section
Date: 13 JUL 2020
Spec No: 2145
Project No:
Rev:
File No: 223-23-0865
File Name: W6SA_GTEB
Size:22" x 34" Plot Scale: 1
Plot Date:7/13/2020 11:45:59 AM

US ARMY CORPS OF ENGINEERS
SACRAMENTO DISTRICT
1325 J STREET
SACRAMENTO, CA 95814

FT. HUACHUCA AZ

GROUND TRANSPORT EQUIPMENT BUILDING

VICINITY MAP

SHEET IDENTIFICATION
G-101

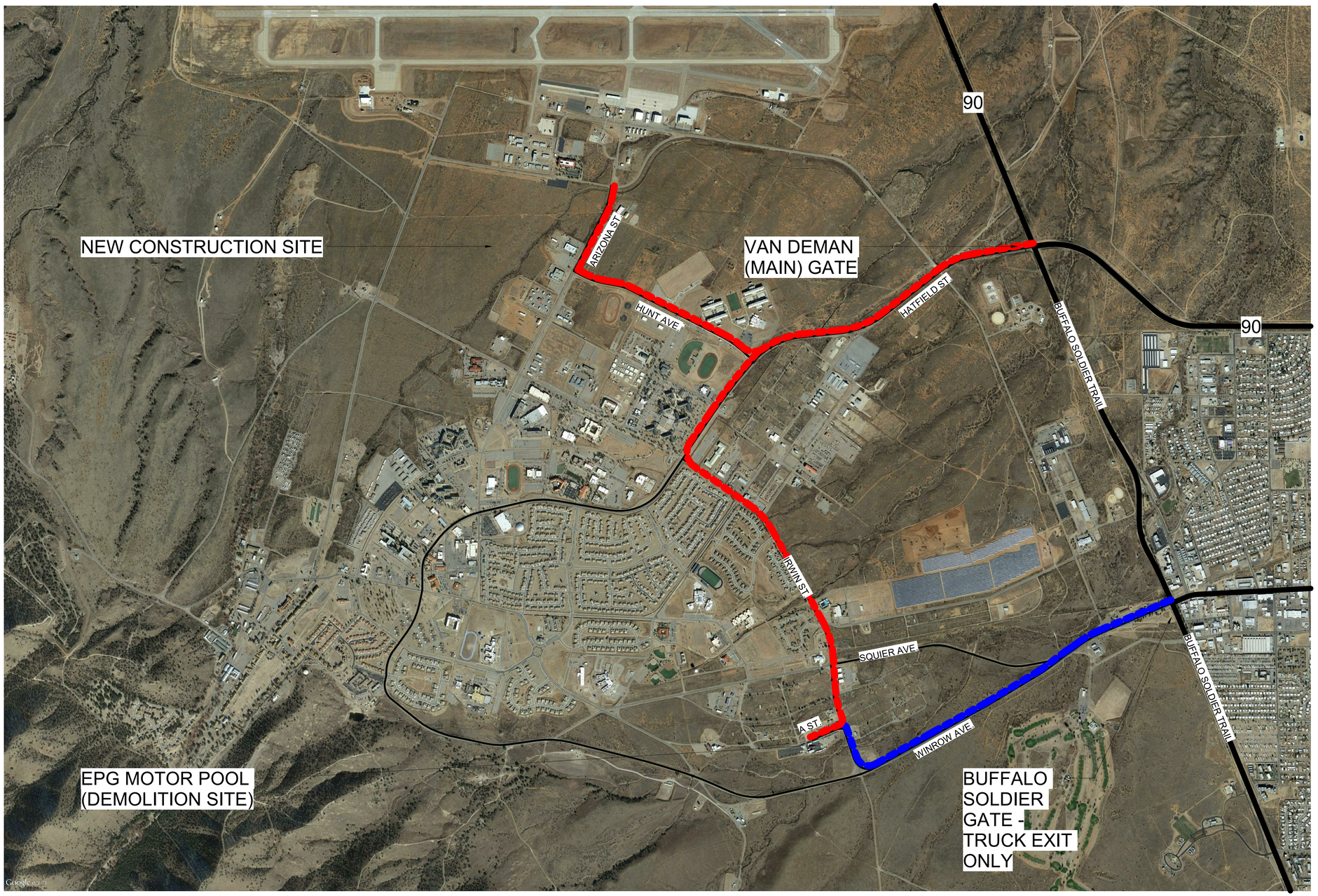

LOCATION MAP / CONTRACTOR HAUL ROUTE

NOT TO SCALE

NOTE: COORDINATE WITH CUSTOMER AND COR TO DETERMINE LAYDOWN AREA.
ALL TRUCK ENTRY THROUGH VAN DEMAN (MAIN) GATE.

PLAN NORTH

HAUL ROUTE

EXIT ONLY

US Army Corps of Engineers ®

MARK	DESCRIPTION	DATE	APPR

Designed by: MVALENTINE
Drawn By: MZV
Date: 13 JUL 2020
Rev:
Submittal Status: RTA
Spec No: 2145
Project No:
Reviewed By: O'AQUINO
File No: 223-25-0655
File Name: W6SA_GTEB
Submitted by: Jill Matthew Valentine
Sec Chief Engineering Section
Size:22" x 34" Scale: Not to Scale
Plot Date:7/13/2020 11:46:04 AM

US ARMY CORPS OF ENGINEERS

SACRAMENTO DISTRICT
1325-J STREET
SACRAMENTO, CA 95814

FT. HUACHUCA AZ

GROUND TRANSPORT EQUIPMENT BUILDING

BASE MAP / CONTRACTOR HAUL ROUTE

SHEET IDENTIFICATION
G-102

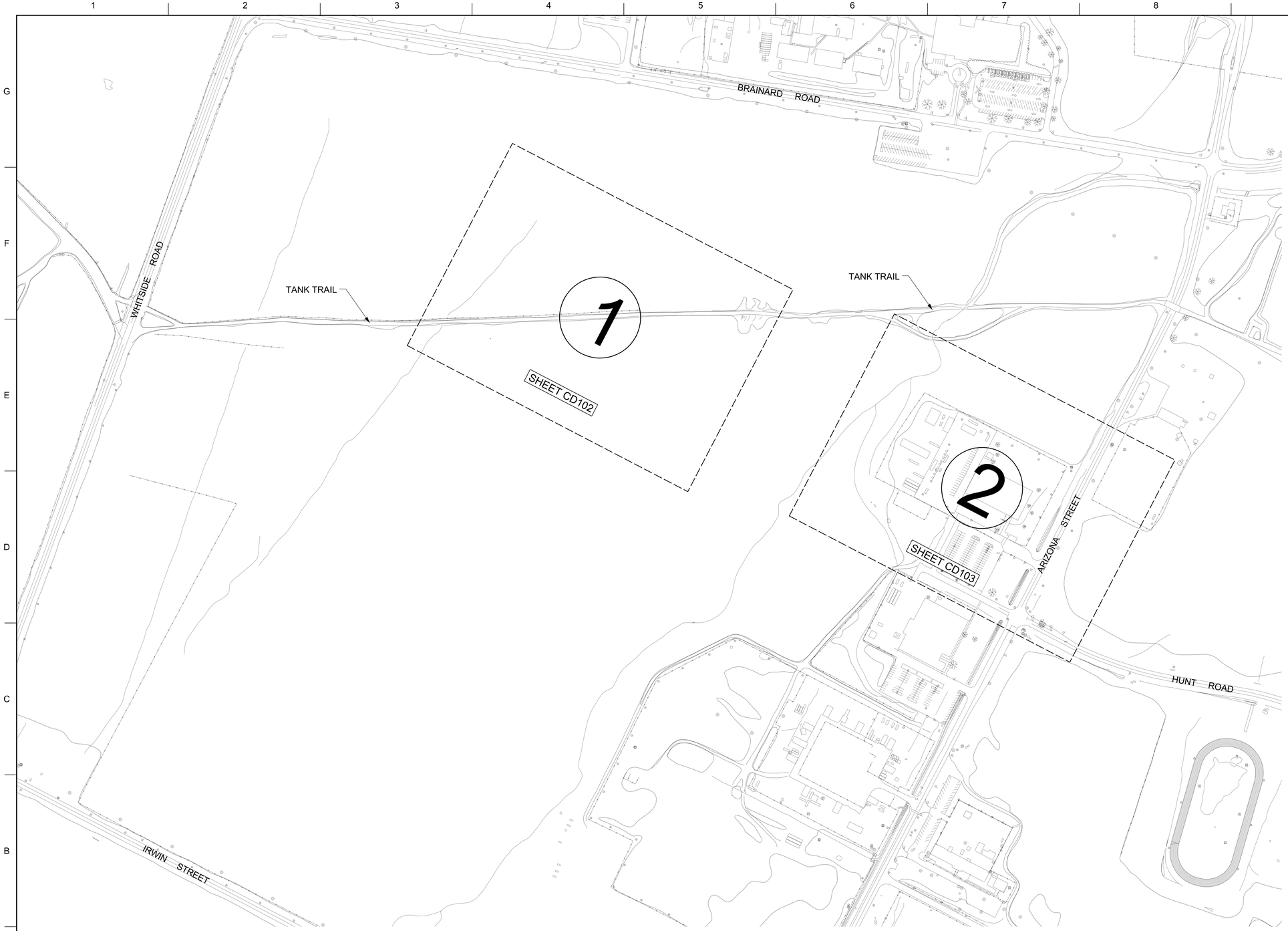

LEGEND

NEW PAVED OR AGGREGATE SURFACE

NOTES

1. SEE SHEET C-101 FOR THE LOCATION OF THE EXISTING EPG MOTOR POOL FACILITY, IN THE SOUTHEAST AREA OF THE POST, WHICH IS TO BE DEMOLISHED AS PART OF THIS PROJECT, DEMOLITION REQUIREMENTS FOR THE EXISTING FACILITY ARE INDICATED ON SHEET CD104.

2. THE CONTRACTOR SHALL DISPOSE OF CONSTRUCTION WASTE MATERIAL OFF THE POST WITH THE EXCEPTION OF MILLED ASPHALT, WHICH MAY BE DISPOSED OF AT THE WASTE ASPHALT STOCKPILE AREA INDICATED ON SHEET C-101. CONSTRUCTION WASTE AND DEBRIS REMOVAL SHALL BE AT THE CONTRACTOR'S EXPENSE AND RESPONSIBILITY.

3. THE PROJECT SITE IS LOCATED ON A FORMER RANGE, CONTRACTOR SHALL EMPLOY QUALIFIED MONITORS DURING ANY EXCAVATION. SEE SPECIFICATION 01 57 20 ENVIRONMENTAL PROTECTION SECTION 3.16 FOR ADDITIONAL INFORMATION.

4. THE PROJECT SITE IS LOCATED ON A CULTURALLY SENSITIVE SITE. DURING ANY EXCAVATION AN ARCHEOLOGICAL MONITOR SHALL BE ON SITE. ARCHEOLOGICAL MONITOR SHALL BE PROVIDED BY THE GOVERNMENT, HOWEVER, THE CONTRACTOR SHALL REQUEST AND SCHEDULE THE MONITOR WITH THE DPW ENVIRONMENTAL SERVICES OFFICE. SEE SPECIFICATION 01 57 20 ENVIRONMENTAL PROTECTION, SECTION 3.8 FOR ADDITIONAL INFORMATION.

SHEET LAYOUT PLAN - DEMOLITION

SCALE: 1"=200'

1"=200' 0' 100' 200' 400' 600'

US Army Corps of Engineers®

MARK	DESCRIPTION	DATE

U.S. ARMY CORPS OF ENGINEERS

DESIGNED BY: H. HORTON	ISSUE DATE: 13 JULY 2020
DRAWN BY: H. HORTON	SOLICITATION NO.:
CHECKED BY: J. WOODRUFF	CONTRACT NO.:
SUBMITTED BY: /s/ CORETTA BOWEN	DESIGN FILE NO: 22E25-2085
SIZE: ANSI D	FILE NAME: fm08cd101.dgn
SPEC NO: 2145	

FT HUACHUCA AZ

GROUND TRANSPORT EQUIPMENT BUILDING

SHEET LAYOUT PLAN - DEMOLITION

SHEET ID

CD101

RTA

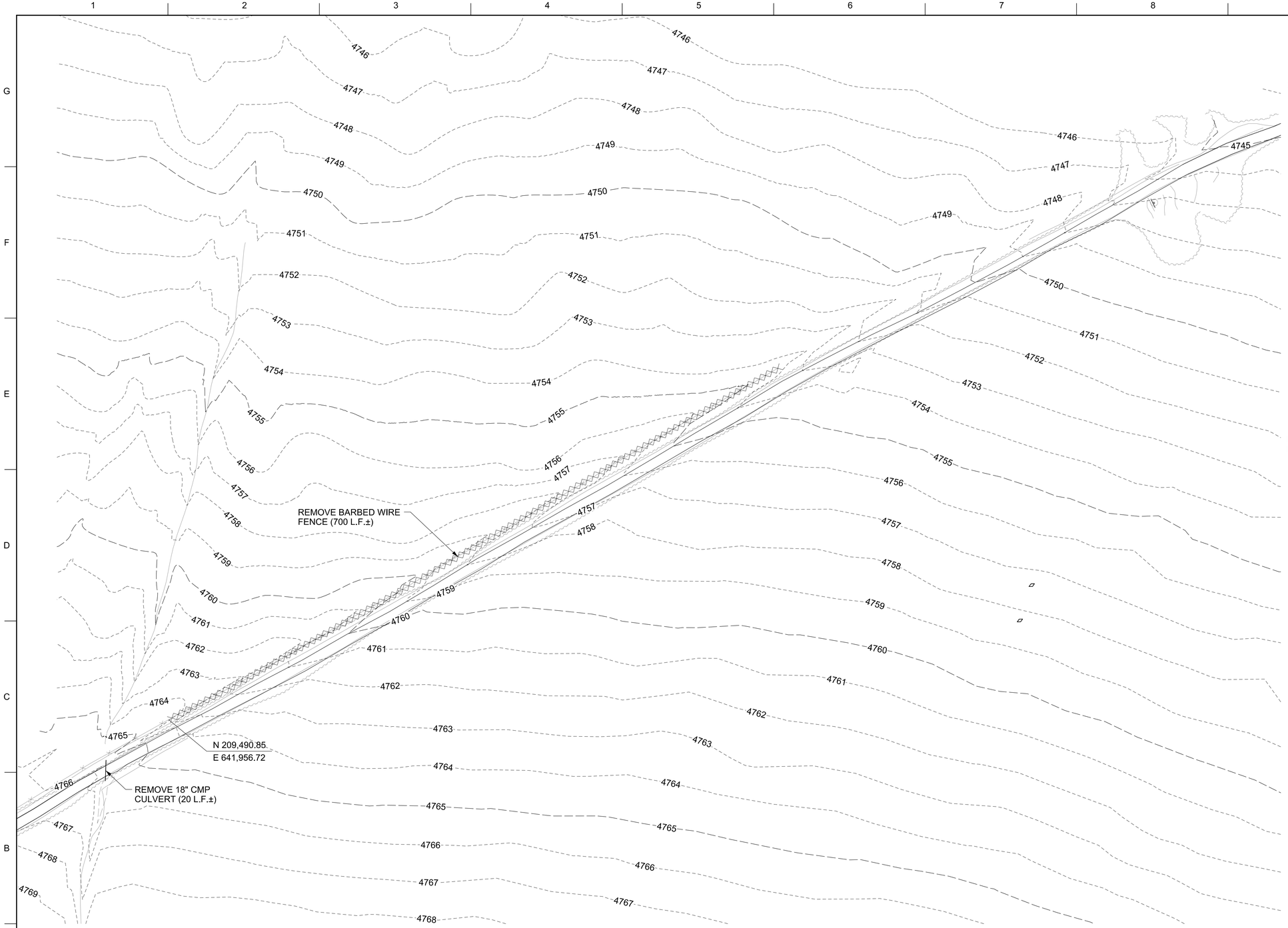

DEMOLITION PLAN 1

SCALE: 1"=50'

LEGEND

BARBED WIRE FENCE TO BE REMOVED

NOTES

1. FENCING INDICATED FOR REMOVAL SHALL BE REMOVED COMPLETE INCLUDING ALL POSTS, POST FOUNDATIONS, WIRE, ETC.

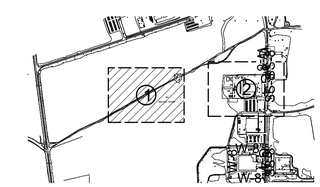

KEY PLAN

1"=50' 0' 25' 50' 100' 150'

US Army Corps of Engineers®

MARK	DESCRIPTION	DATE

DESIGNED BY: H. HORTON	ISSUE DATE: 13 JULY 2020
DRAWN BY: H. HORTON	SOLICITATION NO.:
CHECKED BY: J. WOODRUFF	CONTRACT NO.:
SUBMITTED BY: /s/ CORETTA BOWEN	DESIGN FILE NO: 72E25-2085
SIZE: ANSI D	FILE NAME: SPEC NO: 2145 ft08cd102.dgn

U.S. ARMY CORPS OF ENGINEERS

AZ

FT HUACHUCA

GROUND TRANSPORT EQUIPMENT BUILDING

DEMOLITION PLAN 1

SHEET ID

CD102

RTA

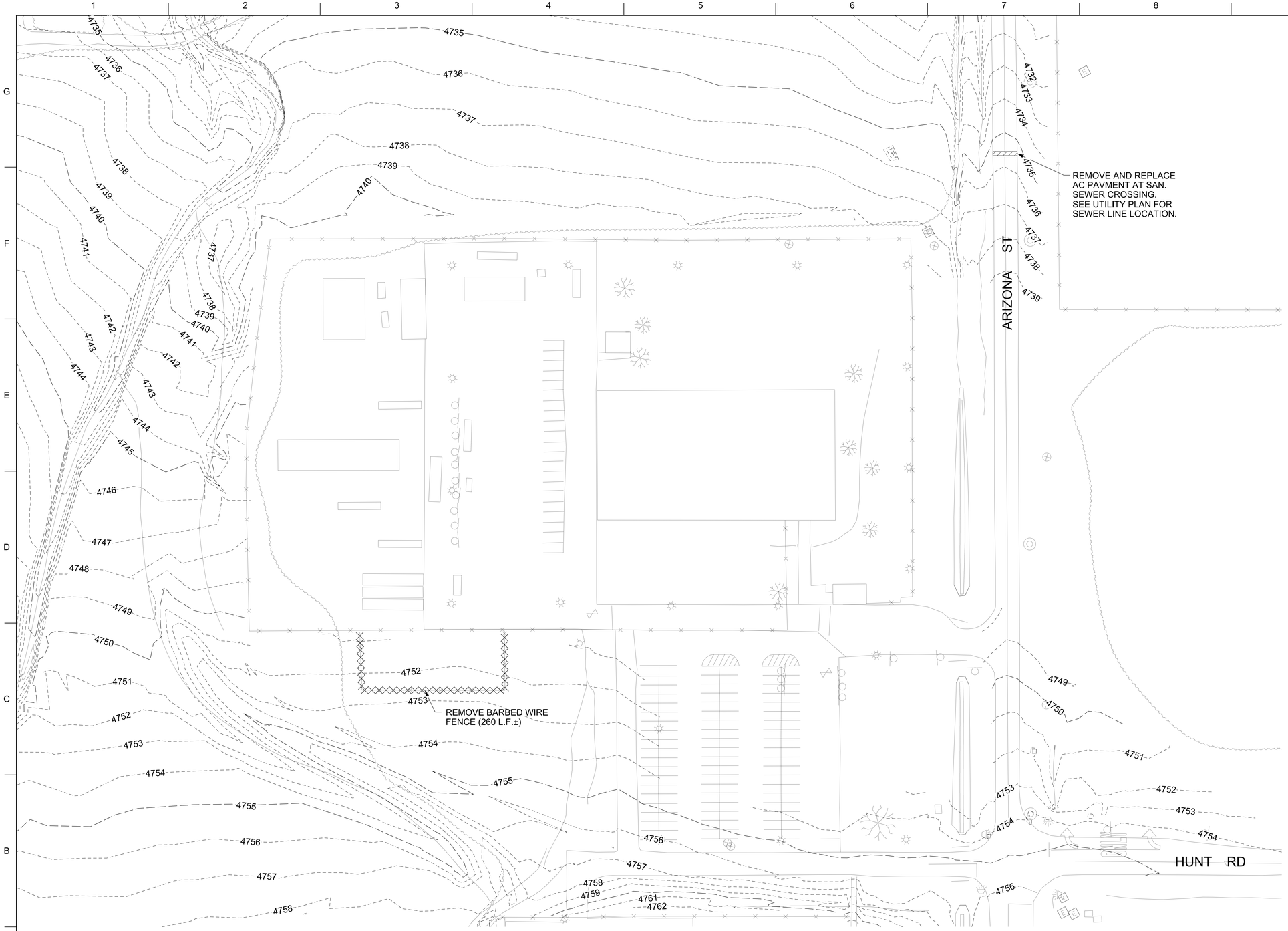

LEGEND

BARBED WIRE FENCE TO BE REMOVED

NOTES

1. FENCING INDICATED FOR REMOVAL SHALL BE REMOVED COMPLETE INCLUDING ALL POSTS, POST FOUNDATIONS, WIRE, ETC.

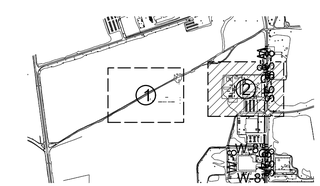

KEY PLAN

DEMOLITION PLAN 2

SCALE: 1"=50'

1"=50' 0' 25' 50' 100' 150'

US Army Corps of Engineers®

MARK	DESCRIPTION	DATE

DESIGNED BY: H. HORTON	ISSUE DATE: 13 JULY 2020
DRAWN BY: H. HORTON	SOLICITATION NO.:
CHECKED BY: J. WOODRUFF	CONTRACT NO.:
SUBMITTED BY: M. CORETTI / S. BOWEN	DESIGN FILE NO: 202425-2065
SIZE: ANSI D	FILE NAME: ft08cd103.dgn
SPEC NO: 2145	

U.S. ARMY CORPS OF ENGINEERS

FT HUACHUCA AZ

GROUND TRANSPORT EQUIPMENT BUILDING

DEMOLITION PLAN 2

SHEET ID

CD103

RTA

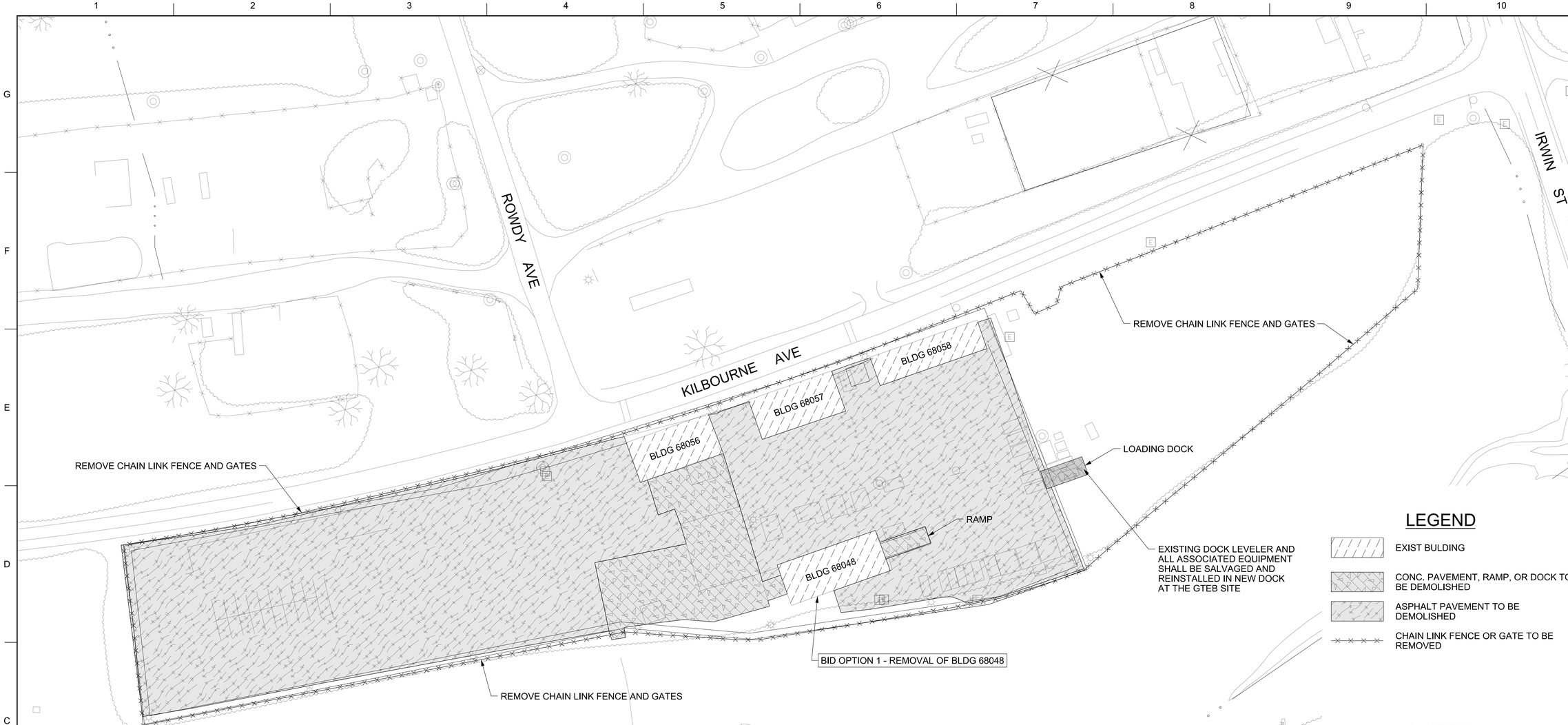

LEGEND

- EXIST BULDING
- CONC. PAVEMENT, RAMP, OR DOCK TO BE DEMOLISHED
- ASPHALT PAVEMENT TO BE DEMOLISHED
- CHAIN LINK FENCE OR GATE TO BE REMOVED

NOTES

1. THE BASE BID SHALL INCLUDE THE COMPLETE DEMOLITION OF BUILDINGS 68056, 68057, AND 68058; DISCONNECTION AND REMOVAL OF ALL UTILITY LATERALS ON THE SITE BACK TO THE MAIN LINE; REMOVAL OF ALL ASPHALT AND CONCRETE PAVEMENT AT THE SITE; AND REMOVAL OF ALL FENCING AND GATES AT THE SITE. PAVEMENT SHALL BE REMOVED TO THE SOUTH EDGE OF KILBOURN AVE.

2. BID OPTION 1 SHALL INCLUDE THE COMPLETE DEMOLITION OF BUILDING 68048; DISCONNECTION AND REMOVAL OF ALL UTILITY LATERALS ON THE SITE BACK TO THE MAIN LINE.

3. THE CONTRACTOR SHALL DISPOSE OF CONSTRUCTION WASTE MATERIAL OFF THE POST WITH THE EXCEPTION OF MILLED ASPHALT, WHICH MAY BE DISPOSED OF AT THE WASTE ASPHALT STOCKPILE AREA INDICATED ON SHEET C-101. CONSTRUCTION WASTE AND DEBRIS REMOVAL SHALL BE AT THE CONTRACTOR'S EXPENSE AND RESPONSIBILIITY.

4. REFER TO THE ELECTRICAL DRAWINGS FOR REQUIRED COMM, ELECTRICAL, AND LIGHTING DEMOLITION.

5. See Appendix 2 for Hazmat test reports. Contractor shall bid based on these sheets. If no test result available for a building, contractor for bidding purposes shall assume no HAZMAT. HOWEVER, contractor shall perform HAZMAT testing for all buildings to be demo'ed. Any discrepancies will be addressed via Changes clause.
6. Bldg 68048 4064 sf built 1994 PEMB; Bldg 68056 3004 sf built 1958 Wood Frame (WF); Bldg 68057 3004 sf built 1942 WF; Bldg 68058 2542 sf built 1942 WF
7. Bldg 68048 removal of service utility lines to main is part of Option.
8. Dock Leveler is to be remove and reinstalled in new building by Contractor.
9. Contractor is not responsible to remove base or sub-base under pavement, but shall provide a final fine grade.

N

1"=50' 0' 25' 50' 100' 150'

DEMOLITION PLAN - EXIST. VEHICLE MAINT. FACILITY

SCALE: 1"=50'

AMENDMENT 3

US Army Corps of Engineers®

MARK	DESCRIPTION	DATE

DESIGNED BY: H. HORTON	ISSUE DATE: 13 JULY 2020
DRAWN BY: H. HORTON	SOLICITATION NO.:
CHECKED BY: J. WOODRUFF	CONTRACT NO.:
SUBMITTED BY: /s/ CORETTA BOWEN	DESIGN FILE NO: F08-25-2065
SIZE: ANSI D	FILE NAME: ft08cd104.dgn
	SHEET NO: 2145

U.S. ARMY CORPS OF ENGINEERS

FT HUACHUCA AZ

GROUND TRANSPORT EQUIPMENT BUILDING

DEMOLITION PLAN - EXIST. VEHICLE MAINT. FACILITY

SHEET ID

CD104

RTA

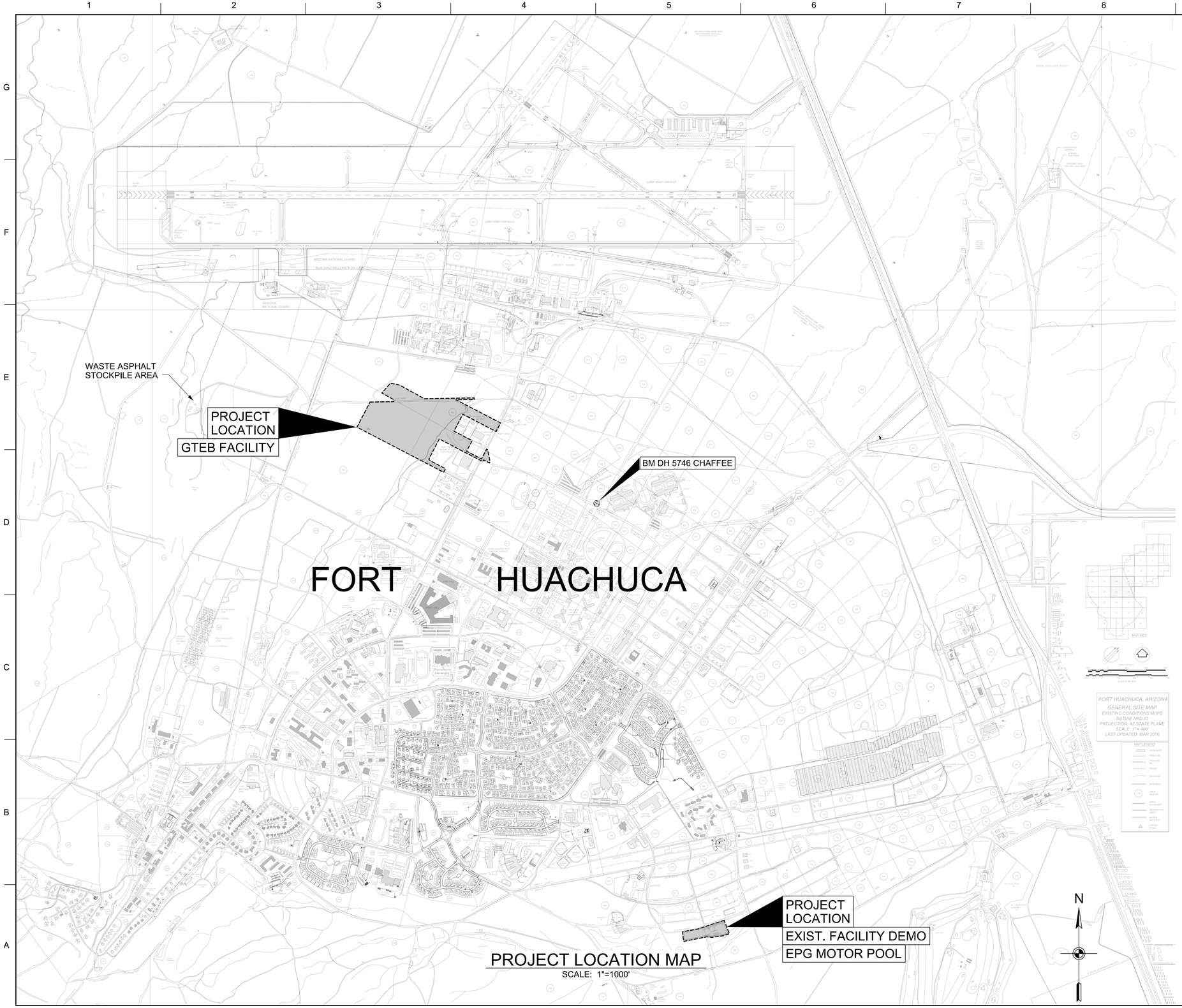

PROJECT LOCATION MAP
SCALE: 1"=1000'

COORD. SYSTEM, DATUM

1.GRID COORDINATES ARE IN US SURVEY FEET AND REFER TO THE ARIZONA STATE COORDINATE SYSTEM ZONE AZ EAST, NAD 83 (2010), AND ARE BASED ON DH 5746 CHAFFEE.

2.ELEVATIONS ARE IN US SURVEY FEET AND REFER TO NAVD 1988, GEOID 12A AND ARE BASED ON CP DH 5746 CHAFFEE.

3.TOPOGRAPHY BY TOTAL STATION & RTK SURVEY METHODS. FIELD SURVEY DATE: OCTOBER 3-18, 2017

4.SCALE FACTOR AT DH 5746 CHAFFEE: SCALE FACTOR=0.999903276, COMBINED FACTOR=0.999903276

GRID COORDINATES ARE IN US SURVEY FEET AND REFER TO THE ARIZONA STATE COORDINATE SYSTEM ZONE AZ EAST, NAD 83 (2010).

BENCHMARK

BENCHMARK DH 5746 CHAFFEE (3" DISK)
N = 207,386.747
E = 646,518.313
ELEV. = 4736.769

GENERAL NOTES

1. BORROW MATERIAL FOR THIS PROJECT IN NOT AVAILABLE ON POST. THE CONTRACTOR SHALL OBTAIN BORROW MATERIAL CONFORMING TO ALL PROJECT REQUIREMENTS OFF THE POST. ALL COSTS ASSOCIATED WITH OBTAINING BORROW FOR THE PROJECT SHALL BE BORNE BY THE CONTRACTOR.

2. THE CONTRACTOR SHALL DISPOSE OF CONSTRUCTION WASTE MATERIAL OFF THE POST WITH THE EXCEPTION OF MILLED ASPHALT, WHICH MAY BE DISPOSED OF AT THE WASTE ASPHALT STOCKPILE AREA INDICATED ON THIS SHEET. CONSTRUCTION WASTE AND DEBRIS REMOVAL SHALL BE AT THE CONTRACTOR'S EXPENSE AND RESPONSIBILITY.

3. STAGING AREA LOCATION, SIZE AND LIMITS SHALL BE COORDINATED WITH AND APPROVED BY THE CONTRACTING OFFICER.

4. TEMPORARY ACCESS ROADS CONSTRUCTED BY THE CONTRACTOR SHALL BE REMOVED COMPLETELY WHEN NO LONGER NEEDED OR AT THE END OF THE PROJECT.

5. THE CONTRACTOR SHALL PREPARE A STORM WATER POLLUTION PREVENTION PLAN (SWPPP) FOR THIS PROJECT IN ACCORDANCE WITH SECTION 01 57 19 OF THE SPECIFICATIONS. AREAS OF THE SITE DISTURBED BY CONSTRUCTION ACTIVITIES OF THIS PROJECT SHALL BE STABILIZED IN ACCORDANCE WITH THE APPROVED SWPPP AND APPROVED BY THE CONTRACTING OFFICER. FINAL STABILIZATION OF DISTURBED SOILS SHALL BE THE ESTABLISHMENT OF A VEGETATIVE COVER OF PERENIAL NATIVE GRASSES APPROPRIATE FOR THE CLIMATE OF PROJECT SITE UNLESS OTHERWISE STATED OR SPECIFIED.

6. AREAS OF THE SITE DISTURBED BY CONSTRUCTION ACTIVITIES INCLUDING, BUT NOT LIMITED TO: TEMPORARY ACCESS ROADS, STOCKPILE AREAS, BORROW AREAS, AND STAGING AREAS SHALL BE SEEDED IN ACCORDANCE WITH THE APPROVED SWPPP.

5. See Appendix 2 for Fort Huachuca Fire Department requirements. These items are required for work under this contract.

1"=1000' 0' 500' 1000' 2000' 3000'

US Army Corps of Engineers®

MARK	DESCRIPTION	DATE

U.S. ARMY CORPS OF ENGINEERS

DESIGNED BY: H. HORTON	ISSUE DATE: 13 JULY 2020
DRAWN BY: H. HORTON	SOLICITATION NO.:
CHECKED BY: J. WOODRUFF	CONTRACT NO.:
SUBMITTED BY: /s/ CORETTA BOWEN	DESIGN FILE NO: F26-25-2065
SIZE ANSI D	FILE NAME: ft08c-101.dgn
SPEC NO: 2145	

FT HUACHUCA AZ

GROUND TRANSPORT EQUIPMENT BUILDING

PROJECT LOCATION MAP

SHEET ID

C-101

RTA

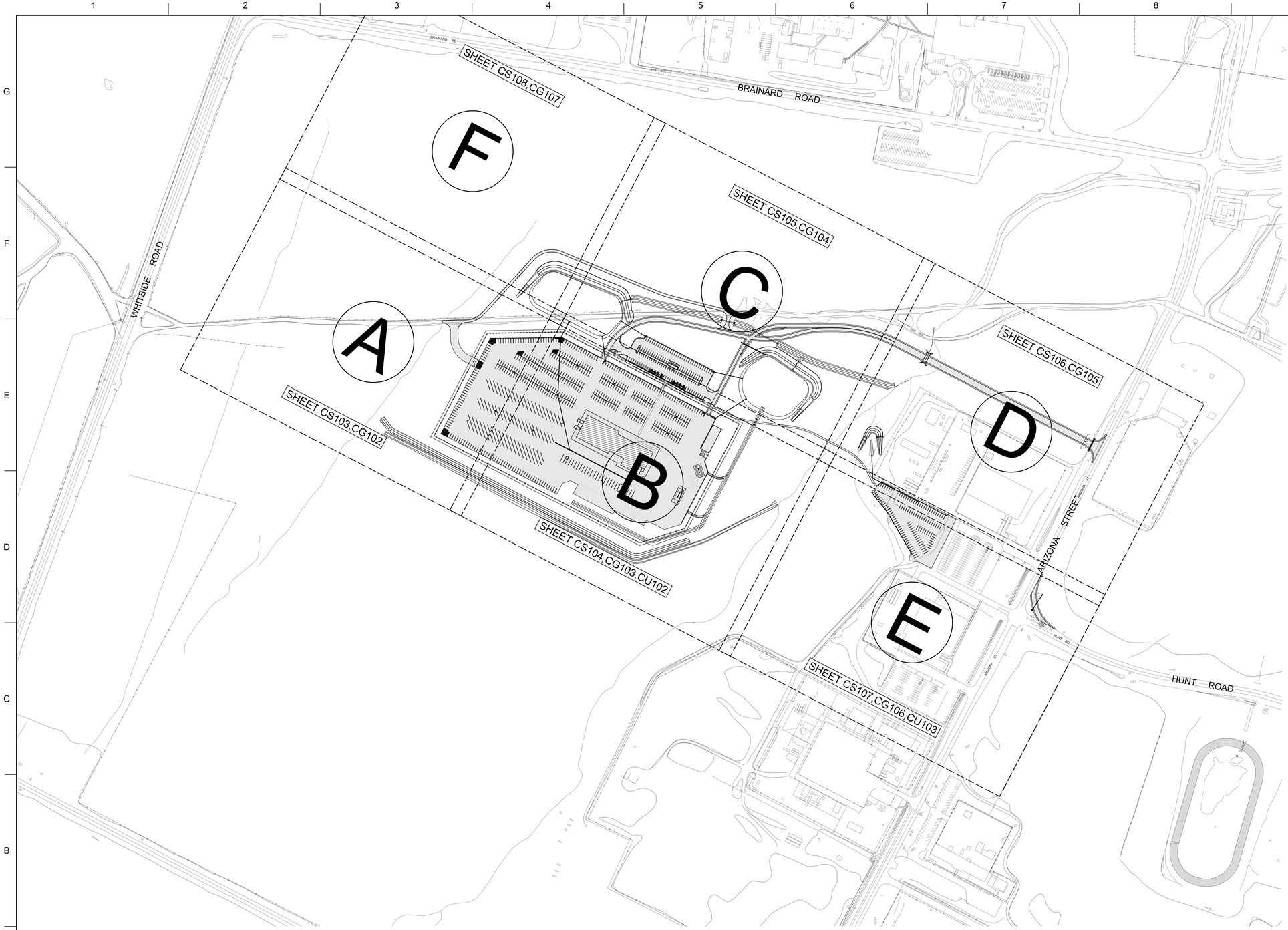

LEGEND

NEW PAVED OR AGGREGATE SURFACE

NOTES

1. SEE SHEET CS102 FOR AN OVERALL VIEW OF THE PROJECT FEATURES. SEE SHEET CG101 FOR AN OVERALL GRADING PLAN OF THE PROJECT.

2. ALIGNMENTS OF THE ROADS, RELOCATED TANK TRAIL, AND SIDEWALK TO THE OVERFLOW PARKING LOT ARE ON THE SITE PLANS. ALIGNMENTS OF STORM DRAIN FEATURES INCLUDING CHANNELS, BERMS, STORM DRAIN LINES, STORM DRAIN TRENCH, CULVERTS, AND POND EMBANKMENTS ARE ON THE GRADING PLANS.

3. ALIGNMENTS OF SEWER LINES AND LOCATIONS OF GAS AND WATER LINES ARE ON THE UTILITY PLANS.

N

SHEET LAYOUT PLAN

SCALE: 1"=200'

1"=200' 0' 100' 200' 400' 600'

US Army Corps of Engineers®

MARK	DESCRIPTION	DATE

U.S. ARMY CORPS OF ENGINEERS

DESIGNED BY: H. HORTON	ISSUE DATE: 13 JULY 2020
DRAWN BY: H. HORTON	SOLICITATION NO.:
CHECKED BY: J. WOODRUFF	CONTRACT NO.:
SUBMITTED BY: /s/ CORETTA BOWEN	DESIGN FILE NO: F08-25-0065
SIZE: ANSI D	SIZE: 24X36
	FILE NAME: ft08cs101.dgn

FT HUACHUCA AZ

GROUND TRANSPORT EQUIPMENT BUILDING

SHEET LAYOUT PLAN
SITE, GRADING, UTILITIES

SHEET ID

CS101

RTA

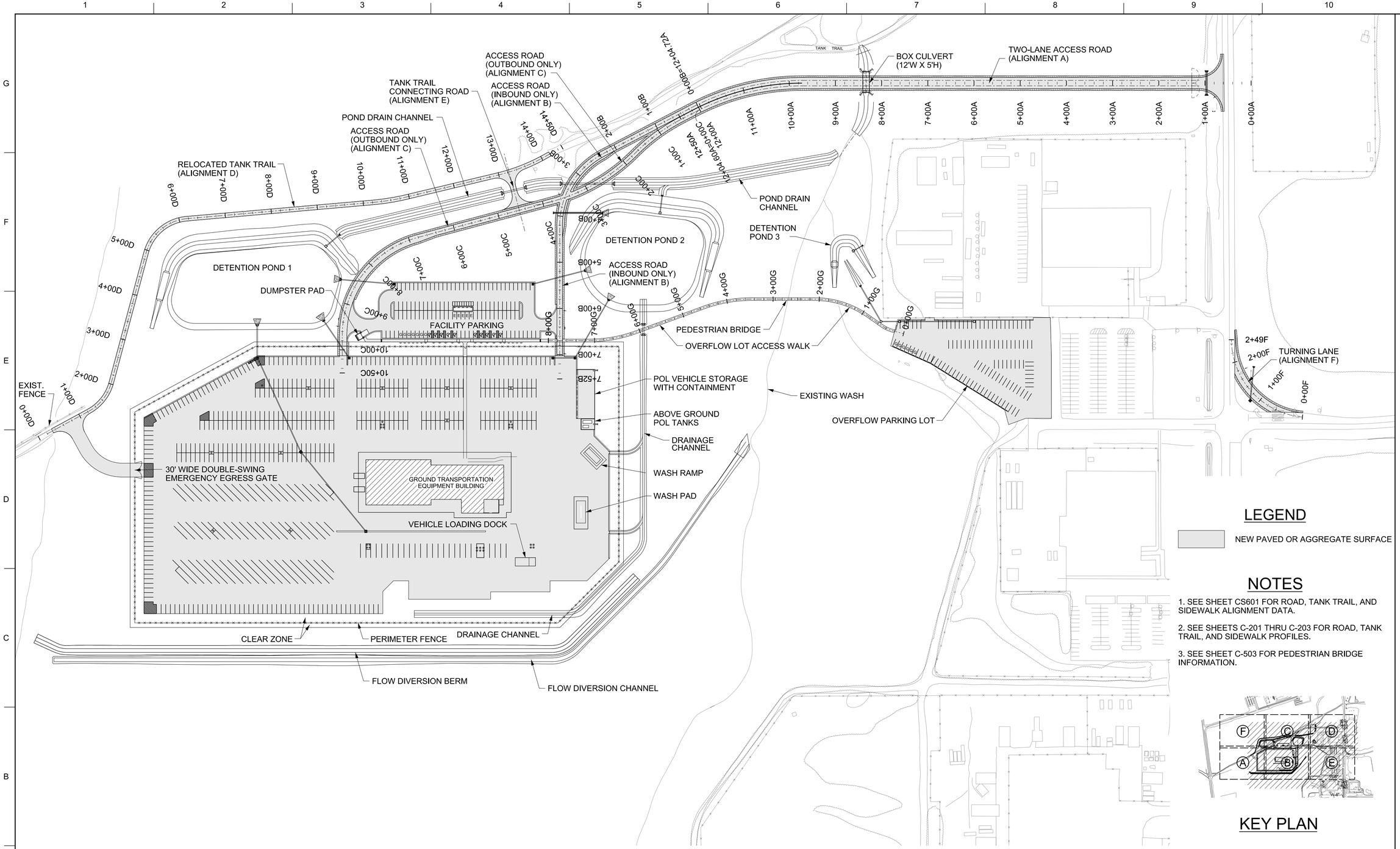

LEGEND

NEW PAVED OR AGGREGATE SURFACE

NOTES

1. SEE SHEET CS601 FOR ROAD, TANK TRAIL, AND SIDEWALK ALIGNMENT DATA.
2. SEE SHEETS C-201 THRU C-203 FOR ROAD, TANK TRAIL, AND SIDEWALK PROFILES.
3. SEE SHEET C-503 FOR PEDESTRIAN BRIDGE INFORMATION.

KEY PLAN

See Drawing CS 102 Behind "UXO Unexploded Ordnance Cleared Area" Addendum 1

SITE PLAN - OVERALL

SCALE: 1"=100'

1"=100' 0' 50' 100' 200' 300'

US Army Corps of Engineers®

MARK	DESCRIPTION	DATE

DESIGNED BY: H. HORTON	ISSUE DATE: 13 JULY 2020
DRAWN BY: H. HORTON	SOLICITATION NO.:
CHECKED BY: J. WOODRUFF	CONTRACT NO.:
SUBMITTED BY: /s/ CORETTA BOWEN	DESIGN FILE NO: F08-25-2065
SUPERVISORY CE	FILE NAME: ft08cs102.dgn
ANSI D	SIZE: 2145

U.S. ARMY CORPS OF ENGINEERS

FT HUACHUCA AZ

GROUND TRANSPORT EQUIPMENT BUILDING

SITE PLAN - OVERALL

SHEET ID

CS102

RTA

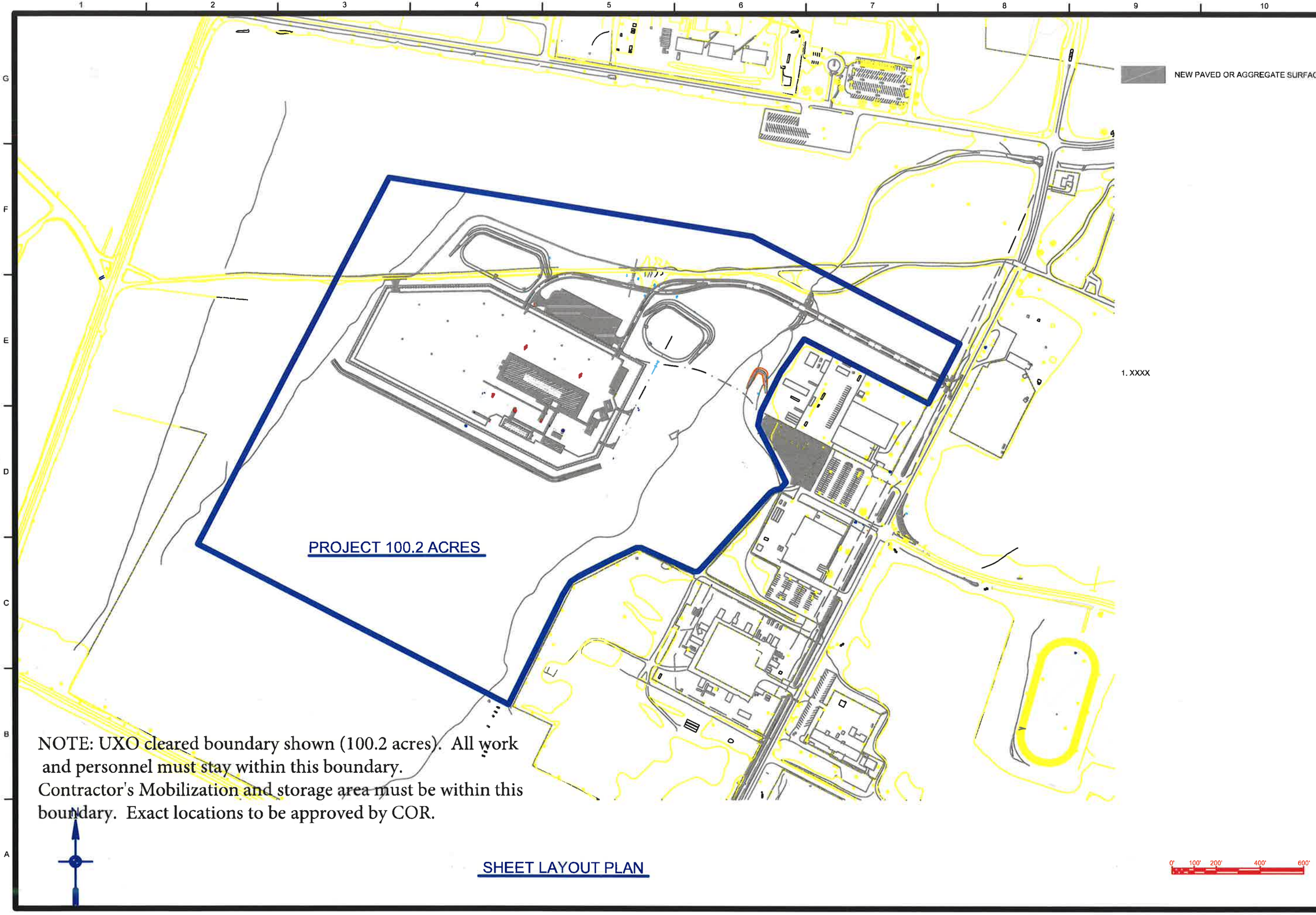

US Army Corps of Engineers®

MARK	DESCRIPTION	DATE

DESIGNED BY: H. HORTON
DRAWN BY: H. HORTON
CHECKED BY: J. WOODRUFF
SUBMITTED BY: [illegible]
SIZE: ANSI D
ISSUE DATE: [illegible]
SOLICITATION NO.: [illegible]
CONTRACT NO.: [illegible]
DESIGN FILE NO.: [illegible]
SPEC NO.: [illegible]
FILE NAME: [illegible]

U.S. ARMY CORPS OF ENGINEERS

FT HUACHUCA AZ

GROUND TRANSPORT EQUIPMENT BUILDING

SHEET LAYOUT PLAN
SITE, GRADING, UTILITIES

SHEET ID
CS102

RTA

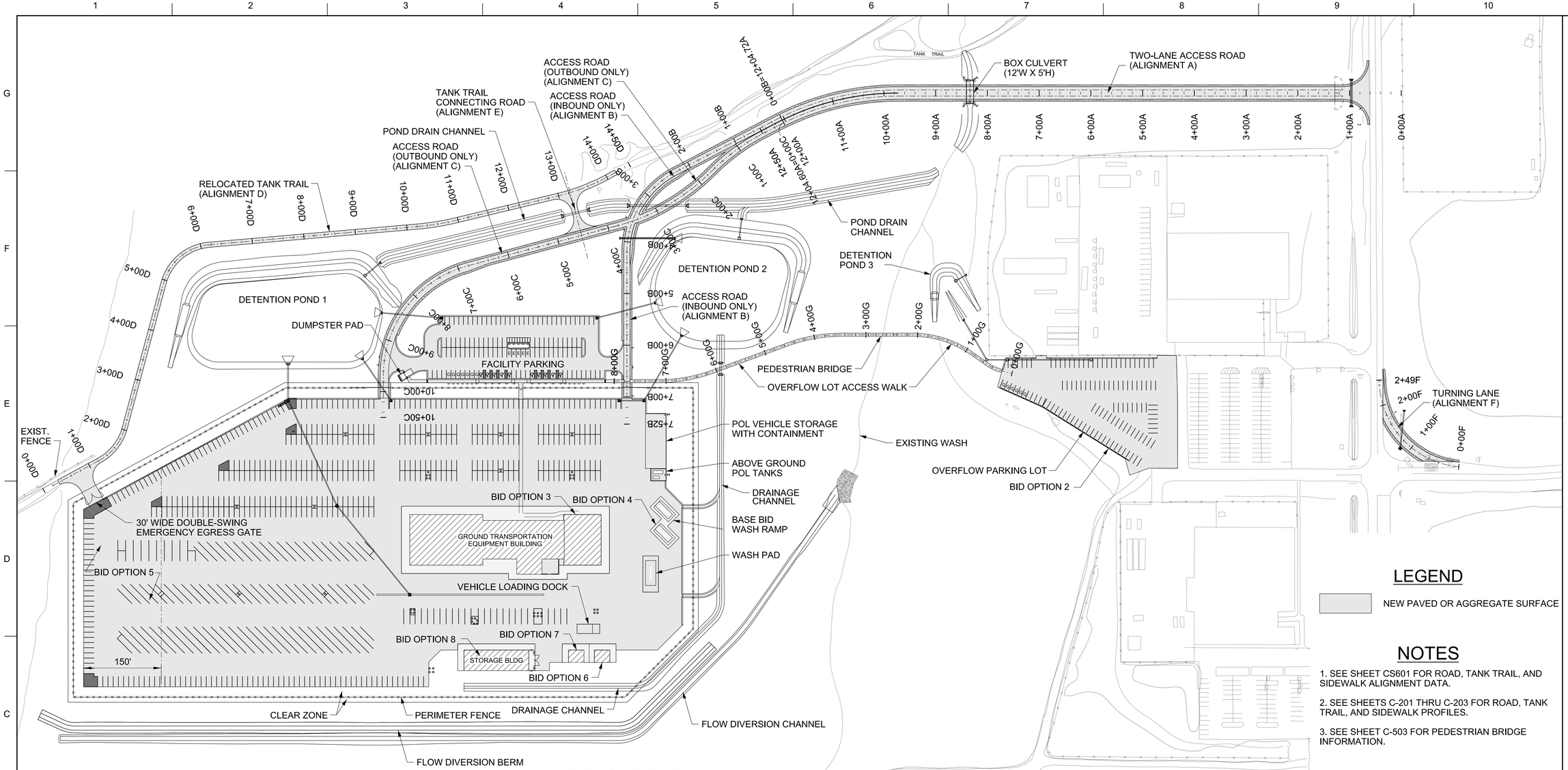

LEGEND

NEW PAVED OR AGGREGATE SURFACE

NOTES

1. SEE SHEET CS601 FOR ROAD, TANK TRAIL, AND SIDEWALK ALIGNMENT DATA.

2. SEE SHEETS C-201 THRU C-203 FOR ROAD, TANK TRAIL, AND SIDEWALK PROFILES.

3. SEE SHEET C-503 FOR PEDESTRIAN BRIDGE INFORMATION.

BID OPTIONS

1. BID OPTION 1 CONSISTS OF DEMOLITION OF BUILDING 68048. SEE SHEET CD104 FOR ADDITIONAL INFORMATION.

2. BID OPTION 2 CONSISTS OF ALL COVERED PARKING STRUCTURES AND ASSOCIATED TOP MOUNTED PHOTOVOLTAIC PANELS WITHIN THE OVERFLOW PARKING LOT. SEE SHEETS CS102 AND CS107 FOR THE LOCATION OF THE OVERFLOW PARKING LOT. SEE THE ELECTRICAL SHEETS FOR ADDITIONAL INFORMATION.

3. BID OPTION 3 CONSISTS OF CONSTRUCTION OF THE EAST END (APPROXIMATELY 6900 SQUARE FEET) OF THE GTEB FACILITY BUILDING. SEE THE ARCHITECTURAL DRAWINGS FOR ADDITIONAL INFORMATION. IF THE BID OPTION IS NOT AWARDED, THE CONCRETE SKIRT SURROUNDING THE BUILDING SHALL BE REVISED AND THE REMAINING FOOTPRINT OF THE BUILDING AREA NOT CONSTRUCTED SHALL BE PAVED WITH THE SAME RESIN MODIFIED PAVEMENT AS THE SURROUNDING MAINTENANCE YARD, AS SHOWN ON SHEET CS102.

4. BID OPTION 4 CONSISTS OF THE CONSTRUCTION OF A SECOND WASH RACK ON THE EAST END OF THE FACILITY MAINTENANCE YARD. THIS OPTION INCLUDES THE CONCRETE PAVED PAD, WASH RAMP STRUCTURE, AND WASTEWATER COLLECTION SYSTEM INCLUDING 16 LINEAR FEET OF SEWER LINE CONNECTING THE WASH RACK DRAIN TO THE SANITARY SEWER SYSTEM. IF THIS BID OPTION IS NOT AWARDED, THE CONCRETE FOOTPRINT OF THE WASH RACK SHALL BE PAVED WITH THE SAME RESIN MODIFIED PAVEMENT AS THE SURROUNDING MAINTENANCE YARD. SEE SHEET CG103 FOR GRADING OF THE AREA IF THE OPTION IS NOT AWARDED.

5. BID OPTION 5 CONSISTS EXTENDING THE FACILITY MAINTENANCE YARD TO THE WEST BY 150 FEET. THE BID OPTION INCLUDES AN ADDITIONAL 57,300 SQUARE FEET OF RESIN MODIFIED PAVED AREA ON THE WEST SIDE OF THE MAINTENANCE YARD. THE BID OPTION INCLUDES ADDITIONAL FENCING AND CURB AND GUTTER AS SHOWN ON SHEET CS103A. IF THE BID OPTION IS NOT AWARDED THE PERIMETER FENCE, CURB AND GUTTER ON THE NORTH SIDE OF THE YARD, PAVEMENT MARKING, AND THE NORTHWEST EXIT DRIVE SHALL BE AS SHOWN ON SHEET CS103. SEE THE ELECTRICAL DRAWINGS FOR MAINTENANCE YARD LIGHTING REVISIONS IF THE BID OPTION IS NOT AWARDED.

6. BID OPTION 6 CONSISTS OF THE CONSTRUCTION OF THE HAZMAT STORAGE BUILDING ON THE SOUTHEAST SIDE OF THE MAINTENANCE YARD. IF THIS BID OPTION IS NOT AWARDED THE FOOTPRINT OF THE HAZMAT BUILDING SHALL BE PAVED WITH THE SAME RESIN MODIFIED PAVEMENT AS THE SURROUNDING MAINTENANCE YARD AND GRADED TO DRAIN TOWARD THE SOUTH AT 1%.

7. BID OPTION 7 CONSISTS OF THE CONSTRUCTION OF THE POL STORAGE BUILDING ON THE SOUTHEAST SIDE OF THE MAINTENANCE YARD. IF THIS BID OPTION IS NOT AWARDED THE FOOTPRINT OF THE POL STORAGE BUILDING SHALL BE PAVED WITH THE SAME RESIN MODIFIED PAVEMENT AS THE SURROUNDING MAINTENANCE YARD TO DRAIN TOWARD THE SOUTH AT 1%.

8. BID OPTION 8 CONSISTS OF THE CONSTRUCTION OF THE STORAGE BUILDING ON THE SOUTH SIDE OF THE MAINTENANCE YARD, UTILITIES TO THE BUILDING, AND BOLLARDS PROTECTING THE UTILITY APPURTENANCES. IF THIS BID OPTION IS NOT AWARDED THE FOOTPRINT OF THE STORAGE BUILDING SHALL BE PAVED WITH THE SAME RESIN MODIFIED PAVEMENT AS THE SURROUNDING MAINTENANCE YARD AND GRADED TO DRAIN TOWARD THE SOUTH AT 1%.

KEY PLAN

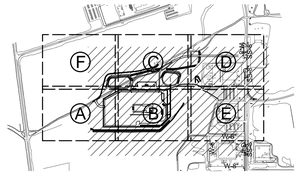

1"=100' 0' 50' 100' 200' 300'

SITE PLAN - BID OPTIONS

SCALE: 1"=100'

US Army Corps of Engineers®

MARK	DESCRIPTION	DATE

DESIGNED BY: H. HORTON
DRAWN BY: H. HORTON
CHECKED BY: J. WOODRUFF
SUBMITTED BY: ####
SIZE: ANSI D
ISSUE DATE: 24 SEP 2018
SOLICITATION NO.: ##########
CONTRACT NO.: ##########
DESIGN FILE NO: ##########
FILE NAME: ft08cs102a.dgn
SPEC NO: ####

U.S. ARMY CORPS OF ENGINEERS

FT HUACHUCA AZ

GROUND TRANSPORT EQUIPMENT BUILDING

SITE PLAN - BID OPTIONS

SHEET ID

CS102A

RTA

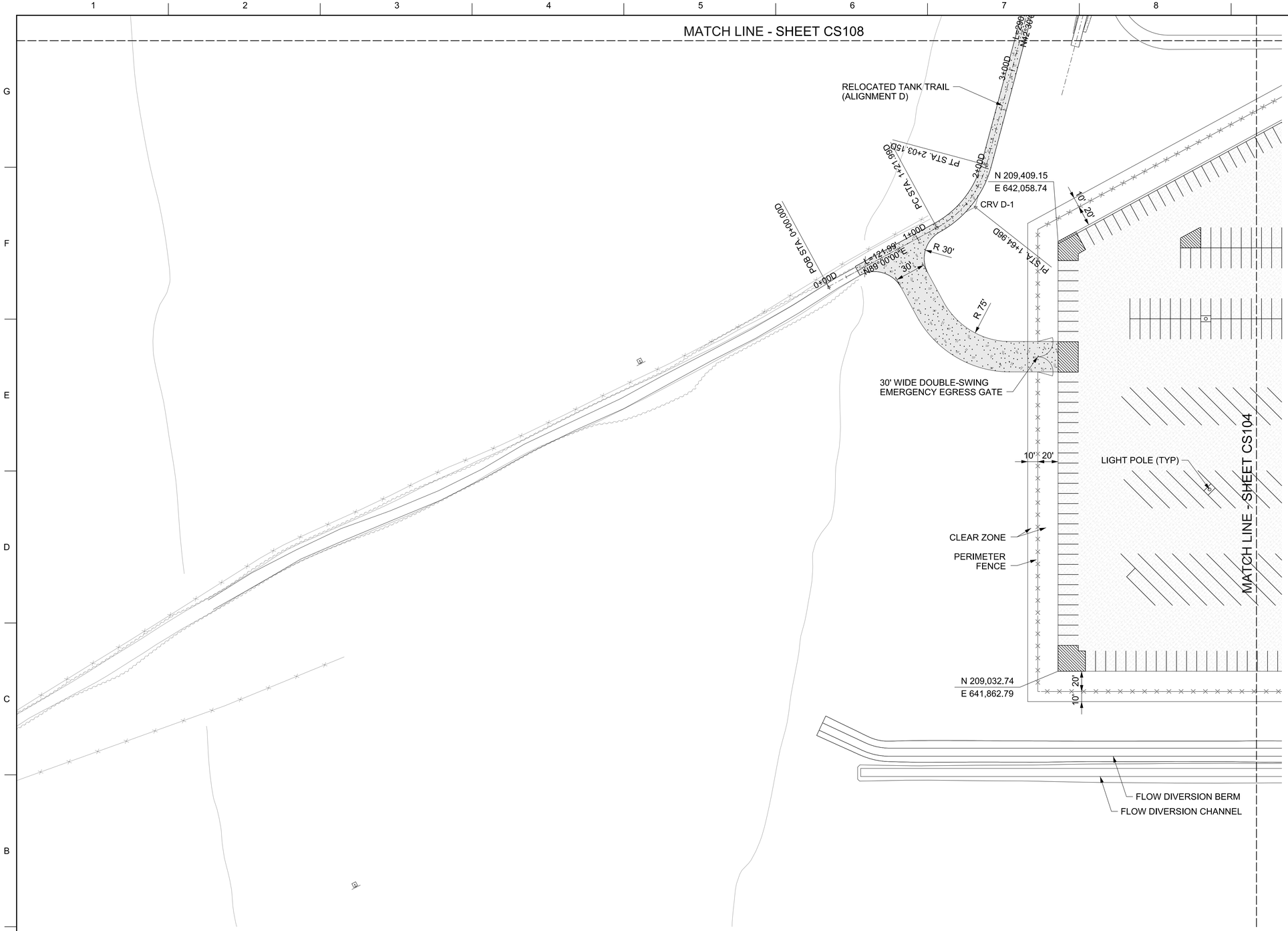

SITE PLAN A

SCALE: 1"=50'

LEGEND

- NEW RESIN MODIFIED PAVEMENT
- NEW AGGREGATE SURFACE ROAD
- NEW CHAIN LINK FENCE
- NEW DOUBLE SWING GATE

NOTES

1. SEE SHEET CS109 FOR PARKING SPACE STRIPE DIMENSIONS.
2. SEE SHEET CS601 FOR ROAD, TANK TRAIL, AND SIDEWALK ALIGNMENT DATA.

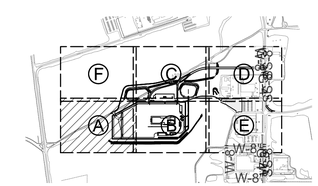

KEY PLAN

1"=50' 0' 25' 50' 100' 150'

US Army Corps of Engineers®

MARK	DESCRIPTION	DATE

U.S. ARMY CORPS OF ENGINEERS

DESIGNED BY: H. HORTON
DRAWN BY: H. HORTON
CHECKED BY: J. WOODRUFF
SUBMITTED BY: SUZANNE R. BOWEN
SIZE: ANSI D
SPEC NO: 2145
ISSUE DATE: 13 JULY 2020
SOLICITATION NO.:
CONTRACT NO.:
DESIGN FILE NO: 2020-25-0065
FILE NAME: ft08cs103.dgn

AZ

GROUND TRANSPORT EQUIPMENT BUILDING

SITE PLAN A

FT HUACHUCA

SHEET ID

CS103

RTA

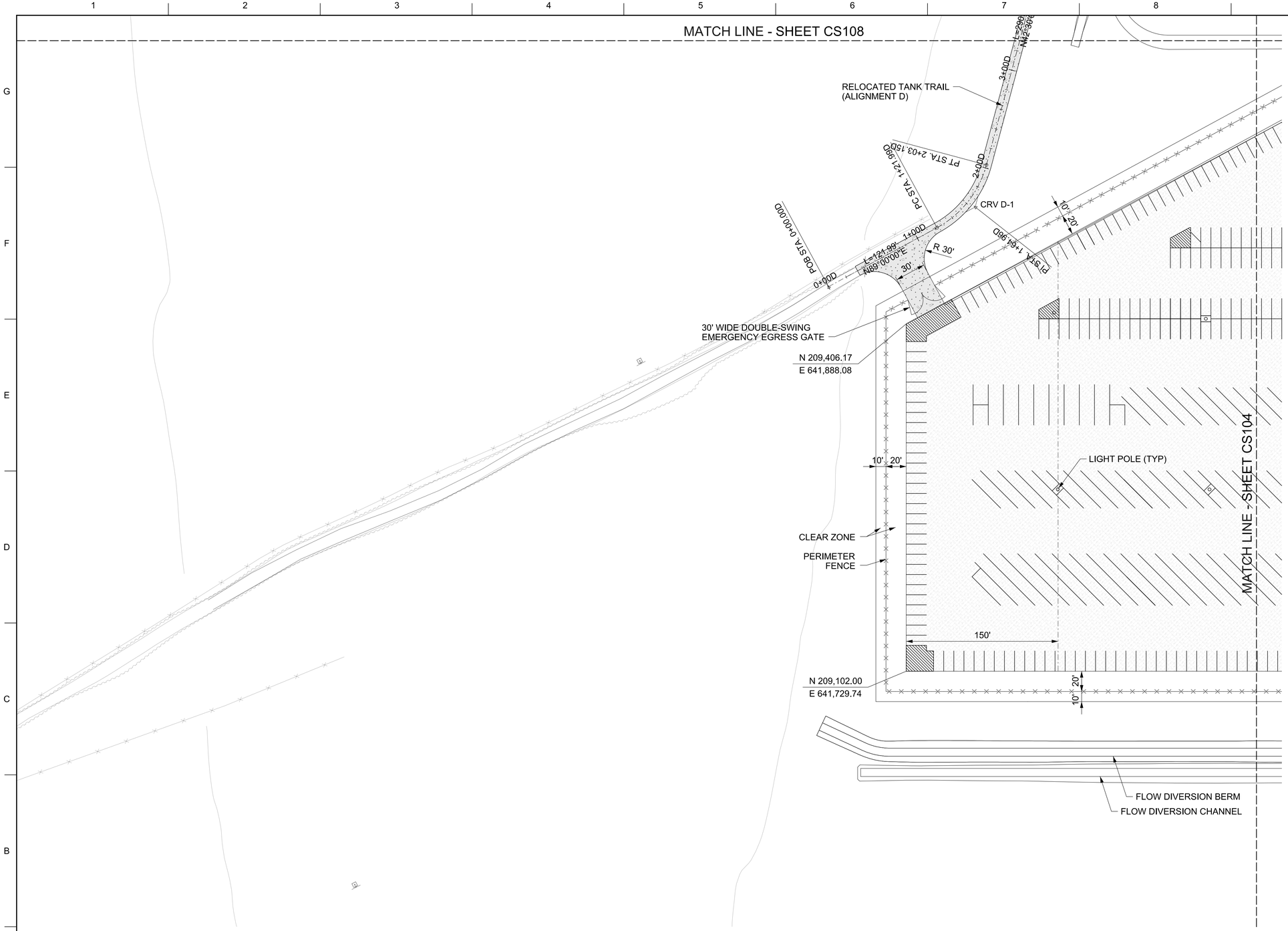

LEGEND

- NEW RESIN MODIFIED PAVEMENT
- NEW AGGREGATE SURFACE ROAD
- NEW CHAIN LINK FENCE
- NEW DOUBLE SWING GATE

NOTES

1. SEE SHEET CS109 FOR PARKING SPACE STRIPE DIMENSIONS.

2. SEE SHEET CS601 FOR ROAD, TANK TRAIL, AND SIDEWALK ALIGNMENT DATA.

3. BID OPTION 5 CONSISTS OF EXTENDING THE MAINTENANCE YARD TO THE WEST BY 150 FEET. THE BID OPTION INCLUDES AN ADDITIONAL 57,300 SQUARE FEET OF RESIN MODIFIED PAVEMENT ON THE WEST SIDE OF THE MAINTENANCE YARD. THE BID OPTION INCLUDES ADDITIONAL FENCING AND CURB AND GUTTER AS SHOWN ON THIS SHEET. IF THE BID OPTION IS NOT AWARDED THE PERIMETER FENCE, CURB AND GUTTER, PAVEMENT MARKING, AND THE NORTHWEST EXIT DRIVE SHALL BE AS SHOWN ON SHEET CS103. SEE THE ELECTRICAL DRAWINGS FOR MAINTENANCE YARD LIGHTING REVISIONS IF THE BID OPTION IS NOT AWARDED.

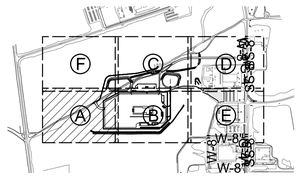

KEY PLAN

BID OPTION 5 - SITE PLAN A

SCALE: 1"=50'

1"=50' 0' 25' 50' 100' 150'

US Army Corps of Engineers®

MARK	DESCRIPTION	DATE

U.S. ARMY CORPS OF ENGINEERS

DESIGNED BY: H. HORTON
DRAWN BY: H. HORTON
CHECKED BY: J. WOODRUFF
SUBMITTED BY: /s/ CORETTA BOWEN
SIZE: ANSI D
SPEC NO: 2145
ISSUE DATE: 13 JULY 2020
SOLICITATION NO.:
CONTRACT NO.:
DESIGN FILE NO: 202-25-2065
FILE NAME: ft08cs-103a.dgn

FT HUACHUCA AZ

GROUND TRANSPORT EQUIPMENT BUILDING

BID OPTION 5
SITE PLAN A

SHEET ID

CS103A

RTA

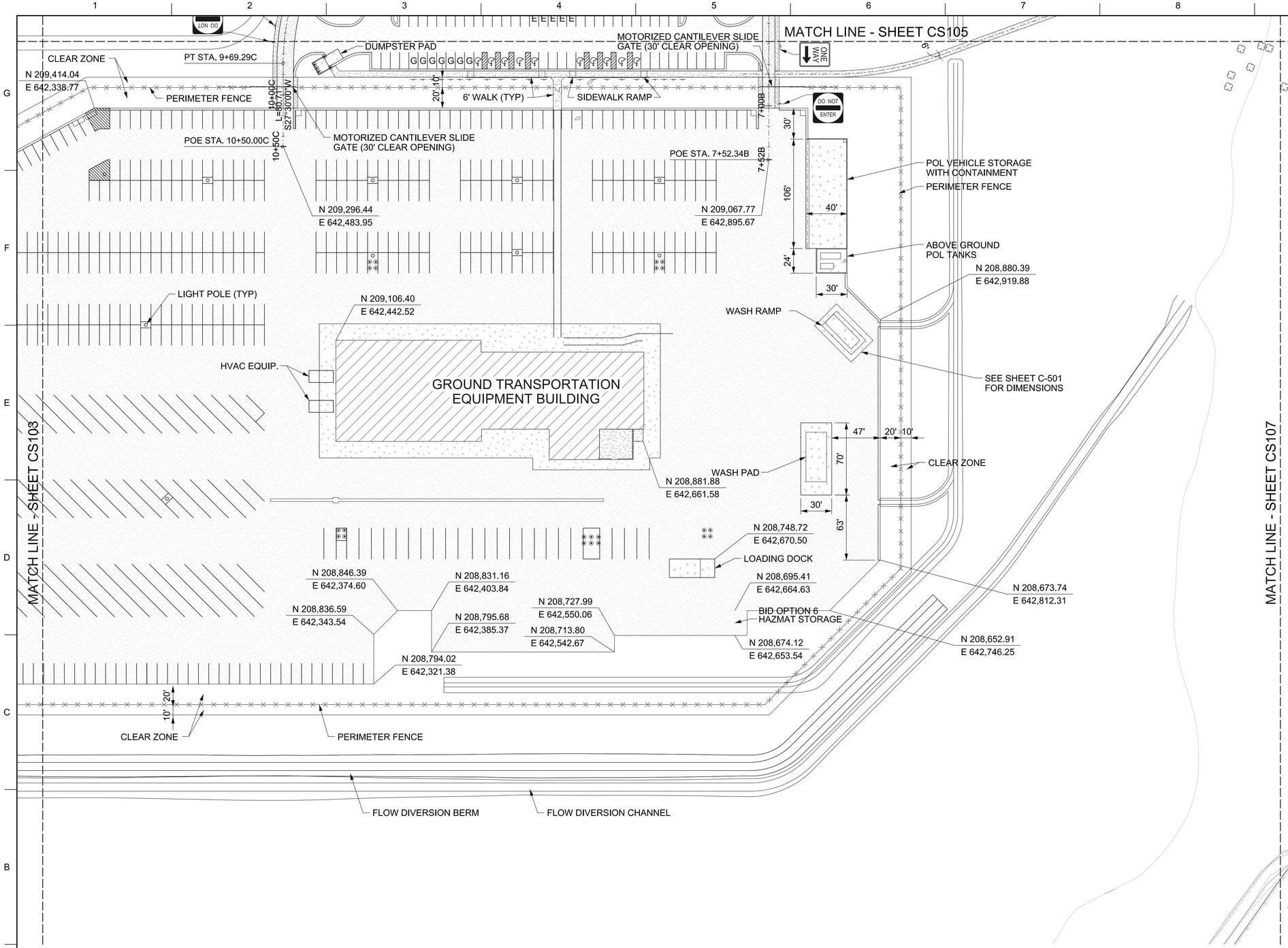

SITE PLAN B

SCALE: 1"=50'

LEGEND

- NEW RESIN MODIFIED PAVEMENT
- NEW CONC. PAVEMENT
- NEW ASPHALT PAVEMENT
- NEW AGG. SURFACE SHOULDER
- NEW CONC. SIDEWALK
- NEW CURB AND GUTTER
- NEW CHAIN LINK FENCE
- NEW 4' WIDE PERSONNEL GATE
- NEW ROAD SIGN
- NEW BOLLARD
- PARKING SPACE FOR HANDICAPPED
- G GREEN VEHICLE PARKING SPACE
- E ELECTRIC VEHICLE PARKING SPACE

NOTES

1. SEE SHEET CS109 FOR PARKING SPACE STRIPE DIMENSIONS.
2. SEE SHEET CS601 FOR ROAD, TANK TRAIL, AND SIDEWALK ALIGNMENT DATA.

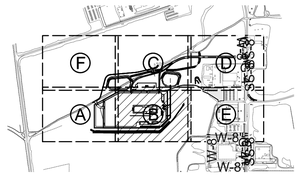

KEY PLAN

1"=50' 0' 25' 50' 100' 150'

US Army Corps of Engineers®

MARK	DESCRIPTION	DATE

U.S. ARMY CORPS OF ENGINEERS

DESIGNED BY: H. HORTON
DRAWN BY: H. HORTON
CHECKED BY: J. WOODRUFF
SUBMITTED BY: SUZANNE R. BOWEN
SIZE: ANSI D
FSC: 2145
ISSUE DATE: 13 JULY 2020
SOLICITATION NO.:
CONTRACT NO.:
DESIGN FILE NO: 72825-20865
FILE NAME: fm08cs104.dgn

AZ

GROUND TRANSPORT EQUIPMENT BUILDING

SITE PLAN B

FT HUACHUCA

SHEET ID

CS104

RTA

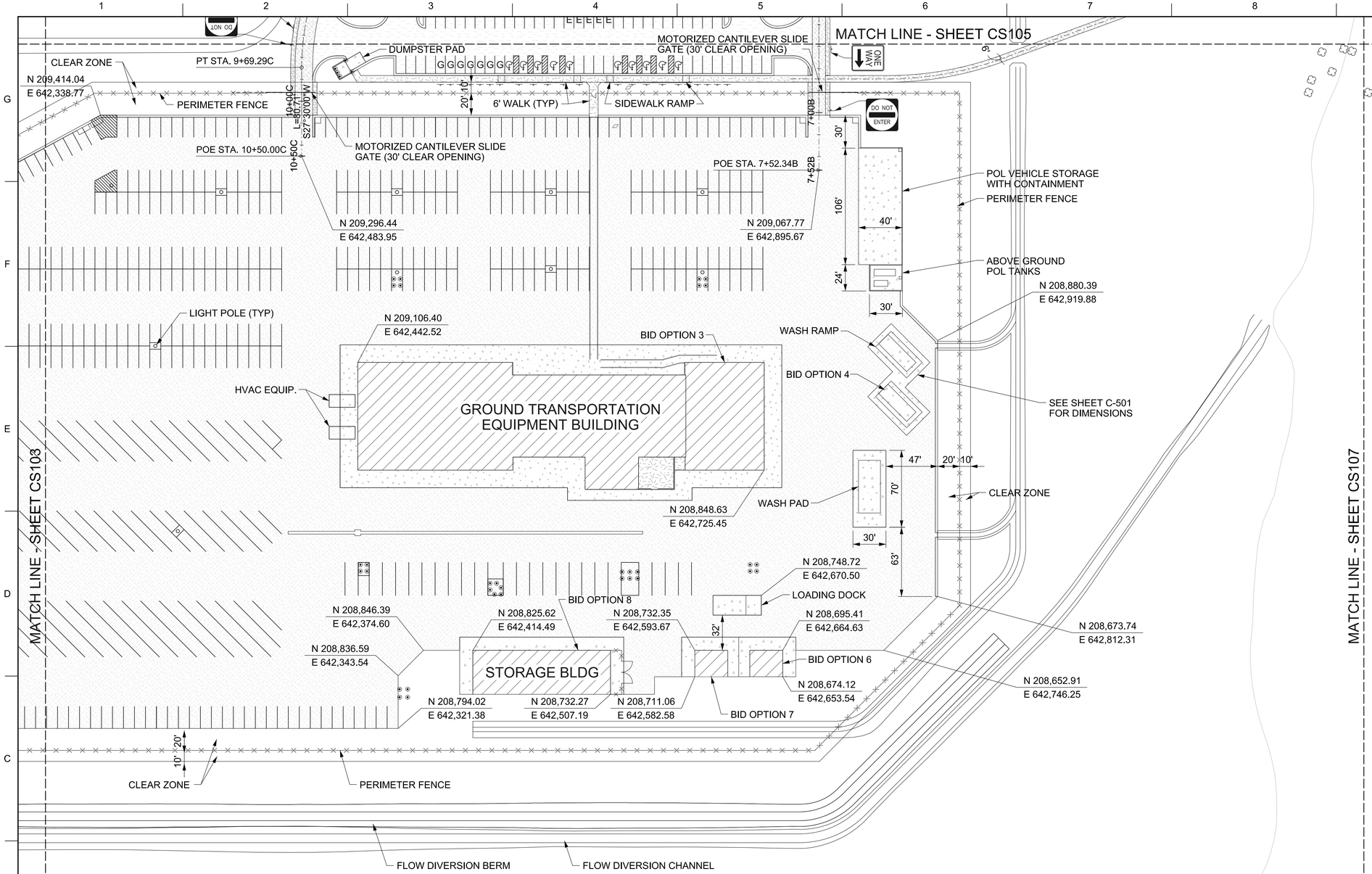

LEGEND

- NEW RESIN MODIFIED PAVEMENT
- NEW CONC. PAVEMENT
- NEW ASPHALT PAVEMENT
- NEW AGG. SURFACE SHOULDER
- NEW CONC. SIDEWALK
- NEW CURB AND GUTTER
- NEW CHAIN LINK FENCE
- NEW 4' WIDE PERSONNEL GATE
- NEW ROAD SIGN
- NEW BOLLARD
- PARKING SPACE FOR HANDICAPPED
- G GREEN VEHICLE PARKING SPACE
- E ELECTRIC VEHICLE PARKING SPACE

NOTES

1. SEE SHEET CS109 FOR PARKING SPACE STRIPE DIMENSIONS.

2. SEE SHEET CS601 FOR ROAD, TANK TRAIL, AND SIDEWALK ALIGNMENT DATA.

BID OPTIONS

1. BID OPTION 3 CONSISTS OF CONSTRUCTION OF THE EAST END (APPROXIMATELY 6900 SQUARE FEET) OF THE GTEB FACILITY BUILDING. SEE THE ARCHITECTURAL DRAWINGS FOR ADDITIONAL INFORMATION. IF THE BID OPTION IS NOT AWARDED, THE CONCRETE SKIRT SURROUNDING THE BUILDING SHALL BE REVISED AND THE REMAINING FOOTPRINT OF THE BUILDING AREA NOT CONSTRUCTED SHALL BE PAVED WITH THE SAME RESIN MODIFIED PAVEMENT AS THE SURROUNDING MAINTENANCE YARD, AS SHOWN ON SHEET CS102.

2. BID OPTION 4 CONSISTS OF THE CONSTRUCTION OF A SECOND WASH RACK ON THE EAST END OF THE FACILITY MAINTENANCE YARD. THIS OPTION INCLUDES THE CONCRETE PAVED PAD, WASH RAMP STRUCTURE, AND WASTEWATER COLLECTION SYSTEM INCLUDING 16 LINEAR FEET OF SEWER LINE CONNECTING THE WASH RACK DRAIN TO THE SANITARY SEWER SYSTEM. IF THIS BID OPTION IS NOT AWARDED, THE CONCRETE FOOTPRINT OF THE WASH RACK SHALL BE PAVED WITH THE SAME RESIN MODIFIED PAVEMENT AS THE SURROUNDING MAINTENANCE YARD. SEE SHEET CG103 FOR GRADING OF THE AREA IF THE OPTION IS NOT AWARDED.

3. BID OPTION 6 CONSISTS OF THE CONSTRUCTION OF THE HAZMAT STORAGE BUILDING ON THE SOUTHEAST SIDE OF THE MAINTENANCE YARD. IF THIS BID OPTION IS NOT AWARDED THE FOOTPRINT OF THE HAZMAT BUILDING SHALL BE PAVED WITH THE SAME RESIN MODIFIED PAVEMENT AS THE SURROUNDING MAINTENANCE YARD AND GRADED TO DRAIN TOWARD THE SOUTH AT 1%.

4. BID OPTION 7 CONSISTS OF THE CONSTRUCTION OF THE POL STORAGE BUILDING ON THE SOUTHEAST SIDE OF THE MAINTENANCE YARD. IF THIS BID OPTION IS NOT AWARDED THE FOOTPRINT OF THE POL STORAGE BUILDING SHALL BE PAVED WITH THE SAME RESIN MODIFIED PAVEMENT AS THE SURROUNDING MAINTENANCE YARD TO DRAIN TOWARD THE SOUTH AT 1%.

5. BID OPTION 8 CONSISTS OF THE CONSTRUCTION OF THE STORAGE BUILDING ON THE SOUTH SIDE OF THE MAINTENANCE YARD, UTILITIES TO THE BUILDING, AND BOLLARDS PROTECTING THE UTILITY APPURTENANCES. IF THIS BID OPTION IS NOT AWARDED THE FOOTPRINT OF THE STORAGE BUILDING SHALL BE PAVED WITH THE SAME RESIN MODIFIED PAVEMENT AS THE SURROUNDING MAINTENANCE YARD AND GRADED TO DRAIN TOWARD THE SOUTH AT 1%.

BID OPTIONS - SITE PLAN B

SCALE: 1"=50'

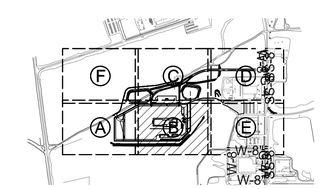

KEY PLAN

1"=50' 0' 25' 50' 100' 150'

US Army Corps of Engineers®

MARK	DESCRIPTION	DATE

U.S. ARMY CORPS OF ENGINEERS

DESIGNED BY: H. HORTON
DRAWN BY: H. HORTON
CHECKED BY: J. WOODRUFF
SUBMITTED BY: /S/ CORETTA BOWEN
SIZE: ANSI D
FSC NO. 2145
ISSUE DATE: 13 JULY 2020
SOLICITATION NO.:
CONTRACT NO.:
DESIGN FILE NO: 2020-25-0065
FILE NAME: ft08cs104a.dgn

AZ

FT HUACHUCA

GROUND TRANSPORT EQUIPMENT BUILDING

BID OPTIONS 3, 4 ,6 ,7 AND 8
SITE PLAN B

SHEET ID

CS104A

RTA

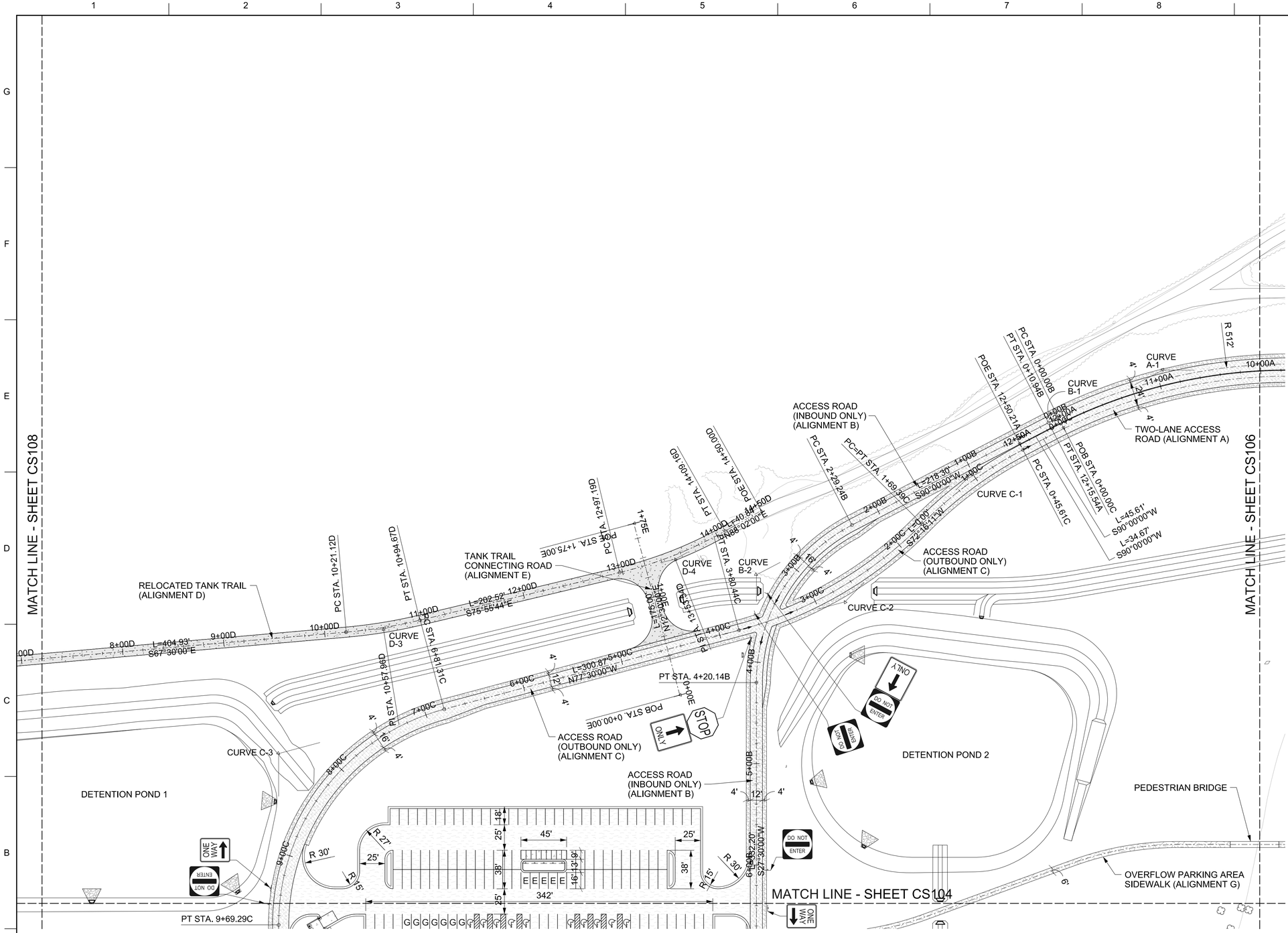

SITE PLAN C

SCALE: 1"=50'

LEGEND

- NEW RESIN MODIFIED PAVEMENT
- NEW CONC. PAVEMENT
- NEW ASPHALT PAVEMENT
- NEW AGGREGATE SURFACE
- NEW AGG. SURFACE SHOULDER
- NEW CONC. SIDEWALK
- NEW CURB AND GUTTER
- NEW ROAD SIGN
- PARKING SPACE FOR HANDICAPPED
- G — GREEN VEHICLE PARKING SPACE
- E — ELECTRIC VEHICLE PARKING SPACE

NOTES

1. SEE SHEET CS109 FOR PARKING SPACE STRIPE DIMENSIONS.
2. SEE SHEET CS601 FOR ROAD, TANK TRAIL, AND SIDEWALK ALIGNMENT DATA.

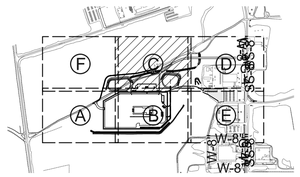

KEY PLAN

1"=50' 0' 25' 50' 100' 150'

US Army Corps of Engineers®

MARK	DESCRIPTION	DATE

ISSUE DATE: 13 JULY 2020
SOLICITATION NO.:
CONTRACT NO.:
DESIGN FILE NO: 232-5-2065
FILE NAME: ft08cs105.dgn

DESIGNED BY: H. HORTON
DRAWN BY: H. HORTON
CHECKED BY: J. WOODRUFF
SUBMITTED BY: SUCKRETA BOWEN
SIZE: 22 X 34 INCHES
ANSI D

U.S. ARMY CORPS OF ENGINEERS

FT HUACHUCA

AZ

GROUND TRANSPORT EQUIPMENT BUILDING

SITE PLAN C

SHEET ID

CS105

RTA

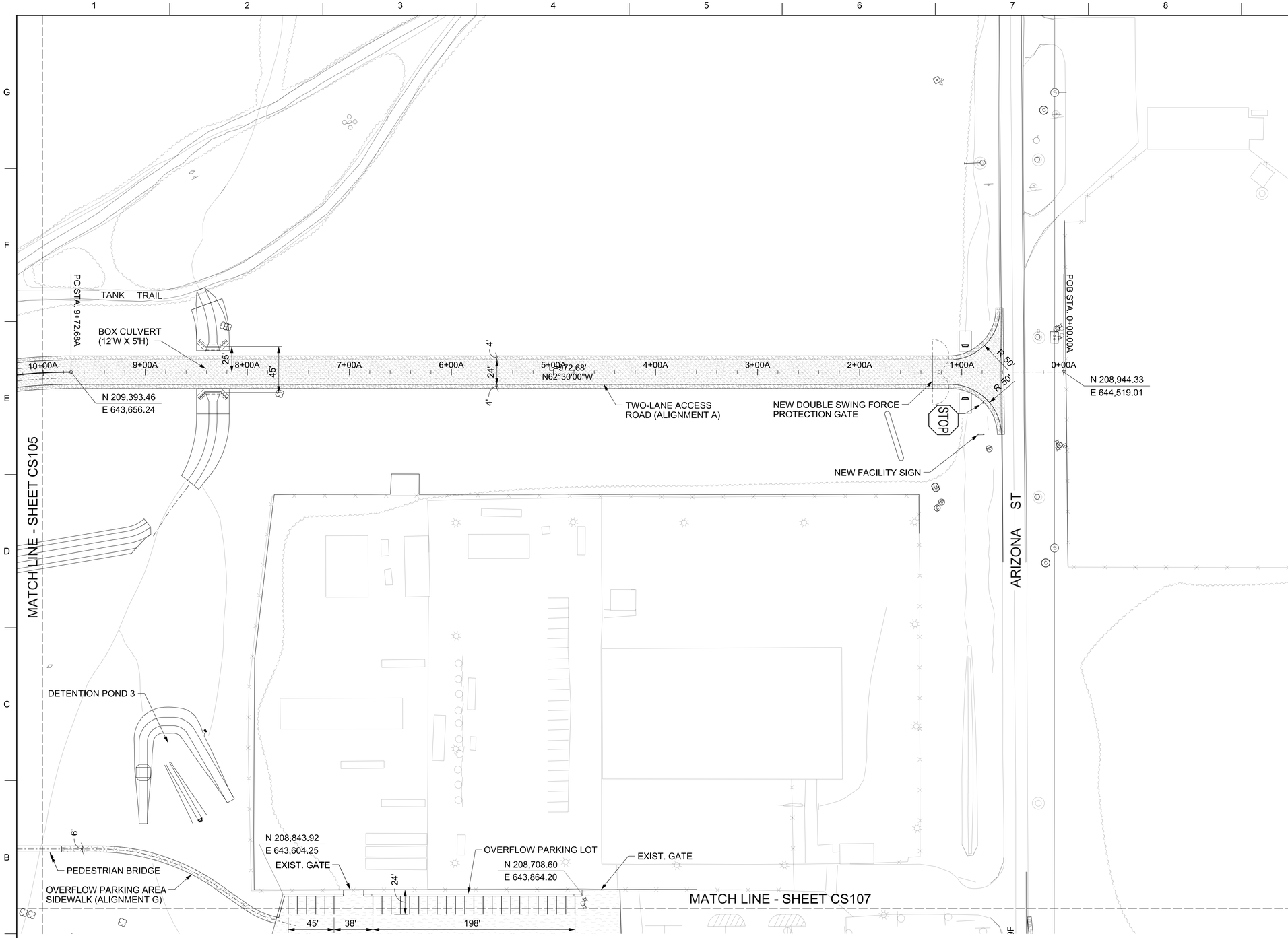

LEGEND

- NEW RESIN MODIFIED PAVEMENT
- NEW ASPHALT PAVING
- NEW RIPRAP EROSION PROTECTION
- NEW AGG. SURFACE SHOULDER
- NEW CONC. SIDEWALK
- NEW ROAD SIGN
- NEW CONC. HEADWALL
- NEW DOUBLE SWING FORCE PROTECTION GATE

NOTES

1. SEE SHEET CS109 FOR PARKING SPACE STRIPE DIMENSIONS.

2. SEE SHEET CS601 FOR ROAD, TANK TRAIL, AND SIDEWALK ALIGNMENT DATA.

3. PROVIDE COVERED PARKING SHADE STRUCTURES, WITH TOP MOUNTED PHOTOVOLTAIC ARRAYS, FOR ALL NEW PARKING SPACES SHOWN IN THE OVERFLOW PARKING LOT. CLEAR HEIGHT FROM BOTTOM OF ROOF SUPPORT STRUCTURE TO FINISH GRADE SHALL BE 9'.

4. SEE SHEET C-503 FOR PEDESTRIAN BRIDGE INFORMATION.

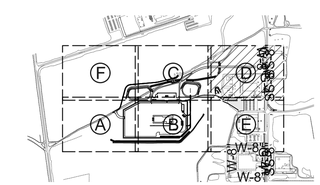

KEY PLAN

SITE PLAN D

SCALE: 1"=50'

1"=50' 0' 25' 50' 100' 150'

US Army Corps of Engineers®

MARK	DESCRIPTION	DATE

ISSUE DATE: 13 JULY 2020
SOLICITATION NO.:
CONTRACT NO.:
DESIGN FILE NO: 72-25-2065
FILE NAME: ft08cs106.dgn

DESIGNED BY: H. HORTON
DRAWN BY: H. HORTON
CHECKED BY: J. WOODRUFF
SUBMITTED BY: /s/ CORETTA BOWEN
SIZE: ANSI D
SPEC NO: 2145

U.S. ARMY CORPS OF ENGINEERS

FT HUACHUCA AZ

GROUND TRANSPORT EQUIPMENT BUILDING

SITE PLAN D

SHEET ID

CS106

RTA

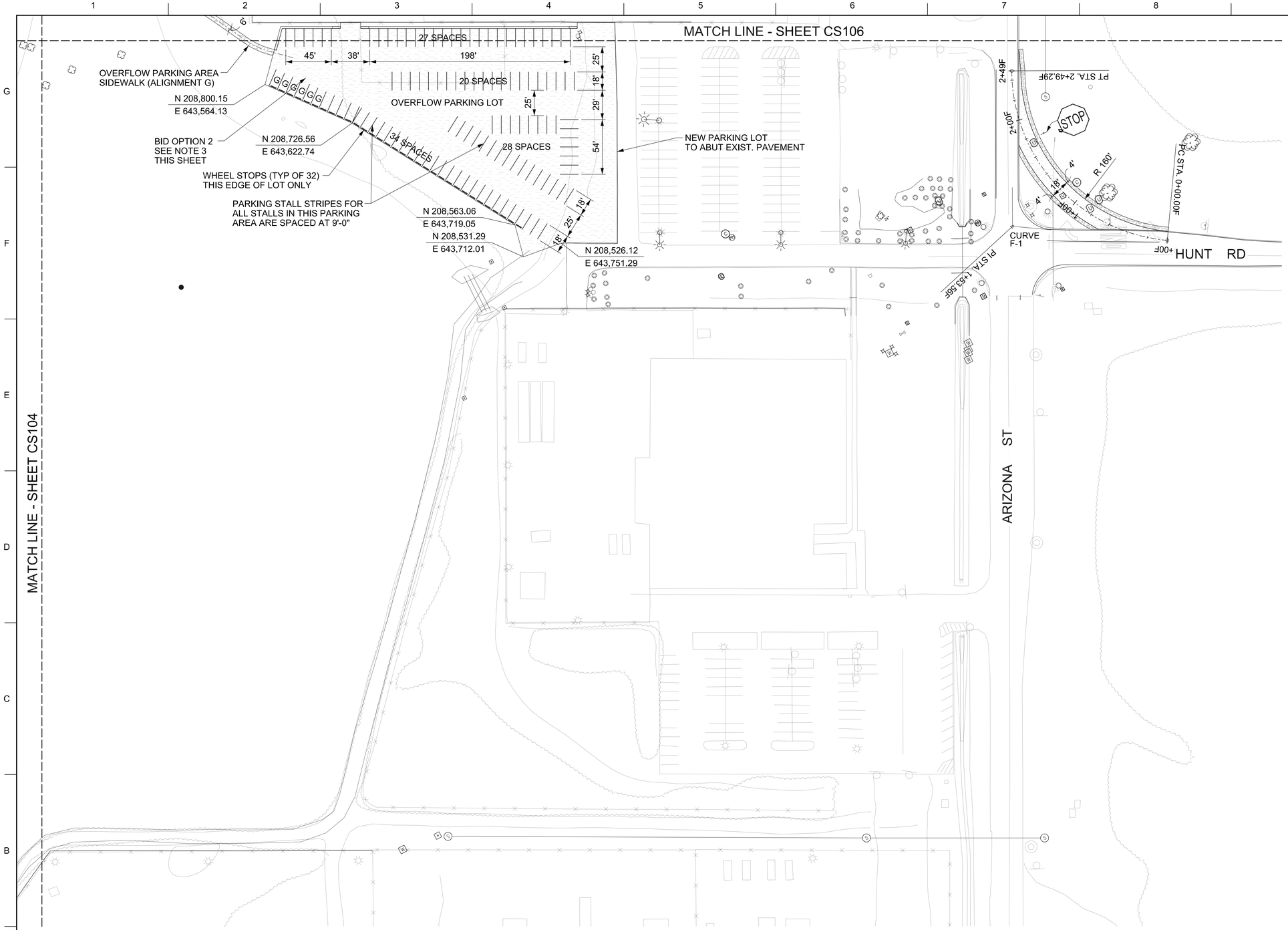

LEGEND

- NEW ASPHALT PAVEMENT
- NEW AGG. SURFACE SHOULDER
- NEW CONC. SIDEWALK
- NEW CURB AND GUTTER
- NEW CONC. WHEEL STOP (TYP OF 32)
- NEW ROAD SIGN
- G — GREEN VEHICLE PARKING SPACE

NOTES

1. SEE SHEET CS109 FOR PARKING SPACE STRIPE DIMENSIONS.

2. SEE SHEET CS601 FOR ROAD, TANK TRAIL, AND SIDEWALK ALIGNMENT DATA.

3. BID OPTION 2 CONSISTS OF ALL COVERED PARKING STRUCTURES AND ASSOCIATED TOP MOUNTED PHOTOVOLTAIC PANELS FOR ALL NEW PARKING SPACES SHOWN IN THE OVERFLOW PARKING LOT. CLEAR HEIGHT FROM BOTTOM OF ROOF SUPPORT STRUCTURE TO FINISH GRADE SHALL BE 9'. SEE THE ELECTRICAL SHEET ES103 FOR ADDITIONAL INFORMATION.

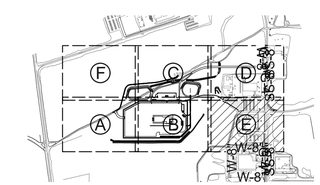

KEY PLAN

SITE PLAN E

SCALE: 1"=50'

1"=50' 0' 25' 50' 100' 150'

US Army Corps of Engineers®

MARK	DESCRIPTION	DATE

DESIGNED BY: H. HORTON	ISSUE DATE: 13 JULY 2020
DRAWN BY: H. HORTON	SOLICITATION NO.:
CHECKED BY: J. WOODRUFF	CONTRACT NO.:
SUBMITTED BY: /s/ CORETTA BOWEN	DESIGN FILE NO: 202-25-2065
SIZE: ANSI D	FILE NAME: ft08cs107.dgn
SPEC NO: 2145	

U.S. ARMY CORPS OF ENGINEERS

FT HUACHUCA AZ

GROUND TRANSPORT EQUIPMENT BUILDING

SITE PLAN E

SHEET ID

CS107

RTA

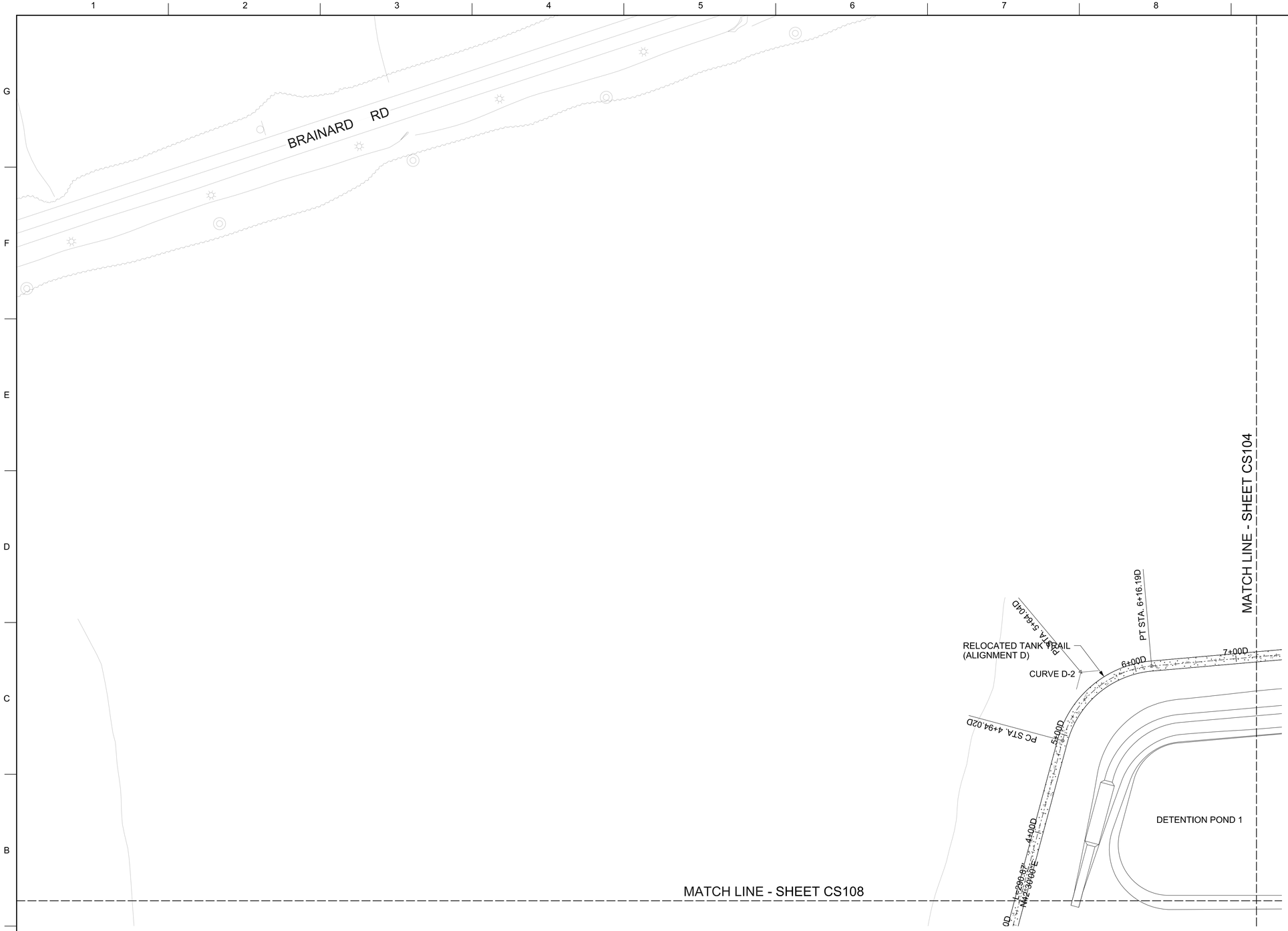

SITE PLAN F

SCALE: 1"=50'

LEGEND

NEW AGGREGATE SURFACE

NOTES

1. SEE SHEET CS601 FOR ROAD, TANK TRAIL, AND SIDEWALK ALIGNMENT DATA.

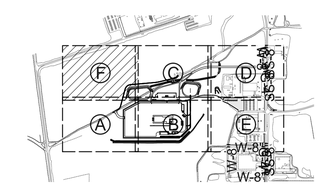

KEY PLAN

1"=50' 0' 25' 50' 100' 150'

US Army Corps of Engineers®

MARK	DESCRIPTION	DATE

U.S. ARMY CORPS OF ENGINEERS

DESIGNED BY: H. HORTON	ISSUE DATE: 13 JULY 2020
DRAWN BY: H. HORTON	SOLICITATION NO.:
CHECKED BY: J. WOODRUFF	CONTRACT NO.:
SUBMITTED BY: M. CORETTA BOWEN	DESIGN FILE NO: 2020-25-0065
SIZE: ANSI D	SPEC NO: 2145
	FILE NAME: ft08cs108.dgn

FT HUACHUCA AZ

GROUND TRANSPORT EQUIPMENT BUILDING

SITE PLAN F

SHEET ID

CS108

RTA

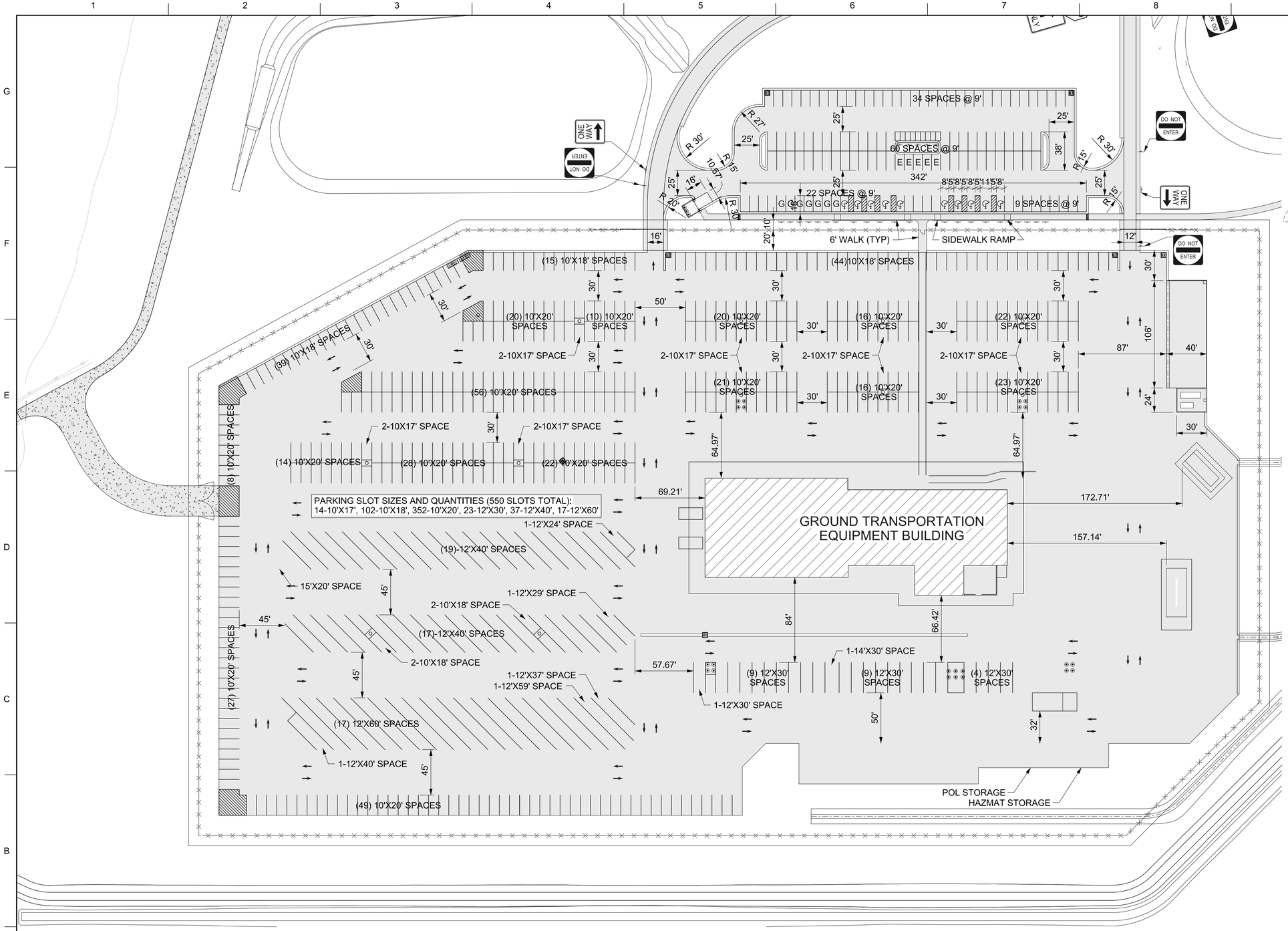

LEGEND

- NEW PAVEMENT
- NEW AGG. SURFACE SHOULDER
- NEW CONC. SIDEWALK
- NEW ASPHALT SIDEWALK
- NEW CURB AND GUTTER
- NEW CHAIN LINK FENCE
- NEW DOUBLE SWING FORCE PROTECTION GATE
- NEW 4' WIDE PERSONNEL GATE
- NEW ROAD SIGN
- NEW BOLLARD

NOTES

1. SEE SHEET CS601 FOR ROAD, TANK TRAIL, AND SIDEWALK ALIGNMENT DATA.

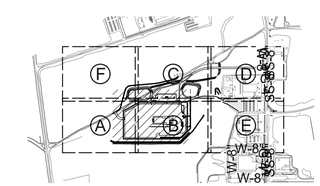

KEY PLAN

PARKING LAYOUT PLAN

SCALE: 1"=50'

1"=50' 0' 25' 50' 100' 150'

US Army Corps of Engineers®

MARK	DESCRIPTION	DATE

U.S. ARMY CORPS OF ENGINEERS

DESIGNED BY: H. HORTON	ISSUE DATE: 13 JULY 2020
DRAWN BY: H. HORTON	SOLICITATION NO.:
CHECKED BY: J. WOODRUFF	CONTRACT NO.:
SUBMITTED BY: ISI CORETTA BOWEN	DESIGN FILE NO: FDE-25-2065
SUPERVISORY ENGR:	FILE NAME: ft08cs109.dgn
ANSI D	SIZE: 2145

AZ

FT HUACHUCA

GROUND TRANSPORT EQUIPMENT BUILDING

PARKING LAYOUT PLAN

SHEET ID

CS109

RTA

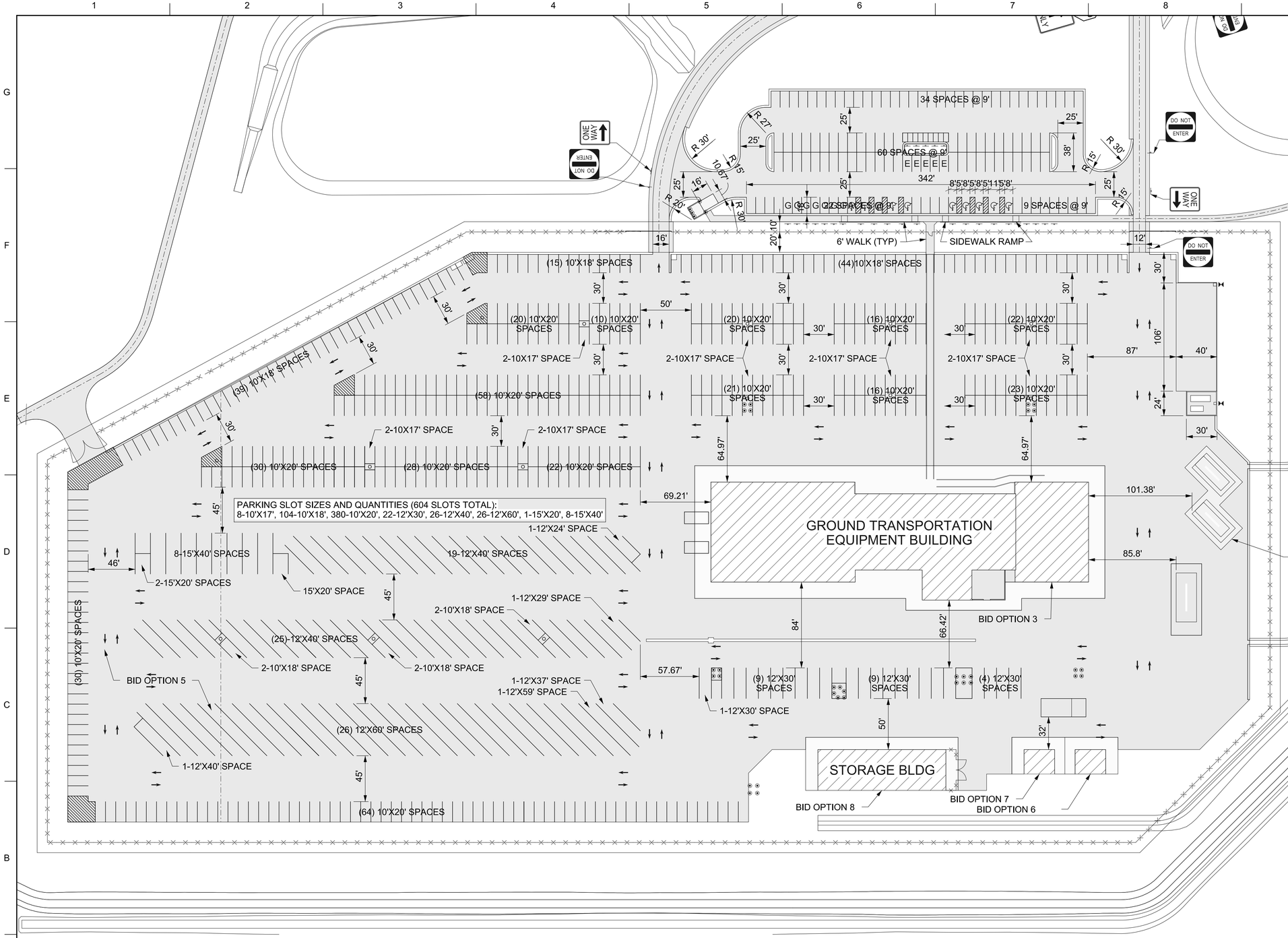

LEGEND

- NEW PAVEMENT
- NEW AGG. SURFACE SHOULDER
- NEW CONC. SIDEWALK
- NEW ASPHALT SIDEWALK
- NEW CURB AND GUTTER
- NEW CHAIN LINK FENCE
- NEW DOUBLE SWING FORCE PROTECTION GATE
- NEW 4' WIDE PERSONNEL GATE
- NEW ROAD SIGN
- NEW BOLLARD

NOTES

1. SEE SHEET CS601 FOR ROAD, TANK TRAIL, AND SIDEWALK ALIGNMENT DATA.
2. SEE SHEET CS102A FOR BID OPTION DESCRIPTIONS.

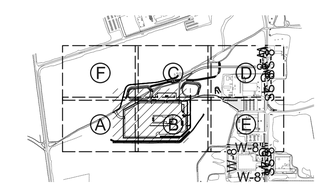

KEY PLAN

BID OPTIONS PARKING LAYOUT PLAN

SCALE: 1"=50'

1"=50' 0' 25' 50' 100' 150'

US Army Corps of Engineers®

MARK	DESCRIPTION	DATE

DESIGNED BY: H. HORTON	ISSUE DATE: 13 JULY 2020
DRAWN BY: H. HORTON	SOLICITATION NO.:
CHECKED BY: J. WOODRUFF	CONTRACT NO.:
SUBMITTED BY: /S/ CORETTA BOWEN	DESIGN FILE NO: F08-25-2065
SIZE: ANSI D	SIZE: 22" X 34"
	FILE NAME: ft08cs109a.dgn

U.S. ARMY CORPS OF ENGINEERS

FT HUACHUCA AZ

GROUND TRANSPORT EQUIPMENT BUILDING

BID OPTIONS PARKING LAYOUT PLAN

SHEET ID

CS109A

RTA

ALIGNMENT A - Access Rd-Two Lane Section

Point	Station	Northing	Easting	Radius	Length	Tangent
POB	0+00.00	208944.33	644519.01			
PC	9+72.68	209393.46	643656.24			
PC	9+72.68	209393.46	643656.24			
PI	10+96.49	209450.63	643546.41	506.000	242.863	123.817
PT	12+15.54	209450.63	643422.59			
PT	12+15.54	209450.63	643422.59			
POE	12+50.21	209450.63	643387.92			

ALIGNMENT B - Access Rd-One Lane Inbound

Point	Station	Northing	Easting	Radius	Length	Tangent
PC	0+00.00	209456.51	643433.53			
PI	0+05.47	209456.63	643428.06	512.000	10.942	5.471
PT	0+10.94	209456.63	643422.59			
PT	0+10.94	209456.63	643422.59			
PC	2+29.24	209456.63	643204.29			
PC	2+29.24	209456.63	643204.29			
PI	3+35.43	209456.63	643098.10	175.000	190.895	106.193
PT	4+20.14	209362.44	643049.06			
PT	4+20.14	209362.44	643049.06			
POE	7+52.34	209067.77	642895.67			

ALIGNMENT C - Access Rd-One Lane Outbound

Point	Station	Northing	Easting	Radius	Length	Tangent
POB	0+00.00	209444.63	643433.53			
PC	0+45.61	209444.63	643387.92			
PC	0+45.61	209444.63	643387.92			
PI	1+08.00	209444.63	643325.53	400.000	123.782	62.389
PT	1+69.39	209425.63	643266.11			
PT	1+69.39	209425.63	643266.11			
PC	1+69.39	209425.63	643266.10			
PC	1+69.39	209425.63	643266.10			
PI	2+77.43	209392.73	643163.20	399.990	211.043	108.039
PT	3+80.44	209416.11	643057.72			
PT	3+80.44	209416.11	643057.72			
PC	6+81.31	209481.23	642763.98			
PC	6+81.31	209481.23	642763.98			
PI	8+50.12	209517.77	642599.17	220.000	287.979	168.812
PT	9+69.29	209368.03	642521.22			
PT	9+69.29	209368.03	642521.22			
POE	10+50.00	209296.44	642483.95			

ALIGNMENT D - Tank Trail Relocation

Point	Station	Northing	Easting	Radius	Length	Tangent
POB	0+00.00	209474.29	641836.88			
PC	1+21.99	209476.42	641958.86			
PC	1+21.99	209476.42	641958.86			
PI	1+64.96	209477.17	642001.81	100.000	81.158	42.963
PT	2+03.15	209508.84	642030.84			
PT	2+03.15	209508.84	642030.84			
PC	4+94.02	209723.30	642227.35			
PC	4+94.02	209723.30	642227.35			
PI	5+64.04	209774.92	642274.66	100.000	122.173	70.021
PT	6+16.19	209748.13	642339.35			
PT	6+16.19	209748.13	642339.35			
PC	10+21.12	209593.17	642713.45			
PC	10+21.12	209593.17	642713.45			
PI	10+57.96	209579.07	642747.49	500.000	73.556	36.844
PT	10+94.67	209570.11	642783.23			
PT	10+94.67	209570.11	642783.23			
PC	12+97.19	209520.87	642979.67			
PC	12+97.19	209520.87	642979.67			
PI	13+53.54	209507.17	643034.33	400.000	111.966	56.351
PT	14+09.16	209509.11	643090.65			
PT	14+09.16	209509.11	643090.65			
POE	14+50.00	209510.51	643131.46			

ALIGNMENT E - Tank Trail Connecting Rd

Point	Station	Northing	Easting	Radius	Length	Tangent
POB	0+00.00	209386.33	642976.41			
POE	1+75.00	209557.19	643014.29			

ALIGNMENT F - Hunt Rd to Arizona St Right Turn Lane

Point	Station	Northing	Easting	Radius	Length	Tangent
PC	0+00.00	208251.98	644283.74			
PI	1+53.56	208334.92	644154.51	169.000	249.293	153.555
PT	2+49.29	208471.48	644224.72			

ALIGNMENT G - Sidewalk from Overflow Parking Lot

Point	Station	Northing	Easting	Radius	Length	Tangent
POB	0+00.00	208810.73	643600.96			
PC	0+23.18	208826.39	643583.87			
PC	0+23.18	208826.39	643583.87			
PI	0+37.29	208835.92	643573.47	80.000	27.925	14.106
PT	0+51.11	208848.44	643566.95			
PT	0+51.11	208848.44	643566.95			
PC	0+87.80	208880.99	643550.01			
PC	0+87.80	208880.99	643550.01			
PI	1+50.86	208936.92	643520.89	200.000	122.173	63.060
PT	2+09.98	208966.04	643464.96			
PT	2+09.98	208966.04	643464.96			
PC	3+47.00	209029.31	643343.42			
PC	3+47.00	209029.31	643343.42			
PI	3+99.90	209053.73	643296.50	300.000	104.720	52.898
PT	4+51.72	209060.64	643244.05			
PT	4+51.72	209060.64	643244.05			
PC	6+07.99	209081.03	643089.12			
PC	6+07.99	209081.03	643089.12			
PI	6+60.88	209087.94	643036.67	300.000	104.720	52.898
PT	7+12.71	209112.36	642989.75			
PT	7+12.71	209112.36	642989.75			
POE	8+00.00	209152.67	642912.32			

ALIGNMENT H - Sanitary Sewer Line-GTEB Main Facility

Point	Station	Northing	Easting	Radius	Length	Tangent
POB	0+00.00	209052.35	642491.99			
PI	0+45.10	209092.35	642512.82			
PI	0+45.10	209092.35	642512.82			
PI	2+16.20	209013.35	642664.59			
PI	2+16.20	209013.35	642664.59			
PI	4+51.48	208928.41	642884.00			
PI	4+51.48	208928.41	642884.00			
PI	10+31.14	208660.75	643398.16			
PI	10+31.14	208660.75	643398.16			
PI	17+03.12	209215.73	643777.06			
PI	17+03.12	209215.73	643777.06			
PI	20+03.12	209138.01	644066.82			
PI	20+03.12	209138.01	644066.82			
POE	25+50.00	208885.49	644551.91			

ALIGNMENT J - Sanitary Sewer Lateral-GTEB

Point	Station	Northing	Easting	Radius	Length	Tangent
POB	0+00.00	208963.25	642638.51			
POE	1+00.00	209051.95	642684.68			

ALIGNMENT K - Sanitary Sewer Lateral

Point	Station	Northing	Easting	Radius	Length	Tangent
POB	0+00.00	208804.69	642777.32			
PI	0+99.50	208758.75	642865.58			
PI	0+99.50	208758.75	642865.58			
PI	2+89.50	208927.28	642953.31			
PI	2+89.50	208927.28	642953.31			
POE	3+52.50	208956.37	642897.43			

ALIGNMENT L - Sanitary Sewer Lateral

Point	Station	Northing	Easting	Radius	Length	Tangent
POB	0+00.00	208901.40	642860.83			
PI	0+52.00	208851.81	642876.47			
PI	0+52.00	208851.81	642876.47			
POE	1+00.00	208829.64	642919.04			

ALIGNMENT M - Sanitary Sewer Lateral

Point	Station	Northing	Easting	Radius	Length	Tangent
POB	0+00.00	209062.94	642945.01			
PI	0+44.00	209042.62	642984.04			
PI	0+44.00	209042.62	642984.04			
POE	1+80.50	208921.54	642921.01			

BID OPTION ALIGNMENT JJ - Sanitary Sewer Line-Storage Bldg Main

Point	Station	Northing	Easting	Radius	Length	Tangent
POB	0+00.00	208797.83	642413.74			
PI	0+45.00	208837.74	642434.52			
PI	0+45.00	208837.74	642434.52			
PI	1+28.97	208798.97	642509.00			
PI	1+28.97	208798.97	642509.00			
PI	3+51.15	208835.99	642728.08			
PI	3+51.15	208835.99	642728.08			
POE	5+32.41	208928.41	642884.00			

BID OPTION ALIGNMENT KK - Sanitary Sewer Lateral-Storage Bldg

Point	Station	Northing	Easting	Radius	Length	Tangent
POB	0+00.00	208759.05	642488.22			
POE	1+00.00	208847.76	642534.39			

US Army Corps of Engineers®

MARK	DESCRIPTION	DATE

DESIGNED BY: H. HORTON
DRAWN BY: H. HORTON
CHECKED BY: J. WOODRUFF
SUBMITTED BY: /s/ CORETTA BOWEN
SIZE: ANSI D
FSC NO: 2145
ISSUE DATE: 13 JULY 2020
SOLICITATION NO.:
CONTRACT NO.:
DESIGN FILE NO: 72-25-2065
FILE NAME: fh08c-601.dgn

U.S. ARMY CORPS OF ENGINEERS

FT HUACHUCA AZ

GROUND TRANSPORT EQUIPMENT BUILDING

HORIZONTAL ALIGNMENT DATA ROADS, SIDEWALK, SEWER LINES

SHEET ID

CS601

RTA

ALIGNMENT N - Access Rd Drainage Crossing and Box Culvert

Point	Station	Northing	Easting	Radius	Length	Tangent
POB	0+00.00	209213.71	643653.56			
PC	0+00.00	209213.71	643653.56			
PC	0+00.00	209213.71	643653.56			
PI	0+31.90	209230.04	643680.96	535.980	63.722	31.899
PT	0+63.72	209243.01	643710.10			
PT	0+63.72	209243.01	643710.10			
PC	0+63.72	209243.01	643710.10			
PC	0+63.72	209243.01	643710.10			
PI	0+98.66	209257.21	643742.02	100.000	67.213	34.932
PT	1+30.94	209288.20	643758.15			
PT	1+30.94	209288.20	643758.15			
PC	2+09.64	209358.00	643794.48			
PC	2+09.64	209358.00	643794.48			
PI	2+29.31	209375.45	643803.57	100.000	38.846	19.671
PT	2+48.48	209395.04	643805.37			
PT	2+48.48	209395.04	643805.37			
POE	2+74.13	209420.58	643807.71			

ALIGNMENT P - Access Rd Culverts at Intx with Arizona St

Point	Station	Northing	Easting	Radius	Length	Tangent
POB	0+00.00	208900.21	644387.19			
POE	2+00.00	209077.61	644479.54			

ALIGNMENT Q - Culvert Across Inbound Access Rd

Point	Station	Northing	Easting	Radius	Length	Tangent
POB	0+00.00	209401.91	643032.01			
POE	2+00.00	209309.56	643209.41			

ALIGNMENT R - GOV Parking Area Storm Drain 1

Point	Station	Northing	Easting	Radius	Length	Tangent
POB	0+00.00	208919.97	642381.18			
PI	2+72.15	209186.36	642325.47			
PI	2+72.15	209186.36	642325.47			
PI	4+94.29	209408.24	642336.21			
PI	4+94.29	209408.24	642336.21			
PI	4+97.29	209411.24	642336.15			
PI	4+97.29	209411.24	642336.15			
POE	6+00.00	209502.35	642383.58			

ALIGNMENT S - GOV Parking Area Storm Drain 2

Point	Station	Northing	Easting	Radius	Length	Tangent
POB	0+00.00	209293.76	642514.94			
POE	1+50.00	209442.73	642497.40			

ALIGNMENT T - GOV Parking Area Storm Drain 3

Point	Station	Northing	Easting	Radius	Length	Tangent
POB	0+00.00	209123.99	642885.85			
PI	0+68.00	209092.59	642946.17			
PI	0+68.00	209092.59	642946.17			
POE	2+50.00	209190.38	643099.67			

ALIGNMENT U - GOV Yard Outlet Ditch 1

Point	Station	Northing	Easting	Radius	Length	Tangent
POB	0+00.00	208732.65	642820.43			
PC	0+53.20	208708.08	642867.62			
PC	0+53.20	208708.08	642867.62			
PI	0+93.20	208689.61	642903.10	40.000	62.832	40.000
PT	1+16.03	208725.09	642921.57			
PT	1+16.03	208725.09	642921.57			
POE	1+50.00	208755.22	642937.25			

ALIGNMENT V - GOV Yard Outlet Ditch 2

Point	Station	Northing	Easting	Radius	Length	Tangent
POB	0+00.00	208885.34	642899.91			
PC	0+53.20	208860.77	642947.10			
PC	0+53.20	208860.77	642947.10			
PI	0+93.20	208842.30	642982.58	40.000	62.832	40.000
PT	1+16.03	208877.78	643001.05			
PT	1+16.03	208877.78	643001.05			
POE	1+50.00	208907.91	643016.74			

ALIGNMENT W - POV Parking Area Storm Drain 1

Point	Station	Northing	Easting	Radius	Length	Tangent
POB	0+00.00	209282.16	642914.97			
POE	1+50.00	209248.26	643061.09			

ALIGNMENT X - Perimieter Ditch-South and East

Point	Station	Northing	Easting	Radius	Length	Tangent
POB	7+00.00	208807.32	642293.71			
PC	11+28.08	208609.65	642673.42			
PC	11+28.08	208609.65	642673.42			
PI	11+48.79	208600.09	642691.79	50.000	39.270	20.711
PT	11+67.35	208606.32	642711.55			
PT	11+67.35	208606.32	642711.55			
PC	13+32.53	208655.99	642869.09			
PC	13+32.53	208655.99	642869.09			
PI	13+53.24	208662.22	642888.84	50.000	39.270	20.711
PT	13+71.80	208680.59	642898.40			
PT	13+71.80	208680.59	642898.40			
POE	20+00.00	209237.81	643188.47			

ALIGNMENT Y - Storm Drain Diversion Berm-South

Point	Station	Northing	Easting	Radius	Length	Tangent
POB	0+00.00	209108.36	641617.49			
PC	0+66.70	209055.45	641658.09			
PC	0+66.70	209055.45	641658.09			
PI	0+80.00	209044.89	641666.19	60.000	26.180	13.302
PT	0+92.88	209038.75	641677.99			
PT	0+92.88	209038.75	641677.99			
PC	11+41.72	208554.45	642608.32			
PC	11+41.72	208554.45	642608.32			
PI	11+66.57	208542.98	642630.37	60.000	47.124	24.853
PT	11+88.84	208550.45	642654.07			
PT	11+88.84	208550.45	642654.07			
POE	14+50.00	208628.98	642903.14			

ALIGNMENT Z - GOV Parking Area Trench Drain

Point	Station	Northing	Easting	Radius	Length	Tangent
POB	0+00.00	209009.70	642292.60			
POE	4+00.00	208825.00	642647.40			

ALIGNMENT AA - Overflow Parking Lot Storm Drain

Point	Station	Northing	Easting	Radius	Length	Tangent
POB	0+00.00	208751.94	643771.21			
PI	2+27.00	208856.75	643569.86			
PI	2+27.00	208856.75	643569.86			
POE	4+00.00	209029.59	643562.31			

ALIGNMENT BB - POV Parking Area Storm Drain 2

Point	Station	Northing	Easting	Radius	Length	Tangent
POB	0+00.00	209402.01	642693.78			
POE	2+00.00	209508.68	642524.60			

ALIGNMENT CC - Diversion Berm Side Ditch

Point	Station	Northing	Easting	Radius	Length	Tangent
POB	0+00.00	209057.17	641599.30			
PC	11+27.14	208536.71	642599.09			
PC	11+27.14	208536.71	642599.09			
PI	11+60.28	208521.41	642628.48	80.000	62.832	33.137
PT	11+89.97	208531.38	642660.08			
PT	11+89.97	208531.38	642660.08			
PC	14+16.14	208599.38	642875.78			
PC	14+16.14	208599.38	642875.78			
PI	14+51.13	208609.91	642909.15	400.000	69.813	34.995
PT	14+85.95	208626.07	642940.19			
PT	14+85.95	208626.07	642940.19			
POE	18+00.00	208771.08	643218.76			

ALIGNMENT DD - Detention Pond 1 Outlet Channel

Point	Station	Northing	Easting	Radius	Length	Tangent
POB	0+00.00	209545.65	642532.32			
PC	0+88.19	209564.74	642618.42			
PC	0+88.19	209564.74	642618.42			
PI	1+00.00	209567.29	642629.95	50.000	23.188	11.806
PT	1+11.38	209564.42	642641.40			
PT	1+11.38	209564.42	642641.40			
PC	5+15.04	209466.28	643032.95			
PC	5+15.04	209466.28	643032.95			
PI	5+38.59	209460.56	643055.79	200.000	46.876	23.546
PT	5+61.92	209449.68	643076.67			
PT	5+61.92	209449.68	643076.67			
PC	8+07.89	209336.11	643294.85			
PC	8+07.89	209336.11	643294.85			
PI	8+50.53	209316.41	643332.68	500.000	85.090	42.648
PT	8+92.98	209303.41	643373.30			
PT	8+92.98	209303.41	643373.30			
PC	11+62.50	209221.25	643629.99			
PC	11+62.50	209221.25	643629.99			
PI	11+81.56	209215.44	643648.14	50.000	36.424	19.063
PT	11+98.92	209223.19	643665.56			
PT	11+98.92	209223.19	643665.56			
POE	12+47.67	209243.01	643710.10			

ALIGNMENT EE - Detention Pond 2 Outlet Channel

Point	Station	Northing	Easting	Radius	Length	Tangent
POB	0+00.00	209262.84	643238.22			
PC	0+74.28	209324.05	643280.30			
PC	0+74.28	209324.05	643280.30			
PI	0+91.55	209338.29	643290.08	20.000	28.491	17.270
PT	1+02.77	209330.68	643305.58			

ALIGNMENT FF - Pond 1 Berm

Point	Station	Northing	Easting	Radius	Length	Tangent
POB	0+00.00	209535.67	642128.66			
PC	1+81.20	209669.26	642251.08			
PC	1+81.20	209669.26	642251.08			
PI	2+37.21	209710.56	642288.92	80.000	97.738	56.017
PT	2+78.93	209689.13	642340.68			
PT	2+78.93	209689.13	642340.68			
PC	5+19.70	209596.99	642563.12			
PC	5+19.70	209596.99	642563.12			
PI	5+45.73	209587.03	642587.17	50.000	47.997	26.028
PT	5+67.70	209561.62	642592.80			
PT	5+67.70	209561.62	642592.80			
POE	7+50.00	209383.64	642632.26			

ALIGNMENT GG - Pond 2 Berm

Point	Station	Northing	Easting	Radius	Length	Tangent
POB	0+00.00	209253.79	642964.32			
PC	1+71.50	209345.93	643108.96			
PC	1+71.50	209345.93	643108.96			
PI	2+24.45	209374.38	643153.62	80.000	93.550	52.951
PT	2+65.05	209344.39	643197.25			
PT	2+65.05	209344.39	643197.25			
PC	4+24.58	209254.03	643328.73			
PC	4+24.58	209254.03	643328.73			
PI	4+82.09	209221.45	643376.13	50.000	85.521	57.518
PT	5+10.10	209179.04	643337.27			
PT	5+10.10	209179.04	643337.27			
POE	6+60.00	209068.52	643236.00			

ALIGNMENT HH - Pond 3 Berm

Point	Station	Northing	Easting	Radius	Length	Tangent
POB	0+00.00	208959.46	643510.08			
PC	0+90.00	209039.29	643551.63			
PC	0+90.00	209039.29	643551.63			
PI	1+10.00	209057.03	643560.87	20.000	31.416	20.000
PT	1+21.42	209047.80	643578.61			
PT	1+21.42	209047.80	643578.61			
PC	1+30.85	209043.44	643586.98			
PC	1+30.85	209043.44	643586.98			
PI	1+42.40	209038.11	643597.22	20.000	20.944	11.547
PT	1+51.79	209026.57	643597.72			
PT	1+51.79	209026.57	643597.72			
POE	2+50.00	208928.46	643602.01			

US Army Corps of Engineers®

MARK	DESCRIPTION	DATE

ISSUE DATE: 13 JULY 2020
SOLICITATION NO.:
CONTRACT NO.:
DESIGN FILE NO: 223-25-0665
FILE NAME: fh08c-602.dgn
DESIGNED BY: H. HORTON
DRAWN BY: H. HORTON
CHECKED BY: J. WOODRUFF
SUBMITTED BY: /s/ COREY R. BOWEN
SIZE: ANSI D
SPEC NO: 2145

U.S. ARMY CORPS OF ENGINEERS

FT HUACHUCA AZ
GROUND TRANSPORT EQUIPMENT BUILDING

HORIZONTAL ALIGNMENT DATA STORM DRAINAGE

SHEET ID
CS602

RTA

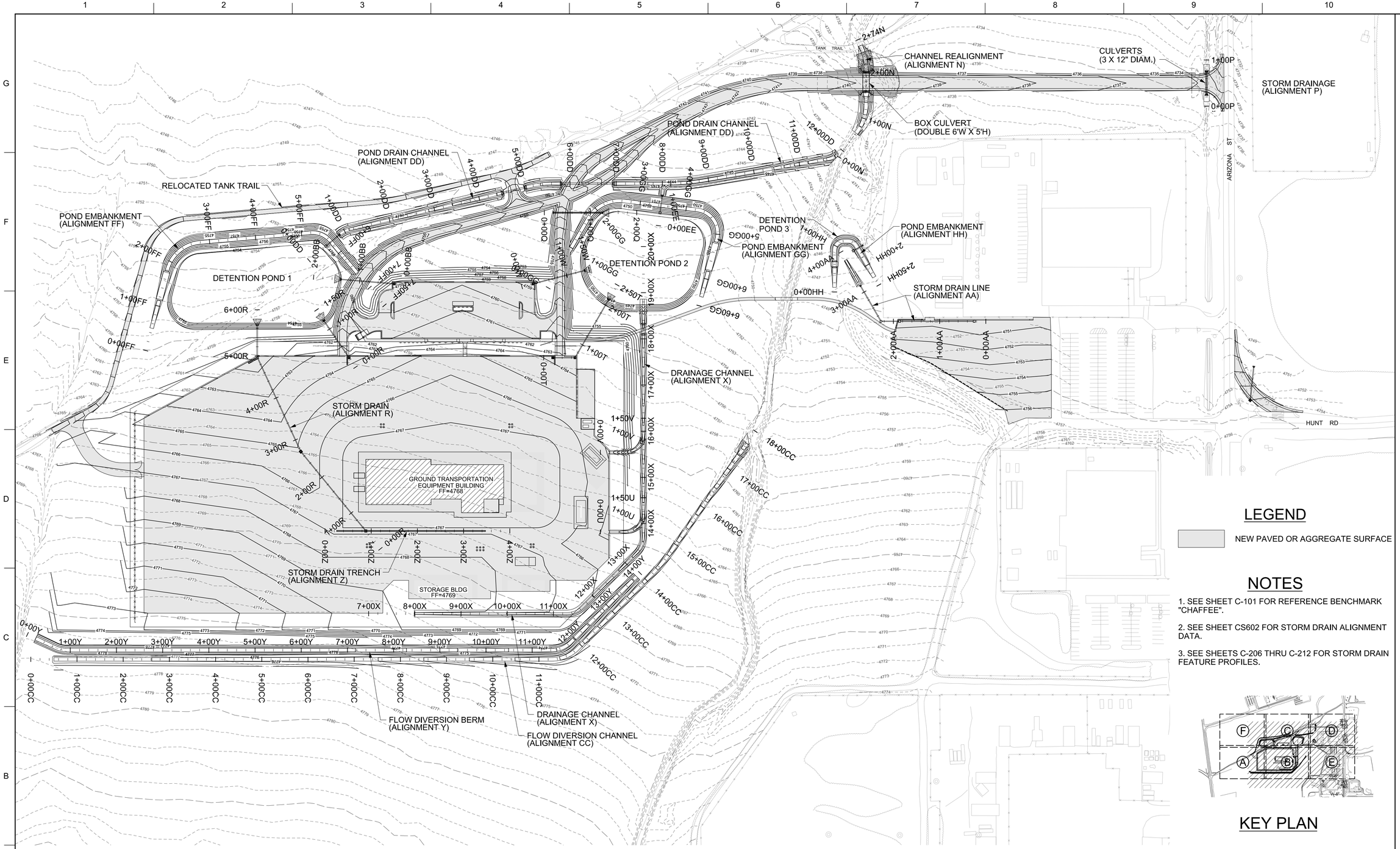

LEGEND

NEW PAVED OR AGGREGATE SURFACE

NOTES

1. SEE SHEET C-101 FOR REFERENCE BENCHMARK "CHAFFEE".
2. SEE SHEET CS602 FOR STORM DRAIN ALIGNMENT DATA.
3. SEE SHEETS C-206 THRU C-212 FOR STORM DRAIN FEATURE PROFILES.

KEY PLAN

GRADING PLAN - OVERALL

SCALE: 1"=100'

1"=100' 0' 50' 100' 200' 300'

US Army Corps of Engineers®

MARK	DESCRIPTION	DATE

ISSUE DATE: 13 JULY 2020
SOLICITATION NO.:
CONTRACT NO.:
DESIGN FILE NO: F08-25-0065
FILE NAME: fm08cg101.dgn

DESIGNED BY: H. HORTON
DRAWN BY: H. HORTON
CHECKED BY: J. WOODRUFF
SUBMITTED BY: J. CORETT R. BOWEN
SIZE: ANSI D
FSCM NO: 22640
STYLE: 21/45

U.S. ARMY CORPS OF ENGINEERS

FT HUACHUCA AZ

GROUND TRANSPORT EQUIPMENT BUILDING

GRADING PLAN - OVERALL

SHEET ID

CG101

RTA

MATCH LINE - SHEET CG107

MATCH LINE - SHEET CG103

N 209,094.93
E 641,669.69

N 209,108.36
E 641,617.49

N 209,057.17
E 641,599.30

FLOW DIVERSION BERM
(ALIGNMENT Y)

FLOW DIVERSION CHANNEL
(ALIGNMENT CC)

LEGEND

- NEW PAVED OR AGGREGATE SURFACE
- 4765 EXIST. MAJOR CONTOUR
- 4767 EXIST. MINOR CONTOUR
- 4767 FINISHED CONTOUR
- TIED CONCRETE BLOCK MAT (FLEXAMAT OR APPROVED EQUAL)

NOTES

1. ADD 4700' TO FINISH SPOT ELEVATIONS.
2. SEE SHEET CS602 FOR STORM DRAIN ALIGNMENT DATA.

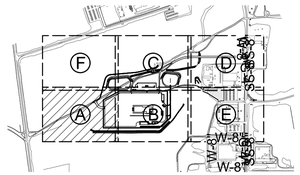

KEY PLAN

GRADING PLAN A

SCALE: 1"=50'

1"=50' 0' 25' 50' 100' 150'

US Army Corps of Engineers®

MARK	DESCRIPTION	DATE

U.S. ARMY CORPS OF ENGINEERS

DESIGNED BY: H. HORTON
DRAWN BY: H. HORTON
CHECKED BY: J. WOODRUFF
SUBMITTED BY: M. CORETTA BOWEN
SIZE: ANSI D
FILE NAME: ft08cg102.dgn
ISSUE DATE: 13 JULY 2020
SOLICITATION NO.:
CONTRACT NO.:
DESIGN FILE NO: 22E25-2065
SHEET NO.: 2145

AZ

GROUND TRANSPORT EQUIPMENT BUILDING

GRADING PLAN A

FT HUACHUCA

SHEET ID

CG102

RTA

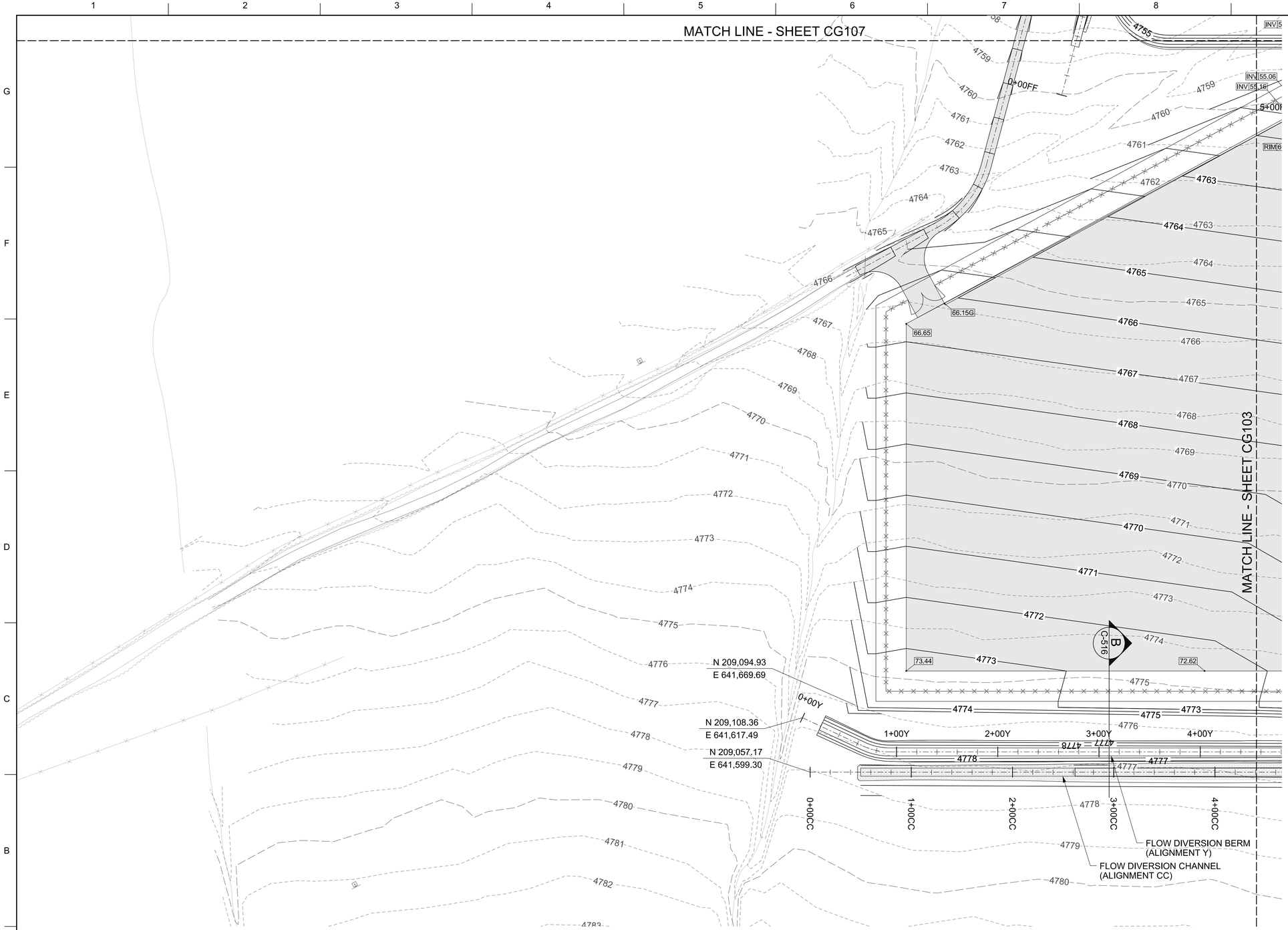

BID OPTION 5 - GRADING PLAN A

SCALE: 1"=50'

LEGEND

- NEW PAVED OR AGGREGATE SURFACE
- 4765 EXIST. MAJOR CONTOUR
- 4767 EXIST. MINOR CONTOUR
- 4767 FINISHED CONTOUR
- TIED CONCRETE BLOCK MAT (FLEXAMAT OR APPROVED EQUAL)

NOTES

1. ADD 4700' TO FINISH SPOT ELEVATIONS.

2. SEE SHEET CS602 FOR STORM DRAIN ALIGNMENT DATA.

3. BID OPTION 5 CONSISTS OF EXTENDING THE FACILITY MAINTENANCE YARD TO THE WEST BY 150 FEET. THE BID OPTION INCLUDES AN ADDITIONAL 57,300 SQUARE FEET OF RESIN MODIFIED PAVED AREA ON THE WEST SIDE OF THE MAINTENANCE YARD. THE BID OPTION INCLUDE ADDITIONAL FENCING AND CURB AND GUTTER AS SHOWN ON SHEET CS103A. IF THE BID OPTION IS NOT AWARDED THE PERIMETER FENCE, CURB AND GUTTER ON THE NORTH SIDE OF THE YARD, PAVEMENT MARKINGS, AND THE NORTHWEST EXIT DRIVE SHALL BE AS SHOWN ON SHEET CS103. SEE ELECTRICAL DRAWINGS FOR MAINTENANCE YARD LIGHTING REVISIONS IF BID OPTION IS NOT AWARDED.

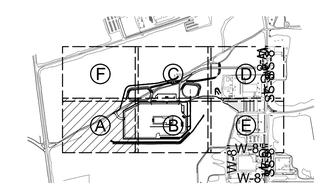

KEY PLAN

1"=50' 0' 25' 50' 100' 150'

US Army Corps of Engineers®

MARK	DESCRIPTION	DATE

ISSUE DATE: 13 JULY 2020
SOLICITATION NO.:
CONTRACT NO.:
DESIGN FILE NO: 72E25-2065
FILE NAME: ft08cg102a.dgn

DESIGNED BY: H. HORTON
DRAWN BY: H. HORTON
CHECKED BY: J. WOODRUFF
SUBMITTED BY: SCORETT R. BOWEN
SIZE: E1 ANSI D
FILE NO.: 2145

U.S. ARMY CORPS OF ENGINEERS

FT HUACHUCA AZ

GROUND TRANSPORT EQUIPMENT BUILDING

BID OPTION 5
GRADING PLAN A

SHEET ID

CG102A

RTA

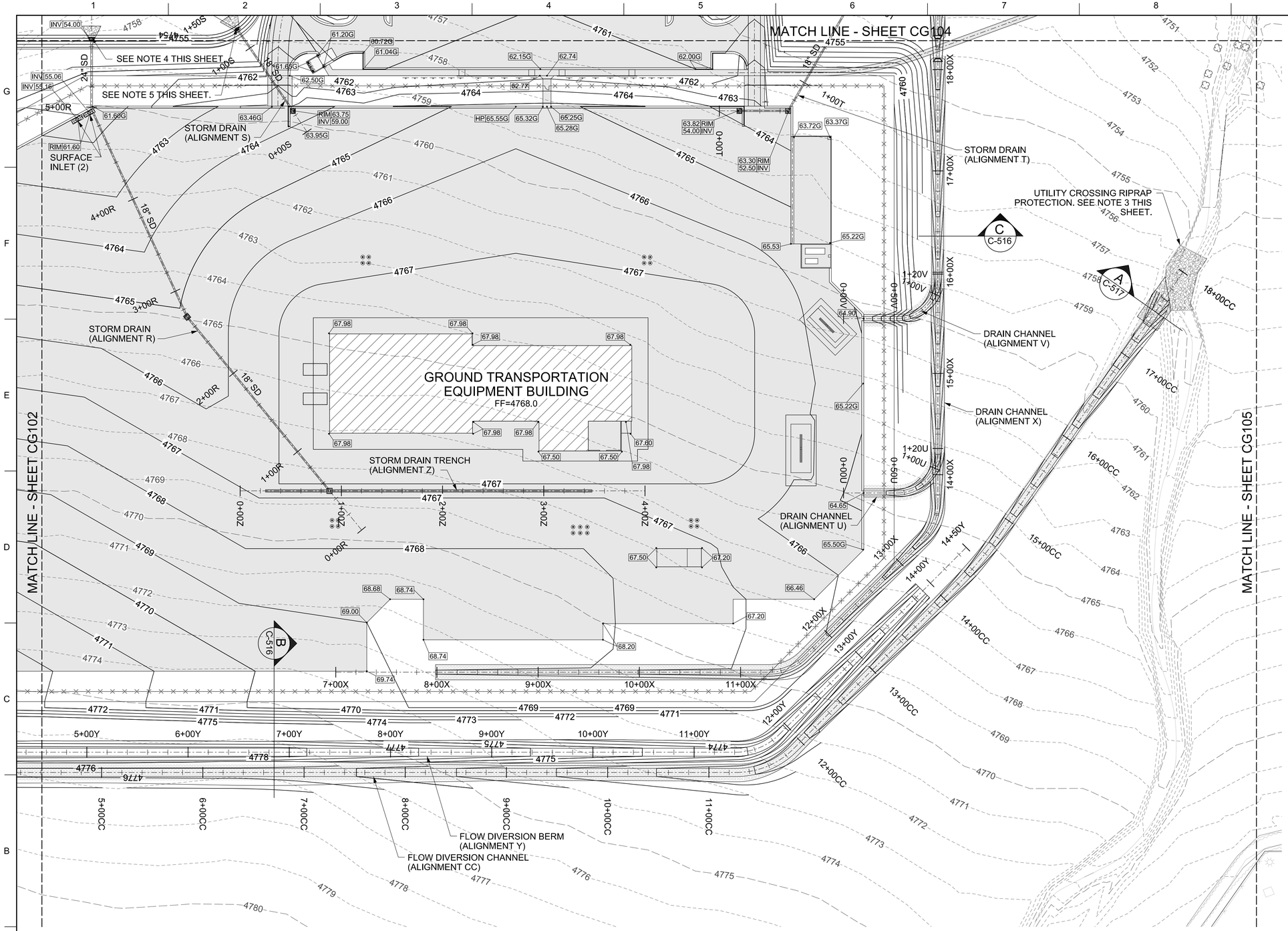

GRADING PLAN B

SCALE: 1"=50'

LEGEND

- NEW PAVED OR AGGREGATE SURFACE
- NEW RIPRAP - PIPE EROSION PAD
- 4765 EXIST. MAJOR CONTOUR
- 4767 EXIST. MINOR CONTOUR
- 4767 FINISHED CONTOUR
- TIED CONCRETE BLOCK MAT (FLEXAMAT OR APPROVED EQUAL)
- SD NEW STORM DRAIN OR CULVERT
- NEW SURFACE INLET
- NEW HEADWALL
- GRADE BREAK LINE
- XX.XX FINISHED GRADE SPOT ELEVATION
- XX.XXG FINISHED GRADE AT GUTTER
- XX.XX|RIM RIM ELEVATION
- XX.XX|INV INVERT ELEVATION

NOTES

1. ADD 4700' TO FINISH SPOT ELEVATIONS.
2. SEE SHEET CS602 FOR STORM DRAIN ALIGNMENT DATA.
3. UTILITIES CROSSING THE CHANNEL SHALL BE CONCRETE ENCASED AND OVERLAIN BY RIPRAP. SEE SHEET CU102 FOR UTILITY CROSSING LOCATION. RIPRAP SHALL BE NON-ENCLOSED RIPRAP. THE BOTTOM OF THE CHANNEL SHALL HAVE A D-50 OF 24 INCHES AND A THICKNESS OF 48 INCHES. THE SIDE SLOPES OF THE CHANNEL SHALL HAVE A D-50 OF 18 INCHES AND A THICKNESS OF 36 INCHES. SEE DETAIL D/C-517 FOR CHANNEL RIPRAP TYPICAL DETAIL.
4. 24" STORM DRAIN OUTLET. SEE B/C-517 FOR RIPRAP DETAIL.
5. 18" STORM DRAIN OUTLET. SEE C/C-517 FOR RIPRAP DETAIL.

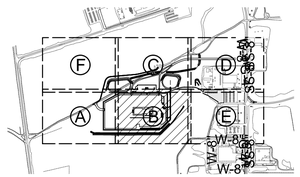

KEY PLAN

1"=50' 0' 25' 50' 100' 150'

US Army Corps of Engineers®

MARK	DESCRIPTION	DATE

U.S. ARMY CORPS OF ENGINEERS

DESIGNED BY: H. HORTON	ISSUE DATE: 13 JULY 2020
DRAWN BY: H. HORTON	SOLICITATION NO.:
CHECKED BY: J. WOODRUFF	CONTRACT NO.:
SUBMITTED BY: M. CORETTI/S. BOWEN	DESIGN FILE NO: F08-25-0065
ANSI D	SIZE: 2145	DWG FILE: ft08cg103.dgn

FT HUACHUCA AZ

GROUND TRANSPORT EQUIPMENT BUILDING

GRADING PLAN B

SHEET ID

CG103

RTA

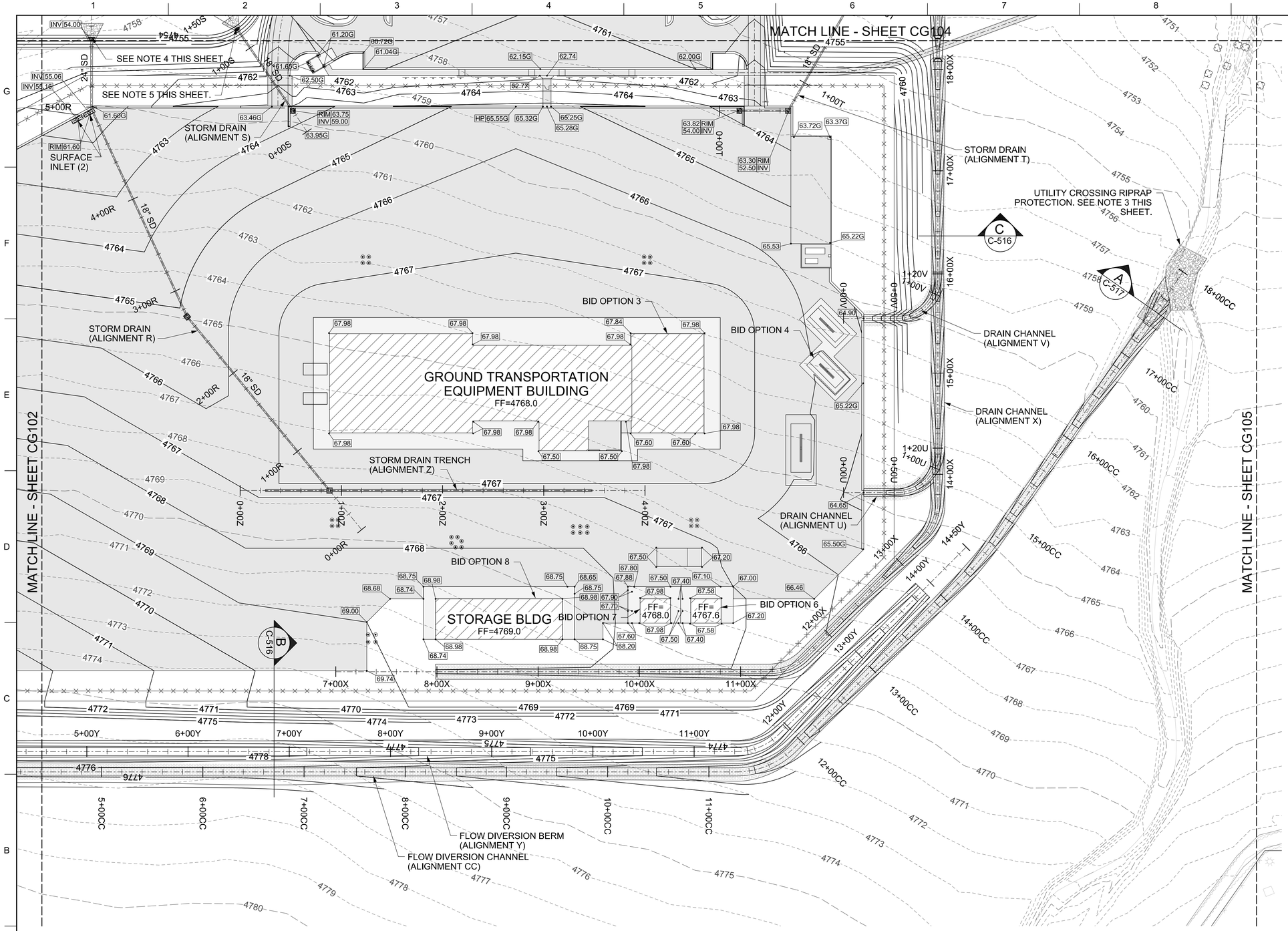

BID OPTIONS GRADING PLAN B

SCALE: 1"=50'

LEGEND

- NEW PAVED OR AGGREGATE SURFACE
- NEW RIPRAP - PIPE EROSION PAD
- 4765 EXIST. MAJOR CONTOUR
- 4767 EXIST. MINOR CONTOUR
- 4767 FINISHED CONTOUR
- TIED CONCRETE BLOCK MAT (FLEXAMAT OR APPROVED EQUAL)
- SD NEW STORM DRAIN OR CULVERT
- NEW SURFACE INLET
- NEW HEADWALL
- GRADE BREAK LINE
- XX.XX FINISHED GRADE SPOT ELEVATION
- XX.XXG FINISHED GRADE AT GUTTER
- XX.XX|RIM RIM ELEVATION
- XX.XX|INV INVERT ELEVATION

NOTES

1. ADD 4700' TO FINISH SPOT ELEVATIONS.
2. SEE SHEET CS602 FOR STORM DRAIN ALIGNMENT DATA.
3. UTILITIES CROSSING THE CHANNEL SHALL BE CONCRETE ENCASED AND OVERLAIN BY RIPRAP. SEE SHEET CU102 FOR UTILITY CROSSING LOCATION. RIPRAP SHALL BE NON-ENCLOSED RIPRAP. THE BOTTOM OF THE CHANNEL SHALL HAVE A D-50 OF 24 INCHES AND A THICKNESS OF 48 INCHES. THE SIDE SLOPES OF THE CHANNEL SHALL HAVE A D-50 OF 18 INCHES AND A THICKNESS OF 36 INCHES. SEE DETAIL D/C-517 FOR CHANNEL RIPRAP TYPICAL DETAIL.
4. 24" STORM DRAIN OUTLET. SEE B/C-517 FOR RIPRAP DETAIL.
5. 18" STORM DRAIN OUTLET. SEE C/C-517 FOR RIPRAP DETAIL.
6. SEE SHEET CS102A FOR BID OPTION DESCRIPTIONS.

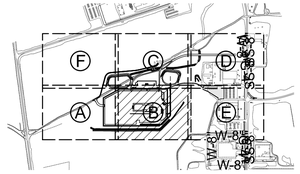

KEY PLAN

1"=50' 0' 25' 50' 100' 150'

US Army Corps of Engineers®

MARK	DESCRIPTION	DATE

ISSUE DATE: 13 JULY 2020
SOLICITATION NO.:
CONTRACT NO.:
DESIGN FILE NO: F08-25-0065
SUBMITTED BY: SCORETT R. BOWEN
SIZE: ANSI D
REV NO.: 2145
FILE NAME: ft08cg103a.dgn

DESIGNED BY: H. HORTON
DRAWN BY: H. HORTON
CHECKED BY: J. WOODRUFF

U.S. ARMY CORPS OF ENGINEERS

FT HUACHUCA AZ

GROUND TRANSPORT EQUIPMENT BUILDING

BID OPTIONS 3, 4, 6, 7, 8 GRADING PLAN B

SHEET ID

CG103A

RTA

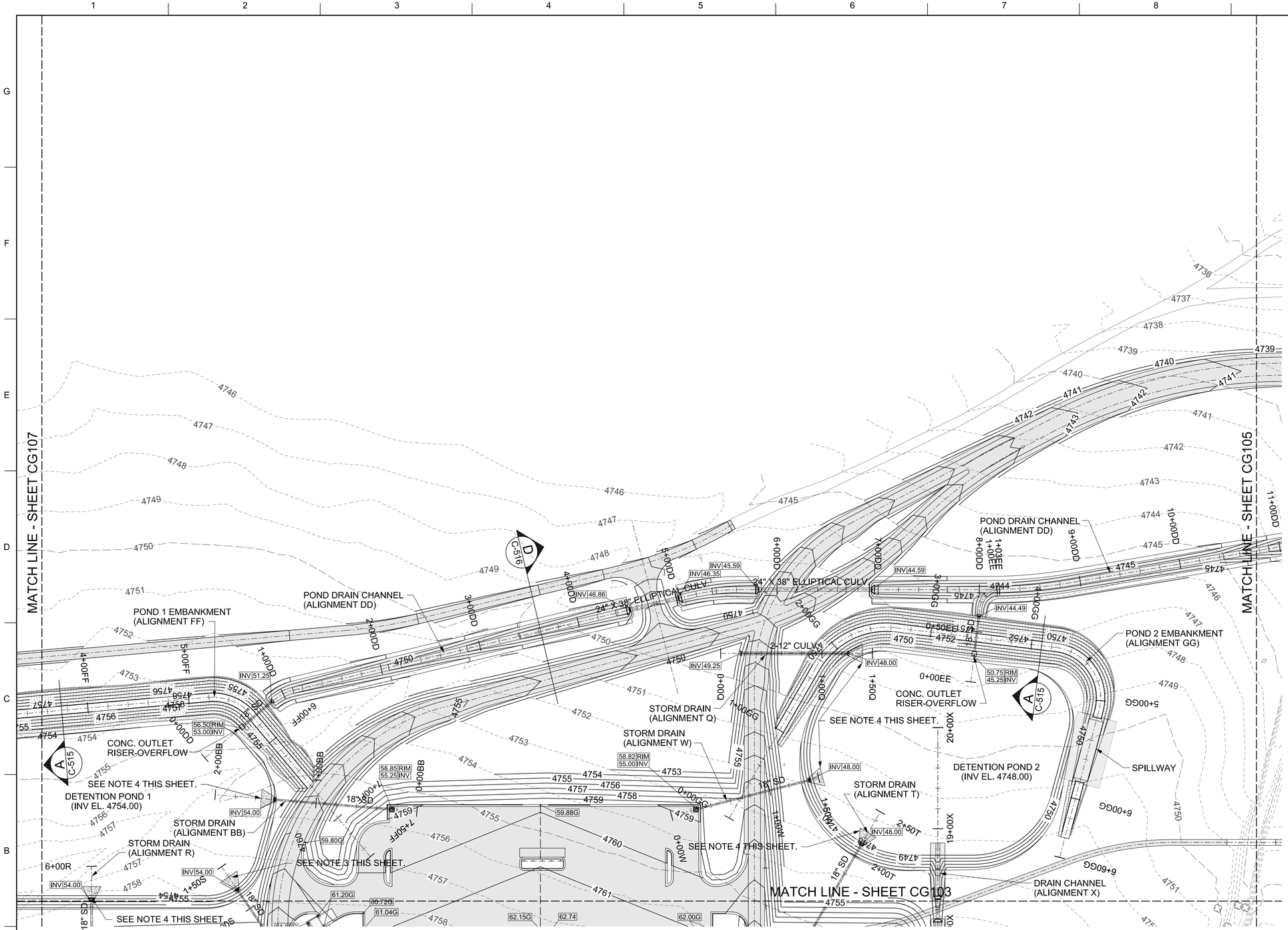

GRADING PLAN C

SCALE: 1"=50'

LEGEND

- NEW PAVED OR AGGREGATE SURFACE
- NEW RIPRAP - PIPE EROSION PAD
- 4765 — EXIST. MAJOR CONTOUR
- 4767 — EXIST. MINOR CONTOUR
- 4767 — FINISHED CONTOUR
- TIED CONCRETE BLOCK MAT (FLEXAMAT OR APPROVED EQUAL)
- SD — NEW STORM DRAIN OR CULVERT
- NEW SURFACE INLET
- NEW HEADWALL
- GRADE BREAK LINE
- XX.XX — FINISHED GRADE SPOT ELEVATION
- XX.XXG — FINISHED GRADE AT GUTTER
- XX.XX RIM — RIM ELEVATION
- XX.XX INV — INVERT ELEVATION

NOTES

1. ADD 4700' TO FINISH SPOT ELEVATIONS.
2. SEE SHEET CS602 FOR STORM DRAIN ALIGNMENT DATA.
3. 24" STORM DRAIN OUTLET. SEE B/C-517 FOR RIPRAP DETAIL.
4. 18" STORM DRAIN OUTLET. SEE C/C-517 FOR RIPRAP DETAIL.

KEY PLAN

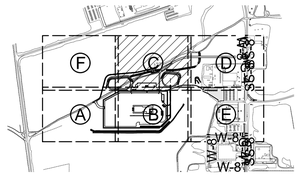

1"=50' 0' 25' 50' 100' 150'

US Army Corps of Engineers®

MARK	DESCRIPTION	DATE

ISSUE DATE: 13 JULY 2020
SOLICITATION NO.:
CONTRACT NO.:
DESIGN FILE NO: 22-25-2065
FILE NAME: ft08cg104.dgn

DESIGNED BY: H. HORTON
DRAWN BY: H. HORTON
CHECKED BY: J. WOODRUFF
SUBMITTED BY: M. CORETT R. BOWEN
SIZE: ANSI D
SCALE: 1"=50'

U.S. ARMY CORPS OF ENGINEERS

FT HUACHUCA AZ

GROUND TRANSPORT EQUIPMENT BUILDING

GRADING PLAN C

SHEET ID

CG104

RTA

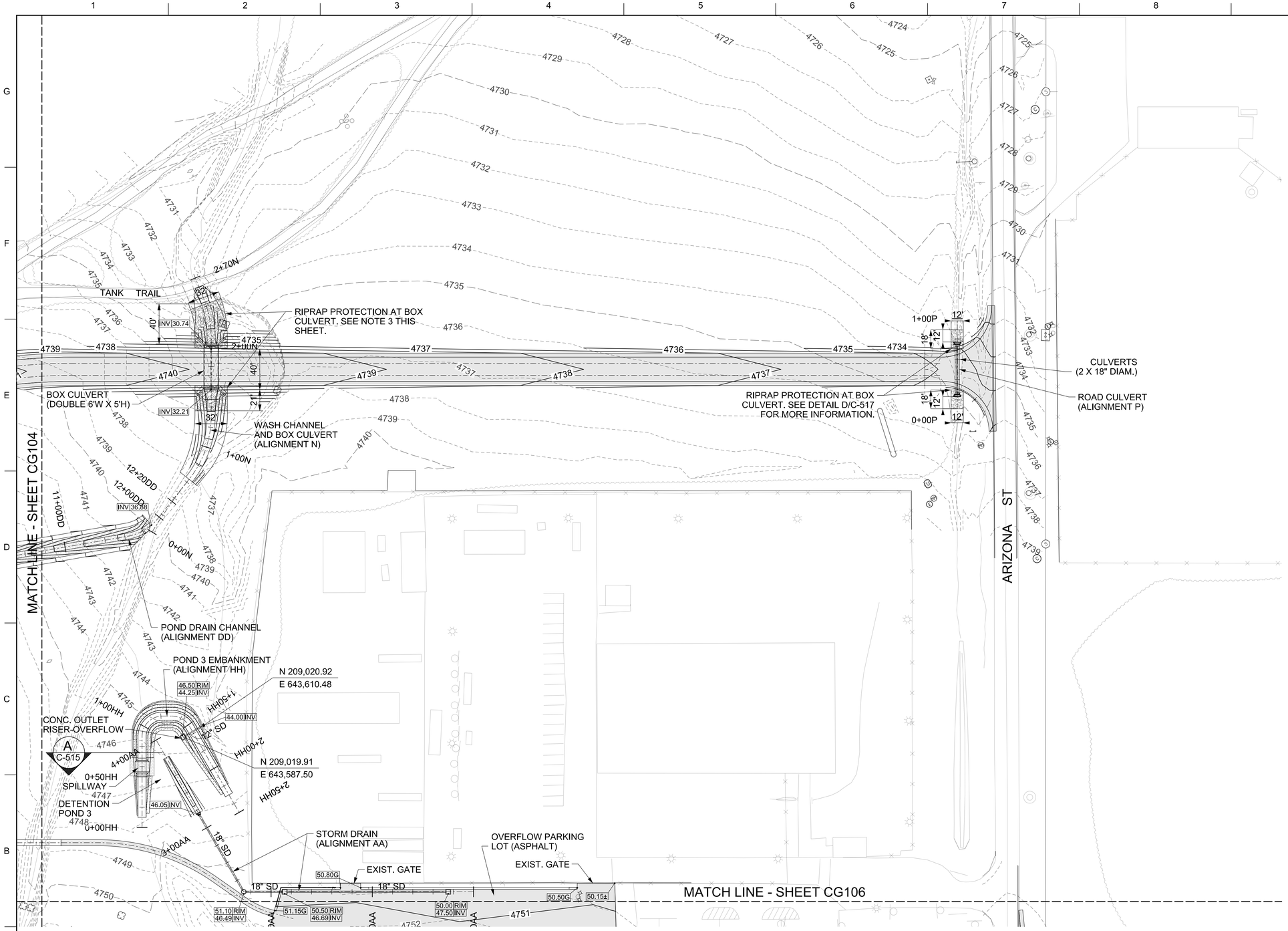

GRADING PLAN D

SCALE: 1"=50'

LEGEND

- NEW PAVED SURFACE
- NEW RIPRAP - PIPE EROSION PAD
- 4765 — EXIST. MAJOR CONTOUR
- 4767 — EXIST. MINOR CONTOUR
- 4767 — FINISHED CONTOUR
- NEW CONC. HEADWALL
- TIED CONCRETE BLOCK MAT (FLEXAMAT OR APPROVED EQUAL)
- SD — NEW STORM DRAIN OR CULVERT
- NEW SURFACE INLET
- XX.XX — FINISHED GRADE SPOT ELEVATION
- XX.XXG — FINISHED GRADE AT GUTTER
- XX.XX RIM — RIM ELEVATION
- XX.XX INV — INVERT ELEVATION

NOTES

1. ADD 4700' TO FINISH SPOT ELEVATIONS.

2. SEE SHEET CS602 FOR STORM DRAIN ALIGNMENT DATA.

3. RIPRAP PROTECTION AT THE BOX CULVERT SHALL BE NON-ENCLOSED RIPRAP. THE BOTTOM OF THE CHANNEL SHALL HAVE A D-50 OF 24 INCHES AND A THICKNESS OF 48 INCHES. THE SIDE SLOPES OF THE CHANNEL SHALL HAVE A D-50 OF 18 INCHES AND HAVE A THICKNESS OF 36 INCHES. SEE DETAIL D/C-517 FOR TYPCAL CHANNEL RIPRAP DETAIL.

4. RIPRAP PROTECTION AT THE ROAD CULVERT SHALL BE NON-ENCLOSED RIPRAP. THE BOTTOM OF THE CHANNEL SHALL HAVE A D-50 OF 6 INCHES AND A THICKNESS OF 18 INCHES. THE SIDE SLOPES OF THE CHANNEL SHALL HAVE A D-50 OF 6 INCHES AND HAVE A THICKNESS OF 18 INCHES. SEE DETAIL D/C-517 FOR TYPCAL CHANNEL RIPRAP DETAIL.

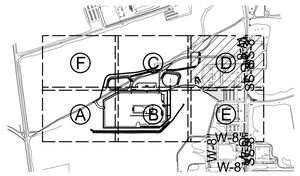

KEY PLAN

1"=50' 0' 25' 50' 100' 150'

US Army Corps of Engineers®

MARK	DESCRIPTION	DATE

ISSUE DATE: 13 JULY 2020
SOLICITATION NO.:
CONTRACT NO.:
DESIGN FILE NO: F18-25-2065
FILE NAME: ft08cg105.dgn

DESIGNED BY: H. HORTON
DRAWN BY: H. HORTON
CHECKED BY: J. WOODRUFF
SUBMITTED BY: M. CORETTA BOWEN
SIZE: ANSI D
SPEC NO: 2145

U.S. ARMY CORPS OF ENGINEERS

AZ

GROUND TRANSPORT EQUIPMENT BUILDING

GRADING PLAN D

FT HUACHUCA

SHEET ID

CG105

RTA

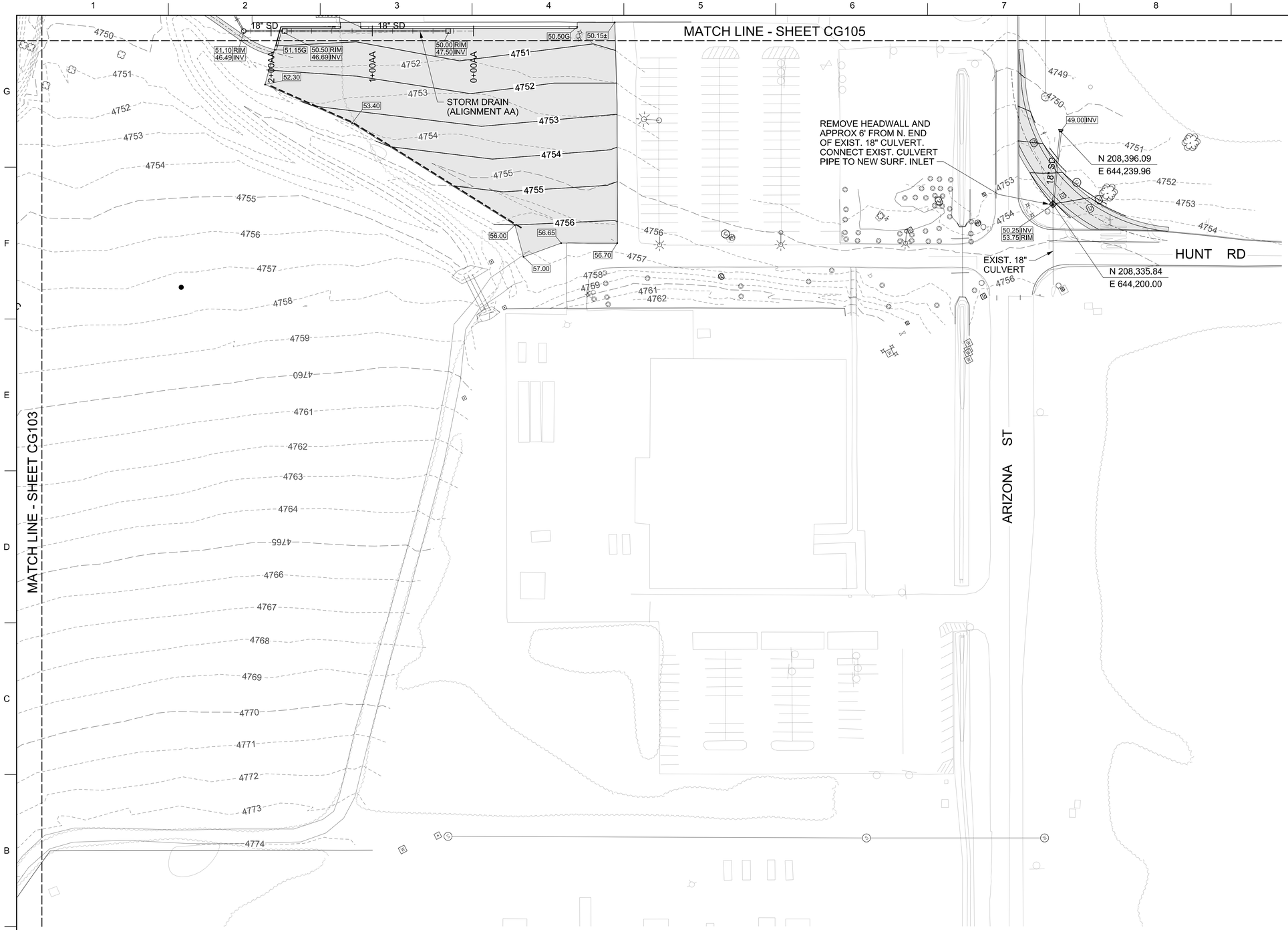

LEGEND

	NEW PAVED OR AGGREGATE SURFACE
4765	EXIST. MAJOR CONTOUR
4767	EXIST. MINOR CONTOUR
4767	FINISHED CONTOUR
SD	NEW STORM DRAIN OR CULVERT
	NEW SURFACE INLET
	NEW CONC. WHEEL STOP
XX.XX	FINISHED GRADE SPOT ELEVATION
XX.XXG	FINISHED GRADE AT GUTTER
XX.XX RIM	RIM ELEVATION
XX.XX INV	INVERT ELEVATION

NOTES

1. ADD 4700' TO FINISH SPOT ELEVATIONS.
2. SEE SHEET CS602 FOR STORM DRAIN ALIGNMENT DATA.

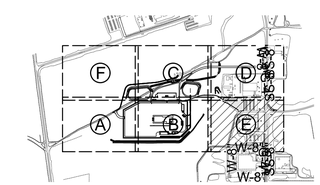

KEY PLAN

GRADING PLAN E

SCALE: 1"=50'

1"=50' 0' 25' 50' 100' 150'

US Army Corps of Engineers®

MARK	DESCRIPTION	DATE

DESIGNED BY: H. HORTON
DRAWN BY: H. HORTON
CHECKED BY: J. WOODRUFF
SUBMITTED BY: /s/ CORETTA BOWEN
SIZE: ANSI D
ISSUE DATE: 13 JULY 2020
SOLICITATION NO.:
CONTRACT NO.:
DESIGN FILE NO: 20-25-2065
FILE NAME: ft08cg106.dgn
SPEC. NO: 2145

U.S. ARMY CORPS OF ENGINEERS

FT HUACHUCA AZ

GROUND TRANSPORT EQUIPMENT BUILDING

GRADING PLAN E

SHEET ID

CG106

RTA

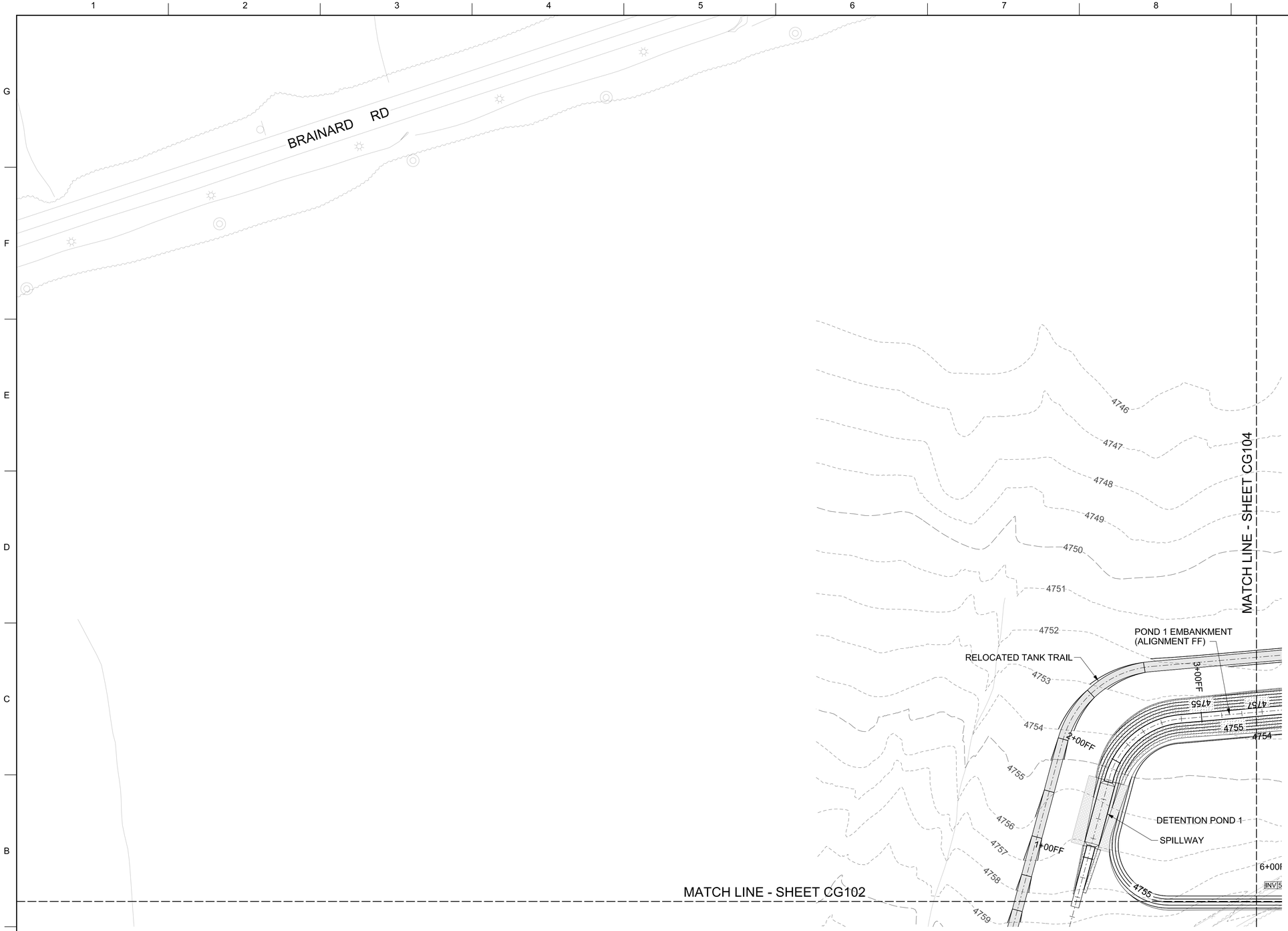

LEGEND

- NEW PAVED OR AGGREGATE SURFACE
- NEW RIPRAP - PIPE EROSION PAD
- 4765 — EXIST. MAJOR CONTOUR
- 4767 — EXIST. MINOR CONTOUR
- 4767 — FINISHED CONTOUR
- TIED CONCRETE BLOCK MAT (FLEXAMAT OR APPROVED EQUAL)
- XX.XX — FINISHED GRADE SPOT ELEVATION
- XX.XXG — FINISHED GRADE AT GUTTER
- XX.XXRIM — RIM ELEVATION
- XX.XXINV — INVERT ELEVATION

NOTES

1. ADD 4700' TO FINISH SPOT ELEVATIONS.
2. SEE SHEET CS602 FOR STORM DRAIN ALIGNMENT DATA.

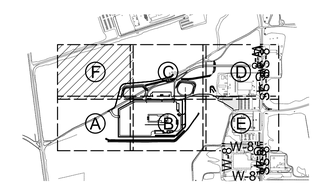

KEY PLAN

N

GRADING PLAN F

SCALE: 1"=50'

1"=50' 0' 25' 50' 100' 150'

US Army Corps of Engineers®

MARK	DESCRIPTION	DATE

U.S. ARMY CORPS OF ENGINEERS

DESIGNED BY: H. HORTON
DRAWN BY: H. HORTON
CHECKED BY: J. WOODRUFF
SUBMITTED BY: /s/ CORETTA BOWEN
SIZE: ANSI D
SPEC NO: 2145
ISSUE DATE: 13 JULY 2020
SOLICITATION NO.:
CONTRACT NO.:
DESIGN FILE NO: 2020-25-2065
FILE NAME: ft08cg107.dgn

AZ

GROUND TRANSPORT EQUIPMENT BUILDING

GRADING PLAN F

FT HUACHUCA

SHEET ID

CG107

RTA

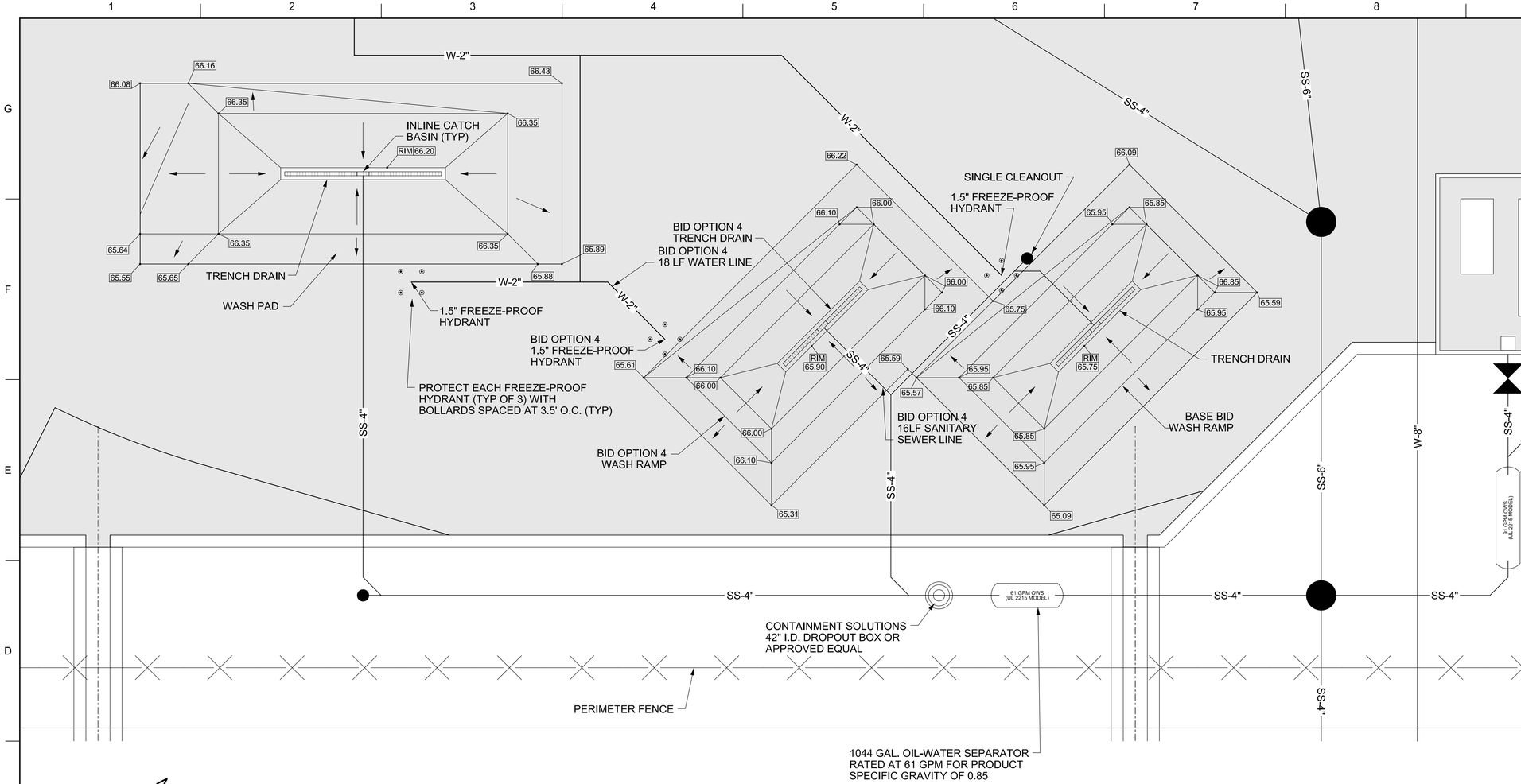

ENLARGED PLAN -WASH PADS

SCALE: 1"=10'

LEGEND

- NEW PAVED SURFACE
- FINISHED CONTOUR
- SLOPE DIRECTION
- SS — NEW SANITARY SEWER
- NEW GATE VALVE
- 65.59 — FINSH GRADE SPOT ELVATION
- RIM — RIM ELEVATION
- TRENCH DRAIN CATCH BASIN (TYP OF 3)

NOTES

1. OIL-WATER SEPARATORS SHALL BE BURIED, DOUBLE-WALL, UL 2215 LISTED.

2. WASH RACK TRENCH DRAINS SHALL BE 6" EXTREME DUTY PRECAST TRENCH DRAIN WITH 8" EXTREME DUTY SLOTTED DUCTILE IRON GRATE. DURATRENCH MODEL DTPF6-EXGS15TEA TRENCH WITH MODEL 08B24DI GRATE OR APRVD EQUAL. EACH TRENCH SHALL DRAIN TO A 6" INLINE EXTREME DUTY CATCH BASIN, DURATRENCH MODEL DTCBPF6-08CBEXDI OR APRVD EQUAL.

3. WASH RACK STRUCTURE SECTIONS SHALL HAVE LEG EXTENSIONS OR SIMILAR SO THAT THE WASH RACK DECKS ARE LEVEL WHILE THE RACK IS MOUNTED ON A SLOPED SURFACE.

4. BID OPTION 4 CONSISTS OF THE CONSTRUCTION OF A SECOND WASH RACK ON THE EAST END OF THE FACILITY MAINTENANCE YARD. THIS OPTION INCLUDES THE CONCRETE PAVED PAD, WASH RAMP STRUCTURE, AND WASTEWATER COLLECTION SYSTEM INCLUDING 16 LINEAR FEET OF SEWER LINE CONNECTING THE WASH RACK DRAIN TO THE SANITARY SEWER SYSTEM, AND 18 LINEAR FEET OF WATER LINE. IF THIS BID OPTION IS NOT AWARDED, THE CONCRETE FOOTPRINT OF THE WASH RACK SHALL BE PAVED WITH THE SAME RESIN MODIFIED PAVEMENT AS THE SURROUNDING MAINTENANCE YARD. SEE SHEET CG103 FOR GRADING OF THE AREA IF THE OPTION IS NOT AWARDED.

5. SEE SHEET C-105 FOR WASH RACK AND WASH PAD DETAILS.

1"=10' 0' 5' 10' 20' 30'

US Army Corps of Engineers®

MARK	DESCRIPTION	DATE

DESIGNED BY: H. HORTON
DRAWN BY: H. HORTON
CHECKED BY: J. WOODRUFF
SUBMITTED BY: ISI CORETTA BOWEN
ANSI D

ISSUE DATE: 13 JULY 2020
SOLICITATION NO.:
CONTRACT NO.:
DESIGN FILE NO: 22E25-2065
FILE NAME: ft08cg401.dgn
SIZE: 2145

U.S. ARMY CORPS OF ENGINEERS

FT HUACHUCA AZ

GROUND TRANSPORT EQUIPMENT BUILDING

ENLARGED PLAN - WASH PADS

SHEET ID

CG401

RTA

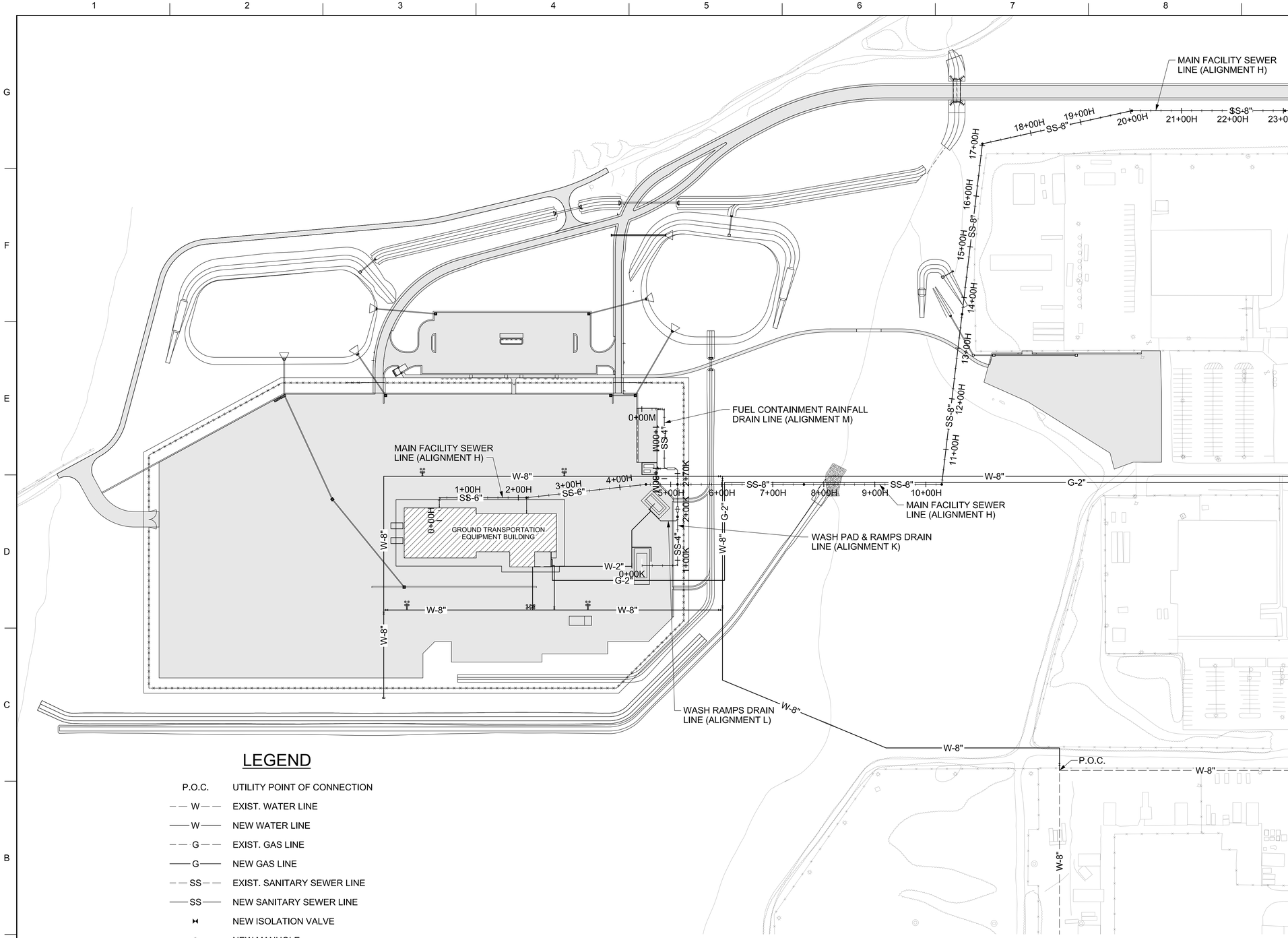

NOTES

1. CONNECTION OF NEW WATER MAINS TO THE EXISTING DISTRIBUTION SYSTEM MAINS SHALL BE BY HOT TAP.

2. SEE SHEET CS602 FOR SANITARY SEWER LINE ALIGNMENT LOCATION DATA.

LEGEND

P.O.C.	UTILITY POINT OF CONNECTION
— — W — —	EXIST. WATER LINE
—— W ——	NEW WATER LINE
— — G — —	EXIST. GAS LINE
—— G ——	NEW GAS LINE
— — SS — —	EXIST. SANITARY SEWER LINE
—— SS ——	NEW SANITARY SEWER LINE
⋈	NEW ISOLATION VALVE
●	NEW MANHOLE

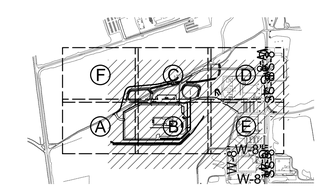

KEY PLAN

N

UTILITY PLAN - OVERALL

SCALE: 1"=100'

1"=100' 0' 50' 100' 200' 300'

US Army Corps of Engineers®

MARK	DESCRIPTION	DATE

DESIGNED BY: H. HORTON	ISSUE DATE: 13 JULY 2020
DRAWN BY: H. HORTON	SOLICITATION NO.:
CHECKED BY: J. WOODRUFF	CONTRACT NO.:
SUBMITTED BY: /s/ JOCKETT S. BOWEN	DESIGN FILE NO: FDE-25-2065
SIZE: ANSI D	FILE NAME: ft08cu101.dgn
	2145

U.S. ARMY CORPS OF ENGINEERS

FT HUACHUCA AZ

GROUND TRANSPORT EQUIPMENT BUILDING

UTILITY PLAN - OVERALL

SHEET ID

CU101

RTA

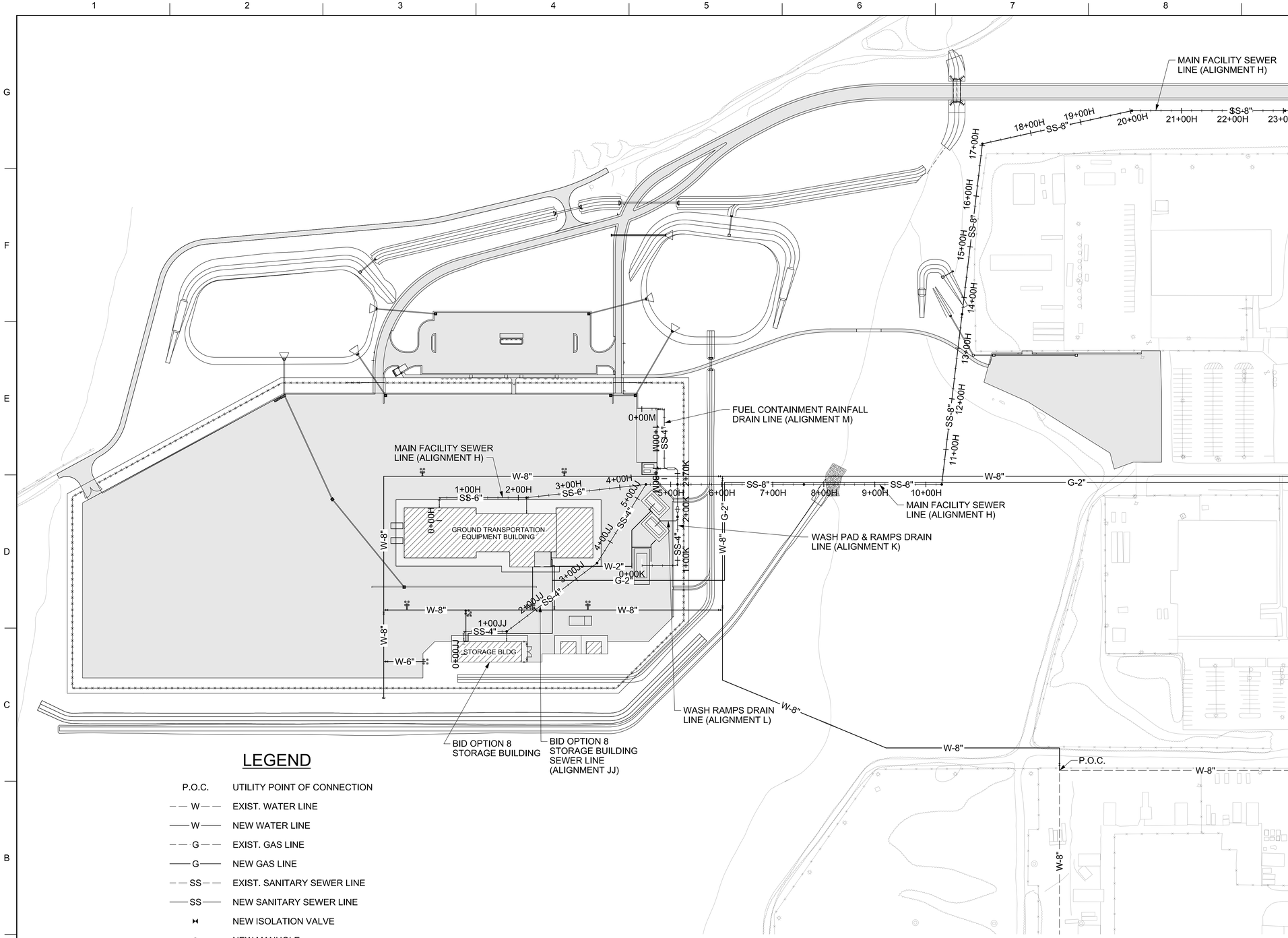

NOTES

1. CONNECTION OF NEW WATER MAINS TO THE EXISTING DISTRIBUTION SYSTEM MAINS SHALL BE BY HOT TAP.

2. SEE SHEET CS602 FOR SANITARY SEWER LINE ALIGNMENT LOCATION DATA.

3. BID OPTION 8 CONSISTS OF THE CONSTRUCTION OF THE STORAGE BUILDING ON THE SOUTH SIDE OF THE MAINTENANCE YARD, UTILITIES TO THE BUILDING, AND BOLLARDS PROTECTING THE UTILITY APPURTENANCES. SEE SHEET CU102 FOR ADDITIONAL INFORMATION.

LEGEND

P.O.C.	UTILITY POINT OF CONNECTION
— — W — —	EXIST. WATER LINE
—— W ——	NEW WATER LINE
— — G — —	EXIST. GAS LINE
—— G ——	NEW GAS LINE
— — SS — —	EXIST. SANITARY SEWER LINE
—— SS ——	NEW SANITARY SEWER LINE
⋈	NEW ISOLATION VALVE
●	NEW MANHOLE

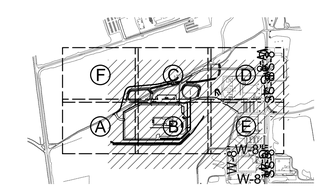

KEY PLAN

UTILITY PLAN - OVERALL

SCALE: 1"=100'

1"=100' 0' 50' 100' 200' 300'

US Army Corps of Engineers®

MARK	DESCRIPTION	DATE

ISSUE DATE: 13 JULY 2020
SOLICITATION NO.:
CONTRACT NO.:
DESIGN FILE NO: F08-25-2065
FILE NAME: fm08cu101a.dgn

DESIGNED BY: H. HORTON
DRAWN BY: H. HORTON
CHECKED BY: J. WOODRUFF
SUBMITTED BY: /s/ JOCKETT S. BOWEN
SUPERV. SPEC. NO.: 2145
ANSI D

U.S. ARMY CORPS OF ENGINEERS

AZ

FT HUACHUCA

GROUND TRANSPORT EQUIPMENT BUILDING

BID OPTIONS

UTILITY PLAN - OVERALL

SHEET ID

CU101A

RTA

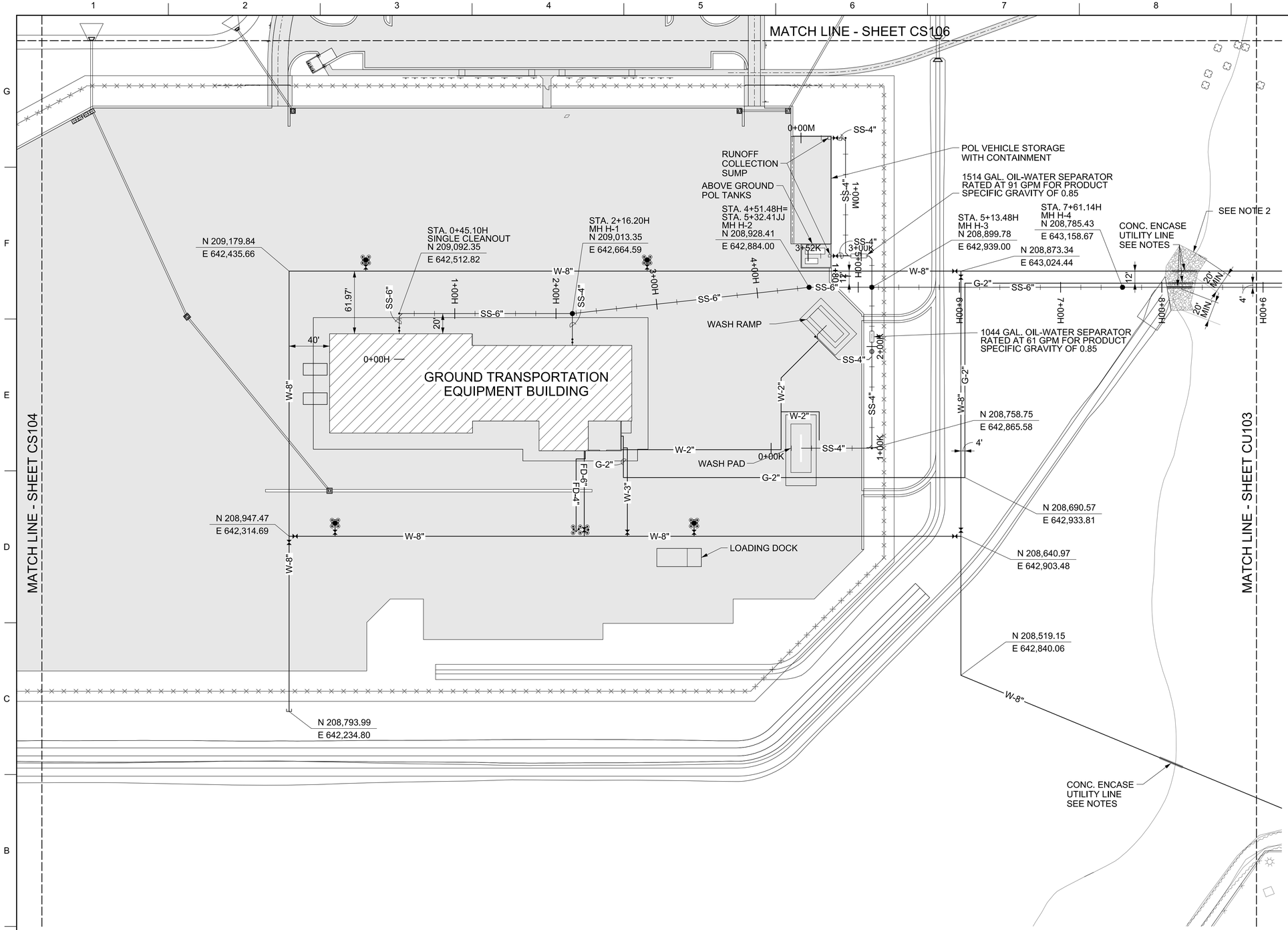

UTILITY PLAN B

SCALE: 1"=50'

LEGEND

- W — NEW WATER LINE
- FD — NEW FIRE DEMAND LINE
- G — NEW GAS LINE
- SS — NEW SANITARY SEWER LINE
- NEW FIRE HYDRANT
- NEW ISOLATION VALVE
- NEW POST INDICATOR VALVE
- NEW FIRE DEPARTMENT CONNECTION
- NEW MANHOLE
- NEW BOLLARD
- NEW OIL-WATER SEPARATOR

NOTES

1. BURY GAS AND WATER LINES WITH 5' COVER, MINIMUM WHERE THE LINES CROSS UNDER THE EXISTING WASH INDICATED. SEE SEWER LINE PROFILE H FOR DEPTH OF COVER AND ENCASEMENT LIMITS OF SEWER LINE AT WASH CROSSING. ENCASE SEWER, WATER, AND GAS LINES WITH 6" THICK CONCRETE ALL AROUND PIPE. PROVIDE ENCASEMENT, CENTERED AT THE WASH THALWEG, FOR A LENGTH OF 25' MINIMUM.

2. UTILTY CROSSING RIPRAP PROTECTION SHALL EXTEND A MINIMUM OF 20 FEET UPSTREAM AND DOWNSTREAM OF THE EDGE OF CONCRETE AS SHOWN.

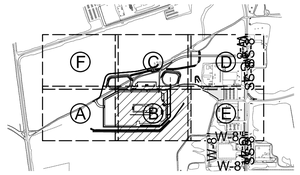

KEY PLAN

1"=50' 0' 25' 50' 100' 150'

US Army Corps of Engineers®

MARK	DESCRIPTION	DATE

ISSUE DATE: 13 JULY 2020
SOLICITATION NO.:
CONTRACT NO.:
DESIGN FILE NO: 22E25-2065
FILE NAME: ft08cu102.dgn

DESIGNED BY: H. HORTON
DRAWN BY: H. HORTON
CHECKED BY: J. WOODRUFF
SUBMITTED BY: M. CORETT / R. BOWEN
SIZE: ANSI D
FSC NO: 2145

U.S. ARMY CORPS OF ENGINEERS

AZ
FT HUACHUCA
GROUND TRANSPORT EQUIPMENT BUILDING
UTILITY PLAN B

SHEET ID
CU102

RTA

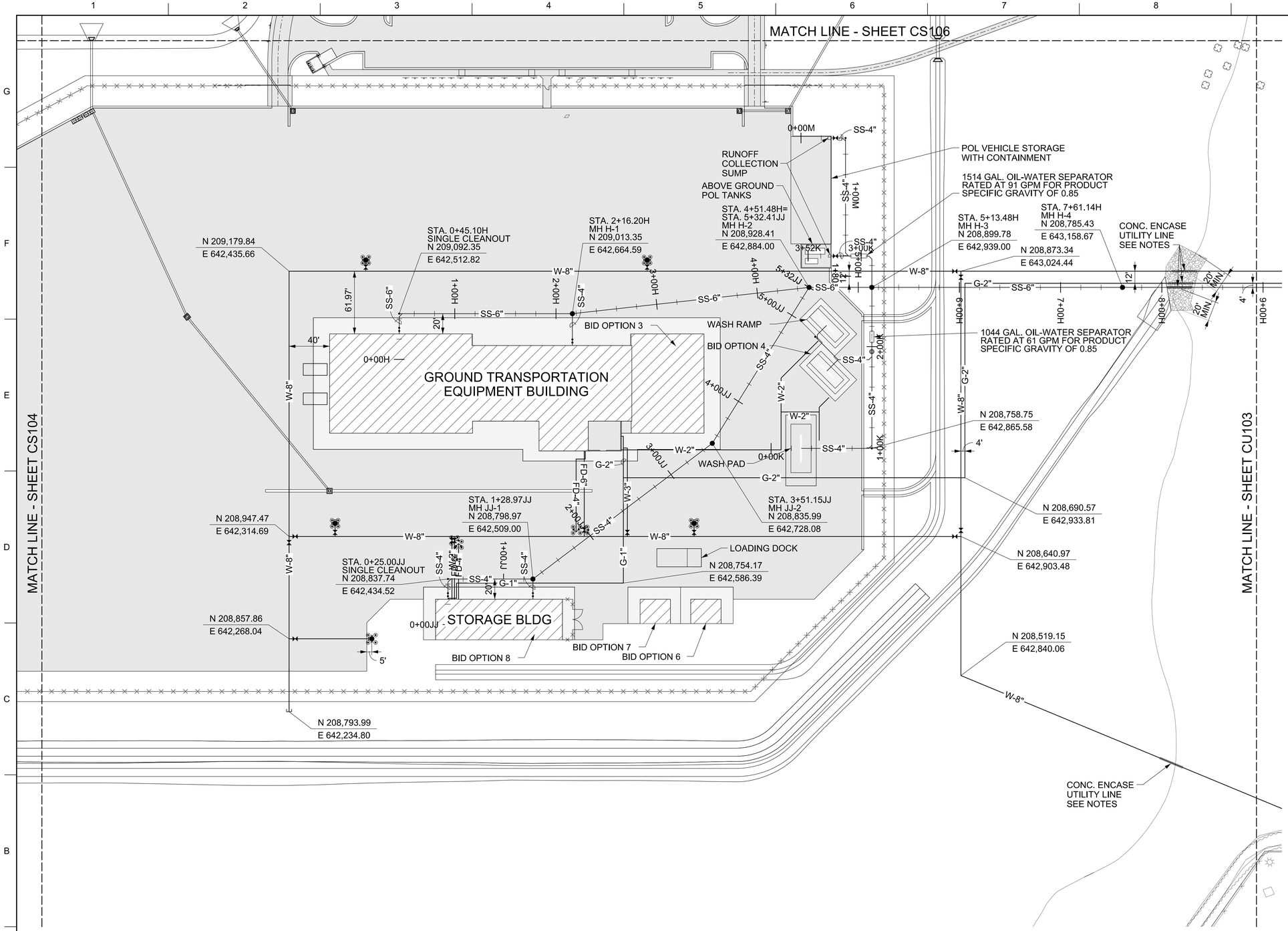

UTILITY PLAN B

SCALE: 1"=50'

LEGEND

- W — NEW WATER LINE
- FD — NEW FIRE DEMAND LINE
- G — NEW GAS LINE
- SS — NEW SANITARY SEWER LINE
- NEW FIRE HYDRANT
- NEW ISOLATION VALVE
- NEW POST INDICATOR VALVE
- NEW FIRE DEPARTMENT CONNECTION
- NEW MANHOLE
- NEW BOLLARD
- NEW OIL-WATER SEPARATOR

NOTES

1. BURY GAS AND WATER LINES WITH 5' COVER, MINIMUM WHERE THE LINES CROSS UNDER THE EXISTING WASH INDICATED. SEE SEWER LINE PROFILE H FOR DEPTH OF COVER AND ENCASEMENT LIMITS OF SEWER LINE AT WASH CROSSING. ENCASE SEWER, WATER, AND GAS LINES WITH 6" THICK CONCRETE ALL AROUND PIPE. PROVIDE ENCASEMENT, CENTERED AT THE WASH THALWEG, FOR A LENGTH OF 25' MINIMUM.

2. SEE SHEET CS102A FOR ADDITIONAL INFORMATION ON BID OPTIONS.

3. UTILITY CROSSING RIPRAP PROTECTION SHALL EXTEND A MINIMUM OF 20' UPSTREAM AND DOWNSTREAM OF THE EDGE OF CONCRETE AS SHOWN.

4. BID OPTION 8 CONSISTS OF THE CONSTRUCTION OF THE STORAGE BUILDING ON THE SOUTH SIDE OF THE MAINTENANCE YARD. UTILITIES TO THE BUILDING, AND BOLLARDS PROTECTING THE UTILITY APPURTENANCES. UTILITY LINES INCLUDE 527 FEET OF 4" SANITARY SEWER (ALIGNMENT JJ); 117 FEET OF FIRE LINE, INCLUDING A PIV, A FIRE DEPARTMENT CONNECTION, AND A FIRE HYDRANT; 293 FEET OF 2" GAS LINE; AND 44 FEET OF 2" WATER LINE. UTILITY LINES, APPURTENANCES, AND PROTECTIVE BOLLARDS SHALL BE AS SHOWN ON THIS SHEET.

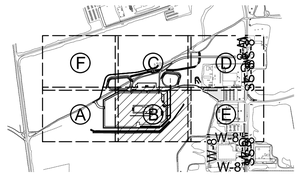

KEY PLAN

1"=50' 0' 25' 50' 100' 150'

US Army Corps of Engineers®

MARK	DESCRIPTION	DATE

ISSUE DATE: 13 JULY 2020
SOLICITATION NO.:
CONTRACT NO.:
DESIGN FILE NO: 22E25-2065
FILE NAME: ft08cu102a.dgn

DESIGNED BY: H. HORTON
DRAWN BY: H. HORTON
CHECKED BY: J. WOODRUFF
SUBMITTED BY: M. CORETT-BOWEN
SIZE: 22" X 34"
ANSI D

U.S. ARMY CORPS OF ENGINEERS

FT HUACHUCA AZ

GROUND TRANSPORT EQUIPMENT BUILDING
BID OPTIONS
UTILITY PLAN B

SHEET ID
CU102A

RTA

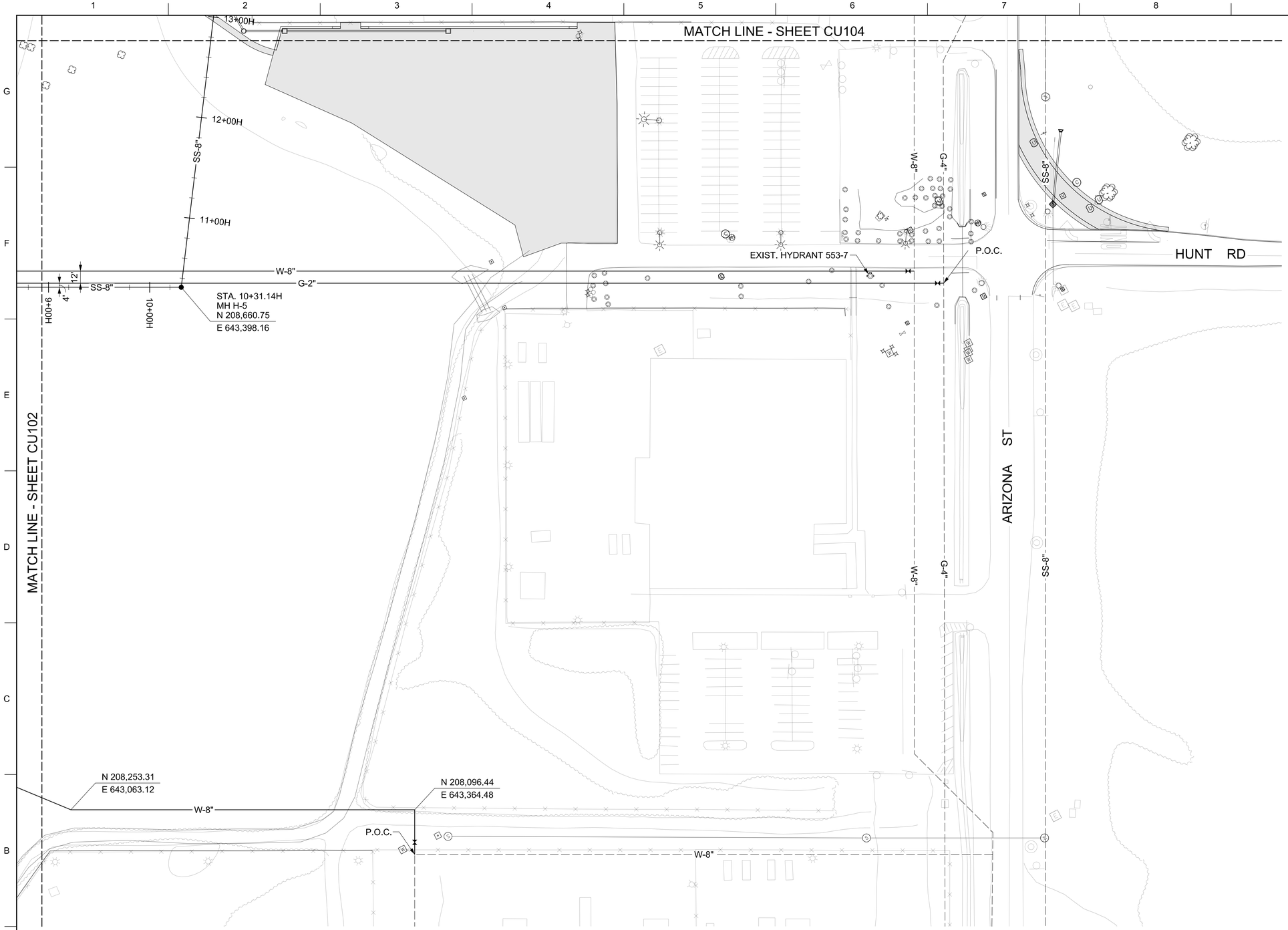

LEGEND

W	EXIST. WATER LINE
W	NEW WATER LINE
G	EXIST. GAS LINE
G	NEW GAS LINE
SS	EXIST. SANITARY SEWER LINE
SS	NEW SANITARY SEWER LINE
	NEW ISOLATION VALVE
	NEW MANHOLE
P.O.C.	UTILITY POINT OF CONNECTION

NOTES

1. CONNECTION OF NEW WATER MAINS TO THE EXISTING DISTRIBUTION SYSTEM MAINS SHALL BE BY HOT TAP.

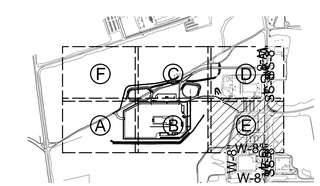

KEY PLAN

1"=50' 0' 25' 50' 100' 150'

UTILITY PLAN E

SCALE: 1"=50'

US Army Corps of Engineers®

MARK	DESCRIPTION	DATE

U.S. ARMY CORPS OF ENGINEERS

DESIGNED BY: H. HORTON
DRAWN BY: H. HORTON
CHECKED BY: J. WOODRUFF
SUBMITTED BY: LORETTA BROWEN
SIZE: ANSI D
SPEC NO: 2145
ISSUE DATE: 13 JULY 2020
SOLICITATION NO.:
CONTRACT NO.:
DESIGN FILE NO: 22CE25-0065
FILE NAME: ft08cu103.dgn

FT HUACHUCA AZ

GROUND TRANSPORT EQUIPMENT BUILDING

UTILITY PLAN E

SHEET ID

CU103

RTA

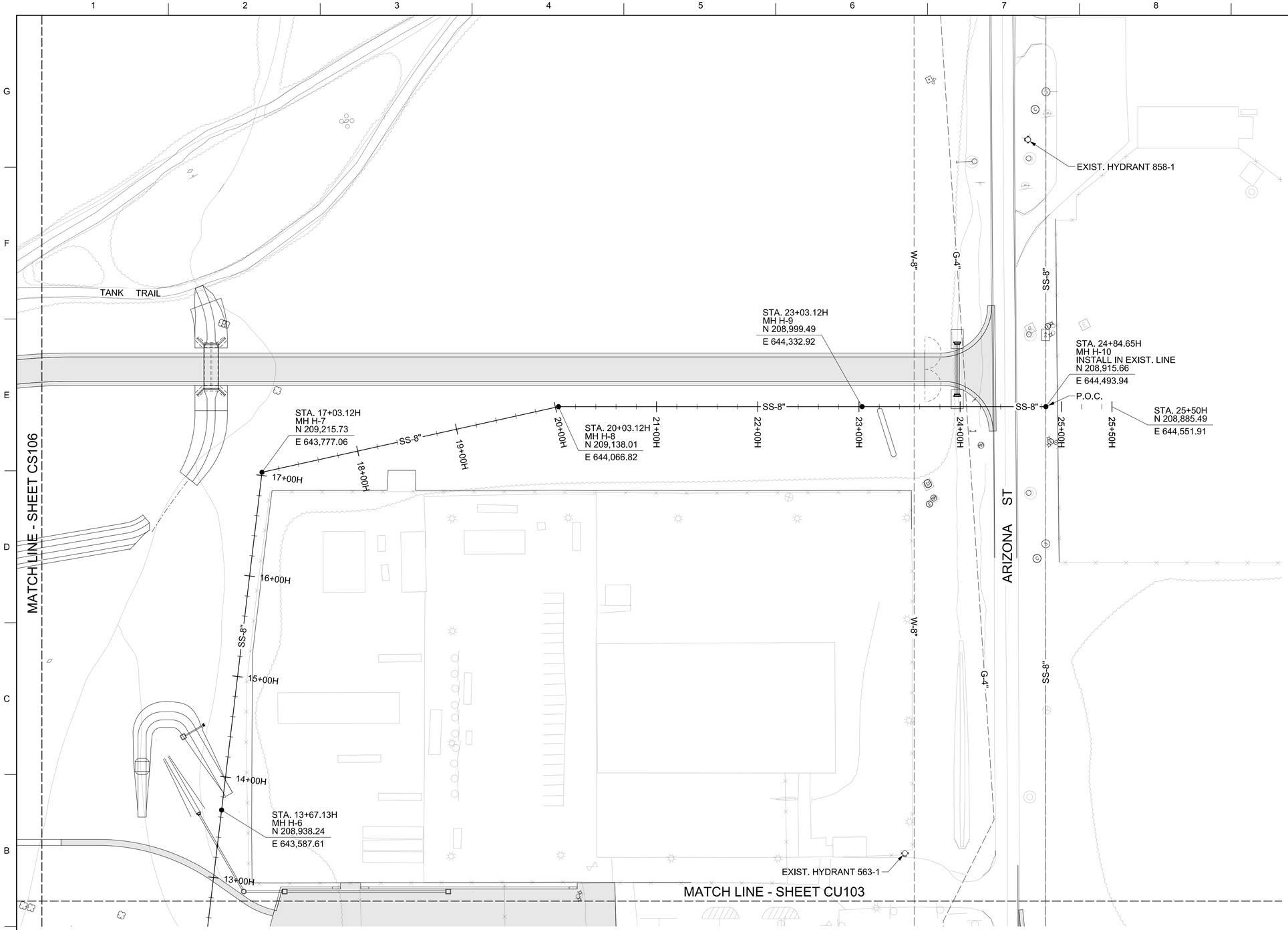

UTILITY PLAN D

SCALE: 1"=50'

LEGEND

— W —	EXIST. WATER LINE
—— W ——	NEW WATER LINE
— G —	EXIST. GAS LINE
—— G ——	NEW GAS LINE
— SS —	EXIST. SANITARY SEWER LINE
—— SS ——	NEW SANITARY SEWER LINE
⋈	NEW ISOLATION VALVE
●	NEW MANHOLE
P.O.C.	UTILITY POINT OF CONNECTION

NOTES

1. CONNECTION OF NEW WATER MAINS TO THE EXISTING DISTRIBUTION SYSTEM MAINS SHALL BE BY HOT TAP.

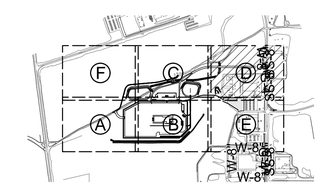

KEY PLAN

1"=50' 0' 25' 50' 100' 150'

US Army Corps of Engineers®

MARK	DESCRIPTION	DATE

U.S. ARMY CORPS OF ENGINEERS

DESIGNED BY: H. HORTON	ISSUE DATE: 13 JULY 2020
DRAWN BY: H. HORTON	SOLICITATION NO.:
CHECKED BY: J. WOODRUFF	CONTRACT NO.:
SUBMITTED BY: /s/ CORETTA BOWEN	DESIGN FILE NO: 22-25-2065
SIZE: ANSI D	FILE NAME: SPEC NO.: 2145 ft08cu104.dgn

AZ

GROUND TRANSPORT EQUIPMENT BUILDING

UTILITY PLAN D

FT HUACHUCA

SHEET ID

CU104

RTA

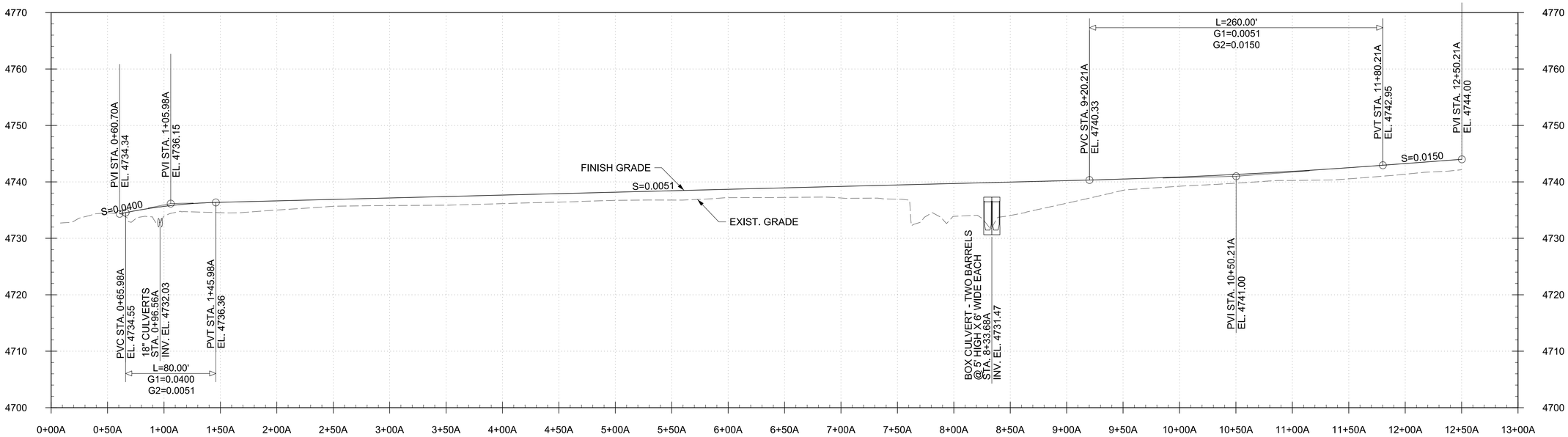

PROFILE - ALIGN. A
TWO-LANE ACCESS ROAD

SCALE: 1"=50' H, 1"=10' V

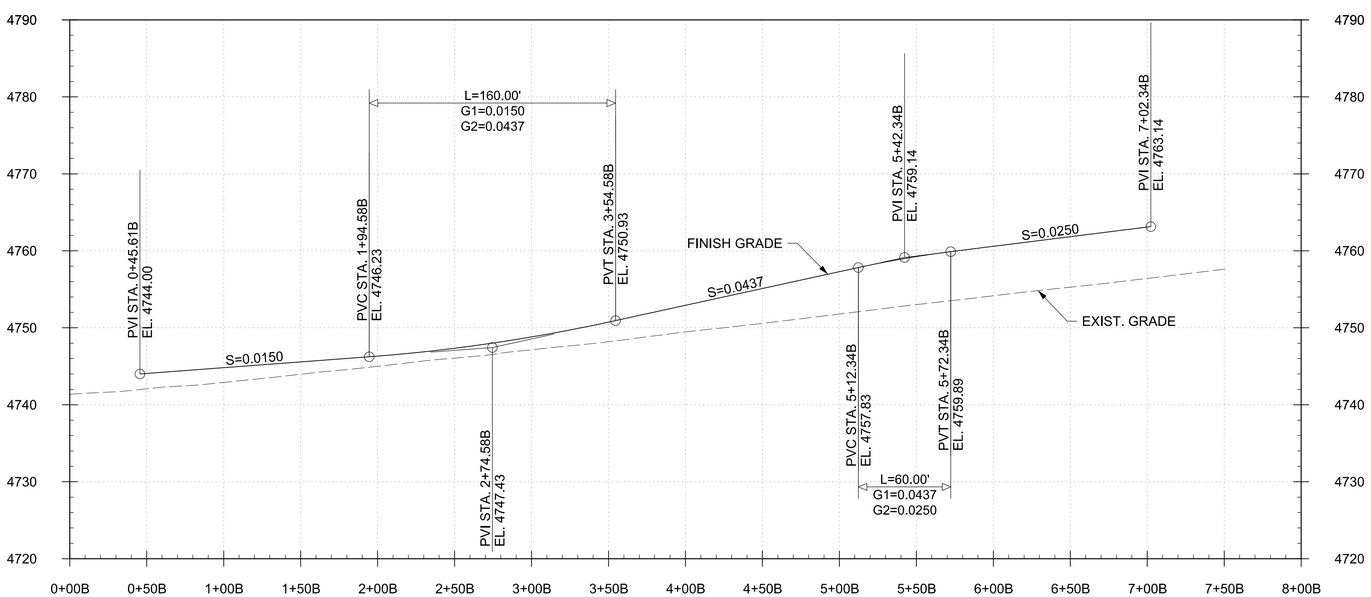

PROFILE - ALIGN. B
SINGLE-LANE INBOUND ACCESS ROAD

SCALE: 1"=50' H, 1"=10' V

1"=10' 0' 5' 10' 20' 30'

1"=50' 0' 25' 50' 100' 150'

US Army Corps of Engineers®

MARK	DESCRIPTION	DATE

ISSUE DATE: 13 JULY 2020
SOLICITATION NO.:
CONTRACT NO.:
DESIGN FILE NO: 22E-25-0085
FILE NAME: ft08c-201.dgn

DESIGNED BY: H. HORTON
DRAWN BY: H. HORTON
CHECKED BY: J. WOODRUFF
SUBMITTED BY: /S/ LORE'T R. BOWEN
SIZE: ANSI D
FSC NO: 2145

U.S. ARMY CORPS OF ENGINEERS

FT HUACHUCA

AZ

GROUND TRANSPORT EQUIPMENT BUILDING

PROFILES - ALIGN. A & B

SHEET ID

C-201

RTA

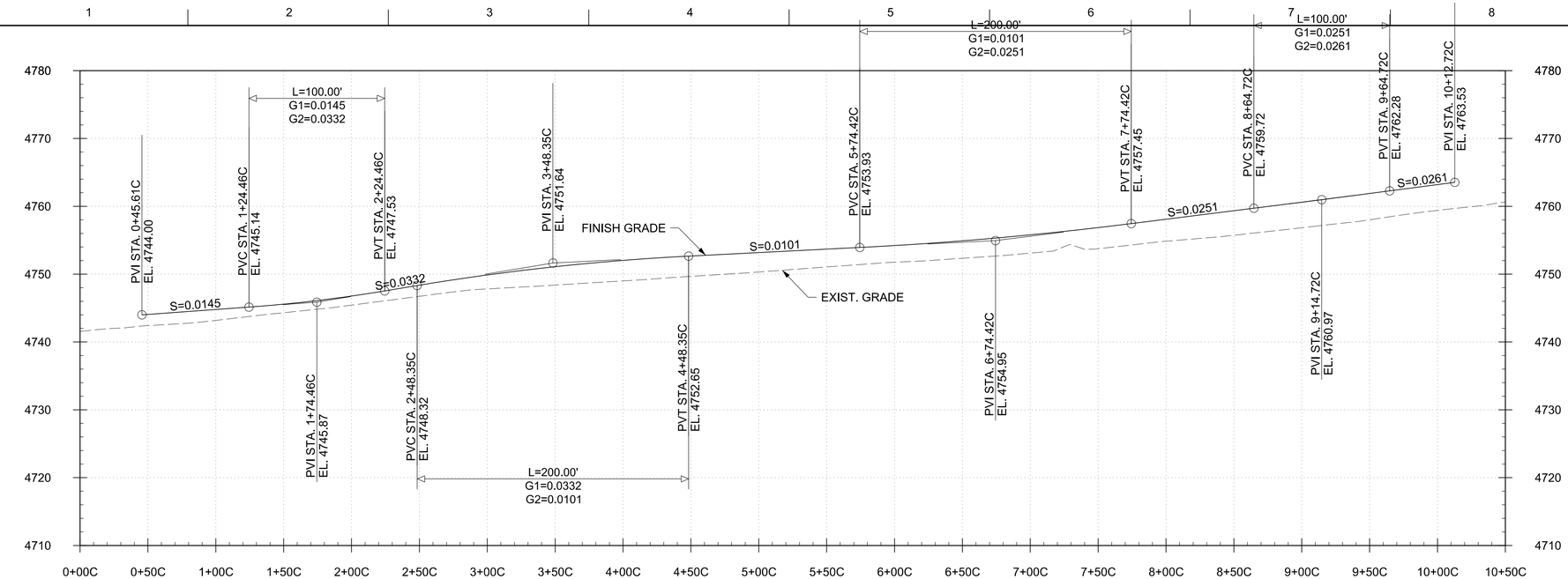

PROFILE - ALIGN. C
SINGLE-LANE OUTBOUND ACCESS ROAD

SCALE: 1"=50' H, 1"=10' V

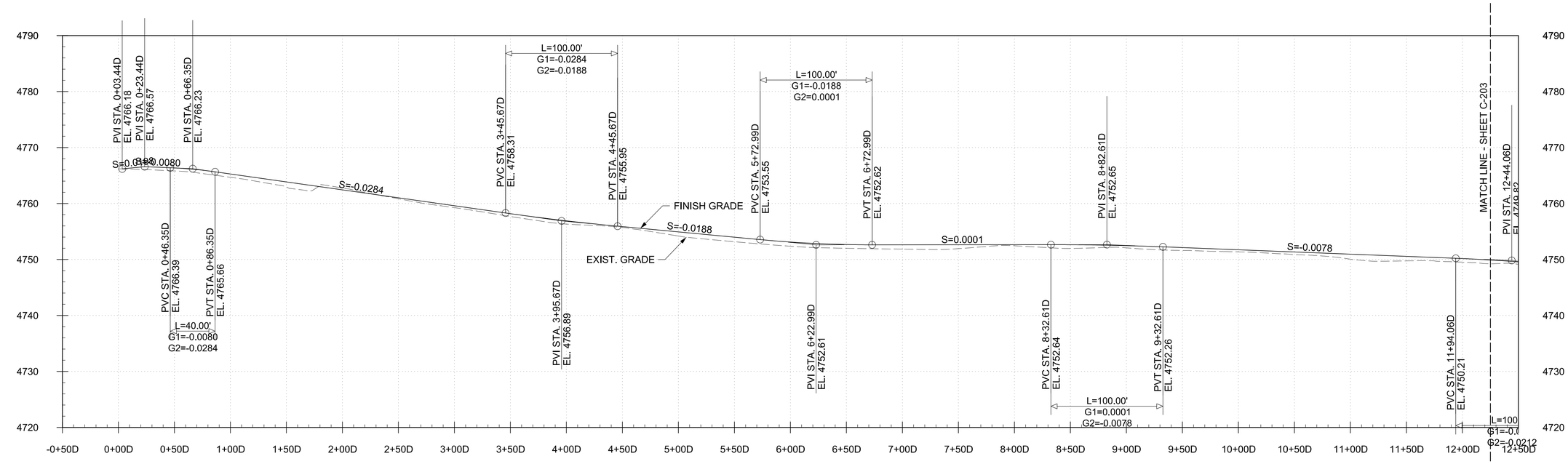

PROFILE - ALIGN. D
TANK TRAIL RELOCATION

SCALE: 1"=50' H, 1"=10' V

1"=10' 0' 5' 10' 20' 30'

1"=50' 0' 25' 50' 100' 150'

US Army Corps of Engineers®

MARK	DESCRIPTION	DATE

DESIGNED BY: H. HORTON
DRAWN BY: H. HORTON
CHECKED BY: J. WOODRUFF
SUBMITTED BY: /S/ LORET R. BOWEN
SIZE: ANSI D
SHEET: 2145

ISSUE DATE: 13 JULY 2020
SOLICITATION NO.:
CONTRACT NO.:
DESIGN FILE NO: 22G-S-0085
FILE NAME: ft08c-202.dgn

U.S. ARMY CORPS OF ENGINEERS

FT HUACHUCA

AZ

GROUND TRANSPORT EQUIPMENT BUILDING

PROFILES - ALIGN. C & D

SHEET ID

C-202

RTA

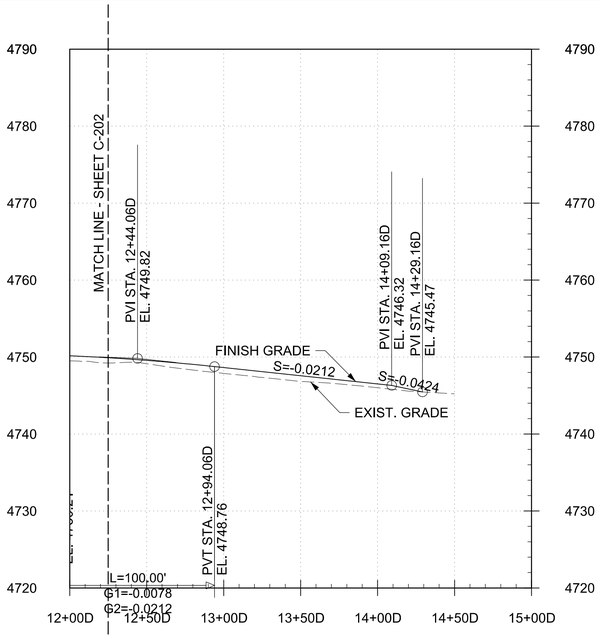

PROFILE - ALIGN. D
TANK TRAIL RELOCATION

SCALE: 1"=50' H, 1"=10' V

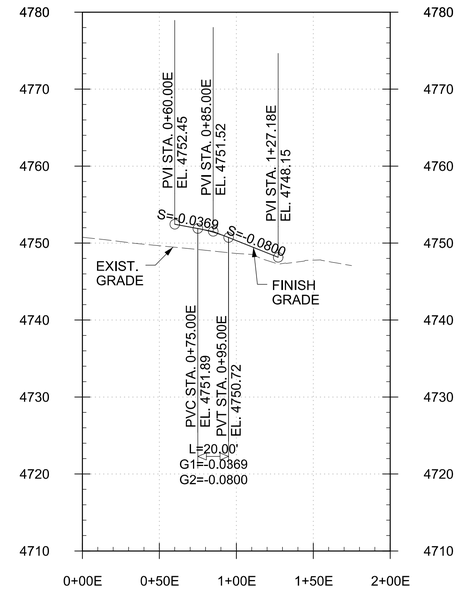

PROFILE - ALIGN. E
TANK TRAIL CONNECTING ROAD

SCALE: 1"=50' H, 1"=10' V

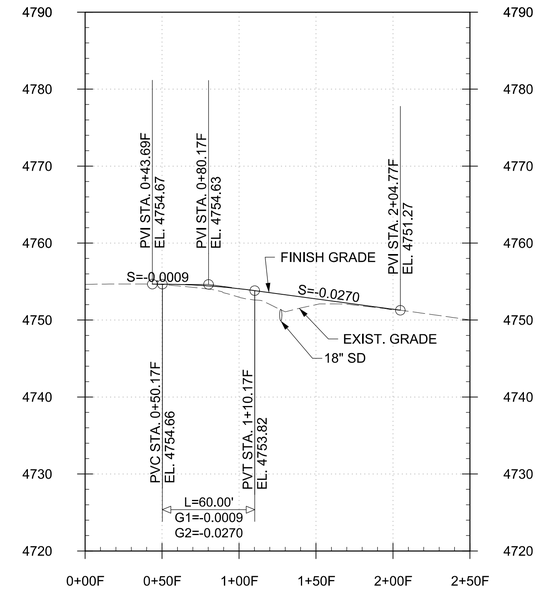

PROFILE - ALIGN. F
HUNT RD RIGHT TURN LANE

SCALE: 1"=50' H, 1"=10' V

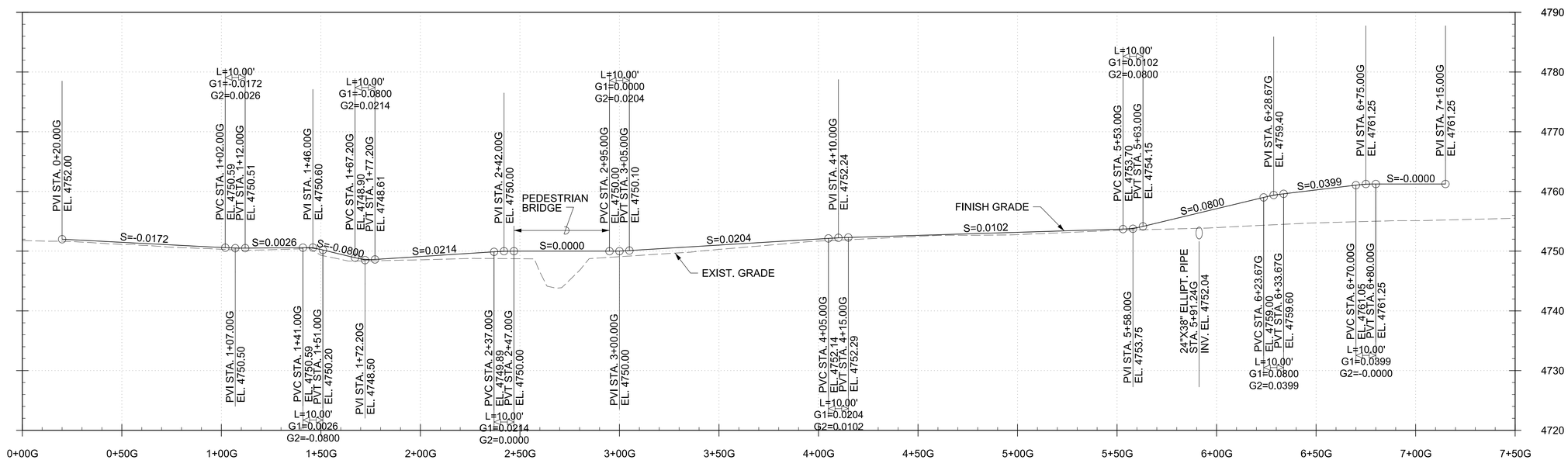

PROFILE - ALIGN. G
OVER FLOW PARKING SIDEWALK

SCALE: 1"=30' H, 1"=10' V

1"=10' 0' 5' 10' 20' 30'

1"=30' 0' 15' 30' 60' 60'

1"=50' 0' 25' 50' 100' 150'

US Army Corps of Engineers®

MARK	DESCRIPTION	DATE

DESIGNED BY: H. HORTON
DRAWN BY: H. HORTON
CHECKED BY: J. WOODRUFF
SUBMITTED BY: M. CORETTI / S. BOWEN
SIZE: ANSI D
SPEC NO.: 2145
ISSUE DATE: 13 JULY 2020
SOLICITATION NO.:
CONTRACT NO.:
DESIGN FILE NO: 20-25-208ES
FILE NAME: ft08c-203.dgn

U.S. ARMY CORPS OF ENGINEERS

FT HUACHUCA AZ

GROUND TRANSPORT EQUIPMENT BUILDING

PROFILES - ALIGN. D, E, F & G

SHEET ID

C-203

RTA

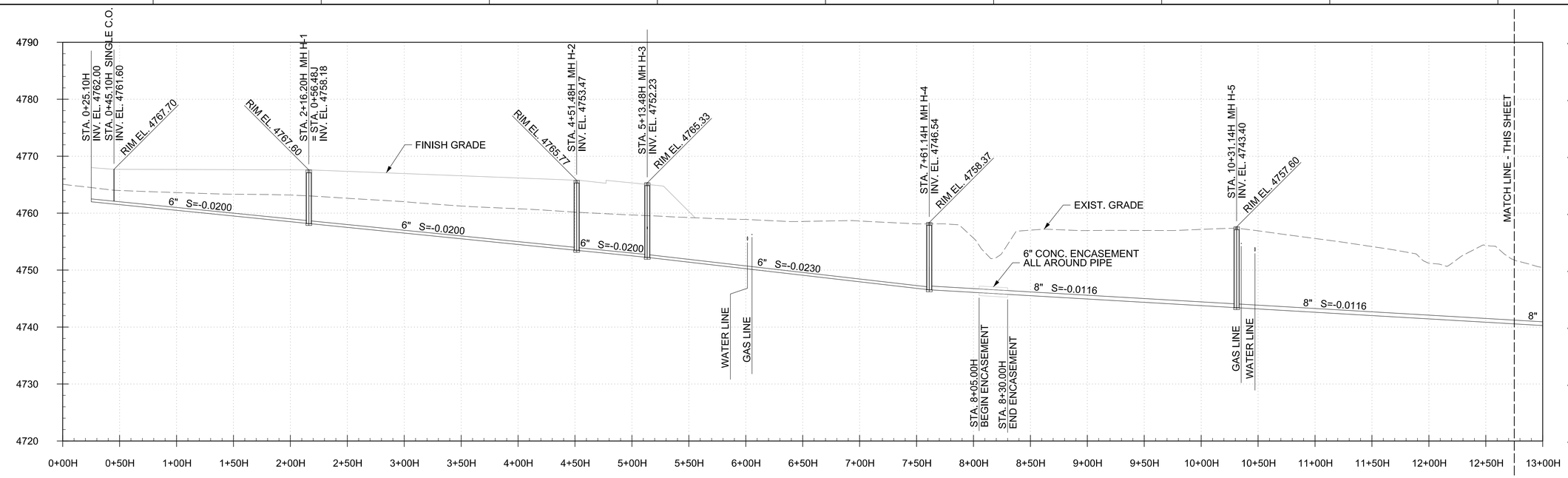

PROFILE - ALIGN. H
GTEB SEWER MAIN

SCALE: 1"=50' H, 1"=10' V

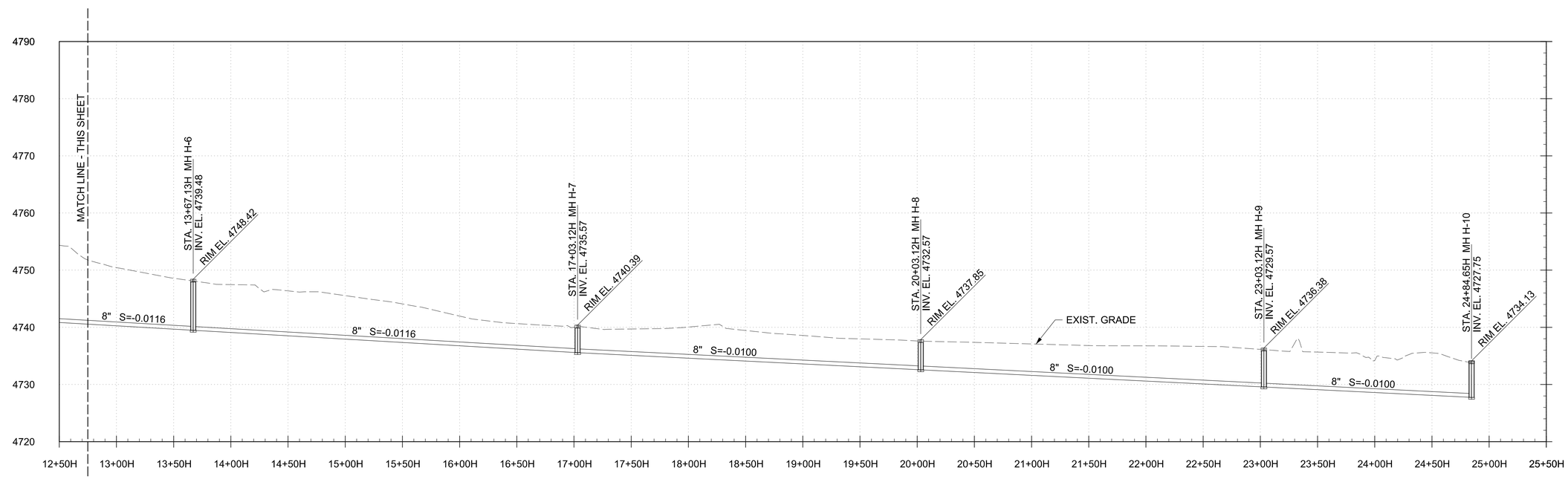

PROFILE - ALIGN. H
GTEB SEWER MAIN

SCALE: 1"=50' H, 1"=10' V

1"=10' 0' 5' 10' 20' 30'

1"=50' 0' 25' 50' 100' 150'

US Army Corps of Engineers®

MARK	DESCRIPTION	DATE

ISSUE DATE: 13 JULY 2020
SOLICITATION NO.:
CONTRACT NO.:
DESIGN FILE NO: 22E-25-0085
FILE NAME: ft08c-204.dgn

DESIGNED BY: H. HORTON
DRAWN BY: H. HORTON
CHECKED BY: J. WOODRUFF
SUBMITTED BY: M. CORETTI / S. BOWEN
SIZE: ANSI D
SPEC NO: 2145

U.S. ARMY CORPS OF ENGINEERS

FT HUACHUCA AZ

GROUND TRANSPORT EQUIPMENT BUILDING

PROFILE - ALIGN. H

SHEET ID

C-204

RTA

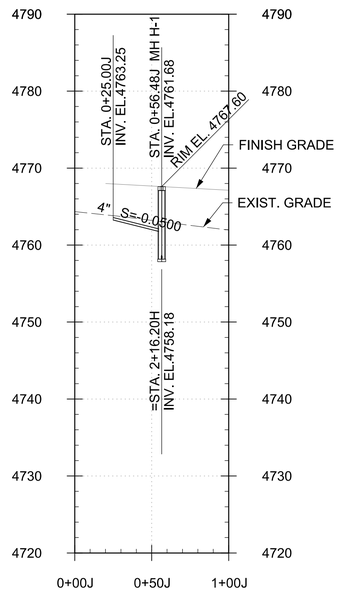

PROFILE - ALIGN. J
GTEB SEWER LATERAL

SCALE: 1"=50' H, 1"=10' V

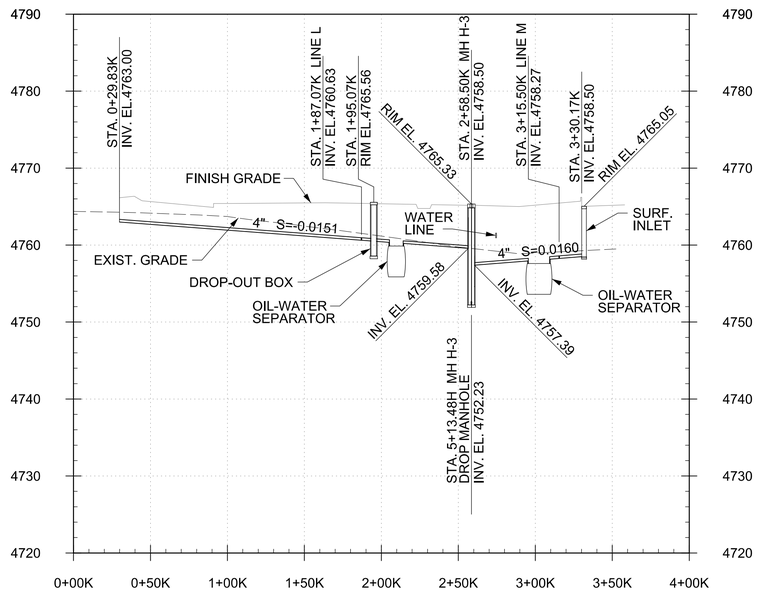

PROFILE - ALIGN. K
SEWER LINE

SCALE: 1"=50' H, 1"=10' V

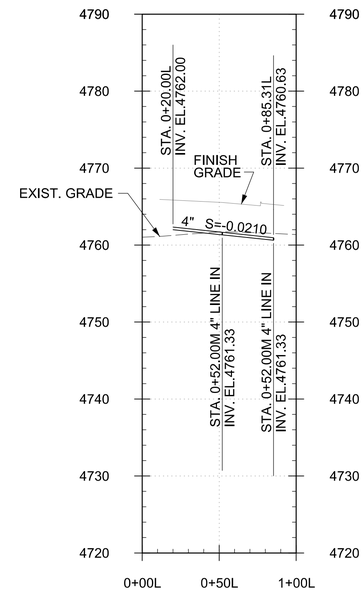

PROFILE - ALIGN. L
SEWER LINE

SCALE: 1"=50' H, 1"=10' V

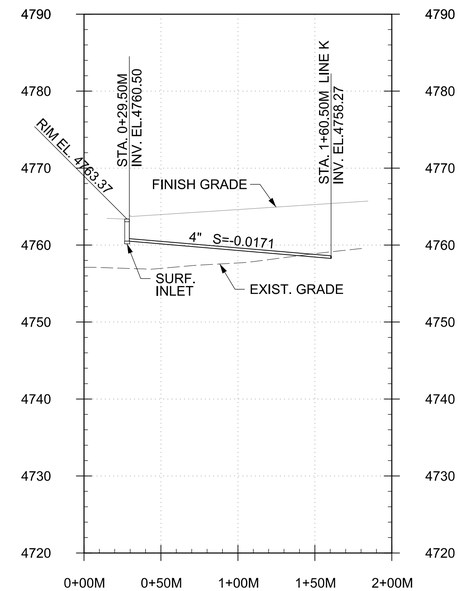

PROFILE - ALIGN. M
SEWER LINE

SCALE: 1"=50' H, 1"=10' V

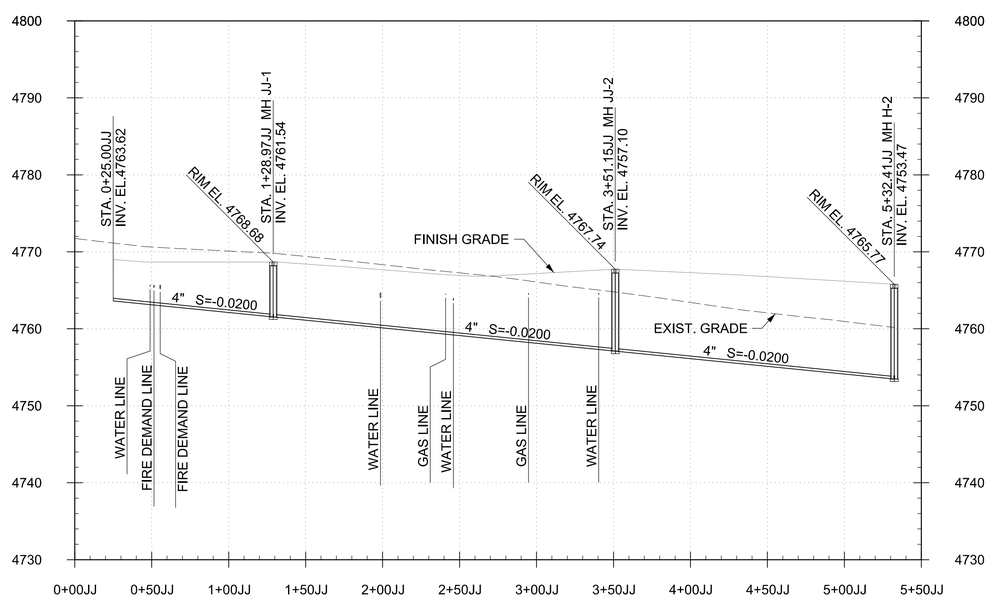

BID OPTION 8
PROFILE - ALIGN. JJ
STORAGE BLDG MAIN SEWER

SCALE: 1"=50' H, 1"=10' V

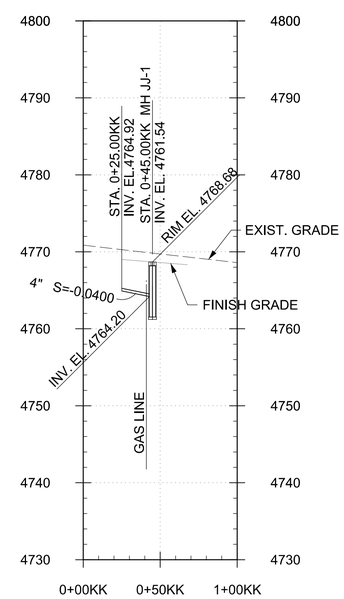

BID OPTION 8
PROFILE - ALIGN. KK
STORAGE BLDG SEWER LATERAL

SCALE: 1"=10' H, 1"=10' V

1"=10' 0' 5' 10' 20' 30'

1"=50' 0' 25' 50' 100' 150'

US Army Corps of Engineers®

MARK	DESCRIPTION	DATE

ISSUE DATE: 13 JULY 2020
SOLICITATION NO.:
CONTRACT NO.:
DESIGN FILE NO: 22C-25-2085
FILE NAME: ft08c-205.dgn

DESIGNED BY: H. HORTON
DRAWN BY: H. HORTON
CHECKED BY: J. WOODRUFF
SUBMITTED BY: R. BOWEN
SIZE: ANSI D
FSCM NO: 22C-25-2085
SHEET NO: 2145

U.S. ARMY CORPS OF ENGINEERS

FT HUACHUCA AZ

GROUND TRANSPORT EQUIPMENT BUILDING

PROFILES - ALIGN. J, K, L, M, JJ & KK

SHEET ID

C-205

RTA

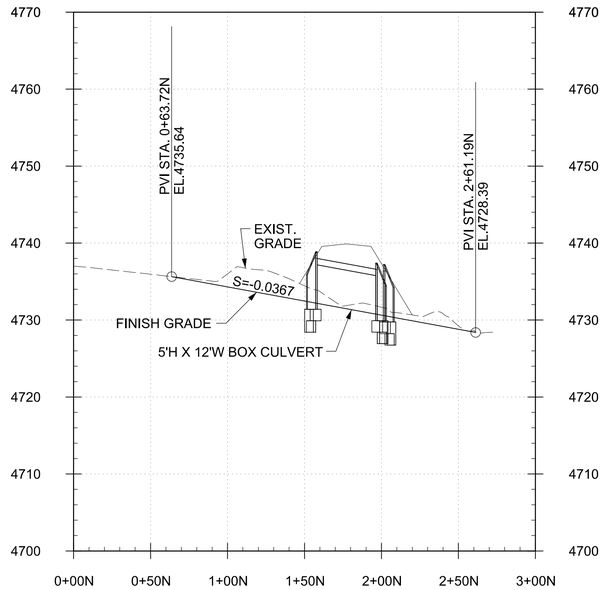

PROFILE - ALIGN. N
WASH CHANNEL, BOX CULVERT

SCALE: 1"=50' H, 1"=10' V

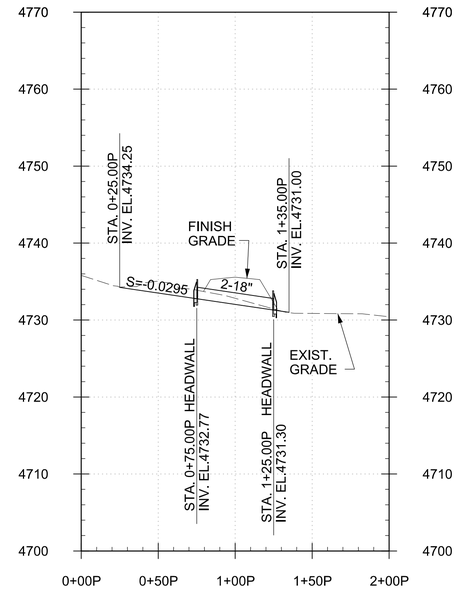

PROFILE - ALIGN. P
ROAD CULVERT

SCALE: 1"=50' H, 1"=10' V

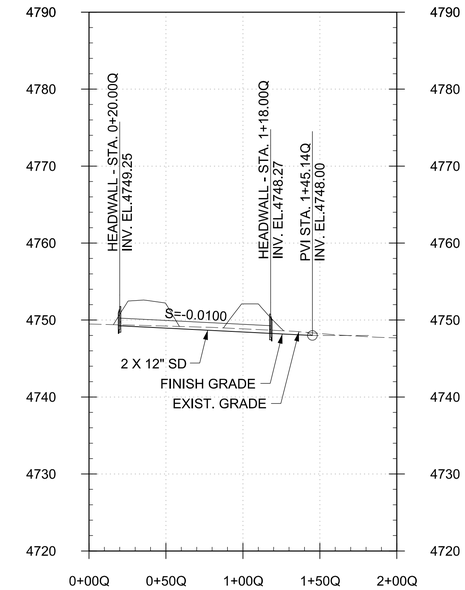

PROFILE - ALIGN. Q
ROAD CULVERT

SCALE: 1"=50' H, 1"=10' V

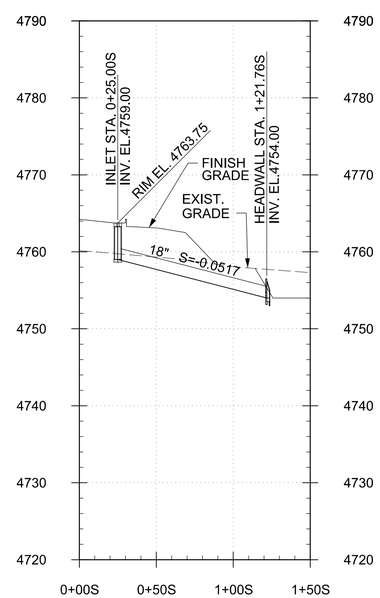

PROFILE - ALIGN. S
STORM DRAIN

SCALE: 1"=50' H, 1"=10' V

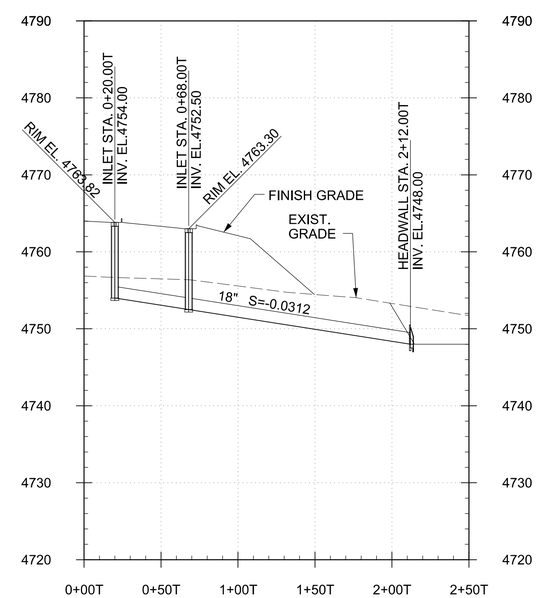

PROFILE - ALIGN. T
STORM DRAIN

SCALE: 1"=50' H, 1"=10' V

1"=10' 0' 5' 10' 20' 30'

1"=50' 0' 25' 50' 100' 150'

US Army Corps of Engineers®

MARK	DESCRIPTION	DATE

ISSUE DATE: 13 JULY 2020
SOLICITATION NO.:
CONTRACT NO.:
DESIGN FILE NO: 22C-25-2065
FILE NAME: ft08c-206.dgn

DESIGNED BY: H. HORTON
DRAWN BY: H. HORTON
CHECKED BY: J. WOODRUFF
SUBMITTED BY: /s/ LORET R. BOWEN
SIZE: ANSI D
SPEC NO.: 2145

U.S. ARMY CORPS OF ENGINEERS

FT HUACHUCA AZ

GROUND TRANSPORT EQUIPMENT BUILDING

PROFILES - ALIGN. N, P, Q, S & T

SHEET ID

C-206

RTA

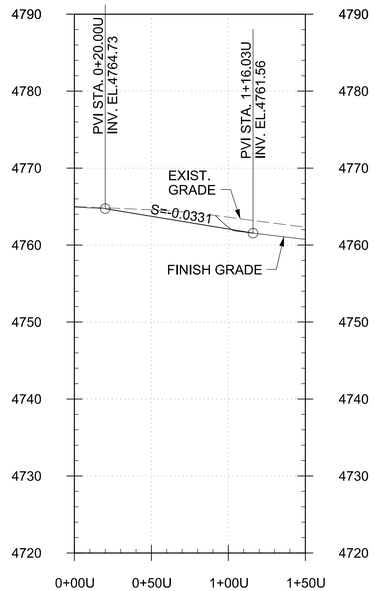

PROFILE - ALIGN. U
DRAIN CHANNEL

SCALE: 1"=50' H, 1"=10' V

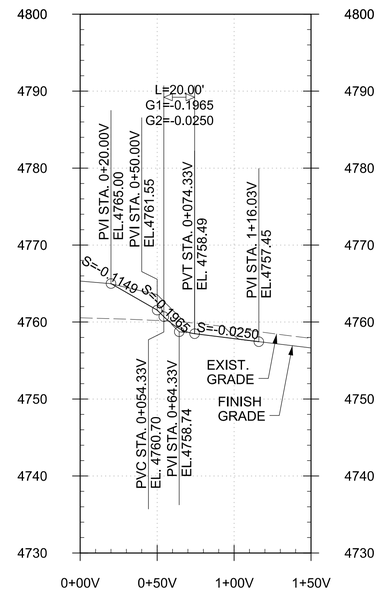

PROFILE - ALIGN. V
DRAIN CHANNEL

SCALE: 1"=50' H, 1"=10' V

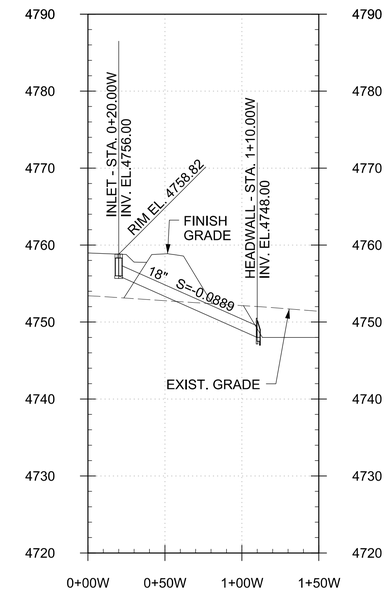

PROFILE - ALIGN. W
STORM DRAIN

SCALE: 1"=50' H, 1"=10' V

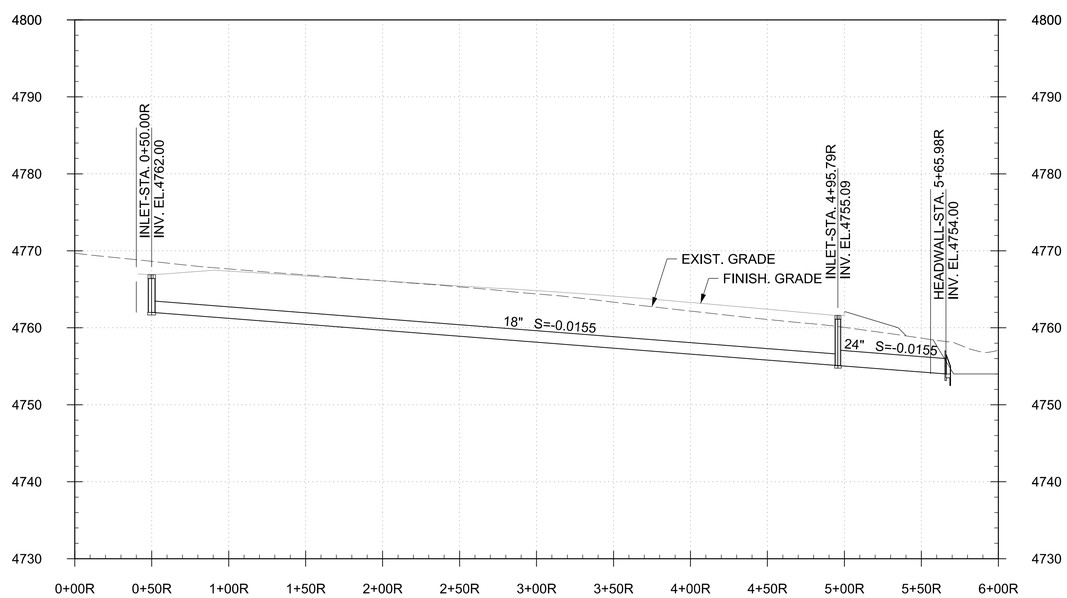

PROFILE - ALIGN. R
STORM DRAIN

SCALE: 1"=50' H, 1"=10' V

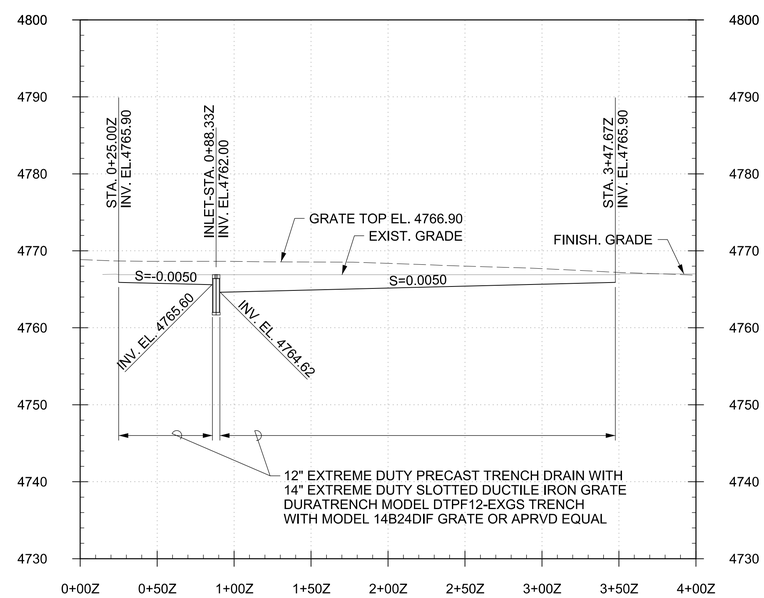

PROFILE - ALIGN. Z
DRAIN TRENCH

SCALE: 1"=50' H, 1"=10' V

1"=10' 0' 5' 10' 20' 30'

1"=50' 0' 25' 50' 100' 150'

US Army Corps of Engineers®

MARK	DESCRIPTION	DATE

ISSUE DATE: 13 JULY 2020
SOLICITATION NO.:
CONTRACT NO.:
DESIGN FILE NO: 22C-25-2065
FILE NAME: fh08c-207.dgn

DESIGNED BY: H. HORTON
DRAWN BY: H. HORTON
CHECKED BY: J. WOODRUFF
SUBMITTED BY: K. CORET, R. BOWEN
SIZE: ANSI D
SPEC NO.: 2145

U.S. ARMY CORPS OF ENGINEERS

AZ

GROUND TRANSPORT EQUIPMENT BUILDING

PROFILES - ALIGN. U, V, W, R & Z

FT HUACHUCA

SHEET ID

C-207

RTA

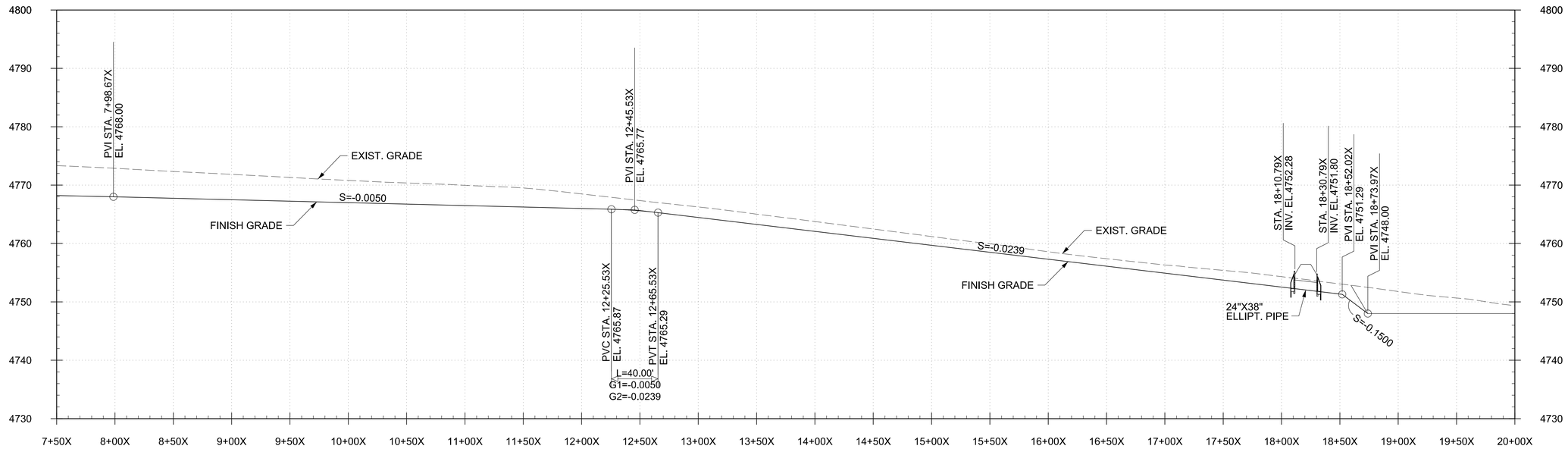

PROFILE - ALIGN. X
DRAIN CHANNEL

SCALE: 1"=50' H, 1"=10' V

1"=10' 0' 5' 10' 20' 30'

1"=50' 0' 25' 50' 100' 150'

US Army Corps of Engineers®

MARK	DESCRIPTION	DATE

U.S. ARMY CORPS OF ENGINEERS

DESIGNED BY: H. HORTON
DRAWN BY: H. HORTON
CHECKED BY: J. WOODRUFF
SUBMITTED BY: M. CORETTA BOWEN
SIZE: ANSI D
SPEC NO.: 2145
ISSUE DATE: 13 JULY 2020
SOLICITATION NO.:
CONTRACT NO.:
DESIGN FILE NO: 262-25-2085
FILE NAME: ft08c-208.dgn

FT HUACHUCA
AZ
GROUND TRANSPORT EQUIPMENT BUILDING
PROFILE - ALIGN. X

SHEET ID
C-208

RTA

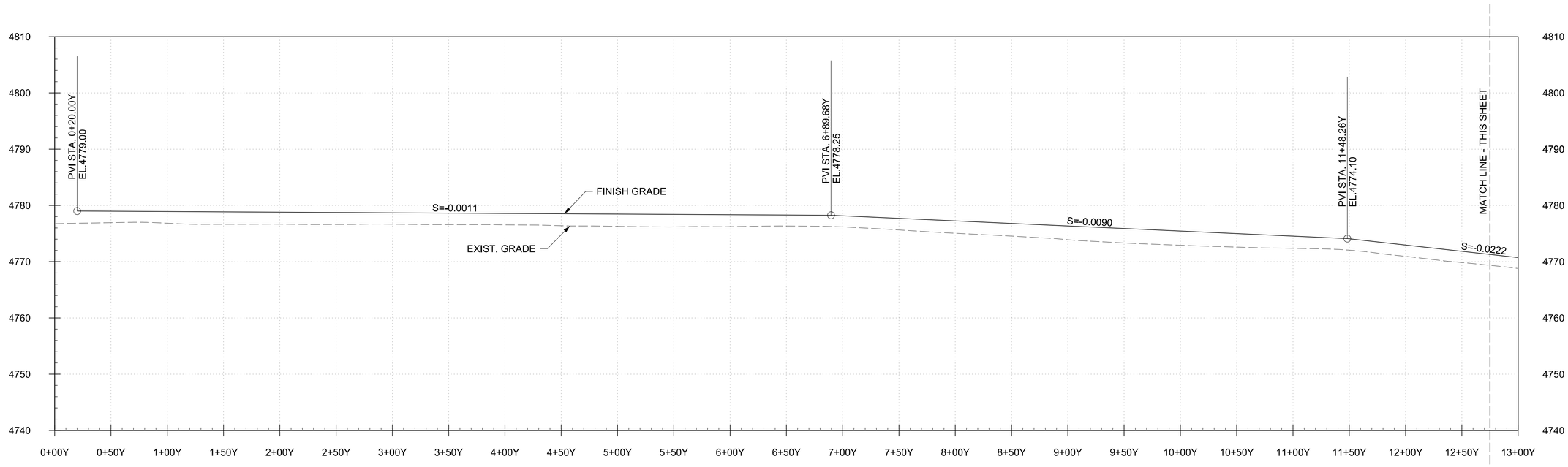

PROFILE - ALIGN. Y
FLOW DIVERSION BERM

SCALE: 1"=50' H, 1"=10' V

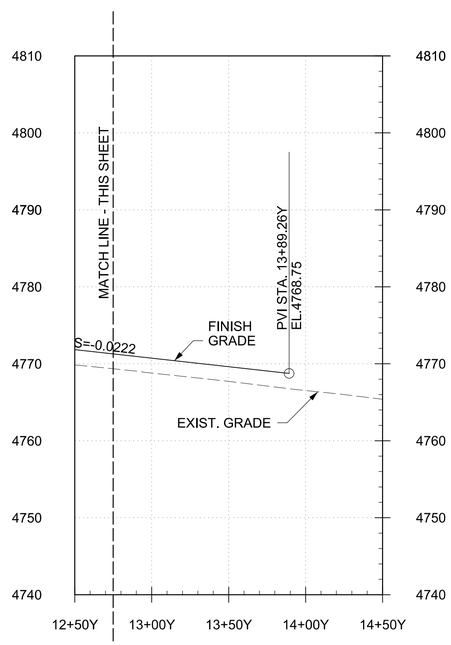

PROFILE - ALIGN. Y
FLOW DIVERSION BERM

SCALE: 1"=50' H, 1"=10' V

1"=10' 0' 5' 10' 20' 30'

1"=50' 0' 25' 50' 100' 150'

US Army Corps of Engineers®

MARK	DESCRIPTION	DATE

U.S. ARMY CORPS OF ENGINEERS

DESIGNED BY: H. HORTON
DRAWN BY: H. HORTON
CHECKED BY: J. WOODRUFF
SUBMITTED BY: M. CORETTI & BOWEN
SIZE: ANSI D
SPEC NO.: 2145
ISSUE DATE: 13 JULY 2020
SOLICITATION NO.:
CONTRACT NO.:
DESIGN FILE NO: 22E-25-0085
FILE NAME: ft08c-209.dgn

FT HUACHUCA AZ

GROUND TRANSPORT EQUIPMENT BUILDING

PROFILE - ALIGN. Y

SHEET ID

C-209

RTA

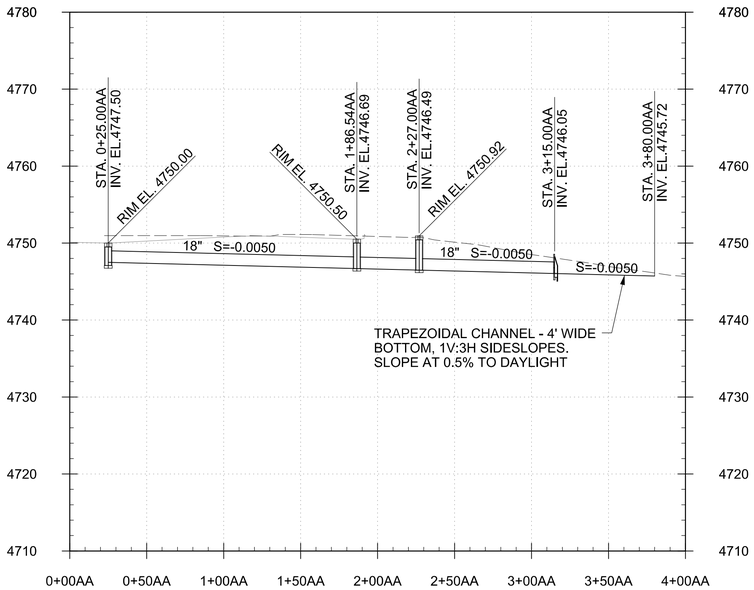

PROFILE - ALIGN. AA
STORM DRAIN

SCALE: 1"=50' H, 1"=10' V

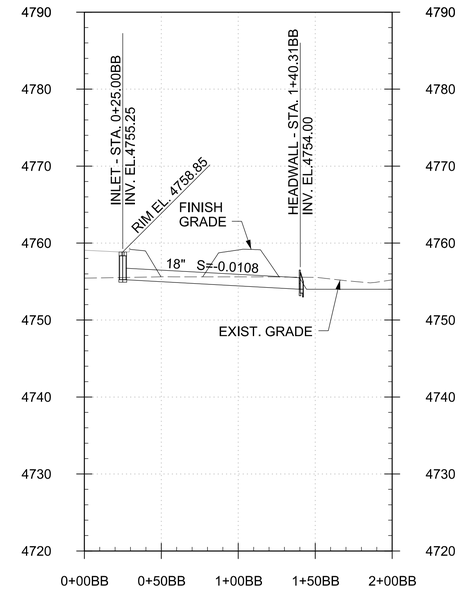

PROFILE - ALIGN. BB
STORM DRAIN

SCALE: 1"=50' H, 1"=10' V

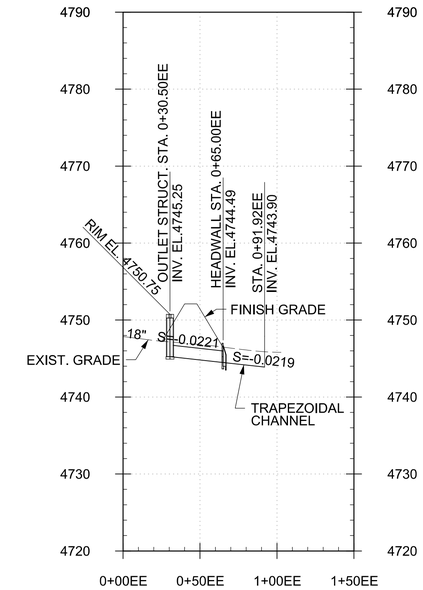

PROFILE - ALIGN. EE
POND 2 OUTLET DRAIN

SCALE: 1"=50' H, 1"=10' V

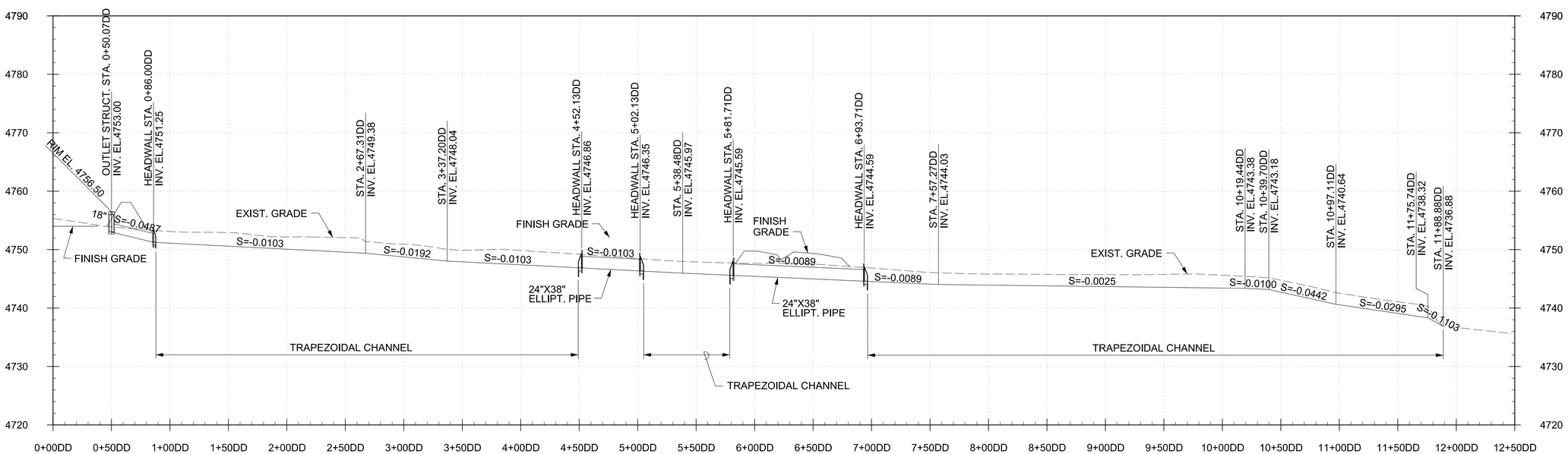

PROFILE - ALIGN. DD
POND 1 OUTLET DRAIN

SCALE: 1"=50' H, 1"=10' V

1"=10' 0' 5' 10' 20' 30'

1"=50' 0' 25' 50' 100' 150'

US Army Corps of Engineers®

MARK	DESCRIPTION	DATE

DESIGNED BY: H. HORTON
DRAWN BY: H. HORTON
CHECKED BY: J. WOODRUFF
SUBMITTED BY: M. CORETTI & BOWEN
SIZE: ANSI D
SPEC NO: 2145
ISSUE DATE: 13 JULY 2020
SOLICITATION NO.:
CONTRACT NO.:
DESIGN FILE NO: 22-25-2065
FILE NAME: fh08c-210.dgn

U.S. ARMY CORPS OF ENGINEERS

FT HUACHUCA AZ

GROUND TRANSPORT EQUIPMENT BUILDING

PROFILE - ALIGN. AA, BB, EE & DD

SHEET ID

C-210

RTA

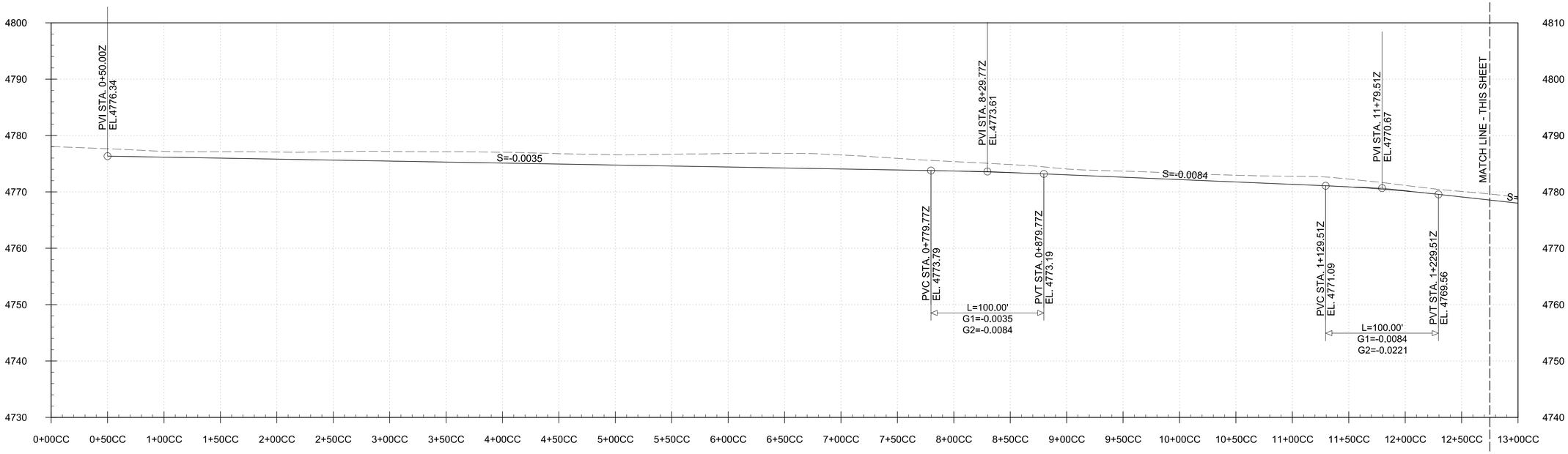

PROFILE - ALIGN. CC
FLOW DIVERSION CHANNEL

SCALE: 1"=50' H, 1"=10' V

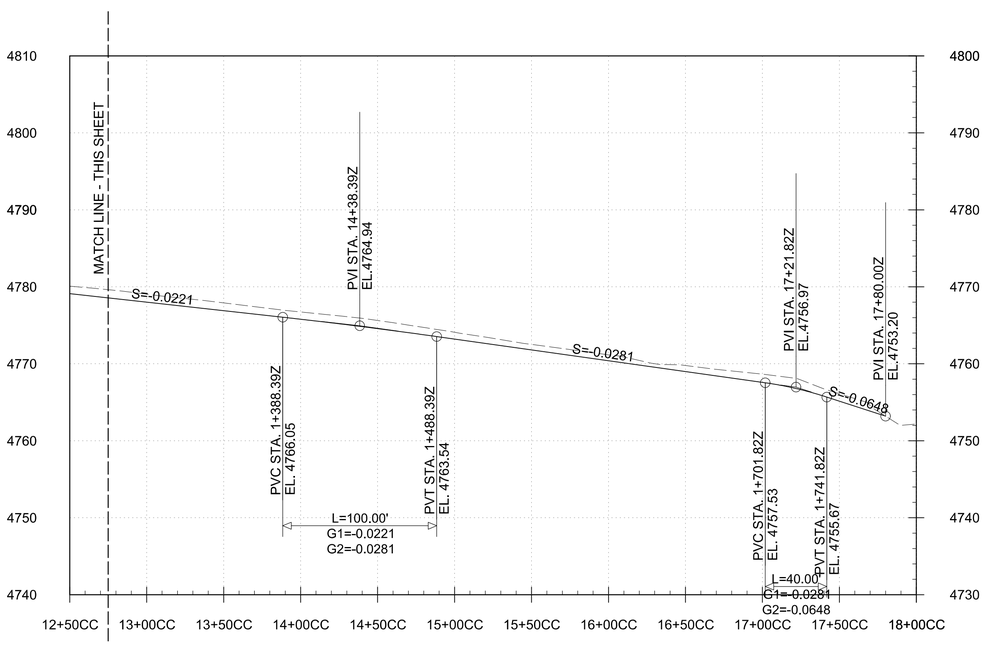

PROFILE - ALIGN. CC
FLOW DIVERSION CHANNEL

SCALE: 1"=50' H, 1"=10' V

1"=10' 0' 5' 10' 20' 30'

1"=50' 0' 25' 50' 100' 150'

US Army Corps of Engineers®

MARK	DESCRIPTION	DATE

U.S. ARMY CORPS OF ENGINEERS

DESIGNED BY: H. HORTON
DRAWN BY: H. HORTON
CHECKED BY: J. WOODRUFF
SUBMITTED BY: M. CORETTI & BOWEN
SIZE: ANSI D
SPEC NO.: 2145
ISSUE DATE: 13 JULY 2020
SOLICITATION NO.:
CONTRACT NO.:
DESIGN FILE NO: 20-25-2065
FILE NAME: fh08c-211.dgn

FT HUACHUCA AZ

GROUND TRANSPORT EQUIPMENT BUILDING

PROFILE - ALIGN. CC

SHEET ID

C-211

RTA

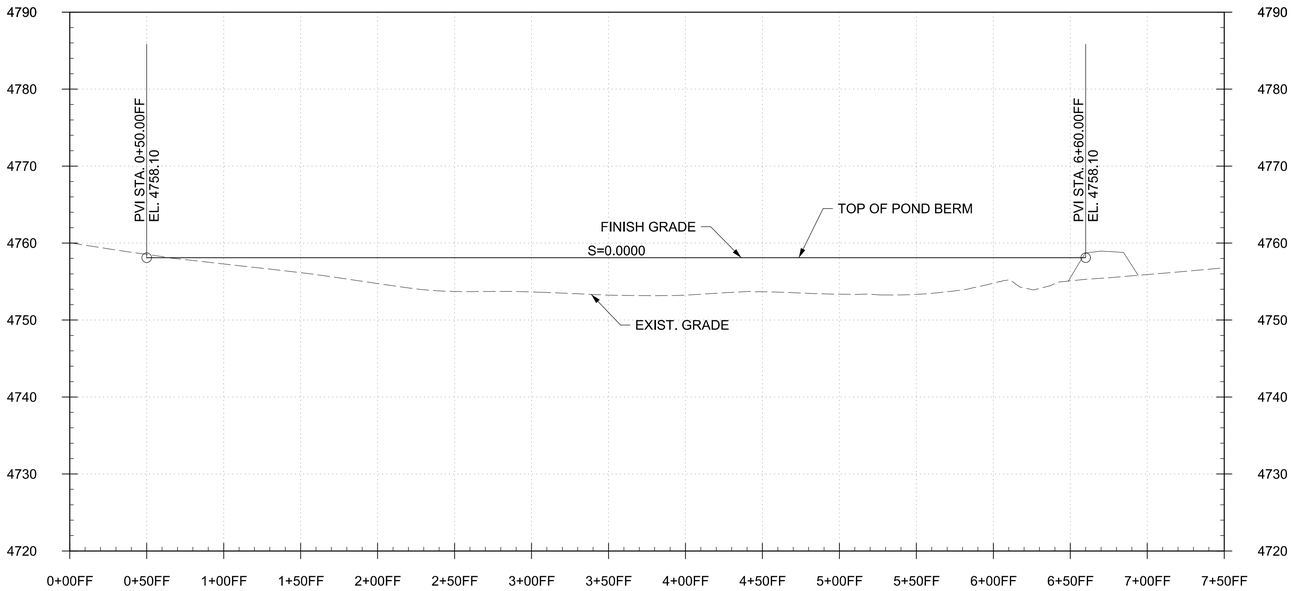

PROFILE - ALIGN. FF
DETENTION POND 1 BERM

SCALE: 1"=50' H, 1"=10' V

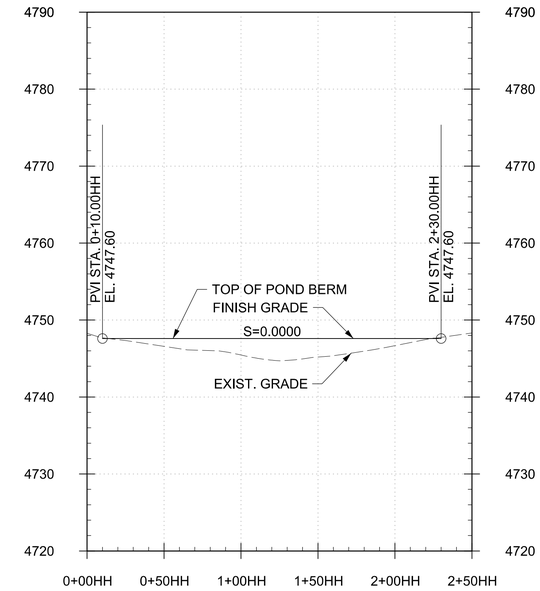

PROFILE - ALIGN. GG
DETENTION POND 2 BERM

SCALE: 1"=50' H, 1"=10' V

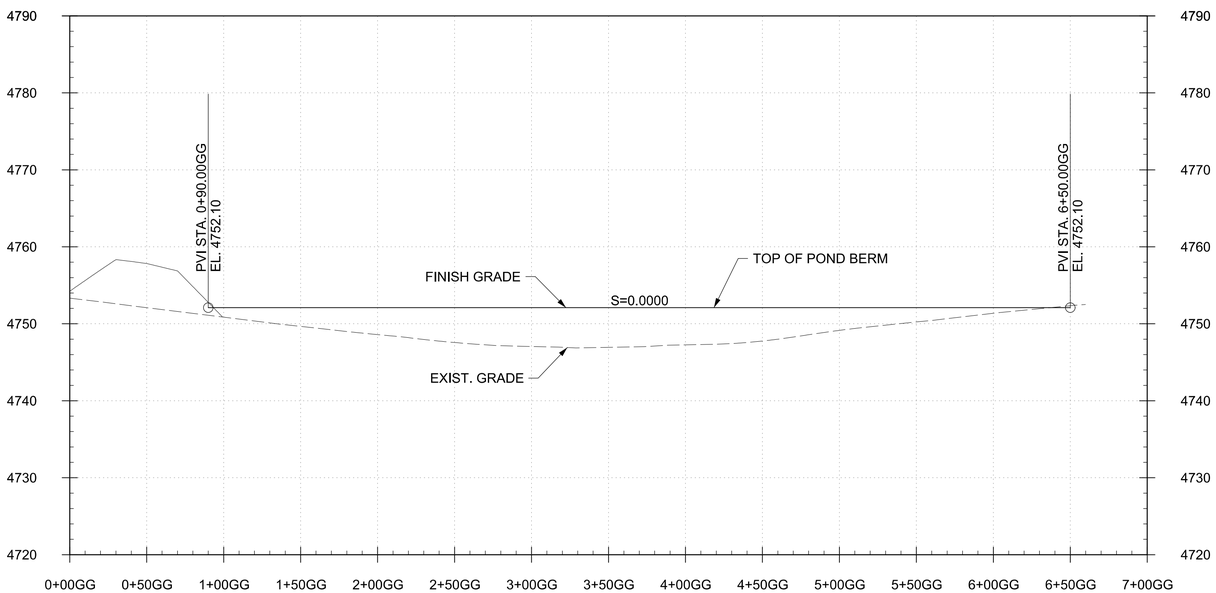

PROFILE - ALIGN. HH
DETENTION POND 3 BERM

SCALE: 1"=50' H, 1"=10' V

1"=10' 0' 5' 10' 20' 30'

1"=50' 0' 25' 50' 100' 150'

US Army Corps of Engineers®

MARK	DESCRIPTION	DATE

DESIGNED BY: H. HORTON
DRAWN BY: H. HORTON
CHECKED BY: J. WOODRUFF
SUBMITTED BY: M. CORETTI & BOWEN
SIZE: ANSI D
ISSUE DATE: 13 JULY 2020
SOLICITATION NO.:
CONTRACT NO.:
DESIGN FILE NO: 262-23-2085
SPEC NO: 2145
FILE NAME: ft08c-212.dgn

U.S. ARMY CORPS OF ENGINEERS

FT HUACHUCA AZ

GROUND TRANSPORT EQUIPMENT BUILDING

PROFILES - ALIGN. FF, GG & HH

SHEET ID

C-212

RTA

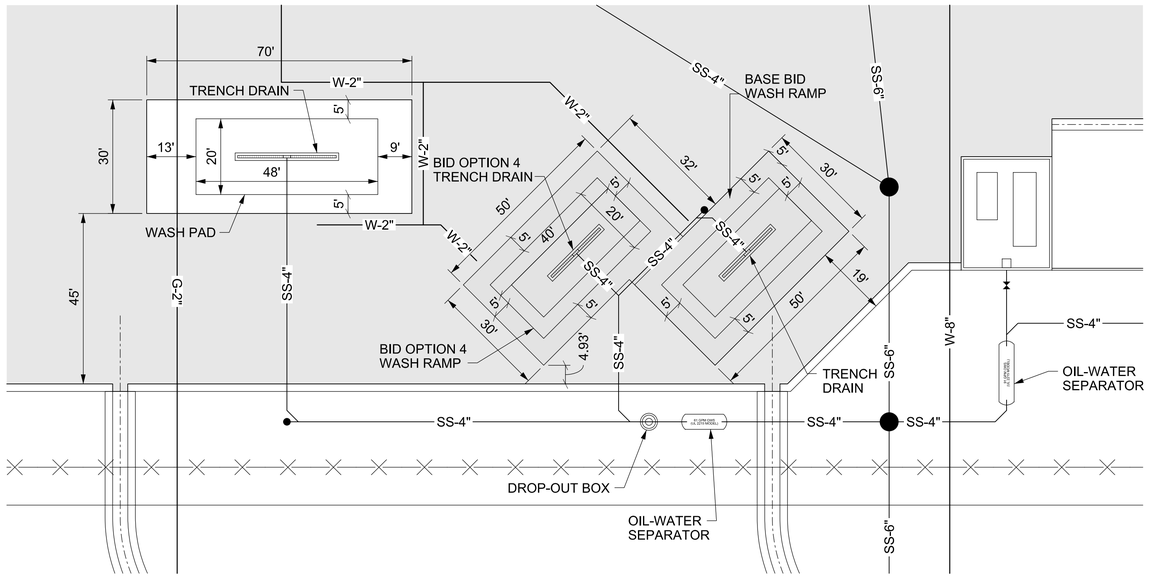

SITE PLAN - WASH RAMPS

SCALE: 1"=20'

NOTES

1. SEE SHEET CG401 FOR ENLARGED PLANS AND ADDITIONAL GRADING INFORMATION OF WASH RAMPS AND PAD.

2. SEE PCC PAVEMENT DETAILS AND SLAB REINFORCEMENT DETAILS IN THE PAVEMENT DRAWINGS FOR PAVEMENT UNDER WASH RAMPS AND WASH PAD.

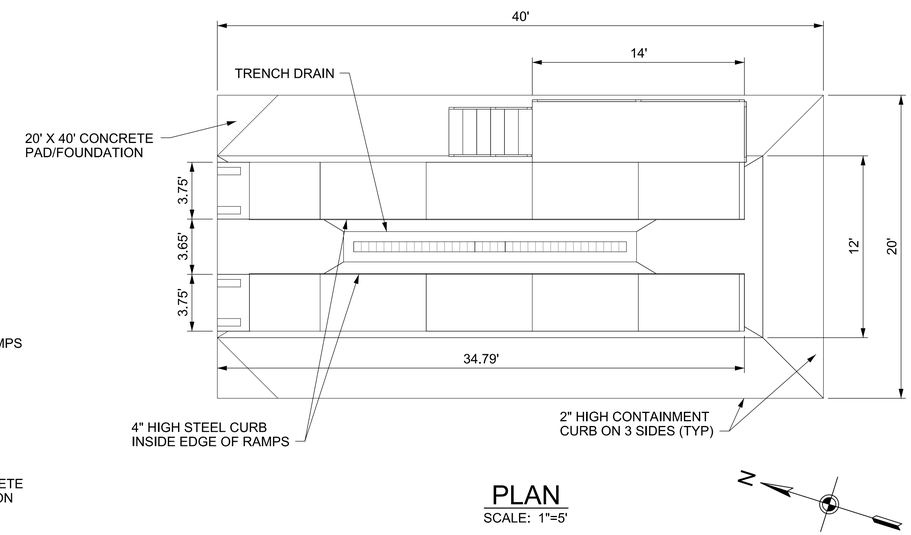

PLAN

SCALE: 1"=5'

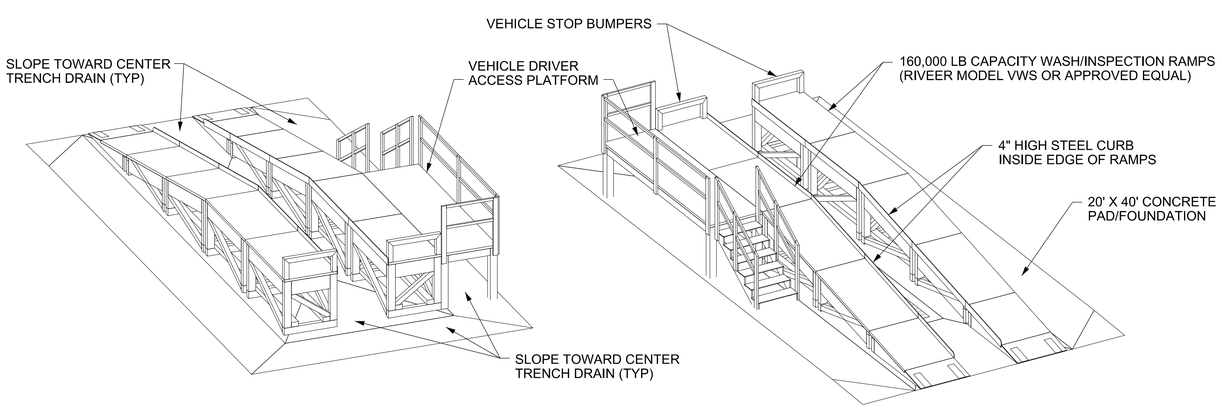

ISOMETRIC VIEWS

SCALE: 1"=5'

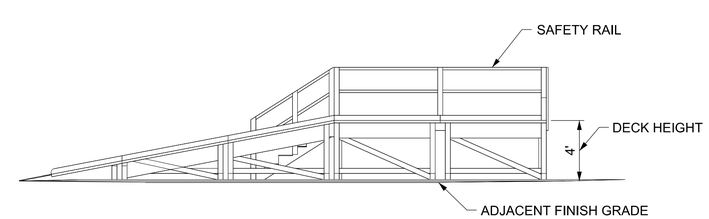

ELEVATION

SCALE: 1"=5'

1"=5' 0' 2.5' 5 10' 15'

1"=20' 0' 10 20' 40' 60'

US Army Corps of Engineers®

MARK	DESCRIPTION	DATE

U.S. ARMY CORPS OF ENGINEERS

DESIGNED BY: H. HORTON
DRAWN BY: H. HORTON
CHECKED BY: J. WOODRUFF
SUBMITTED BY: /s/ COREY R. BOWEN
SIZE: ANSI D
SPEC NO: 2145
ISSUE DATE: 13 JULY 2020
SOLICITATION NO.:
CONTRACT NO.:
DESIGN FILE NO: 223-25-0665
FILE NAME: fm00c-501

FT HUACHUCA AZ

GROUND TRANSPORT EQUIPMENT BUILDING

WASH RAMPS

SHEET ID

C-501

RTA

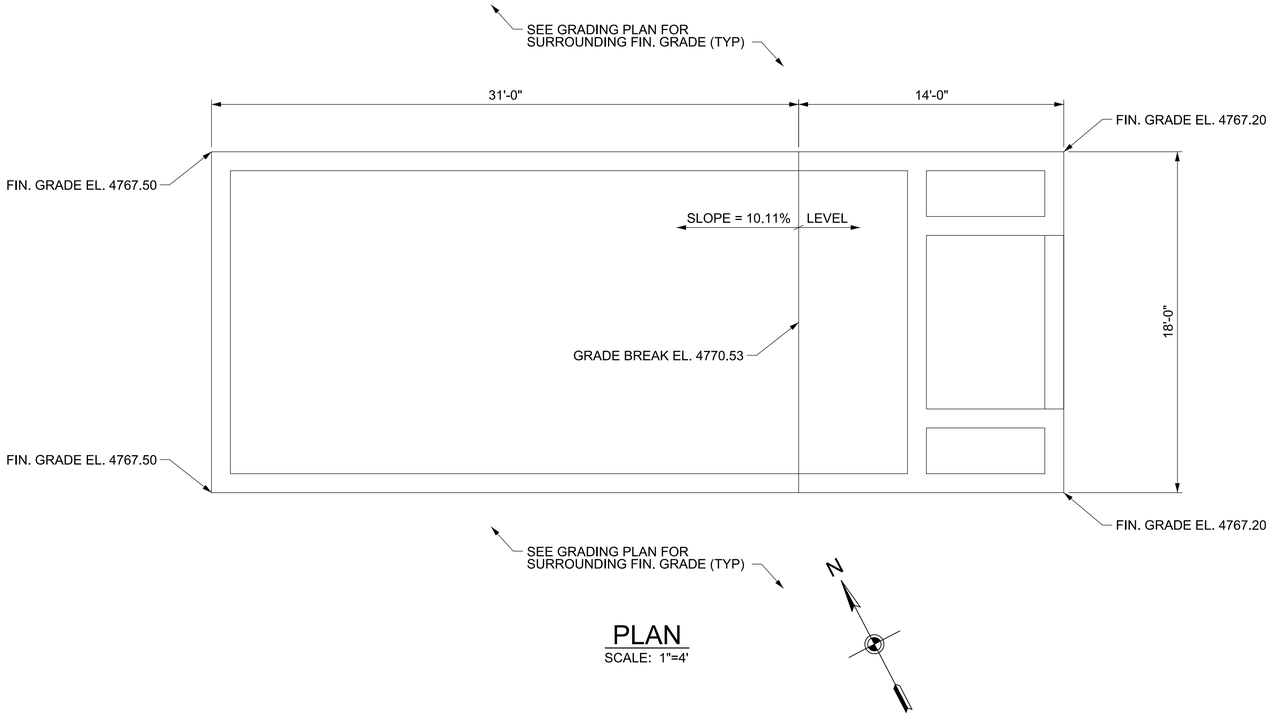

PLAN

SCALE: 1"=4'

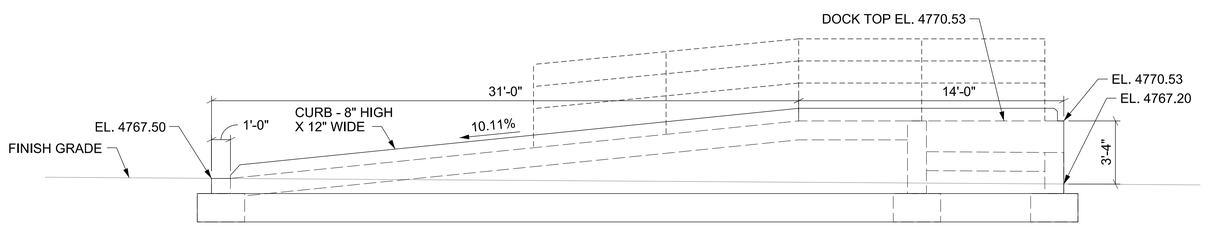

SIDE - ELEVATION

SCALE: 1"=4'

NOTES

1. SEE STRUCTURAL DRAWINGS FOR REINFORCEMENT REQUIREMENTS.

2. SEE STRUCTURAL DRAWINGS FOR HAND RAILING REQUIREMENTS.

1"=4' 0' 2 4' 8' 12'

US Army Corps of Engineers®

MARK	DESCRIPTION	DATE

DESIGNED BY: H. HORTON	ISSUE DATE: 13 JULY 2020
DRAWN BY: H. HORTON	SOLICITATION NO.:
CHECKED BY: J. WOODRUFF	CONTRACT NO.:
SUBMITTED BY: /s/ CORETTA BOWEN	DESIGN FILE NO: 202-25-2065
SIZE: ANSI D	FILE NAME: ft08c-502
SPEC NO: 2145	

U.S. ARMY CORPS OF ENGINEERS

FT HUACHUCA AZ

GROUND TRANSPORT EQUIPMENT BUILDING

VEHICLE LOADING RAMP

SHEET ID

C-502

RTA

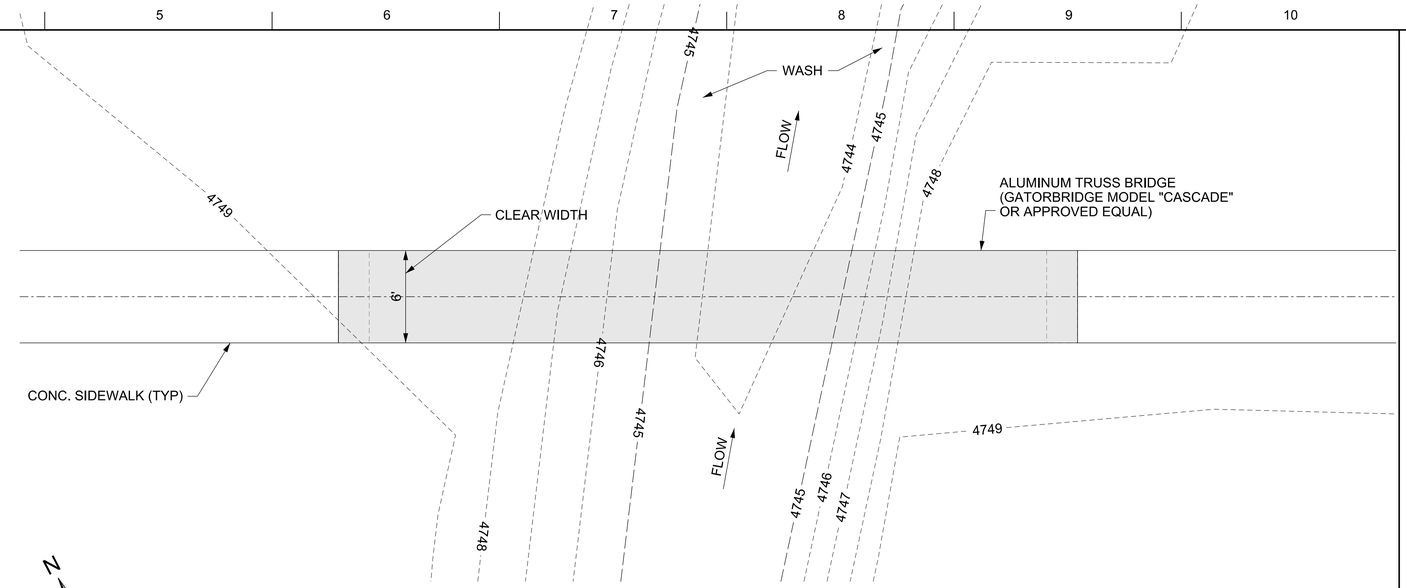

PLAN - PEDESTRIAN BRIDGE

SCALE: 1"=5'

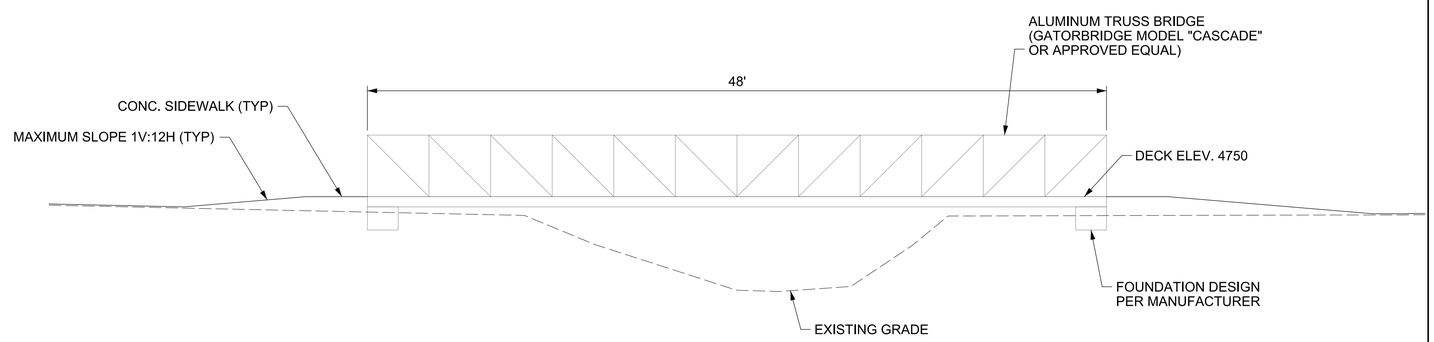

ELEVATION - PEDESTRIAN BRIDGE

SCALE: 1"=5'

1"=5' 0' 2.5' 5 10' 15'

US Army Corps of Engineers®

MARK	DESCRIPTION	DATE

DESIGNED BY: H. HORTON
DRAWN BY: H. HORTON
CHECKED BY: J. WOODRUFF
SUBMITTED BY: /s/ CORET R. BOWEN
SIZE: ANSI D
SPEC NO: 2145
ISSUE DATE: 13 JULY 2020
SOLICITATION NO.:
CONTRACT NO.:
DESIGN FILE NO: 22A-25-0865
FILE NAME: ft106c-503

U.S. ARMY CORPS OF ENGINEERS

FT HUACHUCA AZ

GROUND TRANSPORT EQUIPMENT BUILDING

PEDESTRIAN BRIDGE

SHEET ID

C-503

RTA

NOTES

1. FOR SIZE AND SPACING OF "X" AND "Y" BARS SEE SHEET C-505.
2. THE INTERFACE BETWEEN THE TOP OF FOOTING AND BASE OF WINGWALL STEM IS INTENTIONALLY ROUGHENED TO A FULL AMPLITUDE OF APPROXIMATELY 1/4" BY MEANS OF A SERRATED TROWEL.
3. WALL THICKNESS T=12" FOR BOX CULVERT SPAN=12'.
4. PROVIDE A SAFETY RAIL ALONG TOP OF FORESLOPE AND WINGWALLS ON BOTH ENDS OF CULVERT. RAIL SHALL CONFORM TO MARICOPA ASSOCIATION OF GOVERNMENTS (MAG) STANDARD DETAIL NO. 145, ANCHOR TYPE 1 OR 3.

DESIGN DATA: THE FOLLOWING DESIGN DATA IS ASSUMED:

INTERNAL ANGLE OF FRICTION (Ø) = 30 DEGREES
COEFFICIENT OF FRICTION (μ) = 0.30
UNIT WEIGHT OF SOIL = 120 PCF
UNIT WEIGHT OF CONCRETE = 150 PCF
SLOPE OF BACKFILL = 2:1 (TYPE A & B HEADWALLS)
MAXIMUM FOUNDATION BEARING PRESSURE = 2000 P.S.F.

CONCRETE CLASS C - COMPRESSIVE STRENGTH 4500 PSI (FOOTING, WINGWALL AND FORESLOPE WALL)

REINFORCING STEEL - ASTM A615, A616, OR A617 GRADE 60 MINIMUM YIELD STRENGTH 60,000 PSI (EPOXY COATED)

FOOTING REINFORCING				
FOOTING DESIGN	"V" BAR	SPA. (in)	"W", "Z" BARS	SPA. (in)
	SIZE	v	SIZE	w, z
1	5	18	5	18

LEGEND

C.J.	CONSTRUCTION JOINT
℄	CENTER LINE
CLR.	CLEAR
CONC.	CONCRETE
DIA.	DIAMETER
DIM.	DIMENSION
EXTEN.	EXTENSION
E.F.	EACH FACE
F.F.	FAR FACE
MAX.	MAXIMUM
MIN.	MINIMUM
N.F.	NEAR FACE
PEJF	PREFORMED EXPANSION JOINT FILLER
QTY.	QUANTITY
REINF.	REINFORCING
SER.	SERIES
SHT.	SHEET
SPA.	SPACING
T&B	TOP AND BOTTOM
TYP.	TYPICAL

DIMENSIONS AND REINFORCING													
DESIGN HEIGHT H	FOOTING DESIGN	WINGWALL LENGTH	WINGWALL HEIGHT	FOOTING DIM.		CUTOFF WALL Ht.	DIMENSIONS		WINGWALL REINFORCING (SEE SHEET 6/6)				
									"X" BAR	SPA. (in)	"Y" BAR	SPA. (in)	EXTEN. LENGTH
		L	h	Wf	hf	hcw	a	b	SIZE	x	SIZE	y	c
7'-6"	1	8'-6"	4'-6"	5'-0"	1'-6"	2'-6"	1'-6"	1'-0"	5	12	5	18	2'-5"

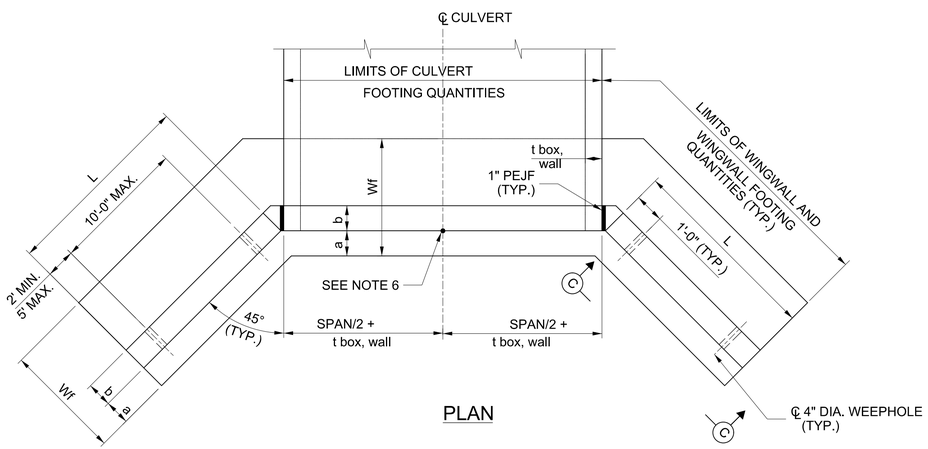

PLAN

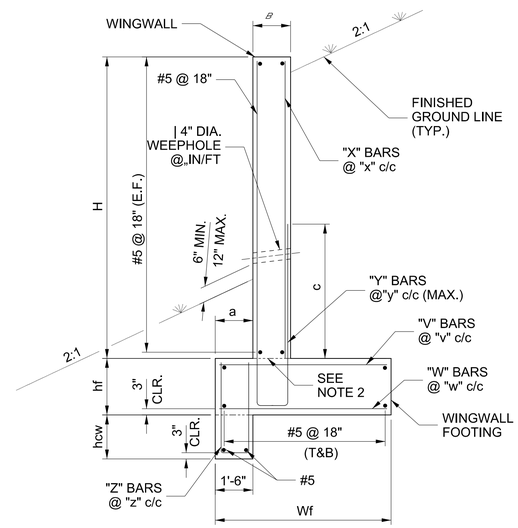

SECTION A-A

(POROUS BACKFILL NOT SHOWN FOR CLARITY)

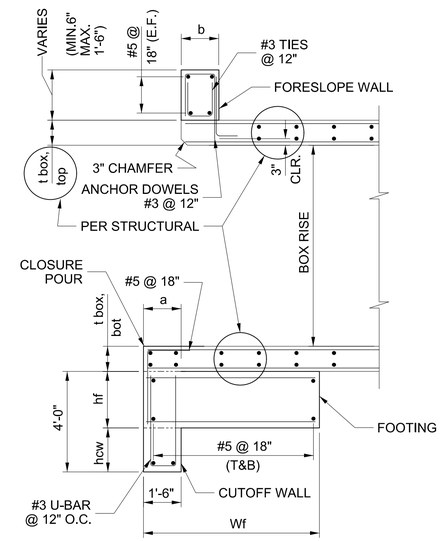

SECTION B-B

(CULVERT INLET BEVEL SHOWN)

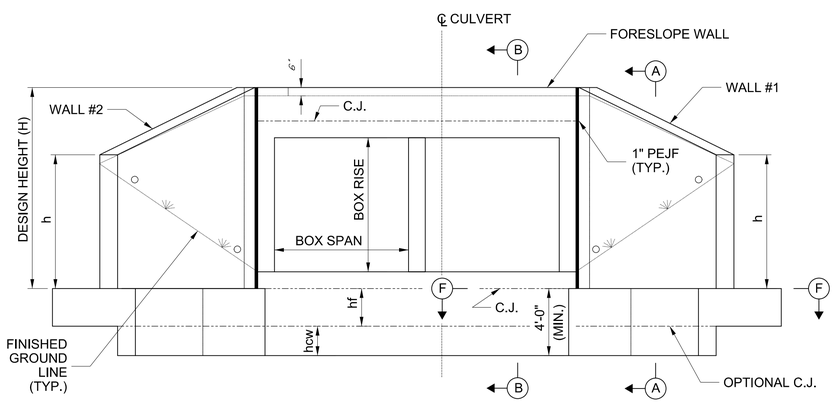

ELEVATION

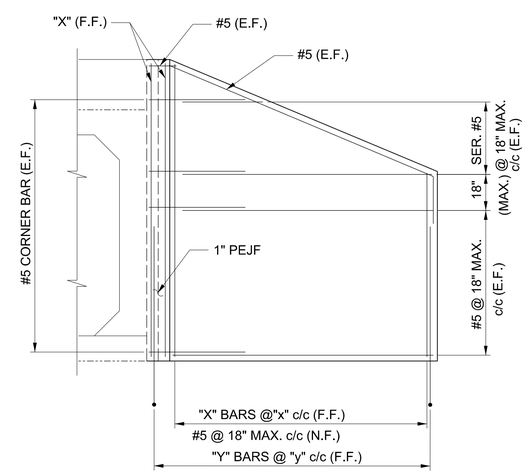

VIEW C-C

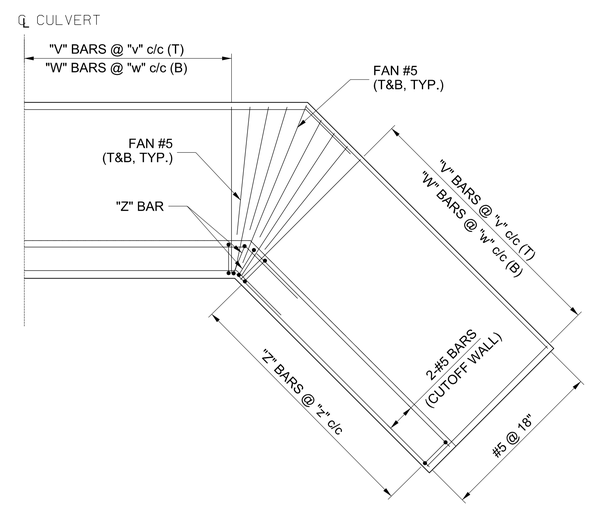

SECTION F-F

BOX CULVERT HEADWALL DETAILS

US Army Corps of Engineers®

MARK	DESCRIPTION	DATE

DESIGNED BY: H. HORTON	ISSUE DATE: 13 JULY 2020
DRAWN BY: H. HORTON	SOLICITATION NO.:
CHECKED BY: J. WOODRUFF	CONTRACT NO.:
SUBMITTED BY: M. CORETTI / B. BOWEN	DESIGN FILE NO: 62625-2065
SIZE: ANSI D	FILE NAME: ft08c-504.dgn
SPEC NO: 2145	

U.S. ARMY CORPS OF ENGINEERS

AZ

FT HUACHUCA

GROUND TRANSPORT EQUIPMENT BUILDING

BOX CULVERT HEADWALL DETAILS

SHEET ID

C-504

RTA

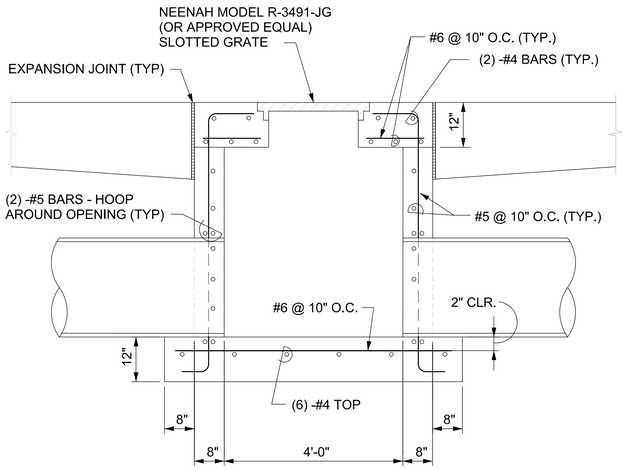

STORM DRAIN SURFACE INLET DETAIL

SCALE: NOT TO SCALE

NO. OF PIPES	DIAM. OF PIPES	TABLE OF DIMENSIONS						
		G	K	X	H	Y	W	BAR SIZE *
1	18"	--	12"	2'-11"	2'-6"	2'-0"	4'-0 7/8"	#3
2	12"	10"	12"	4'-2"	2'-0"	1'-0"	4'-2"	#3
2	18"	1'-2"	12"	4'-7"	2'-6"	2'-0"	6'-8 7/8"	#3
1	24"X38"	--	12"	5'-0"	3'-0"	3'-0"	7'-3 3/4"	#3

* - REINFORCING BARS AT 12" O.C.E.W.

CONCRETE HEADWALL DIMENSIONS

SCALE: NOT TO SCALE

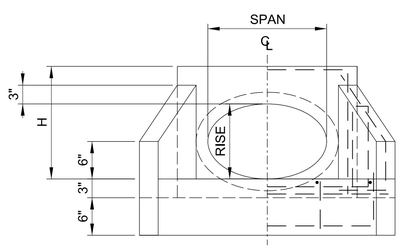

ELEVATION

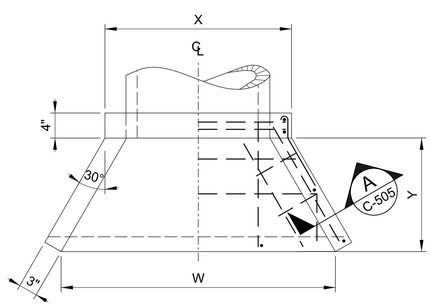

PLAN

CONCRETE HEADWALL - ELLIPTICAL PIPE

SCALE: NOT TO SCALE

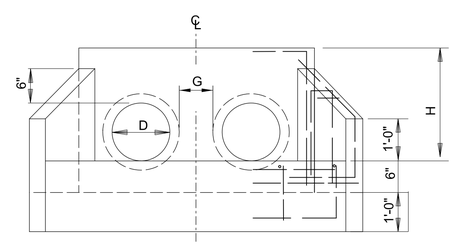

ELEVATION - 2 PIPES

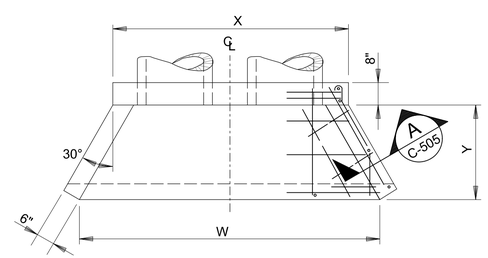

PLAN - 2 PIPES

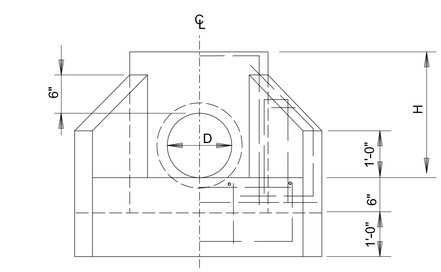

ELEVATION - SINGLE PIPE

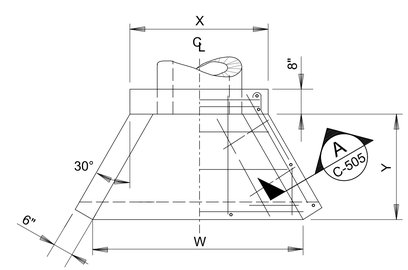

PLAN - SINGLE PIPE

CONCRETE HEADWALL - CIRC. PIPES

SCALE: NOT TO SCALE

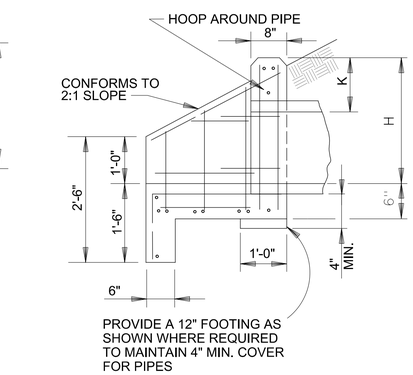

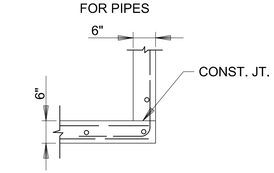

SECTION C / C-505

US Army Corps of Engineers®

MARK	DESCRIPTION	DATE

DESIGNED BY: H. HORTON
DRAWN BY: H. HORTON
CHECKED BY: J. WOODRUFF
SUBMITTED BY: /s/ CORETTA BOWEN
SIZE: ANSI D
SPEC NO.: 2145
ISSUE DATE: 13 JULY 2020
SOLICITATION NO.:
CONTRACT NO.:
DESIGN FILE NO: 2020-25-0065
FILE NAME: ft08c-505.dgn

U.S. ARMY CORPS OF ENGINEERS

AZ

GROUND TRANSPORT EQUIPMENT BUILDING

HEADWALLS, SURFACE INLET DETAILS

FT HUACHUCA

SHEET ID

C-505

RTA

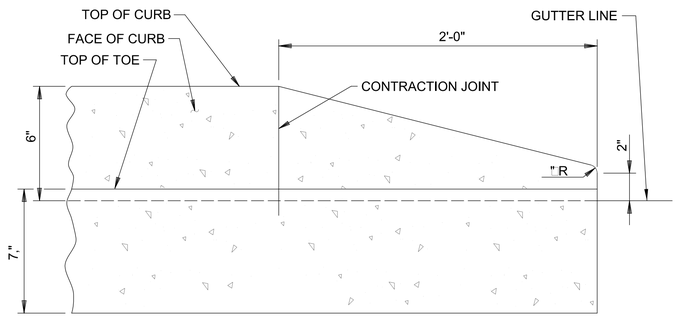

CURB TERMINAL DETAIL
NOT TO SCALE

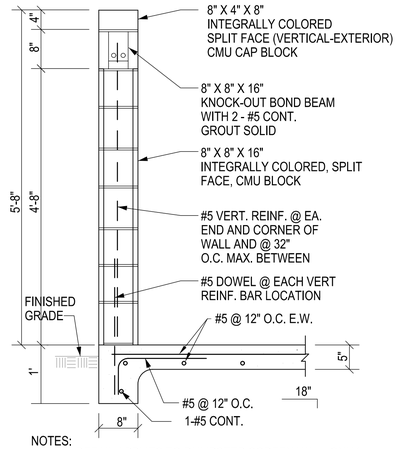

NOTES:
1. WALL DETAIL APPLIES TO DUMPSTER SCREEN WALL ONLY.

2. REFER TO MASONRY NOTES ON STRUCTURAL SHEETS FOR ADDITIONAL INFORMATION.

TYPICAL SECTION

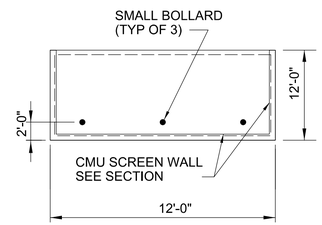

PLAN

DUMPSTER PAD DETAIL
NOT TO SCALE

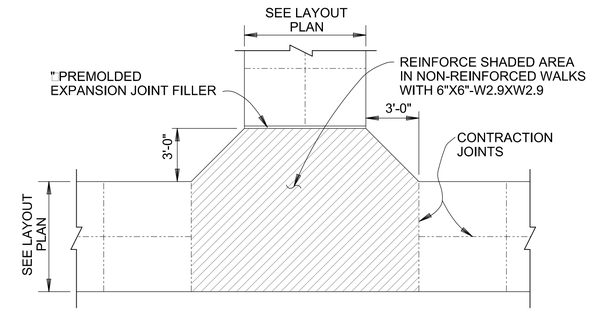

TEE INTERSECTION

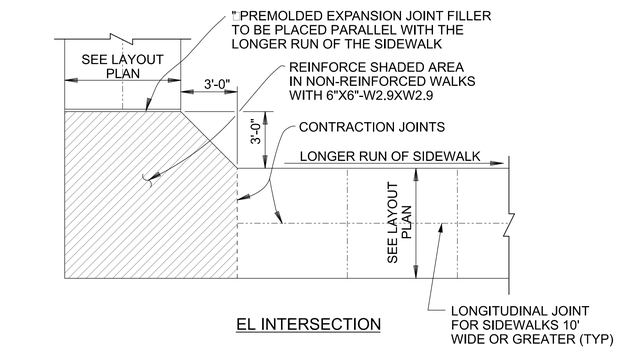

EL INTERSECTION

SIDEWALK INTERSECTION DETAILS
NOT TO SCALE

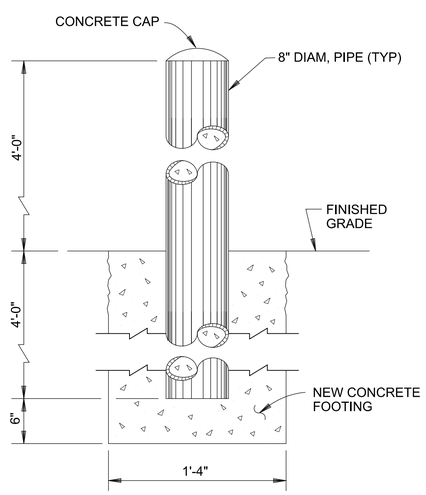

NOTE: BOLLARDS SHALL BE PAINTED REFLECTIVE YELLOW TO MATCH EXISTING BOLLARDS IN THIS PART OF THE BASE.

SMALL BOLLARD DETAIL
NOT TO SCALE

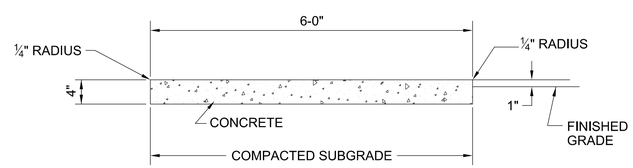

SECTION

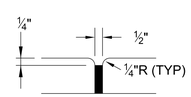

EXPANSION JOINT FILLER TO BE ½" MASTIC BITUMINOUS TYPE PREFORMED EXPANSION JOINT FILLER PER A.S.T.M. D-1751.

EXPANSION JOINT

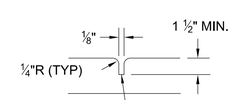

LARGE AGGREGATE IN CONTRACTION JOINT SHALL BE SEPARATED TO A FINISH DEPTH OF ¾"

CONTRACTION JOINT

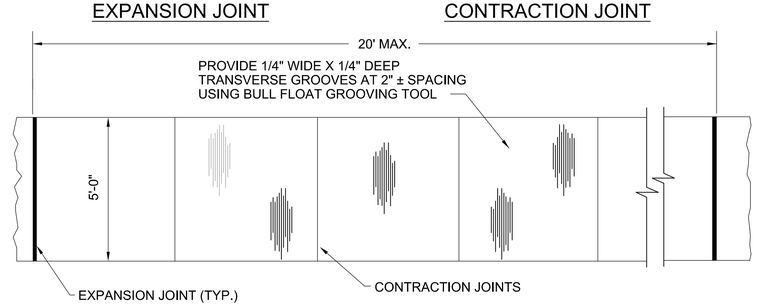

PLAN

SIDEWALKS DETAILS
NOT TO SCALE

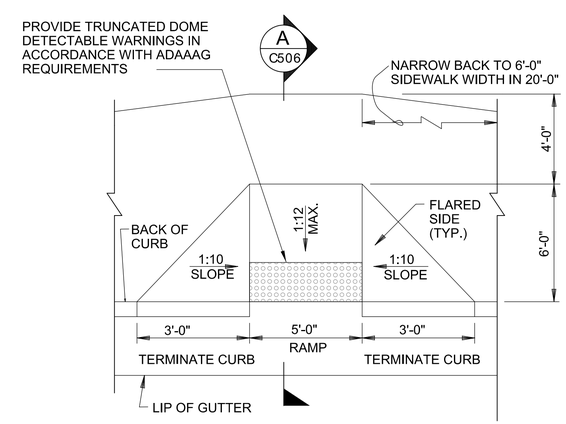

PLAN

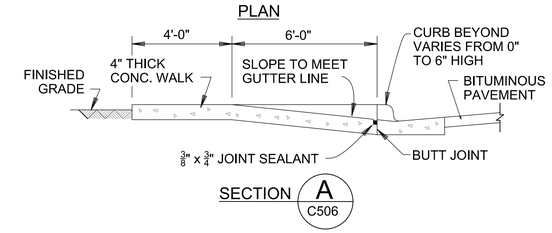

SECTION A C506

HANDICAPPED CURB - RAMP DETAIL
NOT TO SCALE

US Army Corps of Engineers®

MARK	DESCRIPTION	DATE

ISSUE DATE: 13 JULY 2020
SOLICITATION NO.:
CONTRACT NO.:
DESIGN FILE NO: 20-25-20865
FILE NAME: ftu08c-506.dgn

DESIGNED BY: H. HORTON
DRAWN BY: H. HORTON
CHECKED BY: J. WOODRUFF
SUBMITTED BY: LAUREN R. BOWEN
SIZE: ANSI D
SCALE: 1"=45'
SPEC NO.:

U.S. ARMY CORPS OF ENGINEERS

AZ
GROUND TRANSPORT EQUIPMENT BUILDING
SITE DETAILS
FT HUACHUCA

SHEET ID
C-506

RTA

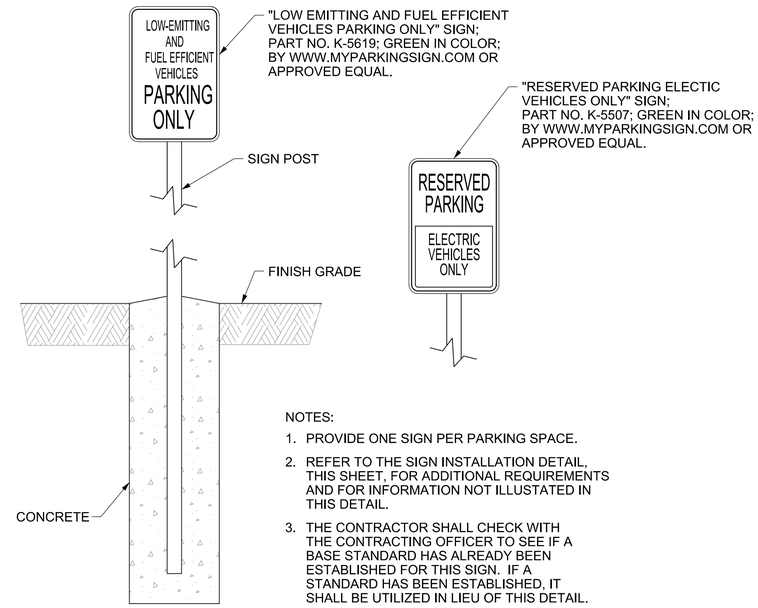

NOTES:

1. PROVIDE ONE SIGN PER PARKING SPACE.
2. REFER TO THE SIGN INSTALLATION DETAIL, THIS SHEET, FOR ADDITIONAL REQUIREMENTS AND FOR INFORMATION NOT ILLUSTATED IN THIS DETAIL.
3. THE CONTRACTOR SHALL CHECK WITH THE CONTRACTING OFFICER TO SEE IF A BASE STANDARD HAS ALREADY BEEN ESTABLISHED FOR THIS SIGN. IF A STANDARD HAS BEEN ESTABLISHED, IT SHALL BE UTILIZED IN LIEU OF THIS DETAIL.

LOW EMISSION VEHICLE PARKING SIGN

NOT TO SCALE

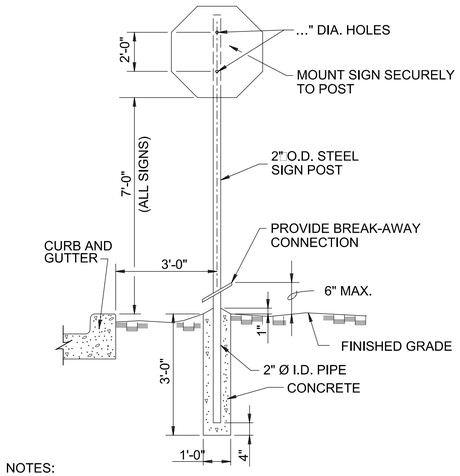

NOTES:

1. WHEN CURB AND GUTTER IS NOT PRESENT, C OF POST SHALL BE SET 7'-0" FROM EDGE OF PAVEMENT.
2. REGULATORY SIGNS AT PARKING AREAS (HANDICAPPED PARKING, ETC.) SHALL BE LOCATED 12" BEYOND THE SIDEWALK ABUTTING THE CURB.
3. ALL SIGNS SHALL CONFORM TO THE MANUAL ON UNIFORM TRAFFIC CONTROL DEVICES (DEPT. OF TRANSPORTATION).
4. SIGN POSTS SHALL HAVE BAKED ENAMEL FINISH, COLOR BROWN IN CONFORMANCE WITH BASE STANDARD.

TRAFFIC SIGN MOUNTING DETAILS

NOT TO SCALE

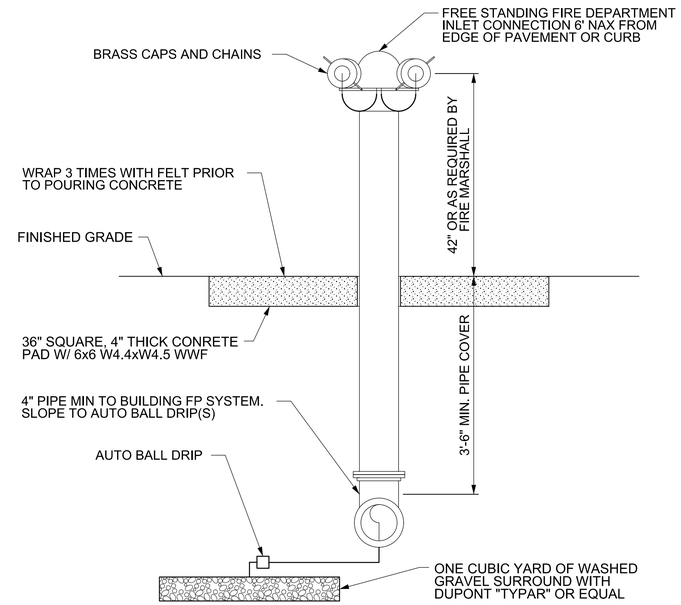

FREE STANDING FDC

NOT TO SCALE

US Army Corps of Engineers®

MARK	DESCRIPTION	DATE

DESIGNED BY: H. HORTON	ISSUE DATE: 13 JULY 2020
DRAWN BY: H. HORTON	SOLICITATION NO.:
CHECKED BY: J. WOODRUFF	CONTRACT NO.:
SUBMITTED BY: /s/ CORETTA BOWEN	DESIGN FILE NO: 20-25-2065
SIZE: ANSI D	SPEC NO: 2145	FILE NAME: ft08c-507.dgn

U.S. ARMY CORPS OF ENGINEERS

FT HUACHUCA AZ

GROUND TRANSPORT EQUIPMENT BUILDING

SITE DETAILS

SHEET ID

C-507

RTA

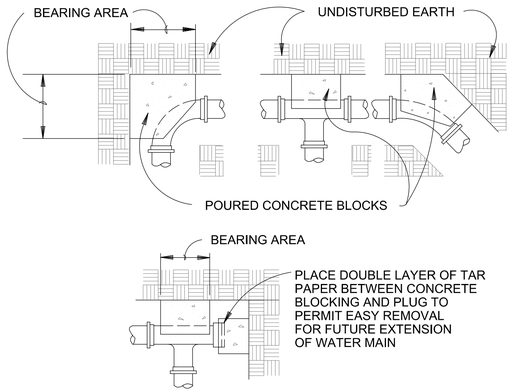

BEARING AREA OF BLOCK IN SQ. FT.					
FITTING SIZES	TEE & END	90° BEND	45° BEND	22 1/2° BEND	11 1/4° BEND
8"	6.3	8.9	4.8	2.5	1.3

THRUST BLOCK DETAILS
NOT TO SCALE

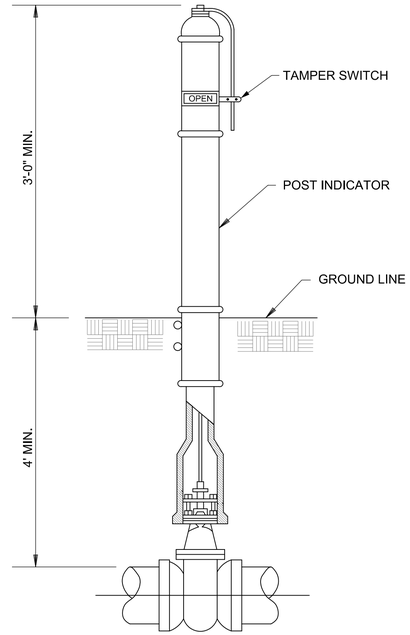

NOTE: EACH POST INDICATOR SHALL HAVE A TAMPER LOCK OF THE TYPE CURRENTLY USED BY THE BASE.

POST INDICATOR VALVE DETAIL
NOT TO SCALE

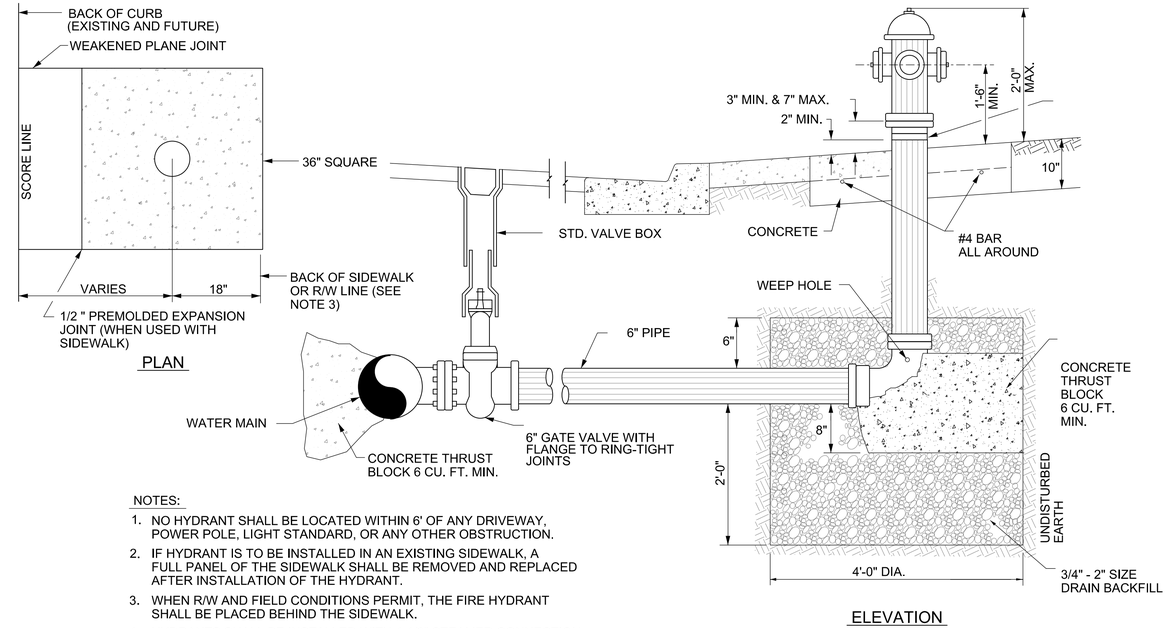

NOTES:

1. NO HYDRANT SHALL BE LOCATED WITHIN 6' OF ANY DRIVEWAY, POWER POLE, LIGHT STANDARD, OR ANY OTHER OBSTRUCTION.
2. IF HYDRANT IS TO BE INSTALLED IN AN EXISTING SIDEWALK, A FULL PANEL OF THE SIDEWALK SHALL BE REMOVED AND REPLACED AFTER INSTALLATION OF THE HYDRANT.
3. WHEN R/W AND FIELD CONDITIONS PERMIT, THE FIRE HYDRANT SHALL BE PLACED BEHIND THE SIDEWALK.
4. HYDRANTS SHALL BE INSTALLED WITH 4-1/2" STEAMER CONNECTION FACING ROADWAY.

FIRE HYDRANT DETAIL
NOT TO SCALE

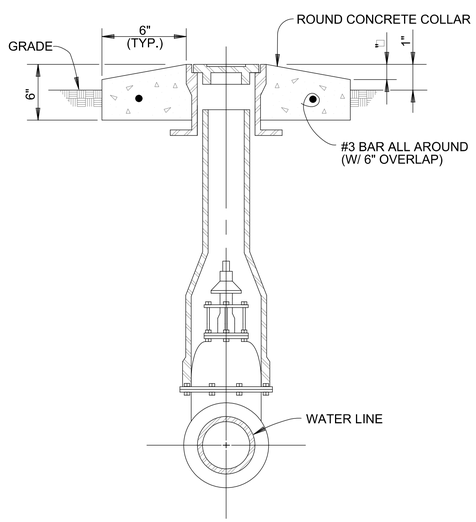

WATER VALVE DETAIL
NOT TO SCALE

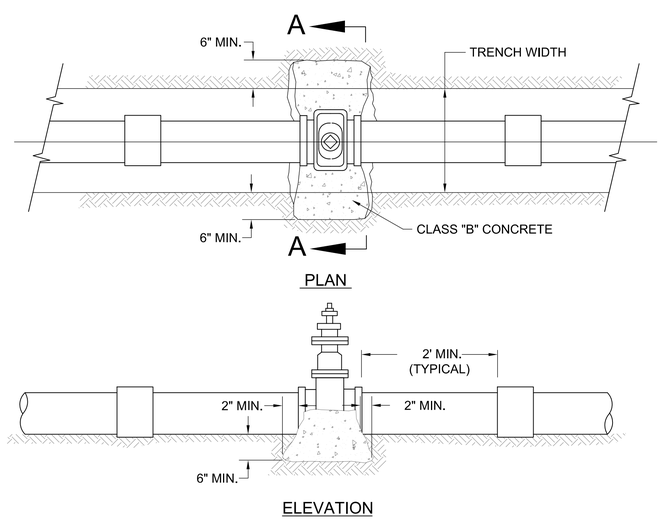

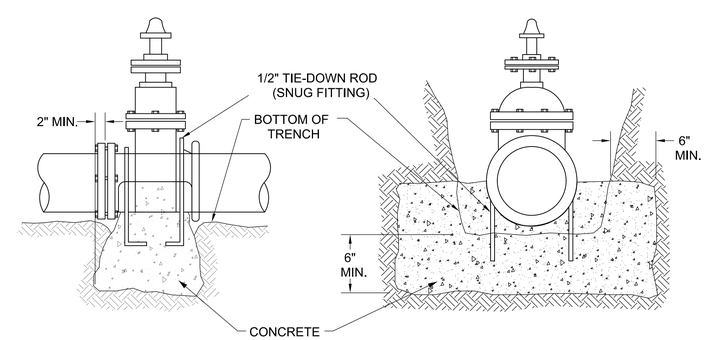

NOTES

1. THIS DETAIL COVERS WATER VALVES 4" OR LARGER.
2. ALL BURIED IRON AND FERROUR SURFACES SHALL BE WRAPPED WITH MIN. 10 MIL. (MIN.) POLYETHELENE PLASTIC WRAP.
3. TIE DOWN RODS REQUIRED FOR PIPE LARGER THAN 8". CONCRETE NOT TO BE PLACED IN CONTACT WITH PIPE.

VALVE ANCHOR DETAILS
NOT TO SCALE

US Army Corps of Engineers®

MARK	DESCRIPTION	DATE

U.S. ARMY CORPS OF ENGINEERS

DESIGNED BY: H. HORTON
DRAWN BY: H. HORTON
CHECKED BY: J. WOODRUFF
SUBMITTED BY: /s/ CORETTA BOWEN
SIZE: ANSI D
FILE NAME: ft08c-508.dgn
ISSUE DATE: 13 JULY 2020
SOLICITATION NO.:
CONTRACT NO.:
DESIGN FILE NO: F08-25-0065
SPEC NO: 2145

FT HUACHUCA AZ

GROUND TRANSPORT EQUIPMENT BUILDING

WATER LINE DETAILS

SHEET ID

C-508

RTA

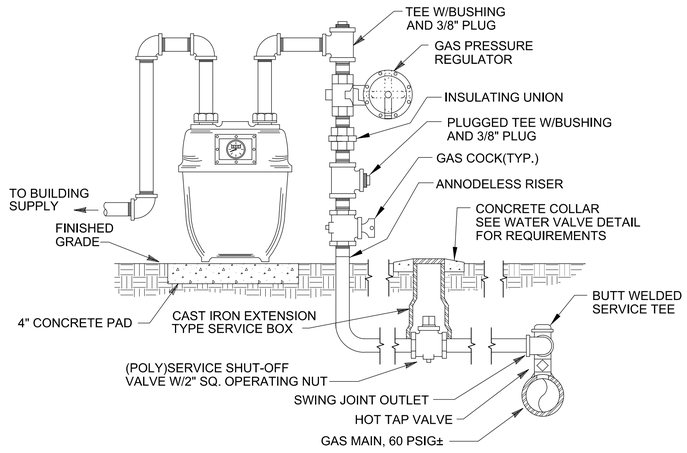

NOTE: METER AND REGULATOR SHALL BE SELECTED FOR A GAS DEMAND OF ???? CFH AT A DELIVERY PRESSURE OF ?? PSI. THE BASE GAS SYSTEM PRESSURE IS ?? PSI. METER SHALL BE CONNECTED TO THE EMCS AND BE CAPABLE OF BEING REMOTELY READ BY IT.

TYPICAL GAS SERVICE CONNECTION

NOT TO SCALE

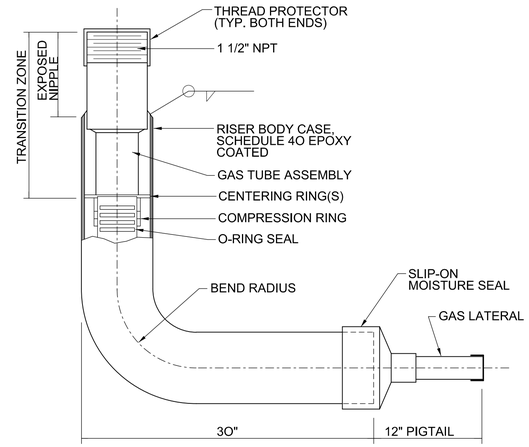

ANNODELESS RISER DETAIL

NOT TO SCALE

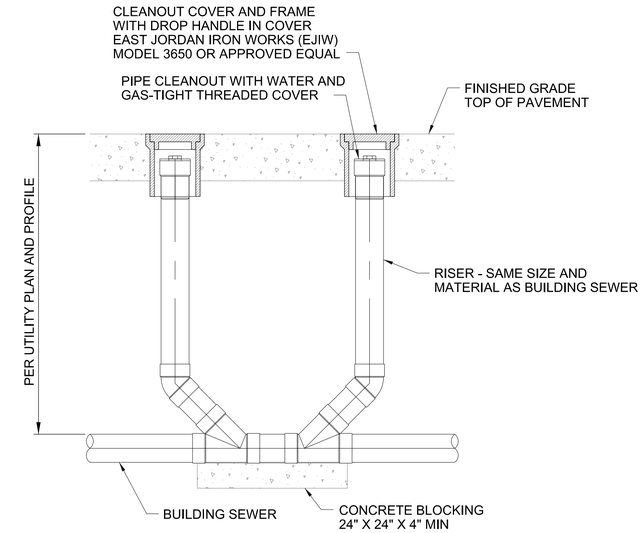

NOTE: CLEANOUT COVER AND FRAME SYSTEM SHALL BE OF IRON CASTINGS CLASSIFIED AS HEAVY DUTY AND SHALL MEET THE REQUIREMENTS OF AASHTO M306. THE WORD "SEWER" SHALL BE CAST IN THE COVER.

1 / C-509 TYP. DOUBLE CLEANOUT DETAIL

SCALE: NOT TO SCALE

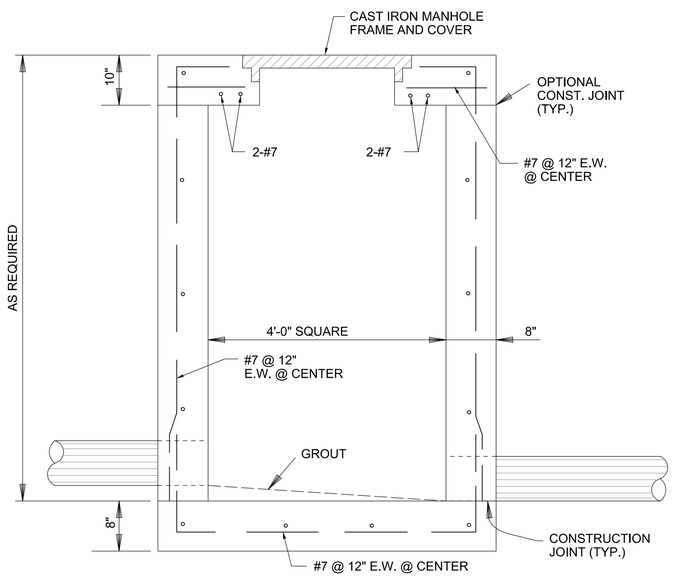

SECTION

CAST-IN-PLACE CONC. OPTION

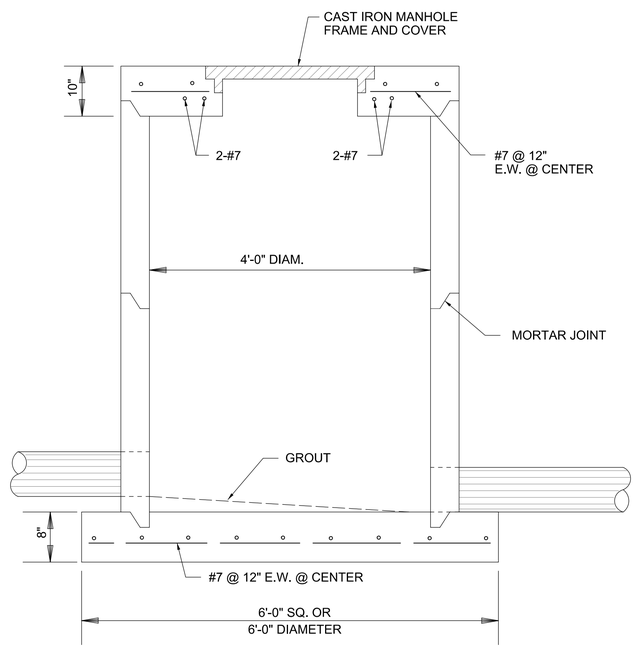

SECTION

PRECAST CONC. OPTION

NOTES

1. PRECAST CONCRETE CONES AND SECTION TO BE A.S.T.M. C-478 (LATEST REVISION) EXCEPT AS SHOWN.
2. PIPE SIZE AND ELEVATIONS AS SHOWN ON PLANS.
3. ASPHALT CAULKING DESIGNED FOR THIS PURPOSE SHALL BE USED ON ALL JOINTS.
4. AN ASPHALT WATERPROOFING COAT SHALL BE APPLIED ON EXTERIOR MANHOLE SURFACES WITHIN THE WATER TABLE.

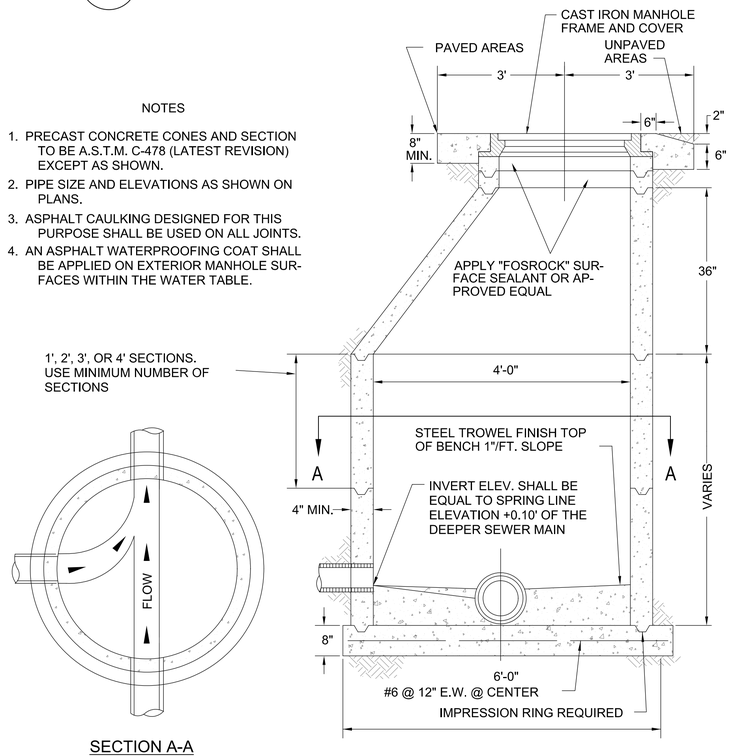

SECTION A-A

ALTERNATE PRECAST CONC. OPTION

SANITARY MANHOLE NOTES:

1. TOP SLABS MAY BE PRECAST OR CAST IN PLACE.
2. CAST-IN-PLACE CONCRETE TO HAVE MINIMUM ULTIMATE COMPRESSIVE STRENGTH OF 4000 PSI 28 DAYS.
3. ALL LAPS AND EXTENSIONS OF REINFORCING BARS SHALL BE 1" x DIAM. OF BARS MIN. EXCEPT AS OTHERWISE NOTED.
4. MANHOLE FRAME AND COVER SHALL BE RATED FOR HS-20 LOADING AND SHALL HAVE A MINIMUM CLEAR OPENING OF 30" DIAMETER.

SANITARY SEWER MANHOLE DETAILS

NOT TO SCALE

US Army Corps of Engineers®

MARK	DESCRIPTION	DATE

DESIGNED BY: H. HORTON
DRAWN BY: H. HORTON
CHECKED BY: J. WOODRUFF
SUBMITTED BY: SUZORET R. BOWEN
SIZE: ANSI D
SPEC NO.: 2145
ISSUE DATE: 13 JULY 2020
SOLICITATION NO.:
CONTRACT NO.:
DESIGN FILE NO: 262-25-2085
FILE NAME: ft08c-509.dgn

U.S. ARMY CORPS OF ENGINEERS

FT HUACHUCA AZ

GROUND TRANSPORT EQUIPMENT BUILDING

GAS SERVICE AND SANITARY SEWER DETAILS

SHEET ID

C-509

RTA

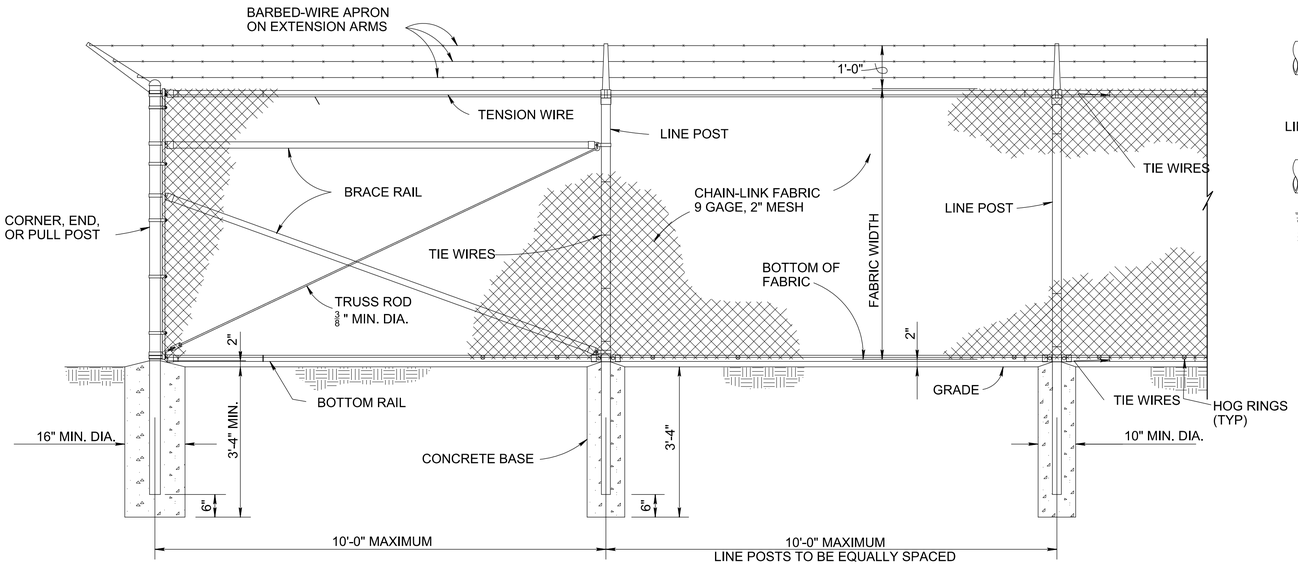

CHAIN LINK SECUTITY FENCE DETAIL

N.T.S.

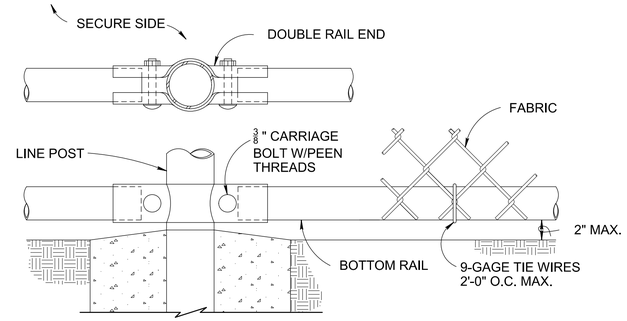

BOTTOM RAIL DETAILS

N.T.S.

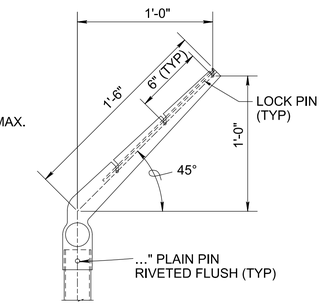

LINE POST

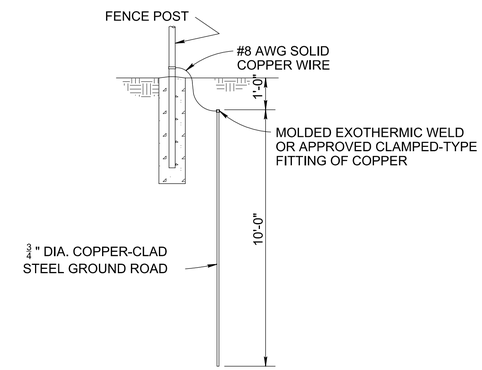

GROUNDING DETAIL

N.T.S.

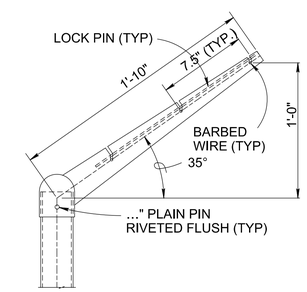

CORNER POST

EXTENSION ARM DETAILS

N.T.S.

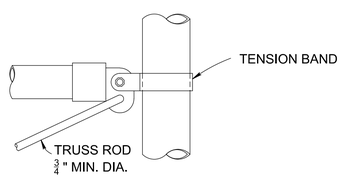

ROUND POST

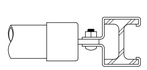

H-BEAM

BRACE RAIL CLAMP DETAILS

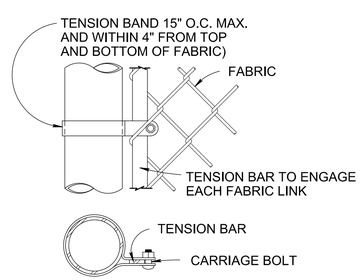

END OR GATE POST DETAIL

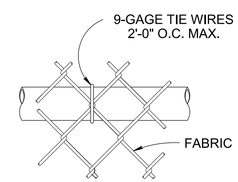

BRACE RAIL ATTACHMENT

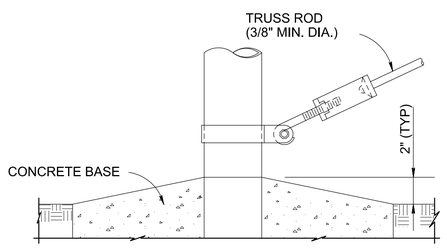

TRUSS ROD AND BAND

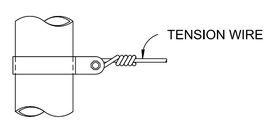

TENSION BAND DETAIL

FASTENING DETAILS

N.T.S.

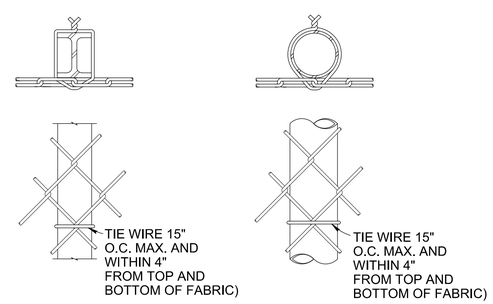

H-BEAM ROUND POST

LINE POST ATTACHMENTS

STEEL POST SCHEDULE

USE AND SECTION	MINIMUM OUTSIDE DIMENSIONS (NOMINAL)		
	FABRIC LESS THAN 72"	FABRIC 72" TO 96"	FABRIC OVER 96"
CORNER, END & PULL POSTS			
TUBULAR - ROUND	2.375" O.D.	2.875" O.D.	4.00" O.D.
TUBLAR - SQUARE	2.00" SQ.	2.50" SQ.	3.00" SQ.
C-SECTION (ROLL-FORMED)	3.50" x 3.50"	3.50" x 3.50"	———
LINE POSTS			
TUBULAR - ROUND	1.90" O.D.	2.375" O.D.	2.875" O.D.
H-SECTION	2.25" x 1.70"	2.25" x 1.70"	2.25" x 1.70"
C-SECTION (ROLL-FORMED)	1.875" x 1.625"	2.25" x 1.70"	———
BOTTOM & BRACE RAILS			
TUBULAR - ROUND	1.66" O.D.		
TUBULAR - SQUARE	1.50" O.D.		
H-SECTION	1.625" x 1.50"		
C-SECTION (ROLL-FORMED)	1.625" x 1.25"		

NOTES:

1. DETAILS SHOWN ARE TO CLARIFY REQUIREMENTS AND ARE NOT INTENDED TO LIMIT OTHER TYPES OF FENCE SECTIONS AND METHODS OF INSTALLATION.
2. WIRE TIES, RAILS, POSTS, AND BRACES SHALL BE CONSTRUCTED ON THE SECURE SIDE OF THE FENCE ALIGNMENT. CHAIN-LINK FABRIC SHALL BE PLACED ON THE OPPOSITE SIDE OF THE SECURE AREA.
3. C-SECTION POSTS SHALL BE INSTALLED SO THAT THE VOID INSIDE THE POST IS COMPLETELY FILLED WITH CONCRETE UP TO THE TOP OF THE FOUNDATION.
4. BOTTOM RAIL SHALL BE ATTACHED TO DOUBLE RAIL ENDS USING (3/8 ") CARRIAGE BOLTS AS SHOWN.

US Army Corps of Engineers®

MARK	DESCRIPTION	DATE

ISSUE DATE: 13 JULY 2020
SOLICITATION NO.:
CONTRACT NO.:
DESIGN FILE NO: 20245-20065
FILE NAME: ft08c-510.dgn

DESIGNED BY: H. HORTON
DRAWN BY: H. HORTON
CHECKED BY: J. WOODRUFF
SUBMITTED BY: M. CORETTI & BOWEN
SIZE: ANSI D
SPEC NO: 2145

U.S. ARMY CORPS OF ENGINEERS

FT HUACHUCA AZ

GROUND TRANSPORT EQUIPMENT BUILDING

CHAIN LINK FENCE DETAILS

SHEET ID

C-510

RTA

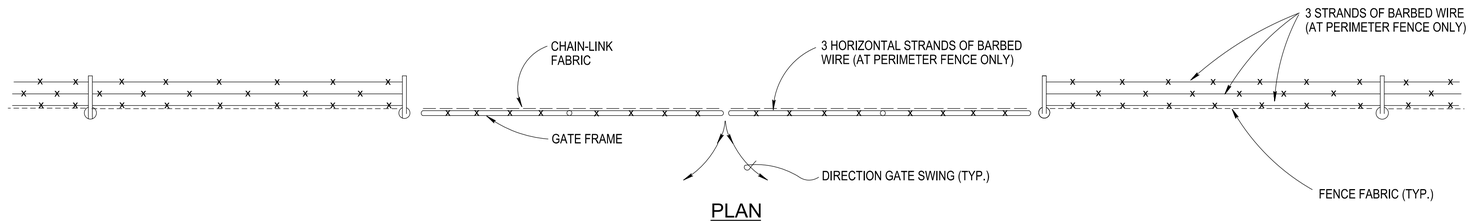

PLAN

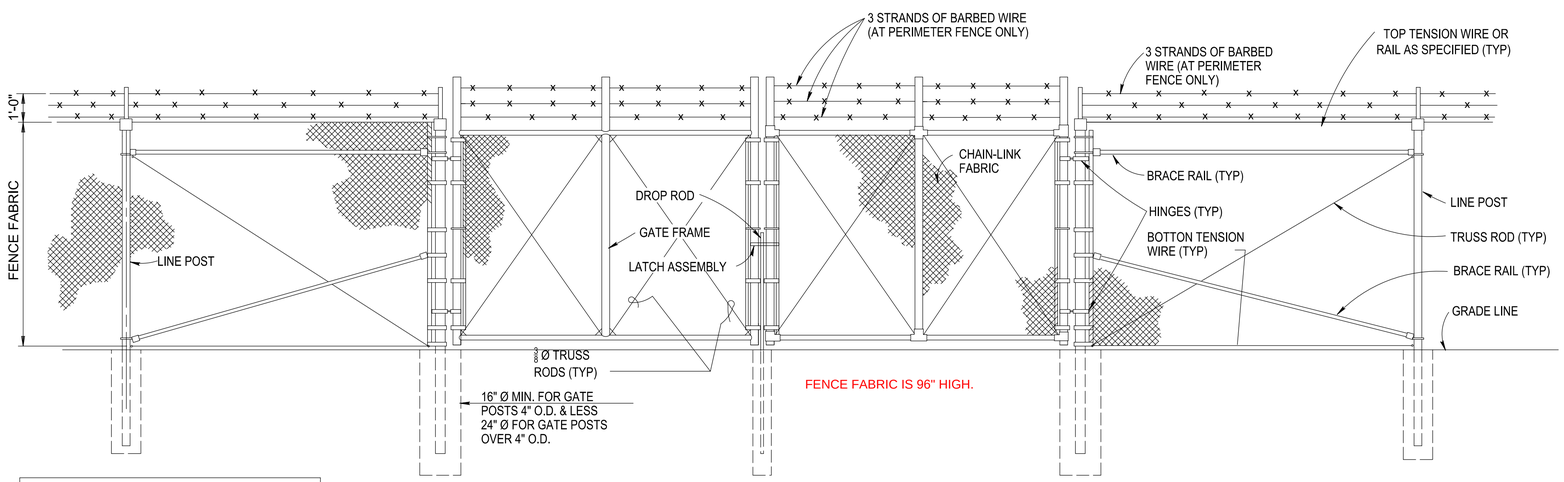

ELEVATION

GATE POST SCHEDULE	
GATE LEAF WIDTH (NOMINAL)	OUTSIDE DIMENSION (NOMINAL)
6' OR LESS	2.875" OD 2.5" SQ
MORE THAN 6' TO 13'	4.0" OD
MORE THAN 13' TO 18'	6.625" OD
MORE THAN 18'	8.625" OD

DOUBLE SWING GATE

N.T.S.

NOTES:

1. SWING GATES SHALL BE CONSTRUCTED WITH DROP RODS, PADLOCKS, LATER ASSEMBLY AND GATE KEEPERS EXCEPT AS NOTED.

2. ALL GATE FRAMES SHALL BE A MINIMUM 1.90" NOMINAL (ROUND) OR 2.00" NOMINAL (SQUARE). GATE FRAMES SHALL BE OF WELDED CONSTRUCTION OR SHALL BE ASSEMBLED USING HEAVY FITTINGS. AT CONSTRUCTOR'S OPTION A WELDED HORIZONTAL MAY BE USED IN LIEU OF TRUSS RODS TO BRACE ALL WELDED GATE FRAMES. THE CONTRACTOR SHALL BE RESPONSIBLE FOR THE PROPER RIGID CONSTRUCTION OF ALL GATES SUPPLIED.

3. SEE SHEET ES102 FOR THE REQUIREMENTS FOR GROUNDING THE GATES.

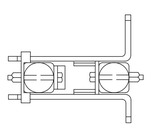

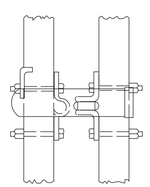

LATCH ASSEMBLY

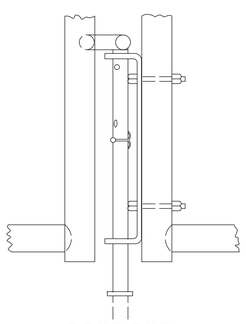

DROP ROD ASSEMBLY

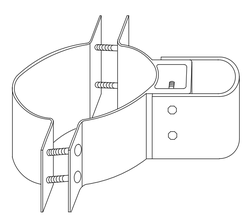

STANDARD HINGE

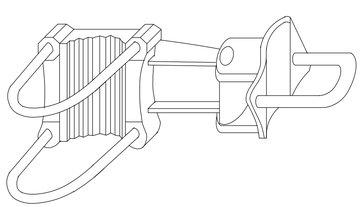

OFFSET HINGE

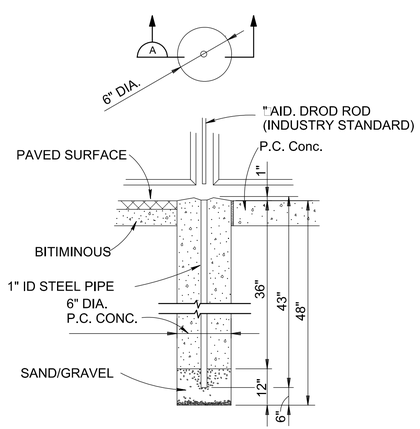

DROP ROD FOUNDATION

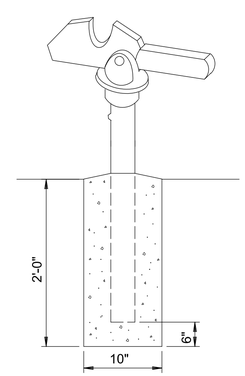

GATE KEEPER (TO HOLD GATE OPEN)

SWING GATE DETAILS

SCALE: NOT TO SCALE

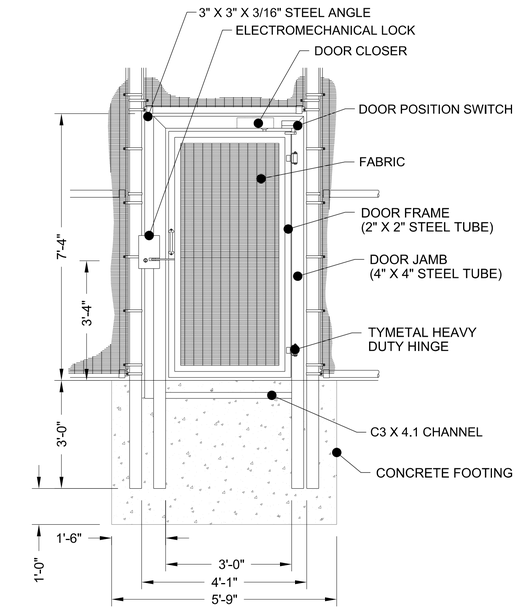

GATE ELEVATION

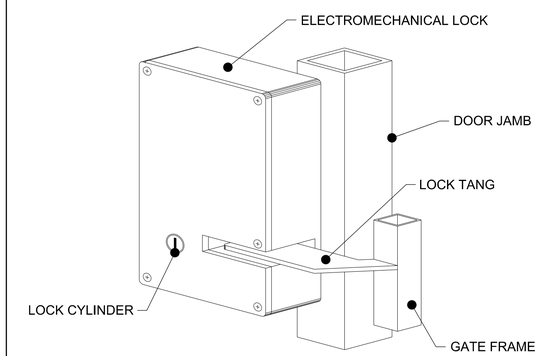

ELECTROMECHANICAL LOCK

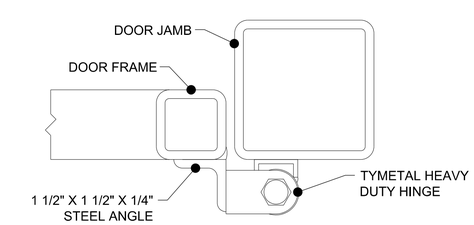

HINGE DETAIL

NOTE: PEDESTRIAN GATE SHALL BE A TYMETAL MODEL 2150 SWING GATE WITH ELECTRO-MECHANICAL LOCK OR APPROVED EQUAL.

PEDESTRIAN SWING GATE DETAILS

SCALE: NOT TO SCALE

US Army Corps of Engineers®

MARK	DESCRIPTION	DATE

DESIGNED BY: H. HORTON
DRAWN BY: H. HORTON
CHECKED BY: J. WOODRUFF
SUBMITTED BY: R. BOWEN
SIZE: ANSI D
FSCM NO: 21450
ISSUE DATE: 13 JULY 2020
SOLICITATION NO.:
CONTRACT NO.:
DESIGN FILE NO: 2020-S-0065
FILE NAME: ft08c-511.dgn

U.S. ARMY CORPS OF ENGINEERS

FT HUACHUCA AZ

GROUND TRANSPORT EQUIPMENT BUILDING

CHAIN LINK FENCE GATE DETAILS

SHEET ID

C-511

AMENDMENT 3

RTA

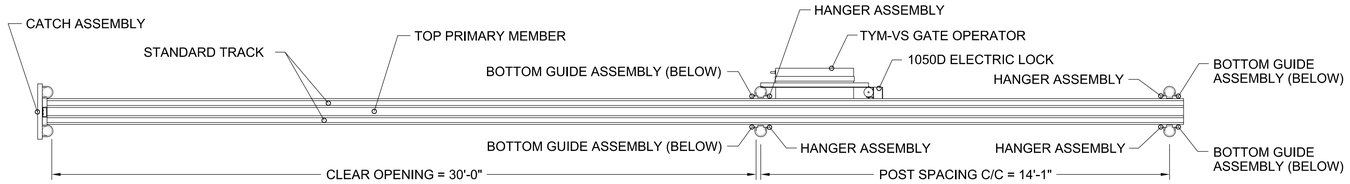

PLAN VIEW
SCALE: NOT TO SCALE

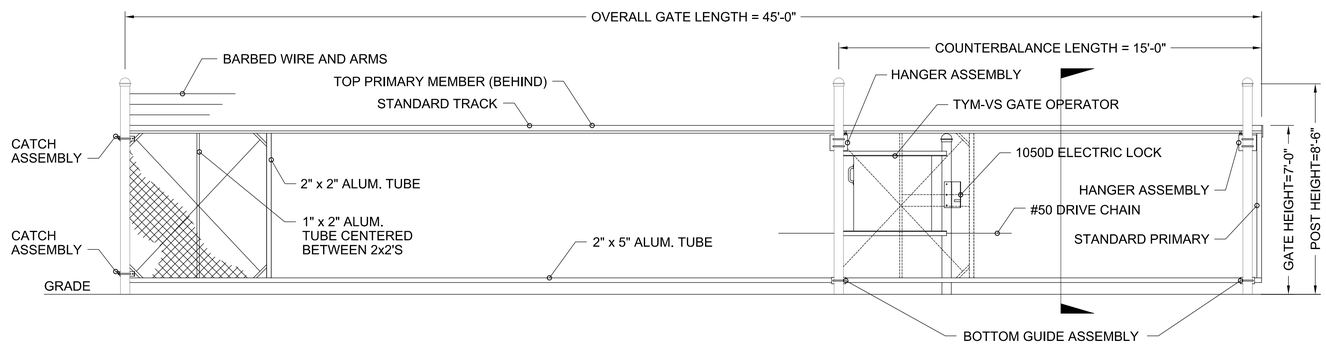

ELEVATION
SCALE: NOT TO SCALE

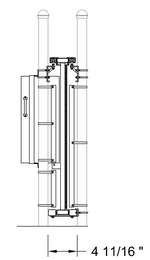

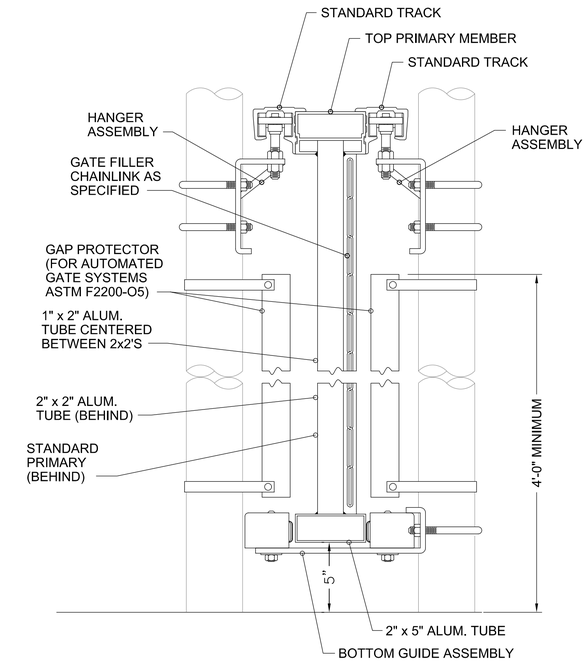

SECTION
SCALE: NOT TO SCALE

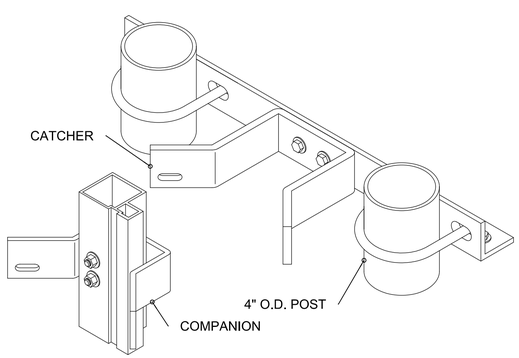

CATCH ASSEMBLY
SCALE: NOT TO SCALE

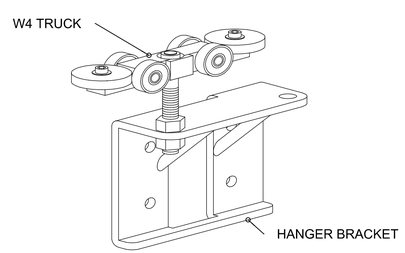

GATE HANGER ASSEMBLY
SCALE: NOT TO SCALE

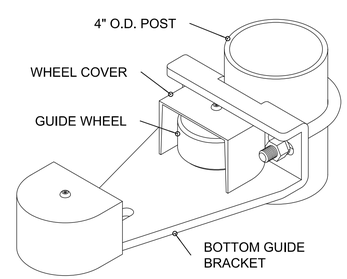

BOTTOM GUIDE
SCALE: NOT TO SCALE

NOTES:

1. THIS PROJECT INCLUDES TWO MOTOR OPERATED, ACCESS CONTROL GATES, EACH WITH ITS OWN POWER OPERATOR, AS SHOWN ON THIS DRAWING. SEE SHEET CS105 FOR GATE LOCATIONS AND THE ELECTRICAL DRAWINGS FOR THE ELECTRICAL REQUIREMENTS FOR EACH GATE.

2. EACH MOTOR OPERATED GATE SHALL BE A COMPLETE, INTEGRATED, SECURITY GATE SYSTEM, INCLULDING BUT NOT LIMITED TO THE GATE PANEL, GATE FILLER, BARBED WIRE AND OUTRIGGERS, GATE OPERATOR, SLIDING GATE LOCK, CATCHER ASSEMBLY, AND ALL ASSOCIATED HARDWARE REQUIRED TO INSTALL A COMPLETE GATE SYSTEM. EACH GATE SHALL BE A TYMETAL STRUCTURAL CANTILEVER SLIDE GATE OR APPROVED EQUAL. EACH GATE OPERATOR SHALL BE A TYMETAL MODEL TYM-VS VARIABLE SPEED OPERATOR OR APPROVED EQUAL.

3. AN ELECTRICALLY ACTIVATED SAFETY SENSING EDGE SHALL BE INSTALLED ON BOTH THE LEADING AND TRAILING EDGES OF THE GATE SO THAT WHEN TOUCHED THE GATE OPERATOR WILL BE IMMEDIATELY SIGNALLED TO REVERSE IN EITHER THE CLOSING OR OPENING CYCLES. THE SAFETY EDGES SHALL EXTEND THE FULL HEIGHT OF THE GATE FRAME.

4. SAFETY SIGNS (4 TOTAL) SHALL BE INSTALLED ON EACH SIDE OF THE GATE NEAR EACH END. SIGNS SHALL BE ALL METAL WITH BAKED ON GRAPHICS. SIGNS SHALL READ AS FOLLOWS:
   LINE 1: "CAUTION"
   LINE 2: "STAND CLEAR"
   LINE 3: "AUTOMATIC GATE"

5. THE GATE, GATE OPERATOR, AND ALL OTHER GATE COMPONENTS SHALL BE INSTALLED IN ACCORDANCE WITH THE RESPECTIVE MANUFACTURER'S RECOMMENDATIONS.

US Army Corps of Engineers®

MARK	DESCRIPTION	DATE

DESIGNED BY: H. HORTON
DRAWN BY: H. HORTON
CHECKED BY: J. WOODRUFF
SUBMITTED BY: /s/ CORETTA BOWEN
SIZE: ANSI D
SPEC NO: 2145
ISSUE DATE: 13 JULY 2020
SOLICITATION NO.:
CONTRACT NO.:
DESIGN FILE NO: F20-25-2065
FILE NAME: ft08c-513.dgn

U.S. ARMY CORPS OF ENGINEERS

FT HUACHUCA AZ

GROUND TRANSPORT EQUIPMENT BUILDING

MOTOR OPERATED GATE DETAILS

SHEET ID
C-512

RTA

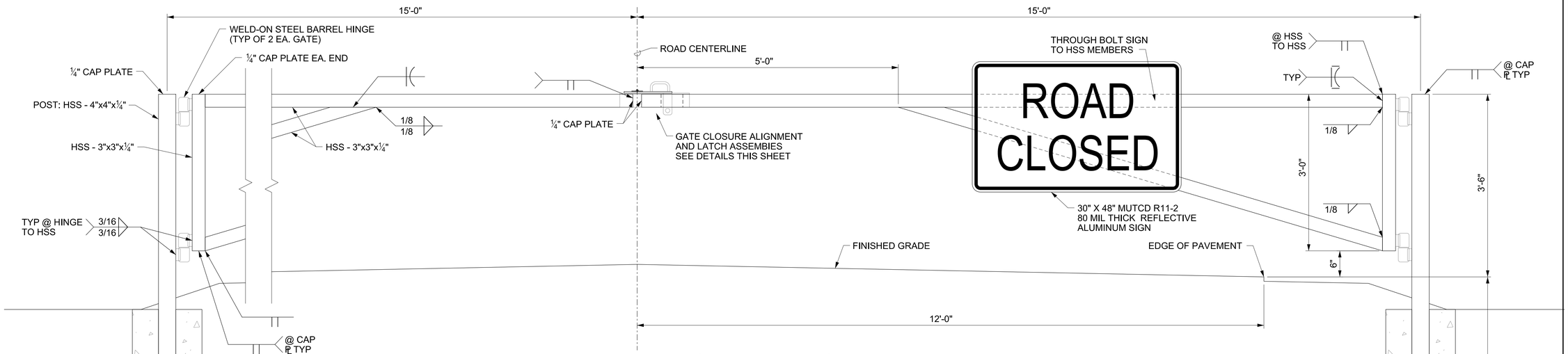

GATE ELEVATION

SCALE: NOT TO SCALE

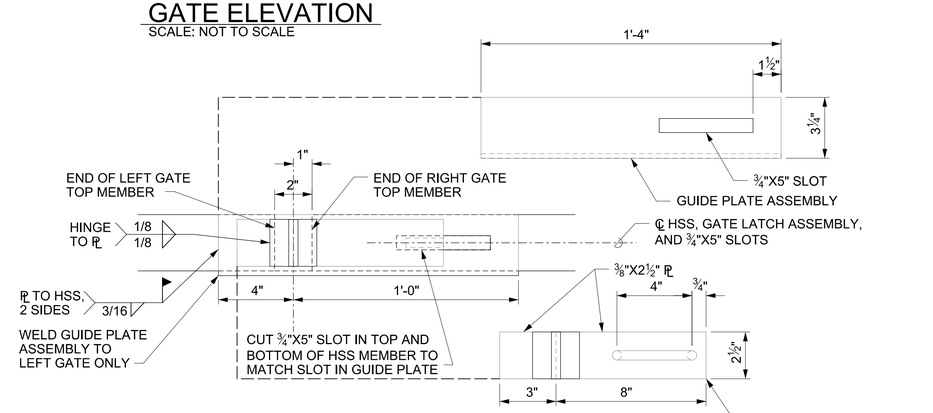

PLAN

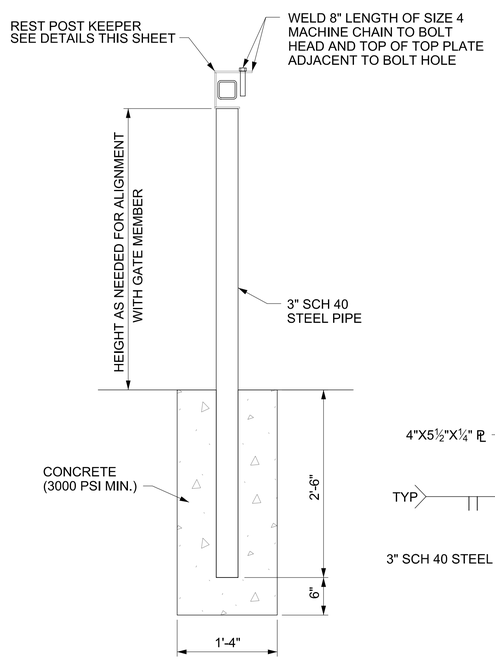

GATE REST POST ELEVATION

SCALE: NOT TO SCALE

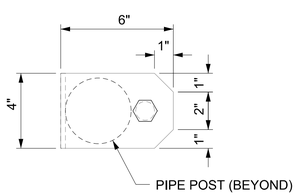

PLAN

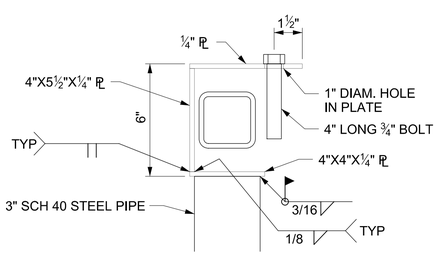

ELEVATION

REST POST KEEPER DETAIL

SCALE: NOT TO SCALE

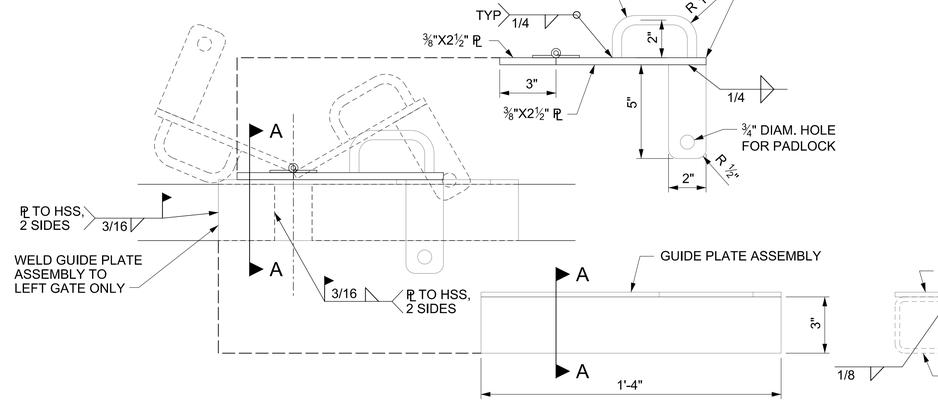

ELEVATION

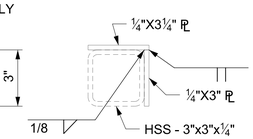

SECTION A-A

GATE GUIDE PLATE AND LATCH DETAIL

SCALE: NOT TO SCALE

GATE NOTES

1. PROVIDE A REST POST FOR EACH GATE LEAF. LOCATE REST POSTS 4' BEYOND EDGE OF PAVEMENT AND 12'± FROM GATE POSTS.

2. GATE LEAF HINGES SHALL BE 7" LONG BY 2.5" DIAMETER BARREL HINGES WITH ZERK TYPE GREASE FITTING. HINGE SHALL HAVE 1.25' DIAMETER STAINLESS STEEL HINGE PIN RIDING ON 1" DIAMETER BALL BEARING. HINGE SHALL HAVE 2.75" BY 2" WELD-ON PLATE FOR ATTACHMENT OF GATE LEAF TO POST.

3. GATE LATCH HINGE SHALL BE A 2" BY 2" WELD-ON BUTT HINGE WITH A 0.25" DIAMETER HINGE PIN MINIMUM.

4. GATE AND ITS COMPONENTS SHALL BE SHOP PAINTED TO THE MAXIMUM EXTENT FEASIBLE AND TOUCH-UP FIELD PAINTED AS NECESSARY. PAINT SYSTEM SHALL BE THREE PART EPOXY SELECTED FOR HARSH DESERT ENVIRONMENT. TOP COLOR SHALL BE AS DIRECTED BY BASE CIVIL ENGINEER'S OFFICE THROUGH THE CONTRACTING OFFICER. PAINT APPLICATION AND PREPARATION OF SURFACES SHALL BE IN ACCORDANCE WITH SSPC-PA 1.

US Army Corps of Engineers®

MARK	DESCRIPTION	DATE

ISSUE DATE: 13 JULY 2020
SOLICITATION NO.:
CONTRACT NO.:
DESIGN FILE NO: 202-25-2065
FILE NAME: ft08c-513.dgn

DESIGNED BY: H. HORTON
DRAWN BY: H. HORTON
CHECKED BY: J. WOODRUFF
SUBMITTED BY: SUZANNE R. BOWEN
SIZE: ANSI D
SPEC NO: 2145

U.S. ARMY CORPS OF ENGINEERS

FT HUACHUCA AZ

GROUND TRANSPORT EQUIPMENT BUILDING

ROAD CLOSURE GATE DETAILS

SHEET ID

C-513

RTA

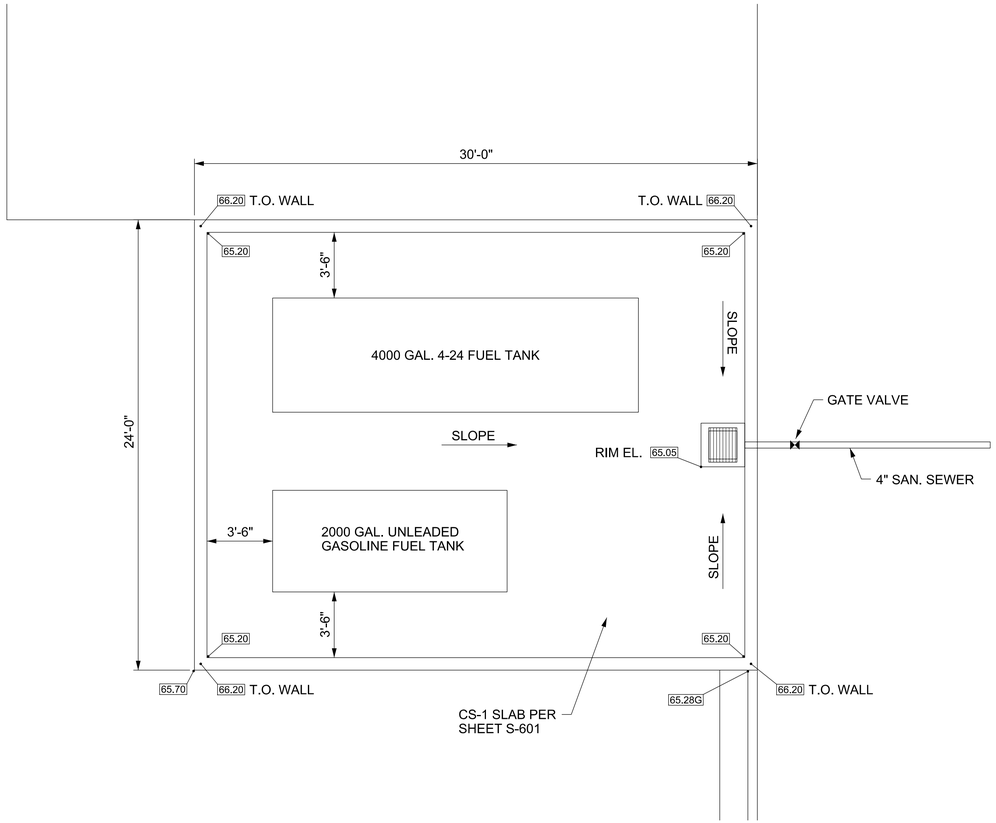

PLAN

SCALE: 1"=4'

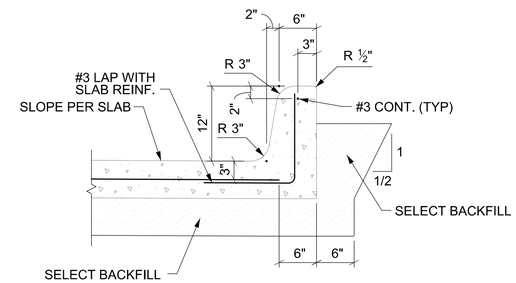

FUEL TANK CONTAINMENT CURB

SCALE: 1"=1'

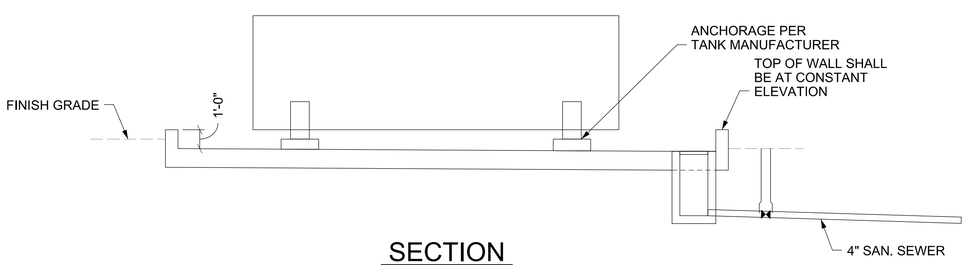

SECTION

SCALE: 1"=4'

FUEL TANK CONTAINMENT DETAILS

SCALE: 1"=4'

1"=1' 0' 0.5 1' 2' 3'

1"=4' 0' 2 4' 8' 12'

US Army Corps of Engineers®

MARK	DESCRIPTION	DATE

U.S. ARMY CORPS OF ENGINEERS

DESIGNED BY: H. HORTON
DRAWN BY: H. HORTON
CHECKED BY: J. WOODRUFF
SUBMITTED BY: /s/ CORETTA BOWEN
SIZE: ANSI D
SPEC NO: 2145

ISSUE DATE: 13 JULY 2020
SOLICITATION NO.:
CONTRACT NO.:
DESIGN FILE NO: 20-45-0865
FILE NAME: ft08c-502

FT HUACHUCA AZ

GROUND TRANSPORT EQUIPMENT BUILDING

FUEL TANK CONTAINMENT

SHEET ID

C-514

RTA

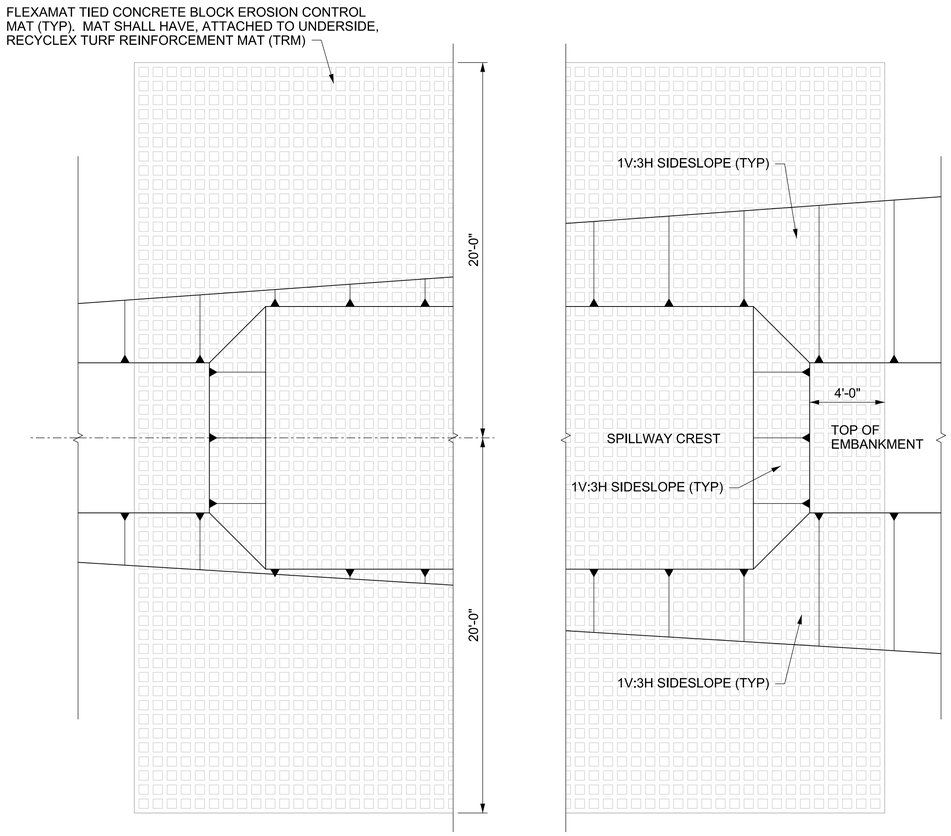

PLAN - POND SPILLWAYS

SCALE: 1"=4'

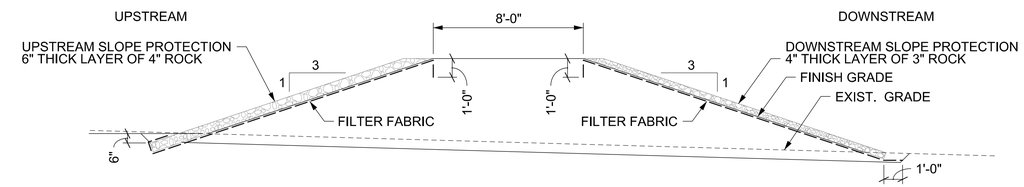

B SECTION - POND EMBANKMENT

CG104

SCALE: 1"=4'

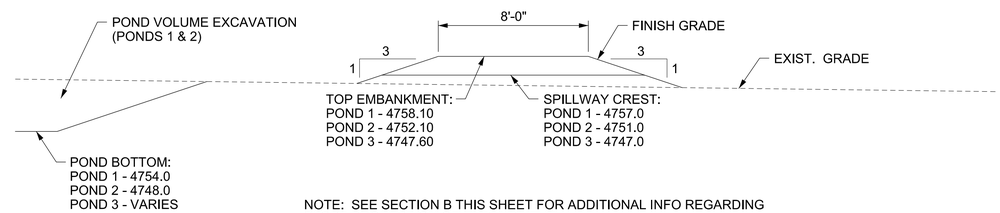

NOTE: SEE SECTION B THIS SHEET FOR ADDITIONAL INFO REGARDING SLOPE PROTECTION OF EMBANKMENT.

SECTION - POND EMBANKMENT AT SPILLWAYS

SCALE: 1"=4'

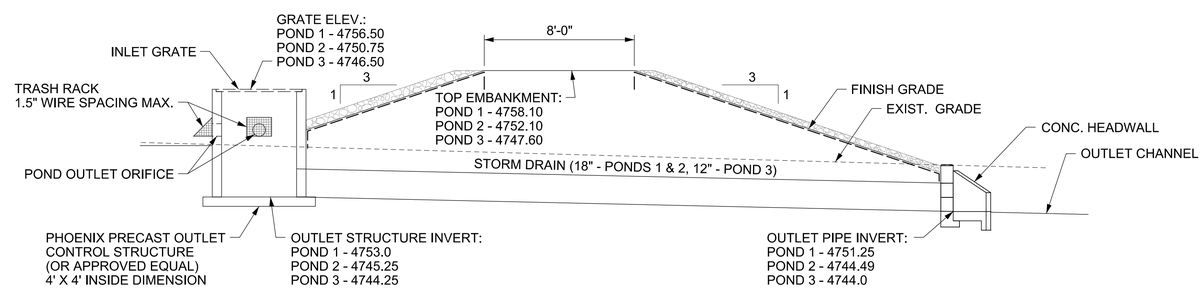

OUTLET STRUCTURE ORIFICE SIZE AND LOCATIONS:
POND 1 - FOUR(4) X 12" DIAM. LOCATED 2 EA. FRONT FACE, 1 EA. SIDE FACE. INV. EL. 4754.25 ALL ORIFICES.
POND 2 - ONE(1) X 10" DIAM. LOCATED FRONT FACE, INV. EL. 4748.25; TWO(2) X 8" DIAM. LOCATED 1 EA. SIDE FACE, INV. EL. 4749.25.
POND 3 - TWO(2) X 9" DIAM LOCATED FRONT FACE. INV. EL. 4745.00 ALL ORIFICES.

NOTE: SEE SECTION B THIS SHEET FOR ADDITIONAL INFO REGARDING SLOPE PROTECTION OF EMBANKMENT.

SECTION - POND EMBANKMENT AT OUTLET

SCALE: 1"=4'

1"=4' 0' 2 4' 8' 12'

US Army Corps of Engineers®

MARK	DESCRIPTION	DATE

U.S. ARMY CORPS OF ENGINEERS

DESIGNED BY: H. HORTON
DRAWN BY: H. HORTON
CHECKED BY: J. WOODRUFF
SUBMITTED BY: M. CORETTI & BOWEN
SIZE: ANSI D
ISSUE DATE: 13 JULY 2020
SOLICITATION NO.:
CONTRACT NO.:
DESIGN FILE NO: 62E25-20865
FILE NAME: ft08c-502
SPEC NO: 2145

FT HUACHUCA

AZ

GROUND TRANSPORT EQUIPMENT BUILDING

DETENTION POND DETAILS

SHEET ID

C-515

RTA

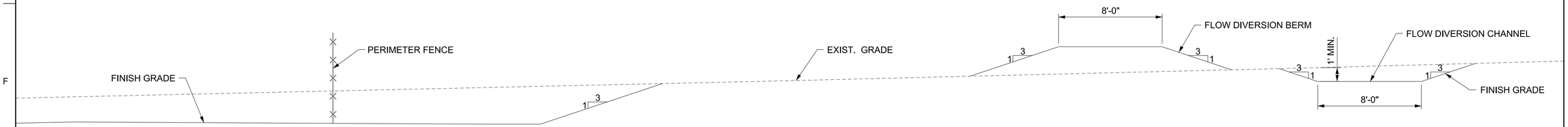

B CG102 SECTION
SCALE: NOT TO SCALE

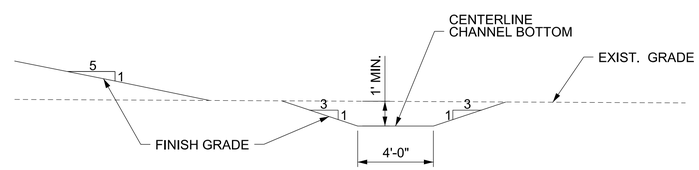

C CG103 SECTION
SCALE: NOT TO SCALE

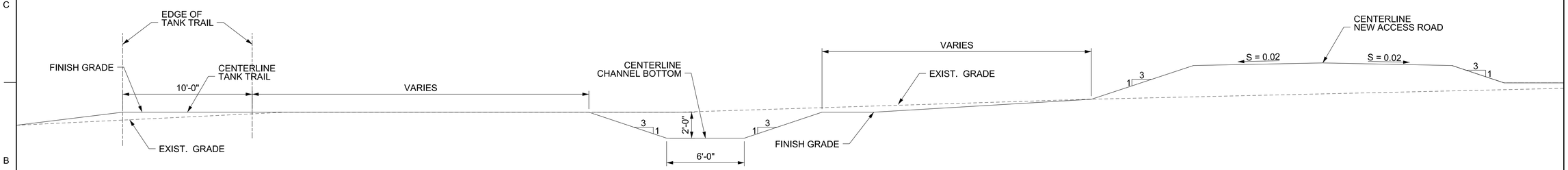

D CG104 SECTION
SCALE: NOT TO SCALE

1"=4' 0' 2 4' 8' 12'

US Army Corps of Engineers®

MARK	DESCRIPTION	DATE

U.S. ARMY CORPS OF ENGINEERS

DESIGNED BY: H. HORTON
DRAWN BY: H. HORTON
CHECKED BY: J. WOODRUFF
SUBMITTED BY: /s/ CORET R. BROWEN
SIZE: ANSI D
FSC NO: 2145

ISSUE DATE: 13 JULY 2020
SOLICITATION NO.:
CONTRACT NO.:
DESIGN FILE NO: 2020-25-0065
FILE NAME: ft08c-502

FT HUACHUCA AZ

GROUND TRANSPORT EQUIPMENT BUILDING

GRADING DETAILS

SHEET ID

C-516

RTA

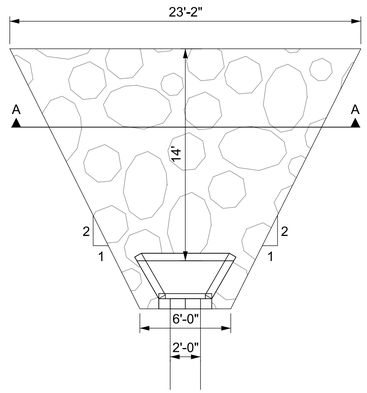

SECTION A-A

NOTE
1. SEE RIP RAP DETAIL THIS SHEET.

B 24" STORM DRAIN OUTLET RIPRAP DETAIL

SCALE: 1"=5'

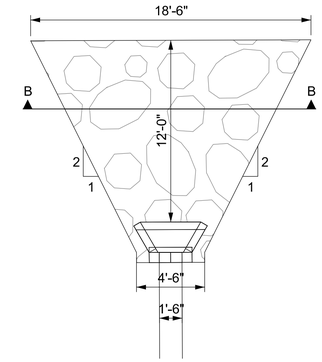

SECTION B-B

NOTE
1. SEE RIP RAP DETAIL THIS SHEET.

C 18" STORM DRAIN OUTLET RIPRAP DETAIL

SCALE: 1"=5'

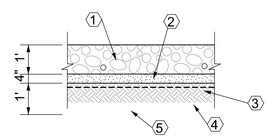

NOTE: SEE FILTER FABRIC TIE-BACK DETAIL, THIS SHEET FOR USE ALONG EDGE OF RIPRAP.

RIPRAP DETAIL

NOT TO SCALE

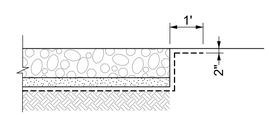

FILTER FABRIC TIE-BACK DETAIL

NOT TO SCALE

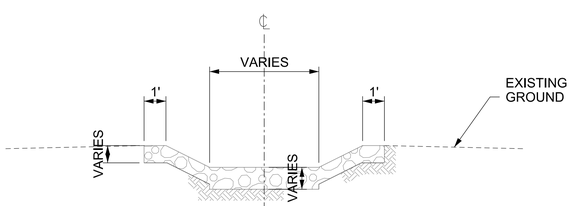

NOTE
1. SEE RIP RAP DETAIL THIS SHEET.
2. SEE GRADING PLANS FOR CHANNEL DIMENSION INFORMATION.

D RIPRAP CHANNEL DETAIL (TYP.)

NOT TO SCALE

KEYED NOTES

1. PLACE RIPRAP IN ACCORDANCE WITH GRADATION AND REQUIREMENTS IN THE DRAWINGS AND SPECIFICATIONS.
2. PLACE BEDDING MATERIAL IN ACCORDANCE WITH THE GRADATION REQUIREMENTS IN THE SPECIFICATIONS.
3. INSTALL FILTER FABRIC IN ACCORDANCE WITH THE REQUIREMENTS IN THE SPECIFICATIONS.
4. SUBGRADE COMPACTED TO 95% MAX. DRY DENSITY IN ACCORDANCE WITH THE REQUIREMENTS IN THE SPECIFICATIONS.
5. FILL AND COMPACT SOIL WITHIN ALL EROSION RILLS WITHIN THE FOOTPRINT OF THE PROPOSED RIPRAP. SOIL USED AND PLACEMENT SHALL BE IN ACCORDANCE WITH THE REQUIREMENTS IN THE SPECIFICATIONS.

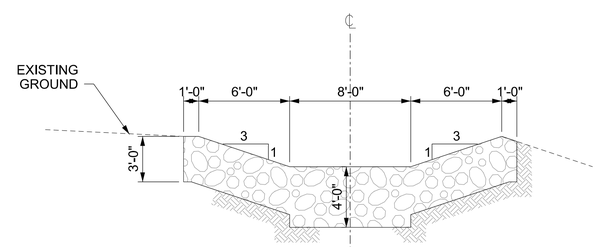

NOTE
1. SEE RIP RAP DETAIL THIS SHEET.

A CG103 DIVERSION CHANNEL OUTLET

NOT TO SCALE

1"=5' 0' 2.5' 5' 10' 15'

US Army Corps of Engineers®

MARK	DESCRIPTION	DATE

DESIGNED BY: H. HORTON	ISSUE DATE: 13 JULY 2020
DRAWN BY: H. HORTON	SOLICITATION NO.:
CHECKED BY: J. WOODRUFF	CONTRACT NO.:
SUBMITTED BY: /s/ CORETTA BOWEN	DESIGN FILE NO: 2020-25-0065
SIZE: ANSI D	FILE NAME: SPEC NO: 2145 ft08c-517

U.S. ARMY CORPS OF ENGINEERS

FT HUACHUCA AZ

GROUND TRANSPORT EQUIPMENT BUILDING

RIPRAP DETAILS

SHEET ID

C-517

RTA

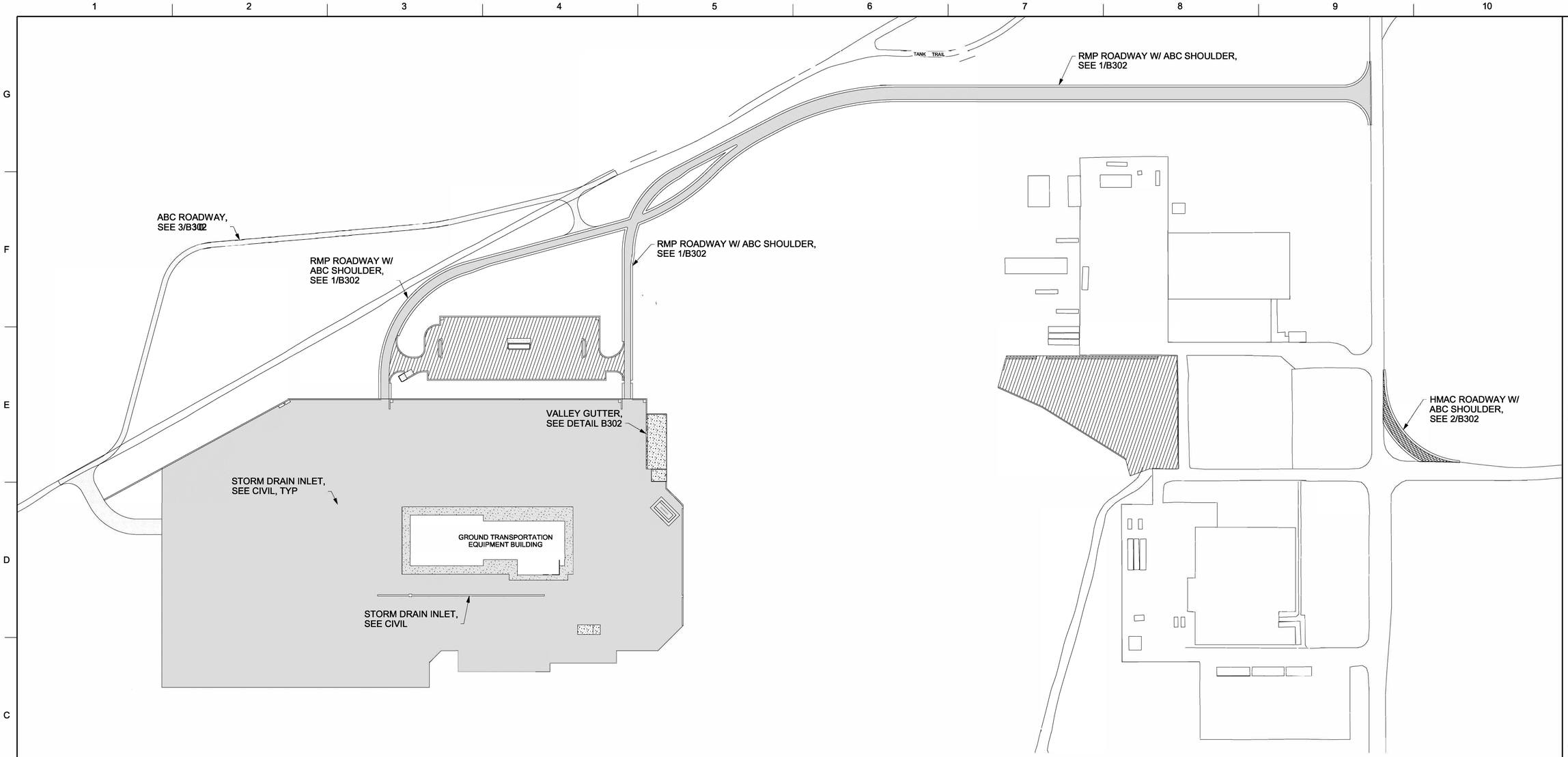

GENERAL NOTES

1. SEE SHEETS B301 AND B302 FOR TYPICAL PAVEMENT SECTIONS AND DETAILS AND TYPICAL ROAD SECTIONS.
2. VERIFY SLOPE AND SLOPE DIRECTION OF ALL PAVEMENTS WITH CIVIL DRAWINGS
3. CONTRACTOR SHALL DEVELOP AND SUBMIT A JOINT LAYOUT PLAN FOR GOVERNMENT APPROVAL FOR ALL PCC PAVEMENTS ON THE PROJECT. ALL PCC PAVEMENT SHALL BE JOINTED IN ACCORDANCE WITH UFC 3 250 01 2016 AND THE FOLLOWING REQUIREMENTS:.
   - A) JOINT SPACING SHALL BE 10' MINIMUM TO 15' MAXIMUM.
   - B) ASPECT RATIO OF PCC PANELS SHALL NOT EXCEED 1.25.
   - C) PCC PANELS NOT MEETING THE ABOVE REQUIREMENTS SHALL BE REINFORCED W/ #4 @ 18" OC EACH WAY.
   - D) A THICKENED EDGE, 1.25 x PAVEMENT THICKNESS, SHALL BE PROVIDED AROUND THE PERIMETER OF ALL PCC PAVED AREAS. SEE DETAIL B-501.
   - E) JOINTS SHALL BE IN ACCORDANCE WITH THE DETAILS SHOWN ON B-501.

N

PAVEMENT PLAN BASE BID - OVERALL

SCALE: 1" = 100'-0"

LEGEND

- RESIN MODIFIED HOT MIX ASPHALT PAVEMENT (RMP) SEE TYPICAL SECTIO B301 . SEE DRWG B101.OP FOR PCC OPT/ON.
- LIGHT DUTY HOT MIX ASPHALT PAVEMENT (HMAC) SEE TYPICAL SECTION B301
- HEAVY DUTY HOT MIX ASPHALT PAVEMENT (HMAC) SEE TYPICAL SECTION B301
- AGGREGATE BASE COURSE (ABC) ROADWAY SEE TYPICAL SECTION B301
- PORTLAND CEMENT CONCRETE (PCC) PAVEMENT SEE TYPICAL SECTION B301

AMENDMENT 4

1" = 100'-0" 0' 50' 100' 200' 300'

US Army Corps of Engineers®

MARK	DESCRIPTION	DATE

U.S. ARMY CORPS OF ENGINEERS

DESIGNED BY: F. FUENTES
DRAWN BY: M. MILLS
CHECKED BY: M. BONNER
SUBMITTED BY: ####
SIZE: ANSI D
ISSUE DATE: 21 FEB 2020
SOLICITATION NO.: ##########
CONTRACT NO.: ##########
DESIGN FILE NO: ####
FILE NAME: fh08c-101.dgn
SPEC NO: ####

A2

FT HUACHUCA

GROUND TRANSPORT EQUIPMENT BUILDING

PAVEMENT PLAN BASE BID OVERALL

SHEET ID

B101

RTA

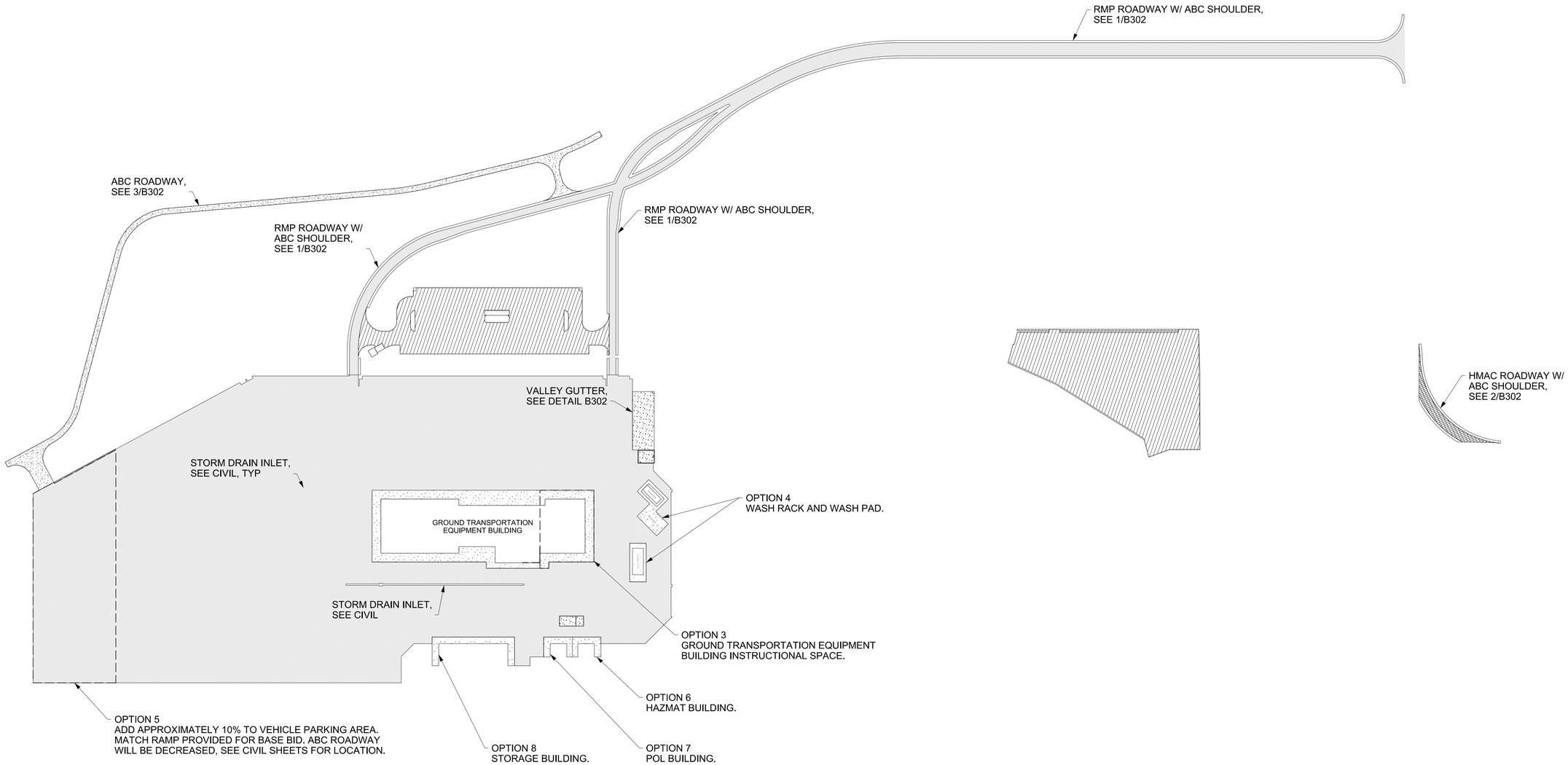

GENERAL NOTES

1. SEE SHEETS B301 AND B302 FOR TYPICAL PAVEMENT SECTIONS AND DETAILS AND TYPICAL ROAD SECTIONS.
2. VERIFY SLOPE AND SLOPE DIRECTION OF ALL PAVEMENTS WITH CIVIL DRAWINGS
3. CONTRACTOR SHALL DEVELOP AND SUBMIT A JOINT LAYOUT PLAN FOR GOVERNMENT APPROVAL FOR ALL PCC PAVEMENTS ON THE PROJECT. ALL PCC PAVEMENT SHALL BE JOINTED IN ACCORDANCE WITH UFC 3 250 01 2016 AND THE FOLLOWING REQUIREMENTS:.
   - A) JOINT SPACING SHALL BE 10' MINIMUM TO 15' MAXIMUM.
   - B) ASPECT RATIO OF PCC PANELS SHALL NOT EXCEED 1.25.
   - C) PCC PANELS NOT MEETING THE ABOVE REQUIREMENTS SHALL BE REINFORCED W/ #4 @ 18" OC EACH WAY.
   - D) A THICKENED EDGE, 1.25 x PAVEMENT THICKNESS, SHALL BE PROVIDED AROUND THE PERIMETER OF ALL PCC PAVED AREAS. SEE DETAIL B-501.
   - E) JOINTS SHALL BE IN ACCORDANCE WITH THE DETAILS SHOWN ON B-501.

N

PAVEMENT PLAN - OVERALL OPTIONS

SCALE: 1" = 100'-0"

PCC NOTE 1

CONTRACTOR SHALL HAVE OPTION OF USING PCC OR RMP PAVMENT. SEE APPENDIX 3 -PCC DETAILS. SPEC 31 11 20 SUBASES FOR FLEXIBLE PAVING SHALL BE USED FOR PCC PAVMENT. SEE NEW SPEC SECTIONS 32 01 19.61 & 32 13 13.06 ADDED VIA AMENDMENT 4.

PCC SECTION

7.5-INCHES PCC ON
6-INCHES AGREEGATE BASE ON
6-INCHES SUBBASE ON
COMPACTED SUBGRADE

LEGEND

- RESIN MODIFIED HOT MIX ASPHALT PAVEMENT (RMP) SEE TYPICAL SECTION B301 OR PORTLAND CEMENT CONCRETE PAVEMENT (PCC). SEE PCC NOTE 1.
- LIGHT DUTY HOT MIX ASPHALT PAVEMENT (HMAC) SEE TYPICAL SECTION B301
- HEAVY DUTY HOT MIX ASPHALT PAVEMENT (HMAC) SEE TYPICAL SECTION B301
- AGGREGATE BASE COURSE (ABC) ROADWAY SEE TYPICAL SECTION B301
- PORTLAND CEMENT CONCRETE (PCC) PAVEMENT SEE TYPICAL SECTION B301

AMENDMENT 4

1" = 100'-0" 0' 50' 100' 200' 300'

US Army Corps of Engineers®

MARK	DESCRIPTION	DATE

U.S. ARMY CORPS OF ENGINEERS

DESIGNED BY: E. FUENTES	ISSUE DATE: 21 FEB 2020
DRAWN BY: M. MILLS	SOLICITATION NO.: ############
CHECKED BY: M. BONNER	CONTRACT NO.: ################
SUBMITTED BY: #####	DESIGN FILE NO: #####
SIZE: ANSI D	SPEC NO: ####
	FILE NAME: fu08c-101.dgn

FT HUACHUCA AZ

GROUND TRANSPORT EQUIPMENT BUILDING

PAVEMENT PLAN - OVERALL OPTIONS

SHEET ID

B101.OP

RTA

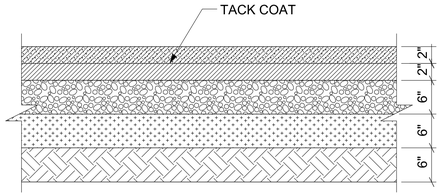

1 B301 TYPICAL RESIN MODIFIED PAVEMENT (RMP) CROSS SECTION

SCALE: NOT TO SCALE

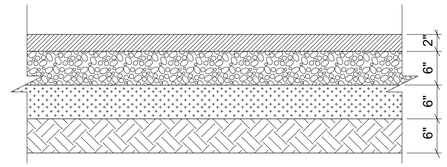

2 B301 TYPICAL LIGHT DUTY HOT MIX ASPHALT (HMAC) PAVEMENT CROSS SECTION

SCALE: NOT TO SCALE

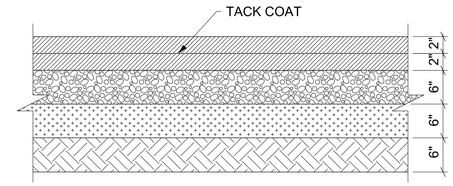

3 B301 TYPICAL HEAVY DUTY HOT MIX ASPHALT (HMAC) PAVEMENT CROSS SECTION

SCALE: NOT TO SCALE

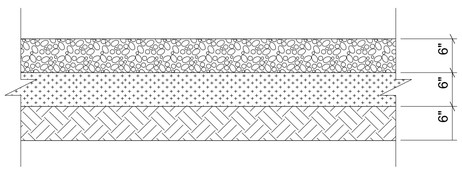

4 B301 TYPICAL AGGREGATE BASE COURSE (ABC) ROADWAY CROSS SECTION

SCALE: NOT TO SCALE

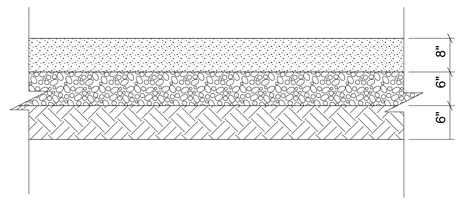

5 B301 PORTLAND CEMENT CONCRETE PAVEMENT (PCC) CROSS SECTION

SCALE: NOT TO SCALE

GENERAL NOTES

1. VERIFY SLOPE AND SLOPE DIRECTION OF ALL PAVEMENTS WITH CIVIL DRAWINGS.
2. SECTION THICKNESS SHALL BE EQUIVALENT TO THAT INDICATED IN THE TYPICAL SECTIONS FOR EACH RESPECTIVE PAVEMENT UNLESS NOTED OTHERWISE.

LEGEND

- PORTLAND CEMENT CONCRETE PAVEMENT (PCC)
- RESIN MODIFIED HOT MIX ASPHALT PAVEMENT (RMP)
- HOT MIX ASPHALT PAVEMENT (HMAC)
- AGGREGATE BASE COURSE (CBR=80 ASTM D1883) COMPACTED TO AT LEAST 100% MAXIMUM DENSITY AS DETERMINED IN ACCORDANCE WITH ASTM D1557.
- AGGREGATE SUBBASE COURSE (CBR=20 ASTM D1883) COMPACTED TO AT LEAST 95% MAXIMUM DENSITY AS DETERMINED IN ACCORDANCE WITH ASTM D1557.
- 6" OF SUBGRADE SCARIFIED AND COMPACTED TO AT LEAST 95% MAXIMUM DENSITY AS DETERMINED IN ACCORDANCE WITH ASTM D1557.

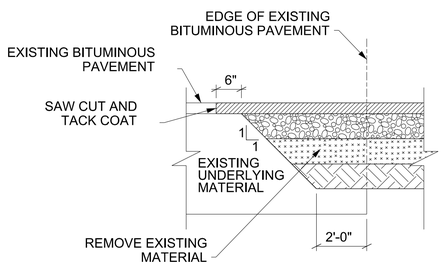

NOTE: TOP PAVEMENT LAYER MAY BE HMAC OR RMP. SEE PAVEMENT PLAN.

A B301 JUNCTURE OF EXISTING HMAC PAVEMENT AND NEW HMAC/RMP PAVEMENT

SCALE: NOT TO SCALE

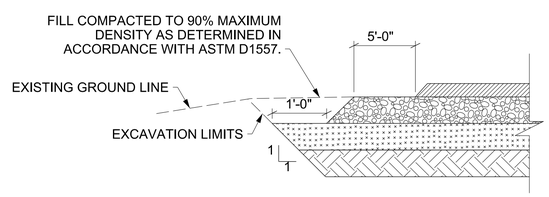

NOTE: TOP PAVEMENT LAYER MAY BE HMAC OR RMP. SEE PAVEMENT PLAN.

B B301 NEW HMAC/RMP PAVEMENT AND FINISHED GRADE

SCALE: NOT TO SCALE

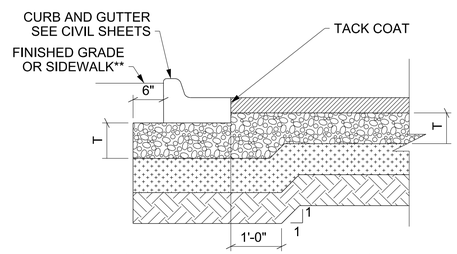

NOTE: TOP PAVEMENT LAYER MAY BE HMAC OR RMP. SEE PAVEMENT PLAN.

** USE 1/2" EXPANSION JOINT MATERIAL WHERE SIDEWALK MEETS CURB.

C B301 CURB AND GUTTER AND HMAC/RMP PAVEMENT

SCALE: NOT TO SCALE

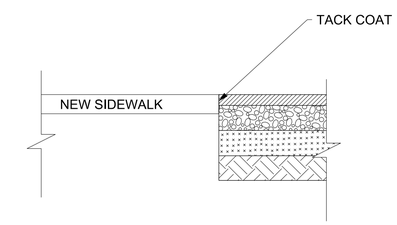

NOTE: TOP PAVEMENT LAYER MAY BE HMAC OR RMP. SEE PAVEMENT PLAN.

D B301 JUNCTURE OF NEW SIDEWALK AND NEW HMAC/RMP PAVEMENT

SCALE: NOT TO SCALE

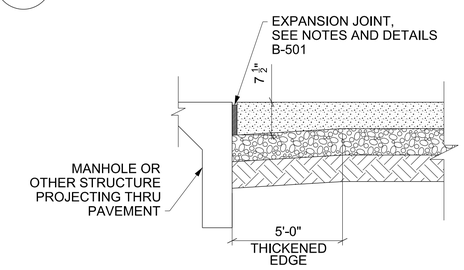

E B301 JUNCTURE OF STRUCTURE AND NEW PCC PAVEMENT

SCALE: NOT TO SCALE

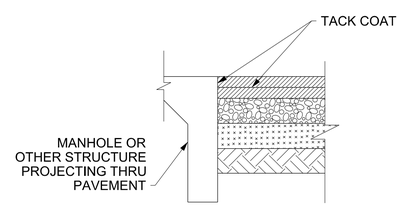

NOTE: TOP PAVEMENT LAYER MAY BE HMAC OR RMP. SEE PAVEMENT PLAN.

F B301 JUNCTURE OF STRUCTURE AND NEW HMAC/RMP

SCALE: NOT TO SCALE

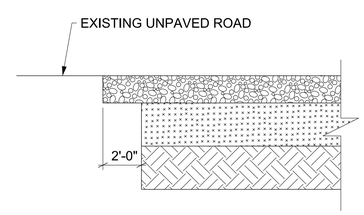

G B301 JUNCTURE OF EXISTING UNPAVED ROAD AND NEW AGGREGATE SURFACE COURSE

SCALE: NOT TO SCALE

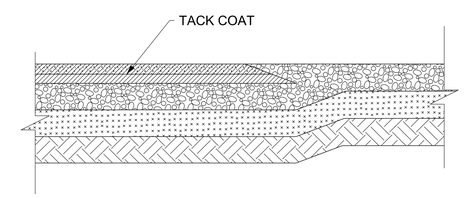

NOTE: TOP PAVEMENT LAYER MAY BE HMAC OR RMP. SEE PAVEMENT PLAN.

H B301 JUNCTURE OF NEW HMAC/RMP PAVEMENT AND NEW AGGREGATE SURFACE COURSE

SCALE: NOT TO SCALE

US Army Corps of Engineers®

MARK	DESCRIPTION	DATE

DESIGNED BY: F. FUENTES
DRAWN BY: M. MILLS
CHECKED BY: M. BONNER
SUBMITTED BY: ####/####
SIZE: ANSI D
SPEC NO: #####
ISSUE DATE: 21 FEB 2020
SOLICITATION NO.: ##########
CONTRACT NO.: ##########
DESIGN FILE NO: ######
FILE NAME: fh08c-301.dgn

U.S. ARMY CORPS OF ENGINEERS

FT HUACHUCA AZ

GROUND TRANSPORT EQUIPMENT BUILDING

TYPICAL PAVEMENT SECTIONS AND DETAILS

SHEET ID

B301

RTA

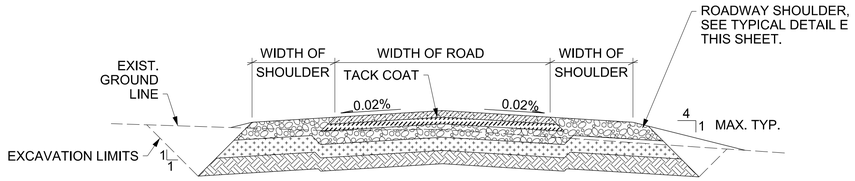

SEE "TYPICAL RESIN MODIFIED PAVEMENT CROSS SECTION" ON SHEET B301 FOR LAYER THICKNESS AND ADDITIONAL INFORMATION.

1 B302 TYPICAL RESIN MODIFIED PAVEMENT ROAD SECTION

SCALE: NOT TO SCALE

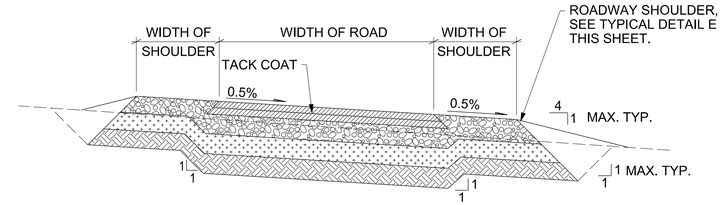

SEE "TYPICAL HOT MIX ASPHALT PAVEMENT CROSS SECTION" ON SHEET B301 FOR LAYER THICKNESS AND ADDITIONAL INFORMATION.

2 B301 TYPICAL HMAC PAVEMENT ROAD SECTION AT ARIZONA ST. AND HUNT AVE.

SCALE: NOT TO SCALE

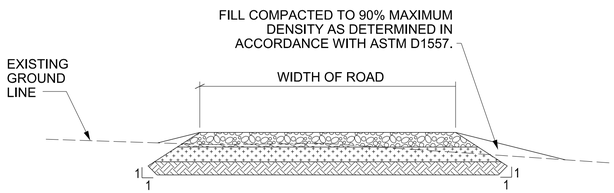

SEE "TYPICAL AGGREGATE BASE COURSE ROADWAY CROSS SECTION" ON B301 FOR LAYER THICKNESS AND ADDITIONAL INFORMATION.

3 B301 TYPICAL AGGREGATE BASE COURSE ROAD SECTION

SCALE: NOT TO SCALE

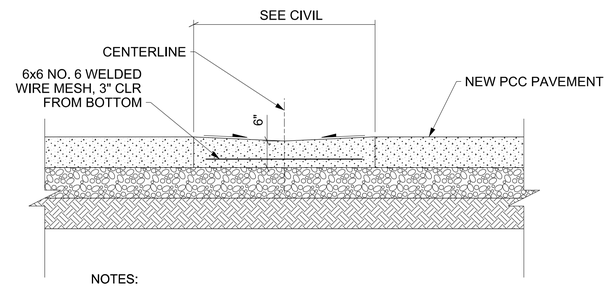

NOTES:

1. PLACE TRANSVERSE CONTRACTION JOINTS AT 5'-0" INTERVALS, SEE DETAIL B-501.
2. FURNISH 3/4" FIELD MOLDED EXPANSION JOINS AT 30' INTERVALS, SEE DETAIL B-501.

A B301 VALLEY GUTTER DETAIL

SCALE: NOT TO SCALE

GENERAL NOTES

1. VERIFY SLOPE AND SLOPE DIRECTION OF ALL PAVEMENTS WITH CIVIL DRAWINGS.
2. SECTION THICKNESS SHALL BE EQUIVALENT TO THAT INDICATED IN THE TYPICAL SECTIONS B301 FOR EACH RESPECTIVE PAVEMENT UNLESS NOTED OTHERWISE.
3. EXPOSED ROADWAY EMBANKMENT SIDE SLOPES SHALL NOT EXCEED A SLOPE OF 1:4 WHEN TYING TO EXISTING GROUND.
4. CUT AND FILL SLOPES NOT PERMANENTLY EXPOSED SHALL HAVE A SLOPE OF NO GREATER THAN 1:1 UNLESS NOTED OTHERWISE.

LEGEND

- PORTLAND CEMENT CONCRETE PAVEMENT (PCC)
- RESIN MODIFIED HOT MIX ASPHALT PAVEMENT (RMP)
- HOT MIX ASPHALT PAVEMENT (HMAC)
- AGGREGATE BASE COURSE (CBR=80 ASTM D1883) COMPACTED TO AT LEAST 100% (98% AT SHOULDER) MAXIMUM DENSITY AS DETERMINED IN ACCORDANCE ASTM D1557.
- AGGREGATE SUBBASE COURSE (CBR=20 ASTM D1883) COMPACTED TO AT LEAST 95% MAXIMUM DENSITY AS DETERMINED IN ACCORDANCE WITH ASTM D1557.
- 6" OF SUBGRADE SCARIFIED AND COMPACTED TO AT LEAST 95% MAXIMUM DENSITY AS DETERMINED IN ACCORDANCE WITH ASTM D1557.

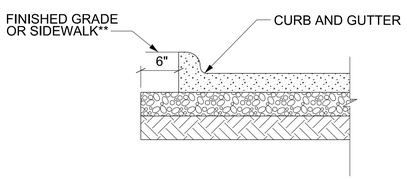

** USE 1/2" EXPANSION JOINT MATERIAL WHERE SIDEWALK MEETS CURB.

B B301 PCC W/ CURB AND GUTTER

SCALE: NOT TO SCALE

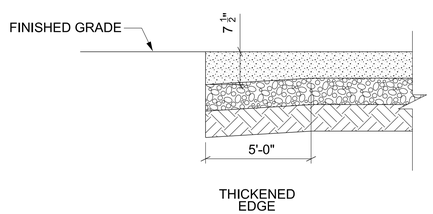

C B-301 JUNCTURE OF FINISHED GRADE AND NEW PCC PAVEMENT

SCALE: NOT TO SCALE

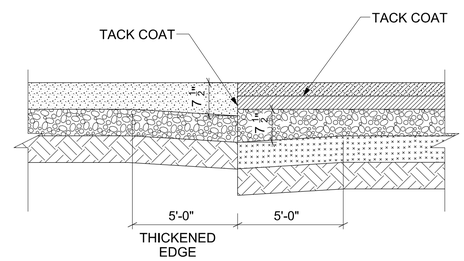

D B-301 JUNCTURE OF NEW PCC PAVEMENT AND NEW RMP PAVEMENT

SCALE: NOT TO SCALE

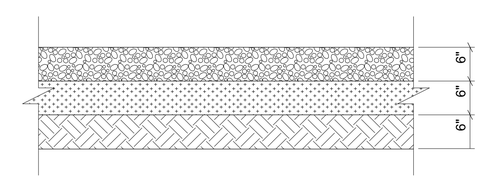

E B301 ROADWAY SHOULDER DETAIL

SCALE: NOT TO SCALE

US Army Corps of Engineers®

MARK	DESCRIPTION	DATE

U.S. ARMY CORPS OF ENGINEERS

DESIGNED BY: F. FUENTES
DRAWN BY: M. MILLS
CHECKED BY: M. BONNER
SUBMITTED BY: ####
SIZE: ANSI D
ISSUE DATE: 21 FEB 2020
SOLICITATION NO.: ##########
CONTRACT NO.: ##########
DESIGN FILE NO: ####
FILE NAME: ft08b-302.dgn
SPEC NO: ####

FT HUACHUCA AZ

GROUND TRANSPORT EQUIPMENT BUILDING

TYPICAL PAVEMENT SECTIONS AND DETAILS

SHEET ID

B302

RTA

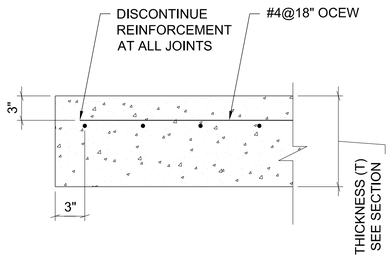

A SLAB REINFORCEMENT DETAIL
B-5001 SCALE: NOT TO SCALE

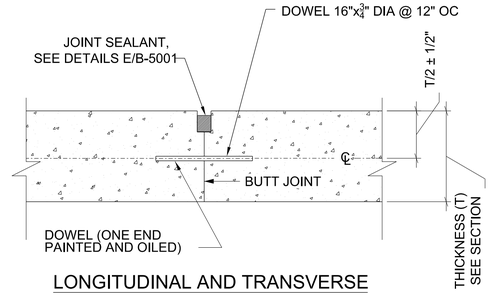

LONGITUDINAL AND TRANSVERSE

B DOWELED CONSTRUCTION JOINTS
B-5001 SCALE: NOT TO SCALE

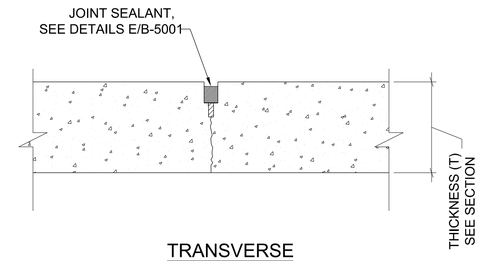

TRANSVERSE

C SAW CUT CONTRACTION JOINTS
B-5001 SCALE: NOT TO SCALE

GENERAL NOTES

1. VERIFY SLOPE AND SLOPE DIRECTION OF ALL PAVEMENTS WITH CIVIL DRAWINGS.
2. REINFORCEMENT OF NEW PCC PAVEMENT WHERE REQUIRED BY UFC 3 250 01 2016.
3. EXPANSION JOINT FILLER SHALL BE PROVIDED FOR THE FULL DEPTH OF THE JOINT TO ENSURE THE PAVEMENT IS NOT IN CONTACT, AT ANY POINT, WITH THE ABUTTING STRUCTURE.

LEGEND

PORTLAND CEMENT CONCRETE (PCC) PAVEMENT

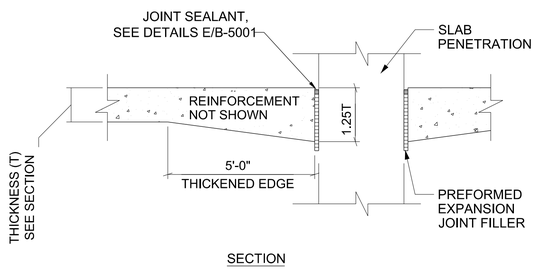

SECTION

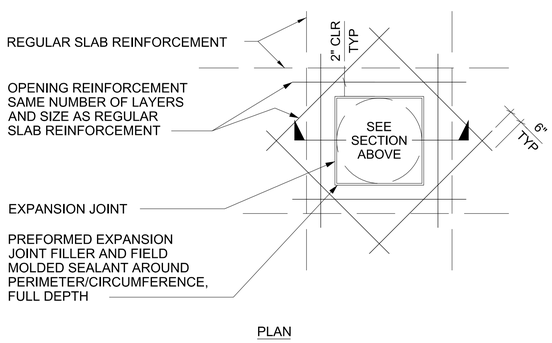

PLAN

D TYPICAL REINFORCEMENT AT PENETRATIONS IN PCC PAVEMENT
B-5001 SCALE: NOT TO SCALE

FIELD MOLDED JOINT SEALANT NOTES

1. FIELD MOLDED JOINT SEALANT SHALL BE USED TO SEAL JOINTS BETWEEN NEW AND EXISTING PCC PAVEMENTS AND WITHIN GENERAL PCC PAVEMENTS ONLY.
2. SEALANT RESERVOIR WIDTH SHALL NOT BE LESS THAN 1/2" OR GREATER THAN 5/8".
3. TOP OF SEAL SHALL BE 1/8" BELOW PAVEMENT SURFACE.
4. DEPTH OF INITIAL SAWCUT SHALL BE 1/4 SLAB THICKNESS +/- 1/2".
5. DIAMETER OF BACKER MATERIAL IS W + 1/8".

EXPANSION JOINT NOTES

1. THICKENED EDGE EXPANSION JOINTS SHALL BE INSTALLED TO SURROUND, OR TO SEPARATE FROM THE PAVEMENT, ANY STRUCTURES THAT PROJECT THROUGH, INTO, OR AGAINST THE PAVEMENT SUCH AS BUILDING FOUNDATIONS, MANHOLES, DRAINAGE INLETS, ETC.
2. EXPANSION JOINT WIDTHS:
   - 3/4 " AT EXPANSION JOINTS BETWEEN NEW-TO-NEW AND NEW-TO-EXISTING RIGID PAVEMENTS.
   - 3/4" AT BUILDING FOUNDATIONS, UTILITY BLOCKOUTS, MANHOLES, CLEAN-OUTS, ETC.
   - 1" AROUND STORM DRAIN TRENCH STRUCTURES.
3. EXPANSION JOINT FILLER SHALL BE PROVIDED FOR THE FULL DEPTH OF THE JOINT.
4. CARE SHALL BE TAKEN TO ENSURE THAT THE PAVEMENT CONCRETE IS NOT IN CONTACT, AT ANY POINT, WITH THE ABUTTING STRUCTURE.
5. SEAL EXPANSION JOINTS IN ACCORDANCE WITH SECTIONS, DETAILS, AND SPECIFICATIONS.
6. DIAMETER OF BACKER MATERIAL IS JOINT WIDTH + 1/8".

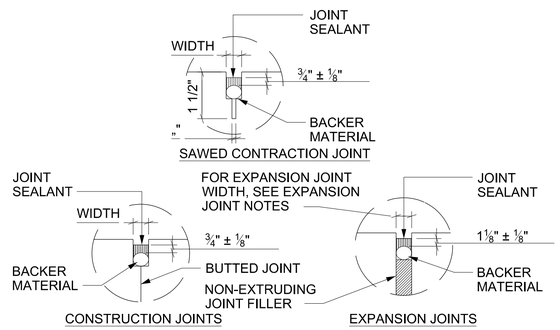

E FIELD MOLDED JOINT SEALANT DETAILS
B-5001 SCALE: NOT TO SCALE

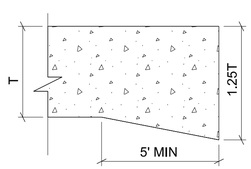

F THICKENED EDGE DETAIL
B-5001 SCALE: NOT TO SCALE

US Army Corps of Engineers®

MARK	DESCRIPTION	DATE

DESIGNED BY: F. FUENTES
DRAWN BY: M. MILLS
CHECKED BY: M. BONNER
SUBMITTED BY: ####
SIZE: ANSI D
ISSUE DATE: 21 FEB 2020
SOLICITATION NO.: ##########
CONTRACT NO.: ##########
DESIGN FILE NO: ##########
FILE NAME: ft08b-501.dgn
SPEC NO: #####

U.S. ARMY CORPS OF ENGINEERS

FT HUACHUCA AZ

GROUND TRANSPORT EQUIPMENT BUILDING

PCC JOINT DETAILS

SHEET ID

B501

RTA

ABBREVIATIONS

#	NUMBER
&	AND
=	EQUAL, EQUALS
@	AT
A/C	AIR CONDITIONING
AB	ANCHOR BOLT
ACI	AMERICAN CONCRETE INSTITUTE
ADDL	ADDITIONAL
ADJ	ADJACENT
AFF	ABOVE FINISEHD FLOOR
AH, AHU	AIR HANDLING UNIT
AISC	AMERICAN INSTITUTE OF STEEL CONSTRUCTION
ALT	ALTERNATE
APA	AMERICAN PLYWOOD ASSOCIATION
APPROX	APPROXIMATELY
ARCH	ARCHITECTURAL
ASTM	AMERICAN SOCIETY FOR TESTING AND MATERIALS
AT/FP	ANTI-TERRORISM/ FORCE PROTECTION
AWS	AMERICAN WELDING SOCIETY
BET	BETWEEN
BLW	BELOW
BM	BEAM
BN	BOUNDARY NAIL
BOF	BOTTOM OF FOOTING
BOT	BOTTOM
BRG	BEARING
C	CHANNEL
CE	CARBON EQUIVALENT
CENT	CENTERED
CFMF	COLD-FORMED METAL FRAMING
CFS	COLD-FORMED STEEL
CIP	CAST IN PLACE
CJ	CONTROL JOINT/CEILING JOIST
CJP	COMPLETE JOINT PENETRATION
CL	CENTERLINE
CLR	CLEAR
CMU	CONCRETE MASONRY UNIT
COL	COLUMN
CONC	CONCRETE
COND	CONDITION
CONN	CONNECT, CONNECTION
CONST	CONSTRUCTION
CONT	CONTINUOUS
CONTR	CONTRACTOR
COORD	COORDINATE
COR	CORNER
CT	CONTROL JOINT (DOWELED)
CWB	CAPILLARY WATERBARRIER
D	DEEP, DEPTH
DEG	DEGREE
DEM	DEMOLISH, DEMOLITION
DEP	DEPRESSED
DET	DETAIL
DIA	DIAMETER
DIAG	DIAGONAL
DL	DEADLOAD
DO	DITTO
DT	DRAG TRUSS
DWG(S)	DRAWINGS
DWL	DOWEL
EA	EACH
EF	EACHFACE
ELEC	ELECTRICAL
ELEV	ELEVATION
EN	EDGE NAIL
EQN	EQUATION
EQUIP	EQUIPMENT
ES	EACH SIDE
EW	EACH WAY
EXIST	EXISTING
EXT	EXTERNAL, EXTERIOR
FF	FAR FACE
FFE	FINISH FLOOR ELEVATION
FG	FINISH GRADE
FJ	FLOOR JOIST
FMG	FRAMING
FN	FIELD NAIL
FND	FOUNDATION
FOC	FACE OF CONCRETE
FOM	FACE OF MASONRY
FOS	FACE OF STUD
FS	FAR SIDE
FT, '	FOOT
FTG	FOOTING
Fy	YIELD STRESS
GA	GAUGE
GLB	GLUED LAMINATED BEAM
GT	GIRDER TRUSS
GUSS	GUSSET
GYP BD	GYPSUM BOARD
HD	HOLD DOWN
HDR	HEADER
HGR	HANGER
HK	HOOK
HORIZ	HORIZONTAL
HP	HIGH POINT
HSS	HOLLOW STRUCTURAL SECTION
HT	HEIGHT
HVAC	HEATNG/ VENTILATING/ AIR CONDITIONING
I	MOMENT OF INERTIA

ABBREVIATIONS

IBC	INTERNATIONAL BUILDING CODE
ICF	INSULATED CONCRETE FORM
ID	INSIDE DIAMETER
IN, "	INCH
INCL	INCLUDE
INFO	INFORMATION
INS	INSULATED, INSULATION
JST	JOIST
K, KIPS	THOUSAND POUNDS
L	LENGTH, ANGLE
LB	POUND
LG	LONG
LL	LIVE LOAD
LLH	LONG LEG HORIZONTAL
LLV	LONG LEG VERTICAL
LOC	LOCATE, LOCATION
LONG	LONGITUDINAL
LP	LOW POINT
LW	LIGHT WEIGHT
MAS	MASONRY
MB	MACHINE BOLT
MBR	MEMBER
MECH	MECHANICAL
MED	MEDIUM
MEZZ	MEZZANINE
MF	MOMENT FRAM
MFG	MANUFACTURING
MIN	MINIMUM
MO	MASONRY OPENING
MOD	MODIFY, MODIFIED
MRF	MANUFACTURER
NF	NEAR FACE
NOM	NOMINAL
NS	NEAR SIDE
OC	ON CENTER
OD	OUTSIDE DIAMETER
OH	OPPOSITE HAND, OVERHEAD
OWSJ	OPEN WEB STEEL JOIST
P/C	PIN CONNECTED
PAR	PARALLEL
PCC	PRECAST CONCRETE
PCF	POUNDS PER CUBIC FOOT
PEMB	PRE. ENGINEERED METAL BUILDING
PEN	PENETRATION
PFJ	PERIMETER FELT JOINT
PL	PLATE
PLYWD	PLYWOOD
PNL	PANEL
PSF	POUNDS PER SQUARE FOOT
PSI	POUNDS PER SQUARE INCH
PT	PRESSURE TREATED, POINT, PRETENSIONED
REINF	REINFORCING, REINFORCED
REQ	REQUIRED
RET	RETURN, RETAINING
REV	REVISION, REVISED
RF	ROOF
RFT	RAFTERS
RPM	REVOLUTIONS PR MINUTE
RS	ROUGH SAWN
RT	ROOF TRUSS
S	SECTION MODULUS
SC	SLIP CRITICAL
SCBRW	SEGMENTAL CONCRETE BLOCK RETAINING WALL
SCHED	SCHEDULE
SDI	STEEL DECK INSTITUTE
SECT	SECTION
SEIS	SEISMIC
SEP	SEPARATION
SHT	SHEET
SIM	SIMILAR
SJI	STEEL JOIST INSTITUTE
SMS	SHEET METAL SCREW
SPEC(S)	SPECIFICATION(S)
SPRT	SUPPORT
SQ	SQUARE
SS	STAINLESS STEEL
ST	SNUG TIGHT
STD	STANDARD
STIF/STIFF	STIFFENER
STL	STEEL
STRUCT	STRUCTURAL, STRUCTURE
SUSP	SUSPENDED
SYM	SYMMETRICAL
T&B	TOP AND BOTTOM
T&G	TONGUE AND GROOVE
TGB	TOP OF GRADE BEAM
THK	THICK, THICKNESS
TL	TOTAL LOAD
TN	TOE NAIL
TOB	TOP OF BEAM
TOC	TOP OF CONCRETE
TOF	TOP OF FOOTING
TOS	TOP OF STEEL
TOW	TOP OF WALL
TYP	TYPICAL
UFC	UNITED FACILITES CRITERIA
UNO	UNLESS NOTED OTHERWISE
UON	UNLESS OTHERWISE NOTED
VB	VAPOR BARRIER
VERT	VERTICAL
W	WIDTH, WEST, WIDE FLANGE
w/	WITH
WF	WIDE FLANGE
WPT	WORKING POINT
WWF	WELDED WIRE FABRIC
WWM	WELDED WIRE MESH

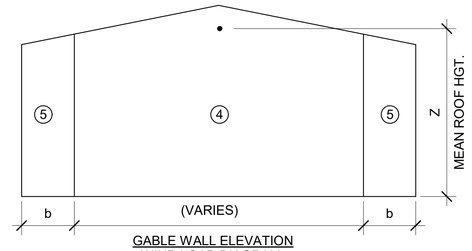

GABLE WALL ELEVATION
WIND LOAD DIAGRAM

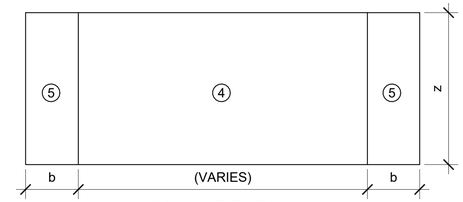

SIDE WALL ELEVATION
WIND LOAD DIAGRAM

		COMPONENTS AND CLADDING WIND LOADS ON WALLS															
		ZONE 4								ZONE 5							
		EFFECTIVE WIND AREA (SF)								EFFECTIVE WIND AREA (SF)							
z (FT.)	b (FT.)	10		20		50		100		10		20		50		100	
45	10	53	-57	49	-53	46	-49	43	-47	53	-67	49	-59	46	-52	43	-47
30	7.6	38	-41	34	-37	30	-34	28	-31	38	-50	34	-43	30	-36	28	-31
20	4	45	-48	41	-44	38	-41	36	-39	45	-57	41	-49	38	-43	36	-39
15	6.5	44	-47	40	-43	37	-40	36	-38	44	-55	40	-48	37	-42	36	-38

* WIND LOADS AT GABLE END WALLS AS BASED ON " z " HEIGHT

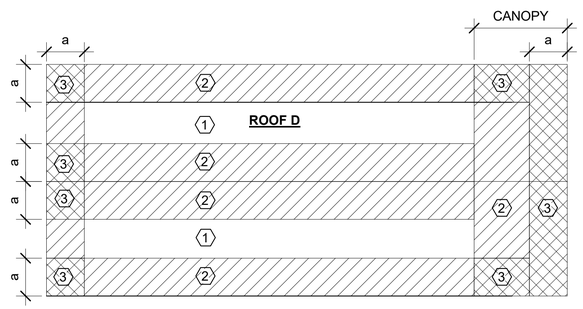

ORG. STORAGE

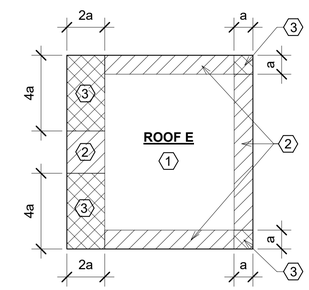

POL / HAZMAT

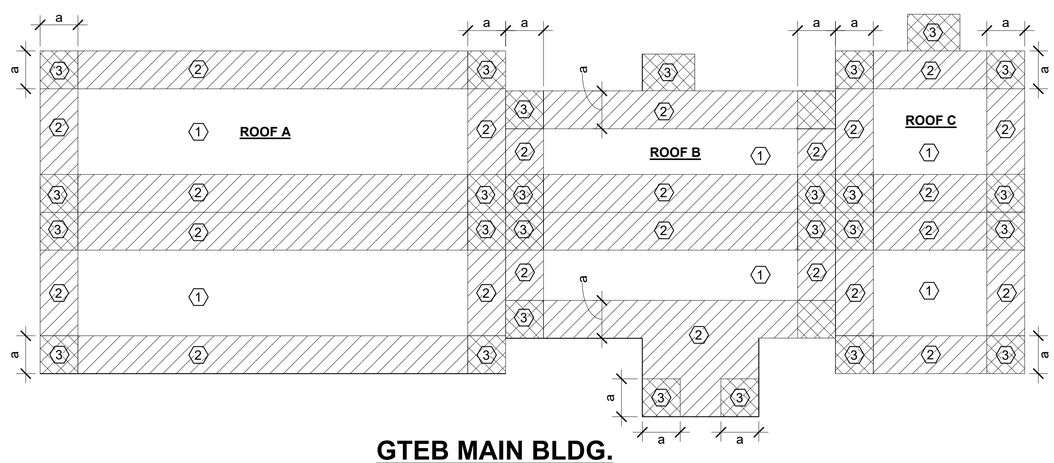

GTEB MAIN BLDG.

h = 51.25' a = 10'

COMPONENTS AND CLADDING WIND LOADS (**ROOF A**)						
TRIBUTARY AREA	ZONE 1		ZONE 2		ZONE 3	
< 10 ft²	36	-50	36	-78	36	-108
25 ft²	34	-49	34	-71	34	-100
50 ft²	32	-48	32	-66	32	-94
> 100 ft²	30	-47	30	-60	30	-88

h = 34.75' a = 7.6'

COMPONENTS AND CLADDING WIND LOADS (**ROOF B**)						
TRIBUTARY AREA	ZONE 1		ZONE 2		ZONE 3	
< 10 ft²	33	-45	33	-61	33	-97
25 ft²	30	-44	30	-63	30	-90
50 ft²	28	-43	28	-59	28	-84
> 100 ft²	26	-42	26	-54	26	-79

h = 19.75 a = 6.5'

COMPONENTS AND CLADDING WIND LOADS (**ROOF C**)						
TRIBUTARY AREA	ZONE 1		ZONE 2		ZONE 3	
< 10 ft²	30	-41	30	-64	30	-89
25 ft²	28	-40	28	-58	28	-82
50 ft²	26	-39	26	-54	26	-77
> 100 ft²	24	-38	24	-50	24	-72

h = 20 a = 4'

COMPONENTS AND CLADDING WIND LOADS (**ROOF D**)						
TRIBUTARY AREA	ZONE 1		ZONE 2		ZONE 3	
< 10 ft²	33	-45	33	-61	33	-97
25 ft²	30	-44	30	-63	30	-90
50 ft²	28	-43	28	-59	28	-84
> 100 ft²	26	-42	26	-54	26	-79

h = 17.5 a = 3'

COMPONENTS AND CLADDING WIND LOADS (**ROOF E**)						
TRIBUTARY AREA	ZONE 1		ZONE 2		ZONE 3	
< 10 ft²	26	-50	26	-58	26	-92
25 ft²	25	-48	25	-53	25	-83
50 ft²	24	-46	24	-50	24	-72
> 100 ft²	23	-44	23	-47	23	-68

WIND LOADS ON TABLES
(+) = DOWNWARD PRESSURE (PSF)
(-) = UPWARD PRESSURE (PSF)

US Army Corps of Engineers ®

MARK	DESCRIPTION	DATE

DESIGNED BY: ASJ
DRAWN BY: ALR
CHECKED BY: BN
SUBMITTED BY: SUMIRE ONWES
SIZE: ANSI D FILE NAME: ANSI D_WISS_GTEB

ISSUE DATE: 13 JULY 2020
PROJECT # 233-25-0665
SPEC # 2145
FILE NUMBER:

US ARMY CORPS OF ENGINEERS
SACRAMENTO DISTRICT
US DEPT OF ARMY

SACRAMENTO DISTRICT
IN-HOUSE DESIGN
1325 J STREET
SACRAMENTO, CA 95814

GROUND TRANSPORT EQUIPMENT BUILDING

GENERAL STRUCTURAL NOTES, DESIGN LOADS & ABBREVIATIONS

SHEET ID
S-001

S S-001-

DESIGN SUBMITTAL: RTA

DESIGN BASIS
CODE: 2015 IBC
ASCE 7-10
UFC 3-301.01

DEAD LOAD:
ROOF - 25 PSF
FLOOR - 80 PSF

LIVE LOADS:
ROOF: 20 PSF (NON REDUCIBLE)
SLAB-ON-GRADE: 150 PSF
CORRIDORS: 80 PSF
ASSEMBLY AREA: 100 PSF
MECHANICAL ROOM AND STORAGE AREA: 125 PSF
STAIRS: 100 PSF
PARTITION: 15 PSF
BRIDGE CRANE: 35 TONS

LATERAL LOAD CALCULATION:
1. OCCUPANCY IMP. FACTOR = 1.25
   RISK CATEGORY 3
   $S_s = 0.243$
   $S_1 = 0.071$
   $S_{DS} = 0.194$
   SITE CLASSIFICATION "C" [PER GEOTECH REPORT]
   SEISMIC DESIGN CATEGORY "B"
   LATERAL FORCE RESISTING SYSTEM
   ORD. REINF. MASONRY SHEAR WALL, R = 2.0, V = 0.162W
2. SEISMIC DESIGN FOR NONSTRUCTURAL COMPONENTS PER ASCE 7-10 CHAPTER 13.
3. BASIC WIND SPEED 120 MPH, EXP C.

IT IS THE RESPONSIBILITY OF THE CONTRACTOR TO HIRE A STRUCTURAL ENGINEER TO DESIGN ATTACHMENTS TO THE STRUCTURE, WHICH ARE NOT DETAILED HEREIN, FOR ALL GRAVITY, SEISMIC, AND OTHER APPLICABLE LOADS. THIS APPLIES TO SLAB-MOUNTED GRAVITY LOADS GREATER THAN 400 LBS, AND SUSPENDED LOADS GREATER THAN 20 LBS, AND FIRE SPRINKLER HANGERS AND BRACING.

GENERAL NOTES:
1. THE PROJECT SPECIFICATIONS ARE A PART OF THE CONTRACT DOCUMENTS.
2. THE CONTRACTOR SHALL EXAMINE THE STRUCTURAL DRAWINGS AND SHALL NOTIFY THE CONTRACTING OFFICER OF ANY DISCREPANCIES BEFORE PROCEEDING WITH ANY WORK.
3. THE DRAWINGS AND SPECIFICATIONS REPRESENT THE COMPLETED STRUCTURE. THEY DO NOT INDICATE THE METHOD OF CONSTRUCTION. THE CONTRACTOR SHALL PROVIDE ALL MEASURES AND MEANS NECESSARY TO PROTECT PERSONS AND STRUCTURES DURING CONSTRUCTION. SUCH MEASURES SHALL INCLUDE, BUT NOT BE LIMITED TO BRACING, SHORING, ETC. OBSERVATION BY THE ARCHITECT, ENGINEER OR CONTRACTING OFFICER DOES NOT INCLUDE REVIEW OF THESE MEASURES.
4. NOTES AND DETAILS ON THE STRUCTURAL DRAWINGS TAKE PRECEDENCE OVER GENERAL NOTES. TYPICAL DETAILS SHALL BE USED WHENEVER APPLICABLE. REFER TO SPECIFICATIONS FOR ADDITIONAL INFORMATION.
5. ALL WORK NOT DETAILED OR NOTED SHALL BE CONSTRUCTED IN ACCORDANCE WITH OTHER SIMILAR WORK SHOWN ON THE DRAWINGS AND TYPICAL DETAILS.
6. DIMENSIONS SHALL TAKE PRECEDENCE OVER GENERAL NOTES AND TYPICAL DETAILS. DRAWINGS SHALL NOT BE SCALED FOR CONSTRUCTION PURPOSES.
7. NO PIPES OR DUCTS SHALL BE PLACED IN OR PENETRATE STRUCTURAL MEMBERS UNLESS SPECIFICALLY DESIGNED AND DETAILED. REFER TO ARCHITECTURAL DRAWINGS FOR THE FOLLOWING:
   A. SIZE AND LOCATION OF DOOR AND WINDOW OPENINGS, EXCEPT AS NOTED.
   B. SIZE AND LOCATION OF INTERIOR AND EXTERIOR NONBEARING PARTITIONS.
   C. SIZE AND LOCATION OF CURBS, FLOOR DRAINS, SLOPES, DEPRESSED AREAS, CHANGES IN LEVEL, RAMPS, CHAMFERS GROOVES, INSERTS, ETC.
   D. SIZE AND LOCATION OF FLOOR AND ROOF OPENINGS IF NOT DIMENSIONED ON THESE DRAWINGS.
   E. FLOOR AND ROOF FINISHES.
   F. STAIR FRAMING AND DETAILS EXCEPT AS SHOWN HEREIN.
8. DIMENSIONS NOT SHOWN ON STRUCT DWGS. REFER TO MECHANICAL, PLUMBING, AND ELECTRICAL DRAWINGS FOR THE FOLLOWING:
   A. PIPE RUNS, SLEEVES, HANGERS, EQUIPMENT, SLAB OPENINGS, NOT SHOWN OR NOTED HEREIN.
   B. ELECTRICAL CONDUIT, BOXES, OUTLETS.
   C. CONCRETE INSERTS FOR ELECTRICAL, MECHANICAL, AND PLUMBING FIXTURES.
   D. SIZE AND LOCATION OF MACHINE AND EQUIPMENT BASES. CONTRACTOR'S ENGINEER SHALL DESIGN SEISMIC ANCHORAGE FOR MECHANICAL AND ELECTRICAL EQUIPMENT PER SPEC.

GENERAL NOTES, CONT:
9. COORDINATOR/JOIST MANUFACTURER TO COORDINATE EXACT WEIGHT, WEIGHT DISTRIBUTION, SIZE AND LOCATION OF ROOF MECHANICAL UNITS/DUCTS AND VERIFY SIZE OF OPEN-WEB STEEL JOIST SHOWN ON THE DRAWINGS FOR ADEQUACY OF LOAD CARRYING CAPABILITY OF THE JOIST.
10. ASTM REFERENCES ARE FOR LATEST REVISIONS AND ISSUE, UON.
11. CONTRACTOR MUST INVESTIGATE THE SITE DURING CLEARING AND EXCAVATION FOR UNSUITABLE CONDITIONS. UNCONSOLIDATED AND UNDOCUMENTED FILLS, BURIED STRUCTURES, UTILITIES, ETC AND SHALL IMMEDIATELY NOTIFY THE CONTRACTING OFFICER OF ANY SITE CONDITIONS NOT REFLECTED ON THE DRAWINGS OR DIFFERENT FROM MAXIMUM OR MINIMUM DIMENSIONS INDICATED, INCLUDING CONFLICT IN GRADES, ADVERSE SOIL CONDITIONS, GROUND WATER PRESENT, DEEPENED FOOTINGS, UNCOVERED AND UNEXPECTED UTILITY LINES, ETC.
12. CONSTRUCTION MATERIALS SHALL BE SPREAD OUT IF PLACED ON STRUCTURAL FRAME SUCH THAT THE LOADING DOES NOT EXCEED THE DESIGN LIVE LOADS. PROVIDE SHORING AND BRACING WHERE DESIGN STRENGTH HAS NOT BEEN ATTAINED OR STRUCTURE IS NOT COMPLETE.
13. THE CONTRACTOR SHALL DETERMINE THE LOCATION OF UTILITY SERVICES IN AREAS TO BE EXCAVATED BEFORE BEGINNING EXCAVATION. EXERCISE CAUTION IN EXCAVATING AND TRENCHING.
14. STRUCTURE DWGS TO BE USED IN CONJUNCTION WITH ARCH DWGS HEREIN.

FOUNDATION:
1. FOUNDATION DESIGN IS BASED ON THE FINAL GEOTECHNICAL REPORT PREPARED BY CESPK-ED-G DATED JUNE 2017 FOR A NET ALLOWABLE SOIL BEARING PRESSURE OF 3000 PSF PLUS 1/3 INCREASE FOR WIND AND SEISMIC LOADS.
2. FOOTINGS SHALL BE PLACED ON WEATHERED ROCK OR ON 12" OF SELECT GRANULAR MATERIAL COMPACTED FILL TO 95% ASTM D1557. A MINIMUM OF 1 FOOT OF COMPACTED FILL SHALL BE PLACED BENEATH FOUNDATIONS. THE COMPACTED FILL AND COMPACTED BACKFILL SHALL EXTEND A HORIZONTAL DISTANCE OF AT LEAST 1 FOOT BEYOND THE FOOTPRINT OF THE STRUCTURE.
3. MINIMUM FOOTING DIMENSIONS AND EMBEDMENTS SHALL BE AS SHOWN ON THE PLANS, AND MAY REQUIRE DEEPENING PER DIRECTION OF THE CONTRACTING OFFICER.
4. FOOTINGS SHALL BE CENTERED UNDER COLUMNS AND WALLS UNLESS SHOWN OTHERWISE. WALL FOOTINGS ARE CONTINUOUSLY POURED CONCRETE WITH CONTINUOUS REINFORCING.
5. ALL ABANDONED FOOTINGS AND UTILITIES THAT INTERFERE WITH NEW CONSTRUCTION SHALL BE REMOVED.
6. ALL SITE SOIL WORK SHALL BE DONE UNDER THE DIRECT OBSERVATION OF THE CONTRACTOR'S SOILS ENGINEER, WHO SHALL VERIFY IN WRITING TO THE CONTRACTING OFFICER THAT SITE SOIL WORK COMPLIES WITH ALL OF THE REQUIREMENTS OF THE CONTRACT. SUBMIT REPORTS FROM AN APPROVED TESTING LAB FOR COMPACTION TESTS FOR ALL FILL.
7. THE FOOTING EXCAVATIONS SHALL BE KEPT FREE FROM LOOSE MATERIAL AND STANDING WATER AND SHALL BE NEAT AND TRUE TO LINE BEFORE ANY CONCRETE IS PLACED. EXCAVATION SHALL BE CHECKED AND APPROVED BY THE CONTRACTOR'S SOILS ENGINEER.
8. CONTRACTOR SHALL PROVIDE FOR DE-WATERING OF EXCAVATIONS FROM SURFACE, GROUND, AND OR SEEPAGE WATER.
9. CONTRACTOR SHALL PROVIDE FOR DESIGN AND INSTALLATION OF ALL CRIBBING, SHEATHING AND SHORING REQUIRED TO SAFELY RETAIN ALL GRADES.
10. WHEN CONCRETE IS PLACED AGAINST PREVIOUSLY HARDENED CONCRETE, THE CONTACT SURFACE SHALL BE CLEAN AND FREE OF LAITANCE AND BE ROUGHENED TO A 1/4" AMPLITUDE UNO.

SHOP DWGS:
THE CONTRACTOR SHALL SUBMIT SHOP DRAWINGS PRIOR TO FABRICATION AS REQUIRED BY THE SPECIFICATIONS. LISTS, QUANTITIES AND LENGTHS OF ALL MATERIALS SHALL BE THE RESPONSIBILITY OF THE CONTRACTOR TO ASSURE COMPLIANCE WITH THE PLANS. THE CONTRACTING OFFICER WILL NOT BE RESPONSIBLE FOR REVIEWING QUANTITIES.

SPECIAL INSPECTIONS:
1. SPECIAL INSPECTIONS MUST BE PERFORMED IN ACCORDANCE WITH THE CONTRACT SPECIFICATIONS FOR THE FOLLOWING ELEMENTS:
   A. OPEN-WEB STEEL JOISTS AND JOIST GIRDERS
   B. CONCRETE CONSTRUCTION
   C. SOIL CLASSIFICATION AND COMPACTION BELLOW FOOTINGS.
   D. MASONRY WALL REINFORCEMENT

REINF CONC:
1. AGGREGATES FOR NORMAL WEIGHT CONCRETE SHALL CONFORM TO ASTM C33, 1 1/2" MAXIMUM SIZE AND ACI 318-14 REQUIREMENTS.
2. ALL REINFORCING BARS AND INSERTS TO BE SECURED PRIOR TO PLACING CONCRETE.
3. NO CONDUITS PLACED IN THE SLAB-ON GRADE SHALL HAVE AN OUTSIDE DIAMETER GREATER THAN 1/3 IN THE THICKNESS OF THE SLAB. NO CONDUIT SHALL BE EMBEDDED IN A SLAB THAT IS LESS THAN 3 1/2" THICK. EXCEPT FOR LOCAL OFFSETS, MIN. CLEAR DISTANCE BETWEEN CONDUITS SHALL BE 6".
4. ADMIXTURES MAY NOT BE USED WITHOUT PRIOR APPROVAL OF THE CONTRACTING OFFICER. ADMIXTURES USED TO INCREASE THE WORKABILITY OF THE CONCRETE SHALL NOT REDUCE THE STRENGTH OF CONCRETE.
5. THE MIX DESIGN, INCLUDING PROPORTIONS OF MATERIALS FOR A ONE YARD BATCH, SHALL BE SUBMITTED FOR REVIEW PRIOR TO ORDERING CONCRETE.
6. ARCHITECTURAL STEEL MEMBERS EMBEDDED IN CONCRETE SHALL BE GALVANIZED. ALL DAMAGED GALVANIZED AREAS SHALL BE REPAIRED PRIOR TO EMBEDMENT.
7. NORMAL WEIGHT AND LIGHT WEIGHT CONCRETE SHALL HAVE A DRY UNIT WEIGHT OF 145 PCF, AND 115 PCF, RESPESTIVELY.
8. MINIMUM CONCRETE COMPRESSIVE STRENGTHS AT 28 DAYS, BE AS FOLLOWS:

TYPE	
SLABS ON GRADE	4000 PSI
FOOTINGS	4000 PSI
GRADE BEAMS	4000 PSI
VEHICLE BOX CULVERT	4500 PSI
OTHER CONC	4000 PSI

9. WATER/CEMENT RATIO SHALL BE 0.45, BY WEIGHT.
10. REINFORCE OPENINGS W/ DIAGONAL BARS PER TYPICAL DETAILS HEREIN.
11. PROVIDE JOINTS IN SLAB ON GRADE AND CONCRETE FLOOR TOPPINGS AS SHOWN ON PLANS UNLESS SPECIFIED OTHERWISE. LOCATION OF JOINTS NOT SPECIFICALLY INDICATED SHALL BE REVIEWED BY THE CONTRACTING OFFICER PRIOR TO PLACING REINFORCING STEEL.
12. NON-SHRINK GROUT SHALL HAVE A MINIMUM COMPRESSIVE STRENGTH AT 28 DAYS OF 7000 PSI PER ASTM C-109. GROUTING OF BASE PLATES PRIOR TO PLUMBING OF COLUMN WILL NOT BE PERMITTED.
13. PROJECTING CORNERS OF SLABS, BEAMS, WALLS, COLUMNS, ETC., SHALL BE FORMED WITH A 3/4" CHAMFER UNLESS OTHERWISE NOTED.
    SEE REINF STL NOTES FOR TYP ICF WALL REINF REQUIREMENTS

REINF STEEL:
1. DETAILING, FABRICATION AND ERECTION OF REINFORCING BARS SHALL FOLLOW ACI DRAFTING MANUAL (2004) DETAILS AND DETAILING OF CONCRETE REINFORCEMENT.
2. ALL REINFORCING BARS SHALL CONFORM TO ASTM A615 GRADE 60. REINFORCING BARS TO BE WELDED SHALL CONFORM TO ASTM A706 GRADE 60.
3. WHERE CONTINUOUS BARS ARE CALLED OUT, SPLICES MAY BE USED. LAPS AT BAR SPLICES SHALL BE AS NOTED ON S-502.
4. ALL REINF BAR BENDS SHALL BE MADE COLD.
5. VERTICAL BARS SHALL BE ACCURATELY POSITIONED AT THE CENTER OF THE WALL UON ON DETAILS, AND SHALL BE ADEQUATELY HELD IN PLACE AT TOP AND BOTTOM.
6. DOWELS BETWEEN FOOTINGS AND WALLS SHALL BE THE SAME GRADE, SIZE, AND SPACING AS VERTICAL REINFORCING.
7. ALL REINFORCING BARS SHALL BE PROVIDED WITH THE FOLLOWING CONCRETE COVER UON:
   A. CONCRETE CAST AGAINST AND PERMANENTLY EXPOSED TO EARTH, 3" COVER.
   B. CONCRETE EXPOSED TO EARTH OR WEATHER NO.6 THROUGH NO.18 BAR, 2" COVER. NO.5 BAR, W31 OR D31 WIRE AND SMALLER 1 1/2" COVER.
   C. CONCRETE NOT EXPOSED TO WEATHER OR IN CONTACT WITH GROUND. NO.14 AND NO.18 BAR 1 1/2", NO.11 BAR AND SMALLER, 3/4" COVER.
   D. BEAMS, COLUMNS, PRIMARY REINFORCEMENT, TIES, STIRRUPS, SPIRALS, 1 1/2" COVER.
8. SLAB ON GRADE REINF SHALL BE POSITIONED AS INDICATED. PROVIDE #4 SPACER TIES AT 2'-6" OC IN ALL GRADE BEAMS AND FOOTINGS TO SECURE REINF BARS IN PLACE, UON.
9. SHOP DRAWINGS SHOWING SIZE AND LAYOUT OF REINFORCING BARS SHALL BE SUBMITTED FOR REVIEW.

STEEL JOIST NOTES:
1. THE JOIST (OPEN WEB JOIST AND JOIST GIRDER SEAT (JOIST BEARING) MUST EXTEND A DISTANCE OF NOT LESS THEN RECOMMENDED BY THE STEEL JOIST INSTITUTE (SJI) FOR BEARING ON STEEL AND CONCRETE SUPPORTS (UON)
2. JOIST BRIDGING SHALL BE DESIGNED AND INSTALLED IN ACCORDANCE WITH THE PROVISIONS OF THE STEEL JOIST INSTITUTE SPECIFICATIONS.
3. DO NOT SUSPEND ANY DUCTS OR OTHER EQUIPMENT FROM JOIST BRIDGING OR FROM STEEL ROOF DECK.
4. DEPTH OF JOIST SEAT SHALL BE DETERMINED BY JOIST MANUFACTURERS (UON)
5. THE DEFLECTION DUE TO THE DESIGN LIVE LOADS MUST NOT EXCEED THE FOLLOWING:
   FLOORS: L /360 OF SPAN
   ROOFS: L /240 OF SPAN
6. DESIGN, FABRICATIONS AND ERECTION OF OPEN WEB JOISTS AND JOIST GIRDERS MUST CONFORM TO THE STANDARD SPECIFICATIONS AND LOAD TABLES FOR STEEL JOIST AND JOIST GIRDER - (LATEST EDITION) OF THE STEEL JOIST INSTITUE (SJ)
7. JOIST MANUFACTURER IS TO PROVIDE ALL ANCHORS AND FASTENERS REQUIRED FOR INSTALLATION OF JOIST, BRIDGING AND BOTTOM CHORD EXTENSIONS.
8. NO LOADS MAY BE APPLIED TO THE JOIST UNTIL BRIDGING HAS BEEN COMPLETELY INSTALLED AND THE JOIST HAVE BEEN SECURED TO THEIR SUPPORTS.
9. STEEL JOIST MANUFACTURER IS TO PROVIDE ADDITIONAL CHORD BRIDGING AS REQUIRED FOR UPLIFT LOADS SHOWN ON S-001.
10. STEEL JOIST MANUFACTURER TO VERIFY SIZE, LOCATION AND WEIGHT OF ALL SUPPORTED MECHANICAL UNITS AND ASSOCIATED OPENINGS PRIOR TO DESIGN AND FABRICATION. JOISTS.
11. SEE WIND UPLIFT DIAGRAM ON S-001 FOR ADDITIONAL INFORMATION.

STRUCT STEEL:
1. ALL STRUCT STL WORK SHALL BE PERFORMED IN ACCORDANCE WITH AISC SPECIFICATIONS:
(A) "CODE OF STANDARD PRACTICE FOR STEEL BUILDINGS AND BRIDGES", AISC 303-16.
(B) "SPECIFICATION FOR STRUCTURAL STEEL BUILDINGS", AISC 360-16.
2. W-SHAPES SHALL CONFORM TO ASTM A992 UON. OTHER SHAPES SHALL CONFORM TO ASTM A36 UON.
3. ALL CONNECTIONS SHALL BE DETAILED ACCORDING TO AISC PUBLICATION "DETAILING FOR STEEL CONSTRUCTION."
4. ALL BOLTS SHALL CONFORM TO ASTM A325 (N) UON.
5. U.O.N. ANCHOR BOLTS, SHALL CONFORM TO ASTM F1554 GRADE 36.
6. ALL STEEL PIPE SECTIONS SHALL CONFORM TO ASTM A 53 GRADE B, 35 KSI.
7. ALL HSS SHALL CONFORM TO ASTM A 500 GRADE B, 46 KSI.
8. ALL STEEL PLATES SHALL CONFORM TO ASTM A36.
9. ALL COLUMN ENDS TO BE MILLED.
10. ALL EXTERIOR STRUCTURAL STEEL AND CONNECTORS PERMANENTLY EXPOSED TO WEATHER SHALL BE HOT-DIP GALVANIZED AFTER FABRICATION. GALVANIZING FOR IRON AND STEEL PRODUCTS SHALL CONFORM TO ASTM A 123. GALVANIZING FOR IRON AND STEEL HARDWARE SHALL CONFORM TO ASTM A 153. ALL AREAS DAMAGED, UNCOATED OR WELDED AFTER HOT-DIP GALVANIZING SHALL BE REPAIRED PER ASTM A 780.
11. STEEL FABRICATOR SHALL VERIFY ALL DIMENSIONS WITH ARCHITECTURAL AND STRUCTURAL DRAWINGS.
12. SUBMIT SHOP DRAWINGS TO THE CONTRACTING OFFICER FOR REVIEW PRIOR TO FABRICATION OR INSTALLATION OF STEEL OR ACCESSORIES.
13. STRUCTURAL STEEL SHALL BE DELIVERED TO THE JOB SITE FREE OF EXCESSIVE RUST, MILL SCALE, GREASE, AND OTHER DELETERIOUS SUBSTANCES, AND SHALL BE SHOP PRIMED.

LIGHT GAGE COLD-FORMED STEEL:
1. MATERIAL STRENGTHS:
   16 GA. AND HEAVIER, Fy = 50 KSI
   18 GA. AND LIGHTER, Fy = 33 KSI
2. COLD - FORMED STEEL MEMBERS SHALL BE INTERCONNECTED WITH SCREW FASTENERS OR BY WELDING. THE USE OF PNEUMATIC NAILING IS PERMITTED ONLY FOR THE CONNECTION OF COLD-FORMED MEMBERS TO MEMBERS MADE OF OTHER MATERIALS.
3. STRUCTURAL WALL STUDS SHALL BE DESIGNED IN ACCORDANCE WITH CURRENT AISI S211 OR AISI S100 CRITERIA.

WELDING:
1. ALL WELDING SHALL BE IN ACCORDANCE WITH THE PROVISIONS OF THE AMERICAN WELDING SOCIETY CODE AWS-D1.1 LATEST EDITION.
2. ALL WELDING SHALL BE DONE BY CERTIFIED WELDERS.
3. ALL WELDING SHALL BE DONE BY THE SHIELDED ARC PROCESS USING APPROVED ELECTRODES PER AWS SPEC E70XX (LOW HYDROGEN ELECTRODES).

WELDING, CONT:
4. ALL WELDS SHALL HAVE A WELD CONTROLLED SEQUENCE AND TECHNIQUE IN ORDER TO MINIMIZE SHRINKAGE STRESSES AND DISTORTION.
5. ALL ELECTRODE FILLER MATERIAL SHALL BE A MINIMUM OF E70XX. FILLER METAL TOUGHNESS FOR CJP GROOVE WELDS SHALL HAVE A CVN TOUGHNESS OF 20 FOOT-POUNDS AT ZERO DEG FAHRENHEIT AND COMPLY WITH AWS FILLER METAL SPECS. WELD ELECTRODES IDENTIFIED AS E70T-4 OR 120 WILL NOT MEET THIS TOUGHNESS REQUIREMENT AND SHALL NOT BE USED IN COMPLETE OR PARTIAL PENETRATION GROOVE WELDS.
6. WELDING OF REINFORCING BARS TO BE IN ACCORDANCE WITH AWS DI.4. REINFORCING STEEL TO BE WELDED SHALL HAVE A CE NOT EXCEEDING 0.55.
7. WELDING OF SHEET METAL SHALL BE IN ACCORDANCE WITH IBC CHAPTER 22 AND AWS D1.3, SECTION A6.

REINF UNIT MASONRY:
1. ALL MASONRY WORK SHALL CONFORM TO IBC 2015, DESIGN STRENGTH f'm= 2500 PSI. ALL CELLS ARE TO BE FILLED SOLID WITH GROUT. TYP WALL REINFORCEMENT IS (1) #5 VERTICAL CENTERED IN WALL AT 32" O.C. AND (2) #5 HORIZONTAL AT 48" O.C. SPACED 2.5" APART AND CENTERED IN BOND BEAM. LINTELS, OPENINGS, CORNERS AND SPECIAL CONDITION REINF PER DETAILS.
2. CONCRETE MASONRY UNITS SHALL BE MEDIUM WEIGHT IN ACCORDANCE WITH ASTM C-90 WITH MAXIMUM LINEAR SHRINKAGE OF 0.06% (Fm=1900 psi MINIMUM).
3. CEMENT SHALL BE AS SPECIFIED FOR CONCRETE. MASONRY CEMENT SHALL NOT BE USED. MORTAR SHALL BE TYPE "S" CONFORMING TO ASTM C270 WITH A COMPRESSIVE STRENGTH OF 1800 psi AT 28 DAYS. CONTRACTOR SHALL VERIFY REQUIRED STRENGTH BY TAKING PRISM TESTS.
4. MORTAR JOINTS SHALL BE STRAIGHT, CLEAN AND UNIFORM IN THICKNESS, AND SHALL BE TOOLED. UNLESS OTHERWISE SPECIFIED OR DETAILED ON THE PLANS HORIZONTAL AND VERTICAL MORTAR JOINTS SHALL BE 3/8" THICK WITH FULL MORTAR COVERAGE ON THE FACE SHELL.
5. OVERHANGING MORTAR, DROPPINGS AND ALL DEBRIS SHALL BE REMOVED FROM ALL CELLS PRIOR TO RECEIVING GROUT. FAILURE TO REMOVE SAME SHALL BE CAUSE FOR REJECTION OF WALL AND ALL REPAIR OR REWORK NECESSARY SHALL BE ENTIRELY AT CONTRACTOR'S EXPENSE.
6. VERTICAL HEAD JOINTS SHALL NOT BE PERMITTED.
7. GROUT SHALL BE COMPOSED OF THE FOLLOWING RATIO BY VOLUME: 1 PART PORTLAND CEMENT, 3 PARTS SAND, 2 PARTS PEA GRAVEL, AND SUFFICIENT WATER FOR POURING WITHOUT SEGREGATION OF GROUT CONSTITUENTS, MIN. COMPRESSIVE STRENGTH OF GROUT SHALL BE 2,000 PSI AT 28 DAYS.
8. AGGREGATE FOR GROUT SHALL CONFORM TO ASTM C404, AND ASTM C144 FOR MASONRY MORTAR.
9. ALL GROUT SHALL BE CONSOLIDATED WITH A MECHANICAL VIBRATOR. MINIMUM 4000 RPM, 3/4" MAX DIA HEAD. PROVIDE INSPECTION AND CLEAN OUT HOLES AT THE BASE OF GROUTED CELLS. MAX LIFT HEIGHT 5 FEET.
10. WHEN GROUTING IS STOPPED FOR ONE HOUR OR LONGER, HORIZONTAL CONSTRUCTION JOINTS SHALL BE FORMED BY STOPPING THE GROUT POUR 1 1/2" BELOW TOP OF THE UPPERMOST UNIT.
11. ALL MASONRY SHALL BE CONSTRUCTED WITH A RUNNING BOND UON.
12. ELECTRIC CONDUIT BOXES AND/OR OTHER OBSTRUCTIONS ARE NOT PERMITTED IN CELLS CONTAINING REINFORCING, UNLESS APPROVED BY THE CONTRACTING OFFICER.
13. ALL HORIZONTAL BARS SHALL BE PLACED IN BOND BEAM UNITS.
14. ALL LAP SPLICES OF REINFORCING STEEL IN MASONRY SHALL BE AS INDICATED ON THE PLANS. VERTICAL BARS ARE TO BE TIED OR OTHERWISE FIXED IN POSITION AT INTERVALS OF NOT MORE THAN 192 BAR DIA AND AT TOP AND BOTTOM.
15. VERTICAL BARS IN WALLS ARE TO BE PLACED IN CENTER OF WALL UON.

REINF UNIT MASONRY, CONT:
16. ANCHOR BOLTS, RODS AND INSERTS SHALL BE SET WITH TEMPLATES AND HELD IN PLACE PRIOR TO GROUTING. PROVIDE AT LEAST ONE INCH OF GROUT BETWEEN ANCHOR BOLT AND MASONRY FACE SHELL.
17. PROVIDE A MINIMUM OF ONE BAR DIAMETER OF GROUT BETWEEN MAIN REINFORCING AND MASONRY UNITS. PROVIDE A MINIMUM OF 1" GROUT AROUND ALL BOLTS EMBEDDED IN MASONRY.
18. ALL MASONRY SHALL BE CONSTRUCTED WITH SINGLE OR DOUBLE OPEN END MASONRY UNITS.

USE OF POWDER DRIVEN FASTENERS IN REINFORCED CONCRETE:
1. FASTENERS SHALL HAVE ICBO APPROVAL FOR THE TYPE OF CONCRETE AND TYPE OF APPLICATION USED ON THE PROJECT.
2. THE CONTRACTOR'S SPECIAL INSPECTOR SHALL PREQUALIFY THE TOOL OPERATOR AND FASTENERS. THE SPECIAL INSPECTOR SHALL OBSERVE THE TESTING OF THE FIRST TEN FASTENER INSTALLATIONS. A TEST `PULLOUT' LOAD OF NOT LESS THAN TWICE THE MANUFACTURE'S ALLOWABLE DESIGN LOAD OR 200 LBS, WHICHEVER IS GREATER, SHALL BE APPLIED TO THE FASTNER. THE FASTNER SHALL NOT PULL OUT OF THE CONCRETE AND THE CONCRETE SURROUNDING THE FASTNER SHALL NOT SPALL OR FAIL IN ANY WAY. THEREAFTER RANDOM TESTS UNDER THE SPECIAL INSPECTOR'S SUPERVISION SHALL BE MADE OF APPROXIMATELY ONE IN TEN FASTNERS. SHOULD FAILURE OCCUR ON ANY FASTNER TESTED, ALL FASTNERS SHALL BE TESTED AND FAILED FASTNERS REPLACED.
3. WHEN INSTALLING POWDER DRIVEN FASTNERS IN EXISTING NON-PRESTRESSED REINFORCED CONCRETE, USE CARE AND CAUTION TO AVOID CUTTING OR DAMAGE TO THE EXISTING REINFORCING BARS. MAINTAIN A MINIMUM CLEARANCE OF ONE INCH BETWEEN THE REINFORCEMENT AND THE FASTNER.

METAL DECKING:
1. METAL DECKING SHALL BE OF THE TYPE AND GAUGE AS INDICATED ON THE DRAWINGS AND SHALL BE INSTALLED IN ACCORDANCE WITH THE MANUFACTURER'S RECOMMENDATIONS.
2. METAL DECK ACCESSORIES SHALL BE FORMED FROM STEEL SHEETS CONFORMING TO ASTM A-611, GRADE C OR ASTM A-446 GRADE A OR E. THE FINISH SHALL BE ZINC COATING CONFORMING TO ASTM A-525, CLASS G-60.
3. CONCRETE ADMIXTURES CONTAINING CHLORIDE OR CHLORIDE SALTS SHALL NOT BE USED.
4. METAL DECK SHOP DRAWINGS SHALL BE SUBMITTED TO THE CONTRACTING OFFICER FOR REVIEW PRIOR TO FABRICATION.
5. CONTRACTOR SHALL CUT DECK PER STRUCTURAL DETAILS AT ALL COLUMN OPENINGS AND ALL REQUIRED PENETRATIONS, AND SHALL SUPPLY ALL NECESSARY ACCESSORY ITEMS SUCH AS CLOSURES, INSULATION CLIPS, AND ROOF SUMP RECESSES. ALL ACCESSORIES SHALL BE GALVANIZED, FURNISHED AND INSTALLED AS REQUIRED.
6. HANGERS SUPPORTED BY METAL DECKING ONLY, OR METAL DECKING WITH INSULATING FILL, SHALL BE ATTACHED TO STEEL BARS 3/8" ROUND X 12" OR 1/8"x12" FLAT. BARS SHALL BE PLACED PERPENDICULAR TO FLUTES. ONLY LIGHTWEIGHT ITEMS (DUCTWORK 12"x16" MAX, PIPING 1 1/2" DIA MAX, OR CEILING) WEIGHING 40 LBS OR LESS MAY BE HUNG IN THIS MANNER. HANGERS MUST BE TWO FLUTES APART ON THE SAME SPAN.
7. HANGERS SUPPORTED BY METAL DECK WITH STRUCTURAL CONCRETE FILL SHALL BE INSTALLED USING ICBO APPROVED ANCHORAGE SYSTEMS. SUCH HANGERS SHALL BE USED TO SUPPORT DUCT WORK (15"x16" MAX.) PIPING 4" ROUND MAX., OR CEILINGS. HANGERS MUST BE AT LEAST TWO FLUTES APART ON THE SAME DECK SPAN. LARGER DUCTWORK AND PIPING SHALL BE SUPPORTED BY STRUCTURAL BEAMS SPANNING BETWEEN JOISTS OR COLUMNS.

US Army Corps of Engineers ®

MARK	DESCRIPTION	DATE

DESIGNED BY: ASJ
DRAWN BY: ALR
CHECKED BY: BN
SUBMITTED BY: KS WIRE OWNERS
SIZE: E1 FILE SIZE: E1
ANSI D
ISSUE DATE: 13 JULY 2020
PROJECT # 233-25-0665
SPEC # 2145
FILE NUMBER:
FILE NAME: WIRES_GTEB

US ARMY CORPS OF ENGINEERS
SACRAMENTO DISTRICT
US DEPT OF ARMY

SACRAMENTO DISTRICT
IN-HOUSE DESIGN
1325 J STREET
SACRAMENTO, CA 95814

GROUND TRANSPORT EQUIPMENT BUILDING

GENERAL STRUCTURAL NOTES

SHEET ID
S-002

DESIGN SUBMITTAL: RTA

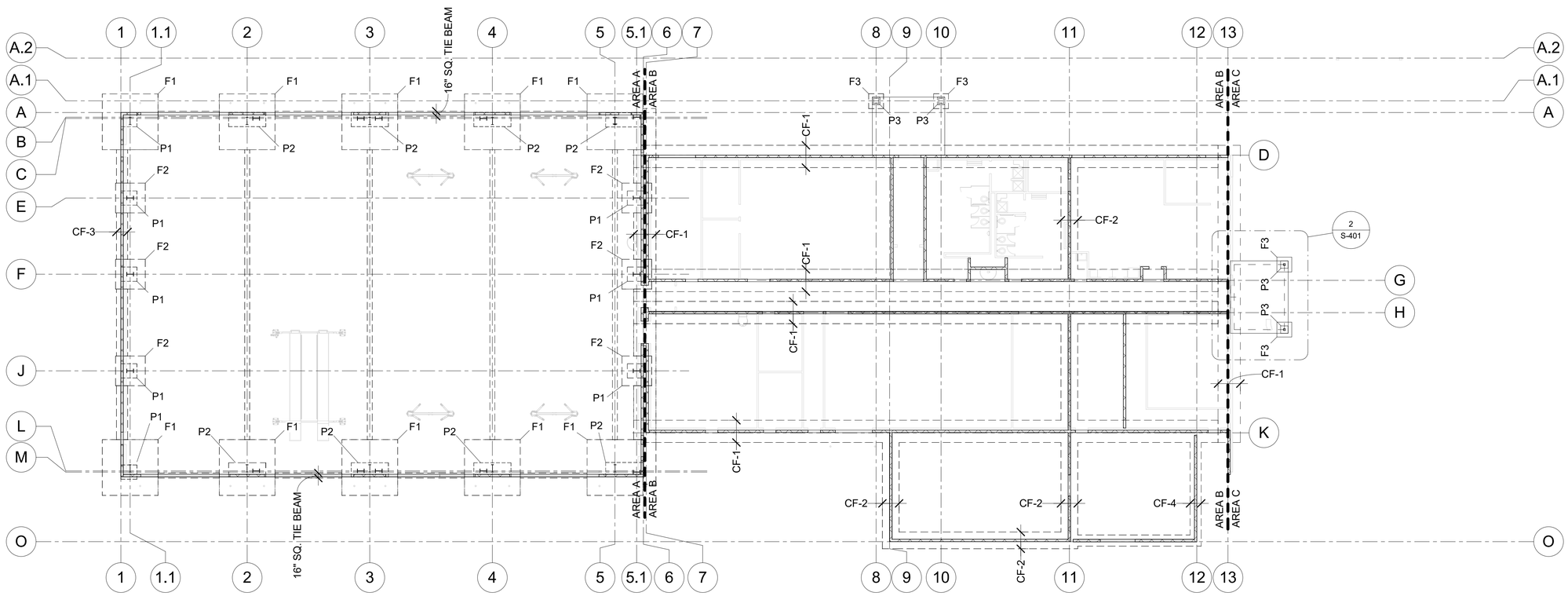

1
S-101

FOUNDATION OVERALL PLAN (BASE BID)

1/16" = 1'-0"

US Army Corps of Engineers ®

MARK	DESCRIPTION	DATE

DESIGNED BY: Designer
DRAWN BY: Author
CHECKED BY: Checker
SUBMITTED BY:
SIZE: ANSI D'
FILE NAME: WBSS_GTEB
ISSUE DATE: 13 JULY 2020
PROJECT # 233-25-0665
SPEC # 2145
FILE NUMBER:

US ARMY CORPS OF ENGINEERS
SACRAMENTO DISTRICT
US DEPT OF ARMY

SACRAMENTO DISTRICT
IN-HOUSE DESIGN
1325 J STREET
SACRAMENTO, CA 95814

GROUND TRANSPORT EQUIPMENT BUILDING

OVERALL FOUNDATION PLAN (BASE BID)

SHEET ID

S-101

S-101-

DESIGN SUBMITTAL: RTA

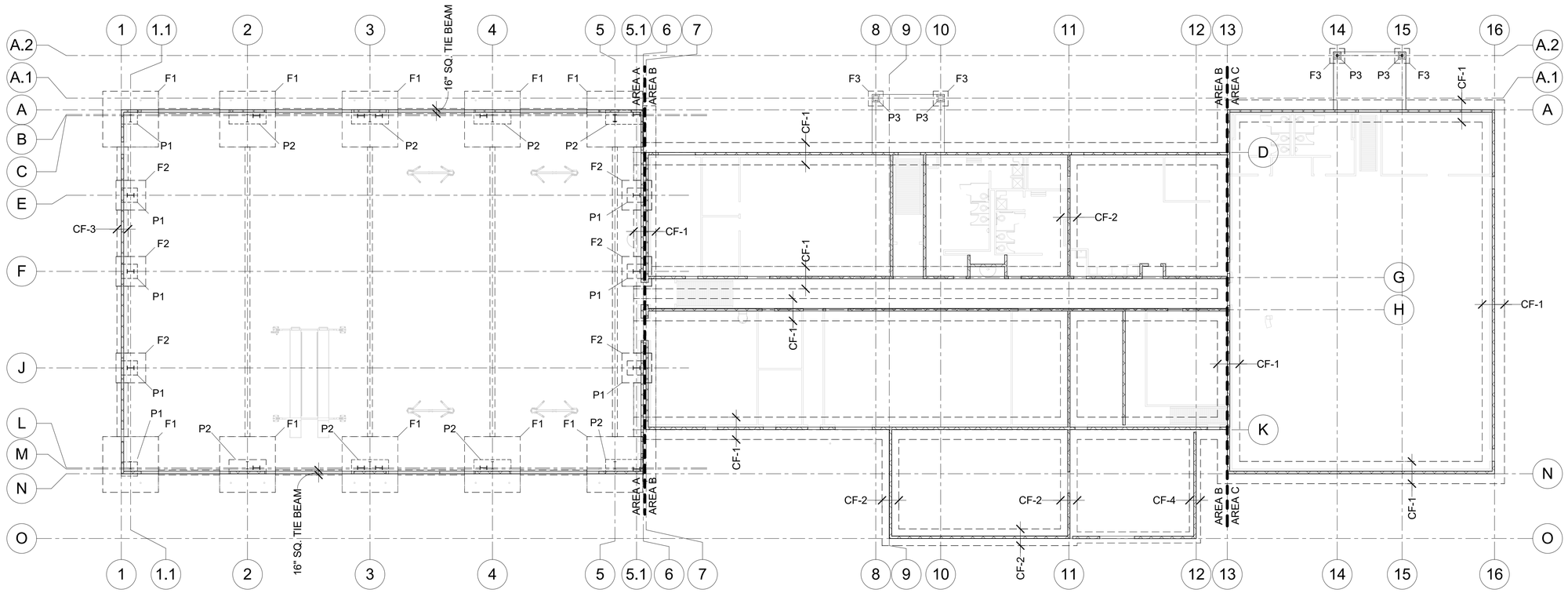

1 S-102 FOUNDATION OVERALL PLAN (BID OPTION 3)

1/16" = 1'-0"

AREA

'A' 'B' 'C'

16' 0 16' 32'

SCALE: 1/16" = 1' - 0"

PLAN NORTH

US Army Corps of Engineers ®

MARK	DESCRIPTION	DATE

DESIGNED BY: ASJ
DRAWN BY: ALR
CHECKED BY: BN
SUBMITTED BY: MIKE OWES
SIZE: ANSI 'D'
FILE NAME: W9SS_GTEB

ISSUE DATE: 13 JULY 2020
PROJECT # 233-25-0665
SPEC # 2145
FILE NUMBER:

US ARMY CORPS OF ENGINEERS
SACRAMENTO DISTRICT
US DEPT OF ARMY

SACRAMENTO DISTRICT
IN-HOUSE DESIGN
1325 J STREET
SACRAMENTO, CA 95814

GROUND TRANSPORT EQUIPMENT BUILDING

OVERALL FOUNDATION PLAN (BID OPTION 3)

SHEET ID

S-102

S S-102-

DESIGN SUBMITTAL: RTA

NOTES:

1. FINISH FLOOR ELEVATION = 0'-0", U.O.N.
2. SEE SHEET S-601 FOR FOOTING AND SLAB-ON-GRADE SCHEDULE
3. COORDINATE DOOR OPENING WITH ARCHITECTURAL DWGS.
4. COORDINATE WITH ELEC. FOR GROUNDING POINTS.
5. CMU WALL PIERS FOUNDED ON SPREAD FOOTINGS, SEE PEDESTAL DETAILS.

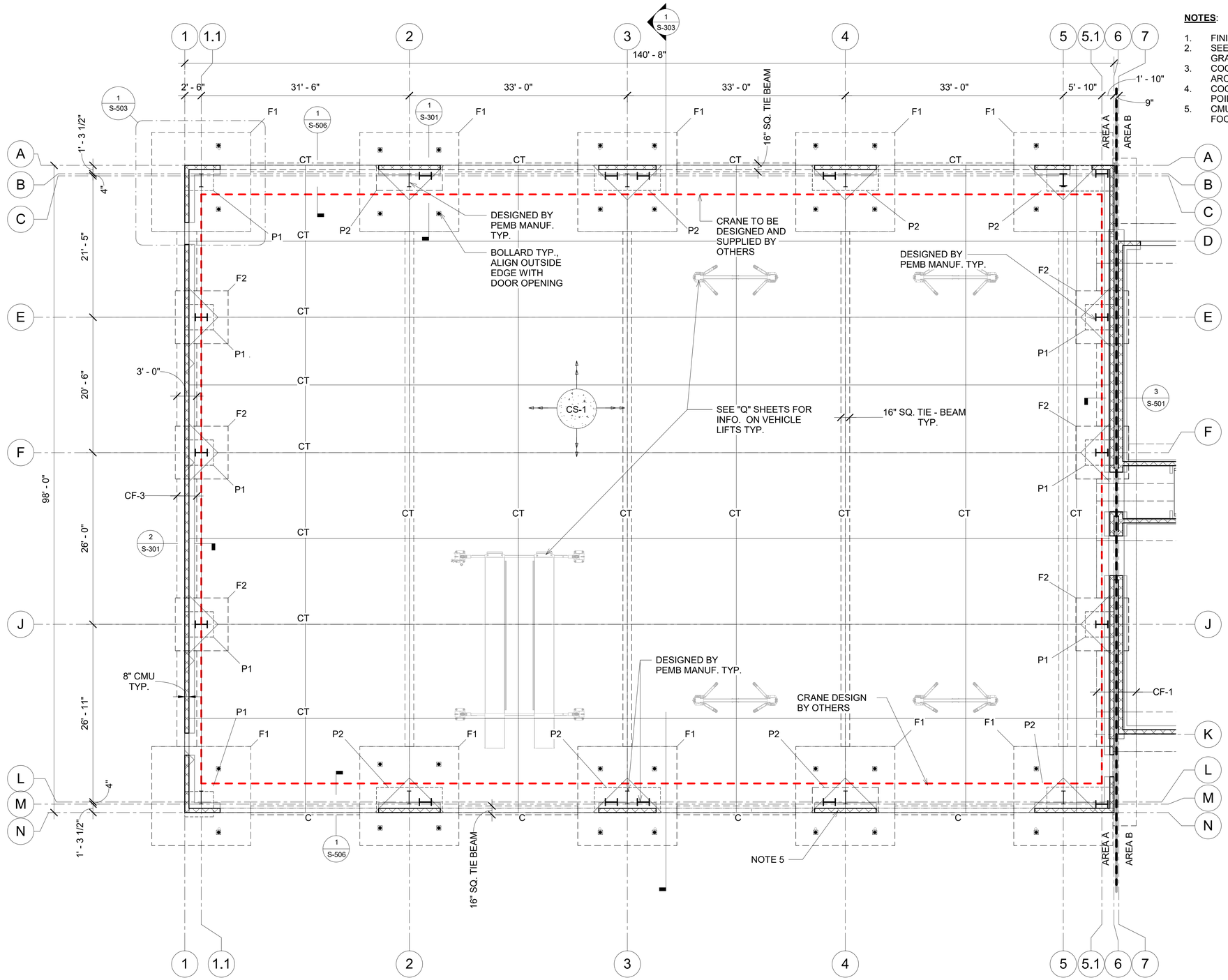

1 S-103 FOUNDATION PLAN AREA A

1/8" = 1'-0"

8' 0 8' 16'

SCALE: 1/8" = 1' - 0"

AREA 'A'

US Army Corps of Engineers ®

MARK	DESCRIPTION	DATE

DESIGNED BY: ASJ
DRAWN BY: ALR
CHECKED BY: BN
SUBMITTED BY: SUPVR OWNES
SIZE: FILE SIZE:
ANSI D'
ISSUE DATE: 13 JULY 2020
PROJECT # 233-25-0665
SPEC # 2145
FILE NUMBER:
FILE NAME: WISS_GTEB

US ARMY CORPS OF ENGINEERS
SACRAMENTO DISTRICT
US DEPT OF ARMY

SACRAMENTO DISTRICT
IN-HOUSE DESIGN
1325 J STREET
SACRAMENTO, CA 95814

GROUND TRANSPORT EQUIPMENT BUILDING

FOUNDATION PLAN AREA A

SHEET ID

S-103

S S-103-

DESIGN SUBMITTAL: RTA

NOTES:

1. FINISH FLOOR ELEVATION = 0'-0", U.N.O.
2. SEE SHEET S-601 FOR FOOTING AND SLAB-ON-GRADE SCHEDULE
3. COORDINATE DOOR OPENING AND PARTITIONS WITH ARCHITECTURAL DWGS.
4. COORDINATE RECESSED FOOT GRILLE WITH ARCHITECTURAL DWGS AND MANUFACTURER.

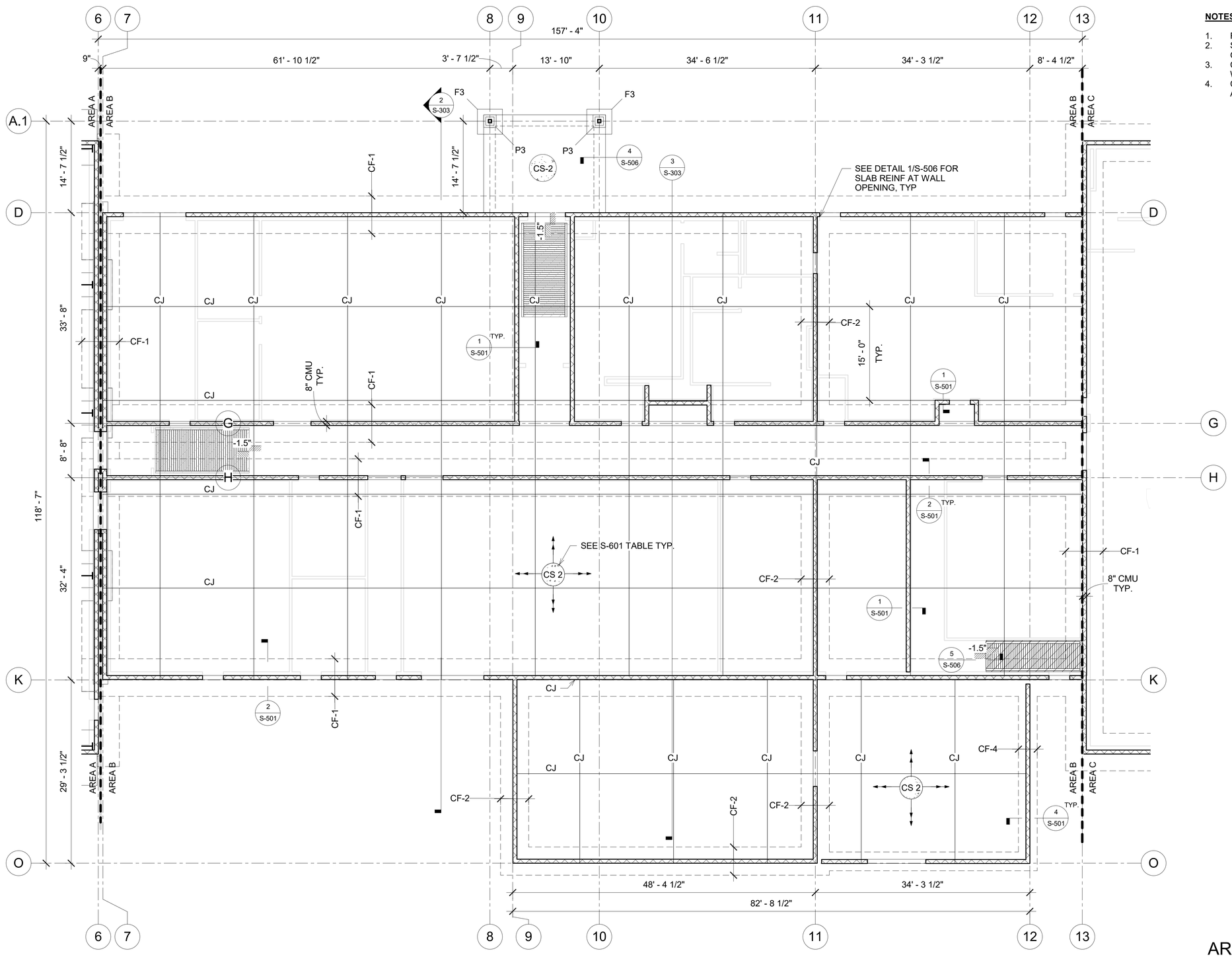

1 S-104 FOUNDATION PLAN AREA B

1/8" = 1'-0"

AREA 'B'

8' 0 8' 16'

SCALE: 1/8" = 1' - 0"

US Army Corps of Engineers ®

MARK	DESCRIPTION	DATE

ISSUE DATE: 13 JULY 2020
PROJECT # 233-25-0665
SPEC # 2145
FILE NUMBER:

DESIGNED BY: ASJ
DRAWN BY: ALR
CHECKED BY: BN
SUBMITTED BY: /S/ MIKE OWENS
SIZE: FILE NAME: ANSI D WSS_GTEB

US ARMY CORPS OF ENGINEERS
SACRAMENTO DISTRICT
US DEPT OF ARMY

SACRAMENTO DISTRICT
IN-HOUSE DESIGN
1325 J STREET
SACRAMENTO, CA 95814

GROUND TRANSPORT EQUIPMENT BUILDING

FOUNDATION PLAN AREA B

SHEET ID

S-104

S S-104-

DESIGN SUBMITTAL: RTA

NOTES:

1. FINISH FLOOR ELEVATION = 0'-0", U.N.O.
2. SEE SHEET S-601 FOR FOOTING AND SLAB-ON-GRADE SCHEDULE
3. COORDINATE DOOR OPENING AND PARTITIONS WITH ARCHITECTURAL DWGS.
4. COORDINATE RECESSED FOOT GRILLE WITH ARCHITECTURAL DWGS AND MANUFACTURER.

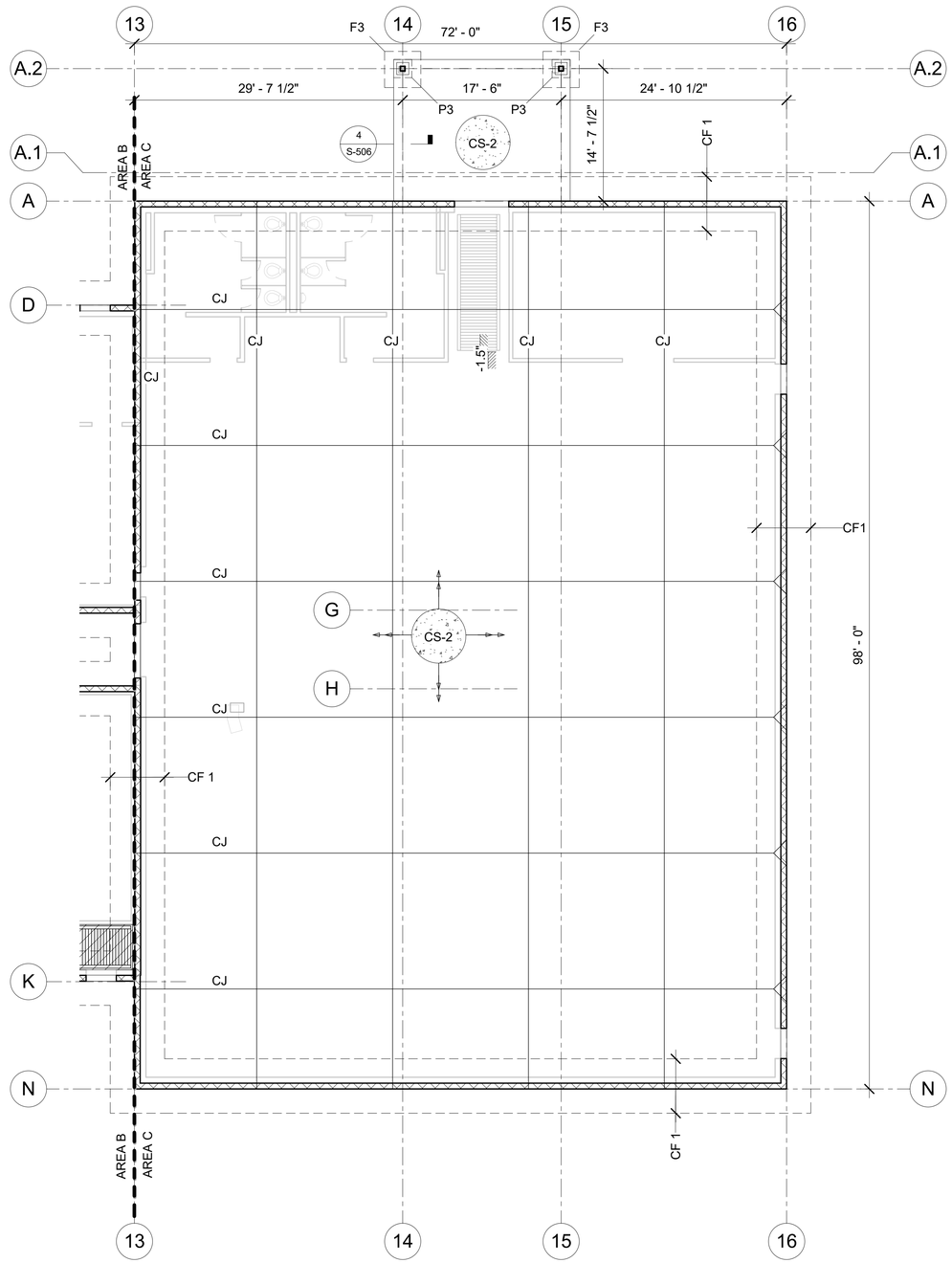

1 S-105 FOUNDATION PLAN AREA C (BID OPTION 3)

1/8" = 1'-0"

AREA

'C

8' 0 8' 16'

SCALE: 1/8" = 1' - 0"

PLAN NORTH

US Army Corps of Engineers ®

MARK	DESCRIPTION	DATE

ISSUE DATE: 13 JULY 2020
PROJECT # 233-25-0665
SPEC # 2145
FILE NUMBER:

DESIGNED BY: ASJ
DRAWN BY: EM
CHECKED BY: BN
SUBMITTED BY: ISMAIL ONWS
SIZE: FILE NAME: ANSI D: W65S_GTEB

US ARMY CORPS OF ENGINEERS
SACRAMENTO DISTRICT
US DEPT OF ARMY

SACRAMENTO DISTRICT
IN-HOUSE DESIGN
1325 J STREET
SACRAMENTO, CA 95814

GROUND TRANSPORT EQUIPMENT BUILDING

FOUNDATION PLAN AREA C (BID OPTION 3)

SHEET ID

S-105

DESIGN SUBMITTAL: RTA

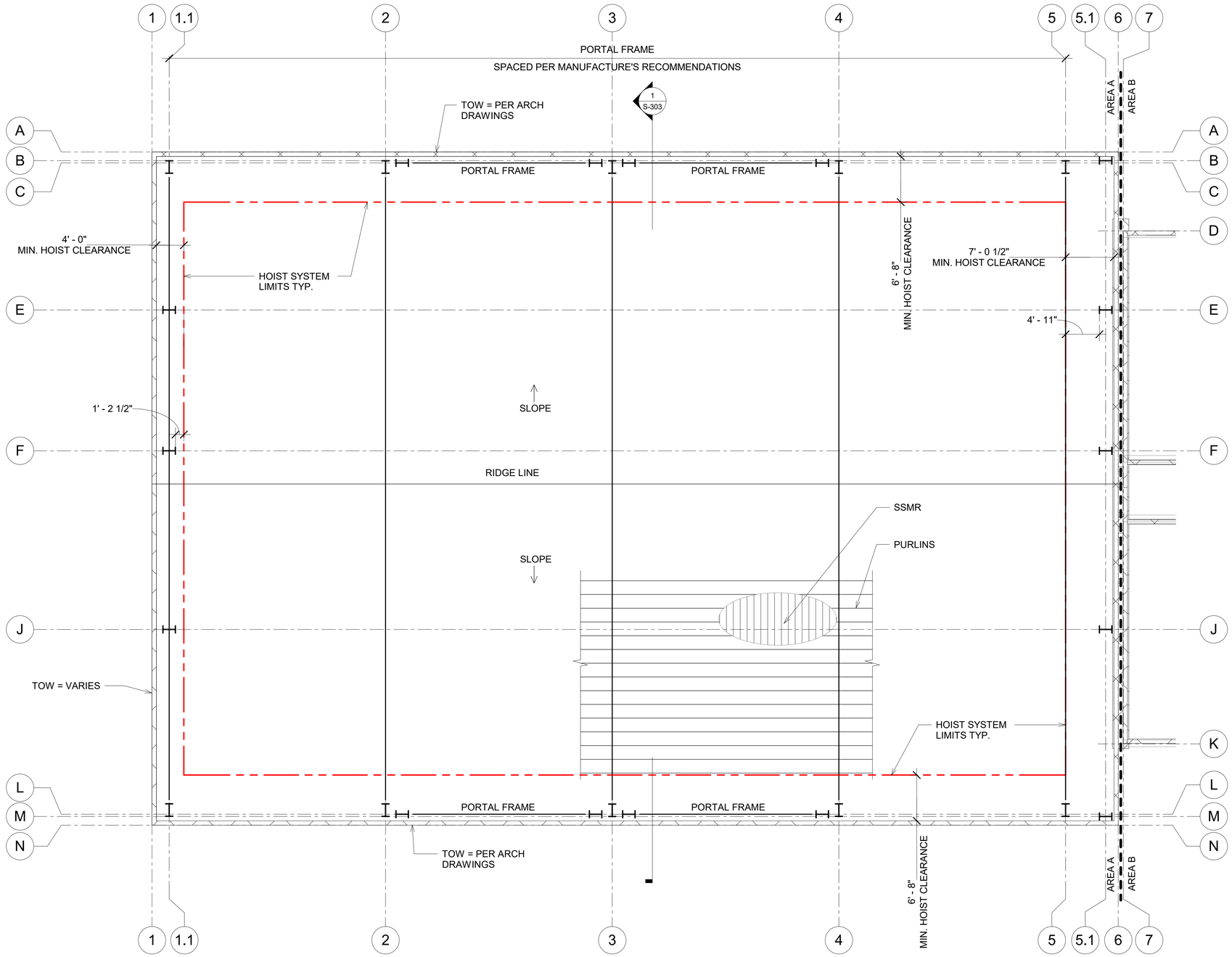

NOTES:

1. ROOF FRAMING PER PEMB MANUFACTURER.

1 S-106 ROOF AREA A

1/8" = 1'-0"

AREA

'A'

8' 0 8' 16'

SCALE: 1/8" = 1' - 0"

PLAN NORTH

US Army Corps of Engineers ®

MARK	DESCRIPTION	DATE

ISSUE DATE: 13 JULY 2020
PROJECT # 233-25-0665
SPEC # 2145
FILE NUMBER:

DESIGNED BY: ASJ
DRAWN BY: ALR
CHECKED BY: BN
SUBMITTED BY: SI/ MIKE DINKESS
SIZE: FILE NAME: ANSI D' WISS_GTEB

US ARMY CORPS OF ENGINEERS
SACRAMENTO DISTRICT
US DEPT OF ARMY

SACRAMENTO DISTRICT
IN-HOUSE DESIGN
1325 J STREET
SACRAMENTO, CA 95814

GROUND TRANSPORT EQUIPMENT BUILDING

ROOF FRAMING PLAN AREA A

SHEET ID

S-106

S S-106-

DESIGN SUBMITTAL: RTA

24K7 JOIST SPACED 5'-0" O.C.

SEE NOTE 2

TYPE II LOWER STEEL DECK WITH 5 1/2" OF REINF. CONC., COLD FORM STEEL OVER FRAMED WITH TYPE I STEEL DECK ON COLD FORM FRAMING

TOS = 12'-0"

TYPE I ROOF DECK SEE S-510 FOR MORE INFO., TYP.

TOW = PER ARCH DRAWINGS

EXTENTION PER ARCH.

R12 EXT. TYP.

HSSX2X1/4

LATERAL BRACING TYP.

HSS 3x3x1/4 LEDGER AT TOP OF WALL

EQ

SLOPE

SEE NOTE 3

RIDGELINE

R12 JOIST EXT. TYP.

LH GABLE

5' - 0" O.C. TYP.

HSS 3x3x1/4

TYPE I ROOF DECK

AREA A

AREA B

AREA C

NOTES:

1. SPECIAL JOISTS TO BE DESIGNED BY THE JOIST SUPPLIER.

2. AREA TO BE FRAMED W/ COLD FORMED STEEL MEMBERS ON TOP OF STEEL & CONC. DECK. SEE S-508 & 3/S-509 FOR DETAILS.

3. PROVIDE BLOCK OUT POCKET FOR JOIST TO PASS THROUGH NON-LOAD BEARING WALL. PROVIDE LINTEL FOR JOIST PER 4/S-507

1/S-107 ROOF AREA B

1/8" = 1'-0"

AREA 'B'

SCALE: 1/8" = 1' - 0"

PLAN NORTH

US Army Corps of Engineers ®

MARK	DESCRIPTION	DATE

DESIGNED BY: ASJ
DRAWN BY: ALR
CHECKED BY: BN
SUBMITTED BY: SUMMIT ONWES
SIZE: 11" X 17" FILE NAME: ANSI D' MSS_GTEB

ISSUE DATE: 13 JULY 2020
PROJECT # 233-25-0665
SPEC # 2145
FILE NUMBER:

US ARMY CORPS OF ENGINEERS
SACRAMENTO DISTRICT
US DEPT OF ARMY

SACRAMENTO DISTRICT
IN-HOUSE DESIGN
1325 J STREET
SACRAMENTO, CA 95814

GROUND TRANSPORT EQUIPMENT BUILDING

ROOF FRAMING PLAN AREA B

SHEET ID

S-107

S S-107-

DESIGN SUBMITTAL: RTA

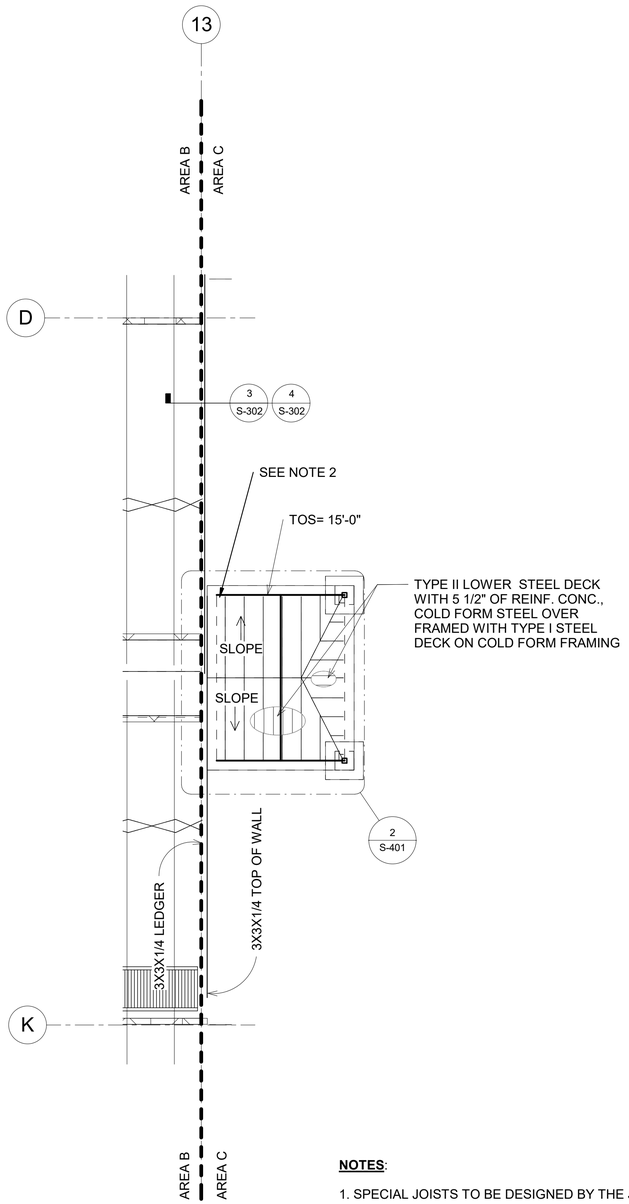

NOTES:

1. SPECIAL JOISTS TO BE DESIGNED BY THE JOIST SUPPLIER.

2. AREA TO BE FRAMED W/ COLD FORMED STEEL MEMBERS ON TOP OF STEEL & CONC. DECK. SEE S-508 & 3/S-509 FOR DETAILS.

2 S-108 ROOF AREA C (BASE BID)

1/8" = 1'-0"

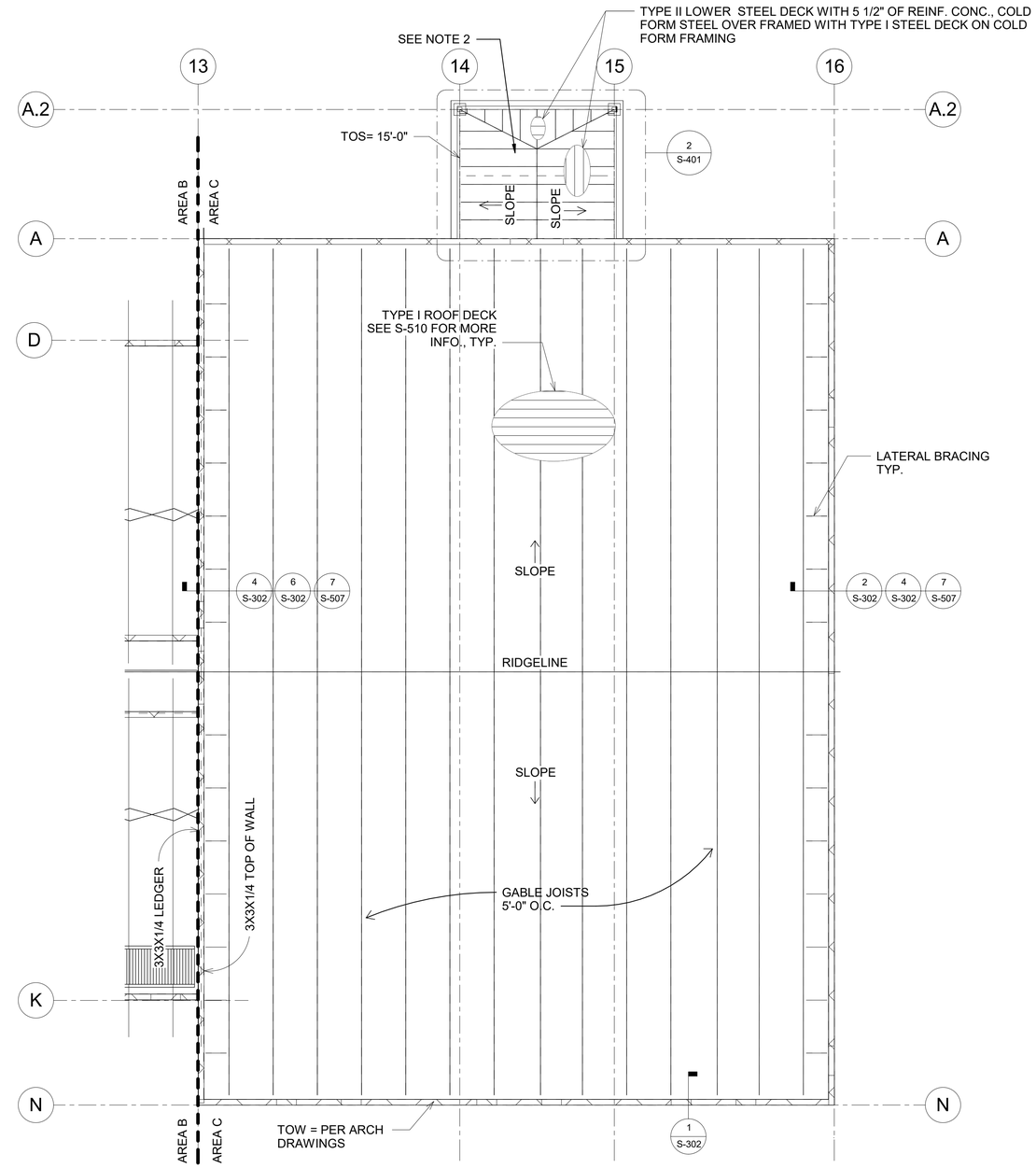

1 S-108 ROOF AREA C (BID OPTION 3)

1/8" = 1'-0"

AREA

'C

16' 0 16' 32'

SCALE: 1/16" = 1' - 0"

PLAN NORTH

US Army Corps of Engineers ®

MARK	DESCRIPTION	DATE

US ARMY CORPS OF ENGINEERS
SACRAMENTO DISTRICT
US DEPT OF ARMY

SACRAMENTO DISTRICT
IN-HOUSE DESIGN
1325 J STREET
SACRAMENTO, CA 95814

DESIGNED BY: ASJ
DRAWN BY: EM
CHECKED BY: BN
SUBMITTED BY: ISI WIFE OWNES
SIZE: E FILE NAME: ANSI D' WIESS_GTEB

ISSUE DATE: 13 JULY 2020
PROJECT # 233-25-0665
SPEC # 2145
FILE NUMBER:

GROUND TRANSPORT EQUIPMENT BUILDING

ROOF FRAMING PLAN AREA C (BID OPTION 3)

SHEET ID

S-108

S-108-

DESIGN SUBMITTAL: RTA

NOTES:

1. SLAB-ON-GRADE ELE. = 0'-0", UNO.
2. SEE SHEET S-601 FOR FOOTING AND SLAB-ON-GRADE SCHEDULE.
3. COORDINATE DOOR OPENINGS AND PARTITIONS WITH ARCHITECTURAL DWGS.

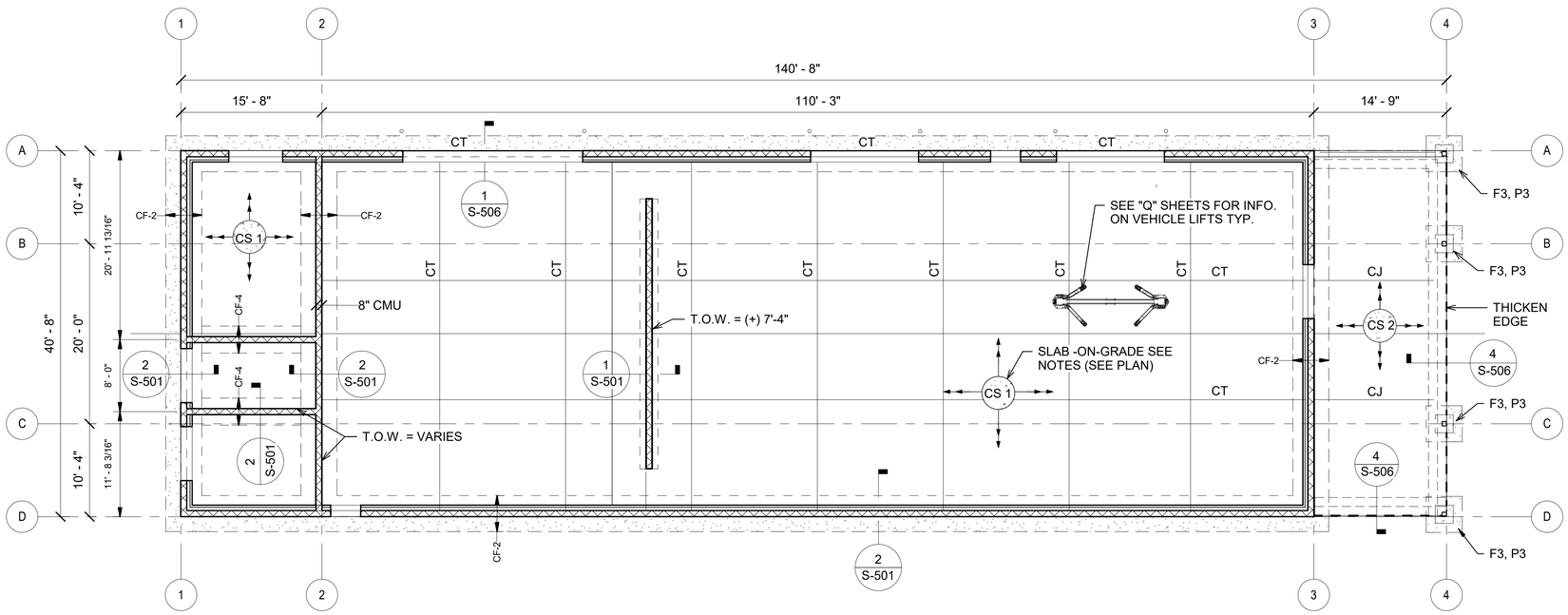

FOUNDATION PLAN - ORG. STORAGE BLDG.
(BID OPTION 8)

1 S-109

1/8" = 1'-0"

PLAN NORTH

US Army Corps of Engineers ®

MARK	DESCRIPTION	DATE

ISSUE DATE: 13 JULY 2020
PROJECT # 233-25-0665
SPEC # 2145
FILE NUMBER:

DESIGNED BY: ASI
DRAWN BY:
EDM
CHECKED BY:
BN
SUBMITTED BY: SUMIKE ONIEWS
SIZE: ANSI 'D'
FILE NAME: W65S_STOR

US ARMY CORPS OF ENGINEERS
SACRAMENTO DISTRICT
US DEPT OF ARMY

SACRAMENTO DISTRICT
1325 J STREET
SACRAMENTO, CA 95814

GROUND TRANSPORT EQUIPMENT BUILDING

ORG. STORAGE BLDG. FOUNDATION PLAN

SHEET ID

S-109

DESIGN SUBMITTAL: RTA

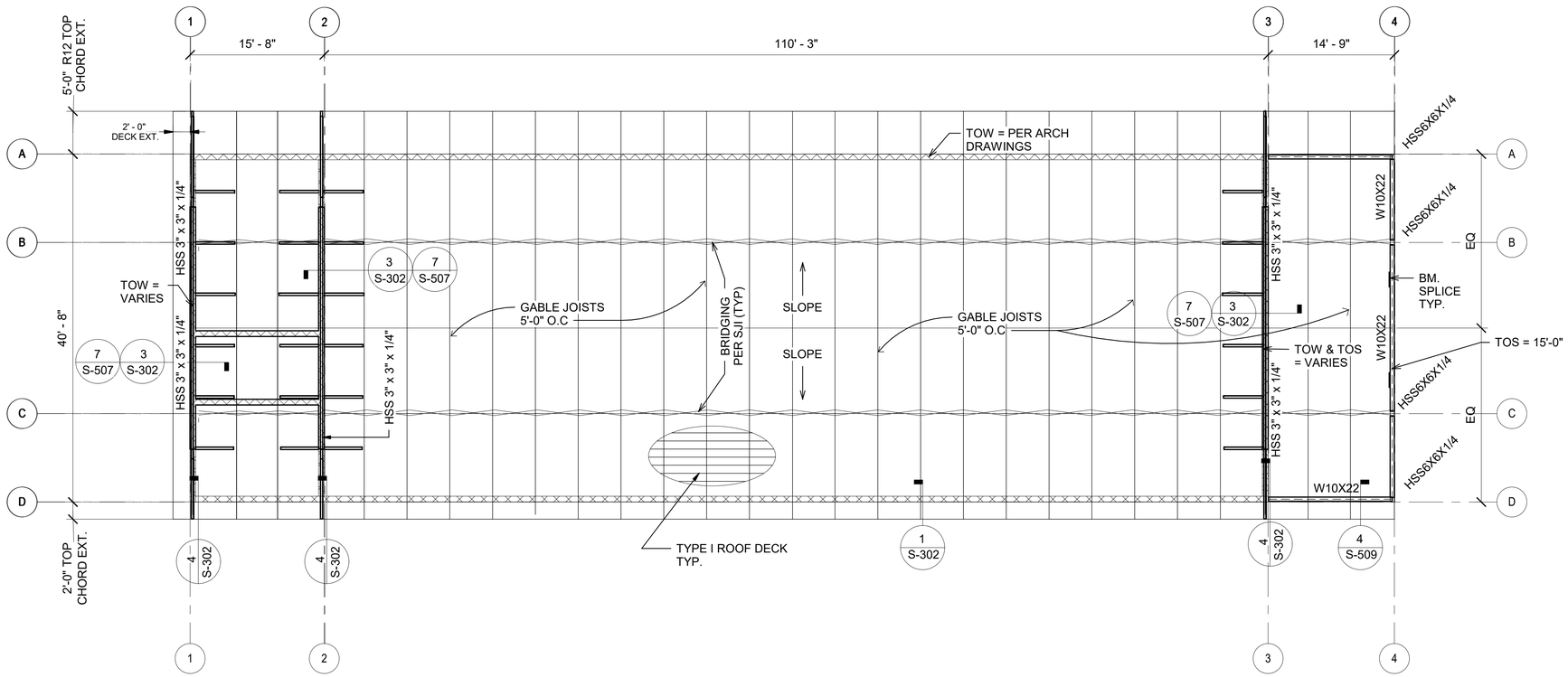

ROOF FRAMING PLAN - ORG. STORAGE BLDG.
(BID OPTION 8)

1 S-110

1/8" = 1'-0"

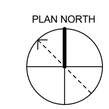

US Army Corps of Engineers ®

MARK	DESCRIPTION	DATE

DESIGNED BY: ASJ
DRAWN BY: EDM
CHECKED BY: BN
SUBMITTED BY: ISI WIFE OWNES
SIZE: E FILE NAME: ANSI D' WIGS_STOR

ISSUE DATE: 13 JULY 2020
PROJECT # 233-25-0665
SPEC # 2145
FILE NUMBER:

US ARMY CORPS OF ENGINEERS
SACRAMENTO DISTRICT
US DEPT OF ARMY

SACRAMENTO DISTRICT
1325 J STREET
SACRAMENTO, CA 95814

GROUND TRANSPORT EQUIPMENT BUILDING

ORG. STORAGE BLDG. ROOF FRAMING PLAN

SHEET ID

S-110

DESIGN SUBMITTAL: RTA

NOTES:

1. HAZ AND POL BUILDINGS ARE BID OPTIONS NOT TO BE INCLUDED IN THE BASE BID. HAZ BUILDING IS BID OPTION 6, POL BUILDING IS BID OPTION 7
2. SLAB-ON-GRADE ELV. = 0'-0", UNO.
3. COORDINATE DOOR OPENINGS AND PARTITIONS WITH ARCHITECTURAL DWGS.

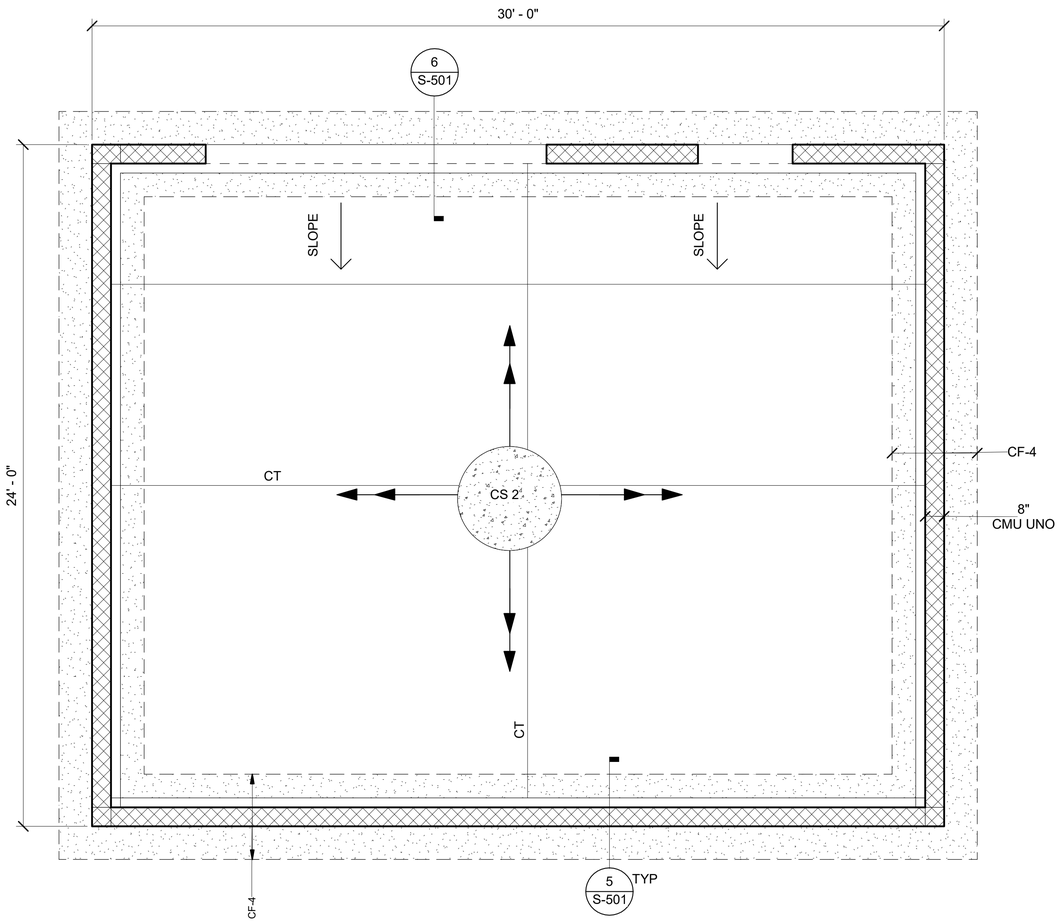

FOUNDATION PLAN - POL & HAZMAT BLDG (BID OPTIONS)

1 S-111

3/8" = 1'-0"

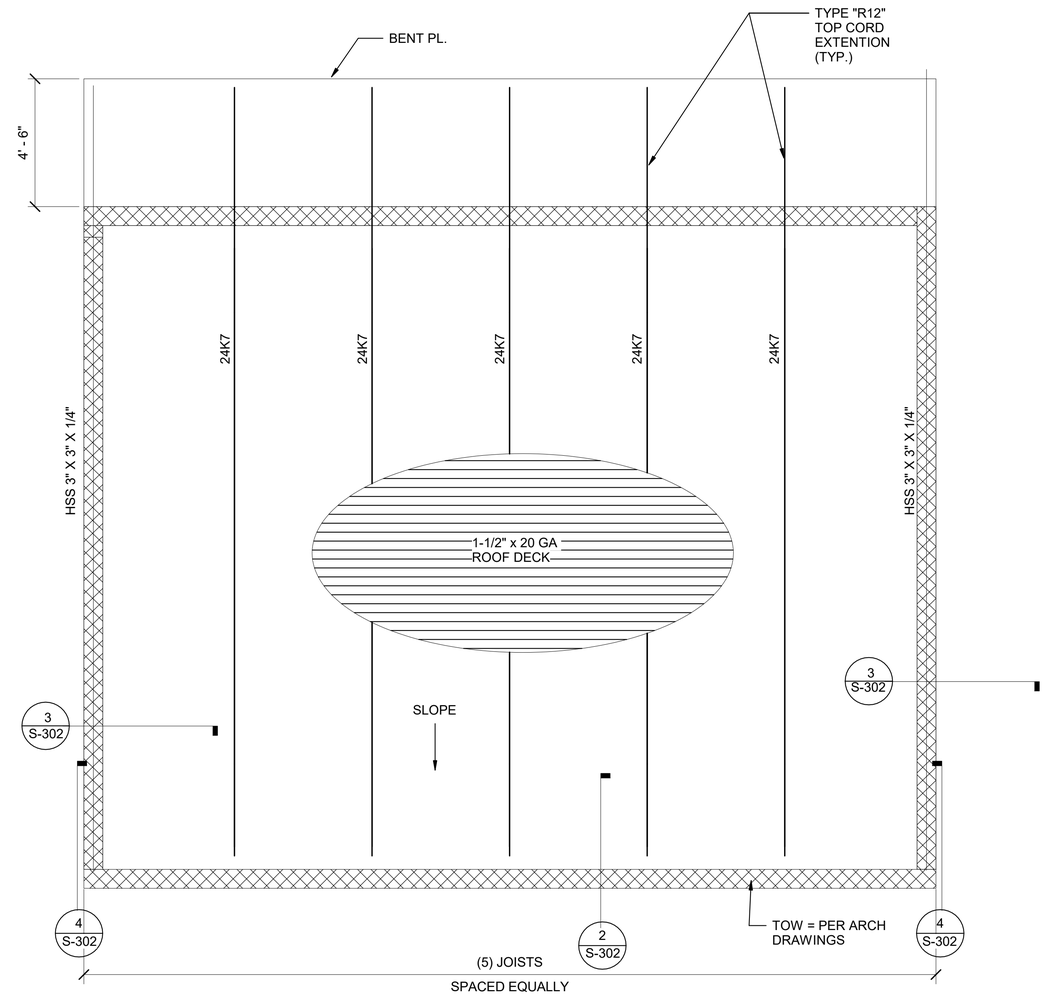

ROOF FRAMING PLAN - POL & HAZMAT BLDG (BID OPTIONS)

2 S-111

3/8" = 1'-0"

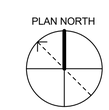

US Army Corps of Engineers ®

MARK	DESCRIPTION	DATE

DESIGNED BY: ASJ
DRAWN BY: EDM
CHECKED BY: BN
SUBMITTED BY: ROWIE ONNES
SIZE: ANSI D'
FILE NAME: WSS_STOR
ISSUE DATE: 13 JULY 2020
PROJECT # 233-25-0665
SPEC # 2145
FILE NUMBER:

US ARMY CORPS OF ENGINEERS
SACRAMENTO DISTRICT
US DEPT OF ARMY

SACRAMENTO DISTRICT
1325 J STREET
SACRAMENTO, CA 95814

GROUND TRANSPORT EQUIPMENT BUILDING

POL & HAZMAT BLDG FOUNDATION & ROOF FRAMING PLAN

SHEET ID

S-111

DESIGN SUBMITTAL: RTA

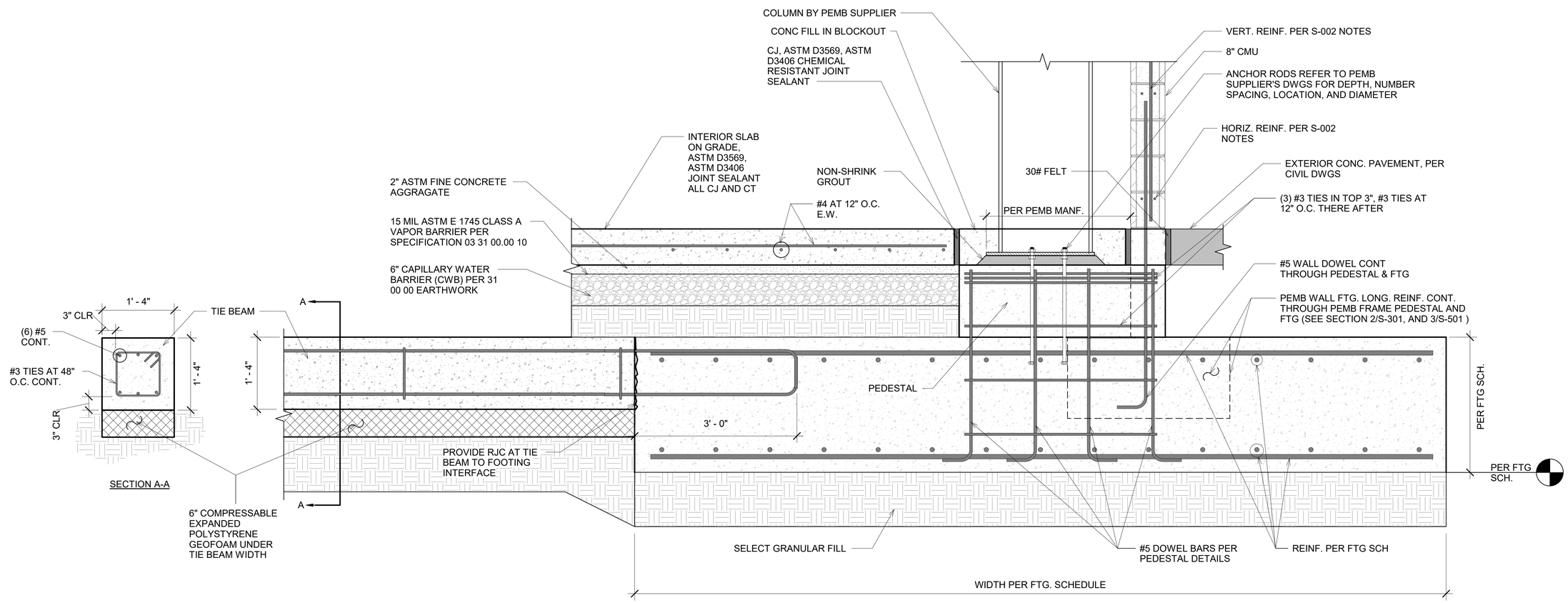

1 S-301 TYP. PEMB FRAME FTG

1" = 1'-0"

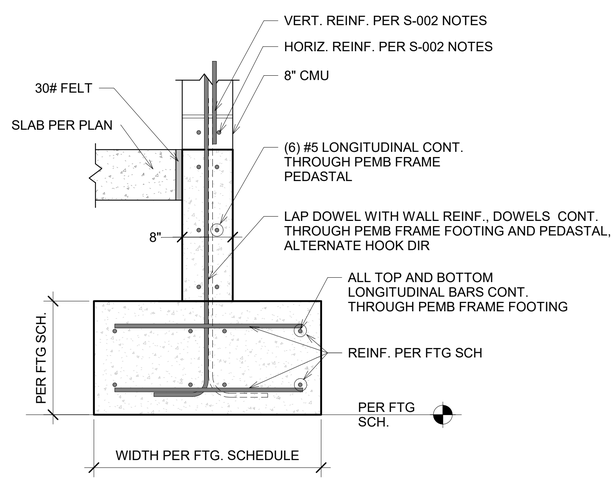

2 S-301 TYP. PEMB WALL FTG DETAIL

1" = 1'-0"

US Army Corps of Engineers ®

MARK	DESCRIPTION	DATE

DESIGNED BY: ASJ
DRAWN BY: ALR
CHECKED BY: BN
SUBMITTED BY: SOWIRE OWNES
SIZE: ANSI D
FILE NAME: WSS_GTEB
ISSUE DATE: 13 JULY 2020
PROJECT # 233-25-0665
SPEC # 2145
FILE NUMBER:

US ARMY CORPS OF ENGINEERS
SACRAMENTO DISTRICT
US DEPT OF ARMY

SACRAMENTO DISTRICT
IN-HOUSE DESIGN
1325 J STREET
SACRAMENTO, CA 95814

GROUND TRANSPORT EQUIPMENT BUILDING

PEMB FOUNDATION SECTIONS

SHEET ID

S-301

S S-301-

DESIGN SUBMITTAL: RTA

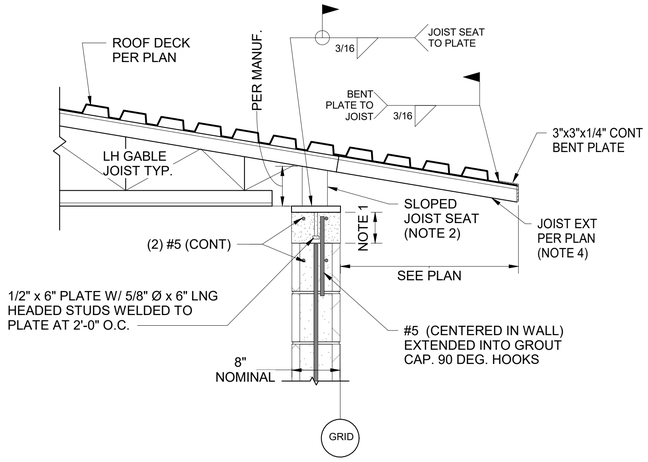

1 S-302 GABLE JOIST SECTION AT EAVE

1" = 1'-0"

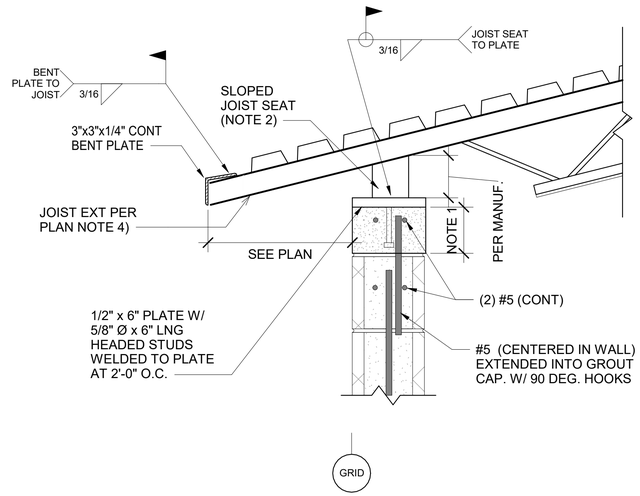

2 S-302 K-JOIST SECTION AT EAVE

1 1/2" = 1'-0"

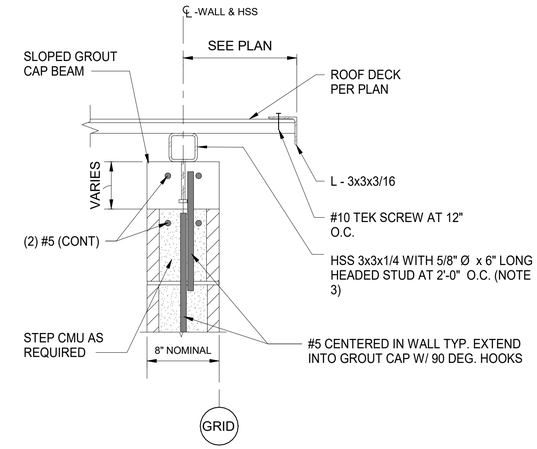

3 S-302 SECTION AT RAKE

1 1/2" = 1'-0"

NOTES:

1. LEVEL GROUT CAP IS OPTIONAL AND THICKNESS SET TO PLACE BOTTOM CHORD OF JOIST AT ELV. PER ARCH DWG. THICKNESS (t) NOT TO EXCEED 7". EXTEND STUDS INTO CMU CELLS, IF CAP DEPTH SHALLOW OR OMITED. OMIT #5 BARS IN GROUT CAP IF t < 2".

2. BUILT-UP ROOF DECK SUPPORT PLATE ASSEMBLY NOT SHOWN. SEE 5/S-302 FOR INFO.

3. EXTEND HSS AT EAVES PER PLAN. PROVIDE 1/4" PLATE CAP WELDED ON ENDS.

4. GABLE JOIST, JOIST EXT AT EAVE, & SLOPED JOIST SEAT PER JOIST MANUFACTURER.

5. THE CONTRACTOR HAS THE OPTION TO SAW CUT MASONRY, AND PROVIDE GROUT CAP PARALLEL TO SAW CUT OR SLOPING MASONRY BOND BEAM

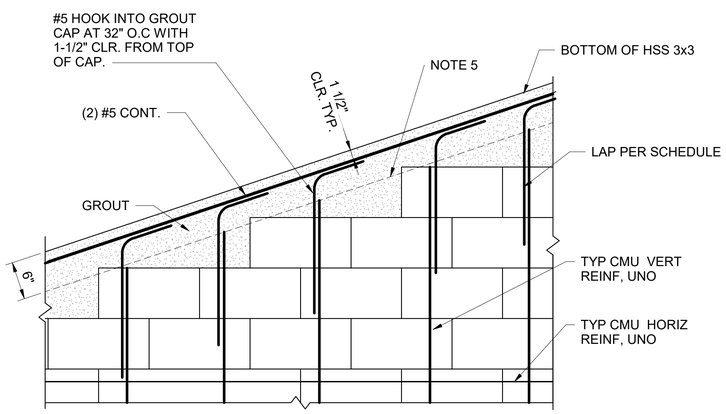

4 S-302 TYP STEPPED CMU BOND BEAM DETAIL

1" = 1'-0"

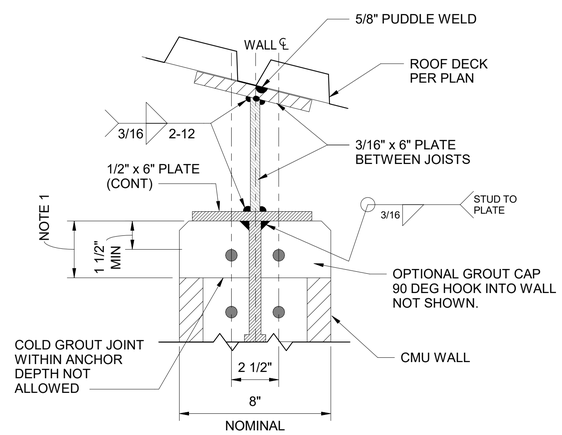

5 S-302 ROOF DECK SUPPORT PLATE

3" = 1'-0"

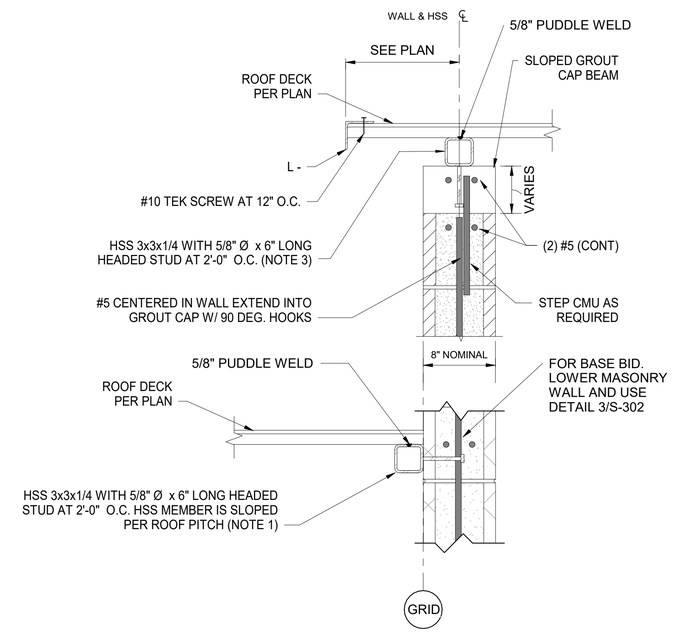

6 S-302 SECTION AT RAKE WITH LEDGER FOR LOWER ROOF DECK (BID OPTION 3)

1 1/2" = 1'-0"

US Army Corps of Engineers ®

MARK	DESCRIPTION	DATE

DESIGNED BY: ASJ
DRAWN BY: ASJ
CHECKED BY: BN
SUBMITTED BY: ISMIKE DINKINS
SIZE: FILE NAME: ANSI D WSS_GTEB

ISSUE DATE: 13 JULY 2020
PROJECT # 233-25-0665
SPEC # 2145
FILE NUMBER:

US ARMY CORPS OF ENGINEERS
SACRAMENTO DISTRICT
US DEPT OF ARMY

SACRAMENTO DISTRICT
IN-HOUSE DESIGN
1325 J STREET
SACRAMENTO, CA 95814

GROUND TRANSPORT EQUIPMENT BUILDING

JOIST AND DECK TO WALL CONNECTION SECTIONS

SHEET ID

S-302

S S-302-

DESIGN SUBMITTAL: RTA

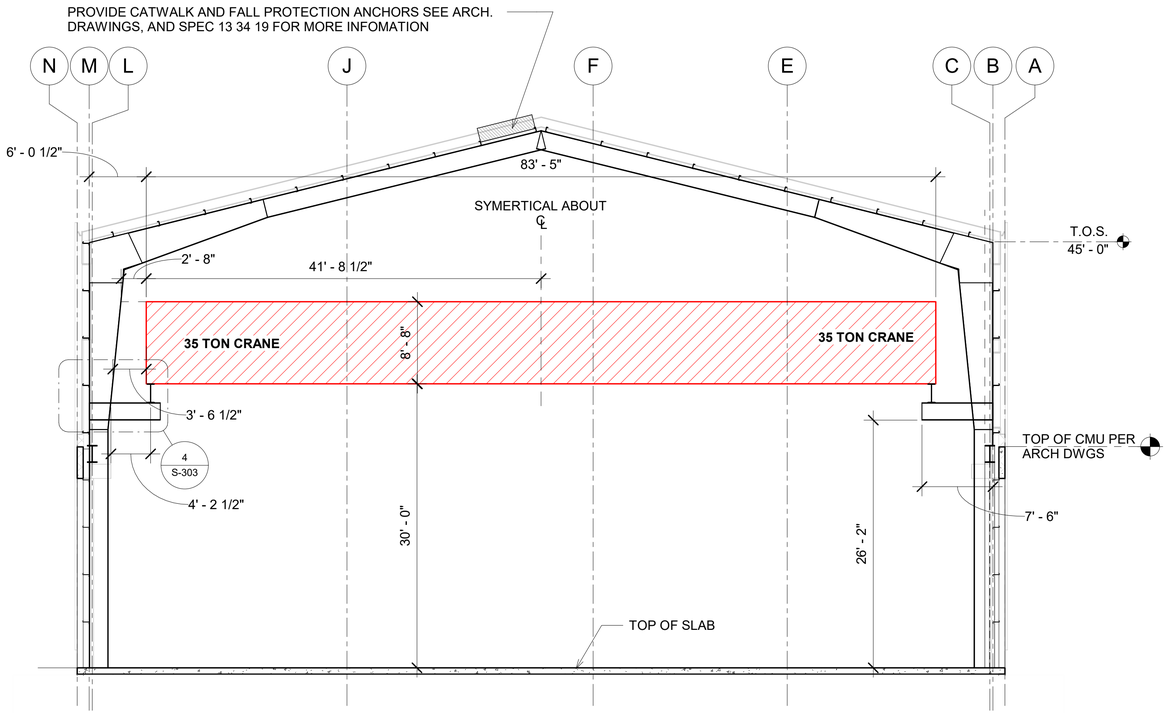

1 S-303 AREA A SECTION

1/8" = 1'-0"

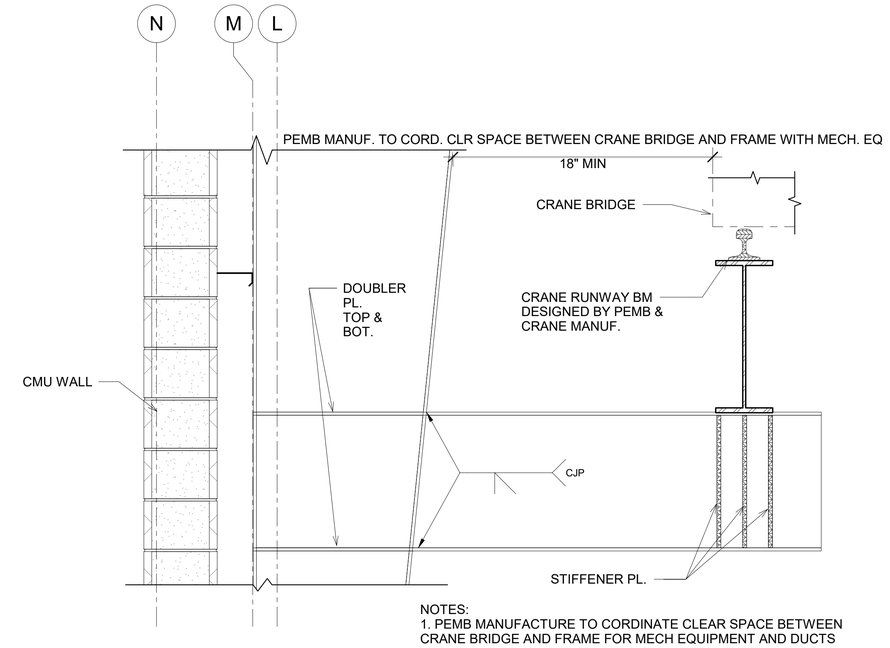

NOTES:
1. PEMB MANUFACTURE TO CORDINATE CLEAR SPACE BETWEEN CRANE BRIDGE AND FRAME FOR MECH EQUIPMENT AND DUCTS

4 S-303 CRANE BM. SUPPORT DETAIL

1" = 1'-0"

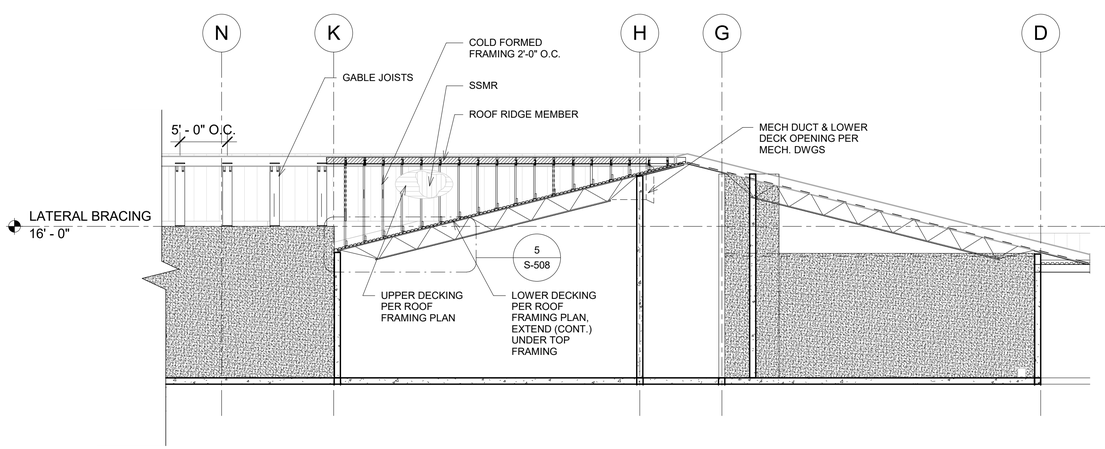

3 S-303 AREA B SECTION

1/8" = 1'-0"

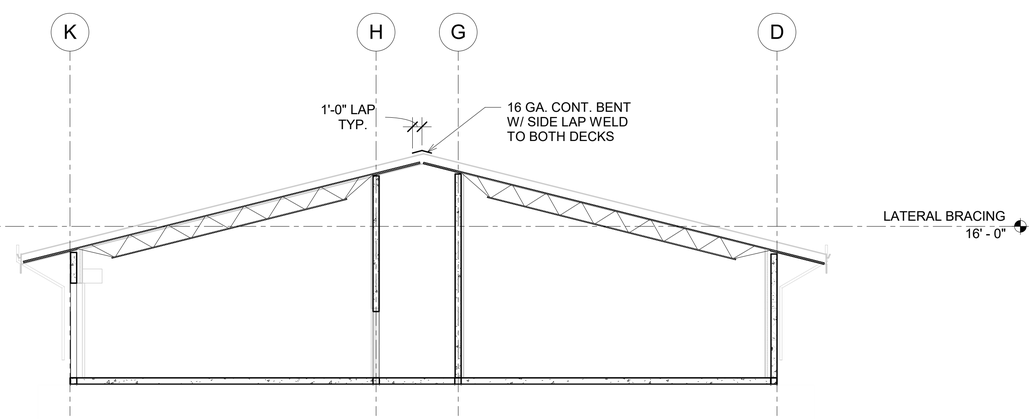

2 S-303 AREA C SECTION

1/8" = 1'-0"

US Army Corps of Engineers ®

MARK	DESCRIPTION	DATE

DESIGNED BY: ASJ
DRAWN BY: ALR
CHECKED BY: BN
SUBMITTED BY: ISAMIC OWNESS
SIZE: ANSI 'D'
FILE NAME: W6SS_GTEB
ISSUE DATE: 13 JULY 2020
PROJECT # 233-25-0665
SPEC # 2145
FILE NUMBER:

US ARMY CORPS OF ENGINEERS
SACRAMENTO DISTRICT
US DEPT OF ARMY

SACRAMENTO DISTRICT
IN-HOUSE DESIGN
1325 J STREET
SACRAMENTO, CA 95814

GROUND TRANSPORT EQUIPMENT BUILDING

FRAMING SECTIONS THROUGH GTEB BLDG

SHEET ID

S-303

S S-303-

DESIGN SUBMITTAL: RTA

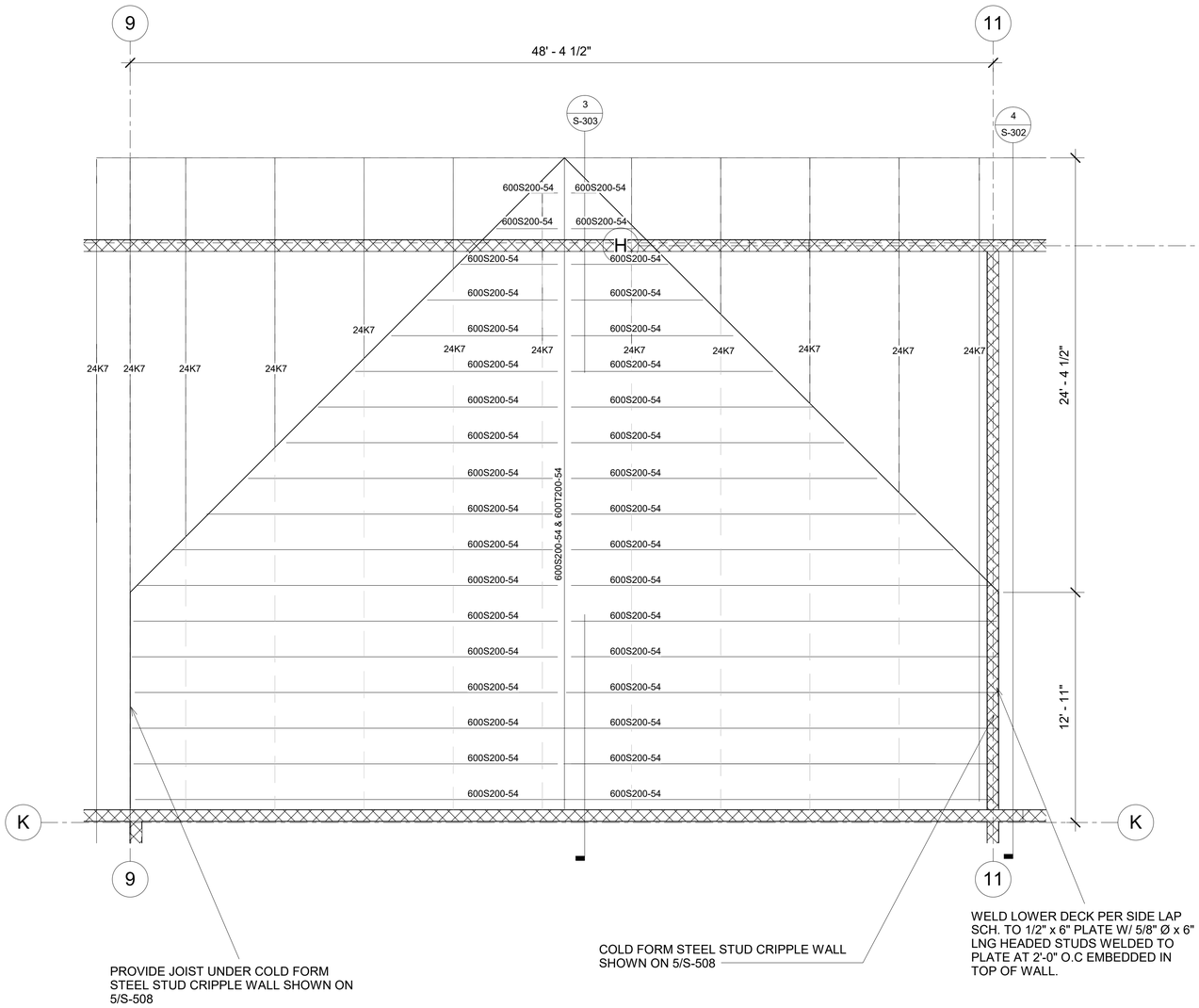

1 S-401 HIP FRAMING PLAN

1/4" = 1'-0"

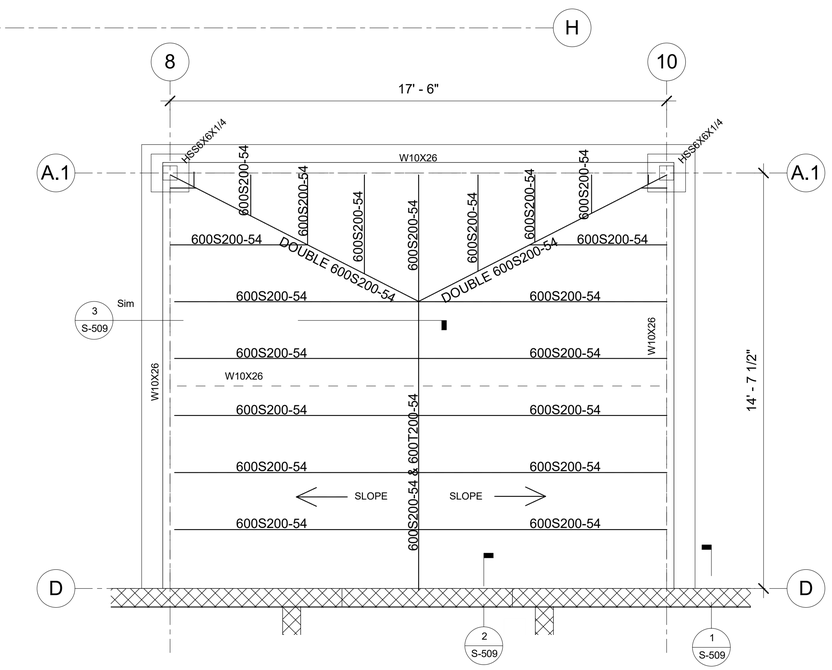

2 S-401 ENTRANCE CANOPY FRAMING PLAN

3/8" = 1'-0"

NOTE:
ALL COLD FORMED ROOF FRAMING MEMBERS SPACED AT 24" O.C.

US Army Corps of Engineers ®

MARK	DESCRIPTION	DATE

ISSUE DATE: 13 JULY 2020
PROJECT # 233-25-0665
SPEC # 2145
FILE NUMBER:

DESIGNED BY: ASJ
DRAWN BY: ALR
CHECKED BY: BN
SUBMITTED BY: ISAMIE DINNESS
SIZE: ANSI 'D'
FILE NAME: W65S_GTEB

US ARMY CORPS OF ENGINEERS
SACRAMENTO DISTRICT
US DEPT OF ARMY

SACRAMENTO DISTRICT
IN-HOUSE DESIGN
1325 J STREET
SACRAMENTO, CA 95814

GROUND TRANSPORT EQUIPMENT BUILDING

ENLARGED PLANS

SHEET ID

S-401

S S-401-

DESIGN SUBMITTAL: RTA

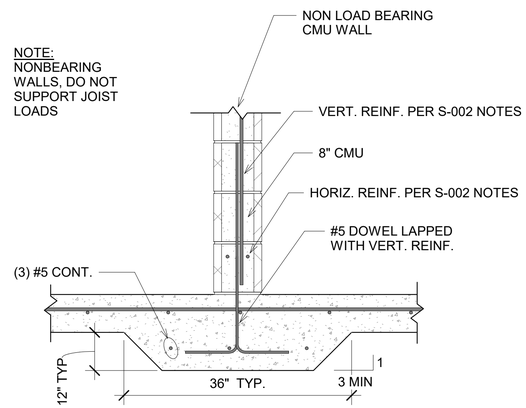

1 S-501 TYP. NON-LOAD BEARING WALL FTG.
1" = 1'-0"

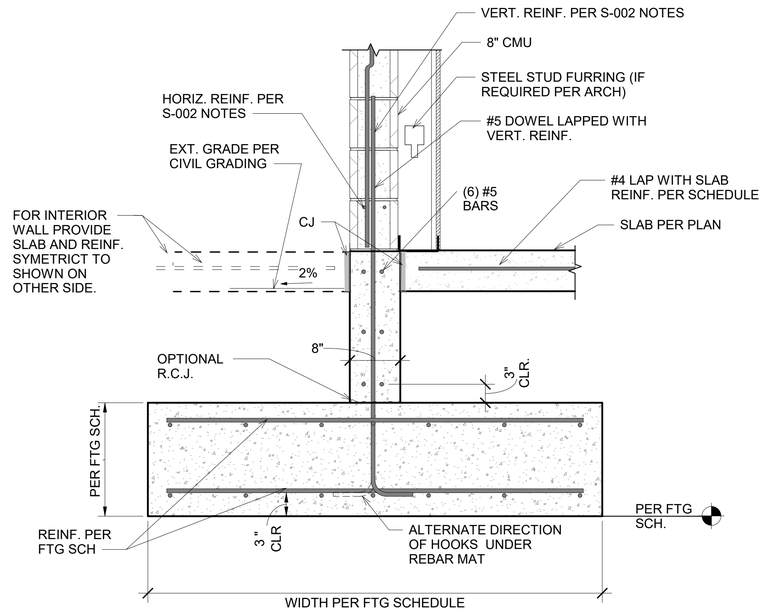

2 S-501 TYP LOAD BEARING WALL FTG.
1" = 1'-0"

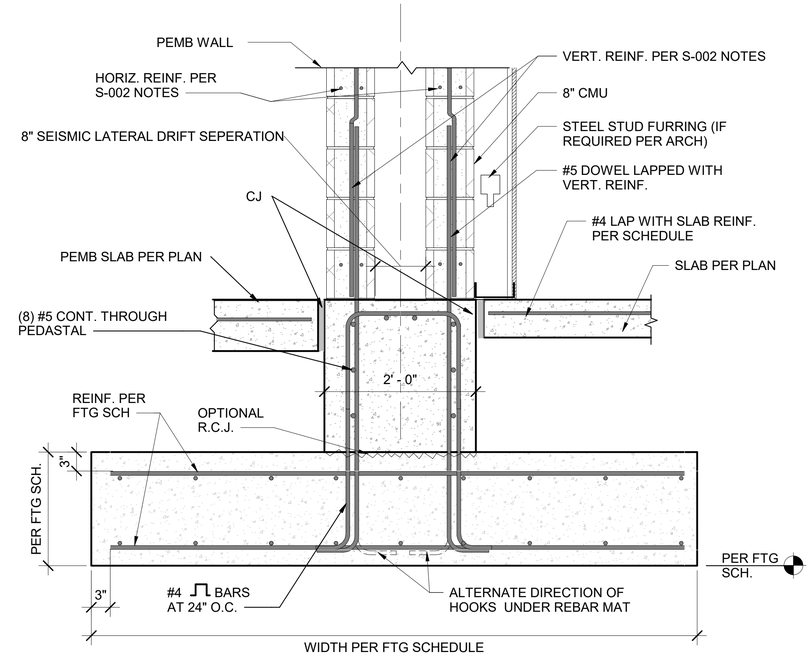

3 S-501 TYP WALL FTG. AT SEISMIC SEPARATION
1" = 1'-0"

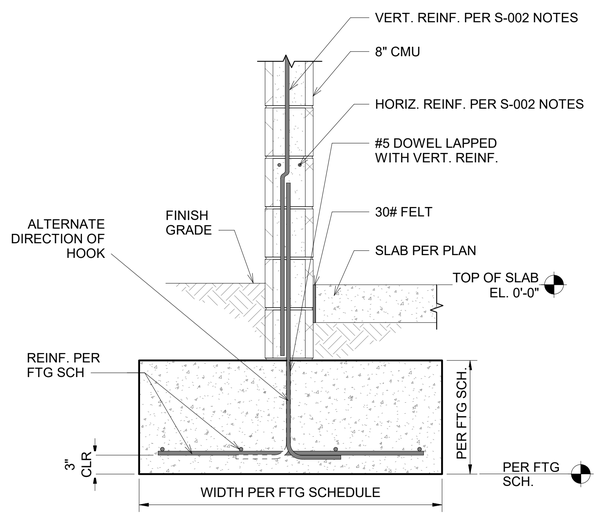

4 S-501 TYP MECH YARD WALL & FTG
1" = 1'-0"

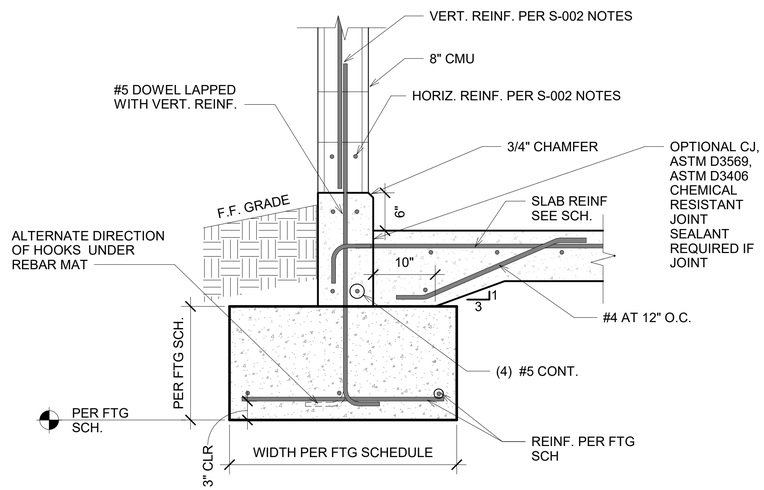

5 S-501 HAZ & POL BLDGS RECESSED SLAB FTG
1" = 1'-0"

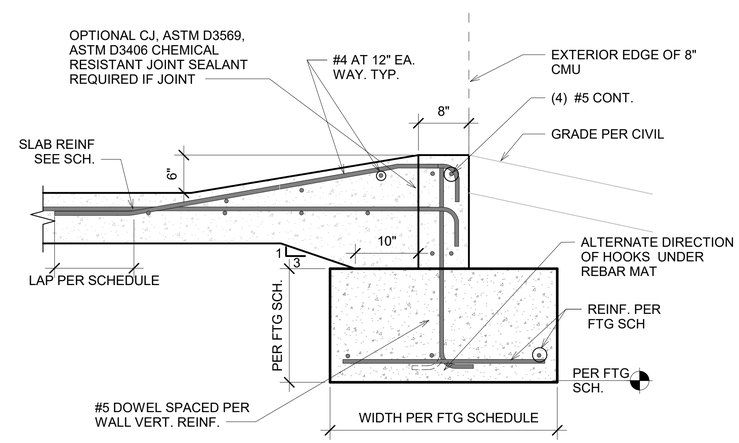

6 S-501 HAZ & POL BLDGS RECESSED SLAB FTG AT DOORS
1" = 1'-0"

US Army Corps of Engineers ®

MARK	DESCRIPTION	DATE

DESIGNED BY: ASJ
DRAWN BY: ALR
CHECKED BY: BN
SUBMITTED BY: SUWIRE OWNES
SIZE: E1 FILE NUMBER:
ANSI D' WIDES GTEB
ISSUE DATE: 13 JULY 2020
PROJECT # 233-25-0665
SPEC # 2145

US ARMY CORPS OF ENGINEERS
SACRAMENTO DISTRICT
US DEPT OF ARMY

SACRAMENTO DISTRICT
IN-HOUSE DESIGN
1325 J STREET
SACRAMENTO, CA 95814

GROUND TRANSPORT EQUIPMENT BUILDING

TYP FOUNDATION DETAILS

SHEET ID
S-501

S-501-

DESIGN SUBMITTAL: RTA

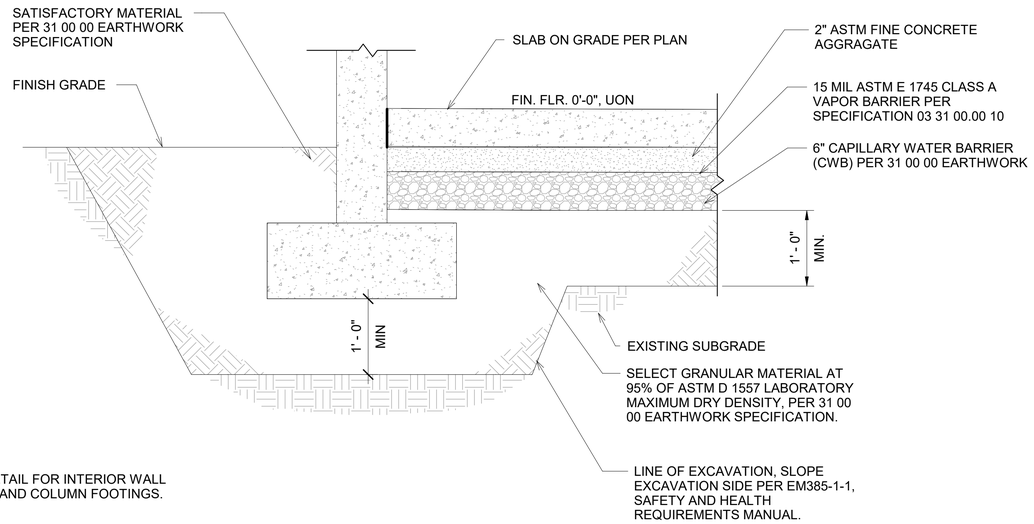

NOTE:
SIMILAR DETAIL FOR INTERIOR WALL FOOTINGS AND COLUMN FOOTINGS.

1 / S-502 TYP FTG. EXCAVATION DETAIL

1" = 1'-0"

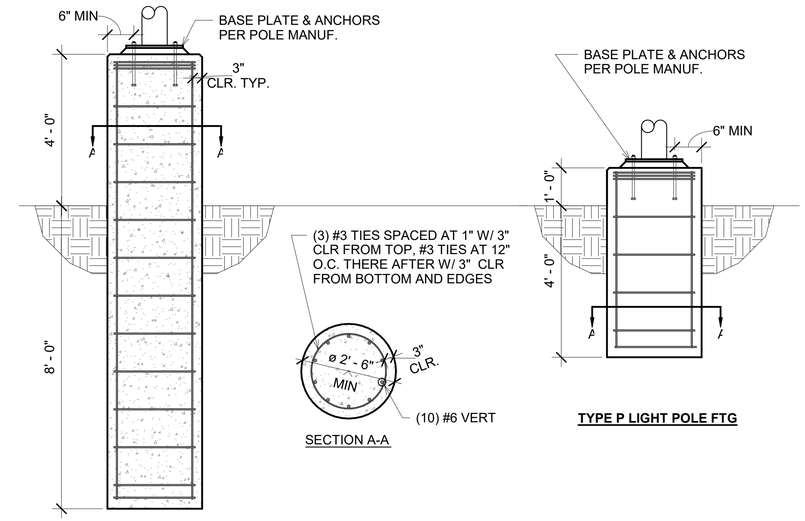

TYPE L LIGHT POLE FTG

TYPE P LIGHT POLE FTG

3 / S-502 TYP. EXT. LIGHT POLE FTGS

1/2" = 1'-0"

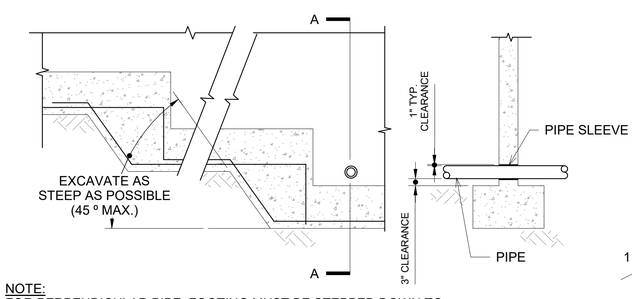

NOTE:
FOR PERPENDICULAR PIPE, FOOTING MUST BE STEPPED DOWN TO ALLOW PIPE PENETRATION TO PASS ABOVE FOOTING. SEE TYP. STEPPED FOOTING DETAIL.

PERPENDICULAR PIPE AND FOOTING

SECTION AA

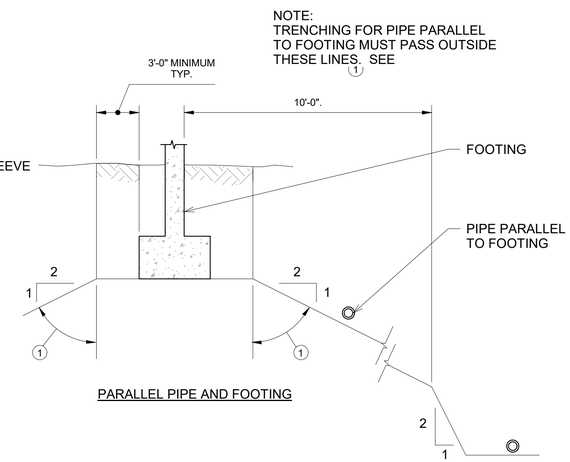

PARALLEL PIPE AND FOOTING

2 / S-502 TYP BURIED PIPE FOUNDATION PENETRATIONS

N.T.S.

US Army Corps of Engineers ®

MARK	DESCRIPTION	DATE

DESIGNED BY: ASJ
DRAWN BY: ALR
CHECKED BY: BN
SUBMITTED BY: IS/ MIKE OWNES
SIZE: E1 FILE NAME: ANSI D' WIESS, GTEB

ISSUE DATE: 13 JULY 2020
PROJECT # 233-25-0665
SPEC # 2145
FILE NUMBER:

US ARMY CORPS OF ENGINEERS
SACRAMENTO DISTRICT
US DEPT OF ARMY

SACRAMENTO DISTRICT
IN-HOUSE DESIGN
1325 J STREET
SACRAMENTO, CA 95814

GROUND TRANSPORT EQUIPMENT BUILDING

TYP FOUNDATION DETAILS

SHEET ID

S-502

S S-502-

DESIGN SUBMITTAL: RTA

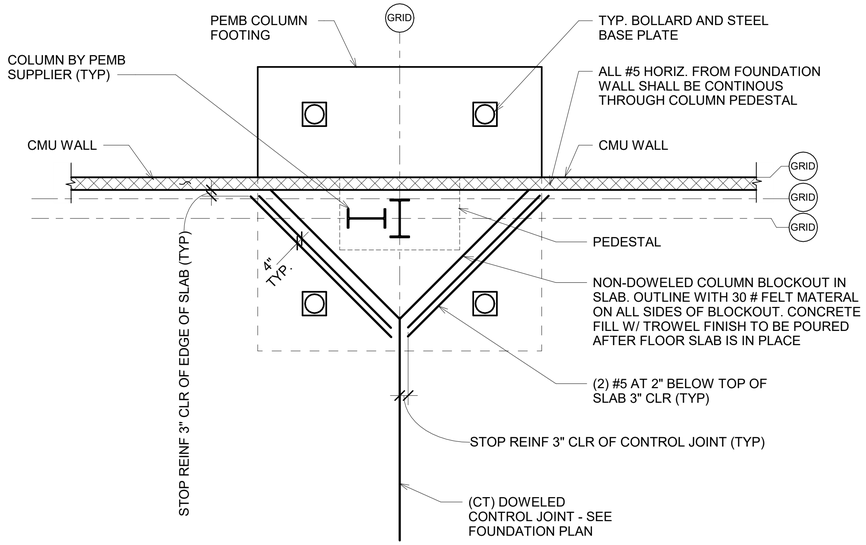

1 S-503 TYP. EXTERIOR COL. BLOCKOUT DETAIL

1/4" = 1'-0"

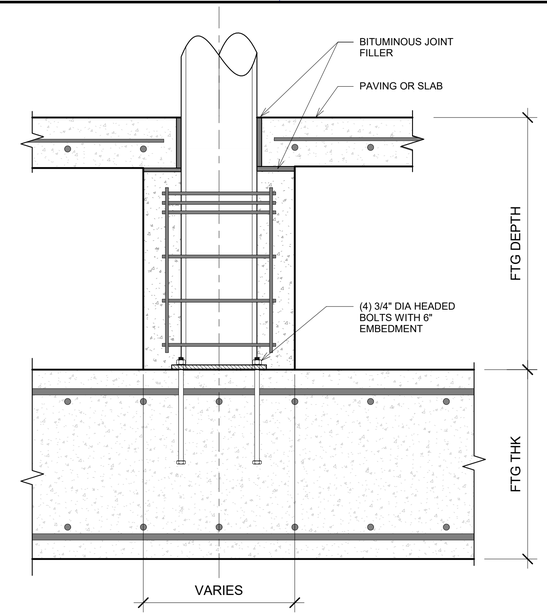

2 S-503 TYP BOLLARD SECTION AT PEMB FTG

1" = 1'-0"

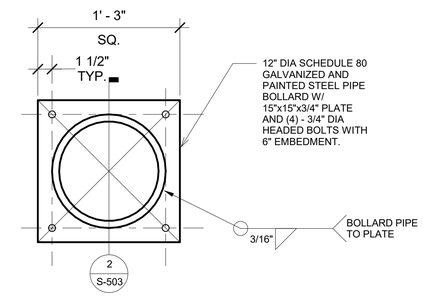

3 S-503 TYP. BOLLARD STEEL BASE PLATE

1 1/2" = 1'-0"

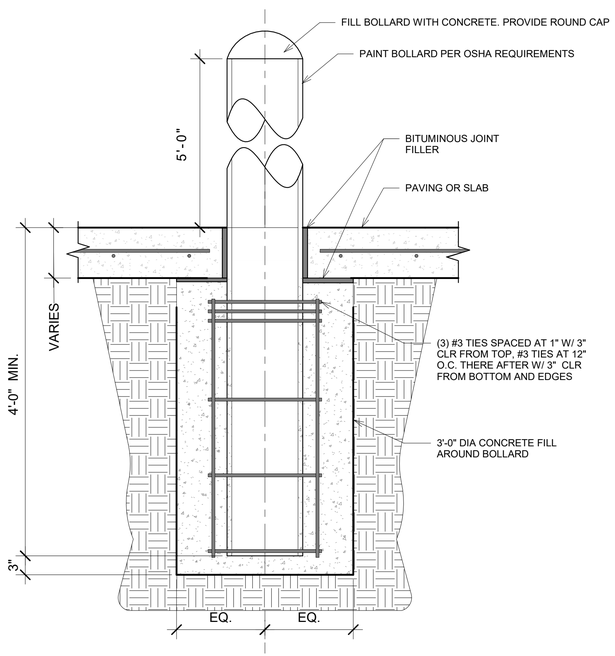

4 S-503 TYP BOLLARD SECTION

1" = 1'-0"

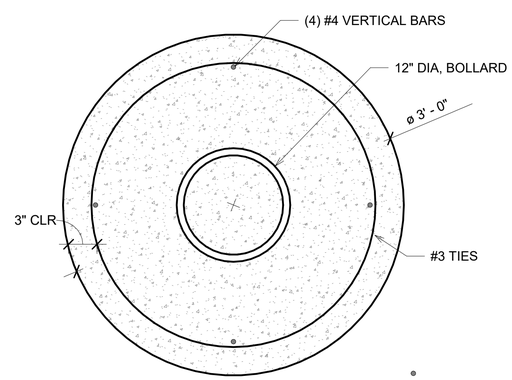

5 S-503 TYP. SECTION AT BOLLARD FTG

1 1/2" = 1'-0"

US Army Corps of Engineers ®

MARK	DESCRIPTION	DATE

ISSUE DATE: 13 JULY 2020
PROJECT # 233-25-0665
SPEC # 2145
FILE NUMBER:

DESIGNED BY: ASJ
DRAWN BY: EM
CHECKED BY: BN
SUBMITTED BY: ISAMIKE ONWEGBUZIE
SIZE: ANSI 'D'
FILE NAME: W66S_GTEB

US ARMY CORPS OF ENGINEERS
SACRAMENTO DISTRICT
US DEPT OF ARMY

SACRAMENTO DISTRICT
IN-HOUSE DESIGN
1325 J STREET
SACRAMENTO, CA 95814

GROUND TRANSPORT EQUIPMENT BUILDING

TYP FOUNDATION BOLLARD AND BLOCKOUT DETAILS

SHEET ID

S-503

S-503-

DESIGN SUBMITTAL: RTA

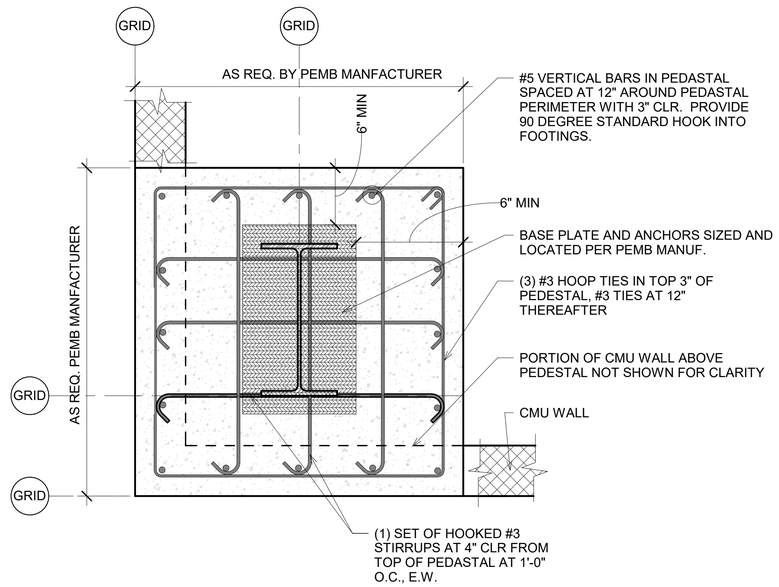

1 S-504 PEDESTAL P1

1" = 1'-0"

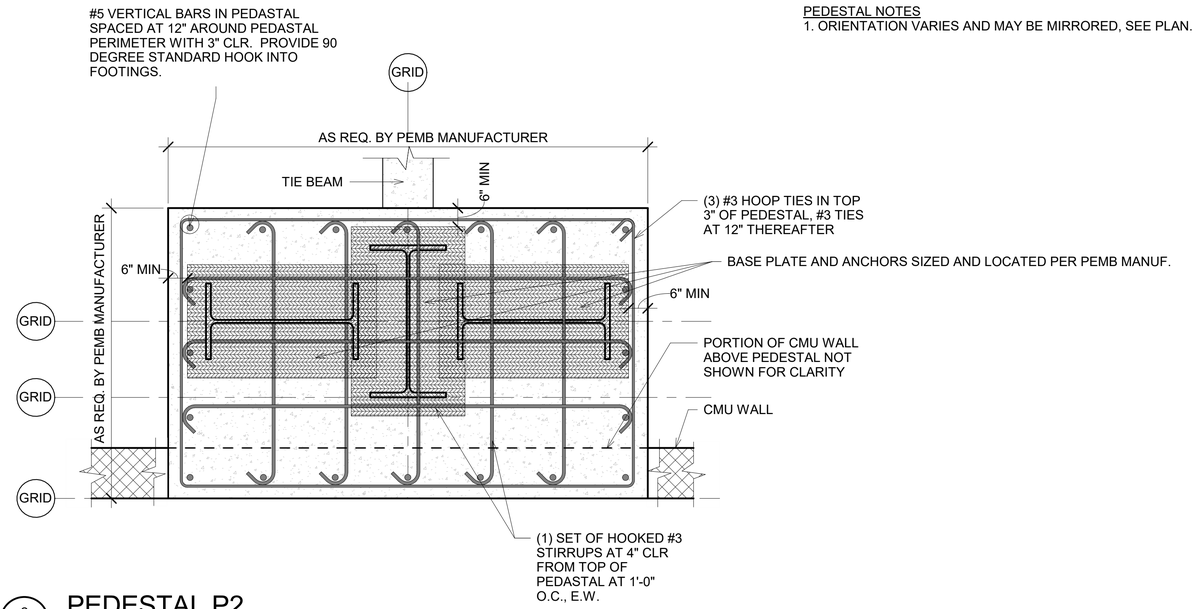

2 S-504 PEDESTAL P2

1" = 1'-0"

PEDESTAL NOTES

1. ORIENTATION VARIES AND MAY BE MIRRORED, SEE PLAN.

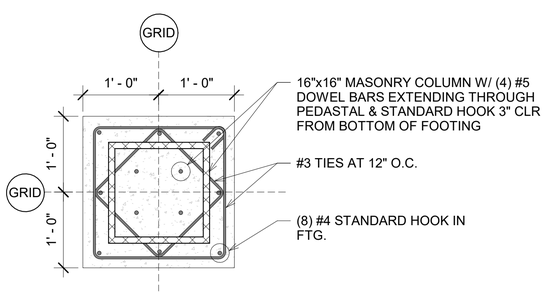

3 S-504 PEDESTAL P3

1" = 1'-0"

US Army Corps of Engineers ®

MARK	DESCRIPTION	DATE

US ARMY CORPS OF ENGINEERS
SACRAMENTO DISTRICT
US DEPT OF ARMY

SACRAMENTO DISTRICT
IN-HOUSE DESIGN
1325 J STREET
SACRAMENTO, CA 95814

DESIGNED BY: ASJ
DRAWN BY: EM
CHECKED BY: BN
SUBMITTED BY: SUWIRE OWNES
SIZE: E FILE NAME: ANSI D' WIDES_GTEB

ISSUE DATE: 13 JULY 2020
PROJECT # 233-25-0665
SPEC # 2145
FILE NUMBER:

GROUND TRANSPORT EQUIPMENT BUILDING

TYP FOUNDATION PEDESTAL DETAILS

SHEET ID

S-504

DESIGN SUBMITTAL: RTA

REINF. MASONRY BAR LAP SPLICE/EMBEDMENT SCHEDULE		
BAR SIZE	f'm = 1500 psi (INCHES)	f'm = 2500 psi (INCHES)
#3	16	16
#4	24	24
#5	35	28
#6	66	51
#7	90	70
#8	135	104
#9	170	132

REINF. CONCRETE BAR LAP SPLICE/EMBEDMENT SCHEDULE			
BAR SIZE	f'c = 4000 psi		L_{dh}
	CLASS B LAP SPLICE (INCHES)	EMBEDMENT (INCHES)	HOOK
#4	23	18	12
#5	29	22	14
#6	35	27	18
#7	51	39	20
#8	58	45	24
#9	65	50	26
#10	73	56	30

1. THE SCHEDULE SHOWN ON THIS SHEET APPLIES TO REGULAR WEIGHT CONCRETE AT 145 TO 150 PFC, AND TO GRADE 60 BARS TYPICAL.

2. ALL SPLICES SHALL BE STAGGERED AS SHOWN. IF MORE THAN 50% OF THE REINFORCING IS LAP SPLICED WITHIN THE REQUIRED LAP SPLICE LENGTH, THE LAP SPLICE LENGTH SHALL BE INCREASED 33%.

3. THE SMALLER BAR LAP LENGTH SHALL BE USED WHEN SPLICING DIFFERENT SIZE BARS.

4. ALL DETAILING AND PLACING OF REINFORCING SHALL COMPLY WITH THE LAP SPLICES SCHEDULE AND DETAILS, UNLESS SPECIFICALLY DETAILED OTHERWISE ON THE DRAWING. LAP LENGTHS DETAILED OTHERWISE ON THE DRAWING SHALL GOVERN.

5. SPLICED BARS SHALL BE WIRED IN CONTACT TYPICAL.

6. FOR LIGHTWEIGHT AGGREGATE CONCRETE INCREASE LAP SPLICE BY 30%.

7. ALL EXTERIOR CMU SHALL BE OPEN ENDED BLOCKS.

8. PROVIDE LINTEL UNITS ABOVE WALL OPENINGS REINFORCED WITH (2) #5 BARS EXTENDING 2'-0" PAST OPENING.

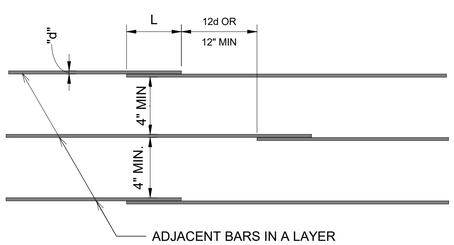

CONTACT

1 S-505 BAR LAP SPLICE SCHEDULE

N.T.S.

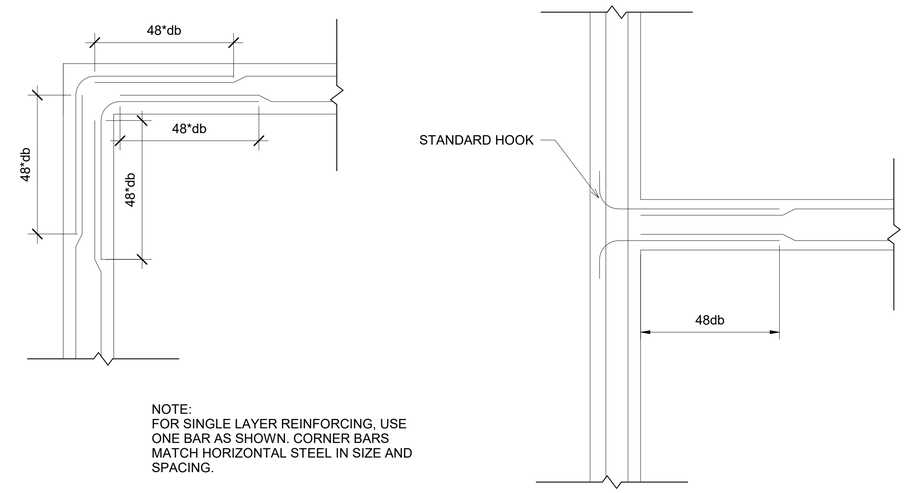

NOTE:
FOR SINGLE LAYER REINFORCING, USE ONE BAR AS SHOWN. CORNER BARS MATCH HORIZONTAL STEEL IN SIZE AND SPACING.

2 S-505 TYP CONCRETE CORNER REINFORCING DETAIL

1" = 1'-0"

TYPE OF STANDARD HOOK	BAR SIZE	MINIMUM INSIDE BEND DIAMETER, IN.	STRAIGHT EXTENSION [1] l_{ext}, IN.	TYPE OF STANDARD HOOK
90-DEGREE HOOK	NO. 3 THROUGH NO. 8	6 d_b	12 d_b	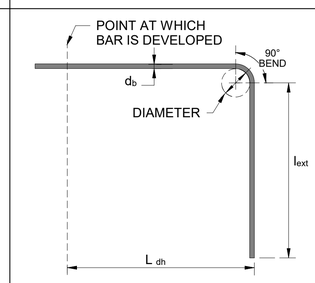
	NO. 9 THROUGH NO. 11	8 d_b		
	NO. 14 AND NO. 18	10 d_b		
180-DEGREE HOOK	NO. 3 THROUGH NO. 8	6 d_b	GREATER OF $4d_b$ AND 2.5 IN.	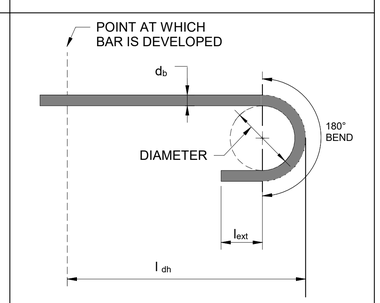
	NO. 9 THROUGH NO. 11	8 d_b		
	NO. 14 AND NO. 18	10 d_b		

3 S-505 STANDARD HOOK TABLE

1" = 1'-0"

US Army Corps of Engineers ®

MARK	DESCRIPTION	DATE

DESIGNED BY: ASJ
DRAWN BY: ALR
CHECKED BY: BN
SUBMITTED BY: /S/ MIKE DWYER
SIZE: E FILE NAME: ANSI D WSS_GTEB
ISSUE DATE: 13 JULY 2020
PROJECT # 233-25-0665
SPEC # 2145
FILE NUMBER:

US ARMY CORPS OF ENGINEERS
SACRAMENTO DISTRICT
US DEPT OF ARMY

SACRAMENTO DISTRICT
IN-HOUSE DESIGN
1325 J STREET
SACRAMENTO, CA 95814

GROUND TRANSPORT EQUIPMENT BUILDING

TYP REINFORCEMENT DETAILS

SHEET ID

S-505

S S-505-

DESIGN SUBMITTAL: RTA

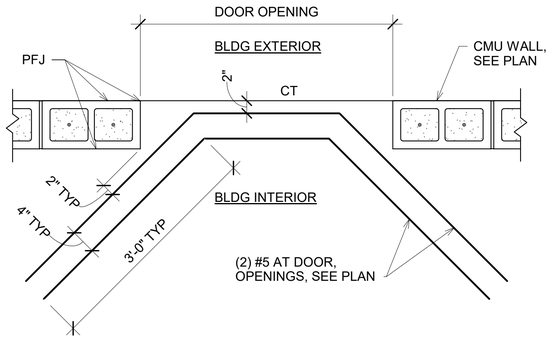

PLAN

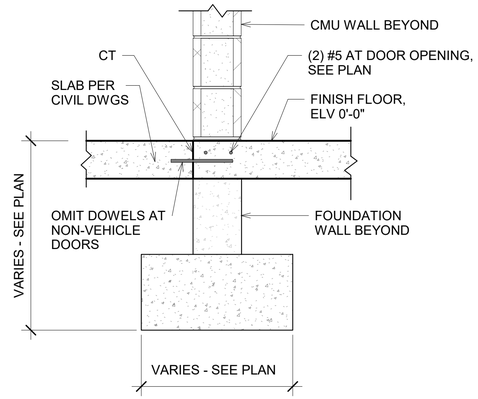

SECTION

1 S-506 TYP. SLAB REINF. AT WALL OPENINGS

1" = 1'-0"

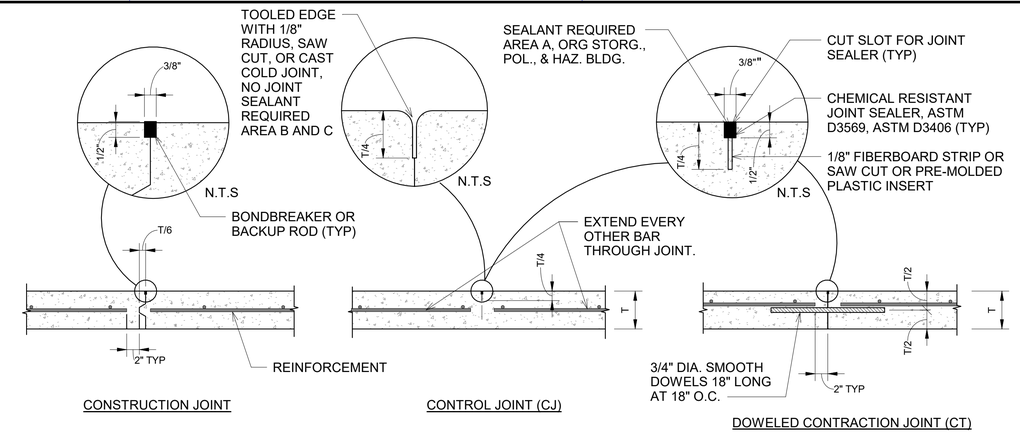

2 S-506 TYP SLAB CONTROL JOINTS

1" = 1'-0"

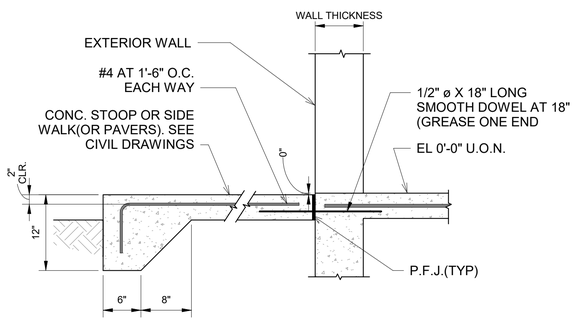

3 S-506 TYP EXTERIOR DOOR STOOP DETAIL

1" = 1'-0"

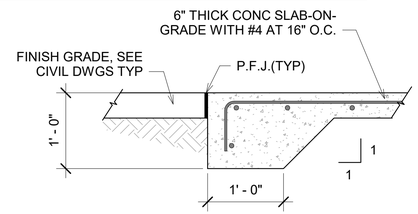

4 S-506 TYP THICKENED EDGE SLAB

1" = 1'-0"

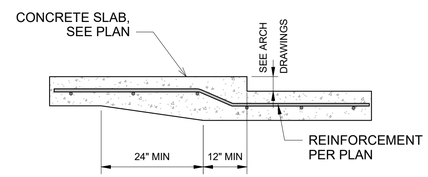

5 S-506 TYP RECESSED SLAB-ON-GRADE

1" = 1'-0"

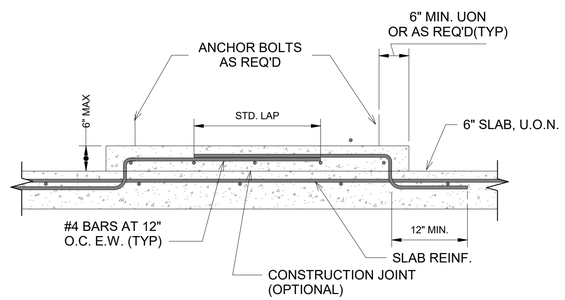

CONCRETE PAD -

NOTE:

1. PAD DIMENSIONS, ANCHOR BOLTS SIZE AND LOCATIONS, AND OTHER EMBEDDED ITEMS SHALL CONFORM TO EQUIPMENT MANUFACTURER'S REQUIREMENTS.

2. EQUIPMENT MANUFACTURER SHALL SELECT THE TYPE OF PAD.

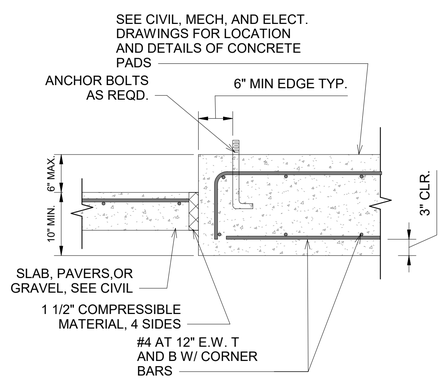

CONCRETE PAD -

6 S-506 TYPICAL EQUIPMENT CONCRETE PAD

1" = 1'-0"

USE 30-POUND ASPHALT SATURATED FELT STRIP (FULL DEPTH OF SLAB) AT PFJ AND COLUMN ISOLATION JOINTS, TYP.

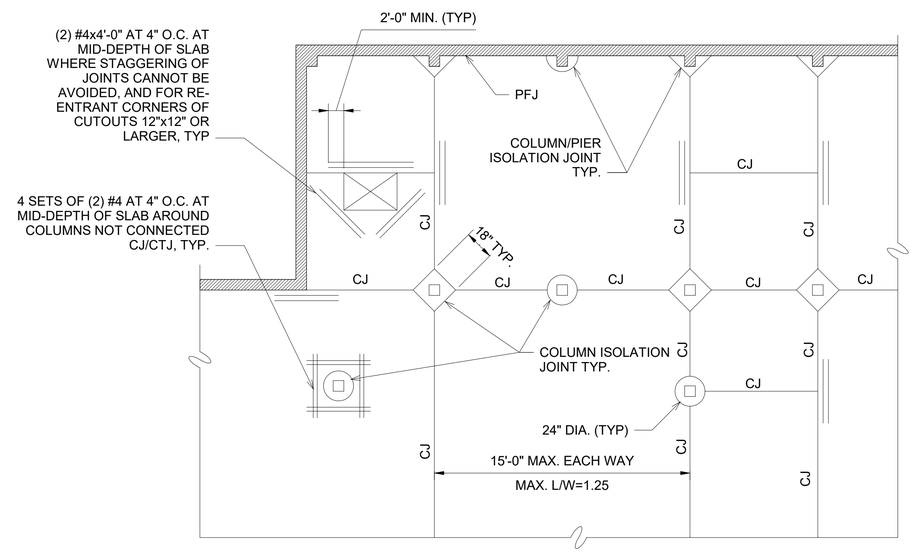

7 S-506 TYP SLAB-ON-GRADE JOINTING AND REINF

N.T.S.

US Army Corps of Engineers ®

MARK	DESCRIPTION	DATE

DESIGNED BY: ASJ
DRAWN BY: ALR
CHECKED BY: BN
SUBMITTED BY: ROWINE OWNESS
SIZE: E1 FILE NAME: ANSI D' WIDES_GTEB
ISSUE DATE: 13 JULY 2020
PROJECT # 233-25-0665
SPEC # 2145
FILE NUMBER:

US ARMY CORPS OF ENGINEERS
SACRAMENTO DISTRICT
US DEPT OF ARMY

SACRAMENTO DISTRICT
IN-HOUSE DESIGN
1325 J STREET
SACRAMENTO, CA 95814

GROUND TRANSPORT EQUIPMENT BUILDING

TYP SLAB AND DETAILS

SHEET ID

S-506

S S-506-

DESIGN SUBMITTAL: RTA

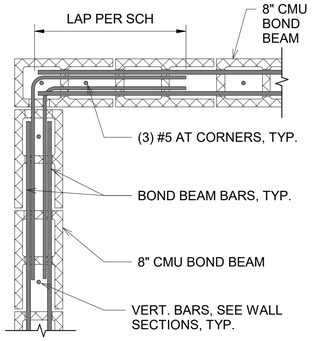

NOTES:
ALL EXTERIOR CMU SHALL BE OPEN ENDED BLOCKS

1 / S-507 TYP MASONRY CORNER REINF.

1" = 1'-0"

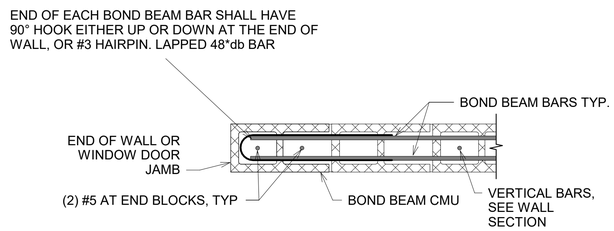

NOTES: ALL EXTERIOR CMU SHALL BE OPEN ENDED BLOCKS

2 / S-507 TYP EDGE OF MASONRY WALL REINF DETAIL

1" = 1'-0"

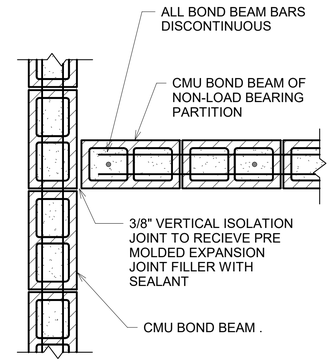

3 / S-507 TYP CMU ISOLATION JOINT

1" = 1'-0"

LINTEL REINF. SCHEDULE					
LINTEL SPAN	HORZ. REINF.			VERT. REINF.	MIN. LINTEL DEPTH
	BOT.	MID.	TOP.		
8'-0" OR LESS	(2) #5	-	-	#5 AT 16" O.C.	24"
>8'-0" TO 20'-0"	(2) #6	(2) #6	(2) #6	#5 AT 16" O.C.	40"
HORZ. REINF. EXTENDS PAST OPENING 28" FOR #5, & 51" FOR #6 PER SCH.					

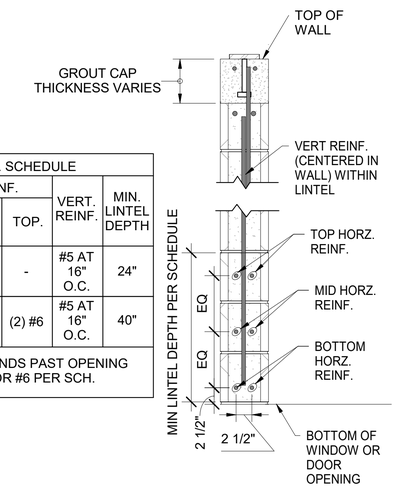

4 / S-507 LINTEL REINF. DETAIL

1" = 1'-0"

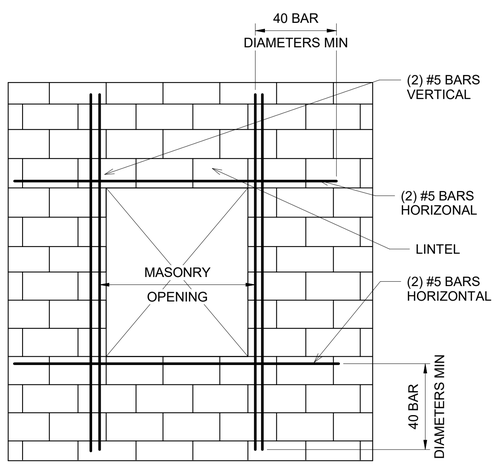

NOTE:
IN ADDITION TO OPENINGS SHOWN ON THE DRAWINGS, MASONRY AND STEEL WORK SHALL INCLUDE PROVIDING MASONRY WALL OPENINGS AND ASSOCIATED LINTELS REQUIRED FOR MECHANICAL /ELECTRCAL EQUIPMENT (OTHER THAN INDIVIDUAL PIPE PENETRATIONS FIELD DRILLED BY THE APPROPRIATE TRADES DURING THEIR WORK), INCLUDING COORDINATING WITH OTHER TRADES, GENERAL CONTRACTOR, ARCHITECT/ENGINEER, AND FINAL MECHANICAL AND ELECTRICAL DRAWINGS TO VERIFY EXACT SIZES AND LOCATIONS OF ALL SUCH OPENINGS AS WORK PROGRESSES. FINAL SIZES MAY NOT BE AVAILABLE UNTIL EQUIPMENT SHOP DRAWINGS ARE RECIEVED FROM SUCCESSFUL BIDDERS. ALL PARTIES SHOUD BE PREPARED TO PLAN AND COOPERATE ACCORDINGLY TO AVOID UNNECESSARY DELAYS IN THE WORK.

5 / S-507 TYP. CMU OPENING REINFORCEMENT

1 1/2" = 1'-0"

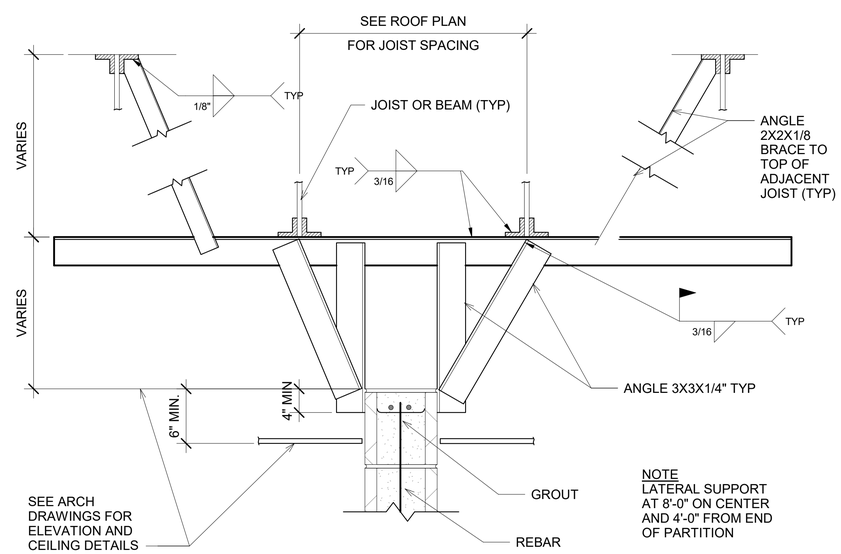

NOTE
LATERAL SUPPORT AT 8'-0" ON CENTER AND 4'-0" FROM END OF PARTITION

6 / S-507 TYP LATERAL SUPORT OF CMU PARTITION

1 1/2" = 1'-0"

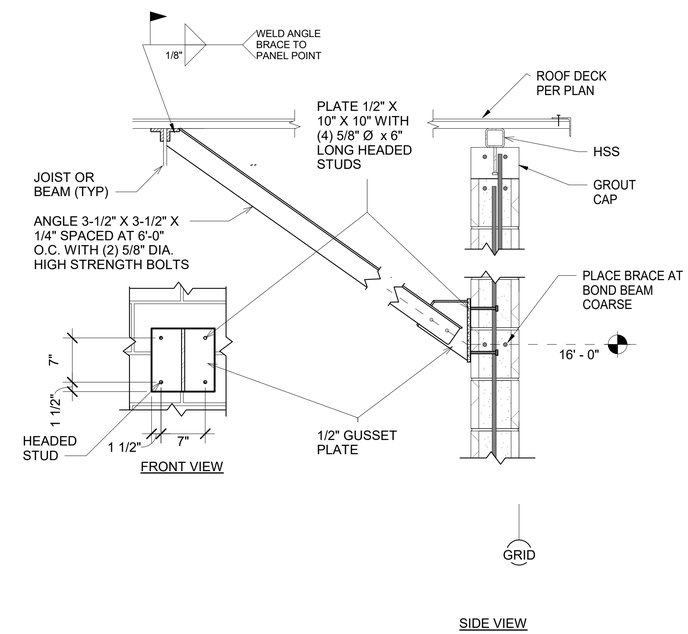

7 / S-507 TYP. LATERAL SUPPORT OF WALL

1" = 1'-0"

US Army Corps of Engineers ®

MARK	DESCRIPTION	DATE

ISSUE DATE: 13 JULY 2020
PROJECT # 233-25-0665
SPEC # 2145
FILE NUMBER:

DESIGNED BY: ASJ
DRAWN BY: ALR
CHECKED BY: BN
SUBMITTED BY: /s/ Daniel Pereira
SIZE: ANSI 'D'
FILE NAME: W65S_GTEB

US ARMY CORPS OF ENGINEERS
SACRAMENTO DISTRICT
US DEPT OF ARMY

SACRAMENTO DISTRICT
IN-HOUSE DESIGN
1325 J STREET
SACRAMENTO, CA 95814

GROUND TRANSPORT EQUIPMENT BUILDING

TYP MASONRY DETAILS

SHEET ID
S-507

S-507-

DESIGN SUBMITTAL: RTA

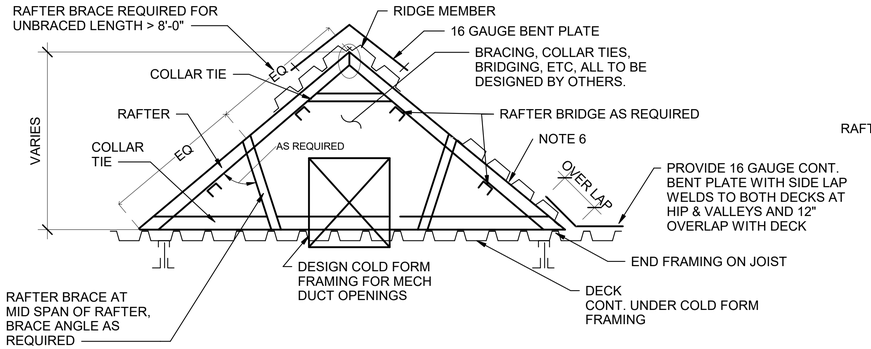

1 S-508 COLD FORMED ROOF FRAMING DETAIL

1" = 1'-0"

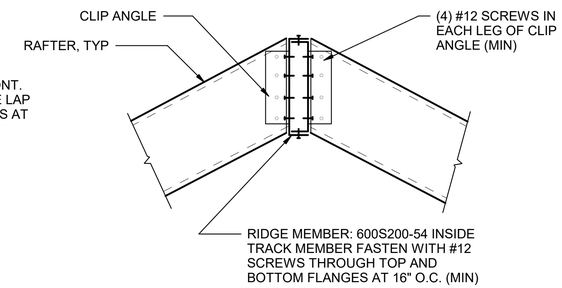

2 S-508 RIDGE MEMBER W/ COPED RAFTER DETAIL

1" = 1'-0"

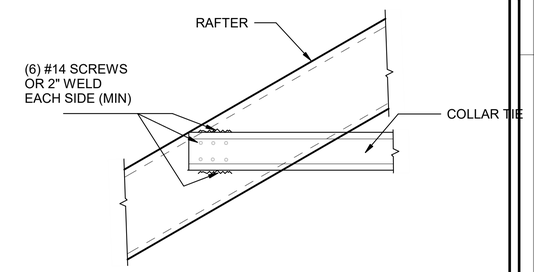

3 S-508 TYP. COLLAR TIE AT RAFTER

1" = 1'-0"

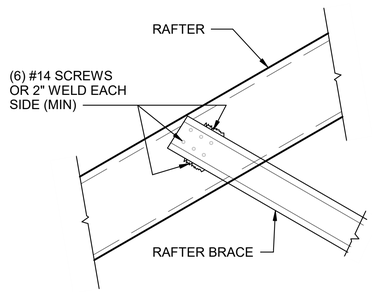

4 S-508 RAFTER BRACE CONNECTION DETAIL

1" = 1'-0"

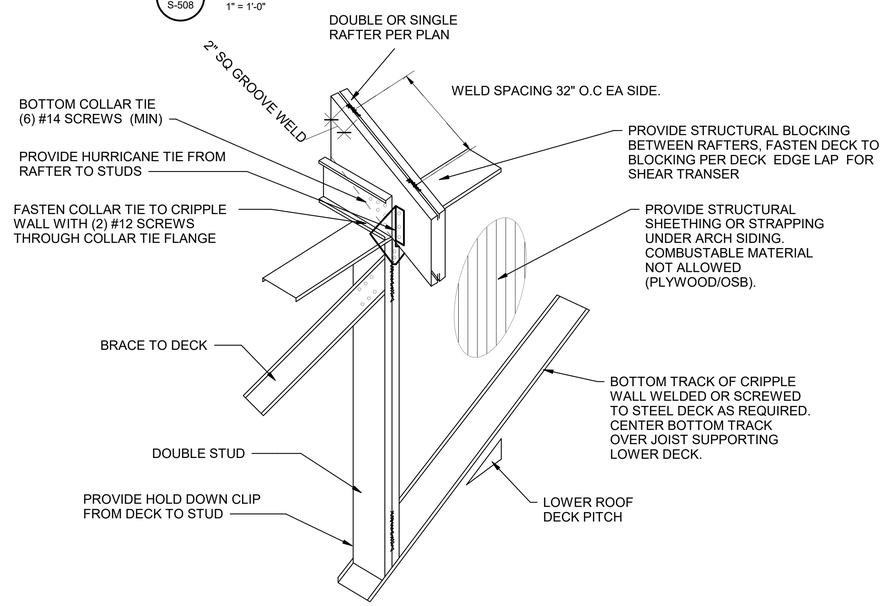

5 S-508 HEEL JOINT CONNECTION AT CRIPPLE WALL DETAIL

1" = 1'-0"

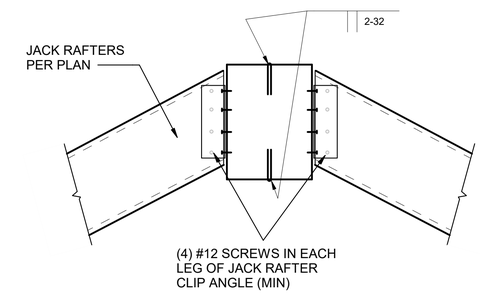

6 S-508 TYP. DOUBLE RAFTER AT HIPS

1" = 1'-0"

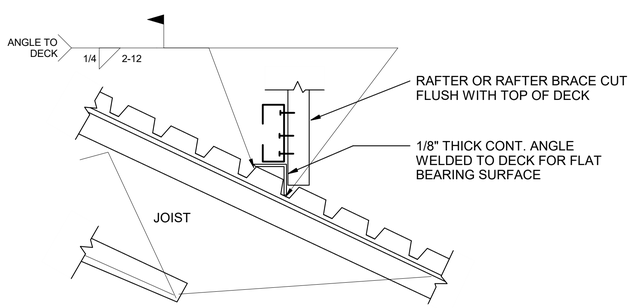

7 S-508 COLLAR TIE TO DECK CONNECTION

1 1/2" = 1'-0"

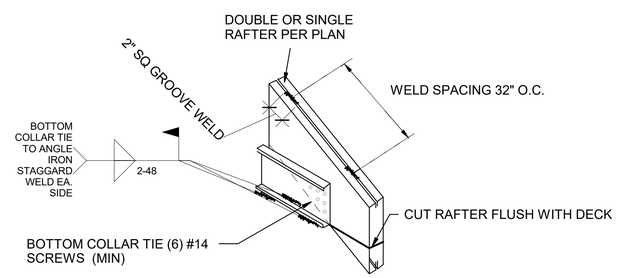

8 S-508 HEEL JOINT CONNECTION TO DECK DETAIL

1" = 1'-0"

NOTES:

1. ALL DETAILS ON THIS SHEET ARE DESIGNED BY OTHERS PER SPECIFICATION 05 40 00, AND DETAILS ARE PROVIDED TO CONVEY ROOF FRAMING CONCEPTS AND MIN. REQUIREMENTS

2. COLD FORM OVER FRAMING TO BE DESIGNED FOR 20 PSF ROOF NON-REDUCABLE LIVE LOAD ON TOP DECK OF COLD FORMED FRAMING, WIND LOADS PER S-001, 11 PSF SNOW LOAD, AND FRAMING SELF WEIGHT.

3. 16 GAUGE (54 MIL) 600S200-54 MIN RAFTER FRAMING MEMBER SIZE. NO WELDING ALLOWED ON MEMBERS THINNER THAN 54 MIL.

4. CLEAN ALL WELDS WITH WIRE BRUSH AND PAINT W/ COLD GALVANIZING COMPOUND. WELDING AND FASTENERS SHALL BE DESIGNED IN ACCORDANCE WITH AISI S100 AND AWS D1.3

5. ALL SKREWS MUST HAVE 4 THREADS MIN. PROTRUDING PASSED LAST MEMBER SCREWS PASSED THROUGH. ALL SCREWS MUST BE PLACED WITH A 1/2" EDGE DISTANCE FROM ALL MEMBERS SCREWED THROUGH.

6. USE #12 SCREWS AT 6" MIN O.C. ON DECK EDGES, AND 12" O.C. IN THE FIELD FOR METAL DECK ATTACHMENT TO COLD FORM MEMBERS. PUDDLE WELDING, NOT PERMITTED FOR DECK TO COLD FORM MEMBERS ATTACHMENT. DECK TO DECK TSW AND PLATE WELDING DECK TO DECK PERMITTED.

US Army Corps of Engineers ®

MARK	DESCRIPTION	DATE

DESIGNED BY: ASJ
DRAWN BY: ASJ
CHECKED BY: BN
SUBMITTED BY: SUPERVISING OWNER
SIZE: E1 FILE NAME: ANSI D' WIDES_GTEB
ISSUE DATE: 13 JULY 2020
PROJECT # 233-25-0665
SPEC # 2145
FILE NUMBER:

US ARMY CORPS OF ENGINEERS
SACRAMENTO DISTRICT
US DEPT OF ARMY

SACRAMENTO DISTRICT
IN-HOUSE DESIGN
1325 J STREET
SACRAMENTO, CA 95814

GROUND TRANSPORT EQUIPMENT BUILDING

COLD FORMED ROOF FRAMIMG TYP. DETAILS

SHEET ID

S-508

S-508-

DESIGN SUBMITTAL: RTA

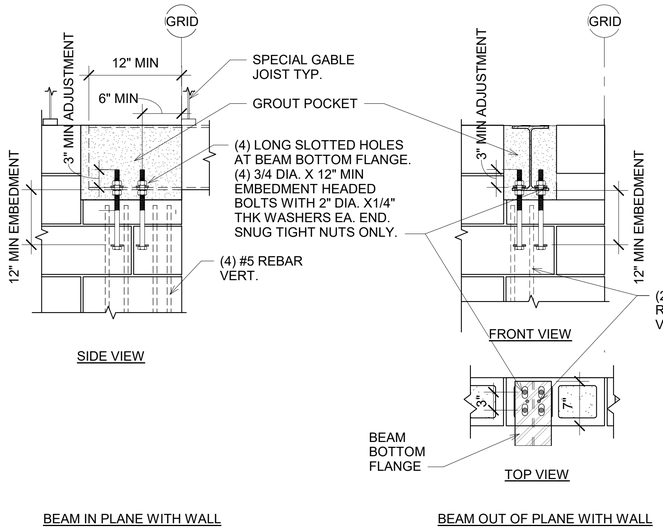

1 / S-509 STEEL BEAM TO CMU WALL CONNECTION

1" = 1'-0"

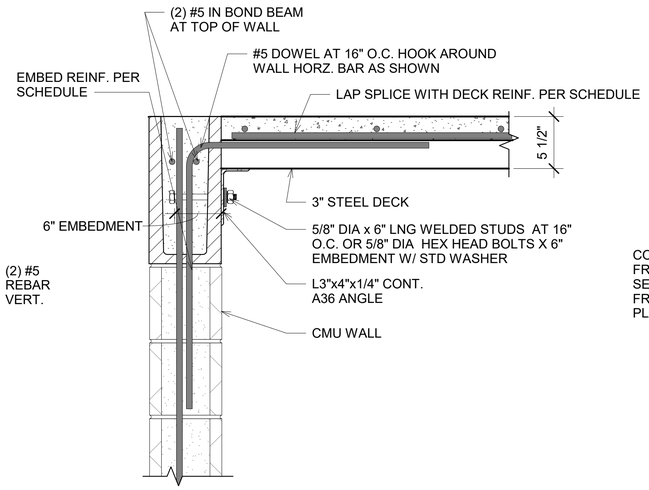

2 / S-509 TYP CONCRETE CANOPY DECK TO WALL CONNECTION

1 1/2" = 1'-0"

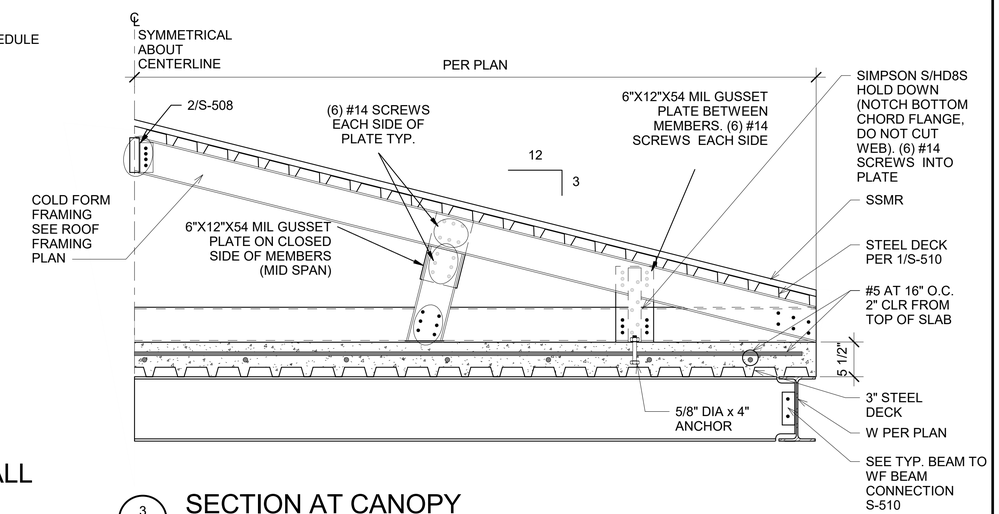

3 / S-509 SECTION AT CANOPY

1" = 1'-0"

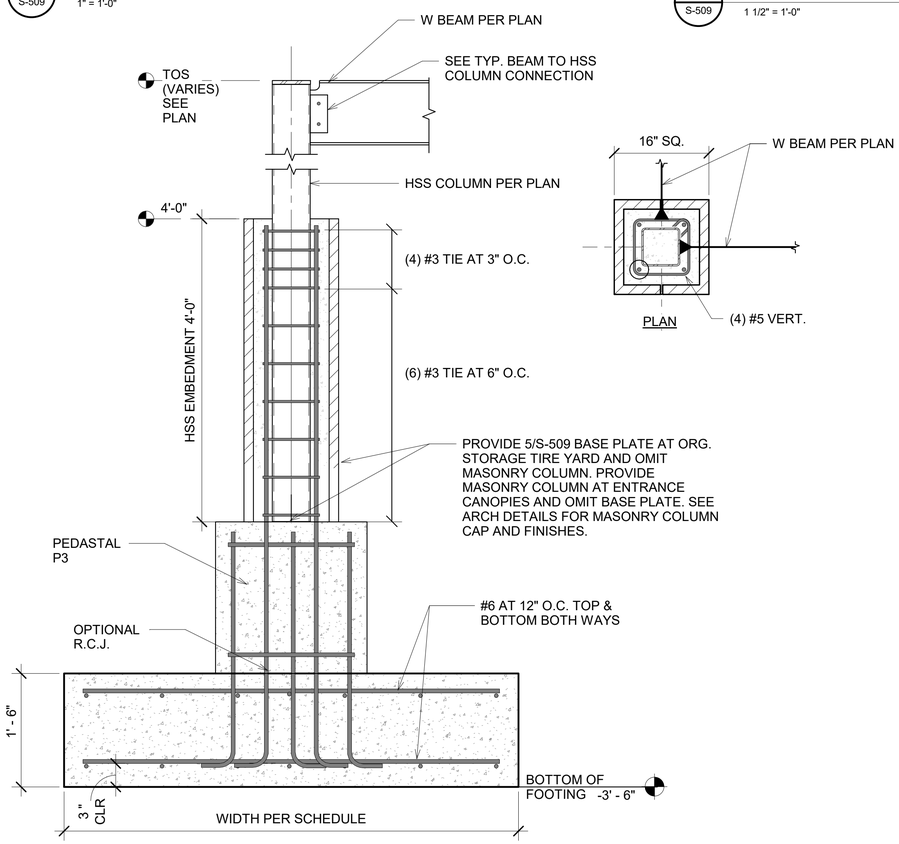

4 / S-509 CMU COL. W/ HSS

1" = 1'-0"

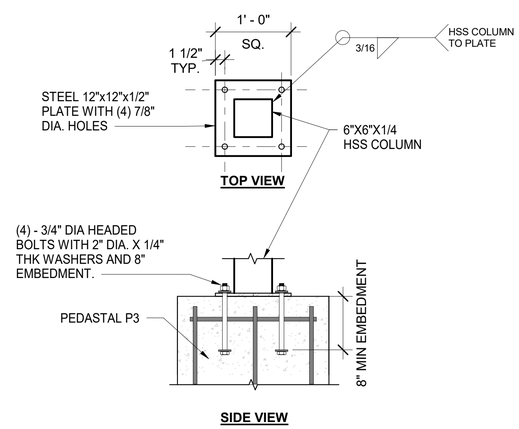

5 / S-509 TYP HSS COLUMN BASE PLATE

1" = 1'-0"

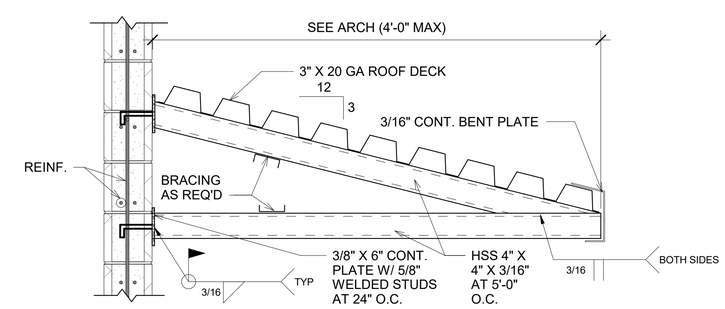

6 / S-509 TYP CANTILEVER CANOPY FRAMING

1" = 1'-0"

US Army Corps of Engineers ®

MARK	DESCRIPTION	DATE

ISSUE DATE: 13 JULY 2020
PROJECT # 233-25-0665
SPEC # 2145
FILE NUMBER:

DESIGNED BY: ASJ
DRAWN BY: EM
CHECKED BY: BN
SUBMITTED BY: ISAMICE ONWESS
SIZE: ANSI 'D'
FILE NAME: W65S_GTEB

US ARMY CORPS OF ENGINEERS
SACRAMENTO DISTRICT
US DEPT OF ARMY

SACRAMENTO DISTRICT
IN-HOUSE DESIGN
1325 J STREET
SACRAMENTO, CA 95814

GROUND TRANSPORT EQUIPMENT BUILDING

CANOPY FRAMING DETAILS

SHEET ID

S-509

S-509-

DESIGN SUBMITTAL: RTA

STEEL DECK PROPERTIES

TYPE	LOCATION	DECK SIZE (DEPTH & THICK.	MOMENT OF INERTIA I MIN. IN⁴ /FT.	SECTION MODULUS Sp MIN. IN³/FT.	SECTION MODULUS SN MIN. IN³/FT.	ATTACHMENT TO SUPPORT AND PARALLEL MEMBERS AND BLOCKINGS	SIDE LAP ATTACHMENT	NOTES/ REMARKS
I	ROOF	PLB 1 1/2" X 20 GA	0.231	0.230	0.237	36/4	1 1/2" TSW AT 24"	"VERCO" PLB (OR EQUAL)
I	CANOPY OVER FRAMING	PLB 1 1/2" X 20 GA	0.231	0.230	0.237	36/4	1 1/2" TSW AT 24"	"VERCO" PLB (OR EQUAL)
I	CANOPY CONCRETE COMPOSITE DECK	PLN 3 X 20 GA	0.953	0.452	0.509	36/4	1 1/2" TSW AT 24"	"VERCO" PLN3 (OR EQUAL)

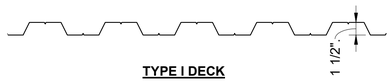

TYPE I DECK

TYPE II DECK

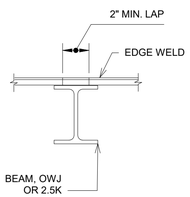

TYP. DECK SPLICE
SCALE: N.T.S

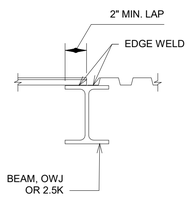

TYP. DECK SPLICE
SCALE: N.T.S

1. DIFFERENT DECK PANEL WIDTHS MAY BE SUBSTITUED IF WELDING PATTERNS ARE ADJUSTED TO PROVIDE EQUAL LATERAL SHEAR CAPACITY OF THE DECKING SHOWN, AND IF APPROVED BY THE CONTRACTING OFFICER.
2. DIFFERENT WIDTHS OF DECK PANELS SHALL NOT BE MIXED EXCEPT AS A MAKEUP FOR UNEVEN MULTIPLE ROOF WIDTHS.
3. ARC SPOT WELDS MAY BE ELIMINATED WHERE THEY COINCIDE WITH STEEL HEADED STUD ANCHORS.

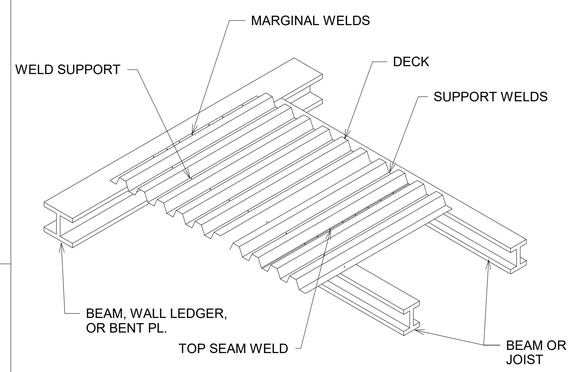

SCALE: N.T.S

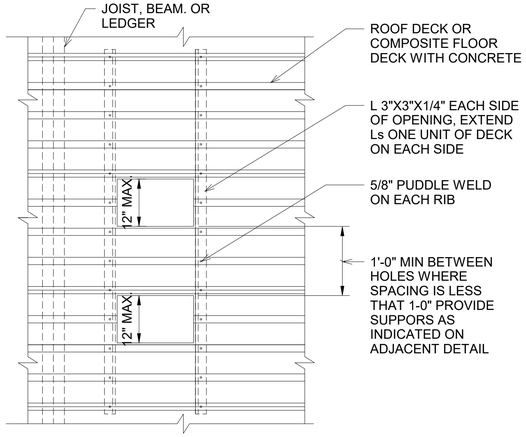

NOTES:
No L's REQUIRED FOR OPENINGS LESS THAN 6" WIDE

OPENINGS 6" -
SCALE: N.T.S

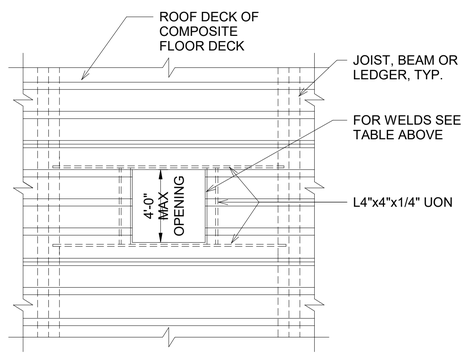

OPENINGS OVER
SCALE: N.T.S

1 / S-510
TYPICAL DECKING DETAILS AND SECTIONS
1" = 1'-0"

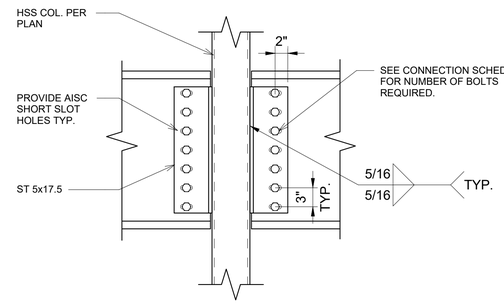

BEAM TO HSS COLUMN SCHEDULE		
BEAM SIZE	NO. OF BOLTS IN ONE VERTICAL ROW	ASTM A325 (N) BOLT ø
W10	2	1"
W12	3	1"
W16	4	1"
W18	5	1"
W21	6	1"
W24	7	1"

2 / S-510
TYP. BEAM & HSS COLUMN DETAIL
1" = 1'-0"

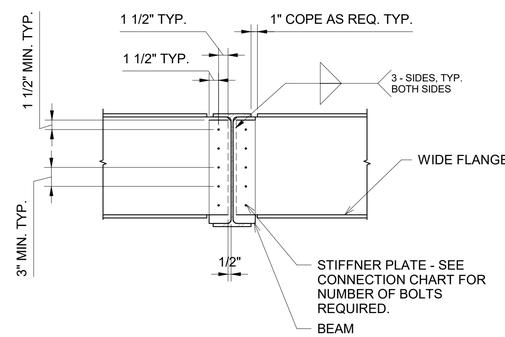

NOTE: PROVIDE AISC SHORT SLOT HOLES TYP.

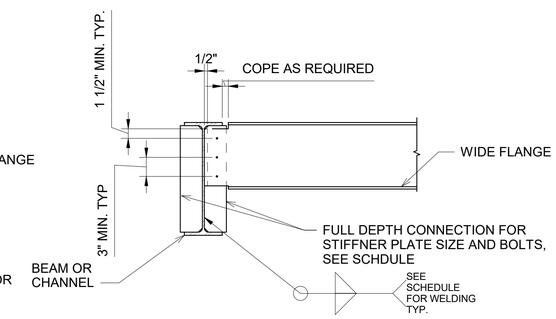

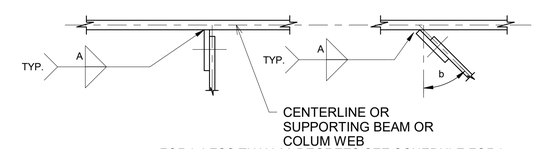

FOR b LESS THAN 30 DEGREES SEE SCHEDULE FOR b LARGER THAN 30 DEGREES TO 45 DEGREES SEE 5/S-541

CONNECTION SCHEDULE					
BEAM SIZE (CHANNEL SIZE SIMILAR)	BEAM TO BEAM AND BEAM TO COLUMN CONNECTION				REMARKS
	PLATE THICKNESS	FILLET WELD A	NO. OF BOLTS IN ONE VERT. ROW	A325-N BOLT DIA.	
W10 TO W10	3/8"	1/4"	2	1" DIA.	
C12, W12 TO W14	3/8"	1/4"	3	1" DIA.	
W16	3/8"	1/4"	4	1" DIA.	
W18	3/8"	1/4"	5	1" DIA.	
W21	3/8"	1/4"	6	1" DIA.	
W24 TO W27	1/2"	5/16"	7	1" DIA.	
W30	5/8"	3/8"	8	1" DIA.	
W36	5/8"	3/8"	9	1" DIA.	

NOTE:
1. CONNECTIONS SHOWN ARE TYP. UNLESS SPECIFICALLY DETAILED OTHERWISE.

2. WHERE DEPTH OF CONNECTED BEAM AND SUPPORTING BEAM DIFFER BY 9" OR MORE, SHEAR PLATE MAY BE TERMINATED A DISTANCE OF 2" BELOW THE LOWEST BOLT.

3. ALL STRUCTURAL BOLTS SHALL BE "SNUG-TIGHTENED" IN ACCORDANCE WITH AISC REQUIREMENTS UNO.

NOTE:
USE THIS DETAIL AND CONNECTIONS AT WHICH THERE IS NO CONNECTION ON OPPOSITE SIDE OF THE BEAM WITHIN A DISTANCE OF 3 FEET.

3 / S-510
TYP BEAM & WF COLUMN DETAIL
1" = 1'-0"

US Army Corps of Engineers ®

MARK	DESCRIPTION	DATE

DESIGNED BY: ASJ
DRAWN BY: ALR
CHECKED BY: BN
SUBMITTED BY: SUMMIT OWNES
SIZE: E FILE NAME: ANSI D' WIDSS_GTEB
ISSUE DATE: 13 JULY 2020
PROJECT # 233-25-0665
SPEC # 2145
FILE NUMBER:

US ARMY CORPS OF ENGINEERS
SACRAMENTO DISTRICT
US DEPT OF ARMY

SACRAMENTO DISTRICT
IN-HOUSE DESIGN
1325 J STREET
SACRAMENTO, CA 95814

GROUND TRANSPORT EQUIPMENT BUILDING

TYP STRUCTURAL DETAILS

SHEET ID
S-510

S S-510-

DESIGN SUBMITTAL: RTA

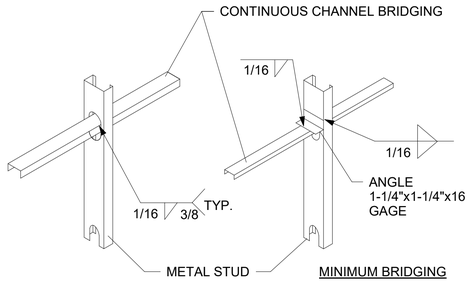

MINIMUM BRIDGING

1. WALLS <10'-0":2 ROWS EQUAL SPACED WALLS>10'-0". 3'-4" ON CENTER MAXIMUM.

2. USE SAME BRIDGING FOR EXTERIOR STEEL STUD WALLS.

1 / S-511 TYPICAL METAL STUD BRIDGING

1" = 1'-0"

ATTACHMENT OF BOTTOM TRACKS:

1. TRACK FOR PARTITIONS RESTING ON CONRETE SLAB SHALL BE ANCHORED WITH POWER DRIVEN THREADED STUDS (RAMSET 2431 1/4" OR EQ.) 6" MAX FROM END OF EA. PIECE AND AT 32" O.C., U.N.O.

2. FOR TRACKS AT EXTERIOR STEEL STUD WALLS, SEE WALL SECTIONS.

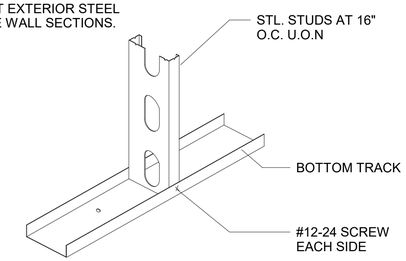

4 / S-511 TYPICAL INTERIOR METAL TRACK

1" = 1'-0"

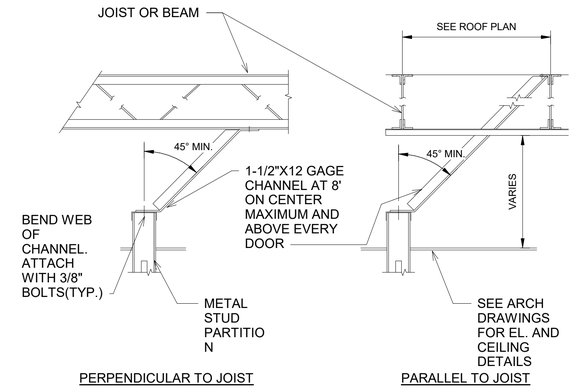

6 / S-511 TYP. LATERAL SUPPORT OF STUD PARTITION

1" = 1'-0"

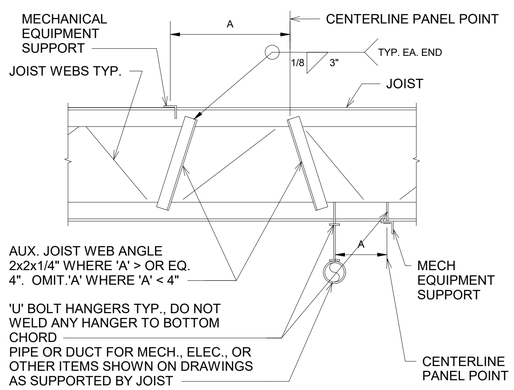

DO NOT SUSPEND UTILITIES OF CEILING FROM ROOF DECK OR BRIDGING

2 / S-511 TYPICAL OWJ AUX MEMBER AND HANGER

1" = 1'-0"

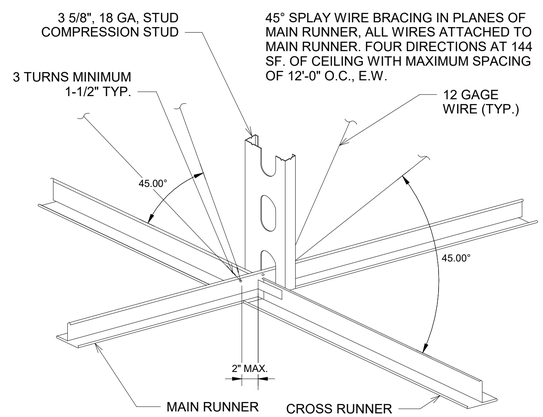

5 / S-511 TYPICAL SUSPENDED CEILING SPLAY BRACING

1" = 1'-0"

INTERIOR WALL OPENING
FRAMING SCHEDULE

'W' WIDTH MAX	JAMBS	HEADER	SILL
LESS THAN 4'-0"	SINGLE STUD	TRACK	TRACK
LESS THAN 16'-0"	DBL STUD	TRACK & STUD	TRACK

INTERIOR NON-BEARING PARTITIONS
MAXIMUM HEIGHT FOR METAL STUDS
WITH DEFLECTION LIMIT L/240

16"CC SPACING

DEPTH	GUAGE	TYPE	HEIGHT
3 5/8"	20	CS	12'-3"
3 5/8"	20	XCS	17'-5"
3 5/8"	18	XCS	18'-10"
3 5/8"	16	XCS	20'-2"
3 5/8"	14	XCS	21'-8"
4"	20	XCS	13'-3"
4"	20	XCS	18'-9"
4"	18	XCS	20'-4"
4"	16	XCS	21'-10"
4"	14	XCS	23'-5"
6"	20	XCS	25'-9"
6"	18	XCS	27'-11"
6"	16	XCS	30'-0"
6"	14	XCS	32'-3"
8"	20	XCS	32'-5"
8"	18	XCS	35'-3"
8"	16	XCS	37'-10"
8"	14	XCS	40'-9"

1. STUDS SHALL BE DEPTH AS INDICATED ON ARCH DRAWINGS AND GAUGE AS DETERMINED BY HEIGHT OF WALL AND THE SCHEDULE ABOVE.

2. SEE ELEVATION FOR TYPICAL WALL FRAMING CONDITIONS.

3. USE DBL STUD MIN AT DOOR AND WINDOW OPENINGS.

7 / S-511 TYPICAL METAL STUD TABLE

1" = 1'-0"

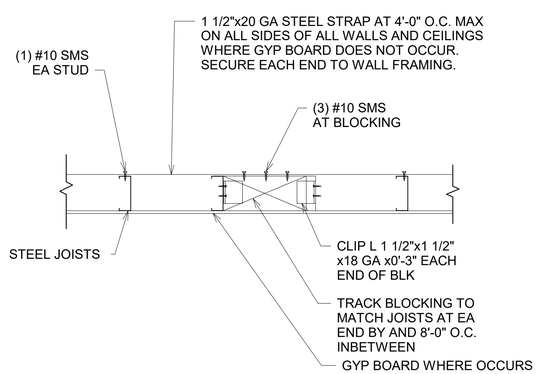

3 / S-511 TYPICAL STRAP BRACING DETAIL

1" = 1'-0"

US Army Corps of Engineers ®

MARK	DESCRIPTION	DATE

ISSUE DATE: 13 JULY 2020
PROJECT # 233-25-0665
SPEC # 2145
FILE NUMBER:

DESIGNED BY: AS
DRAWN BY: ALR
CHECKED BY: BN
SUBMITTED BY: /S/ MIKE ONNES
SIZE: ANSI D
FILE NAME: W999_CFEB

US ARMY CORPS OF ENGINEERS
SACRAMENTO DISTRICT
US DEPT OF ARMY

SACRAMENTO DISTRICT
IN-HOUSE DESIGN
1325 J STREET
SACRAMENTO, CA 95814

GROUND TRANSPORT EQUIPMENT BUILDING

TYP STRUCTURAL STEEL DETAILS

SHEET ID

S-511

S S-511-

DESIGN SUBMITTAL: RTA

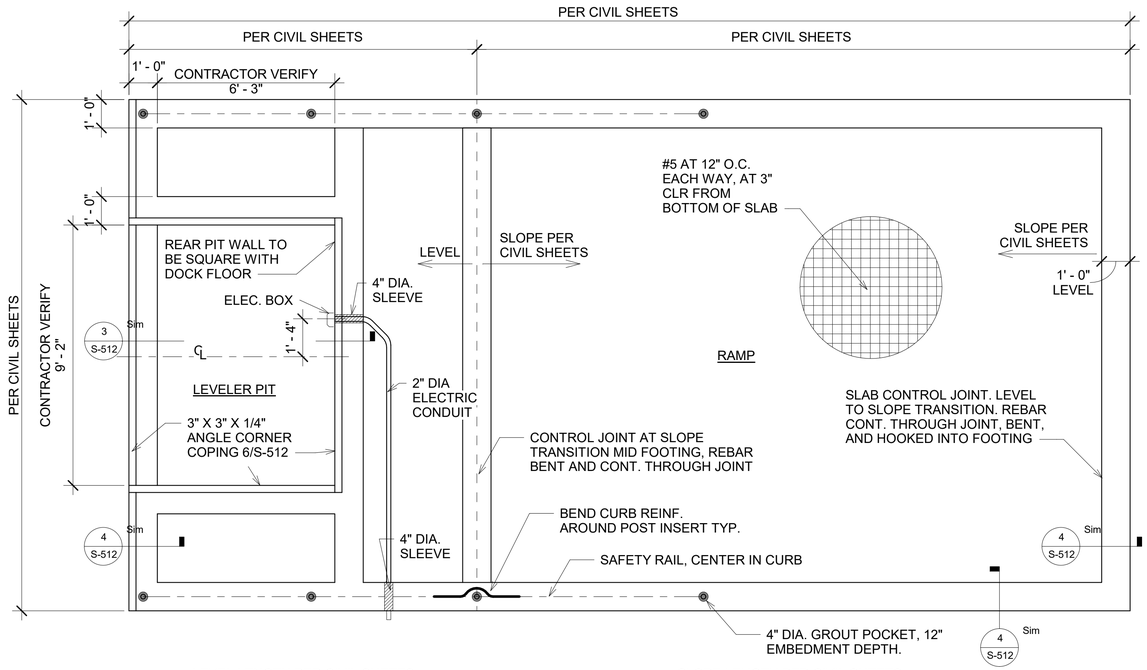

1 S-512 LOADING RAMP PLAN & ELEVATION

3/8" = 1'-0"

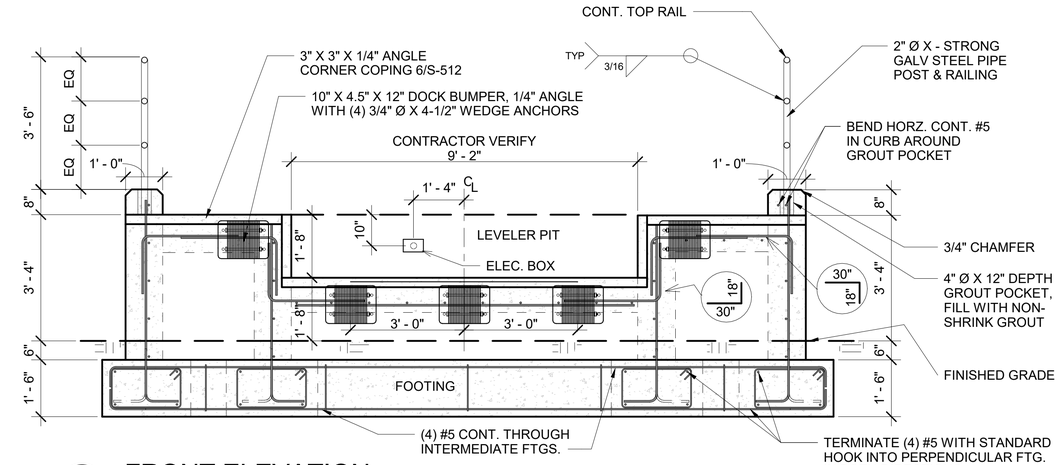

2 S-512 FRONT ELEVATION

1/2" = 1'-0"

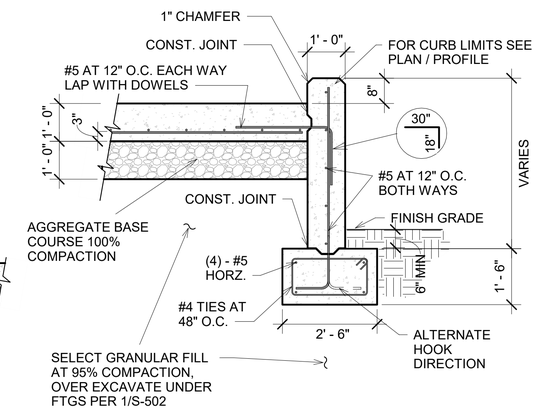

4 S-512 SECTION AT WALL FTG

1/2" = 1'-0"

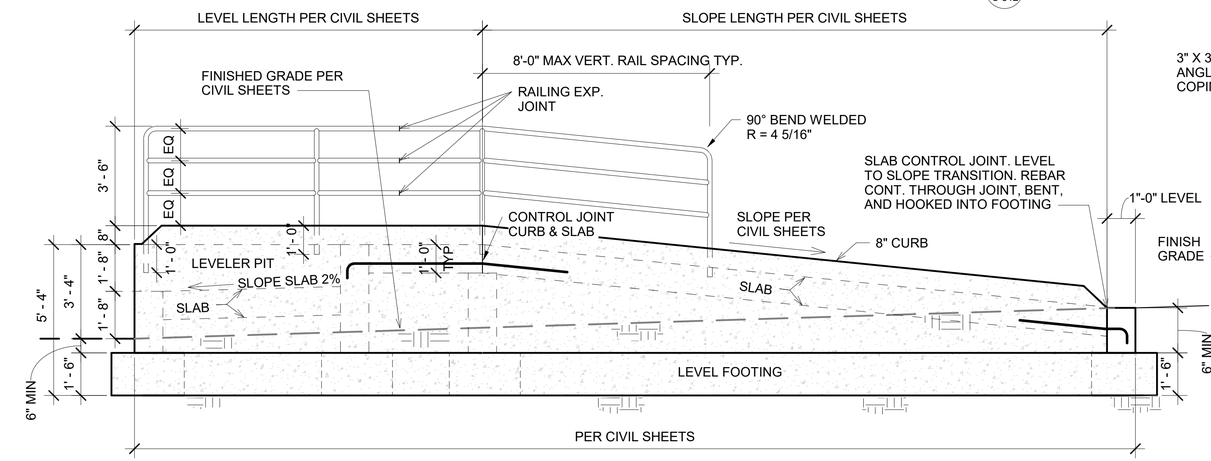

1 S-512 LOADING RAMP PLAN & ELEVATION

3/8" = 1'-0"

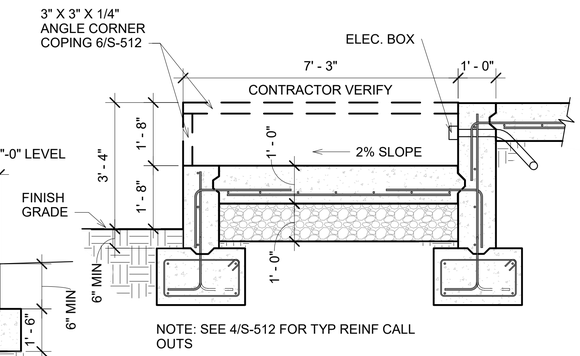

3 S-512 SECTION AT LEVELER PIT

1/2" = 1'-0"

GENERAL NOTES:

1. HYDRAULIC DOCK LEVELER: THE HYDRAULIC DOCK LEVELER IS TO BE REMOVED AND SALVAGED FROM EXISTING LOADING DOCK, AND IS OF THE HDH SERIES FROM PIONEER LOADING DOCK EQUIPMENT, MODEL 9'W X 8'L. INSTALL UNIT PER MANUFACTURER'S SPECIFICATIONS. SEE MANUFACTUR'S OWNER MANUAL FOR DETAILS. FIELD VARIFY LEVELER DIMENSIONS PRIOR TO RAMP CONSTRUCTION.
2. SAFETY RAIL: HOT DIPPED GALVANIZED IN ACCORDANCE WITH ASTM A123, CLEAN AND PAINT WELDS WITH COLD GALVANIZING COMPOUND. FINISH COAT PAINT THE SAFETY RAIL OF COLOR PER OWNER'S DIRECTIVE.
3. AGGREGATE BASE COURSE: THE MATERIAL SHALL CONFORM TO THE 32 11 23 SPEC. MINIMUM COMPACTION OF 100% (ASTM D 1557)
4. CONCRETE: 4000 PSI.
5. REINFORCING STEEL: GRADE 60. LAPS & SPLICES PER SCHEDULE 1/S-505. EXTEND BARS CONTINUOUS AROUND CORNERS PER 2/S-505

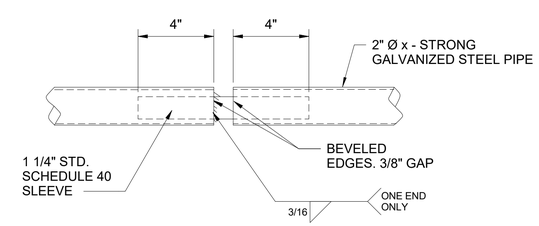

5 S-512 TYP. RAILING EXPANSION JOINT

3" = 1'-0"

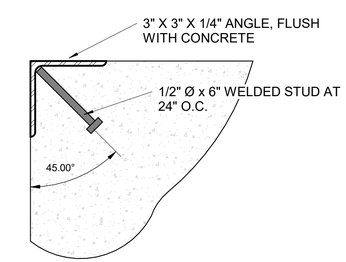

6 S-512 CORNER COPING

3" = 1'-0"

US Army Corps of Engineers ®

MARK	DESCRIPTION	DATE

ISSUE DATE: 13 JULY 2020
PROJECT # 233-25-0665
SPEC # 2145
FILE NUMBER:

DESIGNED BY: ASJ
DRAWN BY: ASJ
CHECKED BY: BN
SUBMITTED BY: /S/ MIKE ONYES
SUBMITTED FILE NAME: ANSI D_W55S_GTEB

US ARMY CORPS OF ENGINEERS
SACRAMENTO DISTRICT
US DEPT OF ARMY

SACRAMENTO DISTRICT
IN-HOUSE DESIGN
1325 J STREET
SACRAMENTO, CA 95814

GROUND TRANSPORT EQUIPMENT BUILDING

LOADING RAMP

SHEET ID

S-512

S-512-

DESIGN SUBMITTAL: RTA

NOTES:

1.) SEE CIVIL DRAWING FOR CULVERT LOCATIONS, AND ADDITIONAL CONCRETE DETAILING AT CULVERT OPENINGS AND HEADWALL

2.) PLACE ALL BARS WITH 3" CLEAR COVER

3.) ALL STANDARD HOOKS PER ACI 318-14, SEE 3/S-505.

4.) NO VEHICAL TRAFFIC ALLOWED ON CULVERT UNTIL CONCRETE HAS REACHED 4,500 PSI DESIGN STRENGTH. CONTRACTOR RESPONSIBLE TO SIZE EQUIPMENT ON CULVERT DURING CONSTRUCTION.

5.) CULVERT DESIGNED FOR ASHTO HS-20, AND HL-93, VEHICLE LOADING SIMULTANEOUSLY IN EACH TRAFFIC LANE. CAPACITY EXCEEDS CALTRANS 2018 STANDARD CAST-IN-PLACE REINF. CONC. DOUBLE BOX CULVERT DRAWING D81 WITH 10' MAX OF EARTH COVER. CONTROLING TRANSIENT VEHICAL LIVE LOADING:

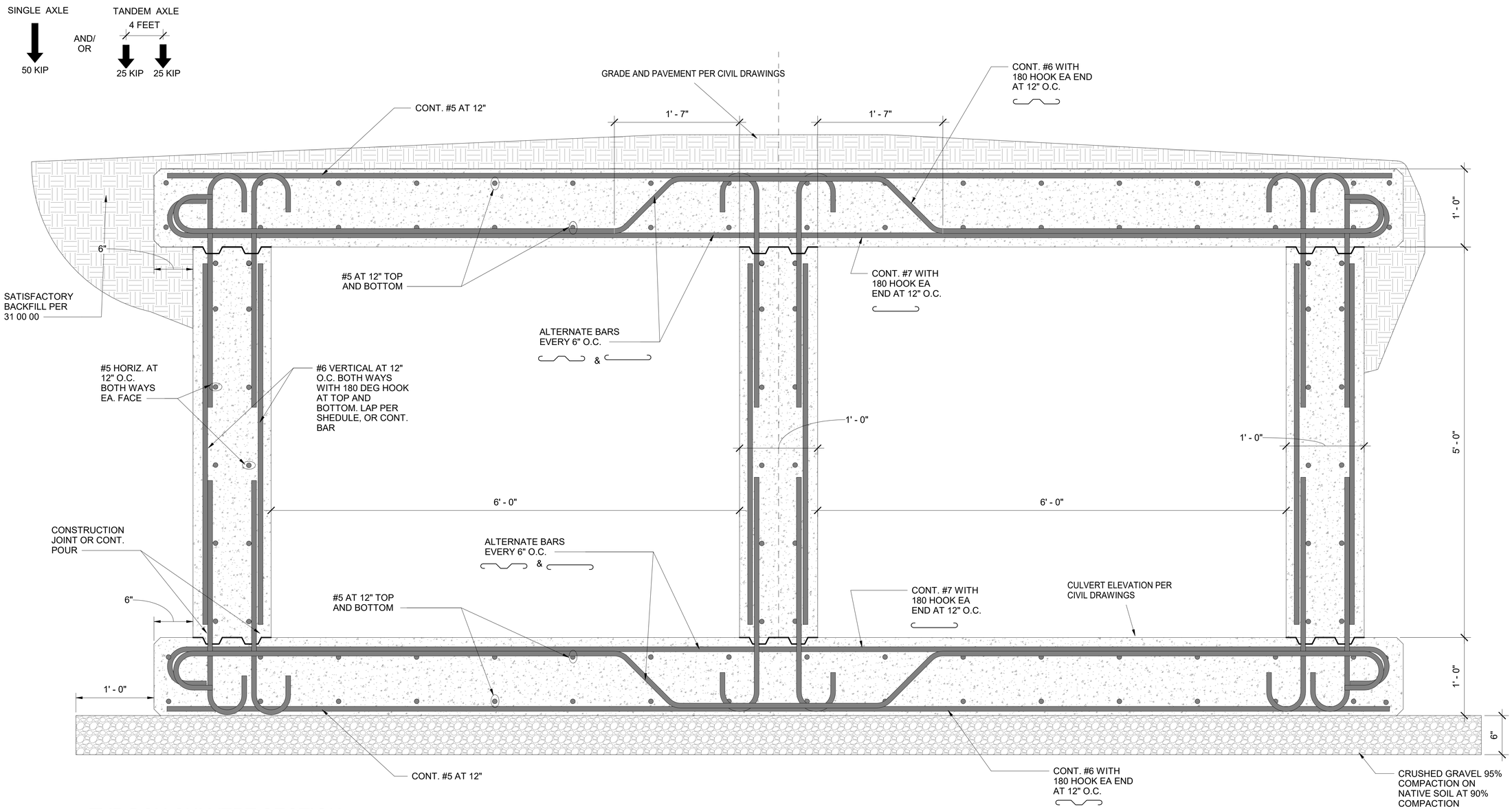

1 / S-513 TYP BOX CULVERT SECTION

1 1/2" = 1'-0"

US Army Corps of Engineers ®

MARK	DESCRIPTION	DATE

DESIGNED BY: ASJ
DRAWN BY: ASJ
CHECKED BY: BN
SUBMITTED BY: SUMWIE ONWES
SIZE: E1 FILE NAME: ANSI D' WIESS_GTEB
ISSUE DATE: 13 JULY 2020
PROJECT # 233-25-0665
SPEC # 2145
FILE NUMBER:

US ARMY CORPS OF ENGINEERS
SACRAMENTO DISTRICT
US DEPT OF ARMY

SACRAMENTO DISTRICT
IN-HOUSE DESIGN
1325 J STREET
SACRAMENTO, CA 95814

GROUND TRANSPORT EQUIPMENT BUILDING

BOX CULVERT

SHEET ID

S-513

S-513-

DESIGN SUBMITTAL: RTA

COLUMN FOOTING

MARK	BOTTOM OF FOOTING	DIMENSIONS			REINFORCEMENT				REMARKS
		LENGTH (L)	WIDTH (W)	THICKNESS (T)	TOP REINF.		BOTTOM REINF.		
					LONG	TRANSV.	LONG	TRANSV.	
F1	-4'-6"	15'-0"	15'-0"	2'-6"	#8 AT 12" O.C.	#8 AT 12" O.C.	#8 AT 12" O.C.	#8 AT 12" O.C.	SEE NOTE 1.
F2	-4'-6"	8'-0"	8'-0"	2'-6"	#8 AT 12" O.C.	#8 AT 12" O.C.	#8 AT 12" O.C.	#8 AT 12" O.C.	SEE NOTE 1.
F3	-3'-6"	4'-0"	4'-0"	1'-6"	#6 AT 12" O.C.	#6 AT 12" O.C.	#6 AT 12" O.C.	#6 AT 12" O.C.	

NOTE:
1. PRE-ENGINEERED METAL BUILDING (PEMB) FOUNDATION SIZES ARE PRELIMINARY AND THE ACTUAL SIZES SHALL BE DETERMINED BY THE EOR BASED ON THE COMPUTED BUILDING REACTIONS BY THE PEMB SUPPLIER. SEE SPECIFICATIONS FOR ADDITIONAL INFORMATION.

WALL FOOTING SCHEDULE

MARK	DIMENSION		TOP REINF.		BOTTOM REINF.		BOTTOM OF FOOTING
	WIDTH	THICKNESS	TRANSV.	LONG.	TRANSV.	LONG	
CF-1	6'-0"	1'-6"	#6 AT 12" O.C.	#6 AT 12" O.C.	#6 AT 12" O.C.	#6 AT 12" O.C.	(-) 3'-6"
CF-2	4'-6"	1'-6"	#6 AT 12" O.C.	#6 AT 12" O.C.	#6 AT 12" O.C.	#6 AT 12" O.C.	(-) 3'-6"
CF-3	3'-0"	1'-6"	#5 AT 8" O.C.	#5 AT 8" O.C.	#5 AT 8" O.C.	#5 AT 8" O.C.	(-) 3'-6"
CF-4	3'-0"	1'-6"	NONE	NONE	#5 AT 8" O.C.	#5 AT 8" O.C.	(-) 2'-6"

CONCRETE SLAB SCHEDULE

KEY	SLAB THICKNESS	SLAB TYPE	REINFORCEMENT	REMARKS
CS-1	8"	ON GRADE	#4 AT 12" O.C.	REINF. 3" CLR FROM TOP OF SLAB
CS-2	6"	ON GRADE	#4 AT 12" O.C.	REINF. 2" CLR FROM TOP OF SLAB

NOTE:
1. SEE DETAIL 1/S-502 FOR TYPICAL SLAB-ON-GRADE SUBGRADE PREPARATION.

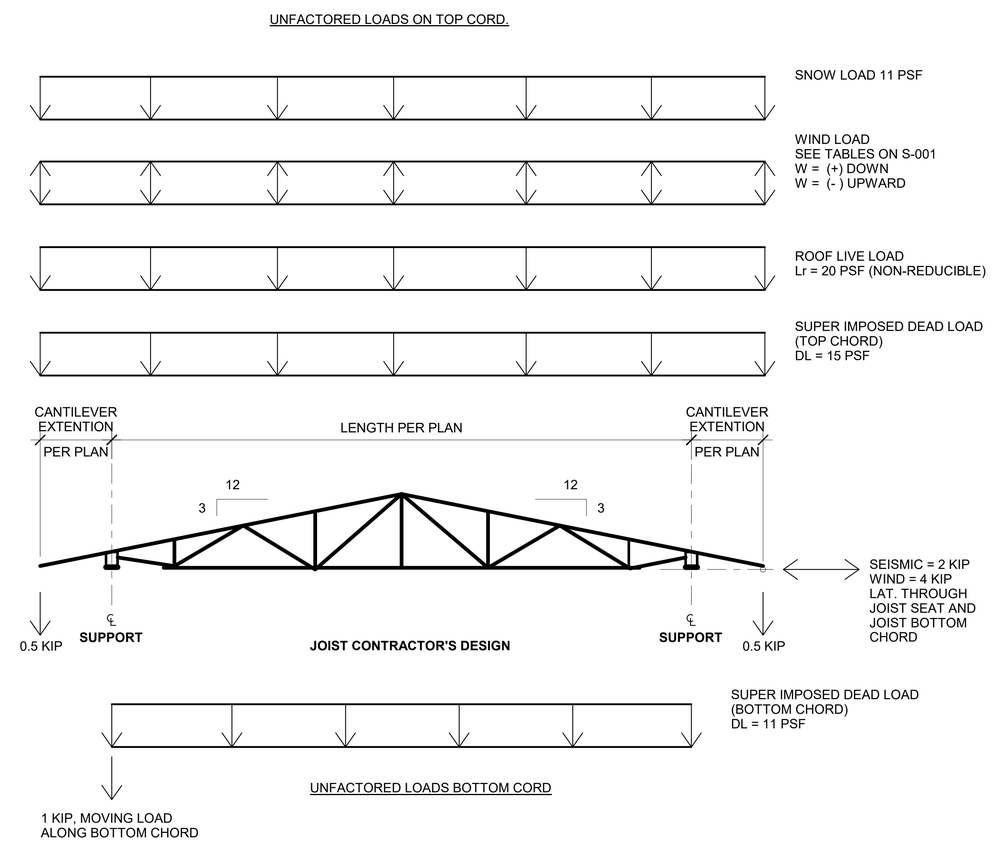

1 / S-601 TYP. SPECIAL JOIST LOADING DIAGRAM

12" = 1'-0"

US Army Corps of Engineers ®

MARK	DESCRIPTION	DATE

DESIGNED BY: ASJ
DRAWN BY: ALR
CHECKED BY: BN
SUBMITTED BY: SUMMIT ONWESS
SIZE: FILE NAME: ANSI D' WSS_GTEB
ISSUE DATE: 13 JULY 2020
PROJECT # 233-25-0665
SPEC # 2145
FILE NUMBER:

US ARMY CORPS OF ENGINEERS
SACRAMENTO DISTRICT
US DEPT OF ARMY

SACRAMENTO DISTRICT
IN-HOUSE DESIGN
1325 J STREET
SACRAMENTO, CA 95814

GROUND TRANSPORT EQUIPMENT BUILDING

SCHEDULES AND DIAGRAMS

SHEET ID

S-601

S S-601-

DESIGN SUBMITTAL: RTA

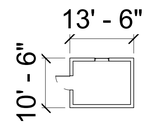

68059 - HAZMAT
142 GSF

8 AD101 BUILDING 68059
1/16" = 1'-0"

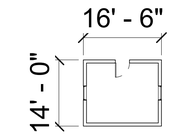

68053 - BATTERY SHOP
231 GSF

4 AD101 BUILDING 68053
1/16" = 1'-0"

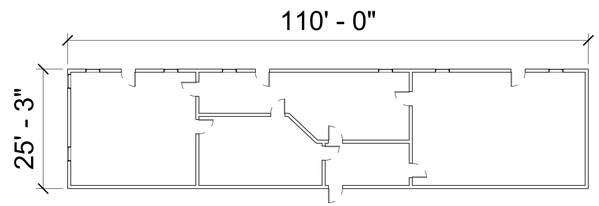

68058 - PRODUCTION CONTROL / PLL
2,778 GSF

7 AD101 BUILDING 68058
1/16" = 1'-0"

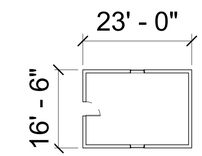

68052 - TIRE SHOP
380 GSF

3 AD101 BUILDING 68052
1/16" = 1'-0"

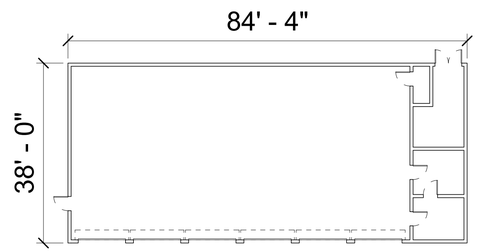

68057 - GND MAINT BAY
3,205 GSF

6 AD101 BUILDING 68057
1/16" = 1'-0"

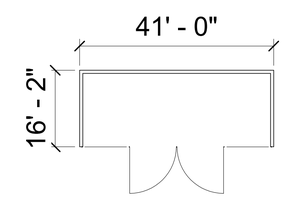

68049 - POL SHED
663 GSF

2 AD101 BUILDING 68049
1/16" = 1'-0"

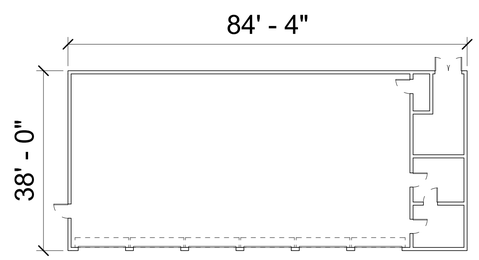

68056 - LT WHL VEH BAY
3,205 GSF

5 AD101 BUILDING 68056
1/16" = 1'-0"

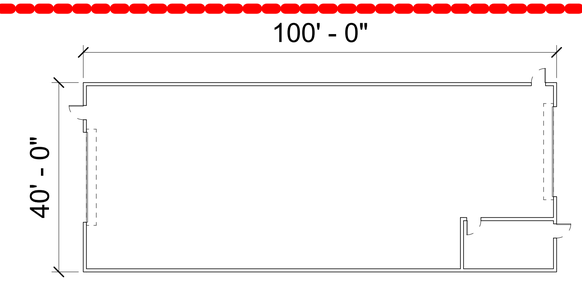

68048 - HVY MAINT BAY / STRYKER
4,000 GSF

1 AD101 BUILDING 68048
1/16" = 1'-0"

NOTE: FLOOR PLANS PROVIDED FOR REFERENCE; NOT ALL BUILDING CURRENTLY IDENTIFIED / SCHEDULED FOR DEMOLITION IN THIS CONTRACT

OPTION 1: DEMOLITION

16 12 8 4 0 16 32
SCALE: 1/16"=1'-0"

NORTH ANGLE VARIES

US Army Corps of Engineers ®

MARK	DESCRIPTION	DATE	APPR.

Designed by: MVALENTINE
Drawn By: MZV
Submittal Status: RTA
Reviewed by: O AQUINO
Submitted by: CPT Matthew Valentine
Chief, Contracting Office Section
Date: 13 JUL 2020
Spec No: 2145
File No: 223-25-0665
Size:22" x 34"
Plot Scale: 1=1'0"
Plot Date:7/13/2020 11:48:35 AM
Rev:
Project No:
File Name: W68A_GTEB

US ARMY CORPS OF ENGINEERS
SACRAMENTO DISTRICT
1325 J STREET
SACRAMENTO, CA 95814

FT. HUACHUCA AZ

GROUND TRANSPORT EQUIPMENT BUILDING

DEMOLITION - EXISTING MOTOR POOL SITE

SHEET IDENTIFICATION
AD101

TYPICAL ARCHITECTURAL ABBREVIATIONS

ACT	ACOUSTICAL CEILING TILE
ADDL.	ADDITIONAL
ALUM	ALUMINUM
ANOD.	ANODIZED
B.O.	BOTTOM OF
BU	BUILT UP
BLDG	BUILDING
BLKG	BLOCKING
BRG	BEARING
CLG, CEIL'G	CEILING
CLR	CLEAR
CMU	CONCRETE MASONRY UNIT
CNTRSUNK	COUNTERSUNK
C.O.	SONCRETE OPENING
CO2	CARBON DIOXIDE
COL	COLUMN
COMM.	COMMUNICATIONS
COMP	COMPOSITION
CONC	CONCRETE
CONT	CONTINUOUS
CORR.	CORRIDOR
CT	CERAMIC TILE
D.B.G.	DISTANCE BETWEEN GUIDES
DBL.	DOUBLE
DET.	DETAIL
DEPT.	DEPARTMENT
DIM.	DIMENSIONS
DN	DOWN
DS	DOWNSPOUT
DWGS	DRAWINGS
DWD	DRINKING WATER DISPENSER
EA	EACH
EL.	ELEVATION
ELEC.	ELECTRICAL
ELEV	ELEVATION
EMERG.	EMERGENCY
EPS	EXTRUDED POLYSTYRENE
EQ	EQUAL
EQUIP	EQUIPMENT
EXIST	EXISTING
EXP†	EXPANSION
EXTING.	EXTINGUISHER
EW	EACH WAY
EWC	ELECTRIC WATER COOLER
F.H.	FLAT HEAD
F.H.W.S.	FLAT HEAD WOOD SCREW
FD	FLOOR DRAIN
FEC	FIRE EXTINGUISHER CABINET
FEH	FIRE EXTINGUISHER HOLDER
FF, FFL.	FINISHED FLOOR
FIN	FINISHED
FLASH	FLASHING
FLR	FLOOR
F.O.C.	FACE OF CONCRETE
FOM	FACE OF MASONRY
FOS	FACE OF STEEL OR STUD
FS	FLOOR SINK
FT	FOOT OR FEET
FTG	FOOTING
GA	GAUGE
GALV.	GALVANIZED
G.S.U.	GLZED STRUCTURAL UNITS
GWB	GYPSUM WALL BOARD
HC	HANDICAP
HDWD	HARDWOOD
HGHT, HT	HEIGHT
HR	HOUR
HSS	HOLLOW STRUCTURAL SECTION
HVAC	HEATING, VENTILATING & AIR CONDITIONING
ICF	INSULATED CONCRETE FORM
INSUL	INSULATION
JAN	JANITOR
JT	JOINT
LG	LONG
MAX.	MAXIMUM
M.B.	MACHINE BOLT
MDF	MEDIUM DENSITY FIBERBOARD
MECH	MECHANICAL
MTL., MET.	METAL
MFR'S	MANUFACTURER'S
MIN.	MINIMUM
MISC.	MISCELLANEOUS
M.O.	MASONRY OPENING
N/A	NOT APPLICABLE
N.I.C.	NOT IN CONTRACT
NTS	NOT TO SCALE
O.C.	ON CENTER
O.D.	OUTSIDE DIAMETER
OPNG	OPENING
OWJ	OPEN WEB JOIST
PHSMS	PAN HEAD SHEET METAL SCREW
PJF	PERIMETER FELT JOINT
PLYWD	PLYWOOD
PRE-ENG	PRE-ENGINEERED
PREP	PREPARATION
QT	QUART
R	RADIUS
RC	RESILIENT CHANNEL
RDWD	REDWOOD
REHAB	REHABILITATE
REQ'D	REQUIRED
RES	RESILIENT
RM	ROOM
R'FING	ROOFING
R.S.	ROUGH SAWN
SAFB	SOUND ATTENUATING FIRE BLANKET
SD	SOAP DISPENSER
SHT	SHEET
SIM.	SIMILAR
SMS	SHEET METAL SCREW
SND	SANITARY NAPKIN DISPOSER
SNTD	SANITARY NAPKIN DISPENSER
SPECS	SPECIFICATIONS
SQ	SQUARE
STD	STANDARD
SSTL	STAINLESS STEEL
STL	STEEL
STRUCT	STRUCTURAL
T&G	TONGUE AND GROOVE
T.O.	TOP OF
T.O.C.	TOP OF CONCRETE
TOM, T.O.M	TOP OF MASONRY
TOS, T.O.S.	TOP OF STEEL
T.O.W.	TOP OF WALL
TELE	TELEPHONE
THK.	THICK
TR	TELECOMMUNICATION ROOM
TS	TUBE SECTION
TTD	TOILET PAPER DISPENSER
TYP.	TYPICAL
U.O.N.	UNLESS OTHERWISE NOTED
UL	UNDERWRITERS LABORATORIES
VAT	VINYL ASBESTOS TILE
VCT	VINYL COMPOSITION TILE
VWC	VINYL COATED WALL COVERING
W/	WITH
WD	WOOD
WNDW	WINDOW
WP, W.P.	WORKING POINT
W/O	WITHOUT
&	AND
<	ANGLE
@	AT
	CENTERLINE
Ø, DIA	DIAMETER
#, NO.	NUMBER
	PLATE

UNLESS OTHERWISE SPECIFICALLY REDEFINED ON SCHEDULE DRAWINGS
I.E. EXP = EXPOSED ON FINISH SCHEDULE

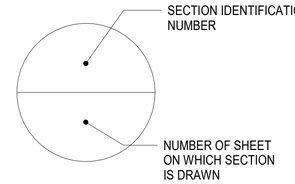

SECTION & DETAIL DESIGNATION SYMBOL

FLOOR PLAN LEGEND

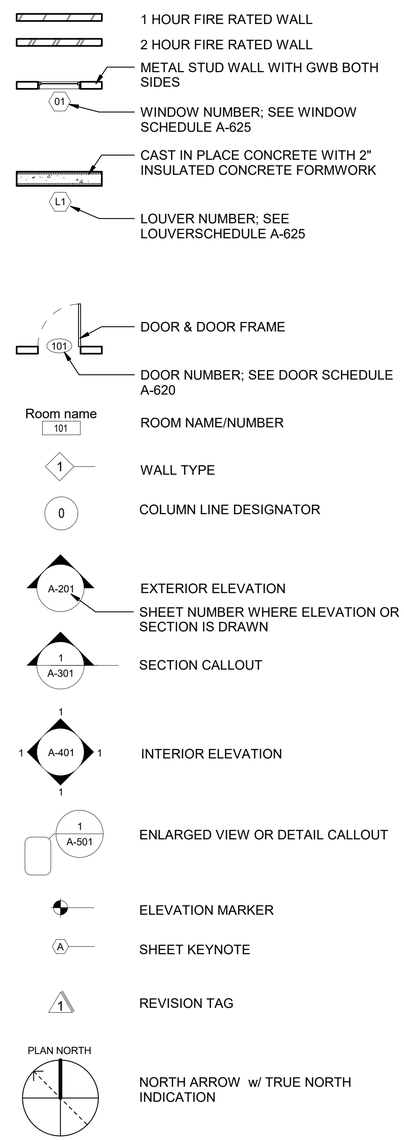

CEILING LEGEND

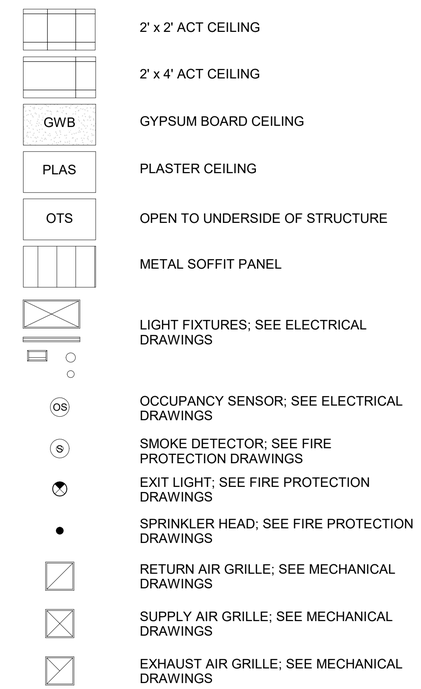

MATERIAL LEGEND

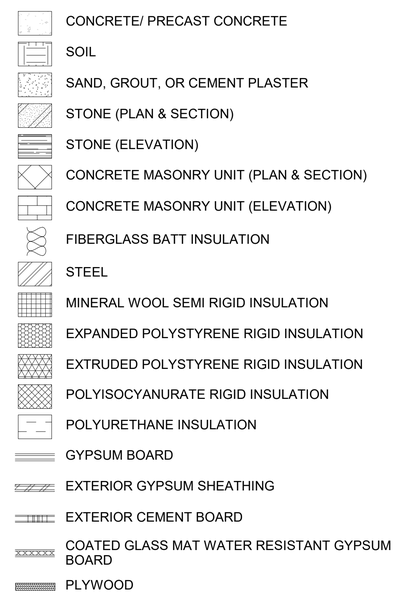

GENERAL SHEET NOTES:

SEE A-100s FOR FLOOR PLANS
SEE A-200s FOR ELEVATIONS
SEE A-300s FOR SECTIONS
SEE A-400s FOR ENLARGED VIEWS
SEE A-500s FOR DETAILS
SEE A-600s FOR SCHEDULES

US Army Corps of Engineers ®

MARK	DESCRIPTION	DATE	APPD

Designed by: MVALENTINE | Drawn By: MZV
Submittal Status: RTA
Reviewed by: O'AQUINO
Submitted by: Al Matthew Valentine
Chief, Architectural Design Section
Date: 13 JUL 2020
Rev:
Spec No: 2145
Project No:
File No: 223-25-0665
File Name: WBA_GTEB
Size:22" x 34"
Plot Scale: Manufactured
Plot Date:7/13/2020 11:47:51 AM

US ARMY CORPS OF ENGINEERS
SACRAMENTO DISTRICT
1325 J STREET
SACRAMENTO, CA 95814

FT. HUACHUCA
AZ
GROUND TRANSPORT EQUIPMENT BUILDING
ARCHITECTURAL NOTES & ABBREVIATIONS

SHEET IDENTIFICATION
A-001

22. SEAL ALL EXTERIOR BUILDING JOINTS AT BOTH THE EXTERIOR AND INTERIOR SURFACES AGAINST MOISTURE AND AIR INFILTRATION.

23. SEAL AROUND ALL DOOR AND WINDOW FRAMES, COUNTERTOPS, WALL-MOUNTED FIXTURES AND EQUIPMENT TO ADJACENT WALL SURFACES.

24. THE CONTRACTOR SHALL REVIEW THE DIMENSIONS OF ALL EQUIPMENT IN THE PROJECT REGARDLESS OF THE SOURCE AND COORDINATE ACCESS TO THE SPACE. CONTRACTOR SHALL VERIFY CLEAR FLOOR SPACE IS PROVIDED AS REQUIRED TO ENSURE EASE OF INSTALLATION.

25. ALL WORK MUST BE OF GOOD QUALITY, FREE FROM DEFECTS, AND IN ACCORDANCE WITH THE REQUIREMENTS OF THE CONTRACT DOCUMENTS.

26. THE CONTRACTOR IS RESPONSIBLE FOR THE COORDINATION OF ALL PENETRATIONS IN THE STRUCTURE FOR THE PROPER INSTALLATION OF THE WORK. REFER TO STRUCTURAL DRAWINGS FOR SECONDARY FRAMING AND OR REINFORCING REQUIRED AT PENETRATIONS IN STEEL, CONCRETE OR MASONRY.

27. THE CONTRACTOR SHALL PROVIDE ACCESS DOORS OR PANELS AS REQUIRED FOR SERVICING OF PIPING, DUCTWORK, CABLE TRAYS, FIRE DAMPERS AND SIMILAR APPLICATIONS. ALL PROPOSED ACCESS DOOR LOCATIONS TO BE SUBMITTED FOR APPROVAL PRIOR TO INSTALLATION.

28. PROVIDE ALL HVAC, PLUMBING, GAS OR ELECTRIC SERVICE CONNECTIONS TO CASEWORK, FIXTURES, SIGNAGE, OR EQUIPMENT INDICATED (WHETHER UNITS ARE INSTALLED BY CONTRACTOR OR BY OTHERS).

29. BRACE PARTITIONS, SUSPENDED CEILINGS, SOFFITS, SUSPENDED ITEMS, ETC. ONLY TO STRUCTURAL ELEMENTS ABOVE. DO NOT ANCHOR TO PLUMBING / SPRINKLER PIPES, DUCTWORK, ELECTRICAL CONDUIT OR SIMILAR ELEMENTS.

30. EXTEND ALL FLOORING AND WALL-BASE COMPLETELY INTO RECESSES, UNDER OPEN COUNTERTOPS, AND BEHIND ALL EQUIPMENT.

31. ALL MATERIALS USED FOR CONSTRUCTION SHALL BE NEW AND UNDAMAGED. THE CONTRACTOR SHALL SUBMIT SHOP DRAWINGS FOR ALL WORK SHOWN, AND AS REQUIRED BY THE SPECIFICATIONS.

32. THE CONTRACTOR SHALL BECOME FULLY ACQUAINTED WITH CONDITIONS RELATED TO THE WORK. ANY DISCREPANCIES BETWEEN THE DRAWINGS AND THE ACTUAL CONDITIONS SHALL BE REPORTED TO THE DESIGN PROFESSIONALS FOR RESOLUTION PRIOR TO PROCEEDING WITH THE WORK.

33. DRAWINGS CONTAINED IN THIS SET SHALL NOT BE REPRODUCED FOR SHOP DRAWINGS. COPIES OF THESE DRAWINGS SUBMITTED AS SHOP DRAWINGS WILL BE REJECTED AND RETURNED TO THE CONTRACTOR.

34. EACH INSTALLER MUST EXAMINE SUBSTRATE AND/OR CONDITIONS UNDER WHICH THE WORK WILL BE INSTALLED AND REPORT TO THE CONTRACTOR IN WRITING ANY CONDITIONS DETRIMENTAL TO THE PROPER AND TIMELY EXECUTION OF THE INSTALLERS WORK. DO NOT PROCEED UNTIL UNSATISFACTORY CONDITIONS ARE CORRECTED. INSTALLATION SHALL CONSTITUTE ACCEPTANCE OF THE SUBSTRATE AND/OR CONDITIONS.

35. "TYPICAL" (TYP) AS USED IN THESE DOCUMENTS SHALL MEAN THAT THE CONDITIONS OR DIMENSION IS THE SAME OR REPRESENTATIVE FOR SIMILAR CONDITIONS THROUGHOUT.

36. CONTROL JOINTS (CJ) SHALL BE INSTALLED AT ALL PARTITIONS. CJ AT GYPSUM PARTITIONS SHALL BE MAXIMUM 30'-0" O.C., CJ AT CONCRETE MASONRY UNIT PARTITIONS SHALL BE MAXIMUM 20'-0" O.C., UNLESS OTHERWISE NOTED ON DRAWINGS. REFER TO ELEVATION DRAWINGS FOR EXTERIOR CONTROL JOINT LOCATIONS.

37. NON-BEARING PARTITIONS SHALL BE ISOLATED FROM THE BUILDING STRUCTURE TO PREVENT TRANSFER OF BUILDING LOADS FROM THE STRUCTURE TO THE PARTITIONS.

38. THE CONTRACTOR SHALL COORDINATE WITH THE COR, CUSTOMER, AND DPW FOR DESIGNATED CONSTRUCTION STAGING LOCATIONS, STORAGE AREAS, AND CONSTRUCTION SEQUENCING.

1. ALL WORK SHALL COMPLY WITH ALL APPLICABLE CODES AND STANDARDS AS LISTED OR REFERENCED ON LIFE SAFETY PLAN AND LIFE SAFETY CRITERIA OR AS REQUIRED BY THE AUTHORITY HAVING JURISDICTION.

2. THE CONTRACTOR SHALL INCLUDE ALL WORK REQUIRED TO COMPLY WITH ALL APPLICABLE CODES AND STANDARDS AS LISTED OR REFERENCED ON LIFE SAFETY PLAN AND LIFE SAFETY CRITERIA OR AS REQUIRED BY THE AUTHORITY HAVING JURISDICTION.

3. DIMENSIONS SHALL GOVERN. DETAILS SHALL GOVERN OVER PLANS AND ELEVATIONS. LARGE SCALE DETAILS OR PLANS SHALL GOVERN OVER SMALL SCALE DETAILS OR PLANS. DO NOT SCALE DRAWINGS.

4. THE GENERAL CONTRACTOR SHALL PROVIDE AND INSTALL ALL EXIT SIGNS, EMERGENCY LIGHTING SYSTEMS, ALARM SYSTEMS AND AUTOMATIC SPRINKLER SYSTEMS AS REQUIRED BY APPLICABLE CODES AND STANDARDS OR AS REQUIRED BY THE AUTHORITY HAVING JURISDICTION.

5. ALL FLOORS SHALL BE INSPECTED FOR DAMAGE, WARPING OR OTHER NOTICEABLE DEVIATIONS AND PATCHED AND LEVELED PRIOR TO COVERING WITH FLOOR FINISHES, INSTALLATION OF ACCESS FLOOR SYSTEM, OR ERECTION AND INSTALLATION OF COLD-FORMED FRAMING.

6. THE GENERAL CONTRACTOR SHALL BE RESPONSIBLE FOR PROVIDING ALL MANUFACTURER'S RECOMMENDED MAINTENANCE PROCEDURES AND SCHEDULES.

7. ANY MANUFACTURER'S OR BRAND NAME PRODUCTS INDICATED OR SPECIFIED ARE DONE SO TO ESTABLISH A MINIMUM LEVEL OF QUALITY.

8. ALL CONSTRUCTION SHALL MEET OR EXCEED LOCAL INDUSTRY STANDARDS. DETAILS ARE PROVIDED TO INDICATE MINIMUM QUALITY AND TO GIVE STANDARDS OF CONSTRUCTION. IF A CONDITION IS NOT SPECIFICALLY DETAILED, SUBMIT A SIMILAR DETAIL FOR GUIDE AND APPROVAL.

9. THE LETTERS I, O, AND Q ARE NOT USED TO INDICATE DETAILS, SECTIONS OR ELEVATIONS.

10. PROVIDE PRESERVATIVE-TREATED WOOD AT ALL LOCATIONS WHERE WOOD IS IN DIRECT CONTACT WITH CONCRETE OR MASONRY.

11. PROVIDE 3/4" FIRE-RETARDANT TREATED PLYWOOD BACKING AT ALL ELECTRICAL, PHONE, AND SECURITY SYSTEM PANELS.

12. PROVIDE FIRE-RESISTANT TREATED WOOD BLOCKING FOR SECURE ANCHORAGE OF ALL SHELVES, RUNNING TRIM, RAILINGS, SUSPENDED ITEMS, DOOR-STOPS, GRAB-BARS, AND OTHER SIMILAR WOODWORK, HARDWARE, SPECIALTIES, ACCESSORIES, FIXTURES, OR EQUIPMENT.

13. PROVIDE CEMENT BOARD SHEATHING AT ALL AREAS WHERE A TILE SURFACE IS TO BE INSTALLED ON METAL STUD WALLS.

14. PROVIDE WATER-RESISTANT GYPSUM BOARD AT ALL WET OR UNCONDITIONED AREAS INCLUDING, BUT NOT LIMITED TO, PARTITIONS BEHIND SINKS. CONTRACTOR TO ENSURE THAT FIRE RATING IS MAINTAINED.

15. PAINT, STAIN, OR COAT ALL EXPOSED SURFACES OF CONSTRUCTION UNLESS NOTED OTHERWISE OR IF SURFACES ARE PRE-FINISHED.

16. ALL OPENING DIMENSIONS ARE NOMINAL. THE CONTRACTOR SHALL FIELD MEASURE ALL OPENINGS AND COORDINATE WITH THE APPROPRIATE SUPPLIER FOR ALL DOORS AND WINDOWS.

17. ALL CONDUITS, PLUMBING, PIPING, DUCTWORK, AND OTHER EQUIPMENT EXPOSED TO VIEW SHALL BE LOCATED PARALLEL OR PERPENDICULAR TO THE STRUCTURAL FRAMING SYSTEM.

18. PROVIDE GALVANIC PROTECTION BETWEEN DISSIMILAR MATERIALS, WHERE REQUIRED.

19. CERAMIC TILE TO BE INSTALLED UP TO 4'-0" ABOVE FINISH FLOOR AND 1'-0" TO EITHER SIDE AT ALL MOP SINK LOCATIONS. EXTENT OF TILE VARIES BY LOCATION. SEE INTERIOR DESIGN SHEETS.

20. ARCHITECTURAL DETAILS ARE APPLICABLE WHERE INDICATED BY SECTION CUT, BY NOTE, OR BY DETAIL TITLE. INCORPORATE SIMILAR DETAILS AT SIMILAR CONDITIONS UNLESS NOTED OTHERWISE. THE MOST STRINGENT REQUIREMENTS SHALL CONTROL.

21. PROVIDE FIRE-STOPPING SYSTEMS AT TOP OF AND AT ALL PENETRATIONS THROUGH FIRE-RATED PARTITIONS.

US Army Corps of Engineers ®

MARK	DESCRIPTION	DATE	APPR

Designed by: MVALENTINE
Drawn By: MZV
Submittal Status: RTA
Reviewed by: O'AQUINO
Submitted by: /s/ Matthew Valentine
Chief, Architectural Design Section
Date: 13 JUL 2020
Spec No: 2145
File No: 223-25-0665
Size:22" x 34"
Plot Scale: 1:1
Plot Date:7/13/2020 11:47:51 AM
Rev:
Project No:
File Name: W85A_GTEB

US ARMY CORPS OF ENGINEERS
SACRAMENTO DISTRICT
1325 J STREET
SACRAMENTO, CA 95814

FT. HUACHUCA
A2
GROUND TRANSPORT EQUIPMENT BUILDING
ARCHITECTURAL GENERAL NOTES

SHEET IDENTIFICATION
A-002

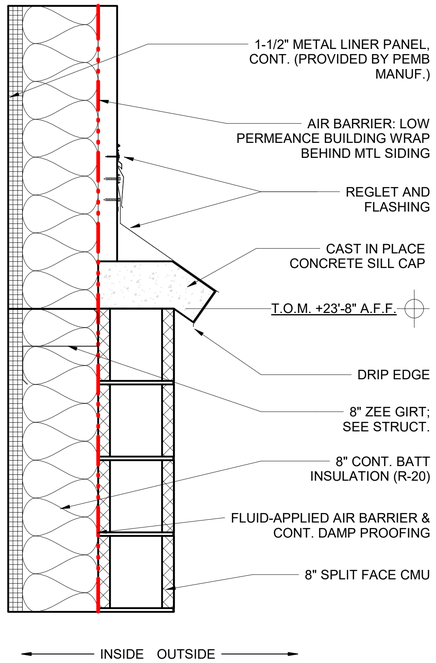

WALL TYPE 15

SCALE: 1 1/2" = 1'-0"

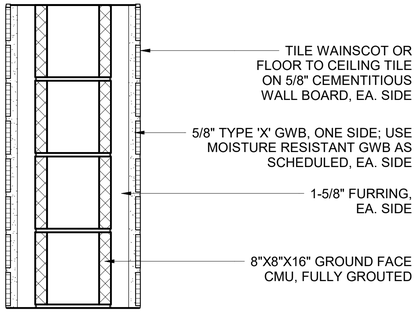

WALL TYPE 14

SCALE: 1 1/2" = 1'-0"

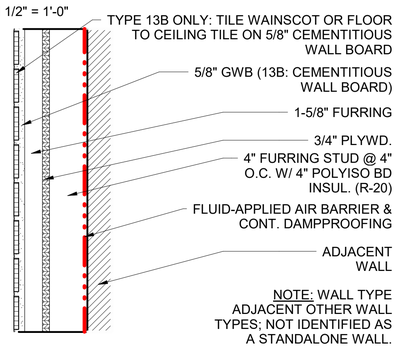

WALL TYPE 13

SCALE: 1 1/2" = 1'-0"

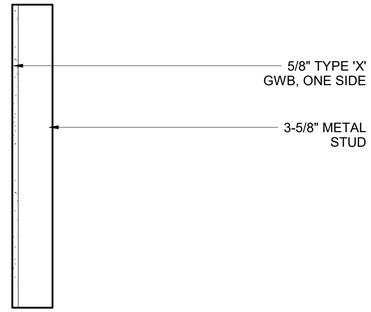

WALL TYPE 12

SCALE: 1 1/2" = 1'-0"

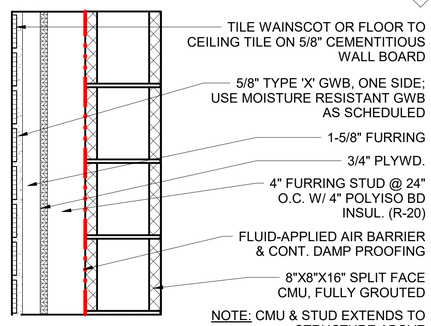

WALL TYPE 11

SCALE: 1 1/2" = 1'-0"

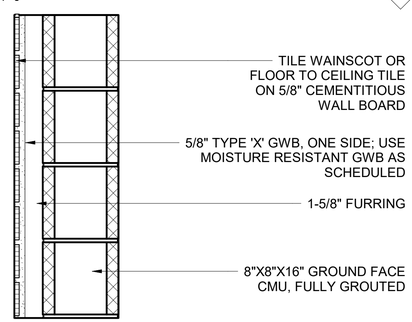

WALL TYPE 10

SCALE: 1 1/2" = 1'-0"

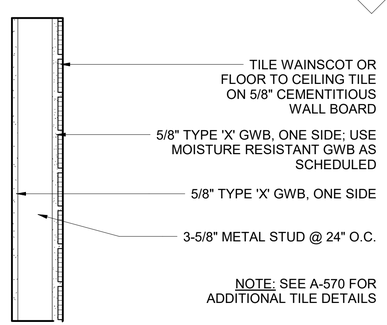

WALL TYPE 9

SCALE: 1 1/2" = 1'-0"

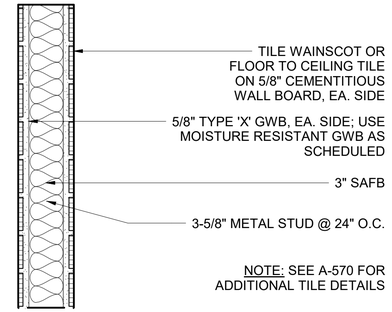

WALL TYPE 8

SCALE: 1 1/2" = 1'-0"

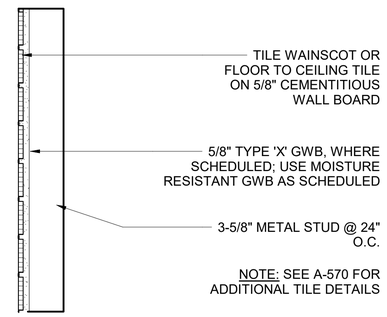

WALL TYPE 7

SCALE: 1 1/2" = 1'-0"

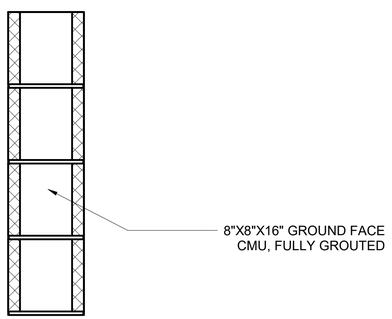

WALL TYPE 6

SCALE: 1 1/2" = 1'-0"

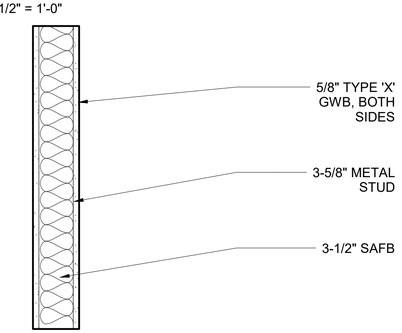

WALL TYPE 5

1HR RATED , UL U457 / USG-840222

SCALE: 1 1/2" = 1'-0"

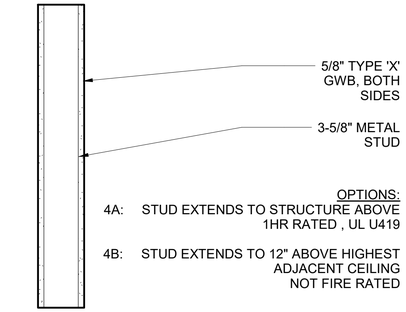

WALL TYPE 4

SCALE: 1 1/2" = 1'-0"

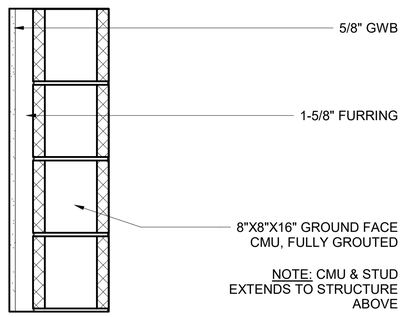

WALL TYPE 3

1HR RATED

SCALE: 1 1/2" = 1'-0"

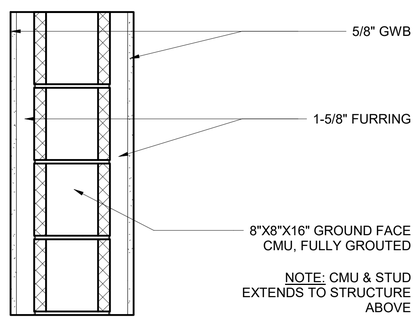

WALL TYPE 2

1HR RATED

SCALE: 1 1/2" = 1'-0"

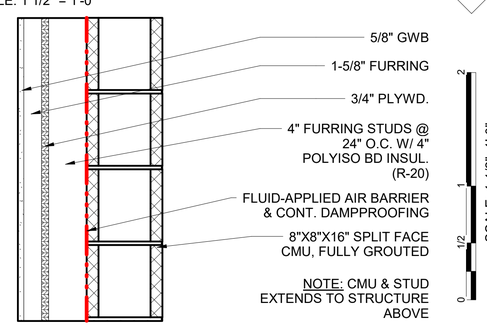

WALL TYPE 1

1HR RATED

SCALE: 1 1/2" = 1'-0"

US Army Corps of Engineers ®

MARK	DESCRIPTION	DATE	APPD

Designed by: MVALENTINE | MZV
Drawn By:
Submittal Status: RTA
Reviewed by: D AQUINO
Submitted by: R. Matthew Valentine, Chief, Planning & Design Section
Date: 13 JUL 2020
Spec No: 2145
File No: 223-25-0665
Size: 22" x 34", Plot Scale: 1" = 1'-0", Plot Date: 7/13/2020 11:47:54 AM
Project No:
File Name: W60A_GTEB
Rev:

US ARMY CORPS OF ENGINEERS
SACRAMENTO DISTRICT
1325 J STREET
SACRAMENTO, CA 95814

AZ
FT. HUACHUCA
GROUND TRANSPORT EQUIPMENT BUILDING
PROJECT WALL TYPES

SHEET IDENTIFICATION
A-010

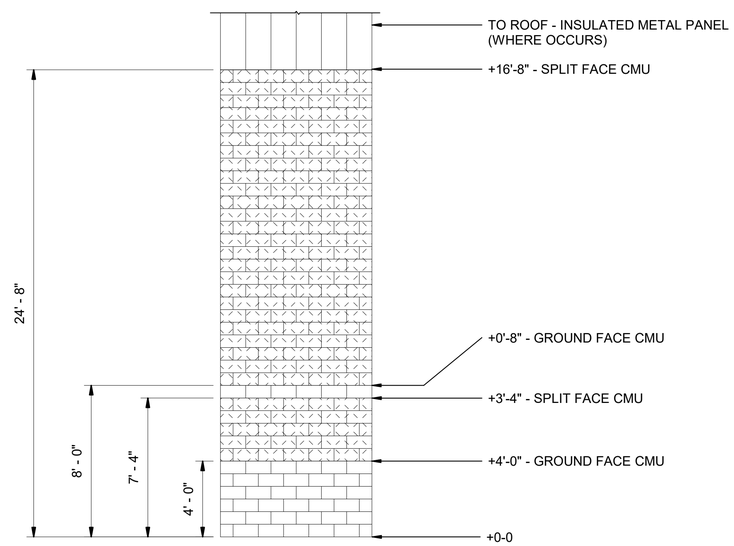

EXTERIOR WALL MATERIAL HEIGHTS

1/4" = 1'-0"

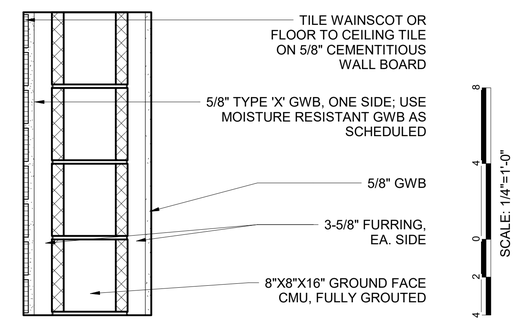

WALL TYPE

SCALE: 1 1/2" = 1'-0"

18

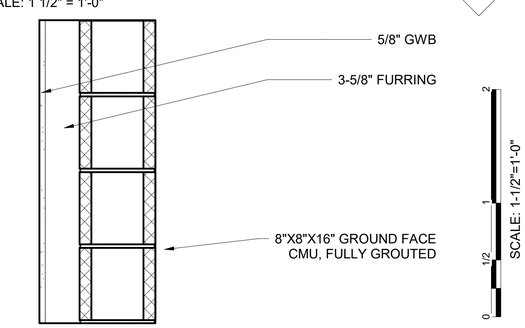

WALL TYPE

SCALE: 1 1/2" = 1'-0"

17

US Army Corps of Engineers ®

MARK	DESCRIPTION	DATE	APPR

Designed by: MVALENTINE
Drawn By: MZV
Submittal Status: RTA
Reviewed by: O'AQUINO
Submitted by: Mr. Matthew Valentine
File Contents: Wall Types Section
Date: 13 JUL 2020
Rev:
Spec No: 2145
Project No:
File No: 223-25-0665
File Name: W65A_GTEB
Size:22" x 34"
Plot Scale: As indicated
Plot Date:7/13/2020 11:47:55 AM

US ARMY CORPS OF ENGINEERS

SACRAMENTO DISTRICT
1325 J STREET
SACRAMENTO, CA 95814

FT. HUACHUCA AZ

GROUND TRANSPORT EQUIPMENT BUILDING

PROJECT WALL TYPES

SHEET IDENTIFICATION
A-011

AREA

'A' 'B' 'C'

PLAN NORTH

16 12 8 4 0 16 32

SCALE: 1/16"=1'-0"

AREA 'A'
SEE SHEET A-101

AREA 'B'
SEE SHEET A-102

OPTION ITEM 3
AREA 'C'
SEE SHEET A-103

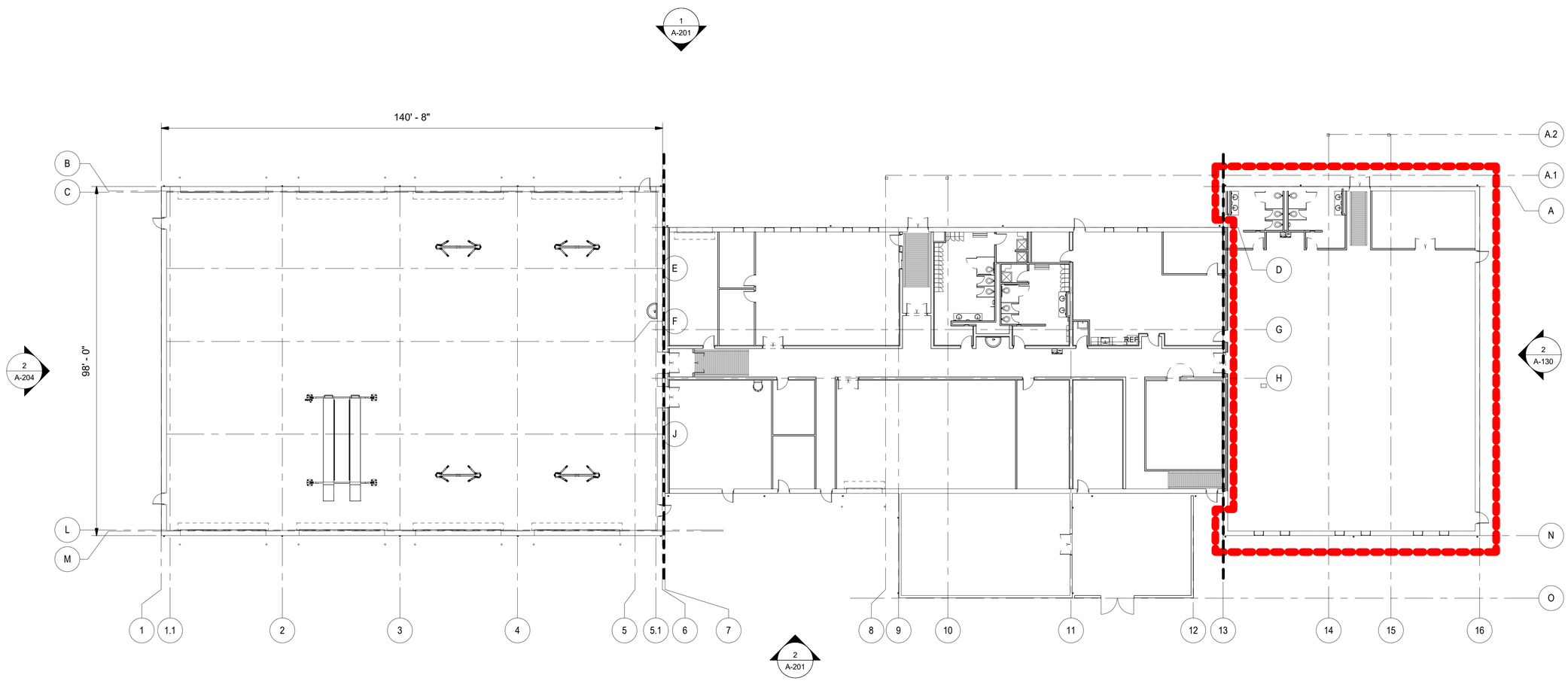

1 A-100 FIRST FLOOR PLAN - OVERALL

1/16" = 1'-0"

US Army Corps of Engineers ®

MARK	DESCRIPTION	DATE	APPR

Designed by: MVALENTINE | Drawn By: MZV
Submittal Status: RTA
Reviewed By: O'AQUINO
Submitted by: Al Matthew Valentine
Chief, Architectural Design Section

Date: 13 JUL 2020
Rev:
Spec No: 2145
Project No:
File No: 223-25-9665
File Name: WBSA_GTEB
Size:22" x 34"
Plot Scale: 1" = 1'-0"
Plot Date:7/13/2020 11:48:02 AM

US ARMY CORPS OF ENGINEERS

SACRAMENTO DISTRICT
1325 J STREET
SACRAMENTO, CA 95814

FT. HUACHUCA

A2

GROUND TRANSPORT EQUIPMENT BUILDING

GTEB OVERALL FIRST FLOOR PLAN

SHEET IDENTIFICATION
A-100

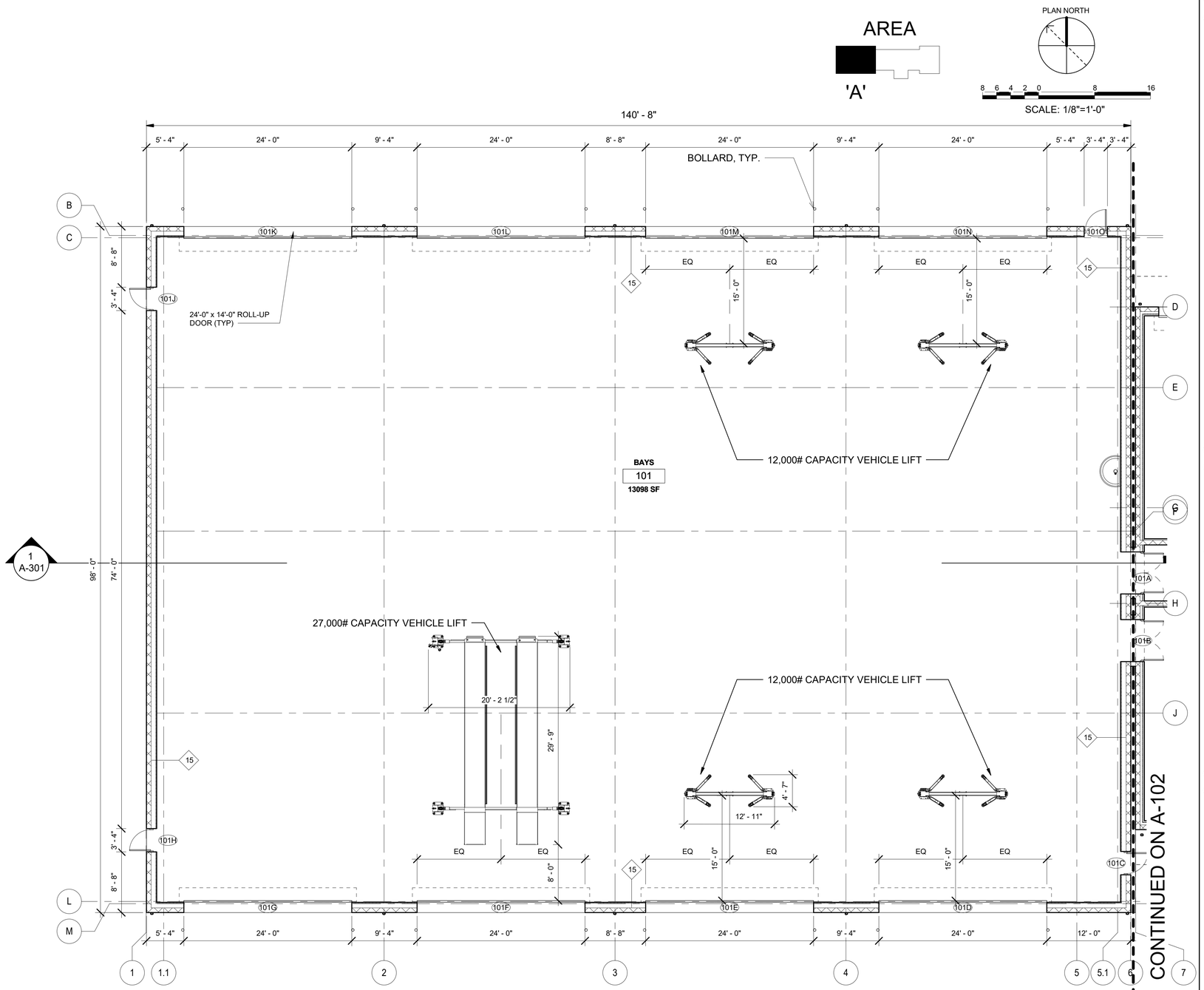

1 A-101 GTEB FIRST FLOOR PLAN - AREA A

1/8" = 1'-0"

US Army Corps of Engineers ®

MARK	DESCRIPTION	DATE	APPR.

Designed by: MVALENTINE | Drawn By: MZV
Submittal Status: RTA
Reviewed: O'AQUINO
Submitted by: Dr. Matthew Valentine
Chief, Architecture Section

Date: 13 JUL 2020
Spec No: 2145
File No: 223-25-0685
Rev:
Project No:
File Name: W85A_GTEB
Size:22" x 34"
Plot Scale: 1/8" = 1'-0"
Plot Date/7/13/2020 11:48:08 AM

US ARMY CORPS OF ENGINEERS
SACRAMENTO DISTRICT
1325 J STREET
SACRAMENTO, CA 95814

FT. HUACHUCA
AZ

GROUND TRANSPORT EQUIPMENT BUILDING

GTEB FLOOR PLAN - AREA 'A'

SHEET IDENTIFICATION
A-101

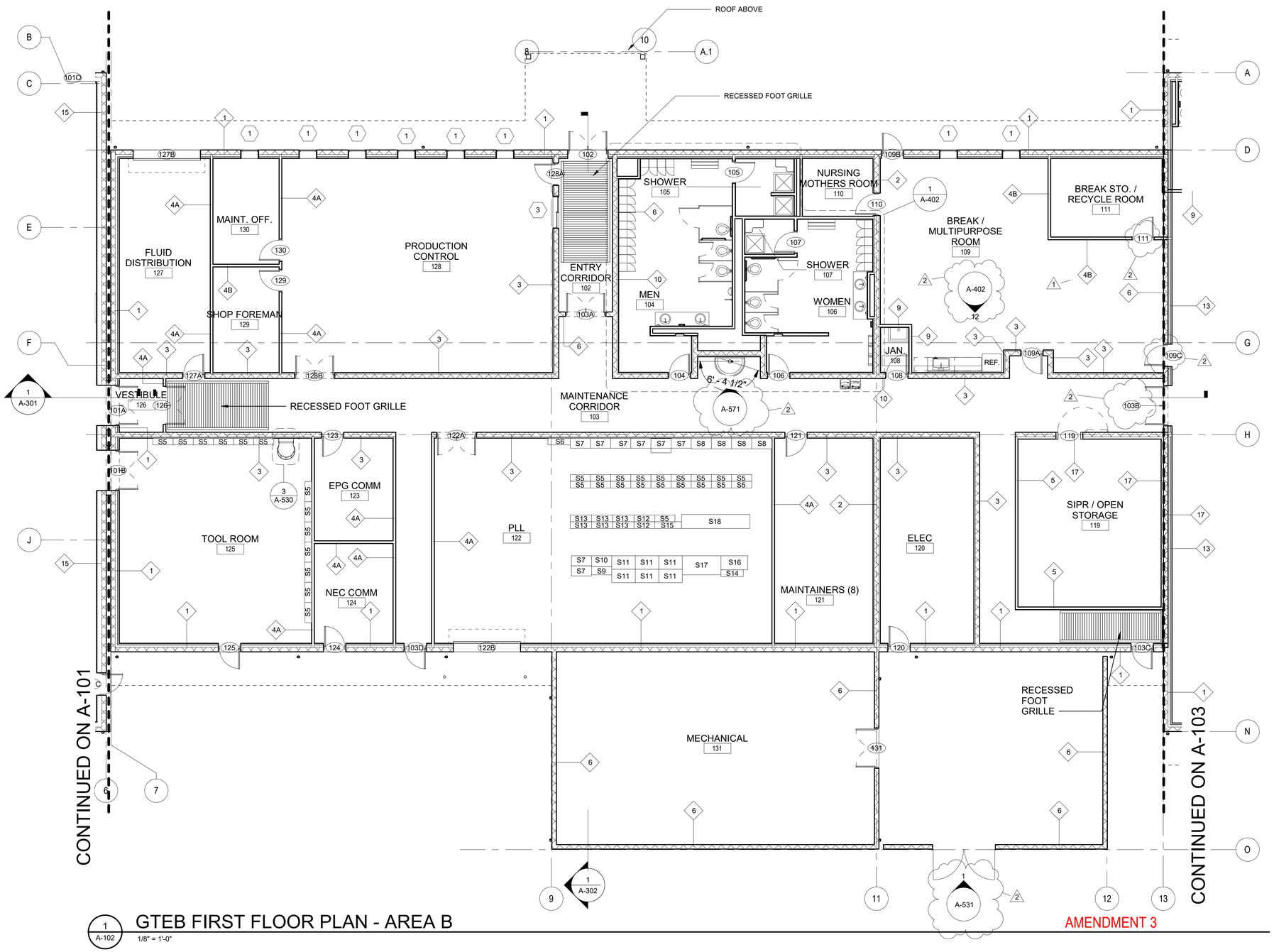

AREA

'B'

PLAN NORTH

SCALE: 1/8"=1'-0"

SHELVING NOTES:

S5	SHELVES (36" X 12")
S6	SHELVES (34" X 12")
S7	SHELVES (36" X 18")
S8	SHELVES (36" X 19")
S9	SHELVES (36" X 15")
S10	SHELVES (36" X 18.5")
S11	SHELVES (36" X 24")
S12	SHELVES (37" X 12")
S13	SHELVES (38" X 12")
S14	SHELVES (40" X 12")
S15	SHELVES (48" X 12")
S16	SHELVES (48" X 24.5")
S17	SHELVES (69" X 34")
S18	SHELVES (121" X 24.5")

NOTE: CONFIRM FINAL LOCATIONS OF SHELVING UNITS WITH CUSTOMER AND COR.

GTEB FIRST FLOOR PLAN - AREA B

1/8" = 1'-0"

AMENDMENT 3

US Army Corps of Engineers ®

MARK	DESCRIPTION	DATE	APPR
2	DOOR AND SIGNAGE REVISION, REFERENCE CLARIFICATIONS	10/16/2020	
1	CLARIFICATIONS ON BID SET	10/7/2020	

Designed by: MVALENTINE | Drawn By: MZV
Submittal Status: RTA
Reviewed: O'AQUINO
Submitted by: Mr. Matthew Valentine
Chief, Architectural Design Section

Date: 13 JUL 2020
Spec No: 2145
File No: 223-25-0665
Size:22" x 34"
Plot Scale: 1" = 1'-0"
Plot Date:10/15/2020 4:06:12 PM

Rev:
Project No:
File Name: W65A_GTEB

US ARMY CORPS OF ENGINEERS
SACRAMENTO DISTRICT
1325 J STREET
SACRAMENTO, CA 95814

FT. HUACHUCA AZ

GROUND TRANSPORT EQUIPMENT BUILDING

GTEB FLOOR PLAN - AREA 'B'

SHEET IDENTIFICATION
A-102

AREA

'B'

PLAN NORTH

SCALE: 1/8"=1'-0"

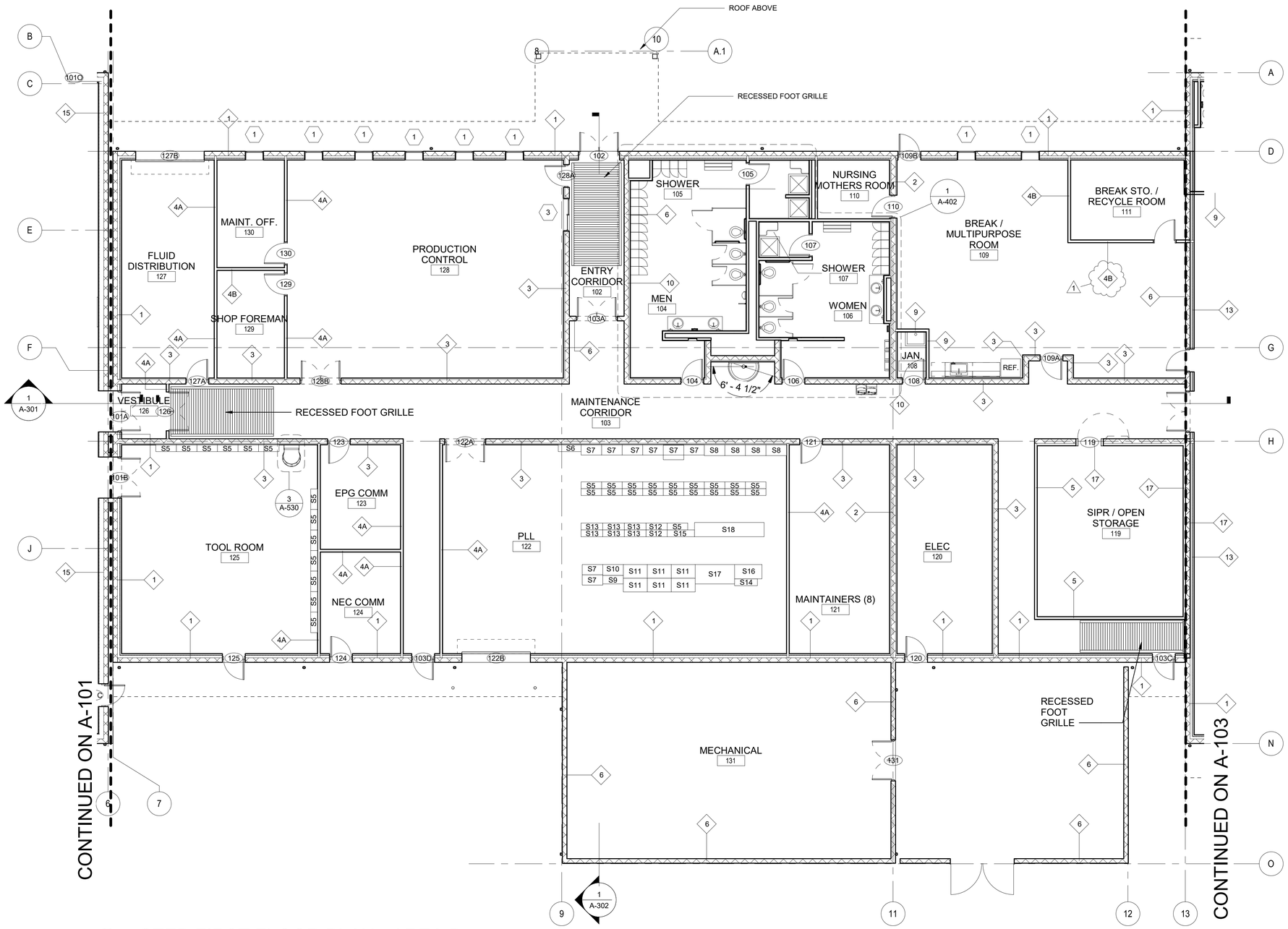

SHELVING NOTES:

S5	SHELVES (36" X 12")
S6	SHELVES (34" X 12")
S7	SHELVES (36" X 18")
S8	SHELVES (36" X 19")
S9	SHELVES (36" X 15")
S10	SHELVES (36" X 18.5")
S11	SHELVES (36" X 24")
S12	SHELVES (37" X 12")
S13	SHELVES (38" X 12")
S14	SHELVES (40" X 12")
S15	SHELVES (48" X 12")
S16	SHELVES (48" X 24.5")
S17	SHELVES (69" X 34")
S18	SHELVES (121" X 24.5")

NOTE: CONFIRM FINAL LOCATIONS OF SHELVING UNITS WITH CUSTOMER AND COR.

1 A-102 GTEB FIRST FLOOR PLAN - AREA B

1/8" = 1'-0"

AMENDMENT 3

US Army Corps of Engineers ®

MARK	DESCRIPTION	DATE	APPR
1	Clarifications on bid set	10/7/2020	

Designed by: MVALENTINE Drawn By: MZV
Submittal Status: RTA
Reviewed O'AQUINO
Submitted by: Dr. Matthew Valentine
Chief, Architectural Design Section

Date: 13 JUL 2020
Spec No: 2145
File No: 223-25-0665
Size:22" x 34" Plot Scale: 1" = 1'-0" Plot Date: 10/7/2020 7:18:14 AM

Rev:
Project No:
File Name: W65A_GTEB

US ARMY CORPS OF ENGINEERS

SACRAMENTO DISTRICT
1325 J STREET
SACRAMENTO, CA 95814

FT. HUACHUCA AZ

GROUND TRANSPORT EQUIPMENT BUILDING

GTEB FLOOR PLAN - AREA 'B'

SHEET IDENTIFICATION

A-102A

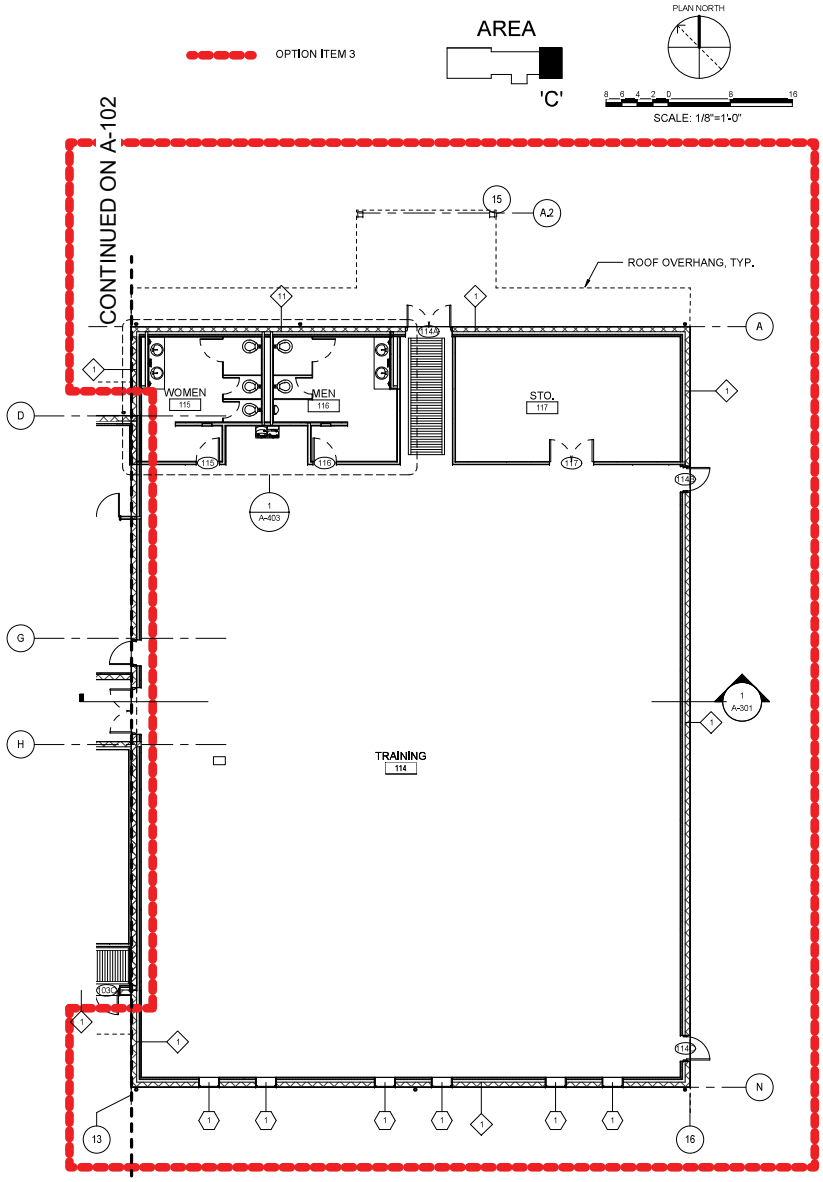

1 A-103 GTEB FIRST FLOOR PLAN - AREA C

1/8" = 1'-0"

US Army Corps of Engineers ®

MARK	DESCRIPTION	DATE	APPR

US ARMY CORPS OF ENGINEERS

SACRAMENTO DISTRICT
1325 J STREET
SACRAMENTO, CA 95814

Designed by MVALENTINE	Drawn by MEV	Date 13 JUL 2020	Title
Submittal Status: RTA		Spec No 2145	Project No
Reviewed by CVIQUINO		File No: 223-25-0865	File Name: W65A_GTEB
Submitted by MVALENTINE Chief, Architecture Section		Size/Z: 24" x 36" Scale: 1" = 1'-0" Plot Date: 7/13/2020 11:48:13 AM	

FT. HUACHUCA

AZ

GROUND TRANSPORT EQUIPMENT BUILDING

GTEB FLOOR PLAN - AREA 'C' (OPTION 3)

SHEET IDENTIFICATION

A-103

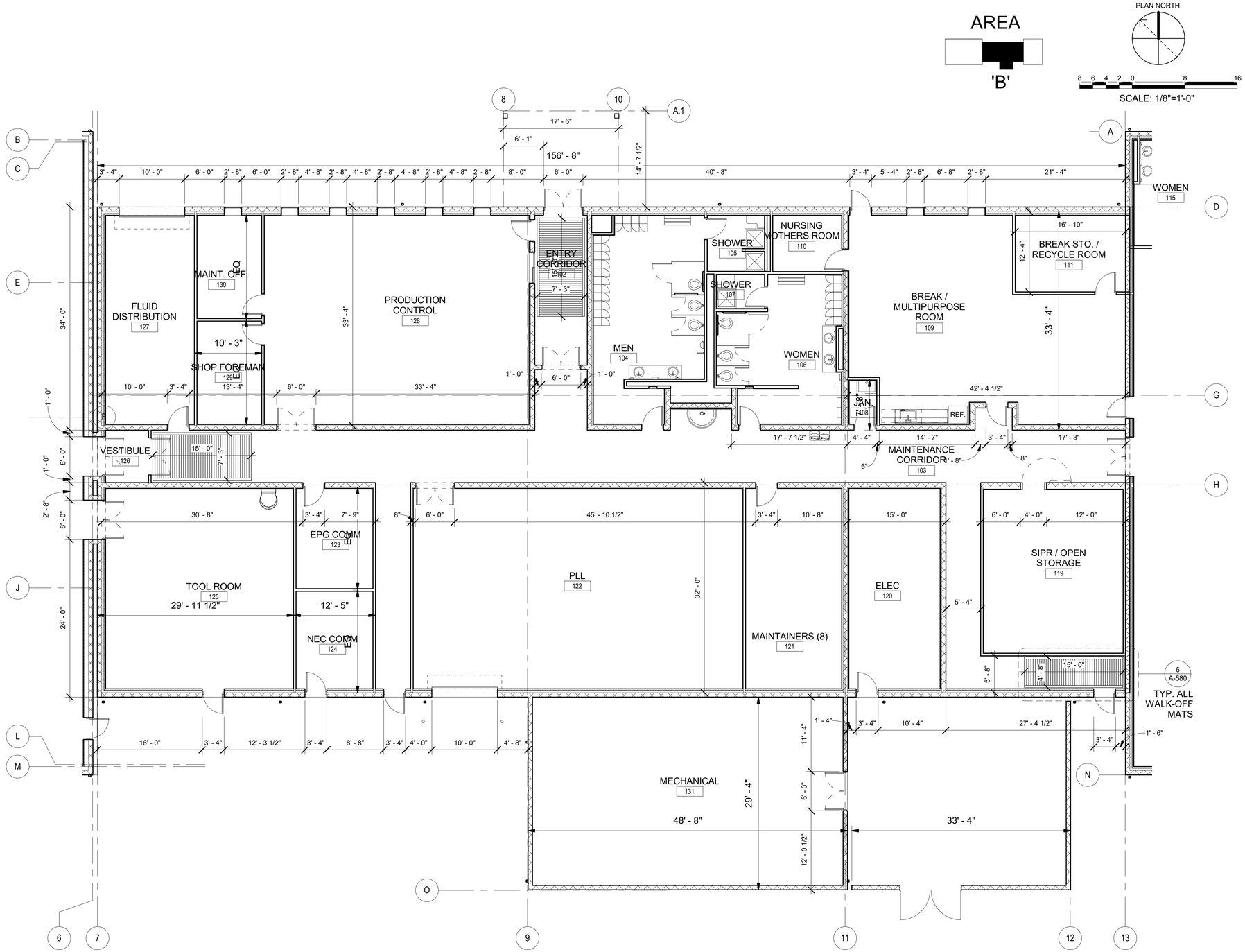

1 A-104 GTEB FIRST FLOOR PLAN - AREA B DIMENSION PLAN

1/8" = 1'-0"

US Army Corps of Engineers ®

MARK	DESCRIPTION	DATE	APPR.

Designed by: MVALENTINE | Drawn By: MZY
Submittal Status: RTA
Reviewed by: O'AQUINO
Submitted by: Mr. Matthew Valentine
Chief, Design Branch, Planning Section

Date: 13 JUL 2020 | Rev:
Spec No: 2145 | Project No:
File No: 223-25-0665 | File Name: W6GA_GTEB
Size:22" x 34" Plot Scale: 1" = 1'-0"
Plot Date:7/13/2020 11:46:15 AM

US ARMY CORPS OF ENGINEERS

SACRAMENTO DISTRICT
1325 J STREET
SACRAMENTO, CA 95814

FT. HUACHUCA AZ

GROUND TRANSPORT EQUIPMENT BUILDING

GTEB FLOOR PLAN - AREA 'B' DIMENSION PLAN

SHEET IDENTIFICATION
A-104

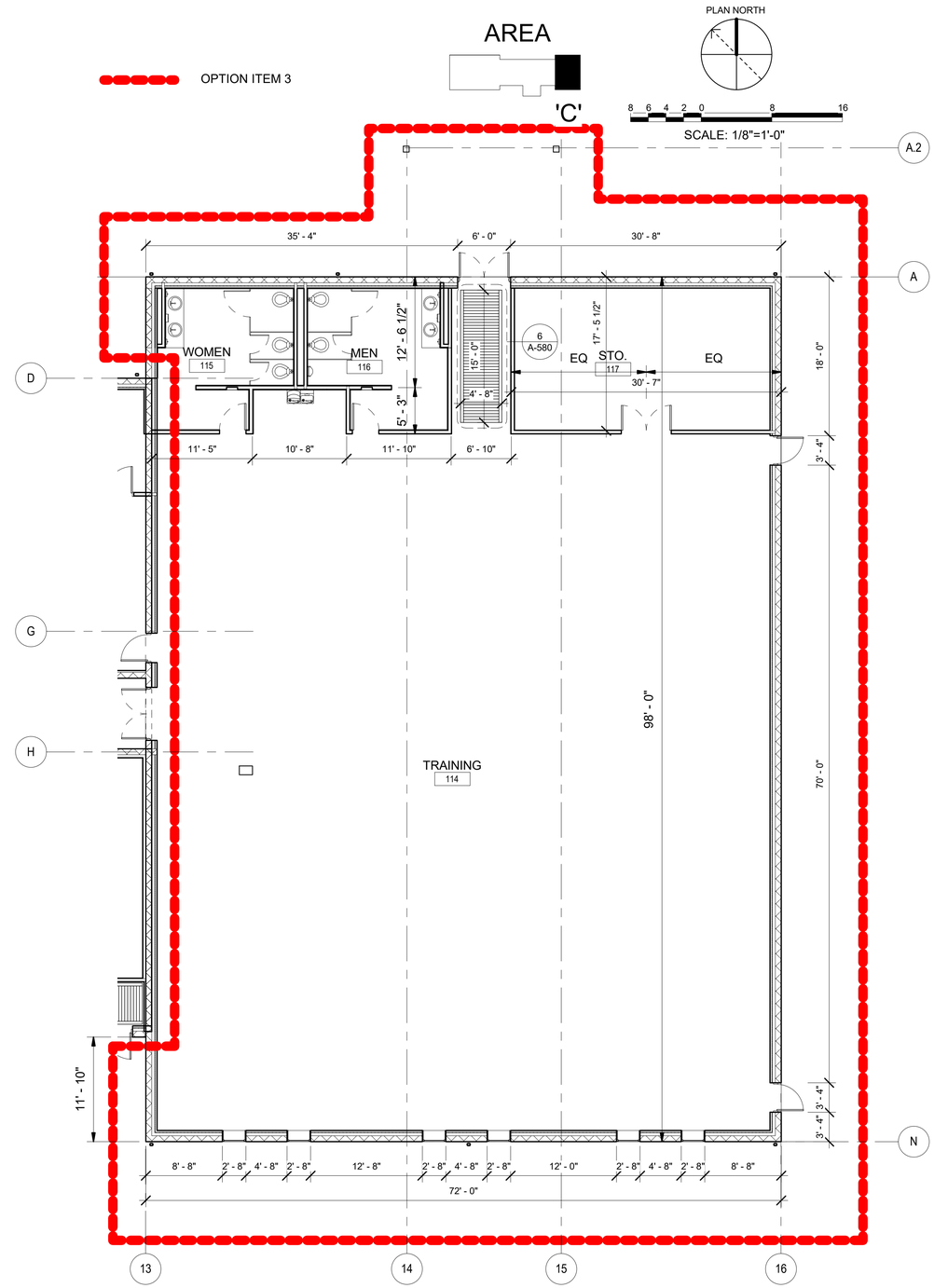

1
A-105

GTEB FIRST FLOOR PLAN - AREA C DIMENSION PLAN

1/8" = 1'-0"

US Army Corps of Engineers ®

MARK	DESCRIPTION	DATE	APPD

Designed by: MVALENTINE | Drawn By: MZV | Date: 13 JUL 2020 | Rev:
Submittal Status: RTA | Spec No: 2145 | Project No:
Reviewed By: O'AQUINO | File No: 223-25-0665 | File Name: W6IA_GTEB
Submitted by: /S/ Matthew Valentine Chief, Architectural Design Section | Size:22" x 34" Plot Scale: 1" = 1'-0" Plot Date:7/13/2020 11:48:16 AM

US ARMY CORPS OF ENGINEERS

SACRAMENTO DISTRICT
1325 J STREET
SACRAMENTO, CA 95814

A2

FT. HUACHUCA

GROUND TRANSPORT EQUIPMENT BUILDING

GTEB FLOOR PLAN - AREA 'C' DIMENSION PLAN

SHEET IDENTIFICATION
A-105

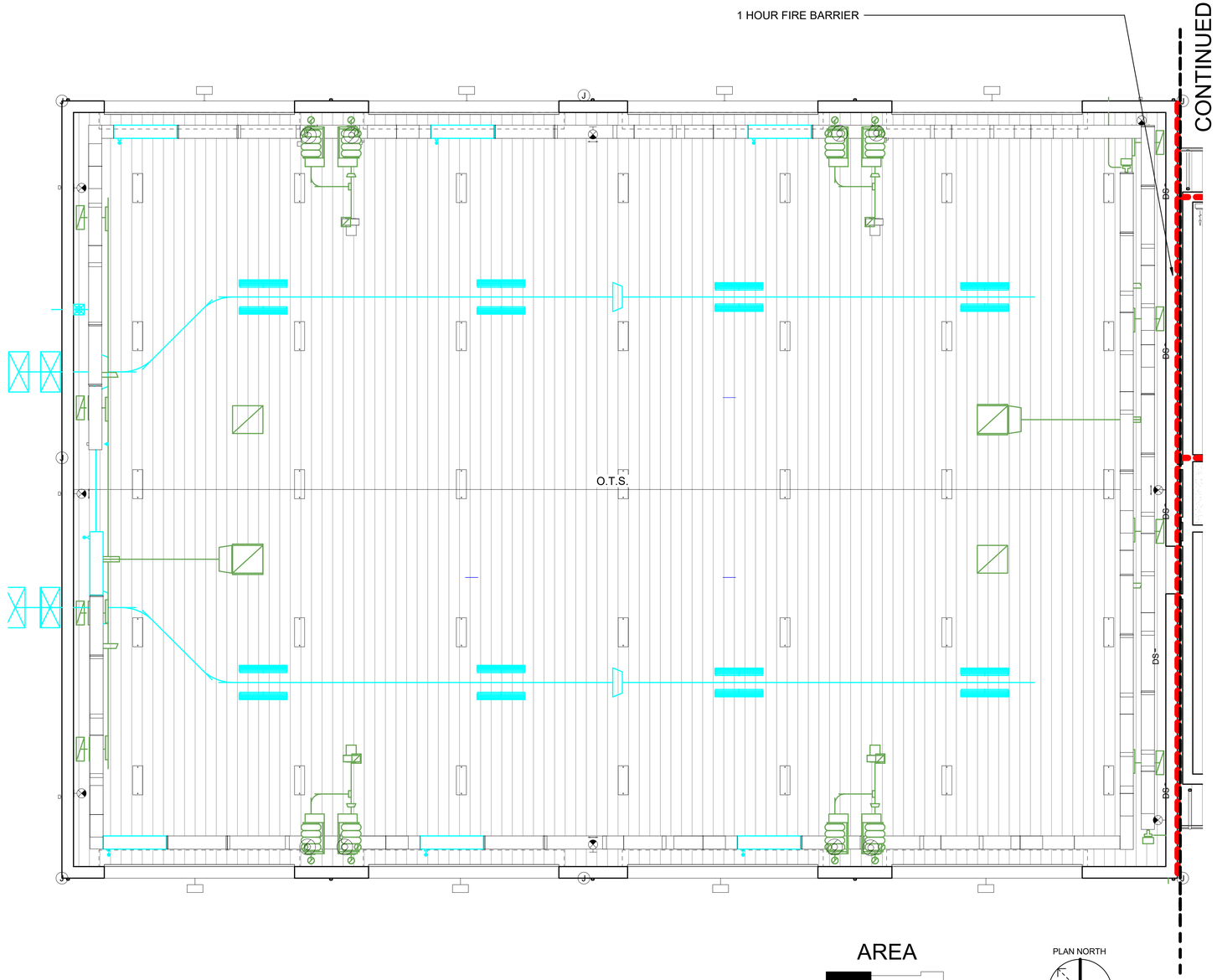

1 / A-106 GTEB REFLECTED CEILING PLAN - AREA 'A'

1/8" = 1'-0"

US Army Corps of Engineers ®

MARK	DESCRIPTION	DATE	APPR

Designed by: MVALENTINE
Drawn By: MZY
Submittal Status: RTA
Reviewed by: O'AQUINO
Submitted by: Maj Matthew Valentine
Chief, Engineering Design Section

Date: 13 JUL 2020
Rev:
Spec No: 2145
Project No:
File No: 223-25-0665
File Name: W68A_GTEB
Size:22" x 34"
Plot Scale: 1" = 1'-0"
Plot Date:7/13/2020 11:48:19 AM

US ARMY CORPS OF ENGINEERS

SACRAMENTO DISTRICT
1325 J STREET
SACRAMENTO, CA 95814

FT. HUACHUCA

A2

GROUND TRANSPORT EQUIPMENT BUILDING

GTEB REFLECTED CEILING PLAN - AREA 'A'

SHEET IDENTIFICATION
A-106

1
A-107

GTEB REFLECTED CEILING PLAN - AREA 'B'

1/8" = 1'-0"

US Army Corps of Engineers ®

MARK	DESCRIPTION	DATE	APPR

Designed by: MVALENTINE Drawn By: MZV
Submittal Status: RTA
Reviewed: O AQUINO
Submitted by: Dr. Matthew Valentine
Date Submitted: Design Section

Date: 13 JUL 2020
Spec No: 2145
File No: 223-25-0685
Size:22" x 34" Scale: 1/8" = 1'-0" Plot Date:7/13/2020 11:48:30 AM

Rev:
Project No:
File Name: W69A_GTEB

US ARMY CORPS OF ENGINEERS
SACRAMENTO DISTRICT
1325 J STREET
SACRAMENTO, CA 95814

FT. HUACHUCA AZ

GROUND TRANSPORT EQUIPMENT BUILDING

GTEB REFLECTED CEILING PLAN - AREA 'B'

SHEET IDENTIFICATION
A-107

CONTINUED ON A-107

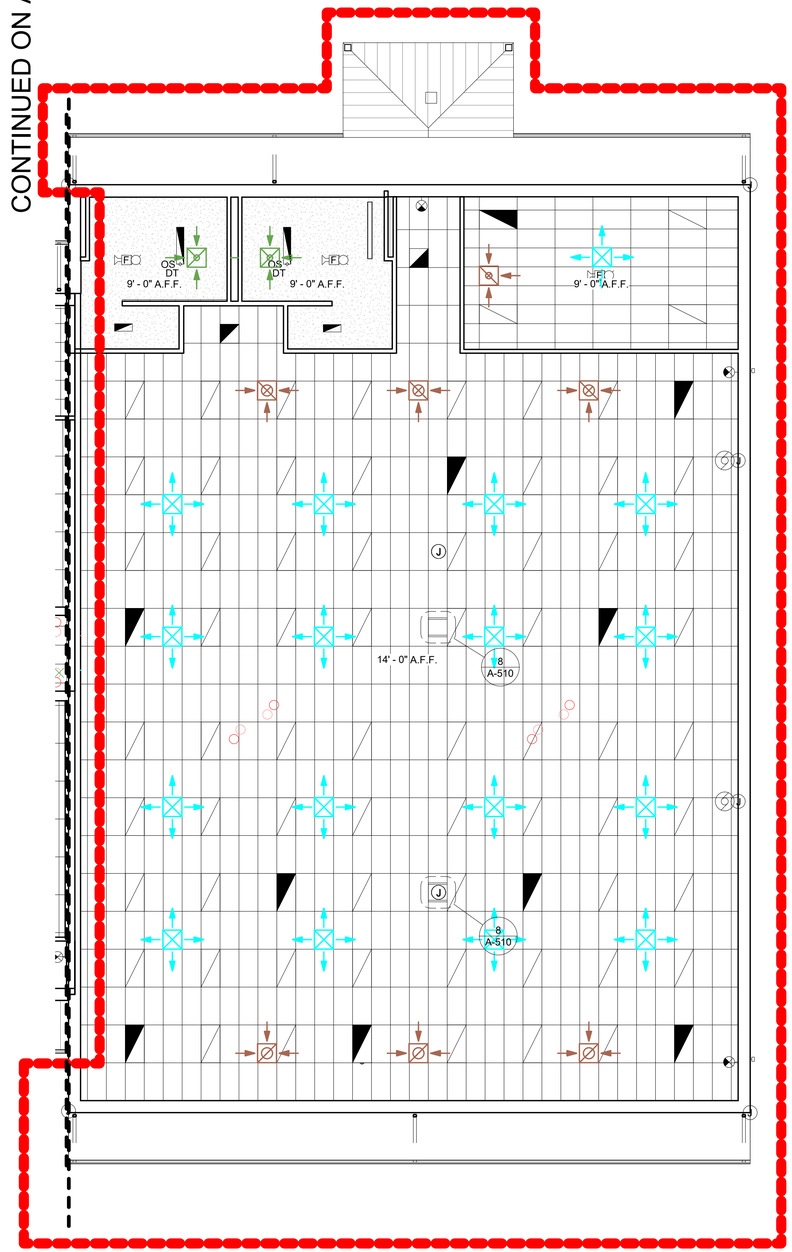

OPTION ITEM 3

AREA

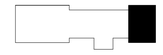

'C'

PLAN NORTH

8 6 4 2 0 8 16

SCALE: 1/8"=1'-0"

1
A-108

GTEB REFLECTED CEILING PLAN - AREA 'C'

1/8" = 1'-0"

US Army Corps of Engineers ®

MARK	DESCRIPTION	DATE	APPD

Designed by: MVALENTINE | Drawn By: MZV | Date: 13 JUL 2020 | Rev:

Submittal Status: RTA | Spec No: 2145 | Project No:

Reviewed By: O'AQUINO | File No: 223-25-0665 | File Name: W68A_GTEB

Submitted by: /S/ Matthew Valentine Chief, Architectural Design Section | Size:22" x 34" Plot Scale: 1" = 1'-0" Plot Date:7/13/2020 11:48:31 AM

US ARMY CORPS OF ENGINEERS

SACRAMENTO DISTRICT
1325 J STREET
SACRAMENTO, CA 95814

FT. HUACHUCA

A2

GROUND TRANSPORT EQUIPMENT BUILDING

GTEB REFLECTED CEILING PLAN - AREA 'C' (OPTION 3)

SHEET IDENTIFICATION
A-108

OPTION ITEM 3

AREA

'A' 'B' 'C'

PLAN NORTH

16 12 8 4 0 16 32

SCALE: 1/16"=1'-0"

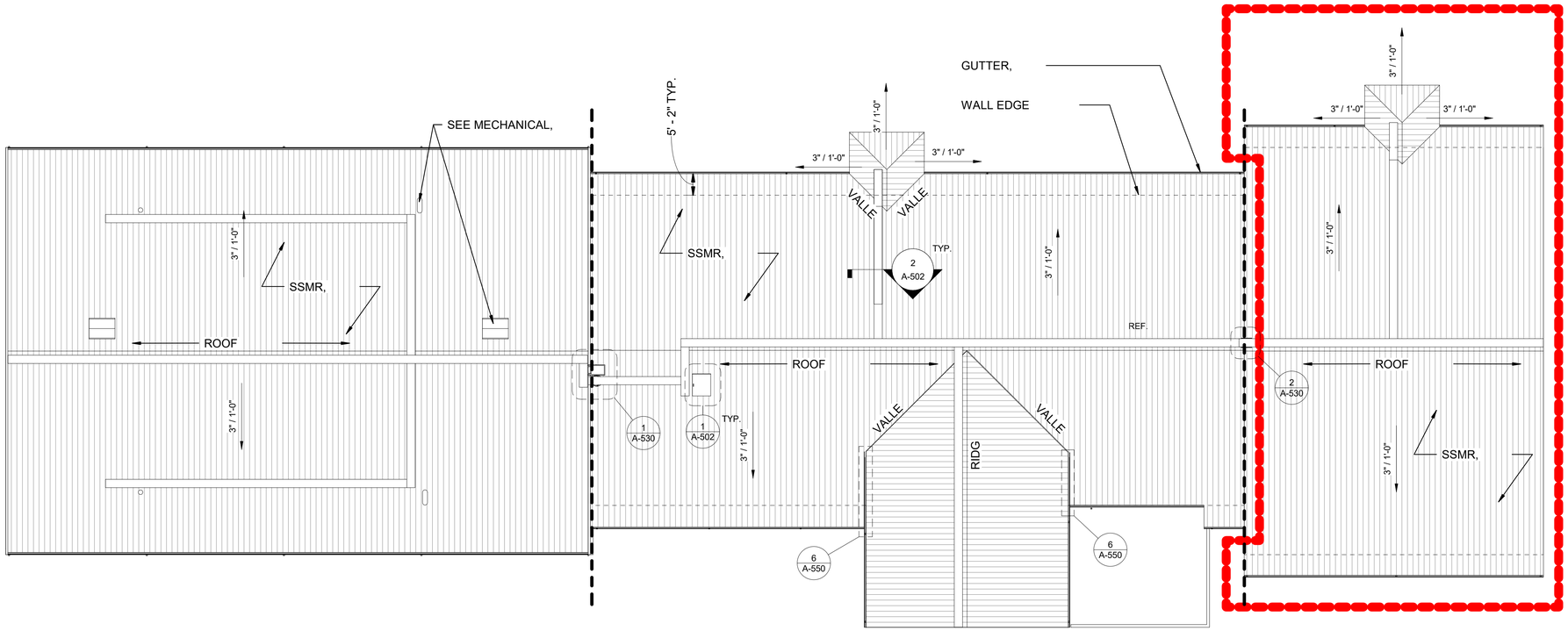

1 A-109 ROOF PLAN

1/16" = 1'-0"

US Army Corps of Engineers ®

MARK	DESCRIPTION	DATE	APPR.

Designed by: MVALENTINE | Drawn By: MZV
Submittal Status: RTA
Reviewed: O'AQUINO
Submitted by: Mr. Matthew Valentine
Title: Architectural Design Section

Date: 13 JUL 2020
Spec No: 2145
Project No:
File No: 223-25-0665
Rev:
File Name: W6SA_GTEB
Size:22" x 34"
Plot Scale: 1/16" = 1'-0"
Plot Date:7/13/2020 11:48:33 AM

US ARMY CORPS OF ENGINEERS

SACRAMENTO DISTRICT
1325 J STREET
SACRAMENTO, CA 95814

FT. HUACHUCA AZ

GROUND TRANSPORT EQUIPMENT BUILDING

GTEB ROOF PLAN

SHEET IDENTIFICATION
A-109

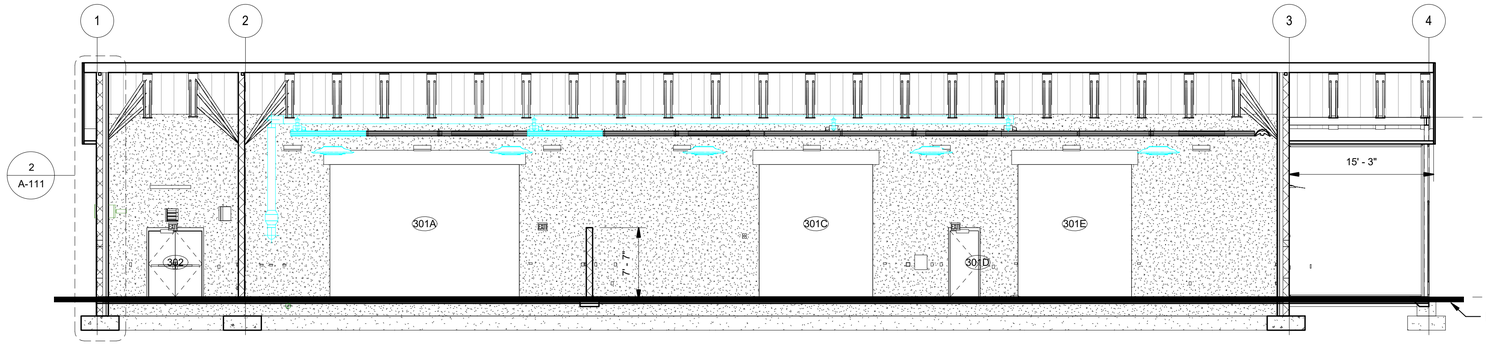

3 A-110 ORG STORAGE CROSS SECTION AT MECH

1/8" = 1'-0"

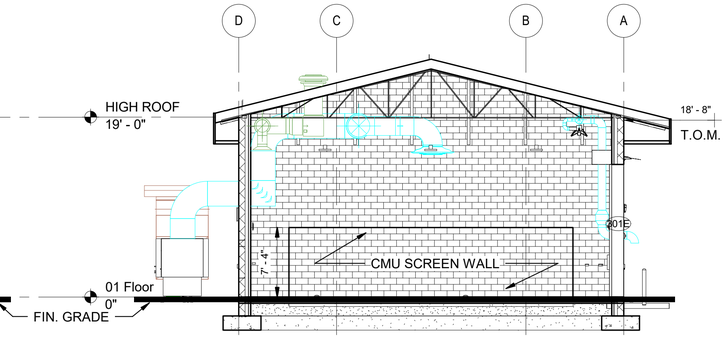

2 A-110 ORG STORAGE CROSS SECTION AT BAYS

1/8" = 1'-0"

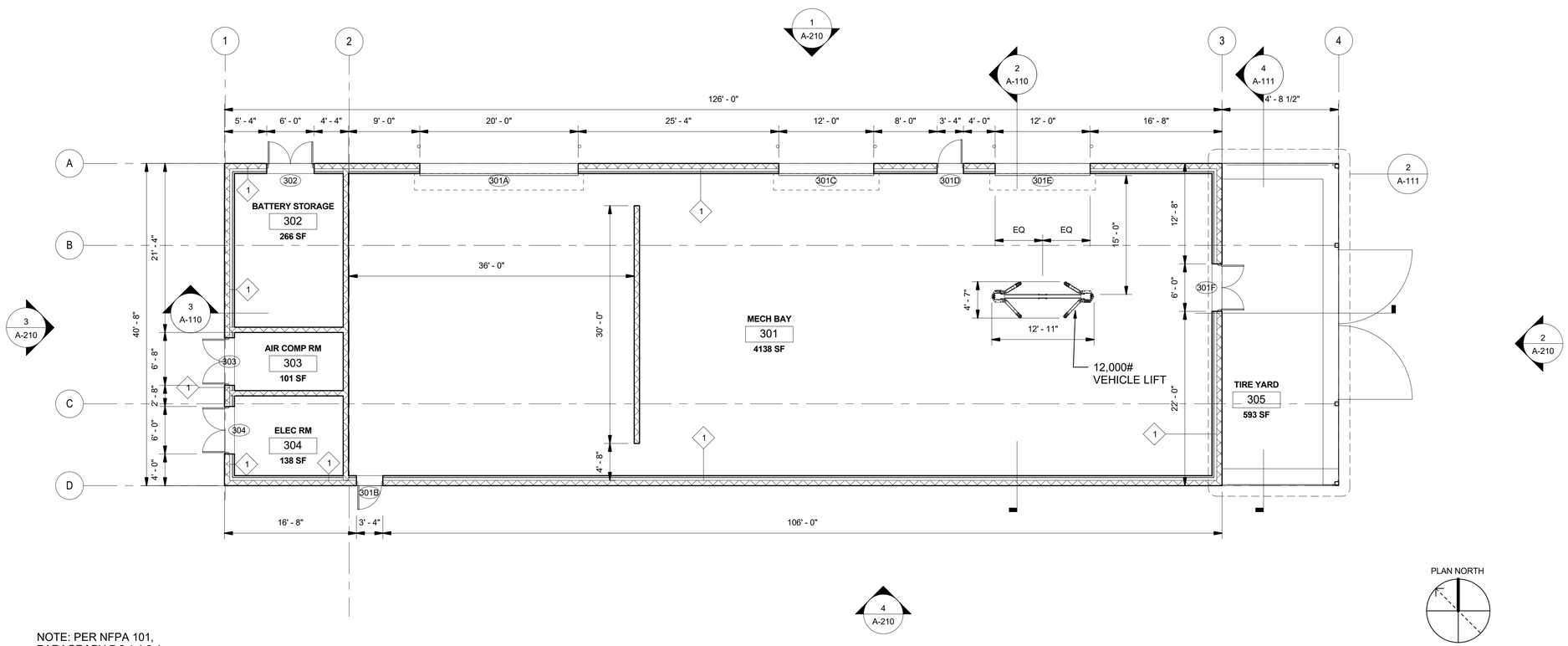

NOTE: PER NFPA 101,
PARAGRAPH 7.2.1.1.3.1,
BUILDING IS UNOCCUPIED.

OPTION 8

SCALE: 1/8"=1'-0"

1 A-110 ORG STORAGE FLOOR PLAN

1/8" = 1'-0"

US Army Corps of Engineers ®

MARK	DESCRIPTION	DATE	APPD

Designed by: MVALENTINE Drawn By: MZV
Submittal Status: 100% SUBMITTAL
Reviewed by: D'AQUINO
Submitted by: Mr. Matthew Valentine
Chief, Architectural Design Section

Date: 13 JUL 2020
Spec No: 2145
File No: 223-25-0665
Size/2" x 34"
Plot Scale: 1" = 1'-0"
Plot Date: 7/13/2020 11:17:01 AM

Rev:
Project No:
File Name: W85A_STOR

US ARMY CORPS OF ENGINEERS

SACRAMENTO DISTRICT
1325 J STREET
SACRAMENTO, CA 95814

FT. HUACHUCA AZ

GROUND TRANSPORT EQUIPMENT BUILDING

ORG STORAGE FLOOR PLAN & SECTIONS - OPTION 8

SHEET IDENTIFICATION
A-110

OPTION 8

SCALE: 1/8"=1'-0"

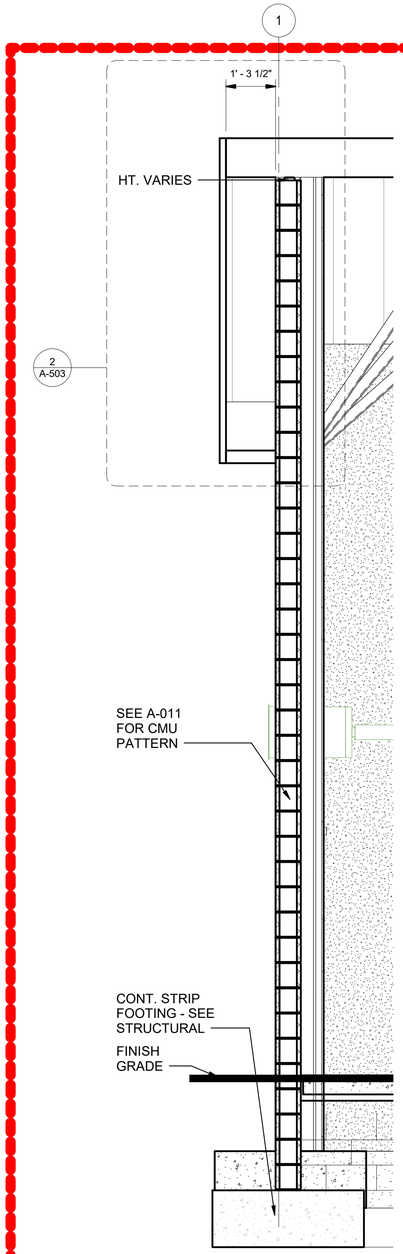

3 A-111 ORG STORAGE WALL SECTION

1/2" = 1'-0"

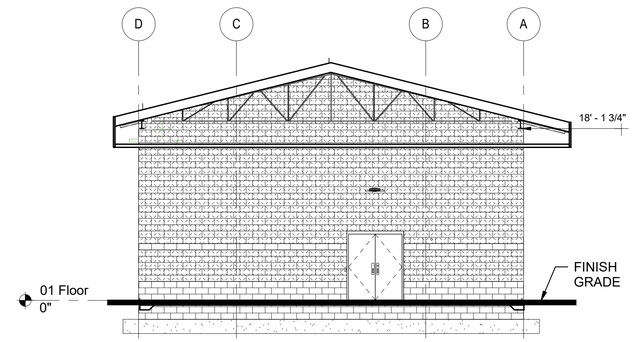

4 A-111 CROSS SECTION @ TIRE STO.

1/8" = 1'-0"

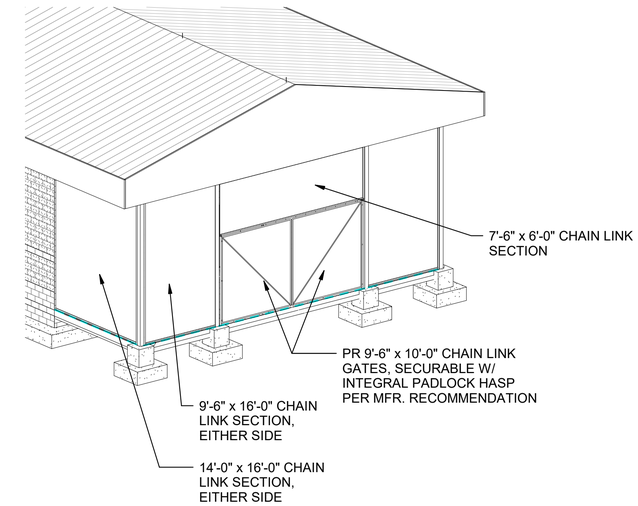

2 A-111 CHAIN LINK TIRE YARD CAGE - NTS

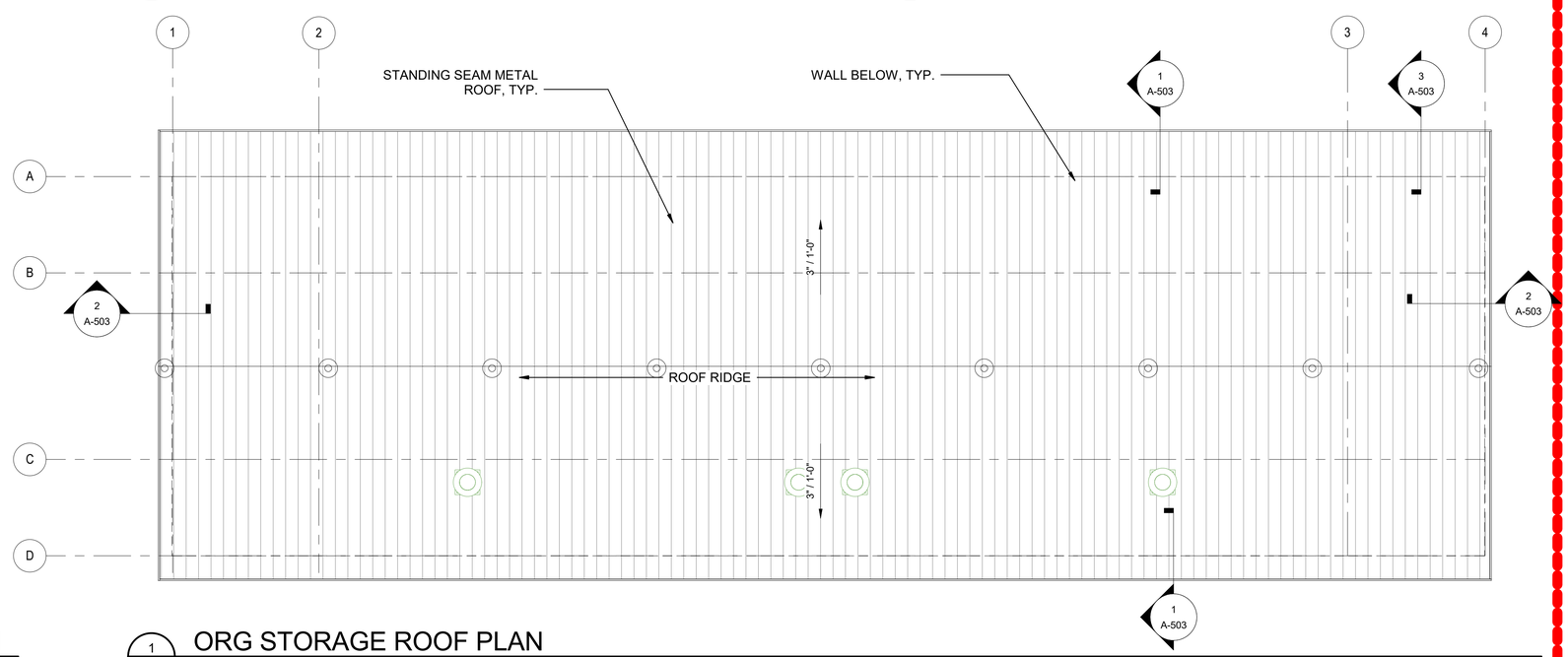

1 A-111 ORG STORAGE ROOF PLAN

1/8" = 1'-0"

PLAN NORTH

8 6 4 2 0 8 16

US Army Corps of Engineers ®

MARK	DESCRIPTION	DATE	APPR

Designed by: MVALENTINE | Drawn By: MZV
Submittal Status: 100% SUBMITTAL
Reviewed by: AQUINO
Submitted by: Al Matthew Valentine
File Name/Number Section

Date: 13 JUL 2020
Rev:
Spec No: 2145
Project No:
File No: 223-25-0685
File Name: W85A_STOR
Size:22" x 34"
Plot Scale: Unscaled
Plot Date:7/13/2020 11:17:11 AM

US ARMY CORPS OF ENGINEERS

SACRAMENTO DISTRICT
1325 J STREET
SACRAMENTO, CA 95814

FT. HUACHUCA AZ

GROUND TRANSPORT
EQUIPMENT BUILDING

ORG STORAGE ROOF PLAN & SECTION
- OPTION 8

SHEET IDENTIFICATION
A-111

OPTION 6 - HAZMAT BUILDING

OPTION 7 - POL BUILDING

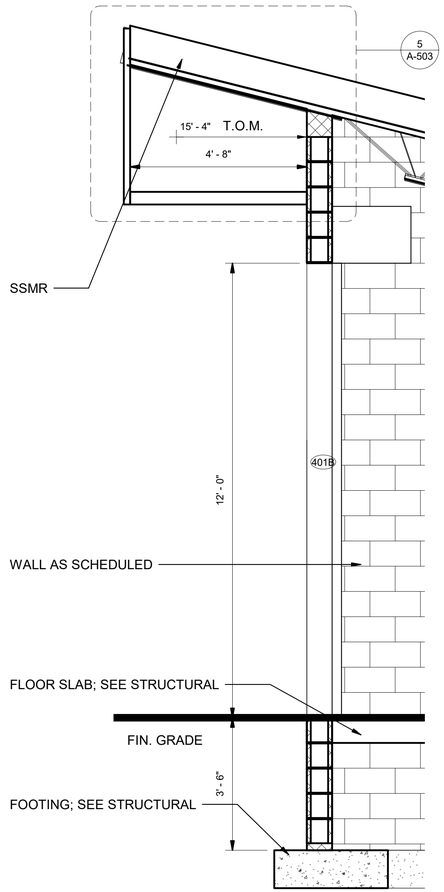

8 A-120 POL WALL SECTION
1/2" = 1'-0"

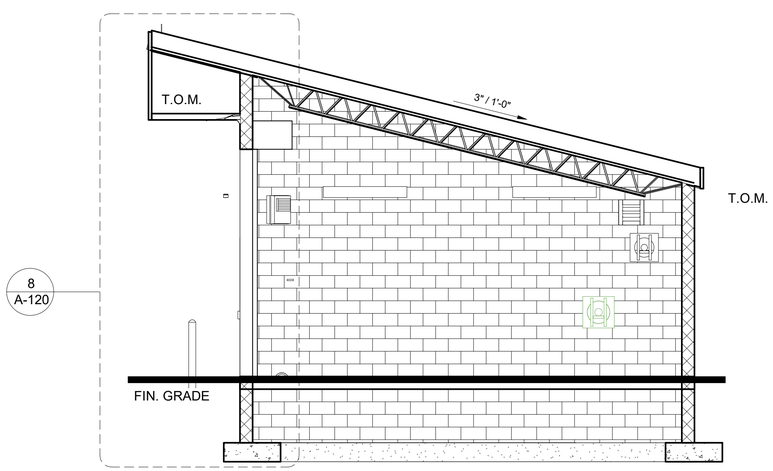

7 A-120 POL SECTION
1/4" = 1'-0"

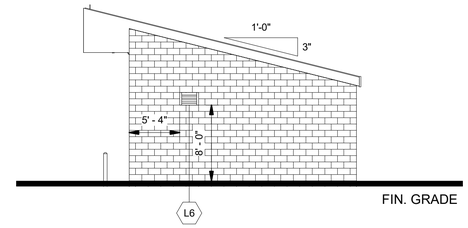

6 A-120 POL WEST ELEVATION
1/8" = 1'-0"

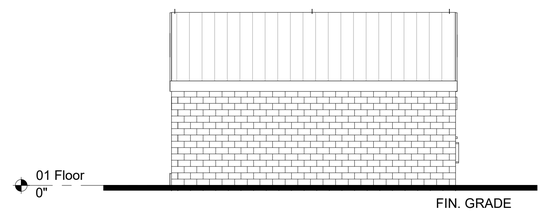

5 A-120 POL SOUTH ELEVATION
1/8" = 1'-0"

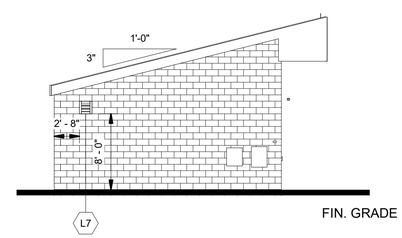

4 A-120 POL EAST ELEVATION
1/8" = 1'-0"

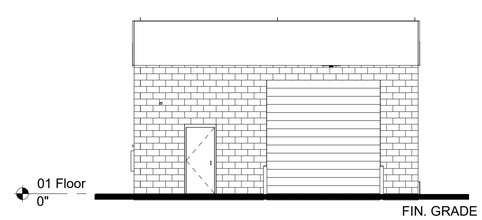

3 A-120 POL NORTH ELEVATION
1/8" = 1'-0"

GENERAL NOTE:

POL PLANS AND ELEVATIONS TO BE IDENTICAL TO THE HAZMAT BUILDING PLANS

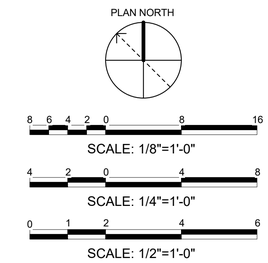

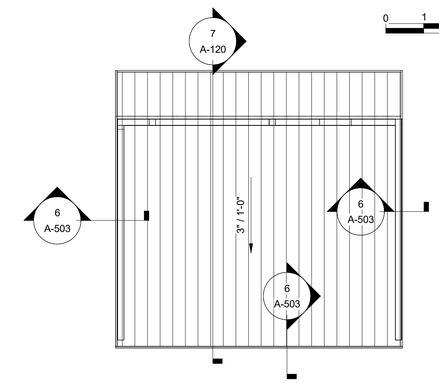

2 A-120 POL & HAZMAT ROOF PLAN
1/8" = 1'-0"

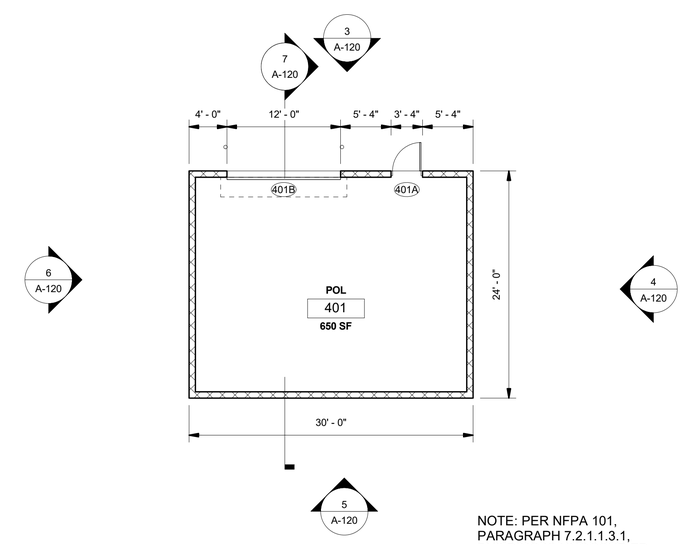

NOTE: PER NFPA 101, PARAGRAPH 7.2.1.1.3.1, BUILDING IS UNOCCUPIED.

1 A-120 POL FLOOR PLAN (HAZMAT SIM.)
1/8" = 1'-0"

US Army Corps of Engineers ®

MARK	DESCRIPTION	DATE	APPD

Designed by: MVALENTINE | Drawn By: MZV
Submittal Status: 100% SUBMITTAL
Reviewed By: ACQUINO
Submitted by: Al Matthew Valentine, Project Manager, Design Section
Date: 13 JUL 2020
Rev:
Spec No: 2145
Project No:
File No: 223-25-0665
File Name: W68A_STOR
Size:22" x 34"
Plot Scale: As indicated
Plot Date:7/13/2020 11:17:26 AM

US ARMY CORPS OF ENGINEERS

SACRAMENTO DISTRICT
1325 J STREET
SACRAMENTO, CA 95814

FT. HUACHUCA AZ

GROUND TRANSPORT EQUIPMENT BUILDING

POL & HAZMAT PLANS, ELEVATIONS, SECTIONS - OPTIONS 6 & 7

SHEET IDENTIFICATION
A-120

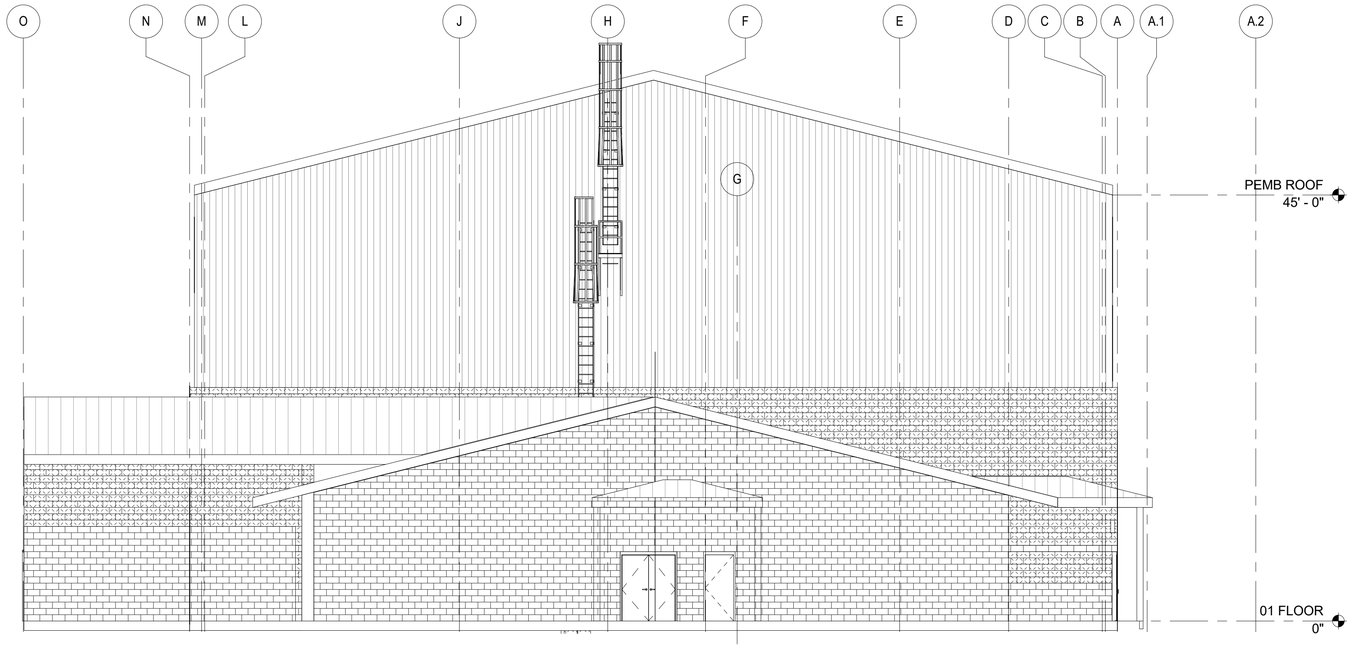

2 A-130 EAST ELEVATION

1/8" = 1'-0"

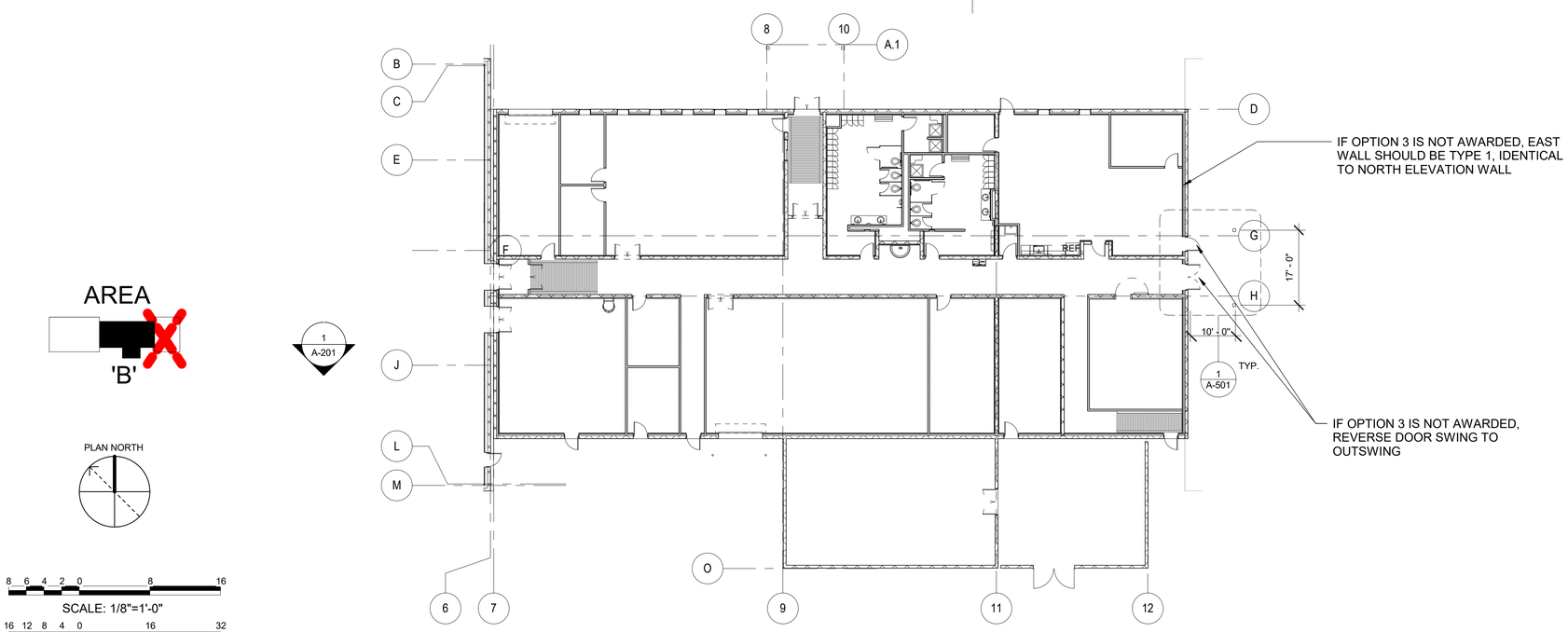

1 A-130 GTEB FIRST FLOOR PLAN - AREA B IF OPTION 3 IS NOT AWARDED

1/16" = 1'-0"

1 A-201

8 6 4 2 0 8 16

SCALE: 1/8"=1'-0"

16 12 8 4 0 16 32

SCALE: 1/16"=1'-0"

US Army Corps of Engineers ®

MARK	DESCRIPTION	DATE	APPR

Designed by: Designer | Drawn By: OJW | Date: 13 JUL 2020 | Rev:

Submittal Status: RTA | Spec No: | Project No:

Reviewed by: Checker | File No: | File Name:

Submitted by: | Size:22" x 34" Scale: As Indicated

Approved by: Chief, Architectural Design Section | Plot Date:7/13/2020 11:56:04 AM

US ARMY CORPS OF ENGINEERS

SACRAMENTO DISTRICT
1325 J STREET
SACRAMENTO, CA 95814

GROUND TRANSPORT EQUIPMENT BUILDING

NEW FLOOR PLAN W/O OPTION 3

SHEET IDENTIFICATION
A-130

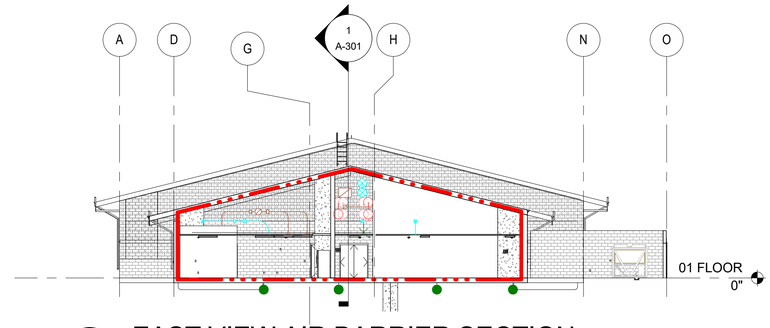

3 A-140 EAST VIEW AIR BARRIER SECTION

1/16" = 1'-0"

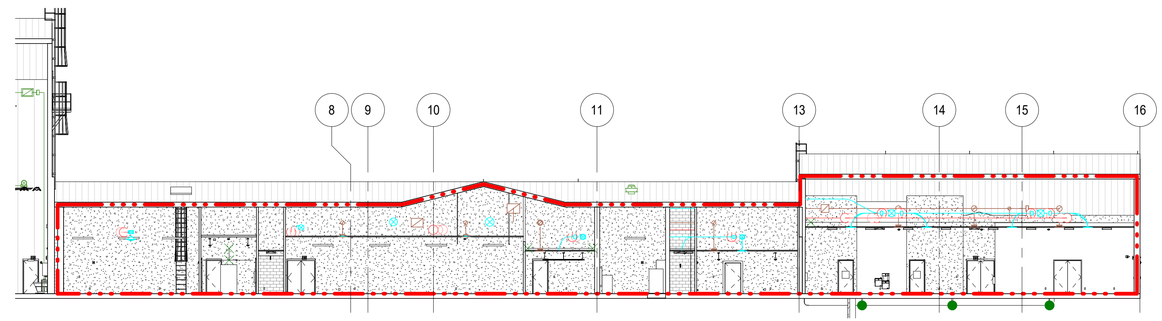

2 A-140 NORTH VIEW AIR BARRIER SECTION

1/16" = 1'-0"

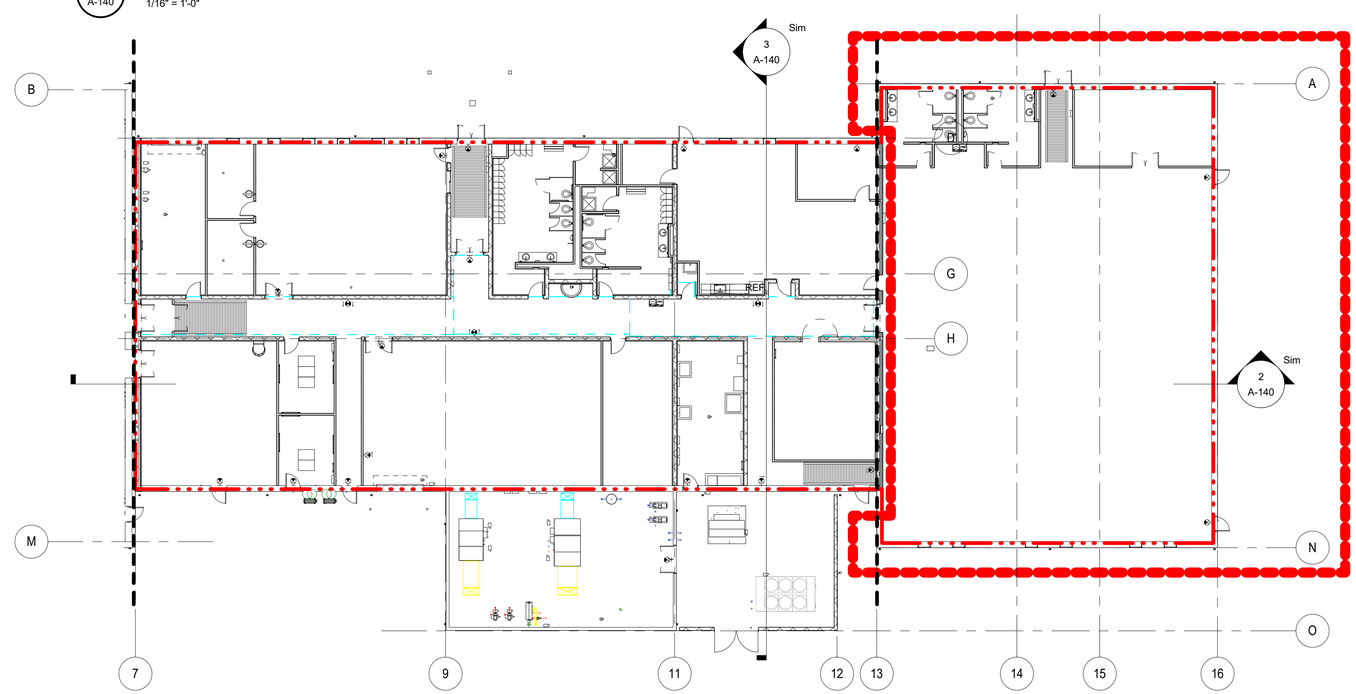

1 A-140 01 FLOOR AIR BARRIER PLAN - AREA B

1/16" = 1'-0"

PLAN NORTH

16 12 8 4 0 16 32

SCALE: 1/16"=1'-0"

LIMITS OF AIR BARRIER OF THE BUILDING TO BE TESTED FOR AIR TIGHTNESS

OPTION ITEM 3

US Army Corps of Engineers ®

MARK	DESCRIPTION	DATE	APPD

Rev:

Date: 13 JUL 2020

Project No:

Spec No:

File Name: W85A_GTEB

File No: 223-25-0665

Size:22" x 34"
Plot Scale: 1" = 1'-0"
Plot Date:7/13/2020 11:56:11 AM

Designed by: MVALENTINE
Drawn by: MZV

Submittal Status: RTA

Reviewed by: O AQUINO

Submitted by: Maj Matthew Valentine
Chief, Engineering Design Section

US ARMY CORPS OF ENGINEERS

SACRAMENTO DISTRICT
1325 J STREET
SACRAMENTO, CA 95814

FT. HUACHUCA, AZ

GROUND TRANSPORT EQUIPMENT BUILDING

GTEB AIR BARRIER BOUNDARY

SHEET IDENTIFICATION
A-140

RTA

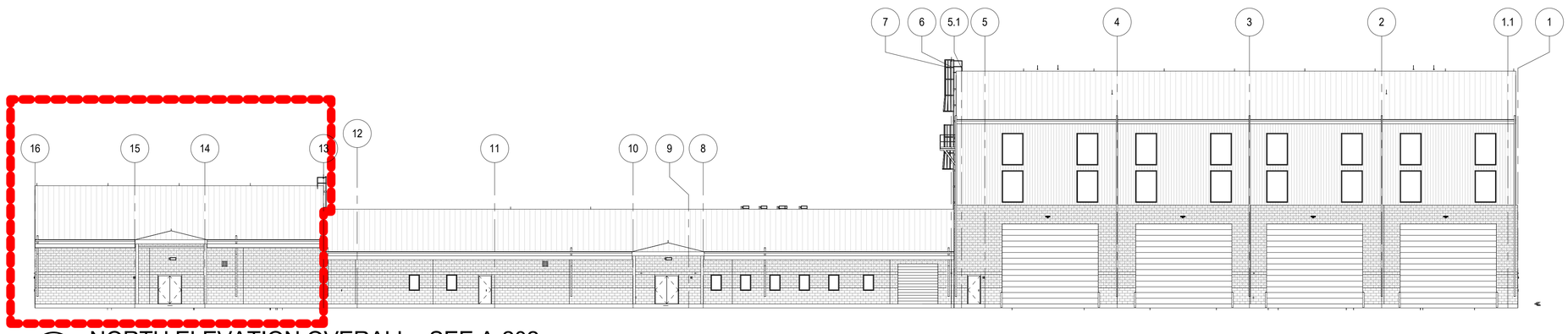

1
A-201

NORTH ELEVATION OVERALL - SEE A-202

1/16" = 1'-0"

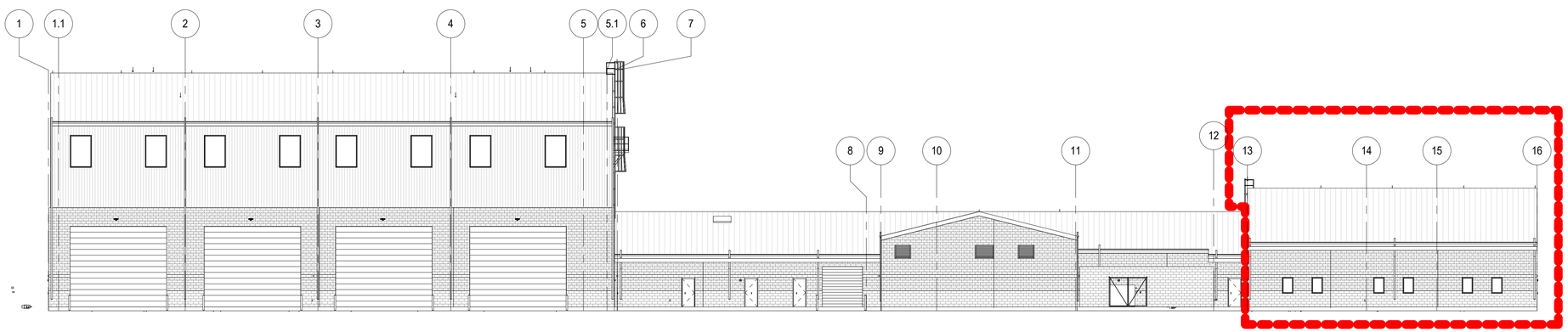

2
A-201

SOUTH ELEVATION OVERALL - SEE A-203

1/16" = 1'-0"

OPTION 3 - INSTRUCTIONAL

16 12 8 4 0 16 32

SCALE: 1/16"=1'-0"

US Army Corps of Engineers ®

MARK	DESCRIPTION	DATE	APPR

Designed by: MVALENTINE
Drawn By: MZV
Date: 13 JUL 2020
Rev:
Submittal Status: RTA
Spec No: 2145
Project No:
Reviewed by: O'AQUINO
File No: 223-25-0665
File Name: W69A_GTEB
Submitted by: Jill Matthew Valentine
Chief, Engineering Design Section
Size:22" x 34"
Plot Scale: 1/16" = 1'-0"
Plot Date:7/13/2020 11:56:18 AM

US ARMY CORPS OF ENGINEERS

SACRAMENTO DISTRICT
1325 J STREET
SACRAMENTO, CA 95814

FT. HUACHUCA

AZ

GROUND TRANSPORT EQUIPMENT BUILDING

GTEB NORTH AND SOUTH ELEVATIONS - OVERALL

SHEET IDENTIFICATION
A-201

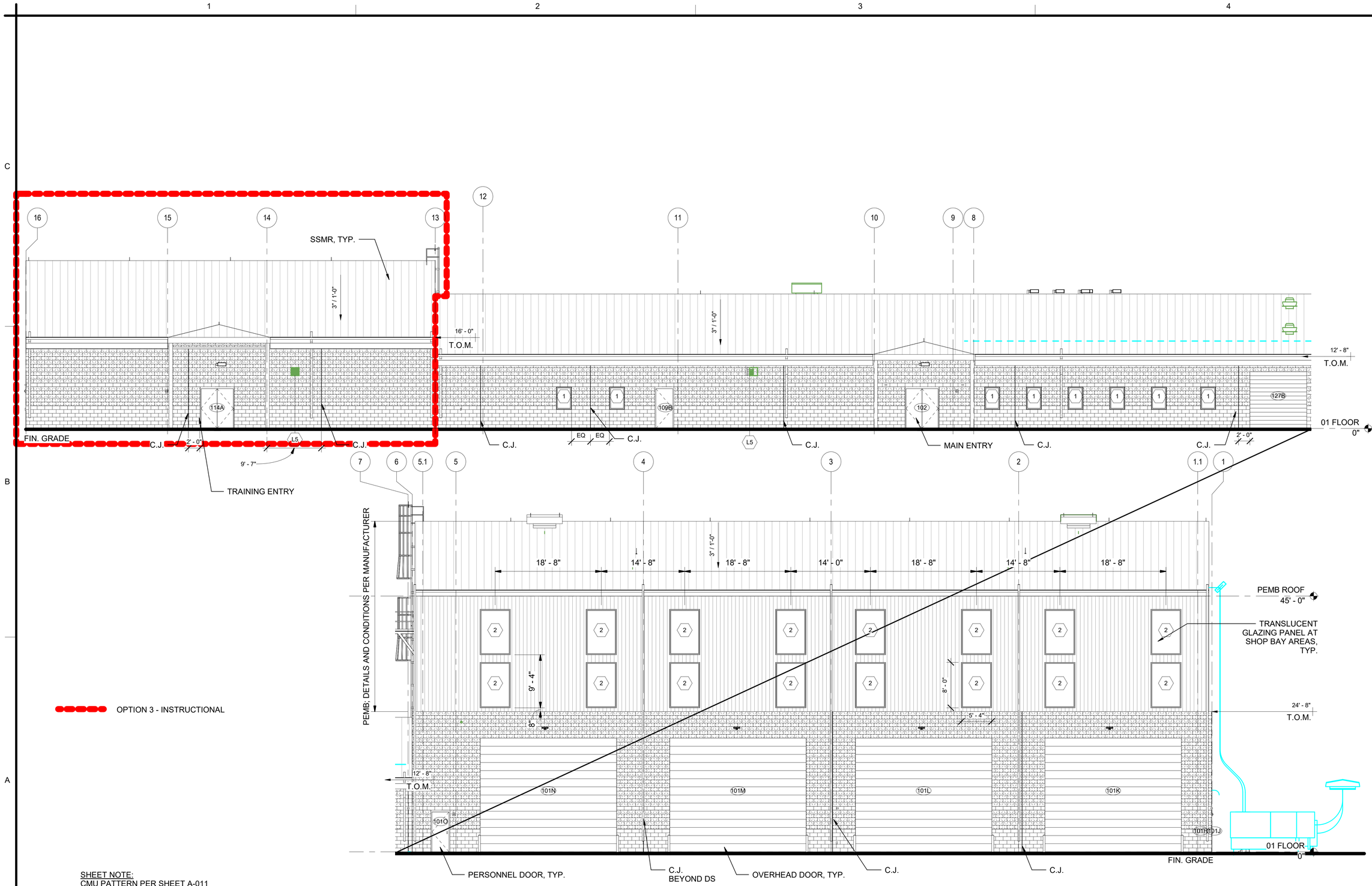

OPTION 3 - INSTRUCTIONAL

SHEET NOTE:
CMU PATTERN PER SHEET A-011

8 6 4 2 0 8 16
SCALE: 1/8"=1'-0"

1 A-202 NORTH ELEVATION
1/8" = 1'-0"

US Army Corps of Engineers ®

MARK	DESCRIPTION	DATE	APPR.

Designed by: MVALENTINE
Drawn By: MZV
Submittal Status: RTA
Reviewed by: O'AQUINO
Submitted by: Dr. Matthew Valentine
Chief, Design Branch, Section

Date: 13 JUL 2020
Rev:
Spec No: 2145
Project No:
File No: 223-25-0685
File Name: W85A_GTEB
Size:22" x 34"
Plot Scale: 1" = 1'-0"
Plot Date:7/13/2020 11:56:24 AM

US ARMY CORPS OF ENGINEERS
SACRAMENTO DISTRICT
1325 J STREET
SACRAMENTO, CA 95814

FT. HUACHUCA AZ

GROUND TRANSPORT EQUIPMENT BUILDING

GTEB NORTH ELEVATION

SHEET IDENTIFICATION
A-202

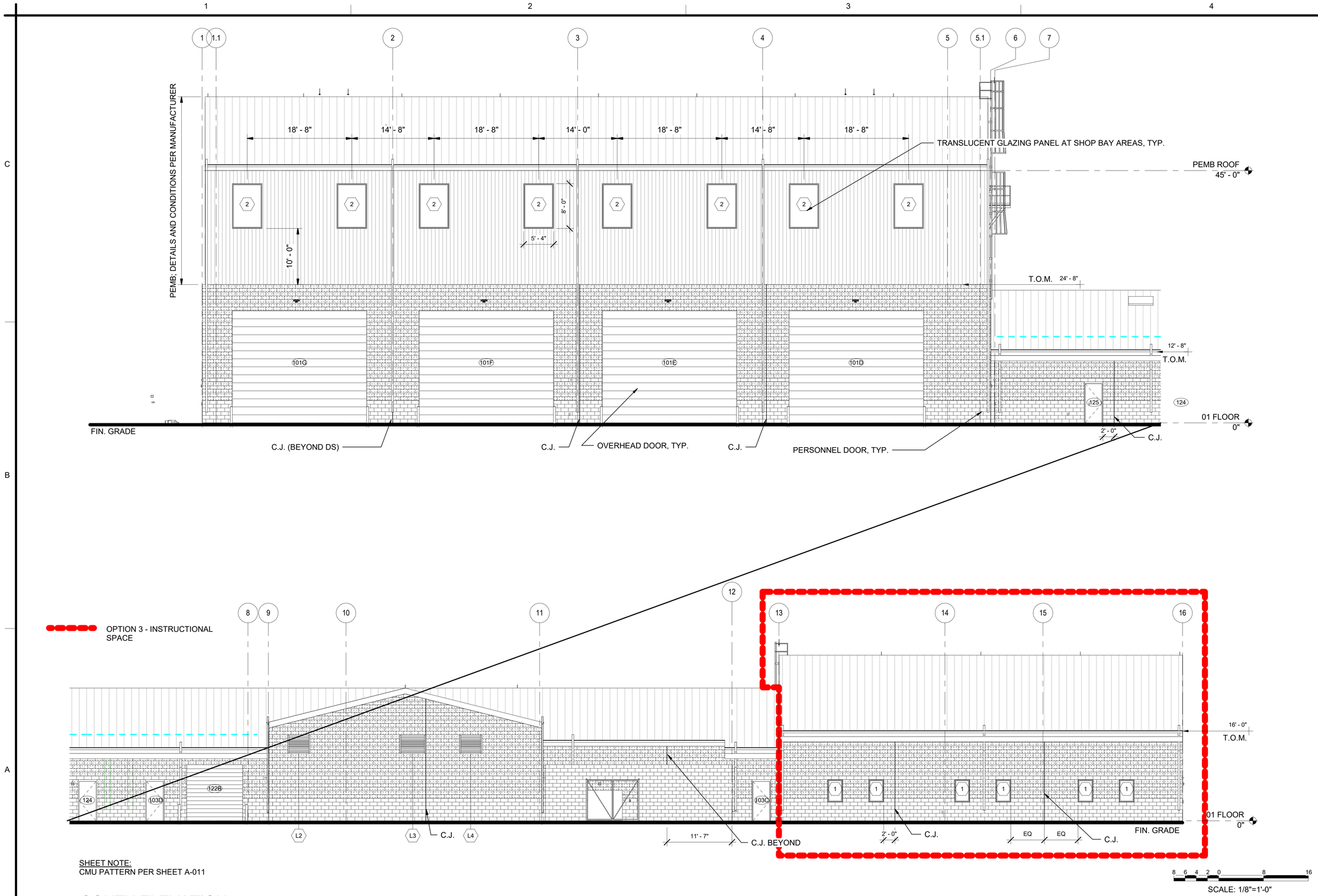

SHEET NOTE:
CMU PATTERN PER SHEET A-011

1 / A-203 SOUTH ELEVATION
1/8" = 1'-0"

US Army Corps of Engineers ®

MARK	DESCRIPTION	DATE	APPR

Designed by: MVALENTINE
Drawn By: MZV
Date: 13 JUL 2020
Rev:
Submittal Status: RTA
Spec No: 2145
Project No:
Reviewed by: O AQUINO
File No: 223-25-0665
File Name: W68A_GTEB
Submitted by: Mr. Matthew Valentine
Chief, Engineering Design Section
Size/Z# x 34"
Plot Scale: 1" = 1'-0"
Plot Date:7/13/2020 11:56:27 AM

US ARMY CORPS OF ENGINEERS
SACRAMENTO DISTRICT
1325 J STREET
SACRAMENTO, CA 95814

FT. HUACHUCA AZ

GROUND TRANSPORT EQUIPMENT BUILDING

GTEB SOUTH ELEVATION

SHEET IDENTIFICATION
A-203

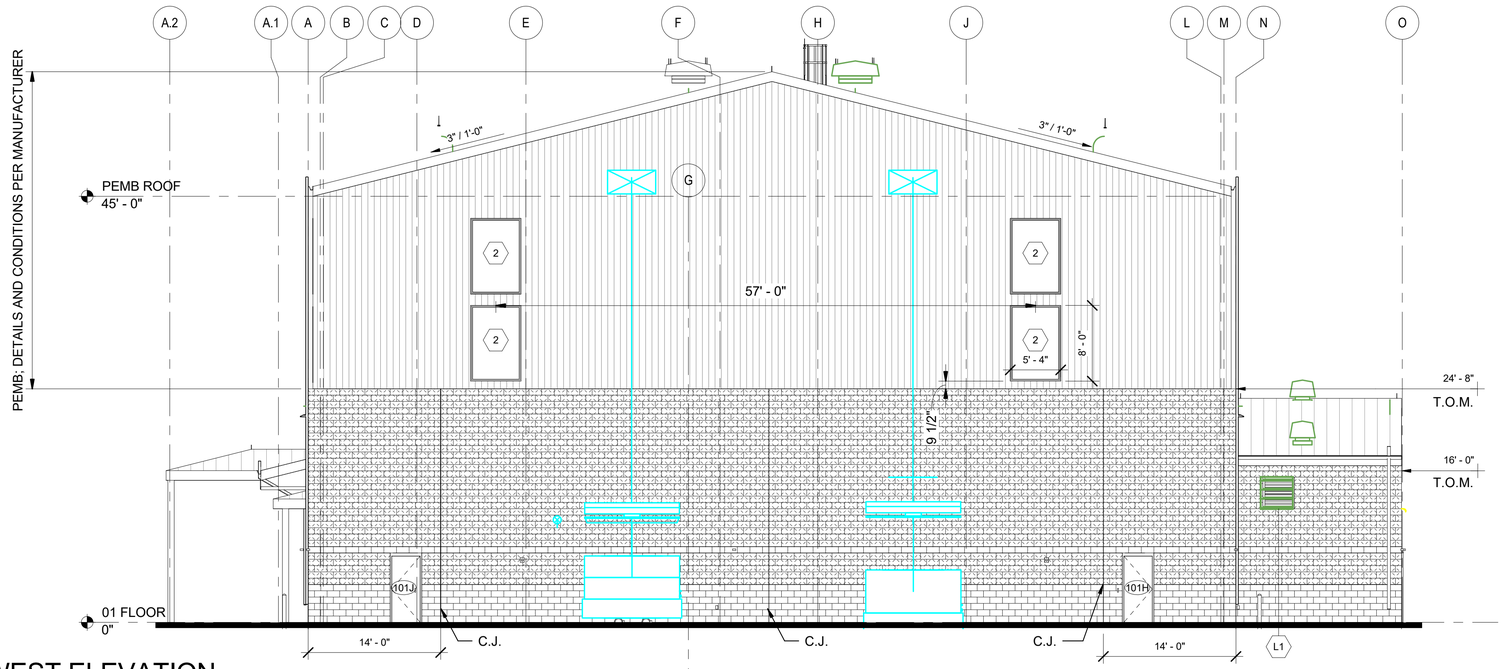

2
A-204

WEST ELEVATION

1/8" = 1'-0"

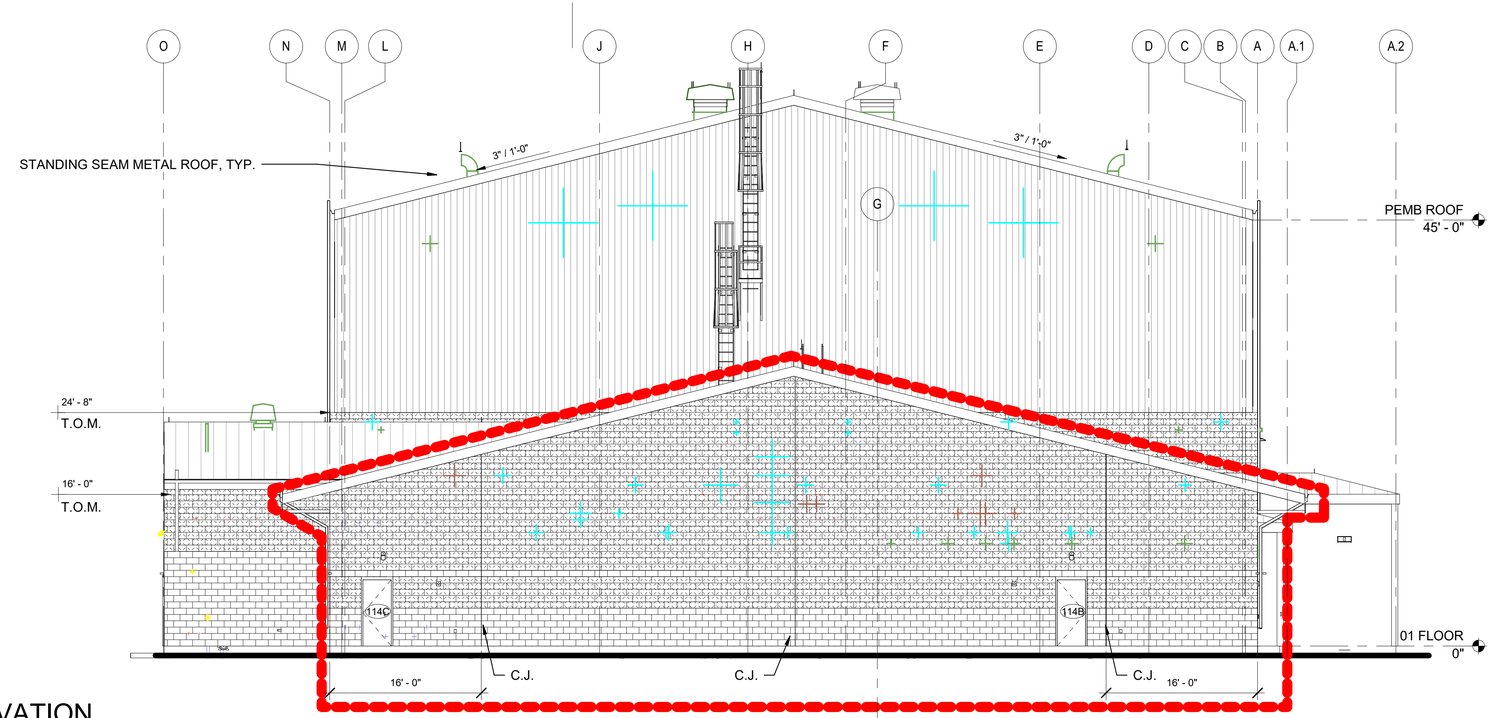

OPTION 3 - INSTRUCTIONAL SPACE

SHEET NOTE:
CMU PATTERN PER SHEET A-011

8 6 4 2 0 8 16

SCALE: 1/8"=1'-0"

1
A-204

EAST ELEVATION

1/8" = 1'-0"

US Army Corps of Engineers ®

MARK	DESCRIPTION	DATE	APPR.

Designed by: MVALENTINE Drawn By: MZV
Submittal Status: RTA
Reviewed by: O AQUINO
Submitted by: Matthew Valentine
Date/Time: 7/13/2020 11:56:33 AM
Date Approved: Supervisory Engineer, Section

Date: 13 JUL 2020
Spec No: 2145
File No: 223-25-0665
Size/Z-x: 34"
Rev: AZ
Project No:
File Name: W65A_GTEB
Scale: 1/8" = 1'-0"
Plot Date: 7/13/2020 11:56:33 AM

US ARMY CORPS OF ENGINEERS
SACRAMENTO DISTRICT
1325 J STREET
SACRAMENTO, CA 95814

FT. HUACHUCA
GROUND TRANSPORT EQUIPMENT BUILDING
GTEB EAST AND WEST ELEVATIONS

SHEET IDENTIFICATION
A-204

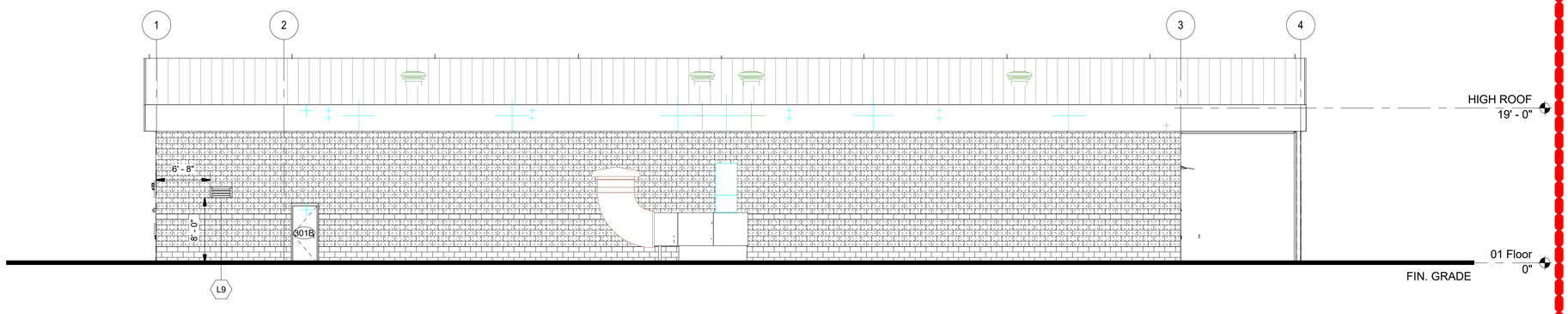

4 A-210 ORG STORAGE SOUTH ELEVATION

1/8" = 1'-0"

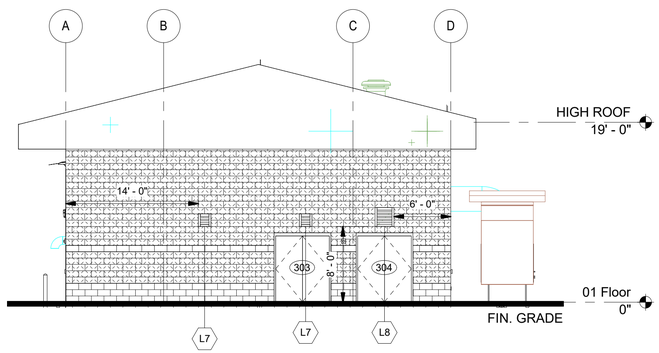

3 A-210 ORG STORAGE WEST ELEVATION

1/8" = 1'-0"

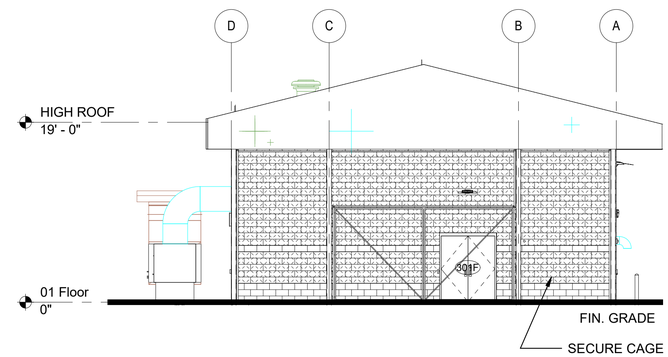

2 A-210 ORG STORAGE EAST ELEVATION

1/8" = 1'-0"

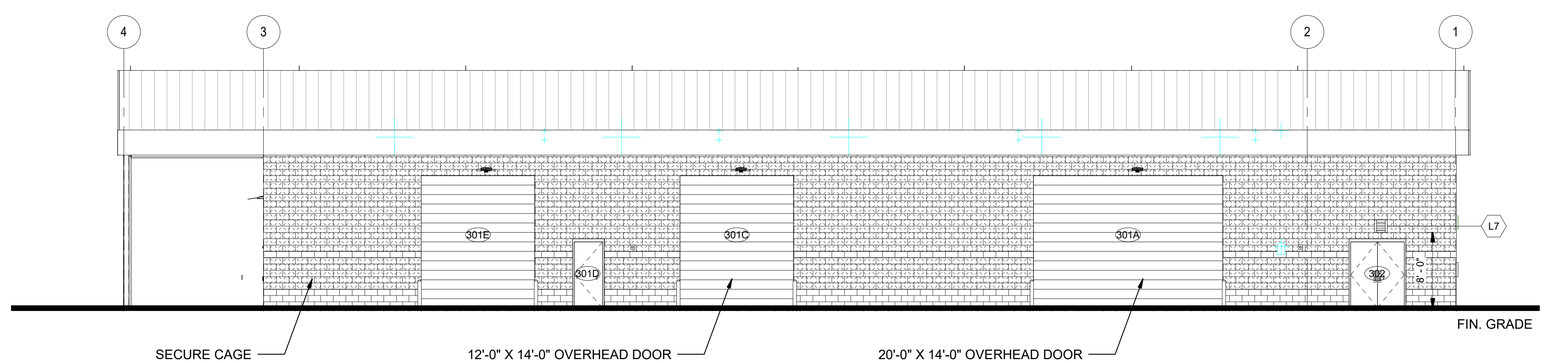

1 A-210 ORG STORAGE NORTH ELEVATION

1/8" = 1'-0"

OPTION 8

SHEET NOTE:
CMU PATTERN PER SHEET A-011

8 6 4 2 0 8 16

SCALE: 1/8"=1'-0"

US Army Corps of Engineers ®

MARK	DESCRIPTION	DATE	APPD

Designed by: MVALENTINE
Drawn By: MZV
Submittal Status: 100% SUBMITTAL
Reviewed by: ACQUINO
Submitted by: SL Matthew Valentine
Chief, Design Branch, Design Section

Date: 13 JUL 2020
Rev:
Spec No: 2145
Project No:
File No: 223-23-0865
File Name: W65A_STOR
Size:22" x 34"
Plot Scale: 1:1.0T
Plot Date:7/13/2020 11:17:38 AM

US ARMY CORPS OF ENGINEERS

SACRAMENTO DISTRICT
1325 J STREET
SACRAMENTO, CA 95814

FT. HUACHUCA AZ

GROUND TRANSPORT EQUIPMENT BUILDING

ORG STORAGE ELEVATIONS - OPTION 8

SHEET IDENTIFICATION
A-210

8 6 4 2 0 8 16

SCALE: 1/8"=1'-0"

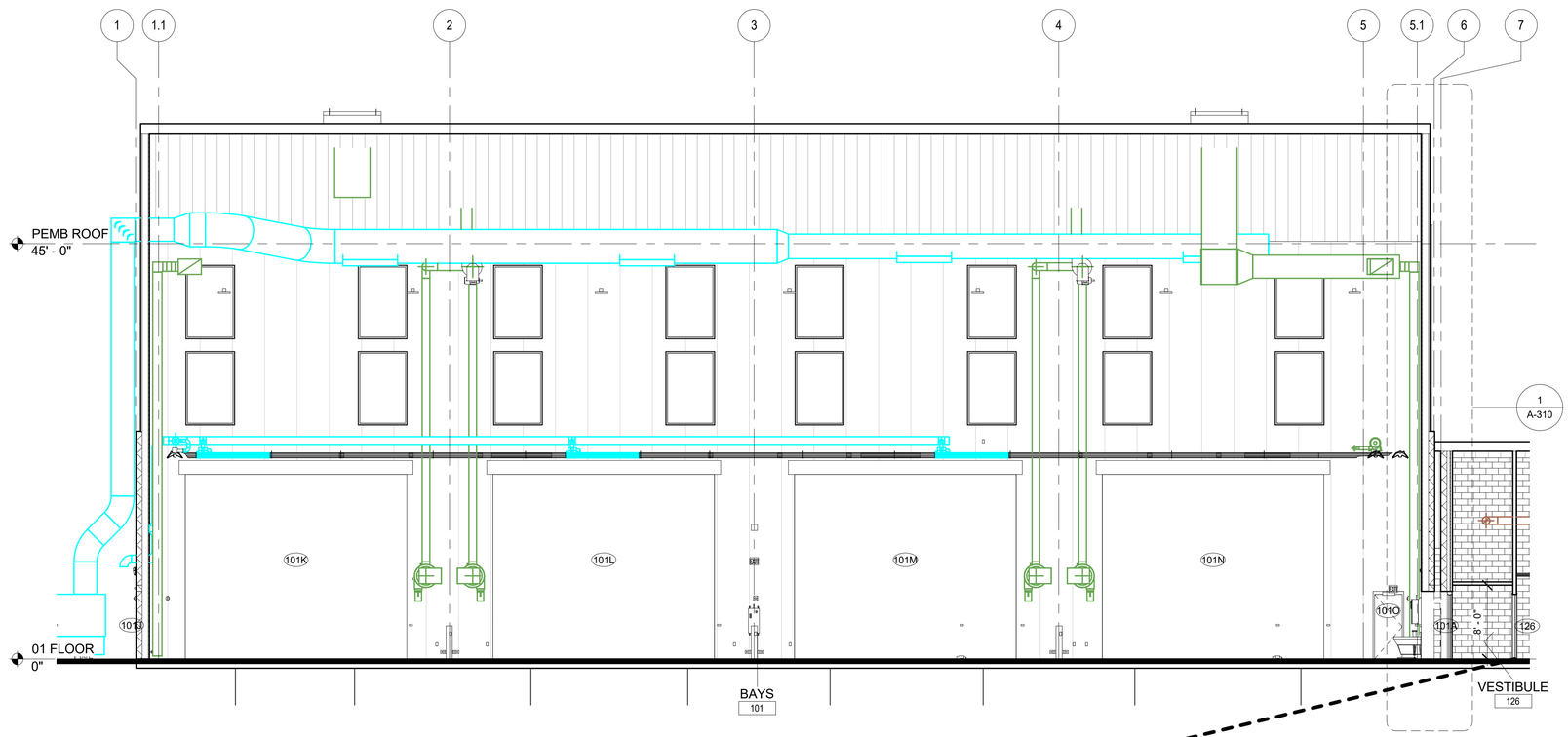

OPTION 3 - INSTRUCTIONAL SPACE

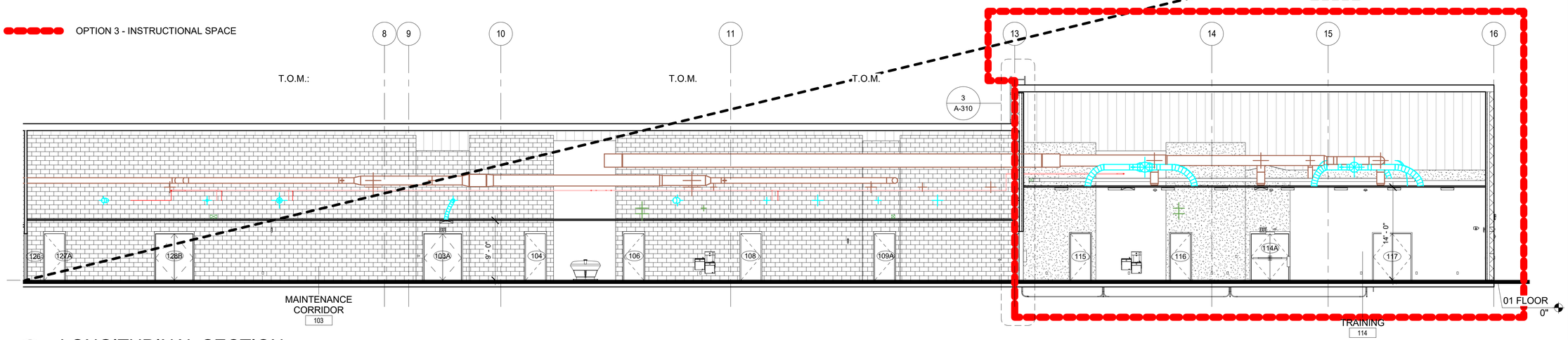

1
A-301

LONGITUDINAL SECTION

1/8" = 1'-0"

US Army Corps of Engineers ®

MARK	DESCRIPTION	DATE	APPR

Designed by: MVALENTINE
Drawn By: MZV
Submittal Status: RTA
Reviewed by: O'AQUINO
Submitted by: Mr. Matthew Valentine
Chief, Design Branch, Design Section

Date: 13 JUL 2020
Rev:
Spec No: 2145
Project No:
File No: 223-25-0665
File Name: W85A_GTEB
Size:22" x 34"
Plot Scale: 1" = 1'-0"
Plot Date:7/13/2020 11:58:01 AM

US ARMY CORPS OF ENGINEERS

SACRAMENTO DISTRICT
1325 J STREET
SACRAMENTO, CA 95814

FT. HUACHUCA AZ

GROUND TRANSPORT EQUIPMENT BUILDING

GTEB LONGITUDINAL SECTION

SHEET IDENTIFICATION
A-301

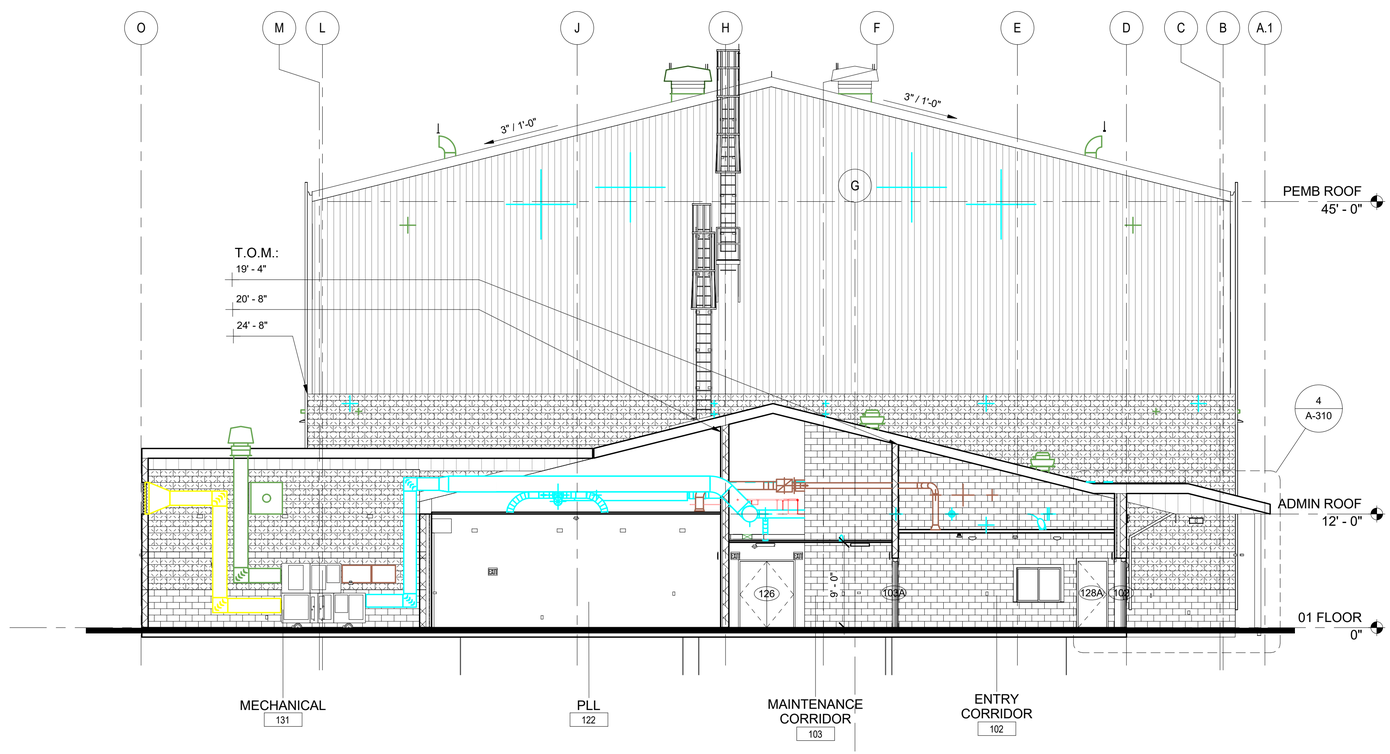

8 6 4 2 0 8 16

SCALE: 1/8"=1'-0"

1 / A-302 CROSS SECTION @ MAIN ENTRY

1/8" = 1'-0"

US Army Corps of Engineers ®

MARK	DESCRIPTION	DATE	APPR.

Designed by: MVALENTINE | Drawn By: MZV | Date: 13 JUL 2020 | Rev:

Submittal Status: RTA | Spec No: 2145 | Project No:

Reviewed By: O'AQUINO | File No: 223-25-0665 | File Name: W68A_GTEB

Submitted by: Al Matthew Valentine, Civil Engineering Section | Size:22" x 34" Plot Scale: 1" = 1'-0" Plot Date:7/13/2020 11:58:05 AM

US ARMY CORPS OF ENGINEERS

SACRAMENTO DISTRICT
1325 J STREET
SACRAMENTO, CA 95814

FT. HUACHUCA

AZ

GROUND TRANSPORT EQUIPMENT BUILDING

GTEB CROSS SECTION

SHEET IDENTIFICATION

A-302

SCALE: 1/4"=1'-0"

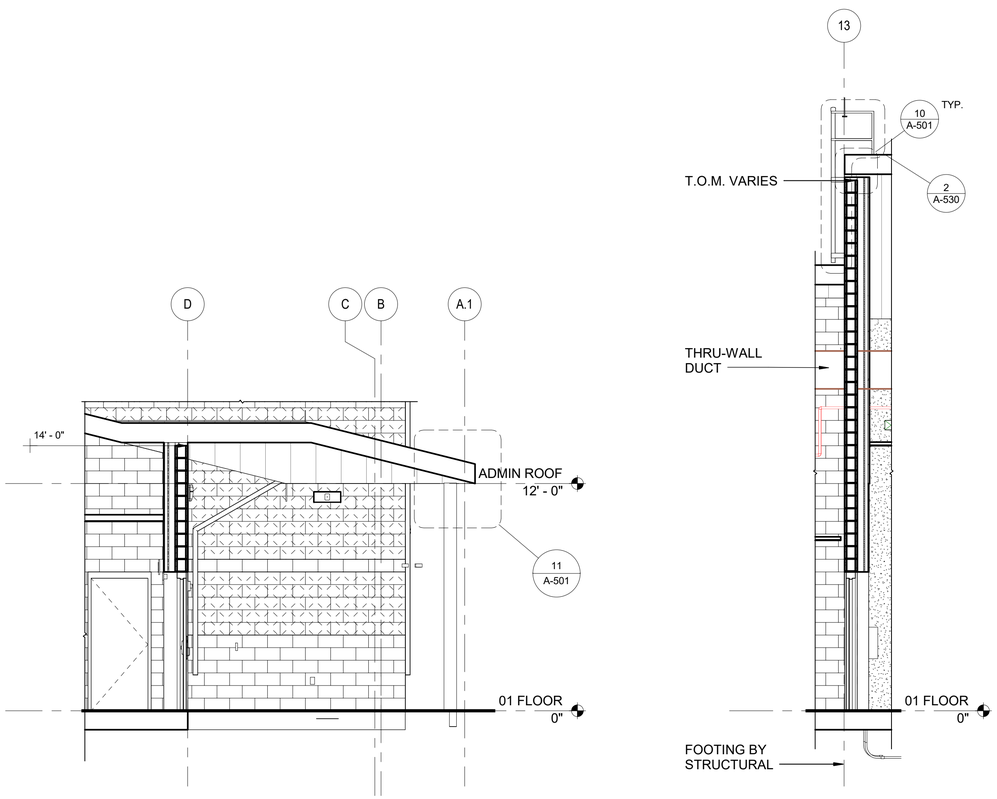

4 A-310 NORTH WALL @ ENTRY
1/4" = 1'-0"

3 A-310 WEST WALL @ TRAINING
1/4" = 1'-0"

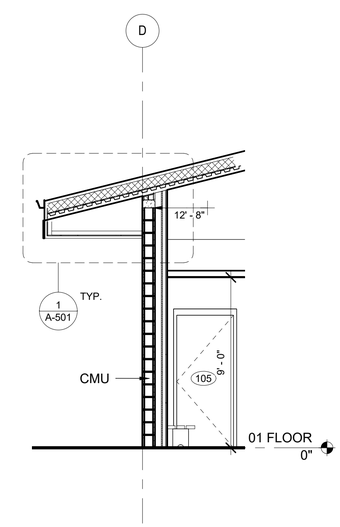

2 A-310 WALL SEC @ MEN'S WC
1/4" = 1'-0"

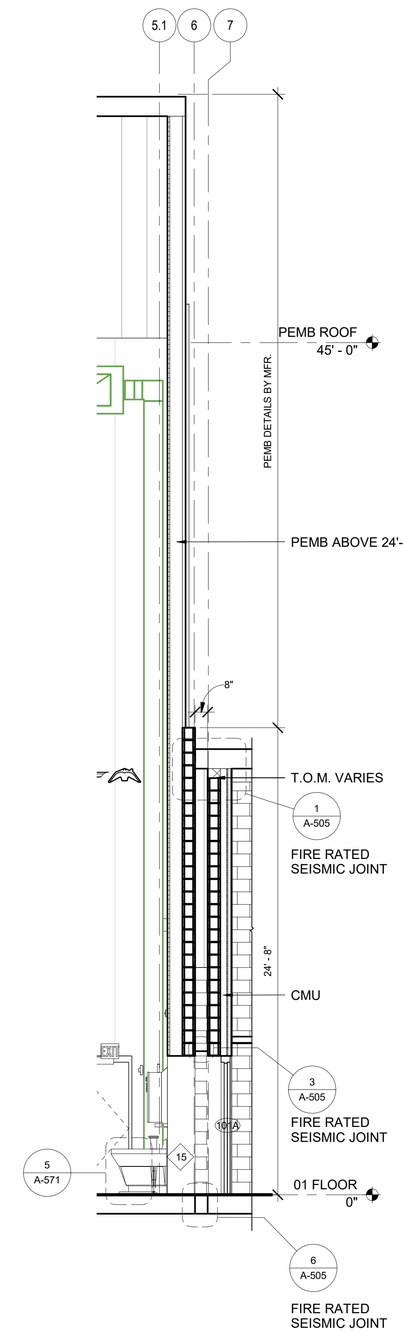

1 A-310 EAST WALL @ HIGH BAY
1/4" = 1'-0"

US Army Corps of Engineers ®

MARK	DESCRIPTION	DATE	APPR.

Designed by: MVALENTINE
Drawn By: MZV
Date: 13 JUL 2020
Rev:
Submittal Status: RTA
Spec No: 245
Project No:
Reviewed By: O'AQUINO
File No: 223-25-0665
File Name: WBA_GTEB
Submitted by: Al Matthew Valentine
Pro Manager/Design Section
Size:22" x 34"
Plot Scale: 1" = 1'-0"
Plot Date:7/13/2020 11:58:07 AM

US ARMY CORPS OF ENGINEERS
SACRAMENTO DISTRICT
1325 J STREET
SACRAMENTO, CA 95814

FT. HUACHUCA
AZ
GROUND TRANSPORT EQUIPMENT BUILDING
WALL SECTIONS

SHEET IDENTIFICATION
A-310

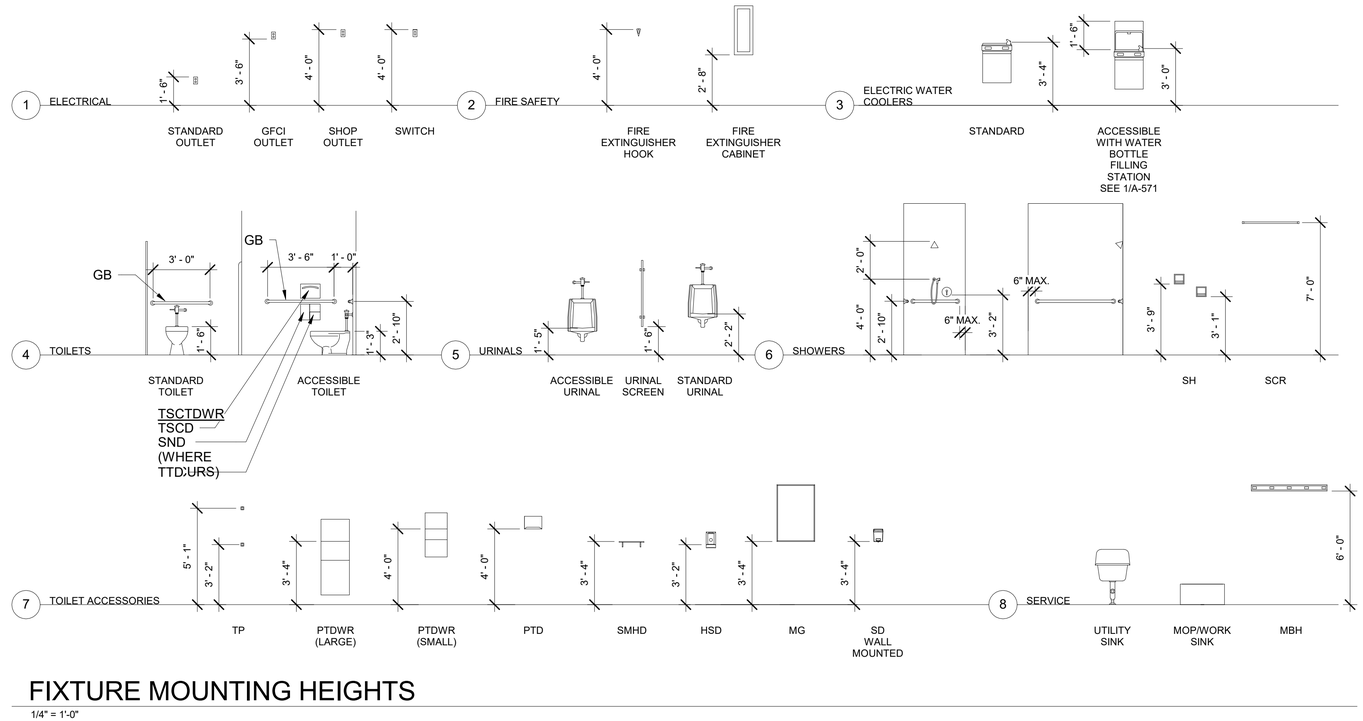

FIXTURE MOUNTING HEIGHTS

1/4" = 1'-0"

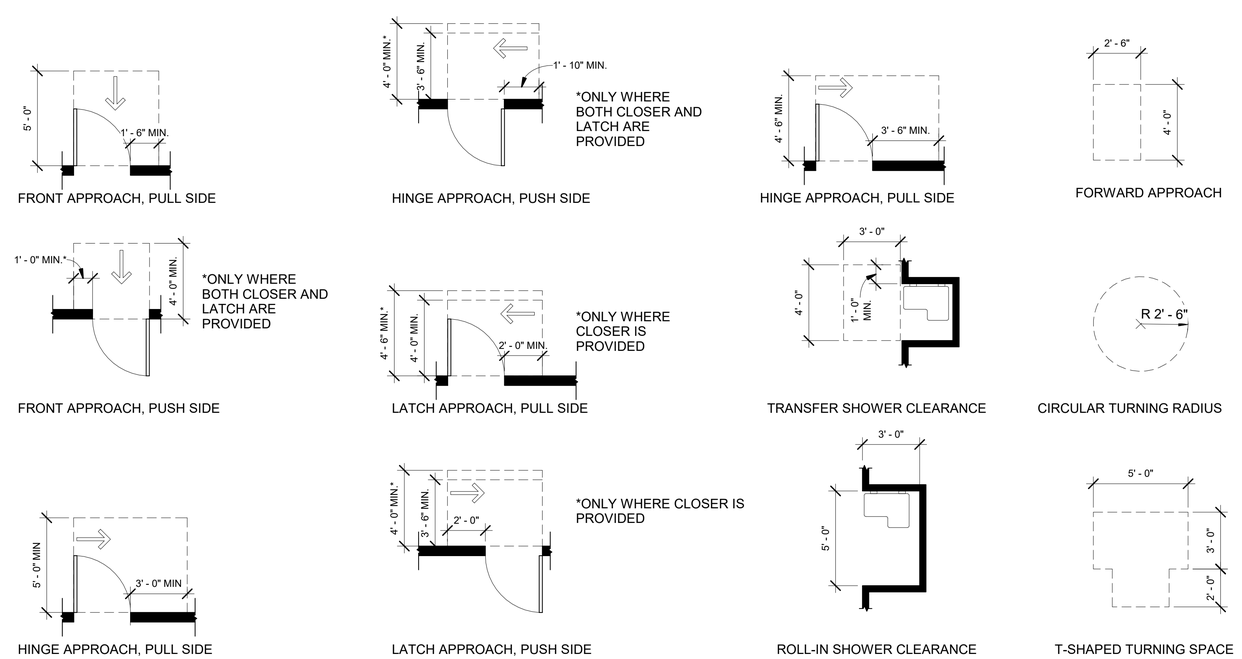

MANUEVERING CLEARANCE

1/4" = 1'-0"

SHEET NOTES

1. SEE A-001 FOR FIXTURE ABBREVIATIONS

GRAPHIC SCALE

4 2 0 4 8

SCALE: 1/4"=1'-0"

US Army Corps of Engineers ®

MARK	DESCRIPTION	DATE	APPR.

Designed by: MVALENTINE | Drawn by: MZV
Submittal Status: RTA
Reviewed by: O AQUINO
Submitted by: Joy Matthew, Valentine
Plot Date: Plot Scale: 1:1 Size: 22" x 34"
Date: 13 JUL 2020
Spec No:
File No: 223-25-0665
Project No:
File Name: W85A_GTEB
Rev:

US ARMY CORPS OF ENGINEERS
SACRAMENTO DISTRICT
1325 J STREET
SACRAMENTO, CA 95814

FT. HUACHUCA, AZ
GROUND TRANSPORT EQUIPMENT BUILDING
INTERIOR ELEVATIONS LEGEND

SHEET IDENTIFICATION
A-401

RTA

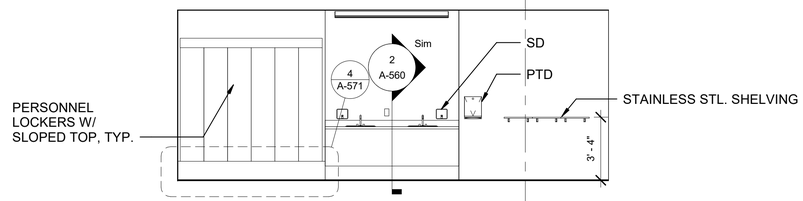

8 A-402 WOMEN 106 - EAST
1/4" = 1'-0"

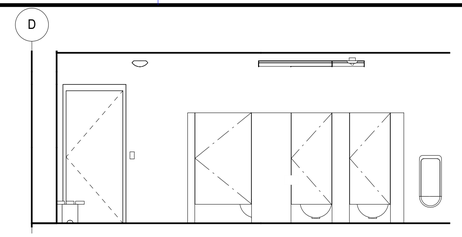

3 A-402 MEN 104 - EAST
1/4" = 1'-0"

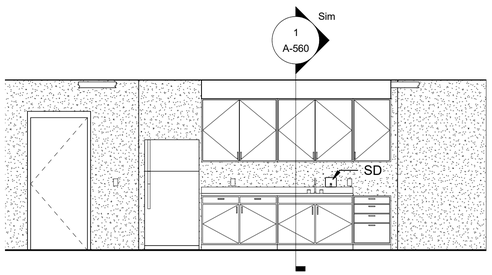

12 A-402 BREAK 109 - SOUTH
1/4" = 1'-0"

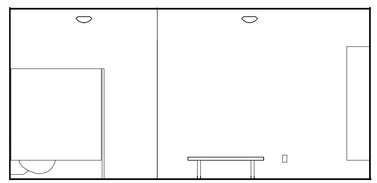

7 A-402 WOMEN 106 - NORTH
1/4" = 1'-0"

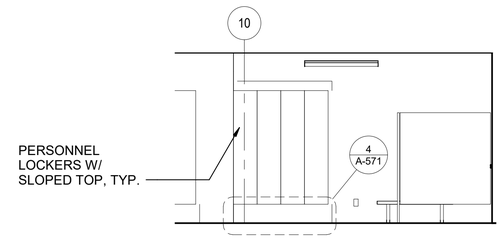

2 A-402 MEN 104 - NORTH
1/4" = 1'-0"

SHEET NOTES:
SEE INTERIOR DESIGN FOR WALL TILE PATTERN AND MATERIALS.

4 2 0 4 8
SCALE: 1/4"=1'-0"

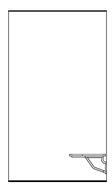

11 A-402 WOMEN SHOWER 107 - WEST
1/4" = 1'-0"

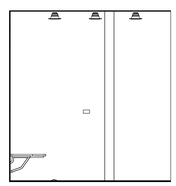

6 A-402 MEN SHOWER 105 - EAST
1/4" = 1'-0"

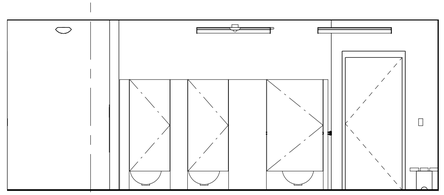

10 A-402 WOMEN 106 - WEST
1/4" = 1'-0"

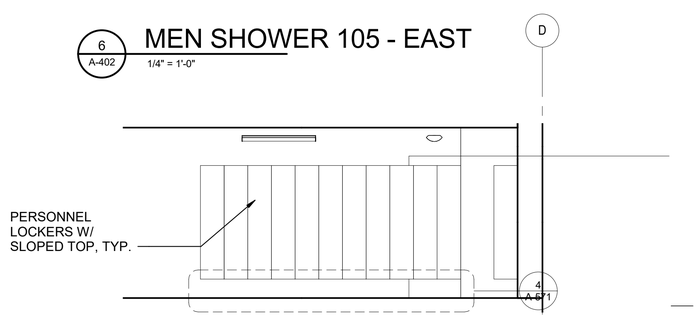

5 A-402 MEN 104 - WEST
1/4" = 1'-0"

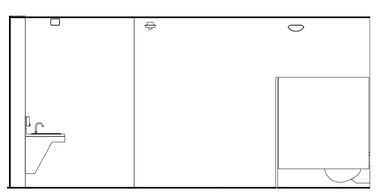

9 A-402 WOMEN 106 - SOUTH
1/4" = 1'-0"

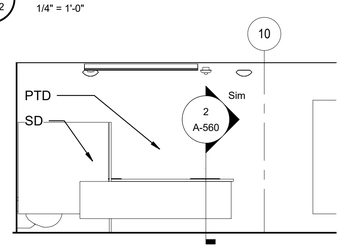

4 A-402 MEN 104 - SOUTH
1/4" = 1'-0"

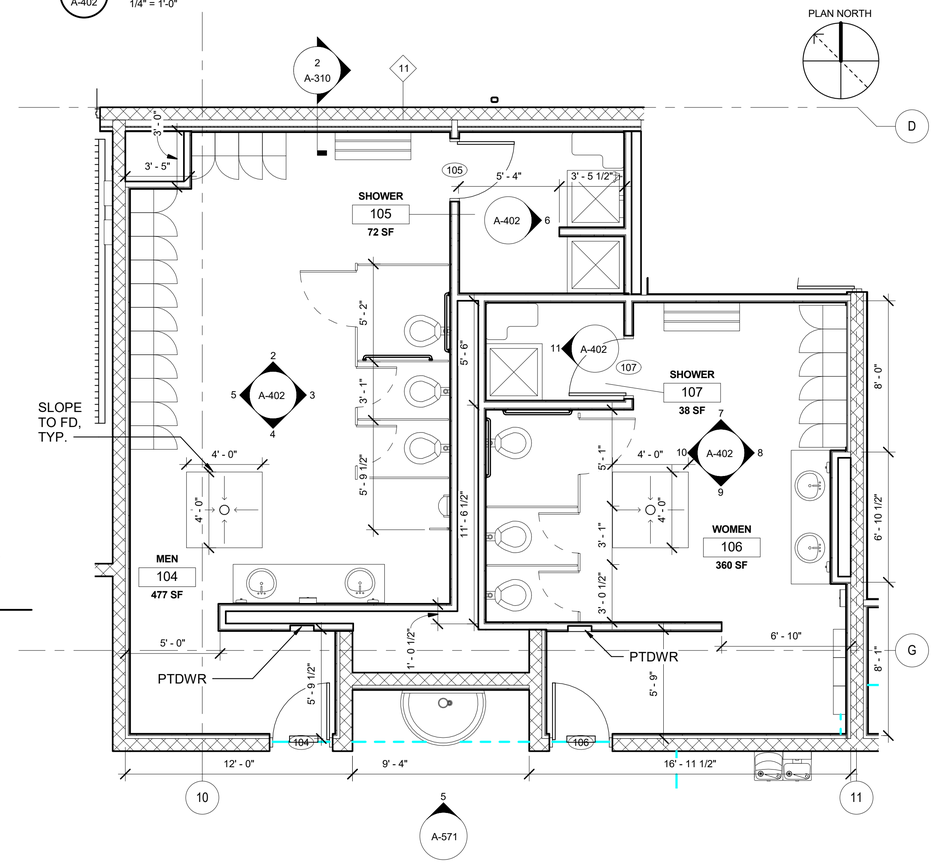

1 A-402 ENLARGED AREA 'B' BATHROOM PLAN
1/4" = 1'-0"

PLAN NORTH

US Army Corps of Engineers ®

MARK	DESCRIPTION	DATE	APPR

Designed by: MVALENTINE
Drawn By: MZV
Submittal Status: RTA
Reviewed by: O AQUINO
Submitted by: Dr. Matthew Valentine
Chief, Architectural Design Section
Date: 13 JUL 2020
Rev:
Spec No:
Project No:
File No: 223-25-0685
File Name: W85A_GTEB
Size:22" x 34"
Plot Scale: 1" = 1'-0"
Plot Date:7/13/2020 11:58:13 AM

US ARMY CORPS OF ENGINEERS
SACRAMENTO DISTRICT
1325 J STREET
SACRAMENTO, CA 95814

FT. HUACHUCA, AZ
GROUND TRANSPORT EQUIPMENT BUILDING
ENLARGED FLOOR PLAN - AREA 'B'

SHEET IDENTIFICATION
A-402

RTA

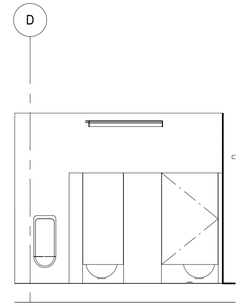

9 A-403 MEN - 116 WEST
1/4" = 1'-0"

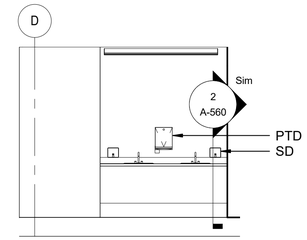

5 A-403 WOMEN - 115 WEST
1/4" = 1'-0"

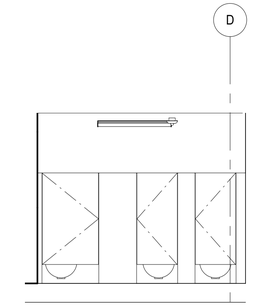

3 A-403 WOMEN 115 - EAST
1/4" = 1'-0"

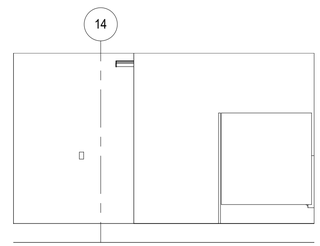

8 A-403 MEN - 116 SOUTH
1/4" = 1'-0"

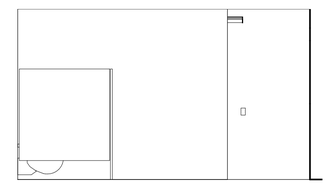

4 A-403 WOMEN - 115 SOUTH
1/4" = 1'-0"

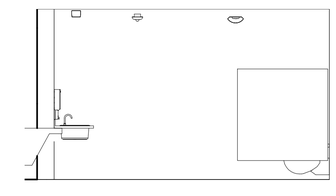

2 A-403 WOMEN 115 - NORTH
1/4" = 1'-0"

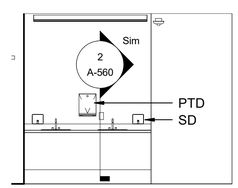

7 A-403 MEN - 116 EAST
1/4" = 1'-0"

OPTION ITEM 3

SHEET NOTES:
SEE INTERIOR DESIGN FOR WALL TILE PATTERN AND MATERIALS.

4 2 0 4 8
SCALE: 1/4"=1'-0"

PLAN NORTH

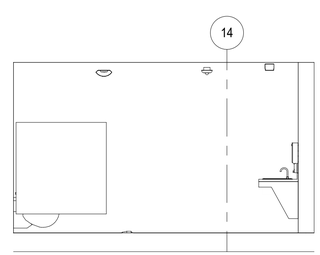

6 A-403 MEN - 116 NORTH
1/4" = 1'-0"

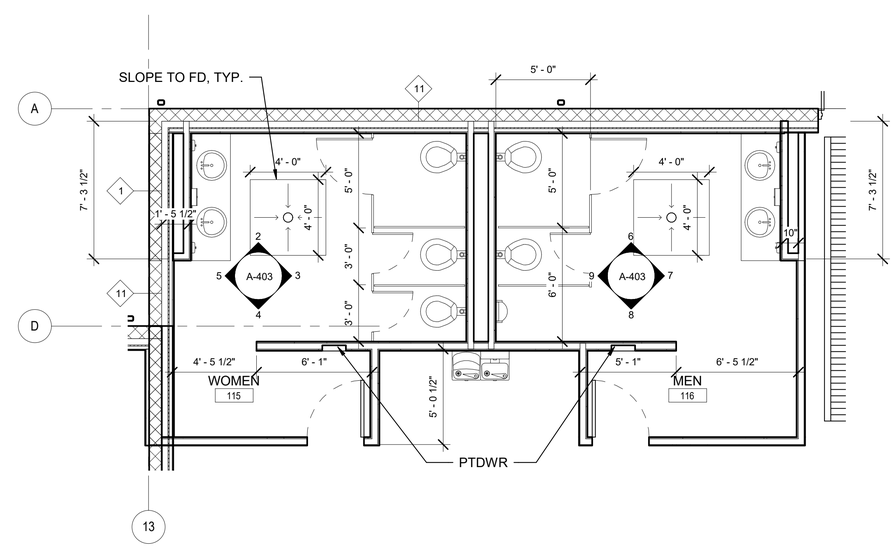

1 A-403 ENLARGED AREA 'C' BATHROOM PLAN
1/4" = 1'-0"

US Army Corps of Engineers ®

MARK	DESCRIPTION	DATE	APPD

Designed by: M VALENTINE | MZV
Drawn By:
Submittal Status: RTA
Reviewed by: O AQUINO
Submitted by: M Matthew Valentine
Chief, Design Branch, Design Section
Date: 13 JUL 2020
Spec No: 2145
File No: 223-25-0665
Size:22" x 34"
Plot Scale: 1 = 1:0'
Plot Date:7/13/2020 11:58:17 AM
Rev:
Project No:
File Name: W65A_GTEB

US ARMY CORPS OF ENGINEERS
SACRAMENTO DISTRICT
1325 J STREET
SACRAMENTO, CA 95814

FT. HUACHUCA AZ

GROUND TRANSPORT EQUIPMENT BUILDING

ENLARGED FLOOR PLAN - AREA 'C' (OPTION 3)

SHEET IDENTIFICATION
A-403

SHEET NOTES

1. SEE A-109 FOR ROOF PLAN.
2. SEE A-300 SERIES FOR BUILDING SECTIONS.
3. SEE A-140 FOR ADDITIONAL AIR BARRIER DETAILS.

GRAPHIC SCALES

SCALE: 3/4"=1'-0"

SCALE: 3"=1'-0"

SCALE: 1-1/2"=1'-0"

SCALE: 1"=1'-0"

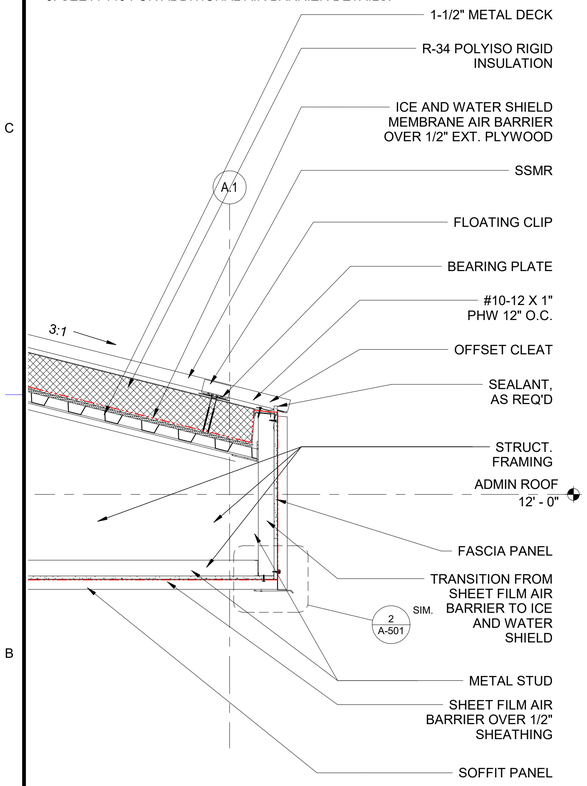

11 A-501 ENTRY EAVE
1" = 1'-0"

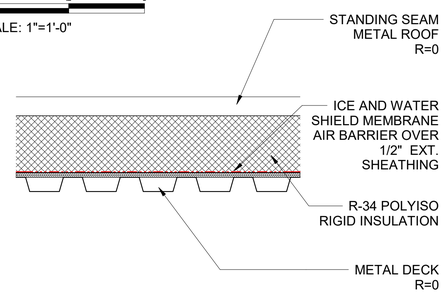

9 A-501 GTEB / ORG STO. ROOF ASSEMBLY
1 1/2" = 1'-0"
R-VALUE = 34 h-ft2-F/Btu

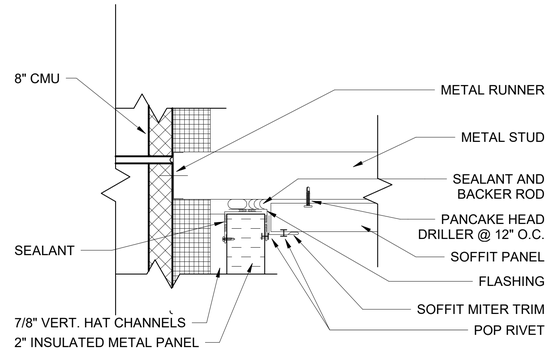

6 A-501 SOFFIT
3" = 1'-0"

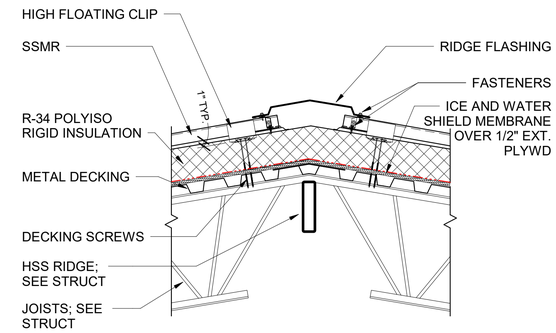

3 A-501 RIDGE/HIP DETAIL
1" = 1'-0"

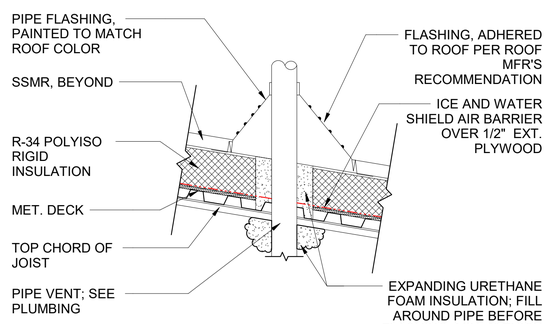

8 A-501 PIPE VENT
1" = 1'-0"

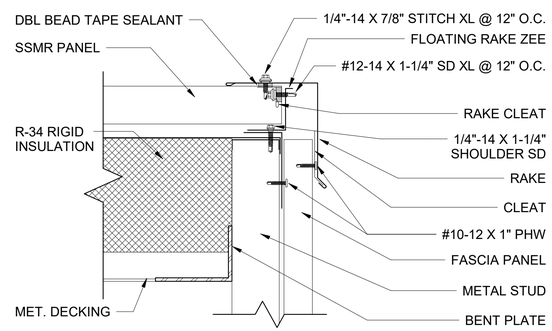

5 A-501 RAKE FLASHING
3" = 1'-0"

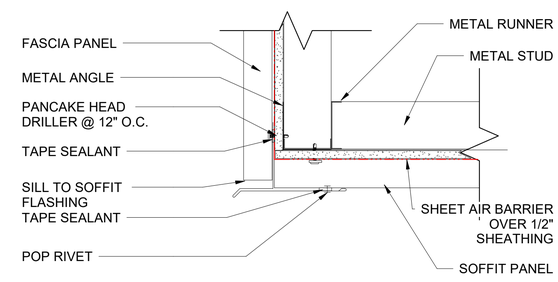

2 A-501 FASCIA TO SOFFIT
3" = 1'-0"

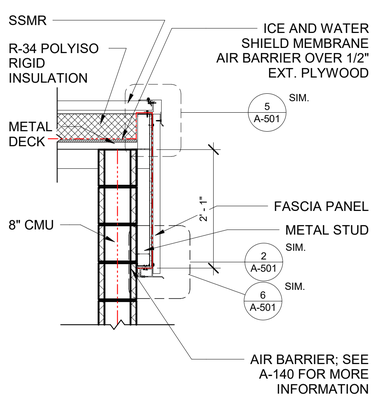

10 A-501 RAKE @ TRAINING WEST
3/4" = 1'-0"

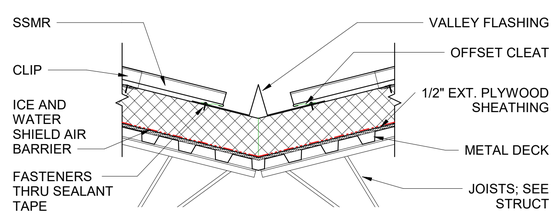

7 A-501 VALLEY
1" = 1'-0"

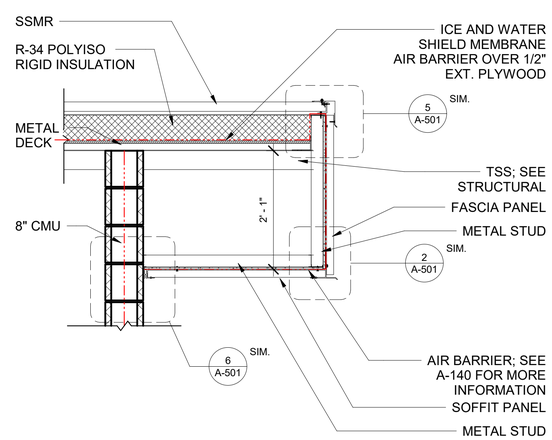

4 A-501 RAKE
3/4" = 1'-0"

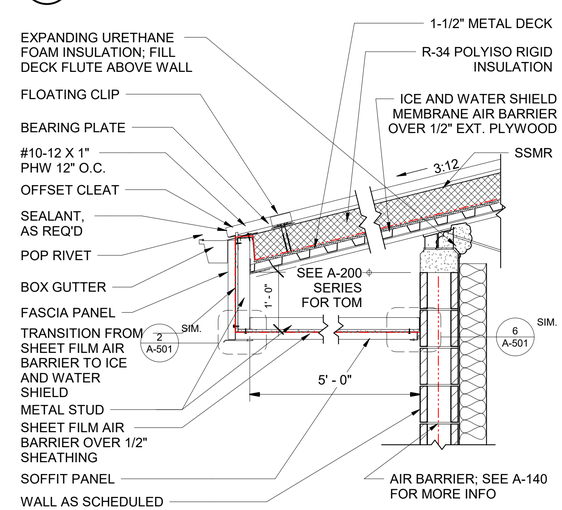

1 A-501 EAVE
3/4" = 1'-0"

US Army Corps of Engineers ®

MARK	DESCRIPTION	DATE	APPR

Designed by: MVALENTINE Drawn By: MZ/
Submittal Status: RTA
Reviewed by: O AQUINO
Submitted by: Date: 13 JUL 2020
Spec No: Project No: Rev:
File No: 223-25-0665 File Name: W65A_GTEB
Size:22" x 34" Scale: As indicated Plot Date:7/13/2020 11:58:22 AM

US ARMY CORPS OF ENGINEERS
SACRAMENTO DISTRICT
1325 J STREET
SACRAMENTO, CA 95814

FT. HUACHUCA, AZ
GROUND TRANSPORT EQUIPMENT BUILDING
ROOF DETAILS

SHEET IDENTIFICATION
A-501

RTA

SHEET NOTES

1. SEE A-109 FOR ROOF PLAN.
2. SEE A-300 SERIES FOR BUILDING SECTIONS.
3. SEE A-582 FOR ADDITIONAL AIR BARRIER DETAILS.

GRAPHIC SCALES

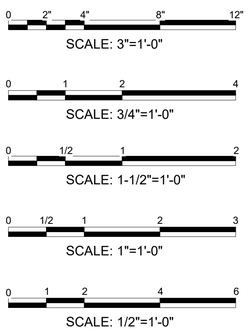

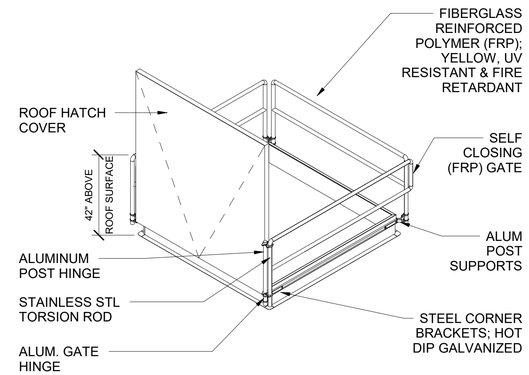

4 A-502 ROOF HATCH RAILING
1/2" = 1'-0"

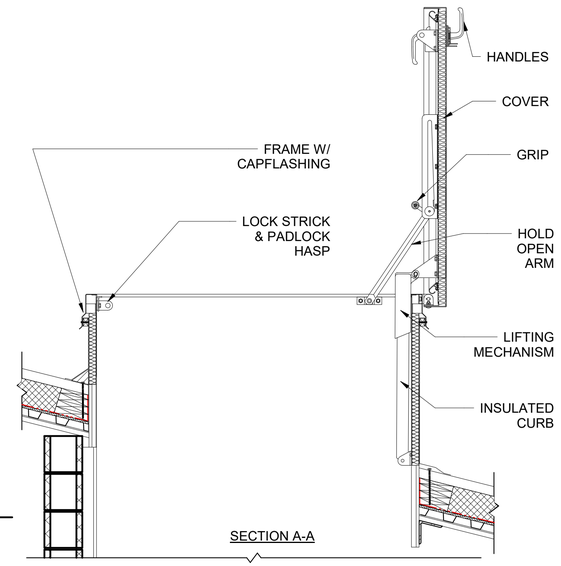

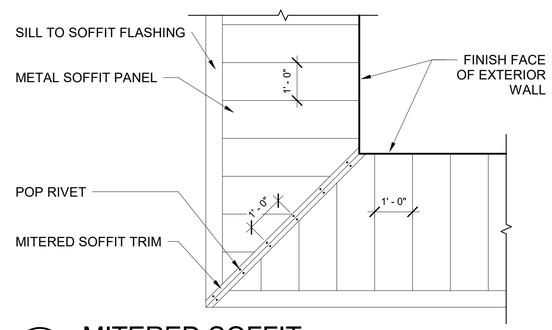

3 A-502 MITERED SOFFIT
1/2" = 1'-0"

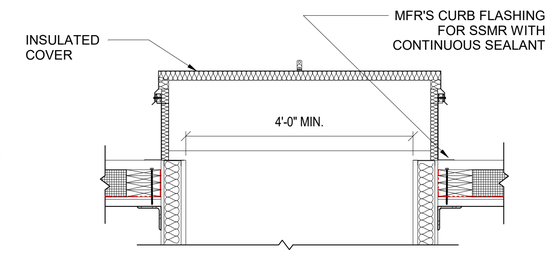

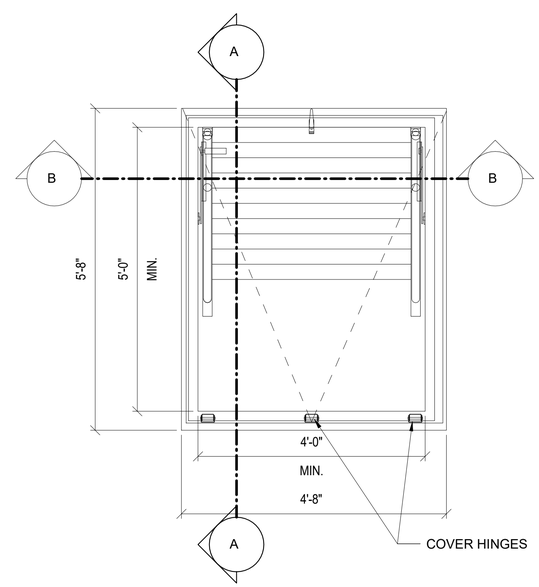

1 A-502 ROOF HATCH
3/4" = 1'-0"

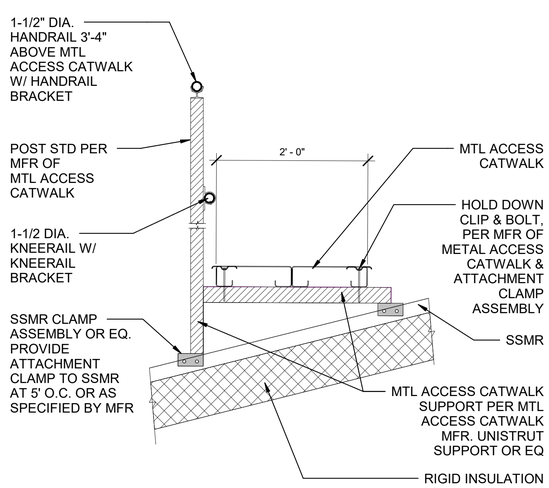

6 A-502 ROOF CATWALK DETAIL W/ RAILING
1" = 1'-0"

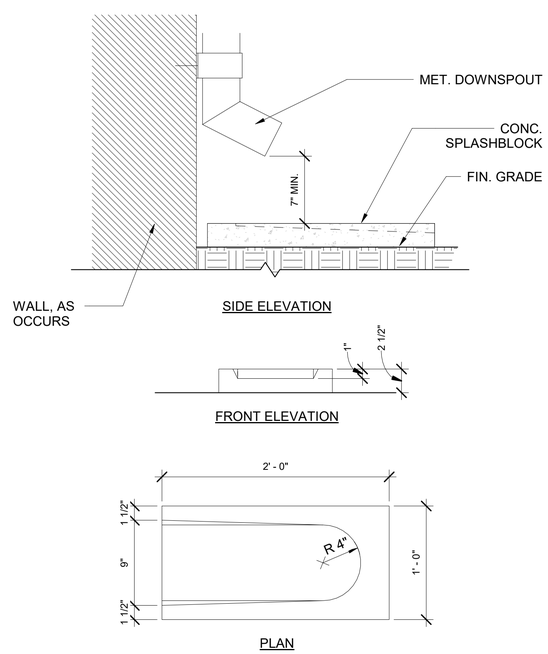

5 A-502 DOWNSPOUT W/ SPLASHBLOCK
1 1/2" = 1'-0"

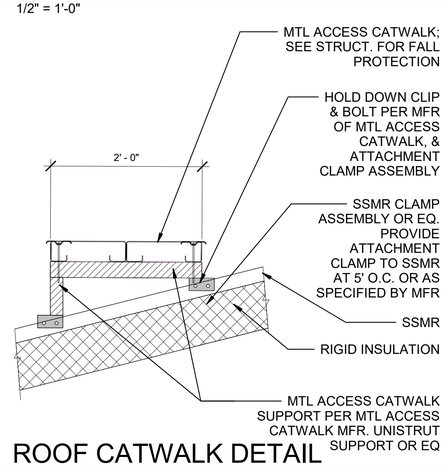

2 A-502 ROOF CATWALK DETAIL
1" = 1'-0"

US Army Corps of Engineers ®

MARK	DESCRIPTION	DATE	APPR

Designed by: MVALENTINE
Drawn By: MZV
Date: 13 JUL 2020
Rev:
Submittal Status: RTA
Spec No:
Project No:
Reviewed by: O AQUINO
File No: 223-25-0665
File Name: W6IA_GTEB
Submitted by: Sr. Matthew Valentine Chief, Architectural Design Section
Size:22" x 34" Plot Scale:Unscaled Plot Date:7/13/2020 11:58:24 AM

US ARMY CORPS OF ENGINEERS
SACRAMENTO DISTRICT
1325 J STREET
SACRAMENTO, CA 95814

FT. HUACHUCA, AZ
GROUND TRANSPORT EQUIPMENT BUILDING
ROOF DETAILS

SHEET IDENTIFICATION
A-502

RTA

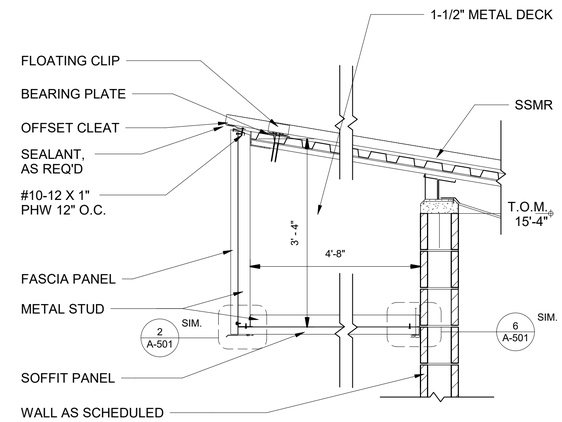

5 A-503 POL & HAZMAT EAVE
3/4" = 1'-0"

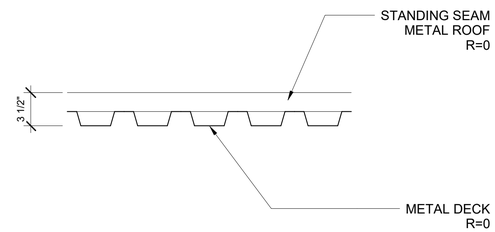

4 A-503 POL & HAZMAT ROOF ASSEMBLY
1 1/2" = 1'-0"

SHEET NOTES

1. SEE A-111 & A-120 FOR ROOF PLAN.
2. SEE A-110, A-111, AND A-120 FOR SECTIONS.
3. SEE A-582 FOR ADDITIONAL AIR BARRIER DETAILS.

GRAPHIC SCALES

0 1 2 4
SCALE: 3/4"=1'-0"
0 1/2 1 2
SCALE: 1-1/2"=1'-0"

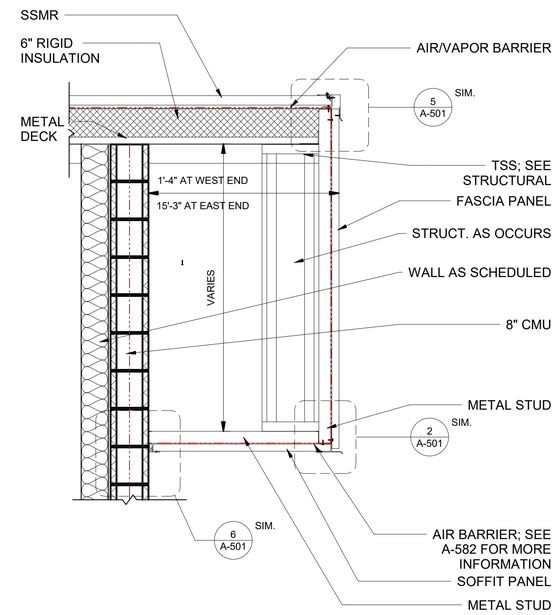

2 A-503 ORG STORAGE RAKE
3/4" = 1'-0"

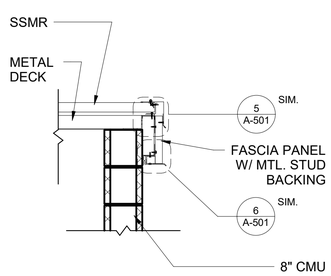

6 A-503 POL & HAZMAT RAKE
3/4" = 1'-0"

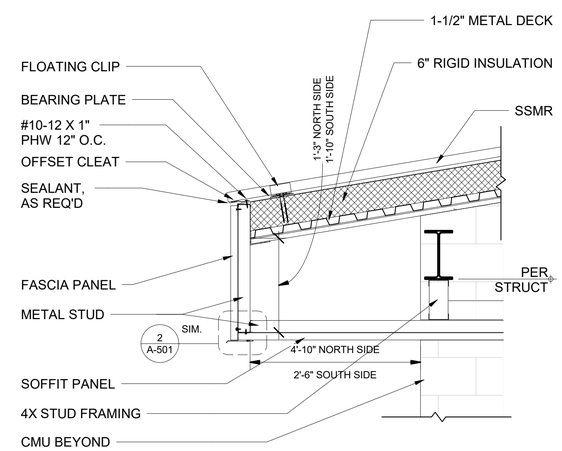

3 A-503 ORG STORAGE EAVE @ TIRE STO.
3/4" = 1'-0"

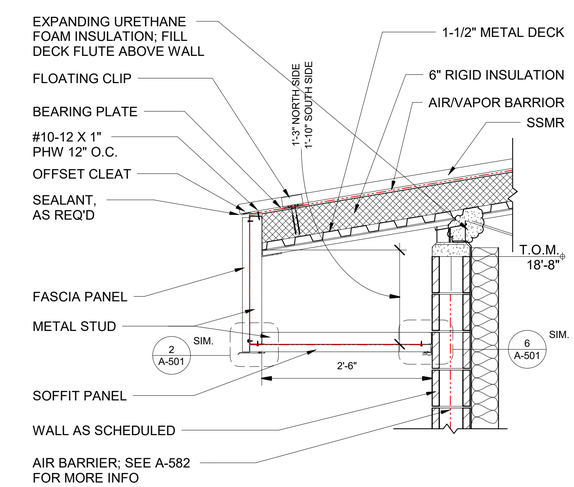

1 A-503 ORG STORAGE EAVE
3/4" = 1'-0"

US Army Corps of Engineers ®

MARK	DESCRIPTION	DATE	APPR.

Designed by: MVALENTINE | Drawn By: MZV
Submittal Status: 100% SUBMITTAL
Reviewed By: ACQUINO
Submitted by: Al Matthew Valentine, Civil Engineering Section
Date: 13 JUL 2020 | Rev:
Spec No: 2145 | Project No:
File No: 223-25-0665 | File Name: W68A_GTEB
Size:22" x 34" Plot Scale:Unscaled Plot Date:7/13/2020 11:17:51 AM

US ARMY CORPS OF ENGINEERS
SACRAMENTO DISTRICT
1325 J STREET
SACRAMENTO, CA 95814

FT. HUACHUCA AZ

GROUND TRANSPORT EQUIPMENT BUILDING

ROOF DETAILS

SHEET IDENTIFICATION
A-503

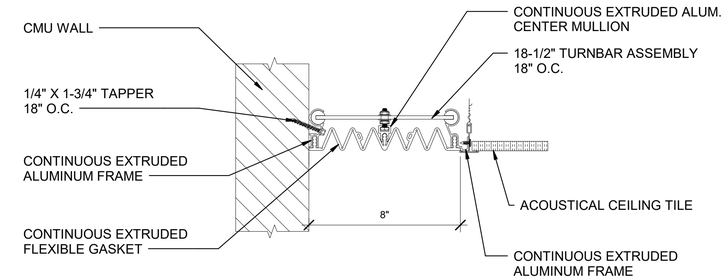

4 / A-505 CEILING EXPANSION JOINT

3" = 1'-0"

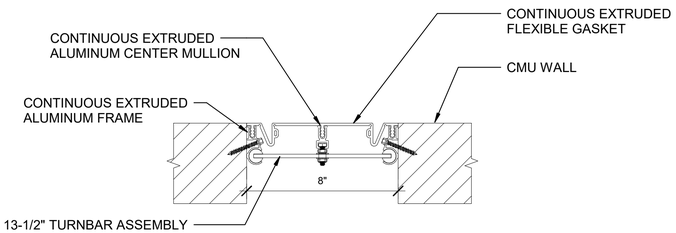

3 / A-505 INTERIOR WALL EXPANSION JOINT

3" = 1'-0"

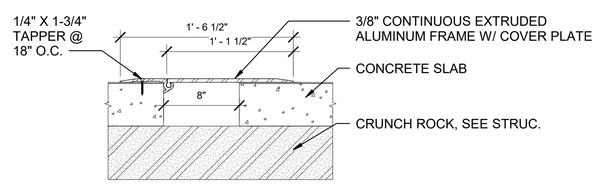

6 / A-505 FLOOR EXPANSION JOINT

1 1/2" = 1'-0"

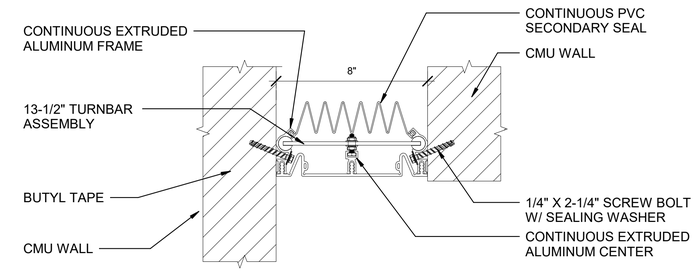

2 / A-505 EXTERIOR WALL EXPANSION JOINT

3" = 1'-0"

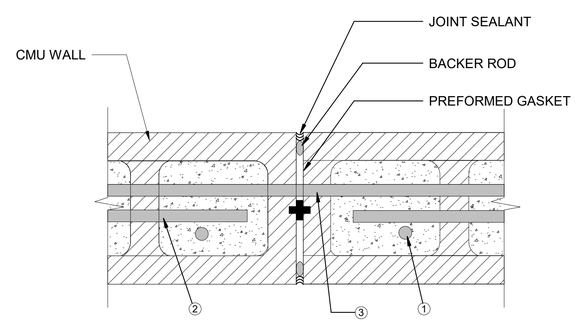

NOTE:
1. ADDITIONAL VERTICAL BARS ON EACH SIDE OF ALL CONTROL JOINTS.
2. TERMINATE ALL HORIZONTAL REINFORCING 2" FROM CONTROL JOINTS.
3. PROVIDE 1/2" DIA. X 4'-0" SMOOTH DOWEL ACROSS JOINT. PREVENT BOND BETWEEN BAR AND GROUT WITH PLASTIC SLEEVE. MATCH SPACING OF HORIZONTAL REINFORCEMENT.

5 / A-505 DOWELLED CONTROL JOINT

3" = 1'-0"

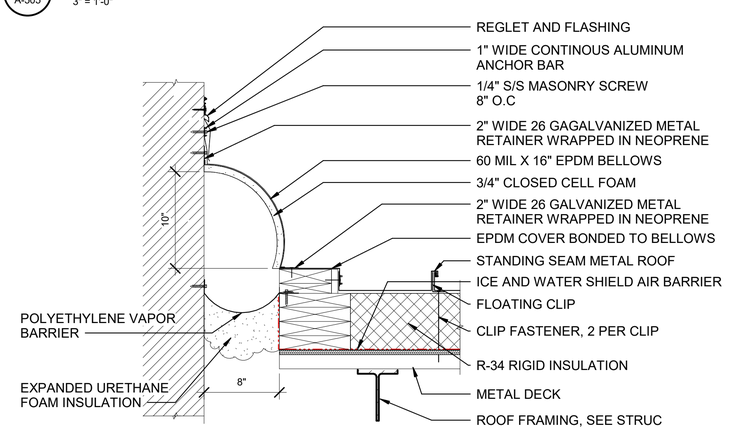

1 / A-505 ROOF EXPANSION JOINT

1 1/2" = 1'-0"

US Army Corps of Engineers ®

MARK	DESCRIPTION	DATE	APPR

Designed by: M VALENTINE | MZV
Drawn By:
Submittal Status: RTA
Reviewed O'AQUINO
Submitted by: Dr. Matthew J Valentine
Chief, Engineering Design Section
Date: 13 JUL 2020
Rev:
Spec No: 2145
Project No:
File No: 223-25-0665
File Name: W85A_GTEB
Size:22" x 34"
Plot Scale: Undefined
Plot Date:7/13/2020 12:04:06 PM

US ARMY CORPS OF ENGINEERS
SACRAMENTO DISTRICT
1325 J STREET
SACRAMENTO, CA 95814

FT. HUACHUCA AZ

GROUND TRANSPORT
EQUIPMENT BUILDING

EXPANSION JOINT DETAILS

SHEET IDENTIFICATION
A-505

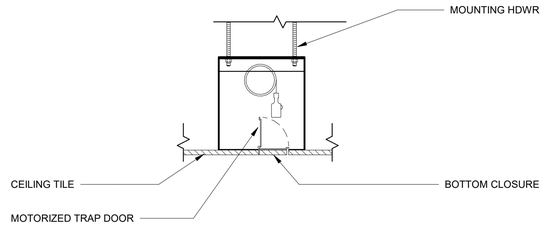

10 A-510 RECESSED PROJECTION SCREEN
1 1/2" = 1'-0"

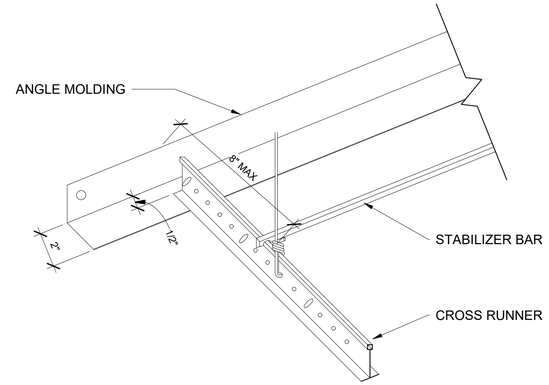

ISOMETRIC

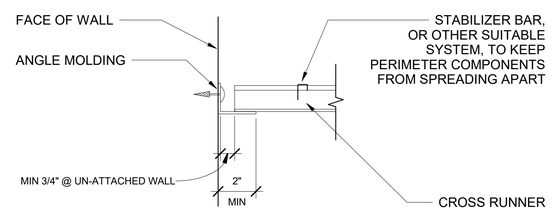

SECTION

6 A-510 CROSS RUNNERS UN-ATTACHED
3" = 1'-0"

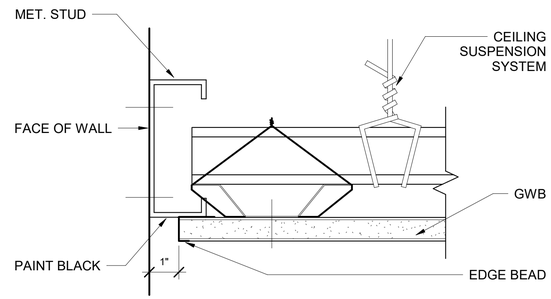

4 A-510 GWB SHADOW MOULD DETAIL
6" = 1'-0"

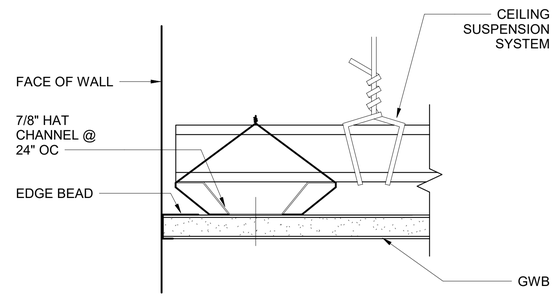

3 A-510 GWB EDGE DETAIL
6" = 1'-0"

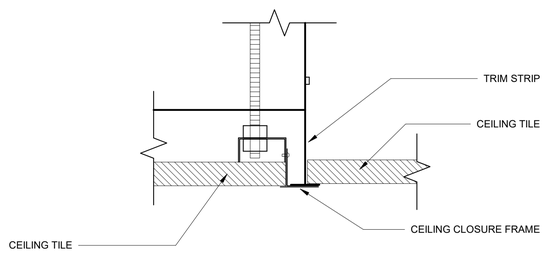

9 A-510 CEILING CLOSURE
12" = 1'-0"

GRAPHIC SCALES

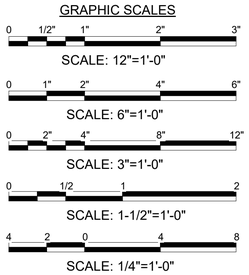

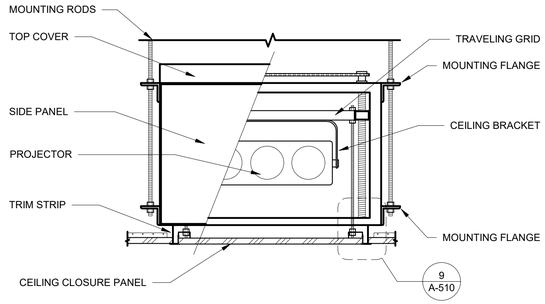

8 A-510 RECESSED PROJECTOR
1 1/2" = 1'-0"

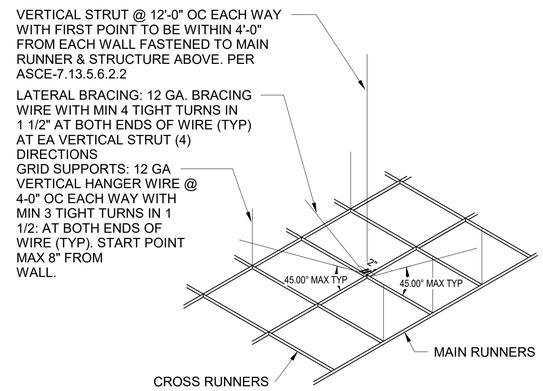

NOTE:

1. BRACING WIRES SECURED TO MAIN RUNNERS WITHIN 2" OF THE CROSS RUNNER INTERSECTION AND SPLAYED 90 DEGREES FROM EACH OTHER AT AN ANGLE NOT TO EXCEEDING 45 DEGREES FROM THE PLANE OF THE CEILING.

2. A MINIMUM WALL ANGLE AT THE SIZE OF 2" HORIZONTAL LEG SHALL BE USED AT PERIMETER WALLS AND INTERIOR FULL HEIGHT PARTITION. THE FIRST TILE SHALL BE 3/4" CLEAR FROM WALL SURFACE AT UN-ATTACHED END.

3. WHEN THE DISTANCE BETWEEN THE STRUCTURAL DECK AND THE CEILING EXCEEDS 4, THE SPACING OF THE VERTICAL HANGERS SHALL NOT EXCEED 2' OC ALONG THE ENTIRE LENGTH OF THE MEANS OF EGRESS SERVICING AN OCCUPANT LOAD OF 30 OR MORE, AND AT LOBBIES ACCESSORY TO GROUP A OCCUPANCIES.

5 A-510 SUSPENDED CEILING SUPPORT
1/4" = 1'-0"

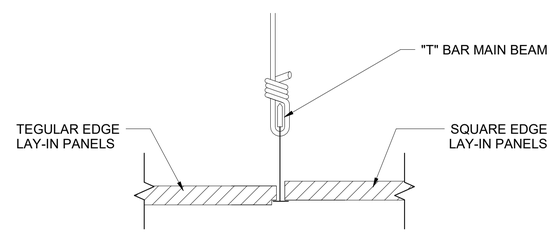

2 A-510 LAY-IN GRID ATTACMENT
6" = 1'-0"

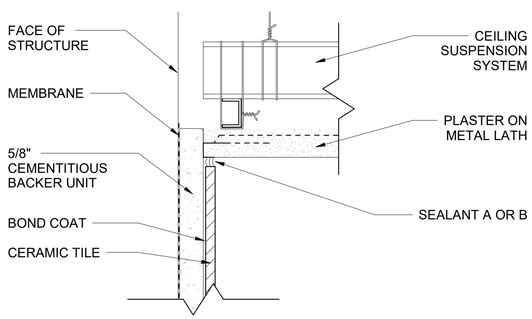

11 A-510 PLASTER CEILING
6" = 1'-0"

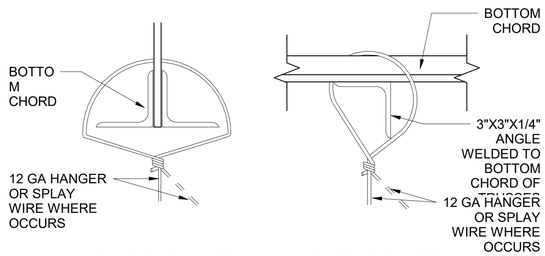

PARALLEL/IN PLANE TO TRUSS

PERPENDICULAR/OUT OF PLANE TO TRUSS

7 A-510 CEILING SUPPORT @ TRUSS
3" = 1'-0"

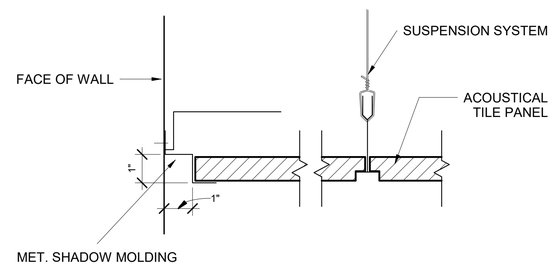

1 A-510 SUSPENDED CEILING EDGE DETAIL
6" = 1'-0"

US Army Corps of Engineers ®

MARK	DESCRIPTION	DATE	APPD

US ARMY CORPS OF ENGINEERS

SACRAMENTO DISTRICT
1325 J STREET
SACRAMENTO, CA 95814

Designed by: MVALENTINE Drawn By: MZ/
Submittal Status: RTA
Reviewed by: O AQUINO
Submitted by: NJ Matthew Valentine
Chief, Architectural Design Section

Date: 13 JUL 2020
Spec No:
File No: 223-25-0665
Size/Scale: 22" x 34" Rev Date: 7/13/2020
Rev:
Project No:
File Name: W85A_GTEB
Plot Date: 7/13/2020 12:04:09 PM

FT. HUACHUCA, AZ

GROUND TRANSPORT EQUIPMENT BUILDING

CEILING DETAILS

SHEET IDENTIFICATION
A-510

RTA

SHEET NOTES

1. SEE A-620 AND A-621 FOR DOOR SCHEDULE.
2. SEE A-610 AND A-611 FOR INTERIOR FINISH SCHEDULE.

GRAPHIC SCALE

3 2 1 0 3

SCALE: 6"=1'-0"

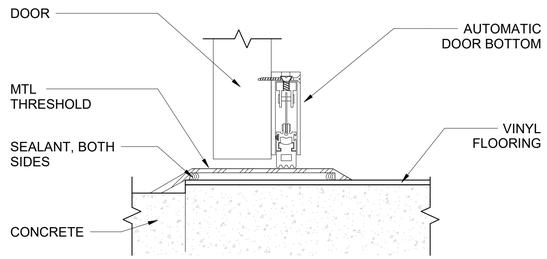

12 A-520 SILL - VINYL TO EXTERIOR
6" = 1'-0"

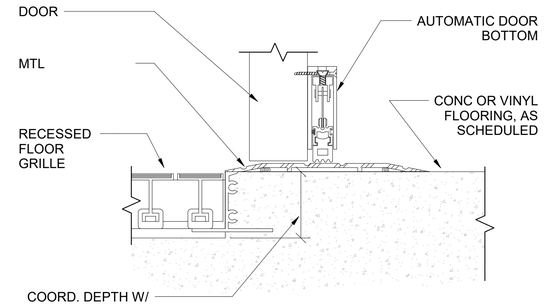

8 A-520 SILL - RFG THRESHOLD
6" = 1'-0"

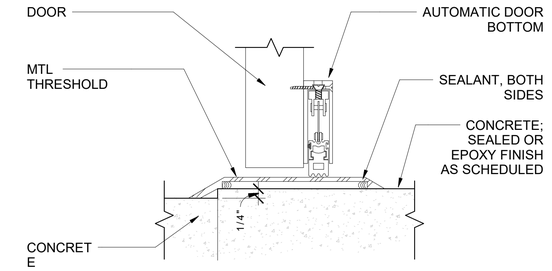

4 A-520 SILL - CONC TO EXTERIOR
6" = 1'-0"

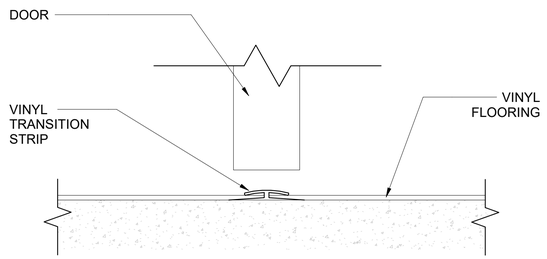

11 A-520 SILL - VINYL TO VINYL
6" = 1'-0"

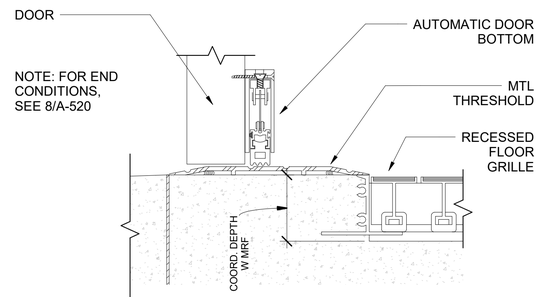

7 A-520 SILL - RFG @ EXTERIOR
6" = 1'-0"

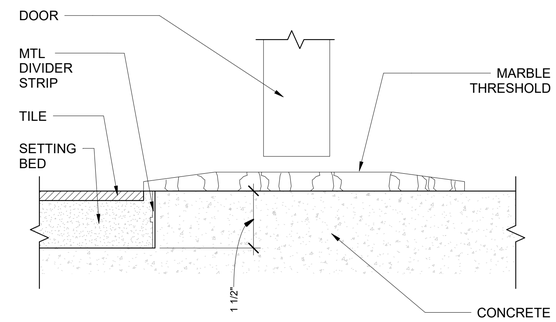

3 A-520 SILL - TILE TO CONCRETE
6" = 1'-0"

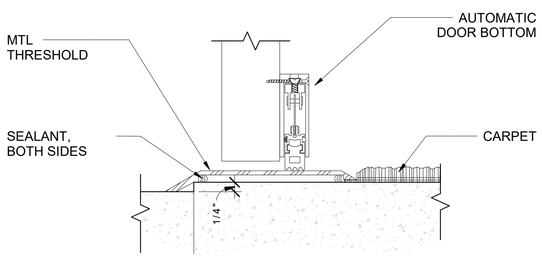

14 A-520 SILL - CARPET TO EXTERIOR
6" = 1'-0"

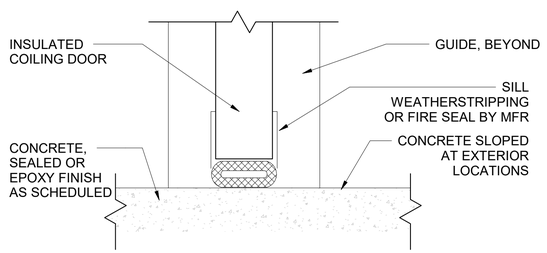

10 A-520 SILL - COILING
6" = 1'-0"

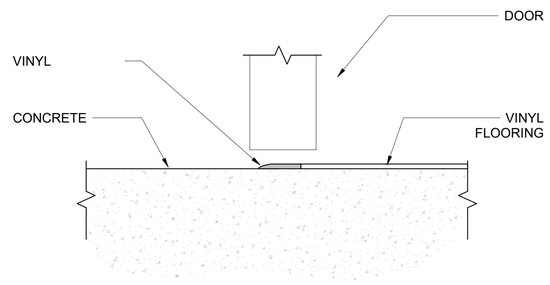

6 A-520 SILL - VINYL TO CONCRETE
6" = 1'-0"

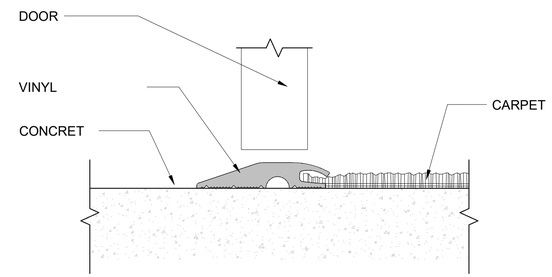

2 A-520 SILL - CARPET TO CONCRETE
6" = 1'-0"

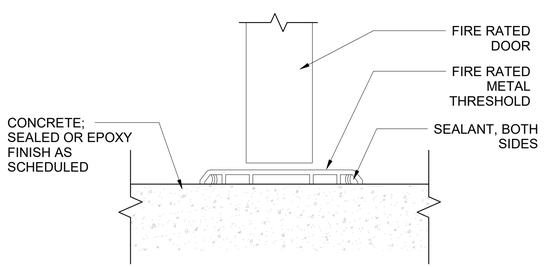

13 A-520 SILL - CONC TO CONC (RATED)
6" = 1'-0"

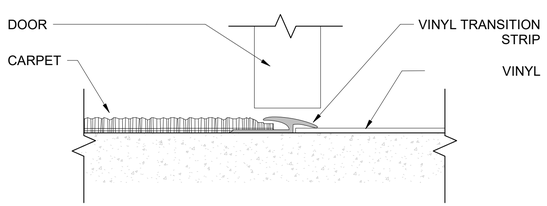

9 A-520 SILL - VINYL TO CARPET
6" = 1'-0"

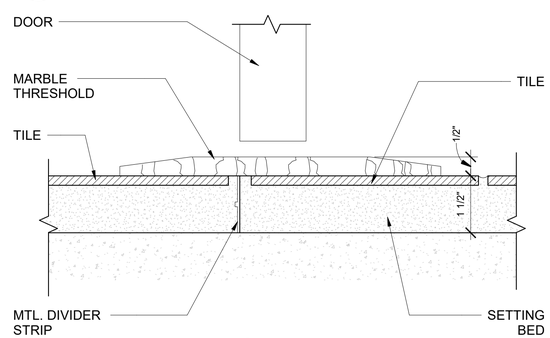

5 A-520 SILL - TILE TO TILE
6" = 1'-0"

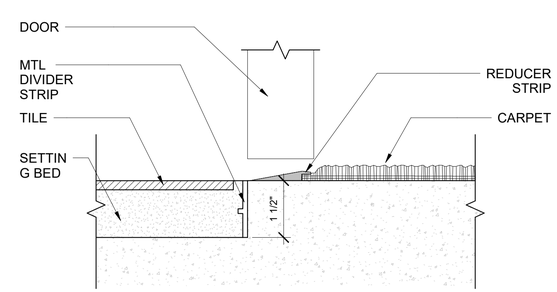

1 A-520 SILL - CARPET TO TILE
6" = 1'-0"

US Army Corps of Engineers ®

MARK	DESCRIPTION	DATE	APPR

US ARMY CORPS OF ENGINEERS
SACRAMENTO DISTRICT
1325 J STREET
SACRAMENTO, CA 95814

Designed by: MVALENTINE Drawn By: MZV
Submittal Status: RTA
Reviewed by: O AQUINO
Submitted by: M Matthew Valentine Chief, Architectural Section
Date: 13 JUL 2020
Spec No:
File No: 223-25-0665
Size:22" x 34" Plot Scale: 1" = 1'-0" Plot Date:7/13/2020 12:04:14 PM
Rev:
Project No:
File Name: W65A_GTEB

FT. HUACHUCA, AZ
GROUND TRANSPORT EQUIPMENT BUILDING
DOOR DETAILS

SHEET IDENTIFICATION
A-520

RTA

SHEET NOTES

1. SEE A-620 AND A-621 FOR DOOR SCHEDULE.

2. SEE A-170 FOR AIR BARRIER PLAN & A-370 FOR AIR BARRIER SECTIONS.

3. SEE A-582 FOR AIR BARRIER DETAILS.

GRAPHIC SCALES

6 4 2 0 6

SCALE: 3"=1'-0"

3 2 1 0 3

SCALE: 6"=1'-0"

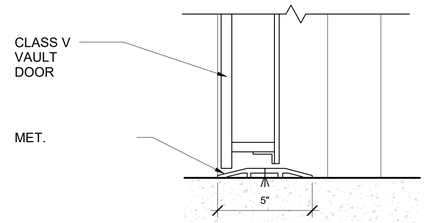

9 A-521 VAULT SILL
3" = 1'-0"

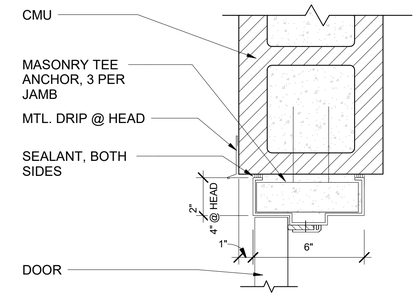

4 A-521 JAMB/HEAD - WALL TYPE 6
3" = 1'-0"

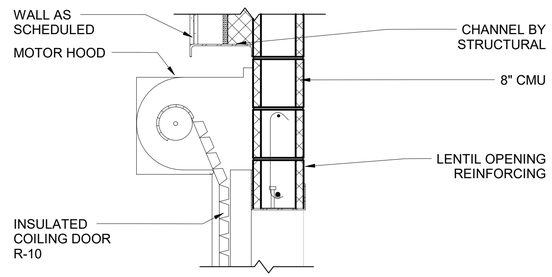

7 A-521 HEAD - COILING DOOR
1" = 1'-0"

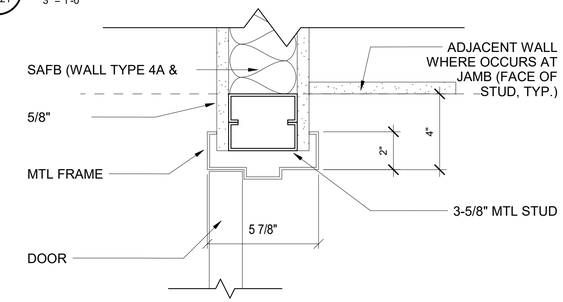

3 A-521 JAMB/HEAD - WALL TYPE 4, 8, & 9
3" = 1'-0"

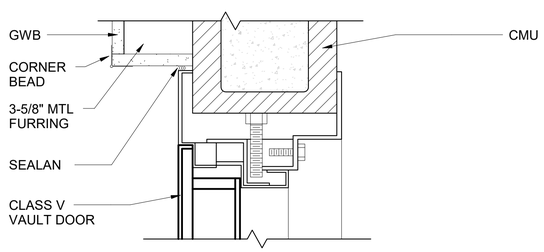

11 A-521 VAULT HEAD
3" = 1'-0"

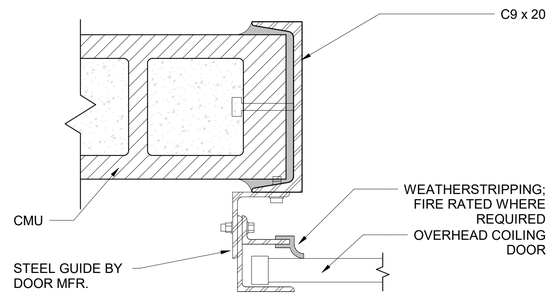

6 A-521 JAMB - COILING DOOR
3" = 1'-0"

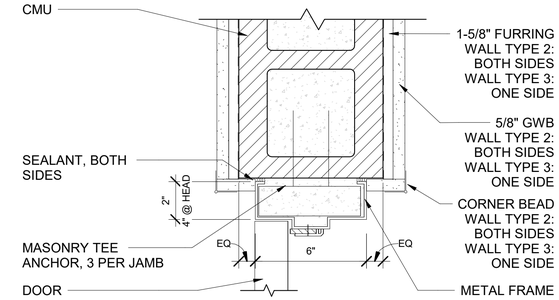

2 A-521 JAMB/HEAD - WALL TYPE 2 & 3
3" = 1'-0"

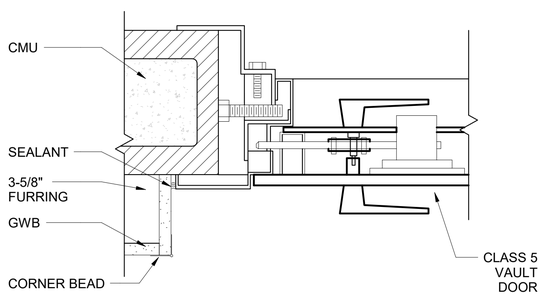

10 A-521 VAULT JAMB
3" = 1'-0"

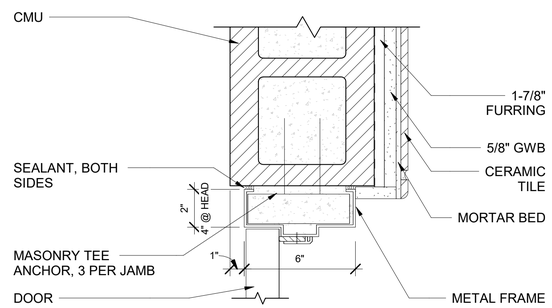

5 A-521 JAMB/HEAD - WALL TYPE 10
3" = 1'-0"

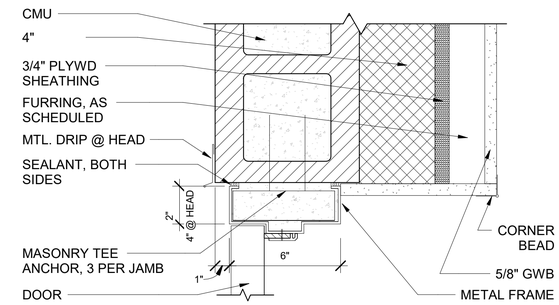

1 A-521 JAMB/HEAD - WALL TYPE 1 AND 15/16
3" = 1'-0"

US Army Corps of Engineers ®

MARK	DESCRIPTION	DATE	APPD

US ARMY CORPS OF ENGINEERS

SACRAMENTO DISTRICT
1325 J STREET
SACRAMENTO, CA 95814

Designed by: MVALENTINE Drawn By: MZV
Submittal Status: RTA
Reviewed by: O AQUINO
Submitted by: Mr. Matthew Valentine Chief, Design Branch, Design Section

Date: 13 JUL 2020
Spec No:
File No: 223-25-0665
Size/Z" x 34" Scale: As indicated Plot Date:7/13/2020 12:04:17 PM

Rev:
Project No:
File Name: W65A_GTEB

FT. HUACHUCA, AZ

GROUND TRANSPORT EQUIPMENT BUILDING

DOOR DETAILS

SHEET IDENTIFICATION
A-521

RTA

SHEET NOTES

1. SEE A-625 FOR WINDOW SCHEDULE.

2. SEE A-102 THROUGH A-104 AND A-110 FOR WINDOW LOCATIONS.

3. CONTRACTOR SHALL VERIFY AND COORDINATE ALL WINDOW INSTALLATION DETAILS WITH WINDOW MANUFACTURER, INSULATED METAL PANEL MANUFACTURER.

4. ALL EXTERIOR WINDOW SHALL COMPLY WITH UFC 4-010-01.

5. PRODUCT INFORMATION IS FOR BIDDING PURPOSES AND IS NOT INTENDED TO LIMIT SELECTIONS TO PRODUCTS OF THE MANUFACTURERS INDICATED. REFER TO SPECIFICATIONS FOR COMPLETE REQUIREMENTS.

6. SEE A-170 & A-370 FOR AIR BARRIER LOCATIONS. SEE A-582 FOR AIR BARRIER DETAILS.

GRAPHIC SCALES

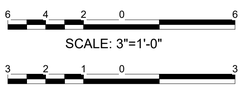

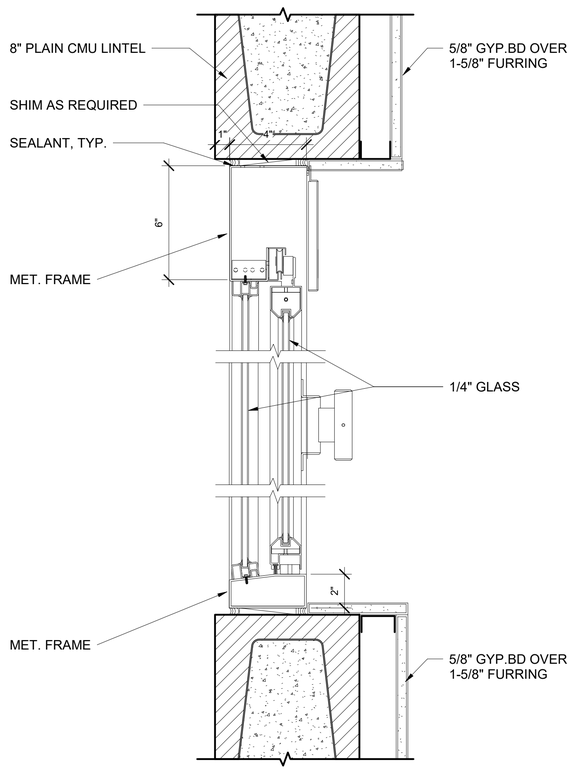

8 A-525 HEAD/SILL - SLIDER WINDOW
3" = 1'-0"

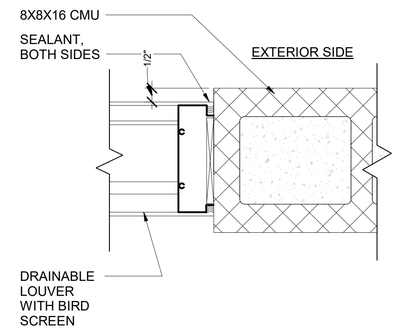

6 A-525 LOUVER JAMB - CMU
3" = 1'-0"

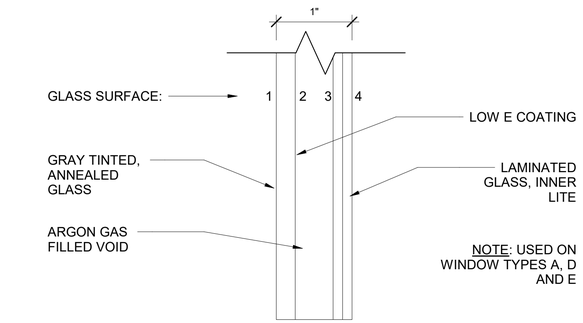

3 A-525 GLASS - FORCE PROTECTION
12" = 1'-0"

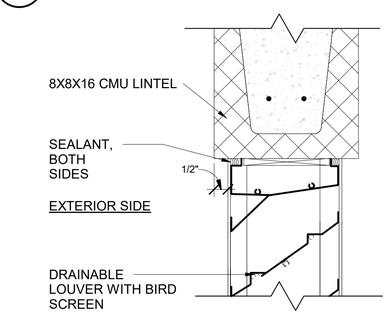

5 A-525 LOUVER HEAD - CMU
3" = 1'-0"

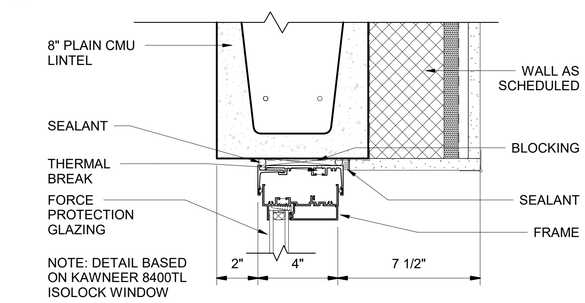

2 A-525 WINDOW HEAD (JAMB SIM.)
3" = 1'-0"

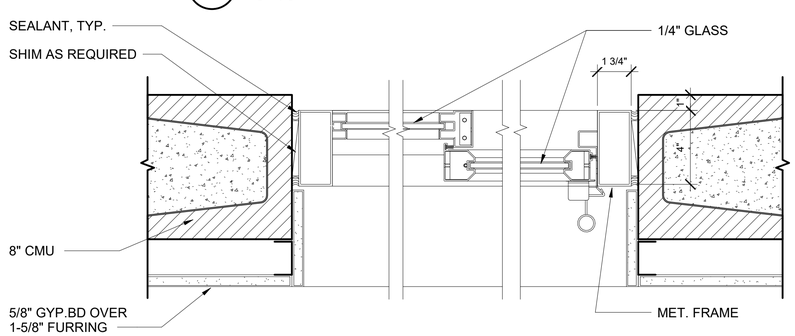

7 A-525 JAMB - SLIDER WINDOW
3" = 1'-0"

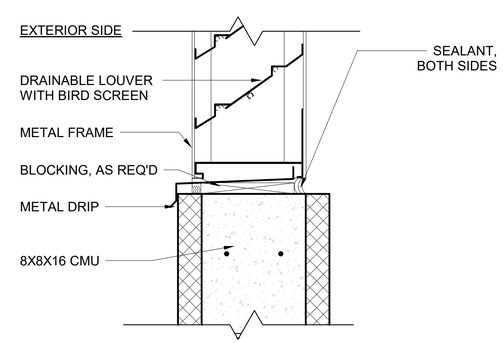

4 A-525 LOUVER SILL - CMU
3" = 1'-0"

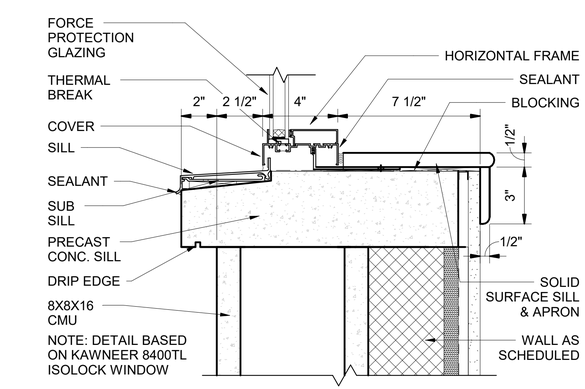

1 A-525 WINDOW SILL
3" = 1'-0"

US Army Corps of Engineers ®

MARK	DESCRIPTION	DATE	APPR

Designed by: MVALENTINE | Drawn by: MZV
Submittal Status: RTA
Reviewed by: O AQUINO
Submitted by: Al Matthew Valentine
File Name/Extension: W65A_GTEB
Date: 13 JUL 2020
Spec No:
File No: 223-25-0665
Size:22" x 34"
Plot Scale:Unscaled
Plot Date:7/13/2020 12:00:31 PM
Rev:
Project No:

US ARMY CORPS OF ENGINEERS
SACRAMENTO DISTRICT
1325 J STREET
SACRAMENTO, CA 95814

FT. HUACHUCA, AZ
GROUND TRANSPORT EQUIPMENT BUILDING
WINDOW AND LOUVER DETAILS

SHEET IDENTIFICATION
A-525

RTA

GENERAL LADDER NOTES:

1. CONTRACTOR RESPONSIBLE FOR VERIFYING DIMENSIONS PRIOR TO ORDERING & MANUFACTURING LADDER.

2. PROVIDE MFR'S STANDARD WALL BRACKETS.

3. PROVIDE APPROPRIATE BOLTS/FASTENERS REQUIRED FOR ANCHORING TO WALL FINISH.

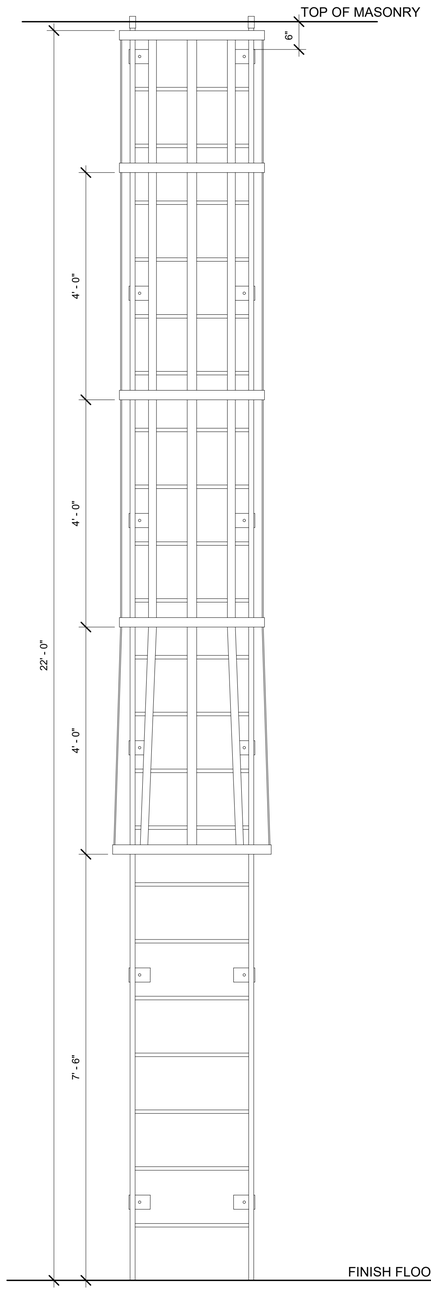

3 A-530 ROOF ACCESS LADDER
3/4" = 1'-0"

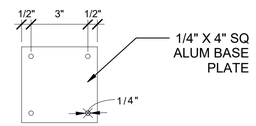

4 A-530 BASE PLATE
3" = 1'-0"

OPTION 3 - INSTRUCTIONAL

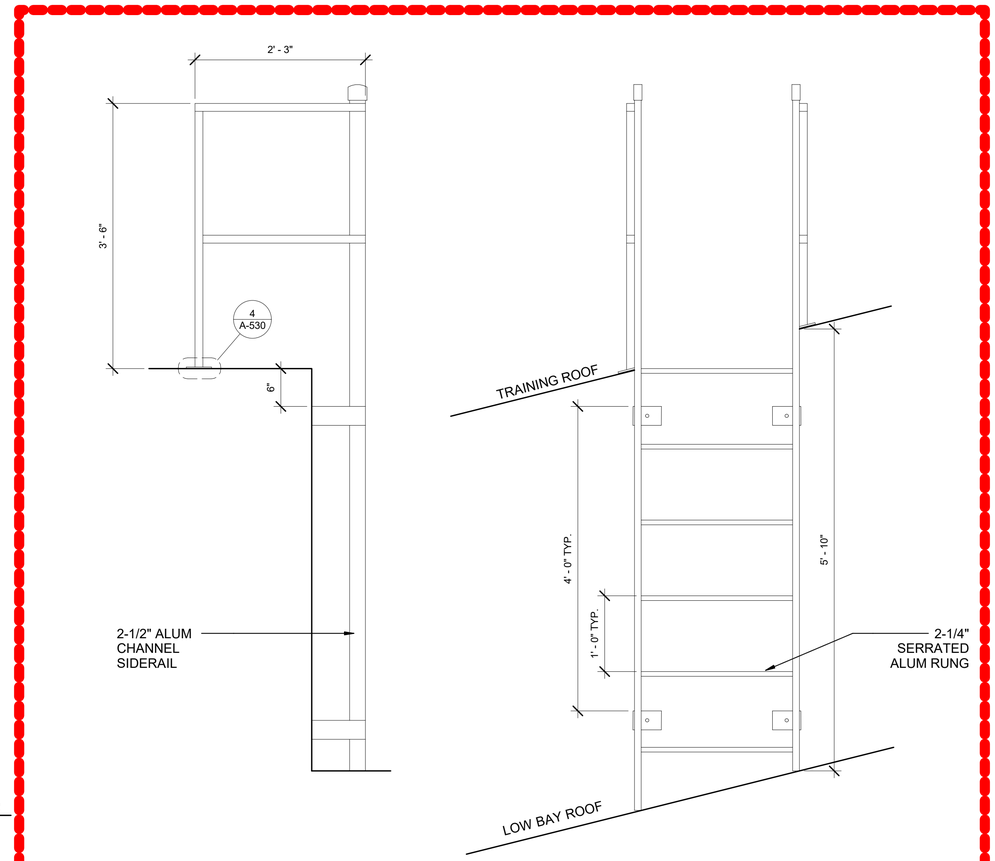

2 A-530 LOW BAY EXTERIOR LADDER
1" = 1'-0"

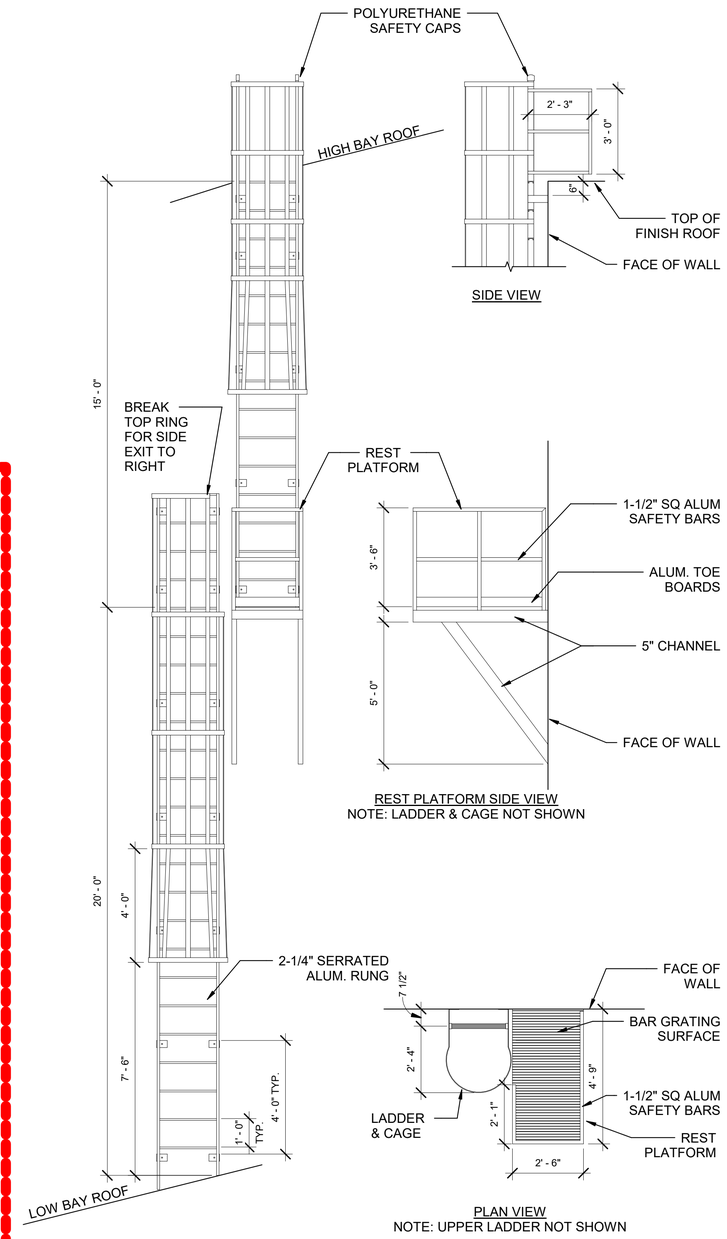

1 A-530 HIGH BAY EXTERIOR LADDER
3/8" = 1'-0"

US Army Corps of Engineers ®

MARK	DESCRIPTION	DATE	APPD

Designed by: MVALENTINE | Drawn By: MTP | Date: 13 JUL 2020 | Rev: | Spec No: | Project No: | Submittal Status: RTA | Reviewed by: O AQUINO | File No: 223-25-0665 | File Name: W68A_GTEB | Submitted by: Sr. Matthew Valentine, Chief, Architectural Design Section | Size:2" x 34" Plot Scale:Unscaled Plot Date:7/13/2020 12:00:33 PM

US ARMY CORPS OF ENGINEERS

SACRAMENTO DISTRICT
1325 J STREET
SACRAMENTO, CA 95814

FT. HUACHUCA, AZ

GROUND TRANSPORT EQUIPMENT BUILDING

LADDER DETAILS

SHEET IDENTIFICATION
A-530

RTA

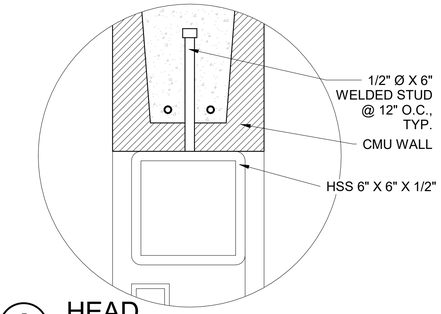

5 A-531 HEAD
3" = 1'-0"

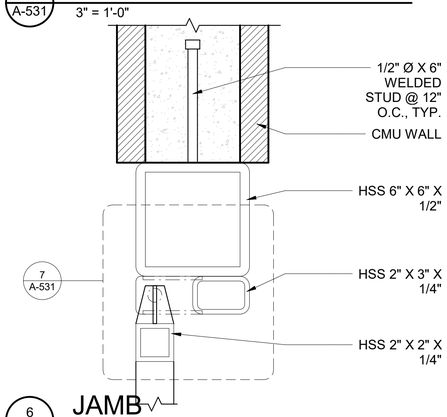

6 A-531 JAMB
3" = 1'-0"

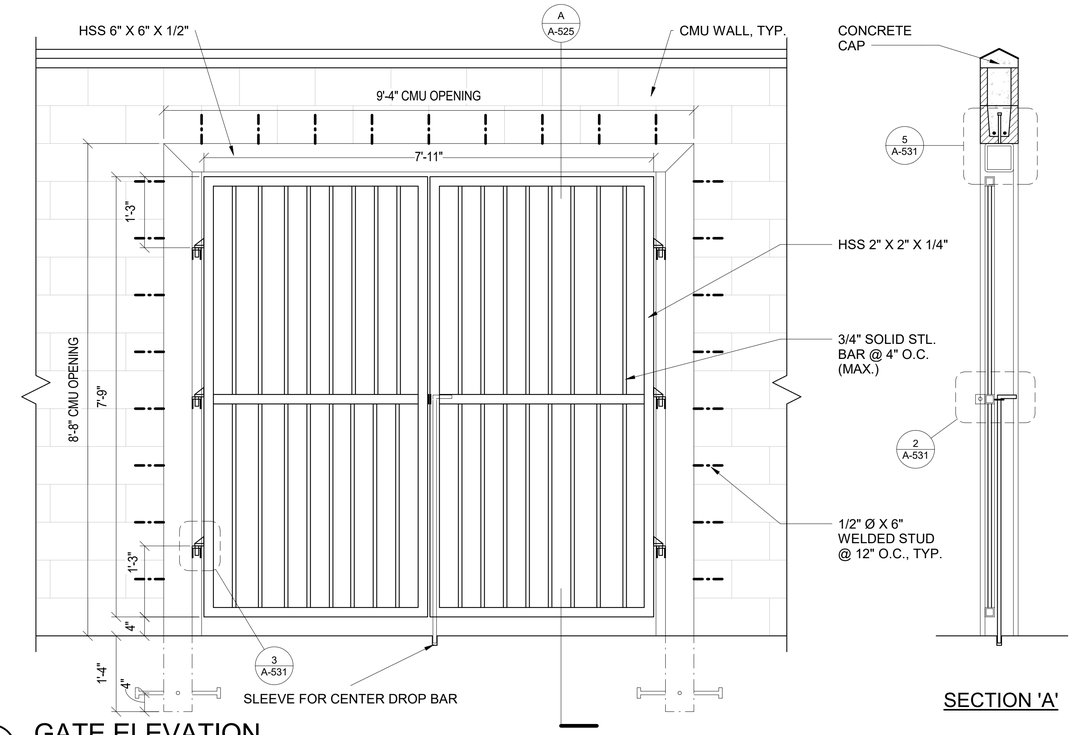

1 A-531 GATE ELEVATION
3/4" = 1'-0"

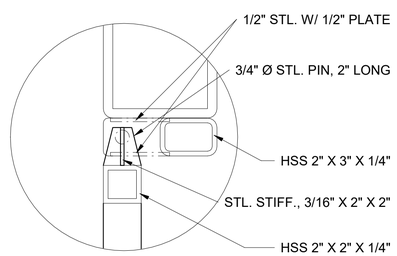

7 A-531 DETAIL 'D'
3" = 1'-0"

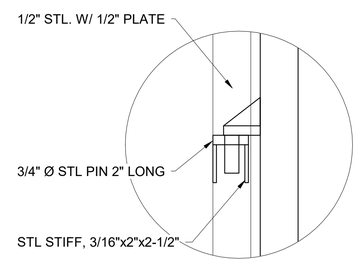

3 A-531 DETAIL 'C'
3" = 1'-0"

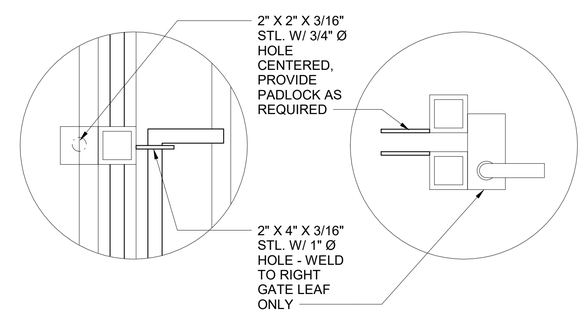

2 A-531 DETAIL 'A' & DETAIL 'B', PLAN
3" = 1'-0"

8' 0 8' 16'
SCALE: 1/8" = 1' - 0"
1' 0 1' 2' 3'
SCALE: 3/4" = 1' - 0"
6" 0 6"
SCALE: 3" = 1' - 0"
3" 0 3"
SCALE: 6" = 1' - 0"

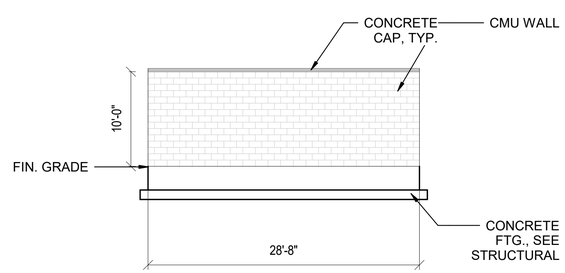

8 A-531 GATE - EAST ELEVATION
1/8" = 1'-0"

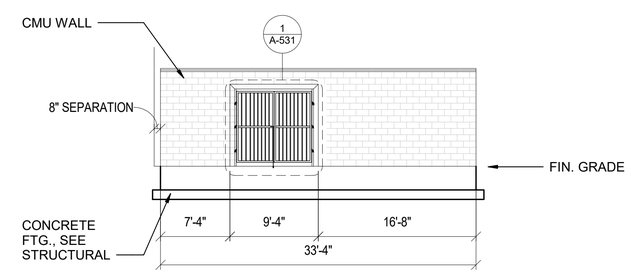

4 A-531 GATE - SOUTH ELEVATION
1/8" = 1'-0"

US Army Corps of Engineers ®

MARK	DESCRIPTION	DATE	APPR.

Designed by: MVALENTINE | Drawn By: MZV | Date: 13 JUL 2020 | Rev:
Submittal Status: RTA | Spec No: 2145 | Project No:
Reviewed By: AQUINO | File No: 223-25-0665 | File Name: W56A_GTEB
Submitted by: Jo Matthew Valentine, Civil Engineering Section | Size:22" x 34" Plot Scale:Unscaled Plot Date:7/13/2020 12:00:35 PM

US ARMY CORPS OF ENGINEERS
SACRAMENTO DISTRICT
1325 J STREET
SACRAMENTO, CA 95814

CA
GROUND TRANSPORT EQUIPMENT BUILDING
MECHANICAL YARD GATE DETAILS

SHEET IDENTIFICATION
A-531

SHEET NOTES

1. ALL SIGNS SHALL CONFORM WITH THE REQUIREMENTS OF THE ARCHITECTURAL BARRIERS ACT (ABA).

2. ALL SIGN LOCATIONS, COPY, MANUFACTURER AND COLOR INFORMATION CAN BE FOUND ON THE SIGN SCHEDULE. SEE A-640.

3. ROOM NUMBERS SHALL BE AS DIRECTED BY CONTRACTING OFFICER.

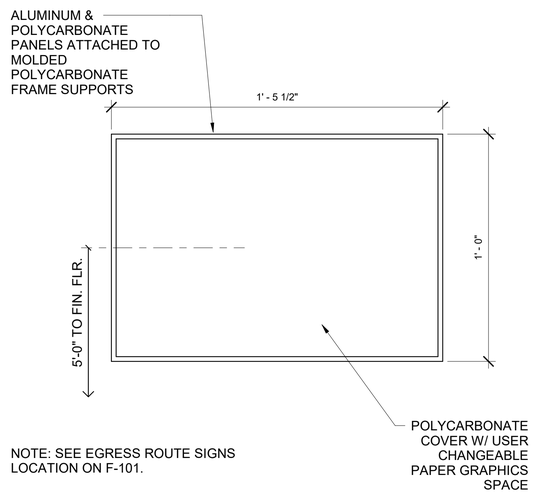

NOTE: SEE EGRESS ROUTE SIGNS LOCATION ON F-101.

12 A-540 TYPE 5 - EGRESS ROUTE
3" = 1'-0"

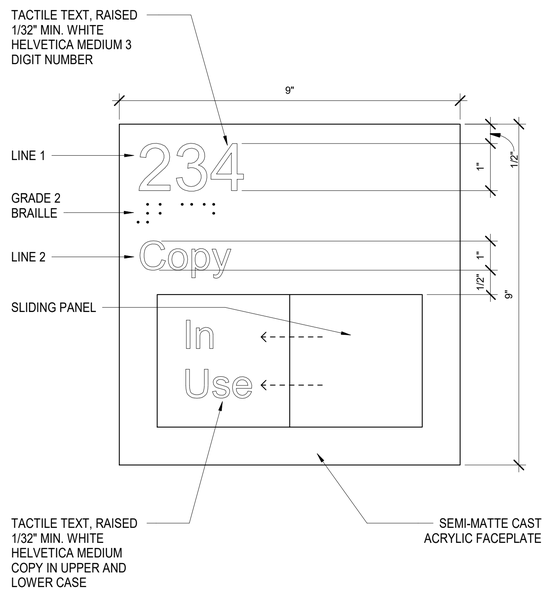

10 A-540 TYPE 3 - ROOM CONTROL
6" = 1'-0"

8 A-540 TYPE 1 - ROOM SIGN
6" = 1'-0"

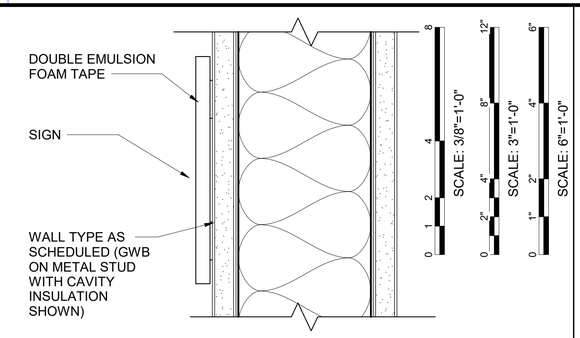

4 A-540 MOUNTING DETAIL (WALL)
6" = 1'-0"

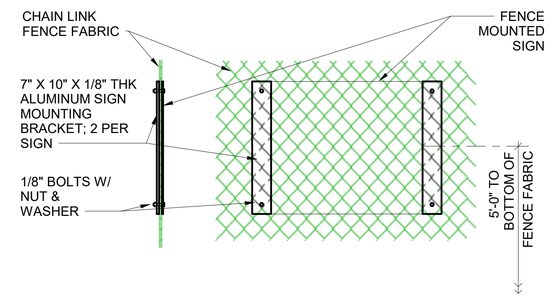

7 A-540 MOUNTING DETAIL (FENCE)
3" = 1'-0"

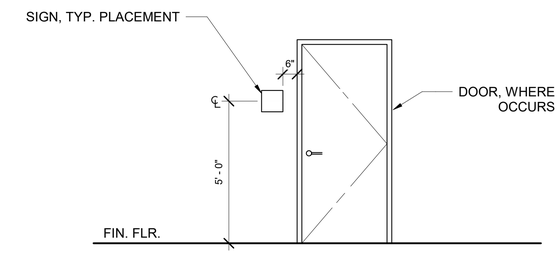

3 A-540 SIGN PLACEMENT (WALL)
3/8" = 1'-0"

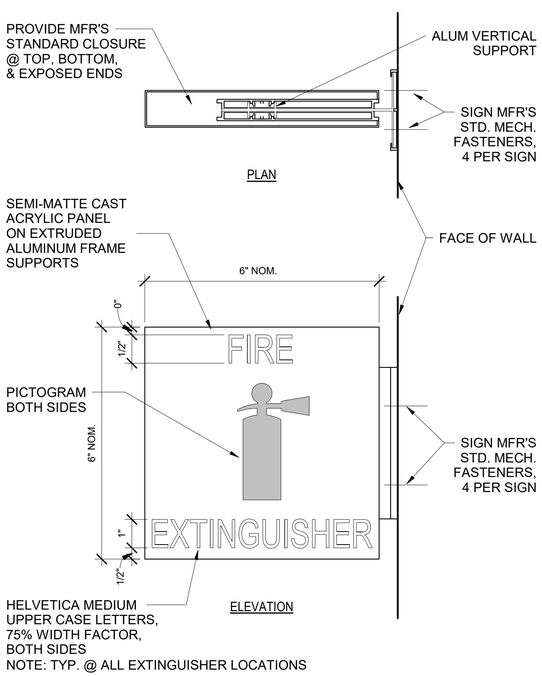

NOTE: TYP. @ ALL EXTINGUISHER LOCATIONS

11 A-540 TYPE 4 - FIRE EXTINGUISHER
6" = 1'-0"

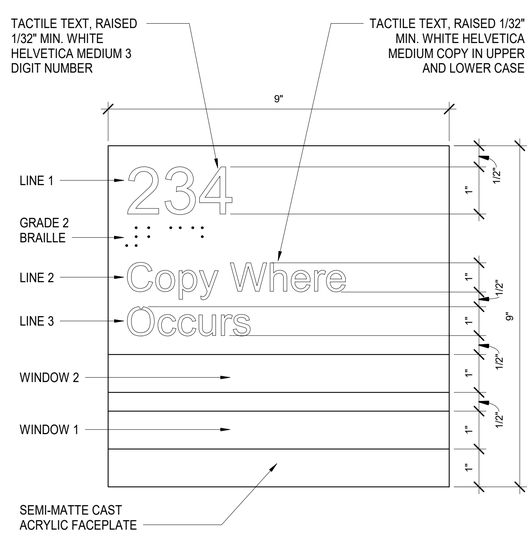

9 A-540 TYPE 2 - WINDOW PLAQUE W/ COPY
6" = 1'-0"

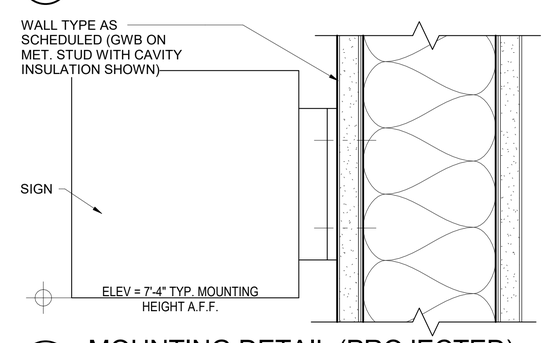

6 A-540 MOUNTING DETAIL (PROJECTED)
6" = 1'-0"

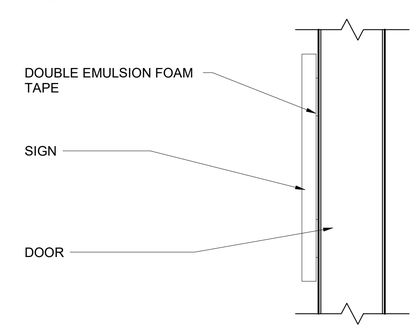

2 A-540 MOUNTING DETAIL (DOOR)
6" = 1'-0"

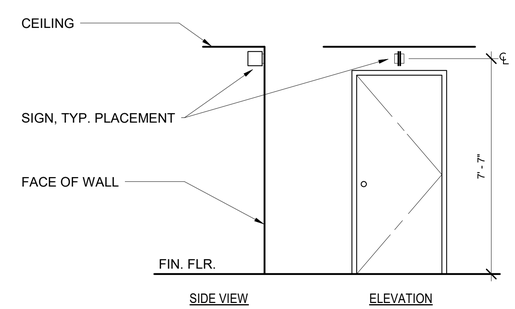

5 A-540 SIGN PLACEMENT (PROJECTED)
3/8" = 1'-0"

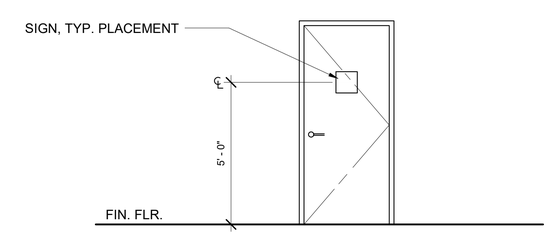

1 A-540 SIGN PLACEMENT (DOOR)
3/8" = 1'-0"

US Army Corps of Engineers ®

MARK	DESCRIPTION	DATE	APPD

Designed by: MVALENTINE | Drawn By: MZV
Submittal Status: RTA
Reviewed by: O AQUINO
Submitted by: Al Matthew Valentine
Date/Time Generated: Contracting Section
Date: 13 JUL 2020
Spec No:
Rev:
Project No:
File No: 223-25-0665
File Name: WBA_GTEB
Size:22" x 34" Scale: As indicated
Plot Date:7/13/2020 12:00:38 PM

US ARMY CORPS OF ENGINEERS
SACRAMENTO DISTRICT
1325 J STREET
SACRAMENTO, CA 95814

FT. HUACHUCA, AZ
GROUND TRANSPORT EQUIPMENT BUILDING
SIGN DETAILS

SHEET IDENTIFICATION
A-540

RTA

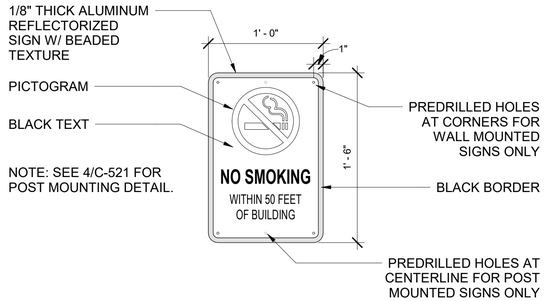

8 A-541 TYPE E2 - NO SMOKING

1 1/2" = 1'-0"

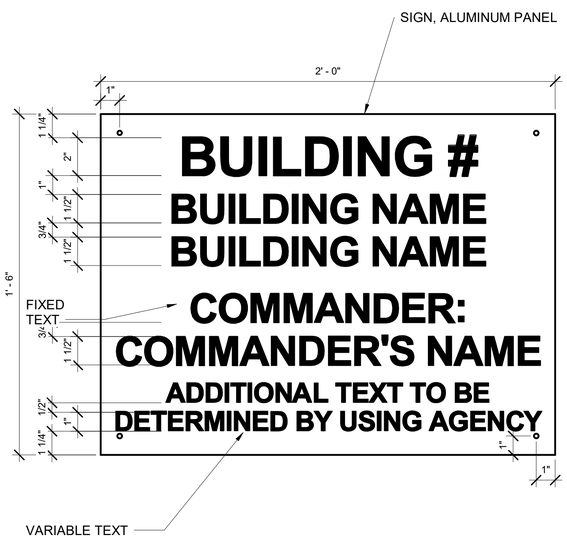

7 A-541 TYPE E1 - BUILDING SIGN

3" = 1'-0"

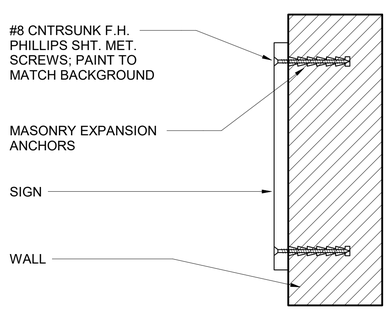

6 A-541 MOUNTING DETAIL (EXTERIOR)

6" = 1'-0"

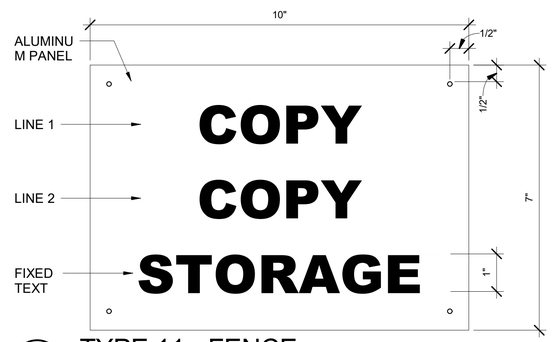

5 A-541 TYPE 11 - FENCE

6" = 1'-0"

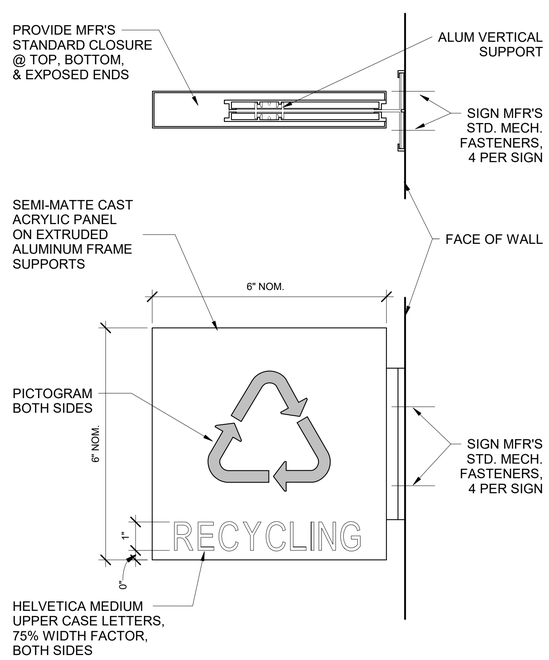

4 A-541 TYPE 10 - RECYCLING

6" = 1'-0"

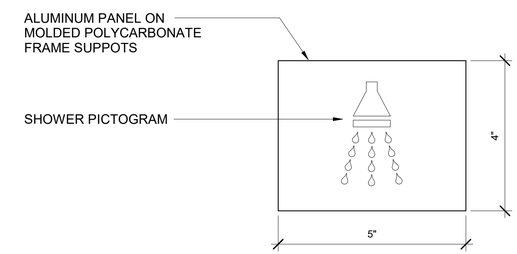

3 A-541 TYPE 9 - SHOWER

6" = 1'-0"

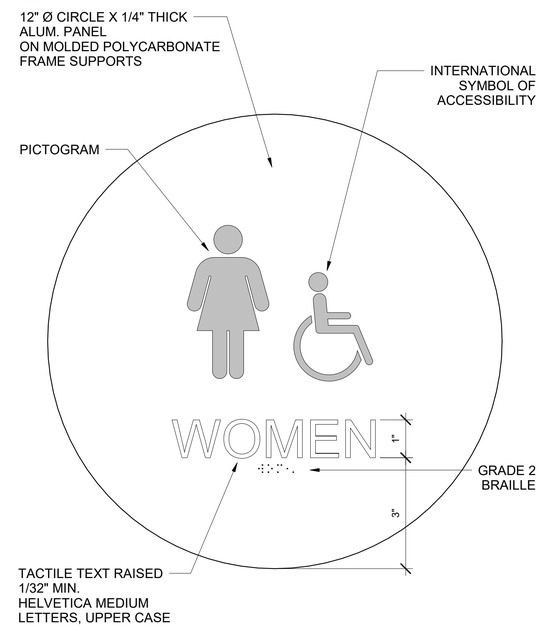

2 A-541 TYPE 8 - WOMEN'S RESTROOM

6" = 1'-0"

SHEET NOTES

1. ALL SIGNS SHALL CONFORM WITH THE REQUIREMENTS OF THE ARCHITECTURAL BARRIERS ACT (ABA).

2. ALL SIGN LOCATIONS, COPY, MANUFACTURER AND COLOR INFORMATION CAN BE FOUND ON THE SIGN SCHEDULE. SEE A-640.

3. ROOM NUMBERS SHALL BE AS DIRECTED BY CONTRACTING OFFICER.

GRAPHIC SCALES

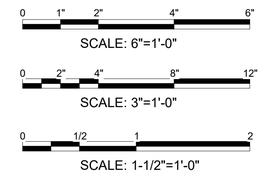

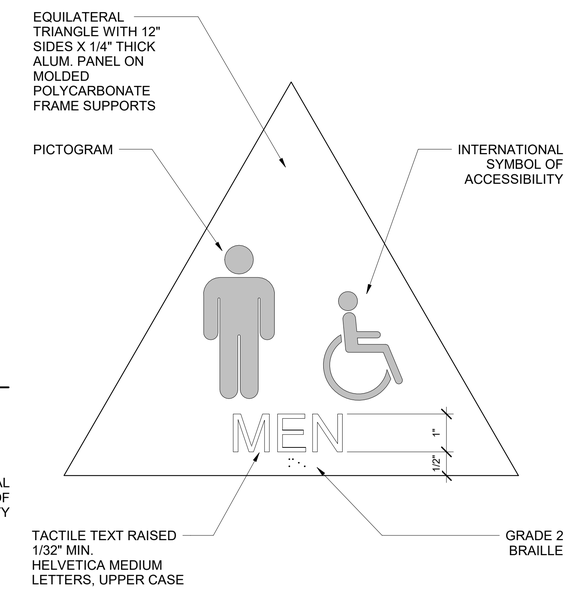

1 A-541 TYPE 7 - MEN'S RESTROOM

6" = 1'-0"

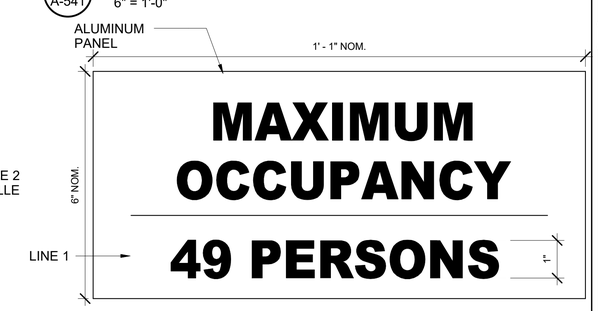

NOTE: SIGN LOCATED ON INSIDE OF ROOM ON WALL ADJACENT TO DOOR

9 A-541 TYPE 6 - MAX OCCUPANCY

6" = 1'-0"

US Army Corps of Engineers ®

MARK	DESCRIPTION	DATE	APPR

US ARMY CORPS OF ENGINEERS

SACRAMENTO DISTRICT
1325 J STREET
SACRAMENTO, CA 95814

Designed by: MVALENTINE Drawn By: MZV
Submittal Status: RTA
Reviewed by: O AQUINO
Submitted by: CPT Matthew Valentine
Date: 13 JUL 2020
Rev:
Project No:
Spec No:
File No: 223-25-0665
File Name: W65A_GTEB
Size:22" x 34"
Plot Scale: As indicated
Plot Date:7/13/2020 12:00:40 PM

FT. HUACHUCA, AZ

GROUND TRANSPORT EQUIPMENT BUILDING

SIGN DETAILS

SHEET IDENTIFICATION
A-541

RTA

0 1/2 1 2

SCALE: 1-1/2"=1'-0"

0 1/2" 1" 2" 3"

SCALE: 12"=1'-0"

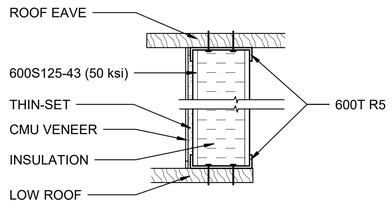

8 / A-550 EXT. ROOF CORNER SECTION DETAIL

1 1/2" = 1'-0"

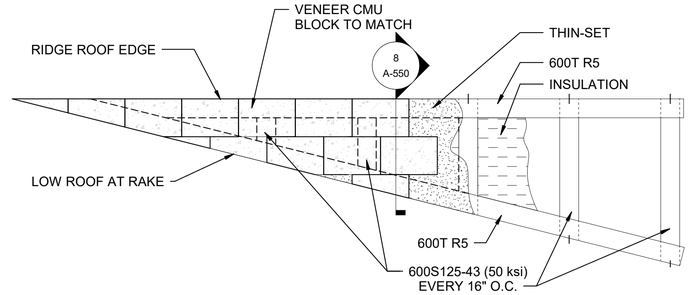

6 / A-550 EXT. ROOF CORNER DETAIL

1" = 1'-0"

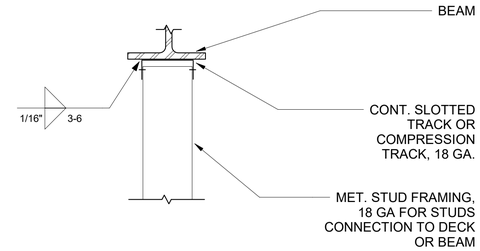

3 / A-550 STUD TO BEAM CONNECTION

NOT TO SCALE

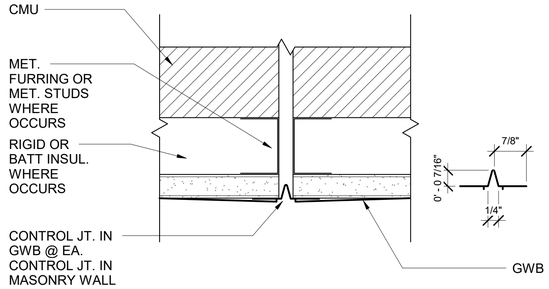

NOTES:
1. ADDITIONAL VERTICAL BARS ON EA. SIDE OF ALL C.J.
2. TERMINATE ALL HORIZONTAL REINFORCING 2" FROM C.J.
3. PROVIDE 1/2" DIAM. x 4'-0" LONG SMOOTH DOWEL ACROSS JOINT. PREVENT BOND BETWEEN BAR AND GROUT WITH PLASTIC SLEEVE. MATCH SPACING OF HORIZ. REINFORCEMENT.

7 / A-550 CONTROL JOINT IN CMU

6" = 1'-0"

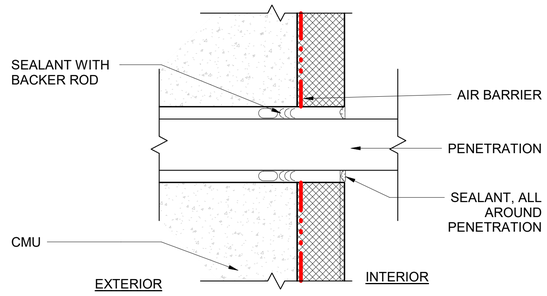

5 / A-550 WALL PENETRATION

6" = 1'-0"

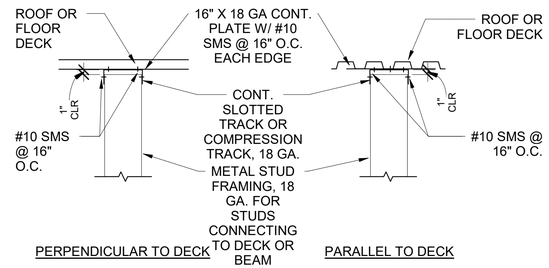

2 / A-550 STUD TO DECK CONNECTION

NOT TO SCALE

ATTACHMENT OF BOTTOM TRACKS:

1. TRACK FOR STUD WALLS RESTING ON CONCRETE SLAB SHALL BE ANCHORED WITH POWER DRIVEN FASTENER, HILTI X-DNI (0.145" DIA. X MIN. EMBED AT CENTER LINE OF TRACK) OR APPROVED EQUAL AT 16" O.C. U.O.N.

2. TRACKS FOR STUDS MOUNTED ON STRUCTURAL FRAMING MEMBERS SHALL BE WELDED TO THEIR SUPPORTS WITH 1/16" FILLET WELD X 2" @ EA. SIDE OF TRACK AT 16" O.C., MIN.

3. TRACKS AT DECK: USE FASTENERS AS INDICATED ON NOTE. 1. ABOVE WITH SPACING AT 12" O.C.

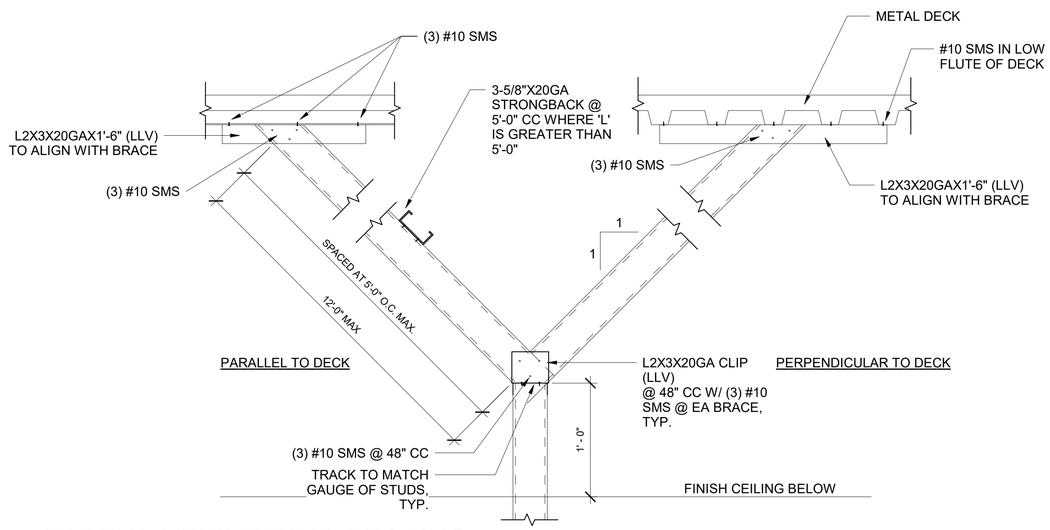

4 / A-550 PARTIAL HEIGHT WALL BRACING

1 1/2" = 1'-0"

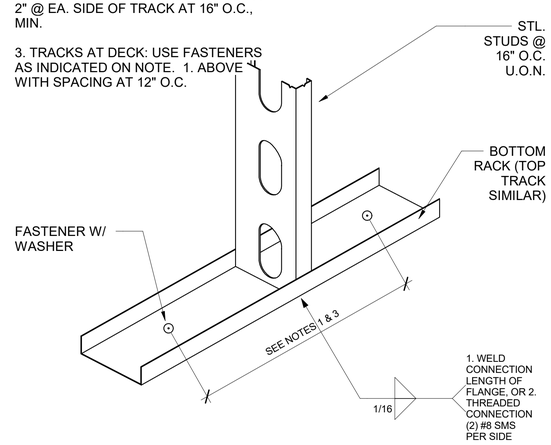

1 / A-550 BOTTOM TRACK

NOT TO SCALE

US Army Corps of Engineers ®

MARK	DESCRIPTION	DATE	APPD

Designed by: MVALENTINE | Drawn By: MZV | Date: 13 JUL 2020 | Rev: | Project No:

Submittal Status: RTA | Spec No: | File No: 223-25-0665 | File Name: W85A_GTEB

Reviewed by: O AQUINO | Size:22" x 34" Scale: As indicated | Print Date:7/13/2020 12:00:42 PM

Submitted by: Jill Matthew Valentine Chief, Design Branch, Engineering Section

US ARMY CORPS OF ENGINEERS

SACRAMENTO DISTRICT
1325 J STREET
SACRAMENTO, CA 95814

FT. HUACHUCA, AZ

GROUND TRANSPORT EQUIPMENT BUILDING

WALL DETAILS

SHEET IDENTIFICATION
A-550

RTA

GRAPHIC SCALES

1 0 1

SCALE: 1 1/2"=1'-0"

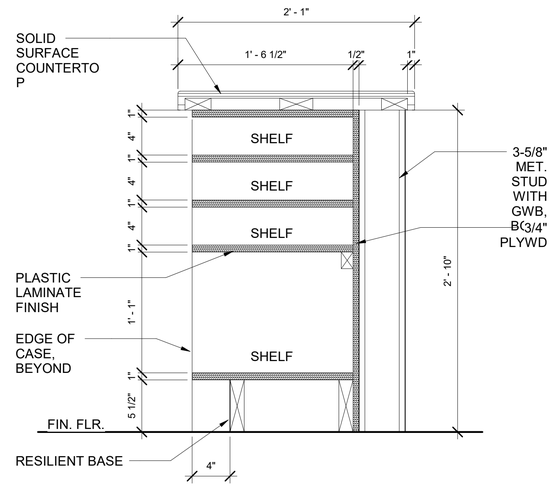

3 A-560 MAP STORAGE SECTION

1 1/2" = 1'-0"

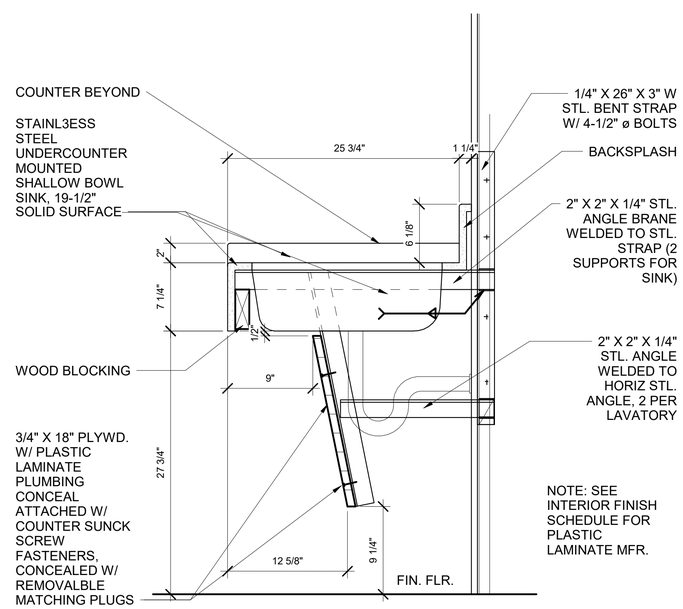

2 A-560 CASEWORK SECTION SINK

1 1/2" = 1'-0"

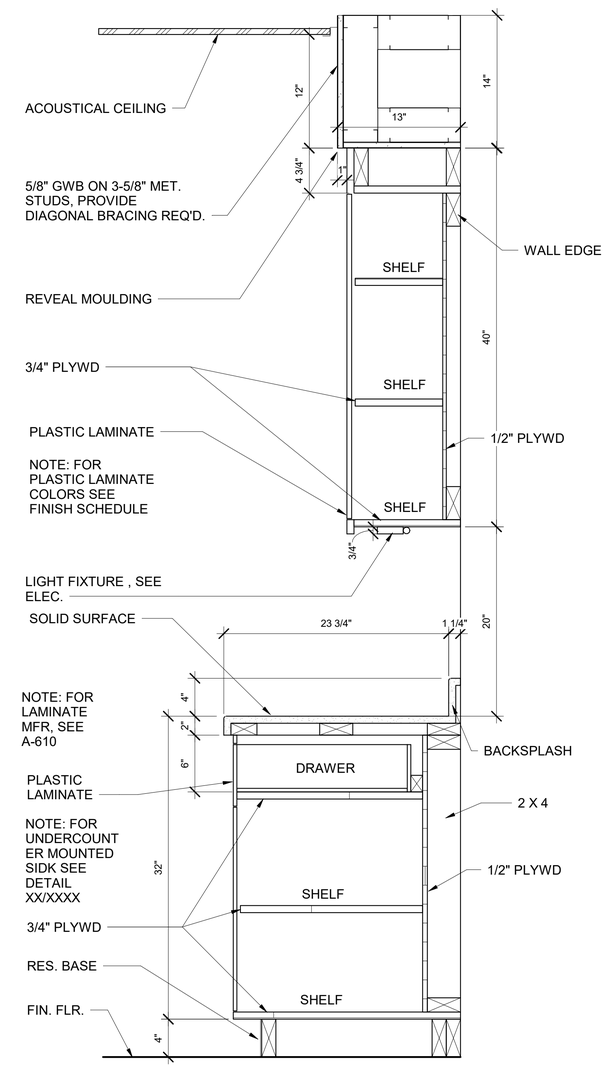

1 A-560 CASEWORK SECTION CABINETRY

1 1/2" = 1'-0"

US Army Corps of Engineers ®

MARK	DESCRIPTION	DATE	APPR.

Designed by: MVALENTINE | Drawn By: MZV | Date: 13 JUL 2020 | Rev:
Submittal Status: RTA | Spec No: | Project No:
Reviewed by: O AQUINO | File No: 223-25-0665 | File Name: W65A_GTEB
Submitted by: Jill Matthew Valentine Chief, Design Branch, Section | Size:22" x 34" Plot Scale: 1"=1'-0" Plot Date:7/13/2020 12:00:43 PM

US ARMY CORPS OF ENGINEERS

SACRAMENTO DISTRICT
1325 J STREET
SACRAMENTO, CA 95814

FT. HUACHUCA, AZ

GROUND TRANSPORT EQUIPMENT BUILDING

CASEWORK DETAILS

SHEET IDENTIFICATION
A-560

RTA

SHEET NOTES

1. COORDINATE MORTAR SETTING BED DEPTH WITH STRUCTURAL SLAB.

GRAPHIC SCALES

3 2 1 0 3
SCALE: 6"=1'-0"

6 4 2 0 6
SCALE: 3"=1'-0"

1 0 1
SCALE: 1 1/2"=1'-0"

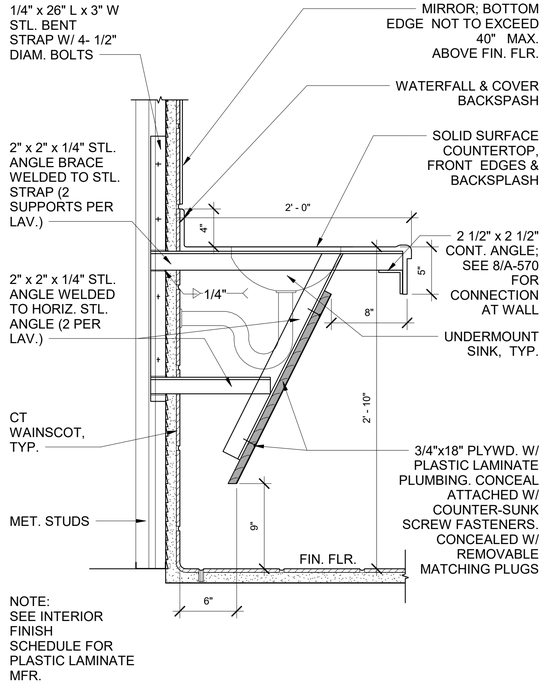

10 A-570 SECTION @ LAVATORY COUNTER
1 1/2" = 1'-0"

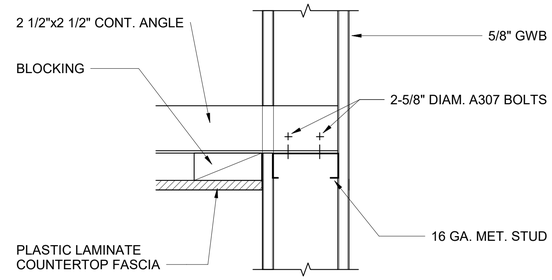

8 A-570 COUNTER SUPPORT DETAIL @ WALL
3" = 1'-0"

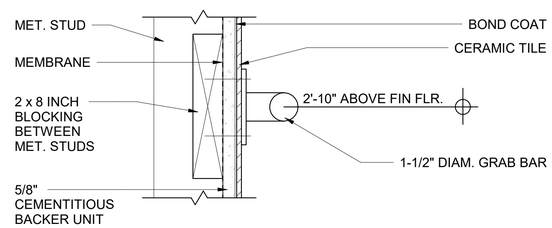

7 A-570 GRAB BAR MOUNTING DETAIL
3" = 1'-0"

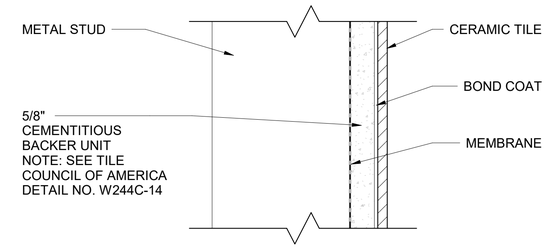

4 A-570 CERAMIC TILE AT SHOWER
6" = 1'-0"

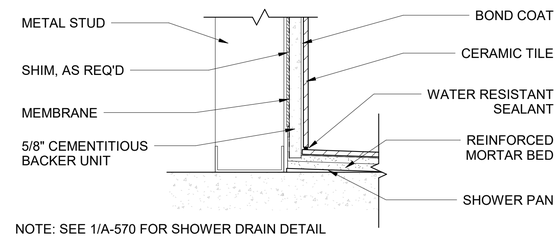

NOTE: SEE 1/A-570 FOR SHOWER DRAIN DETAIL

NOTE: SEE TILE COUNCIL OF AMERICA DETAIL NO. B415-14.

3 A-570 SHOWER FLOOR-WALL CONNECTION
3" = 1'-0"

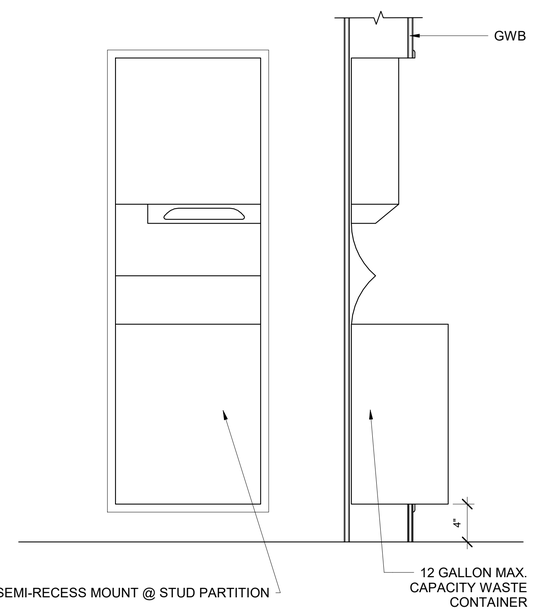

9 A-570 PAPER TOWEL DISPENSER (PTDWR)
1 1/2" = 1'-0"

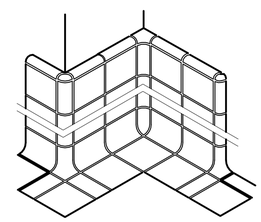

NOTE: ALL TRIM PIECES REQUIRED AS SHOWN ABOVE.

6 A-570 TILE WAINSCOT SETTING
NOT TO SCALE

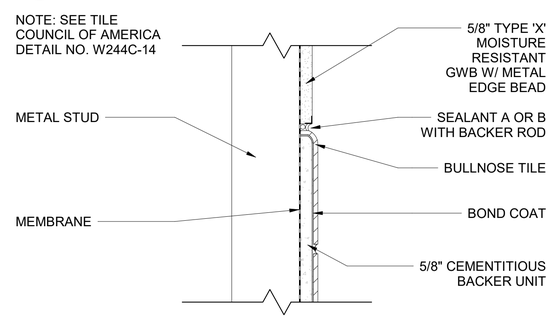

5 A-570 CERAMIC TILE WAINSCOT @ GWB
3" = 1'-0"

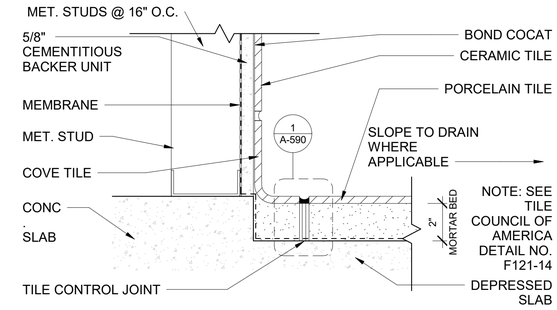

2 A-570 TILE COVE DETAIL
3" = 1'-0"

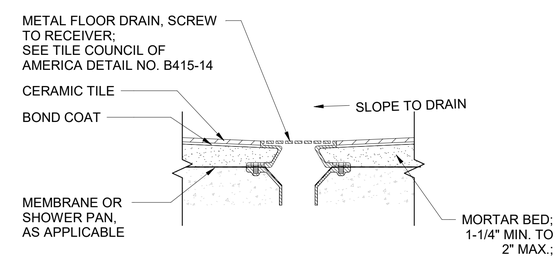

NOTE: SEE TILE COUNCIL OF AMERICA DETAIL NO. F121-14

1 A-570 FLOOR DRAIN
3" = 1'-0"

US Army Corps of Engineers ®

MARK	DESCRIPTION	DATE	APPD

Date: 13 JUL 2020 | Rev: | Designed by: MVALENTINE | Drawn By: MZV | US ARMY CORPS OF ENGINEERS

Spec No: | Project No: | Submittal Status: RTA | Reviewed by: O AQUINO

File No: 223-25-0665 | File Name: W85A_GTEB | Submitted by: Mr. Matthew Valentine, Chief, Design Management Section

Size/Z* x 34* Scale: As indicated Plot Date:7/13/2020 12:00:47 PM

SACRAMENTO DISTRICT
1325 J STREET
SACRAMENTO, CA 95814

FT. HUACHUCA, AZ

GROUND TRANSPORT EQUIPMENT BUILDING

RESTROOM DETAILS

SHEET IDENTIFICATION
A-570

RTA

GRAPHIC SCALES

SCALE: 1-1/2"=1'-0"

SCALE: 3/4"=1'-0"

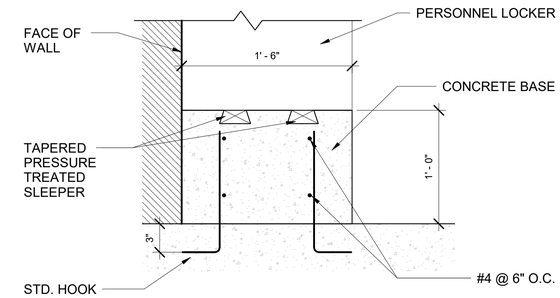

4 A-571 LOCKER BASE

1 1/2" = 1'-0"

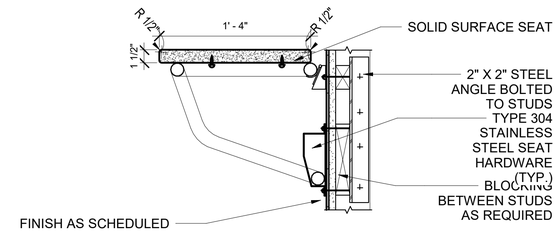

3 A-571 FOLDING SEAT SECTION

1 1/2" = 1'-0"

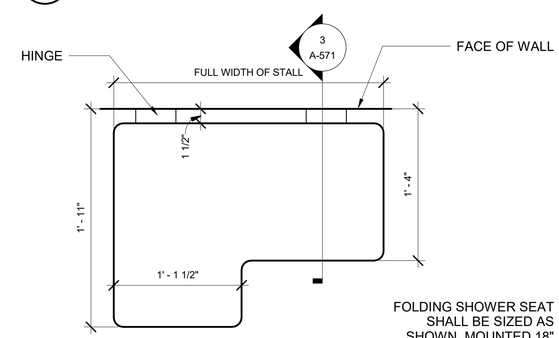

2 A-571 FOLDING SEAT

1 1/2" = 1'-0"

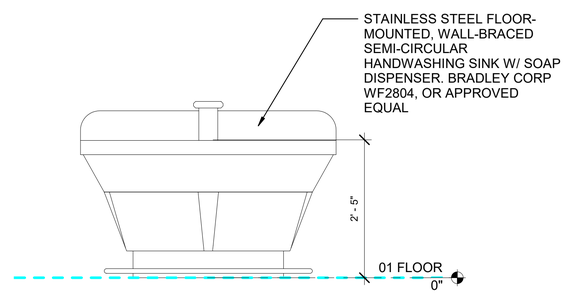

5 A-571 SEMI-CIRCULAR HANDWASHING SINK

3/4" = 1'-0"

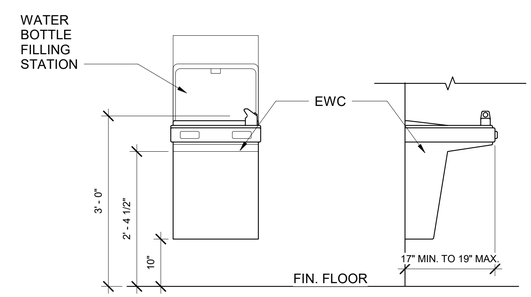

1 A-571 ACCESSIBLE EWC

3/4" = 1'-0"

US Army Corps of Engineers ®

MARK	DESCRIPTION	DATE	APPD

US ARMY CORPS OF ENGINEERS

SACRAMENTO DISTRICT
1325 J STREET
SACRAMENTO, CA 95814

Designed by: MVALENTINE Drawn By: MZV
Submittal Status: RTA
Reviewed by: O AQUINO
Submitted by: Mr. Matthew Valentine
Chief, Engineering Design Section

Date: 13 JUL 2020
Spec No:
File No: 223-25-0665
Size/2" x 34" Scale: As indicated
Plot Date:7/13/2020 12:00:48 PM

Rev:
Project No:
File Name: W65A_GTEB

FT. HUACHUCA, AZ

GROUND TRANSPORT EQUIPMENT BUILDING

RESTROOM DETAILS

SHEET IDENTIFICATION
A-571

RTA

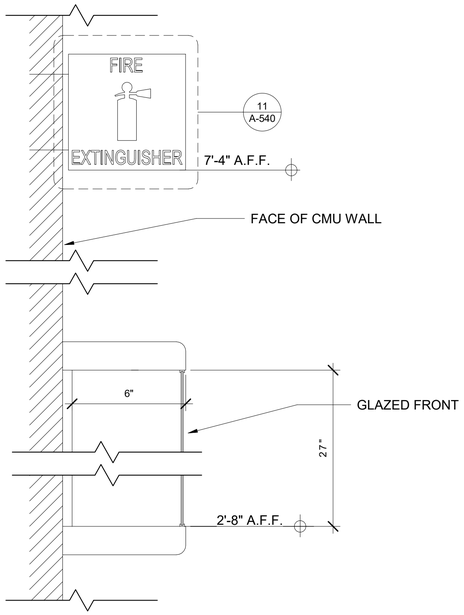

9 / A-580 SUFACE MOUNTED EXTINGUISHER CABINET AT CMU

3" = 1'-0"

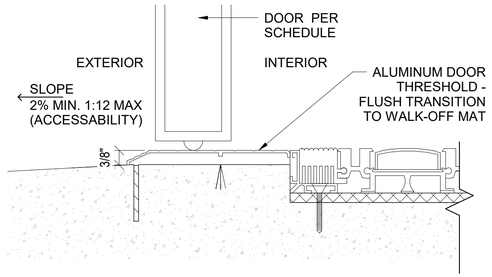

6 / A-580 INTERIOR RFG @ EXT. DOOR

6" = 1'-0"

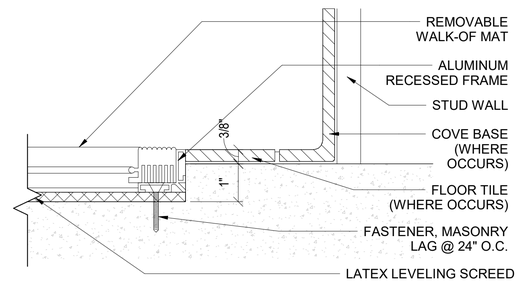

5 / A-580 RFG EDGING - PARALLEL

6" = 1'-0"

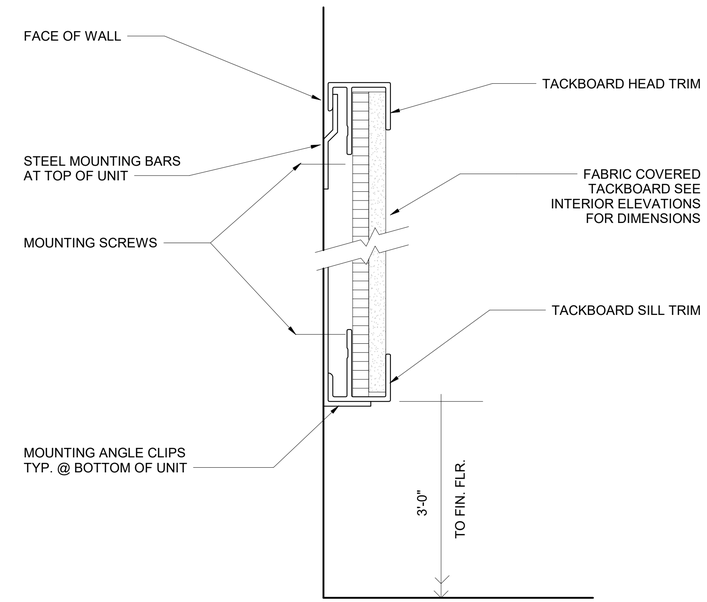

2 / A-580 TACK BOARD

6" = 1'-0"

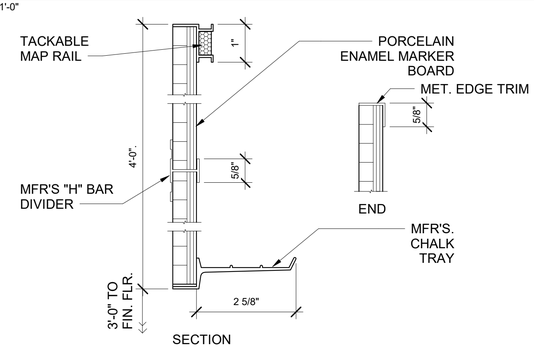

8 / A-580 MARKER BOARD

6" = 1'-0"

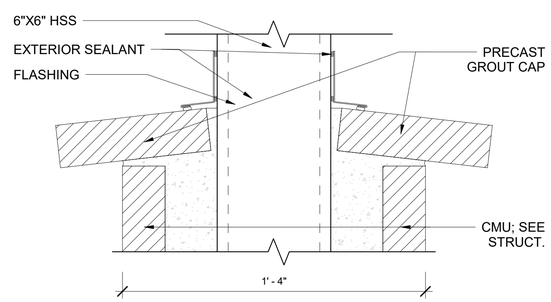

4 / A-580 COLUMN CAP

3" = 1'-0"

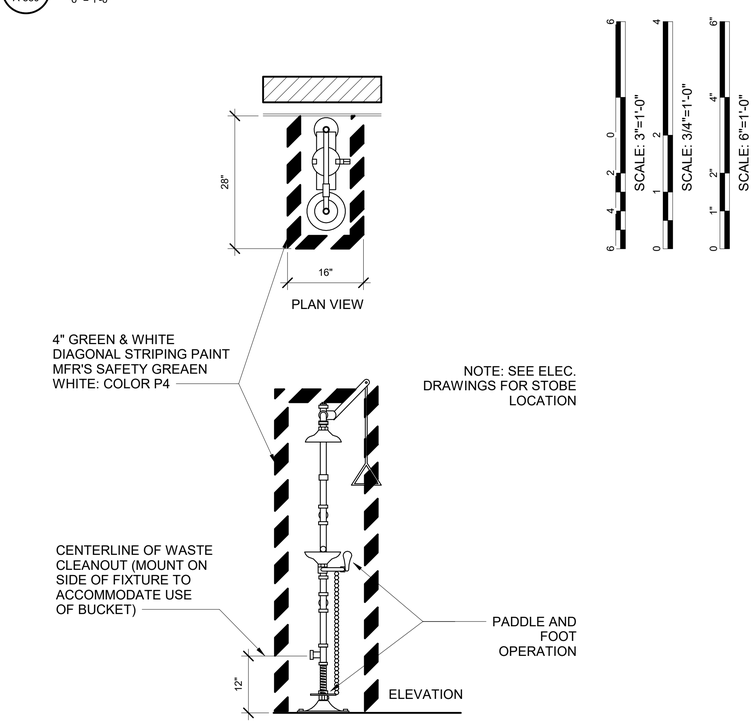

1 / A-580 EMERGENCY EYEWASH & SHOWER

3/4" = 1'-0"

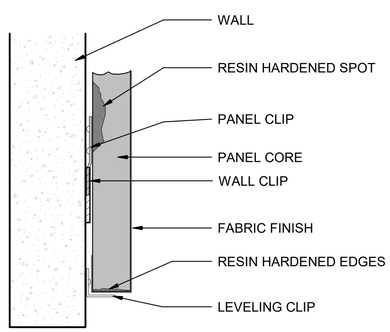

7 / A-580 ACOUSTICAL WALL PANEL DETAIL

6" = 1'-0"

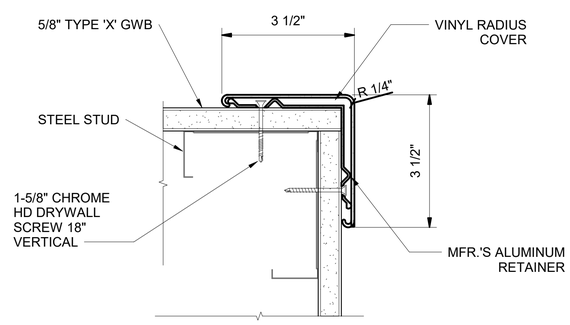

3 / A-580 WALL CORNER GUARD

6" = 1'-0"

US Army Corps of Engineers ®

MARK	DESCRIPTION	DATE	APPD

Designed by: MVALENTINE Drawn By: MZV
Submittal Status: RTA
Reviewed O'AQUINO
Submitted by: Dr. Matthew Valentine
Date: 13 JUL 2020
Spec No: 2145
File No: 223-25-0685
Rev:
Project No:
File Name: W60A_GTEB
Size:22" x 34" Plot Scale:1 Plot Date:7/13/2020 12:00:50 PM

US ARMY CORPS OF ENGINEERS
SACRAMENTO DISTRICT
1325 J STREET
SACRAMENTO, CA 95814

FT. HUACHUCA AZ

GROUND TRANSPORT
EQUIPMENT BUILDING

MISCELLANEOUS DETAILS

SHEET IDENTIFICATION
A-580

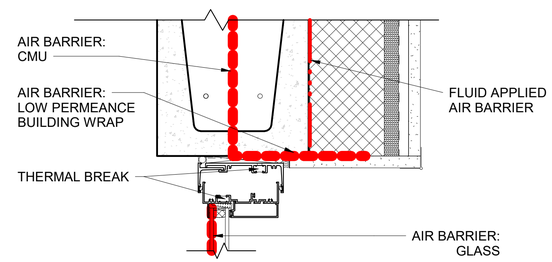

5 A-582 AIR BARRIER AT WINDOW HEAD (JAMB SIM.)
3" = 1'-0"

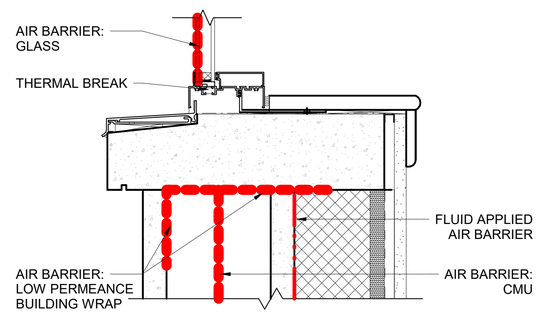

4 A-582 AIR BARRIER AT WINDOW SILL
3" = 1'-0"

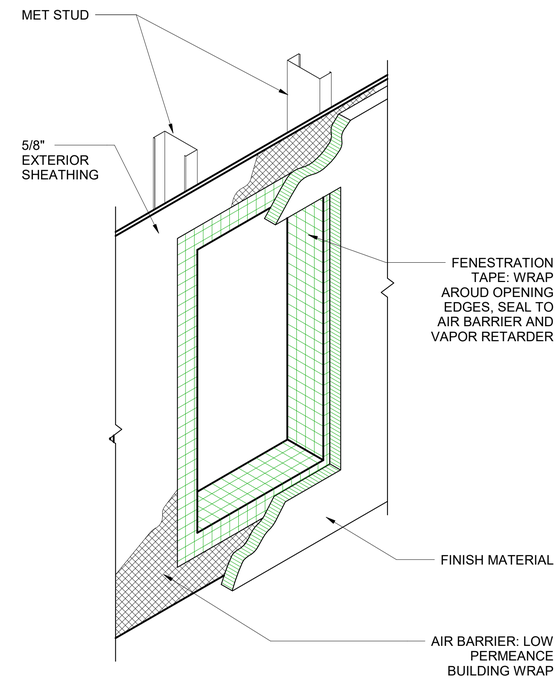

2 A-582 AIR BARRIER AT STUD OPENINGS
1" = 1'-0"

SHEET NOTES:

1. AIR BARRIER SHALL BE INSTALLED IN ACCORDANCE WITH THESE DETAILS AND WITH AIR BARRIER MFR'S REQUIREMENTS AND RECOMMENDATIONS

GRAPHIC SCALES

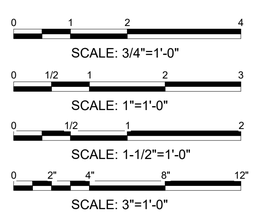

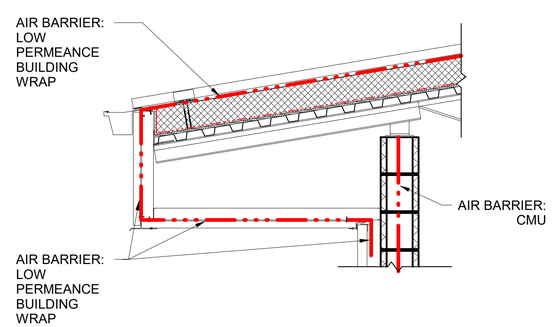

3 A-582 AIR BARRIER AT CMU EAVE
3/4" = 1'-0"

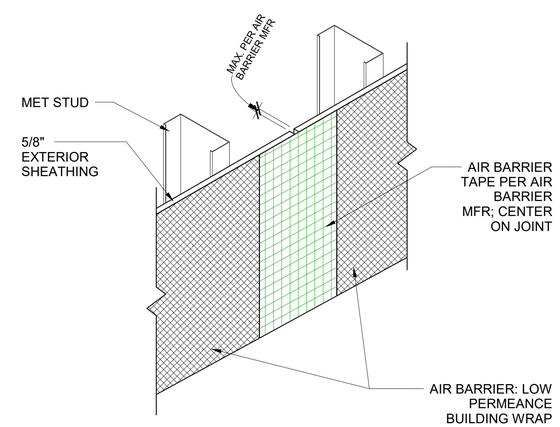

1 A-582 SHEATHING JOINT
1 1/2" = 1'-0"

US Army Corps of Engineers ®

MARK	DESCRIPTION	DATE	APPD

Designed by: MVALENTINE | Drawn By: MZV
Date: 13 JUL 2020
Rev:
Submittal Status: RTA
Spec No:
Project No:
Reviewed by: O AQUINO
File No: 223-25-0665
File Name: W85A_GTEB
Submitted by: Jim Matthew, Valentine
Chief, Design/Construction Section
Size:22" x 34"
Plot Scale:Unscaled
Plot Date:7/13/2020 12:00:52 PM

US ARMY CORPS OF ENGINEERS
SACRAMENTO DISTRICT
1325 J STREET
SACRAMENTO, CA 95814

FT. HUACHUCA, AZ
GROUND TRANSPORT EQUIPMENT BUILDING
AIR BARRIER DETAILS

SHEET IDENTIFICATION
A-582

RTA

GRAPHIC SCALE

0 2" 4" 8" 12"

SCALE: 3"=1'-0"

0 1/2" 1" 2" 3"

SCALE: 12"=1'-0"

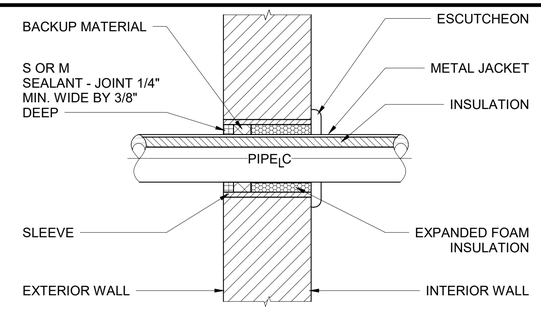

8 A-590 PIPE THRU WALL ABOVE GRADE (IPAG)
12" = 1'-0"

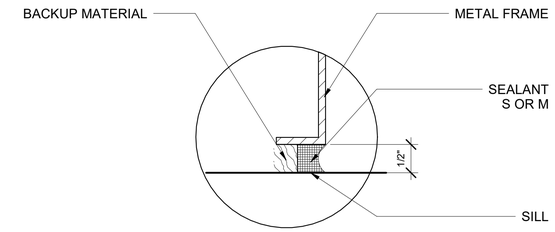

4 A-590 SEALANT @ WINDOW SILL (TJD)
12" = 1'-0"

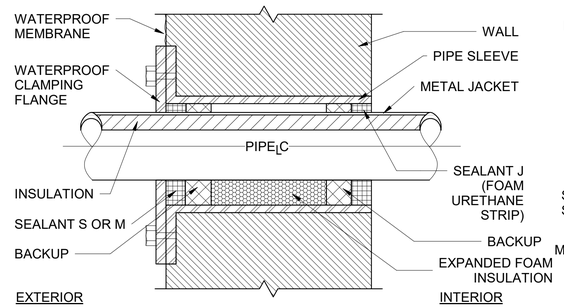

7 A-590 PIPE THRU WALL BELOW GRADE (MJN)
12" = 1'-0"

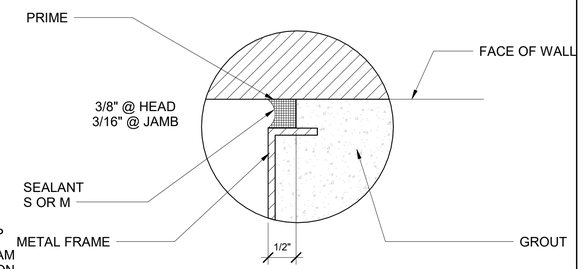

3 A-590 JOINT SHAPE @ DOOR FRAME (TJD)
12" = 1'-0"

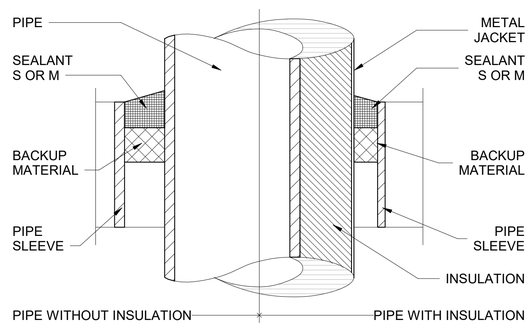

6 A-590 PIPE PENETRATION DETAIL (MJM)
12" = 1'-0"

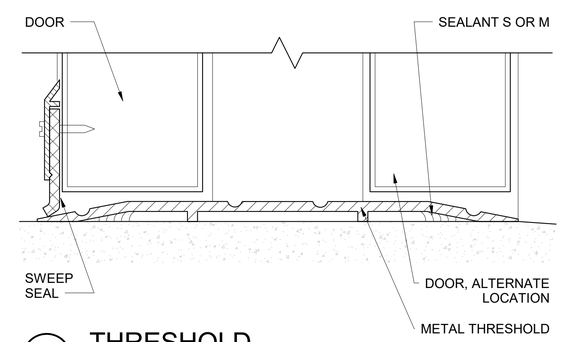

2 A-590 THRESHOLD
12" = 1'-0"

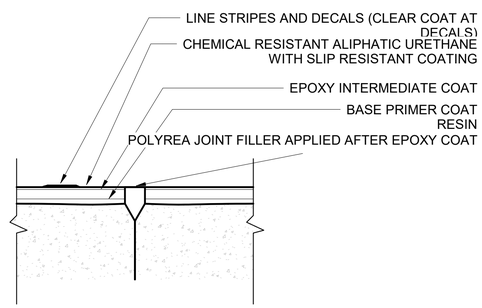

9 A-590 EPOXY FLOOR JOINT DETAIL
NO SCALE

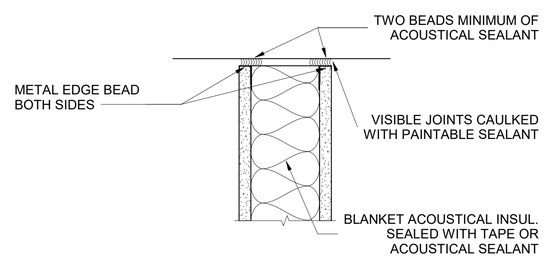

5 A-590 PARTITIONS WITH SOUND XMIT REQS.
3" = 1'-0"

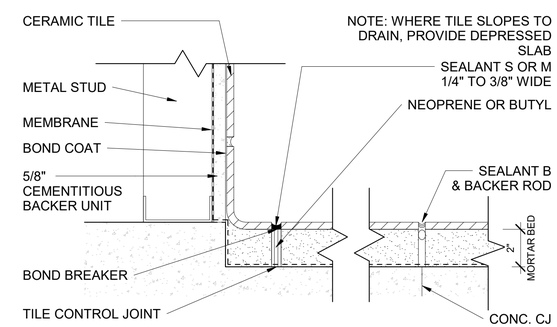

1 A-590 CERAMIC TILE CONTROL JOINT (MJI)
3" = 1'-0"

US Army Corps of Engineers ®

MARK	DESCRIPTION	DATE	APPR

Designed by: MVALENTINE | MZV
Drawn By:
Date: 13 JUL 2020
Rev:
Submittal Status: RTA
Spec No: 2145
Project No:
Reviewed by: O AQUINO
File No: 223-25-0665
File Name: W65A_GTEB
Submitted by: Dr. Matthew Valentine, Chief, Design Branch
Size:22" x 34"
Plot Scale: 1=Plotter
Plot Date:7/13/2020 12:00:53 PM

US ARMY CORPS OF ENGINEERS
SACRAMENTO DISTRICT
1325 J STREET
SACRAMENTO, CA 95814

FT. HUACHUCA AZ

GROUND TRANSPORT EQUIPMENT BUILDING

SEALANT DETAILS

SHEET IDENTIFICATION
A-590

EXTERIOR COLOR / FINISH SCHEDULE

SURFACE	MATERIAL	MANUFACTURER	COLOR	REMARKS
WALLS				
SPLIT-FACE BLOCK			PREMIUM 560, RED	BASALITE WEBSITE: WWW.BASALITE.COM
GROUND FACE BLOCK			STANDARD 377, RED	
VERTICAL SEAM INSULATED METAL PANEL		MBCI	LIGHT STONE	MBCI WEBSITE: WWW.MBCI.COM
DOORS				
FRAMES / STEEL	GALV. STEEL, FACTORY FINISH		PANTONE 18-1027 TPX ARMY COLOR "DARK BROWN"	HEAVY DUTY
WINDOWS				
FRAMES	ANNODIZED ALUMINUM		PANTONE 18-1027 TPX ARMY COLOR "DARK BROWN"	
GLASS			BRONZE TINT GLASS W/ REFLECTIVE COATING	
TRANSLUCENT PANEL		KALWALL	BONE WHITE #21B	WWW.KALWALL.COM
LOUVERS	GALV. STEEL, FACTORY FINISH		PANTONE 18-1027 TPX ARMY COLOR "DARK BROWN"	
GUTTERS / DOWNLEADERS	GALV. STEEL, FACTORY FINISH		PANTONE 18-1027 TPX ARMY COLOR "DARK BROWN"	
ROOF EAVE SOFFIT	METAL		PANTONE 11-0907 TPX ARMY COLOR "ALMOND"	INCLUDING SOFFIT AT ENTRY
ROOFS				
STANDING SEAM METAL		MBCI	LIGHT STONE	MBCI WEBSITE: WWW.MBCI.COM
HANDRAILS	STEEL, GALV.		PANTONE 18-1027 TPX ARMY COLOR "DARK BROWN"	
	ALUMINUM, ANNOD.		PANTONE 18-1027 TPX ARMY COLOR "DARK BROWN"	
MISCELLANEOUS FERROUS METALS	MISCELLANEOUS - WHERE OCCURS		MATCH ADJACENT SURFACE	

GENERAL NOTES:

COLORS LISTED BY MANUFACTURER ARE FOR IDENTIFICATION PURPOSES AND ARE NOT INTENDED TO LIMIT SELECTIONS TO PRODUCTS OF THE MANUFACTURER INDICATED. THE SELECTIONS SERVE TO INDICATE THE COLOR AND QUALITY WHICH THE MANUFACTURERS MUST APPROACH. REFER TO SPECIFICATIONS FOR COMPLETE REQUIREMENTS THE PRODUCT MUST MEET. USE STANDARD COLORS WHENEVER POSSIBLE.

ALL COLORS SELECTED SHALL CONFORM TO THE FT. HUACHUCA INSTALLATION PLANNING STANDARDS.

EXTERIOR NOTES (REMARKS COLUMN):

METAL BUILDING COMPONENTS (IE WINDOW FRAMES, LOUVERS, ETC.) ARE SPECIFIED AS FACTORY COLOR FINISH; THE COLOR INDICATED IN THE EXTERIOR COLOR SCHEDULE IS THE COLOR THAT THE MANUFACTURER'S FINISH COLOR MUST APPROACH.

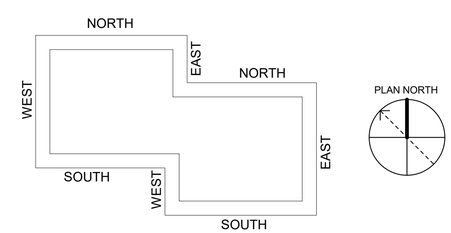

EXTERIOR COLOR / FINISH SCHEDULE
REFERENCE DIAGRAM

US Army Corps of Engineers ®

MARK	DESCRIPTION	DATE	APPR

US ARMY CORPS OF ENGINEERS
SACRAMENTO DISTRICT
1325 J STREET
SACRAMENTO, CA 95814

Designed by: MVALENTINE | Drawn By: MZV
Submittal Status: RTA
Reviewed: O'AQUINO
Submitted by: Mr. Matthew J Mentlitz
Chief, Construction Branch, Section

Date: 13 JUL 2020
Rev:
Spec No: 2145
Project No:
File No: 223-25-0665
File Name: W65A_GTEB
Size:22" x 34"
Plot Scale: 1" = 1'-0"
Plot Date:7/13/2020 12:00:54 PM

FT. HUACHUCA AZ

GROUND TRANSPORT EQUIPMENT BUILDING

EXTERIOR COLOR / FINISH SCHEDULE

SHEET IDENTIFICATION
A-601

BUILDING DOOR SCHEDULE

DOOR NO.	HW	TYPE	DOOR SIZE WIDTH	DOOR SIZE HT	DOOR SIZE THK	DOOR MATL	DOOR FIN	FIRE RATING	FRAME TYPE	FRAME MATL	FRAME FIN	DETAILS HEAD	DETAILS JAMB	DETAILS SILL	COMMENTS
101A	HW-1	FF	5' - 8"	7' - 0"	2"	HM	PT	3/4 HR	3	HM	PT	1/A-521	1/A-521	13/A-520	INSULATED DOOR
101B	HW-1	FF	5' - 8"	7' - 0"	2"	HM	PT	3/4 HR	3	HM	PT	1/A-521	1/A-521	13/A-520	INSULATED DOOR
101C	HW-2	F	3' - 0"	7' - 0"	2"	HM	PT		3	HM	PT	1/A-521	1/A-521	4/A-520	INSULATED DOOR
101D	HW-3	OH	24' - 0"	20' - 0"	2"	STL	PT		2	STL	PT	7/A-521	6/A-521	10/A-520	INSULATED DOOR
101E	HW-3	OH	24' - 0"	20' - 0"	2"	STL	PT		2	STL	PT	7/A-521	6/A-521	10/A-520	INSULATED DOOR
101F	HW-3	OH	24' - 0"	20' - 0"	2"	STL	PT		2	STL	PT	7/A-521	6/A-521	10/A-520	INSULATED DOOR
101G	HW-3	OH	24' - 0"	20' - 0"	2"	STL	PT		2	STL	PT	7/A-521	6/A-521	10/A-520	INSULATED DOOR
101H	HW-2	F	3' - 0"	7' - 0"	2"	HM	PT		3	HM	PT	1/A-521	1/A-521	4/A-520	INSULATED DOOR
101J	HW-2	F	3' - 0"	7' - 0"	2"	HM	PT		3	HM	PT	1/A-521	1/A-521	4/A-520	INSULATED DOOR
101K	HW-3	OH	24' - 0"	20' - 0"	2"	STL	PT		2	STL	PT	7/A-521	6/A-521	10/A-520	INSULATED DOOR
101L	HW-3	OH	24' - 0"	20' - 0"	2"	STL	PT		2	STL	PT	7/A-521	6/A-521	10/A-520	INSULATED DOOR
101M	HW-3	OH	24' - 0"	20' - 0"	2"	STL	PT		2	STL	PT	7/A-521	6/A-521	10/A-520	INSULATED DOOR
101N	HW-3	OH	24' - 0"	20' - 0"	2"	STL	PT		2	STL	PT	7/A-521	6/A-521	10/A-520	INSULATED DOOR
101O	HW-2	F	3' - 0"	7' - 0"	2"	HM	PT		3	HM	PT	1/A-521	1/A-521	4/A-520	INSULATED DOOR
102	HW-4	FF	5' - 8"	7' - 0"	2"	STL	PT		3	STL	PT	1/A-521	1/A-521	7/A-520	INSULATED DOOR
103A	HW-5	FF	5' - 8"	7' - 0"	2"	HM	PT		3	HM	PT	4/A-521	4/A-521	--	
103B	HW-1 OR HW-4	FF	5' - 8"	7' - 0"	2"	STL	PT	3/4 HR	2	STL	PT	1/A-521 OR SIM	1/A-521 OR SIM	2/A-520 OR 4/A-520	FIRST OPTION OMITTED IF OPTION 3 NOT AWARDED 2
103C	HW-2	F	3' - 0"	7' - 0"	2"	HM	PT		3	HM	PT	1/A-521	1/A-521	7/A-520	INSULATED DOOR
103D	HW-2	F	3' - 0"	7' - 0"	2"	HM	PT		3	HM	PT	1/A-521	1/A-521	4/A-520	INSULATED DOOR
104	HW-6	L	3' - 0"	7' - 0"	2"	HM	PT		3	HM	PT	5/A-521	5/A-521	3/A-520	
105	HW-8	F	3' - 0"	7' - 0"	2"	HM	PT	2	1	HM	PT	3/A-521	3/A-521	5/A-520	
106	HW-6	L	3' - 0"	7' - 0"	2"	HM	PT		3	HM	PT	5/A-521	5/A-521	3/A-520	
107	HW-7	F	3' - 0"	7' - 0"	2"	HM	PT		1	HM	PT	3/A-521	3/A-521	5/A-520	
108	HW-10	F	3' - 0"	7' - 0"	2"	HM	PT		3	HM	PT	2/A-521	2/A-521	3/A-520	1" UNDERCUT
109A	HW-11	F	3' - 0"	7' - 0"	2"	HM	PT		3	HM	PT	2/A-521	2/A-521	6/A-520	
109B	HW-2	F	3' - 0"	7' - 0"	2"	STL	PT		3	STL	PT	1/A-521	1/A-521	12/A-520	INSULATED DOOR
109C	HW-21 OR HW-2	F	3' - 0"	7' - 0"	2"	STL	PT		3	STL	PT	1/A-521 OR SIM	1/A-521 OR SIM	2/A-520 OR 4/A-520	FIRST OPTION OMITTED IF OPTION 3 NOT AWARDED 2
110	HW-9	F	3' - 0"	7' - 0"	2"	HM	PT		3	HM	PT	2/A-521	2/A-521	11/A-520	
111	HW-12	F	3' - 0"	7' - 0"	2"	HM	PT		3	HM	PT	3/A-521	3/A-521	11/A-520	
114A	HW-4	FF	5' - 8"	7' - 0"	2"	HM	PT		3	HM	PT	1/A-521	1/A-521	14/A-520	INSULATED DOOR, OPTION ITEM 3
114B	HW-2	F	3' - 0"	7' - 0"	2"	HM	PT		3	HM	PT	1/A-521	1/A-521	14/A-520	INSULATED DOOR, OPTION ITEM 3
114C	HW-2	F	3' - 0"	7' - 0"	2"	HM	PT		3	HM	PT	1/A-521	1/A-521	14/A-520	INSULATED DOOR, OPTION ITEM 3
115	HW-6	L	3' - 0"	7' - 0"	2"	HM	PT	2	1	HM	PT	3/A-521	3/A-521	1/A-520	OPTION ITEM 3
116	HW-6	L	3' - 0"	7' - 0"	2"	HM	PT		1	HM	PT	3/A-521	3/A-521	1/A-520	OPTION ITEM 3
117	HW-13	FF	5' - 8"	7' - 0"	2"	HM	PT		1	HM	PT	3/A-521	3/A-521	9/A-520	OPTION ITEM 3
119	HW-14	V	3' - 4"	6' - 6"	4 1/2"	STL	PT		3	STL	PT	11/A-521	10/A-521	9/A-521	
120	HW-16	F	3' - 0"	7' - 0"	2"	HM	PT		3	HM	PT	1/A-521	1/A-521	4/A-520	INSULATED DOOR
121	HW-17	F	3' - 0"	7' - 0"	2"	HM	PT		3	HM	PT	2/A-521	2/A-521	6/A-520	
122A	HW-18	FF	5' - 8"	7' - 0"	2"	HM	PT		3	HM	PT	2/A-521	2/A-521	--	
122B	HW-3	OH	10' - 0"	10' - 0"	2"	STL	PT	2	2	STL	PT	7/A-521	6/A-521	10/A-520	INSULATED DOOR
123	HW-21	F	3' - 0"	7' - 0"	2"	HM	PT	1-3/4 HR	3	HM	PT	2/A-521	2/A-521	13/A-520	
124	HW-22	F	3' - 0"	7' - 0"	2"	HM	PT		3	HM	PT	1/A-521	1/A-521	4/A-520	INSULATED DOOR
125	HW-2	F	3' - 0"	7' - 0"	2"	HM	PT		3	HM	PT	1/A-521	1/A-521	4/A-520	INSULATED DOOR
126	HW-19	FF	5' - 8"	7' - 0"	2"	HM	PT		1	HM	PT	3/A-521	3/A-521	8/A-520	
127A	HW-21	F	3' - 0"	7' - 0"	2"	HM	PT	3/4 HR	1	HM	PT	2/A-521	2/A-521	8/A-520	
127B	HW-3	OH	10' - 0"	10' - 0"	2"	STL	PT		2	STL	PT	7/A-521	6/A-521	10/A-520	INSULATED DOOR
128A	HW-17	F	3' - 0"	7' - 0"	2"	HM	PT	2	1	HM	PT	2/A-521	2/A-521	8/A-520	
128B	HW-18	FF	5' - 8"	7' - 0"	2"	HM	PT		3	HM	PT	2/A-521	2/A-521	6/A-520	
129	HW-20	F	3' - 0"	7' - 0"	2"	HM	PT		1	HM	PT	3/A-521	3/A-521	11/A-520	
130	HW-20	F	3' - 0"	7' - 0"	2"	HM	PT		1	HM	PT	3/A-521	3/A-521	11/A-520	
131	HW-15	FF	5' - 8"	7' - 0"	2"	STL	PT		3	STL	PT	4/A-521	4/A-521	4/A-520	

ABBREVIATIONS

AL	ALUMINUM
AN	ANODIZED
ALUM	ALUMINUM
DR	DOOR
FIN	FINISH
HM	HOLLOW METAL
HR	HOUR
HW	HARDWARE
MATL	MATERIAL
NO.	NUMBER
PT	PAINT
PR	PAIR
WD	WOOD
ST	STAIN
STL	STEEL

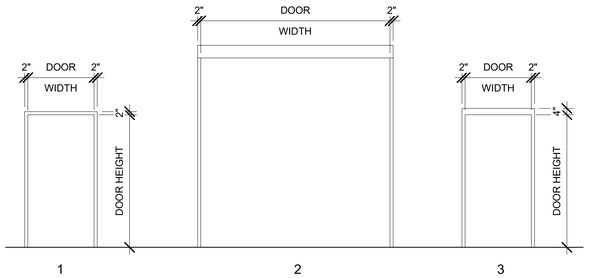

DOOR FRAME TYPES

1/4" = 1'-0"

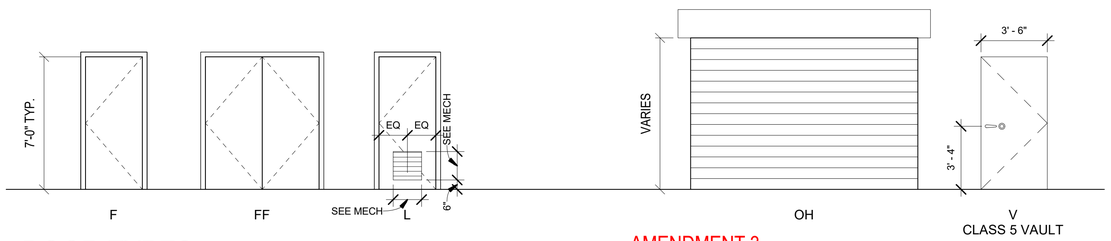

DOOR TYPES

1/4" = 1'-0"

AMENDMENT 3

SCALE: 1/4"=1'-0"

US Army Corps of Engineers ®

MARK	DESCRIPTION	DATE	APPD
2	DOOR AND SIGNAGE REVISION, REFERENCE CLARIFICATIONS	10/16/2020	

Designed by: MVALENTINE | Drawn By: MZV
Submittal Status: R7A
Reviewed by: O'AQUINO
Submitted by: M. Matthew Valentine
Chief, Architectural Design Section

Date: 13 JUL 2020
Spec No: 2145
Rev:
Project No:
File No: 223-25-0665
File Name: W65A_GTEB
Size:22" x 34" Plot Scale: 1" = 1'-0" Plot Date:10/15/2020 4:06:39 PM

US ARMY CORPS OF ENGINEERS
SACRAMENTO DISTRICT
1325 J STREET
SACRAMENTO, CA 95814

FT. HUACHUCA AZ

GROUND TRANSPORT EQUIPMENT BUILDING

DOOR SCHEDULE - GTEB

SHEET IDENTIFICATION
A-620

LOUVER SCHEDULE				
COUNT	TYPE	WIDTH	HEIGHT	SILL HEIGHT
1	L1	3' - 4"	3' - 4"	12' - 0"
1	L2	4' - 0"	3' - 4"	12' - 0"
1	L3	4' - 8"	3' - 4"	12' - 0"
1	L4	4' - 0"	3' - 4"	12' - 0"
2	L5	1' - 4"	1' - 4"	9' - 4"

WINDOW SCHEDULE

COUNT	TYPE	R.O. WIDTH	R.O. HEIGHT	TYPE	FRAME FIN.	FRAME MATL.	GLAZING TYPE	GLAZING THICKNESS	DETAILS HEAD	DETAILS JAMB	DETAILS SILL	HEAD HT.	REMARKS (SEE NOTES BELOW)
14	1	2' - 8"	4' - 0"	Window_Fixed	ANOD	ALUM			2/A-525	2/A-525	1/A-525	7' - 4"	
28	2	5' - 4"	8' - 0"	Window_Fixed	ANOD	ALUM			2/A-525	2/A-525	1/A-525		
1	3	4' - 9 1/2"	3' - 9"	Slider with Trim	ANOD	ALUM			8/A-525	7/A-525	8/A-525	6' - 5"	

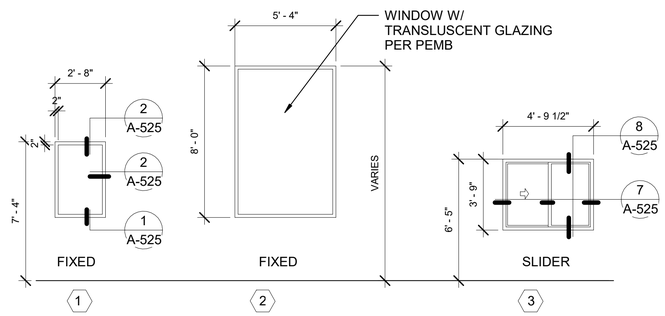

WINDOW TYPE

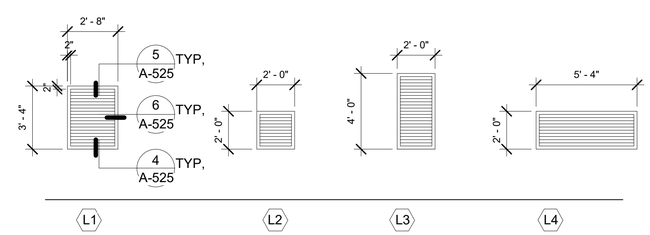

LOUVER TYPE

NOTE: SEE BUILDING ELEVATIONS FOR LOUVER LOCATIONS AND SILL ELEVATIONS, AND MECHANICAL DRAWINGS FOR ADDITIONAL INFORMATION.

US Army Corps of Engineers ®

MARK	DESCRIPTION	DATE	APPD

Designed by: MVALENTINE
Drawn By: MZV
Date: 13 JUL 2020
Rev:
Submittal Status: RTA
Spec No: 2145
Project No:
Reviewed By: O AQUINO
File No: 223-25-0665
File Name: W65A_GTEB
Submitted by: Mr. Matthew Valentine
Chief, Engineering Design Section
Size/2" x 34"
Revision Scale = 1=0"
Plot Date:7/13/2020 12:01:02 PM

US ARMY CORPS OF ENGINEERS
SACRAMENTO DISTRICT
1325 J STREET
SACRAMENTO, CA 95814

FT. HUACHUCA AZ

GROUND TRANSPORT EQUIPMENT BUILDING

WINDOW AND LOUVER SCHEDULE - GTEB

SHEET IDENTIFICATION
A-621

GENERAL NOTE:

POL SCHEDULE OF DOORS TO BE IDENTICAL TO THE HAZMAT BUILDING SCHEDULE OF DOORS

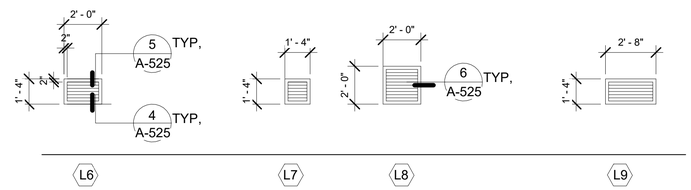

LOUVER TYPE

NOTE: SEE BUILDING ELEVATIONS FOR LOUVER LOCATIONS AND SILL ELEVATIONS, AND MECHANICAL DRAWINGS FOR ADDITIONAL INFORMATION.

LOUVER SCHEDULE				
Count	TYPE	WIDTH	HEIGHT	SILL HEIGHT
1	L6	2' - 0"	1' - 4"	8' - 0"
5	L7	1' - 4"	1' - 4"	8' - 0"
1	L8	2' - 0"	2' - 0"	8' - 0"
1	L9	2' - 8"	1' - 4"	8' - 0"

BUILDING DOOR SCHEDULE															
DOOR NO.	HW	TYPE	DOOR SIZE WIDTH	DOOR SIZE HT	DOOR SIZE THK	DOOR MATL	DOOR FIN	FIRE RATING	FRAME TYPE	FRAME MATL	FRAME FIN	DETAILS HEAD	DETAILS JAMB	DETAILS SILL	COMMENTS
301A	HW-3	OH	20' - 0"	14' - 0"	2"	STL	PT		2	STL	PT	7/A-521	6/A-521	10/A-520	OPTION ITEM 8
301B	HW-2	F	3' - 0"	7' - 0"	1 3/4"	STL	PT		3	STL	PT	1/A-521	6/A-521	4/A-520	OPTION ITEM 8
301C	HW-3	OH	12' - 0"	14' - 0"	2"	STL	PT		2	STL	PT	7/A-521	6/A-521	10/A-520	OPTION ITEM 8
301D	HW-2	F	3' - 0"	7' - 0"	1 3/4"	STL	PT		3	STL	PT	1/A-521	6/A-521	4/A-520	OPTION ITEM 8
301E	HW-3	OH	12' - 0"	14' - 0"	2"	STL	PT		2	STL	PT	7/A-521	6/A-521	10/A-520	OPTION ITEM 8
301F	HW-23	FF	5' - 8"	7' - 0"	1 3/4"	STL	PT		3	STL	PT	1/A-521	6/A-521	4/A-520	OPTION ITEM 8
302	HW-23	FF	5' - 8"	7' - 0"	1 3/4"	STL	PT		3	STL	PT	1/A-521	6/A-521	4/A-520	OPTION ITEM 8
303	HW-23	LL	5' - 8"	7' - 0"	1 3/4"	STL	PT		3	STL	PT	1/A-521	6/A-521	4/A-520	OPTION ITEM 8
304	HW-23	FF	5' - 8"	7' - 0"	1 3/4"	STL	PT		3	STL	PT	1/A-521	6/A-521	4/A-520	OPTION ITEM 8
401A	HW-2	F	3' - 0"	7' - 0"	1 3/4"	STL	PT		3	STL	PT	4/A-521	4/A-521	4/A-520	OPTION ITEMS 6 AND 7
401B	HW-3	OH	12' - 0"	12' - 0"	2"	STL	PT		2	STL	PT	7/A-521	6/A-521	10/A-520	OPTION ITEMS 6 AND 7

ABBREVIATIONS

AL	ALUMINUM
AN	ANODIZED ALUMINUM
DR	DOOR
FIN	FINISH
HM	HOLLOW METAL
HR	HOUR
HW	HARDWARE
MAT'L	MATERIAL
NO.	NUMBER
PT	PAINT
PR	PAIR
WD	WOOD
ST	STAIN

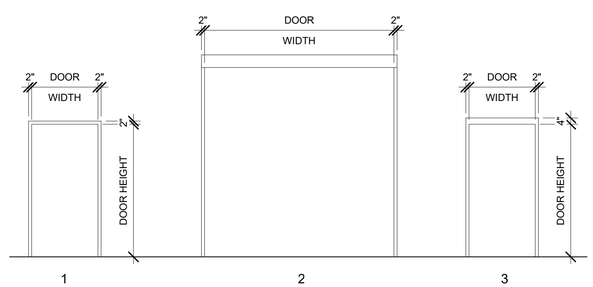

DOOR FRAME TYPES

1/4" = 1'-0"

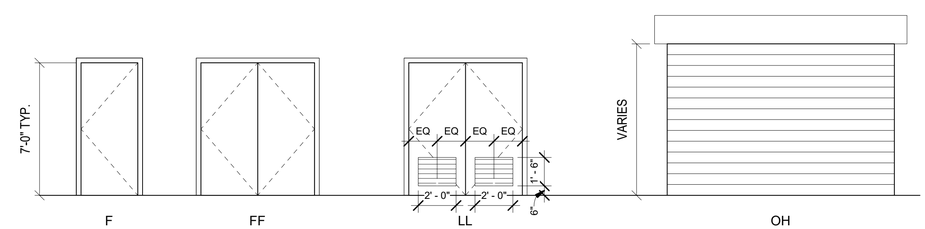

DOOR TYPES

1/4" = 1'-0"

SCALE: 1/4"=1'-0"

US Army Corps of Engineers ®

MARK	DESCRIPTION	DATE	APPD

Designed by: MVALENTINE | Drawn By: MZV
Submittal Status: 100% SUBMITTAL
Reviewed by: AQUINO
Submitted by: Al Matthew Valentine
Chief, Engineering Design Section

Date: 13 JUL 2020
Spec No: 2145
File No: 223-25-0665
Size:22" x 34"
Plot Scale: 1" = 1'-0"
Plot Date:7/13/2020 11:18:00 AM

Rev:
Project No:
File Name: W65A_STOR

US ARMY CORPS OF ENGINEERS
SACRAMENTO DISTRICT
1325 J STREET
SACRAMENTO, CA 95814

FT. HUACHUCA AZ

GROUND TRANSPORT EQUIPMENT BUILDING

DOOR AND LOUVER SCHEDULE (OPTIONS 6, 7, & 8)

SHEET IDENTIFICATION
A-625

SIGN SCHEDULE-PROJECT

LOCATION	LOCATION TYPE DOOR	LOCATION TYPE WALL	SIGN TYPE	PLACEMENT DETAIL	MOUNTING DETAIL	COPY LINE 1*	COPY LINE 2**	COPY LINE 3***	COMMENTS
101A		X	1	3/A-540	4/A-540				
101B		X	1	3/A-540	4/A-540				
103B		X	3	3/A-540	4/A-540				
104	X		7	1/A-540	2/A-540				
105		X	9	5/A-540	6/A-541				
106	X		8	1/A-540	2/A-540				
107		X	9	5/A-540	6/A-541				
108		X	1	3/A-540	4/A-540				
109A		X	1	3/A-540	4/A-540				
110		X	3	3/A-540	4/A-540				
112B		X	1	3/A-540	4/A-540				
112C		X	3	3/A-540	4/A-540				
115	X		8	3/A-540	4/A-540				OPTION ITEM 3
116	X		7	3/A-540	4/A-540				OPTION ITEM 3
117		X	1	3/A-540	4/A-540				OPTION ITEM 3
119		X	1	3/A-540	4/A-540				
120		X	1	3/A-540	6/A-541				
121		X	1	3/A-540	4/A-540				
122A		X	1	3/A-540	4/A-540				
123		X	1	3/A-540	4/A-540				
124		X	1	3/A-540	6/A-541				
127A		X	1	3/A-540	4/A-540				
128A		X	1	3/A-540	4/A-540				
128B		X	1	3/A-540	4/A-540				
129		X	1	3/A-540	4/A-540				
130		X	1	3/A-540	4/A-540				
131		X	1	3/A-540	6/A-541				

GENERAL NOTES:

1. UNLESS OTHERWISE NOTED, SIGNS ARE LOCATED BY DOOR NUMBER. "LOCATION TYPE" REFERS TO LOCATION WITHIN ROOM. "DOOR" INDICATES SIGNAGE MOUNTED ON THE LISTED DOOR. "WALL" INDICATES SIGNAGE MOUNTED ADJACENT TO THE LISTED DOOR. SEE SCHEDULE NOTE BELOW FOR ADDITIONAL CLARIFYING NOTES.

2. SEE SHEETS A-540 AND A-541 FOR SIGN TYPES REFERENCED.

3. MANUFACTURER'S AND PRODUCT LISTED ARE FOR IDENTIFICATION PURPOSES ONLY AND ARE NOT INTENDED TO LIMIT SELECTIONS TO THOSE PRODUCTS INDICATED. AN EXACT MATCH TO THE MANUFACTURER'S COLOR OR PRODUCT IS NOT REQUIRED. THE SELECTIONS SERVE ONLY TO INDICATE THE COLOR WHICH THE CHOSEN MANUFACTURER'S STANDARD MUST APPROACH. FINAL SELECTION SHALL BE APPROVED BY THE CONTRATING OFFICER.

4. SEE LIFE SAFETY PLAN SHEETS F-101 FOR SIGN TYPE 4 (FIRE EXTINGUISHER SIGNS) LOCATIONS AND EGRESS SIGNS.

5. SIGNS BASED ON ASI SINAGE INNOVATIONS "INFORM" PRODUCT. SEE MANUFACTURER INFORMATION THIS SHEET.

6 COORDINATE FINAL SIGN LOCATION WITH CONTRACTING OFFICER.

7. ALL FEC'S SHALL HAVE INDICATION SIGNS HUNG DIRECTLY ABOVE THEM.

8. ALL SIGNAGE SHALL HAVE A CLASS S FIRE RATING.

9. PROVIDE 1 EA. SIGN TYPE E1 PER BLDG, MOUNTED PER 3/A-540 & 6/A-541. 2

MANUFACTURER INFORMATION:
PRODUCT LINE: INFORM
MATERIAL: THERMOFORMED ACRYLIC & OVC ALLOY
PLAQUE THICKNESS: 1/4 INCH
SURFACE TEXTURE: MATTE (NON-GLARE)
MATERIAL COLOR: DARK BROWN
TACTILE LETTERING COLOR: WHITE
BEVEL OPTION: BULLNOSE

SCHEDULE NOTE:
1) * ROOM NUMBERS SHALL BE PROVIDED
2) ** SEE FINISH SCHEDUEL FOR ROOM NAME
3) *** CONTRACTOR SHALL CORDINATE WITH CONTRACTING OFFICER FOR ROOM OCCUPANT'S NAME TITLE ON SIGNAGE
4) SIGNS SHALL HAVE "IN USE" SIGNS FOR ROOM TO INDICATE OCCUPANCY
5) MOUNT SIGN TO NEAREST AVAILABLE WALL, 6" FROM WALL EDGE

AMENDMENT 3

US Army Corps of Engineers ®

MARK	DESCRIPTION	DATE	APPR
2	DOOR AND SIGNAGE REVISION, REFERENCE CLARIFICATIONS	10/16/2020	

US ARMY CORPS OF ENGINEERS
SACRAMENTO DISTRICT
1325 J STREET
SACRAMENTO, CA 95814

Designed by: MVALENTINE | Drawn By: ORA
Submittal Status: RTA
Reviewed by: O'AQUINO
Submitted by: Jill Matthew Valentine
Chief, Contract Drawing Section
Date: 13 JUL 2020
Rev:
Spec No: 2145
Project No:
File No: 223-25-0065
File Name:
Size:22" x 34"
Plot Scale: 1
Plot Date:10/15/2020 4:06:59 PM

FT. HUACHUCA AZ
GROUND TRANSPORT EQUIPMENT BUILDING
SIGN SCHEDULE

SHEET IDENTIFICATION
A-640

SIGN SCHEDULE-PROJECT

LOCATION	LOCATION TYPE DOOR	LOCATION TYPE WALL	SIGN TYPE	PLACEMENT DETAIL	MOUNTING DETAIL	COPY LINE 1*	COPY LINE 2**	COPY LINE 3***	COMMENTS
301B	X		2	1/A-540	2/A-540				OPTION 8
301D	X		2	1/A-540	2/A-540				OPTION 8
301F	X		2	1/A-540	2/A-540				OPTION 8
302	X		2	1/A-540	2/A-540				OPTION 8
303	X		2	1/A-540	2/A-540				OPTION 8
304	X		2	1/A-540	2/A-540				OPTION 8
401A	X		2	1/A-540	2/A-540				OPTION 6 (POL), OPTION 7 (HAZMAT)
TIRE YARD FENCE		X	E2, 11	3/A-540	7/A-540				OPTION 8, MOUNT BOTH SIGNS TO FENCE AS INDICATED ON A-540

GENERAL NOTES:

1. UNLESS OTHERWISE NOTED, SIGNS ARE LOCATED BY DOOR NUMBER. "LOCATION TYPE" REFERS TO LOCATION WITHIN ROOM. "DOOR" INDICATES SIGNAGE MOUNTED ON THE LISTED DOOR. "WALL" INDICATES SIGNAGE MOUNTED ADJACENT TO THE LISTED DOOR. SEE SCHEDULE NOTE BELOW FOR ADDITIONAL CLARIFYING NOTES.

2. SEE SHEETS A-540 AND A-541 FOR SIGN TYPES REFERENCED.

3. MANUFACTURER'S AND PRODUCT LISTED ARE FOR IDENTIFICATION PURPOSES ONLY AND ARE NOT INTENDED TO LIMIT SELECTIONS TO THOSE PRODUCTS INDICATED. AN EXACT MATCH TO THE MANUFACTURER'S COLOR OR PRODUCT IS NOT REQUIRED. THE SELECTIONS SERVE ONLY TO INDICATE THE COLOR WHICH THE CHOSEN MANUFACTURER'S STANDARD MUST APPROACH. FINAL SELECTION SHALL BE APPROVED BY THE CONTRATING OFFICER.

4. SEE LIFE SAFETY PLAN SHEETS F-101 FOR SIGN TYPE 4 (FIRE EXTINGUISHER SIGNS) LOCATIONS AND EGRESS SIGNS.

5. SIGNS BASED ON ASI SINAGE INNOVATIONS "INFORM" PRODUCT. SEE MANUFACTURER INFORMATION THIS SHEET.

6 COORDINATE FINAL SIGN LOCATION WITH CONTRACTING OFFICER.

7. ALL FEC'S SHALL HAVE INDICATION SIGNS HUNG DIRECTLY ABOVE THEM.

8. ALL SIGNAGE SHALL HAVE A CLASS S FIRE RATING.

9. PROVIDE 1 EA. SIGN TYPE E1 PER BLDG, MOUNTED PER 3/A-540 & 6/A-541.

MANUFACTURER INFORMATION:
PRODUCT LINE: INFORM
MATERIAL: THERMOFORMED ACRYLIC & OVC ALLOY
PLAQUE THICKNESS: 1/4 INCH
SURFACE TEXTURE: MATTE (NON-GLARE)
MATERIAL COLOR: DARK BROWN
TACTILE LETTERING COLOR: WHITE
BEVEL OPTION: BULLNOSE

SCHEDULE NOTE:
1) * ROOM NUMBERS SHALL BE PROVIDED
2) ** SEE FINISH SCHEDUEL FOR ROOM NAME
3) *** CONTRACTOR SHALL CORDINATE WITH CONTRACTING OFFICER FOR ROOM OCCUPANT'S NAME TITLE ON SIGNAGE
4) SIGNS SHALL HAVE "IN USE" SIGNS FOR ROOM TO INDICATE OCCUPANCY
5) MOUNT SIGN TO NEAREST AVAILABLE WALL, 6" FROM WALL EDGE

AMENDMENT 3

US Army Corps of Engineers ®

MARK	DESCRIPTION	DATE	APPR
2	DOOR AND SIGNAGE REVISION, REFERENCE CLARIFICATIONS.	16 OCT 2020	

US ARMY CORPS OF ENGINEERS
SACRAMENTO DISTRICT
1325 J STREET
SACRAMENTO, CA 95814

Designed by: MVALENTINE | Drawn By: DRA
Submittal Status: 100% SUBMITTAL
Reviewed by: O'AQUINO
Submitted by: Jill Matthew Valentine
Chief, Architectural Design Section
Date: 13 JUL 2020
Spec No: 2145
File No: 223-25-0065
Size:22" x 34"
Plot Scale: 1
Plot Date:10/15/2020 4:07:38 PM
Rev:
Project No:
File Name:

FT. HUACHUCA AZ
GROUND TRANSPORT EQUIPMENT BUILDING
SIGN SCHEDULE

SHEET IDENTIFICATION
A-641

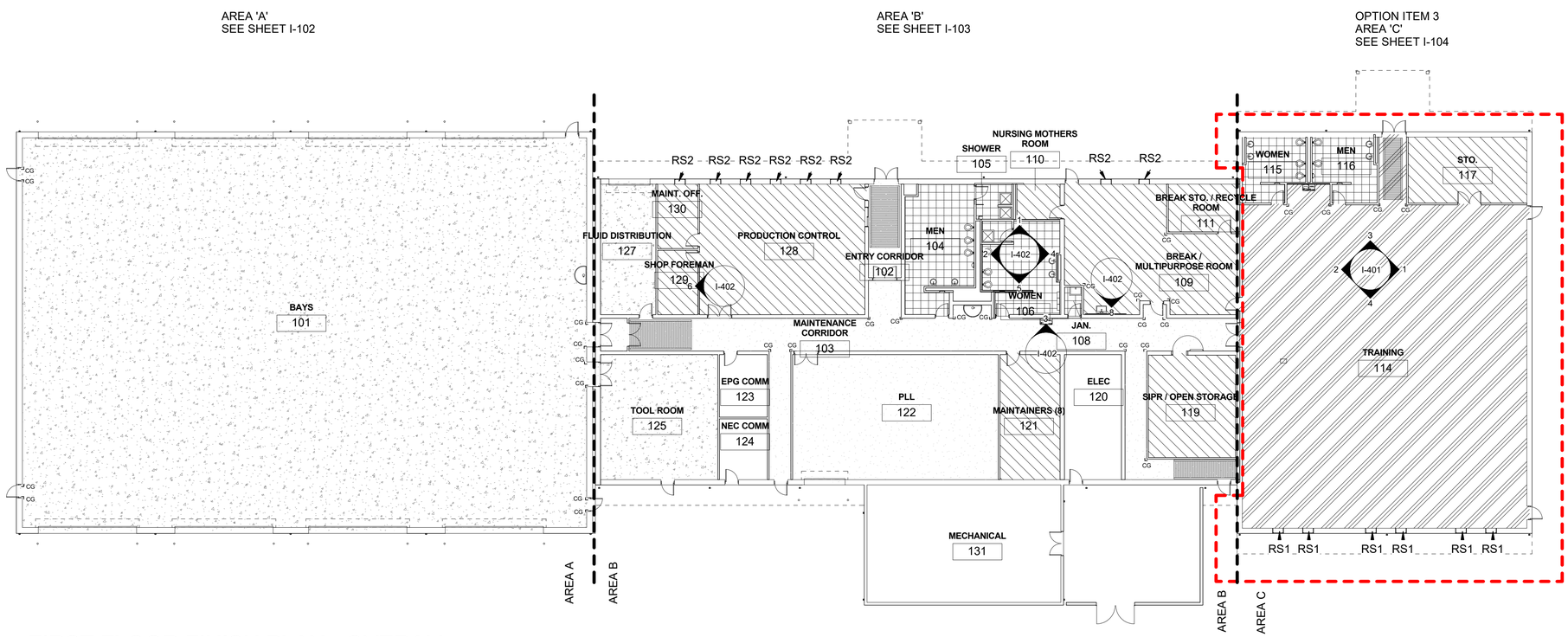

1 I-101 FIRST FLOOR FINISH PLAN - OVERALL

1/16" = 1'-0"

FLOOR FINISH LEGEND

- CARPET
- EPOXY
- LUXURY VINYL TILE
- POLISHED CONCRETE
- PORCELAIN TILE
- RUBBER FLOORING
- SEALED CONCRETE
- RECESSED FOOT GRILLE

FINISH ABBREVIATIONS

CG	CORNER GUARD, SEE DETAIL ON A-580
RS1	BLACKOUT ROLLER SHADES
RS2	LIGHT FILTERING ROLLER SHADES

AREA

'A' 'B' 'C'

PLAN NORTH

0 4 8 16 32

SCALE: 3/32"=1'-0"

US Army Corps of Engineers ®

MARK	DESCRIPTION	DATE	APPR.

Designed by: S KHAN | Drawn By: SK | Date: 13 JUL 2020 | Rev:

Submittal Status: RTA | Spec No: 2145 | Project No:

Reviewed R STEPHENS | File No: 223-25-0665 | File No: W85I_GTEB.rvt

Submitted by: Size:22" x 34" Scale: As indicated

Sal Matthew Valentine Plot Date:7/9/2020 3:27:53 PM

Chief, Design Branch, Design Section

US ARMY CORPS OF ENGINEERS

SACRAMENTO DISTRICT
1325 J STREET
SACRAMENTO, CA 95814

FT. HUACHUCA

AZ

GROUND TRANSPORT EQUIPMENT BUILDING

FIRST FLOOR FINISH PLAN - OVERALL

SHEET IDENTIFICATION

I-101

FINISH ABBREVIATIONS

CG	CORNER GUARD, SEE DETAIL ON A-580
RS1	BLACKOUT ROLLER SHADES
RS2	LIGHT FILTERING ROLLER SHADES

FLOOR FINISH LEGEND

- CARPET
- EPOXY
- LUXURY VINYL TILE
- POLISHED CONCRETE
- PORCELAIN TILE
- RUBBER FLOORING
- SEALED CONCRETE
- RECESSED FOOT GRILLE

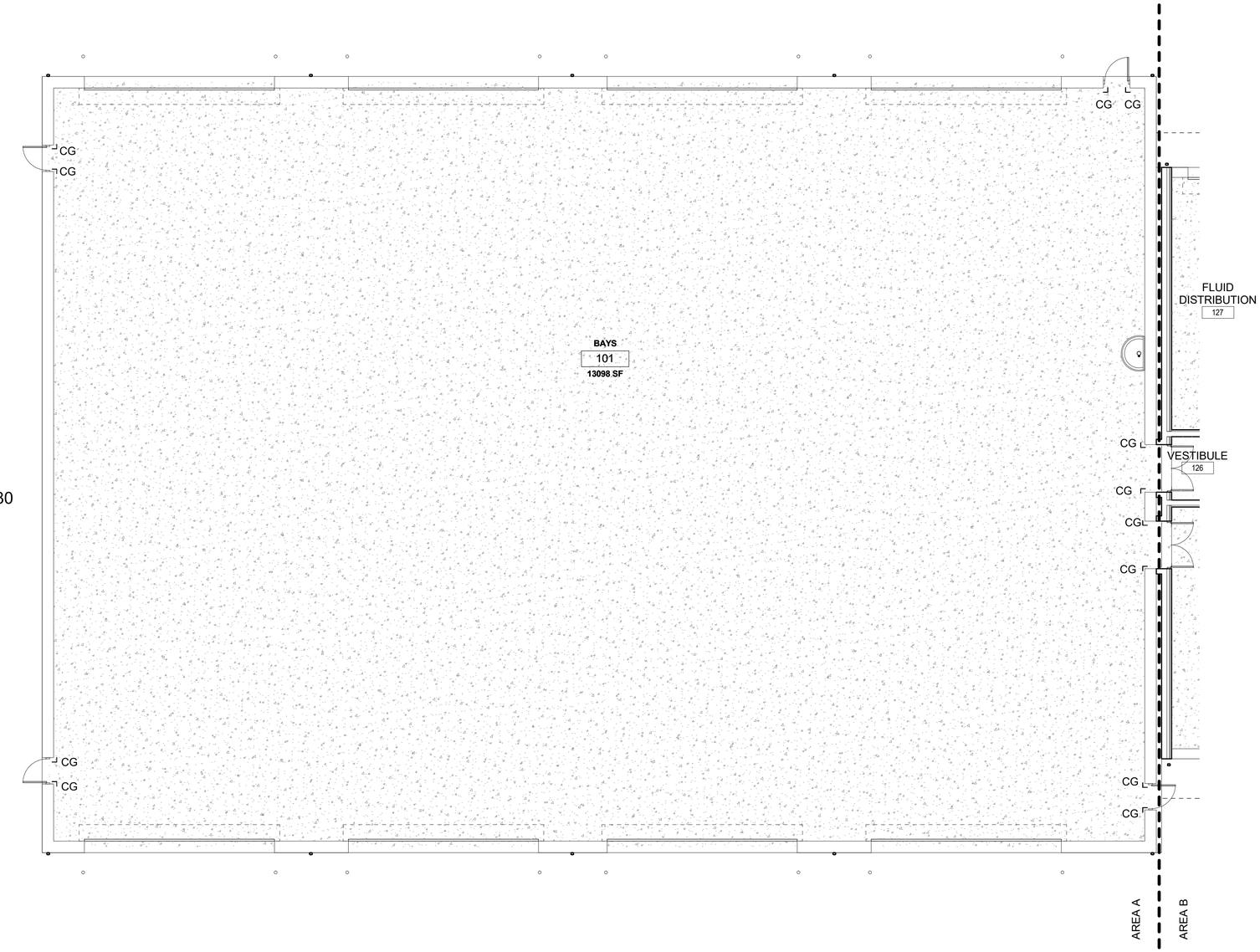

1 / I-102 FIRST FLOOR FINISH PLAN - AREA A

1/8" = 1'-0"

AREA

'A'

PLAN NORTH

16 12 8 4 0 16 32

SCALE: 1/16"=1'-0"

US Army Corps of Engineers ®

MARK	DESCRIPTION	DATE	APPR

US ARMY CORPS OF ENGINEERS

SACRAMENTO DISTRICT
1325 J STREET
SACRAMENTO, CA 95814

Designed by: S KHAN | Drawn By: SK | Date: 13 JUL 2020 | Rev:

Submittal Status: RTA | Spec No: 2145 | Project No:

Reviewed R STEPHENS | File No: 223-25-0665 | File Name: W6II-GTEB.rvt

Submitted by: Size:22" x 34" | Plot Scale: As indicated

Plot Date:7/8/2020 3:28:04 PM

FT. HUACHUCA AZ

GROUND TRANSPORT EQUIPMENT BUILDING

GTEB - FLOOR FINISH PLAN -AREA A

SHEET IDENTIFICATION

I-102

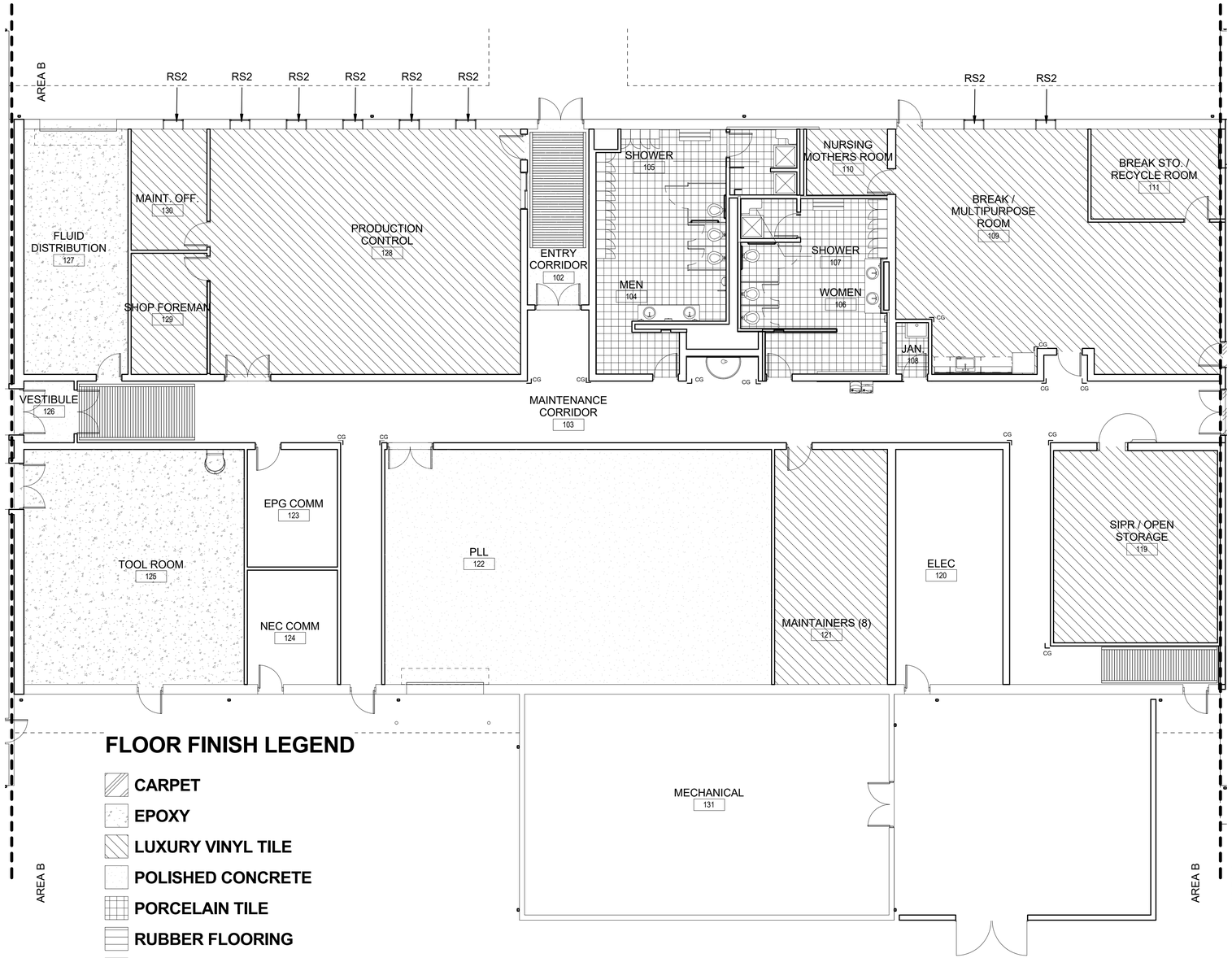

FLOOR FINISH LEGEND

- CARPET
- EPOXY
- LUXURY VINYL TILE
- POLISHED CONCRETE
- PORCELAIN TILE
- RUBBER FLOORING
- SEALED CONCRETE
- RECESSED FOOT GRILLE

FINISH ABBREVIATIONS

CG	CORNER GUARD, SEE DETAIL ON A-580
RS1	BLACKOUT ROLLER SHADES
RS2	LIGHT FILTERING ROLLER SHADES

AREA

'B'

PLAN NORTH

16 12 8 4 0 16 32

SCALE: 1/16"=1'-0"

1 / I-103 FIRST FLOOR FINISH PLAN - AREA B

1/8" = 1'-0"

US Army Corps of Engineers ®

MARK	DESCRIPTION	DATE	APPR

Designed by: S KHAN | Drawn By: SK | Date: 13 JUL 2020 | Rev:

Submittal Status: RTA | Spec No: 2145 | Project No:

Reviewed by: R STEPHENS | File No: 223-25-0665 | File Name: W68_FTEB.rvt

Submitted by: Size:2" x 34" Plot Scale:Unscaled

Plot Date:7/9/2020 3:28:06 PM

US ARMY CORPS OF ENGINEERS

SACRAMENTO DISTRICT
1325 J STREET
SACRAMENTO, CA 95814

FT. HUACHUCA

A2

GROUND TRANSPORT EQUIPMENT BUILDING

GTEB - FLOOR FINISH PLAN - AREA B

SHEET IDENTIFICATION

I-103

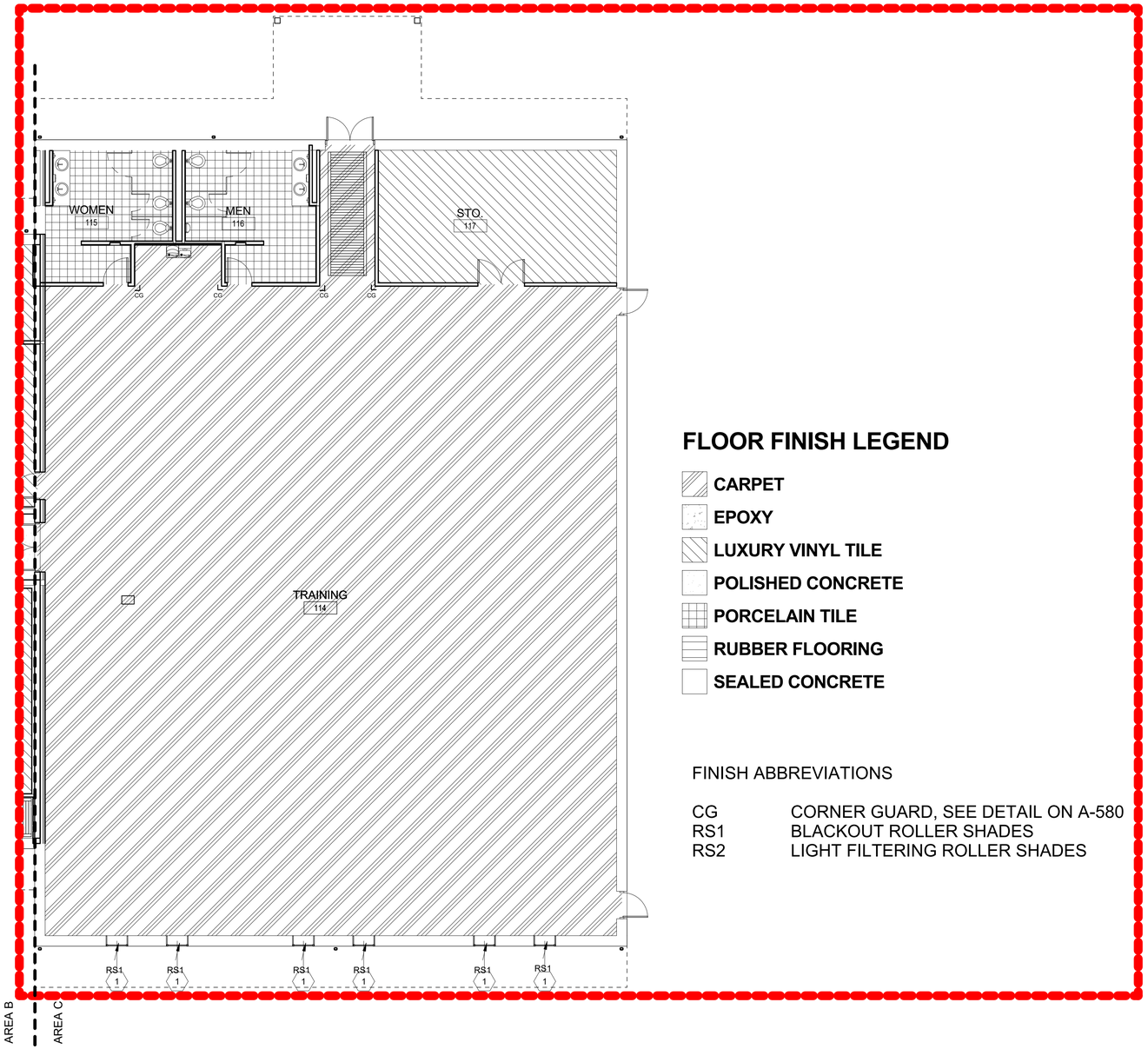

FLOOR FINISH LEGEND

- CARPET
- EPOXY
- LUXURY VINYL TILE
- POLISHED CONCRETE
- PORCELAIN TILE
- RUBBER FLOORING
- SEALED CONCRETE

FINISH ABBREVIATIONS

CG	CORNER GUARD, SEE DETAIL ON A-580
RS1	BLACKOUT ROLLER SHADES
RS2	LIGHT FILTERING ROLLER SHADES

OPTION ITEM 3

1 / I-104 FIRST FLOOR FINISH PLAN - AREA C

1/8" = 1'-0"

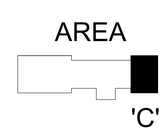

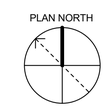

SCALE: 1/16"=1'-0"

US Army Corps of Engineers ®

MARK	DESCRIPTION	DATE	APPD

Designed by: S KHAN
Drawn By: SK
Submittal Status: RTA
Reviewed: R STEPHENS
Submitted by: Al Matthew, Identifier
Date approved by design section
Date: 5/5/08 8/8/8
Rev:
Spec No: 2145
Project No:
File No:
File Name: W85I_GTEB.rvt
Size:22" x 34"
Plot Scale: As indicated
Plot Date:7/8/2020 3:28:08 PM

US ARMY CORPS OF ENGINEERS
SACRAMENTO DISTRICT
1325 J STREET
SACRAMENTO, CA 95814

FT. HUACHUCA AZ

GROUND TRANSPORT EQUIPMENT BUILDING

GTEB - FLOOR FINISH PLAN - AREA C - OPTION 3

SHEET IDENTIFICATION
I-104

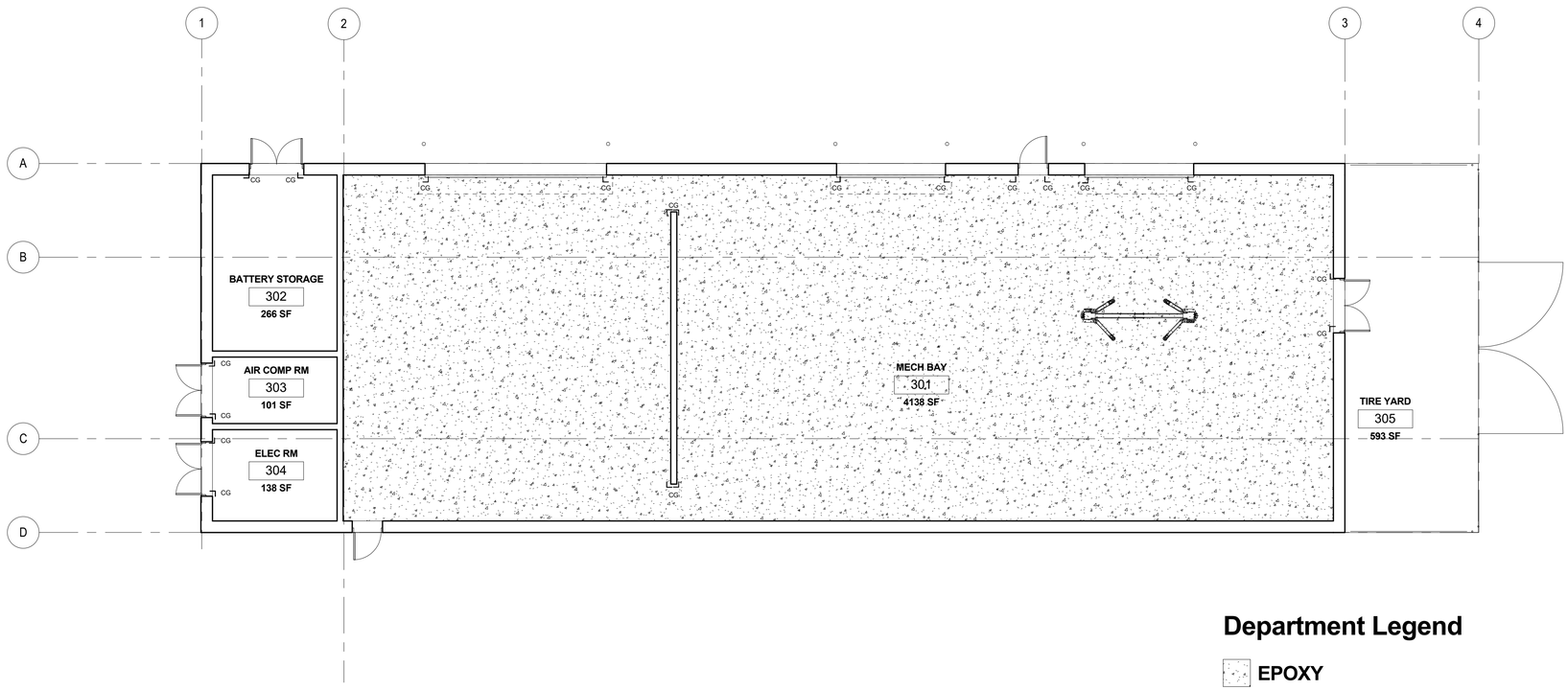

Department Legend

- EPOXY
- SEALED CONCRETE
- CG CORNER GUARD

SCALE: 1/8"=1'-0"

PLAN NORTH

FLOOR FINISH PLAN

1 / I-111

1/8" = 1'-0"

OPTION ITEM 8

US Army Corps of Engineers ®

MARK	DESCRIPTION	DATE	APPD

Designed by: S KHAN
Drawn By: S KHAN
Date: 13 JULY 2020
Rev:
Submittal Status: RTA
Project No: Spec No: 2145
Reviewed by: RSTEPHENS
File No: 223-25-0665
File Name: W8SSTOR_INDEX.RVT
Submitted by: Jill Matthew, Identifire
Size:22" x 34"
Plot Scale: 1" = 1'-0"
Plot Date:7/8/2020 3:23:50 PM
Title approved/signature section

US ARMY CORPS OF ENGINEERS
SACRAMENTO DISTRICT
1325 J STREET
SACRAMENTO, CA 95814

FT. HUACHUCA AZ

GROUND TRANSPORT EQUIPMENT BUILDING

ORG STORAGE - FLOOR FINISH PLAN - OPTION 8

SHEET IDENTIFICATION
I-111

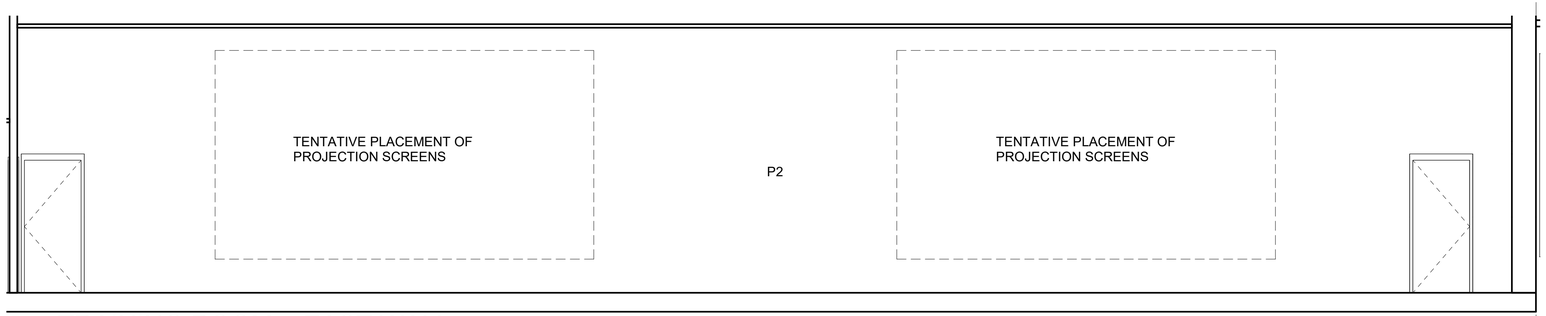

1 I-401 TRAINING ROOM - EAST WALL

1/4" = 1'-0"

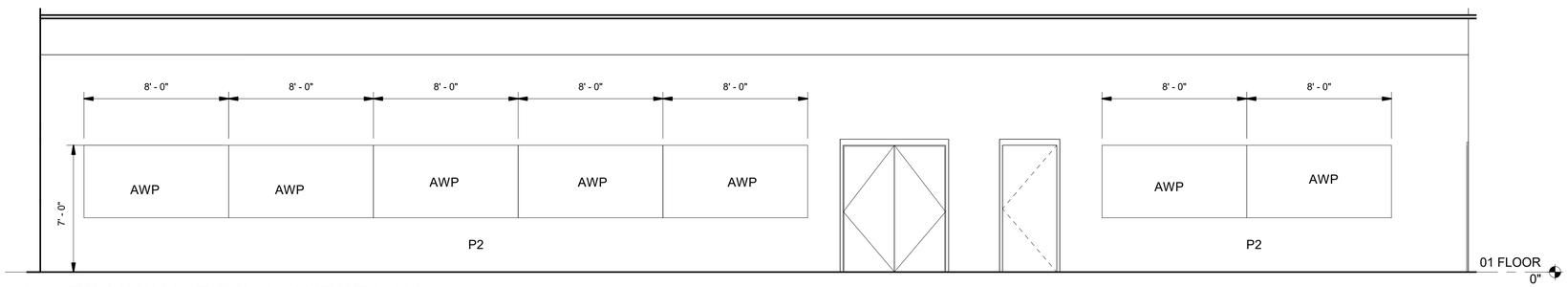

2 I-401 TRAINING ROOM - WEST WALL

1/4" = 1'-0"

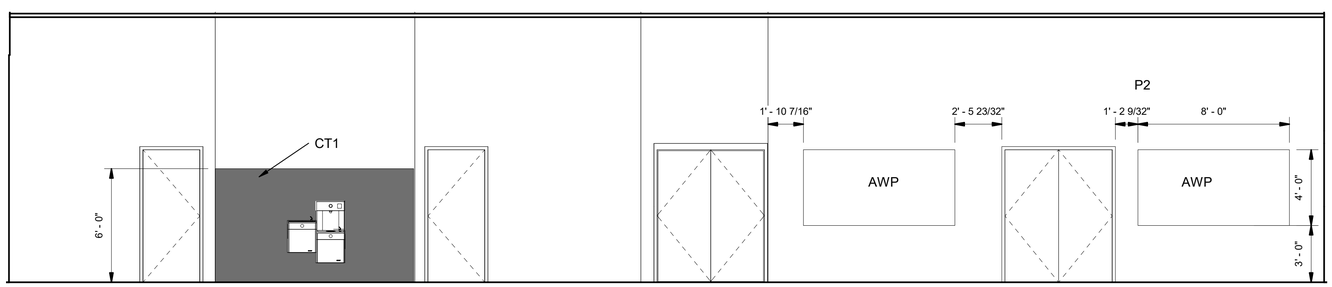

3 I-401 TRAINING ROOM - NORTH WALL

1/4" = 1'-0"

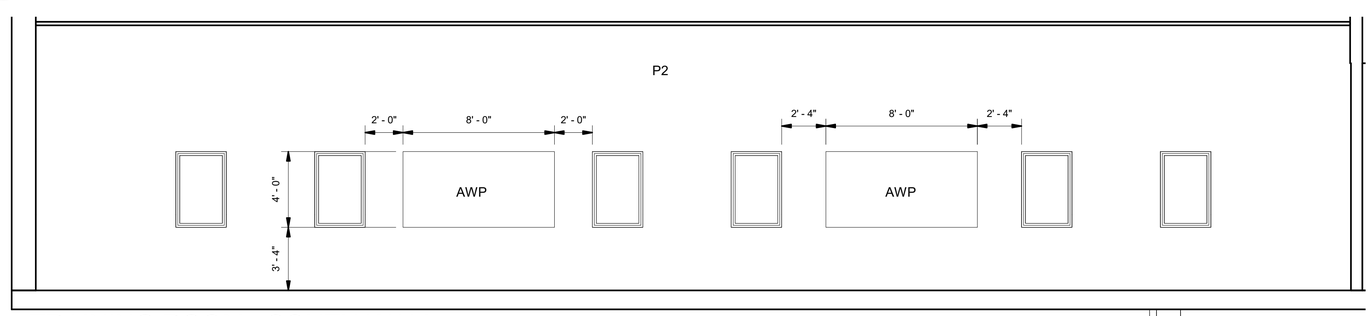

4 I-401 TRAINING ROOM - SOUTH WALL

1/4" = 1'-0"

OPTION ITEM 3

LEGEND

AWP	ACOUSTICAL WALL PANELS 4'-0" X 8-'0"
CT1	CERAMIC TILE
P2	PAINT

US Army Corps of Engineers ®

MARK	DESCRIPTION	DATE	APPR

Designed by: S KHAN
Drawn By: SK
Date: 13 JUL 2020
Rev:
Submittal Status: RTA
Spec No: 2145
Project No:
Reviewed: K STEPHENS
File No: 223-25-0665
File Name: W66J_GTEB.rvt
Submitted by: Dr. Matthew Valentine
Size:22" x 34"
Plot Scale: 1" = 1'-0"
Plot Date:7/8/2020 3:28:11 PM
Chief, Architectural Design Section

US ARMY CORPS OF ENGINEERS
SACRAMENTO DISTRICT
1325 J STREET
SACRAMENTO, CA 95814

FT. HUACHUCA AZ

GROUND TRANSPORT EQUIPMENT BUILDING

GTEB - INTERIOR ELEVATIONS - OPTION 3

SHEET IDENTIFICATION
I-401

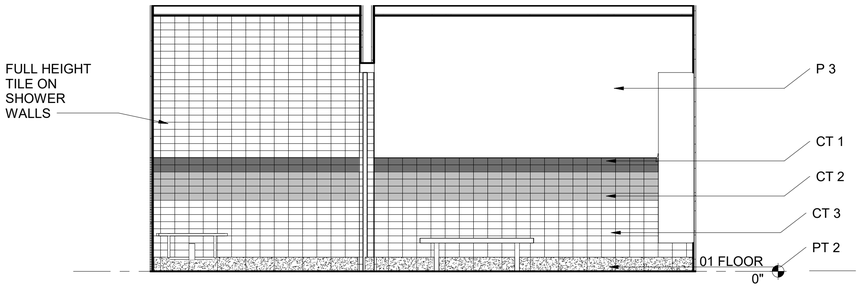

1 I-402 MEN'S RESTROOM - NORTH
3/8" = 1'-0"

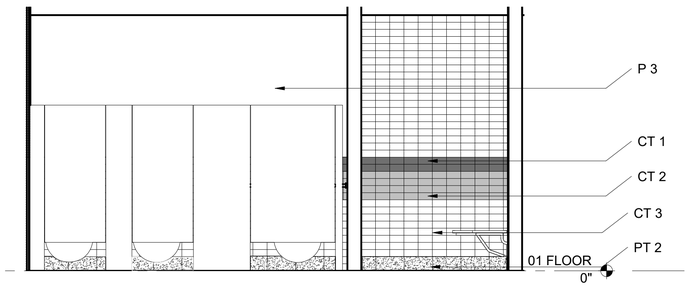

2 I-402 MEN'S RESTROOM - WEST
3/8" = 1'-0"

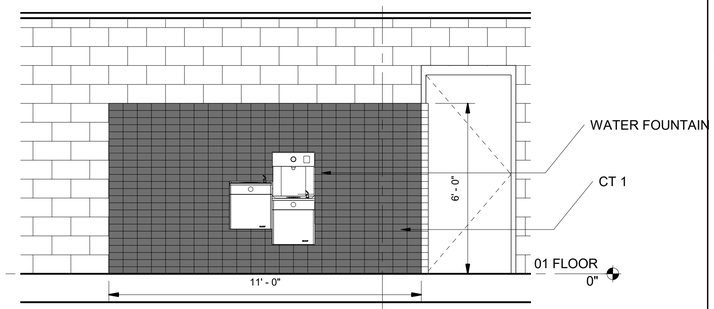

3 I-402 WATER FOUNTAIN
3/8" = 1'-0"

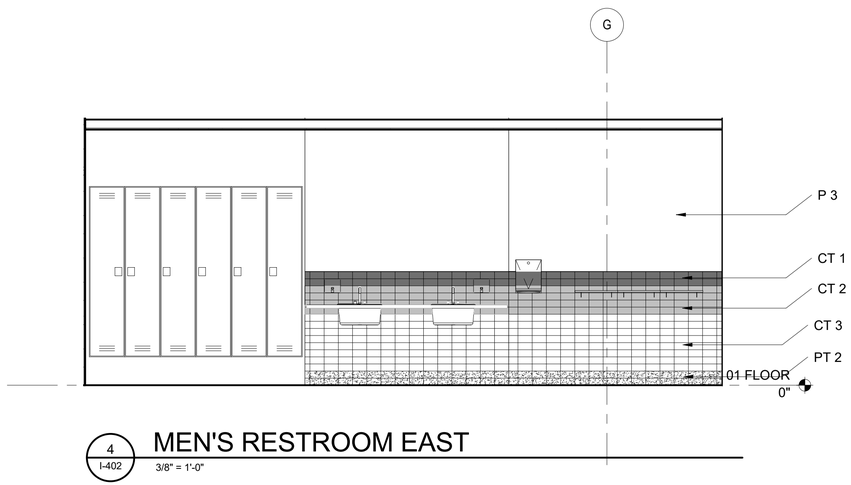

4 I-402 MEN'S RESTROOM EAST
3/8" = 1'-0"

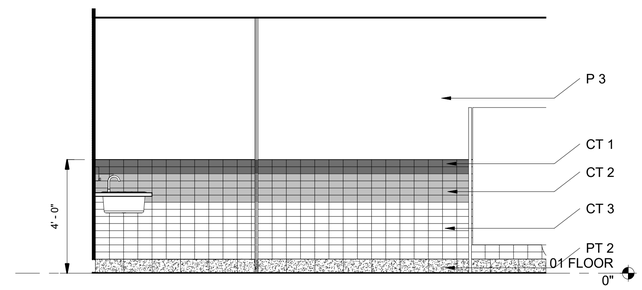

5 I-402 MEN'S RESTROOM - SOUTH
3/8" = 1'-0"

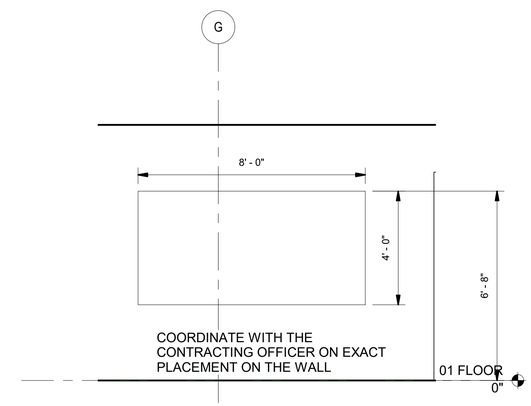

6 I-402 MOUNT., HEIGHT - TACK/WHITE BOARDS
3/8" = 1'-0"

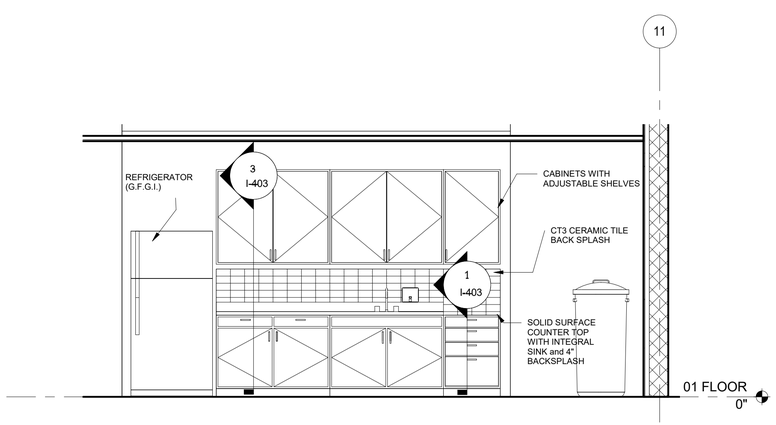

8 I-402 BREAK ROOM
3/8" = 1'-0"

TILE LEGEND

- CT1 - DALTILE, SEMI-GLOSS, AQUA GLOW, 0197, 3" X 6"
- CT2 - DALTILE, SEMI-GLOSS, ICE GRAY, K176, 3" X 6"
- CT3 - DALTILE, SEMI-GLOSS, SUEDE GRAY, 0182, 3" X 6"
- PT2- DALTILE PORTFOLIO, IRON GREY PF06 - 6" X 12"

1. REFER TO SHEET I-610 FOR COLOR.
2. SHOWER WALLS TO HAVE FULL HEIGHT TILES.
3. WALL BEHIND LOCKERS DOES NOT REQUIRE TILES.
4. ALIGN GROUT LINES ON ALL WALL TILES.
5. ALIGHT WALL GROUT LINES WITH FLOOR GROUT LINES.
6. SEMI-GLOSS PAINT P3 ON ALL RESTROOM AND JANITOR'S CLOSET WALLS.

US Army Corps of Engineers ®

MARK	DESCRIPTION	DATE	APPR

Designed by: S KHAN | Drawn By: SK | Date: 13 JUL 2020 | Rev:
Submittal Status: RTA | Spec No: 2145 | Project No:
Reviewed by: K STEPHENS | File No: 223-25-0665 | File Name: W66J_GTEB.rvt
Submitted by: Al Matthew, Valentine | Size:22" x 34" | Plot Scale:Unscaled | Plot Date:7/8/2020 3:28:18 PM
Chief, Design Branch, Design Section

US ARMY CORPS OF ENGINEERS

SACRAMENTO DISTRICT
1325 J STREET
SACRAMENTO, CA 95814

FT. HUACHUCA AZ

GROUND TRANSPORT
EQUIPMENT BUILDING

GTEB - INTERIOR ELEVATIONS

SHEET IDENTIFICATION
I-402

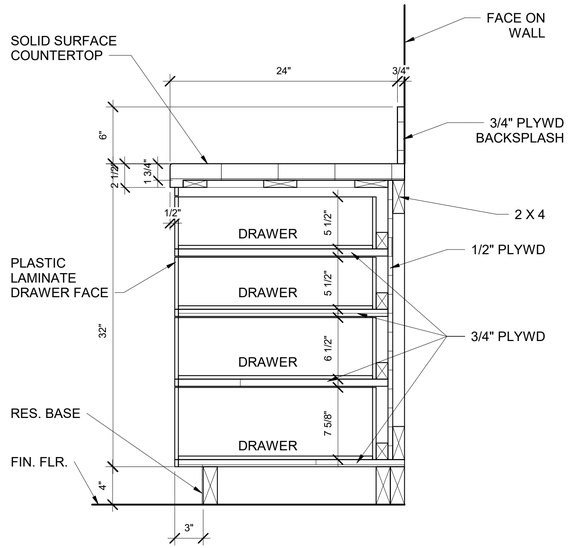

1 I-403 CABINET W/ 4 DRAWERS

1 1/2" = 1'-0"

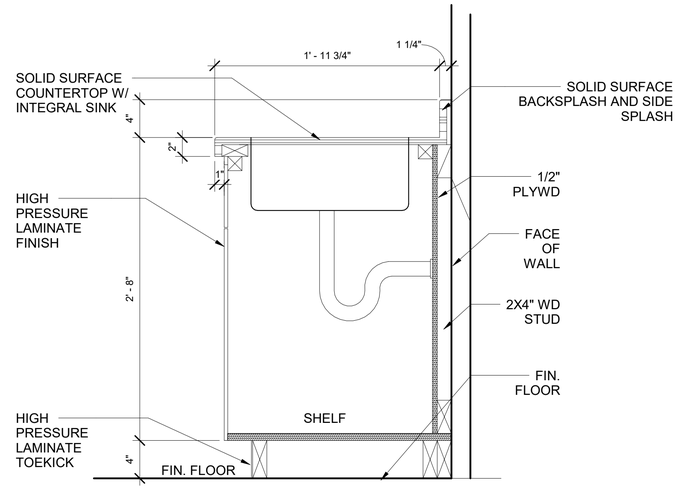

2 I-403 CASEWORK @ SINK, TYP.

1 1/2" = 1'-0"

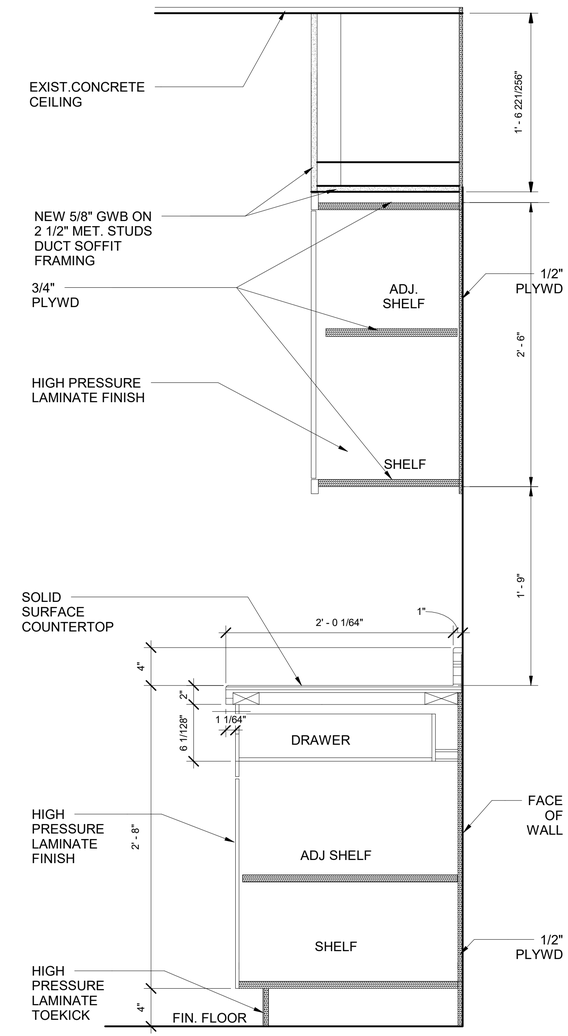

3 I-403 CASEWORK @ KITCHEN, TYP.

1 1/2" = 1'-0"

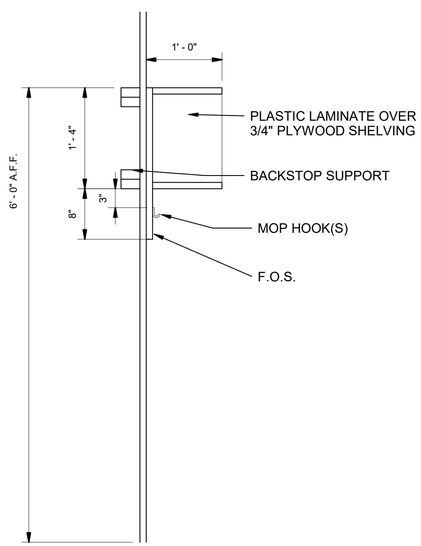

7 I-403 JANITOR SHELVES

1" = 1'-0"

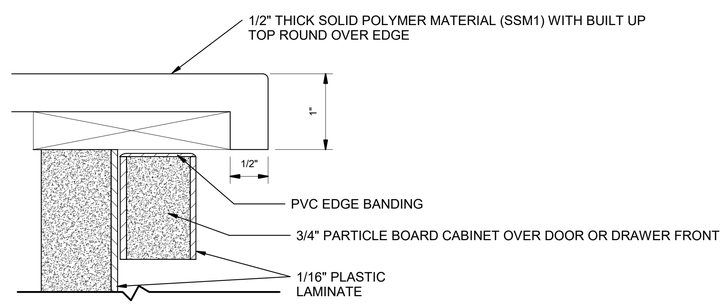

4 I-403 COUNTERTOP EDGE TYPICAL

12" = 1'-0"

GRAPHIC SCALES

0 1/2" 1" 2" 3"
SCALE: 12"=1'-0"

6 4 2 0 6
SCALE: 3"=1'-0"

0 1/2 1 2
SCALE: 1-1/2"=1'-0"

3 2 1 0 3
SCALE: 6"=1'-0"

US Army Corps of Engineers ®

MARK	DESCRIPTION	DATE	APPD

Designed by: S KHAN | Drawn By: SK | Date: 13 JUL 2020 | Rev:
Submittal Status: RTA | Spec No: 2145 | Project No:
Reviewed: R STEPHENS | File No: 223-25-085 | File Name: W91L_GTEB.rvt
Submitted by: Size:22" x 34" Plot Scale:1 Released Plot Date:7/9/2020 3:28:20 PM
Chief, Architecture Section

US ARMY CORPS OF ENGINEERS

SACRAMENTO DISTRICT
1325 J STREET
SACRAMENTO, CA 95814

FT. HUACHUCA AZ

GROUND TRANSPORT EQUIPMENT BUILDING

GTEB - DETAILS

SHEET IDENTIFICATION
I-403

GTEB - INTERIOR FINISH SCHEDULE

ROOM NUMBER	ROOM NAME	FLOOR MATERIAL	BASE	WAINSCOT MATERIAL	WAINSCOT HEIGHT	WALL FINISH NORTH	WALL FINISH EAST	WALL FINISH SOUTH	WALL FINISH WEST	CEILING MAT.	CEILING FIN.	CABINETRY CASEWORK	CABINETRY COUNTERTOP	DOOR/TRIMS	NOTES & REMARKS (SEE NOTES)
101	BAYS	EPOXY	EPOXY	--	--	P1	P1/CT1	P1	P1	OTS	P6	--	--	P4/FF	NOTE 13, 15 16
102	ENTRY CORRIDOR	PC/RFG	RB1	--	--	P1	P1	P1	P1	GWB	--	--	--	P4	--
103	MAINTENANCE CORRIDOR	PC/RFG	RB1	CT1	6'-0"	P1	P1	P1	P1	ACT	--	--	--	P4	NOTE 3, 13
104	MEN	PT1	PT2	CT1,CT2,CT3	4'-0"	P3	P3	P3	P3	GWB	P5	--	--	P4	NOTE 2,6,8,10, 14
105	SHOWER	PT1	PT2	--	--	CTI,CT2,CT3	CT1,CT2,CT3	CT1,CT2,CT3	CT1,CT2,CT3	GWB	P5	--	--	P4	NOTE 1, 2 ,6, 8, 14
106	WOMEN	PT1	PT2	CT1,CT2,CT3	4'-0"	P3	P3	P3	P3	GWB	P5	--	--	P4	NOTE 2,6,8,10,14
107	SHOWER	PT1	PT2	--	--	CTI,CT2,CT3	CT1,CT2,CT3	CT1,CT2,CT3	CT1,CT2,CT3	GWB	P5	--	--	P4	NOTE 1, 2, 6, 8,14
108	JAN.	PT1	PT2	--	--	P3	P3	P3	P3	GWB	P5	--	--	P4	NOTE 6, 8, 11
109	BREAK / MULTIPURPOSE ROOM	LVT	RB1	--	--	P3	P3	P3	P3	ACT/GWB	P5	PLAM	SSM1	P4	NOTE 4,6,8, 9, 12
110	NURSING MOTHERS ROOM	LVT	RB1	--	--	P2	P2	P2	P2	GWB	--	--	--	P4	--
111	BREAK STO. / RECYCLE ROOM	LVT	RB1	--	--	P1	P1	P1	P1	ACT	--	--	--	P4	--
114	TRAINING	CPT	RB2	--	--	P2/AWP	P2/AWP	P2/AWP	P2/AWP	ACT	--	--	--	P4	PROJ, NOTE 3,9,12, 13,17
115	WOMEN	PT1	PT2	CT1,CT2,CT3	4'-0"	P3	P3	P3	P3	GWB	P5	--	--	P4	NOTE 2,6,8,10,14
116	MEN	PT1	PT2	CT1,CT2,CT3	4'-0"	P3	P3	P3	P3	GWB	P5	--	--	P4	NOTE 2,6,8,10,14
117	STO.	LVT	RB1	--	--	P1	P1	P1	P1	ACT	--	--	--	P4	--
119	SIPR / OPEN STORAGE	LVT	RB1	--	--	P1	P1	P1	P1	ACT	P5	--	--	P4	--
120	ELEC	SC	RB1	--	--	P1	P1	P1	P1	OTS	P6	--	--	P4	--
121	MAINTAINERS (8)	LVT	RB1	--	--	P1	P1	P1	P1	ACT	--	--	--	P4	--
122	PLL	PC	RB1	--	--	P1	P1	P1	P1	ACT	--	--	--	P4	--
123	EPG COMM	SC	RB1	--	--	P1	P1	P1	P1	GWB	P5	--	--	P4	--
124	NEC COMM	SC	RB1	--	--	P1	P1	P1	P1	GWB	P5	--	--	P4	--
125	TOOL ROOM	EPOXY	EPOXY	--	--	P1	P1	P1	P1	OTS	P6	--	--	P4	--
126	VESTIBULE	PC	RB1	--	--	P1	P1	P1	P1	ACT	--	--	--	P4	--
127	FLUID DISTRIBUTION	EPOXY	EPOXY	--	--	P1	P1	P1	P1	OTS	P6	--	--	P4	--
128	PRODUCTION CONTROL	LVT	RB1	--	--	P1	P1	P1	P1	ACT	--	--	--	P4	NOTE 9, 12
129	SHOP FOREMAN	LVT	RB1	--	--	P1	P1	P1	P1	ACT	--	--	--	P4	--
130	MAINT. OFF.	LVT	RB1	--	--	P1	P1	P1	P1	ACT	--	--	--	P4	NOTE 9, 12
131	MECHANICAL	SC	RB1	--	--	P1	P1	P1	P1	OTS	P6	--	--	P4	--

FINISH LEGEND

MARK	ITEM	MANUFACTURER	DESCRIPTION	REMARKS/LOCATION
ACT	ACOUSTICAL CEILING TILE	ARMSTRONG	ULTIMATA LAY-IN 1903, 24" X 48" WITH PRELUDE XL 15/16" EXPOSED TEE SYSTEM, WHITE	REFER TO FINISH SCHEDULE AND REFLECTED CEILING PLAN FOR EXACT LOCATIONS
AWP	ACOUSTICAL WALL PANELS	CONWED WALL TECHNOLOGY	RESPOND IR SERIES ACOUSTICAL WALL PANELS, SIZE 4'-0" X 8'-0', WITH DESIGNTEX GAMUT FABRIC, COLOR, ASH 3468-805	REFER TO I-401 FOR EXACT DIMENSION AND MOUNTING HEIGHT
CG	CORNER GUARD	CS GROUP, ACROVYN	SCO-8 - 31/2" LEGS	REFER TO NOTE 3
CPT	CARPET TILE	INTERFACE	CUBIC, STYLE # 1380102500, COLOR 6383 BALANCE, SIZE 50 CM X 50 CM, INSTALLATION: NON-DIRECTIONAL	TRAINING ROOM ONLY
CT1	CERAMIC TILE	DALTILE	SEMI-GLOSS WALL TILE, AQUA GLOW 0197, 3" X 6", STRAIGHT JOINT	INSTALL ON ALL RESTROOM WALLS ABOVE COVED BASE, SEE I-402 FOR EXACT LOCATION
CT2	CERAMIC TILE	DALTILE	SEMI-GLOSS WALL TILE, ICE GRAY K176, 3" X 6" , STRAIGHT JOINT	INSTALL ON ALL RESTROOMS ABOVE COVED BASE, SEE I-402 FOR EXACT LOCATION
CT3	CERAMIC TILE	DALTILE	SEMI-GLOSS WALL TILE, SUEDE GRAY 0182, 3" X 6", STRAIGHT JOINT	INSTALL ON ALL RESTROOM WALLS ABOVE COVED BASE, SEE I-402 FOR EXACT LOCATION
EPOXY	EPOXY FLOORING	TENNANT	3-COAT EPOXY WITH MOISTURE VAPOR PRIMER (MVS), EPOXY COAT (MPE) AND URETHANE TOPCOAT (HTS) WITH INTEGRAL COVE, COLOR: BATTLESHIP GRAY	RESISTANT TO OIL, GREASES AND 100% UV STABLE
G1	GROUT	MAPEI	WARM GRAY 93	GROUT FOR WALL TILES CT1 AND CT3
G2	GROUT	MAPEI	PEARL GRAY 19	GROUT FOR WALL TILE CT2 AND PT1,2
LK	LOCKERS	PENCO PRODUCTS	VANGUARD METAL LOCKERS, 6171V, SINGLE TIER, 72" HEIGHT, 15"X15", COLOR GRAY 028, STANDARD VENTILATION AND DOOR OPTIONS	
LVT	LUXURY VINYL TILE	AMTICO	FUMED OAK, AROW7900, SIZE:6" X 36"	INSTALLATION, ASHLAR
OTS	OPEN TO STRUCTURE			
P1	PAINT, FIELD	SHERWIN WILLIAMS	SW 7631 CITY LOFT	EGGSHELL, FIELD COLOR FOR MOST SPACES OTHER THAN TRAINING ROOM
P2	PAINT, ACCENT	SHERWIN WILLIAMS	SW 7601 DOCKSIDE BLUE	EGGSHELL, ACCENT COLOR FOR TRAINING ROOM
P3	PAINT, FIELD	SHERWIN WILLIAMS	SW 7648 BIG CHILL	SEMI-GLOSS PAINT FOR RESTROOMS AND JANITOR'S CLOSET
P4	PAINT, TRIMS	SHERWIN WILLIAMS	SW 7025 BACKDROP	SEMI-GLOSS, METAL DOORS, FRAMES, TRIM
P5	PAINT, CEILINGS	SHERWIN WILLIAMS	EMINENCE HIGH PERFORMANCE CEILING PAINT	WHITE, ALL CEILINGS SHALL BE FLAT, RESTROOM AND JANITOR'S CLOSET CEILING SHALL BE SEMI-GLOSS
P6	PAINT, HANDRAILS AND ALL EXPOSED INTERIOR STRUCTURE	SHERWIN WILLIAMS	PRO INDUSTRIAL ACRYLIC SEMI-GLOSS, B66-650 SERIES, COLOR CITYSCAPE SW7067	PRIME WITH PRO INDUSTRIAL PRO-CRYL UNIVERSAL PRIMER, B66-310 FIRST.
PC	POLISHED CONCRETE			
PLAM	PLASTIC LAMINATE	FORMICA	5881 CHOCOLATE WARP	
PROJ	PROJECTION SCREEN	DA-LITE OR EQUAL	MOTORIZED, AND RECESSED IN CEILING, MINIMUM 24'-0" WIDE	INSTALL TWO 24'-0" IN THE TRAINING ROOM
PT1	PORCELAIN TILE	DALTILE	PORTFOLIO PORCELAIN, IRON GREY PF06, 12" X 24" FIELD TILE, STRAIGHT JOINT	FIELD TILE FOR RESTROOMS, FOR SHOWERS CUT TILE TO 2" X 2"
PT2	PORCELAIN TILE	DALTILE	PORTFOLIO PORCELAIN, IRON GREY PF06, COVE BASE, P-36C9T, 6" X 12"	COVE BASE TILE FOR RESTROOMS, JANITOR'S CLOSET
RB1	RUBBER BASE	JOHNSONITE	RUBBER 1/8" 101 SEAWEED	4" HIGH FOR LUXURY VINYL TILE
RB2	RUBBER BASE	JOHNSONITE	RUBBER, 1/8" 92, BLUE LAGOON	4" HIGH FOR CARPET IN TRAINING ROOM
RFG	RECESSED FOOT GRILLE	C-S GROUP	PEDITRED G4 ENTRY GRID SYSTEM	RAIL AND FRAME FINISH, MILL. CARPET TREAD INSERTS, 9322 SLATE.REFER TO I-101 FOR EXACT LOCATION
RS1	BLACKOUT ROLLER SHADES	MECHO SYSTEMS	EQUINOX BLACKOUT, 0100 SERIES, GRAPHITE 0117	ROOM DARKENING WITH SHADEOC SYSTEM (FOR TRAINING ROOM)
RS2	LIGHT FILTERING ROLLER SHADES	MECHO SYSTEMS	EUROVEIL BASKET WEAVE 5300 SERIES (5% OPEN), COLOR:SAND 5304	LIGHT FILTERING SHADES FOR ALL EXTERIOR WINDOWS U.O N
SC	SEALER CONCRETE	TENNANT	ECO-HARD-N-SEAL	
SSM1	SOLID SURFACE MATERIAL	CORIAN	SANDALWOOD	ALL COUNTERTOPS
SSM2	SOLID SURFACE MATERIAL	CORIAN	BONE	WINDOWSILLS
TB	TACKBOARD	EGAN	DTB-4848-19TCA, 48" X 48" TACK BOARD	COORDINATE WITH CONTRACTING OFFICER REPRESENTATIVE ON EXACT PLACEMENT
TP	TOILET PARTITION	BRADLEY	FLOOR SUPPORTED RESTROOM PARTITIONS, STAINLESS STEEL, SERIES 500, STANDARD OPTIONS, FINISH: SATIN BRUSHED	
WB	WHITEBOARD	EGAN	DMI9648WHWHI, 96"W X 48"H X 1"D	

INTERIOR DESIGN NOTES:

1. SHOWER AREA WALLS TO RECEIVE FULL HEIGHT CERAMIC TILES.
2. RESTROOM AND SHOWER WALLS TO BE CERAMIC TILE ON MOISTURE RESISTANT GYP. BOARD. CEILINGS TO BE MOISTURE RESISTANT GYP BOARD.
3. INSTALL CORNER GUARDS AT ALL OUTSIDE CORNERS, SHALL BE SURFACE MOUNTED ABOVE BASE MATERIAL.
4. USE CT3 AS BACKSPLASH. PLEASE SEE DETAIL 8, I-402 FOR TYPICALBACKSPLASH LOCATION .
5. PROVIDE AND INSTALL TRANSITION STRIPS WHERE FLOOR MATERIAL CHANGES FROM ONE TYPE TO ANOTHER. REFER TO FINISH SPECIFICATION FOR ADDITIONAL INFORMATION.
6. PROVIDE AND INSTALL ALL NECESSARY BACKING AND BLOCKING AS REQUIRED FOR INSTALLATION OF ALL PLUMBING FIXTURES, CABINETRY, COUNTERTOPS ETC.
7. METAL DOOR AND DOOR FRAMES SHALL BE PAINTED P4.
8. PAINT IN ALL REST ROOMS, SHOWER ROOMS, JANITOR'S CLOSETS, AND BREAK ROOM SHALL BE SEMI-GLOSS.
9. ALL WINDOWS OTHER THAN WORK BAY WINDOWS TO RECEIVE LIGHT FILTERING ROLLER SHADES RS2 EXCEPT TRAINING ROOM WINDOWS WILL HAVE BLACK OUT ROLLER SHADES RS1.
10. PROVIDE STANDARD TOILET ACCESSORIES IN ALL RESTROOMS. SEE A-401 FOR DETAILS.
11. PROVIDE NEW MOP SINK, HOOKS AND ADJUSTABLE SHELVES IN ALL JANITOR'S CLOSETS.
12. ALL WINDOWSILLS SHALL BE SSM2.
13. WALL BEHIND THE WATER FOUNTAIN AND SINK SHALL HAVE 6 FEET HIGH CERAMIC TILE (CT1/G1) FINISH. SEE I-402 FOR MORE DETAILS.
14. PLEASE SEE I-402 FOR TYPICAL TILE WALL PATTERN .
15. PRIME AND PAINT ALL PLYWOOD PANELS IN THE BAY.
16. OVERHEAD DOORS WILL BE FACTORY FINISH, PAINT THE REST OF THE DOORS.
17. PLEASE SEE I-401 FOR ACOUSTICAL WALL PANEL ELEVATIONS.

GENERAL NOTES:

A. MANUFACTURER'S AND PRODUCTS LISTED ARE FOR COLOR, TEXTURE, AND/OR PATTERN REFERENCE ONLY AND ARE NOT INTENDED TO LIMIT SELECTION OF SIMILAR FINISH MATERIALS BY OTHER MANUFACTURERS.
B. INTERIOR CAULKING, FLASHING, AND SEALANTS SHALL BE PAINTED TO MATCH COLOR OF ADJACENT WALLS,
C. ITEMS NOT OTHERWISE IDENTIFIED IN EITHER THE FINISH SCHEDULE OR SPECIFICATIONS SHALL BE PAINTED TO MATCH ADJACENT SURFACE.
D. CONTRACTOR TO PROVIDE 8" X 10" PAINT BRUSH OUTS ON SITE FOR CONTRACTING OFFICERS REPRESENTATIVE'S APPROVAL PRIOR TO FINAL APPLICATION.

OPTION ITEM

US Army Corps of Engineers ®

MARK | DESCRIPTION | DATE | APPR.

Designed by: S KHAN | Drawn By: SK | Date: 13 JUL 2020 | Rev:
Submittal Status: RTA | Spec No: 2145 | Project No:
Reviewed by: K STEPHENS | File No: 223-25-0665 | File Name: W65A_GTEB
Submitted by: /s/ Matthew Valentine, Chief, Architectural Design Section | Size:22" x 34" | Plot Scale: 12" = 1'-0" | Plot Date:7/15/2020 9:52:36 AM

US ARMY CORPS OF ENGINEERS
SACRAMENTO DISTRICT
1325 J STREET
SACRAMENTO, CA 95814

FT. HUACHUCA AZ
GROUND TRANSPORT EQUIPMENT BUILDING
GTEB INTERIOR FINISH SCHEDULE

SHEET IDENTIFICATION
I-610

ORG STORAGE - INTERIOR FINISH SCHEDULE

ROOM NUMBER	ROOM NAME	FLOOR MATERIAL	BASE	WAINSCOT		WALL FINISH				CEILING		CABINETRY		DOOR/TRIMS	NOTES & REMARKS (SEE NOTES)
				MATERIAL	HEIGHT	NORTH	EAST	SOUTH	WEST	MAT.	FIN.	CASEWORK	COUNTERTOP		
301	MECH BAY	EPOXY	RB1	--	--	P1	P1	P1	P1	OTS	P6	--	--	P4	NOTE 1
302	BATTERY STORAGE	SC	RB1	--	--	P1	P1	P1	P1	OTS	P6	--	--	P4	
303	AIR COMP RM	SC	RB1	--	--	P1	P1	P1	P1	OTS	P6	--	--	P4	
304	ELEC RM	SC	RB1	--	--	P1	P1	P1	P1	OTS	P6	--	--	P4	
305	TIRE YARD	SC	RB1	--	--	P1	P1	P1	--	OTS	P6	--	--	P4	

FINISH LEGEND

MARK	ITEM	MANUFACTURER	DESCRIPTION	REMARKS/LOCATION
CG	CORNER GUARD	CS GROUP, ACROVYN	HC- 75C	REFER TO NOTE 1
EPOXY	EPOXY FLOORING	TENNANT	3-COAT EPOXY WITH MOISTURE VAPOR PRIMER (MVS), EPOXY COAT (MPE) AND URETHANE TOPCOAT (HTS) WITH INTEGRAL COVE, COLOR: LIGHT GRAY	RESISTANT TO OIL, GREASES AND 100% UV STABLE
OTS	OPEN TO STRUCTURE			
P1	PAINT, FIELD	SHERWIN WILLIAMS	SW 7631 CITY LOFT	EGGSHELL, FIELD COLOR FOR MOST SPACES OTHER THAN TRAINING ROOM
P2	PAINT, ACCENT	SHERWIN WILLIAMS	SW 7601 DOCKSIDE BLUE	EGGSHELL, ACCENT COLOR FOR TRAINING ROOM
P3	PAINT, ACCENT	SHERWIN WILLIAMS	SW 7648 BIG CHILL	SEMI-GLOSS PAINT FOR RESTROOMS AND JANITORS CLOSET
P4	PAINT, TRIMS	SHERWIN WILLIAMS	SW 7025 BACKDROP	SEMI-GLOSS, METAL DOORS, FRAMES, TRIM
P5	PAINT, CEILINGS	SHERWIN WILLIAMS	EMINENCE HIGH PERFORMANCE CEILING PAINT	CEILING, FLAT WHITE
P6	PAINT, EXPOSED INTERIOR STRUCTURE	SHERWIN WILLIAMS	PRO INDUSTRIAL ACRYLIC SEMI-GLOSS, B66-650 SERIES, COLOR, CITYSCAPE SW 7067	PRIME WITH PRO INDUSTRIAL PRO-CRYL UNIVERSAL PRIMER
RB1	RUBBER BASE	JOHNSONITE	RUBBER 1/8" 168 THUNDER	4" HIGH
SC	SEALED CONCRETE	TENNANT	ECO-HARD-N-SEAL	

INTERIOR DESIGN NOTES:

1. INSTALL CORNER GUARDS AT ALL OUTSIDE CORNERS OF WALLS. SEE I-111 FOR EXACT LOCATIONS.
2. METAL DOOR AND DOOR FRAMES SHALL BE PAINTED P4.

GENERAL NOTES:

A. MANUFACTURER'S AND PRODUCTS LISTED ARE FOR COLOR, TEXTURE, AND/OR PATTERN REFERENCE ONLY AND ARE NOT INTENDED TO LIMIT SELECTION OF SIMILAR FINISH MATERIALS BY OTHER MANUFACTURERS.
B. INTERIOR CAULKING, FLASHING, AND SEALANTS SHALL BE PAINTED TO MATCH COLOR OF ADJACENT WALLS,
C. ITEMS NOT OTHERWISE IDENTIFIED IN EITHER THE FINISH SCHEDULE OR SPECIFICATIONS SHALL BE PAINTED TO MATCH ADJACENT SURFACE.
D. CONCRETE SEALER SHALL BE PREMIUM QUALITY, INDUSTRIAL STRENGTH, NON-YELLOWING, CLEAR SEALER, DESIGNED TO PROTECT AND ENHANCE CONCRETE FLOOR.

OPTION 8

US Army Corps of Engineers ®

MARK	DESCRIPTION	DATE	APPR.

Designed by: S KHAN | Drawn By: SK | Date: 13 JULY 2020 | Rev:
Submittal Status: 100% SUBMITTAL | Spec No: 2145 | Project No:
Reviewed By: R STEPHENS | File No: 223-25-0665 | File Name: W68A_STOR
Submitted by: Al Matthew Valentine, Chief, Architectural Design Section | Size:22" x 34" Plot Scale: 1" = 1'-0" Plot Date:7/9/2020 3:01:30 PM

US ARMY CORPS OF ENGINEERS

SACRAMENTO DISTRICT
1325 J STREET
SACRAMENTO, CA 95814

FT. HUACHUCA

A2

GROUND TRANSPORT EQUIPMENT BUILDING

ORG STORAGE - INTERIOR FINISH SCHEDULE - OPTION 8

SHEET IDENTIFICATION
I-611

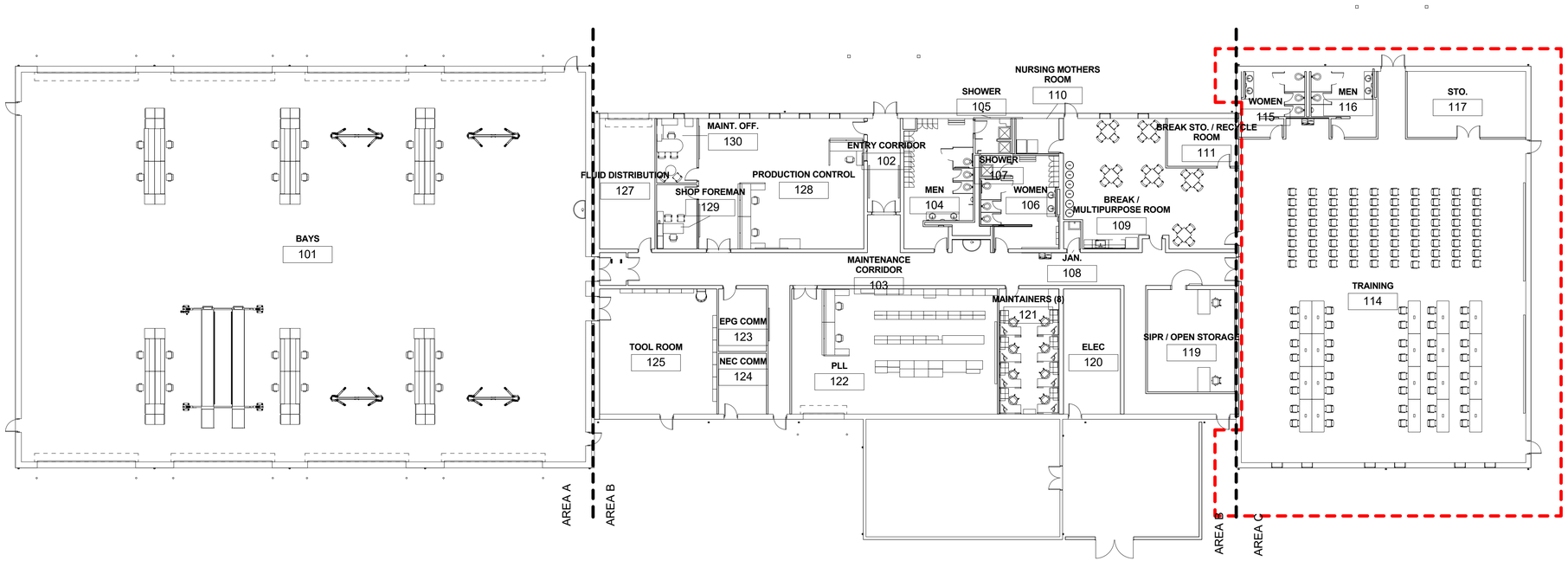

1 IF101 FIRST FLOOR FURNITURE PLAN - OVERALL

1/16" = 1'-0"

AREA

'A' 'B' 'C'

PLAN NORTH

16 12 8 4 0 16 32

SCALE: 1/16"=1'-0"

US Army Corps of Engineers ®

MARK	DESCRIPTION	DATE	APPR.

Designed by: S KHAN | Drawn By: SK | Date: SEP 03 2018 | Rev:

Submittal Status: RTA | Spec No: 2145 | Project No:

Reviewed By: STEPHENS | File No: 223-25-0665 | File Name:

Submitted by: Al Matthew Valentine, Chief Planning & Design Section | Size:22" x 34" Plot Scale: 1" = 1'-0" Plot Date:7/9/2020 3:28:39 PM

US ARMY CORPS OF ENGINEERS

SACRAMENTO DISTRICT
1325 J STREET
SACRAMENTO, CA 95814

Enter Project Name

FIRST FLOOR FURNITRUE PLAN - OVERALL

SHEET IDENTIFICATION
IF101

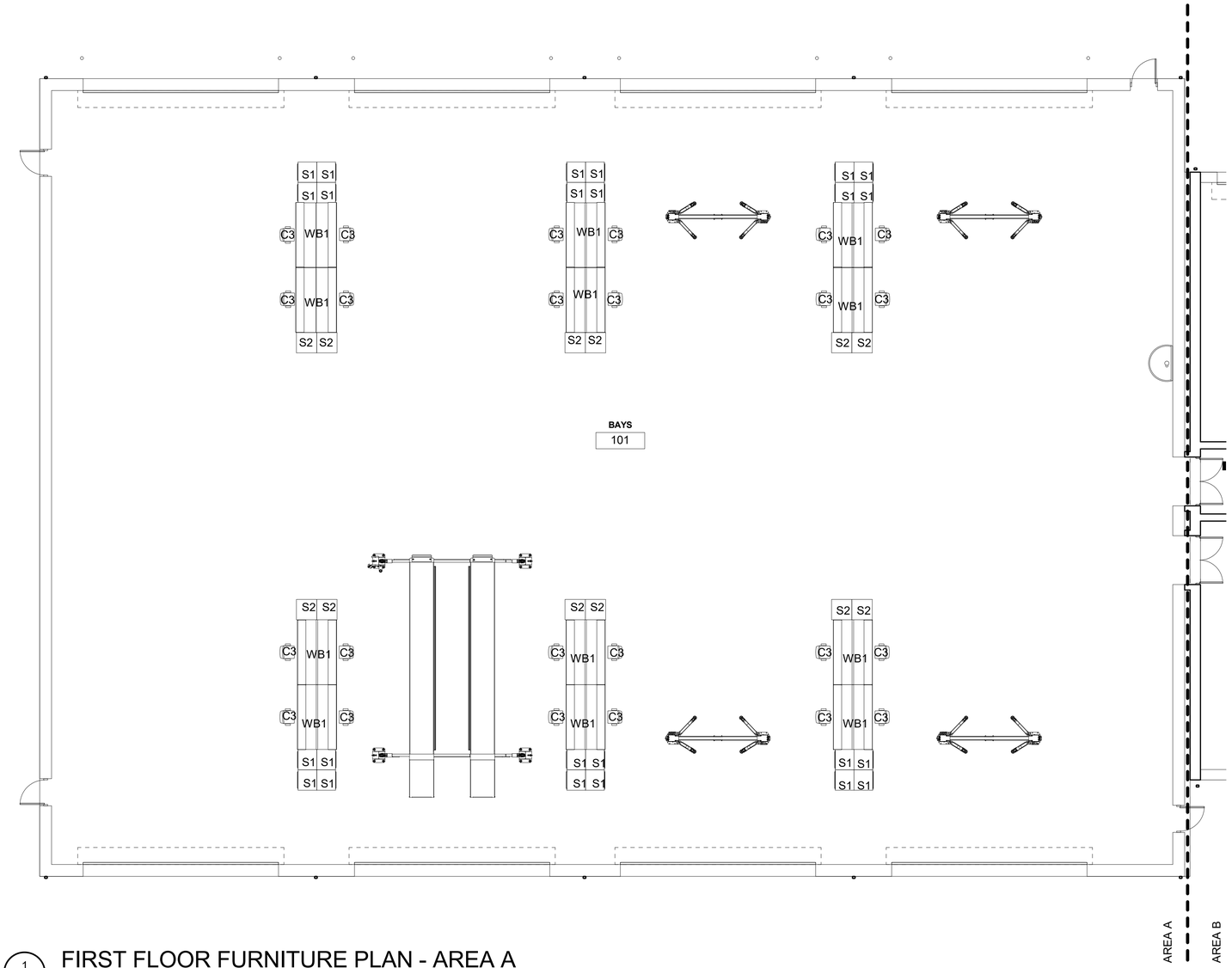

1
IF102

FIRST FLOOR FURNITURE PLAN - AREA A

1/8" = 1'-0"

FURNITURE LEGEND

CHAIRS
C1 TASK CHAIR
C2 SIDE CHAIR
C3 STOOL
C4 MULTI-PURPOSE CHAIR
C5 BREAK ROOM CHAIR
C6 LOUNGE CHAIR WITH OTTOMAN

STORAGE (S5-S18 ARE PART OF CONSTRUCTION CONTRACT)
S1 TOOL STORAGE CARTS, (28" x 30")
S2 COMPUTER CART, (30" x 30")
S3 BOOKSHELF
S4 LATERAL FILES, (36" x 14")
S5 FLOOR MOUNTED SHELVES (36" X 12") - SEE SPEC 10 56 13
S6 FLOOR MOUNTED SHELVES (34" X 12") - SEE SPEC 10 56 13
S7 FLOOR MOUNTED SHELVES (36" X 18") - SEE SPEC 10 56 13
S8 FLOOR MOUNTED SHELVES (36" X 19") - SEE SPEC 10 56 13
S9 FLOOR MOUNTED SHELVES (36" X 15") - SEE SPEC 10 56 13
S10 FLOOR MOUNTED SHELVES (36" X 18.5") - SEE SPEC 10 56 13
S11 FLOOR MOUNTED SHELVES (36" X 24") - SEE SPEC 10 56 13
S12 FLOOR MOUNTED SHELVES (37" X 12") - SEE SPEC 10 56 13
S13 FLOOR MOUNTED SHELVES (38" X 12") - SEE SPEC 10 56 13
S14 FLOOR MOUNTED SHELVES (40" X 12") - SEE SPEC 10 56 13
S15 FLOOR MOUNTED SHELVES (48" X 12") - SEE SPEC 10 56 13
S16 FLOOR MOUNTED SHELVES (48" X 24.5") - SEE SPEC 10 56 13
S17 FLOOR MOUNTED SHELVES (69" X 34") - SEE SPEC 10 56 13
S18 FLOOR MOUNTED SHELVES (121" X 24.5") - SEE SPEC 10 56 13

TABLES
T1 TRAINING TABLE(3'-0" X 8'-0")
T2 TABLE, DIAMETER 30"
T3 PRINTER TABLE, (60" x 30")
T4 BREAK ROOM TABLE (30" X 30")
T5 SIDE TABLE

WORKSTATIONS
WS1 U-SHAPED FOR PRIVATE OFFICE (8'-0" X 6'-0")
WS2 L-SHAPED FOR PRIVATE OFFICE (6'-0" X 9'-0")
WS3 U-SHAPED DESK WITH TRANSACTION SURFACE (6'-0' x 8'-0")
WS4 L-SHAPED FOR MAINTAINERS OFFICE (5'-4" X 6'-0")
WS5 L-SHAPED DESK WITH TRANSACTION SURFACE (5'-6' x 8'-0")
WS6 DESK (3'-0" X 6'-0")

WORKBENCH
WB1 WORKBENCH, 8'0" x 2'6"

VISUAL DISPLAY (PART OF CONSTRUCTION CONTRACT)
V1 PEGBOARD (16'-0" X 8'-0") - SEE SPEC 06 20 00
V2 TACKBOARD (8'-0" X 4'-0") - SEE SPEC 10 11 00
V3 WHITEBOARD (8'-0" X 4'-0") - SEE SPEC 10 11 00
V4 PROJECTION SCREEN - SEE SPEC 10 11 00

MISCELLANEOUS
M1 REFRIGERATOR (35" x 32")
M2 MICROWAVE (16' x 24")
M3 RECYCLING (9'-0" X 2'-0")
M4 COFFEEMAKER
M7 LECTERN

FF&E NOTES
1. FURNITURE PLANS ARE FOR REFERENCE ONLY.

2. ALL MOVEABLE FURNITURE IS GOVERNMENT FURNISHED, GOVERNMENT INSTALLED.

3. VISUAL DISPLAY AND FLOOR MOUNTED SHELVES ARE PART OF THE CONSTRUCTION CONTRACT.

AREA

'A'

PLAN NORTH

16 12 8 4 0 16 32

SCALE: 1/16"=1'-0"

US Army Corps of Engineers ®

MARK	DESCRIPTION	DATE	APPR.

US ARMY CORPS OF ENGINEERS

SACRAMENTO DISTRICT
1325 J STREET
SACRAMENTO, CA 95814

Designed by: S KHAN | Drawn By: SK | Date: 13 JUL 2020 | Rev:
Submittal Status: RTA | Project No: | Spec No: 2145
Reviewed by: K STEPHENS | File No: 223-25-0665 | File Name: WB9_GTEB.rvt
Submitted by: Al Matthew Valentine, Project Manager, Facilities Engineering Section | Size:22" x 34" Plot Scale: As displayed Plot Date:7/9/2020 3:28:50 PM

FT. HUACHUCA

GROUND TRANSPORT EQUIPMENT BUILDING

GTEB - FIRST FLOOR FURNITURE PLAN - AREA A

A2

SHEET IDENTIFICATION
IF102

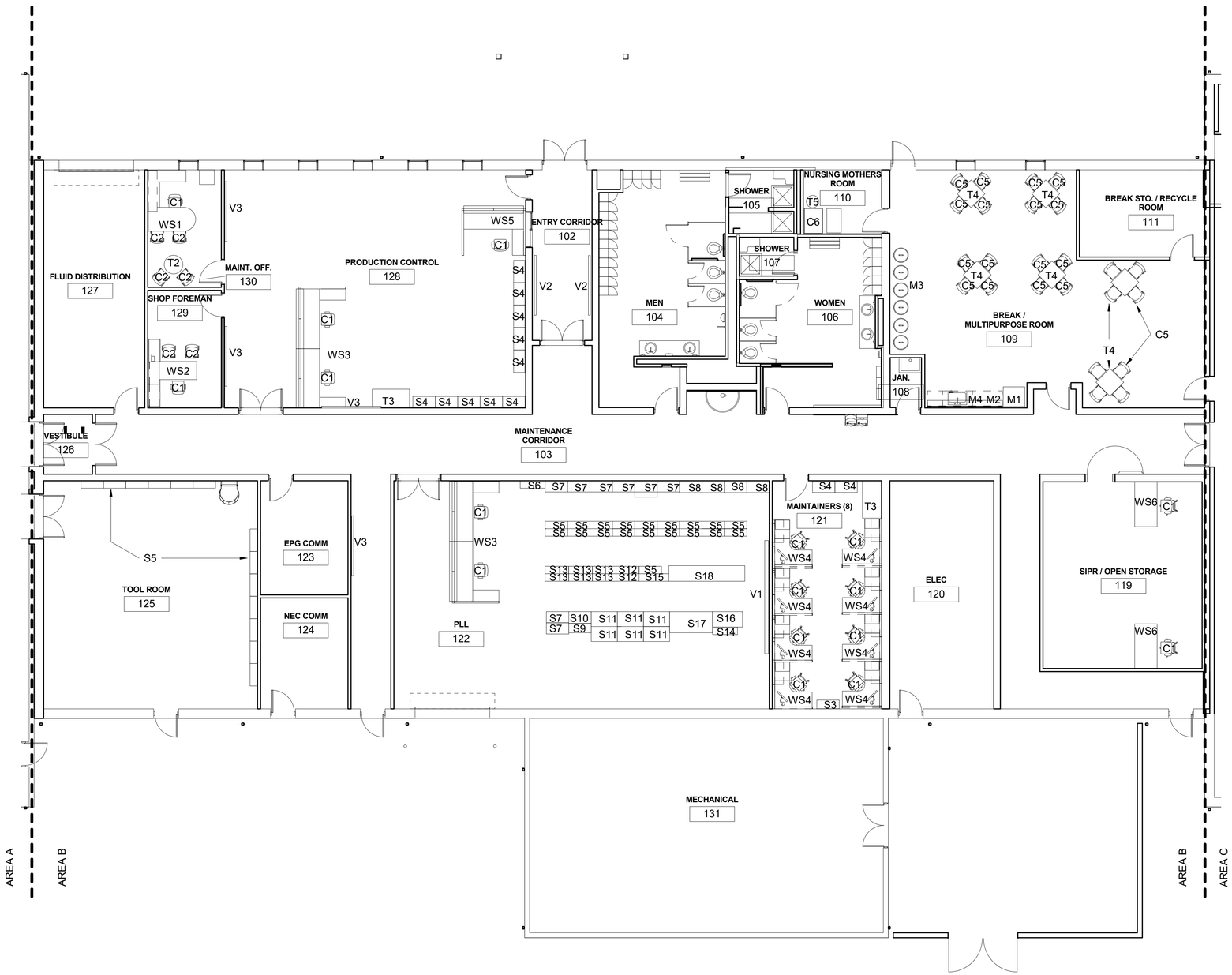

1
IF103

FIRST FLOOR FURNITURE PLAN - AREA B

1/8" = 1'-0"

FURNITURE LEGEND

CHAIRS
- C1 TASK CHAIR
- C2 SIDE CHAIR
- C3 STOOL
- C4 MULTI-PURPOSE CHAIR
- C5 BREAK ROOM CHAIR
- C6 LOUNGE CHAIR WITH OTTOMAN

STORAGE (S5-S18 ARE PART OF CONSTRUCTION CONTRACT)
- S1 TOOL STORAGE CARTS, (28" x 30")
- S2 COMPUTER CART, (30" x 30")
- S3 BOOKSHELF
- S4 LATERAL FILES, (36" x 14")
- S5 FLOOR MOUNTED SHELVES (36" X 12") - SEE SPEC 10 56 13
- S6 FLOOR MOUNTED SHELVES (34" X 12") - SEE SPEC 10 56 13
- S7 FLOOR MOUNTED SHELVES (36" X 18") - SEE SPEC 10 56 13
- S8 FLOOR MOUNTED SHELVES (36" X 19") - SEE SPEC 10 56 13
- S9 FLOOR MOUNTED SHELVES (36" X 15") - SEE SPEC 10 56 13
- S10 FLOOR MOUNTED SHELVES (36" X 18.5") - SEE SPEC 10 56 13
- S11 FLOOR MOUNTED SHELVES (36" X 24") - SEE SPEC 10 56 13
- S12 FLOOR MOUNTED SHELVES (37" X 12") - SEE SPEC 10 56 13
- S13 FLOOR MOUNTED SHELVES (38" X 12") - SEE SPEC 10 56 13
- S14 FLOOR MOUNTED SHELVES (40" X 12") - SEE SPEC 10 56 13
- S15 FLOOR MOUNTED SHELVES (48" X 12") - SEE SPEC 10 56 13
- S16 FLOOR MOUNTED SHELVES (48" X 24.5") - SEE SPEC 10 56 13
- S17 FLOOR MOUNTED SHELVES (69" X 34") - SEE SPEC 10 56 13
- S18 FLOOR MOUNTED SHELVES (121" X 24.5") - SEE SPEC 10 56 13

TABLES
- T1 TRAINING TABLE(3'-0" X 8'-0")
- T2 TABLE, DIAMETER 30"
- T3 PRINTER TABLE, (60" x 30")
- T4 BREAK ROOM TABLE (30" X 30")
- T5 SIDE TABLE

WORKSTATIONS
- WS1 U-SHAPED FOR PRIVATE OFFICE (8'-0" X 6'-0")
- WS2 L-SHAPED FOR PRIVATE OFFICE (6'-0" X 9'-0")
- WS3 U-SHAPED DESK WITH TRANSACTION SURFACE (6'-0' x 8'-0")
- WS4 L-SHAPED FOR MAINTAINERS OFFICE (5'-4" X 6'-0")
- WS5 L-SHAPED DESK WITH TRANSACTION SURFACE (5'-6' x 8'-0")
- WS6 DESK (3'-0" X 6'-0")

WORKBENCH
- WB1 WORKBENCH, 8'0" x 2'6"

VISUAL DISPLAY (PART OF CONSTRUCTION CONTRACT)
- V1 PEGBOARD (16'-0" X 8'-0") - SEE SPEC 06 20 00
- V2 TACKBOARD (8'-0" X 4'-0") - SEE SPEC 10 11 00
- V3 WHITEBOARD (8'-0" X 4'-0") - SEE SPEC 10 11 00
- V4 PROJECTION SCREEN - SEE SPEC 10 11 00

MISCELLANEOUS
- M1 REFRIGERATOR (35" x 32")
- M2 MICROWAVE (16' x 24")
- M3 RECYCLING (9'-0" X 2'-0")
- M4 COFFEEMAKER
- M7 LECTERN

FF&E NOTES
1. FURNITURE PLANS ARE FOR REFERENCE ONLY.

2. ALL MOVEABLE FURNITURE IS GOVERNMENT FURNISHED, GOVERNMENT INSTALLED.

3. VISUAL DISPLAY AND FLOOR MOUNTED SHELVES ARE PART OF THE CONSTRUCTION CONTRACT.

AREA
'B'

PLAN NORTH

16 12 8 4 0 16 32
SCALE: 1/16"=1'-0"

US Army Corps of Engineers ®

MARK	DESCRIPTION	DATE	APPR.

Designed by: S KHAN | Drawn By: SK | Date: 13 JUL 2020 | Rev:
Submittal Status: RTA | Spec No: 2145 | Project No:
Reviewed By: STEPHENS | File No: 223-25-9665 | File Name: W6BI_GTEB.rvt
Submitted by: Al Matthew Valentine, Project Manager, Design Section | Size:22" x 34" Scale: As indicated Plot Date:7/9/2020 3:28:54 PM

US ARMY CORPS OF ENGINEERS
SACRAMENTO DISTRICT
1325 J STREET
SACRAMENTO, CA 95814

FT. HUACHUCA
AZ
GROUND TRANSPORT EQUIPMENT BUILDING
GTEB - FIRST FLOOR FURNITURE PLAN - AREA B

SHEET IDENTIFICATION
IF103

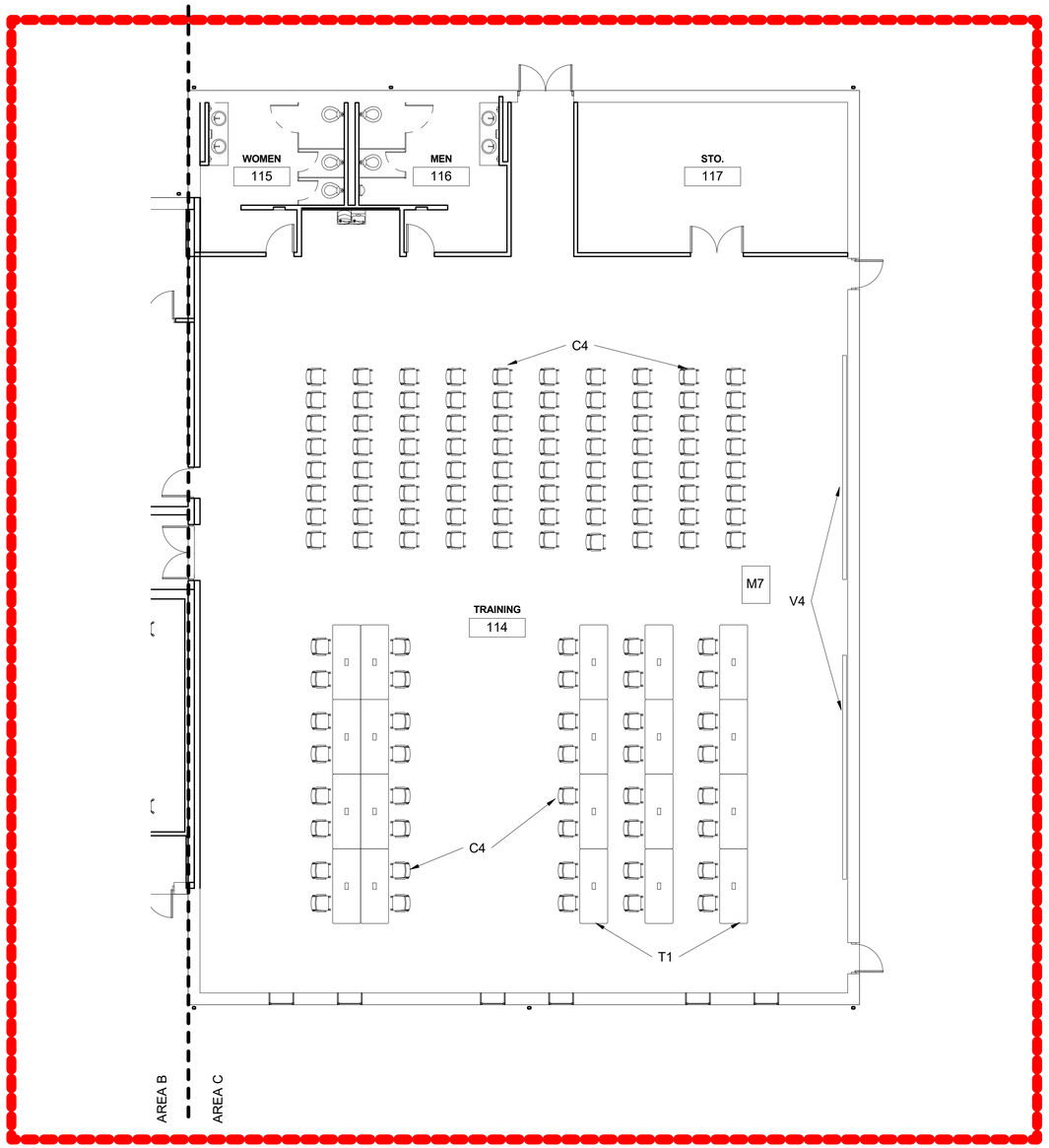

1
IF104
FIRST FLOOR FURNITURE PLAN - AREA C
1/8" = 1'-0"

FURNITURE LEGEND

CHAIRS
C1 TASK CHAIR
C2 SIDE CHAIR
C3 STOOL
C4 MULTI-PURPOSE CHAIR
C5 BREAK ROOM CHAIR
C6 LOUNGE CHAIR WITH OTTOMAN

STORAGE (S5-S18 ARE PART OF CONSTRUCTION CONTRACT)
S1 TOOL STORAGE CARTS, (28" x 30")
S2 COMPUTER CART, (30" x 30")
S3 BOOKSHELF
S4 LATERAL FILES, (36" x 14")
S5 FLOOR MOUNTED SHELVES (36" X 12") - SEE SPEC 10 56 13
S6 FLOOR MOUNTED SHELVES (34" X 12") - SEE SPEC 10 56 13
S7 FLOOR MOUNTED SHELVES (36" X 18") - SEE SPEC 10 56 13
S8 FLOOR MOUNTED SHELVES (36" X 19") - SEE SPEC 10 56 13
S9 FLOOR MOUNTED SHELVES (36" X 15") - SEE SPEC 10 56 13
S10 FLOOR MOUNTED SHELVES (36" X 18.5") - SEE SPEC 10 56 13
S11 FLOOR MOUNTED SHELVES (36" X 24") - SEE SPEC 10 56 13
S12 FLOOR MOUNTED SHELVES (37" X 12") - SEE SPEC 10 56 13
S13 FLOOR MOUNTED SHELVES (38" X 12") - SEE SPEC 10 56 13
S14 FLOOR MOUNTED SHELVES (40" X 12") - SEE SPEC 10 56 13
S15 FLOOR MOUNTED SHELVES (48" X 12") - SEE SPEC 10 56 13
S16 FLOOR MOUNTED SHELVES (48" X 24.5") - SEE SPEC 10 56 13
S17 FLOOR MOUNTED SHELVES (69" X 34") - SEE SPEC 10 56 13
S18 FLOOR MOUNTED SHELVES (121" X 24.5") - SEE SPEC 10 56 13

TABLES
T1 TRAINING TABLE(3'-0" X 8'-0")
T2 TABLE, DIAMETER 30"
T3 PRINTER TABLE, (60" x 30")
T4 BREAK ROOM TABLE (30" X 30")
T5 SIDE TABLE

WORKSTATIONS
WS1 U-SHAPED FOR PRIVATE OFFICE (8'-0" X 6'-0")
WS2 L-SHAPED FOR PRIVATE OFFICE (6'-0" X 9'-0")
WS3 U-SHAPED DESK WITH TRANSACTION SURFACE (6'-0' x 8'-0")
WS4 L-SHAPED FOR MAINTAINERS OFFICE (5'-4" X 6'-0")
WS5 L-SHAPED DESK WITH TRANSACTION SURFACE (5'-6' x 8'-0")
WS6 DESK (3'-0" X 6'-0")

WORKBENCH
WB1 WORKBENCH, 8'0" x 2'6"

VISUAL DISPLAY (PART OF CONSTRUCTION CONTRACT)
V1 PEGBOARD (16'-0" X 8'-0") - SEE SPEC 06 20 00
V2 TACKBOARD (8'-0" X 4'-0") - SEE SPEC 10 11 00
V3 WHITEBOARD (8'-0" X 4'-0") - SEE SPEC 10 11 00
V4 PROJECTION SCREEN - SEE SPEC 10 11 00

MISCELLANEOUS
M1 REFRIGERATOR (35" x 32")
M2 MICROWAVE (16' x 24")
M3 RECYCLING (9'-0" X 2'-0")
M4 COFFEEMAKER
M7 LECTERN

FF&E NOTES
1. FURNITURE PLANS ARE FOR REFERENCE ONLY.

2. ALL MOVEABLE FURNITURE IS GOVERNMENT FURNISHED, GOVERNMENT INSTALLED.

3. VISUAL DISPLAY AND FLOOR MOUNTED SHELVES ARE PART OF THE CONSTRUCTION CONTRACT.

OPTION ITEM 3

PLAN NORTH

16 12 8 4 0 16 32
SCALE: 1/16"=1'-0"

AREA
'C'

US Army Corps of Engineers ®

MARK	DESCRIPTION	DATE	APPR.

Designed by: S KHAN | Drawn By: SK | Date: 13 JUL 2020 | Rev:
Submittal Status: RTA | Spec No: 2145 | Project No:
Reviewed by: K STEPHENS | File No: 223-25-0665 | File Name: W89-GTEB.IVC
Submitted by: Sd Matthew Valentine | Size:22" x 34" | Plot Scale:Scaled
Chief Architectural Design Section | Plot Date:7/9/2020 3:28:58 PM

US ARMY CORPS OF ENGINEERS
SACRAMENTO DISTRICT
1325 J STREET
SACRAMENTO, CA 95814

FT. HUACHUCA
GROUND TRANSPORT EQUIPMENT BUILDING
GTEB - FIRST FLOOR FURNITURE PLAN - AREA C - OPTION 3

A2

SHEET IDENTIFICATION
IF104

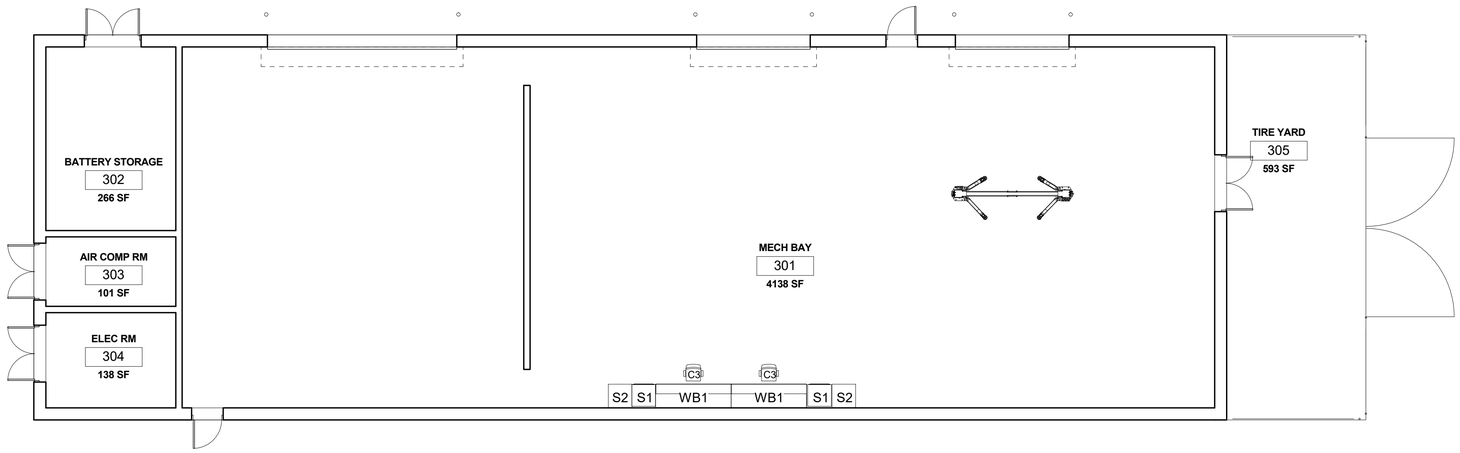

1 IF111 FURNITURE PLAN

1/8" = 1'-0"

FURNITURE LEGEND

CHAIRS
C3 STOOL

STORAGE
S1 TOOL STORAGE CARTS
S2 COMPUTER CART

WORKBENCH
WB1 WORKBENCH

FF&E NOTES
1. FURNITURE PLANS ARE FOR REFERENCE ONLY.

2. ROOM FURNISHINGS ARE GOVERNMENT FURNISHED, GOVERNMENT INSTALLED.

3. ALTHOUGH THE CONSTRUCTION CONTRACTOR IS NOT RESPONSIBLE FOR PROCUREMENT OF FURNITURE, HOWEVER, THE CONTRACTOR SHALL ASSURE COORDINATION WITH STRUCTURAL INTERIOR DESIGN, BUILDING STRUCTURE AND BUILDING UTILITIES INLUDING LIGHT SWITCHES, ELECTRICAL OUTLETS, COMMUNICATION OUTLETS, AND UTILITY PANELS WITHIN THE FURNISHED SPACE.

8 6 4 2 0 8 16

SCALE: 1/8"=1'-0"

PLAN NORTH

OPTION ITEM 8

US Army Corps of Engineers ®

MARK	DESCRIPTION	DATE	APPR

Designed by: S KHAN
Drawn By: S KHAN
Date: 13 JULY 2020
Rev:
Submittal Status: RTA
Spec No: 2145
Project No:
Reviewed By: R STEPHENS
File No: 223-25-0665
File Name: WebSTOR_IND.RVT
Submitted by: Jo Matthew Valentine
Chief, Architectural Design Section
Size:22" x 34"
Plot Scale: As displayed
Plot Date:7/8/2020 3:23:53 PM

US ARMY CORPS OF ENGINEERS
SACRAMENTO DISTRICT
1325 J STREET
SACRAMENTO, CA 95814

FT. HUACHUCA

GROUND TRANSPORT EQUIPMENT BUILDING

ORG STORAGE - FURNITURE PLAN - OPTION 8

A2

SHEET IDENTIFICATION
IF111

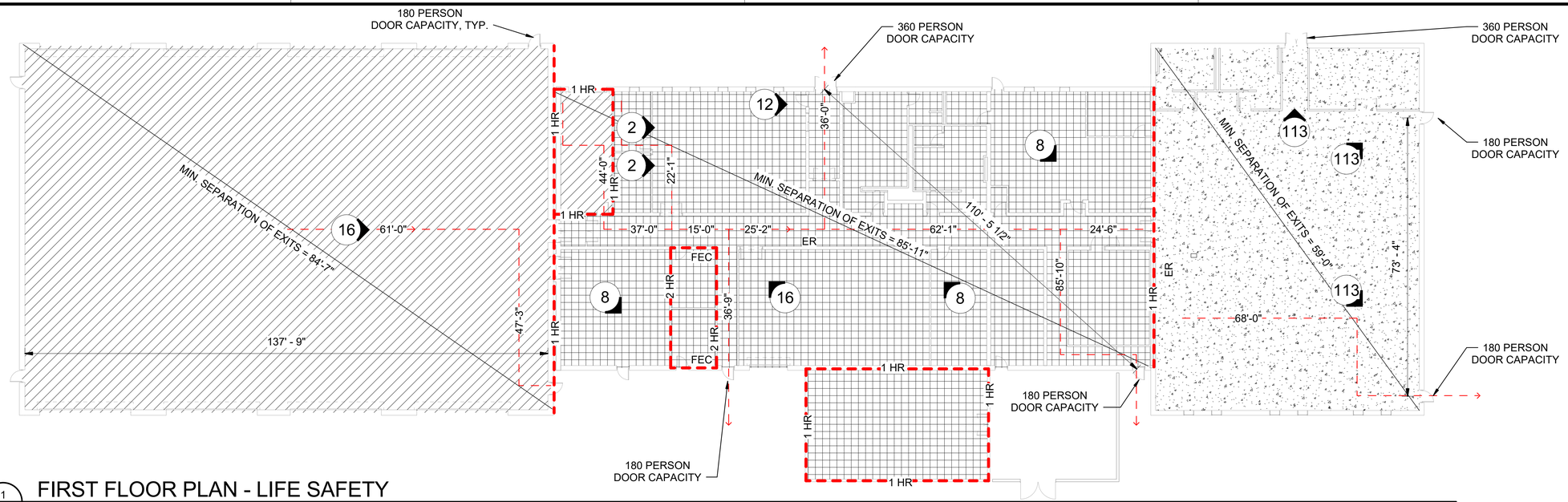

1 F-101 FIRST FLOOR PLAN - LIFE SAFETY

1/16" = 1'-0"

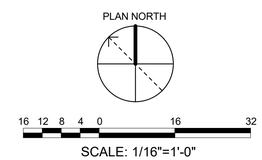

LIFE SAFETY OCCUPANCY GROUP

ASSEMBLY A-3

BUSINESS

STORAGE S-1

ER- EGRESS ROUTE SIGN

FEC- FIRE EXTINGUISHER CABINET

OCCUPANCY:
ASSEMBLY, A-3 — IBC, 303.4
ASSEMBLY — NFPA 101, 6.1.2.1

BUSINESS, B — IBC, 304.1
BUSINESS — NFPA 101, 6.1.11.1

STORAGE, S-1 — IBC, 311.2
STORAGE — NFPA 101, 6.1.13.1

HAZARD:
LIGHT HAZARD: OFFICES — UFC 3-600-01, APPX. B-1.1
ORDINARY HAZARD: REPAIR GARAGES — UFC 3-600-01, APPX. B-1.2
LIGHT (LOW) HAZARD FOR CLASS A FIRES — NFPA 10, 5.4.1.1
CLASS A: ORDINARY COMBUSTIBLE MATERIALS — NFPA 10, 5.2.1

OCCUPANT LOAD FACTOR
ASSEMBLY: LESS CONCENTRATED: 15 SF/PERSON — NFPA 101, TABLE 7.3.1.2
ACTUAL: 5,094 SF / 15 SF / PERSON = 340 PERSONS

BUSINESS: 100 SF/PERSON — NFPA 101, TABLE 7.3.1.2
ACTUAL: 11,451 SF / 100 SF / PERSON = 115 PERSONS

STORAGE: MAXIMUM PROBABLE OCCUPANTS — NFPA 101, TABLE 7.3.1.2
ACTUAL: 16 PERSONS

EGRESS CAPACITY
LEVEL COMPONENTS: 0.2 INCHES/PERSON — NFPA 101, TABLE 7.3.3.1
EXITING ASSEMBLY: .22 INCHES/PERSON — NFPA 101, 13.2.3.2
REQUIRED (WORST CASE CONDITION): 340 PERSONS X .2 INCHES / PERSON = 68" EGRESS WIDTH REQUIRED
ACTUAL: 108" EGRESS WIDTH PROVIDED (540 PERSONS)

NUMBER OF EXITS
ASSEMBLY: AT LEAST 2 — NFPA 101, 12.2.4
ACTUAL: 3

BUSINESS: AT LEAST 2 — NFPA 101, 38.2.4
ACTUAL: 3

STORAGE: ONE PER SECTION — NFPA 101, 42.2.4
ACTUAL: 5 TOTAL FROM BAYS

WIDTH OF DOORS
32 INCHES — NFPA 101, 7.2.1.2.4
ACTUAL: ALL EGRESS DOORS MINIMUM 36" WIDE

CAPACITY OF DOORS
0.2 INCHES/PERSON — NFPA 101, TABLE 7.3.3.1
REQUIRED: 414 PERSONS X .2 INCHES / PERSON = 82.8" EGRESS WIDTH REQUIRED
ACTUAL: 432" EGRESS WIDTH PROVIDED (2,160 PERSONS)

DISTANCE TO EXIT
ASSEMBLY: 250', WITH SPRINKLER — NFPA 101, 12.2.6.2 (1)
ACTUAL: 68'-0", FROM TRAINING 114

BUSINESS: 300', WITH SPRINKLER — NFPA 101, 38.2.6.3
ACTUAL: 131'-8", FROM MAINTAINERS 121

STORAGE: 400', WITH SPRINKLER — NFPA 101, TABLE 42.2.6
ACTUAL: 108'-2", FROM BAYS 101

COMMON PATH OF TRAVEL
ASSEMBLY: 20', ANY NUMBER OF OCCUPANTS — NFPA 101, 12.2.5.1.2
ACTUAL: 0'

BUSINESS: 100', WITH SPRINKLER — NFPA 101, 38.2.5.3.1
ACTUAL: 96'-0", FROM TOOL ROOM 125

STORAGE: 100', WITH SPRINKLER — NFPA 101, TABLE 42.2.5
ACTUAL: 0'

DEAD END CORRIDORS
ASSEMBLY: 20' — NFPA 101, 12.2.5.1.3
ACTUAL: 0'

BUSINESS: 50', WITH SPRINKLER — NFPA 101, 38.2.5.2.1
ACTUAL: 37", IN MAINTENANCE CORRIDOR 107

STORAGE: 100', WITH SPRINKLER — NFPA 101, TABLE 42.2.5
ACTUAL: 0'

MINIMUM WIDTH OF CORRIDORS
ASSEMBLY: AT LEAST 44" — NFPA 101, 12.2.3.8
ACTUAL: 72"

BUSINESS: 44", FOR 50 OR MORE — NFPA 101, 38.2.3.2
ACTUAL: AT LEAST 72"

STORAGE: 36" (NFPA 101, 7.3.4.1) — NFPA 101, 42.2.3
ACTUAL: NO CORRIDORS / DOES NOT APPLY

MEANS OF EGRESS COMMENTS
ASSEMBLY: PER NFPA 7.2.4.1.2, HORIZONTAL EXITS SHALL BE PERMITTED TO BE SUBSTITUTED FOR OTHER EXITS WHERE THE TOTAL EGRESS CAPACITY AND THE TOTAL NUMBER OF THE OTHER EXITS (STAIRS, RAMPS, DOOR OPENINGS LEADING OUTSIDE THE BUILDING) IS NOT LESS THAN HALF THAT REQUIRED FOR THE ENTIRE AREA OF THE BUILDING OR CONNECTED BUILDINGS, AND PROVIDED THAT NONE OF THE OTHER EXITS IS A HORIZONTAL EXIT.

FIRE EXTINGUISHER CABINETS:
PROVIDE FECS AT COMM. ROOMS 123 & 124 PER 9/A-580.

FIRE RATED WALL
RATING INDICATED ON PLAN

0 EXPECTED MAXIMUM OCCUPANT EGRESS, PER NFPA 101

US Army Corps of Engineers ®

MARK	DESCRIPTION	DATE	APPR

Designed by: MVALENTINE Drawn By: MZV
Date: 13 JUL 2020
Rev:
Submittal Status: RTA
Spec No: 2145
Project No:
Reviewed by: O AQUINO
File No: 223-25-0665
File Name: W69A_GTEB
Submitted by: M. Matthew Valentine Chief, Engineering Design Section
Size/Z# x 34" Scale: 1/16" = 1'-0" Plot Date:7/13/2020 12:01:05 PM

US ARMY CORPS OF ENGINEERS
SACRAMENTO DISTRICT
1325 J STREET
SACRAMENTO, CA 95814

FT. HUACHUCA AZ

GROUND TRANSPORT EQUIPMENT BUILDING

GTEB LIFE SAFETY - FIRST FLOOR

SHEET IDENTIFICATION
F-101

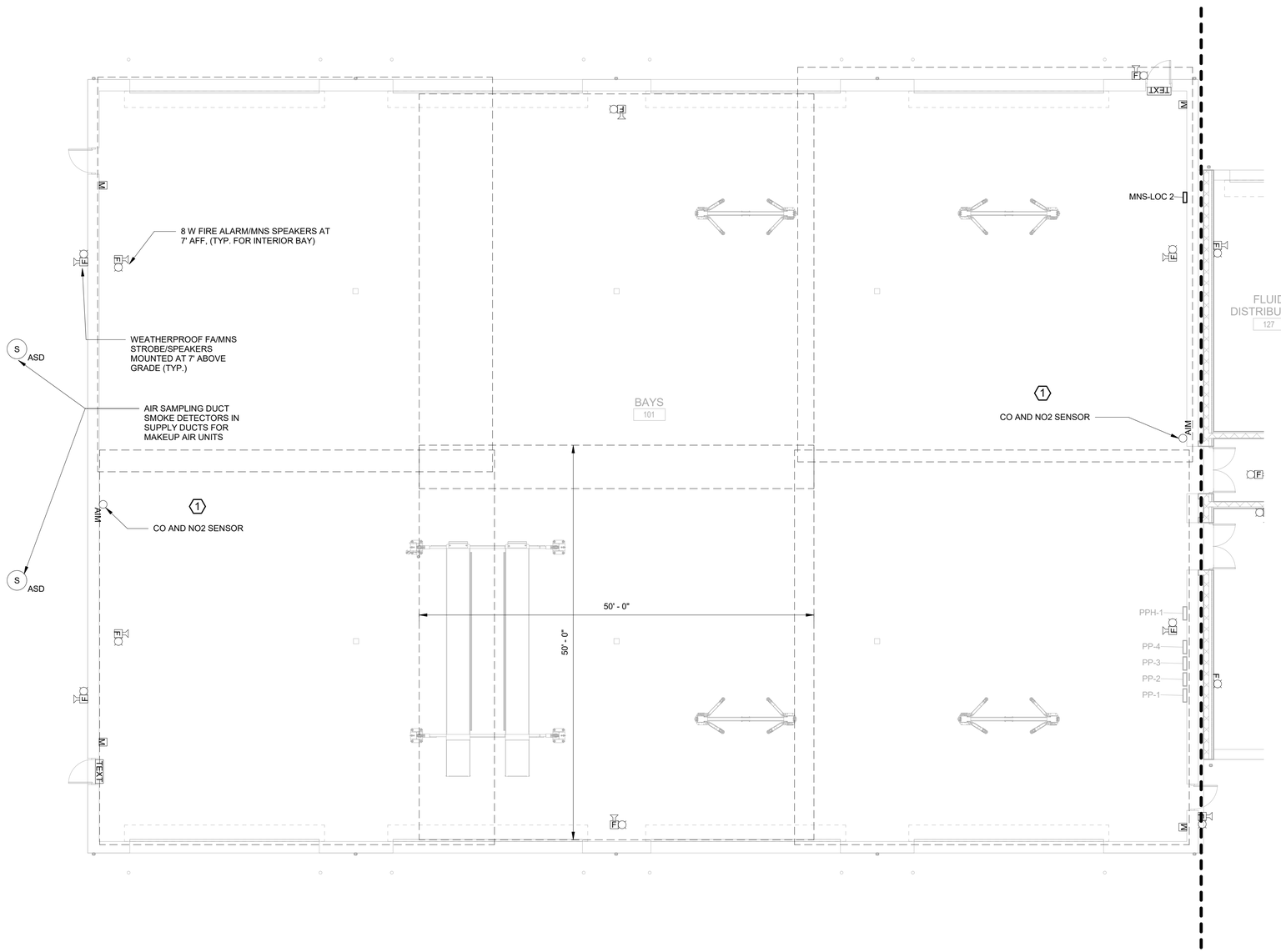

1 FA101 GTEB FIRE ALARM PLAN - BAYS

1/8" = 1'-0"

GENERAL NOTES:

1. SEE RISER DIAGRAM ON FA601 FOR ADDITIONAL REQUIREMENTS FOR FIRE ALARM SYSTEM.
2. SPEAKERS FOR THE FIRE ALARM/MNS SHALL BE DEVICES COMBINED WITH THE STROBES, AND SO ARE LOCATED ACCORDING TO STROBE REQUIREMENTS PER NFPA 72, PARAGRAPH 18.4.8.3.
3. FIRE ALARM/MNS STROBES SHALL BE WHITE AND SHALL SAY "ALERT".
4. ALL STROBES FOR THE BUILDING FIRE ALARM/MNS SYSTEM SHALL BE SYNCHRONIZED (REFERENCE NFPA 72 SECTION 18.5, AND UFC 4-021-01,PARAGRAPH 4-6.2).
5. SEE SHEET FA501 FOR FIRE ALARM/MNS EVENTS MATRIX AND NOTIFICATION APPLIANCE REQUIREMENTS TABLE.
6. SEE SHEET FA601 FOR FIRE ALARM/MASS NOTIFICATION SYSTEM RISER DIAGRAM.
7. DASHED BOXES SHOW OUTLINES OF STROBE COVERAGE, PER NFPA 72, TABLE 18.5.5.4.1(a). SEE NOTIFICATION APPLIANCE REQUIREMENTS TABLE ON FA501 FOR CANDELA OUTPUT.
8. CONTRACTOR SHALL COORDINATE INSTALLATION OF FIRE ALARM DEVICES WITH OTHER DISCIPLINES TO ENSURE THAT THERE IS NO INTERFERENCE BETWEEN OTHER EQUIPMENT SUCH AS LUMINAIRES, MECHANICAL VENTS, SPRINKLER HEADS, OR OTHER DEVICES.

(#) KEYED NOTES:

1. CARBON MONOXIDE (CO) AND NITROGEN DIOXIDE (NO2) SENSORS SHALL BE POWERED THROUGH THE FIRE ALARM PANEL. SELECT SENSORS THAT ARE COMPATIBLE WITH THE FIRE ALARM PANEL. COORDINATE WITH MECHANICAL PLANS.

FIRE ALARM/MNS LEGEND

M	MANUAL PULL STATION, HANDLE MOUNTED AT 45" AFF.
S ASD	SMOKE DETECTOR, PHOTOELECTRIC TYPE. "ASD" DENOTES AIR SAMPLING DEVICE FOR HVAC DUCT.
F	WALL MOUNTED FIRE ALARM/MNS STROBE/SPEAKER. STROBE IS WHITE/CLEAR AND SHALL READ "ALERT". MOUNT AT 7' AFF.
F	CEILING MOUNTED FIRE ALARM/MNS STROBE/SPEAKER. STROBE IS WHITE/CLEAR AND SHALL READ "ALERT".
F	FIRE ALARM/MNS STROBE. STROBE IS WHITE COLORED AND SHALL READ "ALERT".
TEXT	MNS LED TEXT DISPLAY. MIN. 24" WIDE X 4" TALL
AIM	ADDRESSABLE INPUT MODULE, TYPE AS INDICATED.

8 6 4 2 0 8 16

SCALE: 1/8"=1'-0"

PLAN NORTH

AREA

'A'

US Army Corps of Engineers ®

MARK	DESCRIPTION	DATE

ISSUE DATE: 13 JUL 2020
PROJECT # 225-25-0665
SPEC # 2145
FILE NUMBER:

DESIGNED BY: D. CARULLI
DRAWN BY: D. CARULLI
CHECKED BY: S. JONES
SUBMITTED BY: W. CONNER PARISH
SIZE: ANSI 'D' FILE NAME: W05E_GTEB_Central.rvt

US ARMY CORPS OF ENGINEERS
SACRAMENTO DISTRICT
US DEPT OF ARMY

SACRAMENTO DISTRICT
IN-HOUSE DESIGN
1325 J STREET
SACRAMENTO, CA 95814

ARIZONA
FT. HUACHUCA
GROUND TRANSPORT EQUIPMENT BUILDING

GTEB FIRE ALARM/MNS PLAN

SHEET ID

FA101

RTA

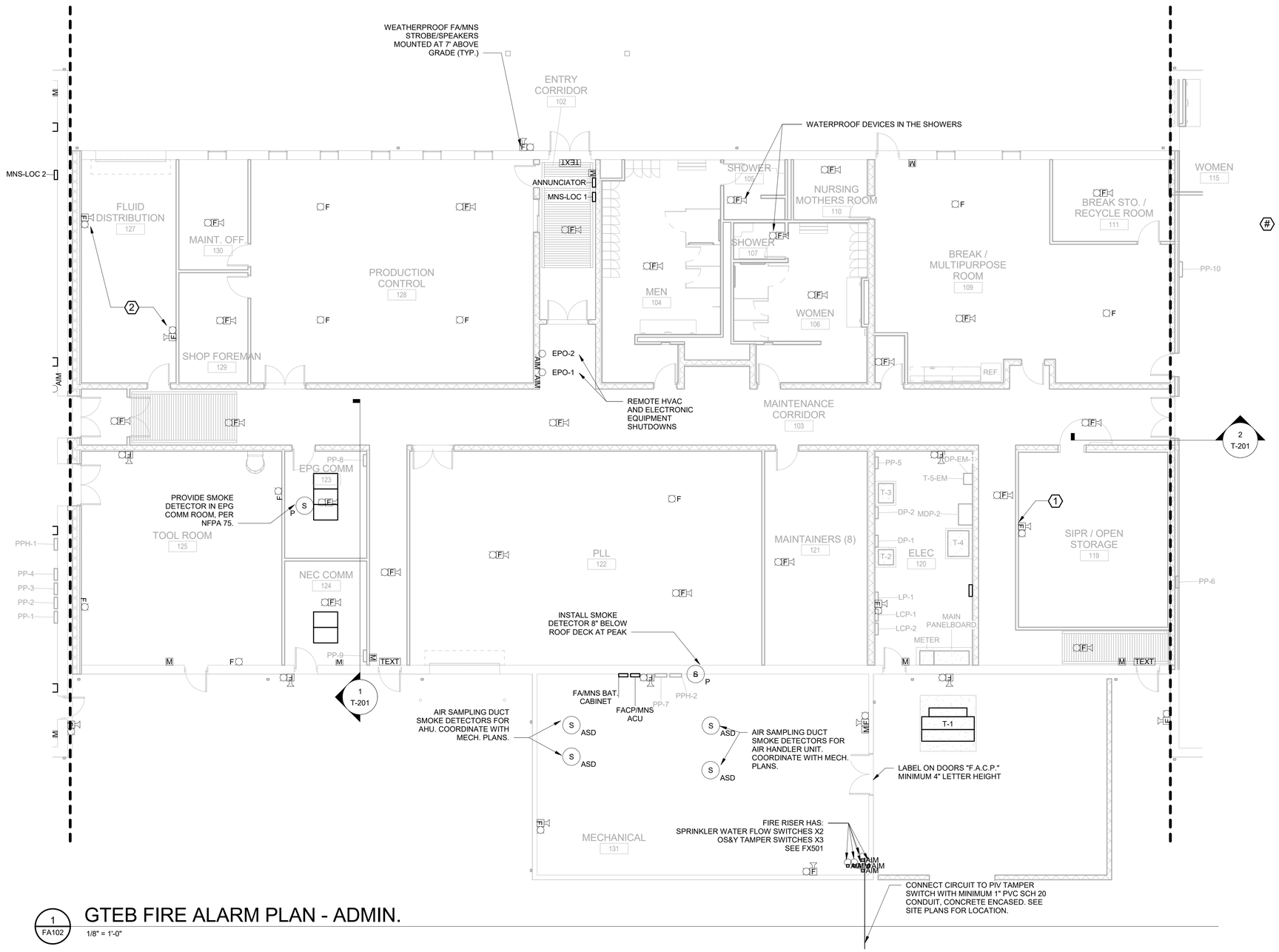

1 FA102 GTEB FIRE ALARM PLAN - ADMIN.

1/8" = 1'-0"

GENERAL NOTES:

1. SEE RISER DIAGRAM ON FA601 FOR ADDITIONAL REQUIREMENTS FOR FIRE ALARM SYSTEM.
2. SPEAKERS FOR THE FIRE ALARM/MNS SHALL BE DEVICES COMBINED WITH THE STROBES, AND SO ARE LOCATED ACCORDING TO STROBE REQUIREMENTS PER NFPA 72, PARAGRAPH 18.4.8.3.
3. FIRE ALARM/MNS STROBES SHALL BE WHITE AND SHALL SAY "ALERT".
4. ALL STROBES FOR THE BUILDING FIRE ALARM/MNS SYSTEM SHALL BE SYNCHRONIZED (REFERENCE NFPA 72 SECTION 18.5, AND UFC 4-021-01,PARAGRAPH 4-6.2).
5. SEE SHEET FA501 FOR FIRE ALARM/MNS EVENTS MATRIX AND NOTIFICATION APPLIANCE REQUIREMENTS TABLE.
6. SEE SHEET FA601 FOR FIRE ALARM/MASS NOTIFICATION SYSTEM RISER DIAGRAM.
7. DASHED BOXES SHOW OUTLINES OF STROBE COVERAGE, PER NFPA 72, TABLE 18.5.5.4.1(a). SEE NOTIFICATION APPLIANCE REQUIREMENTS TABLE ON FA501 FOR CANDELA OUTPUT.
8. CONTRACTOR SHALL COORDINATE INSTALLATION OF FIRE ALARM DEVICES WITH OTHER DISCIPLINES TO ENSURE THAT THERE IS NO INTERFERENCE BETWEEN OTHER EQUIPMENT SUCH AS LUMINAIRES, MECHANICAL VENTS, SPRINKLER HEADS, OR OTHER DEVICES.

(#) KEYED NOTES:

1. ELECTRONIC ISOLATION IS REQUIRED BETWEEN THE SPEAKER FOR THE FA/MNS INSIDE THE SIPR/OPEN STORAGE ROOM AND THE CIRCUITRY OUTSIDE THE ROOM, AS WELL AS THE CONDUITS BETWEEN THEM. PROVIDE A BUFFER AMPLIFIER AT THE WALL PENETRATION INSIDE THE SCIF IN ACCORDANCE WITH UFC 4-010-05, SECTION 3-5.15.5. BUFFER AMPLIFIER SHALL MEET UL 1711. FOR THE CONDUIT PENETRATION, SPACE THE METALLIC CONDUIT WITH A SECTION OF PVC CONDUIT THAT EXTENDS A MINIMUM OF 3" ON EITHER SIDE OF THE PERIMETER WALL.
2. FLUID DISTRIBUTION ROOM IS A CLASS I DIVISION 2 HAZARDOUS LOCATION. DEVICES AND PATHWAYS SHALL BE LISTED FOR THIS HAZARDOUS LOCATION CLASSIFICATION. PROVIDE THREADED RGS WITH MINIMUM 5 THREADS ENGAGED FOR CONDUIT TYPE, AND CONDUIT SEALS WITHIN 18" OF WALL PENETRATION

FIRE ALARM/MNS LEGEND

M	MANUAL PULL STATION, HANDLE MOUNTED AT 45" AFF.
S ASD	SMOKE DETECTOR, PHOTOELECTRIC TYPE. "ASD" DENOTES AIR SAMPLING DEVICE FOR HVAC DUCT.
F	WALL MOUNTED FIRE ALARM/MNS STROBE/SPEAKER. STROBE IS WHITE/CLEAR AND SHALL READ "ALERT". MOUNT AT 7' AFF.
F	CEILING MOUNTED FIRE ALARM/MNS STROBE/SPEAKER. STROBE IS WHITE/CLEAR AND SHALL READ "ALERT".
F	FIRE ALARM/MNS STROBE. STROBE IS WHITE COLORED AND SHALL READ "ALERT".
TEXT	MNS LED TEXT DISPLAY. MIN. 24" WIDE X 4" TALL
AIM	ADDRESSABLE INPUT MODULE, TYPE AS INDICATED.

8 6 4 2 0 8 16

SCALE: 1/8"=1'-0"

PLAN NORTH

AREA

'B'

US Army Corps of Engineers ®

MARK	DESCRIPTION	DATE

ISSUE DATE: 13 JUL 2020
PROJECT # 225-25-0665
SPEC # 2145
FILE NUMBER:

DESIGNED BY: D. CARULLI
DRAWN BY: D. CARULLI
CHECKED BY: S. JONES
SUBMITTED BY: KJOHN PARRISH
SIZE: ANSI D'
FILE NAME: W6SE_GTEB_Central.rvt

US ARMY CORPS OF ENGINEERS
SACRAMENTO DISTRICT
US DEPT OF ARMY

SACRAMENTO DISTRICT
IN-HOUSE DESIGN
1325 J STREET
SACRAMENTO, CA 95814

FT. HUACHUCA
GROUND TRANSPORT EQUIPMENT BUILDING
ARIZONA

GTEB FIRE ALARM/MNS PLAN

SHEET ID

FA102

RTA

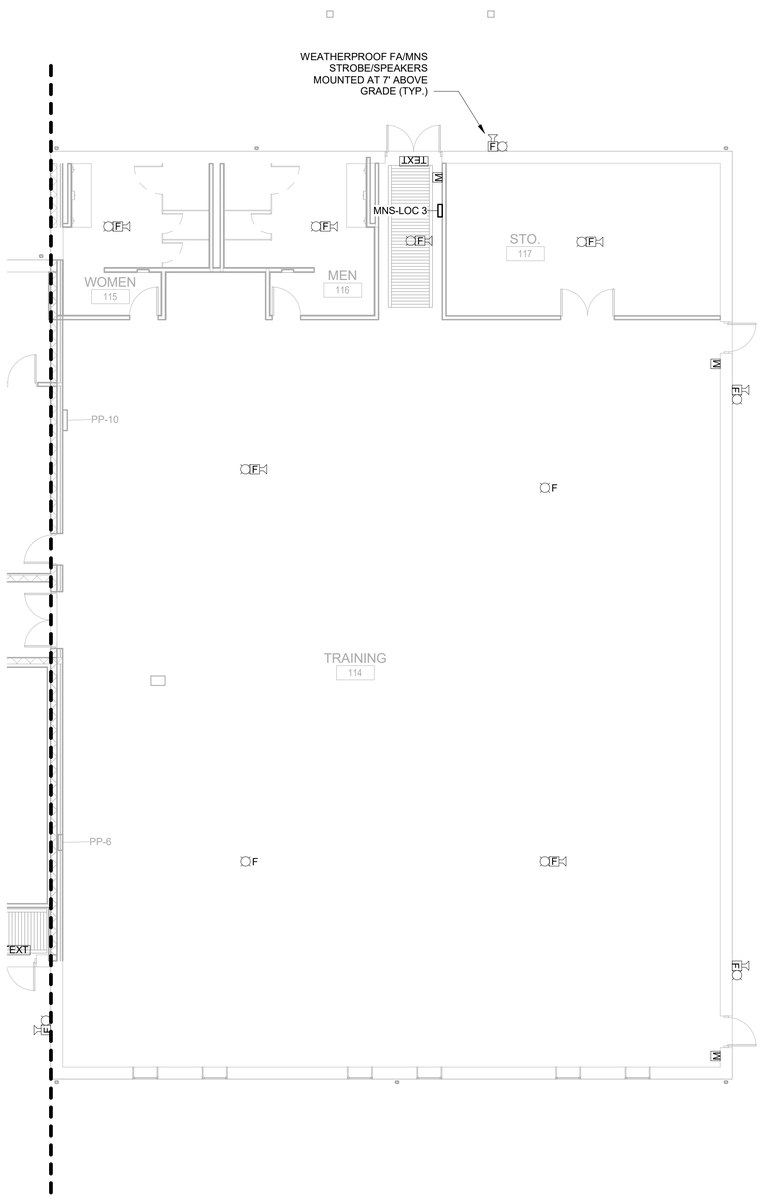

1 FA103 GTEB FIRE ALARM PLAN - TRAINING (OPTION 3)

1/8" = 1'-0"

GENERAL NOTES:

1. SEE RISER DIAGRAM ON FA601 FOR ADDITIONAL REQUIREMENTS FOR FIRE ALARM SYSTEM.
2. SPEAKERS FOR THE FIRE ALARM/MNS SHALL BE DEVICES COMBINED WITH THE STROBES, AND SO ARE LOCATED ACCORDING TO STROBE REQUIREMENTS PER NFPA 72, PARAGRAPH 18.4.8.3.
3. FIRE ALARM/MNS STROBES SHALL BE WHITE AND SHALL SAY "ALERT".
4. ALL STROBES FOR THE BUILDING FIRE ALARM/MNS SYSTEM SHALL BE SYNCHRONIZED (REFERENCE NFPA 72 SECTION 18.5, AND UFC 4-021-01,PARAGRAPH 4-6.2).
5. SEE SHEET FA501 FOR FIRE ALARM/MNS EVENTS MATRIX AND NOTIFICATION APPLIANCE REQUIREMENTS TABLE.
6. SEE SHEET FA601 FOR FIRE ALARM/MASS NOTIFICATION SYSTEM RISER DIAGRAM.
7. DASHED BOXES SHOW OUTLINES OF STROBE COVERAGE, PER NFPA 72, TABLE 18.5.5.4.1(a). SEE NOTIFICATION APPLIANCE REQUIREMENTS TABLE ON FA501 FOR CANDELA OUTPUT.
8. CONTRACTOR SHALL COORDINATE INSTALLATION OF FIRE ALARM DEVICES WITH OTHER DISCIPLINES TO ENSURE THAT THERE IS NO INTERFERENCE BETWEEN OTHER EQUIPMENT SUCH AS LUMINAIRES, MECHANICAL VENTS, SPRINKLER HEADS, OR OTHER DEVICES.
9. THIS AREA SHOWS OPTION 3. IF OPTION 3 IS NOT AWARDED:
   A. PROVIDE MANUAL PULL STATIONS AT THE EAST EXIT DOORWAYS FROM THE MAINTENANCE CORRIDOR 103, AND BREAK/MULTIPURPOSE ROOM 109
   B. PROVIDE MNS LED TEXT DISPLAY AT THE EAST EXIT DOORWAY FROM THE MAINTENANCE CORRIDOR 103
   C. PROVIDE WATERPROOF FA/MNS SPEAKER STROBE AT THE EXTERIOR OF THESE DOORWAYS.

FIRE ALARM/MNS LEGEND

M	MANUAL PULL STATION, HANDLE MOUNTED AT 45" AFF.
S ASD	SMOKE DETECTOR, PHOTOELECTRIC TYPE. "ASD" DENOTES AIR SAMPLING DEVICE FOR HVAC DUCT.
F	WALL MOUNTED FIRE ALARM/MNS STROBE/SPEAKER. STROBE IS WHITE/CLEAR AND SHALL READ "ALERT". MOUNT AT 7' AFF.
F	CEILING MOUNTED FIRE ALARM/MNS STROBE/SPEAKER. STROBE IS WHITE/CLEAR AND SHALL READ "ALERT".
F	FIRE ALARM/MNS STROBE. STROBE IS WHITE COLORED AND SHALL READ "ALERT".
TEXT	MNS LED TEXT DISPLAY. MIN. 24" WIDE X 4" TALL
AIM	ADDRESSABLE INPUT MODULE, TYPE AS INDICATED.

8 6 4 2 0 8 16

SCALE: 1/8"=1'-0"

PLAN NORTH

AREA

'C'

US Army Corps of Engineers ®

MARK	DESCRIPTION	DATE

DESIGNED BY: D. CARULLI
DRAWN BY: D. CARULLI
CHECKED BY: S. JONES
SUBMITTED BY: ALVORNA PARRISH
SIZE: ANSI D'
FILE NAME: WESE_GTEB_Central.rvt
ISSUE DATE: 13 JUL 2020
PROJECT # 225-25-0665
SPEC # 2145
FILE NUMBER:

US ARMY CORPS OF ENGINEERS
SACRAMENTO DISTRICT
US DEPT OF ARMY

SACRAMENTO DISTRICT
IN-HOUSE DESIGN
1325 J STREET
SACRAMENTO, CA 95814

FT. HUACHUCA
GROUND TRANSPORT EQUIPMENT BUILDING
ARIZONA

GTEB FIRE ALARM/MNS PLAN (OPTION 3)

SHEET ID

FA103

RTA

GENERAL NOTES:

1. SEE RISER DIAGRAM ON FA601 FOR ADDITIONAL REQUIREMENTS FOR FIRE ALARM SYSTEM.
2. SPEAKERS FOR THE FIRE ALARM/MNS SHALL BE DEVICES COMBINED WITH THE STROBES, AND SO ARE LOCATED ACCORDING TO STROBE REQUIREMENTS PER NFPA 72, PARAGRAPH 18.4.8.3.
3. FIRE ALARM/MNS STROBES SHALL BE WHITE AND SHALL SAY "ALERT".
4. ALL STROBES FOR THE BUILDING FIRE ALARM/MNS SYSTEM SHALL BE SYNCHRONIZED (REFERENCE NFPA 72 SECTION 18.5, AND UFC 4-021-01,PARAGRAPH 4-6.2).
5. SEE SHEET FA501 FOR FIRE ALARM/MNS EVENTS MATRIX AND NOTIFICATION APPLIANCE REQUIREMENTS TABLE.
6. SEE SHEET FA601 FOR FIRE ALARM/MASS NOTIFICATION SYSTEM RISER DIAGRAM.
7. DASHED BOXES SHOW OUTLINES OF STROBE COVERAGE, PER NFPA 72, TABLE 18.5.5.4.1(a). SEE NOTIFICATION APPLIANCE REQUIREMENTS TABLE ON FA501 FOR CANDELA OUTPUT.
8. CONTRACTOR SHALL COORDINATE INSTALLATION OF FIRE ALARM DEVICES WITH OTHER DISCIPLINES TO ENSURE THAT THERE IS NO INTERFERENCE BETWEEN OTHER EQUIPMENT SUCH AS LUMINAIRES, MECHANICAL VENTS, SPRINKLER HEADS, OR OTHER DEVICES.

FIRE ALARM/MNS LEGEND

M	MANUAL PULL STATION, HANDLE MOUNTED AT 45" AFF.
S ASD	SMOKE DETECTOR, PHOTOELECTRIC TYPE. "ASD" DENOTES AIR SAMPLING DEVICE FOR HVAC DUCT.
F	WALL MOUNTED FIRE ALARM/MNS STROBE/SPEAKER. STROBE IS WHITE/CLEAR AND SHALL READ "ALERT". MOUNT AT 7' AFF.
F	CEILING MOUNTED FIRE ALARM/MNS STROBE/SPEAKER. STROBE IS WHITE/CLEAR AND SHALL READ "ALERT".
F	FIRE ALARM/MNS STROBE. STROBE IS WHITE COLORED AND SHALL READ "ALERT".
TEXT	MNS LED TEXT DISPLAY. MIN. 24" WIDE X 4" TALL
AIM	ADDRESSABLE INPUT MODULE, TYPE AS INDICATED.

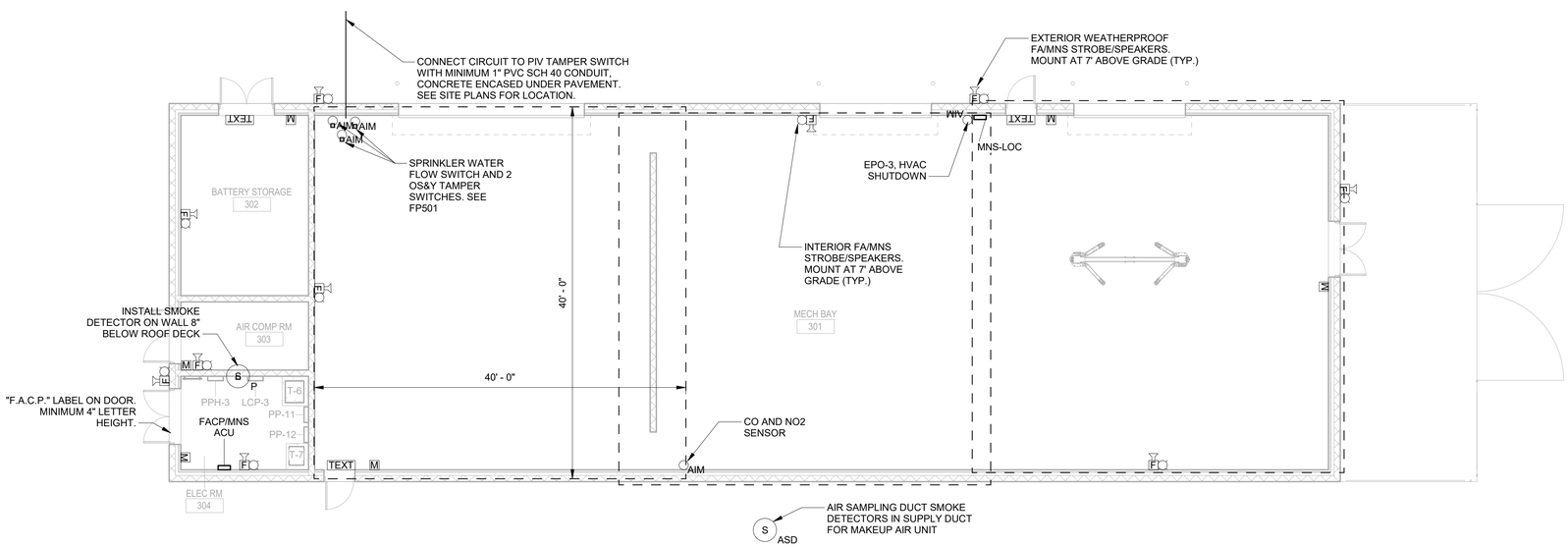

1 / FA111 ORG. STORAGE (OPTION 8) FIRE ALARM PLAN

1/8" = 1'-0"

US Army Corps of Engineers ®

MARK	DESCRIPTION	DATE

US ARMY CORPS OF ENGINEERS
SACRAMENTO DISTRICT
US DEPT OF ARMY

SACRAMENTO DISTRICT
IN-HOUSE DESIGN
1325 J STREET
SACRAMENTO, CA 95814

DESIGNED BY: D. CARULLI
DRAWN BY: D. CARULLI
CHECKED BY: S. JONES
SUBMITTED BY: W JOHN P. PARISH
SIZE: ANSI D'
FILE NAME: W65F_STOR_central.rvt
ISSUE DATE: 13 JUL 2020
PROJECT # 225-25-0665
SPEC # 2145
FILE NUMBER:

FT. HUACHUCA
GROUND TRANSPORT EQUIPMENT BUILDING
ARIZONA

ORG STORAGE FIRE ALARM/MNS PLAN
(OPTION 8)

SHEET ID
FA111

RTA

	1	2	3	4	5
D					

SYSTEM OUTPUTS

			ANNUNCIATION AT LOCAL PANELS (FACP AND MNS)								TRANSMIT SIGNAL TO THE FIRE STATION									FIRE SUPPRESION SYSTEM, CONTROL, AND AUXILIARY FUNCTIONS						BUILDING NOTIFICATION			
			AUDIO-VISUAL FIRE ALARM INDICATION BY ZONE	AUDIO-VISUAL SUPERVISORY INDICATION BY DEVICE	AUDIO-VISUAL COMMON TROUBLE INDICATION	AUDIO-VISUAL TROUBLE INDICATION BY ZONE	AUDIO-VISUAL ALARM INDICATION BY DEVICE (SILENCE PA SYSTEM)	AUDIO-VISUAL TROUBLE INDICATION FOR MNS ANNOUNCEMENT	TROUBLE INDICATOR FA INTERRUPTED FOR MNS ANNOUNCEMENT		COMMON FIRE ALARM SIGNAL FOR BUILDING	COMMON SUPERVISORY SIGNAL FOR BUILDING	COMMON TROUBLE SIGNAL FOR BUILDING	FIRE ALARM MUTE FOR MNS ANNOUNCEMENT	MANUAL PULL STATION	SPRINKLER WATER FLOW	TAMPER SWITCH - OS&Y	TAMPER SWITCH - PIV		CLOSE DAMPER(S), SHUT DOWN HVAC UNIT(S)	RELEASE MAGNETICALLY HELD/LOCKED EGRESS DOORS WHERE PROVIDED	OVERRIDE SECURITY SYSTEM EGRESS DELAY FOR DOORS WHERE PROVIDED	SIGNAL TO BASE MASS NOTIFICATION EQUIPMENT VIA TRANSCEIVER	MUTE FA FOR MNS ANNOUNCEMENT (60 SECOND MAXIMUM)		FACILITY FIRE EVACUATION VISUAL SIGNAL - CLEAR STROBES	FACILITY FIRE EVACUATION AUDIO SIGNAL THROUGH SPEAKERS - ALARM TONE	MASS NOTIFICATION VISUAL SIGNAL - CLEAR STROBES AND TEXT SIGNS	MASS NOTIFICATION AUDIO SIGNAL THROUGH SPEAKERS (SILENCE PA SYSTEM)
	SYSTEM INPUTS																												
	ALARM DEVICES		A	B	C	D	E	F	G		H	I	J	K	L	M	N	O		P	Q	R	S	T		U	V	W	X
1	MANUAL FIRE ALARM PULL STATIONS	1	●				●			1	●				●				1	●	●	●			1	●	●		
2	WATER FLOW SWITCH	2	●				●			2	●					●			2	●	●	●			2	●	●		
3	SMOKE DETECTORS	3	●				●			3	●								3	●	●	●			3	●	●		
4	DUCT SMOKE DETECTORS IN HVAC	4	●				●			4	●								4	●	●	●			4	●	●		
5	CO OR NO2 DETECTOR ALARM	5							●	5		●							5				●		5			●	●
6	REMOTE HVAC EQUIPMENT SHUTDOWN	6							●	6		●							6	●	●	●	●		6				
7	REMOTE ELECTRONIC EQUIPMENT SHUTDOWN	7							●	7		●							7				●		7				
	SUPERVISORY DEVICES		A	B	C	D	E	F	G		H	I	J	K	L	M	N	O		P	Q	R	S	T		U	V	W	X
8	TAMPER SWITCH - PIV	8		●						8		●						●	8						8				
9	TAMPER SWITCH - OS&Y	9		●						9		●					●		9						9				
	TROUBLE FUNCTIONS		A	B	C	D	E	F	G		H	I	J	K	L	M	N	O		P	Q	R	S	T		U	V	W	X
10	INITIATING DEVICE CIRCUIT OPEN	10			●	●				10			●						10						10				
11	INITIATING DEVICE CIRCUIT SHORT	11			●	●				11			●						11						11				
12	INITIATING DEVICE CIRCUIT GROUND FAULT	12			●	●				12			●						12						12				
13	NOTIFICATION APPLIANCE CIRCUIT OPEN	13			●	●				13			●						13						13				
14	NOTIFICATION APPLIANCE CIRCUIT SHORT	14			●	●				14			●						14						14				
15	NOTIFICATION CIRCUIT GROUND FAULT	15			●	●				15			●						15						15				
16	AC POWER FAILURE	16			●					16			●						16						16				
17	TEST MODE	17			●					17			●						17						17				
18	LOW BATTERY VOLTAGE	18			●					18			●						18						18				
19	SUPERVISED COMPONENT FAILURE	19			●					19			●						19						19				
	MASS NOTIFICATION SYSTEM (MNS)		A	B	C	D	E	F	G		H	I	J	K	L	M	N	O		P	Q	R	S	T		U	V	W	X
20	VOICE MESSAGE SYSTEM ACTIVATED	20						●		20				●					20				●	●	20			●	●
21	LIVE VOICE ANNOUNCEMENT FROM BASEWIDE SYSTEM	21							●	21				●					21				●	●	21			●	●
22	PRERECORDED MESSAGE ACTIVATED AT LOC	22							●	22				●					22				●	●	22			●	●
23	LIVE VOICE ANNOUNCEMENT ACTIVATED AT LOC	23							●	23				●					23				●	●	23			●	●
			A	B	C	D	E	F	G		H	I	J	K	L	M	N	O		P	Q	R	S	T		U	V	W	X

FIRE ALARM/MNS EVENTS MATRIX

FIRE ALARM/MNS EVENTS MATRIX NOTES:

1. OUTPUT P: COORDINATE SMOKE DAMPER AND HVAC UNIT SHUTDOWN CONTROLS WITH MECHANICAL PLANS AND SPECIFICATIONS.
2. INPUT 2: WATER FLOW SWITCH FOR THE ELECTRONIC EQUIPMENT AREAS SHALL ACTIVATE ELECTRONIC EQUIPMENT SHUTDOWN (SYSTEM OUTPUT NOT SHOWN). THIS MAY BE ACCOMPLISHED WITH A SEPARATE RELAY TO THE ELECTRONIC EQUIPMENT POWER PANEL MAIN BREAKER.
3. INPUT 5: COORDINATE CO AND NO2 DETECTOR ALARMS AND WITH MECHANICAL PLANS. CO AND NO2 ALARMS SHALL HAVE SEPARATE INPUTS WITH UNIQUE MNS MESSAGES INDICATING THE TYPE OF GAS AND LOCATION IT IS DETECTED. THESE SIGNALS SHALL TAKE PRECEDENCE OVER FIRE ALARM TROUBLE AND SUPERVISORY SIGNALS, BUT SHALL NOT OVERRIDE FIRE ALARM EVENT SIGNALS OR NOTIFICATION APPLIANCES. REFERENCE NFPA 72, SECTION 10.7
4. INPUT 7: THE ELECTRONIC EQUIPMENT SHUTDOWN DISCONNECTS POWER TO THE ELECTRONIC EQUIPMENT ROOM, INCLUDING HVAC UNITS SERVING THAT ROOM; THE ELECTRONIC EQUIPMENT SHUTDOWN SHALL NOT TRIGGER WHOLE BUILDING HVAC SHUTDOWN.

FIRE ALARM/MNS SPEAKER AND STROBE REQUIREMENTS

BUILDING	ROOM NO.	ROOM NAME	MOUNTING LOCATION	MOUNTING HEIGHT	CEILING HEIGHT	MINIMUM STROBE CANDELA (CD)	STROBE COVERAGE AREA	MINIMUM SPEAKER POWER (W)	NOTES
GTEB	N/A	(EXTERIOR)	WALLS	7'	N/A	30	28'x28'	2	EXTERIOR WEATHERPROOF RATED SPEAKERS AND STROBES
	101	BAYS	WALLS/BEAMS	7'	N/A	95	50'X50'	8	
	102	ENTRY CORRIDOR	CEILING	CEILING	10'	15	20'X20'	2	
	103	MAINTENANCE CORRIDOR	CEILING	CEILING	9'	15	(SEE NOTE)	2	CORRIDOR COVERAGE DETERMINED BY NFPA 72, SECTION 18.5.5.5
	104	MEN	CEILING	CEILING	9'	15	20'X20'	2	
	105	SHOWER	CEILING	CEILING	9'	15	20'X20'	2	
	106	WOMEN	CEILING	CEILING	9'	15	20'X20'	2	
	107	SHOWER	CEILING	CEILING	9'	15	20'X20'	2	
	108	JAN.	CEILING	CEILING	9'	15	20'X20'	2	
	109	BREAK	CEILING	CEILING	9'	30	30'X30'	2	
	110	NURSING MOTHERS ROOM	CEILING	CEILING	9'	15	20'X20'	2	
	111	BREAK STOR. / RECYCLE	CEILING	CEILING	9'	15	20'X20'	2	
	112	BREAK	CEILING	CEILING	9'	15	20'X20'	2	
	114	TRAINING	CEILING	CEILING	14'	75	44'X44'	2	
	115	MEN	CEILING	CEILING	9'	30	30'X30'	2	
	116	WOMEN	CEILING	CEILING	9'	15	20'X20'	2	
	117	STO.	CEILING	CEILING	9'	30	30'X30'	2	
	119	SIPR / OPEN STORAGE	CEILING	CEILING	9'	30	30'X30'	2	ELECTRONIC ISOLATION WITH BUFFER-AMPLIFIER (UL 1711) REQUIRED
	120	ELEC	WALL	7'	N/A	15	20'X20'	2	
	121	MAINTAINERS (8)	CEILING	CEILING	9'	30	30'X30'	2	
	122	PLL	CEILING	CEILING	12'	75	44'X44'	2	
	123	EPG COMM	CEILING	CEILING	12'	30	20'X20'	2	
	124	NEC COMM	CEILING	CEILING	12'	30	20'X20'	2	
	125	TOOL ROOM	WALL	7'	N/A	15	20'X20'	2	
	126	VESTIBULE	CEILING	CEILING	8'	15	20'X20'	2	
	127	FLUID DISTRIBUTION	WALL	7'	N/A	15	20'X20'	2	DEVICES AND PATHWAYS RATED FOR CLASS I DIV 2 HAZARDOUS LOCATION
	128	PRODUCTION CONTROL	CEILING	CEILING	9'	15	20'X20'	2	
	129	SHOP FOREMAN	CEILING	CEILING	9'	15	20'X20'	2	
	130	MAINT. OFF.	CEILING	CEILING	9'	15	20'X20'	2	
	131	MECHANICAL	WALL	7'	N/A	30	28'X28'	2	
ORG STORAGE	N/A	(EXTERIOR)	WALLS	7'	N/A	30	28'x28'	2	EXTERIOR WEATHERPROOF RATED SPEAKERS AND STROBES
	301	MECH BAY	WALL	7'	N/A	60	40'X40'	8	
	302	BATTERY STORAGE	WALL	7'	N/A	30	28'X28'	2	
	303	ELEC RM	WALL	7'	N/A	15	20'X20'	2	
POL STORAGE	N/A	POL STORAGE	N/A	N/A	N/A	N/A	N/A	N/A	
HAZMAT STORAGE	N/A	HAZMAT STORAGE	N/A	N/A	N/A	N/A	N/A	N/A	

FIRE ALARM/MNS NOTIFICATION APPLIANCE REQUIREMENTS

FIRE ALARM/MNS NOTIFICATION APPLIANCE REQUIREMENTS NOTES:

1. DEVICES SHALL BE LISTED FOR THEIR APPLICATION AND INSTALLATION METHOD.
2. TYPICALLY, SPEAKERS FOR THE FIRE ALARM/MNS SHALL BE COMBINED INTO A SINGLE DEVICE WITH THE FIRE ALARM STROBE, OR BOTH THE FIRE ALARM STROBE AND MNS STROBE. AS SUCH, THESE DEVICES ARE LOCATED ACCORDING TO THE STROBE REQUIREMENTS, PER NFPA 72, PARAGRAPH 18.4.8.3.
3. EFFECTIVE STROBE COVERAGE AREA IS ADAPTED FROM NFPA 72, TABLE 18.5.5.4.1(a) OR TABLE 18.5.5.4.1(b), DEPENDING ON THE MOUNTING LOCATION. CANDELA OUTPUTS WERE CHOSEN BASED ON THE NEEDS AND DIMENSIONS OF THE SPACE.
4. SPEAKER WATTAGE LISTED IS THE MINIMUM WATTAGE OF THE SPEAKER THAT THE CONTRACTOR SHALL INSTALL. TYPICALLY, THESE SPEAKERS SHALL HAVE TAP SETTINGS TO ADJUST TO LOWER WATTAGE, AND CONTRACTOR SHALL ADJUST THE TAP SETTINGS OF EACH SPEAKER AFTER INSTALLATION AND PRIOR TO TESTING AND COMMISSIONING TO MEET MINIMUM DECIBEL AND INTELLIGIBILITY REQUIREMENTS PER NFPA 72.

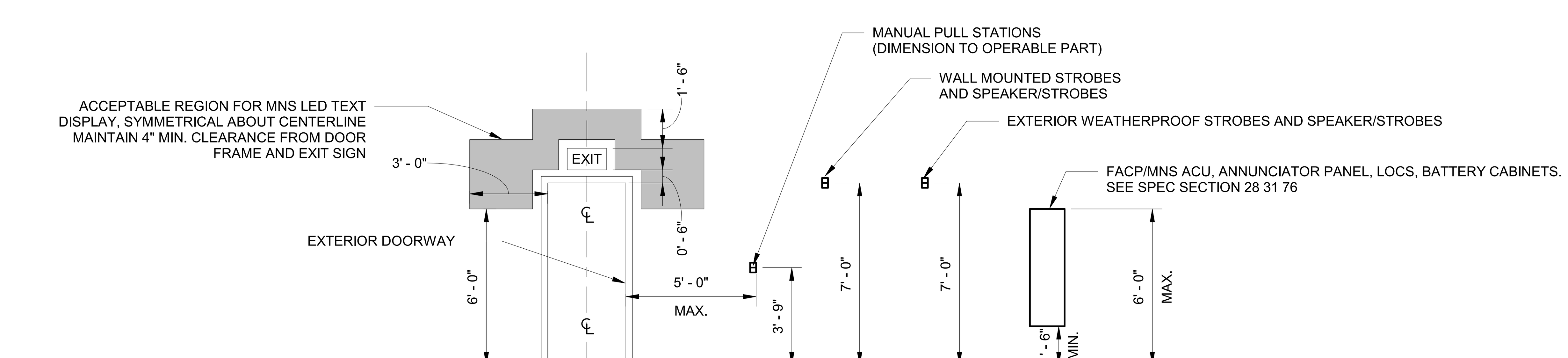

2 FA501 FIRE ALARM DEVICE MOUNTING HEIGHTS

NOT TO SCALE

FIRE ALARM ZONES (MAIN BUILDING) -TO BE USED FOR ZONE REPORTING AND GRAPHIC MAP. SEE ALSO SPEC SECTION 28 31 76

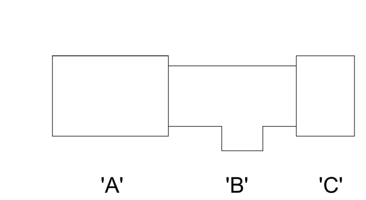

US Army Corps of Engineers ®

MARK	DESCRIPTION	DATE

DESIGNED BY: D. CARULLI	ISSUE DATE: 13 JUL 2020
DRAWN BY: D. CARULLI	PROJECT # 225-25-0665
CHECKED BY: S. JONES	SPEC # 2145
SUBMITTED BY: /s/ JOHN R. PARRISH	FILE NUMBER:
SIZE: ANSI 'D'	FILE NAME: W65E_GTEB_Central.rvt

US ARMY CORPS OF ENGINEERS
SACRAMENTO DISTRICT
US DEPT OF ARMY

SACRAMENTO DISTRICT
IN-HOUSE DESIGN
1325 J STREET
SACRAMENTO, CA 95814

FT. HUACHUCA ARIZONA
GROUND TRANSPORT EQUIPMENT BUILDING

FIRE ALARM/MNS TABLES

SHEET ID

FA501

RTA

GENERAL NOTES:

1. SYSTEM RISER IS DIAGRAMMATIC ONLY, AND DOES NOT SHOW ALL CIRCUITS OR ALL DEVICES. CONTRACTOR SHALL BE RESPONSIBLE FOR PROVIDING A FULL FIRE ALARM/MASS NOTIFICATION SYSTEM COMPLIANT WITH ALL APPLICABLE CRITERIA. SEE SPEC SECTION 28 31 76.
2. CONTRACTORS FIRE ALARM PROVIDER SHALL BE UNDER THE SUPERVISION OF A REGISTERED FIRE PROTECTION ENGINEER, OR BY AN ENGINEERING TECHNOLOGIST QUALIFIED AT NICET LEVEL IV IN FIRE ALARM SYSTEMS. THE INDIVIDUAL'S NAME, SIGNATURE, AND PROFESSIONAL ENGINEER NUMBER OR NICET CERTIFICATION NUMBER SHALL BE INCLUDED ON ALL SUBMITTAL DOCUMENTS AND FINAL DESIGN DOCUMENTS. SYSTEM SHALL MEET REQUIREMENTS OF NFPA 72 AND UFC 4-021-01
3. FIRE ALARM/MASS NOTIFICATION SYSTEM SHALL BE FULLY ANALOG/ADDRESSABLE AND COMPATIBLE WITH THE EXISTING BASE MONITORING SYSTEM, WHICH USES MONACO MAAPX PANELS AND MONACO TRANCIEVERS.
4. TYPICALLY, INITIATING AND NOTIFICATION CIRCUITS SHALL BE CLASS A.
5. COORDINATE WITH FT. HUACHUCA FIRE DISPATCH FOR SELECTION AND INSTALLATION ORIENTATION OF TRANSCEIVER ANTENNA.
6. The Fort Huachuca Office of Fire Prevention has mandated that Monaco MAPP+ or MAPPX addressable point reporting be installed for all new fire alarm systems being installed.
   i.

INDIVIDUAL BUILDING COMBINED FIRE ALARM / MNS: SPEAKERS SHARED BY FIRE ALARM SYSTEM AND MNS.

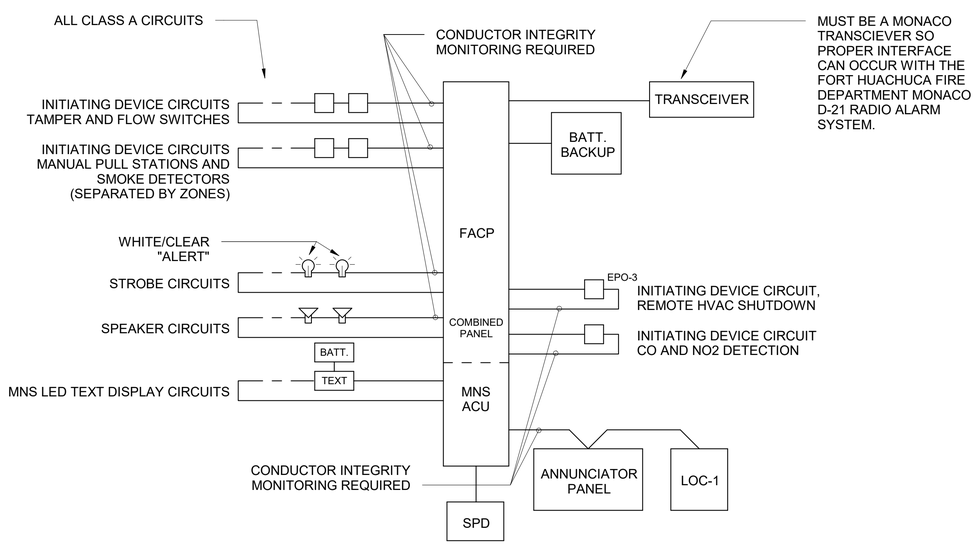

2 FA601

ORG. STORAGE FIRE ALARM / MASS NOTIFICATION SYSTEM DIAGRAM (OPTION 8)

NOT TO SCALE

INDIVIDUAL BUILDING COMBINED FIRE ALARM / MNS: SPEAKERS SHARED BY FIRE ALARM SYSTEM AND MNS.

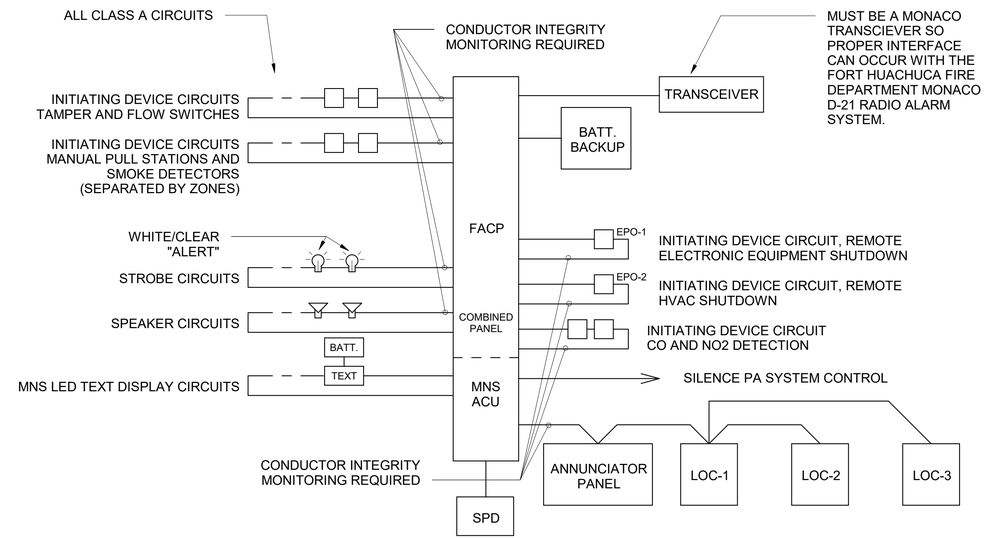

1 FA601

GTEB FIRE ALARM / MASS NOTIFICATION SYSTEM DIAGRAM

NOT TO SCALE

AMENDMENT 3

US Army Corps of Engineers ®

MARK	DESCRIPTION	DATE

DESIGNED BY: D. CARULLI
DRAWN BY: D. CARULLI
CHECKED BY: S. JONES
SUBMITTED BY: W. JOHN PARRISH
SIZE: ANSI D
FILE NAME: WISE_GTEB_Central.rvt
ISSUE DATE: 13 JUL 2020
PROJECT # 225-25-0665
SPEC # 2145
FILE NUMBER:

US ARMY CORPS OF ENGINEERS
SACRAMENTO DISTRICT
US DEPT OF ARMY

SACRAMENTO DISTRICT
IN-HOUSE DESIGN
1325 J STREET
SACRAMENTO, CA 95814

FT. HUACHUCA
GROUND TRANSPORT EQUIPMENT BUILDING
ARIZONA

FIRE ALARM/MNS RISER DIAGRAMS

SHEET ID

FA601

RTA

FIRE SUPPRESSION NOTES

A. THE ENTIRE BUILDING SHALL BE PROTECTED WITH A WET PIPE SPRINKLER SYSTEM DESIGNED AND INSTALLED IN ACCORDANCE WITH NFPA 13, EXCEPT AS OTHERWISE SPECIFIED. THE SPRINKLER SYSTEM SHALL BE HYDRAULICALLY CALCULATED. THE HAZARD CLASSIFICATION, SPRINKLER DENSITY, AREA OF APPLICATION, AND HOSE STREAM FLOW SHALL BE AS INDICATED. THE CONTRACTOR SHALL REDUCE SPRINKLER HEAD SPACING, INCREASE SPRINKLER LINE SIZES, AND USE LOW PRESSURE BACKFLOW ASSEMBLIES AS NECESSARY TO PROVIDE THE SPECIFIED FIRE FLOWS WITH THE AVAILABLE WATER SUPPLY.

B. THE FIRE FLOW REQUIREMENTS SHALL BE BASED ON THE FOLLOWING:

1. HYDRAULIC DESIGN SHALL BE BASED ON AN AVAILABLE STATIC PRESSURE OF 70 PSI AND A RESIDUAL PRESSURE OF 52 PSI AT 2333 GPM FLOW AT HYDRANT #553-7. FIRE FLOW TEST DATA COLLECTED 21 SEP 2017. (SEE CIVIL UTILITY PLANS FOR LOCATION/ELEVATION).

2. THE FIRE FLOW SHALL BE BASED ON THE OPERATION OF SPRINKLERS IN THE MOST HYDRAULICALLY DEMANDING 2,500 SQ.FT. OF PROTECTION AREA AND THE HOSE STREAM AS INDICATED. THE DESIGN AREA MUST BE INCREASED BY 30 PERCENT FOR SLOPED CEILINGS THAT EXCEED A SLOPE OF 2 IN 12. THE DESIGN AREA REDUCTIONS IN NFPA 13 FOR QUICK-RESPONSE SPRINKLERS ARE NOT PERMITTED.

3. STORAGE OCCUPANCIES IN MIXED USE FACILITIES MUST FOLLOW THE MISCELLANEOUS STORAGE PROVISIONS OF NFPA 13.

C. SPRINKLER SYSTEM MAINS, CROSS MAINS, AND BRANCH PIPING SHALL BE HUNG FROM THE ROOF STRUCTURE. SPRINKLER SYSTEM RISER, MAINS, CROSS MAINS AND OTHER PIPING SHALL NOT BE INSTALLED WITHIN ELECTRICAL ROOMS, SCIF OPEN STORAGE, OR COMMUNICATION ROOMS, EXCEPT FOR BRANCH PIPING TO SPRINKLERS LOCATED WITHIN THESE ROOMS.

D. PENDENT SPRINKLERS SHALL BE RECESSED TYPE. SPRINKLERS IN T-BAR CEILINGS SHALL BE CENTERED ON THE CEILING TILE IN ONE DIRECTION AND BE A MINIMUM OF 6 INCHES FROM THE EDGE OF ANY CEILING TILE IN THE OTHER DIRECTION.

E. SPRINKLER HEAD PLACEMENT SHALL BE COORDINATED WITH THE LIGHT FIXTURES AS SHOWN ON THE ARCH AND ELECTRICAL DRAWINGS. SPRINKLER HEADS SHALL BE LOCATED AWAY FROM ALL CLOSETS, SHELVING, AND EQUIPMENT ACCESS PANELS.

F. ALL METALLIC PENETRATIONS THROUGH SCIF WALLS SHALL BE CONSIDERED CARRIERS OF COMPROMISING EMANATION (CE) AND POSE TEMPEST HAZARDS THAT SHALL BE ADDRESSED.

UNLESS DIRECTED OTHERWISE BY THE CERTIFIED TEMPEST TECHNICAL AUTHORITY(CTTA):

1. METALLIC SPRINKLER (FIRE SUPPRESSION) PIPE: PROVIDE A UL LISTED DIELECTRIC UNION INSIDE THE SCIF PERIMETER ADJACENT TO THE PENETRATION, OR GROUND THE CONDUIT WITHIN 6 INCHES OF THE PERIMETER PENETRATION USING A NO. 4 WIRE TO THE BUILDING GROUND.

G. ELECTRONIC EQUIPMENT AREAS AND TELECOMMUNICATION AREAS. (EPG COMM 123 & NEC COMM 124):

PROVIDE DEDICATED FIRE WATER LINE WITH ISOLATION VALVE, FLOW SWITCH, AND TEST CONNECTION SERVING BOTH EPG COMM AND NEC COMM ROOMS. INSTALL IN ACCESSIBLE LOCATION ON THE FIRE RISER IN THE MECHANICAL ROOM. SEE FX501, DETAIL 1 FOR FIRE RISER DETAIL.

H. EXTRA HAZARD AREA: THE TIRE YARD RUBBER TIRE STORAGE AREA WILL BE PROTECTED BY 0.55 GPM/SQ.FT. FOR A DESIGN AREA OF 2600 SQ.FT. PER NFPA 13. THE DESIGN SHALL ACOUNT FOR NO MORE THAN 18 FEET OF RUBBER TIRES STORED ON PALLETIZED PORTABLE RACKS. SPRINKLERS SERVING THE TIRE YARD AREA SHALL BE DRY-TYPE SIDEWALL SPRINKLER HEADS MOUNTED ON THE EAST WALL OF THE ORG STORAGE BUILDING.

I. SPRINKLER PIPING SHALL NOT RUN DIRECTLY ABOVE ELECTRICAL OR ELECTRONIC EQUIPMENT, WHICH SHALL INCLUDE SWITCHBOARDS, TRANSFORMERS, PANELBOARDS, FIRE ALARM/MNS PANELS, AND COMMUNICATIONS RACKS. ROUTE PIPING AROUND EQUIPMENT AS NECESSARY TO AVOID LEAKS FROM SPRINKLER PIPING FALLING DIRECTLY ON ELECTRICAL EQUIPMENT. COORDINATE INSTALLATION OF PIPING WITH THE ACTUAL LOCATIONS OF INSTALLED EQUIPMENT.

FIRE SPRINKLER SCHEDULE (NEW WORK)

HATCH PATTERN	SYSTEM TYPE	HAZARD CLASSIFICATION	DESIGN WATER DENSITY, GPM/SQ. FT.	DEMAND AREA SQ. FT.	MINIMUM K-FACTOR	HOSE STREAM ALLOWANCE, GPM	REMARKS
	WET PIPE	LIGHT	0.10	1500	5.6	250	
	WET PIPE	ORDINARY	0.20	2500	8.0*	250	K-FACTOR = 11.2 FOR BAYS 101
	WET PIPE	EXTRA	0.55	2600	11.2	500	

FIRE SUPPRESSION LEGEND

SYMBOL	ABBR	DESCRIPTION
	FW	FIRE WATER
	CHK	CHECK VALVE
	SOV	SHUTOFF VALVE
	DN	RISER DOWN
	UP	RISER UP
		CAP
		UNION
	POD	POINT OF DISCONNECTION
	POC	POINT OF CONNECTION
		FIRE RISER ASSEMBLY
#		KEYED NOTE

US Army Corps of Engineers ®

MARK	DESCRIPTION	DATE	APPR.

US ARMY CORPS OF ENGINEERS

SACRAMENTO DISTRICT
IN-HOUSE DESIGN
1325 J STREET
SACRAMENTO, CA 95814

Designed by: T. GEIGER | Drawn By: TDG | Date: 13 JUL 2020 | Rev:
Submittal Status: RTA | Spec No: 2145 | Project No: | File No: 233-25-0665 | File Name: W65M_GTEB
Reviewed By: MORITA/BARMANN | Submitted by: M. Timothy A. Lee, P.E. Chief, Mechanical Section | Size/2" x 34" Scale: 1" = 1'-0" Plot Date:7/10/2020 12:16:34 PM

FT. HUACHUCA AZ

GROUND TRANSPORT
EQUIPMENT BUILDING

FIRE SUPPRESSION LEGEND

SHEET IDENTIFICATION
FX001

RTA

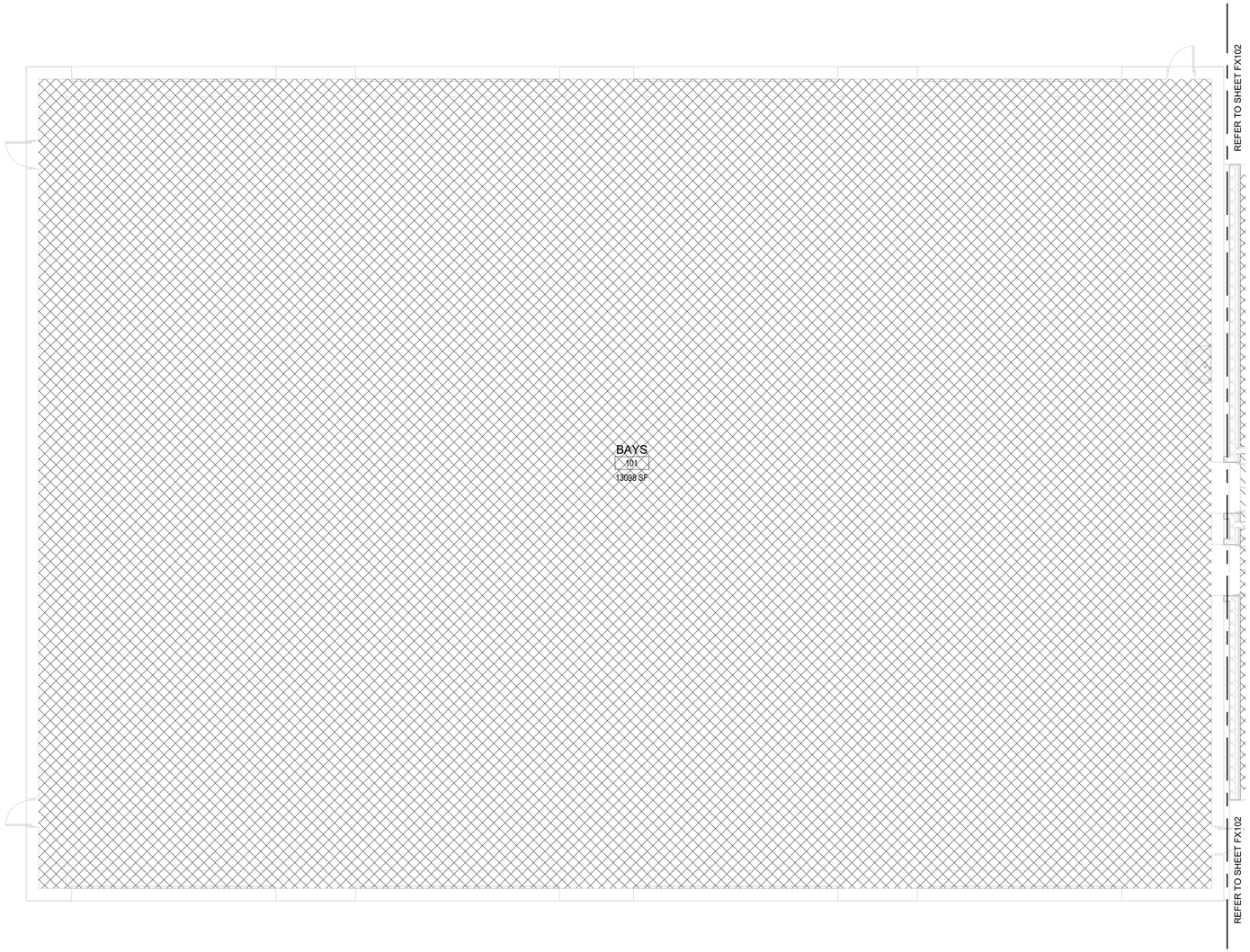

LIGHT HAZARD

ORDINARY HAZARD

EXTRA HAZARD

8' 0 8' 16'

SCALE: 1/8" = 1' - 0"

PLAN NORTH

AREA

'A'

1 FIRE PROTECTION PLAN - AREA A

1/8" = 1'-0"

US Army Corps of Engineers ®

MARK	DESCRIPTION	DATE	APPR

Designed by: T. GEIGER
Drawn By: TDG
Date: 13 JUL 2020
Rev:
Submittal Status: RTA
Spec No: 2145
Project No:
Reviewed by: MORITA/BARMANN
File No: 233-25-0665
File Name: W69M_GTEB
Submitted by: Sgt Timothy A. Lee, P.E. Fire Protection Engineer, Section
Size:22" x 34" Plot Scale: 1" = 1'-0" Plot Date:7/10/2020 12:16:34 PM

US ARMY CORPS OF ENGINEERS

SACRAMENTO DISTRICT
IN-HOUSE DESIGN
1325 J STREET
SACRAMENTO, CA 95814

FT. HUACHUCA

A2

GROUND TRANSPORT EQUIPMENT BUILDING

FIRE SUPPRESSION PLAN - AREA A

SHEET IDENTIFICATION
FX101

RTA

KEY NOTES

1 SEE FX001, NOTE 6 FOR SCIF ROOM REQUIREMENTS.

2 PROVIDE DEDICATED FIRE WATER LINE WITH ISOLATION VALVE, FLOW SWITCH, AND TEST CONNECTION SERVING BOTH EPG COMM AND NEC COMM ROOMS PER NFPA 75. INSTALL IN AN ACCESSIBLE LOCATION ON THE FIRE RISER IN THE MECHANICAL ROOM. SEE FX501, DETAIL 1 FOR FIRE RISER DETAIL.

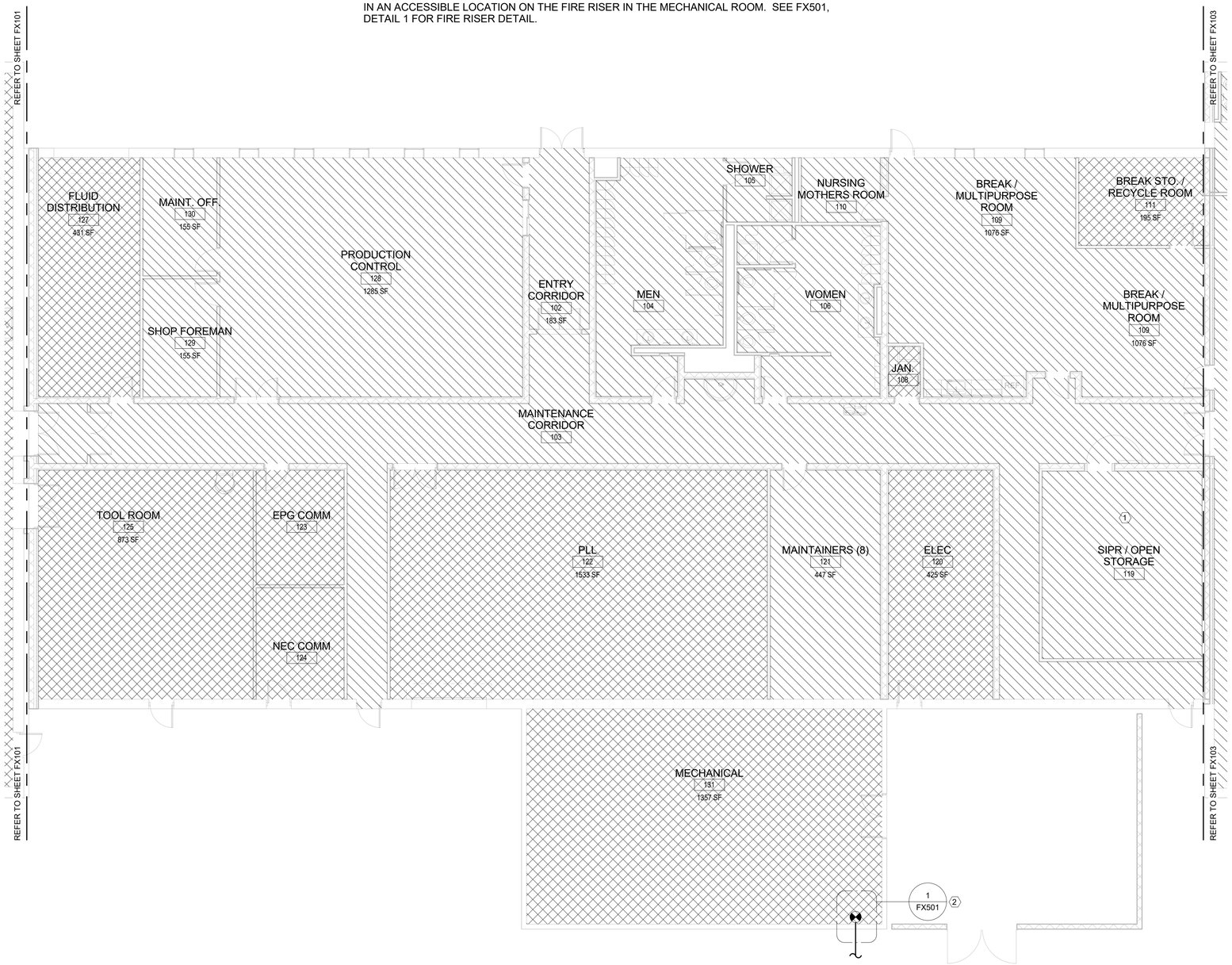

LIGHT HAZARD

ORDINARY HAZARD

EXTRA HAZARD

8' 0 8' 16'

SCALE: 1/8" = 1' - 0"

PLAN NORTH

AREA

'B'

1 FIRE PROTECTION PLAN - AREA B

1/8" = 1'-0"

US Army Corps of Engineers ®

MARK	DESCRIPTION	DATE	APPR

Designed by: T. GEIGER | Drawn By: TDG | Date: 13 JUL 2020 | Rev:

Submittal Status: RTA | Spec No: 2145 | Project No:

Reviewed MORITA/BARMANN | File No: 233-25-0665 | File Name: W65M_GTEB

Submitted by: Maj. Timothy A. Lee, P.E. Chief, Design Branch, Section | Size:22" x 34" Plot Scale: 1" = 1'-0" Plot Date:7/10/2020 12:16:34 PM

US ARMY CORPS OF ENGINEERS

SACRAMENTO DISTRICT IN-HOUSE DESIGN 1325 J STREET SACRAMENTO, CA 95814

FT. HUACHUCA AZ

GROUND TRANSPORT EQUIPMENT BUILDING

FIRE SUPPRESSION PLAN - AREA B

SHEET IDENTIFICATION

FX102

RTA

GENERAL NOTES:

A. AREAS SHOWN ON THIS SHEET SHALL BE SPRINKLERED IF OPTION 3 IS EXERCISED.

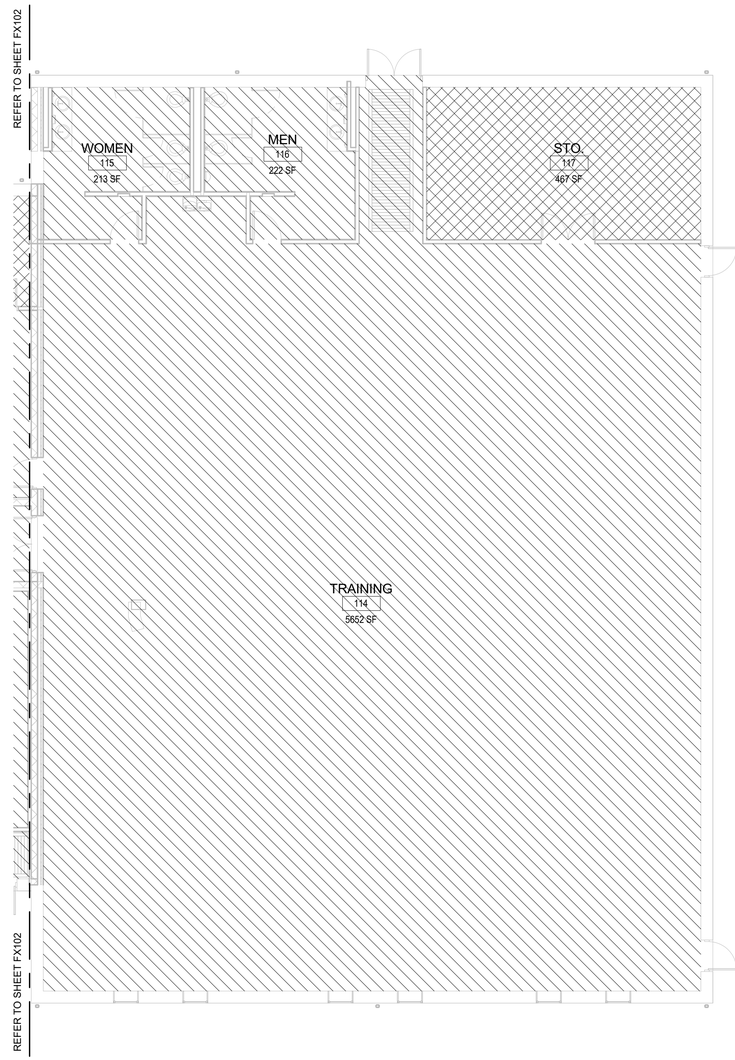

1 FIRE PROTECTION PLAN - AREA C (OPTION 3)
1/8" = 1'-0"

LIGHT HAZARD

ORDINARY HAZARD

EXTRA HAZARD

8' 0 8' 16'
SCALE: 1/8" = 1' - 0"

PLAN NORTH

AREA

'C'

US Army Corps of Engineers ®

MARK	DESCRIPTION	DATE	APPD

Designed by: T. GEIGER
Drawn By: TDG
Date: 13 JUL 2020
Rev:
Submittal Status: RTA
Spec No: 2145
Project No:
Reviewed By: MORITA/BARMANN
File No: 233-25-0665
File Name: W6SM_GTEB
Submitted by: Sr. Timothy A. Lee, P.E.
Chief, Mechanical Design Section
Size:22" x 34"
Plot Scale: 1" = 1'-0"
Plot Date:7/10/2020 12:16:34 PM

US ARMY CORPS OF ENGINEERS

SACRAMENTO DISTRICT
IN-HOUSE DESIGN
1325 J STREET
SACRAMENTO, CA 95814

FT. HUACHUCA

AZ

GROUND TRANSPORT
EQUIPMENT BUILDING

FIRE SUPPRESSION PLAN - AREA C
(OPTION 3)

SHEET IDENTIFICATION
FX103

RTA

GENERAL NOTES:

A. AREAS SHOWN ON THIS SHEET SHALL BE SPRINKLERED IF OPTION 8 IS EXERCISED.

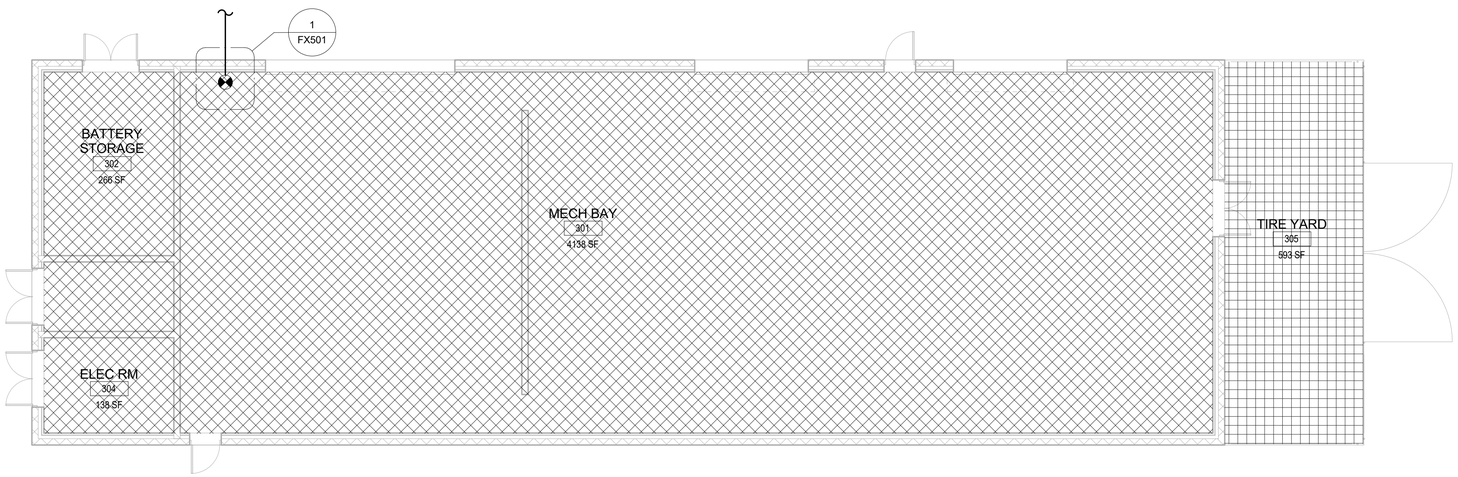

LIGHT HAZARD

ORDINARY HAZARD

EXTRA HAZARD

1 ORG STORAGE FIRE PROTECTION PLAN (OPTION 8)

1/8" = 1'-0"

8' 0 8' 16'

SCALE: 1/8" = 1' - 0"

PLAN NORTH

US Army Corps of Engineers ®

MARK	DESCRIPTION	DATE	APPR

US ARMY CORPS OF ENGINEERS

SACRAMENTO DISTRICT
IN-HOUSE DESIGN
1325 J STREET
SACRAMENTO, CA 95814

Designed by: T. GEIGER
Drawn By: TDG
Submittal Status: 100%
Reviewed By: MORITA/BARMANN
Submitted by: M. Timothy A. Lee, P.E. Chief, Engineering Division
Date: 13 JUL 2020
Spec No: 2145
File No: 223-25-0655
Size/Z* x 34" Plot Scale: 1" = 1'-0" Plot Date:7/10/2020 12:21:05 PM
Rev:
Project No:
File Name: W911KB-_STOR-RVT.

FT. HUACHUCA AZ

ORG STORAGE BUILDING

FIRE SUPPRESSION PLAN (OPTION 8)

SHEET IDENTIFICATION
FX111

RTA

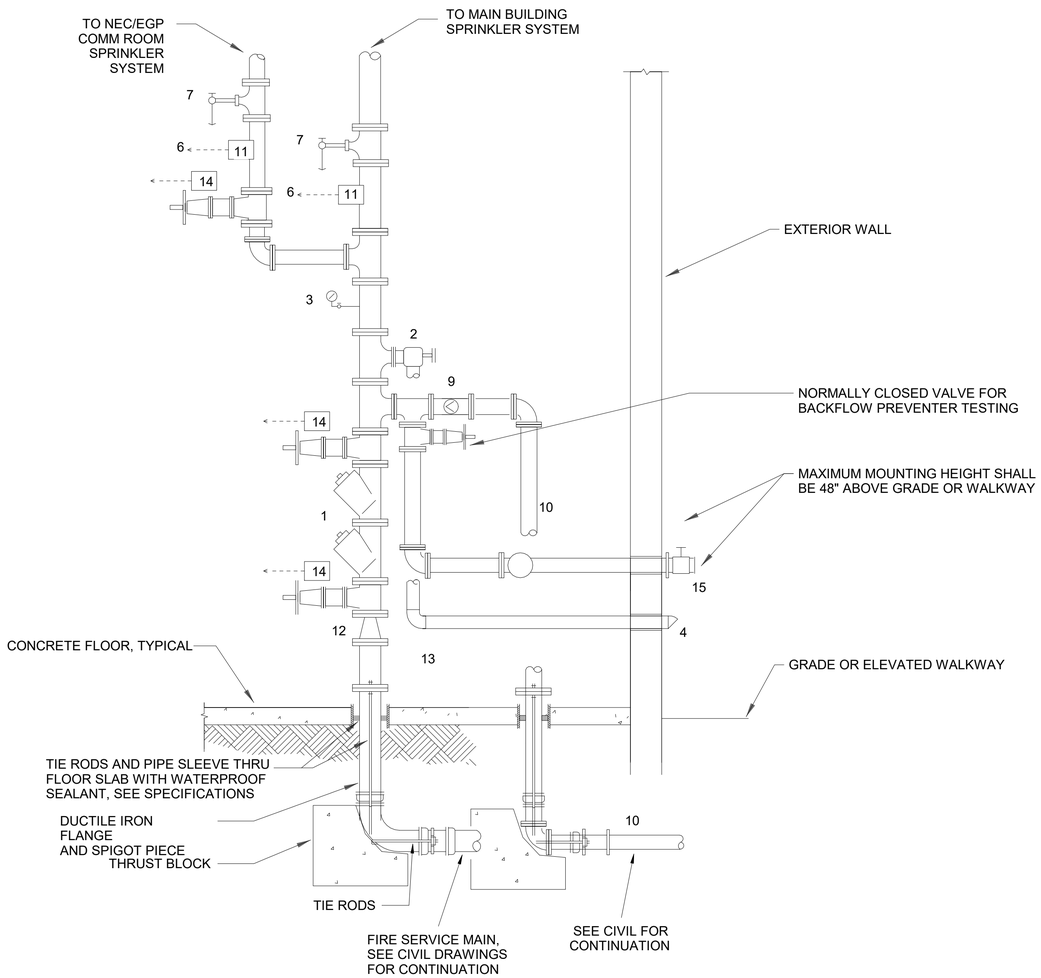

LEGEND

1. DOUBLE CHECK BACKFLOW PREVENTER
2. MAIN DRAIN VALVE
3. PRESSURE GAGE
4. DRAIN OUTLET
5. NOT USED
6. TRANSMITTED ALARM CIRCUIT
7. INSPECTOR'S TEST CONNECTION
8. NOT USED
9. CHECK VALVE
10. TO REMOTE 2-1/2" X 2-1/2" X 4" FIRE DEPARTMENT CONNECTION
11. VANE TYPE WATER FLOW INDICATOR
12. CONCENTRIC REDUCER (WHEN VERIFIED BY HYDRAULIC CALCULATIONS)
13. AUTOMATIC DRIP (DRAIN)
14. SUPERVISED OS&Y GATE VALVE WITH TRANSMITTED ALARM CIRCUIT
15. TEST HEADER WITH MINIMUM OF TWO 2-1/2" HOSE VALVES WITH CAPS

1 WET-PIPE FIRE RISER DETAIL

NOT TO SCALE

US Army Corps of Engineers ®

MARK	DESCRIPTION	DATE	APPD

Designed by: T. GEIGER | Drawn By: TDG | Date: 13 JUL 2020 | Rev:
Submittal Status: 100% | Project No: 2145 | Spec No: 2145
Reviewed By: MORITA/BARMANN | File No: 223-25-0655 | File Name: 1400FA1_STOR.RVT
Submitted by: Sq. Timothy A. Lee, P.E. Chief, Mechanical Section | Size:22" x 34" Plot Scale:Fit Plot Date:7/10/2020 12:21:06 PM

US ARMY CORPS OF ENGINEERS

SACRAMENTO DISTRICT
IN-HOUSE DESIGN
1325 J STREET
SACRAMENTO, CA 95814

FT. HUACHUCA AZ

ORG STORAGE BUILDING

FIRE SUPPRESSION DETAILS

SHEET IDENTIFICATION
FX501

RTA

GENERAL PLUMBING NOTES

A. THESE GENERAL NOTES APPLY TO ALL PLUMBING DRAWINGS IN THIS SET. SHEET SPECIFIC NOTES ARE INDICATED ON EACH SHEET.

B. PROVIDE ALL MATERIALS AND EQUIPMENT AND PERFORM ALL LABOR REQUIRED TO INSTALL COMPLETE AND OPERABLE PLUMBING SYSTEMS AS INDICATED ON THE DRAWINGS, AS SPECIFIED AND AS REQUIRED BY CODE.

C. INSTALL ALL EQUIPMENT AND APPURTENANCES IN ACCORDANCE WITH MANUFACTURER'S RECOMMENDATIONS, THIS CONTRACT'S DOCUMENTS, AND APPLICABLE CODES AND REGULATIONS.

D. REFER TO ARCHITECTURAL DRAWINGS FOR EXACT LOCATIONS OF PLUMBING FIXTURES, DRAINS, PIPE CHASES, WALLS AND FURRINGS.

E. THESE DRAWINGS ARE DIAGRAMMATIC WHEREIN THE POSITIONING OF PLUMBING PIPING IS APPROXIMATE AND SHALL BE VERIFIED AND COORDINATED WITH WORK BY OTHER TRADES AND BUILDING DESIGN/ CONSTRUCTION CONDITIONS PRIOR TO INSTALLATION.

F. PROVIDE VIBRATION ISOLATORS FOR ALL PUMPS AND OTHER DYNAMIC MECHANICAL EQUIPMENT TO PREVENT TRANSMISSION OF VIBRATION TO BUILDING STRUCTURE.

G. PROVIDE ACCESS PANELS IN WALLS AND CEILINGS, WHERE REQUIRED, TO SERVICE VALVES, TRAP PRIMERS, WATER HAMMER ARRESTORS, AND OTHER CONCEALED MECHANICAL EQUIPMENT THAT REQUIRES ROUTINE MAINTENANCE.

H. ALL OPENINGS IN FIRE WALLS DUE TO DUCTWORK, PIPING, CONDUIT, ETC., SHALL BE FIRE STOPPED.

I. PROVIDE NON-CONDUCTING DIELECTRIC CONNECTIONS WHEREVER DISSIMILAR METALS ARE JOINED.

J. UNIFORMLY SLOPE STORM DRAIN AND CONDENSATE DRAIN PIPING NOT LESS THAN 1/8 INCH PER FOOT AND WASTE AND SEWER DRAIN PIPING NOT LESS THAN 1/4 INCH PER FOOT UNLESS OTHERWISE NOTED AND APPROVED BY THE INSPECTOR.

ABBREVIATIONS

#	NUMBER
#/P###	DETAIL # ON SHEET P###
°F	DEGREES FAHRENHEIT
Δ	DELTA (CHANGE)
%	PERCENTAGE
AC	AIR COMPRESSOR
AD	ACCESS DOOR
AFF	ABOVE FINISHED FLOOR
AFG	ABOVE FINISHED GRADE
AP	ACCESS PANEL
AR	ACID RESISTING
BFF	BELOW FINISHED FLOOR
BFG	BELOW FINISHED GRADE
BLDG	BUILDING
BTU	BRITISH THERMAL UNIT
BTUH	BRITISH THERMAL UNIT PER HOUR
BV	BALANCING VALVE
CA	COMPRESSED AIR
CAP	CAPACITY
CFH	CUBIC FEET PER HOUR
CLG	CEILING
CO	CLEANOUT
COTG	CLEANOUT TO GRADE
DCW	DOMESTIC COLD WATER
DF	DRINKING FOUNTAIN
DHW	DOMESTIC HOT WATER
DHWR	DOMESTIC HOT WATER RETURN
DIA	DIAMETER
DIFF	DIFFERENTIAL
DIST	DISTANCE
DN	DOWN
DWG	DRAWING(S)
EFF	EFFICIENCY
ELEV	ELEVATION
ESP	EXTERNAL STATIC PRESSURE
ET	EXPANSION TANK
EWC	ELECTRIC WATER COOLER
EWT	ENTERING WATER TEMPERATURE
FCO	FLOOR CLEANOUT
FD	FLOOR DRAIN
FLA	FULL LOAD AMPS
FLEX	FLEXIBLE
FPS	FEET PER SECOND
FS	FLOOR SINK
FT	FEET OR FOOT
G	GAS
GAL	GALLON(S)
GPH	GALLONS PER HOUR
GPM	GALLONS PER MINUTE
GWC	GREY WATER COLLECTION
GWS	GREY WATER SUPPLY
HB	HOSE BIBB
HD	HUB DRAIN
HP	HORSEPOWER
HR	HOUR
HZ	HERTZ
IE	INVERT ELEVATION
IN	INCH
IN WG	INCHES OF WATER GAGE
KW	KILOWATTS
LAV	LAVATORY
LBS	POUNDS
LPG	LIQUEFIED PETROLEUM GAS
LWT	LEAVING WATER TEMPERATURE
MAX	MAXIMUM
MBH	THOUSAND BTU PER HOUR
MCA	MINIMUM CURRENT AMPACITY
MIN	MINIMUM
MOCP	MAXIMUM OVER CURRENT PROTECTION
MS	MOP SINK
NC	NORMALLY CLOSED
NO	NORMALLY OPEN
NOM	NOMINAL
NPSH	NET POSITIVE SUCTION HEAD
NTS	NOT TO SCALE
PD	PRESSURE DROP
PH	PHASE
POC	POINT OF CONNECTION
POD	POINT OF DISCONNECTION
PPM	PARTS PER MILLION
PRESS	PRESSURE
PSI	POUNDS PER SQUARE INCH
PSIA	POUNDS PER SQUARE INCH ABSOLUTE
PSIG	POUNDS PER SQUARE INCH GAGE
QTY	QUANTITY
RECIRC	RECIRCULATING
S	SANITARY
SHWR	SOLAR HOT WATER RETURN
SHWS	SOLAR HOT WATER SUPPLY
STD	STANDARD
TEMP	TEMPERATURE
TMV	TEMPERATURE MIXING VALVE
TP	TRAP PRIMER
TW	TEPID WATER
TYP	TYPICAL
V	VENT
VTR	VENT THRU ROOF
VEL	VELOCITY
W	WASTE
W	WATTS
W/	WITH
W/O	WITHOUT
WCO	WALL CLEANOUT
WH	WALL HYDRANT
WHA	WATER HAMMER ARRESTOR

DRAWING SYMBOLS

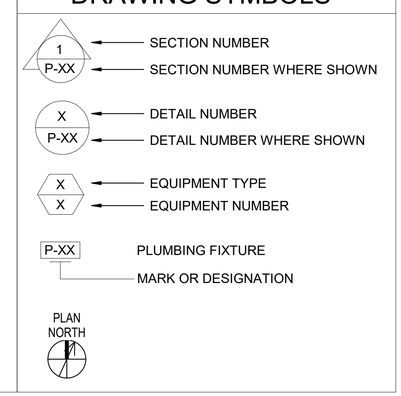

PLUMBING LEGEND

SYMBOL	ABBR	DESCRIPTION
	DCW	DOMESTIC COLD WATER
	DHW	DOMESTIC HOT WATER
	DHWR	DOMESTIC HOT WATER RETURN
	V	VENT PIPING
	W	SANITARY WASTE
CA	CA	COMPRESSED AIR
NG	NG	NATURAL GAS
AF	AF	ANTIFREEZE
ATF	ATF	AUTOMATIC TRANSMISSION FLUID
EO	EO	ENGINE OIL
GO	GO	GEAR OIL
	CHK	CHECK VALVE
	SOV	SHUTOFF VALVE (BALL VALVE)
	DN	RISER DOWN
	UP	RISER UP
		CAP
		UNION
	CO	CLEANOUT
		FLOW IN DIRECTION OF ARROW
	HB/WH	HOSE BIBB / WALL HYDRANT
	POD	POINT OF DISCONNECTION
	POC	POINT OF CONNECTION
#		KEYED NOTE

US Army Corps of Engineers ®

MARK	DESCRIPTION	DATE	APPR.

US ARMY CORPS OF ENGINEERS

SACRAMENTO DISTRICT
IN-HOUSE DESIGN
1325 J STREET
SACRAMENTO, CA 95814

Designed by: J. STONE | Drawn by: J STONE
Submittal Status: RTA
Reviewed by: MORITA/BARMANN
Submitted by: Dr. P. Modhy A. Lee, P.E. Chief, Technical Support Section

Date: 13 JUL 2020
Spec No: 2145
File No: 223-23-0865
Size: 22" x 34"
Plot Scale: 1" = 1'-0"
Plot Date: 7/10/2020 12:37:52 PM

Rev:
Project No:
File Name: W65P_GTEB

FT. HUACHUCA AZ

GROUND TRANSPORT EQUIPMENT BUILDING

PLUMBING LEGEND

SHEET IDENTIFICATION
P-001

RTA

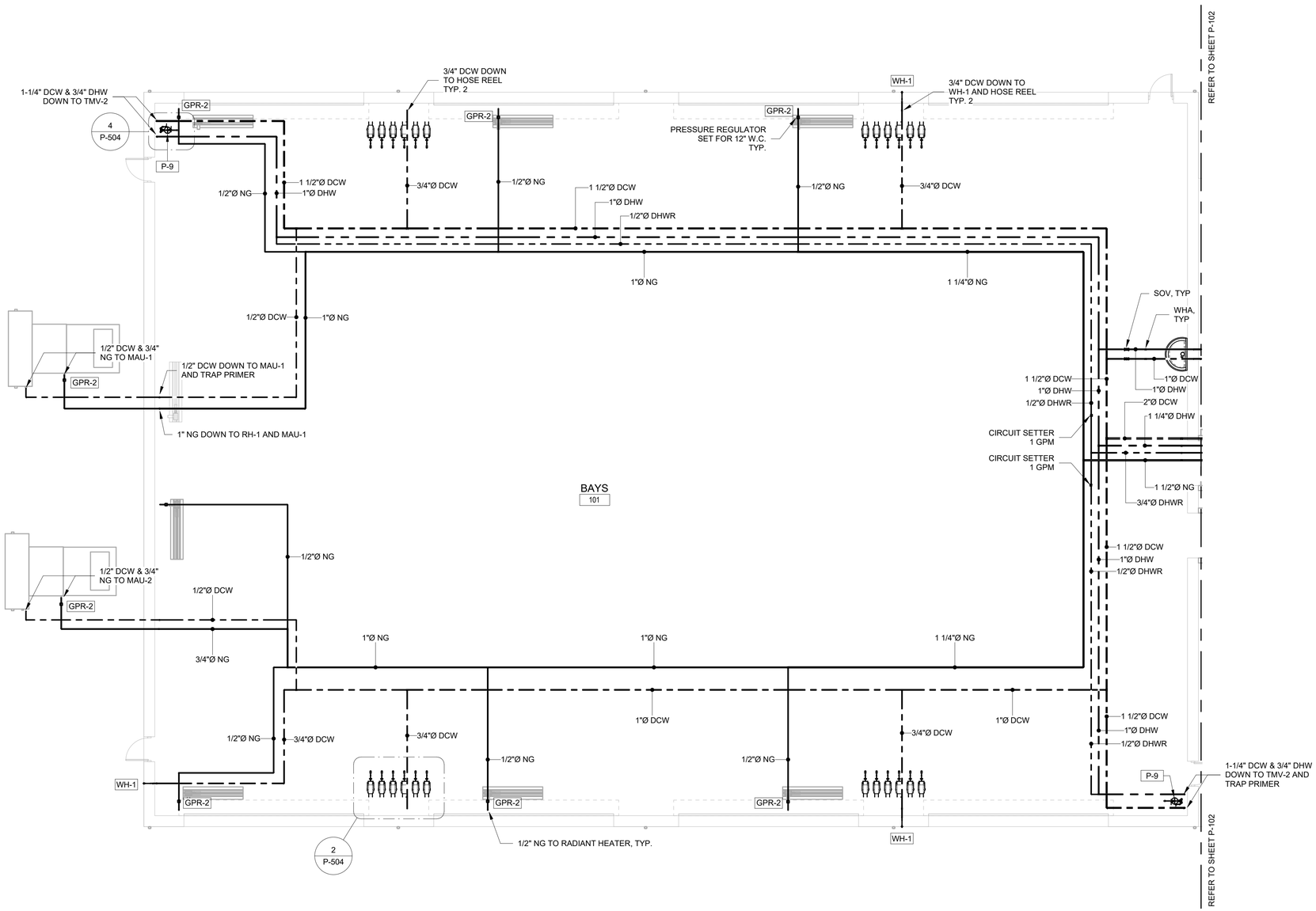

1 DOMESTIC WATER & GAS PLUMBING PLAN - AREA A

1/8" = 1'-0"

8' 0 8' 16'

SCALE: 1/8" = 1' - 0"

PLAN NORTH

AREA

'A'

US Army Corps of Engineers ®

MARK	DESCRIPTION	DATE	APPD

Designed by: J. STONE | Drawn By: J. STONE | Date: 13 JUL 2020 | Rev:

Submittal Status: RTA | Spec No: 2145 | Project No:

Reviewed by: MORITA/BARMANN | File No: 223-23-0865 | File Name: W05P_GTEB

Submitted by: Ch_Ff_modify_A_Lee_P_E | Size:22" x 34" Plot Scale: 1" = 1'-0" Plot Date:7/10/2020 12:37:55 PM

US ARMY CORPS OF ENGINEERS

SACRAMENTO DISTRICT
IN-HOUSE DESIGN
1325 J STREET
SACRAMENTO, CA 95814

FT. HUACHUCA AZ

GROUND TRANSPORT EQUIPMENT BUILDING

DOMESTIC WATER & GAS PLUMBING PLAN - AREA A

SHEET IDENTIFICATION

P-101

RTA

GENERAL NOTES:

A. PIPE SIZES SHOWN WITHIN BRACKETS SHALL BE USED IF OPTION 3 IS NOT EXERCISED.

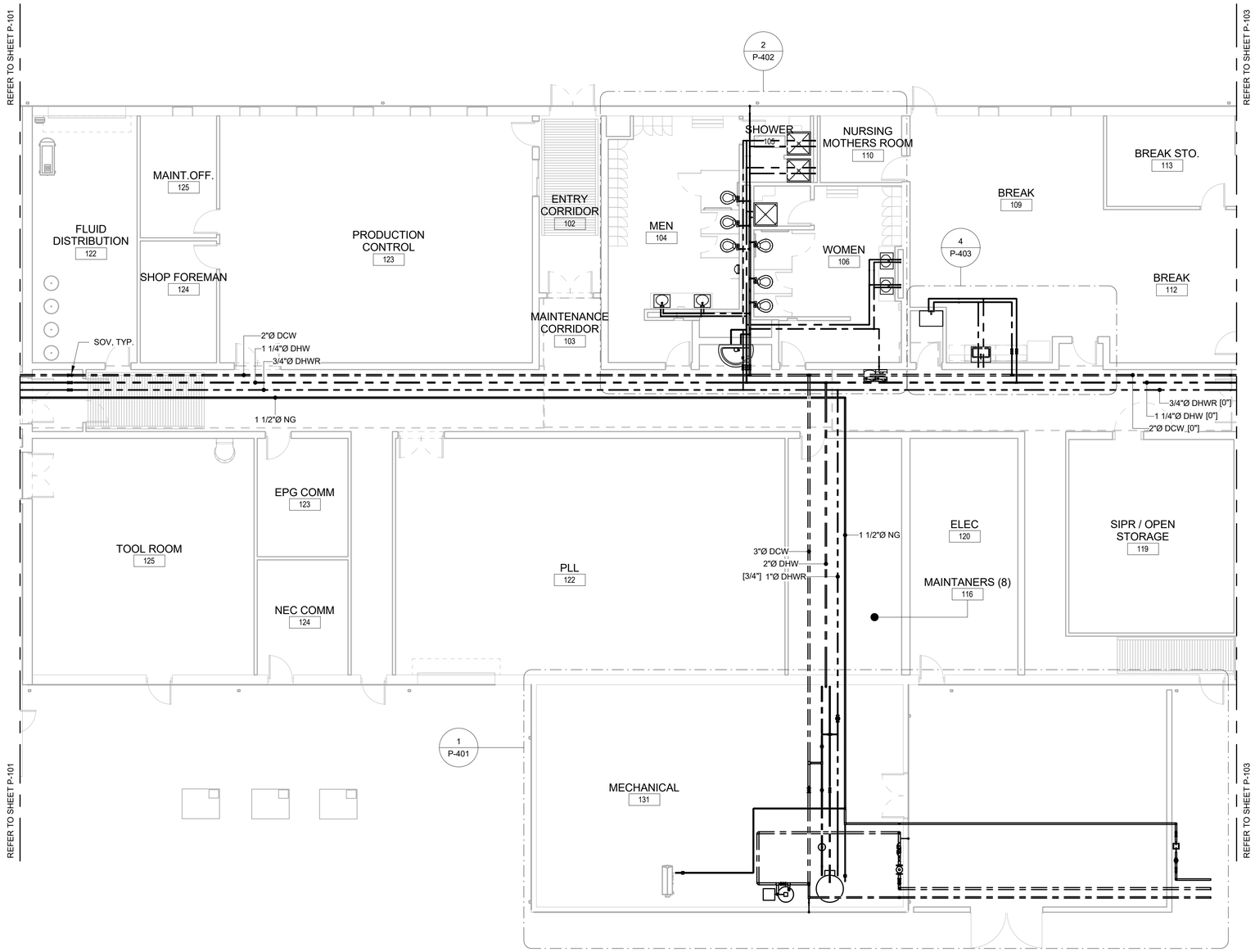

1 DOMESTIC WATER & GAS PLUMBING PLAN - AREA B

1/8" = 1'-0"

8' 0 8' 16'

SCALE: 1/8" = 1' - 0"

PLAN NORTH

AREA

'B'

US Army Corps of Engineers ®

MARK	DESCRIPTION	DATE	APPR

Designed by: J. STONE
Drawn By: J. STONE
Date: 13 JUL 2020
Rev:
Submittal Status: RTA
Spec No: 2145
Project No:
Reviewed by: MORITA/BARMANN
File No: 223-25-9665
File Name: W6SP_GTEB
Submitted by: Al Timothy A. Lee, P.E. Chief, Mechanical Engineering Section
Size:22" x 34" Plot Scale: 1" = 1'-0" Plot Date:7/10/2020 12:37:57 PM

US ARMY CORPS OF ENGINEERS

SACRAMENTO DISTRICT
IN-HOUSE DESIGN
1325 J STREET
SACRAMENTO, CA 95814

FT. HUACHUCA

AZ

GROUND TRANSPORT EQUIPMENT BUILDING

DOMESTIC WATER & GAS PLUMBING PLAN - AREA B

SHEET IDENTIFICATION
P-102

RTA

GENERAL NOTES:

A. CONSTRUCT PLUMBING SYSTEMS AS SHOWN ON THIS SHEET IF OPTION 3 IS EXERCISED.

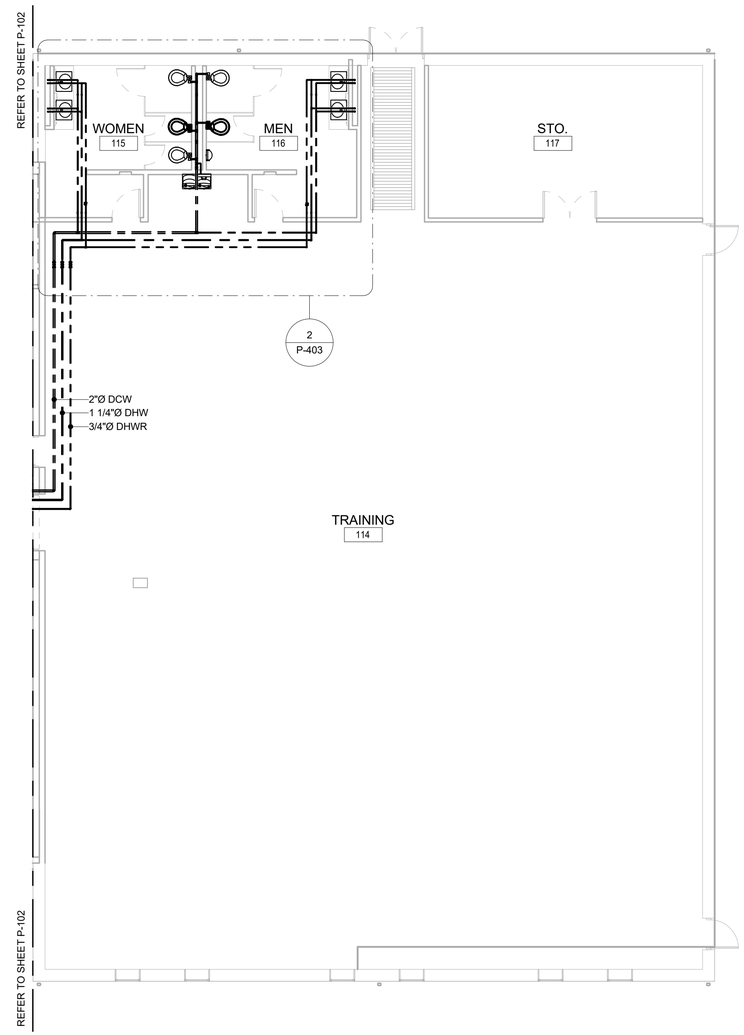

1 DOMESTIC WATER PLUMBING PLAN - AREA C (OPTION 3)
1/8" = 1'-0"

8' 0 8' 16'
SCALE: 1/8" = 1' - 0"

PLAN NORTH

AREA
'C'

US Army Corps of Engineers ®

MARK	DESCRIPTION	DATE	APPD

Designed by: J. STONE
Drawn by: J. STONE
Submittal Status: RTA
Reviewed by: MORITA/BARMANN
Submitted by: Pat Timothy A. Lee, P.E. Chief, Resident Engineering Section
Date: 13 JUL 2020
Rev:
Spec No: 2145
Project No:
File No: 223-25-0665
File Name: W6SP_GTEB
Size:22" x 34" Plot Scale: 1" = 1'-0" Plot Date:7/10/2020 12:37:58 PM

US ARMY CORPS OF ENGINEERS
SACRAMENTO DISTRICT
IN-HOUSE DESIGN
1325 J STREET
SACRAMENTO, CA 95814

FT. HUACHUCA AZ

GROUND TRANSPORT EQUIPMENT BUILDING

DOMESTIC WATER & GAS PLUMBING PLAN - AREA C (OPTION 3)

SHEET IDENTIFICATION
P-103

RTA

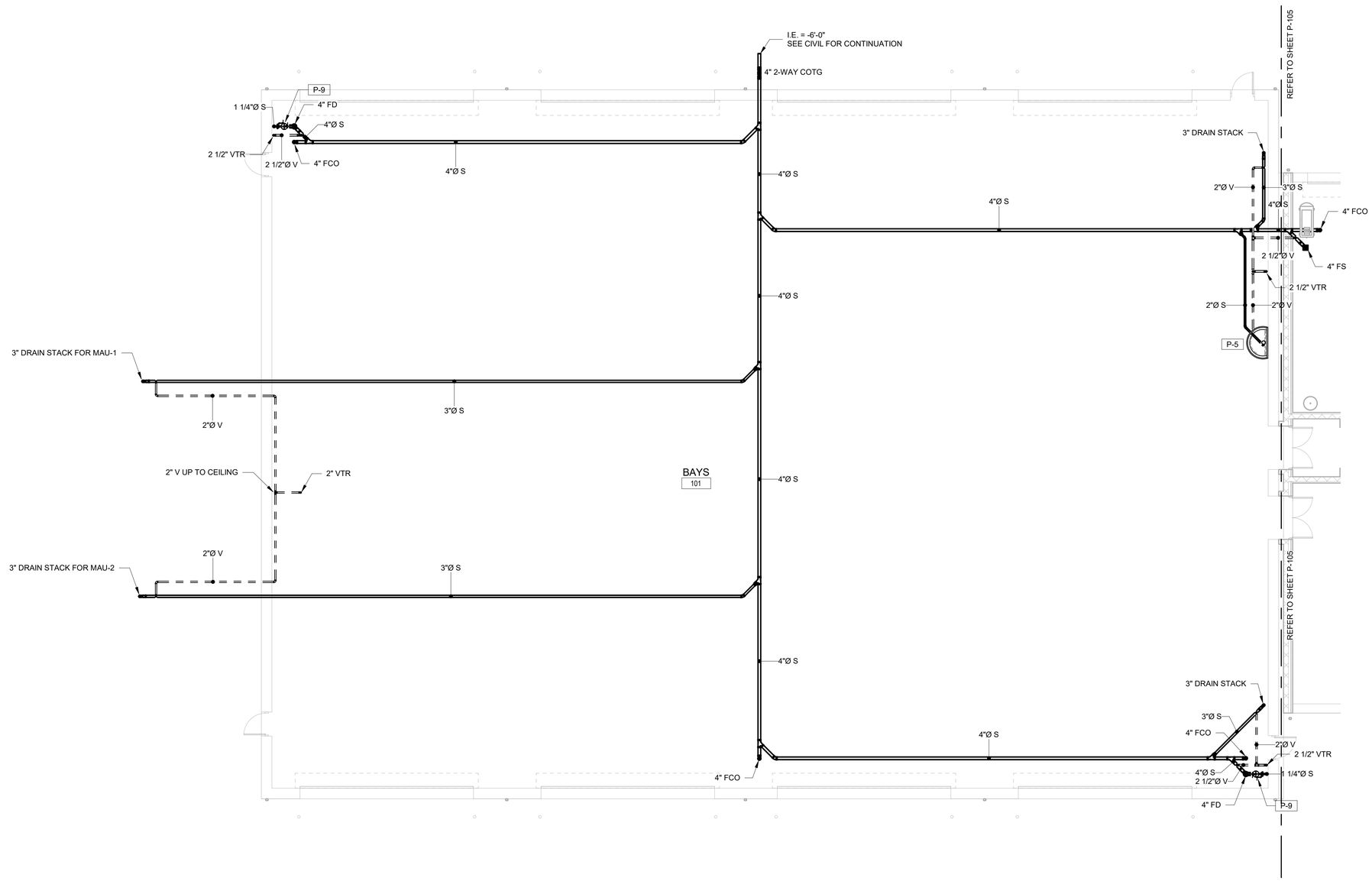

1 WASTE & VENT PLUMBING PLAN - AREA A

1/8" = 1'-0"

8' 0 8' 16'

SCALE: 1/8" = 1' - 0"

PLAN NORTH

AREA

'A'

US Army Corps of Engineers ®

MARK	DESCRIPTION	DATE	APPD

Designed by: J. STONE
Drawn By: J. STONE
Date: 13 JUL 2020
Rev:
Submittal Status: RTA
Spec No: 2145
Project No:
Reviewed MORITA/BARMANN
File No: 223-25-0665
File Name: W6SP_GTEB
Submitted by: Pat Timothy A. Lee, P.E. Chief, Mechanical Engineering Section
Size:22" x 34" Plot Scale: 1" = 1'-0" Plot Date:7/10/2020 12:37:59 PM

US ARMY CORPS OF ENGINEERS

SACRAMENTO DISTRICT
IN-HOUSE DESIGN
1325 J STREET
SACRAMENTO, CA 95814

FT. HUACHUCA AZ

GROUND TRANSPORT EQUIPMENT BUILDING

WASTE & VENT PLUMBING PLAN - AREA A

SHEET IDENTIFICATION
P-104

RTA

GENERAL NOTES:

A. PIPE SIZES SHOWN WITHIN BRACKETS SHALL BE USED IF OPTION 3 IS NOT EXERCISED.

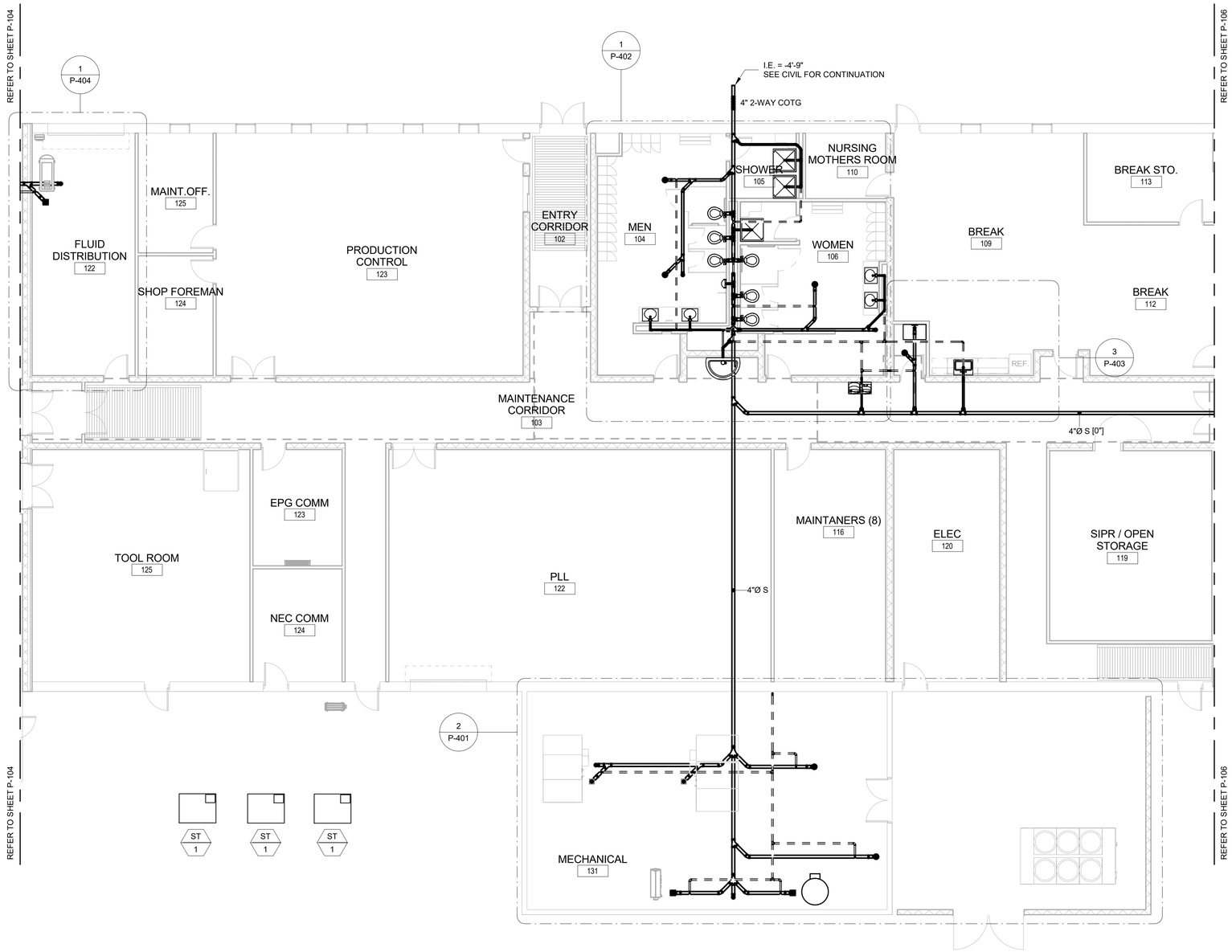

8' 0 8' 16'

SCALE: 1/8" = 1' - 0"

PLAN NORTH

AREA

'B'

1 WASTE & VENT PLUMBING FLOOR PLAN - AREA B

1/8" = 1'-0"

US Army Corps of Engineers ®

MARK	DESCRIPTION	DATE	APPD

Designed by: J. STONE
Drawn By: J. STONE
Submittal Status: RTA
Reviewed by: MORITA/BARMANN
Submitted by: Ms. Timothy A. Lee, P.E. Chief, Design Branch
Date: 13 JUL 2020
Spec No: 2145
Project No:
Rev:
File No: 223-25-0685
File Name: WBP_GTEB
Size:22" x 34"
Plot Scale: 1" = 1'-0"
Plot Date/7/10/2020 12:38:03 PM

US ARMY CORPS OF ENGINEERS

SACRAMENTO DISTRICT
IN-HOUSE DESIGN
1325 J STREET
SACRAMENTO, CA 95814

FT. HUACHUCA AZ

GROUND TRANSPORT EQUIPMENT BUILDING

WASTE & VENT PLUMBING PLAN - AREA B

SHEET IDENTIFICATION
P-105

RTA

GENERAL NOTES:

A. CONSTRUCT PLUMBING SYSTEMS AS SHOWN ON THIS SHEET IF OPTION 3 IS EXERCISED.

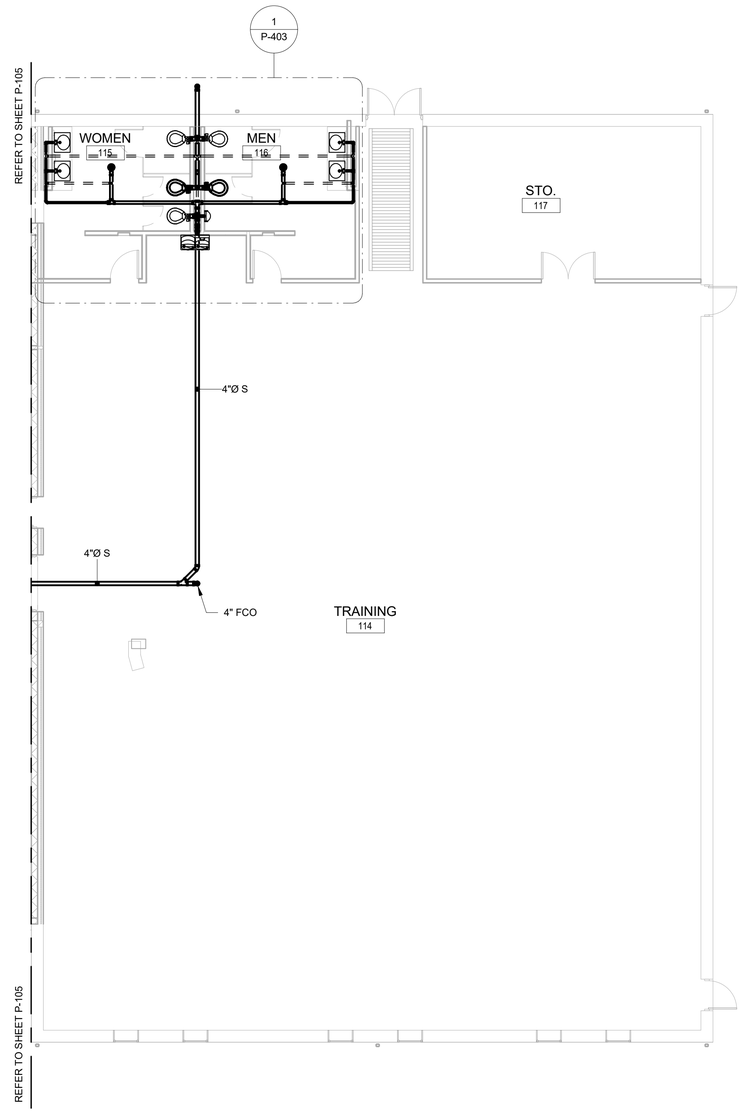

8' 0 8' 16'

SCALE: 1/8" = 1' - 0"

PLAN NORTH

AREA

'C'

1 WASTE & VENT PLUMBING FLOOR PLAN - AREA C (OPTION 3)

1/8" = 1'-0"

US Army Corps of Engineers ®

MARK	DESCRIPTION	DATE	APPD

Designed by: J. STONE
Drawn By: J. STONE
Date: 13 JUL 2020
Rev:
Submittal Status: RTA
Spec No: 2145
Project No:
Reviewed by: MORITA/BARMANN
File No: 223-25-0065
File Name: W6GP_GTEB
Submitted by: Cal Thrift/A. Lee, P.E. Chief, Resident Engineer Section
Size/22" x 34"
Plot Scale: 1" = 1'-0"
Plot Date:7/10/2020 12:38:04 PM

US ARMY CORPS OF ENGINEERS

SACRAMENTO DISTRICT
IN-HOUSE DESIGN
1325 J STREET
SACRAMENTO, CA 95814

FT. HUACHUCA AZ

GROUND TRANSPORT EQUIPMENT BUILDING

WASTE & VENT PLUMBING PLAN - AREA C (OPTION 3)

SHEET IDENTIFICATION
P-106

RTA

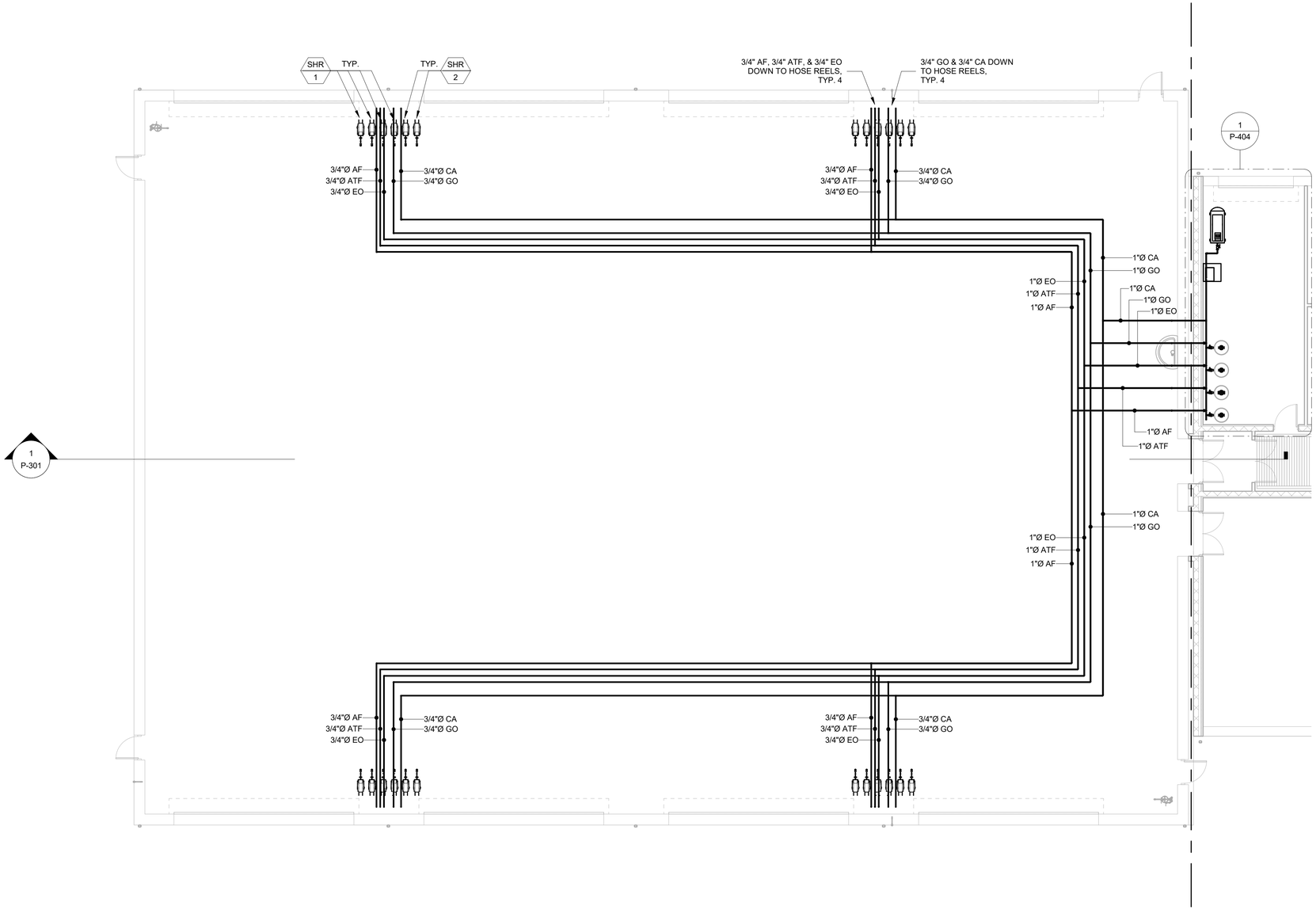

1 POL & COMPRESSED AIR PLUMBING PLAN - AREA A

1/8" = 1'-0"

8' 0 8' 16'

SCALE: 1/8" = 1' - 0"

PLAN NORTH

AREA

'A'

US Army Corps of Engineers ®

MARK	DESCRIPTION	DATE	APPR

Designed by: J. STONE
Drawn By: J. STONE
Date: 13 JUL 2020
Rev:
Submittal Status: RTA
Spec No: 2145
Project No:
Reviewed by: S. BARMANN
File No: 223-25-0665
File Name: W6IP_GTEB
Submitted by: Maj. Timothy A. Lee, P.E. Chief, Design Branch
Size:22" x 34" Plot Scale: 1" = 1'-0" Plot Date:7/10/2020 12:38:06 PM

US ARMY CORPS OF ENGINEERS

SACRAMENTO DISTRICT
IN-HOUSE DESIGN
1325 J STREET
SACRAMENTO, CA 95814

FT. HUACHUCA

AZ

GROUND TRANSPORT EQUIPMENT BUILDING

POL & COMPRESSED AIR PLUMBING PLAN - AREA A

SHEET IDENTIFICATION
P-107

RTA

GENERAL NOTES:

A. CONSTRUCT PLUMBING SYSTEMS AS SHOWN ON THIS SHEET IF OPTION 8 IS EXERCISED.

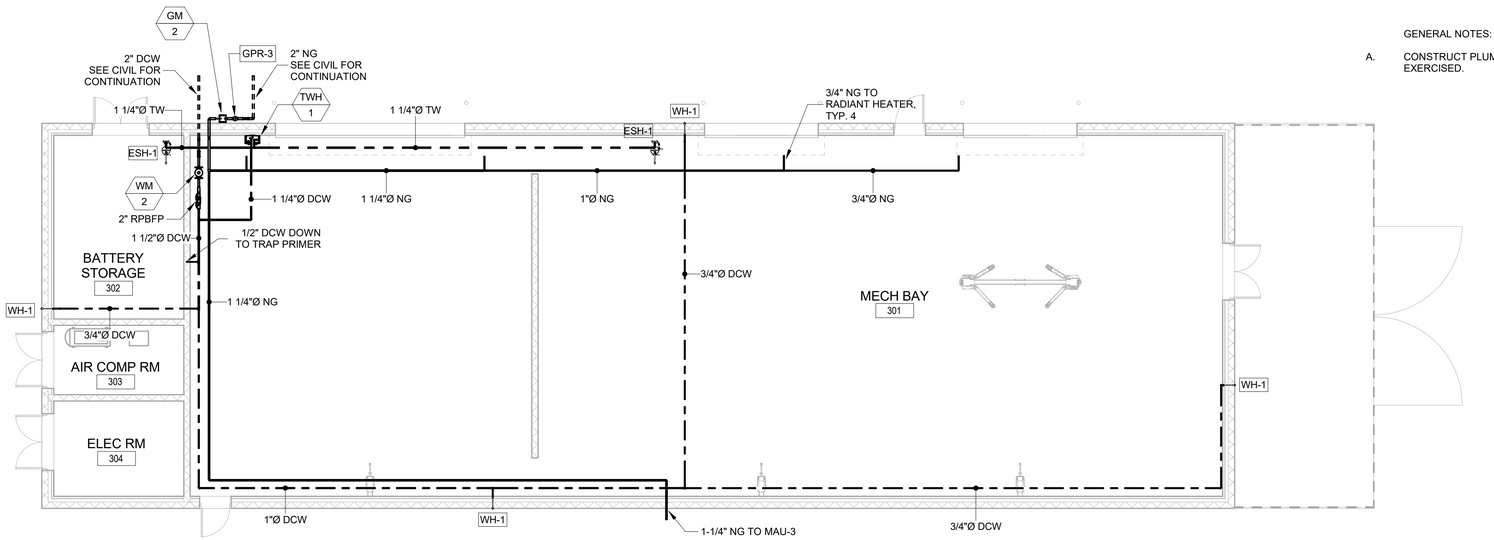

1 DOMESTIC WATER & GAS PLUMBING PLAN - ORGANIZATIONAL STORAGE BUILDING (OPTION 8)

1/8" = 1'-0"

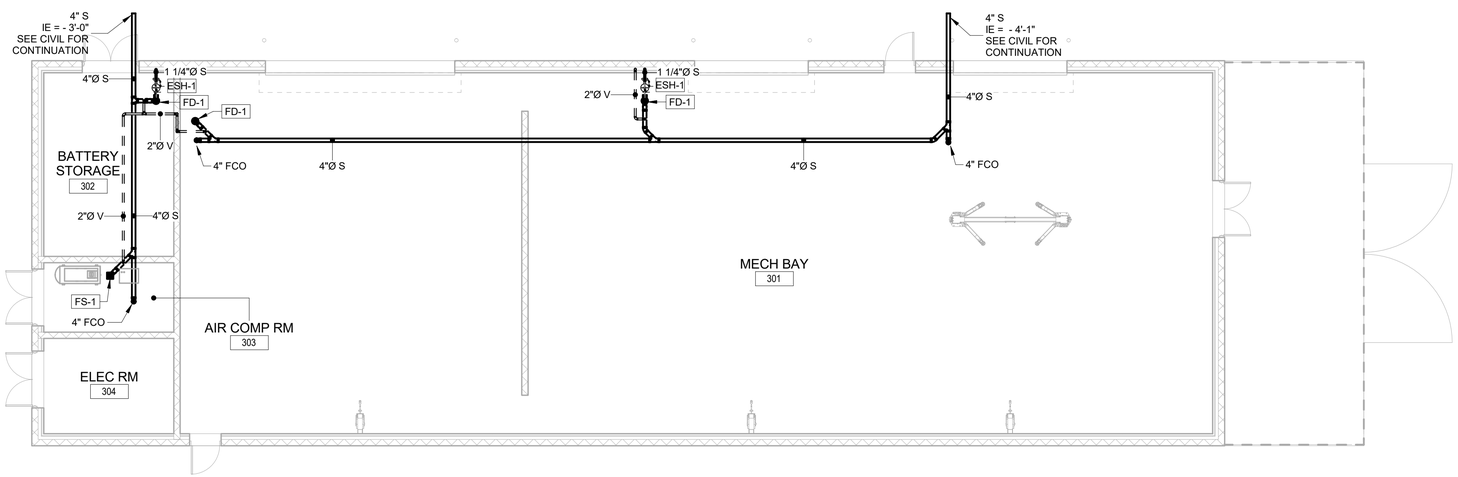

2 WASTE & VENT PLUMBING PLAN - ORGANIZATIONAL STORAGE BUILDING (OPTION 8)

1/8" = 1'-0"

8' 0 8' 16'

SCALE: 1/8" = 1' - 0"

PLAN NORTH

US Army Corps of Engineers ®

MARK	DESCRIPTION	DATE	APPR

Designed by: J. STONE
Drawn by: J. STONE
Submittal Status: RTA
Reviewed by: S. BARMANN
Submitted by: Pat Timothy A. Lee, P.E. Chief, Resource Management Section
Date: 13 JUL 2020
Spec No: 2145
Project No:
Rev:
File No: 223-25-0665
File Name: W86P_STOR
Size:22" x 34" Plot Scale: 1" = 1'-0" Plot Date:7/10/2020 12:45:04 PM

US ARMY CORPS OF ENGINEERS

SACRAMENTO DISTRICT
IN-HOUSE DESIGN
1325 J STREET
SACRAMENTO, CA 95814

FT. HUACHUCA AZ

GROUND TRANSPORT
EQUIPMENT BUILDING

ORGANIZATIONAL STORAGE BUILDING
(OPTION 8)

SHEET IDENTIFICATION
P-111

RTA

GENERAL NOTES:

A. CONSTRUCT PLUMBING SYSTEMS AS SHOWN ON THIS SHEET IF OPTION 8 IS EXERCISED.

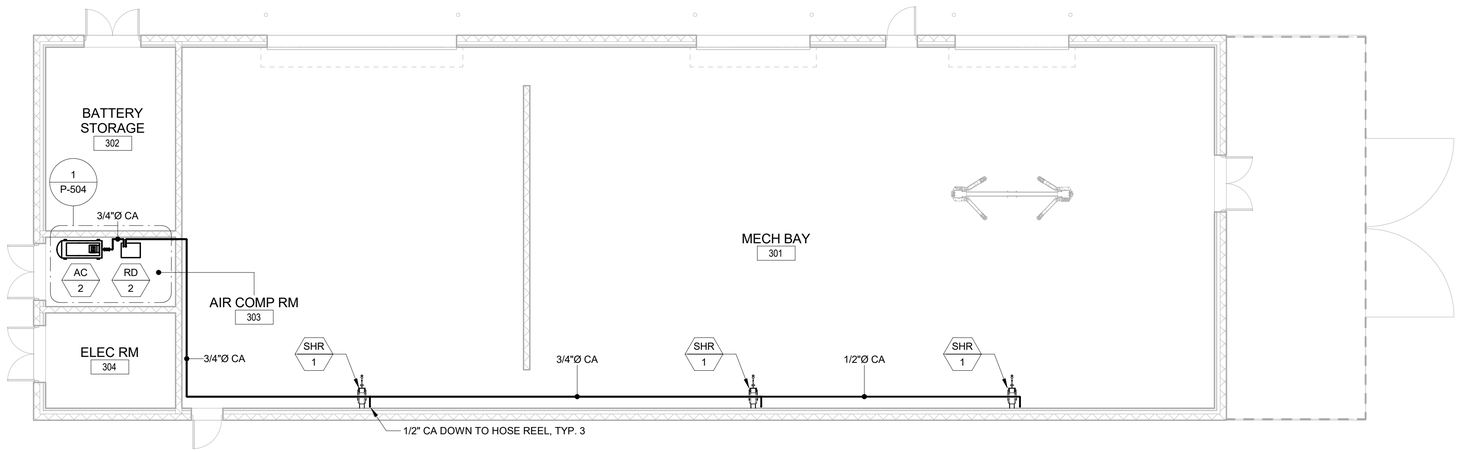

1 COMPRESSED AIR PLUMBING PLAN - ORGANIZATIONAL STORAGE BUILDING (OPTION 8)

1/8" = 1'-0"

8' 0 8' 16'

SCALE: 1/8" = 1' - 0"

PLAN NORTH

US Army Corps of Engineers ®

MARK	DESCRIPTION	DATE	APPD

US ARMY CORPS OF ENGINEERS

SACRAMENTO DISTRICT
IN-HOUSE DESIGN
1325 J STREET
SACRAMENTO, CA 95814

Designed by: J. STONE
Drawn By: J. STONE
Date: 13 JUL 2020
Rev:
Submittal Status: RTA
Spec No: 2145
Project No:
Reviewed by: S. BARMANN
Submitted by: Dr. Timothy A. Lee, P.E.
Chief, Mechanical Design Section
File No: 223-25-0685
File Name: W8IP_STOR
Size:22" x 34"
Plot Scale: 1" = 1'-0"
Plot Date:7/10/2020 12:45:06 PM

FT. HUACHUCA AZ

GROUND TRANSPORT EQUIPMENT BUILDING

ORGANIZATIONAL STORAGE BUILDING (OPTION 8)

SHEET IDENTIFICATION
P-112

RTA

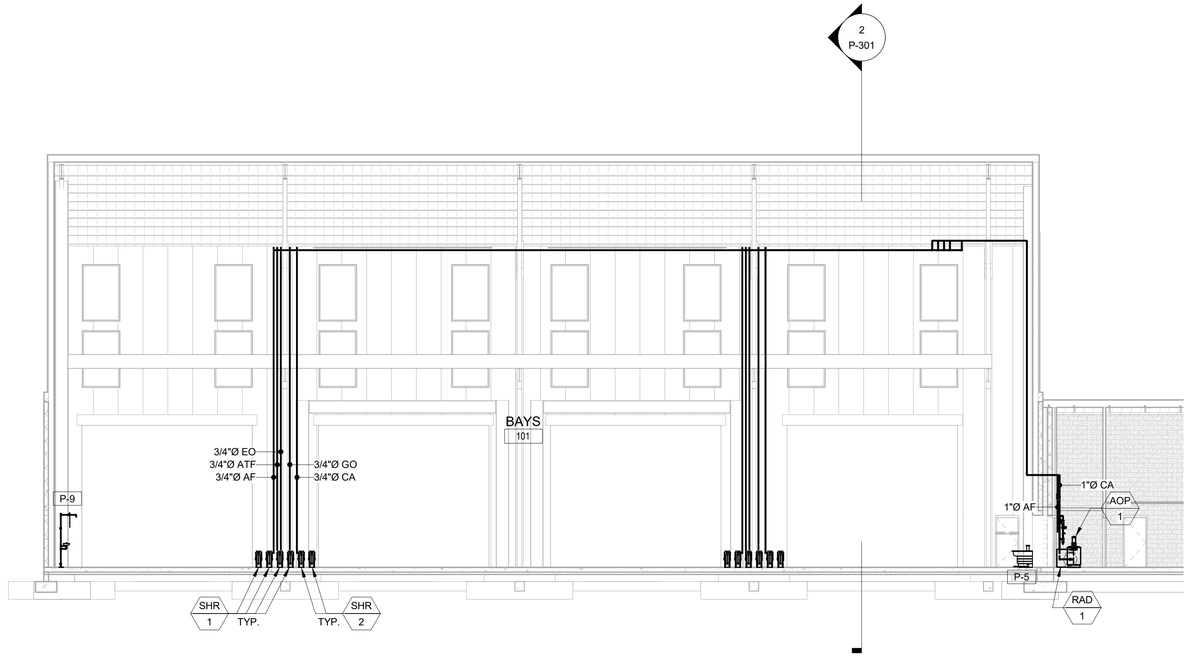

1 SECTION 1 GTEB

3/32" = 1'-0"

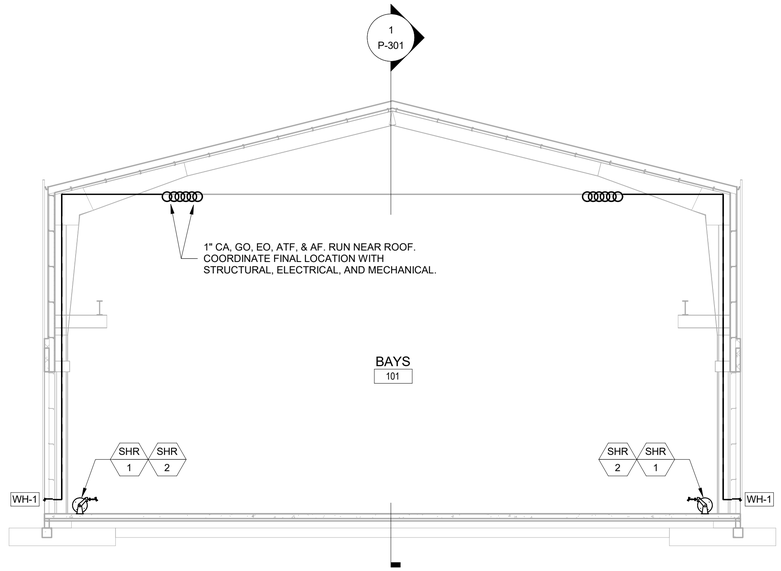

2 SECTION 2 GTEB

3/32" = 1'-0"

US Army Corps of Engineers ®

MARK	DESCRIPTION	DATE	APPR.

Designed by: J. STONE
Drawn By: J. STONE
Submittal Status: RTA
Reviewed by: MORITA/BARMANN
Submitted by: Dr. Timothy A. Lee, P.E. Chief, Mechanical Design Section
Date: 13 JUL 2020
Spec No: 2145
File No: 223-25-0665
Size:22" x 34" Plot Scale:1" = 1'-0" Plot Date:7/10/2020 12:38:13 PM
Rev:
Project No:
File Name: W69P_GTEB

US ARMY CORPS OF ENGINEERS

SACRAMENTO DISTRICT
IN-HOUSE DESIGN
1325 J STREET
SACRAMENTO, CA 95814

FT. HUACHUCA AZ

GROUND TRANSPORT EQUIPMENT BUILDING

PLUMBING BUILDING SECTION

SHEET IDENTIFICATION
P-301

RTA

GENERAL NOTES:

A. PIPE SIZES SHOWN WITHIN BRACKETS SHALL BE USED IF OPTION 3 IS NOT EXERCISED.

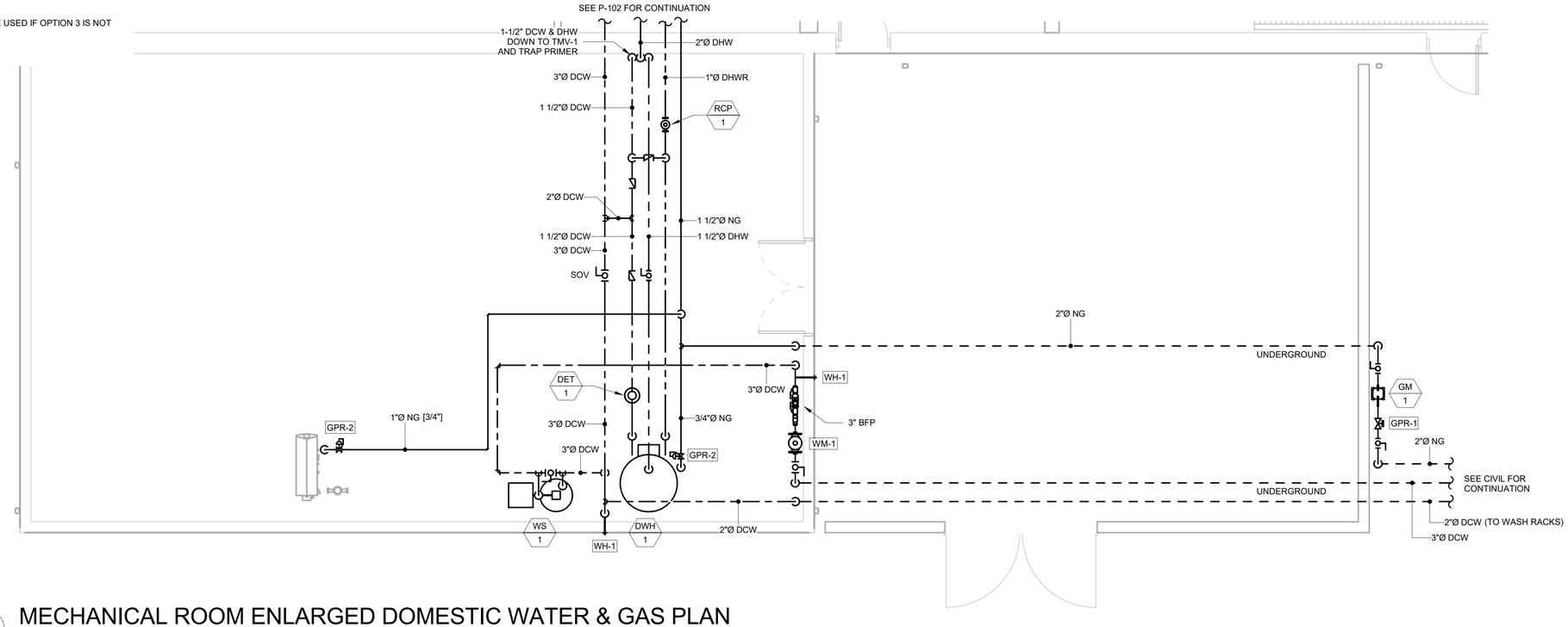

1 MECHANICAL ROOM ENLARGED DOMESTIC WATER & GAS PLAN

1/4" = 1'-0"

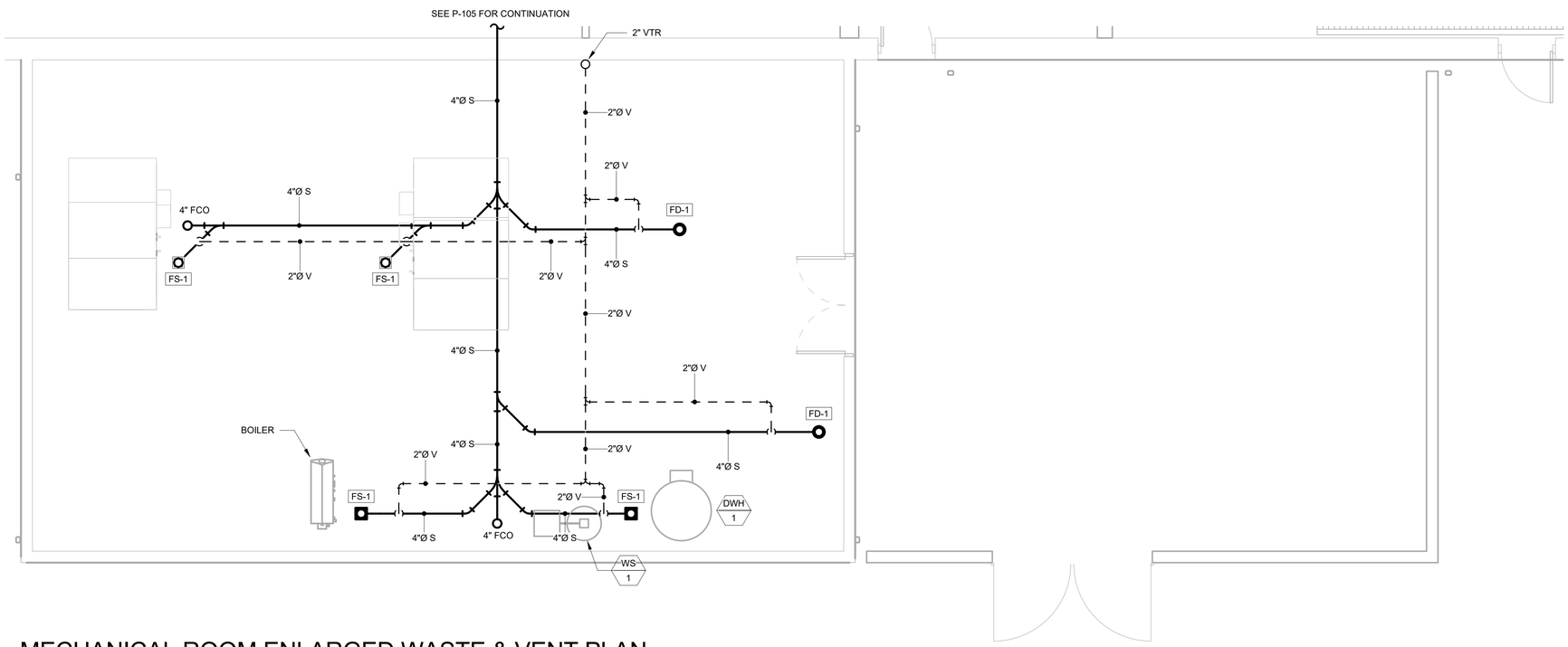

2 MECHANICAL ROOM ENLARGED WASTE & VENT PLAN

1/4" = 1'-0"

US Army Corps of Engineers ®

MARK	DESCRIPTION	DATE	APPD

Rev:

Date: 13 JUL 2020

Project No:

Spec No: 2145

File Name: W6SP_GTEB

File No: 223-25-0685

Size:22" x 34"
Plot Scale: 1" = 1'-0"
Plot Date:7/10/2020 12:38:14 PM

Designed by: J. STONE

Drawn By: J. STONE

Submittal Status: RTA

Reviewed by: S. BARMANN

Submitted by: M. Timothy A. Lee, P.E. Chief, Mechanical Design Section

US ARMY CORPS OF ENGINEERS

SACRAMENTO DISTRICT
IN-HOUSE DESIGN
1325 J STREET
SACRAMENTO, CA 95814

FT. HUACHUCA AZ

GROUND TRANSPORT EQUIPMENT BUILDING

ENLARGED PLUMBING PLAN

SHEET IDENTIFICATION
P-401

RTA

GENERAL NOTES:

A. PIPE SIZES SHOWN WITHIN BRACKETS SHALL BE USED IF OPTION 3 IS NOT EXERCISED.

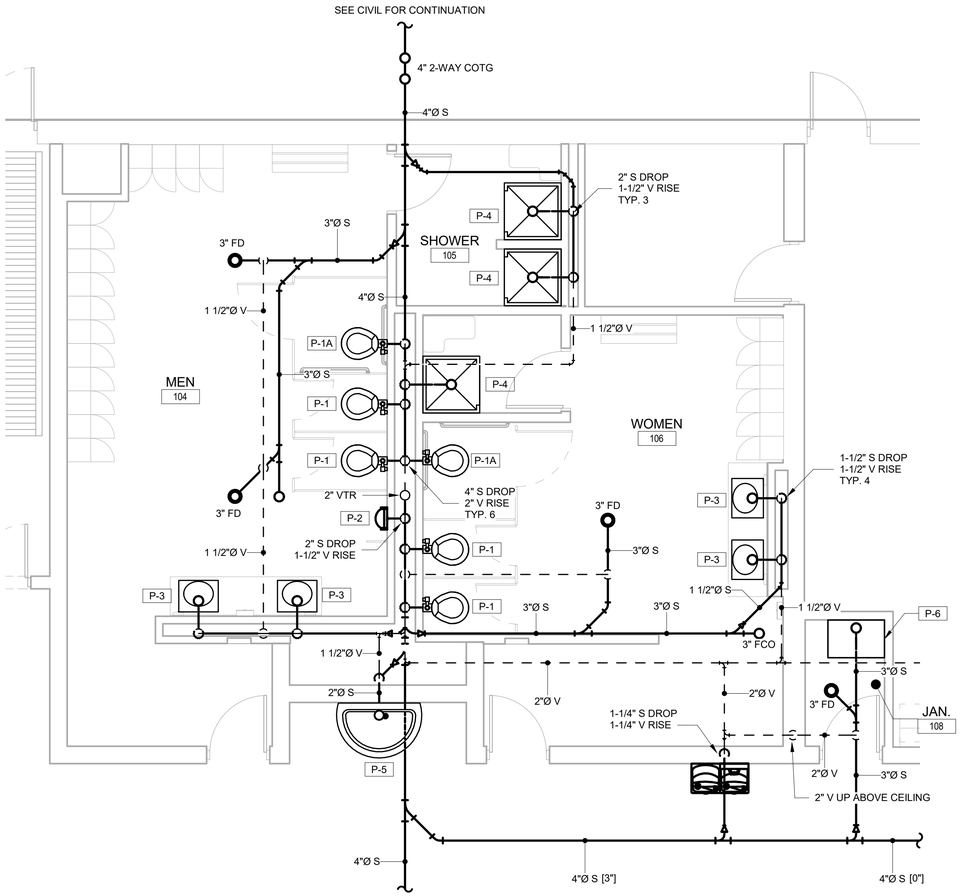

1 RESTROOM ENLARGED WASTE & VENT PLAN

1/4" = 1'-0"

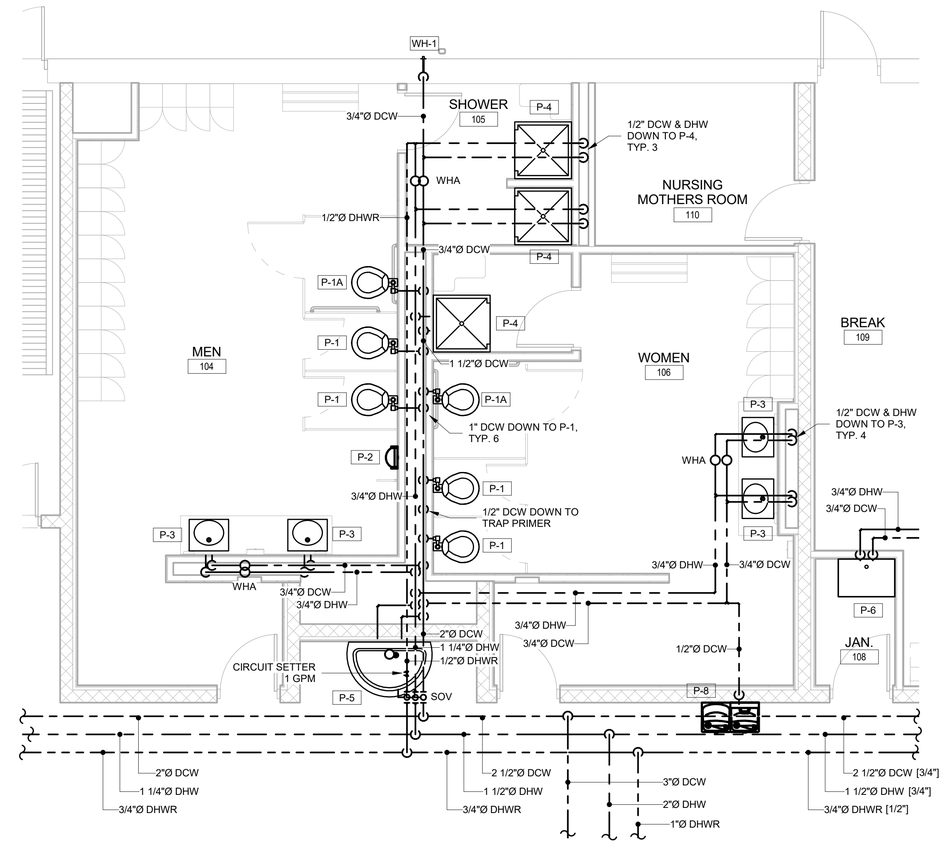

2 RESTROOM ENLARGED DOMESTIC WATER PLAN

1/4" = 1'-0"

4' 0 4' 8'

SCALE: 1/4" = 1' - 0"

PLAN NORTH

US Army Corps of Engineers ®

MARK	DESCRIPTION	DATE	APPR.

Designed by: J. STONE
Drawn By: J. STONE
Date: 13 JUL 2020
Rev:
Submittal Status: RTA
Reviewed by: MORITA/BARMANN
Project No: 223-25-0655
Spec No: 2145
File No: W6IP_GTEB
Submitted by: Sq/ Timothy A. Lee, P.E. Chief, Mechanical Design Section
Size/Z# x 34" Plot Scale: 1" = 1'-0" Plot Date/7/10/2020 12:38:15 PM

US ARMY CORPS OF ENGINEERS

SACRAMENTO DISTRICT
IN-HOUSE DESIGN
1325 J STREET
SACRAMENTO, CA 95814

FT. HUACHUCA

AZ

GROUND TRANSPORT
EQUIPMENT BUILDING

ENLARGED PLUMBING PLAN

SHEET IDENTIFICATION
P-402

RTA

GENERAL NOTES:

A. PIPE SIZES SHOWN WITHIN BRACKETS SHALL BE USED IF OPTION 3 IS NOT EXERCISED.

B. TRAINING AREA PLUMBING TO BE PROVIDED IF OPTION 3 IS EXERCISED.

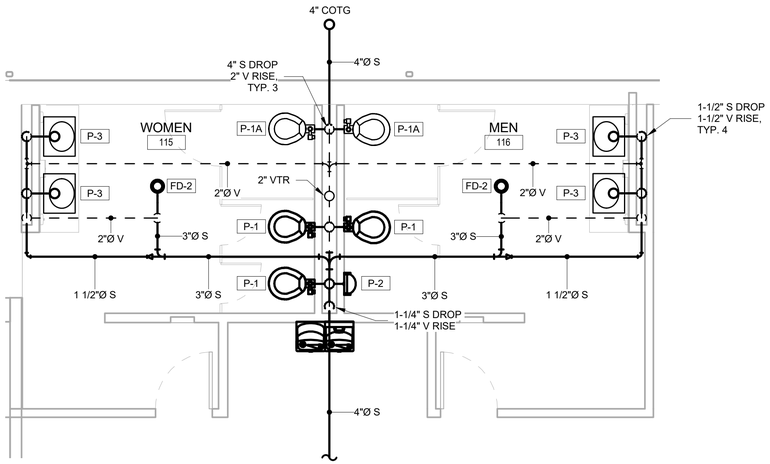

1 TRAINING AREA ENLARGED WASTE & VENT PLAN (OPTION 3)

1/4" = 1'-0"

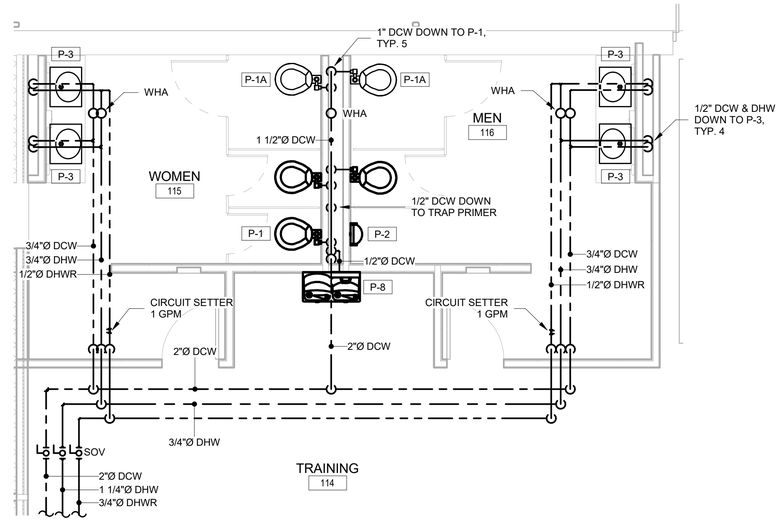

2 TRAINING AREA ENLARGED DOMESTIC WATER PLAN (OPTION 3)

1/4" = 1'-0"

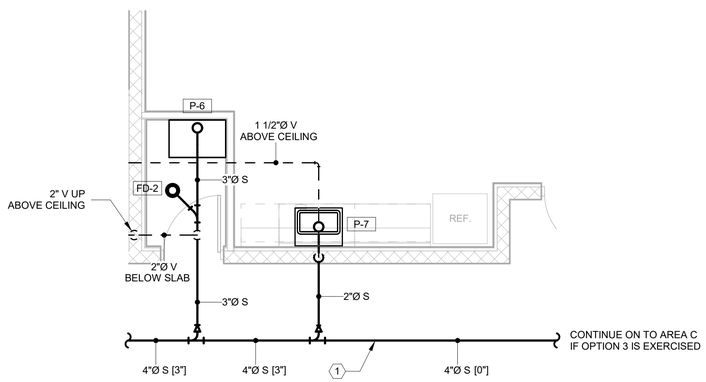

3 BREAK ROOM ENLARGED WASTE & VENT PLAN

1/4" = 1'-0"

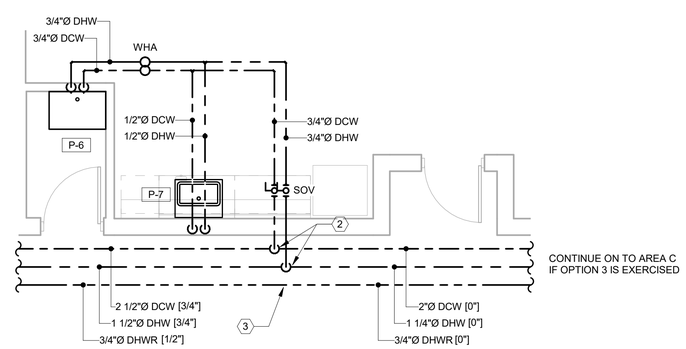

4 BREAK ROOM ENLARGED DOMESTIC WATER PLAN

1/4" = 1'-0"

KEYNOTES:

1. IF OPTION 3 IS NOT EXERCISED, TERMINATE WASTE LINE AT THIS POINT WITH 3 INCH FLOOR CLEANOUT.
2. IF OPTION 3 IS NOT EXERCISED, TERMINATE DCW AND DHW LINES AT THIS POINT INSTEAD OF CONTINUING ON TO AREA C.
3. IF OPTION 3 IS NOT EXERCISED, CONNECT DHWR TO DHW LINE AT THIS POINT WITH CIRCUIT SETTER CALIBRATED FOR 1 GPM.

4' 0 4' 8'

SCALE: 1/4" = 1' - 0"

PLAN NORTH

US Army Corps of Engineers ®

MARK	DESCRIPTION	DATE	APPD

Designed by: J. STONE
Drawn By: J. STONE
Date: 13 JUL 2020
Rev:
Submittal Status: RTA
Spec No: 2145
Project No:
Reviewed by: MORITA/BARMANN
File No: 223-25-0665
File Name: W69P_GTEB
Submitted by: Jill Timothy A. Lee, P.E. Chief, Design Branch, Section
Size:22" x 34" Plot Scale: 1" = 1'-0" Plot Date:7/10/2020 12:38:16 PM

US ARMY CORPS OF ENGINEERS
SACRAMENTO DISTRICT
IN-HOUSE DESIGN
1325 J STREET
SACRAMENTO, CA 95814

FT. HUACHUCA AZ

GROUND TRANSPORT EQUIPMENT BUILDING

ENLARGED PLUMBING PLAN

SHEET IDENTIFICATION
P-403

RTA

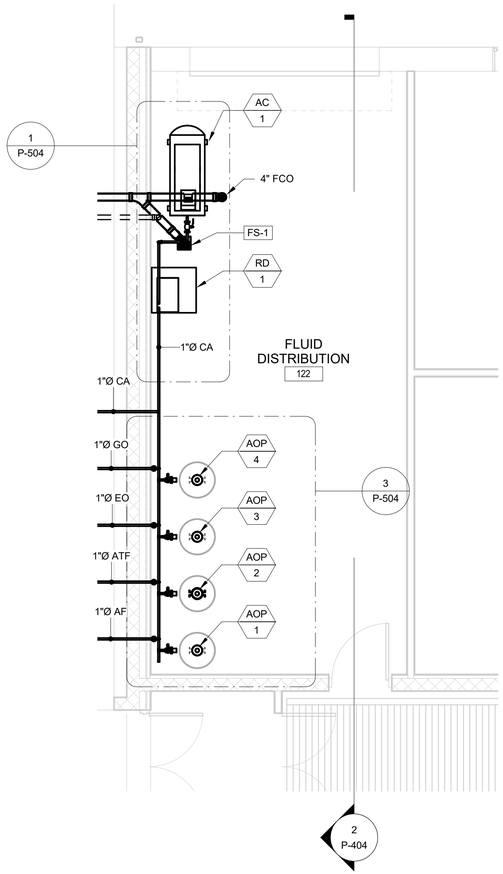

1 FLUID DISTRIBUTION ROOM ENLARGED PLAN

1/4" = 1'-0"

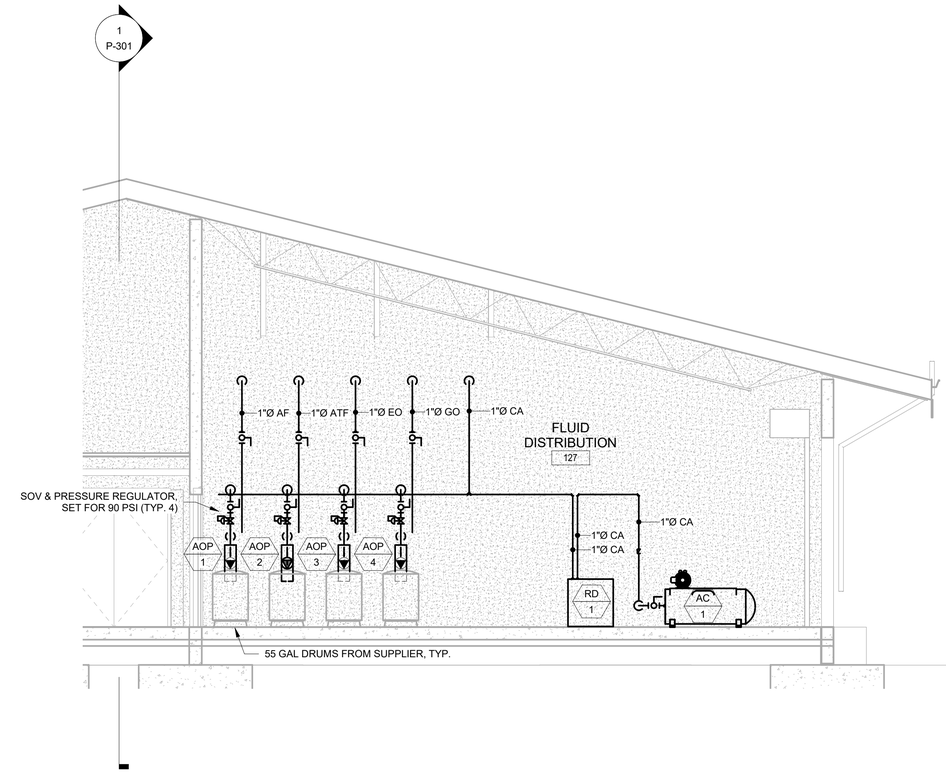

2 FLUID DISTRIBUTION ROOM SECTION

1/4" = 1'-0"

4' 0 4' 8'

SCALE: 1/4" = 1' - 0"

PLAN NORTH

US Army Corps of Engineers ®

MARK	DESCRIPTION	DATE	APPR

Designed by: J. STONE
Drawn By: J. STONE
Date: 13 JUL 2020
Rev:
Submittal Status: RTA
Spec No: 2145
Project No:
Reviewed by: MORITA/BARMANN
File No: 223-25-0665
File Name: W6IP_GTEB
Submitted by: Sal Timothy A. Lee, P.E. Chief, Design Branch, Section
Size:22" x 34" Plot Scale: 1" = 1'-0" Plot Date:7/10/2020 12:38:30 PM

US ARMY CORPS OF ENGINEERS

SACRAMENTO DISTRICT
IN-HOUSE DESIGN
1325 J STREET
SACRAMENTO, CA 95814

FT. HUACHUCA

AZ

GROUND TRANSPORT
EQUIPMENT BUILDING

ENLARGED PLUMBING PLAN

SHEET IDENTIFICATION
P-404

RTA

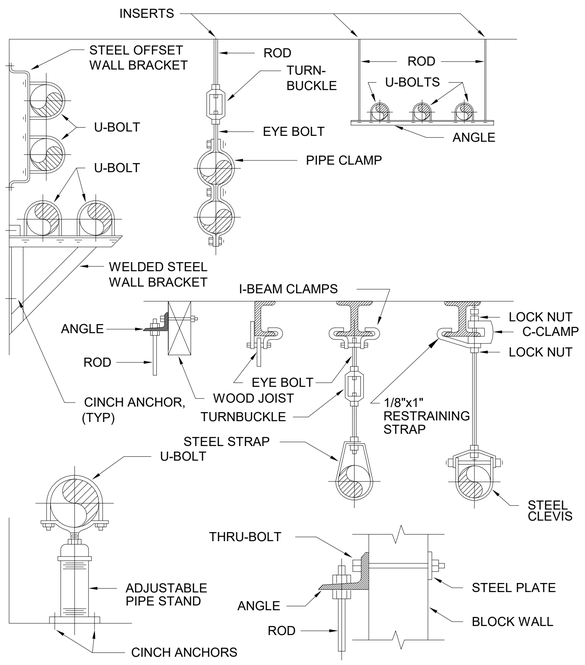

1 PIPE SUPPORT DETAIL

NOT TO SCALE

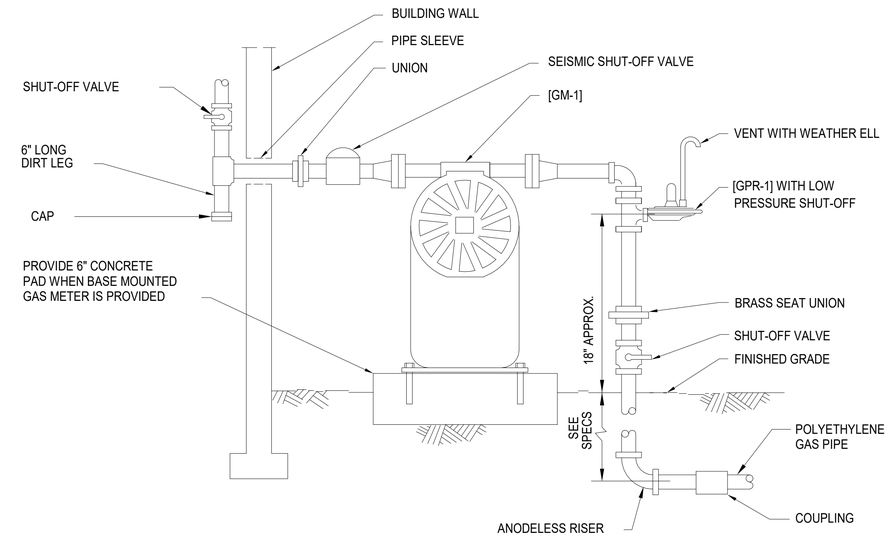

2 GAS METER & REGULATOR DETAIL

NOT TO SCALE

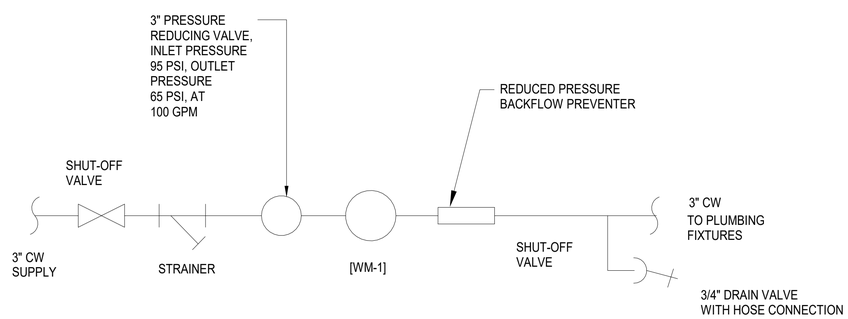

1. MAXIMUM HEIGHT AFF, 5'-0".
2. ALL FITTINGS, VALVES AND EQUIPMENT TO BE FLANGED.
3. ALL FITTINGS, VALVES AND EQUIPMENT TO BE LINE SIZE.

3 DOMESTIC WATER METER DETAIL

NOT TO SCALE

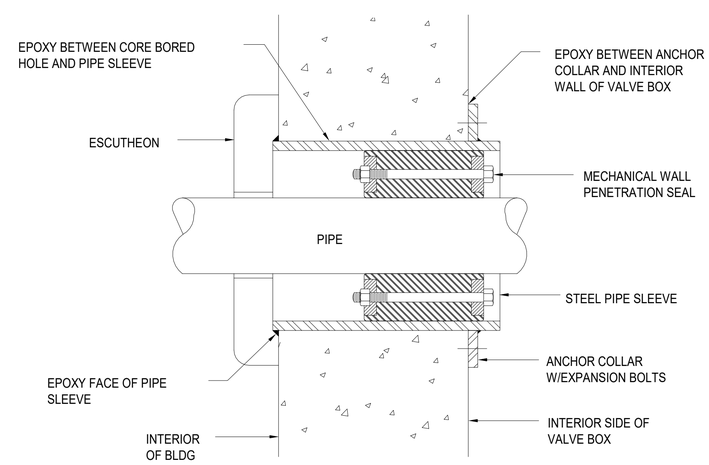

4 MECHANICAL WALL PENETRATION DETAIL

NOT TO SCALE

US Army Corps of Engineers ®

MARK	DESCRIPTION	DATE	APPD

US ARMY CORPS OF ENGINEERS

SACRAMENTO DISTRICT
IN-HOUSE DESIGN
1325 J STREET
SACRAMENTO, CA 95814

Designed by: M ISIDRO | Drawn By: MJI | Date: 13 JUL 2020 | Rev:
Submittal Status: RTA | Spec No: 2145 | Project No:
Reviewed by: S. BARMANN | File No: 223-23-0865 | File Name: W6GP_STOR
Submitted by: Size:22" x 34" | Plot Scale:1:1 | Plot Date:7/10/2020 12:45:06 PM
Chief, Design Branch Section

FT. HUACHUCA AZ

GROUND TRANSPORT EQUIPMENT BUILDING

PLUMBING DETAILS

SHEET IDENTIFICATION
P-501

RTA

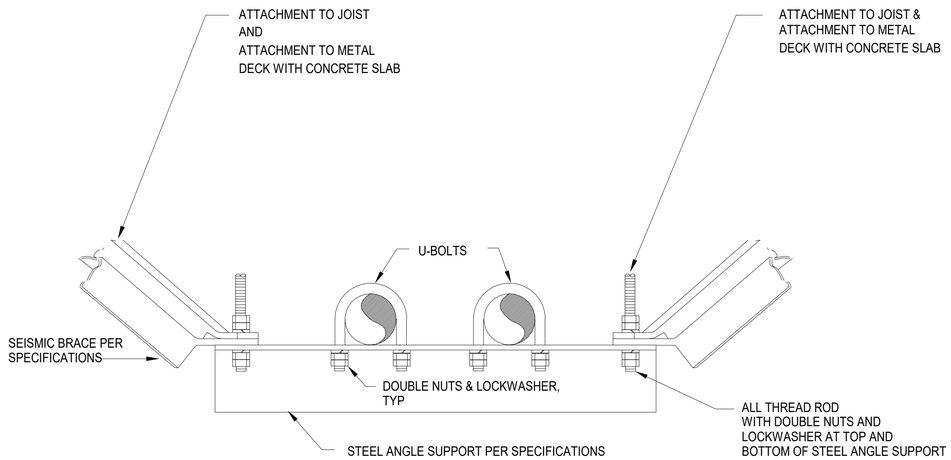

1 PIPE SUPPORT & SEISMIC BRACE DETAIL

NOT TO SCALE

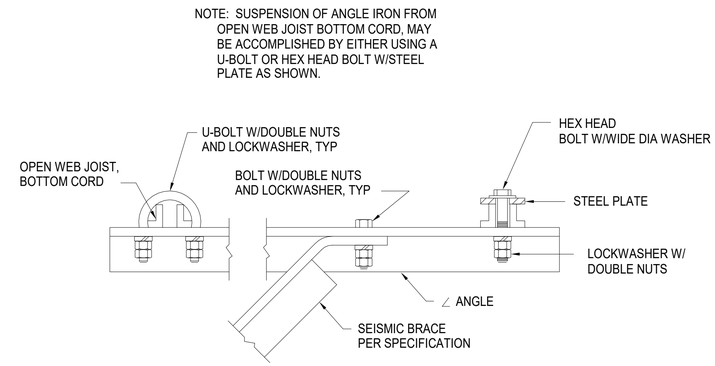

2 SEISMIC BRACE ATTACHMENT TO JOIST DETAIL

NOT TO SCALE

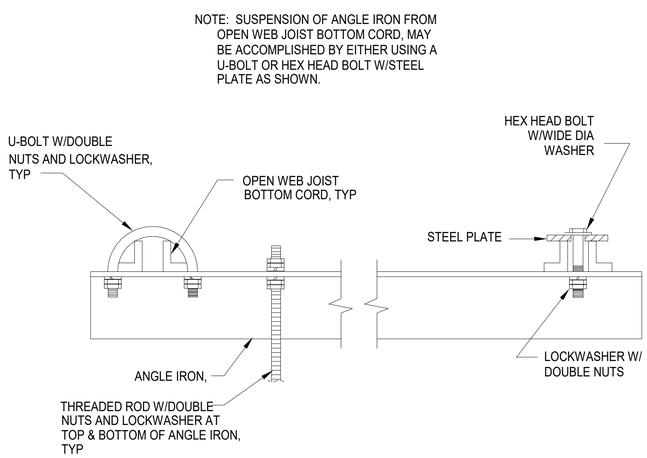

3 THREADED ROD ATTACHMENT FROM JOIST DETIAL

NOT TO SCALE

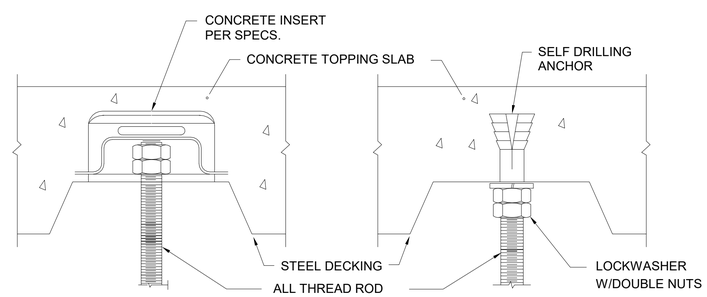

TYPE 1

MAXIMUM LOAD PER
MFR. RECOMMENDED RATING.

TYPE 2

INSTALLED AFTER CONCRETE IS
POURED. MAX LOAD 50% OF
MFR. RECOMMENDED RATING.

4 THREADED ROD ATTACHMENT FROM METAL DECK DETAIL

NOT TO SCALE

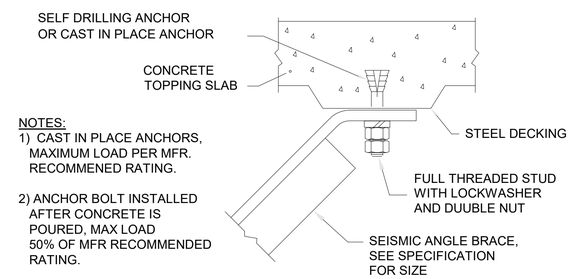

NOTES:

1) CAST IN PLACE ANCHORS, MAXIMUM LOAD PER MFR. RECOMMENED RATING.

2) ANCHOR BOLT INSTALLED AFTER CONCRETE IS POURED, MAX LOAD 50% OF MFR RECOMMENDED RATING.

5 SEISMIC BRACE ATTACHMENT TO METAL DECK

NOT TO SCALE

US Army Corps of Engineers ®

MARK	DESCRIPTION	DATE	APPD

Designed by: M ISIDRO
Drawn By: MJI
Date: 13 JUL 2020
Rev:
Submittal Status: RTA
Spec No: 2145
Project No:
Reviewed S. BARMANN
File No: 223-25-0685
File Name: W6SP_STOR
Submitted by: Dr. Timothy A. Lee, P.E. Chief, Mechanical Engineering Section
Size:22" x 34" Plot Scale:NOT TO SCALE Plot Date:7/10/2020 12:45:06 PM

US ARMY CORPS OF ENGINEERS

SACRAMENTO DISTRICT
IN-HOUSE DESIGN
1325 J STREET
SACRAMENTO, CA 95814

FT. HUACHUCA AZ

GROUND TRANSPORT
EQUIPMENT BUILDING

PLUMBING DETAILS

SHEET IDENTIFICATION
P-502

RTA

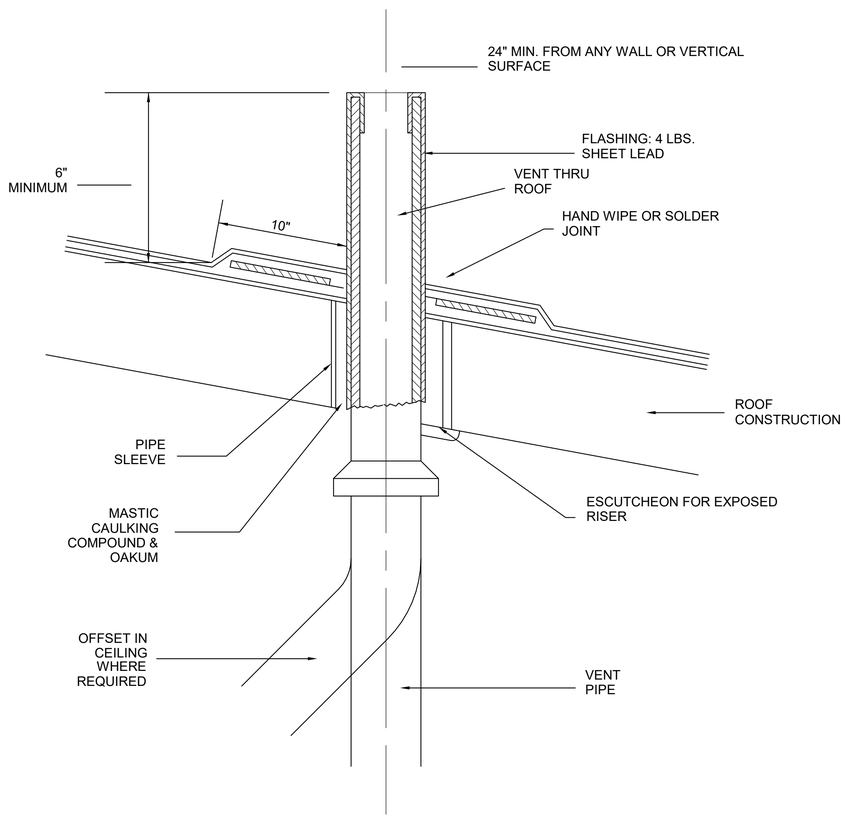

NOTE: SEE ARCH FOR ROOF CONSTRUCTION & PENETRATION DETAILS.

1 VENT THRU ROOF DETAIL

NOT TO SCALE

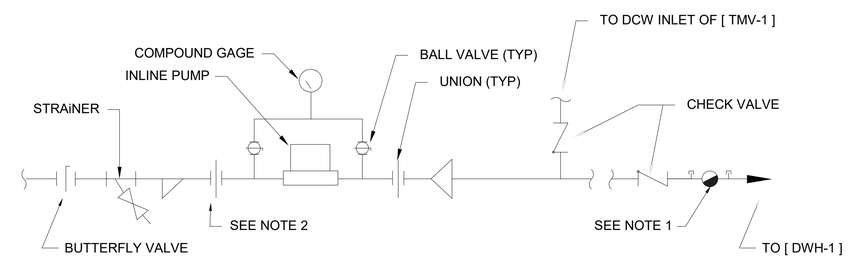

NOTES

1. CALIBRATED BALANCE VALVE TO BE INSTALLED WITH A MINIMUM DISTANCE OF 5 PIPE DIAMETERS UP STREAM AND 2 PIPE DIAMETERS DOWN STREAM OF ANY FITTING, OR AS RECOMMENDED BY THE MANUF.
2. PROVIDE UNIONS AT BOTH ENDS OF PUMP IF CONNECTIONS ARE THREADED.

2 INLINE PUMP INSTALLATION DETAIL

NOT TO SCALE

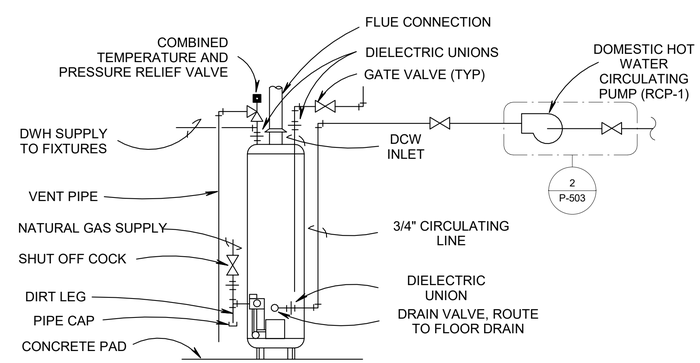

3 GAS FIRED HOT WATER HEATER WITH RECIRCULATING LOOP

NOT TO SCALE

US Army Corps of Engineers ®

MARK	DESCRIPTION	DATE	APPD

Designed by: M SIDIRO | Drawn By: MJI | Date: 13 JUL 2020 | Rev:
Submittal Status: RTA | Spec No: 2145 | Project No:
Reviewed By: MORITA/BARMANN | File No: 223-25-0665 | File Name: W6IP_GTEB
Submitted by: Sgt Timothy A. Lee, P.E. Chief, Mechanical Section | Size:2" x 34" Plot Scale:1:1 TO SCALE Plot Date:7/10/2020 12:38:30 PM

US ARMY CORPS OF ENGINEERS

SACRAMENTO DISTRICT
IN-HOUSE DESIGN
1325 J STREET
SACRAMENTO, CA 95814

FT. HUACHUCA

A2

GROUND TRANSPORT EQUIPMENT BUILDING

PLUMBING DETAILS

SHEET IDENTIFICATION
P-503

RTA

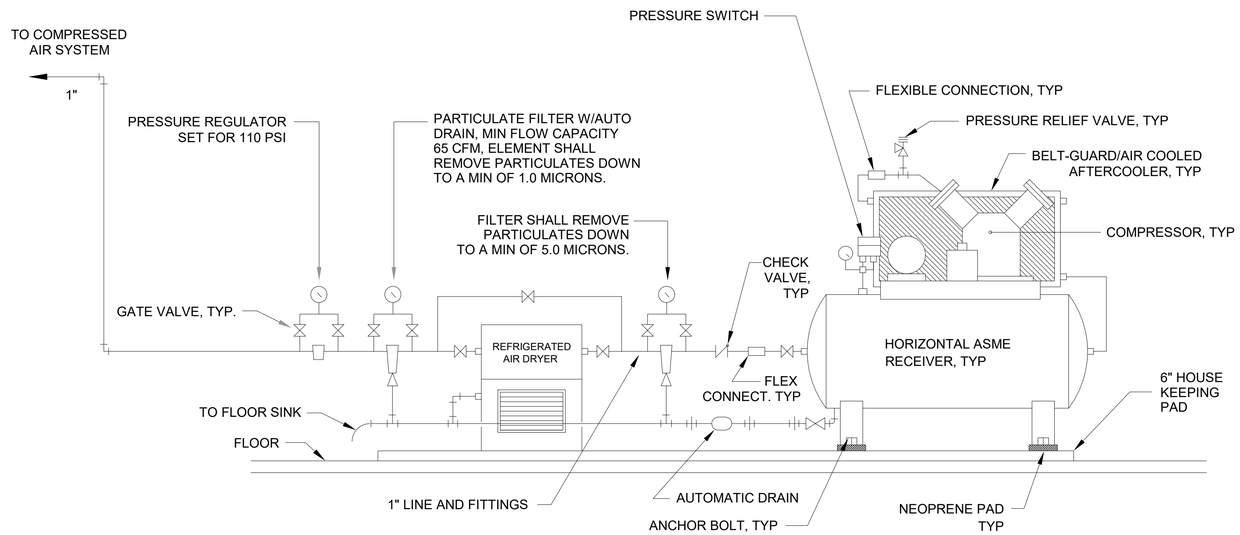

NOTE: LINE SIZES SHOWN ARE FOR AC-1. USE 3/4" FOR AC-2.

1 AIR COMPRESSOR W/ AIR DRYER DETAIL

NOT TO SCALE

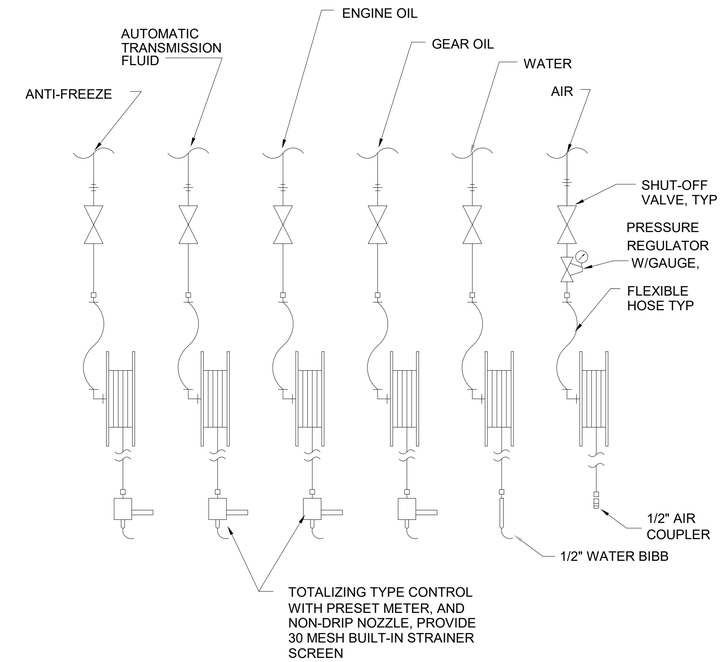

2 HOSE REEL DETAIL

NOT TO SCALE

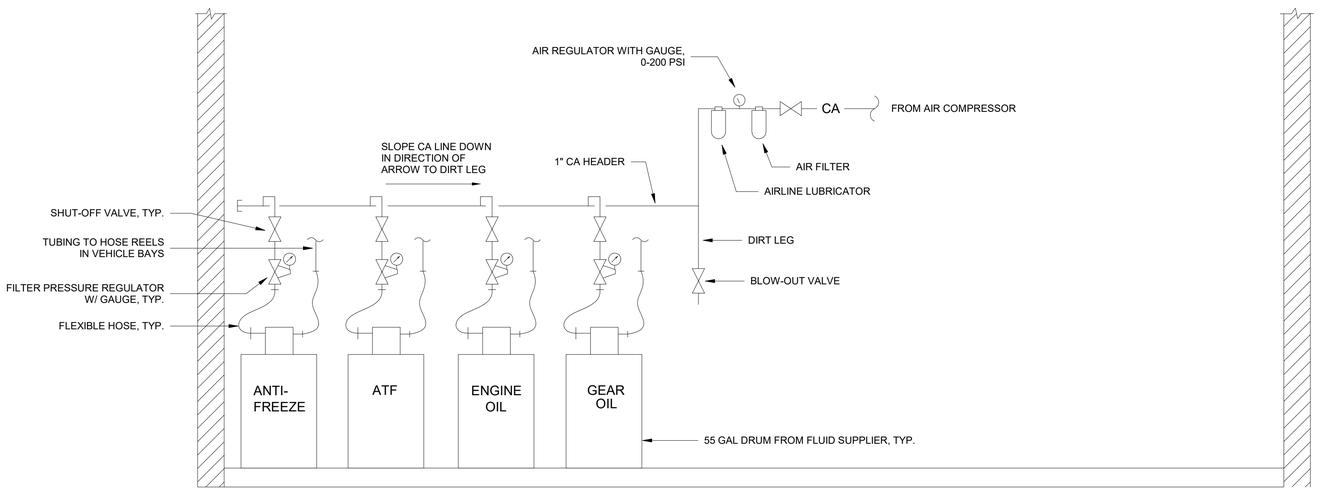

1. ALL LINES 1" UNLESS OTHERWISE NOTED.
2. POST SIGN IN FLUID DISTRIBUTION ROOM THAT READS: "WARNING! PRESSURE REGULATOR SETTING FOR OIL PUMPS NOT TO EXCEED 120 PSI"
3. POST SIGN ABOVE EACH PUMP INDICATING TYPE OF FLUID BEING DISPENSED OR ATTACH IDENTIFICATION TAGS TO EACH AIR PUMP.
4. INDICATED PIPING TO BE SLOPED AT A MINIMUM OF 1"/10'.

3 BULK DISPENSING SCHEMATIC

NOT TO SCALE

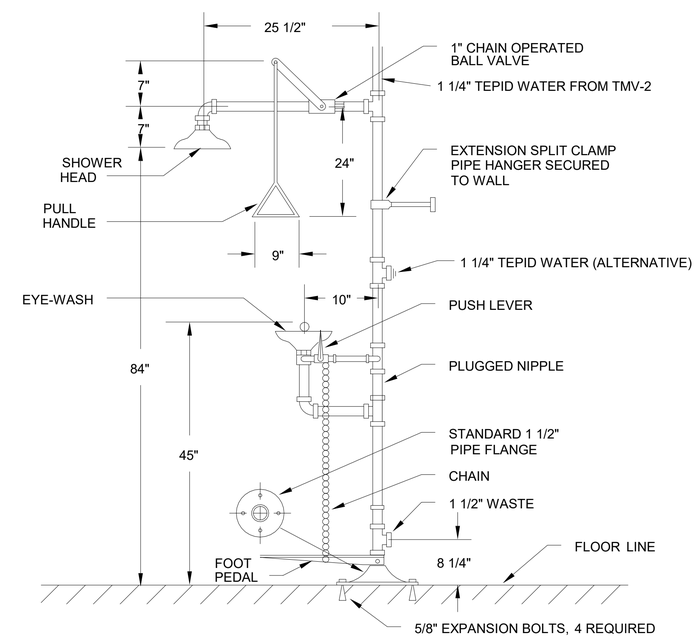

4 EMERGENCY EYEWASH & SHOWER DETAIL

NOT TO SCALE

US Army Corps of Engineers ®

MARK	DESCRIPTION	DATE	APPR

Designed by: M ISIDRO | Drawn By: MJI | Date: 13 JUL 2020 | Rev:
Submittal Status: RTA | Spec No: 2145 | Project No:
Reviewed by: MORITA/BARMANN | File No: 223-25-0665 | File Name: W6SP_GTEB
Submitted by: Al Timothy A. Lee, P.E. Resident Engineer/Project Manager | Size/Z" x 34" Scale: NOT TO SCALE Plot Date:7/10/2020 12:38:31 PM

US ARMY CORPS OF ENGINEERS

SACRAMENTO DISTRICT
IN-HOUSE DESIGN
1325 J STREET
SACRAMENTO, CA 95814

FT. HUACHUCA AZ

GROUND TRANSPORT EQUIPMENT BUILDING

PLUMBING DETAILS

SHEET IDENTIFICATION
P-504

RTA

NOTE: UNITS DESIGNATED WITH (*) SHALL BE PROVIDED IN PLACE OF COUNTERPART IF OPTION 3 IS NOT EXERCISED.

PLUMBING FIXTURE SCHEDULE						
MARK	DESCRIPTION	CONNECTION SIZE (IN)				REMARKS
		CW	HW	WASTE	VENT	
P-1A	WATER CLOSET (ADA)	1	--	4	2	
P-1	WATER CLOSET	1	--	4	2	
P-2	URINAL (WATERLESS)	--	--	2	1-1/2	
P-3	LAVATORY	1/2	1/2	1-1/2	1-1/4	
P-4	SHOWER	1/2	1/2	2	1-1/2	
P-5	SEMI-CIRCULAR WASHFOUNTAIN	1	1	2	1-1/2	
P-6	SERVICE SINK	3/4	3/4	3	1-1/2	
P-7	KITCHEN SINK	1/2	1/2	2	1-1/2	
P-8	DRINKING FOUNTAIN	1/2	--	1-1/4	1-1/4	
P-9	EMERGENCY SHOWER & EYE-WASH	--	1-1/4	1-1/4	1-1/4	
WH-1	WALL HYDRANT	3/4	--	--	--	
FD-1	FLOOR DRAIN	--	--	4	2	
FD-2	FLOOR DRAIN	--	--	3	1-1/2	
FS-1	FLOOR SINK	--	--	4	2	

DOMESTIC PUMP SCHEDULE							
MARK	SERVICE	FLOW RATE (GPM)	HEAD (FT H2O)	HP	RPM	ELECTRICAL	REMARKS
RCP-1	DOMESTIC HOT WATER RECIRCULATION	5	20	0.5	1,800	120/1/60	AQUASTAT CONTROL TIED INTO BUILDING SCHEDULER OF BAS. SET TO ON AT 100°F, OFF AT 110°F (ADJ).
RCP-1*	DOMESTIC HOT WATER RECIRCULATION	4	20	--	3,600	120/1/60	AQUASTAT CONTROL TIED INTO BUILDING SCHEDULER OF BAS. SET TO ON AT 100°F, OFF AT 110°F (ADJ).

WATER HEATER SCHEDULE								
MARK	DESCRIPTION	GAS TYPE	MAX INPUT (MBH)	MIN. RATED EFFICIENCY (%)	MIN RECOVERY RATE AT 90°F TEMP RISE (GPH)	STORAGE TEMP. (°F)	MIN STORAGE CAPACITY (GAL)	REMARKS
DWH-1	CONDENSING GAS WATER HEATER	NG	200	94	220	140	200	

DOMESTIC EXPANSION TANK SCHEDULE									
MARK	LOCATION (ROOM)	SERVICE	TYPE	MIN VOLUME (GAL)	MIN ACCEPT. VOLUME (GAL)	OPERATING PRESSURE (PSI)	MAX PRESSURE (PSI)	MAX TEMP (°F)	REMARKS
DET-1	MECHANICAL 131	DOMESTIC HOT WATER	PRESSURIZED DIAPHRAGM	9.6	4.7	70	150	200	

WATER SOFTENER SCHEDULE											
MARK	DESCRIPTION	EXCHANGE CAPACITY (GRAINS) SALT USAGE (LBS)		CONT. GPM	PEAK GPM	PIPE SIZE (IN)	RESIN (CU. FT.)	TANK SIZES (IN)		SALT STORAGE (LBS)	REMARKS
		MAX	MIN					SOFTENER (D x H)	BRINE (D x H)		
WS-1	WATER SOFTENER SYSTEM	240,000 120	160,000 48	120	170	3	8	24x72	24x50	510	

WATER METER SCHEDULE					
SYMBOL	METER SIZE	MIN CAP (GPM)	MIN OPERATING PRESSURE	TYPE	REMARKS
WM-1	3"	150 GPM	150.00 psi	TURBINE	RUST FREE BRONZE, US GALLON REGISTRATION.

GAS METER SCHEDULE				
MARK	MIN. FLOW (CFH)	INLET PRESSURE (PSI)	GAS TYPE	REMARKS
GM-1	2,200	2	NG	

GAS PRESSURE REGULATOR SCHEDULE					
MARK	MIN. FLOW (CFH)	INLET PRESSURE (PSI)	OUTLET PRESSURE (PSI)	GAS TYPE	REMARKS
GPR-1	2,200	14	2	NG	
GPR-2	700	2	0.5	NG	

THERMOSTATIC MIXING VALVE SCHEDULE							
Mark	PURPOSE	FLOW RATE (GPM)	PRESSURE DROP AT FLOW RATE (PSI)	LEAVING TEMPERATURE (°F)	INLET SIZE	OUTLET SIZE	REMARKS
TMV-1	MASTER TEMPERING VALVE	41	5	120	1-1/4"	1-1/2"	
TMV-2	TEPID WATER FOR EMERGENCY SHOWERS	20	5	75	1-1/4"	1-1/2"	

US Army Corps of Engineers ®

MARK	DESCRIPTION	DATE	APPR.

Designed by: J. STONE
Drawn By: J. STONE
Submittal Status: RTA
Reviewed by: MORITA/BARMANN
Submitted by: CW Thrift/A. Lee, P.E.
Chief, Mechanical Engineering Section

Date: 13 JUL 2020
Spec No: 2145
File No: 223-25-0065
Size:22" x 34"
Plot Scale: 1
Plot Date:7/10/2020 12:38:31 PM

Rev:
Project No:
File Name: W6SP_GTEB

US ARMY CORPS OF ENGINEERS

SACRAMENTO DISTRICT
IN-HOUSE DESIGN
1325 J STREET
SACRAMENTO, CA 95814

FT. HUACHUCA AZ

GROUND TRANSPORT EQUIPMENT BUILDING

PLUMBING SCHEDULES

SHEET IDENTIFICATION
P-601

RTA

AIR COMPRESSOR SCHEDULE								
MARK	TYPE	MIN. CAPACITY (CFM)	MAX PRESSURE (PSI)	DISCHARGE PRESSURE (PSI)	HP	TANK SIZE (GAL)	ELECTRICAL	REMARKS
AC-1	TWO-STAGE RECIPROCATING	65	175	125	20	200	460/3/60	

REFRIGERATED AIR DRYER SCHEDULE									
MARK	TYPE	MIN. CAPACITY (CFM)	AMBIENT TEMP (°F)	INLET AIR TEMP (°F)	AIR PRESSURE (PSI)	PRESSURE DEW POINT (°F)	HP	ELECTRICAL	REMARKS
RD-1	HIGH-INLET TEMPERATURE	65	98	180	125	50	1	115/1/60	

AIR OPERATED OIL PUMP SCHEDULE								
MARK	TYPE	SERVICE	RATIO	FLOW RATE AT 90 PSI (GPM)	MAX AIR PRESSURE (PSI)	AIR CONSUMPTION (CFM)	SUCTION TUBE LENGTH (IN)	REMARKS
AOP-1	DOUBLE ACTION	ANTIFREEZE	5:1	5	120	15	37	
AOP-2	DOUBLE ACTION	ATF	5:1	5	120	15	37	
AOP-3	DOUBLE ACTION	ENGINE OIL	5:1	5	120	15	37	
AOP-4	DOUBLE ACTION	GEAR OIL	5:1	5	120	15	37	

SERVICE HOSE REEL SCHEDULE							
MARK	TYPE	SERVICE	MAX PRESSURE (PSI)	HOSE LENGTH (FT)	INLET SIZE (IN)	OUTLET SIZE (IN)	REMARKS
SHR-1	SPRING REWIND	OIL	1,160	50	1/2	1/2	
SHR-2	SPRING REWIND	AIR/WATER	250	50	1/2	1/2	

FUEL TANK SCHEDULE						
SYMBOL	TYPE	FLUID	NOMINAL CAPACITY (GAL)	TANK LENGTH	WEIGHT	REMARKS
FT-1	SINGLE-WALL HORIZONTAL	FUEL GAS	2000	76"	2,353 lbs	LABEL EACH TANK WITH SYMBOL
FT-2	SINGLE-WALL HORIZONTAL	F-24	4000	204"	3,611 lbs	LABEL EACH TANK WITH SYMBOL

FUEL TRANSFER PUMP								
MARK	MIN CAP (GPM)	TYPE	MAX RPM	NOMINAL HP	VOLTAGE	PHASE	HZ	REMARKS
FP-1	18 GPM	SEE SPECS	1725	1/3	115 V	1	60 Hz	SELF-PRIMING, DIRECT-DRIVE ROTARY VANE; 23 PSI STAINLESS STEEL BYPASS
FP-2	18 GPM	SEE SPECS	1725	1/3	115 V	1	60 Hz	SELF-PRIMING, DIRECT-DRIVE ROTARY VANE; 23 PSI STAINLESS STEEL BYPASS

WASTE FLUID STORAGE TANK SCHEDULE						
MARK	TANK TYPE	LOCATION	MAX WORKING PRESSURE	MINIMUM STORAGE GALLONS	WEIGHT (LBS)	REMARK
ST-1	DOUBLE WALL	OUTSIDE, MOUNTED TO CONCRETE BUILDING FOOTPRINT, ADJACENT TO TOOL ROOM	1 PSI	500	1425	EQUIP WITH A MINIMUM TWO LIFTING LUGS, FIVE NPT OPENINGS FOR THE PRIMARY & TWO NPT OPENINGS FOR MONITORING THE INTERSTITIAL SPACE. PROVIDE EMERGENCY VENTS FOR PRIMARY AND SECONDARY TANK SIZED PER NFPA 30 & UL 142 REQUIREMENTS. LUBECUBE 500 GALLON DOUBLE WALL TANK OR APPROVED EQUAL. INSTALL WITH MFR PREFAB STEP W/ ACCESS PLATFORM.

US Army Corps of Engineers ®

MARK	DESCRIPTION	DATE	APPR

Designed by: J. STONE
Drawn By: J. STONE
Date: 13 JUL 2020
Rev:
Submittal Status: RTA
Spec No: 2145
Project No:
Reviewed By: MORITA/BARMANN
File No: 223-25-0665
File Name: W6SP_GTEB
Submitted by: Jill Timothy A. Lee, P.E. Chief, Engineering Design Section
Size/Z* x 34* Plot Scale: 1:1 Plot Date:7/10/2020 12:38:31 PM

US ARMY CORPS OF ENGINEERS
SACRAMENTO DISTRICT
IN-HOUSE DESIGN
1325 J STREET
SACRAMENTO, CA 95814

FT. HUACHUCA AZ

GROUND TRANSPORT EQUIPMENT BUILDING

PLUMBING SCHEDULES

SHEET IDENTIFICATION
P-602

RTA

NOTE: EQUIPMENT SHOWN SHALL BE PROVIDED IF OPTION 8 IS EXERCISED.

AIR COMPRESSOR SCHEDULE								
MARK	TYPE	MIN. CAPACITY (CFM)	MAX PRESSURE (PSI)	DISCHARGE PRESSURE (PSI)	HP	TANK SIZE (GAL)	ELECTRICAL	REMARKS
AC-2	TWO-STAGE RECIPROCATING	26	175	125	7.5	120	460/3/60	

REFRIGERATED AIR DRYER SCHEDULE									
MARK	TYPE	MIN. CAPACITY (CFM)	AMBIENT TEMP (°F)	INLET AIR TEMP (°F)	AIR PRESSURE (PSI)	PRESSURE DEW POINT (PSI)	HP	ELECTRICAL	REMARKS
RD-2	HIGH-INLET TEMPERATURE	26	98	180	125	50	1/2	115/1/60	

TANKLESS WATER HEATER									
MARK	SERVICE	WATER FLOW REQUIRED (GPM)	TEMPERATURE RISE (°F)	POWER (KW)	AMPS	VOLTAGE (V)	PHASE	FREQUENCY (HZ)	REMARKS
TWH-1	TEPID WATER FOR EMERGENCY SHOWERS	20	18	54	65	480	3	60	PROVIDE WITH NEMA 4 ENCLOSURE. WALL MOUNT 5'-0" AFF.

WATER METER SCHEDULE					
SYMBOL	MIN CAP (GPM)	METER SIZE	MIN OPERATING PRESSURE	TYPE	REMARKS
WM-2	42 GPM	1 1/2"	150.00 psi	TURBINE	RUST FREE BRONZE MAIN CASING, US GALLON REGISTRATION

GAS PRESSURE REGULATOR SCHEDULE					
MARK	MIN FLOW (CFH)	INLET PRESSURE (PSI)	OUTLET PRESSURE (PSI)	GAS TYPE	REMARKS
GPR-3	390	28	0.5	NG	

GAS METER SCHEDULE				
SYMBOL	MIN FLOW (CFH)	INLET PRESSURE (PSI)	GAS TYPE	REMARKS
GM-2	390	0.5	NG	

US Army Corps of Engineers ®

MARK	DESCRIPTION	DATE	APPD

Designed by: J. STONE
Drawn By: J. STONE
Submittal Status: RTA
Reviewed by: S. BARMANN
Submitted by: Dr. Timothy A. Lee, P.E. Chief, Mechanical Engr. Section
Date: 13 JUL 2020
Rev:
Spec No: 2145
Project No:
File No: 223-25-0665
File Name: W6SP_STOR
Size:22" x 34" Plot Scale: 1:1
Plot Date:7/10/2020 12:45:07 PM

US ARMY CORPS OF ENGINEERS

SACRAMENTO DISTRICT
IN-HOUSE DESIGN
1325 J STREET
SACRAMENTO, CA 95814

FT. HUACHUCA AZ

GROUND TRANSPORT EQUIPMENT BUILDING

PLUMBING SCHEDULES (OPTION 8)

SHEET IDENTIFICATION
P-611

RTA

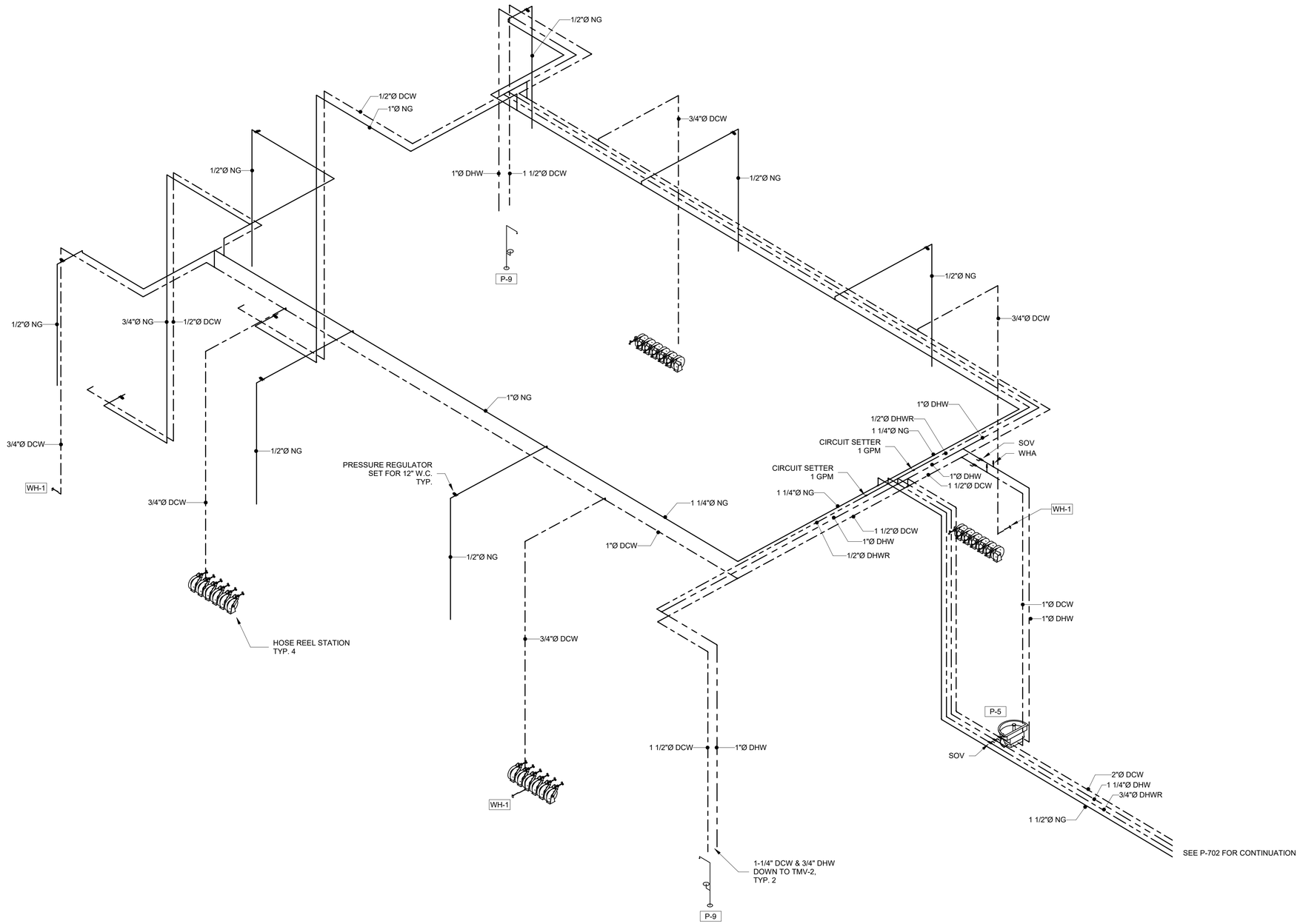

1 DOMESTIC WATER & GAS RISER DIAGRAM - AREA A

US Army Corps of Engineers ®

MARK	DESCRIPTION	DATE	APPD

Designed by: J. STONE
Drawn By: J. STONE
Date: 13 JUL 2020
Rev:
Submittal Status: RTA
Spec No: 2145
Project No:
Reviewed By: MORITA/BARMANN
File No: 223-25-0665
File Name: W6IP_GTEB
Submitted by: Sgt Timothy A. Lee, P.E.
Chief, Mechanical Design Section
Size:22" x 34"
Plot Scale: 1:1
Plot Date:7/10/2020 12:38:32 PM

US ARMY CORPS OF ENGINEERS

SACRAMENTO DISTRICT
IN-HOUSE DESIGN
1325 J STREET
SACRAMENTO, CA 95814

FT. HUACHUCA AZ

GROUND TRANSPORT
EQUIPMENT BUILDING

DOMESTIC WATER AND GAS RISER
DIAGRAM - AREA A

SHEET
IDENTIFICATION
P-701

RTA

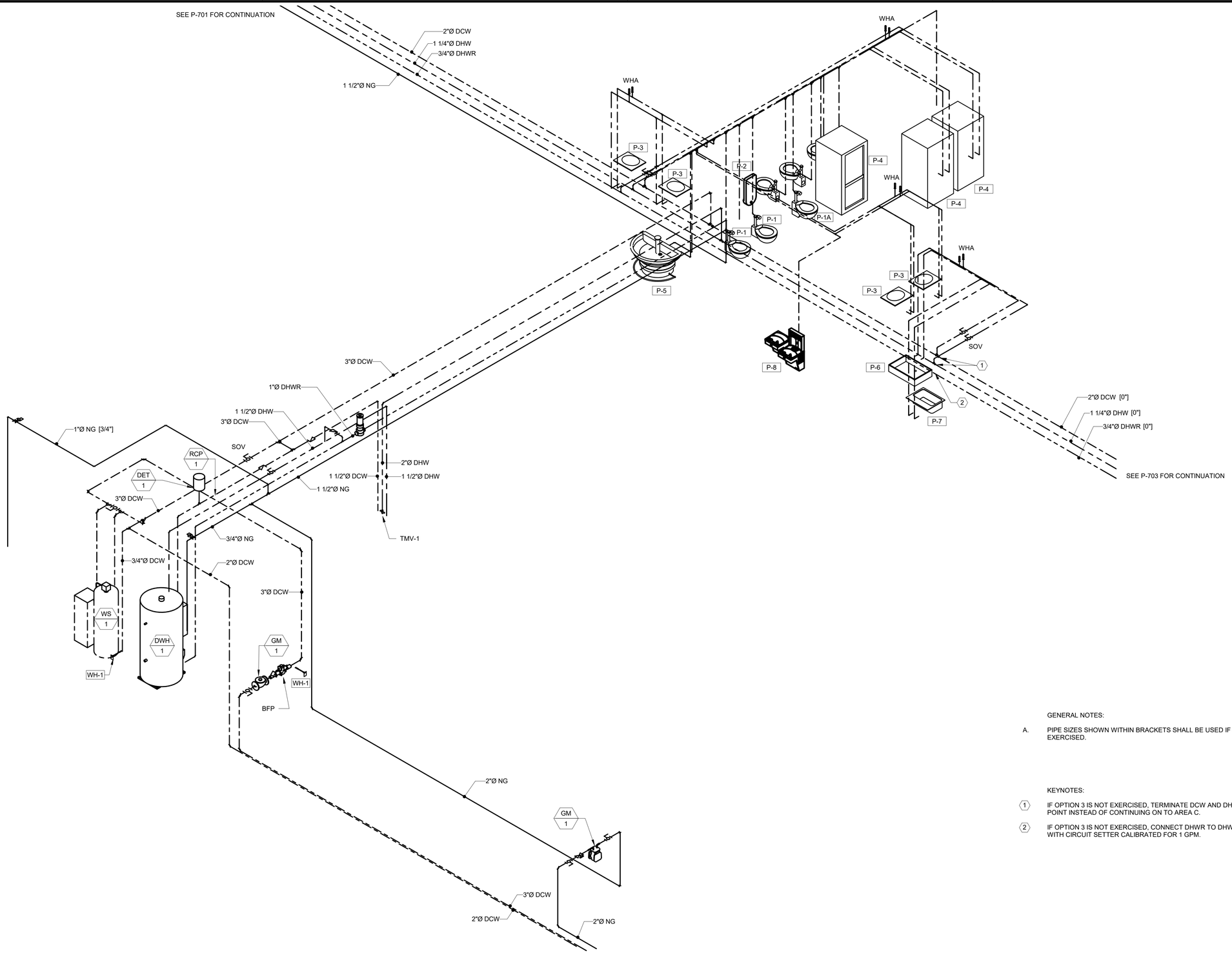

GENERAL NOTES:

A. PIPE SIZES SHOWN WITHIN BRACKETS SHALL BE USED IF OPTION 3 IS NOT EXERCISED.

KEYNOTES:

1. IF OPTION 3 IS NOT EXERCISED, TERMINATE DCW AND DHW LINES AT THIS POINT INSTEAD OF CONTINUING ON TO AREA C.
2. IF OPTION 3 IS NOT EXERCISED, CONNECT DHWR TO DHW LINE AT THIS POINT WITH CIRCUIT SETTER CALIBRATED FOR 1 GPM.

1 DOMESTIC WATER & GAS RISER DIAGRAM - AREA B

US Army Corps of Engineers ®

MARK	DESCRIPTION	DATE	APPR

US ARMY CORPS OF ENGINEERS

SACRAMENTO DISTRICT
IN-HOUSE DESIGN
1325 J STREET
SACRAMENTO, CA 95814

Designed by: J. STONE | Drawn By: J. STONE | Date: 13 JUL 2020 | Rev:
Submittal Status: RTA | Spec No: 2145 | Project No:
Reviewed by: MORITA/BARMANN | File No: 223-25-0065 | File Name: W6SP_GTEB
Submitted by: CL Tindlid A. Lee, P.E. Chief, Mechanical Engineering Section | Size:22" x 34" Plot Scale: 1 Plot Date:7/10/2020 12:38:32 PM

FT. HUACHUCA AZ

GROUND TRANSPORT EQUIPMENT BUILDING

DOMESTIC WATER & GAS RISER DIAGRAM - AREA B

SHEET IDENTIFICATION
P-702

RTA

GENERAL NOTES:

A. CONSTRUCT PLUMBING SYSTEMS AS SHOWN ON THIS SHEET IF OPTION 3 IS EXERCISED.

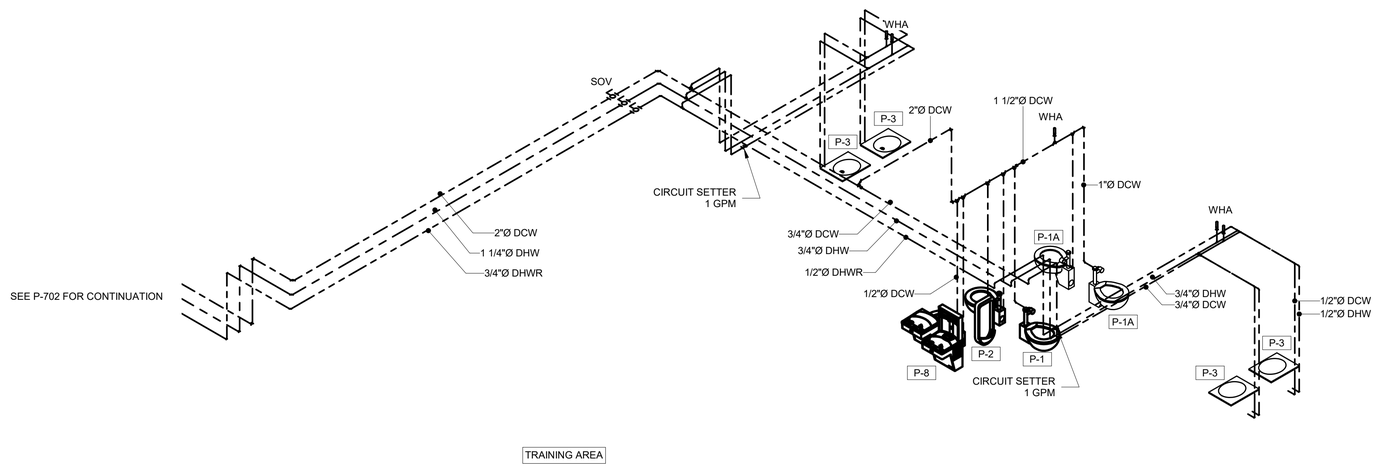

1 DOMESTIC WATER & GAS RISER DIAGRAM - AREA C (OPTION 3)

US Army Corps of Engineers ®

MARK	DESCRIPTION	DATE	APPR.

Designed by: J. STONE
Drawn By: J. STONE
Date: 13 JUL 2020
Rev:
Submittal Status: RTA
Spec No: 2145
Project No:
Reviewed by: MCRITA/BARMANN
File No: 223-25-0665
File Name: WBP_GTEB
Submitted by: Al Timothy A. Lee, P.E. Chief, Mechanical Design Section
Size:22" x 34" Plot Scale: Full Plot Date:7/10/2020 12:38:33 PM

US ARMY CORPS OF ENGINEERS

SACRAMENTO DISTRICT
IN-HOUSE DESIGN
1325 J STREET
SACRAMENTO, CA 95814

FT. HUACHUCA

AZ

GROUND TRANSPORT EQUIPMENT BUILDING

DOMESTIC WATER & GAS RISER DIAGRAM - AREA C (OPTION 3)

SHEET IDENTIFICATION
P-703

RTA

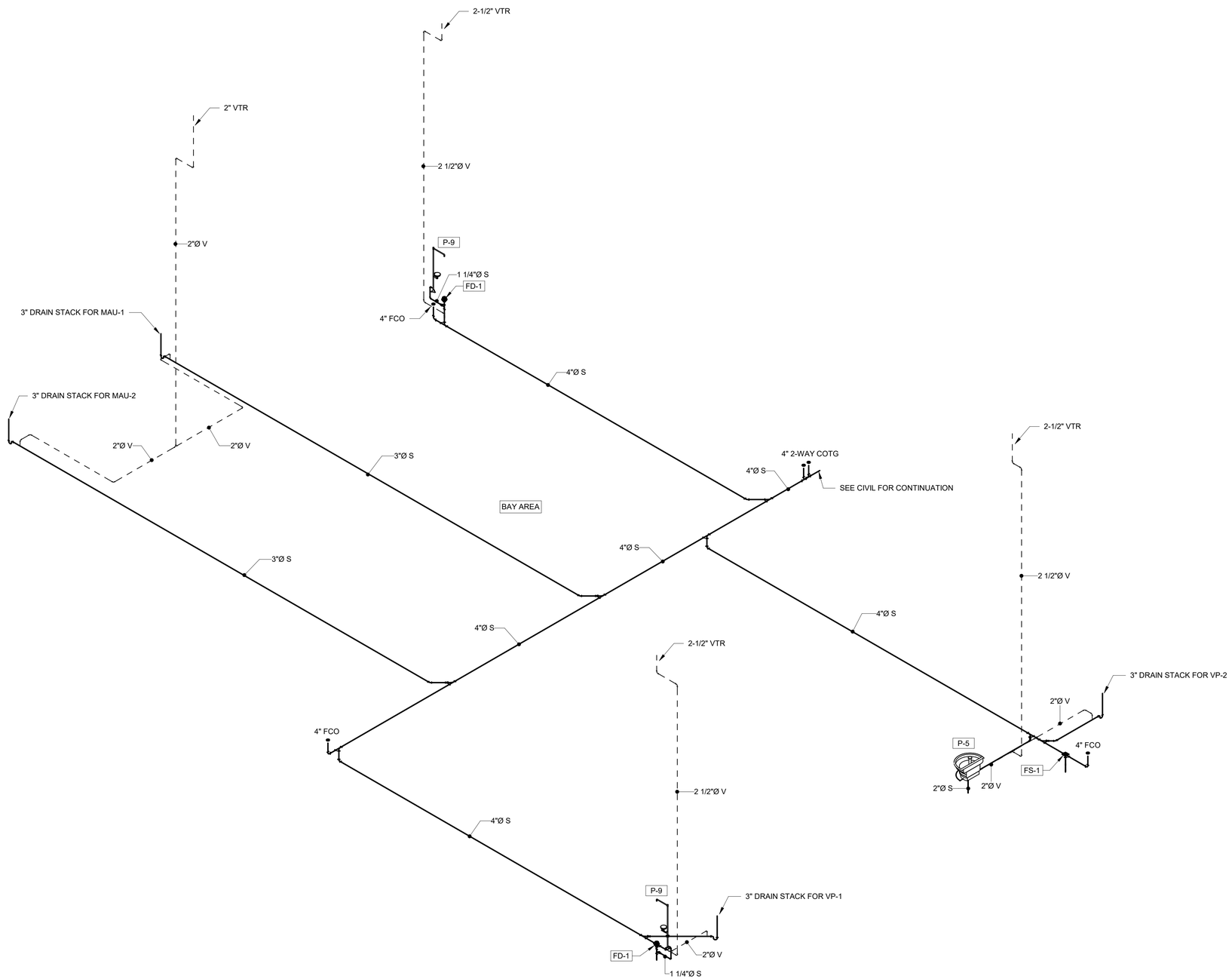

1 WASTE & VENT RISER DIAGRAM - AREA A

US Army Corps of Engineers ®

MARK	DESCRIPTION	DATE	APPD

Designed by: J. STONE
Drawn By: J. STONE
Date: 13 JUL 2020
Rev:
Submittal Status: RTA
Spec No: 2145
Project No:
Reviewed by: MCRITA/BARMANN
File No: 223-25-0665
File Name: WBSP_GTEB
Submitted by: Al J Timothy A. Lee, P.E. Civil Engineering Section
Size:22" x 34" Plot Scale: 1:1 Plot Date:7/10/2020 12:38:33 PM

US ARMY CORPS OF ENGINEERS

SACRAMENTO DISTRICT
IN-HOUSE DESIGN
1325 J STREET
SACRAMENTO, CA 95814

FT. HUACHUCA

AZ

GROUND TRANSPORT EQUIPMENT BUILDING

WASTE & VENT RISER DIAGRAM- AREA A

SHEET IDENTIFICATION
P-704

RTA

GENERAL NOTES:

A. PIPE SIZES SHOWN WITHIN BRACKETS SHALL BE USED IF OPTION 3 IS NOT EXERCISED.

KEYNOTES:

1 IF OPTION 3 IS NOT EXERCISED, TERMINATE WASTE LINE AT THIS POINT WITH 3 INCH FLOOR CLEANOUT.

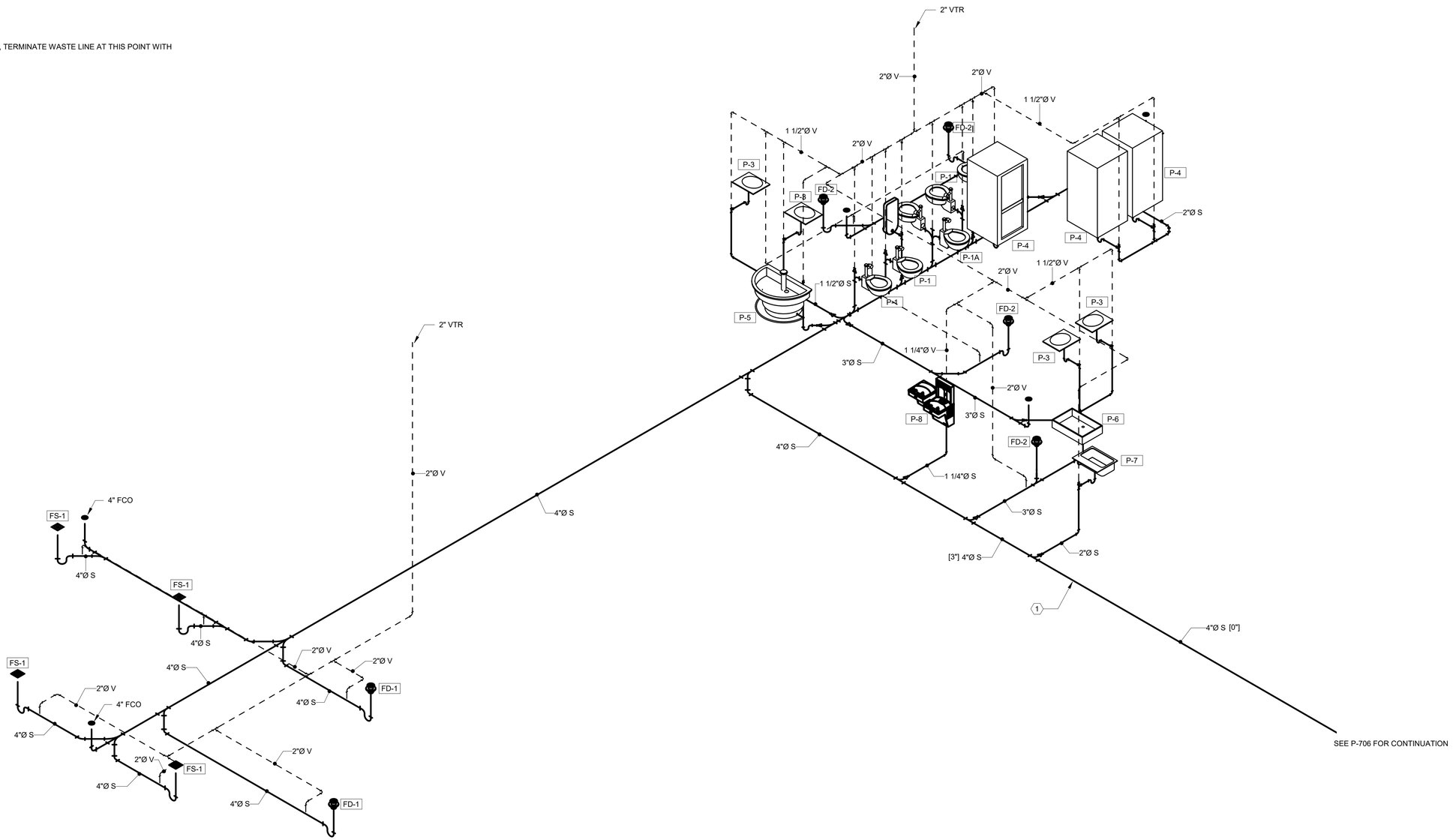

1 WASTE & VENT RISER DIAGRAM - AREA B

US Army Corps of Engineers ®

MARK	DESCRIPTION	DATE	APPD

Designed by: J. STONE
Drawn by: J. STONE
Submittal Status: RTA
Reviewed by: MORITA/BARMANN
Submitted by: Pat Timothy A. Lee, P.E. Chief, Design Branch, Section
Date: 13 JUL 2020
Spec No: 2145
File No: 223-25-0685
Size:22" x 34"
Plot Scale: 1
Plot Date:7/10/2020 12:38:34 PM
Rev:
Project No:
File Name: W6SP_GTEB

US ARMY CORPS OF ENGINEERS
SACRAMENTO DISTRICT
IN-HOUSE DESIGN
1325 J STREET
SACRAMENTO, CA 95814

FT. HUACHUCA AZ

GROUND TRANSPORT EQUIPMENT BUILDING

WASTE & VENT RISER DIAGRAM - AREA B

SHEET IDENTIFICATION
P-705

RTA

GENERAL NOTES:

A. CONSTRUCT PLUMBING SYSTEMS AS SHOWN ON THIS SHEET IF OPTION 3 IS EXERCISED.

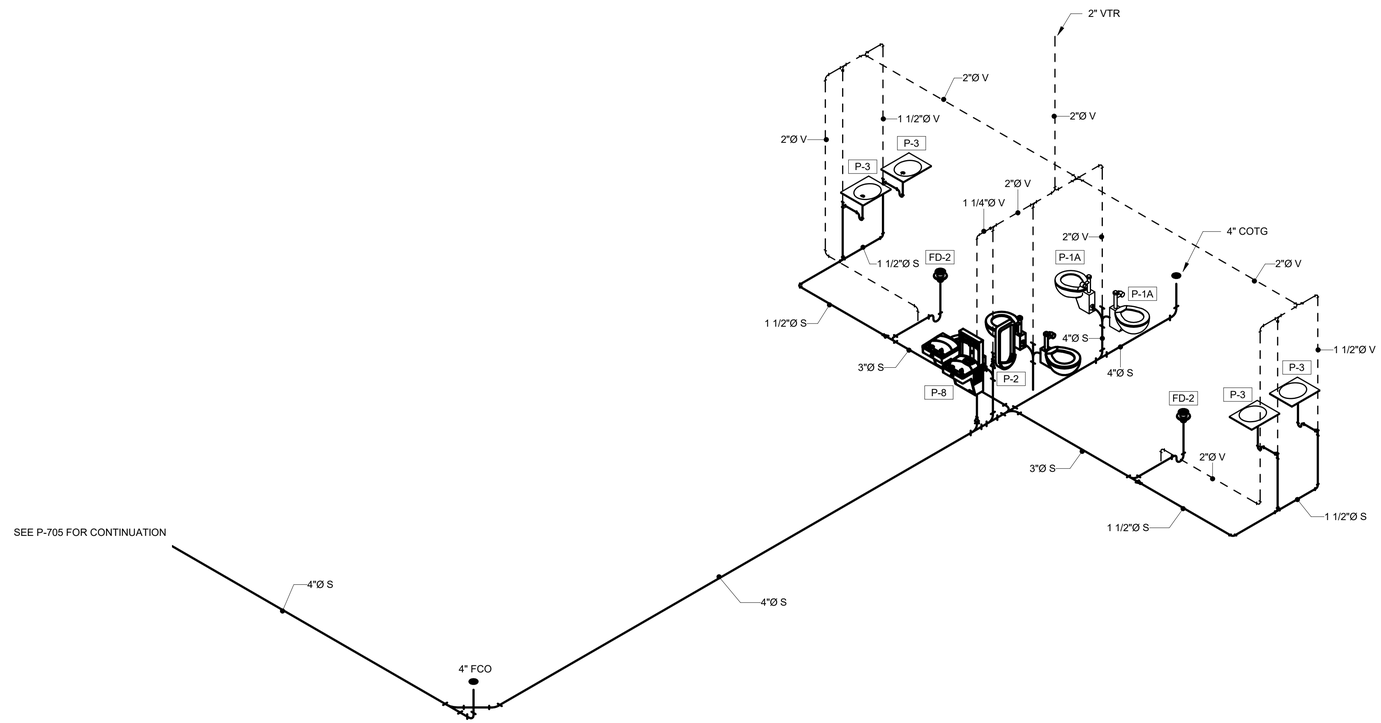

1 WASTE & VENT RISER DIAGRAM - AREA C (OPTION 3)

US Army Corps of Engineers ®

MARK	DESCRIPTION	DATE	APPD

Designed by: J. STONE | Drawn By: J. STONE | Date: 13 JUL 2020 | Rev:
Submittal Status: RTA | Spec No: 2145 | Project No:
Reviewed by: MORITA/BARMANN | File No: 223-25-0665 | File Name: W6SP_GTEB
Submitted by: Dr. Timothy A. Lee, P.E. | Size:22" x 34" Plot Scale: 1 | Plot Date:7/10/2020 12:38:34 PM

US ARMY CORPS OF ENGINEERS

SACRAMENTO DISTRICT
IN-HOUSE DESIGN
1325 J STREET
SACRAMENTO, CA 95814

FT. HUACHUCA AZ

GROUND TRANSPORT EQUIPMENT BUILDING

WASTE & VENT RISER DIAGRAM - AREA C (OPTION 3)

SHEET IDENTIFICATION
P-706

RTA

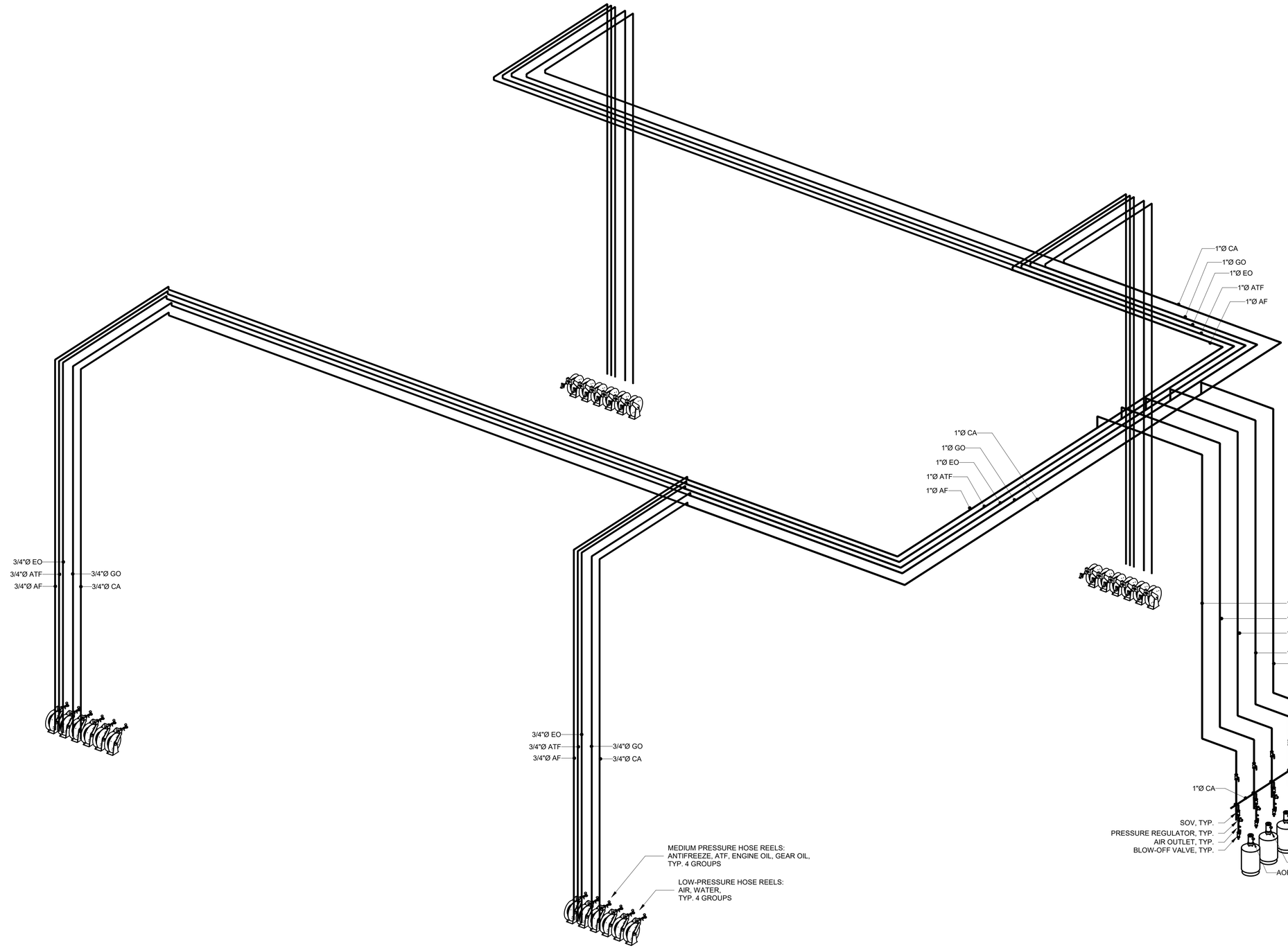

1 POL & COMPRESSED AIR RISER DIAGRAM

US Army Corps of Engineers ®

MARK	DESCRIPTION	DATE	APPR

Designed by: J. STONE
Drawn By: J. STONE
Submittal Status: RTA
Reviewed By: MORITA/BARMANN
Submitted by: Sgt Timothy A. Lee, P.E. Chief, Mechanical Design Section
Date: 13 JUL 2020
Rev:
Spec No: 2145
Project No:
File No: 223-25-0065
File Name: W6SP_GTEB
Size:22" x 34" Plot Scale: 1:1
Plot Date:7/10/2020 12:38:38 PM

US ARMY CORPS OF ENGINEERS
SACRAMENTO DISTRICT
IN-HOUSE DESIGN
1325 J STREET
SACRAMENTO, CA 95814

FT. HUACHUCA

AZ

GROUND TRANSPORT EQUIPMENT BUILDING

POL & COMPRESSED AIR RISER DIAGRAM

SHEET IDENTIFICATION
P-707

RTA

GENERAL NOTES:

A. CONSTRUCT PLUMBING SYSTEMS AS SHOWN ON THIS SHEET IF OPTION 8 IS EXERCISED.

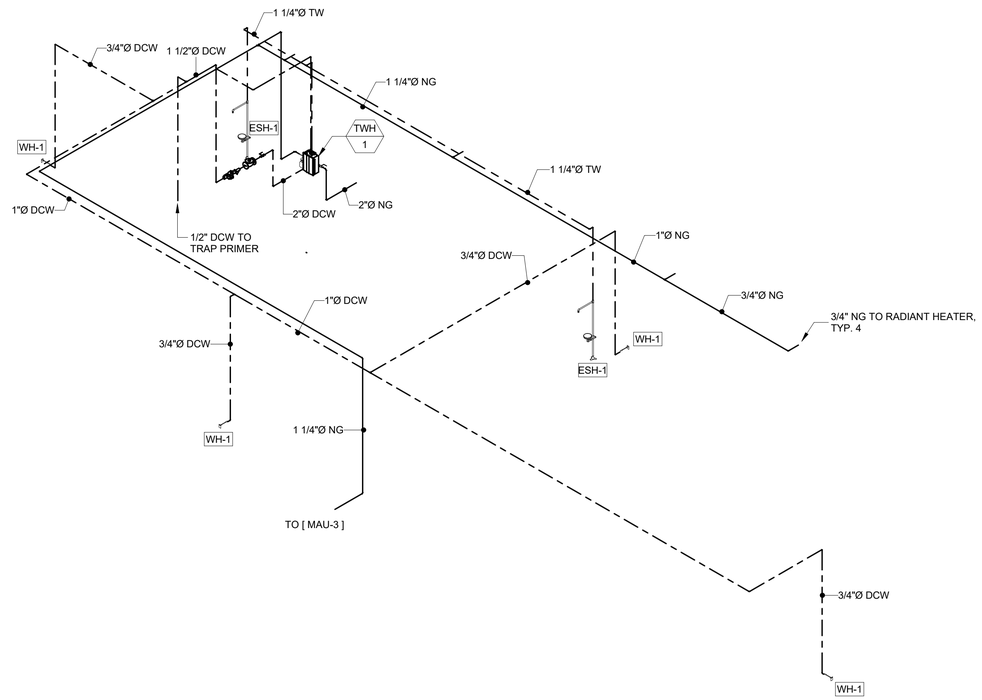

1 DOMESTIC WATER & GAS RISER DIAGRAM - ORG STORAGE BUILDING (OPTION 8)

US Army Corps of Engineers ®

MARK	DESCRIPTION	DATE	APPD

US ARMY CORPS OF ENGINEERS

SACRAMENTO DISTRICT
IN-HOUSE DESIGN
1325 J STREET
SACRAMENTO, CA 95814

Designed by: J. STONE
Drawn By: J. STONE
Submittal Status: RTA
Reviewed by: S. BARMANN
Submitted by: M. Timothy A. Lee, P.E.
Chief, Design Branch Section

Date: 13 JUL 2020
Spec No: 2145
File No: 223-25-0665
Size:22" x 34"
Plot Scale:
Plot Date:7/10/2020 12:45:07 PM

Rev:
Project No:
File Name: W6SP_STOR

FT. HUACHUCA AZ

GROUND TRANSPORT
EQUIPMENT BUILDING

DOMESTIC WATER & GAS RISER
DIAGRAM - ORG STORAGE BUILDING
(OPTION 8)

SHEET IDENTIFICATION
P-711

RTA

GENERAL NOTES:

A. CONSTRUCT PLUMBING SYSTEMS AS SHOWN ON THIS SHEET IF OPTION 8 IS EXERCISED.

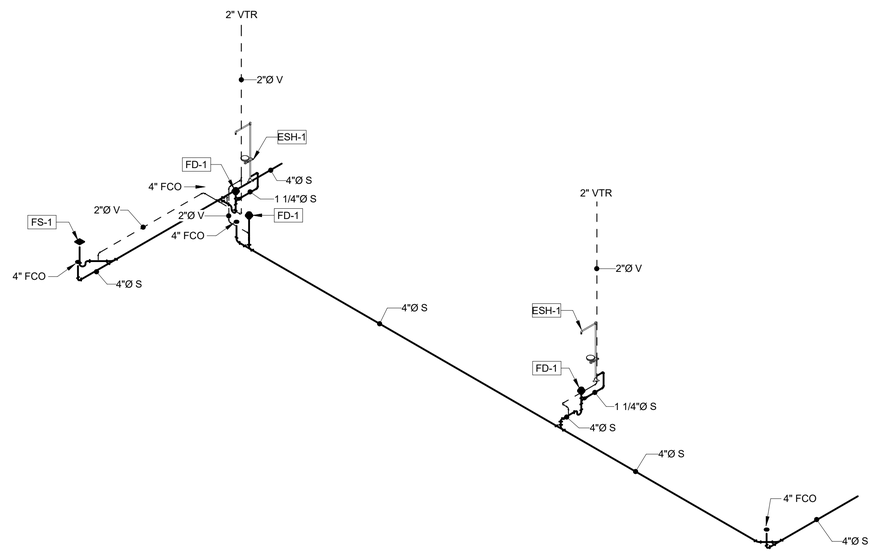

1 WASTE & VENT RISER DIAGRAM - ORG STORAGE BUILDING (OPTION 8)

US Army Corps of Engineers ®

MARK	DESCRIPTION	DATE	APPD

Designed by: J. STONE | Drawn by: J. STONE | Date: 13 JUL 2020 | Rev:
Submittal Status: RTA | Spec No: 2145 | Project No:
Reviewed by: S. BARMANN | File No: 223-25-0685 | File Name: W8SP_STOR
Submitted by: Maj. Timothy A. Lee, P.E. Chief, Resident Engineer Section | Size:22" x 34" Plot Scale: 1:1 Plot Date:7/10/2020 12:45:07 PM

US ARMY CORPS OF ENGINEERS

SACRAMENTO DISTRICT
IN-HOUSE DESIGN
1325 J STREET
SACRAMENTO, CA 95814

FT. HUACHUCA AZ

GROUND TRANSPORT EQUIPMENT BUILDING

WASTE & VENT RISER DIAGRAM - ORG STORAGE BUILDING (OPTION 8)

SHEET IDENTIFICATION
P-712

RTA

GENERAL NOTES:

A. CONSTRUCT PLUMBING SYSTEMS AS SHOWN ON THIS SHEET IF OPTION 8 IS EXERCISED.

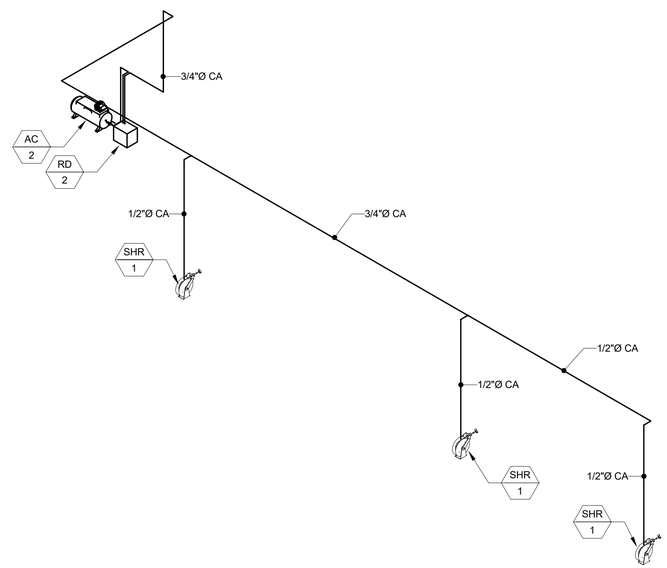

1 COMPRESSED AIR RISER DIAGRAM - ORG STORAGE BUILDING (OPTION 8)

US Army Corps of Engineers ®

MARK	DESCRIPTION	DATE	APPD

Designed by: J. STONE
Drawn By: J. STONE
Submittal Status: RTA
Reviewed by: S. BARMANN
Submitted by: CW Timothy A. Lee, P.E. Chief, Resident Engineer Section
Date: 13 JUL 2020
Spec No: 2145
File No: 223-25-0085
Size:22" x 34" Plot Scale: Plot Date:7/10/2020 12:45:07 PM
Rev:
Project No:
File Name: W6GP_STOR

US ARMY CORPS OF ENGINEERS

SACRAMENTO DISTRICT
IN-HOUSE DESIGN
1325 J STREET
SACRAMENTO, CA 95814

FT. HUACHUCA AZ

GROUND TRANSPORT EQUIPMENT BUILDING

COMPRESSED AIR RISER DIAGRAM - ORG STORAGE BUILDING (OPTION 8)

SHEET IDENTIFICATION
P-713

RTA

GENERAL MECHANICAL NOTES

A. THESE GENERAL NOTES APPLY TO ALL MECHANICAL DRAWINGS IN THIS SET. SHEET SPECIFIC NOTES ARE INDICATED ON EACH SHEET.

B. PROVIDE ALL MATERIALS AND EQUIPMENT AND PERFORM ALL LABOR REQUIRED TO INSTALL COMPLETE AND OPERABLE MECHANICAL SYSTEMS AS INDICATED ON THE DRAWINGS, AS SPECIFIED AND AS REQUIRED BY CODE.

C. INSTALL ALL MECHANICAL EQUIPMENT AND APPURTENANCES IN ACCORDANCE WITH MANUFACTURER'S RECOMMENDATIONS, THIS CONTRACT'S DOCUMENTS, AND APPLICABLE CODES AND REGULATIONS.

D. PROVIDE VIBRATION ISOLATORS FOR ALL PUMPS, FANS, AND OTHER DYNAMIC MECHANICAL EQUIPMENT TO PREVENT TRANSMISSION OF VIBRATION TO BUILDING STRUCTURE.

E. PROVIDE ACCESS PANELS IN WALLS AND CEILINGS, WHERE REQUIRED, TO SERVICE FIRE DAMPERS, VALVES, SMOKE DETECTORS, AND OTHER CONCEALED MECHANICAL EQUIPMENT THAT REQUIRES ROUTINE MAINTENANCE. ACCESS PANELS MUST BE LARGE ENOUGH TO ALLOW PROPER CLEARANCE FOR ACCESS DOORS.

F. ALL OPENINGS IN FIRE WALLS DUE TO DUCTWORK, PIPING, CONDUIT, ETC., SHALL BE FIRE STOPPED.

G. ALL AIR VOLUME BALANCE DAMPERS SHALL BE ACCESSIBLE. IF AIR VOLUME BALANCE DAMPERS ARE LOCATED ABOVE HARD CEILING PROVIDE LOCKABLE ACCESS PANELS TO ALLOW ADJUSTAMENT OF DAMPERS.

H. DUCTWORK SHALL BE CONSTRUCTED FOR A POSITIVE PRESSURE OR NEGATIVE PRESSURE OF 2.0 INCH WATER GAUGE UNLESS OTHERWISE INDICATED.

I. FLEXIBLE DUCT CONNECTIONS SHALL NOT EXCEED 5'-0" IN LENGTH. FLEXIBLE DUCT SHALL NOT BE PULLED TIGHT AROUND CORNERS AND ALL CHANGES IN DIRECTION SHALL BE MADE WITH RIGID 90-DEGREE ELBOWS.

J. PROVIDE ALL LOUVERS AND WALL CAPS WITH INSECT SCREENS.

K. REFRIGERANT LIQUID AND SUCTION LINES SHALL BE SIZED PER MANUFACTURER'S WRITTEN RECOMMENDATIONS.

L. MOUNT THERMOSTATS 48 INCHES ABOVE THE FINISHED FLOOR UNLESS OTHERWISE INDICATED.

M. ALL GROUND AND FLOOR MOUNTED HVAC EQUIPMENT LOCATED OUTSIDE THE FACILITY SHALL BE INSTALLED ON AND ANCHORED TO REINFORCED CONCRETE PADS. PADS SHALL BE SIZED A MINIMUM OF 6" LARGER ON EACH SIDE OF THE EQUIPMENT TO BE INSTALLED.

N. WHERE REFRIGERANT LINES ENTER THE BUILDING, PROVIDE STEEL SLEEVE AND SEAL WATER TIGHT AT EACH LOCATION.

O. EQUIPMENT CAPACITIES ON SCHEDULE SHEETS ARE REQUIRED AT A SITE ELEVATION OF 4900 FT ABOVE SEA LEVEL.

ABBREVIATIONS

#	NUMBER
#/P###	DETAIL # ON SHEET P###
°F	DEGREES FAHRENHEIT
Δ	DELTA (CHANGE)
%	PERCENTAGE
AABC	ASSOCIATED AIR BALANCE COUNCIL
ABSORP	ABSORPTION
AD	ACCESS DOOR
AFF	ABOVE FINISHED FLOOR
AFG	ABOVE FINISHED GRADE
AFUE	ANNUAL FUEL UTILIZATION EFFICIENCY
AIC	AMPERES INTERRUPTING CURRENCY
AMB	AMBIENT
AP	ACCESS PANEL
APD	AIR PRESSURE DROP
AV	AUTOMATIC AIR VENT
ASHRAE	AMERICAN SOCIETY OF HEATING,
BARO	BAROMETRIC
BAS	BUILDING AUTOMATION SYSTEM
BDD	BACKDRAFT DAMPER
BFF	BELOW FINISHED FLOOR
BFG	BELOW FINISHED GRADE
BHP	BRAKE HORSEPOWER
BLDG	BUILDING
BTU	BRITISH THERMAL UNIT
BTUH	BRITISH THERMAL UNIT PER HOUR
CAP	CAPACITY
CFH	CUBIC FEET PER HOUR
CFM	CUBIC FEET PER MINUTE
CHW	CHILLED WATER
CO2	CARBON DIOXIDE
COMB	COMBUSTION
CMPR	COMPRESSOR
CONFIG	CONFIGURATION
CONN	CONNECTION
CTRL	CONTROL
D	DEPTH
DIA	DIAMETER
DB	DRY BULB
DIFF	DIFFERENTIAL
DIST	DISTANCE
DN	DOWN
DIA	DIAMETER
DN	DOWN
DWG	DRAWING(S)
DX	DIRECT EXPANSION
EA	EXHAUST AIR
EAT	ENTERING AIR TEMPERATURE
EBOD	ELEVATION BOTTOM OF DUCT
EER	ENERGY EFFICIENCY RATIO
EFF	EFFICIENCY
ELEV	ELEVATION
ENT	ENTERING
ESP	EXTERNAL STATIC PRESSURE
EVAP	EVAPORATIVE
EWT	ENTERING WATER TEMPERATURE
EXH	EXHAUST
EXT	EXTERNAL
FD	FIRE DAMPER
FF	FRICTION FACTOR
FF	FINISHED FLOOR
FLA	FULL LOAD AMPS
FLEX	FLEXIBLE
FPI	FINS PER INCH
FPS	FEET PER SECOND
FS	FLOW SWITCH
FT	FEET OR FOOT
GA	GAGE
GAL	GALLON(S)
GPH	GALLONS PER HOUR
GPM	GALLONS PER MINUTE
GRS	GRAINS
H	HEIGHT
H2S	HYDROGEN SULFIDE
HORZ	HORIZONTAL
HP	HORSEPOWER
HR	HOUR
HTR	HEATER
HZ	HERTZ
IDF	INDOOR FAN
IN	INCH
IPLV	INTEGRATED PART LOAD VALUE
IN HG	INCHES OF MERCURY
IN WG	INCHES OF WATER GAGE
KW	KILOWATTS
L	LENGTH
LAT	LEAVING AIR TEMPERATURE
LBS	POUNDS
LVG	LEAVING
LWT	LEAVING WATER TEMPERATURE
MAX	MAXIMUM
MBH	THOUSAND BTU PER HOUR
MCA	MINIMUM CURRENT AMPACITY
MCC	MOTOR CONTROL CENTER
MECH	MECHANICAL
MIN	MINIMUM
MOCP	MAXIMUM OVER CURRENT PROTECTION
MTG	MOUNTING
MV	MANUAL AIR VENT
NEBB	NATIONAL ENVIRONMENTAL
NC	NORMALLY CLOSED
NO	NORMALLY OPEN
NOM	NOMINAL
NPSH	NET POSITIVE SUCTION HEAD
NTS	NOT TO SCALE
OBD	OPPOSED BLADE DAMPER
ODF	OUTDOOR FAN
OPER	OPERATING
OSA	OUTSIDE AIR
PD	PRESSURE DROP
PH	PHASE
PPM	PARTS PER MILLION
PRESS	PRESSURE
PSI	POUNDS PER SQUARE INCH
PSIA	POUNDS PER SQUARE INCH ABSOLUTE
PSIG	POUNDS PER SQUARE INCH GAGE
QTY	QUANTITY
RA	RETURN AIR
RECIRC	RECIRCULATING
REFRIG	REFRIGERATION
REGEN	REGENERATION
REQ'D	REQUIRED
RH	RELATIVE HUMIDITY
RPM	REVOLUTIONS PER MINUTE
SA	SUPPLY AIR
SD	SMOKE DETECTOR
SFD	SMOKE AND FIRE DAMPER
S&R	SUPPLY AND RETURN
SEER	SEASONAL ENERGY EFFICIENCY
SENS	SENSIBLE
SF	SQUARE FEET OR SQUARE FOOT
SQ IN	SQUARE INCH
SYS	SYSTEM
TEMP	TEMPERATURE
TSP	TOTAL STATIC PRESSURE
T-STAT	THERMOSTAT
TYP	TYPICAL
V	VOLT(S)
VD	VOLUME DAMPER
VEL	VELOCITY
W	WIDTH
W	WATTS
W/	WITH
W/O	WITHOUT
WB	WET BULB
WPD	WATER PRESSURE DROP
WT	WEIGHT

DRAWING SYMBOLS

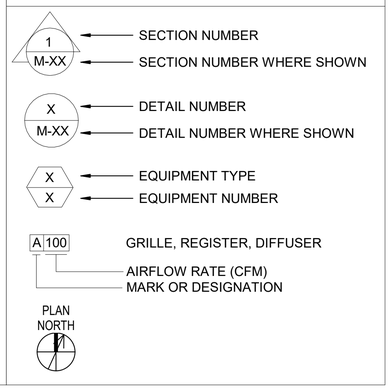

MECHANICAL LEGEND

SYMBOL	ABBR	DESCRIPTION
CHWS	CHWS	CHILLED WATER SUPPLY
CHWR	CHWR	CHILLED WATER RETURN
HWS	HWS	HOT WATER SUPPLY
HWR	HWR	HOT WATER RETURN
CA	CA	COMPRESSED AIR
NG	NG	NATURAL GAS
		BALL VALVE
	CHK	CHECK VALVE
		BUTTERFLY VALVE
	GV	GATE VALVE
		MOTORIZED VALVE
		2-WAY CONTROL VALVE
		3-WAY CONTROL VALVE
		AUTOMATIC BALANCING VALVE
		FLEXIBLE PIPE CONNECTION
	DN	RISER DOWN
	UP	RISER UP
		CAP
		UNION
24x12 24x12		RECTANGULAR DUCTWORK
24Ø 24Ø		ROUND DUCTWORK
		EXPANDED THROAT TAKE-OFF
		ELBOW WITH TURNING VANES
		CONTINUATION
		DUCT TRANSITION
	MB	MAN BARS IN DUCTWORK
	SA	SUPPLY AIR
	RA	RETURN AIR
	EXH	EXHAUST AIR
	OA	OUTSIDE AIR
FD	FD	FIRE DAMPER
SD	SD	SMOKE DAMPER
SFD	SFD	COMBINATION SMOKE/FIRE DAMPER
VD	VD	VOLUME DAMPER
BDD	BDD	BACKDRAFT DAMPER
M	MD	MOTORIZED DAMPER
T		THERMOSTAT
H		HUMIDITY SENSOR
S		SMOKE DETECTOR
C		CARBON MONOXIDE SENSOR
ES		EMERGENCY SHUT DOWN SWITCH
	POD	POINT OF DISCONNECTION
	POC	POINT OF CONNECTION
#		KEYED NOTE
		RETURN & EXHAUST AIR FLOW
		FLOW IN DIRECTION OF ARROW

US Army Corps of Engineers ®

MARK	DESCRIPTION	DATE	APPR

US ARMY CORPS OF ENGINEERS

SACRAMENTO DISTRICT
IN-HOUSE DESIGN
1325 J STREET
SACRAMENTO, CA 95814

Designed by: J. STONE
Drawn By: J. STONE
Submittal Status: RTA
Reviewed By: S. BARMANN
Submitted by: M. Timothy A. Lee, P.E. Chief, Mechanical Section
Date: 13 JUL 2020
Rev:
Spec No: 2145
Project No:
File No: 233-25-0665
File Name: W6M_GTEB
Size:22" x 34" Plot Scale: 1" = 1'-0"
Plot Date:7/10/2020 12:28:25 PM

FT. HUACHUCA AZ

GROUND TRANSPORT EQUIPMENT BUILDING

HVAC LEGEND

SHEET IDENTIFICATION
M-001

RTA

KEYNOTES:

1. ROUTE CONDENSATE FROM MAKE-UP AIR UNIT TO NEARBY DRAIN STACK. SEE PLUMBING PLANS FOR DRAIN STACK LOCATIONS.
2. ROUTE CONDENSATE FROM RADIANT HEATER VACUUM PUMP TO NEARBY DRAIN STACK. SEE PLUMBING PLANS FOR DRAIN STACK LOCATIONS.
3. PROVIDE CARBON MONOXIDE (CO) AND NITROGEN DIOXIDE (NO2) MONITORING SENSOR. SET HIGH LIMIT OF CO TO 50 PPM AND HIGH LIMIT OF NO2 TO 3 PPM. UPON REACHING HIGH LIMIT, SEND ALARM SIGNAL TO FIRE ALARM SYSTEM. SEE FIRE ALARM DRAWINGS FOR MORE INFORMATION.

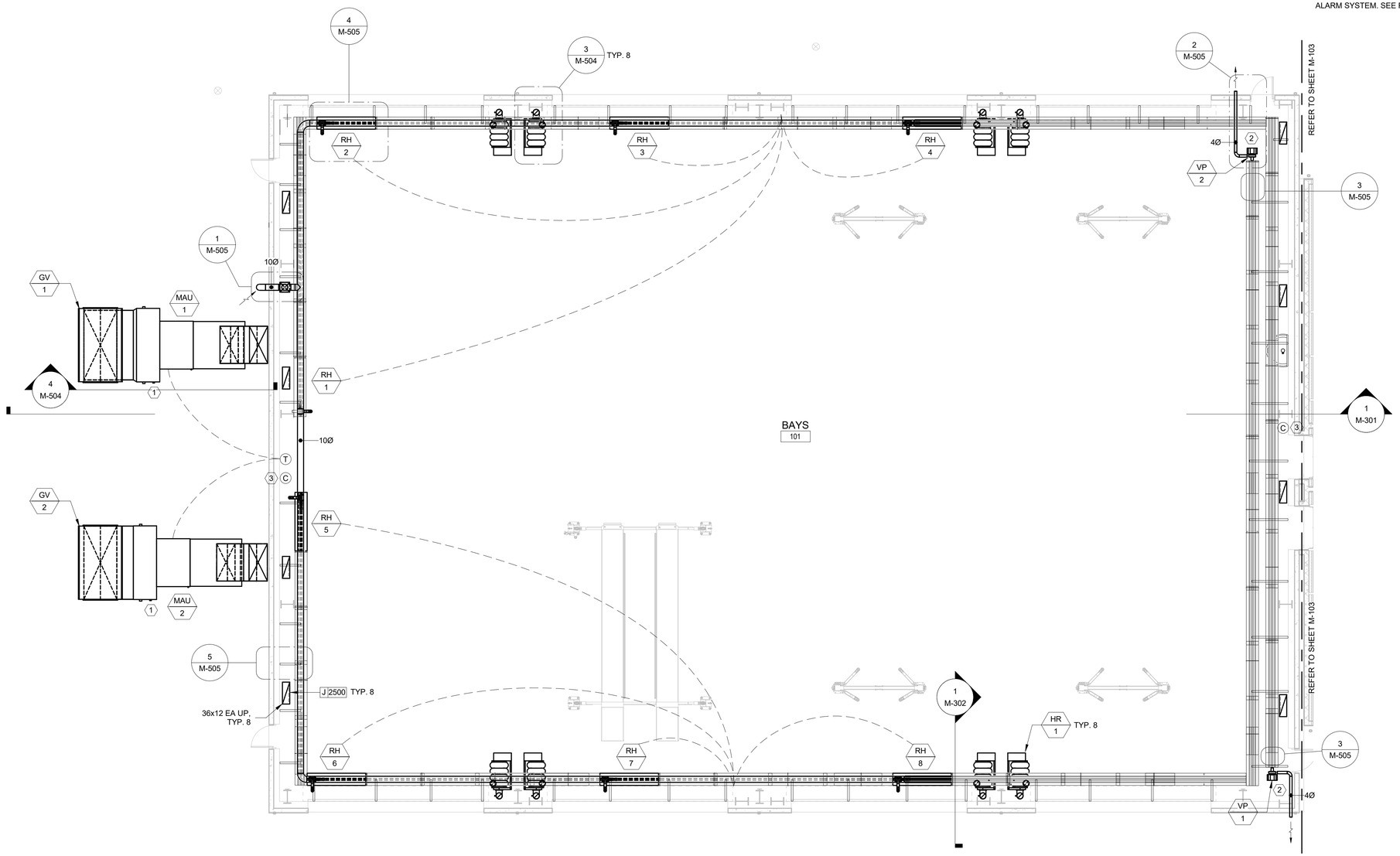

8' 0 8' 16'

SCALE: 1/8" = 1' - 0"

PLAN NORTH

AREA

'A'

1 HVAC FLOOR PLAN - AREA A 0' TO 25' AFF

1/8" = 1'-0"

US Army Corps of Engineers ®

MARK	DESCRIPTION	DATE	APPR

Designed by: J. STONE
Drawn by: J. STONE
Submittal Status: RTA
Reviewed by: S. BARMANN
Submitted by: Dr. Timothy A. Lee, P.E. Chief, Mechanical Design Section
Date: 13 JUL 2020
Spec No: 2145
File No: 233-25-0665
Size:22" x 34"
Plot Scale: 1/8" = 1'-0"
Plot Date:7/10/2020 12:28:32 PM
Rev:
Project No:
File Name: W69M_GTEB

US ARMY CORPS OF ENGINEERS

SACRAMENTO DISTRICT
IN-HOUSE DESIGN
1325 J STREET
SACRAMENTO, CA 95814

FT. HUACHUCA AZ

GROUND TRANSPORT EQUIPMENT BUILDING

GTEB HVAC PLAN - AREA A

SHEET IDENTIFICATION
M-101

RTA

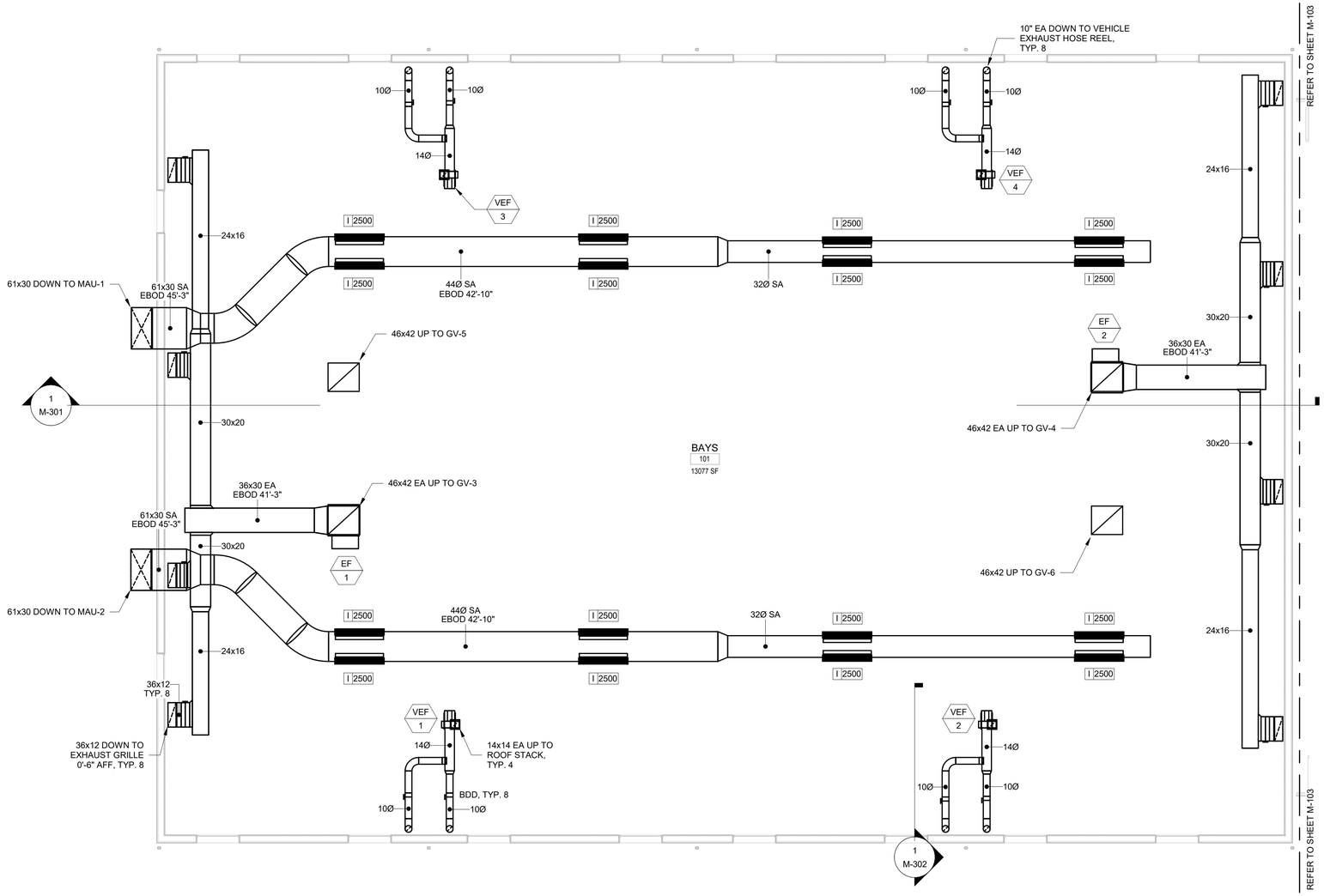

1 HVAC FLOOR PLAN - AREA A 25' TO 35' AFF

1/8" = 1'-0"

8' 0 8' 16'

SCALE: 1/8" = 1' - 0"

PLAN NORTH

AREA

'A'

US Army Corps of Engineers ®

MARK	DESCRIPTION	DATE	APPR

US ARMY CORPS OF ENGINEERS

SACRAMENTO DISTRICT
IN-HOUSE DESIGN
1325 J STREET
SACRAMENTO, CA 95814

Designed by: J. STONE
Drawn By: J. STONE
Submittal Status: RTA
Reviewed By: S. BARMANN
Submitted by: Daniel J. Lee, P.E. Chief, Mechanical Section

Date: 13 JUL 2020
Spec No: 2145
File No: 233-25-0665
Size/Zoom: 24" x 36" / 1/8" = 1'-0"
Plot Date: 7/10/2020 12:28:34 PM

Rev:
Project No:
File Name: W60M_GTEB

FT. HUACHUCA AZ

GROUND TRANSPORT EQUIPMENT BUILDING

GTEB HVAC PLAN - AREA A

SHEET IDENTIFICATION
M-102

RTA

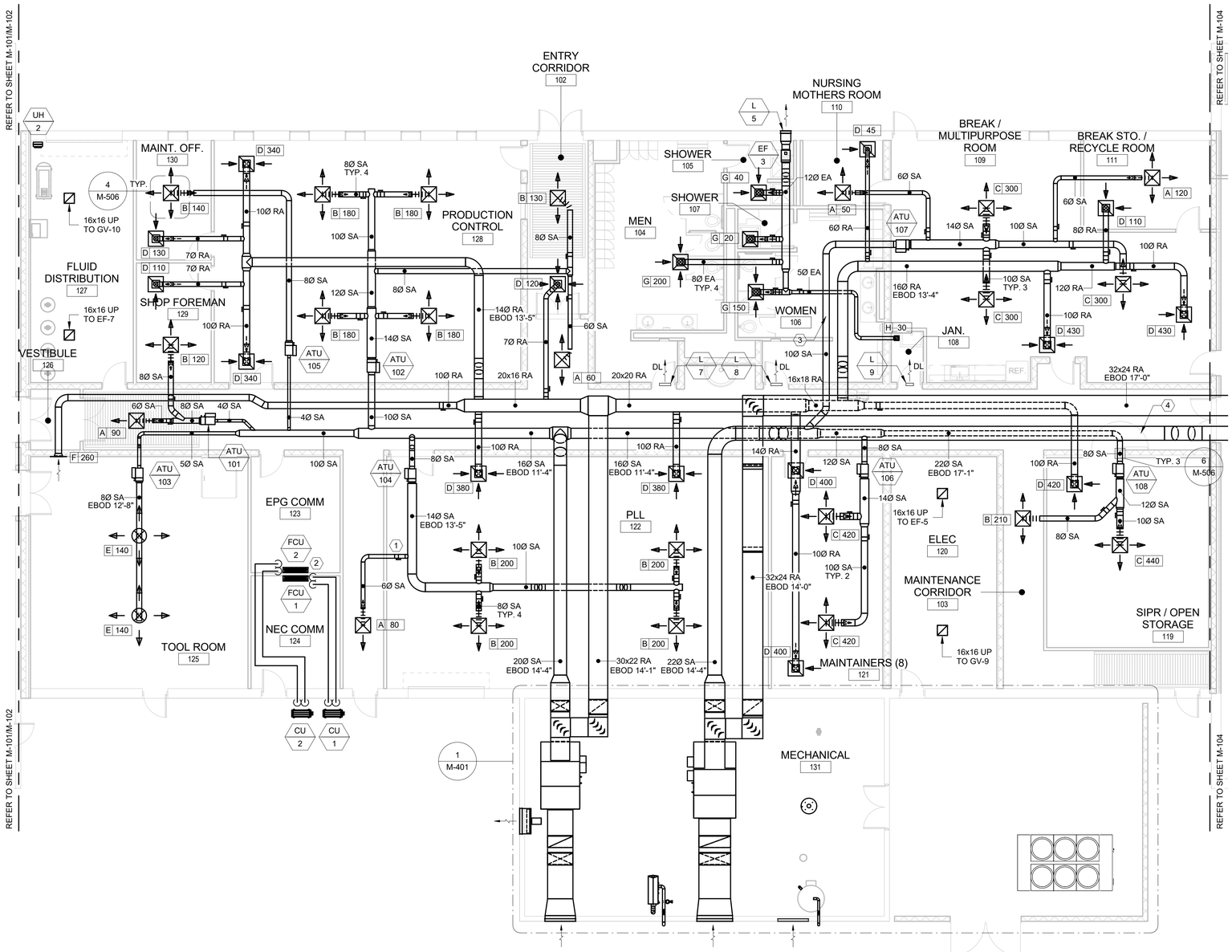

KEYNOTES:

1. PROVIDE VOLUME DAMPERS ON DUCTWORK UPSTREAM OF ALL SUPPLY DIFFUSERS AND RETURN GRILLES.
2. ROUTE CONDENSATE FROM FAN COIL UNITS TO EXTERIOR WALL.
3. DUCT STATIC PRESSURE SENSOR LOCATION FOR AHU-1.
4. DUCT STATIC PRESSURE SENSOR LOCATION FOR AHU-2.

AREA

'B'

SCALE: 1/8" = 1' - 0"

PLAN NORTH

1 HVAC FLOOR PLAN - AREA B

1/8" = 1'-0"

US Army Corps of Engineers ®

MARK	DESCRIPTION	DATE	APPR

Designed by: J. STONE | Drawn By: J. STONE | Date: 13 JUL 2020 | Rev:

Submittal Status: RTA | Spec No: 2145 | Project No:

Reviewed by: S. BARMANN | File No: 233-25-0865 | File Name: W69M_GTEB

Submitted by: | Size/Zoom: 22" x 34" Plot Scale: 1" = 1'-0" | Plot Date/Time: 7/10/2020 12:28:38 PM

US ARMY CORPS OF ENGINEERS

SACRAMENTO DISTRICT
IN-HOUSE DESIGN
1325 J STREET
SACRAMENTO, CA 95814

FT. HUACHUCA AZ

GROUND TRANSPORT EQUIPMENT BUILDING

GTEB HVAC PLAN - AREA B

SHEET IDENTIFICATION

M-103

RTA

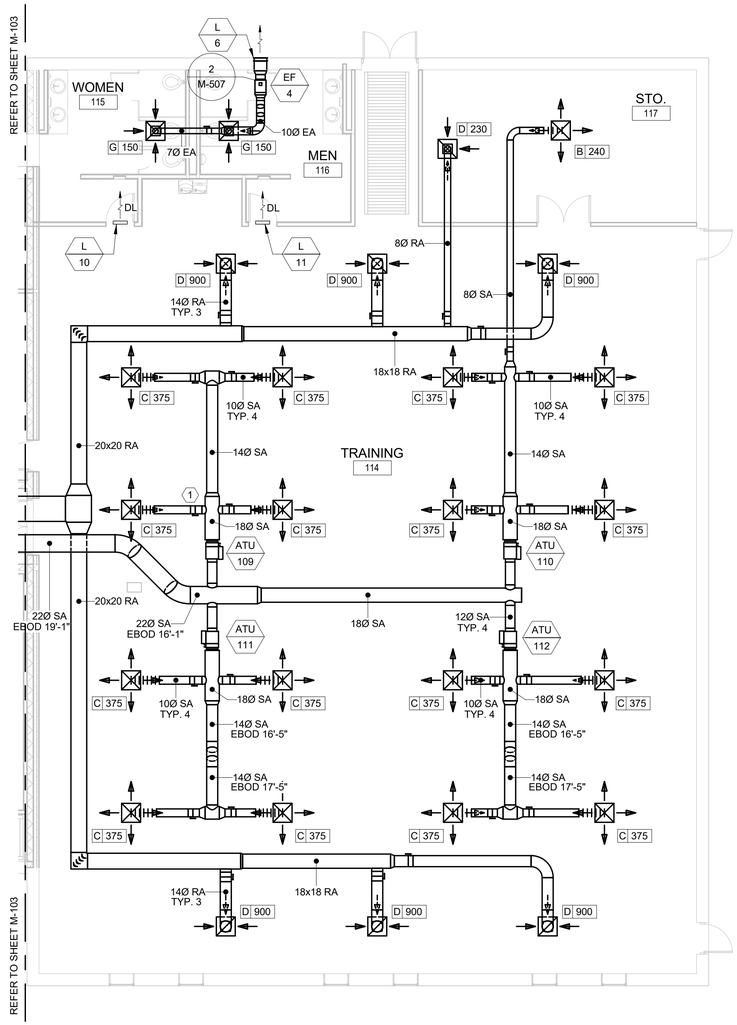

1 HVAC FLOOR PLAN - AREA C (OPTION 3)

1/8" = 1'-0"

GENERAL NOTES:

A. CONSTRUCT MECHANICAL SYSTEMS AS SHOWN ON THIS SHEET IF OPTION 3 IS EXERCISED.

B. IF OPTION 3 IS NOT EXERCISED, [AHU-2] AND [EF-4] AND ALL ASSOCIATED COMPONENTS SHALL NOT BE PROVIDED.

KEYNOTES:

1 PROVIDE VOLUME DAMPERS ON DUCTWORK UPSTREAM OF ALL SUPPLY DIFFUSERS AND RETURN GRILLES.

AREA

'C'

8' 0 8' 16'

SCALE: 1/8" = 1' - 0"

PLAN NORTH

US Army Corps of Engineers ®

MARK	DESCRIPTION	DATE	APPR.

Designed by: J. STONE
Drawn By: J. STONE
Date: 13 JUL 2020
Rev:
Submittal Status: RTA
Reviewed by: S. BAKMANN
Project No: 2145
Spec No:
Submitted by: Maj. Timothy A. Lee, P.E. Chief, Mechanical Design Section
File No: 233-25-0665
File Name: W6SM_GTEB
Size:22" x 34" Plot Scale: 1" = 1'-0" Plot Date:7/10/2020 12:28:37 PM

US ARMY CORPS OF ENGINEERS

SACRAMENTO DISTRICT
IN-HOUSE DESIGN
1325 J STREET
SACRAMENTO, CA 95814

FT. HUACHUCA

A2

GROUND TRANSPORT EQUIPMENT BUILDING

GTEB HVAC PLAN - AREA C (OPTION 3)

SHEET IDENTIFICATION
M-104

RTA

GENERAL NOTES:

A. PIPE SIZES SHOWN WITHIN BRACKETS SHALL BE USED IF OPTION 3 IS NOT EXERCISED.

KEYNOTES:

1. MAIN HYDRONIC HOT WATER CIRCUIT RUNS 13'-6" AFF.
2. PROVIDE A DIELECTRIC UNION INSIDE THE ROOM PERIMETER ADJACENT TO THE PENETRATION, OR GROUND THE PIPING WITHIN 6 INCHES OF THE WALL PENETRATION USING A NO. 4 WIRE TO THE BUILDING GROUND.
3. IF OPTION 3 IS NOT EXERCISED, END OF HYDRONIC HOT WATER CIRCUIT LOOP SHALL BE SHIFTED TO THIS LOCATION INSTEAD OF CONTINUING ON TO AREA C.

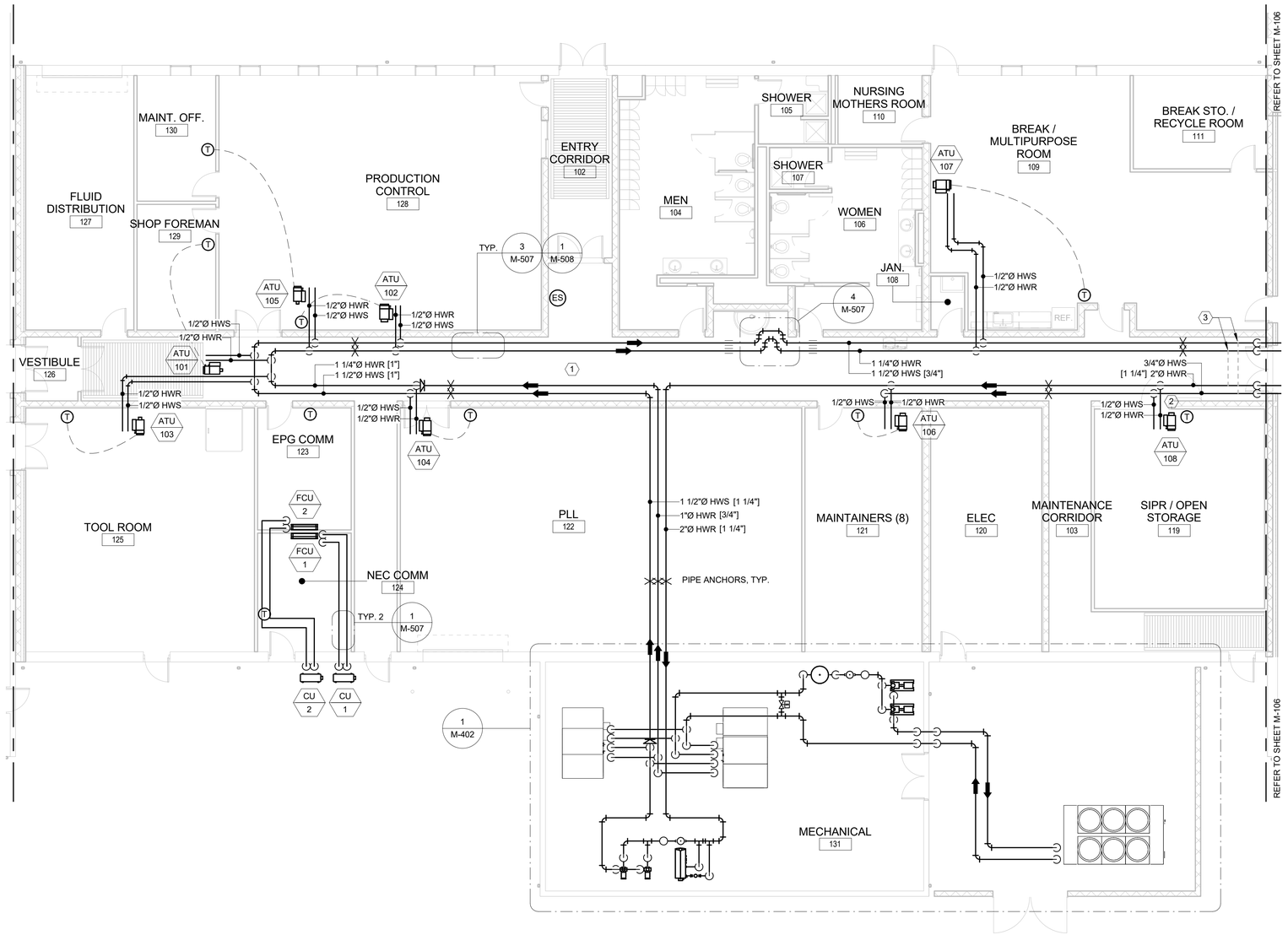

1 HVAC HYDRONIC FLOOR PLAN - AREA B

1/8" = 1'-0"

AREA

'B'

8' 0 8' 16'

SCALE: 1/8" = 1' - 0"

PLAN NORTH

US Army Corps of Engineers ®

MARK	DESCRIPTION	DATE	APPR

Designed by: J. STONE
Drawn By: J. STONE
Date: 13 JUL 2020
Rev:
Submittal Status: RTA
Spec No: 2145
Project No:
Reviewed by: S. BARMANN
Submitted by: M. Timothy A. Lee, P.E. Chief, Mechanical Design Section
File No: 233-25-0665
File Name: W6M_GTEB
Size:22" x 34" Plot Scale: 1" = 1'-0" Plot Date:7/10/2020 12:28:40 PM

US ARMY CORPS OF ENGINEERS

SACRAMENTO DISTRICT
IN-HOUSE DESIGN
1325 J STREET
SACRAMENTO, CA 95814

FT. HUACHUCA AZ

GROUND TRANSPORT EQUIPMENT BUILDING

GTEB HYDRONIC PLAN - AREA B

SHEET IDENTIFICATION
M-105

RTA

GENERAL NOTES:

A. CONSTRUCT MECHANICAL SYSTEMS AS SHOWN ON THIS SHEET IF OPTION 3 IS EXERCISED.

B. IF OPTION 3 IS NOT EXERCISED, REFER TO KEYNOTE 3 ON SHEET M-105 FOR HYDRONIC PIPE ROUTING.

KEYNOTES:

1. MAIN HYDRONIC HOT WATER CIRCUIT RUNS 16'-0" AFF.

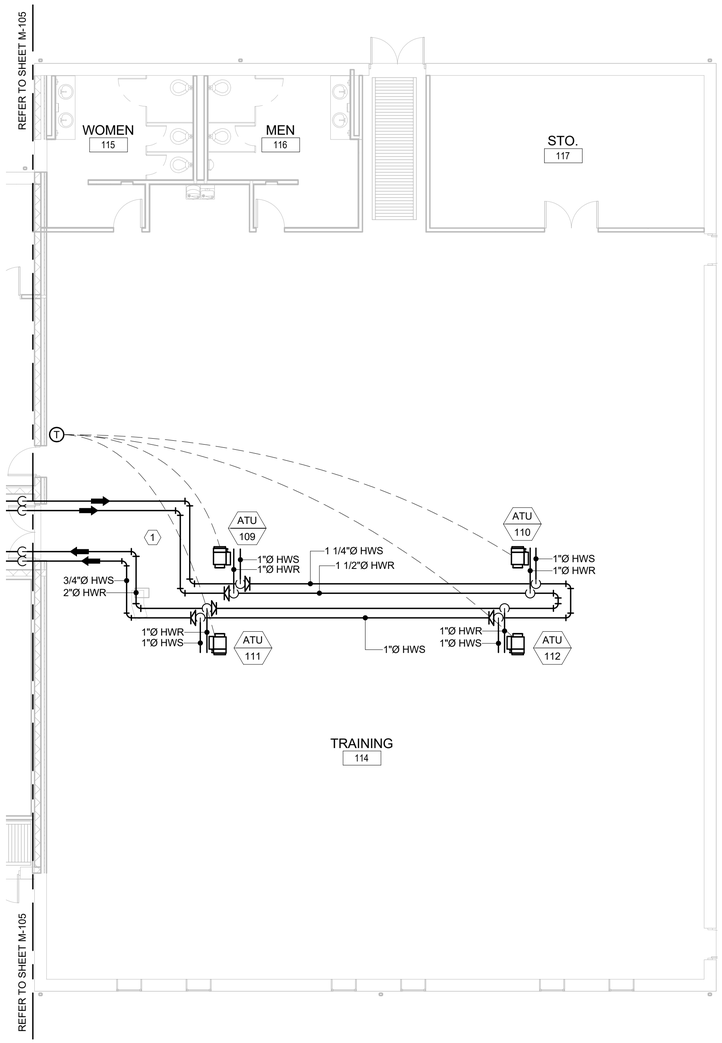

1 HVAC HYDRONIC FLOOR PLAN - AREA C (OPTION 3)
1/8" = 1'-0"

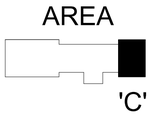

SCALE: 1/8" = 1' - 0"

US Army Corps of Engineers ®

MARK	DESCRIPTION	DATE	APPD

Designed by: J. STONE
Drawn By: J. STONE
Date: 13 JUL 2020
Rev:
Submittal Status: RTA
Spec No: 2145
Project No:
Reviewed by: S. BARMANN
Submitted by: Maj. Timothy A. Lee, P.E. Chief, Mechanical Engineering Section
File No: 233-25-0665
File Name: W69ML_GTEB
Size:22" x 34" Plot Scale: 1" = 1'-0" Plot Date:7/10/2020 12:28:40 PM

US ARMY CORPS OF ENGINEERS
SACRAMENTO DISTRICT
IN-HOUSE DESIGN
1325 J STREET
SACRAMENTO, CA 95814

FT. HUACHUCA AZ

GROUND TRANSPORT EQUIPMENT BUILDING

GTEB HYDRONIC PLAN - AREA C (OPTION 3)

SHEET IDENTIFICATION
M-106

RTA

GENERAL NOTES:

A. CONSTRUCT MECHANICAL SYSTEMS AS SHOWN ON THIS SHEET IF OPTIONS 6, 7, AND/OR 8 ARE EXERCISED.

KEYNOTES:

1. PROVIDE WALL-MOUNTED CARBON MONOXIDE (CO) AND NITROGEN DIOXIDE (NO2) MONITORING SENSOR. SET HIGH LIMIT OF CO TO 50 PPM AND HIGH LIMIT OF NO2 TO 3 PPM. UPON REACHING HIGH LIMIT, SEND ALARM SIGNAL TO FIRE ALARM SYSTEM. SEE FIRE ALARM DRAWINGS FOR MORE INFORMATION.

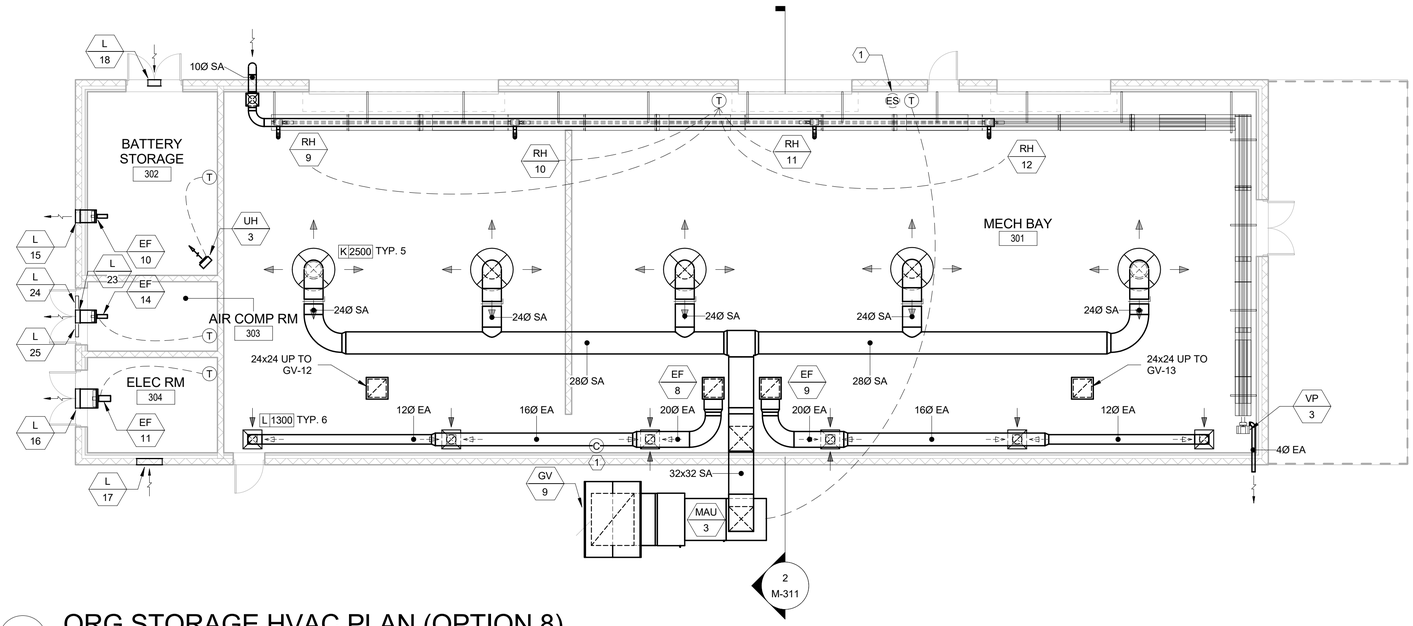

1 ORG STORAGE HVAC PLAN (OPTION 8)
1/8" = 1'-0"

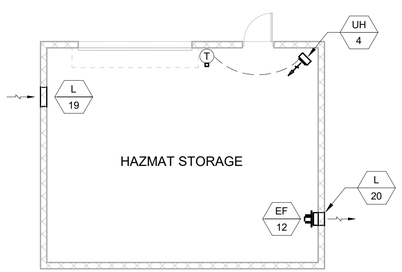

2 HAZMAT STORAGE HVAC PLAN (OPTION 6)
1/8" = 1'-0"

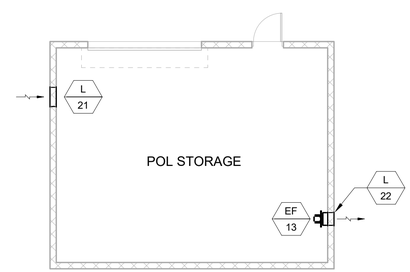

3 POL STORAGE HVAC PLAN (OPTION 7)
1/8" = 1'-0"

8' 0 8' 16'
SCALE: 1/8" = 1' - 0"

PLAN NORTH

US Army Corps of Engineers ®

MARK	DESCRIPTION	DATE	APPD

Designed by: TK CRONIN
Drawn By: TKC
Date: 13 JUL 2020
Rev:
Submittal Status: 100%
Spec No: 2145
Project No:
Reviewed by: S. BARMANN
File No: 223-25-0655
File Name: 223-25-0655 STOR.RVT
Submitted by: M. Timothy A. Lee, P.E. Chief, Mechanical Design Section
Size:22" x 34" Plot Scale: 1/8" = 1'-0" Plot Date:7/10/2020 12:31:40 PM

US ARMY CORPS OF ENGINEERS
SACRAMENTO DISTRICT
IN-HOUSE DESIGN
1325 J STREET
SACRAMENTO, CA 95814

FT. HUACHUCA
ORG STORAGE BUILDING
HVAC FLOOR PLAN (OPTIONS 6, 7 AND 8)
A2

SHEET IDENTIFICATION
M-111

RTA

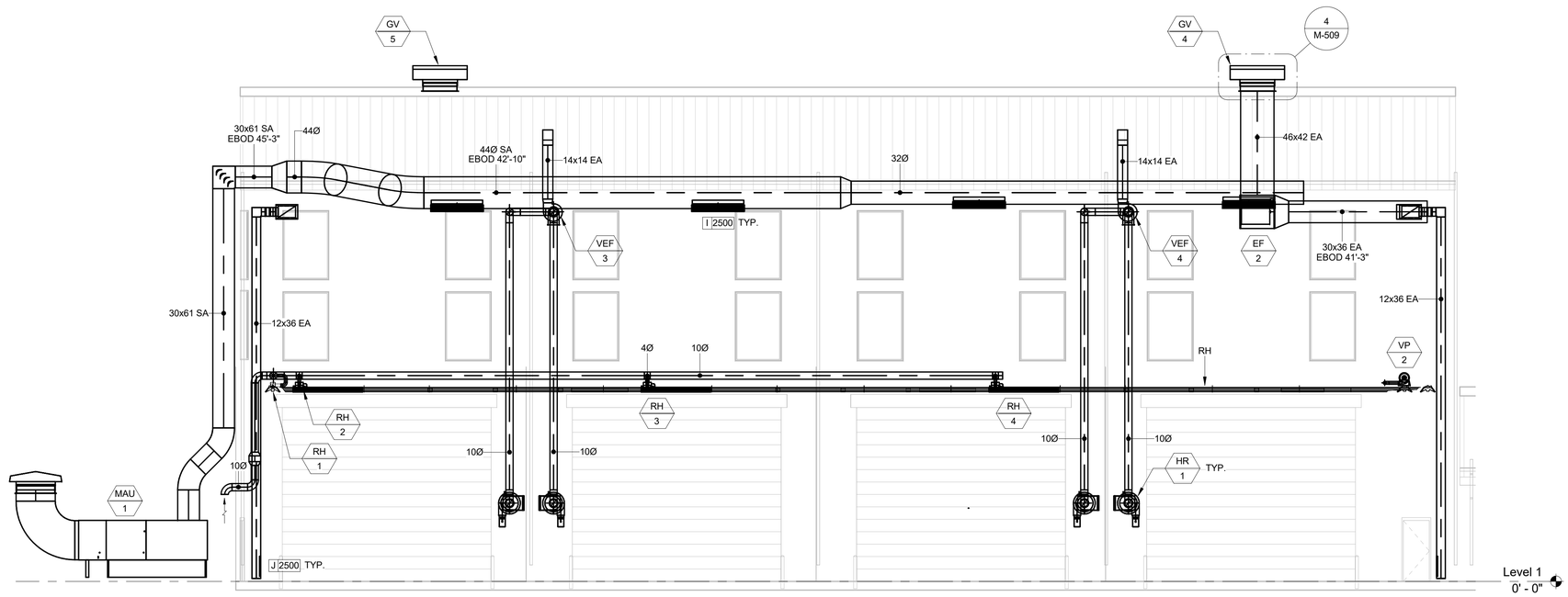

1
M-301

MAINTENANCE BAY BUILDING SECTION VIEW

1/8" = 1'-0"

8' 0 8' 16'

SCALE: 1/8" = 1' - 0"

US Army Corps of Engineers ®

MARK	DESCRIPTION	DATE	APPR.

Designed by: J. STONE
Drawn By: J. STONE
Date: 13 JUL 2020
Rev:
Submittal Status: RTA
Spec No: 2145
Project No:
Reviewed by: S. BARMANN
Submitted by: Maj. Timothy A. Lee, P.E. Chief, Mechanical Design Section
File No: 233-25-0665
File Name: W65M_GTEB
Size:2" x 34" Plot Scale: 1" = 1'-0" Plot Date:7/10/2020 12:28:47 PM

US ARMY CORPS OF ENGINEERS

SACRAMENTO DISTRICT
IN-HOUSE DESIGN
1325 J STREET
SACRAMENTO, CA 95814

FT. HUACHUCA

A2

GROUND TRANSPORT EQUIPMENT BUILDING

GTEB HVAC SECTION VIEW

SHEET IDENTIFICATION
M-301

RTA

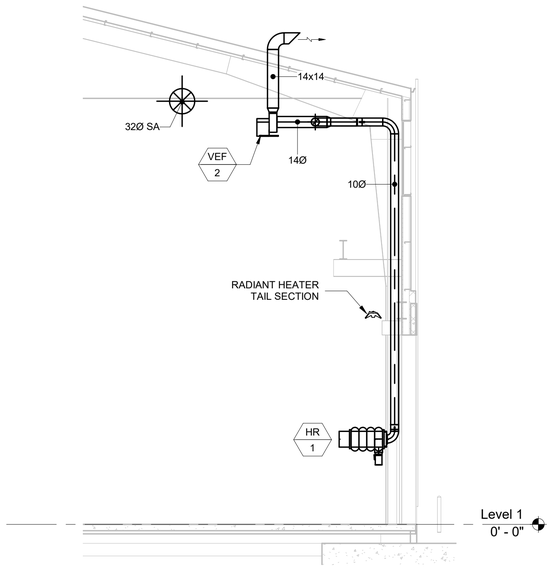

1 MAINTENANCE BAY SECTION VIEW
1/8" = 1'-0"

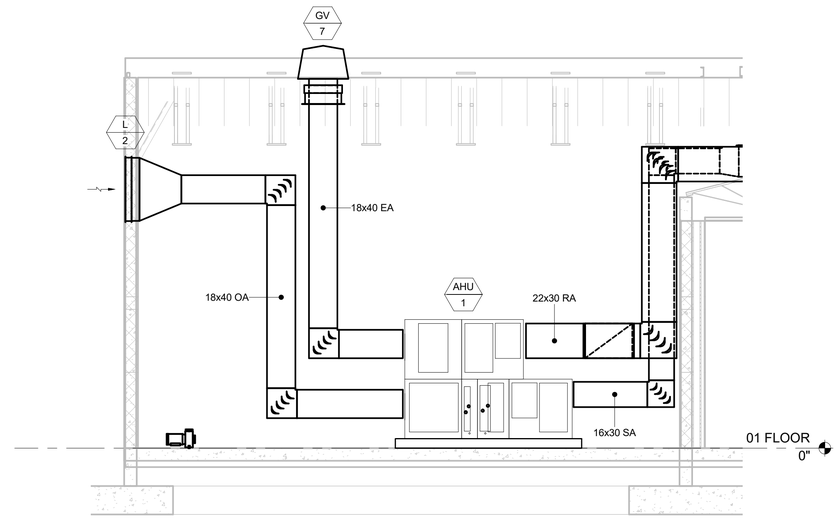

2 AHU-1 SECTION VIEW
1/4" = 1'-0"

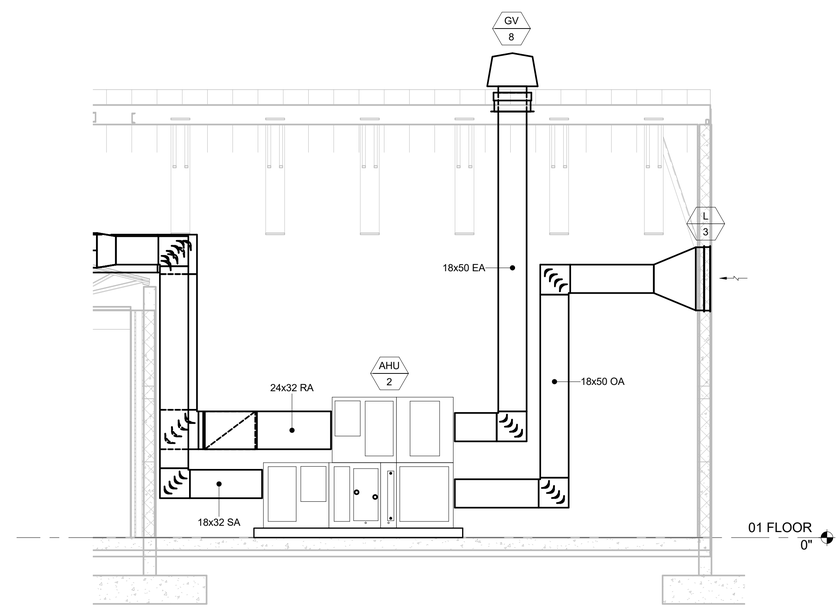

3 AHU-2 SECTION VIEW (OPTION 3)
1/4" = 1'-0"

US Army Corps of Engineers ®

MARK	DESCRIPTION	DATE	APPD

US ARMY CORPS OF ENGINEERS

SACRAMENTO DISTRICT
IN-HOUSE DESIGN
1325 J STREET
SACRAMENTO, CA 95814

Designed by: J. STONE
Drawn By: J. STONE
Date: 13 JUL 2020
Rev:
Submittal Status: RTA
Reviewed by: S. BARMANN
Project No:
Spec No: 2145
Submitted by: Maj Timothy A. Lee, P.E.
Chief, Mechanical Design Section
File No: 233-25-0665
File Name: WBM_GTEB
Size:22" x 34"
Plot Scale:Modelspace
Plot Date:7/10/2020 12:28:48 PM

FT. HUACHUCA

A2

GROUND TRANSPORT
EQUIPMENT BUILDING

GTEB HVAC SECTION VIEW

SHEET IDENTIFICATION
M-302

RTA

GENERAL NOTES:

A. CONSTRUCT MECHANICAL SYSTEMS AS SHOWN ON THIS SHEET IF OPTION 8 IS EXERCISED.

KEYNOTES:

1 FOR CONCRETE PAD DETAIL, SEE STRUCTURAL.

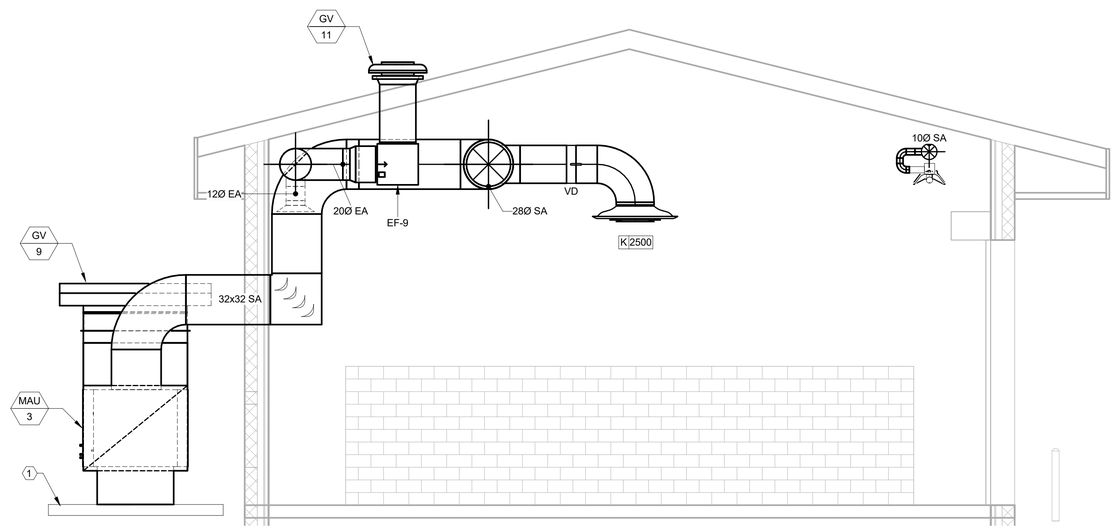

2 ORG STORAGE SECTION VIEW (OPTION 8)

1/4" = 1'-0"

US Army Corps of Engineers ®

MARK	DESCRIPTION	DATE	APPR

US ARMY CORPS OF ENGINEERS

SACRAMENTO DISTRICT
IN-HOUSE DESIGN
1325 J STREET
SACRAMENTO, CA 95814

Designed by: TK CRONIN | Drawn By: TDG | Date: 13 JUL 2020 | Rev:
Submittal Status: 100% | Spec No: 2145 | Project No:
Reviewed by: S. BARMANN | File No: 223-25-0655 | File Name: M-311 STOR.RVT
Submitted by: M. Timothy A. Lee, P.E. Chief, Mechanical Design Section | Size:22" x 34" Plot Scale: 1" = 1'-0" Plot Date:7/10/2020 12:31:40 PM

FT. HUACHUCA

A2

ORG STORAGE BUILDING

HVAC SECTION VIEW (OPTION 8)

SHEET IDENTIFICATION
M-311

RTA

KEYNOTES:

1 PROVIDE [AHU-2] AND ASSOCIATED COMPONENTS IF OPTION 3 IS EXERCISED.

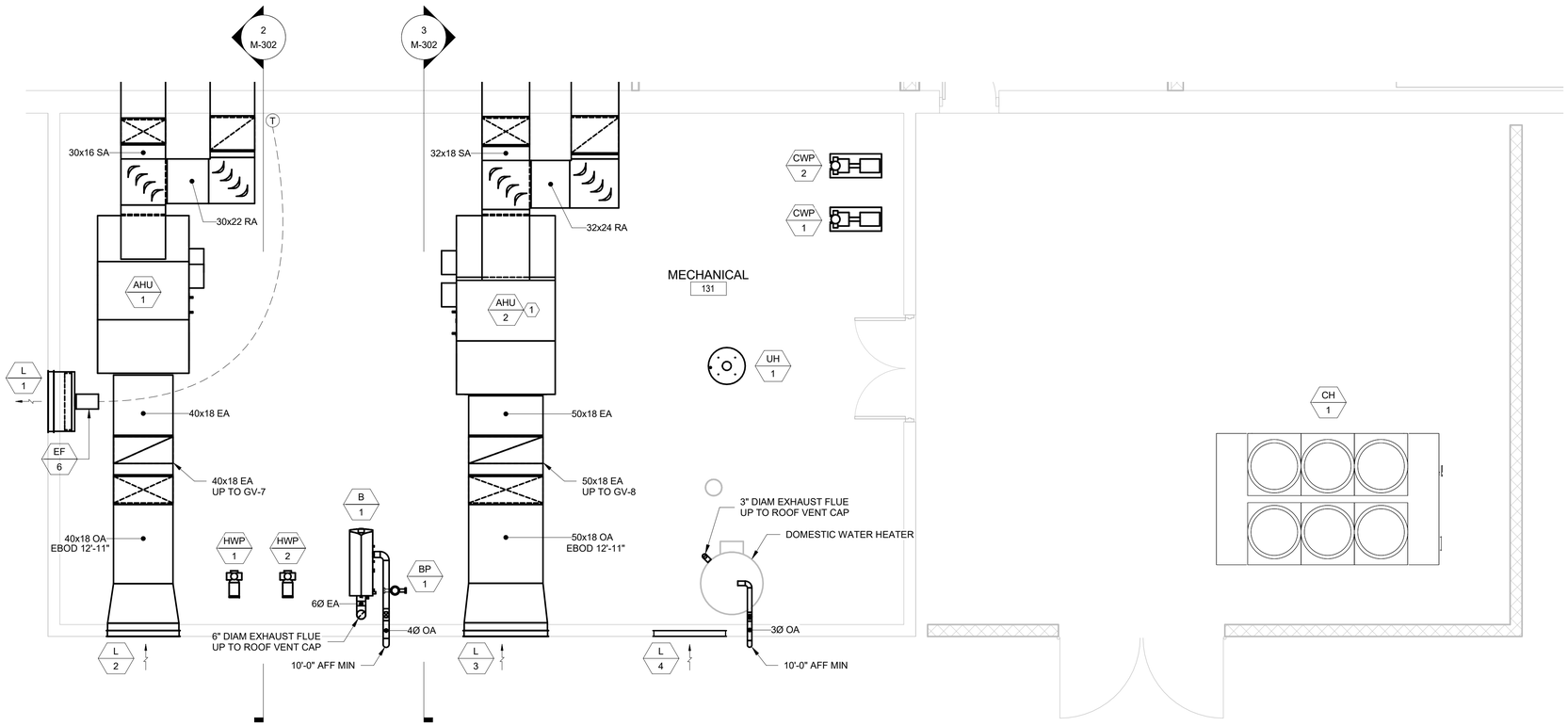

1 ENLARGED HVAC DUCT FLOOR PLAN - MECHANICAL ROOM

1/4" = 1'-0"

4' 0 4' 8'

SCALE: 1/4" = 1' - 0"

PLAN NORTH

US Army Corps of Engineers ®

MARK	DESCRIPTION	DATE	APPR

Designed by: J. STONE
Drawn By: J. STONE
Submittal Status: RTA
Reviewed by: S. BARMANN
Submitted by: Dr. Timothy A. Lee, P.E. Chief, Mechanical Design Section

US ARMY CORPS OF ENGINEERS

SACRAMENTO DISTRICT
IN-HOUSE DESIGN
1325 J STREET
SACRAMENTO, CA 95814

Date: 13 JUL 2020
Rev:
Spec No: 2145
Project No:
File No: 233-25-0665
File Name: W65M_GTEB
Size:22" x 34"
Plot Scale: 1" = 1'-0"
Plot Date:7/10/2020 12:28:48 PM

FT. HUACHUCA AZ

GROUND TRANSPORT
EQUIPMENT BUILDING

ENLARGED HVAC DUCT FLOOR PLAN

SHEET IDENTIFICATION
M-401

RTA

GENERAL NOTES:

A. PIPE SIZES SHOWN WITHIN BRACKETS SHALL BE USED IF OPTION 3 IS NOT EXERCISED.

KEYNOTES:

1. ROUTE CONDENSATE FROM AIR HANDLING UNIT TO NEARBY FLOOR SINK. SEE PLUMBING PLANS FOR FLOOR SINK LOCATIONS.

2. PROVIDE [AHU-2] AND ASSOCIATED COMPONENTS IF OPTION 3 IS EXERCISED.

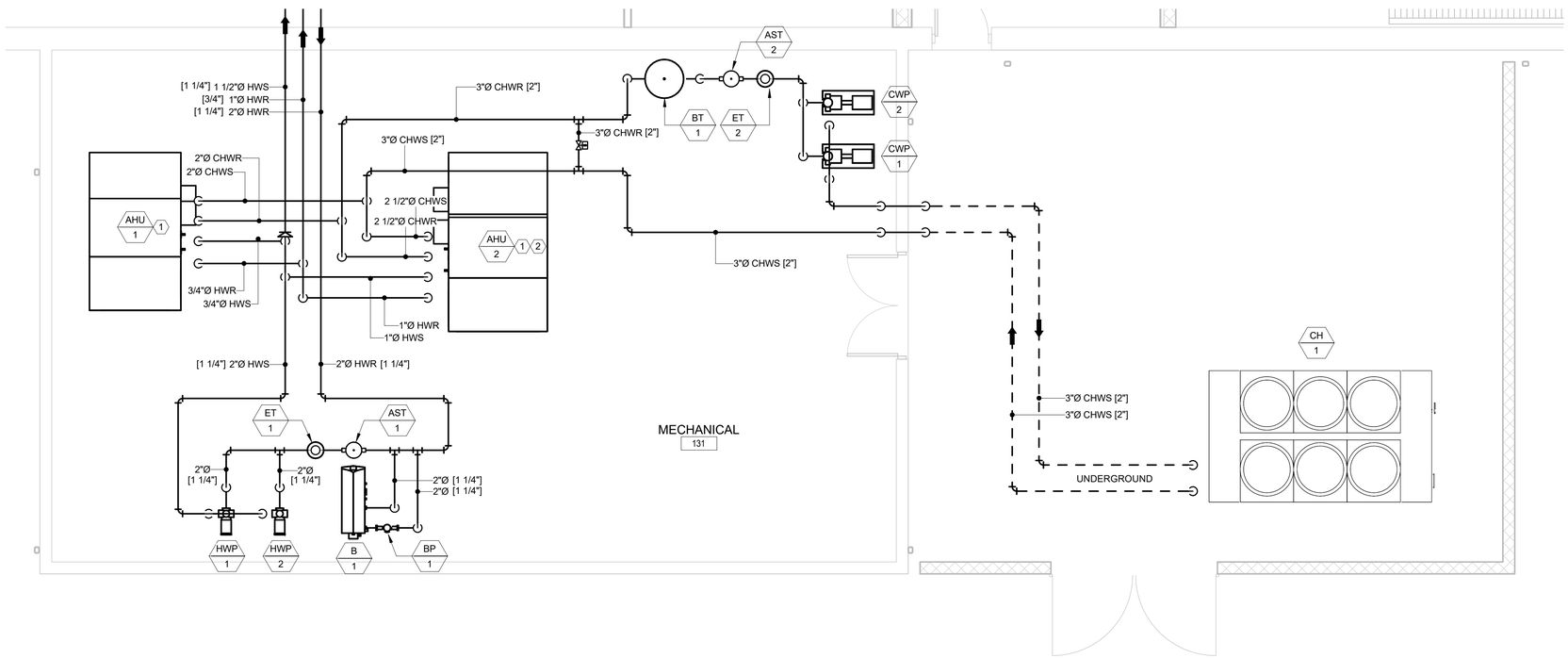

1 ENLARGED HVAC HYDRONIC FLOOR PLAN - MECHANICAL ROOM

1/4" = 1'-0"

4' 0 4' 8'

SCALE: 1/4" = 1' - 0"

PLAN NORTH

US Army Corps of Engineers ®

MARK	DESCRIPTION	DATE	APPD

Designed by: J. STONE
Drawn By: J. STONE
Date: 13 JUL 2020
Rev:
Submittal Status: RTA
Spec No: 2145
Project No:
Reviewed by: S. BAKMANN
File No: 233-25-0665
File Name: W6SM_GTEB
Submitted by: Al_Timothy.A.Lee_P.E.
Size:22" x 34" Plot Scale: 1:1 = 1:0.5" Plot Date:7/10/2020 12:28:49 PM
Chief, Mechanical Design Section

US ARMY CORPS OF ENGINEERS

SACRAMENTO DISTRICT
IN-HOUSE DESIGN
1325 J STREET
SACRAMENTO, CA 95814

FT. HUACHUCA

A2

GROUND TRANSPORT EQUIPMENT BUILDING

ENLARGED HVAC HYDRONIC FLOOR PLAN

SHEET IDENTIFICATION
M-402

RTA

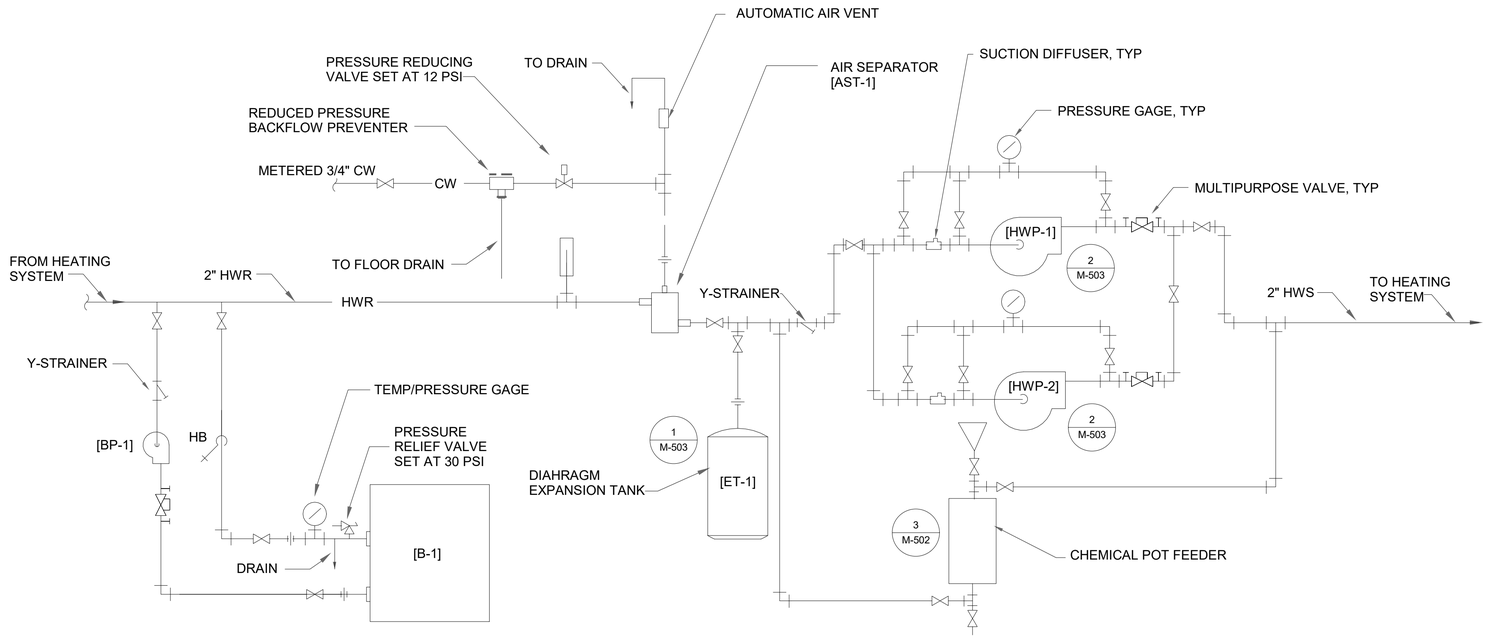

1 BOILER PIPING SCHEMATIC

N.T.S.

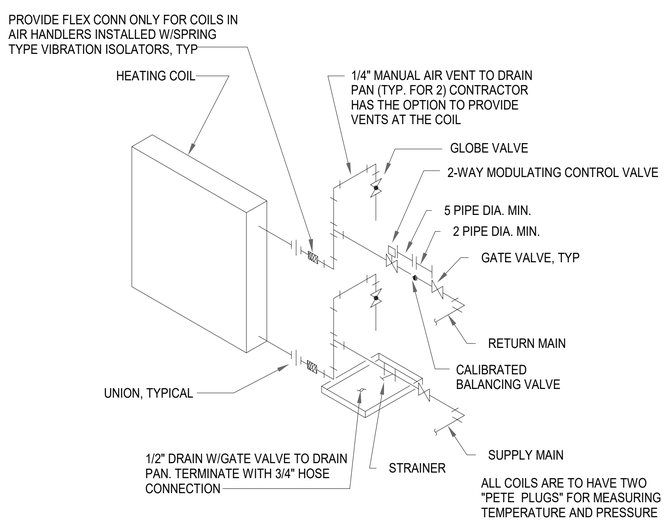

2 HOT WATER COIL CONNECTION (2-WAY CONTROL VALVE)

NOT TO SCALE

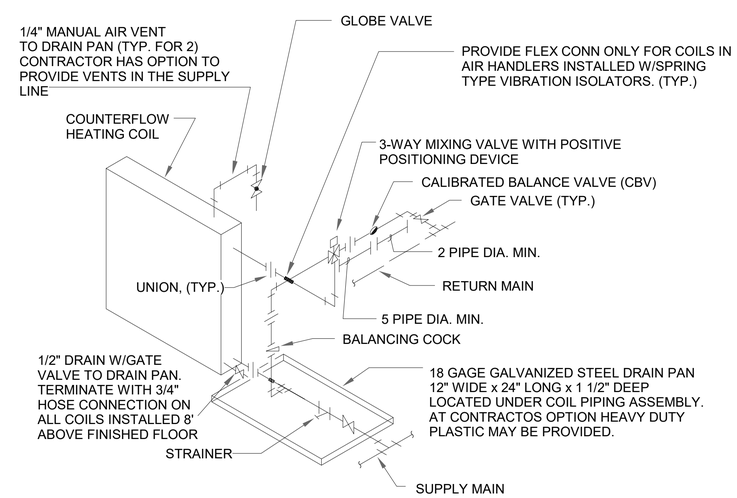

3 HOT WATER COIL CONNECTION (3-WAY MIXING VALVE)

N.T.S.

US Army Corps of Engineers ®

MARK	DESCRIPTION	DATE	APPD

Designed by: J. STONE
Drawn by: J. STONE
Submittal Status: RTA
Reviewed S. BARMANN
Submitted by: M. Timothy A. Lee, P.E. Chief, Mechanical Section
Date: 13 JUL 2020
Spec No: 2145
File No: 233-25-0665
Size:22" x 34" Plot Scale:1:1 S. Plot Date:7/10/2020 12:28:50 PM
Rev:
Project No:
File Name: W65M_GTEB

US ARMY CORPS OF ENGINEERS

SACRAMENTO DISTRICT
IN-HOUSE DESIGN
1325 J STREET
SACRAMENTO, CA 95814

FT. HUACHUCA AZ

GROUND TRANSPORT EQUIPMENT BUILDING

HVAC DETAILS

SHEET IDENTIFICATION
M-501

RTA

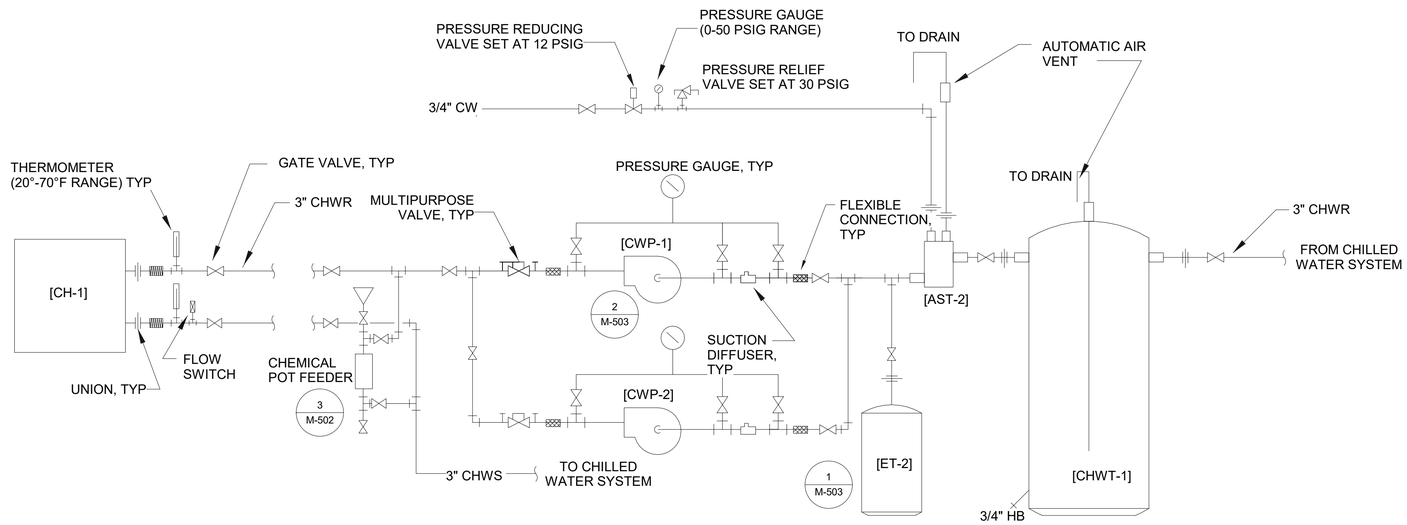

1 CHILLED WATER PIPING SCHEMATIC

N.T.S.

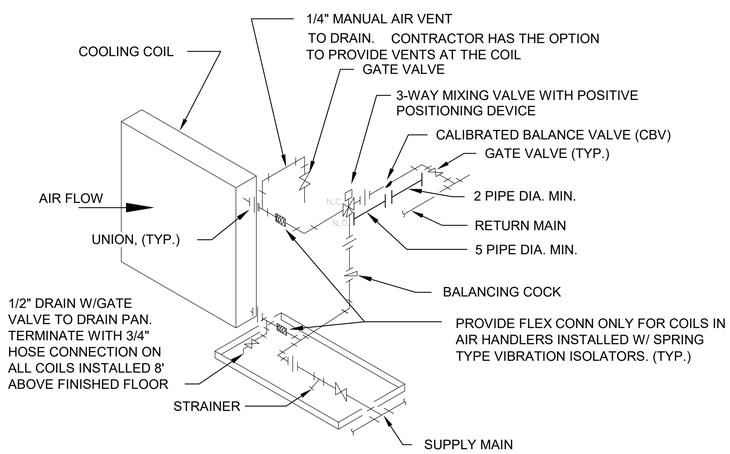

2 CHILLED WATER COIL CONNECTION

N.T.S.

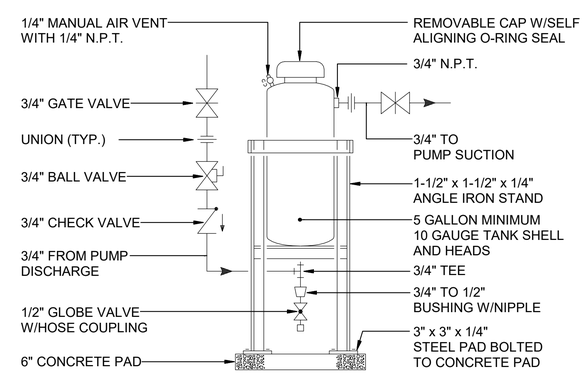

3 WATER TREATMENT ONE-SHOT FEEDER

N.T.S.

US Army Corps of Engineers ®

MARK	DESCRIPTION	DATE	APPD

Designed by: J. STONE
Drawn by: J. STONE
Submittal Status: RTA
Reviewed by: S. BARMANN
Submitted by: Ali Tinoco A. Lee, P.E.
Chief, Mechanical Design Section
Date: 13 JUL 2020
Rev:
Spec No: 2145
Project No:
File No: 233-25-0665
File Name: W65M_GTEB
Size:22" x 34"
Plot Scale:N.T.S.
Plot Date:7/10/2020 12:28:50 PM

US ARMY CORPS OF ENGINEERS

SACRAMENTO DISTRICT
IN-HOUSE DESIGN
1325 J STREET
SACRAMENTO, CA 95814

FT. HUACHUCA AZ

GROUND TRANSPORT EQUIPMENT BUILDING

HVAC DETAILS

SHEET IDENTIFICATION
M-502

RTA

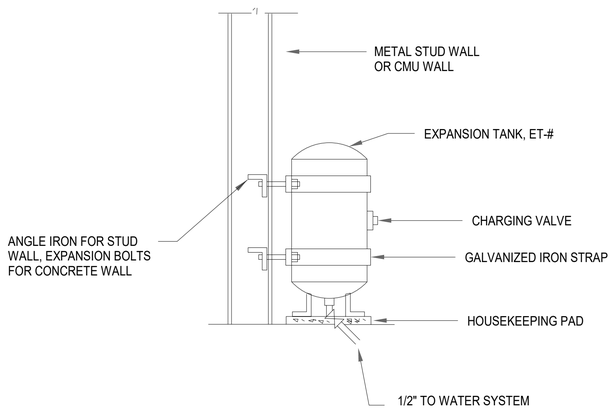

1 FLOOR-MOUNTED EXPANSION TANK

NOT TO SCALE

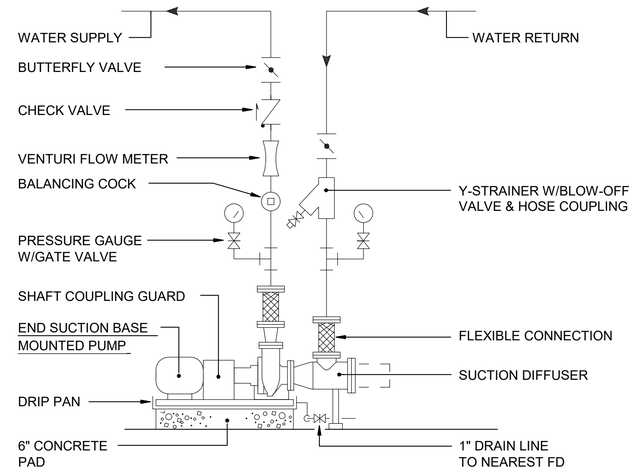

2 FLOOR MOUNTED PUMP

N.T.S.

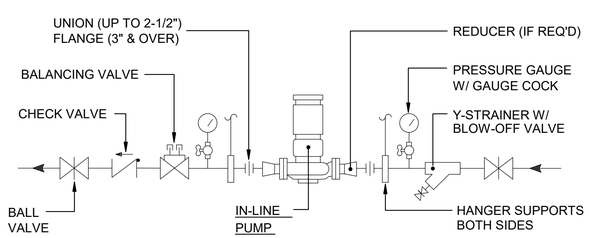

3 VERTICAL IN-LINE PUMP DETAIL

NOT TO SCALE

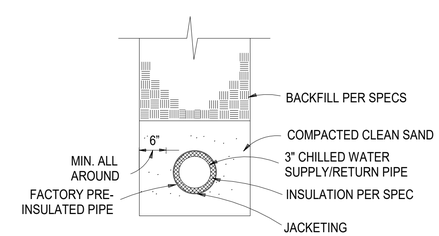

NOTE: SEE SPEC 23 07 00, BELOW GROUND PIPE INSULATION SECTION 3.2.4 FOR FACTORY PRE-INSULATED PIPE SYSTEM.

4 UNDERGROUND PIPE DETAIL

N.T.S.

US Army Corps of Engineers ®

MARK	DESCRIPTION	DATE	APPD

Designed by: J. STONE
Drawn By: J. STONE
Submittal Status: RTA
Reviewed by: S. BARMANN
Submitted by: Dr. Timothy A. Lee, P.E.
Chief, Mechanical Design Section
Date: 13 JUL 2020
Rev:
Spec No: 2145
Project No:
File No: 233-25-0665
File Name: W65M_GTEB
Size:22" x 34"
Plot Scale: As Indicated
Plot Date:7/10/2020 12:28:54 PM

US ARMY CORPS OF ENGINEERS

SACRAMENTO DISTRICT
IN-HOUSE DESIGN
1325 J STREET
SACRAMENTO, CA 95814

FT. HUACHUCA AZ

GROUND TRANSPORT
EQUIPMENT BUILDING

HVAC DETAILS

SHEET
IDENTIFICATION
M-503

RTA

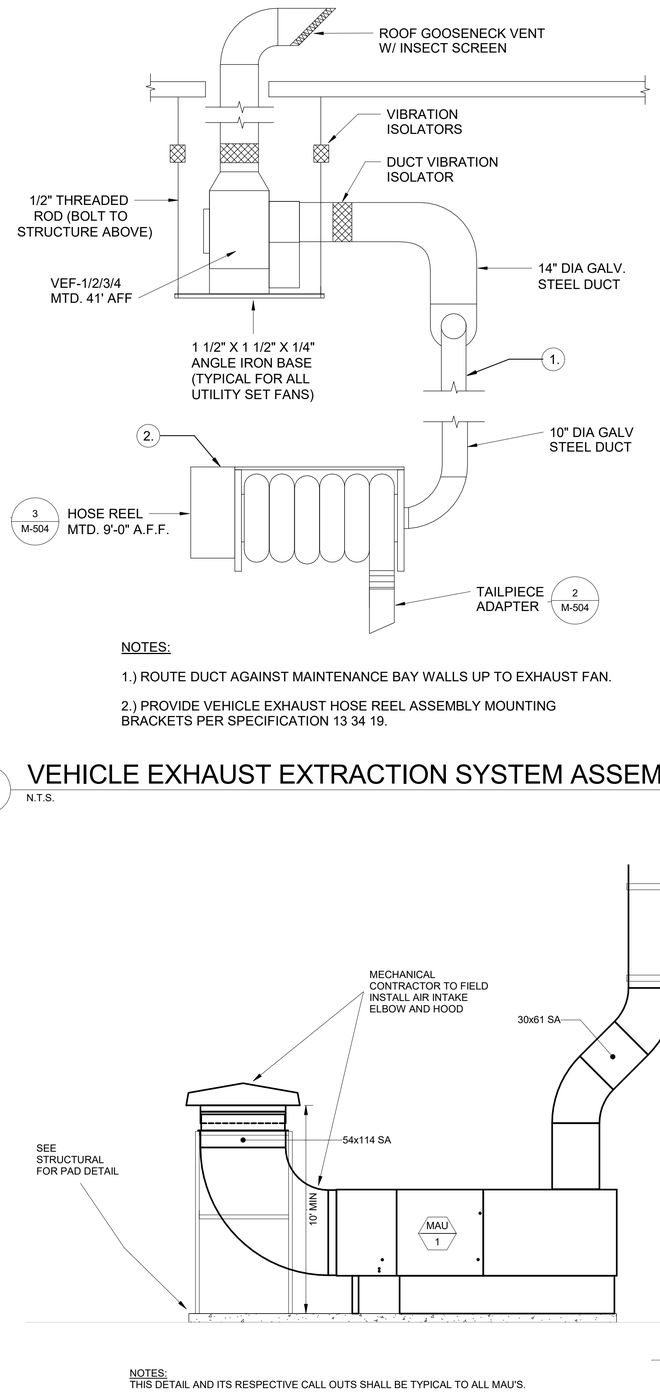

NOTES:

1.) ROUTE DUCT AGAINST MAINTENANCE BAY WALLS UP TO EXHAUST FAN.

2.) PROVIDE VEHICLE EXHAUST HOSE REEL ASSEMBLY MOUNTING BRACKETS PER SPECIFICATION 13 34 19.

1 VEHICLE EXHAUST EXTRACTION SYSTEM ASSEMBLY

N.T.S.

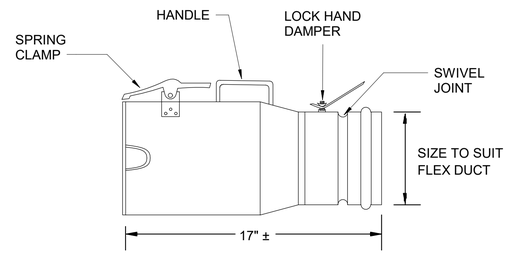

2 VEHICLE EXHAUST TAILPIPE ADAPTER

N.T.S.

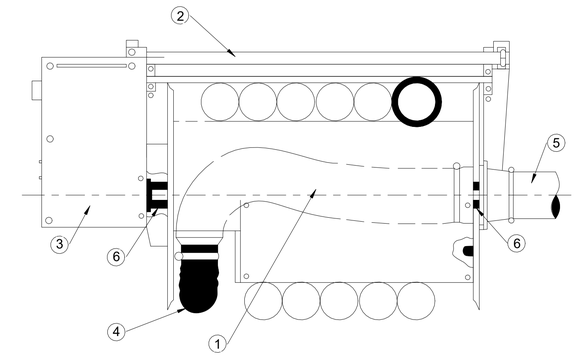

NOTES:

1. EXHAUST HOSE REEL INTERNAL ALUMINUM TUBE
2. EXHAUST HOSE REEL FRAME
3. MOTOR DRIVE COMPARTMENT
4. EXHAUST HOSE
5. CONNECTION DUCT
6. EXHAUST HOSE REEL BEARING

3 VEHICLE EXHAUST HOSE REEL

N.T.S.

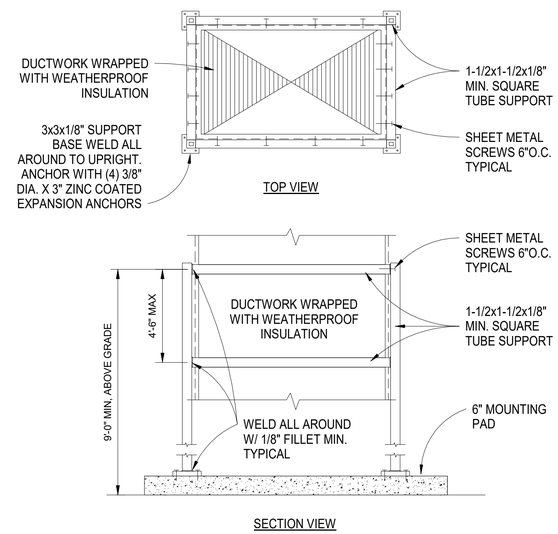

5 DUCT VERTICAL SUPPORT DETAIL

N.T.S.

NOTES:
THIS DETAIL AND ITS RESPECTIVE CALL OUTS SHALL BE TYPICAL TO ALL MAU'S.
FASTEN STRAPS TO CMU APPROX 5'-0" APART.

4 MAKEUP AIR UNIT

N.T.S.

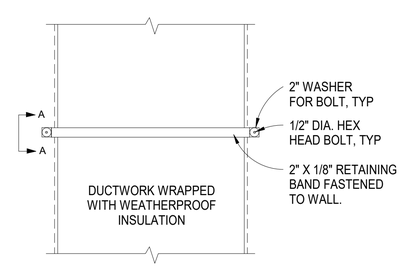

NOTE: ATTACH BAND TO WALL EVERY 5'-0" ON CENTER

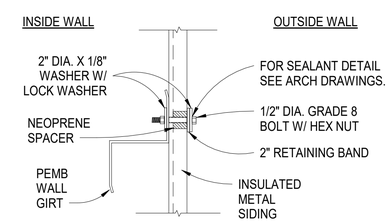

NOTE: FASTEN TO EVERY WALL GIRT, APPROX 5'-0" ON CENTER.

SECTION A-A: FASTENER TO PEMB SIDING (ABOVE CMU)

6 DUCT WALL SUPPORT DETAIL

N.T.S.

US Army Corps of Engineers ®

MARK	DESCRIPTION	DATE	APPR.

Designed by: T HARTI/AAK | Drawn By: TTH/AAK | Date: 13 JUL 2020 | Rev:
Submittal Status: RTA | Spec No: 2145 | Project No:
Reviewed By: S. BARKMANN | File No: 233-25-0665 | File Name: WBSM_GTEB
Submitted by: Sgt Timothy A. Lee, P.E. Chief, Mechanical Section | Size:22" x 34" Plot Scale:Unscaled Plot Date:7/10/2020 12:28:55 PM

US ARMY CORPS OF ENGINEERS

SACRAMENTO DISTRICT
IN-HOUSE DESIGN
1325 J STREET
SACRAMENTO, CA 95814

FT. HUACHUCA AZ

GROUND TRANSPORT EQUIPMENT BUILDING

HVAC DETAILS

SHEET IDENTIFICATION
M-504

RTA

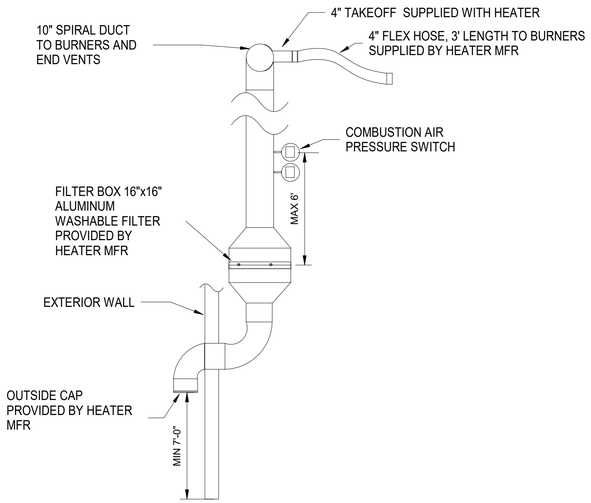

NOTE: SEAL ALL COMBUSTION AIR DUCT JOINTS COMPLETELY.
INSTALL WITH SPOT WELDS NOT ADJUSTABLE ELBOW FITTINGS.

1 RADIANT HEATER COMBUSTION AIR ASSEMBLY

N.T.S.

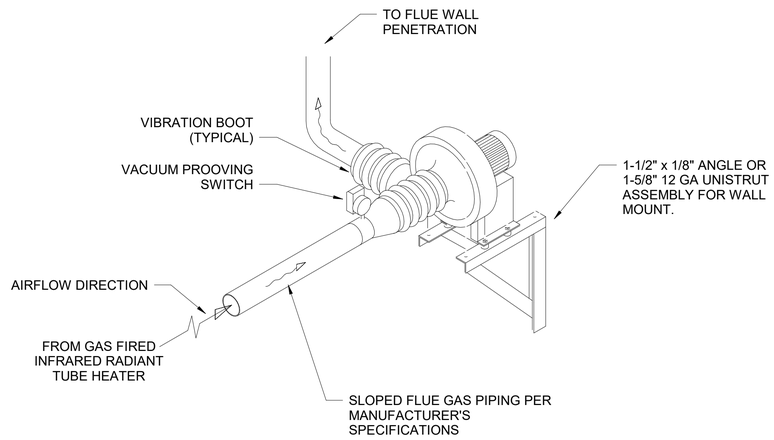

2 RADIANT HEATING VACUUM PUMP

N.T.S.

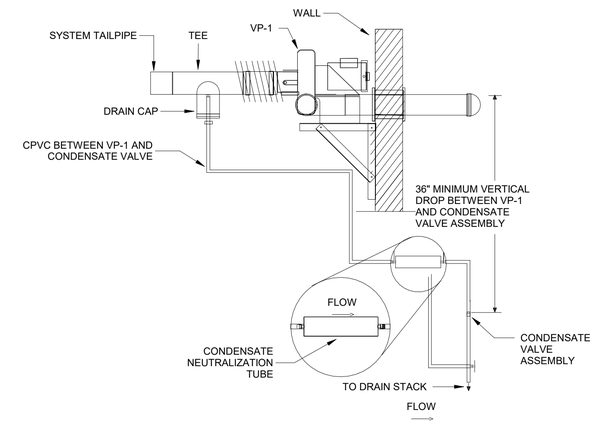

DETAIL NOTES:
1. DO NOT MOUNT CONDENSATE NEUTRALIZATION TUBE IN VERTICAL POSITION
2. MOUNT CONDENSATE NEUTRALIZATION AND CHECK VALVE AT ACCESSIBLE HEIGHT FOR EASE OF MAINTENANCE.

3 RADIANT HEATER CONDENSATE NEUTRALIZATION

N.T.S.

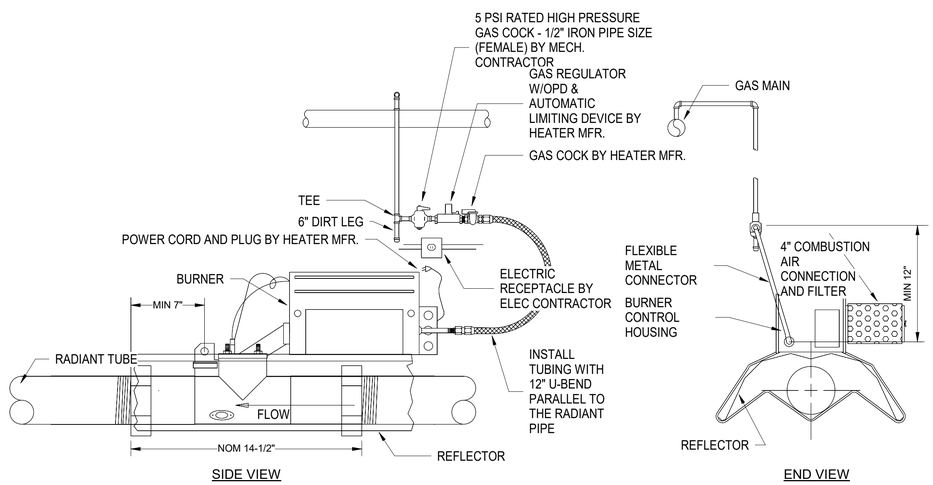

4 RADIANT HEATER GAS AND AIR CONNECTION

N.T.S.

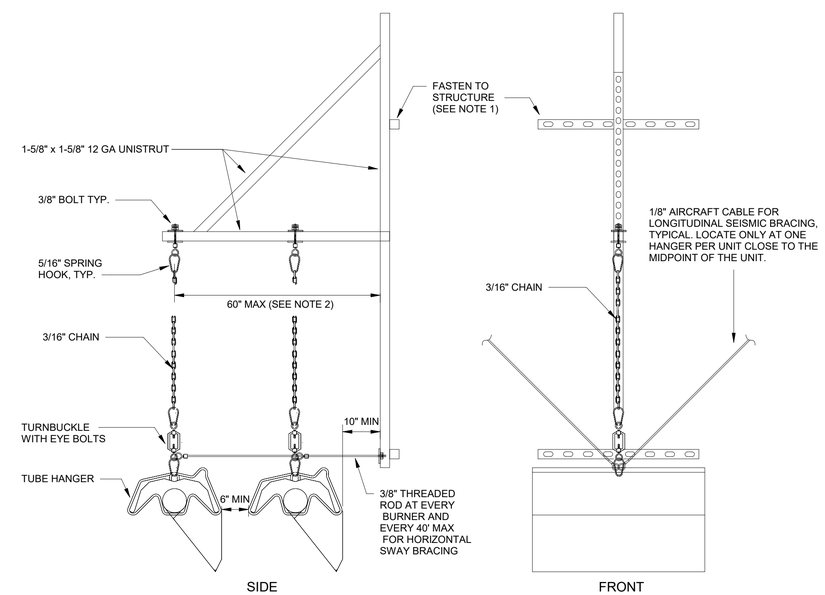

NOTES:
1. PROVIDE SUSPENSION ASSEMBLY 10' MAXIMUM SPACING FOR RADIANT HEATER SECTION.
2. SUSPEND SINGLE RADIANT HEATER SECTIONS APPROX 36" FROM WALL.

5 RADIANT HEATER SUSPENSION

N.T.S.

US Army Corps of Engineers ®

MARK	DESCRIPTION	DATE	APPR

Designed by: TK CRONIN | Drawn By: TKC | Date: 13 JUL 2020 | Rev:
Submittal Status: RTA | Spec No: 2145 | Project No:
Reviewed By: S. BARMANN | File No: 233-25-0665 | File Name: W65M_GTEB
Submitted by: M. Timothy A. Lee, P.E. Resident Engineer | Size/2" x 34" Scale: Not Applicated Plot Date:7/10/2020 12:28:56 PM

US ARMY CORPS OF ENGINEERS
SACRAMENTO DISTRICT
IN-HOUSE DESIGN
1325 J STREET
SACRAMENTO, CA 95814

FT. HUACHUCA AZ

GROUND TRANSPORT EQUIPMENT BUILDING

HVAC DETAILS

SHEET IDENTIFICATION
M-505

RTA

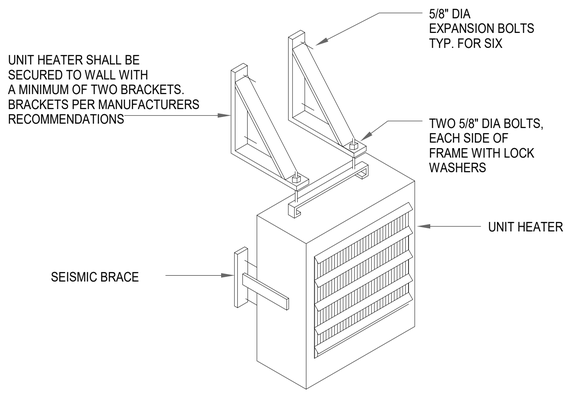

1 ELECTRIC UNIT HEATER

NOT TO SCALE

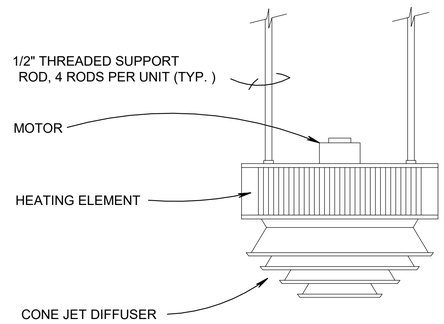

2 VERTICAL UNIT HEATER

N.T.S.

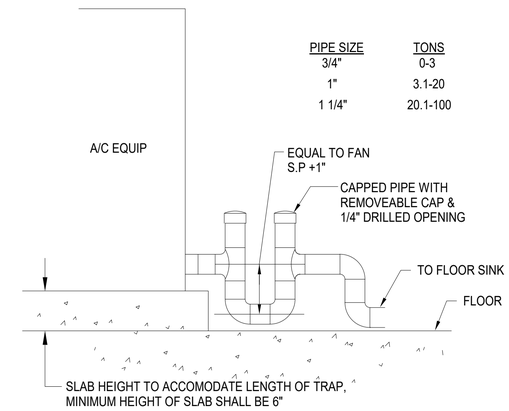

3 CONDENSATE DRAIN

NOT TO SCALE

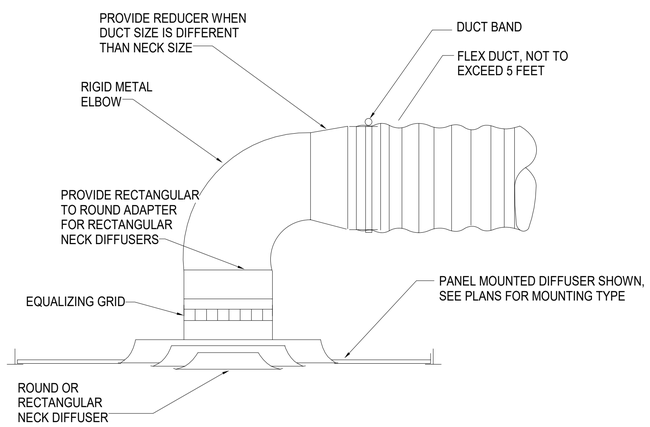

4 FLEXIBLE DUCT TO CEILING DIFFUSER

NOT TO SCALE

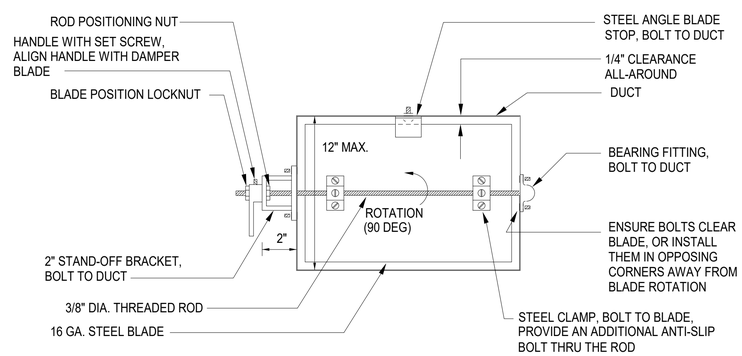

NOTES:

1. DAMPERS FOR ROUND DUCTS SHALL BE SIMILAR TO THE DAMPER SHOWN ABOVE.
2. ENSURE THAT FULL 90° DAMPER BLADE MOVEMENT IS UNOBSTRUCTED.
3. FOR DUCT HEIGHTS MORE THAN 12", PROVIDE FACTORY-FABRICATED OPPOSED BLADE DAMPERS

5 MANUAL BALANCING DAMPER - VOLUME DAMPER

NOT TO SCALE

PROVIDE A NONCONDUCTIVE BREAK (FLEX CONNECTION) USING MATERIAL APPROPRIATE FOR THE CLIMATE, FOR A 2- TO 6-INCH SECTION OF THE DUCT INSIDE THE SCIF PERIMETER ADJACENT TO THE PENETRATION. WHEN A WAVEGUIDE-BELOW-CUTOFF RF FILTER IS REQUIRED BY CTTA, PROVIDE BETWEEN THE SCIF PERIMETER AND THE NONCONDUCTIVE BREAK.

6 SCIF DUCT PENETRATION

NOT TO SCALE

US Army Corps of Engineers ®

MARK	DESCRIPTION	DATE	APPR

Designed by: T HARTAAK | Drawn By: TTH/AAK | Date: 13 JUL 2020 | Rev:
Submittal Status: RTA | Spec No: 2145 | Project No:
Reviewed S. BARMANN | File No: 233-25-0665 | File Name: W65M_GTEB
Submitted by: Jill Timothy A. Lee, P.E. Chief, Mechanical Section | Size:22" x 34" File Scale:NOT TO SCALE Plot Date:7/10/2020 12:28:56 PM

US ARMY CORPS OF ENGINEERS

SACRAMENTO DISTRICT
IN-HOUSE DESIGN
1325 J STREET
SACRAMENTO, CA 95814

FT. HUACHUCA AZ

GROUND TRANSPORT
EQUIPMENT BUILDING

HVAC DETAILS

SHEET IDENTIFICATION
M-506

RTA

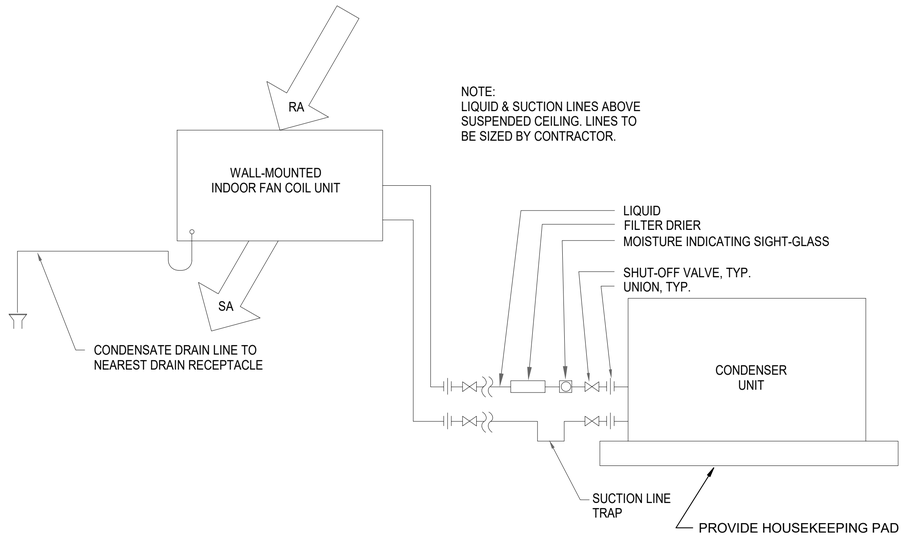

1 TYPICAL SPLIT-SYSTEM FAN COIL PIPING SCHEMATIC

NOT TO SCALE

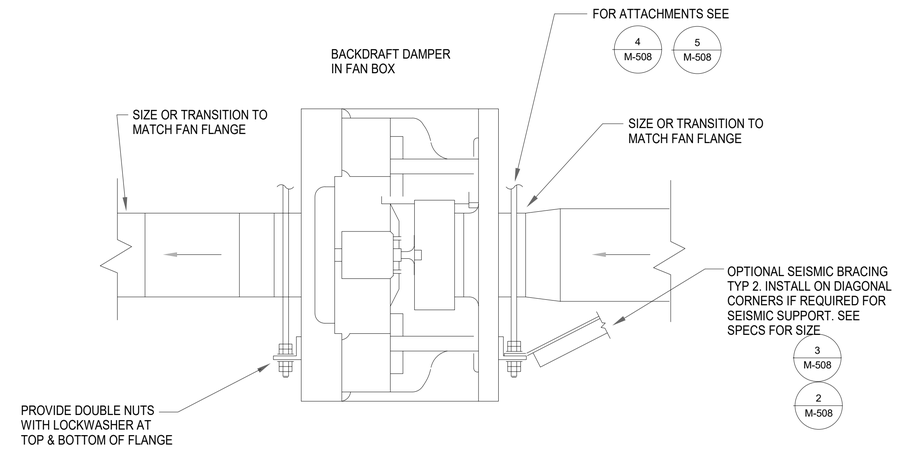

2 INLINE EXHAUST FAN

NOT TO SCALE

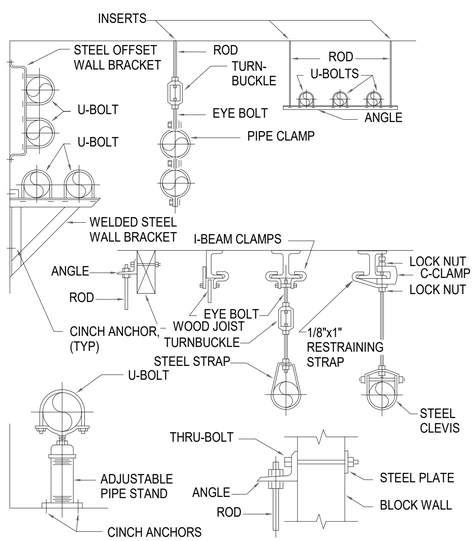

3 TYPICAL PIPE SUPPORT DETAILS

NOT TO SCALE

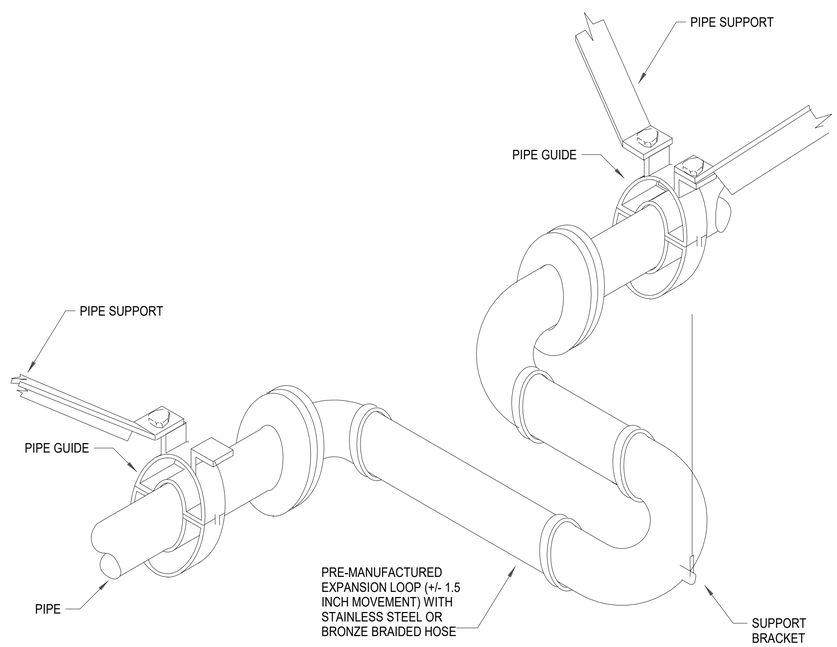

4 EXPANSION LOOP

NOT TO SCALE

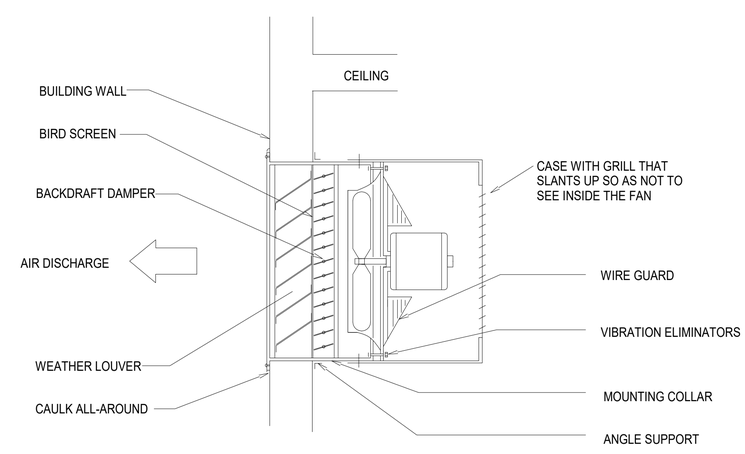

5 SIDEWALL EXHAUST FAN

NOT TO SCALE

US Army Corps of Engineers ®

MARK	DESCRIPTION	DATE	APPD

Designed by: T HARTAAK | Drawn By: TTHAAK | Date: 13 JUL 2020 | Rev:
Submittal Status: RTA | Spec No: 2145 | Project No:
Reviewed S. BARMANN | File No: 233-25-0665 | File Name: W65M_GTEB
Submitted by: Maj. Timothy A. Lee, P.E. Chief, Mechanical Engineering Section | Size:22" x 34" File Format: TO SCALE Plot Date:7/10/2020 12:28:56 PM

US ARMY CORPS OF ENGINEERS

SACRAMENTO DISTRICT
IN-HOUSE DESIGN
1325 J STREET
SACRAMENTO, CA 95814

FT. HUACHUCA AZ

GROUND TRANSPORT
EQUIPMENT BUILDING

HVAC DETAILS

SHEET
IDENTIFICATION
M-507

RTA

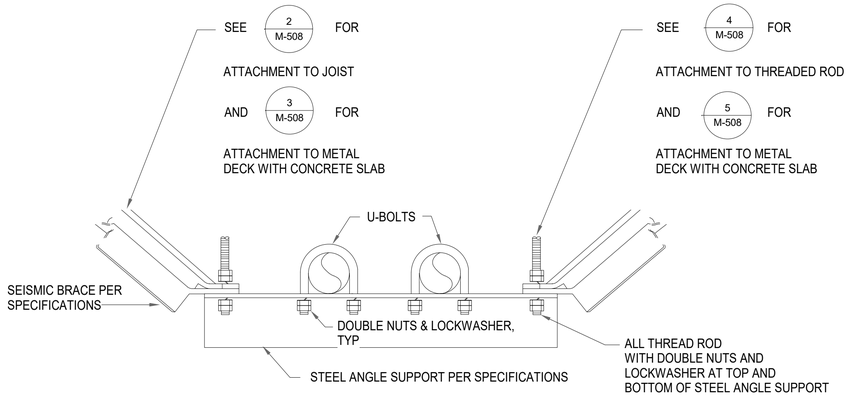

1 PIPE SUPPORT AND SEISMIC BRACE

NOT TO SCALE

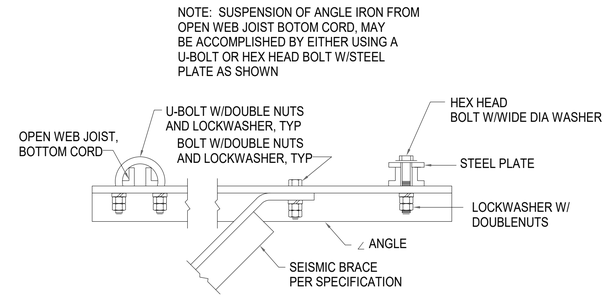

2 SEISMIC BRACE ATTACHMENT TO JOIST

NOT TO SCALE

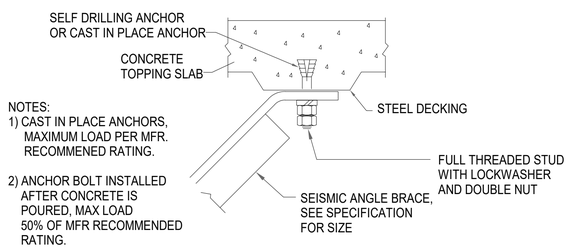

3 SEISMIC BRACE ATTACHMENT TO METAL DECK WITH CONCRETE SLAB

NOT TO SCALE

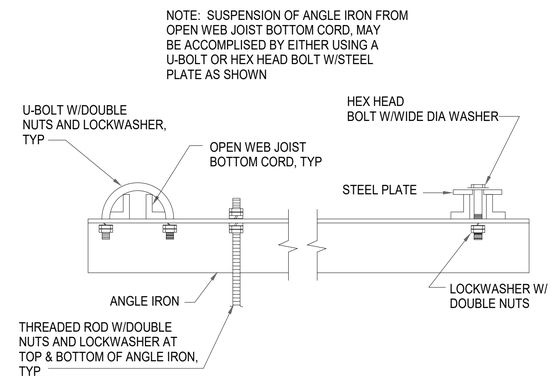

4 THREADED ROD ATTACHMENT FROM JOIST

NOT TO SCALE

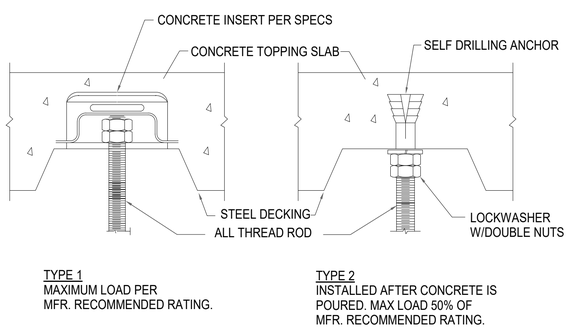

5 THREADED ROD ATTACHMETNS FROM METAL DECK WITH CONCRETE SLAB

NOT TO SCALE

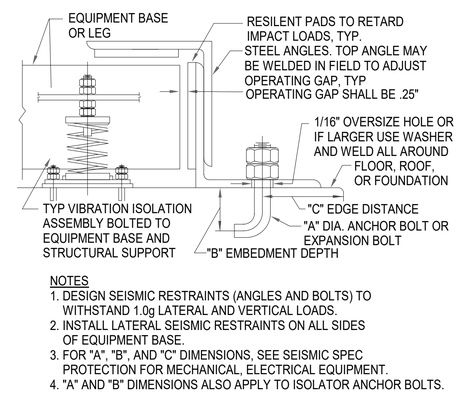

NOTES
1. DESIGN SEISMIC RESTRAINTS (ANGLES AND BOLTS) TO WITHSTAND 1.0g LATERAL AND VERTICAL LOADS.
2. INSTALL LATERAL SEISMIC RESTRAINTS ON ALL SIDES OF EQUIPMENT BASE.
3. FOR "A", "B", AND "C" DIMENSIONS, SEE SEISMIC SPEC PROTECTION FOR MECHANICAL, ELECTRICAL EQUIPMENT.
4. "A" AND "B" DIMENSIONS ALSO APPLY TO ISOLATOR ANCHOR BOLTS.

6 SEISMIC RESTRAINTS FOR LATERAL & VERTICAL LOADS

NOT TO SCALE

US Army Corps of Engineers ®

MARK	DESCRIPTION	DATE	APPD

Designed by: T HART/AAK | Drawn By: TTH/AAK | Date: 13 JUL 2020 | Rev:
Submittal Status: RTA | Spec No: 2145 | Project No:
Reviewed By: Al Timothy A. Lee, P.E. | File No: 233-25-0665 | File Name: W65M_GTEB
Submitted by: Al John R. Parrish, P.E. | Size:22" x 34" Plot Scale:AS NOTED TO SCALE Plot Date:7/10/2020 12:28:57 PM

US ARMY CORPS OF ENGINEERS
SACRAMENTO DISTRICT
IN-HOUSE DESIGN
1325 J STREET
SACRAMENTO, CA 95814

FT. HUACHUCA AZ

GROUND TRANSPORT EQUIPMENT BUILDING

HVAC DETAILS

SHEET IDENTIFICATION
M-508

RTA

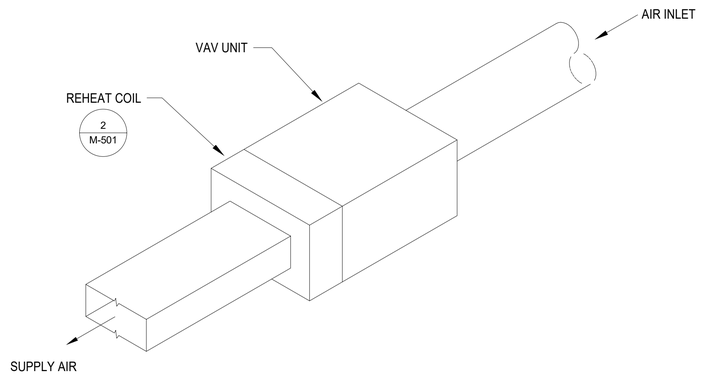

1 VAV WITH REHEAT COIL

NOT TO SCALE

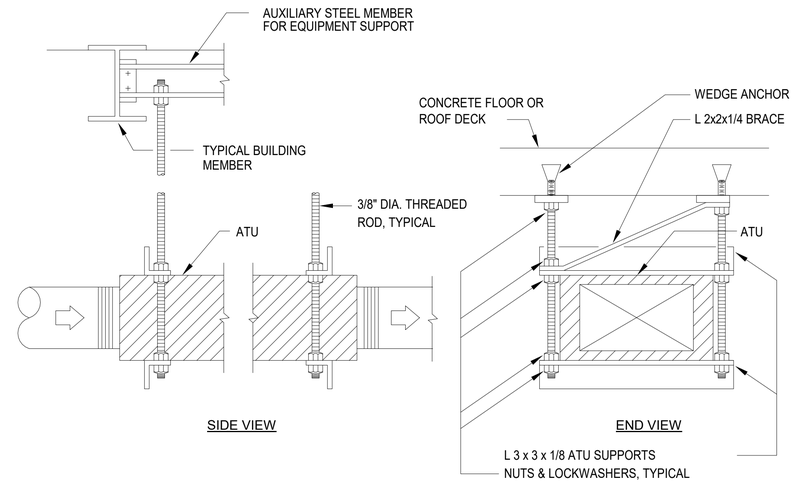

2 AIR TERMINAL UNIT MOUNTING DETAIL ALTERNATIVE

NOT TO SCALE

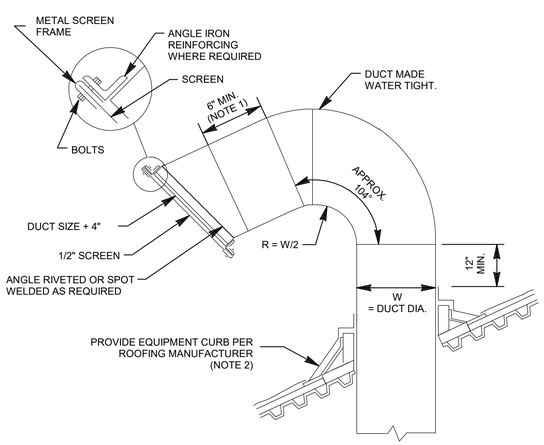

NOTES:

NOTE 1: ROUTE DUCT PARALLEL TO ROOF PLANE BELOW
NOTE 2: SEE ARCHITECTURAL DRAWINGS FOR ROOF PENETRATION DETAILS

3 TYPICAL GOOSENECK DETAIL

NOT TO SCALE

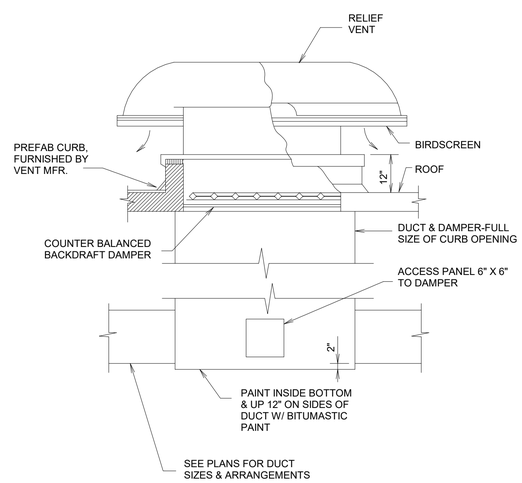

NOTE: LIMIT STATIC PRESSURE DROP TO 0.2 IN W.G.

4 TYPICAL RELIEF VENT DETAIL

NOT TO SCALE

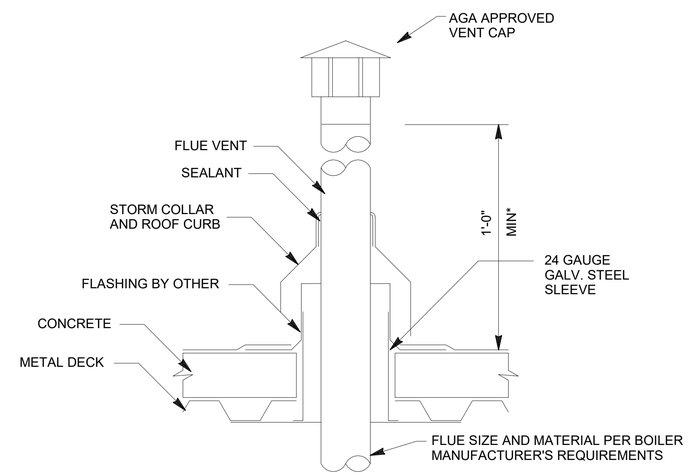

*MINIMUM HEIGHT SHALL BE DETERMINED IN ACCORDANCE WITH NFPA 54.

GAS VENTS THAT ARE 12 IN OR OVER IN SIZE OR ARE LOCATED LESS THAN 8 FT FROM A VERTICAL WALL OR SIMILAR OBSTRUCTION SHALL TERMINATE NOT LESS THAN 2 FT ABOVE THE HIGHEST POINT WHERE THEY PASS THROUGH THE ROOF AND NOT LESS THAN 2 FT ABOVE ANY PORTION OF A BUILDING WITHIN 10 FT HORIZONTALLY.

5 FLUE ROOF PENETRATION

NOT TO SCALE

US Army Corps of Engineers ®

MARK	DESCRIPTION	DATE	APPR.

Designed by: T HARTAAK | Drawn By: TTH/AAK | Date: 13 JUL 2020 | Rev:
Submittal Status: RTA | Spec No: 2145 | Project No:
Reviewed by: /s/ Timothy A. Lee, P.E. | File No: 233-25-0665 | File Name: W65M_GTEB
Submitted by: /S/ Jon R. Parrish, P.E. Chief, Mechanical Engineering Section | Size:22" x 34" File Format: TO SCALE Plot Date:7/10/2020 12:28:57 PM

US ARMY CORPS OF ENGINEERS

SACRAMENTO DISTRICT
IN-HOUSE DESIGN
1325 J STREET
SACRAMENTO, CA 95814

FT. HUACHUCA | AZ

GROUND TRANSPORT EQUIPMENT BUILDING

HVAC DETAILS

SHEET IDENTIFICATION
M-509

RTA

AIR HANDLING UNIT SCHEDULE

MARK	DESCRIPTION	SUPPLY FAN							RETURN FAN					
		TYPE	QTY	CFM	MIN OA (CFM)	ESP (IN W.G.)	TSP (IN W.G.)	MOTOR HP	TYPE	QTY	CFM	ESP (IN W.G.)	TSP (IN W.G.)	MOTOR HP
AHU-1	VARIABLE AIR VOLUME INDOOR AIR HANDLER	DIRECT DRIVE PLENUM	1	4,500	1,620	2.5	5.8	7.5	DIRECT DRIVE PLENUM	1	3,835	1.2	1.5	2
AHU-2	VARIABLE AIR VOLUME INDOOR AIR HANDLER	DIRECT DRIVE PLENUM	1	6,000	4,460*	2.9	6.5	10	DIRECT DRIVE PLENUM	1	5,400	1.4	1.7	3

*MIN OA SHOWN FOR AHU-2 IS BASED ON MAXIMUM OCCUPANCY OF 316 PEOPLE. DURING MINIMUM OCCUPANCY PERIODS (BASED ON SYSTEM SCHEDULER) MIN OA SHALL BE SET AT 615 CFM BASED ON MINIMUM OCCUPANCY OF 10 PEOPLE.

AIR HANDLING UNIT SCHEDULE CONTINUED

MARK	COOLING COIL												PRE-HEAT COIL									PRE-FILTER	FINAL-FILTER	ELECTRICAL	NOTES
	CAPACITY (MBH)		EAT (°F)		LAT (°F)		MAX AIR PD (IN W.G.)	GPM	EWT (°F)	LWT (°F)	FLUID PD (FT H2O)	CV	CAPACITY (MBH)	EAT (°F)	LAT (°F)	MAX AIR PD (IN W.G.)	GPM	EWT (°F)	LWT (°F)	FLUID PD (FT H2O)	CV				
	TOTAL	SENS.	DB	WB	DB	WB																			
AHU-1	198.4	132.5	85	67	55	52	0.6	35	42	54	8	18.8	47.1	35	55	0.1	2.5	140	102	4	1.9	MERV 8	MERV 13	460/3/60	1, 2, 3
AHU-2	371.2	214.9	92	72	55	52	0.8	65	42	54	8	34.9	129.1	25	55	0.1	4.5	140	82	4	3.4	MERV 8	MERV 13	460/3/60	1, 2, 3, 4

1. PREMIUM EFFICIENCY FAN MOTOR WITH VFD FOR BOTH SUPPLY AND RETURN FAN.
2. PROVIDE 2-WAY VALVE ON COOLING AND HEATING COILS.
3. CAPACITIES SHOWN ARE BASED ON A SITE ELEVATION OF 4900 FT ABOVE SEA LEVEL.
4. PROVIDE UNIT IF OPTION 3 IS EXERCISED.

VACUUM SYSTEM INFRA-RED HEATER SCHEDULE

MARK	SERVICE	MAX INPUT (MBH)	MIN INPUT (MBH)	MOUNTING HEIGHT (FT)	FUEL TYPE	BURNER		NOTES
						ELECTRICAL	CURRENT	
RH-1	MAINTENANCE BAY	100	60	22	NG	120/1/60	0.3 A	1
RH-2	MAINTENANCE BAY	100	60	22	NG	120/1/60	0.3 A	1
RH-3	MAINTENANCE BAY	100	60	22	NG	120/1/60	0.3 A	1
RH-4	MAINTENANCE BAY	100	60	22	NG	120/1/60	0.3 A	1
RH-5	MAINTENANCE BAY	100	60	22	NG	120/1/60	0.3 A	2
RH-6	MAINTENANCE BAY	100	60	22	NG	120/1/60	0.3 A	2
RH-7	MAINTENANCE BAY	100	60	22	NG	120/1/60	0.3 A	2
RH-8	MAINTENANCE BAY	100	60	22	NG	120/1/60	0.3 A	2

1. UNIT SERVED BY [VP-1].
2. UNIT SERVED BY [VP-2].

RADIANT HEATER VACUUM PUMP SCHEDULE

MARK	TYPE	MOTOR HP	MOTOR SPEED (RPM)	ELECTRICAL	MAX WEIGHT (LBS)	NOTES
VP-1	DIRECT DRIVE	3/4	3,450	208/3/60	120	1
VP-2	DIRECT DRIVE	3/4	3,450	208/3/60	120	2

1. UNIT SERVES [RH-1] THROUGH [RH-4].
2. UNIT SERVES [RH-5] THROUGH [RH-8].

MAKE-UP AIR UNIT SCHEDULE

SYMBOL	DESCRIPTION	SUPPLY FAN							DIRECT FIRED HEATING SECTION							EVAPORATIVE COOLING SECTION					ELECTRICAL	OPERATING WEIGHT (LBS)	NOTES
		FAN TYPE	MAX AIRFLOW (CFM)	ESP (IN W.G.)	TSP (IN W.G.)	QTY	MOTOR HP (PER FAN)	RPM	HEATING CFM	MIN OUTPUT CAPACITY (MBH)	TURNDOWN RATIO	MIN THERMAL EFFICIENCY (%)	EAT (°F)	LAT (°F)	GAS TYPE	EAT (°F)		LAT (°F)		MIN MEDIA EFFICIENCY (%)			
																DB	WB	DB	WB				
MAU-1	VARIABLE VOLUME MAKEUP AIR	DIRECT DRIVE PLENUM	20,000	1.0	2.4	2	7.5	1960	10,000	207.4	30:1	92	32	55	NG	71	66.5	67	66.5	90	460/3/60	3,400	1, 2, 3
MAU-2	VARIABLE VOLUME MAKEUP AIR	DIRECT DRIVE PLENUM	20,000	1.0	2.4	2	7.5	1960	10,000	207.4	30:1	92	32	55	NG	71	66.5	67	66.5	90	460/3/60	3,400	1, 2, 3

1. PREMIUM EFFICIENCY MOTOR WITH VFD FOR SUPPLY FAN.
2. MECHANICAL CONTRACTOR TO FIELD FABRICATE AND INSTALL INTAKE WITH HOOD 10'-0" ABOVE GRADE. SEE HOOD SCHEDULE FOR DETAILS.
3. CAPACITIES SHOWN ARE BASED ON A SITE ELEVATION OF 4900 FT ABOVE SEA LEVEL.

VEHICLE EXHAUST HOSE REEL

MARK	COUNT	SERVICE	TYPE / DRIVE	ELECTRICAL	HP	MOUNTING HEIGHT (AFF)	WEIGHT (LBS)	NOTES
HR-1	8	VEHICLE EXHAUST EXTRACTION SYSTEM	MOTORIZED	230/1/60	1/2	9'-0" TO CENTER OF REEL	620	1, 2

1. INCLUDE 2-BUTTON UP/DOWN SWITCH AND INTERNAL AUTOMATIC RESET THERMAL OVERLOAD.
2. PROVIDE WITH 25' OF 10" DIA, 900°F RATED EXHAUST HOSE EQUIPPED WITH TAILPIPE ADAPTER.

FAN SCHEDULE

MARK	SERVICE	TYPE / DRIVE	EXHAUST AIRFLOW (CFM)	ESP (IN W.G.)	HP	RPM	ELECTRICAL	MOUNTING HEIGHT (AFF)	CONTROLS	NOTES
EF-1	BAYS 101, GENERAL EXHAUST	CENTRIFUGAL / BELT	10,000	1.25	5	1,100	460/3/60	44'-0"	OPERATES ON OCCUPANCY SCHEDULE	1
EF-2	BAYS 101, GENERAL EXHAUST	CENTRIFUGAL / BELT	10,000	1.25	5	1,100	460/3/60	44'-0"	OPERATES ON OCCUPANCY SCHEDULE	1
EF-3	MULTIPLE ROOMS, SEE PLANS	CENTRIFUGAL / DIRECT	440	0.5	1/6	1,600	115/1/60	11'-4"	OPERATES ON OCCUPANCY SCHEDULE	
EF-4	MULTIPLE ROOMS, SEE PLANS	CENTRIFUGAL / BELT	300	0.5	1/10	1,600	115/1/60	11'-4"	OPERATES ON OCCUPANCY SCHEDULE	4
EF-5	ELECTRICAL 120	CENTRIFUGAL ROOF / DIRECT	1,250	0.25	1/4	1,050	115/1/60	ROOF	OPERATES WHEN ROOM TEMP > 85°F	
EF-6	MECHANICAL 131	SIDEWALL / BELT	4,500	0.25	1/2	680	115/1/60	13'-8"	OPERATES WHEN ROOM TEMP > 85°F	
EF-7	FLUID DISTRIBUTION 127	CENTRIFUGAL ROOF / DIRECT	1,250	0.25	1/4	1,050	115/1/60	ROOF	OPERATES WHEN ROOM TEMP > 85°F	
VEF-1	BAYS 101, VEHICLE EXHAUST EXTRACTION	CENTRIFUGAL / BELT	3,200	5.0	15	2,950	460/3/60	41'-0"	OPERATES WITH LOCAL, MANUAL SWITCH	1, 2, 3
VEF-2	BAYS 101, VEHICLE EXHAUST EXTRACTION	CENTRIFUGAL / BELT	3,200	5.0	15	2,950	460/3/60	41'-0"	OPERATES WITH LOCAL, MANUAL SWITCH	1, 2, 3
VEF-3	BAYS 101, VEHICLE EXHAUST EXTRACTION	CENTRIFUGAL / BELT	3,200	5.0	15	2,950	460/3/60	41'-0"	OPERATES WITH LOCAL, MANUAL SWITCH	1, 2, 3
VEF-4	BAYS 101, VEHICLE EXHAUST EXTRACTION	CENTRIFUGAL / BELT	3,200	5.0	15	2,950	460/3/60	41'-0"	OPERATES WITH LOCAL, MANUAL SWITCH	1, 2, 3

1. PROVIDE WITH EXPLOSION-PROOF MOTOR.
2. STAINLESS STEEL CONSTRUCTION SUITABLE FOR HIGH-HEAT ENVIRONMENT (900°F).
3. PROVIDE MOTOR WITH VFD. FAN SHALL OPERATE AT 50% SPEED WHEN ONE HOSE REEL IS SWITCHED ON. FAN SHALL OPERATE AT 100% SPEED WHEN BOTH HOSE REELS ARE SWITCHED ON.
4. PROVIDE UNIT IF OPTION 3 IS EXERCISED.

US Army Corps of Engineers ®

MARK	DESCRIPTION	DATE	APPD

Designed by: J. STONE
Drawn By: J. STONE
Submittal Status: RTA
Reviewed by: S. BARMANN
Submitted by: Maj. Timothy A. Lee, P.E. Chief, Mechanical Design Section
Date: 13 JUL 2020
Rev:
Spec No: 2145
Project No:
File No: 233-25-0665
File Name: W65M_GTEB
Size:22" x 34"
Plot Scale: 1:1
Plot Date:7/10/2020 12:28:57 PM

US ARMY CORPS OF ENGINEERS
SACRAMENTO DISTRICT
IN-HOUSE DESIGN
1325 J STREET
SACRAMENTO, CA 95814

FT. HUACHUCA AZ

GROUND TRANSPORT EQUIPMENT BUILDING

HVAC SCHEDULES

SHEET IDENTIFICATION
M-601

RTA

NOTE: UNITS DESIGNATED WITH (*) SHALL BE PROVIDED IN PLACE OF COUNTERPART IF OPTION 3 IS NOT EXERCISED.

HOT WATER BOILER SCHEDULE

MARK	LOCATION (ROOM)	TYPE	FUEL TYPE	MAX INPUT (MBH)	MIN OUTPUT (MBH)	RATED EFFICIENCY (%)	GPM	EWT (°F)	LWT (°F)	MAX P.D. (FT H2O)	MIN GPM	AIR INTAKE DIA. (IN)	VENT DIA. (IN)	ELECTRICAL	NOTES
B-1	MECHANICAL 131	CONDENSING WATERTUBE	NG	700	568	94	32	108	140	10	20	4	6	120/1/60	1, 2, 3, 5
B-1*	MECHANICAL 131	CONDENSING FIRE-TUBE	NG	285	185	94	11	110	140	10	1.5	3	3	120/1/60	1, 2, 3, 4

1. PROVIDE WITH CONDENSATE NEUTRALIZING FILTER KIT ROUTED TO NEARBY FLOOR SINK.
2. SIZE INTAKE AND VENT DIAMETERS BASED ON CHOSEN MANUFACTURER'S WRITTEN RECOMMENDATIONS.
3. MINIMUM OUTPUT SHOWN ASSUMES BOILER MUST BE DE-RATED 2% PER 1,000 FT ABOVE SEA LEVEL. PROJECT ELEVATION = 4,900 FT.
4. PROVIDE UNIT IF OPTION 3 IS NOT EXERCISED.
5. PROVIDE UNIT IF OPTION 3 IS EXERCISED.

1

VAV TERMINAL UNIT SCHEDULE

MARK	AIRFLOW				REHEAT COIL						CONTROL VALVE	VALVE CV	NOTES
	COOLING (CFM)	HEATING (CFM)	MAX AIR PRESSURE DROP (IN. W.G.)	INLET SIZE (IN)	MIN COIL CAPACITY (MBH)	ENTERING AIR TEMP (°F)	LEAVING AIR TEMP (°F)	GPM	MAX WATER PRESSURE DROP (FT. H2O)	EWT (°F)			
ATU-101	210	120	0.35	4	5.5	55	105	0.5	4	140	2-WAY	1.8	
ATU-102	910	470	0.35	10	21.6	55	105	1.1	4	140	2-WAY	2.7	
ATU-103	280	230	0.35	5	10.6	55	105	0.9	4	140	2-WAY	1.6	
ATU-104	880	440	0.35	8	19.9	55	105	1.6	4	140	2-WAY	4.5	
ATU-105	140	70	0.35	4	3.2	55	105	0.6	4	140	2-WAY	1.2	
ATU-106	840	420	0.35	8	19.1	55	105	1.5	4	140	3-WAY	4.3	
ATU-107	1070	535	0.35	10	24.5	55	105	1.3	4	140	2-WAY	2.7	
ATU-108	650	325	0.35	8	14.6	55	105	1.0	4	140	3-WAY	4.1	
ATU-109	1500	1160	0.90	12	52.5	55	105	3.9	4	140	2-WAY	5.3	1
ATU-110	1740	1280	0.90	12	57.9	55	105	4.8	4	140	3-WAY	5.4	1
ATU-111	1500	1160	0.90	12	52.5	55	105	3.9	4	140	2-WAY	5.3	1
ATU-112	1500	1160	0.90	12	52.5	55	105	3.9	4	140	2-WAY	5.3	1

1. PROVIDE UNIT IF OPTION 3 IS EXERCISED.

1

AIR-COOLED CHILLER SCHEDULE

MARK	LOCATION	MIN CAPACITY (TONS)	MIN IPLV (EER)	EVAPORATOR DATA						CONDENSER DATA			COMPRESSOR TYPE	COMPRESSOR QTY	MAX POWER (KW)	ELECTRICAL	WEIGHT (LBS)	NOTES
				GPM	EWT (°F)	LWT (°F)	MAX. P.D. (FT H2O)	MIN GPM	% GLYCOL	AMBIENT TEMP (°F)	FAN QTY	REFRIGERANT TYPE						
CH-1	MECHANICAL YARD	47.5	14	100	54	42	15	68	20	100	6	R410A	SCROLL	4	70	460/3/60	5,000	1, 3
CH-1*	MECHANICAL YARD	16.6	14	35	54	42	15	24	20	100	2	R410A	SCROLL	2	25	460/3/60	2,200	1, 2

1. MINIMUM CAPACITY SHOWN IS REQUIRED AFTER TAKING INTO ACCOUNT PERFORMANCE AT 4,900 FT ELEVATION. SELECT UNIT THAT CAN MEET OUTPUT BASED ON MANUFACTURER'S RECOMMENDATIONS FOR ELEVATION LOSSES.
2. PROVIDE UNIT IF OPTION 3 IS NOT EXERCISED.
3. PROVIDE UNIT IF OPTION 3 IS EXERCISED.

HYDRONIC WATER PUMP SCHEDULE

MARK	TYPE	SERVICE	GPM	HEAD (FT H2O)	PROPYLENE GLYCOL (%)	MOTOR			MIN. EFFICIENCY	VFD / ECM	NOTES
						RPM	HP	ELECTRICAL			
BP-1	CLOSE COUPLED IN-LINE CENTRIFUGAL	PRIMARY HOT WATER	32	15	0	1800	1/3	120/1/60	60	NO	
BP-1*	CLOSE COUPLED IN-LINE CENTRIFUGAL	PRIMARY HOT WATER	11	15	0	1800	1/3	120/1/60	49	NO	1
HWP-1	BASE MOUNTED END SUCTION	SECONDARY HOT WATER	32	50	0	3600	1.5	460/60/3	55	YES	
HWP-1*	IN-LINE	SECONDARY HOT WATER	11	42	0	3600	1/2	460/60/3	--	YES	1
HWP-2	BASE MOUNTED END SUCTION	SECONDARY HOT WATER	32	50	0	3600	1.5	460/60/3	55	YES	
HWP-2*	IN-LINE	SECONDARY HOT WATER	11	42	0	3600	1/2	460/60/3	--	YES	1
CWP-1	BASE MOUNTED END SUCTION	PRIMARY CHILLED WATER	100	68	20	3600	5	460/60/3	70	YES	
CWP-1*	BASE MOUNTED END SUCTION	PRIMARY CHILLED WATER	35	68	20	3600	2	460/60/3	61	YES	1
CWP-2	BASE MOUNTED END SUCTION	PRIMARY CHILLED WATER	100	68	20	3600	5	460/60/3	70	YES	
CWP-2*	BASE MOUNTED END SUCTION	PRIMARY CHILLED WATER	35	68	20	3600	2	460/60/3	61	YES	1

1. PROVIDE UNIT IF OPTION 3 IS EXERCISED.

AIR SEPARATOR SCHEDULE

MARK	LOCATION (ROOM)	GPM	MAX. WATER PRESSURE DROP (FT WC)	SERVICE	NOTES
AST-1	MECHANICAL 131	32	2	HOT WATER	
AST-1*	MECHANICAL 131	11	2	HOT WATER	1
AST-2	MECHANICAL 131	100	4	CHILLED WATER	
AST-2*	MECHANICAL 131	35	4	CHILLED WATER	1

1. PROVIDE UNIT IF OPTION 3 IS EXERCISED.

CHILLED WATER BUFFER TANK SCHEDULE

MARK	LOCATION	CAPACITY (GAL)	TYPE	SYSTEM	NOTES
BT-1	MECHANICAL 131	120	VERTICAL	CHILLED WATER	1

1. ASME STAMPED, 125 PSI RATED WORKING PRESSURE.

HYDRONIC EXPANSION TANK SCHEDULE

MARK	LOCATION (ROOM)	SERVICE	TYPE	MIN VOLUME (GAL)	MIN ACCEPT. VOLUME (GAL)	CHARGE PRESSURE (PSI)	MAX OPERATING TEMP (°F)	MAX OPERATING PRESSURE (PSI)	NOTES
ET-1	MECHANICAL 131	HOT WATER	PRESSURIZED DIAPHRAGM	5.3	1.9	12	240	100	
ET-2	MECHANICAL 131	CHILLED WATER	PRESSURIZED DIAPHRAGM	4	1.5	12	240	100	

AMENDMENT 3

US Army Corps of Engineers ®

MARK	DESCRIPTION	DATE	APPD
1	AM-04: REVISED SCHEDULE NOTES.	26 OCT 2020	

Designed by: J. STONE
Drawn By: J. STONE
Date: 13 JUL 2020
Rev:
Submittal Status: RTA
Spec No: 2145
Project No:
Reviewed by: S. BARMANN
Submitted by: M. Timothy A. Lee, P.E.
Chief, Mechanical Design Section
File No: 233-25-0685
File Name: W6ML_GTEB
Size:22" x 34"
Plot Scale: 1:1
Plot Date: 10/26/2020 10:22:33 AM

US ARMY CORPS OF ENGINEERS
SACRAMENTO DISTRICT
IN-HOUSE DESIGN
1325 J STREET
SACRAMENTO, CA 95814

FT. HUACHUCA AZ

GROUND TRANSPORT EQUIPMENT BUILDING

HVAC SCHEDULES

SHEET IDENTIFICATION
M-602

DIFFUSER & REGISTER SCHEDULE									
MARK	FLOW RANGE (CFM)	FACE SIZE (IN)	NECK SIZE (DIAMETER IN)	TYPE	MOUNTING LOCATION	MAX N.C.	CONSTRUCTION	DESCRIPTION	COUNT
A	50-120	24x24	6	SUPPLY AIR DIFFUSER	CEILING	30	ALL STEEL. WHITE FINISH	LOUVERED FACE	5
B	120-240	24x24	8	SUPPLY AIR DIFFUSER	CEILING	30	ALL STEEL. WHITE FINISH	LOUVERED FACE	13
C	300-440	24x24	10	SUPPLY AIR DIFFUSER	CEILING	30	ALL STEEL. WHITE FINISH	LOUVERED FACE	22
D	45-900	24x24	12x12	RETURN AIR GRILLE	CEILING	30	ALL STEEL. WHITE FINISH	EGGCRATE	21
E	140	15	8	DUCT SUPPLY DIFFUSER	DUCT	30	ALL STEEL. WHITE FINISH	LOUVERED FACE	2
F	260	14x14	MATCH DUCT	RETURN AIR GRILLE	WALL	30	ALL STEEL. WHITE FINISH	EGGCRATE	1
G	20-200	24x24	12x12	EXHAUST AIR GRILLE	CEILING	30	ALL STEEL. WHITE FINISH	EGGCRATE	6
H	30	6x6	MATCH DUCT	EXHAUST AIR GRILLE	CEILING	30	ALL STEEL. WHITE FINISH	LOUVERED FACE	1
I	2500	70x10	MATCH DUCT	SUPPLY AIR DRUM LOUVER	DUCT	30	ALL STEEL. WHITE FINISH	15° DEFLECTION W/ VOLUME DAMPER	16
J	2500	28x28	MATCH DUCT	EXHAUST AIR GRILLE	DUCT	30	ALL STEEL. WHITE FINISH	LOUVERED FACE	8

NOTE: QUANTITIES ARE BASED ON OPTION 3 BEING EXERCISED.

LOUVER SCHEDULE						
MARK	LOCATION (ROOM WALL OR DOOR)	DUTY	TYPE	DIMENSIONS (W x H) (IN x IN)	MIN FREE AREA (SF)	NOTES
L-1	MECHANICAL 131	EXHAUST	WALL LOUVER	40 x 40	5.0	1, 2, 3
L-2	MECHANICAL 131	INTAKE	WALL LOUVER	48 x 40	6.0	1, 2, 3
L-3	MECHANICAL 131	INTAKE	WALL LOUVER	56 x 40	7.0	1, 2, 3
L-4	MECHANICAL 131	INTAKE	WALL LOUVER	48 x 40	6.0	1, 2, 4
L-5	SHOWER 105	EXHAUST	WALL LOUVER	16 x 16	0.5	1,2
L-6	MEN 116	EXHAUST	WALL LOUVER	16 x 16	0.5	1,2, 5
L-7	MEN 104	TRANSFER	DOOR LOUVER	18 x 18	1.0	
L-8	WOMEN 106	TRANSFER	DOOR LOUVER	18 x 18	1.0	
L-9	JAN 108	TRANSFER	DOOR LOUVER	12 x 12	0.5	
L-10	WOMEN 115	TRANSFER	DOOR LOUVER	18 x 18	1.0	5
L-11	MEN 116	TRANSFER	DOOR LOUVER	18 x 18	1.0	5

1. EXTRUDED ALUMINUM, DRAINABLE STATIONARY LOUVER.
2. PROVIDE WITH BIRDSCREEN.
3. PROVIDE WITH 2-POSITION ATFP MOTORIZED, LOW-LEAKAGE DAMPER.
4. PROVIDE WITH 2-POSITION MOTORIZED DAMPER TIED TO ROOM THERMOSTAT.
5. PROVIDE UNIT IF OPTION 3 IS EXERCISED.

HOOD SCHEDULE					
MARK	TYPE	CFM	MAX AIR PRES DROP (IN W.G.)	THROAT SIZE (IN x IN)	NOTES
GV-1	INTAKE	20,000	0.10	120x54	1, 2
GV-2	INTAKE	20,000	0.10	120x54	1, 2
GV-3	EXHAUST	10,000	0.10	46x42	1, 2
GV-4	EXHAUST	10,000	0.10	46x42	1, 2
GV-5	BAROMETRIC RELIEF	10,000	0.25	46x42	1, 3
GV-6	BAROMETRIC RELIEF	10,000	0.25	46x42	1, 3
GV-7	EXHAUST	4,500	0.25	40x18	1, 2
GV-8	EXHAUST	6,000	0.25	50x18	1, 2
GV-9	INTAKE	1,250	0.25	16x16	1, 2
GV-10	INTAKE	1,250	0.25	16x16	1, 2

1. PROVIDE WITH BIRDSCREEN.
2. PROVIDE WITH 2-POSITION ATFP MOTORIZED, LOW-LEAKAGE DAMPER.
3. SET BAROMETRIC RELIEF DAMPER TO 0.05" W.G.

SPLIT SYSTEM A/C SCHEDULE																
			INDOOR UNIT								OUTDOOR UNIT					
MARK	ROOM SERVED	TYPE	SUPPLY AIR (CFM)	TOTAL COOLING MBH	MIN. SEER	MCA	FLA	ELECTRICAL	FILTRATION	MOUNT	MARK	AMBIENT TEMP (DEG F)	MCA	BREAKER SIZE	ELECTRICAL	NOTES
FCU-1	NEC COMM 124	HEAT PUMP	400-740	31	16	EER: 8.2	COP: 2.7	208/1/60	MERV 11	MOUNT BOTTOM OF UNIT @ 8' AFF	CU-1	100	24 A	FLA: 20 A	208/1/60	
FCU-2	EPG COMM 123	HEAT PUMP	400-740	31	16	EER: 8.2	COP: 2.7	208/1/60	MERV 11	MOUNT BOTTOM OF UNIT @ 8' AFF	CU-2	100	24 A	FLA: 20 A	208/1/60	

UNIT HEATER SCHEDULE							
MARK	LOCATION (ROOM)	TYPE	AIRFLOW (CFM)	CAPACITY (KW)	ELECTRICAL	MOUNT HEIGHT (FT AFF)	NOTES
UH-1	MECHANICAL 131	VERTICAL / ELECTRIC	800	5	277/1/60	17	
UH-2	FLUID DISTRIBUTION 127	HORIZONTAL / ELECTRIC	380	3	277/1/60	8	

US Army Corps of Engineers ®

MARK	DESCRIPTION	DATE	APPD

Designed by: J. STONE
Drawn By: J. STONE
Date: 13 JUL 2020
Rev:
Submittal Status: RTA
Spec No: 2145
Project No:
Reviewed by: S. BARMANN
Submitted by: M. Timothy A. Lee, P.E.
Chief, Mechanical Design Section
File No: 233-25-0665
File Name: W6M_GTEB
Size:22" x 34"
Plot Scale: 1:1
Plot Date:7/10/2020 12:28:58 PM

US ARMY CORPS OF ENGINEERS

SACRAMENTO DISTRICT
IN-HOUSE DESIGN
1325 J STREET
SACRAMENTO, CA 95814

FT. HUACHUCA AZ

GROUND TRANSPORT EQUIPMENT BUILDING

HVAC SCHEDULES

SHEET IDENTIFICATION
M-603

RTA

NOTE: EQUIPMENT SHOWN ON THIS SHEET SHALL BE PROVIDED IF OPTIONS 6, 7, AND/OR 8 ARE EXERCISED.

MAKE-UP AIR UNIT SCHEDULE

SYMBOL	DESCRIPTION	SUPPLY FAN							DIRECT FIRED HEATING SECTION							EVAPORATIVE COOLING SECTION					ELECTRICAL	OPERATED WEIGHT (LBS)	NOTES
		FAN TYPE	MAX AIRFLOW (CFM)	ESP (IN W.G.)	TSP (IN W.G.)	QTY	MOTOR HP (PER FAN)	RPM	HEATING CFM	MIN OUTPUT CAPACITY (MBH)	TURNDOWN RATIO	MIN THERMAL EFFICIENCY (%)	EAT (°F)	LAT (°F)	GAS TYPE	EAT (°F)		LAT (°F)		MIN MEDIA EFFICIENCY (%)			
																DB	WB	DB	WB				
MAU-3	VARIABLE VOLUME MAKEUP AIR	DIRECT DRIVE PLENUM	12,500	1	2.3	1	15	1,900	6,250	130	25:1	92	32	55	NG	71	66.5	67	66.5	90	460/3/60	2,200	1, 2, 3, 4

1. PREMIUM EFFICIENCY MOTOR WITH VFD FOR SUPPLY FAN.
2. MECHANICAL CONTRACTOR TO FIELD FABRICATE AND INSTALL INTAKE HOOD WITH 10'-0" ABOVE GRADE. SEE HOOD SCHEDULE FOR DETAILS.
3. CAPACITIES SHOWN ARE BASED ON A SITE ELEVATION OF 4900 FT ABOVE SEA LEVEL.
4. PROVIDE UNIT IF OPTION 8 IS EXERCISED.

EXHAUST FAN SCHEDULE

MARK	SERVICE	TYPE / DRIVE	EXHAUST AIRFLOW (CFM)	ESP (IN W.G.)	HP	RPM	ELECTRICAL	MOUNTING HEIGHT (AFF)	CONTROLS	NOTES
EF-8	ORG STORAGE GENERAL EXHAUST	CENTRIFUGAL / DIRECT	3090	2	2	VARIABLE	208/1/60	15'-0"	OPERATES ON OCCUPANCY SCHEDULE	1, 4
EF-9	ORG STORAGE GENERAL EXHAUST	CENTRIFUGAL / DIRECT	3090	2	2	VARIABLE	208/1/60	15'-0"	OPERATES ON OCCUPANCY SCHEDULE	1, 4
EF-10	BATTERY STORAGE ROOM EXHAUST	SIDEWALL PROP / DIRECT	550	0.3	1/6	1160	115/1/60	8'-6"	OPERATES CONTINUOUSLY	4
EF-11	ELECTRICAL ROOM EXHAUST	SIDEWALL PROP / DIRECT	1550	0.3	1/4	1160	115/1/60	8'-6"	OPERATES WHEN ROOM TEMP > 85°F	4
EF-12	HAZMAT STORAGE EXHAUST	SIDEWALL PROP / DIRECT	640	0.3	1/6	1160	115/1/60	8'-6"	OPERATES CONTINUOUSLY	2
EF-13	POL STORAGE EXHAUST	SIDEWALL PROP / DIRECT	640	0.3	1/6	1160	115/1/60	8'-6"	OPERATES CONTINUOUSLY	3
EF-14	AIR COMPRESSOR ROOM EXHAUST	SIDEWALL PROP / DIRECT	550	0.3	1/6	1160	115/1/60	8'-6"	OPERATES WHEN ROOM TEMP > 85°F	4

1. PROVIDE WITH EXPLOSION-PROOF MOTOR.
2. PROVIDE UNIT IF OPTION 6 IS EXERCISED.
3. PROVIDE UNIT IF OPTION 7 IS EXERCISED.
4. PROVIDE UNIT IF OPTION 8 IS EXERCISED.

VACUUM SYSTEM INFRA-RED HEATER SCHEDULE

MARK	SERVICE	MAX INPUT (MBH)	MIN INPUT (MBH)	MOUNTING HEIGHT (FT)	FUEL TYPE	BURNER		NOTES
						ELECTRICAL	CURRENT	
RH-9	ORG STORAGE	60	36	17	NG	120/1/60	0.3A	1, 2
RH-10	ORG STORAGE	60	36	17	NG	120/1/60	0.3A	1, 2
RH-11	ORG STORAGE	60	36	17	NG	120/1/60	0.3A	1, 2
RH-12	ORG STORAGE	60	36	17	NG	120/1/60	0.3A	1, 2

1. UNIT SERVED BY [VP-3].
2. PROVIDE UNIT IF OPTION 8 IS EXERCISED.

RADIANT HEATER VACUUM PUMP SCHEDULE

MARK	TYPE	MOTOR HP	MOTOR SPEED (RPM)	ELECTRICAL	MAX WEIGHT (LBS)	NOTES
VP-3	DIRECT DRIVE	3/4	3,450	208/3/60	120	1, 2

1. UNIT SERVES [RH-9] THROUGH [RH-12].
2. PROVIDE UNIT IF OPTION 8 IS EXERCISED.

DIFFUSER & REGISTER SCHEDULE

MARK	FLOW RANGE (CFM)	FACE SIZE (IN)	NECK SIZE (IN)	TYPE	MOUNTING LOCATION	MAX N.C.	CONSTRUCTION	DESCRIPTION
K	2500	28	20	DUCT SUPPLY DIFFUSER	DUCT	30	ALL STEEL WHITE FINISH	LOUVERED FACE
L	1300	24x24	12x12	EXHAUST AIR GRILLE	DUCT	30	ALL STEEL WHITE FINISH	LOUVERED FACE

UNIT HEATER SCHEDULE

MARK	LOCATION (ROOM)	TYPE	AIRFLOW (CFM)	CAPACITY (KW)	ELECTRICAL	MOUNT HEIGHT (FT)	NOTES
UH-3	BATTERY STORAGE	HORIZONTAL / ELECTRIC	310	3	277/1/60	8	2
UH-4	HAZMAT STORAGE	HORIZONTAL / ELECTRIC	400	5	208/1/60	8	1, 3

1. PROVIDE WITH EXPLOSION-PROOF, THERMALLY PROTECTED FAN MOTOR.
2. PROVIDE UNIT IF OPTION 6 IS EXERCISED.
3. PROVIDE UNIT IF OPTION 8 IS EXERCISED.

LOUVER SCHEDULE

MARK	LOCATION (ROOM WALL OR DOOR)	DUTY	TYPE	DIMENSIONS (W x H) (IN x IN)	MIN FREE AREA (SF)	NOTES
L-15	BATTERY STORAGE	EXHAUST	WALL LOUVER	16 x 16	0.9	3
L-16	ELECTRICAL	EXHAUST	WALL LOUVER	24 x 24	2.0	3
L-17	ELECTRICAL	INTAKE	WALL LOUVER	32 x 16	1.8	3
L-18	BATTERY STORAGE	INTAKE	WALL LOUVER	16 x 16	0.9	3
L-19	HAZMAT STORAGE	INTAKE	WALL LOUVER	24 x 16	1.3	1
L-20	HAZMAT STORAGE	EXHAUST	WALL LOUVER	16 x 16	0.9	1
L-21	POL STORAGE	INTAKE	WALL LOUVER	24 x 16	1.3	2
L-22	POL STORAGE	EXHAUST	WALL LOUVER	16 x 16	0.9	2
L-23	AIR COMPRESSOR ROOM	EXHAUST	WALL LOUVER	16 x 16	0.9	3
L-24	AIR COMPRESSOR ROOM	INTAKE	DOOR LOUVER	18 x 18	1.0	3
L-25	AIR COMPRESSOR ROOM	INTAKE	DOOR LOUVER	18 x 18	1.0	3

1. PROVIDE UNIT IF OPTION 6 IS EXERCISED.
2. PROVIDE UNIT IF OPTION 7 IS EXERCISED.
3. PROVIDE UNIT IF OPTION 8 IS EXERCISED.

HOOD SCHEDULE

MARK	TYPE	CFM	MAX AIR PRES DROP (IN W. G.)	THROAT SIZE (IN X IN)	REMARKS
GV-9	GRAVITY INTAKE HOOD	12400	0.10	66X42	1, 2, 5
GV-10	GRAVITY RELIEF HOOD	3100	0.10	24X24	1, 3, 5
GV-11	GRAVITY RELIEF HOOD	3100	0.10	24X24	1, 4, 5
GV-12	GRAVITY RELIEF HOOD	3100	0.10	24X24	1, 5
GV-13	GRAVITY RELIEF HOOD	3100	0.10	24X24	1, 5

1. PROVIDE WITH BIRD SCREEN.
2. UNIT SERVES [MAU-3].
3. UNIT SERVES [EF-8].
4. UNIT SERVES [EF-9].
5. PROVIDE UNIT IF OPTION 8 IS EXERCISED.

US Army Corps of Engineers ®

MARK	DESCRIPTION	DATE	APPD

Designed by: TK CRONIN | Drawn By: TKC | Date: 13 JUL 2020 | Rev:
Submittal Status: 100% | Spec No: 2145 | Project No:
Reviewed by: S. BARMANN | File No: 223-25-0655 | File Name: 0655-M611-STOR.RVT
Submitted by: M. Timothy A. Lee, P.E. | Size/Zoom: 22" x 34" Plot Scale: 1 | Plot Date: 7/10/2020 12:31:40 PM

US ARMY CORPS OF ENGINEERS
SACRAMENTO DISTRICT
IN-HOUSE DESIGN
1325 J STREET
SACRAMENTO, CA 95814

FT. HUACHUCA AZ

ORG STORAGE BUILDING

HVAC SCHEDULES (OPTIONS 6, 7, AND 8)

SHEET IDENTIFICATION
M-611

RTA

W-X-Y-Z
##

DEVICE SYMBOL, GENERIC
USED TO REPRESENT SENSORS, INSTRUMENTS
SAFETIES, AND OTHER CONTROL DEVICES
W-X-Y-Z : (SEE ABBREVIATIONS AND ACRONYMS)
GENERIC USAGE TO SHOW LOCATION OF DEVICE;
PROCESS OR DEVICE BEING MEASURED OR
CONTROLLED; SIGNAL TYPE; MODIFIERS AND
OTHER APPLICATION INFORMATION

W-X-Y-Z
##

DEVICE SYMBOL, GENERIC
MULTIPLE OUTPUT DEVICE WHERE AT LEAST 1
OUTPUT IS ALWAYS SAFETY INTERLOCK

W-X-Y-Z
DDC
##
DIR
REV

DEVICE SYMBOL, CONTROLLER
DDC : DIRECT DIGITAL CONTROL
: DEVICE NUMBER
DIR : DIRECT CONTROL ACTION, OR
REV : REVERSE CONTROL ACTION
W-X-Y-Z : (SEE ABBREVIATIONS AND ACRONYMS)
GENERIC USAGE TO SHOW LOCATION OF DEVICE;
PROCESS OR DEVICE BEING MEASURED OR
CONTROLLED; SIGNAL TYPE; MODIFIERS AND
OTHER APPLICATION INFORMATION

ACTUATOR, ELECTRIC

P

ACTUATOR, PNEUMATIC
WITH LOCALLY MOUNTED
PRESSURE GAGE

P
PP
M

ACTUATOR, PNEUMATIC
WITH POSITIVE POSITIONER
AND LOCALLY MOUNTED
PRESSURE GAGE

AFMA

AIR FLOW MEASUREMENT ARRAY,
WITH FLOW TRANSMITTER
SEE "DEVICE SYMBOL, GENERIC"

BOILER

CHILLER

C
COIL, COOLING

DX
COIL, COOLING, DIRECT-EXPANSION

HC
COIL, HEAT/COOL (DUAL TEMPERATURE)

H
COIL, HEATING

PC
COIL, PRECOOL

PH
COIL, PREHEAT

CONTACT, PRESSURE, HIGH LIMIT (HL)
SHOWN IN ACTIVATED POSITION
OPEN WHEN PRESSURE IS ABOVE SETPOINT
CLOSED WHEN PRESSURE IS BELOW SETPOINT

CONTACT, PRESSURE, HIGH LIMIT (HL)
SHOWN IN UNACTIVATED POSITION
OPEN WHEN PRESSURE IS ABOVE SETPOINT
CLOSED WHEN PRESSURE IS BELOW SETPOINT

CONTACT, PRESSURE, LOW LIMIT (LL)
SHOWN IN ACTIVATED POSITION
OPEN WHEN PRESSURE IS BELOW SETPOINT
CLOSED WHEN PRESSURE IS ABOVE SETPOINT

CONTACT, PRESSURE, LOW LIMIT (LL)
SHOWN IN UNACTIVATED POSITION
OPEN WHEN PRESSURE IS BELOW SETPOINT
CLOSED WHEN PRESSURE IS ABOVE SETPOINT

CONTACT, TEMPERATURE, HIGH LIMIT (HL)
SHOWN IN ACTIVATED POSITION
OPEN WHEN TEMPERATURE IS ABOVE SETPOINT
CLOSED WHEN TEMPERATURE IS BELOW SETPOINT

CONTACT, TEMPERATURE, HIGH LIMIT (HL)
SHOWN IN UNACTIVATED POSITION
OPEN WHEN TEMPERATURE IS ABOVE SETPOINT
CLOSED WHEN TEMPERATURE IS BELOW SETPOINT

CONTACT, TEMPERATURE, LOW LIMIT (LL)
SHOWN IN ACTIVATED POSITION
OPEN WHEN TEMPERATURE IS BELOW SETPOINT
CLOSED WHEN TEMPERATURE IS ABOVE SETPOINT

CONTACT, TEMPERATURE, LOW LIMIT (LL)
SHOWN IN UNACTIVATED POSITION
OPEN WHEN TEMPERATURE IS BELOW SETPOINT
CLOSED WHEN TEMPERATURE IS ABOVE SETPOINT

CONTROL SIGNAL LINE, LOW VOLTAGE

CURRENT TRANSFORMER/SWITCH

DAMPER, BALANCING

D-##
DAMPER, PARALLEL BLADE
NORMALLY OPEN OR CLOSED AS SHOWN
= DAMPER NUMBER AS SHOWN
IN DAMPER SCHEDULE

D-##
DAMPER, OPPOSED BLADE
NORMALLY OPEN OR CLOSED AS SHOWN
= DAMPER NUMBER AS SHOWN
IN DAMPER SCHEDULE

HEAT EXCHANGER

MAIN AIR
MAIN AIR

M#
MOTOR

MS-#
MOTOR STARTER

Rxx
RELAY COIL
xx = SEQUENTIAL RELAY
(SOLENOID) NUMBER

Rxx-YY
RELAY COIL CONTACT
NORMALLY OPEN
xx = RELAY COIL NUMBER
YY = CONTACT NUMBER

Rxx-YY
RELAY COIL CONTACT
NORMALLY CLOSED
xx = RELAY COIL NUMBER
YY = CONTACT NUMBER

EPS
##
ELECTRIC-TO-PNEUMATIC SWITCH
(SOLENOID ACTUATED PNEUMATIC VALVE)
= SEQUENTIAL NUMBER
(WHEN MORE THAN 1 EPS)

EP
##
ELECTRIC-TO-PNEUMATIC TRANSDUCER
VDC OR mA INPUT / 3-15 PSI OUTPUT
= SEQUENTIAL NUMBER
(WHEN MORE THAN 1 EP)

FAN

FILTER

LDP
##
LOCAL DISPLAY PANEL
= SEQUENTIAL NUMBER
(WHEN MORE THAN 1 LDP)

PP
POSITIVE POSITIONER
SEE "ACTUATOR, PNEUMATIC"

P
PRESSURE GAGE

H P L
PRESSURE SWITCH, DIFFERENTIAL, WITH GAGE
H = HIGH PRESSURE TAP
L = LOW PRESSURE TAP
SEE "DEVICE SYMBOL, GENERIC"

PUMP

RADIATOR

RST-BUT
RESET BUTTON FOR SAFETY RESET

SMOKE DETECTOR, DUCT-MOUNTED
SEE "DEVICE SYMBOL, GENERIC"

SWITCH, MANUAL

T
TEMPERATURE GAGE

TEMPERATURE SENSOR, AVERAGING
or TEMPERATURE LOW LIMIT / FREEZESTAT
SEE "DEVICE SYMBOL, GENERIC"

TEMPERATURE SENSOR, POINT
SEE "DEVICE SYMBOL, GENERIC"

STAT
THERMOSTAT WITH SPECIFIED I/O FUNCTIONS

THERMOWELL IN PIPE

VALVE, BALANCING

V-##
NC
VALVE, NORMALLY CLOSED
WITH SPRING RETURN FAILSAFE
= VALVE NUMBER AS SHOWN
IN VALVE SCHEDULE

V-##
NO
VALVE, NORMALLY OPEN
WITH SPRING RETURN FAILSAFE
= VALVE NUMBER AS SHOWN
IN VALVE SCHEDULE

COM V-## NO NC
VALVE, 3-WAY DIVERTING
WITH SPRING RETURN FAILSAFE
NO = NORMALLY OPEN
NC = NORMALLY CLOSED
COM = COMMON PORT
= VALVE NUMBER AS SHOWN
IN VALVE SCHEDULE

NO V-## COM NC
VALVE, 3-WAY MIXING
WITH SPRING RETURN FAILSAFE
NO = NORMALLY OPEN
NC = NORMALLY CLOSED
COM = COMMON PORT
= VALVE NUMBER AS SHOWN
IN VALVE SCHEDULE

VFD
XX-C XX-SS XX-S
VARIABLE FREQUENCY DRIVE
XX = PROCESS/DEVICE BEING CONTROLLED

SS = START/STOP COMMAND
S = STATUS FEEDBACK (ON/OFF)
C = 4-20 mA, VDC, or SNVT CONTROL SIGNAL

CONTROL SCHEMATIC SYMBOLS

B
BINARY HARDWARE
INPUT

A
ANALOG
HARDWARE
INPUT

B
BINARY HARDWARE
OUTPUT

A
ANALOG
HARDWARE
OUTPUT OR
BINARY SIGNAL
INPUT

ANALOG OR
BINARY SIGNAL
OUTPUT
CONSTANT VALUE

IF___
CONDITIONAL STATEMENT

IN IN MATH OUT
GENERIC
MATH
FUNCTION
AS DEFINED

IN IN MIN OUT
MINIMUM
SIGNAL
SELECTOR

IN IN MAX OUT
MAXIMUM
SIGNAL
SELECTOR

IN IN PLUS OUT
ADDITION
FUNCTION

IN IN MINUS OUT
SUBTRACTION
FUNCTION

IN RESET OUT
RESET SCHEDULE
(OUTPUT INCREASES
AS INPUT
INCREASES)

IN RESET OUT
RESET SCHEDULE (OUTPUT
DECREASES AS INPUT
INCREASES)

IN OUT
LOGICAL NOT
FUNCTION

IN IN OUT
LOGICAL OR
FUNCTION

IN IN OUT
LOGICAL AND
FUNCTION

IN1 IN2 COMP DB OUT
COMPARATOR
WITH DEADBAND
(DB).
WHEN IN1>IN2
OUTPUT IS TRUE

IN IN S LAT R B OUT
BINARY
LATCH
S=SET
R=RESET

IN HAND OFF OUT
H-O-A SWITCH

IN OCC UNOCC OUT
OCC/UNOCC/AUTO
SWITCH

CONTROL
IN NO IN NC OUT COM
SWITCH

IN T=___SEC OUT
ON DELAY TIMER
OUT=IN AFTER
TIME DELAY

ENABLE
IN VALUE IN SETPOINT PID OUT
DEFAUL T OUTPUT
PID LOOP
WITH ENABLE
AND DEFAULT
OUTPUT
WHEN NOT
ENABLED

UP
RATE CLEAR U C D DOWN OUT
RAMP WITH
UP, DOWN,
RATE, AND
CLEAR INPUTS

CONTROL LOGIC DIAGRAM SYMBOLS

2P	TWO-POSITION (CONTROL SIGNAL)
ADJ	ADJUSTABLE
AFMA	AIRFLOW MEASUREMENT ARRAY
ALM	ALARM
BA	BYPASS AIR
BLDG	BUILDING
BUT	BUTTON
C	COMMAND (MODULATING CONTROL SIGNAL)
CD	COLD DECK
CF	CONDENSER FAN
CHLR	CHILLER
CLG	COOLING
CO2	CARBON DIOXIDE
COM	COMMON
COMP	COMPARATOR
CP	CONFIGURATION PROPERTY
CR	CONDENSER/CONDENSATE WATER RETURN
CS	CONDENSER/CONDENSATE WATER SUPPLY
CT	CURRENT TRANSFORMER/SWITCH
CTF	COOLING TOWER FAN
CWR	CHILLED WATER RETURN
CWS	CHILLED WATER SUPPLY
CW	CHILLED WATER
D	DAMPER
DA	DISCHARGE AIR
DB	DEADBAND
DDC	DIRECT DIGITAL CONTROL(LER)
DIFF	DIFFERENCE
DIR	DIRECT (CONTROL ACTION)
DIS	DISABLE
DISP	DISPLAY
DT	DUAL TEMP
DTWR	DUAL TEMP WATER RETURN
DTWS	DUAL TEMP WATER SUPPLY
DX	DIRECT EXPANSION (UNIT)
EA	EXHAUST AIR
ECO	ECONOMIZER
EF	EXHAUST FAN
ENA	ENABLE
EP	ELECTRIC TO PNEUMATIC TRANSDUCER
EPS	ELECTRIC TO PNEUMATIC SWITCH
F	FLOW
FAP	FIRE ALARM PANEL
FLT	FILTER
HD	HOT DECK
HL	HIGH LIMIT
HTG	HEATING
HTHW	HIGH TEMPERATURE HOT WATER
HUM	HUMIDIFIER
HW	HOT WATER
HWR	HOT WATER RETURN
HWS	HOT WATER SUPPLY
HX	HEAT EXCHANGER
I/O	INPUT/OUTPUT
LDP	LOCAL DISPLAY PANEL
LL	LOW LIMIT
M&C	MONITORING & CONTROL (SOFTWARE)
MA	MIXED AIR
MINOA	MINIMUM OUTSIDE AIR
MS	MOTOR STARTER
N/A	NOT APPLICABLE
NC	NORMALLY CLOSED
nci	NETWORK CONFIGURATION INPUT
NO	NORMALLY OPEN
OA	OUTSIDE AIR
OCC	OCCUPIED
ODT	ON DELAY TIMER
OWS	OPERATOR WORKSTATION
P	PRESSURE
PC	PRE-COOLING
PCW	PRIMARY CHILLER WATER
PCWR	PRIMARY CHILLER WATER RETURN
PCWS	PRIMARY CHILLER WATER SUPPLY
PH	PREHEAT
PMP	PUMP
PP	POSITIVE POSITIONER
R	RELAY
RA	RETURN AIR
REV	REVERSE (CONTROL ACTION)
RF	RETURN FAN
RH	RELATIVE HUMIDITY
RLA	RELIEF AIR
RM	ROOM
RST	RESET
RT	RATE
S	STATUS
SA	SUPPLY AIR
SEC	SECONDARY
SF	SUPPLY FAN
SMK	SMOKE
SNVT	STANDARD NETWORK VARIABLE TYPE
SP	SETPOINT
SS	START/STOP COMMAND
STAT	THERMOSTAT
SYS	SYSTEM
SCHD	SCHEDULER
T	TEMPERATURE
TAP	TAP, PRESSURE
UNOCC	UNOCCUPIED
V	VALVE
VAV	VARIABLE AIR VOLUME
VFD	VARIABLE FREQUENCY DRIVE
WN	WINDOW
WB	WET BULB (TEMPERATURE)
ZN	ZONE

ABBREVIATIONS AND ACRONYMS

US Army Corps of Engineers ®

MARK	DESCRIPTION	DATE	APPR.

Designed by: J. STONE
Drawn By: J. STONE
Date: 13 JUL 2020
Rev:
Submittal Status: RTA
Spec No: 2145
Project No:
Reviewed by: S. BARMANN
Submitted by: M. Timothy A. Lee, P.E. Chief, Mechanical Section
File No: 233-25-0665
File Name: W69M_GTEB
Size:22" x 34" Scale: AS NOTED TO SCALE
Plot Date:7/10/2020 12:28:59 PM

US ARMY CORPS OF ENGINEERS
SACRAMENTO DISTRICT
IN-HOUSE DESIGN
1325 J STREET
SACRAMENTO, CA 95814

FT. HUACHUCA AZ

GROUND TRANSPORT
EQUIPMENT BUILDING

HVAC CONTROLS - LEGEND

SHEET
IDENTIFICATION
M-801

RTA

POINT SCHEDULE INSTRUCTIONS FOR UFGS-23 09 23 CONTRACTOR

GENERAL:

1. THE CONTRACT DRAWING POINTS SCHEDULES ASSUME THAT THE ENTIRE SEQUENCE OF OPERATION IS PERFORMED IN A SINGLE PIECE OF DDC HARDWARE. IN CASES WHERE MULTIPLE PIECES OF DDC HARDWARE ARE USED (INCLUDING CEA-709.1 NETWORKED SENSORS AND ACTUATORS), SEPARATE THE POINTS SCHEDULE INTO SEPARATE TABLES EACH WITH ITS OWN HEADER INFORMATION (SEE BELOW) SO THAT EACH PIECE OF DDC HARDWARE HAS A TABLE DEDICATED TO IT. ALL TABLES FOR A SINGLE SEQUENCE OF OPERATION SHALL BE ON A SINGLE DRAWING WHICH MAY SPAN MULTIPLE SHEETS. SHOW COMMUNICATION BETWEEN MULTIPLE PIECES OF DDC HARDWARE PERFORMING A COMMON SEQUENCE THROUGH THE USE OF NVI AND NVO ENTRIES IN THE I/O COLUMN (SEE I/O COLUMN INSTRUCTIONS BELOW), ADDING ROWS TO THE TABLE(S) AS NEEDED.

2) ENTRIES SHOWN BRACKETED AS: < ___ > ARE REQUIRED ENTRIES UNDER UFGS-23 09 23. SOME ENTRIES WITHOUT BRACKETS MAY BE REQUIRED IN SOME INSTANCES AS DESCRIBED IN THESE INSTRUCTIONS.

SPACES WHERE NO ENTRY IS ORDINARILY REQUIRED CONTAINS A TILDE: " ~ " (EQUIVALENT TO AN "N/A" OR NULL VALUE)

WHEN AN ENTRY APPEARS INSIDE OF BRACKETS, IT IS A RECOMMENDED ENTRY THAT MUST BE VERIFIED OR CHANGED BY THE APPROPRIATE PARTY (AS INDICATED BY THE BRACKET TYPE). WHEN EDITING THE POINT SCHEDULES, DELETE THE BRACKETS AFTER VERIFYING/PROVIDING THE ENTRY. DO NOT LEAVE CELLS BLANK, INSTEAD SHOW THE TILDE ("~") TO INDICATE A NULL VALUE OR THAT NO FURTHER ENTRY IS REQUIRED.

HEADER INFORMATION INSTRUCTIONS:

1. DDC HARDWARE IDENTIFIER: SHOW THE IDENTIFIER FOR EACH PIECE OF DDC HARDWARE. MAINTAIN CONSISTENCY AND UNIQUENESS OF DDC HARDWARE IDENTIFIERS BETWEEN ALL DRAWINGS.

2) DDC HARDWARE LOCATION: SHOW THE PHYSICAL LOCATION OF THE DEVICE. LOCATION SHALL INCLUDE THE BUILDING AND ROOM NUMBER AND MAY ALSO INCLUDE FURTHER INFORMATION SUCH AS ENCLOSURE/PANEL IDENTIFICATION.

3) NODE ADDRESS: SHOW THE DOMAIN, SUBNET AND NODE ADDRESSES FOR ALL DEVICES ON THE NETWORK.

4) NODE ID: SHOW THE MANUFACTURER SUPPLIED NODE ID (ALSO CALLED THE NEURONID) FOR EACH DEVICE.

"GENERAL" COLUMNS:

1. NAME COLUMN: SHOW POINT NAMES AS NEEDED AND AS INDICATED BY BRACKETS (<___>). THE NAME SHALL BE CONSISTENT WITH POINT NAMES SHOWN ON ALL OTHER DRAWINGS AND SHALL USE THE ESTABLISHED POINT ABBREVIATIONS.

2) SETTING COLUMN: CONFIGURE DEVICES TO USE THE SETPOINTS AND SETTINGS SHOWN. WHEN A SETPOINT OR SETTING IS NOT SHOWN, USE VALUES IN ACCORDANCE WITH THE SPECIFICATION AND SHOW THE SETPOINT OR SETTING USED. INCLUDE THE APPROPRIATE ENGINEERING UNITS FOR ENTRIES IN THIS COLUMN.

3) RANGE COLUMN: CONFIGURE DEVICES TO USE THE RANGES SHOWN. WHEN A RANGE IS NOT SHOWN, USE VALUES IN ACCORDANCE WITH THE SPECIFICATION AND SHOW THE RANGE USED. FOR SENSORS SHOW THE ACTUAL SENSOR RANGE (THIS RANGE MUST AT LEAST ENCOMPASS THE RANGE SPECIFIED IN SECTION 23 09 23). FOR DAMPER ACTUATORS SHOW THE ACTUAL RANGE OVER WHICH THE VALVE OR DAMPER IS ACTUATED. INCLUDE THE APPROPRIATE ENGINEERING UNITS FOR ENTRIES IN THIS COLUMN.

4) NCI/CP NAME COLUMN: ENTRIES IN THIS COLUMN ARE ONLY REQUIRED FOR GENERAL PURPOSE PROGRAMMABLE CONTROLLERS (GPPC) OR APPROVED APPLICATION SPECIFIC CONTROLLERS (ASC) LACKING LONWORKS NETWORK SERVICES (LNS) PLUG-INS. SHOW ALL NETWORK CONFIGURATION INPUTS (NCI) OR CONFIGURATION PROPERTIES (CP) THAT RELATE TO THE POINT. FOR CPS OF A USER-DEFINED NETWORK CONFIGURATION PARAMETER TYPE (UCPT), PROVIDE EITHER THE STANDARD NETWORK VARIABLE TYPE (SNVT) THAT RELATES TO THE CP, OR (FOR UCPTS NOT BASED ON A SNVT) PROVIDE DETAILED DESCRIPTIONS OF THE FIELDS AND UNITS OF EACH CP. EXPAND ROWS AND USE ADDITIONAL SHEETS AS REQUIRED TO PROVIDE CONFIGURATION PROPERTY DESCRIPTIONS.

5) I/O TYPE COLUMN: SHOW THE I/O TYPE FOR EACH POINT AS ONE (OR MORE) OF THE FOLLOWING:
* AI FOR ANALOG INPUTS
* AO FOR ANALOG OUTPUTS
* BI FOR BINARY INPUTS
* BO FOR BINARY OUTPUTS
* NVO FOR NETWORK VARIABLE OUTPUTS (BOUND TO ANOTHER PIECE OF DDC HARDWARE)
* NVI FOR NETWORK VARIABLE INPUTS (BOUND FROM ANOTHER PIECE OF DDC HARDWARE)

IF MORE THAN ONE PIECE OF DDC HARDWARE IS USED TO IMPLEMENT A SEQUENCE AND THE VALUE OF A PHYSICAL INPUT TO ONE IS NEEDED BY THE OTHER, SHOW THE POINT AS BOTH A HARDWARE INPUT (AI OR BI) AND A NETWORK VARIABLE OUTPUT (NVO) ON THE FIRST AND AS A NETWORK VARIABLE INPUT (NVI) TO THE OTHER DDC HARDWARE. SIMILARLY FOR OUTPUTS SHOW A NETWORK VARIABLE OUTPUT (NVO) ON ONE CONTROLLER, AND A NETWORK VARIABLE INPUT (NVI) AND HARDWARE OUTPUT (AO OR BO) ON THE OTHER.

AN ENTRY OF NVO IS ONLY REQUIRED FOR OUTPUTS THAT ARE USED BY ANOTHER PIECE OF DDC HARDWARE; POINTS THAT HAVE SNVT OUTPUTS ONLY FOR DISPLAY OR TRENDING AT AN LDP OR BY THE M&C SOFTWARE ARE ASSUMED TO BE NVOS AND DO NOT NEED AN NVO ENTRY IN THE I/O COLUMN.

FOR EVERY ENTRY OF NVO OR NVI SHOW THE SNVT NAME AND TYPE IN THE SNVT NAME AND SNVT TYPE COLUMNS UNDER LDP AND M & C DISPLAY. SEE “SNVT TYPE COLUMN” INSTRUCTIONS BELOW.

6) HOA REQ'D COLUMN: FOR EACH OUTPUT WITH AN “X” IN THIS COLUMN PROVIDE A HARDWARE MANUAL OVERRIDE FOR THAT OUTPUT:
a. THE MANUAL OVERRIDE SWITCH FOR BINARY OUTPUTS SHALL PROVIDE FOR OVERRIDING THE OUTPUT OPEN OR CLOSED
b. THE MANUAL OVERRIDE SWITCH FOR ANALOG OUTPUTS SHALL EITHER:
   1. PROVIDE FOR OVERRIDING THE OUTPUT TO 0% OR 100%
   2. PROVIDE FOR OVERRIDING THROUGH THE RANGE OF 0% TO 100%.
c. THE MANUAL OVERRIDE SHALL BE INTEGRATED WITH THE CONTROLLER HARDWARE OR AN EXTERNAL OVERRIDE CO-LOCATED WITH (IN THE SAME ENCLOSURE AS) THE CONTROLLER.

LDP AND M & C DISPLAY COLUMNS:

1. LDP VIEW REQ'D COLUMN: PROVIDE AN LDP AND CONFIGURE THE BUILDING CONTROL NETWORK AND THE LDP TO DISPLAY POINTS MARKED WITH AN "X". SHOW THE SNVT NAME AND SNVT TYPE FOR EACH POINT SHOWN. (SEE INSTRUCTIONS FOR THE "SNVT TYPE" COLUMN)

2) M & C DISP REQ'D: AN "X" IN THIS COLUMN INDICATES THAT A SNVT FOR THIS POINT MUST BE AVAILABLE FROM THE DDC HARDWARE PERFORMING THE SEQUENCE FOR THIS SYSTEM. PROVIDE A SNVT OUTPUT FOR THESE POINTS AND SHOW THE SNVT NAME AND SNVT TYPE. (SEE INSTRUCTIONS FOR THE "SNVT TYPE" COLUMN)

3) M & C TREND REQ'D COLUMN: FOR ALL POINTS WITH AN X IN THIS COLUMN A SNVT FOR THIS POINT SHALL BE AVAILABLE. PROVIDE A SNVT OUTPUT FOR THESE POINTS AND SHOW THE SNVT NAME AND SNVT TYPE. (SEE INSTRUCTIONS FOR THE "SNVT TYPE" COLUMN)

4) SNVT TYPE COLUMNS: WHEN A SNVT TYPE IS SHOWN ON THE POINT SCHEDULE CONTRACT DRAWING, USE THE SHOWN SNVT TYPE FOR THE PROVIDED SNVT. IF NECESSARY, A SNVT TYPE TRANSLATOR MAY BE USED TO CONVERT TO THIS SNVT TYPE. IF THE USE OF A TYPE TRANSLATOR RESULTS IN THE SHARING OF A SNVT BETWEEN DDC HARDWARE, DOCUMENT IT ON THE POINTS SCHEDULE AS DESCRIBED IN THE “GENERAL” PORTION OF THESE INSTRUCTIONS. WHERE NO SNVT TYPE IS SHOWN, SHOW THE SNVT TYPE USED.

OVERRIDES COLUMNS:

1. LDP OVRD REQ'D COLUMN: FOR EACH POINT WITH AN “X” IN THIS COLUMN, PROVIDE A SNVT INPUT FOR THE POINT BY WHICH THE VALUE OF THE POINT CAN BE OVERRIDDEN AND PROVIDE AN LDP (IF NOT ALREADY PROVIDED) AND CONFIGURE THE BUILDING CONTROL NETWORK AND THE LDP TO ALLOW AN OPERATOR TO OVERRIDE (WRITE TO) THE POINT FROM THE LDP. SHOW THE OVERRIDE INPUT SNVT NAME AND TYPE FOR EACH POINT REQUIRING AN OVERRIDE. IF THE OVERRIDE IS RELEASED BY A MEANS OTHER THAN WRITING THE “NULL VALUE” FOR THE SNVT TYPE (AS DEFINED IN THE LONMARK MASTER SNVT LIST), PROVIDE A DESCRIPTION OF HOW THE OVERRIDE IS USED AND RELEASED.

2) M & C OVRD REQ'D COLUMN: FOR EACH POINT WITH AN “X” IN THIS COLUMN, PROVIDE A SNVT INPUT FOR THE POINT BY WHICH THE VALUE OF THE POINT CAN BE OVERRIDDEN AND SHOW THE SNVT NAME AND TYPE FOR EACH.

ALARMS COLUMNS:

1. ALARM CONDITION COLUMN: FOR EACH POINT WITH AN ENTRY IN THIS COLUMN PROVIDE A SNVT OUTPUT FOR THE POINT AND SHOW THE SNVT NAME AND SNVT TYPE IN THE SNVT NAME AND SNVT TYPE COLUMNS UNDER LDP AND M & C DISPLAY. SEE “SNVT TYPE COLUMN” INSTRUCTIONS ABOVE.

OTHER:

1. SYSTEM RESET BUTTON (RST-BUT): IF THE "I/O TYPE" COLUMN CONTAINS "BI", THE SYSTEM SHALL BE CAPABLE OF BEING RESET VIA A LOCAL HARDWARE PUSH-BUTTON.

IF THERE IS AN "X" IN THE LDP OVRD REQ'D OR M & C OVRD REQ'D COLUMN, THE SYSTEM SHALL ALSO BE CAPABLE OF BEING RESET VIA SNVT INPUT (SEE INSTRUCTIONS FOR M & C OVRD REQ'D AND LDP OVRD REQ'D COLUMNS)

2) SYSTEM OCCUPANCY (SYS-OCC): SHOW OCC, UNOCC, WUCD (WARM-UP/COOL-DOWN) IN THE RANGE COLUMN BASED ON THE SYSTEM-SPECIFIC SEQUENCE OF OPERATIONS AND OCCUPANCY SCHEDULE.

3) MINIMUM OUTSIDE AIR (MINOA) FLOW: FOR SYSTEMS CONTROLLING TO A MINOA SETPOINT, USE THE MINOA-F-SP SHOWN WHEN CONFIGURING THE DDC HARDWARE PERFORMING THE SEQUENCE OF OPERATION. FOR OTHER SYSTEMS SET THE MINIMUM OUTSIDE AIR FLOW TO THE MINIMUM OUTSIDE AIR FLOW SETTING SHOWN AS SPECIFIED.

4) PID LOOP SETTINGS: SHOW ALL PID LOOP SETTINGS IN THE SETTINGS COLUMN, INCLUDING ENGINEERING UNITS FOR EACH SETTING. ADJUST ROW HEIGHT AS NEEDED TO SHOW ALL PID SETTINGS.

5) FILTERS: WHEN FILTER PRESSURES ARE SHOWN, INSTALL FILTER PRESSURE SWITCHES. SHOW LOADED FILTER (HIGH-LIMIT) SETPOINT FOR EACH FILTER.

6) OTHER POINTS: INSTALL SENSORS FOR MONITORING PURPOSES ONLY.

POINT SCHEDULE INSTRUCTIONS FOR UFGS-25 10 10 CONTRACTOR

1. SPACES WHERE NO ENTRY IS ORDINARILY REQUIRED CONTAINS A TILDE: " ~ " (EQUIVALENT TO AN "N/A" OR NULL VALUE)

2) NAME COLUMN: USE THE POINT NAMES SHOWN ON THE POINTS SCHEDULE FOR ALL GRAPHIC DISPLAYS

3) M & C DISP REQ'D: FOR EACH "X" IN THIS COLUMN CONFIGURE THE GRAPHICAL DISPLAY FOR THIS SYSTEM TO DISPLAY THE VALUE OF THE POINT. UNLESS OTHERWISE SPECIFIED OR APPROVED, USE THE POINT NAME, AS SHOWN IN THE "NAME" COLUMN, TO LABEL THE GRAPHICAL DISPLAY.

4) M & C TREND REQ'D COLUMN: FOR ALL POINTS WITH AN "X" IN THIS COLUMN, SET UP A TREND AT THE M & C SOFTWARE AS SPECIFIED.

5) M & C OVRD REQ'D COLUMN: FOR ALL POINTS WITH AN X IN THIS COLUMN USE THE SNVT NAME AND TYPE SHOWN TO PROVIDE OVERRIDE CAPABILITY. CONFIGURE THE M & C SYSTEM DISPLAYS TO ALLOW AN OPERATOR TO OVERRIDE (AND RELEASE THE OVERRIDE) THESE POINTS AS SPECIFIED

6) ALARM CONDITION COLUMN: FOR EACH POINT WITH AN ENTRY IN THIS COLUMN USE THE ALARM LIMITS SHOWN TO CONFIGURE ALARM GENERATION FOR THE POINT AT THE M&C SOFTWARE.

7) ALARM PRIORITY COLUMN: WHEN CONFIGURING THE ALARM HANDLING AT THE M&C SOFTWARE, USE THE ALARM PRIORITY SHOWN TO DETERMINE IF THE ALARM IS CRITICAL (CRIT) OR INFORMATIONAL (INFO).

8) M&C ROUTING NAME COLUMN: CONFIGURE ALARM HANDLING AT THE M&C SERVER ACCORDING TO THE ALARM ROUTING SHOWN ON THE POINTS SCHEDULE, THE ALARM ROUTING SCHEDULES AND AS SPECIFIED.

9) SYSTEM RESET BUTTON (RST-BUT): IF THERE IS AN AN "X" IN M & C OVRD REQ'D COLUMN, CONFIGURE M & C SOFTWARE GRAPHIC DISPLAYS TO PROVIDE SYSTEM RESET CAPABILITY.

US Army Corps of Engineers ®

MARK	DESCRIPTION	DATE	APPD

Designed by: T HARTAAK | Drawn By: TTHAAK | Date: 13 JUL 2020 | Rev:
Submittal Status: RTA | Spec No: 2145 | Project No:
Reviewed by: S. BARMANN | File No: 233-25-0685 | File Name: W6M_GTEB
Submitted by: Dr. Timothy A. Lee, P.E. Chief, Mechanical Engineering Section | Size:22" x 34" Plot Scale: 1:1 | Plot Date:7/10/2020 12:28:59 PM

US ARMY CORPS OF ENGINEERS

SACRAMENTO DISTRICT
IN-HOUSE DESIGN
1325 J STREET
SACRAMENTO, CA 95814

FT. HUACHUCA AZ

GROUND TRANSPORT EQUIPMENT BUILDING

HVAC CONTROLS - POINT SCHEDULE INSTRUCTIONS

SHEET IDENTIFICATION
M-802

RTA

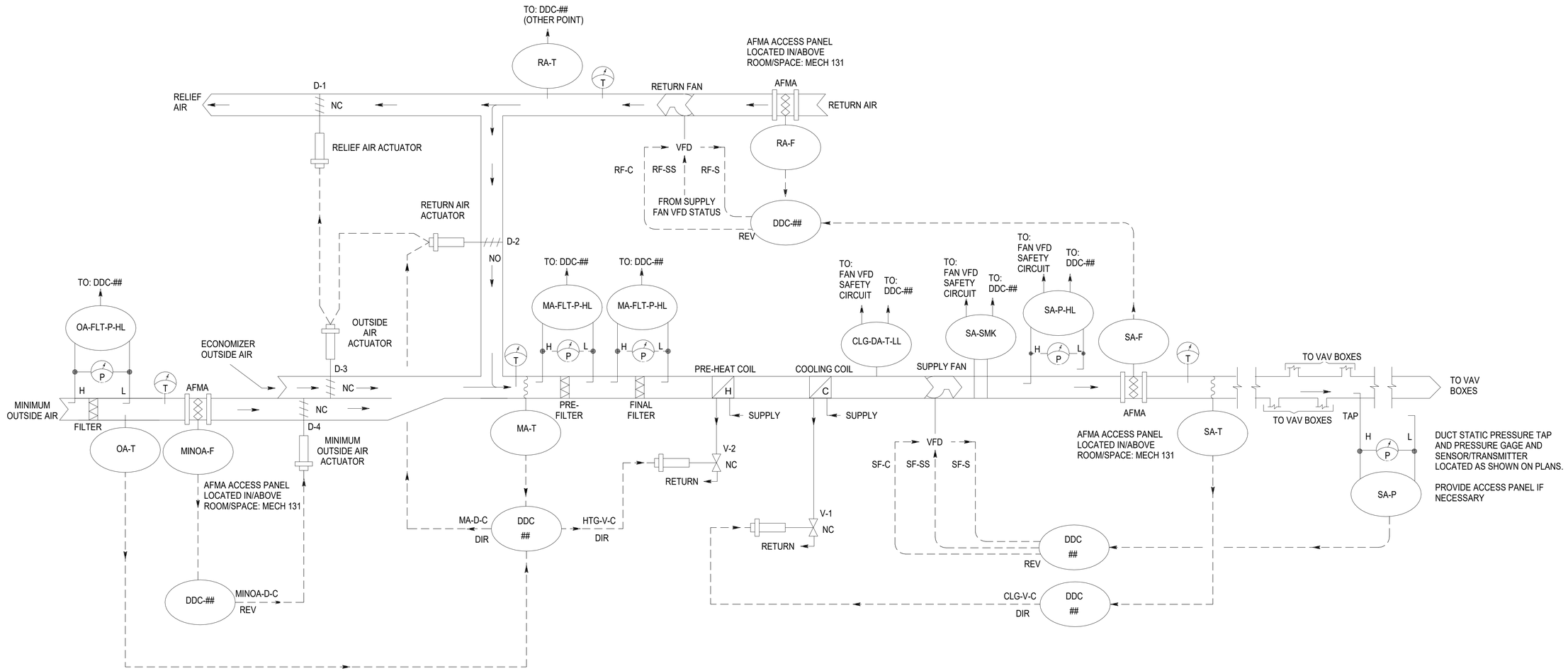

NOTE 1: CONTRACTOR SHALL AFFIX PERMANENT TAGS/LABELS TO ALL DEVICES AS SPECIFIED

NOTE 2: CONTRACTOR SHALL RECORD DUCT STATIC PRESSURE INSTRUMENTATION, AFMA ACCESS PANEL, AND OTHER DEVICE LOCATIONS AS SHOWN

NOTE 3: CONTRACTOR SHALL LABEL ALL DDC I/O SIGNAL LINES: 4-20 mA, VDC, OR SNVT

NOTE 4: CONTRACTOR SHALL SHOW A UNIQUE IDENTIFIER FOR EACH DEVICE. WHERE MULTIPLE IDENTICAL DEVICES ARE SHOWN (FOR EXAMPLE; DDC CONTROLLER, OA SENSOR, OR EP TRANSDUCER) EACH SHALL BE SEQUENTIALLY NUMBERED. WHERE SEPARATE DDC CONTROLLER BUBBLES ARE USED TO REPRESENT/SHOW A COMMON (OR SINGLE) CONTROLLER EACH BUBBLE SHALL USE THE SAME IDENTIFIER AND NUMBER. DEVICE AND SIGNAL IDENTIFIERS SHALL BE CONSISTENT BETWEEN DRAWINGS.

NOTE 5: CONTRACTOR SHALL UNIQUELY NUMBER ALL ANSI 709.1 DEVICES. THIS NUMBERING SHALL BE CONSISTENT BETWEEN ALL DRAWINGS

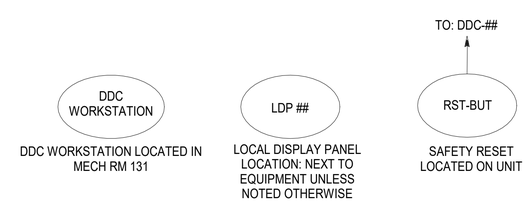

1 VAV WITH RETURN FAN CONTROL SCHEMATIC - AHU-1 & AHU-2

NOT TO SCALE

US Army Corps of Engineers ®

MARK	DESCRIPTION	DATE	APPR

US ARMY CORPS OF ENGINEERS

SACRAMENTO DISTRICT
IN-HOUSE DESIGN
1325 J STREET
SACRAMENTO, CA 95814

Designed by: J. STONE | Drawn By: J. STONE | Date: 13 JUL 2020 | Rev:
Submittal Status: RTA | Reviewed By: S. BARMANN | Submitted by: | Spec No: 2145 | Project No:
File No: 233-25-0865 | File Name: W65M_GTEB
Size:22" x 34" | Plot Scale:1:1 | Plot Date:7/10/2020 12:28:59 PM

FT. HUACHUCA AZ

GROUND TRANSPORT EQUIPMENT BUILDING

HVAC CONTROLS

SHEET IDENTIFICATION
M-803

RTA

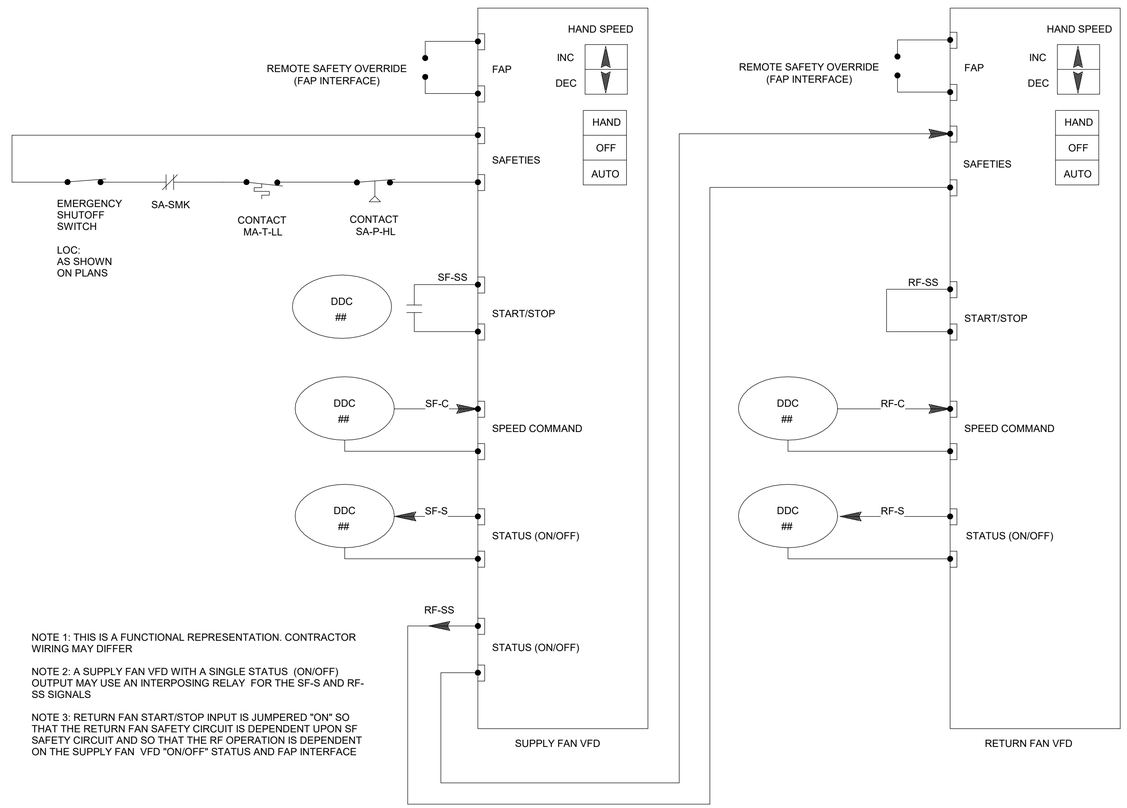

NOTE 1: THIS IS A FUNCTIONAL REPRESENTATION. CONTRACTOR WIRING MAY DIFFER

NOTE 2: A SUPPLY FAN VFD WITH A SINGLE STATUS (ON/OFF) OUTPUT MAY USE AN INTERPOSING RELAY FOR THE SF-S AND RF-SS SIGNALS

NOTE 3: RETURN FAN START/STOP INPUT IS JUMPERED "ON" SO THAT THE RETURN FAN SAFETY CIRCUIT IS DEPENDENT UPON SF SAFETY CIRCUIT AND SO THAT THE RF OPERATION IS DEPENDENT ON THE SUPPLY FAN VFD "ON/OFF" STATUS AND FAP INTERFACE

VAV SYSTEM LADDER DIAGRAM

US Army Corps of Engineers ®

MARK	DESCRIPTION	DATE	APPD

Designed by: J. STONE
Drawn By: J. STONE
Submittal Status: RTA
Reviewed S. BARMANN
Submitted by: Maj. Timothy A. Lee, P.E. Chief, Mechanical Section
Date: 13 JUL 2020
Rev:
Spec No: 2145
Project No:
File No: 233-25-0665
File Name: W65M_GTEB
Size:22" x 34" Plot Scale: 1"=1'-0"
Plot Date:7/10/2020 12:29:00 PM

US ARMY CORPS OF ENGINEERS
SACRAMENTO DISTRICT
IN-HOUSE DESIGN
1325 J STREET
SACRAMENTO, CA 95814

FT. HUACHUCA AZ

GROUND TRANSPORT EQUIPMENT BUILDING

HVAC CONTROLS

SHEET IDENTIFICATION
M-804

RTA

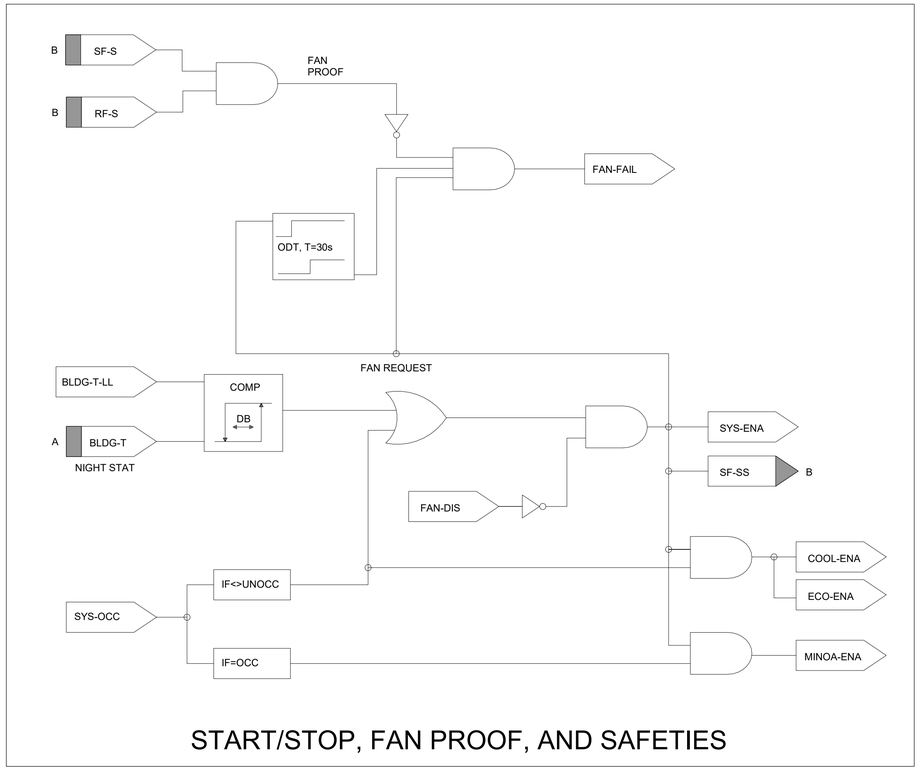

START/STOP, FAN PROOF, AND SAFETIES

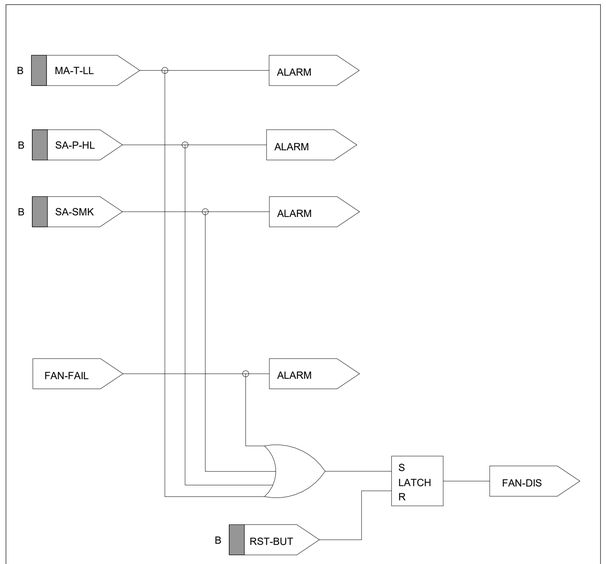

ALARMS AND SHUTDOWN

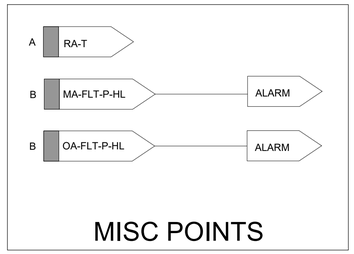

MISC POINTS

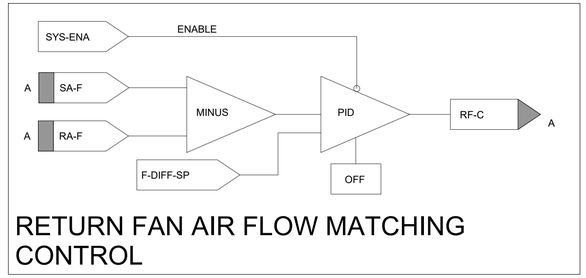

RETURN FAN AIR FLOW MATCHING CONTROL

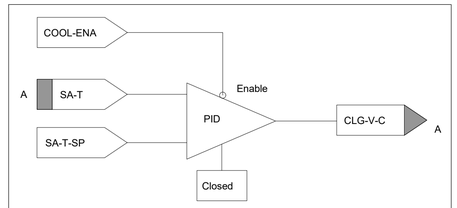

COOLING COIL CONTROL

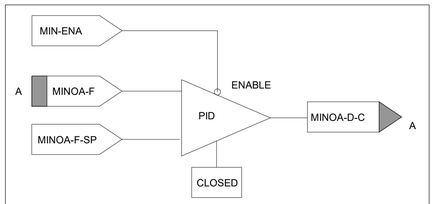

MINIMUM OA DAMPER CONTROL

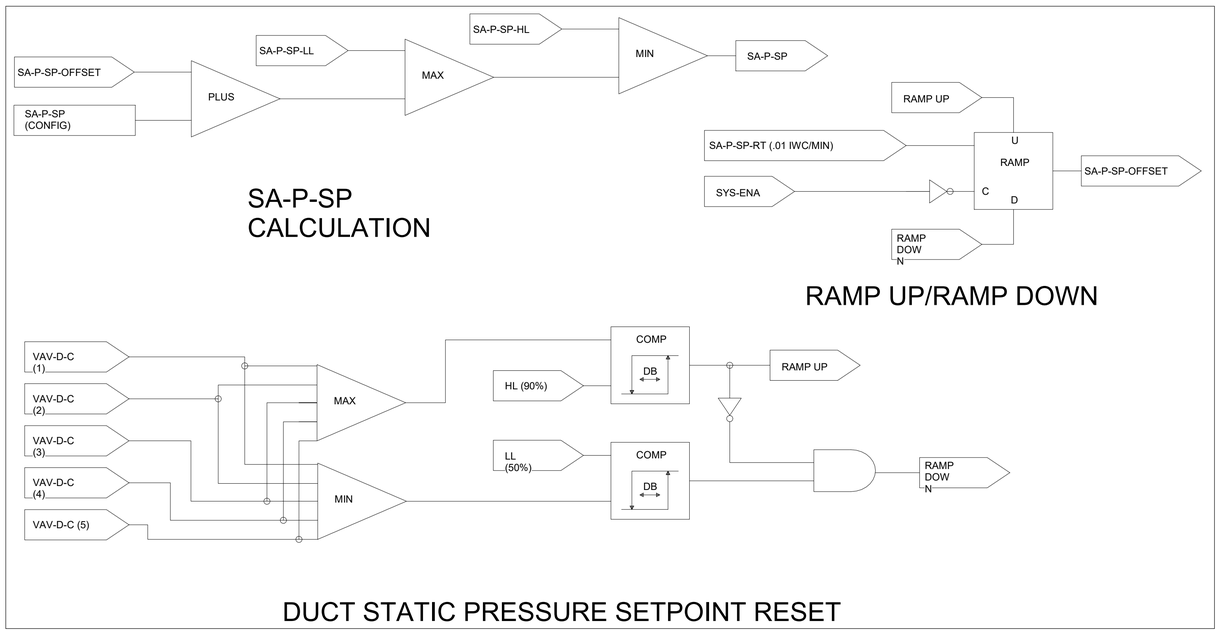

SA-P-SP CALCULATION

RAMP UP/RAMP DOWN

DUCT STATIC PRESSURE SETPOINT RESET

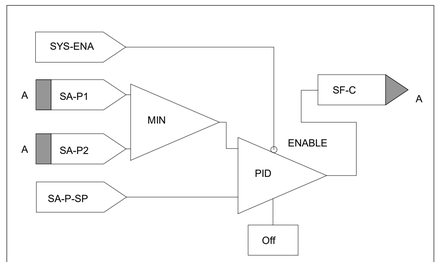

SUPPLY FAN DUCT STATIC PRESSURE CONTROL

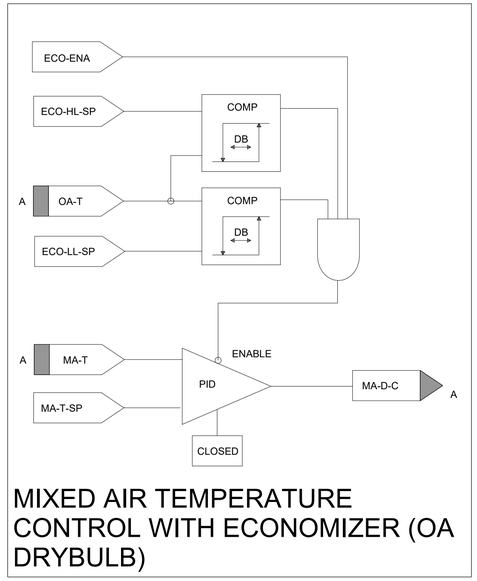

MIXED AIR TEMPERATURE CONTROL WITH ECONOMIZER (OA DRYBULB)

US Army Corps of Engineers ®

MARK	DESCRIPTION	DATE	APPD

Designed by: TK CRONIN | Drawn By: TKC | Date: 13 JUL 2020 | Rev:
Submittal Status: RTA | Spec No: 2145 | Project No:
Reviewed By: S. BARMANN | File No: 233-25-0665 | File Name: W6SM_GTEB
Submitted by: Dr. Timothy A. Lee, P.E. Chief, Mechanical Design Section | Size:22" x 34" Plot Scale: 1" = 1'-0" Plot Date:7/10/2020 12:29:00 PM

US ARMY CORPS OF ENGINEERS

SACRAMENTO DISTRICT
IN-HOUSE DESIGN
1325 J STREET
SACRAMENTO, CA 95814

FT. HUACHUCA

A2

GROUND TRANSPORT EQUIPMENT BUILDING

HVAC CONTROLS

SHEET IDENTIFICATION
M-805

RTA

Sequences of Operation for Air Handling Units

Variable Air Volume System with Return Fan

Install DDC hardware to perform this Sequence of Operation and to provide SNVT inputs and outputs as specified and shown on the Points Schedule. Unless otherwise specified, all modulating control shall be proportional-integral (PI) control.

a. HAND-OFF-AUTO switches:

Supply fan variable frequency drive (VFD) unit shall accept a Fire Alarm Panel (FAP) signal that takes precedence over all other VFD inputs and switches and shall cause the VFD to run at 100% speed. The VFD shall accept an occupant accessible emergency shutoff switch as shown. The supply fan variable frequency drive (VFD) unit shall have an integral H-O-A switch:

(1) HAND: With the H-O-A switch in HAND position, the supply fan shall start and run continuously, subject to Safeties. Fan speed shall be under manual-operator control.

(2) OFF: With the H-O-A switch in OFF position, the supply fan shall stop.

(3) AUTO: With the H-O-A switch in AUTO position, the supply fan shall run subject to the Supply Fan Start/Stop Signal (SF-SS) and Safeties. Fan speed shall be under control of the DDC Hardware.

b. Return fan variable frequency drive (VFD) unit shall accept a Fire Alarm Panel (FAP) signal that takes precedence over all other VFD inputs and switches and shall cause the VFD to run at 100% speed. The return fan variable frequency drive (VFD) unit shall have an integral H-O-A switch:

(1) HAND: With the H-O-A switch in HAND position, the return fan shall run subject to Safeties. Fan speed shall be under manual-operator control.

(2) OFF: With the H-O-A switch in OFF position, the return fan shall be off.

(3) AUTO: With the H-O-A switch in AUTO position, the return fan shall run subject to the supply fan running. Fan speed shall be under control of the DDC Hardware.

c. Occupancy Modes: The system shall obtain its Occupancy Mode input from the System Scheduler as specified and shown. The system shall operate in one of the following modes: Occupied, Unoccupied, or Warm Up/Cool Down.

d. Proofs and Safeties:

(1) The supply fan, return fan, and all DDC Hardware control loops shall be subject to Proofs and Safeties. Safeties shall be direct-hardwire interlocked to the VFD as shown. DDC Hardware shall monitor all proofs and safeties and failure of any proof or activation of any safety shall result in all control loops being disabled and the AHU fan being commanded off until reset.

(2) Proofs:

(a) Supply fan status (SF-S)

(b) Return fan status (RF-S)

(3) Safeties:

(a) Cooling coil discharge air temperature low limit (freezestat) (CLG-DA-T-LL)

(b) Supply air duct pressure high limit (SA-P-HL)

(c) Supply air smoke (SA-SMK)

(d) (ATFP) Emergency Shutoff Switch

(4) DDC Hardware reset of all proofs and safeties shall be via a local binary push-button (RST-BUT) input to the DDC Hardware, via a remote command to the DDC Hardware via SNVT or both (where the Contractor provides both reset functions and the operator can use either one to perform the reset), as shown on the Points Schedule drawing.

e. System Enable and Loop Enable

(1) Occupied mode: The supply fan shall be enabled (SYS-ENA) and commanded to run (SF-SS). All control loops shall be enabled.

(2) Unoccupied mode: While the building temperature (BLDG-T) is above the low limit setpoint (BLDG-T-LL) all control loops shall be disabled and the supply fan shall not run. When BLDG-T drops below BLDG-T-LL (with a 5 degrees F deadband) the supply fan shall be enabled (SYS-ENA) and commanded to run (SF-SS), the Supply Duct Static Pressure Control, Return Fan Volume Control loops shall be enabled. The Minimum Outside Air Flow Control, Mixed Air Temperature Control, and Cooling Coil Control loops shall be disabled.

(3) Warm Up/Cool Down: The supply fan shall be enabled (SYS-ENA) and commanded to run (SF-SS). The Minimum Outside Air Flow Control loop shall be disabled and all other control loops shall be enabled.

THERMOSTAT AND OCCUPANCY SENSOR SCHEDULE

SYSTEM SERVICE (AHU)	TERMINAL UNIT IDENTIFIER	SPACES SERVED	STAT LOCATION	ZN-T	ZN-T-SP ADJUST	UNOCC OVERRIDE PUSHBUTTON	UNOCC OVERRIDE TIME	OCC SENSOR	REMARKS
AHU-1	ALL ATU	SEE DWGS	SEE DWGS	WINTER : 68°F SUMMER: 78°F	+/- 2°F	YES	1 HR (ADJ)	NO	
AHU-2	ALL ATU	SEE DWGS	SEE DWGS	WINTER : 68°F SUMMER: 78°F	+/- 2°F	YES	1 HR (ADJ)	NO	1

1. UNOCC OVERRIDE FOR AHU-2 SHALL CAUSE THE SYSTEM TO RUN AT MAXIMUM OCCUPANCY SETTINGS FOR THE DURATION SPECIFIED.

f. Fan Capacity Control:

(1) Supply Duct Static Pressure Control. When this loop in enabled the DDC Hardware shall modulate the supply fan variable frequency drive unit to maintain the duct static pressure (SA-P) at setpoint (SA-P-SP) as measured by the duct static pressure tap and sensor. When this loop is disabled, the DDC Hardware capacity modulation output to the VFD shall be zero percent.

(2) Supply Duct Static Pressure Reset Control. AHU controller shall be networked with all associated VAV terminal units to obtain airflow requests. The static pressure setpoint (SA-P-SP) shall be reset based on zone airflow requests, derived from damper position and meeting airflow and space temperature.

(a) When there are no zone airflow requests, (when all zone dampers are throttling closed - below 90% open and actual/setpoint airflow ratio is greater than 95%), the duct static pressure setpoint (SA-P-SP) shall be incrementally reset down by 0.10 in H2O at a frequency of 10 minutes to a minimum of 0.30 in H2O or the supply fan VFD has reached its lowest operating speed limit.

(b) As airflow requests increase, when at least one zone damper is greater than 99% open and actual/setpoint airflow ratio is less than 90% and space temperature is not satisfied, the reverse shall occur and the duct static pressure setpoint (SA-P-SP) shall incrementally reset up at same rate as above to a maximum of 1.25 in H2O

(3) Return Fan Volume Control. When this loop is enabled the DDC Hardware shall modulate the return fan variable frequency drive unit to maintain a constant volumetric airflow difference at setpoint (F-DIFF-SP) as shown, as measured by the airflow measurement arrays located in the supply and return ducts as shown. When this loop is disabled, the output to the VFD shall be zero percent.

g. Minimum Outside Air Flow Control: When this loop is enabled the DDC Hardware shall modulate the minimum outside air damper to maintain the minimum OA volumetric flow (MINOA-F) at setpoint (MINOA-F-SP) as shown. When this loop is disabled, the minimum outside air damper shall be closed.

h. Mixed Air Temperature Control With Economizer

(1) When this loop is enabled, and the Economizer is ON as determined by the Economizer Enable Logic, the DDC Hardware shall modulate the economizer outside air, relief, and return air dampers to maintain the mixed air temperature (MA-T) at setpoint (MA-T-SP) as shown.

(2) When this loop is disabled, or the Economizer is OFF as determined by the Economizer Enable Logic, the economizer outside air and relief air dampers shall be closed, and the return air damper shall be open.

(3) Economizer Enable Logic. The economizer shall be ON when the outside air dry bulb temperature is between the high limit (ECO-HL-SP) and low limit (ECO-LL-SP) setpoints as shown. The Economizer shall otherwise be OFF. ECO-HL-SP and ECO-LL-SP shall each have a 2 degrees F deadband.

i. Cooling Coil Control: When this loop is enabled the DDC Hardware shall modulate the cooling coil valve to maintain the supply air temperature (SA-T) setpoint (SA-T-SP) as shown. When this loop is disabled, the cooling coil valve shall be closed.

j. Heating Coil Control (Pre-heat): When this loop is enabled the DDC Hardware shall modulate the pre-heat coil valve to maintain the mixed air temperature (MA-T) setpoint (MA-T-SP) as shown. When this loop is disabled, the pre-heat coil valve shall be closed. Loop shall be enabled when MA-T drops below the setpoint for a period longer than 5 minutes (adj). When outside air temperature (OA-T) reads below 32°F and the supply fan is enabled, DDC Hardware shall modulate the pre-heat coil valve to allow 25% (adj) fluid flow through the coil in order to prevent the coil freezing from stratified air.

k. Emergency HVAC Shutoff Control: When the emergency shutoff switch is enabled, the supply fan and return fan shall be disabled. Relief and outside air dampers shall be in the closed position.

OCCUPANCY SCHEDULE

	SYSTEM DEFAULT SCHEDULE		SUPERVISORY MONITORING & CONTROL SCHEDULE			# OCC SENSORS TO PUT AHU IN OCC MODE	REMARKS
SYSTEM	OCCUPIED	UNOCCUPIED	OCCUPIED	UNOCCUPIED	WARM-UP		
AHU-1	M-F 0600-1800	OTHERWISE	M-F 0600-1800	OTHERWISE	0500-0600 (ADJ)	~	
AHU-2	M-F 0600-1800	OTHERWISE	M-F 0600-1800	OTHERWISE	0500-0600 (ADJ)	~	1

1. AHU-2 SYSTEM SCHEDULER SHALL BE PROGRAMMED FOR ONE MAX OCCUPANCY DAY PER MONTH (ADJ).
ALL OTHER OCCUPIED HOURS OF THE DEFAULT SCHEDULE SHALL BE SET FOR MINIMUM OCCUPANCY.

CONTROL DAMPER SCHEDULE

SYSTEM	IDENTIFIER	LOCATION	FUNCTION	TYPE	SIZE	RANGE	REMARKS
AHU-1	D-1-1	MECH RM-164	RELIEF AIR	MODULATING WITH SPRING RETURN	SEE DWGS		PARALLEL BLADE
AHU-1	D-1-2	MECH RM-164	RETURN AIR	MODULATING WITH SPRING RETURN	SEE DWGS		PARALLEL BLADE
AHU-1	D-1-3	MECH RM-164	ECONOMIZER OUTSIDE AIR	MODULATING WITH SPRING RETURN	SEE DWGS		PARALLEL BLADE
AHU-1	D-1-4	MECH RM-164	MINIMUM OUTSIDE AIR	MODULATING WITH SPRING RETURN	SEE DWGS		PARALLEL BLADE
AHU-2	D-2-1	MECH-RM-211	RELIEF AIR	MODULATING WITH SPRING RETURN	SEE DWGS		PARALLEL BLADE
AHU-2	D-2-2	MECH-RM-211	RETURN AIR	MODULATING WITH SPRING RETURN	SEE DWGS		PARALLEL BLADE
AHU-2	D-2-3	MECH-RM-211	ECONOMIZER OUTSIDE AIR	MODULATING WITH SPRING RETURN	SEE DWGS		PARALLEL BLADE
AHU-2	D-2-4	MECH-RM-211	MINIMUM OUTSIDE AIR	MODULATING WITH SPRING RETURN	SEE DWGS		PARALLEL BLADE

US Army Corps of Engineers ®

MARK	DESCRIPTION	DATE	APPR.

Designed by: J. STONE
Drawn By: J. STONE
Date: 13 JUL 2020
Rev:
Submittal Status: RTA
Spec No: 2145
Project No:
Reviewed by: S. BARMANN
Submitted by: G. THWEAT, A. Lee, P.E.
Chief, Mechanical Engineering Section
File No: 233-25-0985
File Name: W69ML_GTEB
Size:22" x 34"
Plot Scale: 1" = 1'-0"
Plot Date:7/10/2020 12:29:00 PM

US ARMY CORPS OF ENGINEERS
SACRAMENTO DISTRICT
IN-HOUSE DESIGN
1325 J STREET
SACRAMENTO, CA 95814

FT. HUACHUCA AZ

GROUND TRANSPORT EQUIPMENT BUILDING

HVAC CONTROLS

SHEET IDENTIFICATION
M-806

RTA

VAV WITH RETURN FAN

DDC HARDWARE: <DDC##>
DDC HARDWARE LOCATION: <___>
NODE ADDRESS: Domain = <___>, Subnet = <___>, Node = <___>
NODE ID: <___>

ALARM GENERATOR DDC HARDWARE INFORMATION:

DDC HARDWARE: <DDC##><INTEGRATED>
DDC HARDWARE LOCATION: <___>
NODE ADDRESS: Domain = <___>, Subnet = <___>, Node = <___>
NODE ID: <___>

FUNCTION	NAME	DESCRIPTION	SETTING (WITH UNITS)	RANGE (WITH UNITS)	CPT NAME	IO TYPE	LDP AND M&C DISPLAY: LDP VIEW REQ'D	M&C: DISP REQ'D	M&C: TREND REQ'D	M&C: SNVT NAME	M&C: SNVT TYPE	OVERRIDES: LDP OVRD REQ'D	M&C OVRD REQ'D	SNVT NAME	SNVT TYPE	ALARMS: ALARM CONDITION (SEE NOTES)	ALARM PRIORITY	SNVT NAME	SNVT TYPE	M&C ROUTING NAME	BLDG ROUTING REQ'D
PROOFS & SAFETIES	SF-S	SUPPLY FAN STATUS	~	ON/OFF		BI	X	X	~	<___>	<___>	~	~	~	~	SUPPLY FAN PROOF FAILED		<___>	<___>	①	~
	RF-S	RETURN FAN STATUS	~	ON/OFF		BI	X	X	~	<___>	<___>	~	~	~	~	RETURN FAN PROOF FAILED		<___>	<___>	①	~
	SA-SMK	SUPPLY AIR SMOKE	~	ALM/NORMAL		BI	~	~	~	~	~	~	~	~	~	ALM		<___>	<___>	①	~
	CLG-DA-T-LL	COOLING COIL DISCHARGE AIR TEMP LOW LIMIT	39 DEG F	ALM/NORMAL		BI	~	~	~	~	~	~	~	~	~	ALM		<___>	<___>	①	~
	SA-P-HL	SUPPLY AIR PRESSURE HIGH LIMIT	2.75"WC (ADJ)	ALM/NORMAL		BI	~	~	~	~	~	~	~	~	~	ALM		<___>	<___>	①	~
	RST-BUT	SYSTEM RESET BUTTON (FOR SAFETIES)	~	~		<___>	~	~	~	~	~	~	<___>	<___>	<___>	~		~	~	~	~
START/STOP	BLDG-T	BUILDING TEMPERATURE (NIGHT STAT)	~	<___>		AI	~	X	~	<___>	TEMP_P	~	~	~	~	BLDG-T LESS THAN BLDG-T-LL		<___>	<___>	①	~
	BLDG-T-LL-SP	BUILDING TEMP LOW LIMIT SETPOINT	55°F	~		~	~	X	~	<___>	<___>	~	X	<___>	<___>	~		~	~	~	~
	SYS-OCC	OCCUPANCY INPUT (FROM SYSTEM SCHEDULER)	~	<___>		NVI	X	X	~	<___>	<___>	SEE NOTES				~		~	~	~	~
	SF-SS	SUPPLY FAN START/STOP	~	ON/OFF		BO	X	X	~	<___>	<___>	~	X	<___>	<___>	~		~	~	~	~
	UNIT STATUS	UNIT STATUS (HTG AND/OR CLG REQUEST) (SEE NOTE)	~	HVAC_COOL/[HVAC_HEAT]		NVO	~	[X]	~	<___>	HVAC_STATUS	~	~	~	~	~		~	~	~	~
SUPPLY FAN CAPACITY CONTROL	SA-P	SUPPLY AIR PRESSURE	~	<___>		AI	X	X	X	<___>	<___>	~	~	~	~	* SA-P IS MORE THAN 20% ABOVE OR BELOW THAN 80% OF SA-P-SP		<___>	<___>	①	~
	SA-P-SP	SUPPLY AIR PRESSURE SETPOINT	1.0"WC (ADJ)	②		AI	X	X	~	<___>	<___>	~	X	<___>	<___>	~		~	~	~	~
	SF-C	SUPPLY FAN COMMAND	~	0-100%		AO	~	X	~	<___>	<___>	~	X	<___>	<___>	~		~	~	~	~
		SUPPLY FAN PID LOOP SETTINGS	<___>	~		~	~	~	~	~	~	~	~	<___>	<___>	~		~	~	~	~
RETURN FAN CAPACITY CONTROL	SA-F	SUPPLY AIR FLOW	~	SEE SCHEDULE		AI	X	X	~	<___>	<___>	~	~	~	~	~		<___>	<___>	①	~
	RA-F	RETURN AIR FLOW	~	SEE SCHEDULE		AI	X	X	~	<___>	<___>	~	~	~	~	~		<___>	<___>	①	~
	F-DIFF-SP	FLOW DIFFERENCE SETPOINT	SEE SCHEDULE	~		~	~	X	~	<___>	<___>	~	X	<___>	<___>	~		~	~	~	~
	RF-C	RETURN FAN COMMAND	~	0-100%		AO	~	X	~	<___>	<___>	~	X	<___>	<___>	~		~	~	~	~
		RETURN FAN PID LOOP SETTINGS	<___>	~		~	~	~	~	~	~	~	~	<___>	<___>	~		~	~	~	~
MINIMUM OUTSIDE AIR	MINOA-F	MINIMUM OUTSIDE AIR FLOW	~	0-100%		AI	X	X	X	<___>	<___>	~	~	~	~	* MINOA-F LESS THAN 80% OF MINOA-F-SP		<___>	<___>	①	~
	MINOA-F-SP	MINIMUM OUTSIDE AIR FLOW SETPOINT	SEE SCHEDULE	~		~	XX	X	~	<___>	<___>	~	X	<___>	<___>	~		~	~	~	~
	MINOA-D-C	MINIMUM OUTSIDE AIR DAMPER COMMAND	~	0-100% OPEN		AO	X	X	~	<___>	<___>	~	X	<___>	<___>	~		~	~	~	~
		MINIMUM OUTSIDE AIR DAMPER PID LOOP SETTINGS	<___>	~		~	~	~	~	~	~	~	~	<___>	<___>	~		~	~	~	~
MIXED AIR TEMPERATURE CONTROL WITH ECONOMIZER	OA-T	OUTSIDE AIR TEMPERATURE	~	<___>		AI	XX	X	X	<___>	<___>	~	~	~	~	~		<___>	<___>	~	~
	MA-D-C	MIXED AIR DAMPER COMMAND	~	0-100% OPEN		AO	XX	X	~	<___>	<___>	~	X	<___>	<___>	~		~	~	~	~
	MA-T	MIXED AIR TEMPERATURE	~	<___>		AI	X	X	X	<___>	<___>	~	~	~	~	~		<___>	<___>	①	~
	MA-T-SP	MIXED AIR TEMPERATURE SETPOINT	53°F	~		~	X	X	~	<___>	<___>	~	X	<___>	<___>	~		~	~	~	~
	ECO-HL-SP	ECONOMIZER HIGH LIMIT SETPOINT	75°F	~		~	X	X	~	<___>	<___>	~	X	<___>	<___>	~		~	~	~	~
	ECO-LL-SP	ECONOMIZER LOW LIMIT SETPOINT	45°F	~		~	X	X	~	<___>	<___>	~	X	<___>	<___>	~		~	~	~	~
		MIXED AIR DAMPER PID LOOP SETTINGS	<___>	~		~	~	~	~	~	~	~	X	<___>	<___>	~		~	~	~	~
SUPPLY AIR TEMPERATURE	SA-T	SUPPLY AIR TEMPERATURE	~	<___>		AI	X	X	X	<___>	TEMP_P	~	~	~	~	* SA-T IS MORE THAN 37 DEG F ABOVE OR BELOW SA-T-SP		<___>	<___>	①	~
	SA-T-SP	SUPPLY AIR TEMPERATURE SETPOINT	55°F	~		~	XX	X	~	<___>	<___>	~	X	<___>	<___>	~		~	~	~	~
	CLG-V-C	COOLING VALVE COMMAND	~	0-100% OPEN		AO	X	X	~	<___>	<___>	~	X	<___>	<___>	~		~	~	~	~
		COOLING VALVE PID LOOP SETTINGS	<___>	~		~	~	~	~	~	~	~	~	<___>	<___>	~		~	~	~	~
OTHER POINTS	RA-T	RETURN AIR TEMPERATURE	~	<___>		AI	~	X	~	<___>	TEMP_P	~	~	~	~	~		<___>	<___>	①	~
	MA-FLT-P-HL	MIXED AIR PRE-FILTER PRESSURE HIGH LIMIT SWITCH	<___>	ALM/NORMAL		BI	~	~	~	<___>	<___>	~	~	~	~	TRUE		<___>	<___>	①	~
	MA-FLT-P-HL	MIXED AIR FINAL-FILTER PRESSURE HIGH LIMIT SWITCH	<___>	ALM/NORMAL		BI	~	~	~	<___>	<___>	~	~	~	~	TRUE		<___>	<___>	①	~
	OA-FLT-P-HL	OUTSIDE AIR FILTER PRESSURE HIGH LIMIT SWITCH	<___>	ALM/NORMAL		BI	~	~	~	<___>	<___>	~	~	~	~	TRUE		<___>	<___>	①	~

① CONTRACTOR TO COORDINATE WITH FIELD INSPECTOR/END USER ON M&C ROUTING NAME.

② ALLOWABLE OPERATIONAL PRESSURE RANGE TO BE OBTAINED FROM FAN MANUFACTURE.

NOTE 1: THE CONTRACTOR SHALL COMPLETE THE POINTS SCHEDULE AS SPECIFIED AND AS DESCRIBED IN THE POINTS SCHEDULE INSTRUCTIONS DRAWING

NOTE 2: UNIT MANUFACTURERS PROOFS AND SAFETIES: THE CONTRACTOR SHALL SHOW EACH PROOF AND SAFETY AS A SEPARATE ROW

NOTE 3: SYS-OCC: AS DESCRIBED IN THE POINTS SCHEDULE INSTRUCTIONS, OVERRIDE OF SYS-OCC IS ACCOMPLISHED THROUGH THE SYSTEM SCHEDULER

NOTE 4: ALARM CONDITIONS MARKED WITH A SINGLE ASTERISK SHALL BE ACTIVE ONLY WHEN THE SYSTEM IS IN OCCUPIED MODE AND HAS BEEN IN OCCUPIED MODE FOR MORE THAN : *=5 MINUTES, **=30 MINUTES

NOTE 5: UNIT STATUS: SERVES AS A MONITORED POINT AT THE M&C SOFTWARE AND AS A HEATING/COOLING REQUEST TO THE BOILER, CHILLER SERVING THIS SYSTEM

US Army Corps of Engineers ®

MARK	DESCRIPTION	DATE	APPD

Designed by: TK CRONIN | Drawn By: TKC | Date: 13 JUL 2020 | Rev:
Submittal Status: RTA | Spec No: 2145 | Project No:
Reviewed By: S. BARKMANN | File No: 233-25-0665 | File Name: W69M_GTEB
Submitted by: Maj. Timothy A. Lee, P.E. | Size:22" x 34" Scale:1/2" = 1'-0" | Plot Date:7/10/2020 12:29:01 PM

US ARMY CORPS OF ENGINEERS

SACRAMENTO DISTRICT
IN-HOUSE DESIGN
1325 J STREET
SACRAMENTO, CA 95814

FT. HUACHUCA

A2

GROUND TRANSPORT EQUIPMENT BUILDING

HVAC CONTROLS

SHEET IDENTIFICATION
M-807

RTA

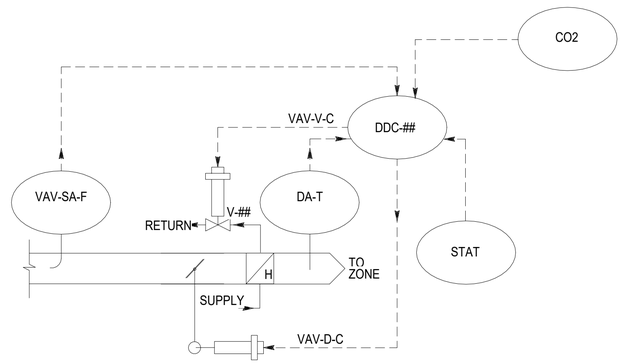

VAV BOX WITH REHEAT (SEE SCHEDULE)

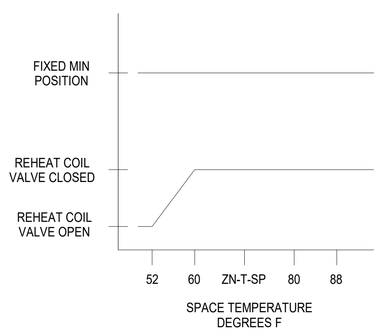

VAV BOX WITH REHEAT
UNOCCUPIED MODE SEQUENCING

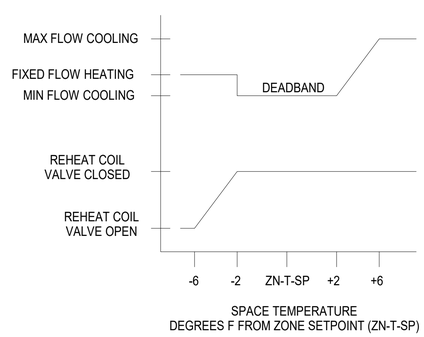

VAV BOX WITH REHEAT
OCCUPIED MODE SEQUENCING

US Army Corps of Engineers ®

MARK	DESCRIPTION	DATE	APPR

Designed by: J. STONE
Drawn By: J. STONE
Submittal Status: RTA
Reviewed by: S. BARMANN
Submitted by: Maj. Timothy A. Lee, P.E. Chief, Mechanical Engineering Section
Date: 13 JUL 2020
Rev:
Spec No: 2145
Project No:
File No: 233-25-0665
File Name: W65M_GTEB
Size:22" x 34" Plot Scale:1 TO SCALE Plot Date:7/10/2020 12:29:01 PM

US ARMY CORPS OF ENGINEERS
SACRAMENTO DISTRICT
IN-HOUSE DESIGN
1325 J STREET
SACRAMENTO, CA 95814

FT. HUACHUCA AZ

GROUND TRANSPORT
EQUIPMENT BUILDING

HVAC CONTROLS

SHEET IDENTIFICATION
M-808

RTA

VAV TERMINAL WITH REHEAT

DDC HARDWARE: <DDC##>
DDC HARDWARE LOCATION: <___>
NODE ADDRESS: Domain = <___>, Subnet = <___>, Node = <___>
NODE ID: <___>

FUNCTION	NAME	DESCRIPTION	SETTING (WITH UNITS)	RANGE (WITH UNITS)	nci/CP NAME	I/O TYPE	LDP AND M&C DISPLAY: LDP VIEW REQ'D	M&C: DISP REQ'D	M&C: TREND REQ'D	M&C: SNVT NAME	M&C: SNVT TYPE	OVERRIDES: LDP OVRD REQ'D	OVRD: M&C OVRD REQ'D	OVRD: SNVT NAME	OVRD: SNVT TYPE	ALARMS: ALARM CONDITION (SEE NOTES)	ALARM PRIORITY	ALARM: SNVT NAME	ALARM: SNVT TYPE	ALARM: M&C ROUTING NAME	ALARM: BLDG ROUTING REQ'D
PROOFS & SAFETIES	<___>	<UNIT MANUFACTURER'S PROOF> (SEE NOTES)	<___>	ALM/NORMAL		<BI>	~	~	~	~	~	~	~	~	~	~		< >	< >	1	~
	<___>	<UNIT MANUFACTURER'S SAFETIES> (SEE NOTES)	<___>	ALM/NORMAL		<BI>	~	~	~	~	~	~	~	~	~	ALM		< >	< >	1	~
START/STOP	SYS-OCC	OCCUPANCY INPUT (FROM SYSTEM SCHEDULER)	~	~		NVI	~	X	~	< >	< >	SEE NOTES				~		~	~	~	~
	ZN-OCC	ZONE OCCUPANCY INPUT	~	~		BI	~	X	~	< >	< >	~	~	~	~	~		~	~	~	~
	EFF-OCC	EFFECTIVE OCCUPANCY	~	OCC/UNOCC		NVO	~	X	~	< >	OCCUPANCY	~	~	~	~	~		~	~	~	~
	HTG-RQST1 CLG-RQST1	UNIT STATUS HTG AND OR CLG REQUEST (SEE NOTE)	~	<HVAC_HEAT/HVAC_OFF>		NVO	~	X	~	<___>	HVAC_STATUS	~	~	~	~	~		~	~	~	~
ZONE TEMPERATURE CONTROL	ZN-T	ZONE TEMPERATURE	~	<___>		AI	~	X	X	<___>	TEMP_P	~	~	~	~	** ZN-T MORE THAN 77 DEG F OR BELOW 68 DEG F		<___>	<___>	1	~
	ZN-T-SP	ZONE TEMPERATURE SETPOINT	OCC ADJ	78 DEG F		AI	~	X	~	< >	< >	~	X	< >	< >	~		~	~	~	~
	ZN-T-SP-UNOCC	ZONE TEMPERATURE SETPOINT FOR UNOCCUPIED MODE	HEAT:55°, COOL: 82°	~		~	~	~	~	< >	< >	~	~	< >	< >	~		~	~	~	~
	VAV-SA-F	VAV SUPPLY AIR FLOW	~	<___>		AI	~	X	~	< >	< >	~	~	~	~	~		< >	< >	1	~
	VAV-SA-F-SP	VAV SUPPLY AIR FLOW SETPOINT	RESET	~		~	~	~	~	< >	< >	~	~	~	~	~		~	~	~	~
	VAV-D-C	VAV DAMPER COMMAND	~	<0-100% OPEN>		AO	~	X	X	< >	< >	~	~	~	~	~		~	~	~	~
	VAV-V-C	VAV REHEAT VALVE COMMAND	~	<0-100% OPEN>		AO	~	X	~	< >	< >	~	~	~	~	~		~	~	~	~
		ZONE TEMPERATURE SETPOINT DEADBAND	<5 DEG F>	~		~	~	~	~	~	~	~	~	~	~	~		~	~	~	~
		VAV DAMPER PID LOOP SETTINGS	<___>	~		~	~	~	~	~	~	~	~	~	~	~		~	~	~	~
		VAV VALVE PID LOOP SETTINGS	<___>	~		~	~	~	~	~	~	~	~	~	~	~		~	~	~	~
OTHER POINTS	VAV-DA-T	VAV DISCHARGE AIR TEMPERATURE	~	<___>		AI	~	X	X	<___>	TEMP_P	~	~	~	~	~		< >	< >	1	~
	WN-OCC	WINDOW OCCUPANCY INPUT																			

ALARM GENERATOR DDC HARDWARE INFORMATION:

DDC HARDWARE: <DDC##><INTEGRATED>
DDC HARDWARE LOCATION: <___>
NODE ADDRESS: Domain = <___>, Subnet = <___>, Node = <___>
NODE ID: <___>

1 CONTRACTOR TO COORDINATE WITH FIELD INSPECTOR/END USER ON M&C ROUTING NAME.

NOTE 1: THE CONTRACTOR SHALL COMPLETE THE POINTS SCHEDULE AS SPECIFIED AND IS DESCRIBED IN THE POINTS SCHEDULE INSTRUCTIONS DRAWING

NOTE 2: UNIT MANUFACTURERS PROOS AND SAFETIES: THE CONTRACTOR SHALL SHOW EACH PROOF AND SAFETY AS A SEPARATE ROW.

NOTE 3: SYS-OCC: AS DESCRIBED IN THE POINTS SCHEDULE INSTRUCTIONS, OVERRIDE OF SYS-OCC IS ACCOMPLISHED THROUGH THE SYSTEM SCHEDULER

NOTE 4: ALARM CONDITIONS MARKED WITH A SINGLE ASTERISK SHALL BE ACTIVE ONLY WHEN THE THE SYSTEM IS IN OCCUPIED MODE AND HAS BEEN IN OCCUPIED MODE FOR MORE THAN: *=5 MINUTES, **=30 MINUTES

NOTE 5: HTG-RQST1 AND CLG-RQST1: SERVES AS A MONITORED POINT AT THE M&C SOFTWARE (FRONT-END) AND AS A HEATING/COOLING REQUEST TO THE BOILER, CHILLER SERVING THIS SYSTEM

Sequences of Operation for Terminal Units

Zone Temperature Control - VAV Box with Reheat

Install DDC hardware to perform this Sequence of Operation and to provide SNVT inputs and outputs as specified and shown on the Points Schedule. Unless otherwise specified, all modulating control shall be proportional-integral (PI) control.

a. Occupancy Modes:

(1) Occupied: The VAV box DDC Hardware shall be in the Occupied Mode when the local space occupancy input(s) (ZN-OCC) indicate that the space is occupied or when the input from the System Scheduler (SYS-OCC) is occupied.

(2) Unoccupied: The VAV box DDC Hardware shall be in the Unoccupied Mode when the local space occupancy input(s) (ZN-OCC) indicate that the space is unoccupied and the input from the System Scheduler (SYS-OCC) is unoccupied.

b. Zone Temperature Control:

(1) In the Occupied Mode the zone temperature setpoint (ZN-T-SP) shall be at the configured setpoint or at the occupant-adjustable setpoint via the wall-mounted thermostat, as shown.

(2) In the Unoccupied Mode the zone temperature setpoint (ZN-T-SP) shall be at the configured setpoint as shown.

(3) The DDC Hardware shall modulate the VAV box damper to maintain VAV box supply air flow (VAV-SA-F) at setpoint as measured by a multi-point flow sensing element at the inlet to the VAV box. Sequencing shall be as shown: Upon a rise in zone temperature above zone temperature setpoint (ZN-T-SP), subject to the zone temperature setpoint deadband as shown, the airflow setpoint shall be adjusted between minimum and maximum flow based on the difference between zone temperature and zone temperature setpoint as shown. Upon a fall in zone temperature below zone temperature setpoint, subject to the deadband as shown, the airflow shall be maintained at a fixed air flow setpoint (with a setting independent of the cooling minimum air flow), and the heating valve shall modulate towards open or the staged electric resistance heating coil(s) shall cycle on in sequence.

c. Minimum Ventilation of Carbon Dioxide (CO2) Concentration (Only for densely occupied spaces).
When in the occupied mode, the controller shall measure the zone CO2 concentrations. High zone CO2 concentration alarm shall be provided. If the zone CO2 concentration is greater than 1500 PPM the alarm will be triggered.

US Army Corps of Engineers ®

MARK	DESCRIPTION	DATE	APPD

Designed by: J. STONE | Drawn By: J. STONE | Date: 13 JUL 2020 | Rev:
Submittal Status: RTA | Spec No: 2145 | Project No:
Reviewed by: S. BARMANN | File No: 233-25-0665 | File Name: W6M_GTEB
Submitted by: Ms. Timothy A. Lee, P.E. Chief, Mechanical Engineering Section | Size:22" x 34" Plot Scale: 1"=1'-0" Plot Date:7/10/2020 12:29:01 PM

US ARMY CORPS OF ENGINEERS
SACRAMENTO DISTRICT
IN-HOUSE DESIGN
1325 J STREET
SACRAMENTO, CA 95814

FT. HUACHUCA AZ

GROUND TRANSPORT EQUIPMENT BUILDING

HVAC CONTROLS

SHEET IDENTIFICATION
M-809

RTA

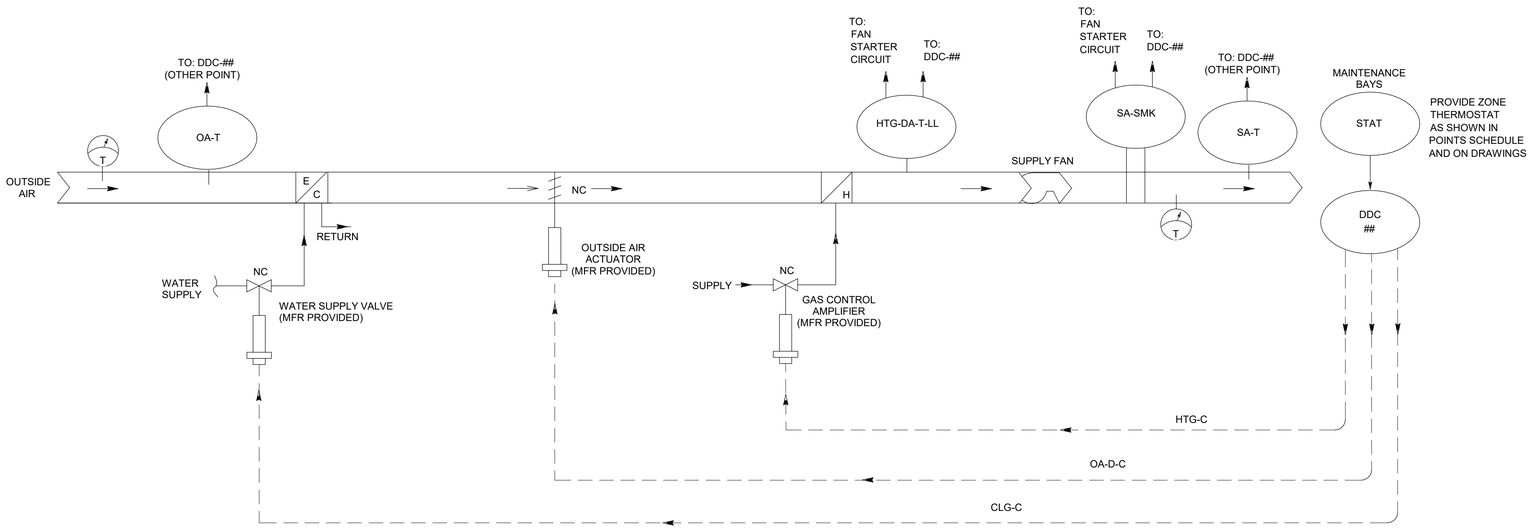

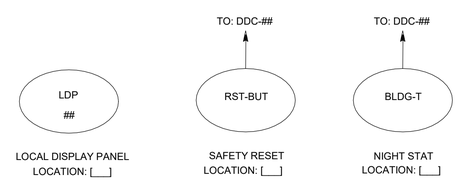

NOTE 1: CONTRACTOR SHALL AFFIX PERMANENT TAGS/LABELS TO ALL DEVICES AS SPECIFIEDNTRACTOR SHALL LABEL ALL DDC I/O SIGNAL LINES: 4-20 mA, VDC, OR SNVT. 3: CONTRACTOR SHALL SHOW A UNIQUE IDENTIFIER FOR EACH DEVICE. WERE MULTIPLE IDENTICAL DEVICES ARE SHOWN (FOR EXAMPLE; DDC CONTROLLER, OA SENSOR, OR EP TRANSDUCER) EACH SHALL BE SEQUENTIALLY NUMBERED. WHERE SEPERATE DDC CONTROLLER BUBBLES ARE USED TO REPRESENT/SHOW A COMMON (OR SINGLE) CONTROLLER EACH BUBBLE SHALL USE THE SAME IDENTIFIER AND NUMBER. DEVICE AND SIGNAL IDENTIFIERS SHALL BE CONSISTENT BETWEEN DRAWINGS.

NOTE 4: CONTRACTOR SHALL UNIQUELY NUMBER ALL ANSI 709.1 DEVICES. THIS NUMBERING SHALL BE CONSISTENT BETWEEN ALL DRAWINGS

SYSTEM: MAU-1, MAU-2, MAU-3

1 MAKEUP AIR UNIT CONTROL SCHEMATIC
12" = 1'-0"

US Army Corps of Engineers ®

MARK	DESCRIPTION	DATE	APPD

Designed by: | Drawn By: A. KLAPHECK | AAK
Submittal Status: RTA
Reviewed by: S. BARMANN
Submitted by: Maj. Timothy A. Lee, P.E.
Chief, Mechanical Design Section
Date: 13 JUL 2020
Rev:
Spec No: 2145
Project No:
File No: 233-25-0665
File Name: W65M_GTEB
Size:22" x 34"
Plot Scale: 1"=1'-0"
Plot Date:7/10/2020 12:29:02 PM

US ARMY CORPS OF ENGINEERS
SACRAMENTO DISTRICT
IN-HOUSE DESIGN
1325 J STREET
SACRAMENTO, CA 95814

FT. HUACHUCA AZ

GROUND TRANSPORT EQUIPMENT BUILDING

HVAC CONTROLS

SHEET IDENTIFICATION
M-810

RTA

Sequences of Operation for Direct Fired Heating, Evaporative Cooling Makeup Air Units

MAU-1, MAU-2, & MAU-3

Install DDC hardware to perform this Sequence of Operation. Unless otherwise specified, all modulating control shall be proportional-integral (PI) control.

a. HAND-OFF-AUTO switches:

MAU fan variable frequency drive (VFD) unit shall accept a Fire Alarm Panel (FAP) signal that takes precedence over all other VFD inputs and shall cause the VFD to turn off. MAU fan variable frequency drive (VFD) unit shall have an integral H-O-A switch:

(1) HAND: With the H-O-A switch in HAND position, the supply fan shall start and run continuously, subject to Safeties. Fan speed shall be under manual-operator control.

(2) OFF: With the H-O-A switch in OFF position, the supply fan shall stop.

(3) AUTO: With the H-O-A switch in AUTO position, the supply fan shall run subject to the Supply Fan Start/Stop Signal (SF-SS) and Safeties. Fan speed shall be under control of the DDC Hardware.

b. Occupancy Modes: The system shall obtain its Occupancy Mode input from the System Scheduler as specified and shown. The system shall operate in one of the following modes: Occupied or Unoccupied.

c. Proofs and Safeties:

(1) The supply fan and all DDC Hardware control loops shall be subject to Proofs and Safeties. Safeties shall be direct-hardwire interlocked to the VFD. DDC Hardware shall monitor all proofs and safeties and failure of any proof shall result in all control loops being disabled and the AHU fan being commanded off until reset. Activation of the safety shall result in supply fans commanded to shut off.

(2) Proofs:

(a) Supply fan status (SF-S)

(3) Safety:

(a) Supply air smoke (SA-SMK)

(4) DDC Hardware reset of all proofs and safeties shall be via a local binary push-button (RST-BUT) input to the DDC Hardware, via a remote command to the DDC Hardware via SNVT or both (where the Contractor provides both reset functions and the operator can use either one to perform the reset), as shown on the Points Schedule drawing.

d. System Enable and Loop Enable

(1) Occupied mode: The supply fan shall be enabled (SYS-ENA) and commanded to run (SF-SS). All control loops shall be enabled.

(2) Unoccupied mode: Supply fans shall be commanded off.

(3) Heating Mode: When OA-T is below 55°F, heating mode shall be enabled. The heater shall modulate to maintain SA-T-SP of 55°F. The gas control amplifier located in the unit shall modulate the heating to maintain a supply air temperature of 55°F.

(4) Cooling Mode: When OA-T is above 80F, evaporative cooling mode shall be enabled. The supply fan shall be commanded to run at maximum capacity to maintain a space temperature setpoint of 80F. When cooling is enabled the unit shall signal the water supply valve to open, signal the water drain valve to close and energize the recirculating pump. The pump recirculates water from the sump over the evaporative cooling media and a float valve maintains the water level in the sump. The unit will automatically disable the pump and drain the sump for a 10 minute interval (adj.), once every 24 hours (adj.). After the drain interval, fresh water fills the sump reducing mineral concentrations. A non-adjustable freeze protection sensor shall also drain the sump, disable the pump and drain the supply line when outside air falls below 45 F.

e. Fan Capacity Control:

(1) Minimum Capacity: When the MAU is in occupied mode and there is no signal for cooling, the supply fan shall run at 50% speed. A space differential pressure sensor shall report to the DDC. The supply fan shall ramp up from 50% incrementally until the space differential pressure is maintained above the sensor setpoint of -0.05"W.G.

(2) Maximum Capacity: When the MAU is in occupied mode and in cooling mode, the supply fan shall run at 100% airflow until the space setpoint is reached.

THERMOSTATS AND OCCUPANCY SENSORS

SYSTEM SERVICE	TERMINAL UNIT IDENTIFIER	SPACES SERVED	STAT LOCATION	ZN-T DISPLAY	ZN-T-SP ADJUST	UNOCC OVERRIDE PUSHBUTTON	UNOCC OVERRIDE TIME	OCC SENSOR	OTHER
MAU	N/A	BAYS	SEE DWGS	SUMMER: 85°F	+/- 2°F	NO	N/A	NO	

OCCUPANCY SCHEDULE

	SYSTEM DEFAULT SCHEDULE		SUPERVISORY MONITORING & CONTROL SCHEDULE			# OCC SENSORS TO PUT MAU IN OCC MODE
SYSTEM	OCCUPIED	UNOCCUPIED	OCCUPIED	UNOCCUPIED	WARM-UP	
MAU	M-F 0600-1800	OTHERWISE	M-F 0600-1800	OTHERWISE	M-F 0500-0600	~

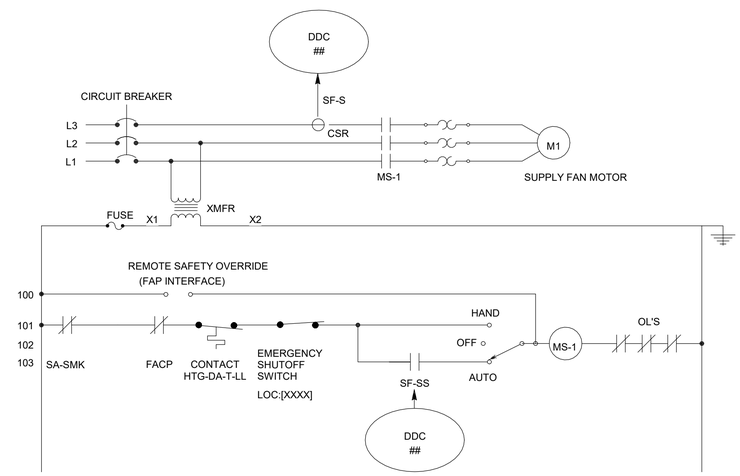

US Army Corps of Engineers ®

MARK	DESCRIPTION	DATE	APPD

Designed by: TK CRONIN | Drawn By: TKC | Date: 13 JUL 2020 | Rev:

Submittal Status: RTA | Spec No: 2145 | Project No:

Reviewed by: S. BARMANN | File No: 233-25-0665 | File Name: W65M_GTEB

Submitted by: Size/Z* x 34* Scale: 1" = 1'-0" Plot Date:7/10/2020 12:29:02 PM

US ARMY CORPS OF ENGINEERS

SACRAMENTO DISTRICT
IN-HOUSE DESIGN
1325 J STREET
SACRAMENTO, CA 95814

FT. HUACHUCA AZ

GROUND TRANSPORT EQUIPMENT BUILDING

HVAC CONTROLS

SHEET IDENTIFICATION
M-811

RTA

MAKEUP AIR UNIT - POINT SCHEDULE

DDC HARDWARE: <DDC##>
DDC HARDWARE LOCATION: <___>
NODE ADDRESS: Domain = <___>, Subnet = <___>, Node = <___>
NODE ID: <___>

FUNCTION	NAME	DESCRIPTION	DDC HARDWARE ID	SETTING (WITH UNITS)	RANGE (WITH UNITS)	CIO TYPE	HOA REQ'D	CONFIG. TYPE	M&C VIEW AND OVRD	LDP VIEW AND OVRD	TREND REQ'D	ALARMING			PRIMARY POINT INFORMATION		OVERRIDES		CONFIGURATION INFORMATION
												ALARM CONDITION	ALARM PRIORITY	M&C ROUTING	SNVT NAME	SNVT TYPE	SNVT NAME	SNVT TYPE	
PROOFS & SAFETIES	HTG-DA-T-LL	HEATING COIL DISCHARGE TEMPERATURE LOW LIMIT SWITCH	<___>	39 DEG F	ALM/NORMAL	BI		H				ALM	CRIT	(1)	<___>	<___>			<___>
	SA-SMK	SUPPLY AIR SMOKE	<___>		ALM/NORMAL	BI		H				ALM	CRIT	(1)	<___>	<___>			<___>
	DOOR-S	ROLL-UP DOOR SWITCH OPEN/CLOSED STATUS	<___>		ALM/NORMAL	BI		H				ALM	CRIT	(1)	<___>	<___>			<___>
	RST-BUT	SYSTEM RESET BUTTON (FOR SAFETIES)	<___>			AI			~						<___>	<___>	<___>	<___>	<___>
	SF-S	SUPPLY FAN STATUS	<___>		ON/OFF	BI			V	V	~	SUPPLY FAN PROOF FAILED	INFO	(1)	<___>	<___>	<___>	<___>	<___>
START/STOP	BLDG-T	BUILDING TEMPERATURE (NIGHT STAT)	<___>		<___>	AI			V	~	~	BLDG-T IS LESS THAN BLDG-T-LL	INFO	(1)	<___>	TEMP_P	<___>	<___>	<___>
	BLDG-T-LL	BUILDING TEMPERATURE LOW LIMIT SETPOINT	<___>	40 DEG F				C	VO	~	~				<___>	<___>	<___>	<___>	<___>
	SYS-OCC	OCCUPANCY INPUT (FROM SCHEDULER)	<___>		<___>	NET-IN			V	V	~	~	INFO	(1)	<___>	<___>	<___>	<___>	<___>
	SF-SS	SUPPLY FAN START/STOP	<___>		ON/OFF	~	~		VO	V	~				<___>	<___>	<___>	<___>	<___>
	UNIT STATUS	UNIT STATUS (HTG AND/OR CLG REQUEST) (SEE NOTE)	<___>		<HVAC_HEAT/ HVAC_OFF> <___>	NET-OUT			V	~	~	~	INFO	(1)	<___>	HVAC_STATUS	<___>	<___>	<___>
ZONE TEMPERATURE CONTROL	ZN-T	ZONE TEMPERATURE	<___>		<___>	AI			V	V	X	** ZN-T IS MORE THAN 37 DEG F ABOVE OR BELOW ZN-T-SP	INFO	(1)	<___>	TEMP_P	<___>	<___>	<___>
	ZN-T-SP	ZONE TEMPERATURE SETPOINT	<___>	55°F / 85°F	<___>	AI			VO	V	X				<___>	<___>	<___>	<___>	<___>
	HTG-C	HEATING MODE COMMAND	<___>		ON/OFF	AO	~		VO	V	X	~	INFO	(1)	<___>	<___>	<___>	<___>	<___>
	CLG-C	COOLING MODE COMMAND	<___>		ON/OFF	AO	~		VO	V	X	~	INFO	(1)	<___>	<___>	<___>	<___>	<___>
	OA-D-C	OUTSIDE AIR DAMPER COMMAND	<___>		OPEN/CLOSED	AO	~		VO	V	X	~	INFO	(1)	<___>	<___>	<___>	<___>	<___>
	BURNER TURNDOWN PID LOOP SETTINGS	PROPORTIONAL CONSTANT	<___>	<___>				C											<___>
		INTEGRAL CONSTANT	<___>	<___>				C											<___>
		BIAS	<___>	<___>				C											<___>
		MAXIMUM OUTPUT	<___>	<___>				C											<___>
		MINIMUM OUTPUT	<___>	<___>				C											<___>
OTHER POINTS	SA-T	SUPPLY AIR TEMPERATURE	<___>		<___>	AI			V	~	~	~	INFO	(1)	<___>	<___>	<___>	<___>	<___>
	OA-T	OUTSIDE AIR TEMPERATURE	<___>		<___>	AI			V	~	~	~	INFO	(1)	<___>	<___>	<___>	<___>	<___>

(1) CONTRACTOR TO COORDINATE WITH FIELD INSPECTOR/END USER ON M&C ROUTING NAME.

NOTE 1: THE CONTRACTOR SHALL COMPLETE THE POINTS SCHEDULE AS SPECIFIED AND AS DESCRIBED IN THE POINTS SCHEDULE INSTRUCTIONS DRAWING

NOTE 2: UNIT MANUFACTURERS PROOFS AND SAFETIES: THE CONTRACTOR SHALL SHOW EACH PROOF AND SAFETY AS A SEPARATE ROW

NOTE 3: SYS-OCC: AS DESCRIBED IN THE POINTS SCHEDULE INSTRUCTIONS, OVERRIDE OF SYS-OCC IS ACCOMPLISHED THROUGH THE SYSTEM SCHEDULER

NOTE 4: ALARM CONDITIONS MARKED WITH A SINGLE ASTERISK SHALL BE ACTIVE ONLY WHEN THE SYSTEM IS IN OCCUPIED MODE AND HAS BEEN IN OCCUPIED MODE FOR MORE THAN : *=5 MINUTES, **=30 MINUTES

US Army Corps of Engineers ®

MARK	DESCRIPTION	DATE	APPR.

Designed by: A. KLAPHECK | Drawn By: A. KLAPHECK
Submittal Status: RTA
Reviewed by: S. BARMANN
Submitted by: M. Timothy A. Lee, P.E.
Date Approved: Approved by Division:
Date: 13 JUL 2020
Spec No: 2145
File No: 233-25-0665
Size:22" x 34" Scale: 1/8" = 1'-0"
Plot Date:7/10/2020 12:29:02 PM
Rev:
Project No:
File Name: W69AL_GTEB

US ARMY CORPS OF ENGINEERS
SACRAMENTO DISTRICT
IN-HOUSE DESIGN
1325 J STREET
SACRAMENTO, CA 95814

FT. HUACHUCA AZ
GROUND TRANSPORT EQUIPMENT BUILDING
HVAC CONTROLS

SHEET IDENTIFICATION
M-812

RTA

NOTE 1: CONTRACTOR SHALL AFFIX PERMANENT TAGS/LABELS TO ALL DEVICES AS SPECIFIED

NOTE 2: CONTRACTOR SHALL LABEL ALL DDC I/O SIGNAL LINES: 4-20 mA, VDC OR SNVT

NOTE 3: CONTRACTOR SHALL SHOW A UNIQUE IDENTIFIER FOR EACH DEVICE. WHERE MULTIPLE IDENTICAL DEVICES ARE SHOWN (FOR EXAMPLE: DDC CONTROLLER, OA SENSOR, OR EP TRANSDUCER) EACH SHALL BE SEQUENTIALLY NUMBERED. WHERE SEPARATE DDC CONTROLLER BUBBLES ARE USED TO REPRESENT/SHOW A COMMON (OR SINGLE) CONTROLLER EACH BUBBLE SHALL USE THE SAME IDENTIFIER AND NUMBER. DEVICE AND SIGNAL IDENTIFIERS SHALL BE CONSISTENT BETWEEN DRAWINGS.

NOTE 4: CONTRACTOR SHALL UNIQUELY NUMBER ALL ANSI 709.1 DEVICES. THIS NUMBERING SHALL BE CONSISTENT BETWEEN ALL DRAWINGS

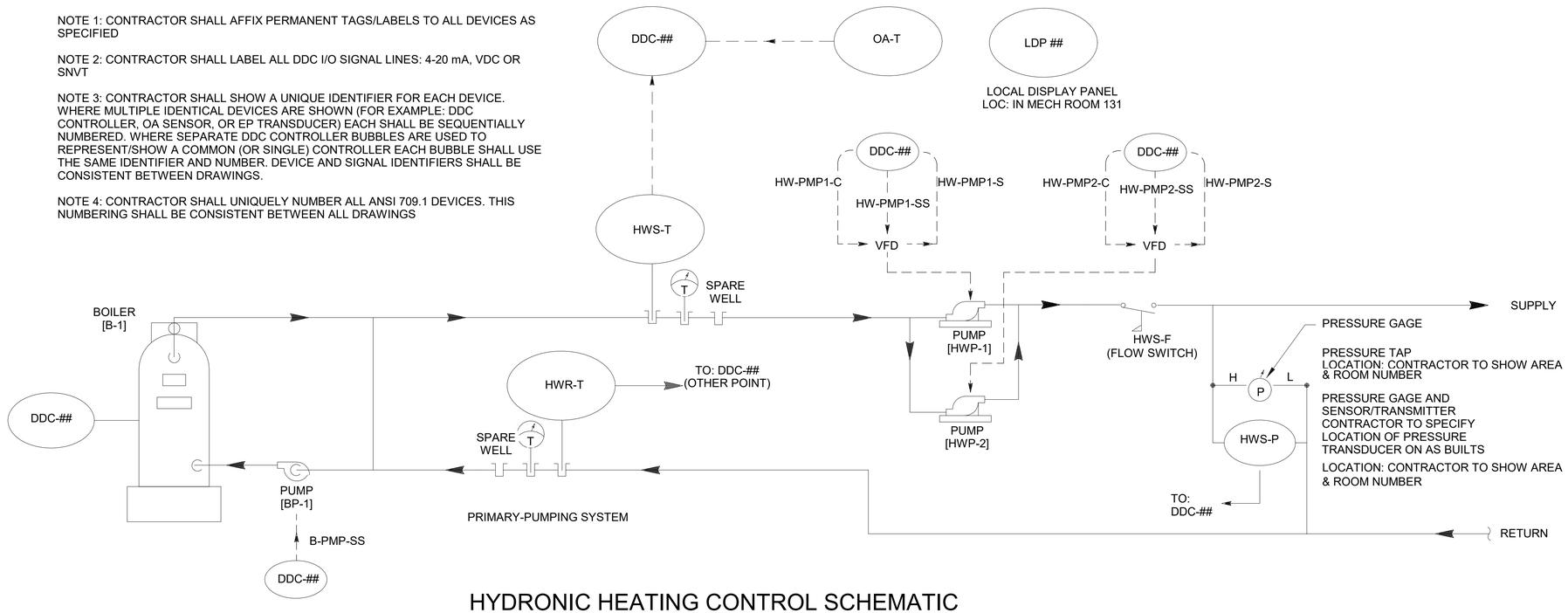

HYDRONIC HEATING CONTROL SCHEMATIC

1 HYDRONIC HEATING CONTROL SCHEMATIC

N.T.S.

US Army Corps of Engineers ®

MARK	DESCRIPTION	DATE	APPD

US ARMY CORPS OF ENGINEERS

SACRAMENTO DISTRICT
IN-HOUSE DESIGN
1325 J STREET
SACRAMENTO, CA 95814

Designed by: J. STONE | Drawn By: J. STONE | Date: 13 JUL 2020 | Rev:
Submittal Status: RTA | Spec No: 2145 | Project No:
Reviewed by: S. BARMANN | Submitted by: Maj. Timothy A. Lee, P.E. Chief, Mechanical Design Section | File No: 233-25-0665 | File Name: W65M_GTEB
Size:22" x 34" Plot Scale:1:1 S Plot Date:7/10/2020 12:29:03 PM

FT. HUACHUCA AZ

GROUND TRANSPORT EQUIPMENT BUILDING

HVAC CONTROLS

SHEET IDENTIFICATION
M-813

RTA

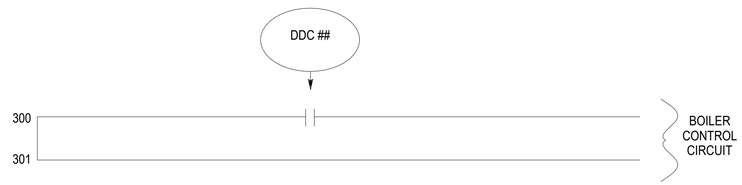

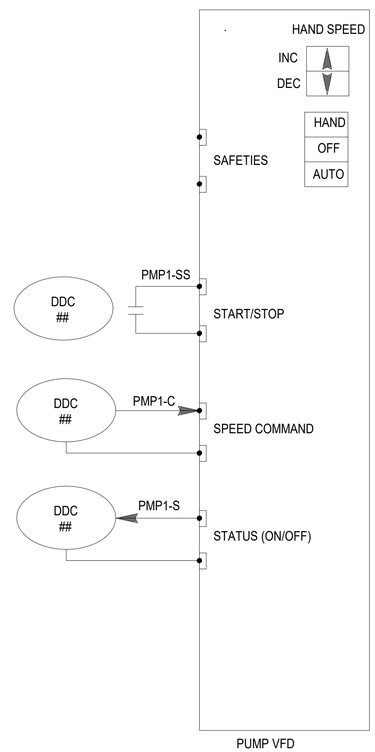

NOTE 1: THIS IS A FUNCTIONAL REPRESENTATION.
CONTRACTOR WIRING MAY DIFFER

HYDRONIC HEATING LADDER DIAGRAM

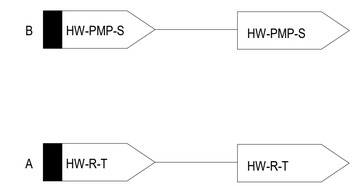

OTHER POINTS

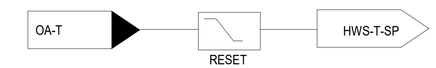

BOILER CONTROL
LOOOP (OR HW TEMP)

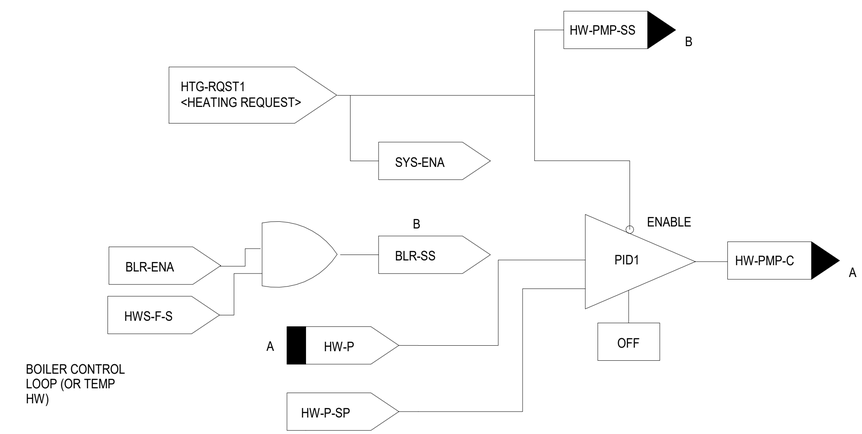

HW PRESSURE CONTROL
LOOP

HYDRONIC HEATING CONTROL LOGIC DIAGRAM

US Army Corps of Engineers ®

MARK	DESCRIPTION	DATE	APPD

Designed by: J. STONE
Drawn By: J. STONE
Submittal Status: RTA
Reviewed by: S. BARMANN
Submitted by: Dr. Timothy A. Lee, P.E.
Chief, Mechanical Engineering Section
Date: 13 JUL 2020
Rev:
Spec No: 2145
Project No:
File No: 233-25-0665
File Name: W65M_GTEB
Size:22" x 34"
Plot Scale: 1" = 1'-0"
Plot Date:7/10/2020 12:29:03 PM

US ARMY CORPS OF ENGINEERS
SACRAMENTO DISTRICT
IN-HOUSE DESIGN
1325 J STREET
SACRAMENTO, CA 95814

FT. HUACHUCA
AZ

GROUND TRANSPORT
EQUIPMENT BUILDING

HVAC CONTROLS

SHEET
IDENTIFICATION
M-814

RTA

HYDRONIC HEATING HOT WATER FROM SINGLE-BUILDING BOILER PLANT

NODE: DDC##
NODE LOCATION: <___>
NODE ADDRESS: Domain = <___>, Subnet = <___>, Node = <___>
NODE ID: <___>

ALARM GENERATOR DDC HARDWARE INFORMATION:

DDC HARDWARE: <DDC##><INTEGRATED>
DDC HARDWARE LOCATION: <___>
NODE ADDRESS: Domain = <___>, Subnet = <___>, Node = <___>
NODE ID: <___>

							LDP AND M&C DISPLAY					OVERRIDES				ALARMS					
							LDP	M&C				LDP	M&C								
FUNCTION	NAME	DESCRIPTION	SETTING (WITH UNITS)	RANGE (WITH UNITS)	nci/CP NAME	I/O TYPE	VIEW REQ'D	DISP REQ'D	TREND REQ'D	SNVT NAME	SNVT TYPE	OVRD REQ'D	OVRD REQ'D	SNVT NAME	SNVT TYPE	ALARM CONDITION (SEE NOTES)	ALARM PRIORITY	SNVT NAME	SNVT TYPE	M&C ROUTING NAME	BLDG ROUTING REQ'D
PROOFS & SAFETIES	HW-PMP1-S	HOT WATER PUMP 1 STATUS	~	ON/OFF			X	X	~	<__>	<__>	~	~	~	~	~		<__>	<__>	~	~
	HW-PMP2-S	HOT WATER PUMP 2 STATUS	~	ON/OFF			X	X	~	<__>	<__>	~	~	~	~	~		<__>	<__>	~	~
START/STOP	SYS-ENA	SYSTEM ENABLE	~	ENABLE/DISABLE		<NVI>	X	X	~	<__>	<__>	~	X	<__>	<__>	~		~	~	~	~
	HW-PMP1-SS	HOT WATER PUMP 1 START/STOP	~	START/STOP		BO	~	~	~	<__>	<__>	~	X	<__>	<__>	~		~	~	~	~
	HW-PMP2-SS	HOT WATER PUMP 2 START/STOP	~	START/STOP		BO	~	~	~	<__>	<__>	~	X	<__>	<__>	~		~	~	~	~
PRESSURE CONTROL	HW-P-SP	HOT WATER SUPPLY PRESSURE SETPOINT	(2)	~		~	~	~	~	<__>	<__>	~	X	<__>	<__>	~		~	~	~	~
	HW-P	HOT WATER SUPPLY PRESSURE	~	<___>		AI	X	X	X	<__>	<__>	~	~	~	~	* HWS-P MORE THAN 25% ABOVE OR BELOW HWS-P-SP		<___>	<___>	(1)	~
		HOT WATER PUMP PID LOOP SETTINGS	<___>	~		~	~	~	~	<__>	<__>	~	~	<__>	<__>	~		~	~	~	~
	HW-PMP1-C	HOT WATER VFD PUMP 1 SPEED COMMAND	~	<MIN - 1750 RPM>		AO	~	X	~	<__>	<__>	~	~	~	~	~		~	~	~	~
	HW-PMP2-C	HOT WATER VFD PUMP 2 SPEED COMMAND	~	<MIN - 1750 RPM>		AO	~	X	~	<__>	<__>	~	~	~	~	~		~	~	~	~
HOT WATER TEMPERATURE CONTROL	BLR-S	BOILER STATUS (STATE)	~	START/STOP		<BI>	X	X	X	<__>	<__>	~	~	~	~	~		~	~	~	~
	BLR-SS	BOILER START/STOP	~	START/STOP		BO	~	~	~	<__>	<__>	~	X	<__>	<__>	~		~	~	~	~
	HWS-T	HOT WATER SUPPLY TEMPERATURE	140°F	<___>		AI	X	X	X	<__>	<__>	~	~	~	~	* HWS-T MORE THAN 41 DEG F ABOVE OR BELOW HWS-T-SP		<___>	<___>	(1)	~
	HWS-T-SP	HOT WATER SUPPLY TEMPERATURE SETPOINT	(2)	~		~	X	X	X	<__>	<__>	~	X	<__>	<__>	~		~	~	~	~
	OA-T-LL	OUTSIDE AIR TEMPERATURE LOWER LIMIT	65°F	~		AO	~	~	~	<__>	<__>	~	~	~	~	~		~	~	~	~
	OA-T	OUTSIDE AIR TEMPERATURE	~	<___>		AI	X	X	X	<__>	<__>	~	~	~	~	~		~	~	~	~
SYSTEMS SERVED	HTG-RQST1	FROM AIR TERMINAL UNITS	~	START/STOP		NVI	X	X	~	<__>	<__>	~	~	~	~	~		~	~	~	~
OTHER POINTS	HWR-T	HOT WATER RETURN TEMPERATURE	~	<___>		AI	X	X	~	<__>	<__>	~	~	~	~	~		~	~	~	~
	BLR-S	BOILER STATUS (STATE)	~	ON/OFF		<BI>	X	X	X	<__>	<__>	~	~	~	~	~		~	~	~	~

(1) CONTRACTOR TO COORDINATE WITH FIELD INSPECTOR/END USER ON M&C ROUTING NAME.

(2) SEE DRAWINGS AND SPECIFICATIONS.

HYDRONIC HEATING POINTS SCHEDULE

HYDRONIC HEATING HOT WATER FROM SINGLE-BUILDING BOILER

CONTRACTOR SHALL INSTALL DDC HARDWARE TO PERFORM THIS SEQUENCE OF OPERATION AND TO PROVIDE SNVT INPUTS, OUTPUTS AND ALARMS AS SPECIFIED AND SHOWN ON THE POINTS SCHEDULE. UNLESS OTHERWISE SPECIFIED, ALL MODULATING CONTROL SHALL BE PROPORTIONAL-INTEGRAL (PI) CONTROL

A. SYSTEM ENABLE AND LOOP ENABLE
(1) THIS SYSTEM SHALL MONITOR THE ENABLE STATUS OF ALL SYSTEMS SERVED BY THIS SYSTEM. IF ONE OR MORE SYSTEMS SERVED BY THIS SYSTEM ARE NOT ENABLED, THIS SYSTEM SHALL NOT BE ENABLED.
(2) WHEN THIS SYSTEM IS ENABLED (SYS-ENA) AND THE HOT WATER PUMP IS PROOFED ON, THE BOILER CONTROL AND HOT WATER TEMPERATURE CONTROL LOOPS SHALL BE ENABLED.

B. HAND-OFF-AUTO SWITCH: THE HOT WATER PUMP MOTOR STARTED SHALL HAVE AN H-O-A SWITCH:
(1) HAND: WITH THE H-O-A SWITCH IN HAND POSITION, THE PUMP SHALL START AND RUN CONTINUOUSLY.
(2) OFF: WITH THE H-O-A SWITCH IN OFF POSITION, THE PUMP SHALL STOP.
(3) AUTO: WITH THE H-O-A SWITCH IN AUTO POSITION, THE PUMP SHALL RUN SUBJECT TO THE HOT WATER PUMP START/STOP (HW-PMP-SS) COMMAND.

C. HW PRESSURE CONTROL LOOP
THE SYSTEM PUMP SHALL START WHEN A THERMOSTAT CALLS FOR HEAT. WHEN THE PUMP IS ENABLED, THE VARIABLE FREQUENCY DRIVE START/STOP (SS) IS "STARTED" AND THE VARIABLE SPEED PID CONTROL LOOP IN ENABLED AT MINIMUM SPEED (20% OR PER MANUF. RECOMMENDATION) AND WITH A LONG RAMP DURATION DURING INITIAL START-UP (0.8PERCENT PER SECOND OR PER MANUF. RECOMMENDATION). THE DDC SYSTEM SHALL MODULATE THE SPEED OF THE HOT WATER PUMP TO MAINTAIN HOT WATER SYSTEM DIFFERENTIAL PRESSURE TO ITS SETPOINT OF 10 PSIG (FIELD DETERMINED PROPER DIFFERENTIAL PRESSURE SETPOINT). AS THE DIFFERENTIAL PRESSURE INCREASES THE PUMP SPEED SHALL DECREASE.

D. BOILER CONTROL LOOP
THE DDC SYSTEM SHALL MODULATE THE BOILER WATER TEMPERATURE TO ITS SETPOINT. THE HOT WATER SUPPLY TEMPERATURE SETPOINT SHALL BE READJUSTED BASED ON OUTSIDE AIR TEMPERATURE ACCORDING TO THE HOT WATER RESET SCHEDULE.

E. PROOFS AND SAFETIES:
(1) DDC HARDWARE SHALL MONITOR ALL PROOFS AND SAFETIES.
(2) PROOFS: HOT WATER PUMP
(3) DDC HARDWARE RESET OF ALL PROOFS AND SAFETIES SHALL BE VIA A LOCAL BINARY PUSH-BUTTON (RST-BUT) INPUT TO THE DDC HARDWARE, VIA A REMOTE COMMAND TO THE DDC HARDWARE VIA SNVT OR BOTH (WHERE THE CONTRACTOR PROVIDES BOTH RESET FUNCTIONS AND THE OPERATOR CAN USE EITHER ONE TO PERFORM THE RESET), AS SHOWN ON THE POINTS SCHEDULE DRAWING.

F. BOILER CONTROL: WHEN THIS LOOP IS ENABLED, THE DDC HARDWARE SHALL TURN THE BOILER AND BOILER PUMP ON. WHEN THIS LOOP IS DISABLED, THE BOILER AND BOILER PUMP SHALL BE OFF.

G. PUMP CONTROL: SYSTEM PUMPS SHALL ALTERNATE PRIMARY AND STAND-BY FUNCTION.

HYDRONIC HEATING SEQUENCE OF OPERATION

US Army Corps of Engineers ®

MARK	DESCRIPTION	DATE	APPD

US ARMY CORPS OF ENGINEERS
SACRAMENTO DISTRICT
IN-HOUSE DESIGN
1325 J STREET
SACRAMENTO, CA 95814

Designed by: J. STONE | Drawn By: J. STONE | Date: 13 JUL 2020 | Rev:
Submittal Status: RTA | Spec No: 2145 | Project No:
Reviewed by: S. BARMANN | File No: 233-25-0665 | File Name: WBSM_GTEB
Submitted by: Maj Timothy A. Lee, P.E. Chief, Mechanical Design Section | Size:22" x 34" Plot Scale: 1" = 1'-0" Plot Date:7/10/2020 12:29:03 PM

FT. HUACHUCA
GROUND TRANSPORT EQUIPMENT BUILDING
HVAC CONTROLS
A2

SHEET IDENTIFICATION
M-815

RTA

NOTE 1: CONTRACTOR SHALL AFFIX PERMANENT TAGS/LABELS TO ALL DEVICES AS SPECIFIED

NOTE 2: CONTRACTOR SHALL INDICATE LOCATION OF DIFFERENTIAL PRESSURE SENSOR CWS-P AND PRESSURE TAP

NOTE 3: CONTRACTOR SHALL LABEL ALL DDC I/O SIGNAL LINES: 4-20 mA, VDC OR SNVT

NOTE 4: CONTRACTOR SHALL SHOW A UNIQUE IDENTIFIER FOR EACH DEVICE. WHERE MULTIPLE IDENTICAL DEVICES ARE SHOWN (FOR EXAMPLE: DDC CONTROLLER, OA SENSOR, OR EP TRANSDUCER) EACH SHALL BE SEQUENTIALLY NUMBERED. WHERE SEPARATE DDC CONTROLLER BUBBLES ARE USED TO REPRESENT/SHOW A COMMON (OR SINGLE) CONTROLLER EACH BUBBLE SHALL USE THE SAME IDENTIFIER AND NUMBER. DEVICE AND SIGNAL IDENTIFIERS SHALL BE CONSISTENT BETWEEN DRAWINGS.

NOTE 5: CONTRACTOR SHALL UNIQUELY NUMBER ALL ANSI 709.1 DEVICES. THIS NUMBERING SHALL BE CONSISTENT BETWEEN ALL DRAWINGS

NOTE 6: MULTIPLE AHU'S/DEVICES MAY HAVE A COMMON SCHEDULER (SCHD-XX) AND ALARM (ALM-XX) NODES

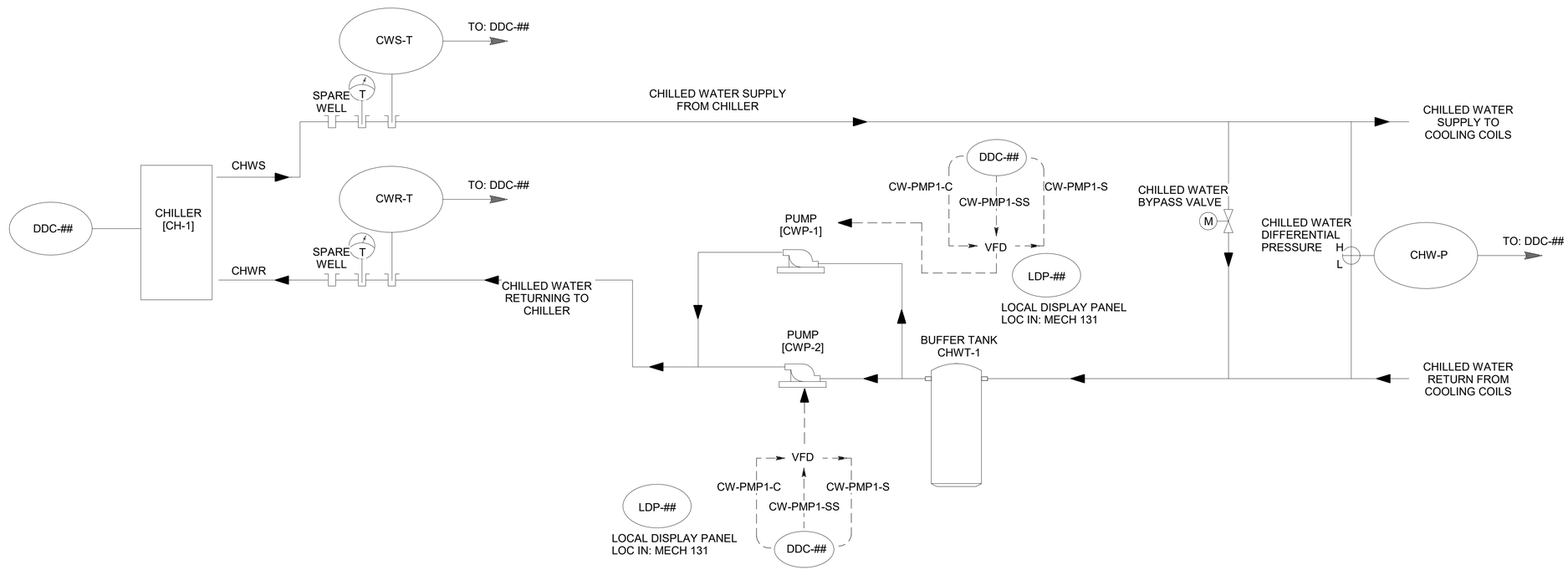

1 CHILLED WATER CONTROL SCHEMATIC

N.T.S.

US Army Corps of Engineers ®

MARK	DESCRIPTION	DATE	APPD

Designed by: J. STONE
Drawn By: J. STONE
Submittal Status: RTA
Reviewed by: S. BARMANN
Submitted by: M. Timothy A. Lee, P.E.
Chief, Mechanical Engineering Section

US ARMY CORPS OF ENGINEERS

SACRAMENTO DISTRICT
IN-HOUSE DESIGN
1325 J STREET
SACRAMENTO, CA 95814

Date: 13 JUL 2020
Rev:
Spec No: 2145
Project No:
File No: 233-25-0665
File Name: W65M_GTEB
Size:22" x 34"
Plot Scale:1:1 S
Plot Date:7/10/2020 12:29:11 PM

FT. HUACHUCA AZ

GROUND TRANSPORT EQUIPMENT BUILDING

HVAC CONTROLS

SHEET IDENTIFICATION
M-816

RTA

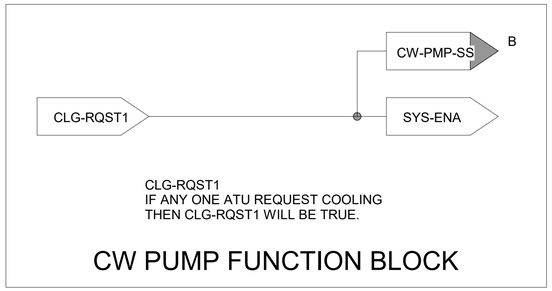

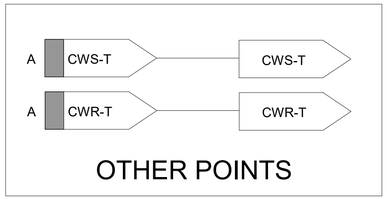

CHILLED WATER CONTROL LOGIC DIAGRAM

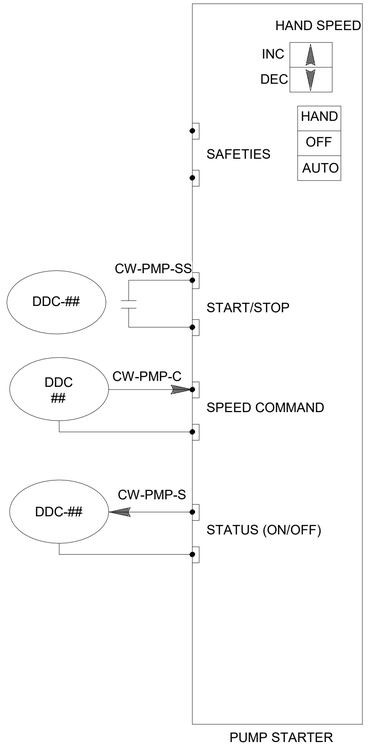

NOTE 1: THIS IS A FUNCTIONAL REPRESENTATION.
CONTRACTOR WIRING MAY DIFFER

CHILLED WATER LADDER DIAGRAM

US Army Corps of Engineers ®

MARK	DESCRIPTION	DATE	APPD

US ARMY CORPS OF ENGINEERS

SACRAMENTO DISTRICT
IN-HOUSE DESIGN
1325 J STREET
SACRAMENTO, CA 95814

Designed by: J. STONE
Drawn By: J. STONE
Submittal Status: RTA
Reviewed By: S. BARMANN
Submitted by: Jul Timothy A. Lee, P.E. Chief, Mechanical Section

Date: 13 JUL 2020
Spec No: 2145
File No: 233-25-0665
Size/2" x 34" Scale: 1" = 1'-0"
Plot Date:7/10/2020 12:29:11 PM

Rev:
Project No:
File Name: W65M_GTEB

FT. HUACHUCA AZ

GROUND TRANSPORT EQUIPMENT BUILDING

HVAC CONTROLS

SHEET IDENTIFICATION
M-817

RTA

CHILLED WATER WITH VARIABLE SPEED PUMPING

NODE: DDC##
NODE LOCATION: <___>
NODE ADDRESS: Domain = <___>, Subnet = <___>, Node = <___>
NODE ID: <___>

ALARM GENERATOR DDC HARDWARE INFORMATION:

DDC HARDWARE: <DDC##><INTEGRATED>
DDC HARDWARE LOCATION: <___>
NODE ADDRESS: Domain = <___>, Subnet = <___>, Node = <___>
NODE ID: <___>

							LDP AND M&C DISPLAY					OVERRIDES				ALARMS					
								M&C													
FUNCTION	NAME	DESCRIPTION	SETTING (WITH UNITS)	RANGE (WITH UNITS)	nci/CP NAME	I/O TYPE	LDP VIEW REQ'D	DISP REQ'D	TREND REQ'D	SNVT NAME	SNVT TYPE	LDP OVRD REQ'D	M&C OVRD REQ'D	SNVT NAME	SNVT TYPE	ALARM CONDITION (SEE NOTES)	ALARM PRIORITY	SNVT NAME	SNVT TYPE	M&C ROUTING NAME	BLDG ROUTING REQ'D
PROOFS & SAFETIES	CW-PMP1-S	CHILLED WATER PUMP 1 STATUS	~	ON/OFF			X	X	~	<___>	<___>	~	~	~	~	~		<___>	<___>	~	~
	CW-PMP2-S	CHILLED WATER PUMP 2 STATUS	~	ON/OFF			X	X	~	<___>	<___>	~	~	~	~	~		<___>	<___>	~	~
START/STOP	SYS-ENA	SYSTEM ENABLE	~	ENABLE/DISABLE		<NVI>	X	X	~	<___>	<___>	~	X	<___>	<___>	~		~	~	~	~
	CW-PMP1-SS	CHILLED WATER PUMP 1 START/STOP	~	START/STOP		BO	~	~	~	<___>	<___>	~	X	<___>	<___>	~		~	~	~	~
	CW-PMP2-SS	CHILLED WATER PUMP 2 START/STOP	~	START/STOP		BO	~	~	~	<___>	<___>	~	X	<___>	<___>	~		~	~	~	~
CHILLED WATER TEMPERATURE CONTROL	CH-S	CHILLER STATUS (STATE)	~	START/STOP		<BI>	X	X	X	<___>	<___>	~	~	~	~	~		~	~	~	~
	CH-SS	CHILLER START/STOP																			
	CWS-T	CHILLED WATER SUPPLY TEMPERATURE	~	<___>		AI	X	X	X	<___>	<___>	~	~	~	~	* CWS-T MORE THAN 10 DEG F ABOVE OR BELOW CWS-T-SP		<___>	<___>	(1)	~
	CWS-T-SP	CHILLED WATER SUPPLY TEMPERATURE SETPOINT	RESET	~		~	X	X	X	<___>	<___>	~	X	<___>	<___>	~		~	~	~	~
	OA-T	OUTSIDE AIR TEMPERATURE	~	<___>		AI	X	X	~	<___>	<___>	~	~	~	~	~		~	~	~	~
SYSTEMS SERVED	CLG-RQST1	FROM AHU SYSTEM	~	START/STOP		NVI	~	X	~	<___>	<___>	~	~	~	~	~		~	~	~	~
OTHER POINTS	CWR-T	CHILLED WATER RETURN TEMPERATURE	~	<___>		AI	X	X	~	<___>	<___>	~	~	~	~	~		~	~	~	~
	CH-S	CHILLER STATUS (STATE)	~	ON/OFF		<BI>	X	X	X	<___>	<___>	~	~	~	~	~		~	~	~	~
	CW-PMP1-C	CHILLED WATER VFD PUMP 1 SPEED COMMAND		<MIN - 1750 RPM>																	
	CW-PMP2-C	CHILLED WATER VFD PUMP 2 SPEED COMMAND		<MIN - 1750 RPM>																	

(1) CONTRACTOR TO COORDINATE WITH FIELD INSPECTOR/END USER ON M&C ROUTING NAME.

NOTE 1: THE CONTRACTOR SHALL COMPLETE THE POINTS SCHEDULE AS SPECIFIED AND AS DESCRIBED IN THE POINTS SCHEDULE INSTRUCTIONS DRAWING
NOTE 2: UNIT MANUFACTURERS PROOFS AND SAFETIES: THE CONTRACTOR SHALL SHOW EACH PROOF AND SAFETY AS A SEPARATE ROW
NOTE 3: SYS-OCC: AS DESCRIBED IN THE POINTS SCHEDULE INSTRUCTIONS, OVERRIDE OF SYS-OCC IS ACCOMPLISHED THROUGH THE SYSTEM SCHEDULER
NOTE 4: ALARM CONDITIONS MARKED WITH A SINGLE ASTERISK SHALL BE ACTIVE ONLY WHEN THE SYSTEM IS IN OCCUPIED MODE AND HAS BEEN IN OCCUPIED MODE FOR MORE THAN: *=5 MINUTES, **=30 MINUTES
NOTE 5: UNIT STATUS: SERVES AS A MONITORED POINT AT THE M&C SOFTWARE AND AS A COOLING REQUEST TO THE CHILLER SERVING THIS SYSTEM

CHILLED WATER POINTS SCHEDULE

CHILLED WATER FROM SINGLE-BUILDING CHILLER PLANT

CONTRACTOR SHALL INSTALL DDC HARDWARE TO PERFORM THIS SEQUENCE OF OPERATION AND TO PROVIDE SNVT INPUTS, OUTPUTS AND ALARMS AS SPECIFIED AND SHOWN ON THE POINTS SCHEDULE. UNLESS OTHERWISE SPECIFIED, ALL MODULATING CONTROL SHALL BE PROPORTIONAL-INTEGRAL (PI) CONTROL

A. SYSTEM ENABLE AND LOOP ENABLE
(1) THIS SYSTEM SHALL MONITOR THE ENABLED STATUS OF ALL SYSTEMS SERVED BY THIS SYSTEM. IF ONE OR MORE SYSTEMS SERVED BY THIS SYSTEM ARE ENABLED, THIS SYSTEM SHALL BE ENABLED (SYS-ENA). IF NO SYSTEMS SERVED BY THIS SYSTEM ARE ENABLED, THIS SYSTEM SHALL BE DISABLED.
(2) WHEN THIS SYSTEM IS ENABLED (SYS-ENA) AND THE CHILLED WATER PUMP IS PROOFED ON, THE CHILLER CONTROL LOOPS SHALL BE ENABLED.

B. HAND-OFF-AUTO SWITCH: THE CHILLED WATER PUMP MOTOR STARTED SHALL HAVE AN H-O-A SWITCH:
(1) HAND: WITH THE H-O-A SWITCH IN HAND POSITION, THE PUMP SHALL START AND RUN CONTINUOUSLY.
(2) OFF: WITH THE H-O-A SWITCH IN OFF POSITION, THE PUMP SHALL STOP.
(3) AUTO: WITH THE H-O-A SWITCH IN AUTO POSITION, THE PUMP SHALL RUN SUBJECT TO THE CHILLED WATER PUMP START/STOP (CW-PMP-SS) COMMAND.

C. PROOFS AND SAFETIES:
(1) DDC HARDWARE SHALL MONITOR ALL PROOFS AND SAFETIES.
(2) PROOFS: CHILLED WATER PUMP
(3) DDC HARDWARE RESET OF ALL PROOFS AND SAFETIES SHALL BE VIA A LOCAL BINARY PUSH-BUTTON (RST-BUT) INPUT TO THE DDC HARDWARE, VIA A REMOTE COMMAND TO THE DDC HARDWARE VIA SNVT OR BOTH (WHERE THE CONTRACTOR PROVIDES BOTH RESET FUNCTIONS AND THE OPERATOR CAN USE EITHER ONE TO PERFORM THE RESET), AS SHOWN ON THE POINTS SCHEDULE DRAWING.

D. CHILLER CONTROL: WHEN THIS LOOP IS ENABLED, THE DDC HARDWARE SHALL TURN THE CHILLER ON ONLY IF EITHER CHILLED WATER PUMP STATUS INDICATES PUMP IS ON. WHEN THIS CHILLER CONTROL LOOP IS DISABLED AND THE CHILLER IS TURNED OFF, THE CHILLED PUMP SHALL CONTINUTE TO OPERATE FOR 15 MINUTES (ADJ) AFTER THE CHILLER IS DISABLED. CHILLER CONTROL PANEL TO MAINTAIN CHILLED WATER SUPPLY TEMPERATURE BASED ON TEMPERATURE SENSOR IN COMMON CHILLED WATER SUPPLY PIPING. DDC SYSTEM PROVIDES SETPOINT TEMPERATURE TO CHILLER CONTROL PANEL. MAINTAIN CONSTANT CHILLED WATER SUPPLY TEMPERATURE AND RESET CHILLED ACCORDING TO HIGHEST COOLING DEMAND; RESET CHILLED WATER SUPPLY TEMPERATURE FROM 42 DEGREES F TO 55 DEGREES F (ADJ.) BASED ON MOST DEMANDING CHILLED WATER CONTROL VALVE POSITION.

E. PUMP CONTROL: CHILLED WATER PUMPS SHALL OPERATE IN LEAD/STANDBY ARRANGEMENT. THE LEAD PRIMARY PUMP IS ENABLED AND RUNS CONTINUOUSLY WHEN THERE IS A CALL TO START THE CHILLER. IF LEAD PUMP STATUS IS NOT PROVEN WITHIN 15 SECONDS (10 TO 60 SECONDS) THE STANDBY PUMP STARTS, THE LEAD PUMP STOPS AND AN ALARM WILL BE ENUNCIATED TO THE BAS. PUMPS SHALL ALTERNATE DESIGNATION OF LEAD OR STANDBY PUMPS TO ENSURE EVEN RUNTIME. IF THE PUMP RUNTIME DIFFERENCE EXCEEDS 50 HOURS (25 TO 200 HOURS) THE PUMPS SHALL SWITCH LEAD/STANDBY DESIGNATION. A LEAD PUMP SWITCHOVER NOTIFICATION SHALL ALERT THE BAS OF THE CHANGE. THE LEAD PUMP SPEED IS CONTROLLED BY THE VFD TO MAINTAIN THE STATIC PRESSURE SETPOINT. THE VFD IS CONTROLLED BY THE DDC USING A SINGLE PID ALGORITHM AT A SETPOINT OF 10 PSIG (ADJ), AS SENSED BY THE DIFFERENTIAL PRESSURE SENSOR. THE VFD MINIMUM SPEED SHALL NOT DROP BELOW 65% (ADJ). THE CHILLED WATER BYPASS VALVE MODULATES AS REQUIRED TO MAINTAIN THE MINIMUM FLOWRATE THROUGH THE CHILLER. ALL SETPOINTS SHALL BE FIELD ADJUSTED DURING THE COMMISSIONING PERIOD TO MEET REQUIREMENTS OF ACTUAL FIELD CONDITIONS.

CHILLED WATER SEQUENCE OF OPERATION

US Army Corps of Engineers ®

MARK	DESCRIPTION	DATE	APPD

US ARMY CORPS OF ENGINEERS
SACRAMENTO DISTRICT IN-HOUSE DESIGN 1325 J STREET SACRAMENTO, CA 95814

Designed by: J. STONE | Drawn By: J. STONE | Date: 13 JUL 2020 | Rev:
Submittal Status: RTA | Spec No: 2145 | Project No:
Reviewed by: S. BARMANN | File No: 233-25-0665 | File Name: WBSM_GTEB
Submitted by: M. Timothy A. Lee, P.E. Chief, Mechanical Design Section | Size:22" x 34" Plot Scale: 1" = 1'-0" Plot Date:7/10/2020 12:29:12 PM

FT. HUACHUCA AZ
GROUND TRANSPORT EQUIPMENT BUILDING
HVAC CONTROLS

SHEET IDENTIFICATION
M-818

RTA

ELECTRICAL ROOM SEQUENCE OF OPERATION

INSTALL STAND ALONE SMART SENSOR THAT MEASURES TEMPERATURE INSIDE ELECTRICAL ROOM AND ALARMS WHEN TEMPERATURE IS OUTSIDE OF SETPOINT.

A. DDC CONNECTION:

THE STAND ALONE SENSOR SHALL CONNECT TO THE BUILDING DDC SYSTEM AND SHALL BE ASSIGNED THE FOLLOWING POINTS IN THE DDC SCHEDULE.

(1) TEMPERATURE INPUT: THE AMBIENT ROOM TEMPERATURE SHALL BE CONTINUOUSLY MONITORED TO DETERMINE EFFECTIVE OPERATION OF THE ELECTRICAL ROOM SPLIT SYSTEM COOLING SYSTEM.

(2) TEMPERATURE SETPOINT: THE TEMPERATURE SETPOINT FOR THE ELECTRICAL ROOM SHALL BE BETWEEN 95 AND 55 DEGREES FAHRENHEIT.

B. ALARMS:

ALARM SHALL BE TRIGGERED WHEN TEMPERATURE INPUT IS OUTSIDE THE RANGE OF THE TEMPERATURE SETPOINT.

C. NOTES:

THIS STAND ALONE SMART SENSOR IS NOT TIED INTO THE OPERATION OF THE ELECTRICAL ROOM SPLIT SYSTEM. ELECTRICAL ROOM COOLING SHALL BE INDEPENDENT OF BUILDING DDC SYSTEM. THE STAND ALONE SMART SENSOR PERFORMS MEASUREMENT AND REPORTING OF ROOM TEMPERATURES AND TRIGGERS ALARMS FOR WIDE TEMPERATURE VARIANCE.

1 ELECTRICAL ROOM CONTROLS
NOT TO SCALE

COMMUNICATIONS ROOM SEQUENCE OF OPERATION

INSTALL STAND ALONE SMART SENSOR THAT MEASURES TEMPERATURE INSIDE COMMUNICATIONS ROOM AND ALARMS WHEN TEMPERATURE IS OUTSIDE OF SETPOINT.

A. DDC CONNECTION:

THE STAND ALONE SENSOR SHALL CONNECT TO THE BUILDING DDC SYSTEM AND SHALL BE ASSIGNED THE FOLLOWING POINTS IN THE DDC SCHEDULE.

(1) TEMPERATURE INPUT: THE AMBIENT ROOM TEMPERATURE SHALL BE CONTINUOUSLY MONITORED TO DETERMINE EFFECTIVE OPERATION OF THE COMMUNICATIONS ROOM SPLIT SYSTEM COOLING SYSTEM.

(2) TEMPERATURE SETPOINT: THE TEMPERATURE SETPOINT FOR THE COMMUNICATIONS ROOM SHALL BE BETWEEN 64 AND 75 DEGREES FAHRENHEIT.

B. ALARMS:

ALARM SHALL BE TRIGGERED WHEN TEMPERATURE INPUT IS OUTSIDE THE RANGE OF THE TEMPERATURE SETPOINT.

C. NOTES:

THIS STAND ALONE SMART SENSOR IS NOT TIED INTO THE OPERATION OF THE COMMUNICATIONS ROOM SPLIT SYSTEM. COMMUNICATIONS ROOM COOLING SHALL BE INDEPENDENT OF BUILDING DDC SYSTEM. THE STAND ALONE SMART SENSOR PERFORMS MEASUREMENT AND REPORTING OF ROOM TEMPERATURES AND TRIGGERS ALARMS FOR WIDE TEMPERATURE VARIANCE.

2 COMMUNICATION ROOM CONTROLS
NOT TO SCALE

ELECTRIC WALL MOUNTED UNIT HEATER CONTROL

UNIT HEATER LOCATION AS INDICATED ON DRAWINGS.

A. UNIT HEATER SHALL BE ENERGIZED UPON A CALL FOR HEATING.

B. UNIT MOUNTED TEMPERATURE SENSOR SHALL DEENERGIZE THE UNIT WHEN THE SPACE TERMPERATURE IS SATIFIED.

C. TEMPERATURE SETPOINT TO BE SET TO 55 DEGREES FAHRENHEIT.

3 UNIT HEATER CONTROLS
NOT TO SCALE

US Army Corps of Engineers ®

MARK	DESCRIPTION	DATE	APPD

Designed by: A. KLAPHECK | Drawn By: AAK
Submittal Status: RTA
Reviewed by: S. BARMANN
Submitted by: Dr. Timothy A. Lee, P.E.
Chief, Mechanical Engineering Section

Date: 13 JUL 2020
Spec No: 2145
File No: 233-25-0665
Size:22" x 34"
Plot Scale:NOT TO SCALE
Plot Date:7/10/2020 12:29:12 PM

Rev:
Project No:
File Name: W65M_GTEB

US ARMY CORPS OF ENGINEERS

SACRAMENTO DISTRICT
IN-HOUSE DESIGN
1325 J STREET
SACRAMENTO, CA 95814

FT. HUACHUCA AZ

GROUND TRANSPORT EQUIPMENT BUILDING

HVAC CONTROLS

SHEET IDENTIFICATION
M-819

RTA

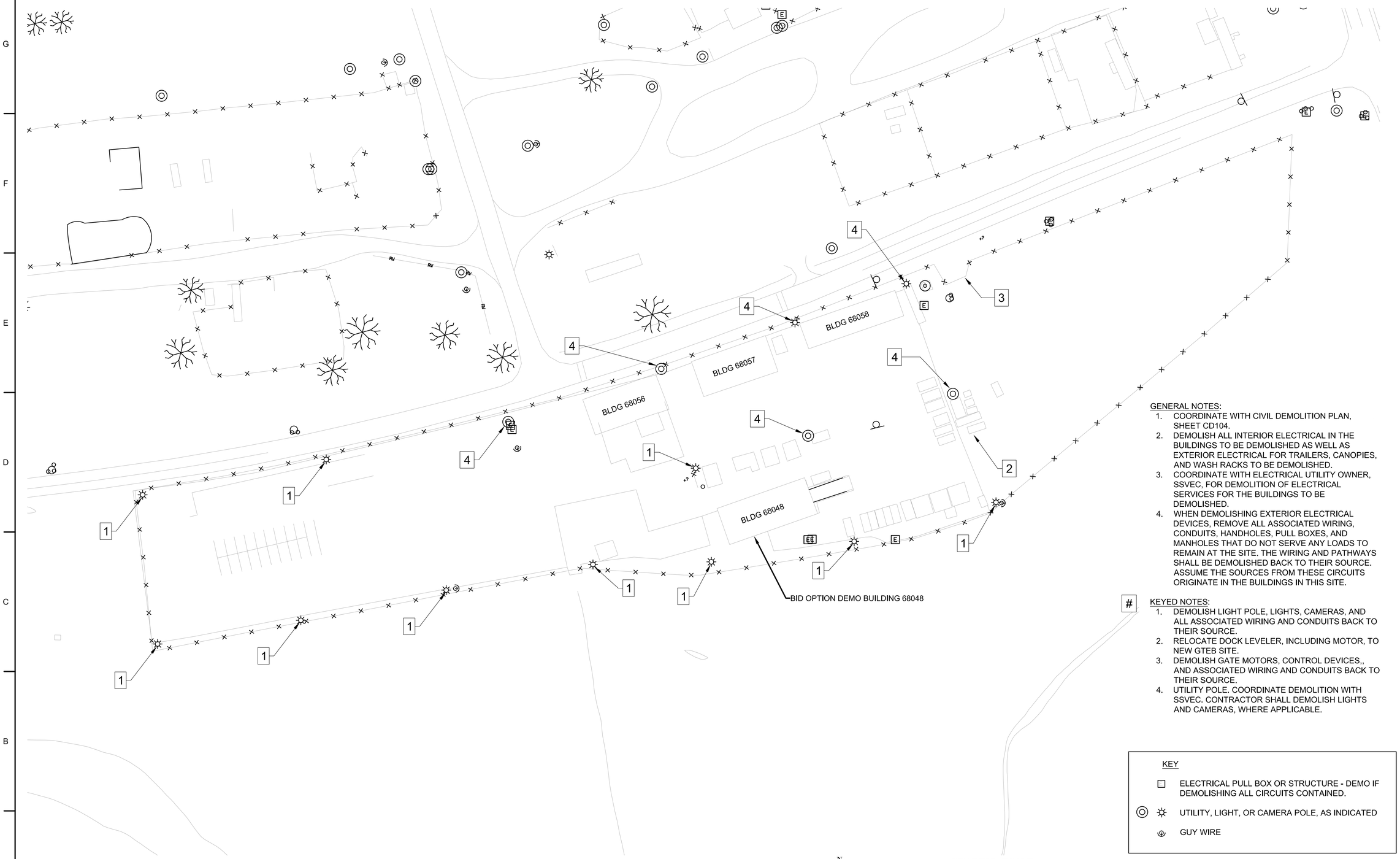

GENERAL NOTES:

1. COORDINATE WITH CIVIL DEMOLITION PLAN, SHEET CD104.
2. DEMOLISH ALL INTERIOR ELECTRICAL IN THE BUILDINGS TO BE DEMOLISHED AS WELL AS EXTERIOR ELECTRICAL FOR TRAILERS, CANOPIES, AND WASH RACKS TO BE DEMOLISHED.
3. COORDINATE WITH ELECTRICAL UTILITY OWNER, SSVEC, FOR DEMOLITION OF ELECTRICAL SERVICES FOR THE BUILDINGS TO BE DEMOLISHED.
4. WHEN DEMOLISHING EXTERIOR ELECTRICAL DEVICES, REMOVE ALL ASSOCIATED WIRING, CONDUITS, HANDHOLES, PULL BOXES, AND MANHOLES THAT DO NOT SERVE ANY LOADS TO REMAIN AT THE SITE. THE WIRING AND PATHWAYS SHALL BE DEMOLISHED BACK TO THEIR SOURCE. ASSUME THE SOURCES FROM THESE CIRCUITS ORIGINATE IN THE BUILDINGS IN THIS SITE.

#

KEYED NOTES:

1. DEMOLISH LIGHT POLE, LIGHTS, CAMERAS, AND ALL ASSOCIATED WIRING AND CONDUITS BACK TO THEIR SOURCE.
2. RELOCATE DOCK LEVELER, INCLUDING MOTOR, TO NEW GTEB SITE.
3. DEMOLISH GATE MOTORS, CONTROL DEVICES,, AND ASSOCIATED WIRING AND CONDUITS BACK TO THEIR SOURCE.
4. UTILITY POLE. COORDINATE DEMOLITION WITH SSVEC. CONTRACTOR SHALL DEMOLISH LIGHTS AND CAMERAS, WHERE APPLICABLE.

KEY

- ELECTRICAL PULL BOX OR STRUCTURE - DEMO IF DEMOLISHING ALL CIRCUITS CONTAINED.
- UTILITY, LIGHT, OR CAMERA POLE, AS INDICATED
- GUY WIRE

ELECTRICAL DEMOLITION PLAN - EXIST. VEHICLE MAINT. FACILITY

N

GRAPHIC SCALE

(IN FEET)
1 inch = 50 ft.

US Army Corps of Engineers®

MARK	DESCRIPTION	DATE

ISSUE DATE: 13 JUL 2020
SOLICITATION NO.: XXXXXX-XX-X-XXXX
CONTRACT NO.: XXXXXX-XX-X-XXXX
SPEC NO: 2445
SSVEC FILE NO: 223-25-0865

DESIGNED BY: D. CARULLI
DRAWN BY: D. CARULLI
CHECKED BY: S. JONES
SUBMITTED BY: SK JOHN T. PARRISH
ANSI D

U.S. ARMY CORPS OF ENGINEERS
SACRAMENTO DISTRICT
US DEPT OF ARMY

SACRAMENTO DISTRICT
IN-HOUSE DESIGN
1325 J STREEET
SACRAMENTO, CA 95814

FT. HUACHUCA, AZ
GROUND TRANSPORTATION EQUIPMENT BUILDING

ELECTRICAL DEMOLITION PLAN

SHEET ID

ED101

W65E_Existing Site Demo Plans.dwg

RTA

LIGHTING

1' x 4' LUMINAIRE. LETTER INDICATES TYPE PER THE FIXTURE SCHEDULE, BLACK TRIANGLE HALF-FILL INDICATES BATTERY BACK-UP.

2' x 4' LUMINAIRE. LETTER INDICATES TYPE PER THE FIXTURE SCHEDULE, BLACK TRIANGLE HALF-FILL INDICATES BATTERY BACK-UP

2' x 2' LUMINAIRE. LETTER INDICATES TYPE PER THE FIXTURE SCHEDULE, BLACK TRIANGLE HALF-FILL INDICATES BATTERY BACK-UP

CANOPY MOUNTED LUMINAIRE (SURFACE). LETTER INDICATES TYPE PER THE FIXTURE SCHEDULE.

PENDANT MOUNTED LUMINAIRE. LETTER INDICATES TYPE PER THE FIXTURE SCHEDULE, BLACK TRIANGLE HALF-FILL INDICATES BATTERY BACK-UP

WALL MOUNTED LUMINAIRE. LETTER INDICATES TYPE PER FIXTURE SCHEDULE, BLACK TRIANGLE HALF-FILL INDICATES BATTERY BACK-UP

SURFACE OR RECESSED LUMINAIRE, DOWNLIGHT. LETTER INDICATES TYPE PER FIXTURE SCHEDULE.

RECESSED LUMINAIRE, ADJUSTABLE GIMBAL. LETTER INDICATES TYPE PER FIXTURE SCHEDULE. ARROW INDICATES AIMING DIRECTION.

EXIT SIGN WITH DIRECTIONAL ARROWS AS INDICATED, WALL MOUNTING. SHADED SIDE IS FACE WITH EXIT SIGN. ALL EXIT SIGNS SHALL HAVE INTEGRAL BATTERY BACKUP FOR EMERGENCY MODE OPERATION.

$ — 20 AMP, 125 VOLT TOGGLE SWITCH MOUNTED 42" AFF.

$3 — 3-WAY, 20 AMP, 125 VOLT TOGGLE SWITCH MOUNTED 42" AFF.

$D — DIMMER SWITCH (MAY BE COMBINED WITH OCCUPANCY SENSOR SWITCH)

$OS — WALL MOUNTED COMBINATION OCCUPANCY SENSOR / SWITCH.

OS PIR — CEILING MOUNTED OCCUPANCY SENSOR. "PIR," "U," OR "DT" INDICATES PASSIVE INFRARED, ULTRASONIC, OR DUAL TECHNOLOGY, RESPECTIVELY.

PIR OS — WALL MOUNTED OCCUPANCY SENSOR, "PIR," "U," OR "DT" INDICATES PASSIVE INFRARED, ULTRASONIC, OR DUAL TECHNOLOGY, RESPECTIVELY.

DS — DAYLIGHT SENSOR. MARKINGS INDICATE DIRECTION OF PHOTOSENSING ELEMENT. WHEN "DS" IS USED ON A LUMINAIRE, IT SHALL BE INTEGRAL WITH THE LUMINAIRE, LOCATED ON THE DIRECTION OF THE LABEL. LIGHTING CONTROL SWITCH

POWER

LETTER DESIGNATIONS ON RECEPTACLES INDICATE DIFFERENT TYPES AS FOLLOWS:

GFCI	GROUND FAULT CIRCUIT INTERRUPTER
AC	ABOVE COUNTER (SHALL HAVE GFCI UNO)
WP	WEATHER PROOF (SHALL ALSO HAVE GFCI)
REF	REFRIGERATOR
PRNT	PRINTER/COPIER

FLUSH FLOOR MOUNTED NEMA 5-20 DUPLEX RECEPTACLE, UNO

FLUSH FLOOR MOUNTED NEMA 5-20 QUAD RECEPTACLE, UNO

NEMA 5-20 DUPLEX RECEPTACLE MOUNTED 18" AFF, UNO

NEMA 5-20 QUADRUPLEX RECEPTACLE MOUNTED 18" AFF, UNO

SINGLE PHASE 2 POLE RECEPTACLE:
- NEMA 6-30R, 240 V (SPLIT PHASE) FOR PRESSURE/STEAM WASHERS
- NEMA 6-30R, 208 V, SINGLE PHASE (2 POLE) FOR BAY AREAS.
- ELECTRIC VEHICLE CHARGING PEDESTAL, SAE J1772 PLUG, 208 V, SINGLE PHASE (2 POLE)
- NEMA L14-30R, 208V, SINGLE PHASE (2 POLE) FOR COMM RACKS.

NEMA L5-20R, 120 V

3 PHASE, 5 WIRE, 208 V RECEPTACLE. NEMA L21-30R FOR BAY AREAS. MOUNT 24" AFF UNO.

WELDING OUTLET, NEMA L6-50

PLASMA CUTTER OUTLET, NEMA L6-50

$M — MOTOR SWITCH

J — JUNCTION BOX OR EQUIPMENT BOX, SIZE VARIES

MOTOR, SIZE AS SHOWN, OR PER MECHANICAL AND PLUMBING SCHEDULES.

UNFUSED DISCONNECT SWITCH. WHEN ADJACENT TO MOTOR, COMBINED MOTOR STARTER/DISCONNECT

FUSED DISCONNECT SWITCH, SIZE FUSES FOR EQUIPMENT BASED ON MANUFACTURERS RECOMMENDATIONS

SURFACE MOUNTED PANELBOARD OR AUTOMATIC TRANSFER SWITCH, AS INDICATED

RECESSED MOUNTED PANELBOARD

WIRING

(P1)-(1) — DOTTED TICK MARK IS GROUND, LONG TICK MARK IS NEUTRAL, SHORT TICK MARKS ARE NUMBER OF PHASE CONDUCTORS. ARROW INDICATES HOMERUN OR CONTINUATION OF CIRCUIT. HOMERUN WILL BE ANNOTATED WITH PANEL/CIRCUIT NUMBER.

TYPICALLY, 20A AND 15 A CIRCUITS SHALL HAVE #12 PHASE CONDUCTORS, #12 GROUNDED CONDUCTOR, AND #12 GREEN EQUIPMENT GROUNDING CONDUCTOR IN 3/4" CONDUIT.

EXTERIOR SITE

EU — UNDERGROUND PRIMARY ELECTRICAL LINE.

EU — UNDERGROUND SECONDARY ELECTRICAL LINE.

UC — EXISTING UNDERGROUND COMMUNICATION LINE

C — EXISTING OVERHEAD COMMUNICATION LINE

Ex — EXISTING ITEMS TO BE REMOVED

UP — NEW UNDERGROUND PRIMARY

US — NEW UNDERGROUND SECONDARY

UC — NEW UNDERGROUND COMMUNICATIONS

S — EXISTING SECTIONALIZER CABINET

NEW PAD MOUNTED TRANSFORMER

H — ELECTRICAL HANDHOLE, SEE E-510, PLATE UG6

PB — ELECTRICAL PULL BOX, SEE E-510, PLATES UG4 AND UG5

M — ELECTRICAL MANHOLE

MC — COMMUNICATIONS MANHOLE, SEE E-511

NEW POLE MOUNTED LIGHTING FIXTURE

NEW BOLLARD LIGHT FIXTURE.

ACS — ELECTRONIC DOOR LOCK WITH CARD READER AND KEYPAD, INTEGRAL WITH LATCH. SEE DETAIL 2/T-501.

COMMUNICATIONS / SECURITY

3-PORT DATA/VOICE OUTLET - 2 DATA AND 1 VOICE, CAT 6, RJ45 UNO.

2 — DUAL (2-PORT) DATA OUTLET, CAT 6, RJ45 UNO.

SINGLE-PORT TELEPHONE OUTLET, MOUNTED 48" AFF UNO.

CATV COAX OUTLET, F-TYPE, MOUNTED 78" AFF.

S — PUBLIC ADDRESS SYSTEM SPEAKER, RATED 15 W, MOUNTED 15' AFF UNO.

PA — PUBLIC ADDRESS CONTROL STATION. SEE DETAIL 2/T-502.

DL — ELECTRONIC DOOR LOCK WITH CARD READER AND KEYPAD, INTEGRAL WITH LATCH. SEE DETAIL 2/T-501.

J — JUNCTION BOX OR EQUIPMENT BOX, SIZE VARIES.

C — SECURITY CAMERA, STATIONARY, OUTDOOR RATED, TAMPER RESISTANT, MOUNTED 8' ABOVE GRADE UNO. LINES INDICATE APPROXIMATE FIELD OF VIEW.

CAM — SECURITY CAMERA (SYSTEM DIAGRAM ONLY)

TELEPHONE TERMINAL BACKBOARD (TTB), 8' TALL X 4' WIDE X 3/4" THICK PLYWOOD

42U 19" EQUIPMENT RACK. DASHED LINES INDICATE DEDICATED SPACE FOR FUTURE RACKS

SINGLE LINE DIAGRAM

CIRCUIT BREAKER

FUSED DISCONNECT

BREAKLINE

TRANSFORMER

M — UTILITY METER

SPD — SURGE PROTECTIVE DEVICE

MOTOR

ANNOTATIONS

A — LUMINAIRE TAG. IF SHOWN, SECOND LINE IS SWITCH LABEL FOR LUMINAIRE (SEE BELOW). SEE LUMINAIRE SCHEDULE, SHEET E-501.

A-B — SWITCH TAG. FIRST LETTER DESIGNATES ROOM/AREA. SECOND LETTER DESIGNTATES SWITCH SYSTEM IN ROOM.

EF-1 — MECHANICAL OR PLUMBING EQUIPMENT TAG. SEE HVAC EQUIPMENT SCHEDULES, SHEET M-601, OR PLUMBING EQUIPMENT SCHEDULES, SHEET P-601.

(PP-1) - (1) — CIRCUIT CALLOUT. FIRST PERENTHESES IS PANEL NAME, SECOND PERENTHESES IS CIRCUIT NUMBER IN THAT PANEL.

— KEYNOTE OR EQUIPMENT CALLOUT. SEE KEYNOTE OR EQUIPMENT LEGEND ON RELEVANT SHEETS.

LINES AND CALLOUTS

DEMOLISHED

NEW

(HALFTONE) UNAFFECTED, OR FEATURES FROM DIFFERENT DISCIPLINE

1 / A-101 — VIEW CALLOUT, SEE SHEET A-001 FOR MORE DETAILS

MATCHLINE

FIRE ALARM / MNS

M — MANUAL PULL STATION, HANDLE MOUNTED AT 45" AFF.

S ASD — SMOKE DETECTOR, PHOTOELECTRIC TYPE. "ASD" DENOTES AIR SAMPLING DEVICE FOR HVAC DUCT.

F — FIRE ALARM/MNS STROBE SPEAKER, (WALL MOUNTED, CEILING MOUNTED, RESPECTIVELY). MOUNT 7' AFF WHEN WALL MOUNTED. STROBE IS WHITE/CLEAR, STROBE SHALL READ "ALERT".

S — FIRE ALARM SPEAKER, MOUNTED 7' AFF WHEN WALL MOUNTED.

F — FIRE ALARM STROBE

TEXT — MNS LED TEXT DISPLAY

AIM — ADDRESSABLE INPUT MODULE. TYPE AS INDICATED.

ABBREVIATIONS

A	AMPERE
AC	ABOVE COUNTER, 42"AFF UNLESS OTHERWISE INDICATED
ACS	ACCESS CONTROL SYSTEM
ACU	AUTONOMOUS CONTROL UNIT
ADA	AMERICANS WITH DISABILITIES ACT
AFF	ABOVE FINISHED FLOOR
AL	ALUMINUM
1/C	ONE CONDUCTOR
C	CONDUIT
CB	CIRCUIT BREAKER
CCTV	CLOSED CIRCUIT TELEVISION
CKT	CIRCUIT
CU	COPPER
DS	DAYLIGHT SENSOR
DT	DUAL TECHNOLOGY (OCCUPANCY SENSOR)
DVR	DIGITAL VIDEO RECORDER
EF	EXHAUST FAN
EMT	ELECTRICAL METALLIC TUBING
EWC	ELECTRIC WATER COOLER
FACP	FIRE ALARM CONTROL PANEL
FM	FREQUENCY MODULATION
GFCI	GROUND FAULT CIRCUIT INTERRUPTER
GFP	GROUND FAULT PROTECTION
GND	GROUND
GTEB	GROUND TRANSPORT EQUIPMENT BUILDING
HACR	HEATING AIR CONDITIONING REFRIGERATION
HAZ	HAZARDOUS, AS IN HAZARDOUS MATERIALS STORAGE
HP	HORSEPOWER
HPS	HIGH PRESSURE SODIUM
HT	HEIGHT
HZ	HERTZ
IDS	INTRUSION DETECTION SYSTEM
J	JUNCTION BOX
KWH	KILOWATT HOUR
LCP	LIGHTING CONTROL PANEL
LED	LIGHT EMITTING DIODE
LOC	LOCAL OPERATING CONSOLE
MCB	MOLDED CASE CIRCUIT BREAKER/MAIN CIRCUIT BREAKER
MH	METAL HALIDE
MLO	MAIN LUGS ONLY
MNS	MASS NOTIFICATION SYSTEM
MPPT	MAXIMUM POWER POINT TRACKING
MTD	MOUNTED
NEC	NATIONAL ELECTRICAL CODE
NEC	NETWORK ENTERPRISE CENTER
NF	NON FUSED
NO.	NUMBER
NOCT	NOMINAL OPERATING CELL TEMPERATURE
OS	OCCUPANCY SENSOR
ORG	ORGANIZATION, AS IN ORG STORAGE BUILDING
PH	PHASE
PIR	PASSIVE INFRARED
POL	PETROLIUM OIL LUBRICANT, AS IN POL STORAGE BUILDING
PV	PHOTOVOLTAIC
RGS	RIGID GALVANIZED STEEL
SM	SINGLE MODE
SSVEC	SULPHUR SPRINGS VALLEY ELECTRIC COOPERATIVE
TTB	TELEPHONE TERMINAL BOARD
TV	TELEVISION
TVSS	TRANSIENT VOLTAGE SURGE SUPPRESSOR
U	ULTRASONIC
UNO	UNLESS NOTED OTHERWISE
V	VOLT
VA	VOLTAMPERE
VVD	VARIABLE VOLUME DAMPER
W	WATTS
WP	WATER PROOF
XFMR	TRANSFORMER

GROUNDING

AIR TERMINAL. DETAIL 5/EG501

GROUNDING ROD. DETAIL 2/EG501

GROUNDING ROD TEST WELL. DETAIL 1/EG501

GROUNDING RECEPTACLE. DETAIL 3/EG501

DOWN CONDUCTOR CONNECTION TO GROUND

G — GRID COUNTERPOISE CONDUCTOR

LIGHTNING PROTECTION ROOF CONDUCTOR

DC — LIGHTNING PROTECTION DOWN CONDUCTOR

GENERAL NOTES

1. UNLESS NOTED OTHERWISE, ALL CONDUCTORS SHALL BE COPPER.
2. TYPICALLY, REGULAR 20 AMP BRANCH CIRCUITS SHALL BE SUPPLIED WITH #12 COPPER CONDUCTORS FOR HOT, NEUTRAL, AND GROUND CONDUCTORS, IN MINIMUM 3/4" EMT CONDUIT.
3. IF CONTRACTOR INSTALLS MORE THAN 3 CURRENT CARRYING CONDUCTORS IN A RACEWAY, CONTRACTOR SHALL BE RESPONSIBLE FOR APPLYING AMPACITY DERATING FACTORS TO THE CONDUCTORS, AND RESIZING THE CONDUCTORS AS NEEDED PER NEC ARTICLE 310.15(B)(3)(a).
4. WHEN USED, THE TERM "OCCUPANCY SENSOR" REFERS TO A DEVICE THAT COULD BE DESCRIBED AS AN OCCUPANCY SENSOR OR A VACANCY SENSOR. THESE DEVICES ARE PHYSICALLY THE SAME. FOR DESCRIPTIONS OF HOW THESE DEVICES SHALL OPERATE LUMINAIRES IN EACH SPACE, SEE LIGHTING CONTROLS ON SHEET EL504
5. ALL CONTRACTOR PROVIDED ELECTRICITY, NATURAL GAS, AND WATER METERS IN THIS PROJECT ARE REQUIRED TO BE ADVANCED METERS, PER UFC 1-200-02, DODI 4170.11, AND THE DOD UTILITIES METER POLICY. THEY SHALL BE CONNECTED TO THE BASE-WIDE ENERGY MANAGEMENT AND CONTROL SYSTEM (EMCS) THROUGH THE NEC COMMUNICATIONS ROOM. COORDINATE WITH THE DPW THROUGH THE CONTRACTING OFFICER FOR COMMUNICATIONS PROTOCOLS AND NETWORK CONNECTION REQUIREMENTS. METERS SHALL ALL BE PERMANENTLY INSTALLED AND RECORD IN INTERVALS OF ONE HOUR OR LESS. THESE METERS SHALL BE CAPABLE OF REPORTING HOURLY, DAILY, MONTHLY, AND ANNUAL USE. THE ELECTRICITY METERS SHALL RECORD CONSUMPTION, DEMAND, AND POWER FACTOR, AT A MINIMUM.

AMENDMENT 3

US Army Corps of Engineers ®

MARK	DESCRIPTION	DATE
2	DATA OUTLET QTY CLARIFY	07 OCT 2020

DESIGNED BY: D. CARULLI
DRAWN BY: D. CARULLI
CHECKED BY: S. JONES
SUBMITTED BY: /s/ JOHN R. PARRISH
SIZE: ANSI 'D'
FILE NAME: W65E_GTEB_Central.rvt
ISSUE DATE: 07 OCT 2020
PROJECT #: 225-25-0665
SPEC #: 2145
FILE NUMBER:

US ARMY CORPS OF ENGINEERS
SACRAMENTO DISTRICT
US DEPT OF ARMY

SACRAMENTO DISTRICT
IN-HOUSE DESIGN
1325 J STREET
SACRAMENTO, CA 95814

FT. HUACHUCA, ARIZONA
GROUND TRANSPORT EQUIPMENT BUILDING

LEGEND AND ABBREVIATIONS

SHEET ID

E-001

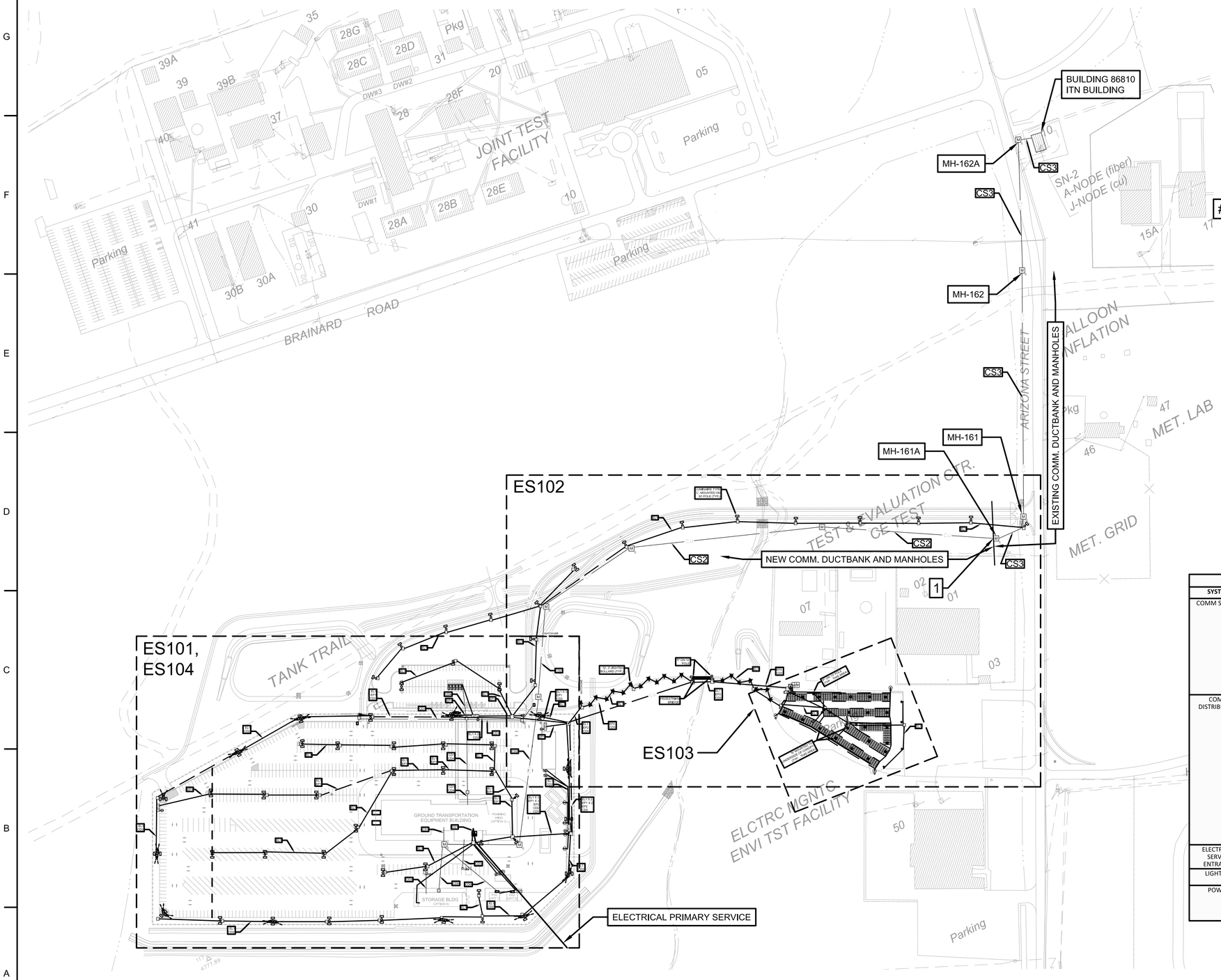

OVERALL ELECTRICAL SITE PLAN - POWER AND COMMUNICATIONS CONNECTIONS

COMMUNICATIONS SERVICE NOTES:

1. PROVIDE COMM SERVICE FROM ITN BUILDING 86810. COORDINATE WITH NETWORK ENTERPRISE CENTER. PULL FIBER AND COPPER THROUGH EXISTING SPARE CONDUITS (NEC HAS VERIFIED THAT THERE IS ADEQUATE SPARE CONDUIT CAPACITY) AND MANHOLES FOLLOWING THE PATH: ITN BUILDING 86810 TO MH-162A TO MH-162 TO MH-161 TO MH-161A. PROVIDE NEW CONDUITS AND MANHOLES LEADING TO THE NEW GROUND TRANSPORTATION EQUIPMENT BUILDING (GTEB), AS SHOWN. PROTECT IN PLACE EXISTING CABLING IN THE DUCTBANK AND MANHOLE SYSTEM.

ELECTRICAL POWER SERVICE NOTES:

1. ELECTRICAL POWER SERVICE TO BE PROVIDED BY SULPHUR SPRINGS VALLEY ELECTRIC COOPERATIVE (SSVEC). CONTRACTOR SHALL PROVIDE CONDUIT SYSTEM. SEE MORE INFORMATION ON SHEET E-503.

KEYED NOTES:

1. BREAK INTO EXISTING MANHOLE AND CONNECT NEW DUCTBANK FOR COMMUNICATIONS SERVICE. FEED NEW COMM CABLING THROUGH THIS MANHOLE AS SHOWN. CONTRACTOR SHALL PROTECT IN PLACE EXISTING CABLING IN THE MANHOLE.

GENERAL NOTES:

1. FOR THE WIRE AND CONDUIT CALLOUT "EP1" FOR MOTORS AND POWER EQUIPMENT, THE SIZE AND QUANTITY OF CONDUCTORS WILL VARY DEPENDING ON THE EQUIPMENT BEING POWERED. CONSULT THE MOTOR SCHEDULE AND SINGLE LINE DIAGRAMS FOR CONDUCTOR/CONDUIT DETAILS.
2. SEE SHEET E-512 FOR DUCTBANK DETAILS.
3. FOR ALL CONDUITS: PVC SCH 20 MINIMUM CONCRETE ENCASED WHEN UNDER PAVED AREAS, AND FOR 5 FT BEYOND THE PAVEMENT, BURIED MINIMUM 24" TO TOP OF CONCRETE ENCASEMENT. PVC SCH 40 MINIMUM DIRECT BURIED WHEN NOT UNDER PAVED AREAS, BURIED MINIMUM 18" TO TOP OF CONDUIT.
4. UNLESS NOTED OTHERWISE, LIGHT FIXTURES SHOWN ARE LUMINAIRE TYPE 'L' MOUNTED ON 30' POLES.
5. UNLESS NOTED OTHERWISE, CAMERAS SHOWN ARE RECOGNITION TYPE, MOUNTED ON LIGHT POLES AT 20' ABOVE GRADE. APPROXIMATE FIELD OF VIEW IS SHOWN. SEE SPEC SECTION 28 10 05 FOR MORE INFORMATION.
6. ALL EXTERIOR RECEPTACLES SHALL HAVE GFCI PROTECTION, BE LISTED AS WEATHER RESISTANT TYPE, AND SHALL HAVE "IN-USE" TYPE WEATHERPROOF COVERS, AND THE COVER SHALL BE IDENTIFIED AS "EXTRA DUTY" PER NEC ARTICLE 406.9 (B)(1)

CONDUIT AND CONDUCTOR/CABLE CALLOUTS - EXTERIOR

SYSTEM	CALLOUT	CONDUIT SIZE	CONDUCTOR/CABLE DESCRIPTION	NOTES
COMM SERVICE	CS1	4-WAY 4" PVC	200 PAIR COPPER CABLE IN 1 CONDUIT, 72 STRAND SMFO CABLE IN 3 CELL 3" MESH INNDERDUCT IN ANOTHER CONDUIT	PROVIDE 3 CELL 3" MESH INNERDUCT IN SPARE CONDUITS. ALL VACANT INNERDUCT SHALL HAVE PULL ROPES
	CS2	3-WAY 4" PVC	200 PAIR COPPER CABLE IN 1 CONDUIT, 72 STRAND SMFO CABLE IN 3 CELL 3" MESH INNDERDUCT IN ANOTHER CONDUIT	PROVIDE 3 CELL 3" MESH INNERDUCT IN SPARE CONDUIT. ALL VACANT INNERDUCT SHALL HAVE PULL ROPES
	CS3	(EXISTING)	200 PAIR COPPER CABLE IN 1 CONDUIT, 72 STRAND SMFO CABLE IN 3 CELL 3" MESH INNDERDUCT IN ANOTHER CONDUIT	PROVIDE 3 CELL 3" MESH INNERDUCT. ALL VACANT INNERDUCT SHALL HAVE PULL ROPES
COMM DISTRIBUTION	CD1	1-WAY 2" PVC	CONTROL WIRING FOR GATES IN 3 CELL 2" MESH INNDERDUCT	PROVIDE 3 CELL 2" MESH INNERDUCT. ALL VACANT INNERDUCT SHALL HAVE PULL ROPES
	CD2	1-WAY 1" PVC	EXTERIOR CCTV CIRCUITS	PROVIDE 3 CELL 2" MESH INNERDUCT. ALL VACANT INNERDUCT SHALL HAVE PULL ROPES
	CD3	1-WAY 1" PVC	FIRE ALARM CIRCUITS	
	CD4	1-WAY 1" PVC	DEMAND RESPONSE DATA CIRCUITS FOR ELECTRIC VEHICLE CHARGING	
	CD5	1-WAY 2" PVC	PV SYSTEM DIAGNOSTICS AND SENSOR CIRCUITS	
	CD6	3-WAY 1" PVC	ACS AND DATA CIRCUITS FOR ORG. STORAGE BLDG AND POL/HAZMAT STORAGE SHEDS	PROVIDE 3 CELL 1" MESH INNERDUCT W/ PULL ROPES. 1 CONDUIT DATA FOR METER, 1 CONDUIT DATA FOR ACS, 1 CONDUIT SPARE
ELECTRICAL SERVICE ENTRANCE	ES1	4-WAY 4" PVC	3 PARALLEL SETS OF: 4 500 KCMIL CU, TYPE USE CABLE	3 CONDUITS HAVE PHASE A, B, C, AND NEUTRAL EACH, AND 1 CONDUIT IS SPARE
LIGHTING	EL1	1-WAY 1" PVC	VARIES. SEE PANEL SCHEDULE LP-1, SHEET E-611	
POWER	EP1	(CONSULT SCHEDULES)	(CONSULT SCHEDULES/SINGLE LINE)	MOTOR AND EQUIPMENT POWER
	EP2	4 WAY 4" PVC	3 PARALLEL SETS OF: 4 500 KCMIL CU, TYPE XHHW-2 CONDUCTOR, #3/0 GND	FOR SOLAR PV. 1 CONDUIT SPARE W/ PULL ROPE

GRAPHIC SCALE

(IN FEET)
1 inch = 150 ft.

US Army Corps of Engineers®

MARK	DESCRIPTION	DATE

ISSUE DATE: 13 JUL 2020
SOLICITATION NO.:
CONTRACT NO.:
DESIGNED BY: D. CARULLI
DRAWN BY: D. CARULLI
CHECKED BY: S. JONES
SPEC NO: 22-445
SUBMITTED BY: ISI JOHN R. PARRISH
DESIGN FILE NO: 223-25-0865
SIZE: ANSI D

U.S. ARMY CORPS OF ENGINEERS
SACRAMENT DISTRICT
US DEPT OF ARMY

SACRAMENTO DISTRICT
IN-HOUSE DESIGN
1325 J STREET
SACRAMENTO, CA 95814

FT. HUACHUCA, AZ
GROUND TRANSPORT EQUIPMENT BUILDING

ELECTRICAL SITE PLAN - OVERALL

SHEET ID
ES100

W65E_Site Plan.dwg

RTA

GENERAL NOTES:

1. FOR THE WIRE AND CONDUIT CALLOUT "EP1" FOR MOTORS AND POWER EQUIPMENT, THE SIZE AND QUANTITY OF CONDUCTORS WILL VARY DEPENDING ON THE EQUIPMENT BEING POWERED. CONSULT THE MOTOR SCHEDULE AND SINGLE LINE DIAGRAMS FOR CONDUCTOR/CONDUIT DETAILS.
2. SEE SHEET E-512 FOR DUCTBANK DETAILS.
3. FOR ALL CONDUITS: PVC SCH 20 MINIMUM CONCRETE ENCASED WHEN UNDER PAVED AREAS, AND FOR 5 FT BEYOND THE PAVEMENT, BURIED MINIMUM 24" TO TOP OF CONCRETE ENCASEMENT. PVC SCH 40 MINIMUM DIRECT BURIED WHEN NOT UNDER PAVED AREAS, BURIED MINIMUM 18" TO TOP OF CONDUIT.
4. UNLESS NOTED OTHERWISE, LIGHT FIXTURES SHOWN ARE LUMINAIRE TYPE 'L' MOUNTED ON 30' POLES. CIRCUIT DESIGNATIONS ARE SHOWN
5. UNLESS NOTED OTHERWISE, CAMERAS SHOWN ARE RECOGNITION TYPE, MOUNTED ON LIGHT POLES AT 20' ABOVE GRADE. APPROXIMATE FIELD OF VIEW IS SHOWN. SEE SPEC SECTION 28 10 05 FOR MORE INFORMATION.
6. ALL EXTERIOR RECEPTACLES SHALL HAVE GFCI PROTECTION, BE LISTED AS WEATHER RESISTANT TYPE, AND SHALL HAVE "IN-USE" TYPE WEATHERPROOF COVERS, AND THE COVER SHALL BE IDENTIFIED AS "EXTRA DUTY" PER NEC ARTICLE 406.9 (B)(1)

#

KEYED NOTES:

1. NEW POWER SERVICE PROVIDED BY SULPHUR SPRINGS VALLEY ELECTRIC COOPERATIVE, INC. (SSVEC). CONTRACTOR PROVIDES CONDUIT. SEE E-503 FOR MORE INFORMATION.
2. ORG STORAGE BUILDING ELECTRICAL SERVICE. FEED FROM GTEB ELEC. ROOM.
3. POL AND HAZMAT STORAGE ELECTRICAL SERVICE. FEED FROM GTEB ELEC. ROOM.
4. DOCK LEVELER MOTOR WITH INTEGRAL CONTROL AND DISCONNECT. TWO RECEPTACLES - NEMA 5-20R AND NEMA L21-30R, INSTALL IN ACCESSIBLE LOCATION.
5. NEMA 5-30R RECEPTACLES FOR STEAM AND PRESSURE WASHERS. FEED FROM XP-1. TWO OF THESE SHALL BE PART OF OPTION ITEM 5.
6. GATE CONTROLS AND CAMERAS FEED TO PRODUCTION CONTROL AND PRIVATE OFFICES.
7. (2 LOCATIONS) GATE CONTROLLER, CARD SWIPE WITH PAGER AND SECURITY CAMERA FOR IDENTIFICATION. MOUNT ON PEDESTAL AT 60" ABOVE GRADE.
8. (2 LOCATIONS) GATE MOTOR. 1 HP, 208 V, 3 PHASE. CONTROLLED LOCALLY AND FROM PRODUCTION CONTROL AND PRIVATE OFFICES. SEE GATE DETAILS ON SHEET C-513.
9. PEDESTRIAN GATE ACCESS CONTROLS.
10. (2 LOCATIONS) SECURITY CAMERA FOR IDENTIFICATION. MOUNT AT 7' ABOVE GRADE. FOR PEDESTRIAN ENTRANCE, MOUNT ON FENCE POST. FOR SWING GATE, MOUNT ON LIGHT POLE.
11. ELECTRIC VEHICLE CHARGING PEDESTALS (5). SAE J1772, 208 V SINGLE PHASE (2 POLE), 30 A. NEMA 3R ENCLOSURE. FEED FROM XP-2
12. (2 LOCATIONS) POST INDICATOR VALVE TAMPER SWITCH. CONNECT TO FIRE ALARM PANEL SERVING BUILDING. COORDINATE WITH CIVIL, FIRE PROTECTION, AND FIRE ALARM PLANS.
13. FUEL PUMPS. 1/3 HP, 115 V, 1 PHASE. FEED FROM PANEL XP-1
14. LIGHT POLES AND HANDHOLES ARE PART OF OPTION 5. IF OPTION 5 IS NOT AWARDED, REMOVE MARKED LIGHT POLES AND HANDHOLES, AND SHIFT THE THREE PERIMETER LIGHT/CAMERA POLES WEST OF HERE AND PANEL XP-3 ALONG WITH THE FENCE LINE. COORDINATE WITH CIVIL LAYOUT.

OPTION ITEMS:

1. DEMO BUILDING (NOT SHOWN THIS SHEET)
2. SOLAR PV COVERED PARKING (NOT SHOWN THIS SHEET)
3. TRAINING WING
4. WASH RACK (SEE KEYED NOTE 5)
5. WEST PORTION OF HARDSTAND (SEE KEYED NOTE 14)
6. HAZMAT STORAGE BUILDING
7. POL STORAGE BUILDING
8. ORG STORAGE BUILDING

CONDUIT AND CONDUCTOR/CABLE CALLOUTS - EXTERIOR

SYSTEM	CALLOUT	CONDUIT SIZE	CONDUCTOR/CABLE DESCRIPTION	NOTES
COMM SERVICE	CS1	4-WAY 4" PVC	200 PAIR COPPER CABLE IN 1 CONDUIT, 72 STRAND SMFO CABLE IN 3 CELL 3" MESH INNDERDUCT IN ANOTHER CONDUIT	PROVIDE 3 CELL 3" MESH INNERDUCT IN SPARE CONDUITS. ALL VACANT INNERDUCT SHALL HAVE PULL ROPES
	CS2	3-WAY 4" PVC	200 PAIR COPPER CABLE IN 1 CONDUIT, 72 STRAND SMFO CABLE IN 3 CELL 3" MESH INNDERDUCT IN ANOTHER CONDUIT	PROVIDE 3 CELL 3" MESH INNERDUCT IN SPARE CONDUIT. ALL VACANT INNERDUCT SHALL HAVE PULL ROPES
	CS3	(EXISTING)	200 PAIR COPPER CABLE IN 1 CONDUIT, 72 STRAND SMFO CABLE IN 3 CELL 3" MESH INNDERDUCT IN ANOTHER CONDUIT	PROVIDE 3 CELL 3" MESH INNERDUCT. ALL VACANT INNERDUCT SHALL HAVE PULL ROPES
COMM DISTRIBUTION	CD1	1-WAY 2" PVC	CONTROL WIRING FOR GATES IN 3 CELL 2" MESH INNDERDUCT	PROVIDE 3 CELL 2" MESH INNERDUCT. ALL VACANT INNERDUCT SHALL HAVE PULL ROPES
	CD2	1-WAY 1" PVC	EXTERIOR CCTV CIRCUITS	PROVIDE 3 CELL 2" MESH INNERDUCT. ALL VACANT INNERDUCT SHALL HAVE PULL ROPES
	CD3	1-WAY 1" PVC	FIRE ALARM CIRCUITS	
	CD4	1-WAY 1" PVC	DEMAND RESPONSE DATA CIRCUITS FOR ELECTRIC VEHICLE CHARGING	
	CD5	1-WAY 2" PVC	PV SYSTEM DIAGNOSTICS AND SENSOR CIRCUITS	
	CD6	3-WAY 1" PVC	ACS AND DATA CIRCUITS FOR ORG. STORAGE BLDG AND POL/HAZMAT STORAGE SHEDS	PROVIDE 3 CELL 1" MESH INNERDUCT W/ PULL ROPES. 1 CONDUIT DATA FOR METER, 1 CONDUIT DATA FOR ACS, 1 CONDUIT SPARE
ELECTRICAL SERVICE ENTRANCE	ES1	4-WAY 4" PVC	3 PARALLEL SETS OF: 4 500 KCMIL CU, TYPE USE CABLE	3 CONDUITS HAVE PHASE A, B, C, AND NEUTRAL EACH, AND 1 CONDUIT IS SPARE
LIGHTING	EL1	1-WAY 1" PVC	VARIES. SEE PANEL SCHEDULE LP-1, SHEET E-611	
POWER	EP1	(CONSULT SCHEDULES)	(CONSULT SCHEDULES/SINGLE LINE)	MOTOR AND EQUIPMENT POWER
	EP2	4 WAY 4" PVC	3 PARALLEL SETS OF: 4 500 KCMIL CU, TYPE XHHW-2 CONDUCTOR, #3/0 GND	FOR SOLAR PV. 1 CONDUIT SPARE W/ PULL ROPE

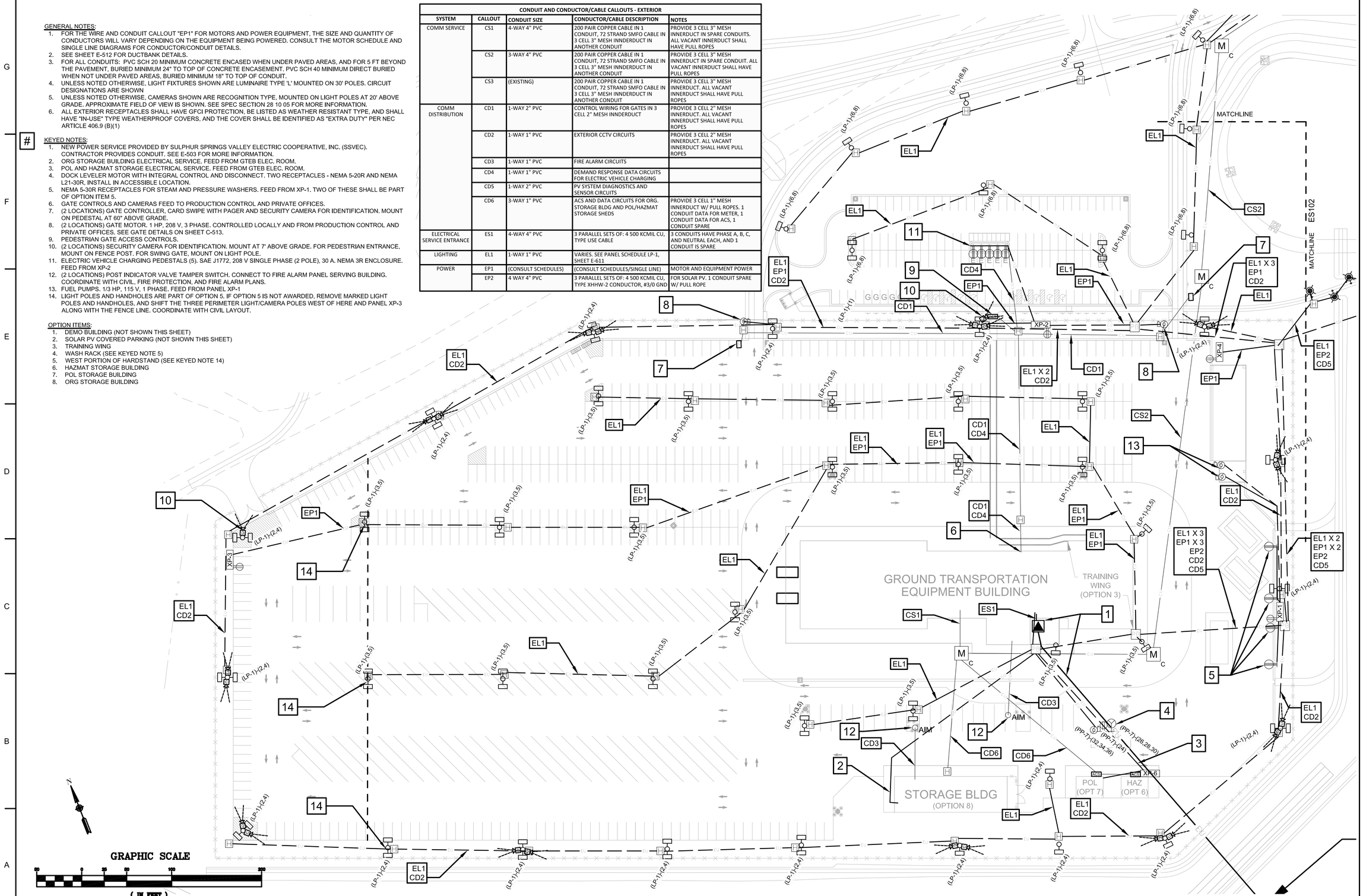

GTEB ELECTRICAL SITE PLAN - MAIN SITE

US Army Corps of Engineers®

MARK	DESCRIPTION	DATE

ISSUE DATE: 13 JUL 2020
SOLICITATION NO.:
CONTRACT NO.:
SPEC NO: 19-45
SUBMITTED BY: W. JOHN R. PARKISH
SIZE: ANSI D
CADD FILE NO: 223-25-0865

DESIGNED BY: D. CARULLI
DRAWN BY: D. CARULLI
CHECKED BY: S. JONES

U.S. ARMY CORPS OF ENGINEERS
SACRAMENT DISTRICT
US DEPT OF ARMY

SACRAMENTO DISTRICT
IN-HOUSE DESIGN
1325 J STREET
SACRAMENTO, CA 95814

FT. HUACHUCA, AZ
GROUND TRANSPORT EQUIPMENT BUILDING

ELECTRICAL SITE PLAN

SHEET ID
ES101

W65E_Site Plan.dwg

RTA

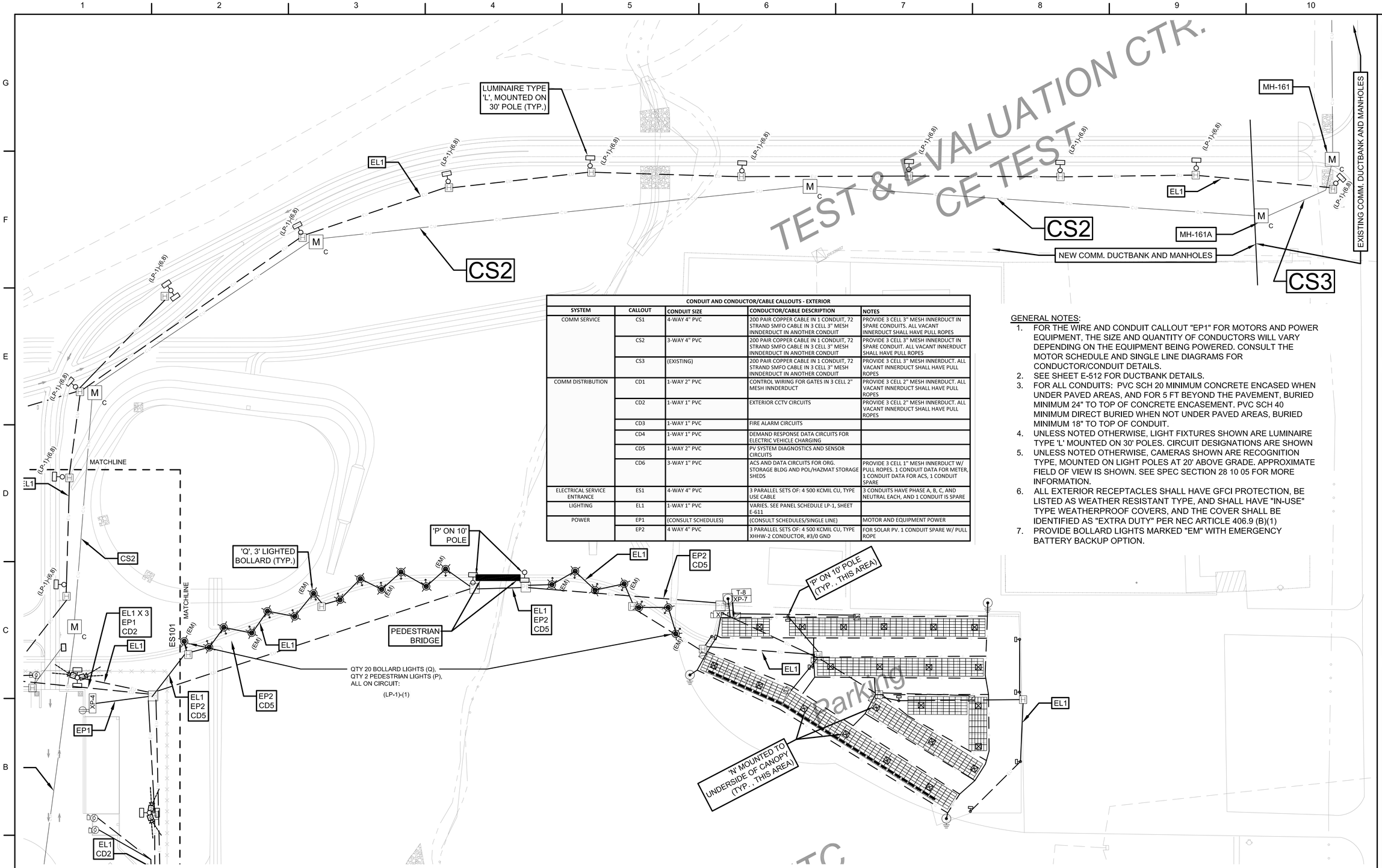

CONDUIT AND CONDUCTOR/CABLE CALLOUTS - EXTERIOR				
SYSTEM	CALLOUT	CONDUIT SIZE	CONDUCTOR/CABLE DESCRIPTION	NOTES
COMM SERVICE	CS1	4-WAY 4" PVC	200 PAIR COPPER CABLE IN 1 CONDUIT, 72 STRAND SMFO CABLE IN 3 CELL 3" MESH INNDERDUCT IN ANOTHER CONDUIT	PROVIDE 3 CELL 3" MESH INNERDUCT IN SPARE CONDUITS. ALL VACANT INNERDUCT SHALL HAVE PULL ROPES
	CS2	3-WAY 4" PVC	200 PAIR COPPER CABLE IN 1 CONDUIT, 72 STRAND SMFO CABLE IN 3 CELL 3" MESH INNDERDUCT IN ANOTHER CONDUIT	PROVIDE 3 CELL 3" MESH INNERDUCT IN SPARE CONDUIT. ALL VACANT INNERDUCT SHALL HAVE PULL ROPES
	CS3	(EXISTING)	200 PAIR COPPER CABLE IN 1 CONDUIT, 72 STRAND SMFO CABLE IN 3 CELL 3" MESH INNDERDUCT IN ANOTHER CONDUIT	PROVIDE 3 CELL 3" MESH INNERDUCT. ALL VACANT INNERDUCT SHALL HAVE PULL ROPES
COMM DISTRIBUTION	CD1	1-WAY 2" PVC	CONTROL WIRING FOR GATES IN 3 CELL 2" MESH INNDERDUCT	PROVIDE 3 CELL 2" MESH INNERDUCT. ALL VACANT INNERDUCT SHALL HAVE PULL ROPES
	CD2	1-WAY 1" PVC	EXTERIOR CCTV CIRCUITS	PROVIDE 3 CELL 2" MESH INNERDUCT. ALL VACANT INNERDUCT SHALL HAVE PULL ROPES
	CD3	1-WAY 1" PVC	FIRE ALARM CIRCUITS	
	CD4	1-WAY 1" PVC	DEMAND RESPONSE DATA CIRCUITS FOR ELECTRIC VEHICLE CHARGING	
	CD5	1-WAY 2" PVC	PV SYSTEM DIAGNOSTICS AND SENSOR CIRCUITS	
	CD6	3-WAY 1" PVC	ACS AND DATA CIRCUITS FOR ORG. STORAGE BLDG AND POL/HAZMAT STORAGE SHEDS	PROVIDE 3 CELL 1" MESH INNERDUCT W/ PULL ROPES. 1 CONDUIT DATA FOR METER, 1 CONDUIT DATA FOR ACS, 1 CONDUIT SPARE
ELECTRICAL SERVICE ENTRANCE	ES1	4-WAY 4" PVC	3 PARALLEL SETS OF: 4 500 KCMIL CU, TYPE USE CABLE	3 CONDUITS HAVE PHASE A, B, C, AND NEUTRAL EACH, AND 1 CONDUIT IS SPARE
LIGHTING	EL1	1-WAY 1" PVC	VARIES. SEE PANEL SCHEDULE LP-1, SHEET E-611	
POWER	EP1	(CONSULT SCHEDULES)	(CONSULT SCHEDULES/SINGLE LINE)	MOTOR AND EQUIPMENT POWER
	EP2	4 WAY 4" PVC	3 PARALLEL SETS OF: 4 500 KCMIL CU, TYPE XHHW-2 CONDUCTOR, #3/0 GND	FOR SOLAR PV. 1 CONDUIT SPARE W/ PULL ROPE

GENERAL NOTES:

1. FOR THE WIRE AND CONDUIT CALLOUT "EP1" FOR MOTORS AND POWER EQUIPMENT, THE SIZE AND QUANTITY OF CONDUCTORS WILL VARY DEPENDING ON THE EQUIPMENT BEING POWERED. CONSULT THE MOTOR SCHEDULE AND SINGLE LINE DIAGRAMS FOR CONDUCTOR/CONDUIT DETAILS.
2. SEE SHEET E-512 FOR DUCTBANK DETAILS.
3. FOR ALL CONDUITS: PVC SCH 20 MINIMUM CONCRETE ENCASED WHEN UNDER PAVED AREAS, AND FOR 5 FT BEYOND THE PAVEMENT, BURIED MINIMUM 24" TO TOP OF CONCRETE ENCASEMENT. PVC SCH 40 MINIMUM DIRECT BURIED WHEN NOT UNDER PAVED AREAS, BURIED MINIMUM 18" TO TOP OF CONDUIT.
4. UNLESS NOTED OTHERWISE, LIGHT FIXTURES SHOWN ARE LUMINAIRE TYPE 'L' MOUNTED ON 30' POLES. CIRCUIT DESIGNATIONS ARE SHOWN
5. UNLESS NOTED OTHERWISE, CAMERAS SHOWN ARE RECOGNITION TYPE, MOUNTED ON LIGHT POLES AT 20' ABOVE GRADE. APPROXIMATE FIELD OF VIEW IS SHOWN. SEE SPEC SECTION 28 10 05 FOR MORE INFORMATION.
6. ALL EXTERIOR RECEPTACLES SHALL HAVE GFCI PROTECTION, BE LISTED AS WEATHER RESISTANT TYPE, AND SHALL HAVE "IN-USE" TYPE WEATHERPROOF COVERS, AND THE COVER SHALL BE IDENTIFIED AS "EXTRA DUTY" PER NEC ARTICLE 406.9 (B)(1)
7. PROVIDE BOLLARD LIGHTS MARKED "EM" WITH EMERGENCY BATTERY BACKUP OPTION.

GTEB ELECTRICAL SITE PLAN - ACCESS ROAD AND SUPPLEMENTAL PARKING

US Army Corps of Engineers®

MARK	DESCRIPTION	DATE

DESIGNED BY: D. CARULLI
DRAWN BY: D. CARULLI
CHECKED BY: S. JONES
SUBMITTED BY: SUJOHN K. PARISH
ISSUE DATE: 13 JUL 2020
SOLICITATION NO.:
CONTRACT NO.:
SPEC NO: 2445
W912QR-
ANSI D 223-25-0865

U.S. ARMY CORPS OF ENGINEERS
SACRAMENT DISTRICT
US DEPT OF ARMY

SACRAMENTO DISTRICT
IN-HOUSE DESIGN
1325 J STREET
SACRAMENTO, CA 95814

FT. HUACHUCA, AZ
GROUND TRANSPORT EQUIPMENT BUILDING

ELECTRICAL SITE PLAN

SHEET ID
ES102

W65E_Site Plan.dwg

RTA

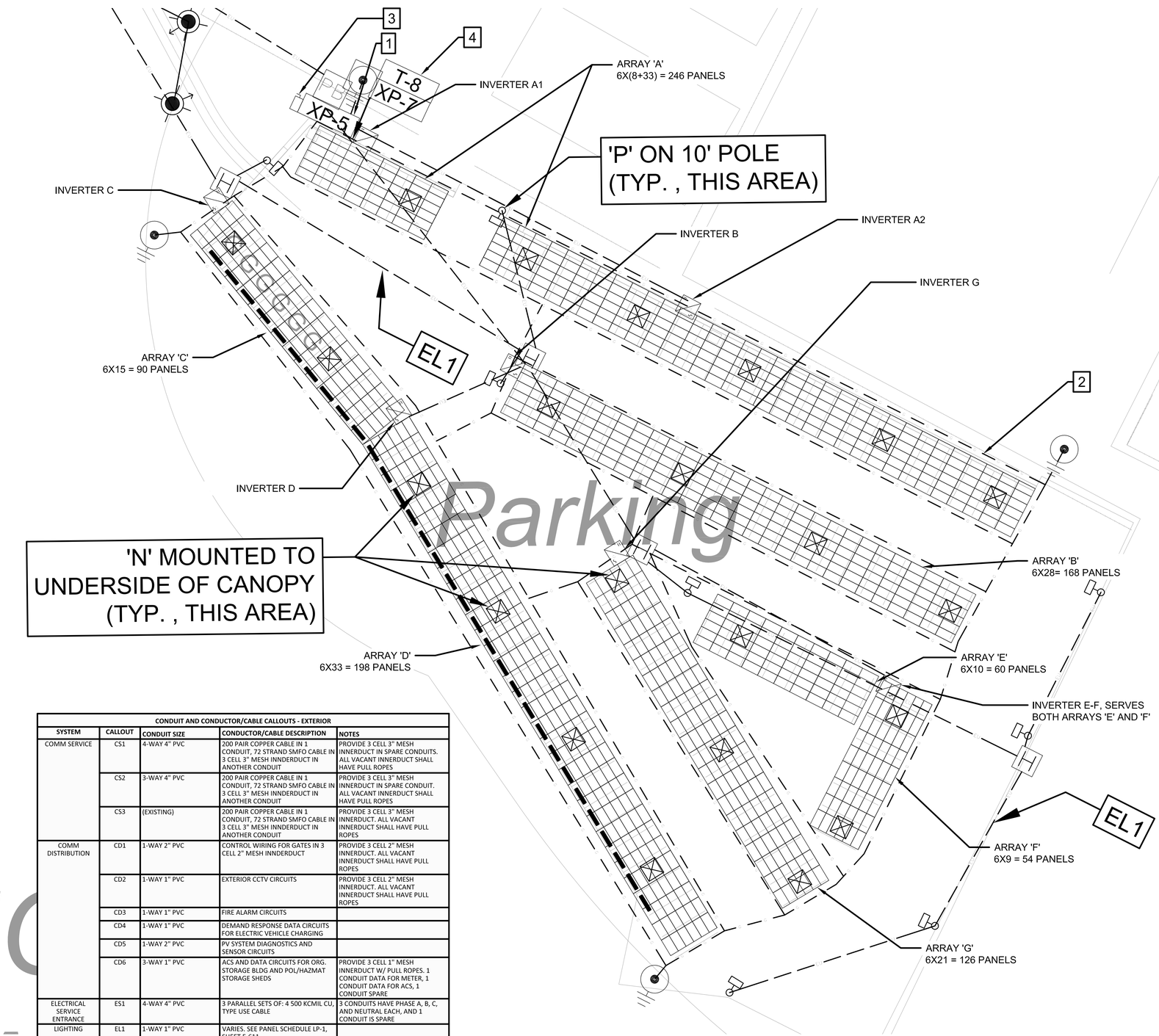

CONDUIT AND CONDUCTOR/CABLE CALLOUTS - EXTERIOR				
SYSTEM	CALLOUT	CONDUIT SIZE	CONDUCTOR/CABLE DESCRIPTION	NOTES
COMM SERVICE	CS1	4-WAY 4" PVC	200 PAIR COPPER CABLE IN 1 CONDUIT, 72 STRAND SMFO CABLE IN 3 CELL 3" MESH INNDERDUCT IN ANOTHER CONDUIT	PROVIDE 3 CELL 3" MESH INNERDUCT IN SPARE CONDUITS. ALL VACANT INNERDUCT SHALL HAVE PULL ROPES
	CS2	3-WAY 4" PVC	200 PAIR COPPER CABLE IN 1 CONDUIT, 72 STRAND SMFO CABLE IN 3 CELL 3" MESH INNDERDUCT IN ANOTHER CONDUIT	PROVIDE 3 CELL 3" MESH INNERDUCT IN SPARE CONDUIT. ALL VACANT INNERDUCT SHALL HAVE PULL ROPES
	CS3	(EXISTING)	200 PAIR COPPER CABLE IN 1 CONDUIT, 72 STRAND SMFO CABLE IN 3 CELL 3" MESH INNDERDUCT IN ANOTHER CONDUIT	PROVIDE 3 CELL 3" MESH INNERDUCT. ALL VACANT INNERDUCT SHALL HAVE PULL ROPES
COMM DISTRIBUTION	CD1	1-WAY 2" PVC	CONTROL WIRING FOR GATES IN 3 CELL 2" MESH INNDERDUCT	PROVIDE 3 CELL 2" MESH INNERDUCT. ALL VACANT INNERDUCT SHALL HAVE PULL ROPES
	CD2	1-WAY 1" PVC	EXTERIOR CCTV CIRCUITS	PROVIDE 3 CELL 2" MESH INNERDUCT. ALL VACANT INNERDUCT SHALL HAVE PULL ROPES
	CD3	1-WAY 1" PVC	FIRE ALARM CIRCUITS	
	CD4	1-WAY 1" PVC	DEMAND RESPONSE DATA CIRCUITS FOR ELECTRIC VEHICLE CHARGING	
	CD5	1-WAY 2" PVC	PV SYSTEM DIAGNOSTICS AND SENSOR CIRCUITS	
	CD6	3-WAY 1" PVC	ACS AND DATA CIRCUITS FOR ORG. STORAGE BLDG AND POL/HAZMAT STORAGE SHEDS	PROVIDE 3 CELL 1" MESH INNERDUCT W/ PULL ROPES. 1 CONDUIT DATA FOR METER, 1 CONDUIT DATA FOR ACS, 1 CONDUIT SPARE
ELECTRICAL SERVICE ENTRANCE	ES1	4-WAY 4" PVC	3 PARALLEL SETS OF: 4 500 KCMIL CU, TYPE USE CABLE	3 CONDUITS HAVE PHASE A, B, C, AND NEUTRAL EACH, AND 1 CONDUIT IS SPARE
LIGHTING	EL1	1-WAY 1" PVC	VARIES. SEE PANEL SCHEDULE LP-1, SHEET E-611	
POWER	EP1	(CONSULT SCHEDULES)	(CONSULT SCHEDULES/SINGLE LINE)	MOTOR AND EQUIPMENT POWER
	EP2	4 WAY 4" PVC	3 PARALLEL SETS OF: 4 500 KCMIL CU, TYPE XHHW-2 CONDUCTOR, #3/0 GND	FOR SOLAR PV. 1 CONDUIT SPARE W/ PULL ROPE

GTEB ELECTRICAL SITE PLAN - SOLAR PV COVERED PARKING (OPTION 2)

SOLAR PV SYSTEM NOTES:

1. SOLAR PV SYSTEM, INCLUDING CARPORT STRUCTURES AND LIGHTING MOUNTED TO THE STRUCTURES, IS BID OPTION ITEM 2.
2. CONTRACTOR SHALL DESIGN SUPPORT STRUCTURE FOR SOLAR PANEL COVERED PARKING. SEE ADDITIONAL PERFORMANCE REQUIREMENTS FOR THE CARPORT STRUCTURE IN SPEC SECTION 26 31 00.
3. SEE CIVIL SHEET CS108 FOR HEIGHT RESTRICTIONS FOR SOLAR COVERED CAR PORT STRUCTURES. COORDINATE MOUNTING HEIGHTS SUCH THAT LIGHT POLES ARE NOT TALL ENOUGH TO CAST A SHADOW ONTO THE PV ARRAYS WHEN THE SUN IS 30 DEGREES OR MORE ABOVE THE HORIZON. LIGHT POLES MAY BE REDUCED IN HEIGHT TO MEET THIS REQUIREMENT.
4. METALLIC SUPPORT STRUCTURES SHALL BE ELECTRICALLY CONTINUOUS, AND SHALL BE BONDED TO THE GROUND RING ELECTRODES, IN ACCORDANCE WITH NFPA 780. SUPPORT STRUCTURE SHALL LEAVE THE UNDERSIDE OF THE PV MODULES EXPOSED BELOW (NO PANELLING BETWEEN MODULES AND THE GROUND). PANELLING WOULD TRAP WARM AIR BENEATH THE PV MODULES, REDUCING PV SYSTEM EFFICIENCY.
5. EACH PV ARRAY SHALL BE TILTED 5 DEGREES FROM HORIZONTAL TOWARDS THEIR LONG RECTANGULAR EDGE THAT IS CLOSEST TO SOUTH. ARRAYS A, B, C, D, E, AND G WILL TILT TOWARDS THE SOUTHWEST. ARRAY F WILL TILT TOWARDS THE SOUTHEAST.
6. MOUNTING HEIGHTS AND TILT ANGLES OF ALL ARRAYS SHALL BE COORDINATED SUCH THAT NO PORTION OF AN ARRAY OR SUPPORT STRUCTURE SHALL CAST A SHADOW ON ANY PORTION OF THE PV ARRAYS WHEN THE SUN IS 30 DEGREES OR MORE ABOVE THE HORIZON AT ALL TIMES OF THE YEAR. THE TILT ANGLE OF ARRAYS E AND F MAY BE REDUCED TO MEET THIS REQUIREMENT.
7. MOUNT XP-5 AND ALL INVERTERS TO SHADED SIDE OF CARPORT STRUCTURAL SUPPORTS OR PROVIDE ADDITIONAL ANGLE-IRON SUPPORT ASSEMBLY AS NECESSARY.
8. SOLAR PANELS SHALL BE COMMERCIAL TYPE, SIZED APPROXIMATELY 78"X39", RATED 340W. ARRAY SIZES MAY DEVIATE SLIGHTLY FROM SHOWN PLAN, DEPENDING ON EXACT LENGTH OF PANELS. PROVIDE THE INDICATED ARRAY PANEL QUANTITIES FOR EACH SOLAR ARRAY.
9. SEE SHEETS E-605 THROUGH E-608 FOR SOLAR PV CIRCUIT DIAGRAMS AND ADDITIONAL DETAILS.

GENERAL NOTES:

1. FOR THE WIRE AND CONDUIT CALLOUT "EP1" FOR POWER EQUIPMENT, THE SIZE AND QUANTITY OF CONDUCTORS WILL VARY DEPENDING ON THE EQUIPMENT BEING POWERED. CONSULT THE SINGLE LINE DIAGRAMS FOR CONDUCTOR/CONDUIT DETAILS.
2. SEE SHEET E-512 FOR DUCTBANK DETAILS.
3. FOR ALL CONDUITS: PVC SCH 20 MINIMUM CONCRETE ENCASED WHEN UNDER PAVED AREAS, AND FOR 5 FT BEYOND THE PAVEMENT, BURIED MINIMUM 24" TO TOP OF CONCRETE ENCASEMENT. PVC SCH 40 MINIMUM DIRECT BURIED WHEN NOT UNDER PAVED AREAS, BURIED MINIMUM 18" TO TOP OF CONDUIT.
4. ALL LIGHTS IN THIS AREA SHALL BE ON THE CIRCUIT LP1-1. SEE SHEET ES102 FOR CONTINUATION. FEED SOLAR STRUCTURE CANOPY MOUNTED LIGHTS FROM NEARBY HANDHOLES.

KEYED NOTES:

1. CONNECT ALL INVERTERS TO PANEL XP-5. PROVIDE ADDITIONAL SENSORS AND SENSOR CONTROL PANELS, DIAGNOSTIC EQUIPMENT, ANNUNCIATOR PANEL, AND OPERATING INSTRUCTIONS NEAR THIS PANEL. ADDITIONAL SENSORS SHALL INCLUDE: METER, IRRADIANCE SENSOR, WIND SPEED SENSOR, AMBIENT TEMPERATURE SENSOR, AND PV MODULE TEMPERATURE SENSOR. ALL DIAGNOSTIC AND SENSOR CIRCUITS SHALL CONNECT BACK TO THE REMOTE MONITORING PANEL IN THE MAIN ELECTRICAL ROOM.
2. (TYP.) GROUND RING ELECTRODE. BOND METALLIC SUPPORT STRUCTURE TO THE GROUND RING ELECTRODE IN ACCORDANCE WITH NFPA 780. PROVIDE A GROUND ROD AT THE 4 OUTSIDE CORNERS OF THE PV ARRAY SYSTEM (WHOLE SYSTEM, NOT EACH ARRAY). PROVIDE A GROUND TEST WELL (DETAIL 1/EG501) FOR THE ROD CLOSEST TO PANEL XP-5.
3. PROVIDE CLEARLY VISIBLE SWITCH ADJACENT TO PANEL XP-5 THAT WILL DISCONNECT ALL ENERGIZED CONDUCTORS FOR THE PV STRUCTURE MOUNTED LIGHTS. LABEL THIS SWITCH "PV MOUNTED LIGHTS". THE "OFF" POSITION OF THE SWITCH SHALL BE CLEARLY INDICATED, AND THE SWITCH SHALL BE CAPABLE OF BEING LOCKED IN THE "OFF" POSITION.
4. PROVIDE MINI LOAD CENTER COMBINATION T-8 AND XP-6 ADJACENT TO XP-6. THIS LOAD CENTER SHALL FEED A 120 V RECEPTACLE CIRCUIT, FOR MAINTENANCE FOR THE PV SYSTEM. PROVIDE GFCI, WEATHERPROOF RECEPTACLES ADJACENT TO EACH INVERTER (NOT SHOWN ON DRAWINGS). WEATHERPROOF RECEPTACLES SHALL BE "IN-USE" TYPE.

N

GRAPHIC SCALE

20 0 10 20 40 80

(IN FEET)
1 inch = 20 ft.

US Army Corps of Engineers®

MARK	DESCRIPTION	DATE

ISSUE DATE: 13 JUL 2020
SOLICITATION NO.:
CONTRACT NO.:
DESIGNED BY: D. CARULLI
DRAWN BY: D. CARULLI
CHECKED BY: S. JONES
SUBMITTED BY: SUZANNE R. PARRISH
ANSI D
SPEC NO: 22-445
DACW05-T-0665
223-25-0665

U.S. ARMY CORPS OF ENGINEERS
SACRAMENT DISTRICT
US DEPT OF ARMY

SACRAMENTO DISTRICT
IN-HOUSE DESIGN
1325 J STREET
SACRAMENTO, CA 95814

FT. HUACHUCA, AZ
GROUND TRANSPORT EQUIPMENT BUILDING

ELECTRICAL SITE PLAN

SHEET ID
ES103

W65E_Site Plan.dwg

RTA

GENERAL NOTES:

1. THIS SHEET PROVIDED TO SHOW GROUNDING POINTS AND THEIR INTERCONNECTIONS THROUGHOUT THE EPG VEHICLE PARKING AREA.
2. BONDING CONDUCTORS SHOWN SHALL BE MINIMUM 1/0 AWG BARE COPPER CONDUCTOR, BURIED A MINIMUM OF 30" BELOW GRADE.
3. SEE EGXXX SERIES SHEETS FOR LIGHTNING PROTECTION AND INTERIOR GROUNDING PLANS. THE GROUND LOOP FOR EACH BUILDING IS APPROXIMATELY SHOWN HERE.
4. BOND THE DIFFERENT BUILDING GROUND LOOPS TO EACH OTHER AS SHOWN. THIS MEETS MIL-HDBK-419A, VOL 2, PARAGRAPH 1.2.3 (f). BOND THESE CONNECTIONS TO THE ROW OF VEHICLE GROUNDING POINTS BETWEEN THE BUILDINGS (SIDE-FLASH REQUIREMENT).
5. FOR EACH GROUNDING SYSTEM, BOND TO ALL NEARBY METALLIC OBJECTS THAT ARE WITHIN 6 FT OF THE GROUNDING CONDUCTOR, INCLUDING, BUT NOT LIMITED TO: METAL WATER PIPING, METAL GAS PIPING, BOLLARDS, LIGHT POLES, HANDHOLES, PULL BOXES, ELECTRICAL PANELS, AND UNDERGROUND ELECTRICAL CONDUIT COUNTERPOISE CONDUCTORS.

KEYED NOTES:

1. PROVIDE GROUND LOOP CONDUCTOR AROUND THE POL STORAGE TANKS. BOND THE POL STORAGE TANKS TO THIS LOOP AT A MINIMUM OF 2 LOCATIONS EACH, PER UFC 3-575-01, SECTION 3-5.12.
2. THESE GROUNDING POINTS, AND ASSOCIATED CONNECTIONS ARE PART OF OPTION 5. IF OPTION 5 IS NOT AWARDED, REMOVE THESE POINTS, AND RELOCATE THE WEST PERIMETER PARKING GROUNDING POINTS ALONG WITH THE PARKING SPACES, IN COORDINATION WITH THE CIVIL PLANS.

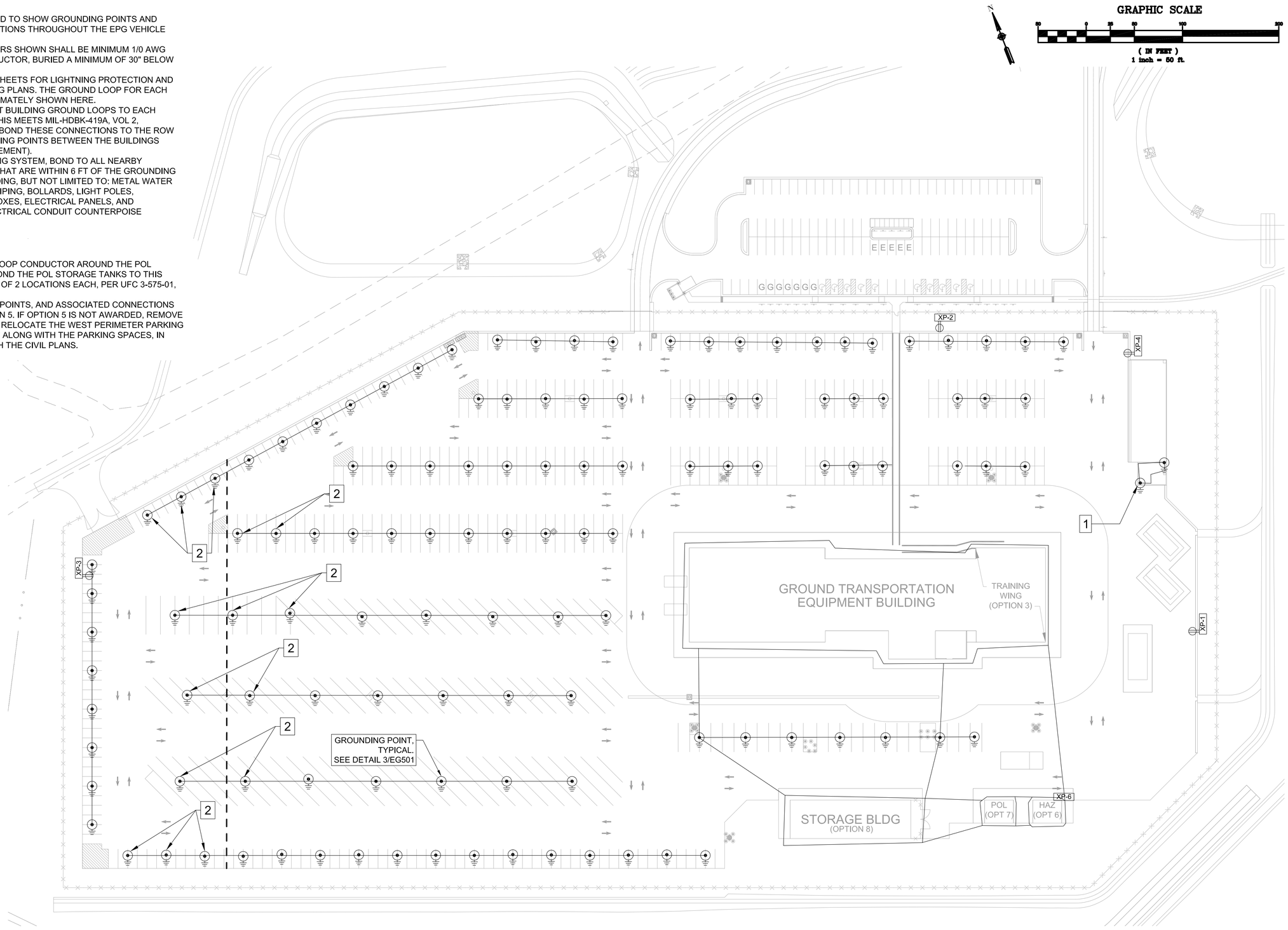

GTEB ELECTRICAL GROUNDING SITE PLAN - MAIN SITE

US Army Corps of Engineers®

MARK	DESCRIPTION	DATE

ISSUE DATE: 13 JUL 2020
SOLICITATION NO.:
CONTRACT NO.:
SPEC NO: 72-145
DESIGN FILE NO: 223-25-0665

DESIGNED BY: D. CARULLI
DRAWN BY: D. CARULLI
CHECKED BY: S. JONES
SUBMITTED BY: ISJOHN R. PARRISH
SIZE: ANSI D

U.S. ARMY CORPS OF ENGINEERS
SACRAMENTO DISTRICT
US DEPT OF ARMY

SACRAMENTO DISTRICT
IN-HOUSE DESIGN
1325 J STREET
SACRAMENTO, CA 95814

FT. HUACHUCA, AZ
GROUND TRANSPORT EQUIPMENT BUILDING

ELECTRICAL SITE PLAN - GROUNDING

SHEET ID

ES104

W65E_Site Plan - Grounding.dwg

RTA

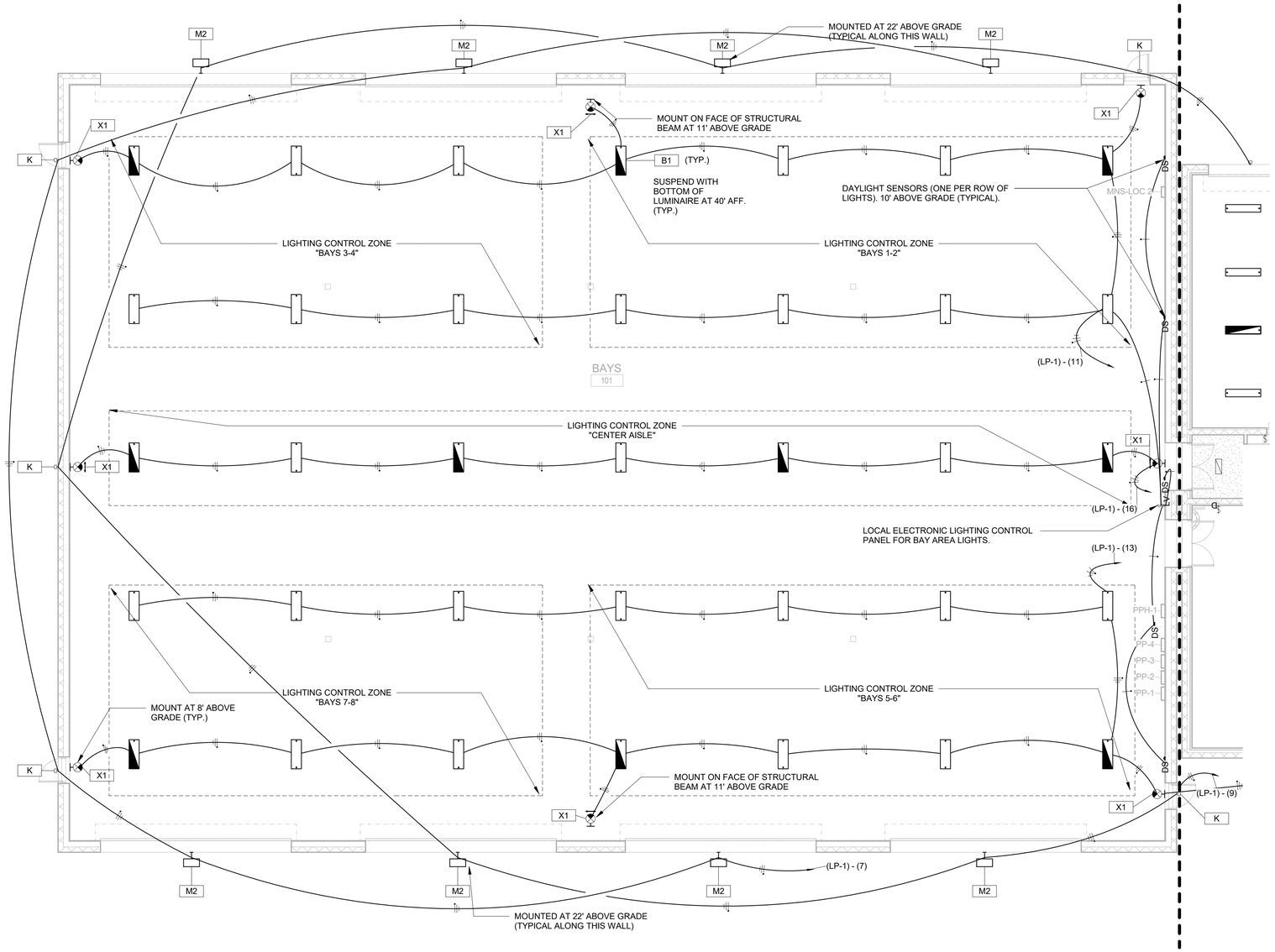

2
EL101

GTEB LIGHTING PLAN - BAYS

1/8" = 1'-0"

GENERAL NOTES:

1. PROVIDE CROSS SUPPORTS BETWEEN THE MAIN ROOFING STRUCTURAL BEAMS TO SUSPEND THE LUMINAIRES FOR THE BAY AREA.
2. BAY AREA LIGHTS SHALL BE CONTROLLED FROM LOCAL ELECTRONIC LIGHTING CONTROL CONSOLE. CONSOLE SHALL BE TOUCH SCREEN TYPE WITH DIMMING CONTROLS FOR EACH ZONE, AND MASTER CONTROL TO CONTROL ALL ZONES COVERED BY THE CONSOLE.
3. FOR THE BAY AREA, PROVIDE DAYLIGHT SENSORS TO AUTOMATICALLY DIM THE BAY LIGHTING. PROVIDE ONE SENSOR FOR EACH ROW OF LIGHTS, AS SHOWN. SENSORS SHALL BE INTALLED A MAXIMUM OF 11' AFF, PER ASHRAE 90.1, SECTION 9.4.1.1, e, 1. TEST AND CALIBRATE THE SYSTEM TO MAINTAIN A HORIZONTAL AVERAGE ILLUMINANCE OF 50 FOOTCANDLES AT 2.5' AFF. DAYLIGHT SENSOR SHALL BE LOCATED AND AIMED SUCH THAT THERE IS NO OBSTRUCTION BETWEEN THE CLERESTORY WINDOWS (SEE ARCHITECTURAL PLANS) AND THE DAYLIGHT SENSORS. DAYLIGHT SENSORS FOR THE NORTH 2 ROWS OF LIGHTS SHALL AIM TOWARD THE NORTH WINDOWS, AND FOR THE SOUTH 3 ROWS OF LIGHTS SHALL AIM TOWARD THE SOUTH WINDOWS. SENSORS SHALL BE INSTALLED AND CALIBRATED AFTER MECHANICAL AND CRANE EQUIPMENT IS INSTALLED.
4. SEE LUMINAIRE SCHEDULES AND DETAILS ON SHEETS EL501 AND EL502.
5. NOT ALL CONTROL DEVICES MAY BE SHOWN ON DRAWINGS. SEE LIGHTING CONTROL SCHEMES ON SHEET EL503.
6. TYPICALLY, ALL LUMINAIRES SHALL HAVE AN ASSOCIATED JUNCTION BOX INSTALLED WITH IT. JUNCTION BOXES ARE NOT SHOWN IN DRAWINGS. FOR WALL-MOUNTED LUMINAIRES, J-BOX SHALL BE IN THE WALL, BEHIND THE LUMINAIRE AT THE LUMINAIRE POWER CONNECTION POINT. J-BOXES SHALL NOT BE VISIBLE IN FINISHED SPACES. MAXIMUM LENGTH OF FLEXIBLE METAL CONDUIT BETWEEN J-BOX AND LUMINAIRE IS 6', PER NEC AND UFC 3-520-01.

8 6 4 2 0 8 16
SCALE: 1/8"=1'-0"

PLAN NORTH

AREA

'A'

US Army Corps of Engineers ®

MARK	DESCRIPTION	DATE

US ARMY CORPS OF ENGINEERS
SACRAMENTO DISTRICT
US DEPT OF ARMY

SACRAMENTO DISTRICT
IN-HOUSE DESIGN
1325 J STREET
SACRAMENTO, CA 95814

DESIGNED BY: D. CARULLI
DRAWN BY: D. CARULLI
CHECKED BY: S. JONES
SUBMITTED BY: KAREN PARRISH
SIZE: ANSI D'
FILE NAME: WESE_GTEB_Central.rvt
ISSUE DATE: 13 JUL 2020
PROJECT # 225-25-0665
SPEC # 2145
FILE NUMBER:

FT. HUACHUCA
GROUND TRANSPORT EQUIPMENT BUILDING
ARIZONA

GTEB LIGHTING PLAN

SHEET ID

EL101

RTA

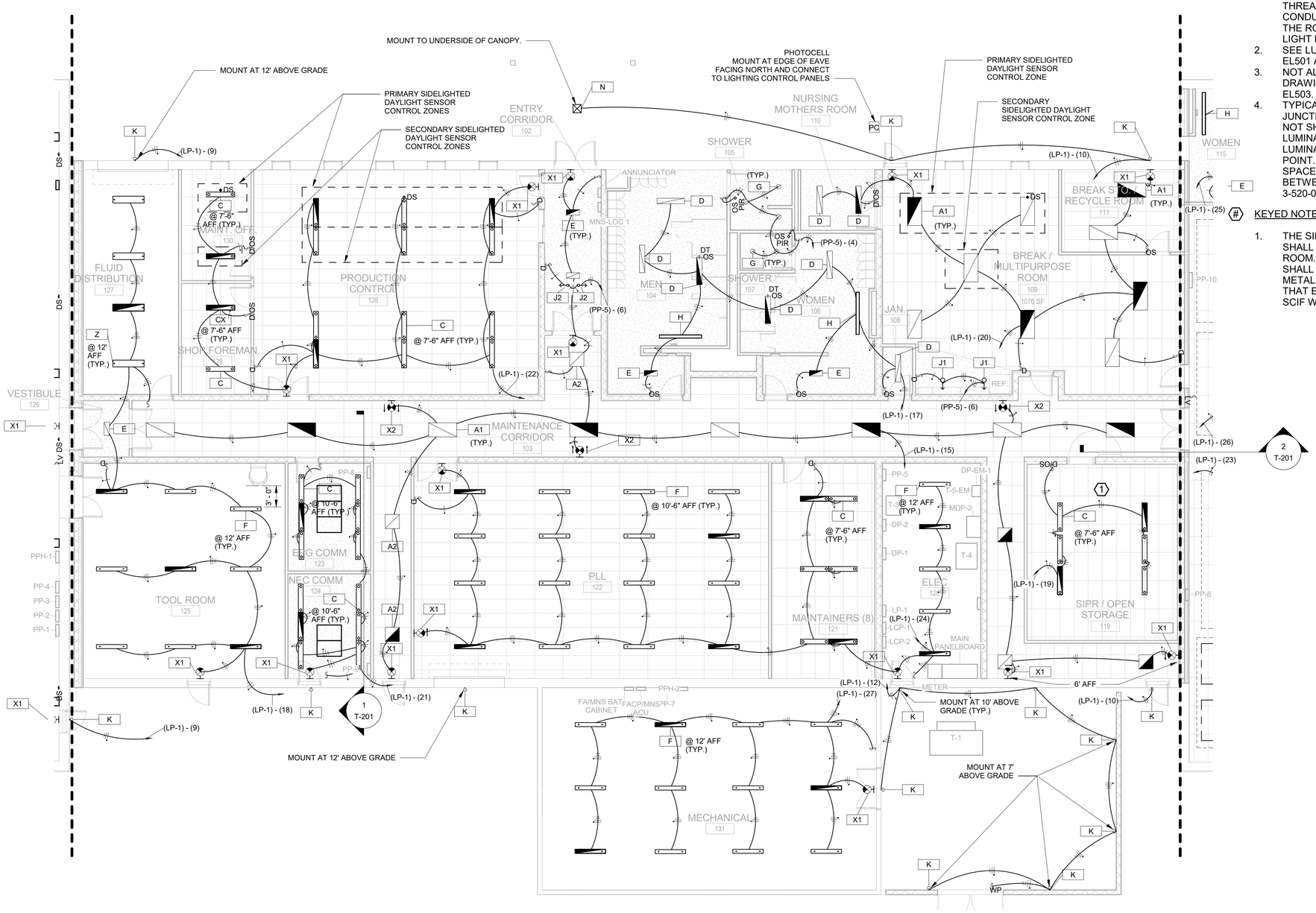

1 EL102 GTEB LIGHTING PLAN - ADMIN.

1/8" = 1'-0"

GENERAL NOTES:

1. HAZARDOUS LOCATION NOTE: THE FLUID DISTRIBUTION ROOM SHALL BE CONSIDERED A CLASS I DIVISION 2 HAZARDOUS LOCATION. MOTORS, LIGHT FIXTURES, SWITCHES, AND ALL ELECTRICAL EQUIPMENT IN THIS ROOM SHALL USE EXPLOSIONPROOF ENCLOSURES, AND ALL CONDUITS SHALL BE THREADED RGS WITH MINIMUM 5 THREADS ENGAGED. PROVIDE CONDUIT SEALS IN CONDUIT SYSTEMS WITHIN 18" OF THE PERIMETER OF THE ROOM, AND WITHIN 18" OF MOTORS, SWITCHES, AND LIGHT FIXTURES.
2. SEE LUMINAIRE SCHEDULES AND DETAILS ON SHEETS EL501 AND EL502.
3. NOT ALL CONTROL DEVICES MAY BE SHOWN ON DRAWINGS. SEE LIGHTING CONTROL SCHEMES ON SHEET EL503.
4. TYPICALLY, ALL LUMINAIRES SHALL HAVE AN ASSOCIATED JUNCTION BOX INSTALLED WITH IT. JUNCTION BOXES ARE NOT SHOWN IN DRAWINGS. FOR WALL-MOUNTED LUMINAIRES, J-BOX SHALL BE IN THE WALL, BEHIND THE LUMINAIRE AT THE LUMINAIRE POWER CONNECTION POINT. J-BOXES SHALL NOT BE VISIBLE IN FINISHED SPACES. MAXIMUM LENGTH OF FLEXIBLE METAL CONDUIT BETWEEN J-BOX AND LUMINAIRE IS 6', PER NEC AND UFC 3-520-01.

KEYED NOTES:

1. THE SIPR / OPEN STORAGE ROOM IS A SCIF. CONTRACTOR SHALL MINIMIZE CONDUIT PENETRATIONS INTO THIS ROOM. CONDUITS THAT PENETRATE THE SCIF PERIMETER SHALL HAVE ELECTRONIC ISOLATION: SPACE THE METALLIC CONDUIT WITH A SECTION OF PVC CONDUIT THAT EXTENDS A MINIMUM OF 3" ON EITHER SIDE OF THE SCIF WALL.

8 6 4 2 0 8 16

SCALE: 1/8"=1'-0"

PLAN NORTH

AREA

'B'

US Army Corps of Engineers ®

MARK	DESCRIPTION	DATE

DESIGNED BY: D. CARULLI
DRAWN BY: D. CARULLI
CHECKED BY: S. JONES
SUBMITTED BY: ALAN PETERKIN
SIZE: ANSI 'D'
FILE NAME: WISE_GTEB_Central.rvt

ISSUE DATE: 13 JUL 2020
PROJECT # 225-25-0665
SPEC # 2145
FILE NUMBER:

US ARMY CORPS OF ENGINEERS
SACRAMENTO DISTRICT
US DEPT OF ARMY

SACRAMENTO DISTRICT
IN-HOUSE DESIGN
1325 J STREET
SACRAMENTO, CA 95814

FT. HUACHUCA
GROUND TRANSPORT EQUIPMENT BUILDING
ARIZONA

GTEB LIGHTING PLAN

SHEET ID

EL102

RTA

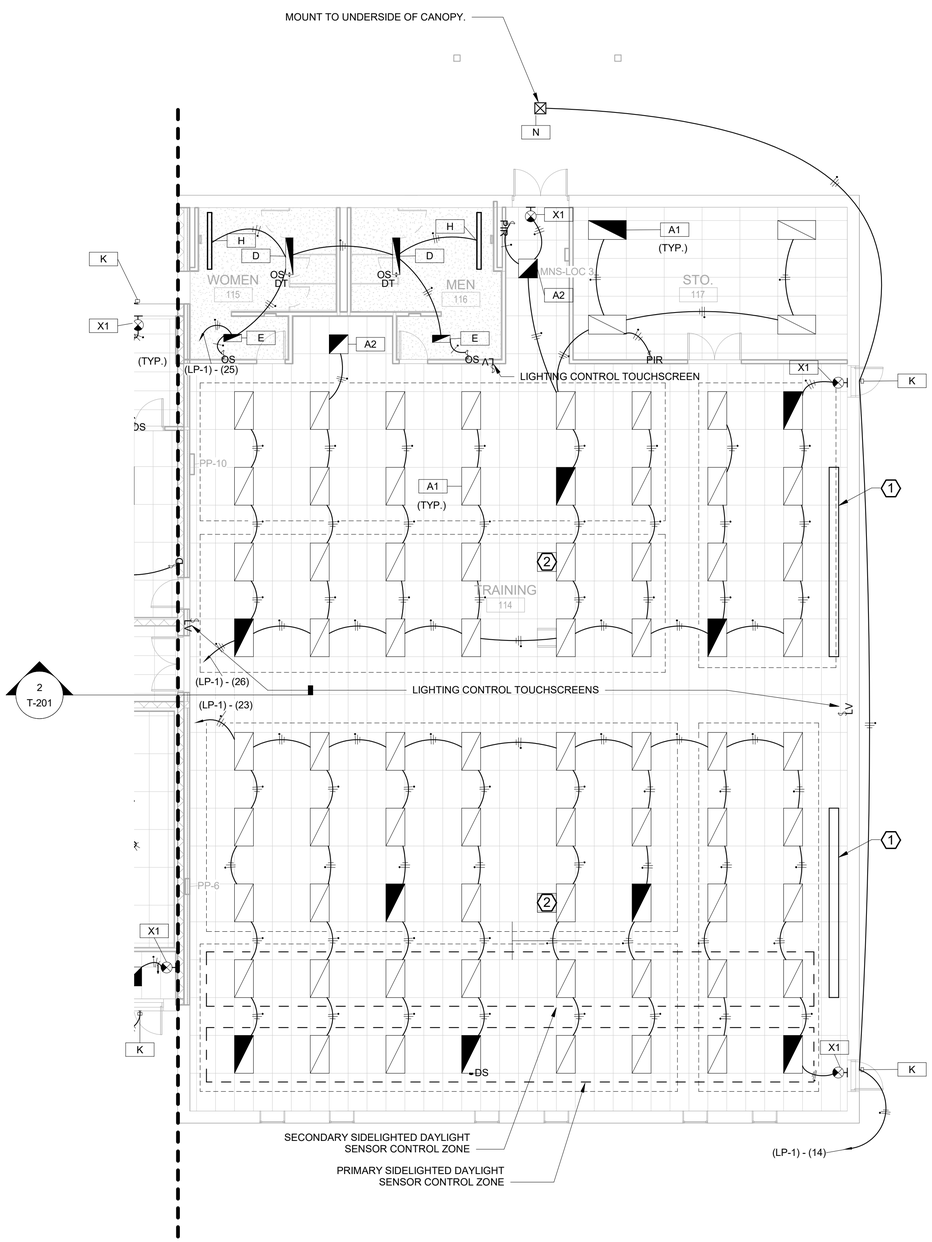

1
EL103

GTEB LIGHTING PLAN - TRAINING (OPTION 3)

1/8" = 1'-0"

GENERAL NOTES:

1. TIGHT DASHED LINES SHOW ZONE CONTROL AREAS FOR THE TRAINING ROOM. THE LIGHTING CONTROL TOUCH SCREEN SHALL BE CAPABLE OF OPERATING (INCLUDING DIMMING) ALL OF THESE ZONES INDEPENDENTLY, AND LOGICAL COLLECTIONS OF ZONES SIMULTANEOUSLY. ZONE GROUPS SHALL INCLUDE: WHOLE ROOM, ABOVE PROJECTOR SCREENS, NORTH HALF, AND SOUTH HALF.
2. SEE LUMINAIRE SCHEDULES AND DETAILS ON SHEETS EL501 AND EL502.
3. NOT ALL CONTROL DEVICES MAY BE SHOWN ON DRAWINGS. SEE LIGHTING CONTROL SCHEMES ON SHEET EL503.
4. TYPICALLY, ALL LUMINAIRES SHALL HAVE AN ASSOCIATED JUNCTION BOX INSTALLED WITH IT. JUNCTION BOXES ARE NOT SHOWN IN DRAWINGS. FOR WALL-MOUNTED LUMINAIRES, J-BOX SHALL BE IN THE WALL, BEHIND THE LUMINAIRE AT THE LUMINAIRE POWER CONNECTION POINT. J-BOXES SHALL NOT BE VISIBLE IN FINISHED SPACES. MAXIMUM LENGTH OF FLEXIBLE METAL CONDUIT BETWEEN J-BOX AND LUMINAIRE IS 6', PER NEC AND UFC 3-520-01.
5. THIS AREA SHOWS OPTION 3. IF OPTION 3 IS NOT AWARDED, PROVIDE EXIT SIGNS AT THE EAST EXTERIOR EXIT DOORS FROM THE MAINTENANCE CORRIDOR 103 AND BREAK/MULTIPURPOSE ROOM 109, AND A LIGHT TYPE "N" MOUNTED ON UNDERSIDE OF EXTERIOR CANOPY (COORDINATE WITH BASE-BID STRUCTURAL AND ARCHITECTURE PLANS).

(#) KEYED NOTES:

1. CEILING MOUNTED PROJECTOR SCREEN LOCATIONS. COORDINATE WITH POWER PLANS.
2. CEILING MOUNTED PROJECTOR LOCATIONS. COORDINATE WITH POWER AND TELECOMMUNICATIONS PLANS.

8 6 4 2 0 8 16

SCALE: 1/8"=1'-0"

PLAN NORTH

AREA

'C'

US Army Corps of Engineers ®

MARK	DESCRIPTION	DATE

DESIGNED BY: D. CARULLI
DRAWN BY: D. CARULLI
CHECKED BY: S. JONES
SUBMITTED BY: ALLYSON T. PARRISH
SIZE: ANSI D'
FILE NAME: WESE_GTEB_Central.rvt
ISSUE DATE: 13 JUL 2020
PROJECT # 225-25-0665
SPEC # 2145
FILE NUMBER:

US ARMY CORPS OF ENGINEERS
SACRAMENTO DISTRICT
US DEPT OF ARMY

SACRAMENTO DISTRICT
IN-HOUSE DESIGN
1325 J STREET
SACRAMENTO, CA 95814

FT. HUACHUCA, ARIZONA
GROUND TRANSPORT EQUIPMENT BUILDING

GTEB LIGHTING PLAN (OPTION 3)

SHEET ID

EL103

RTA

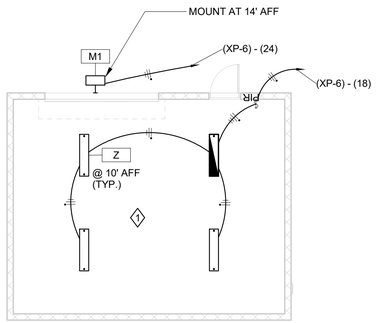

2 EL111 POL STORAGE (OPTION 7) LIGHTING PLAN

1/8" = 1'-0"

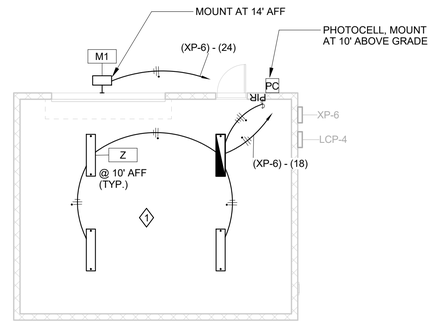

3 EL111 HAZMAT STORAGE (OPTION 6) LIGHTING PLAN

1/8" = 1'-0"

◇ KEYED NOTES:

1. INTERIOR OF POL AND HAZMAT STORAGE BUILDINGS SHALL BE TREATED AS CLASS 1, DIV. 2 HAZARDOUS LOCATIONS. MOTORS, LIGHT FIXTURES, SWITCHES, AND ALL ELECTRICAL EQUIPMENT IN THIS ROOM SHALL USE EXPLOSIONPROOF ENCLOSURES, AND ALL CONDUITS SHALL BE THREADED RGS WITH MINIMUM 5 THREADS ENGAGED. PROVIDE CONDUIT SEALS IN CONDUIT SYSTEMS WITHIN 18" OF THE PERIMETER OF THE ROOM, AND WITHIN 18" OF MOTORS, SWITCHES, AND LIGHT FIXTURES.

GENERAL NOTES:

1. SEE LUMINAIRE SCHEDULES, DETAILS, AND CONTROLS BEGINNING ON SHEET EL501.
2. TYPICALLY, LUMINAIRES SHALL BE PROVIDED WITH JUNCTION BOXES AT THEIR OUTLET LOCATIONS (JUNCTION BOXES NOT SHOWN ON PLANS). FLEXIBLE CONDUIT NOT IN EXCESS OF 6 FT MAY BE USED TO CONNECT LUMINAIRES TO JUNCTION BOXES. MULTIPLE LUMINAIRES MAY SHARE A JUNCTION BOX OUTLET.
3. IF OPTION 7 IS AWARDED, BUT OPTION 6 IS NOT, PLACE PANEL XP-6, LCP-4, AND THE PHOTOCELL ON THE POL STORAGE BUILDING.

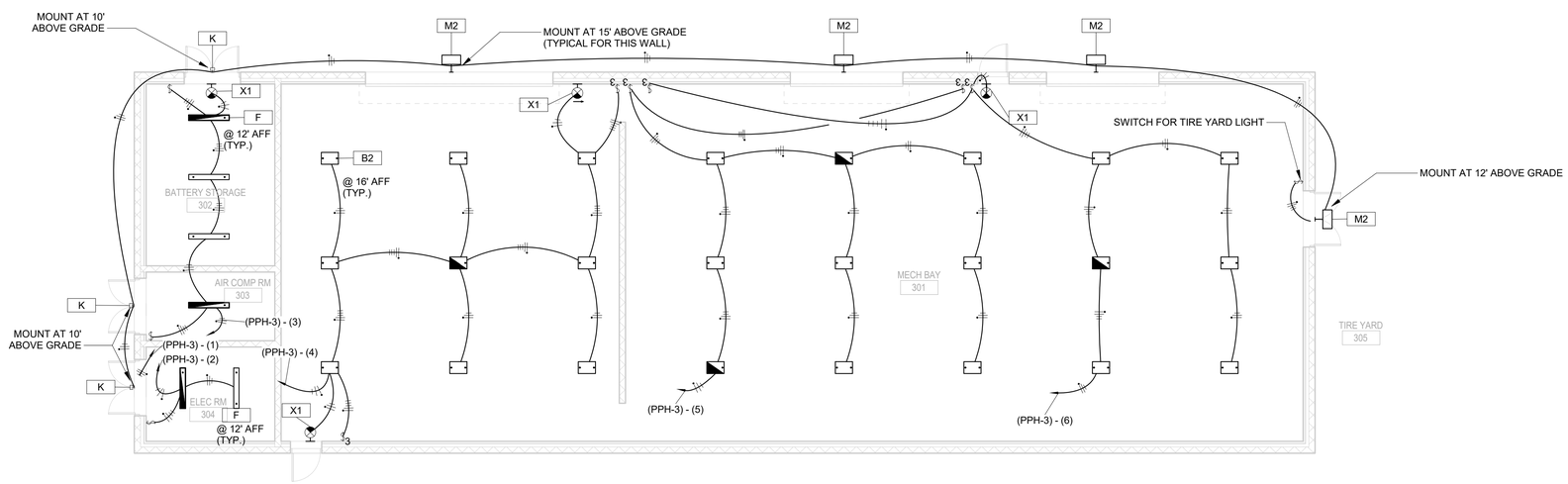

1 EL111 ORG. STORAGE (OPTION 8) LIGHTING PLAN

1/8" = 1'-0"

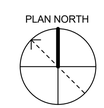

8 6 4 2 0 8 16

SCALE: 1/8"=1'-0"

US Army Corps of Engineers ®

MARK	DESCRIPTION	DATE

DESIGNED BY: D. CARULLI
DRAWN BY: D. CARULLI
CHECKED BY: S. JONES
SUBMITTED BY: W. JOHN PARRISH
SIZE: ANSI D' FILE NAME: WISE_STOR_central.rvt
ISSUE DATE: 13 JUL 2020
PROJECT # 225-25-0665
SPEC # 2145
FILE NUMBER:

US ARMY CORPS OF ENGINEERS
SACRAMENTO DISTRICT
US DEPT OF ARMY

SACRAMENTO DISTRICT
IN-HOUSE DESIGN
1325 J STREET
SACRAMENTO, CA 95814

FT. HUACHUCA
GROUND TRANSPORT EQUIPMENT BUILDING
ARIZONA

STORAGE BUILDINGS LIGHTING PLANS
(OPTIONS 6, 7, & 8)

SHEET ID

EL111

RTA

LUMINAIRE SCHEDULE

Type Mark	Mounting Type	Mounting Location	Shape	Size	Lamp	Luminous Flux	Initial Color Temperature	Fixture Volts	Fixture Watts	Count	Comments
A1	RECESSED	CEILING	LINEAR	2X4	LED	3836 lm	4000 K	277 V	23.2 W	93	
A2	RECESSED	CEILING	LINEAR	2X2	LED	2333 lm	4000 K	277 V	15.9 W	8	
B1	PENDANT	BELOW ROOF STRUCTURE	LINEAR	44" X 15 1/4"	LED	28243 lm	4000 K	277 V	272.0 W	35	BAY LIGHTS
B2	PENDANT	BELOW ROOF STRUCTURE	LINEAR	22" X 15 1/4"	LED	11478 lm	4000 K	277 V	112.0 W	24	SIMILAR TO B1, BUT LOWER LUMENS AND SMALLER
C	PENDANT	CEILING	LINEAR	8" X 4'	LED	4856 lm	4000 K	277 V	52.0 W	29	PROPERTIES APPLY TO EACH 4' LENGTH
CX	PENDANT	CEILING	LINEAR	8" X 4'	LED	4856 lm	4000 K	277 V	52.0 W	11	(EMERGENCY VERSION OF 'C')
D	SURFACE	WALL/CEILING	LINEAR	1X4	LED	2230 lm	4000 K	277 V	20.0 W	10	
E	SURFACE	CEILING	LINEAR	1X2	LED	2156 lm	4000 K	277 V	20.0 W	7	
F	PENDANT	BELOW ROOF STRUCTURE/CEILING	LINEAR	7" x 4'	LED	3148 lm	4000 K	277 V	23.0 W	48	
G	RECESSED	CEILING	ROUND	6"	LED	725 lm	3000 K	120 V	12.7 W	5	SHOWER LIGHTS
H	RECESSED	CEILING	LINEAR	6" X 6'	LED	2070 lm	4000 K	277 V	24.0 W	4	RECESSED VANITY LIGHTS
J1	RECESSED	CEILING	ROUND	6"	LED	770 lm	4000 K	120 V	11.6 W	2	6" ADJUSTABLE GIMBAL
J2	RECESSED	CEILING	ROUND	3"	LED	590 lm	4000 K	120 V	8.7 W	2	3" ADJUSTABLE GIMBAL
K	SURFACE	WALL	TYPE IV		LED	2029 lm	4000 K	277 V	24.0 W	23	
L	POLE	30'	TYPE IV	MEDIUM	LED	15627 lm	4000 K	480 V	134.0 W	93	EXTERIOR AREA LIGHTS
M1	SURFACE	WALL	TYPE III	SHORT	LED	11099 lm	4000 K	120 V	109.0 W	2	EXTERIOR BAY DOOR LIGHTS (POL/HAZMAT STORAGE BLDGS)
M2	SURFACE	WALL	TYPE III	SHORT	LED	11099 lm	4000 K	277 V	109.0 W	12	EXTERIOR BAY DOOR LIGHTS (GTEB AND ORG STORAGE BLDGS)
N	SURFACE	CEILING	TYPE V		LED	4705 lm	4000 K			24	
P	POLE	10'	TYPE II		LED	4446 lm	4000 K	277 V	35.0 W	10	PEDESTRIAN POLE LIGHTS
Q	BOLLARD	GROUND	ASYMMETRIC		LED	1283 lm	4000 K	277 V	16.0 W	20	BOLLARD LIGHTS
X1	SURFACE	WALL			LED	71 lm	3200 K	277 V	5.0 W	30	EXIT SIGN, SINGLE FACE
X2	SURFACE	WALL			LED	142 lm	3200 K	277 V	10.0 W	3	EXIT SIGN, DOUBLE FACE
Z	PENDANT	BELOW ROOF STRUCTURE	LINEAR	4'	LED	5450 lm	4000 K	120 V	46.9 W	12	EXPLOSIONPROOF HAZARDOUS LOCATION LIGHTS

GENERAL NOTES:

1. FOR INTERIOR LIGHTS, "SHAPE" AND "SIZE" DESCRIBE THE APPROXIMATE DIMENSIONS OF THE LIGHT FIXTURE. FOR EXTERIOR LIGHTS, "SHAPE" AND "SIZE" DESCRIBE THE DISTRIBUTION PATTERN OF THE OPTICS.
2. PROVIDE EMERGENCY BATTERY BACKUP OPTIONS INTEGRAL WITH LUMINAIRES FOR EMERGENCY FIXTURES AS INDICATED IN THE DRAWINGS.
3. ALL EXIT SIGN LIGHTS SHALL HAVE INTEGRAL EMERGENCY BATTERY BACKUP.
4. PROVIDE INTEGRAL MOTION SENSORS FOR LUMINAIRES AS NEEDED FOR CONTROLS IN EACH SPACE TYPE.
5. LUMINAIRE DETAIL IMAGES ARE FOR INFORMATION ONLY, TO PROVIDE A QUICK VISUALIZATION OF THE LUMINAIRE CHARACTERISTICS. THESE IMAGES ARE NOT A SUGGESTION TO USE A CERTAIN MANUFACTURER OR MODEL. CONTRACTOR SHALL PROVIDE LUMINAIRES THAT MEET THE NEEDS OF THE THE PROJECT. CONTRACTOR SHALL ATTEMPT TO MEET THE VOLTAGE CHARACTERISTICS, LUMEN OUTPUT, CORRELATED COLOR TEMPERATURE, COLOR RENDERING INDEX, WATTAGE, DISTRIBUTION TYPES (INCLUDING BUG RATING FOR EXTERIOR LUMINAIRES), LIGHTING CONTROL CAPABILITIES, RATINGS, AND GENERAL ASTHETIC OF THE LUMINAIRE DETAILS.
6. LUMINAIRE "COUNT" IS SOFTWARE GENERATED AND PROVIDED FOR INFORMATION ONLY, AND SHALL NOT BE USED FOR BID ESTIMATES OR ORDERING PURPOSES. THIS QUANTITY MAY ALSO CHANGE DEPENDING ON BID OPTIONS. PROVIDE QUANTITY OF LUMINAIRES AS SHOWN ON THE PLANS.

FEATURES:

LAMP TYPE: LED
MOUNTING: RECESSED

ELECTRICAL:

VOLTAGE: 277 V
WATTAGE: 26.4 W
DRIVER: 0-10 V DIMMING

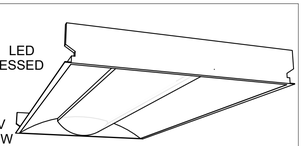

OPTICS:

NOMINAL LUMENS: 3000 lm
LUMENS PER WATT: 146 lm/W
CRI: 80
COLOR TEMP.: 4000 K
EMERGENCY LUMENS: 700 lm

GENERAL DESCRIPTION:

HOUSING: COLD-ROLLED STEEL
FINISH: WHITE POLYESTER POWDER COAT
NOM. DIMENS.: 48" L X 24" W X 4-3/8" H

LUMINAIRE TYPE 'A1'
2'X4' VOLUMETRIC LED TROFFER

FEATURES:

LAMP TYPE: LED
MOUNTING: RECESSED

ELECTRICAL:

VOLTAGE: 277 V
WATTAGE: 17.5 W
DRIVER: 0-10 V DIMMING

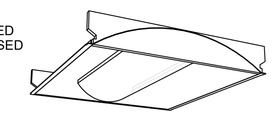

OPTICS:

NOMINAL LUMENS: 2000 lm
LUMENS PER WATT: 133 lm/W
CRI: 80
COLOR TEMP.: 4000 K
EMERGENCY LUMENS: 700 lm

GENERAL DESCRIPTION:

HOUSING: COLD-ROLLED STEEL
FINISH: WHITE POLYESTER POWDER COAT
NOM. DIMENS.: 48" L X 24" W X 4-3/8" H

LUMINAIRE TYPE 'A2'
2'X2' VOLUMETRIC LED TROFFER

FEATURES:

LAMP TYPE: LED
MOUNTING: PENDANT (2 POINT)

ELECTRICAL:

VOLTAGE: 277 V
WATTAGE: 272 W
DRIVER: 0-10 V DIMMING

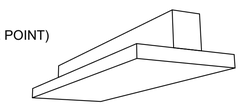

OPTICS:

NOMINAL LUMENS: 30000 lm
LUMENS PER WATT: 103.8 lm/W
CRI: 80
COLOR TEMP.: 4000 K
EMERGENCY MODE: 20W BATTERY, NOMINAL 2000 lm.

GENERAL DESCRIPTION:

HOUSING: FABRICATED STEEL W/ ALUMINUM HEAT SINKS
FINISH: GLOSS WHITE
NOM. DIMENS.: 44" L X 15" W X 4 1/2" H

LUMINAIRE TYPE 'B1'
4' LINEAR LED HIGH BAY LIGHTS

FEATURES:

LAMP TYPE: LED
MOUNTING: PENDANT (2 POINT)

ELECTRICAL:

VOLTAGE: 120 V
WATTAGE: 112 W
DRIVER: 0-10 V DIMMING

OPTICS:

NOMINAL LUMENS: 12000 lm
LUMENS PER WATT: 102.5 lm/W
CRI: 80
COLOR TEMP.: 4000 K
EMERGENCY MODE: 20W BATTERY, NOMINAL 2000 lm.

GENERAL DESCRIPTION:

HOUSING: FABRICATED STEEL W/ ALUMINUM HEAT SINKS
FINISH: GLOSS WHITE
NOM. DIMENS.: 22" L X 15" W X 4 1/2" H

LUMINAIRE TYPE 'B2'
2' LINEAR LED HIGH BAY LIGHTS

FEATURES:

LAMP TYPE: LED
MOUNTING: SUSPENDED 18" BELOW CEILING

ELECTRICAL:

VOLTAGE: 277 V
WATTAGE: 13 W/FT
DRIVER: 0-10 V DIMMING

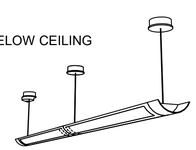

OPTICS:

DISTRIBUTION: 97% UP, 3% DOWN
NOMINAL LUMENS: 4800 lm
LUMENS PER WATT: 93 lm/W
CRI: 80
COLOR TEMP.: 4000 K
EMERGENCY MODE: INTEGRAL BATTERY MODULE

GENERAL DESCRIPTION:
HOUSING: COLD-ROLLED STEEL W/ PERFORATIONS
FINISH: WHITE POLYESTER POWDER COAT
NOM. DIMENS.: 48" L X 7 1/8" W X 2 5/16" H, MODULAR SECTIONS IN 4' LENGTHS

LUMINAIRE TYPE 'C' AND 'CX'
INDIRECT LED SUSPENDED LIGHT

FEATURES:

LAMP TYPE: LED
MOUNTING: SURFACE

ELECTRICAL:

VOLTAGE: 277 V
WATTAGE: 20.01 W
DRIVER: 0-10 V DIMMING

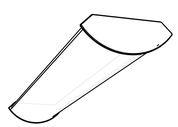

OPTICS:

NOMINAL LUMENS: 2000 lm
LUMENS PER WATT: 111.5 lm/W
CRI: 82
COLOR TEMP.: 4000 K
EMERGENCY LUMENS: 700 lm

GENERAL DESCRIPTION:

HOUSING: ROLL FORMED STEEL W/ DIE-CAST END CAPS.
FINISH: WHITE POLYESTER POWDER COAT
NOM. DIMENS.: 46-3/8" L X 10-1/8" W X 3-7/8" D

LUMINAIRE TYPE 'D'
4' SURFACE VOLUMETRIC LED

FEATURES:

LAMP TYPE: LED
MOUNTING: SURFACE

ELECTRICAL:

VOLTAGE: 277 V
WATTAGE: 20 W
DRIVER: 0-10 V DIMMING

OPTICS:

NOMINAL LUMENS: 2156 lm
LUMENS PER WATT: 107.8 lm/W
CRI: 82
COLOR TEMP.: 4000 K

GENERAL DESCRIPTION:

LENS: ROLL FORMED STEEL W/ DIE-CAST END CAPS
FINISH: WHITE POLYESTER POWDER COAT
NOM. DIMENS.: 22 7/8" L X 10 1/8" W X 3 7/8" D

LUMINAIRE TYPE 'E'
2' VOLUMETRIC SURFACE LED

FEATURES:

LAMP TYPE: LED
MOUNTING: SURFACE/SUSPENDED

ELECTRICAL:

VOLTAGE: 277 V
WATTAGE: 23 W
DRIVER: 0-10 V DIMMING

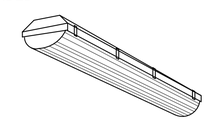

OPTICS:

NOMINAL LUMENS: 3000 lm
LUMENS PER WATT: 136.9 lm/W
DISTRIBUTION: MEDIUM
CRI: 80
COLOR TEMP.: 4000 K
EMERGENCY MODE: INTEGRAL 20 W BATTERY BACKUP

GENERAL DESCRIPTION:

HOUSING: FIBERGLASS, ENCLOSED AND GASKETED
LENS: FROSTED LOW PROFILE POLYCARBONATE
NOM. DIMENS.: 51 3/4" L X 6.8" W X 4.2" H

LUMINAIRE TYPE 'F'
4' LINEAR LED INDUSTRIAL

US Army Corps of Engineers ®

MARK	DESCRIPTION	DATE

DESIGNED BY: D. CARULLI
DRAWN BY: D. CARULLI
CHECKED BY: S. JONES
SUBMITTED BY: W. JOHN PARRISH
SIZE: ANSI D FILE NAME: WEBE_GTEB_Central.rvt
ISSUE DATE: 13 JUL 2020
PROJECT # 225-25-0665
SPEC # 2145
FILE NUMBER:

US ARMY CORPS OF ENGINEERS
SACRAMENTO DISTRICT
US DEPT OF ARMY

SACRAMENTO DISTRICT
IN-HOUSE DESIGN
1325 J STREET
SACRAMENTO, CA 95814

FT. HUACHUCA
GROUND TRANSPORT EQUIPMENT BUILDING
ARIZONA

LUMINAIRE SCHEDULE AND DETAILS

SHEET ID
EL501

RTA

FEATURES:

LAMP TYPE: LED
MOUNTING: RECESSED
LISTINGS: WET LOCATION

ELECTRICAL:

VOLTAGE: 120 V
WATTAGE: 12.7 W

OPTICS:

NOMINAL LUMENS: 725 lm
LUMENS PER WATT: 57 lm/W
CRI: 83
COLOR TEMP.: 3000 K

GENERAL DESCRIPTION:

HOUSING: ALUMINUM DIE CAST
FINISH: MATTE WHITE
NOM. DIMENS.: 6" DIAM. X 4" H

LUMINAIRE TYPE 'G'
6" LED RECESSED DOWNLIGHT

FEATURES:

LAMP TYPE: LED
MOUNTING: RECESSED
LISTING: DAMP LOCATION

ELECTRICAL:

VOLTAGE: 277 V
WATTAGE: 24 W
DRIVER: NON DIMMING

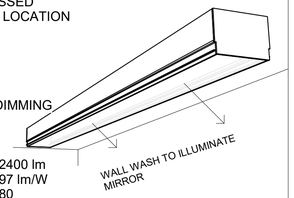

OPTICS:

NOMINAL LUMENS: 2400 lm
LUMENS PER WATT: 97 lm/W
CRI: 80
COLOR TEMP.: 4000 K

GENERAL DESCRIPTION:

HOUSING: COLD-ROLLED STEEL WITH EXTRUDED ALUMINUM TRIM
FINISH: MATTE WHITE POWDER COAT
NOM. DIMENS.: 6' L X 6" W X 4-3/8" H

LUMINAIRE TYPE 'H'
6' RECESSED LED WALL WASHER

FEATURES:

LAMP TYPE: LED
MOUNTING: PARTIALLY RECESSED

ELECTRICAL:

VOLTAGE: 120 V
WATTAGE: J1 - 11.6 W, J2 - 8.7 W
DRIVER: 0-10 V DIMMING DOWN TO 15%

OPTICS:

NOMINAL LUMENS: J1 - 770 lm, J2 - 590 lm
LUMENS PER WATT: J1 - 66 lm/W, J2 - 67.8 lm/W
CRI: J1 - 95, J2 - 92
COLOR TEMP.: 4000 K

GENERAL DESCRIPTION:

HOUSING: SPUN STEEL
FINISH: MATTE WHITE
NOM. DIMENS.: (J1 - 6" DIAM., J2 - 3" DIAM.) X 5 1/16" H
RANGE OF MOTION: 360° ROTATION, 50° TILT

LUMINAIRE TYPE 'J'
LED ADJUSTABLE GIMBAL

FEATURES:

LAMP TYPE: LED
MOUNTING: SUSPENDED
LISTING: CLASS 1, DIV 1&2 HAZARDOUS LOCATIONS, WET LOCATION

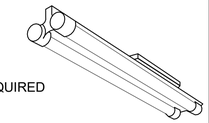

ELECTRICAL:

VOLTAGE: 120-277 V
WATTAGE: 46.9 W
DRIVER: DIMMING NOT REQUIRED

OPTICS:

NOMINAL LUMENS: 5000 lm
LUMENS PER WATT: 116.2 lm/W
CRI: 80
COLOR TEMP.: 4000 K
EMERGENCY MODE: INTEGRAL 20 W BATTERY BACKUP

GENERAL DESCRIPTION:
HOUSING: HEAVY DUTY EXPLOSION PROOF HOUSING.
LENS: IMPACT AND HEAT RESISTANT GLASS TUBES
NOM. DIMENS.: 51 3/4" L X 6.8" W X 4.2" H

LUMINAIRE TYPE 'Z'
EXPLOSION PROOF LED LIGHTS

GENERAL NOTES:

1. PROVIDE INTEGRAL EMERGENCY BATTERY BACKUP OPTIONS FOR LUMINAIRES AS INDICATED IN THE DRAWINGS.
2. ALL EXIT SIGN LUMINAIRES SHALL HAVE INTEGRAL EMERGENCY BATTERY BACKUP.
3. PROVIDE INTEGRAL MOTION SENSORS FOR LUMINAIRES AS NEEDED FOR CONTROLS IN EACH SPACE TYPE.
4. ALL EXTERIOR LUMINAIRES SHALL MEET COCHISE COUNTY LIGHT POLLUTION REQUIREMENTS. LUMINAIRES SHALL MEET IESNA DEFINITION FOR FULL CUTOFF OPTICS.
5. LUMINAIRE DETAIL IMAGES ARE FOR INFORMATION ONLY, TO PROVIDE A QUICK VISUALIZATION OF THE LUMINAIRE CHARACTERISTICS. THESE IMAGES ARE NOT A SUGGESTION TO USE A CERTAIN MANUFACTURER OR MODEL. CONTRACTOR SHALL PROVIDE LUMINAIRES THAT MEET THE NEEDS OF THE THE PROJECT. CONTRACTOR SHALL ATTEMPT TO MEET THE VOLTAGE CHARACTERISTICS, LUMEN OUTPUT, CORRELATED COLOR TEMPERATURE, COLOR RENDERING INDEX, WATTAGE, DISTRIBUTION TYPES (INCLUDING BUG RATING FOR EXTERIOR LUMINAIRES), LIGHTING CONTROL CAPABILITIES, RATINGS, AND GENERAL ASTHETIC OF THE LUMINAIRE DETAILS.

FEATURES:

LAMP TYPE: LED
MOUNTING: WALL
LISTINGS: WET LOCATION
PROVIDE EMERGENCY BATTERY BACKUP FOR ALL 'K' LUMINAIRES

ELECTRICAL:

VOLTAGE: 120-277 V
WATTAGE: 24 W
DRIVER: 700 mA

OPTICS:

NOMINAL LUMENS: 2000 lm
LUMENS PER WATT: 85 lm/W
CRI: 70
COLOR TEMP.: 4000 K
DISTRIBUTION: TYPE III, FULL CUTOFF, BUG: 1,0,1

GENERAL DESCRIPTION:
HOUSING: DIE-CAST ALUMINUM
FINISH: DARK BRONZE POWDER COAT
NOM. DIMENS.: 18" W X 9 3/8" H X 9" D

LUMINAIRE TYPE 'K'
EXTERIOR LED WALL PACK

FEATURES:

LAMP TYPE: LED
MOUNTING: POLE, 30' HEIGHT
LISTINGS: WET LOCATION

ELECTRICAL:

VOLTAGE: 480 V
WATTAGE: 134 W
DRIVER: 1050 mA

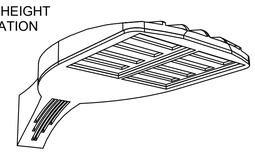

OPTICS:

NOMINAL LUMENS: 16000 lm
LUMENS PER WATT: 117 lm/W
CRI: 70
COLOR TEMP.: 4000 K
DISTRIBUTION: TYPE IV MED., FULL CUTOFF, BUG: 3,0,3

GENERAL DESCRIPTION:

HOUSING: DIE-CAST ALUMINUM
FINISH: DARK BRONZE POWDER COAT
NOM. DIMENS.: 13" W X 26" L X 7" H

LUMINAIRE TYPE 'L'
EXTERIOR LED AREA LIGHTS

FEATURES:

LAMP TYPE: LED
MOUNTING: WALL
LISTINGS: WET LOCATION

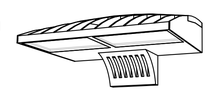

ELECTRICAL:

VOLTAGE: 120-277 V
WATTAGE: 109 W
DRIVER: 1000 mA

OPTICS:

NOMINAL LUMENS: 16000 lm
LUMENS PER WATT: 102 lm/W
CRI: 70
COLOR TEMP.: 4000 K
DISTRIBUTION: TYPE III SHORT, FULL CUTOFF, BUG: 2,0,2

GENERAL DESCRIPTION:

HOUSING: DIE-CAST ALUMINUM
FINISH: DARK BRONZE POWDER COAT
NOM. DIMENS.: 18 1/2" W X 10" D X 7 5/8" H

LUMINAIRE TYPE 'M1' AND 'M2'
EXTERIOR LED BAY DOOR LIGHTS

FEATURES:

LAMP TYPE: LED
MOUNTING: SURFACE/CEILING
LISTINGS: WET LOCATION

ELECTRICAL:

VOLTAGE: 277 V
WATTAGE: 35 W
DRIVER: 530 mA

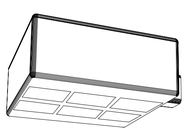

OPTICS:

NOMINAL LUMENS: 4700 lm
LUMENS PER WATT: 134 lm/W
CRI: 70
COLOR TEMP.: 4000 K
DISTRIBUTION: TYPE V, FULL CUTOFF, BUG: 2,0,1

GENERAL DESCRIPTION:

HOUSING: DIE-CAST ALUMINUM
FINISH: DARK BRONZE POWDER COAT
NOM. DIMENS.: 17 1/2" SQUARE X 7 1/8" H

LUMINAIRE TYPE 'N'
EXTERIOR LED CANOPY LIGHT

FEATURES:

LAMP TYPE: LED
MOUNTING: POLE AT 10'
LISTINGS: WET LOCATION

ELECTRICAL:

VOLTAGE: 277 V
WATTAGE: 35 W
DRIVER: 530 mA

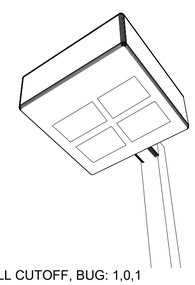

OPTICS:

NOMINAL LUMENS: 4500 lm
LUMENS PER WATT: 127 lm/W
CRI: 70
COLOR TEMP.: 4000 K
DISTRIBUTION: TYPE II, FULL CUTOFF, BUG: 1,0,1

GENERAL DESCRIPTION:

HOUSING: DIE-CAST ALUMINUM
FINISH: DARK BRONZE POWDER COAT
NOM. DIMENS.: 17 1/2" SQUARE X 7 1/8" H

LUMINAIRE TYPE 'P'
EXTR. LED PEDESTRIAN LIGHT

FEATURES:

LAMP TYPE: LED
MOUNTING: GROUND
LISTINGS: WET LOCATION

ELECTRICAL:

VOLTAGE: 277 V
WATTAGE: 16 W
DRIVER: 350 mA

OPTICS:

NOMINAL LUMENS: 1200 lm
LUMENS PER WATT: 80 lm/W
CRI: 70
COLOR TEMP.: 4000 K
DISTRIBUTION: ASYMMETRIC, FULL CUTOFF, BUG: 1,0,1

GENERAL DESCRIPTION:

HOUSING: DIE-CAST ALUMINUM
FINISH: DARK BRONZE POWDER COAT
NOM. DIMENS.: 8" DIAM. X 42" H
EMERGENCY BATTERY BACKUP OPTION ON MARKED FIXTURES

LUMINAIRE TYPE 'Q'
EXTERIOR LED BOLLARD LIGHT

FEATURES:

LAMP TYPE: LED
MOUNTING: SURFACE

ELECTRICAL:

VOLTAGE: 120-277 V
WATTAGE: 5 W / FACE
INTEGRAL EMERGENCY BATTERY BACKUP

OPTICS:

LETTER COLOR: RED
LETTER HEIGHT: 6 IN.
LETTER WIDTH: 3/4 IN.

GENERAL DESCRIPTION:
HOUSING: DIE-CAST ALUMINUM OR 20 GA. COLD ROLLED STEEL
FINISH: MATCH INTERIOR DESIGN
NOM. DIMENS.: 11 3/8" W X 7 7/8" H X 1 3/4" D
TYPE 'X1' SINGLE FACE MOUNTED TO WALL ON BACK SIDE
TYPE 'X2' TWO FACE MOUNTED TO WALL ON SIDE

LUMINAIRE TYPE 'X1', 'X2'
LED STENCIL FACE EXIT SIGN

US Army Corps of Engineers ®

MARK	DESCRIPTION	DATE

DESIGNED BY: D. CARULLI
DRAWN BY: D. CARULLI
CHECKED BY: S. JONES
SUBMITTED BY: W. JOHN PARRISH
SIZE: ANSI D'
FILE NAME: WESE_GTER_Central.rvt
ISSUE DATE: 13 JUL 2020
PROJECT #: 225-25-0665
SPEC #: 2145
FILE NUMBER:

US ARMY CORPS OF ENGINEERS
SACRAMENTO DISTRICT
US DEPT OF ARMY

SACRAMENTO DISTRICT
IN-HOUSE DESIGN
1325 J STREET
SACRAMENTO, CA 95814

FT. HUACHUCA, ARIZONA
GROUND TRANSPORT EQUIPMENT BUILDING

LUMINAIRE DETAILS

SHEET ID
EL502

RTA

DETAIL NOTES:

1. INSTALL POLE AND LIGHT PER MANUFACTURER INSTRUCTIONS.
2. LOCATE POLE HANDHOLE ON SAME SIDE AS LIGHT FOR SINGLE LIGHT CONFIGURATION. LOCATE POLE HANDHOLE TOWARDS PARKING AREA FOR DOUBLE LIGHT CONFIGURATION
3. SEE STRUCTURAL DETAIL 3/S-502 FOR FOUNDATION DETAIL AND DIMENSIONS.

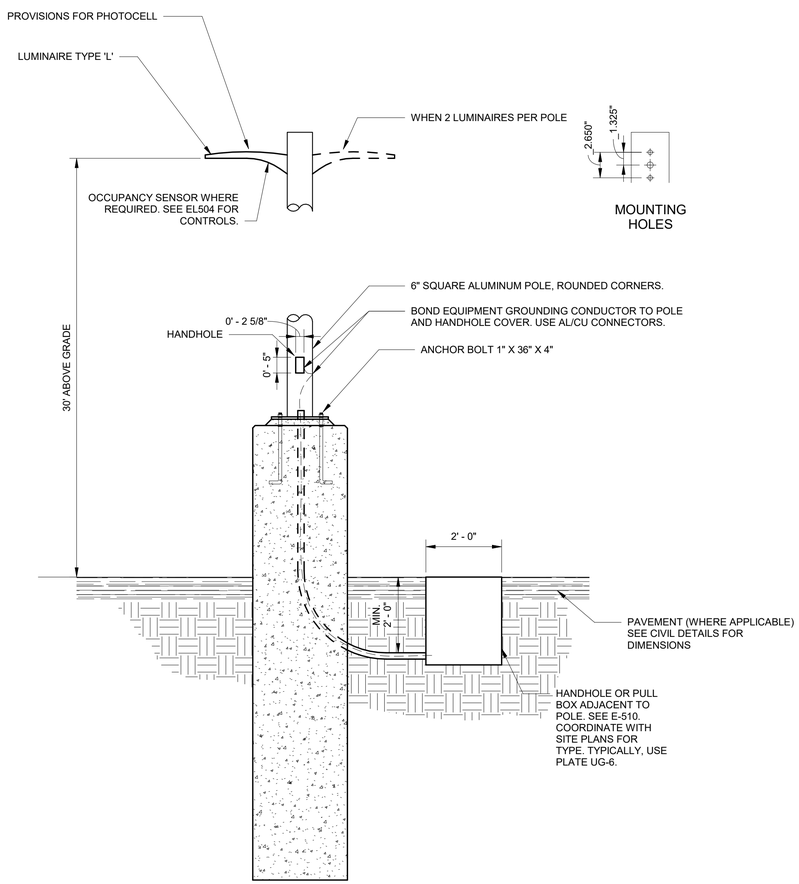

ELEVATION VIEW

1 / EL503 LIGHT POLE DETAIL (LUMINAIRE L)

NOT TO SCALE

DETAIL NOTES:

1. INSTALL POLE AND LIGHT PER MANUFACTURER INSTRUCTIONS.
2. SEE STRUCTURAL DETAIL 5/S-502 FOR FOUNDATION DETAIL AND DIMENSIONS.

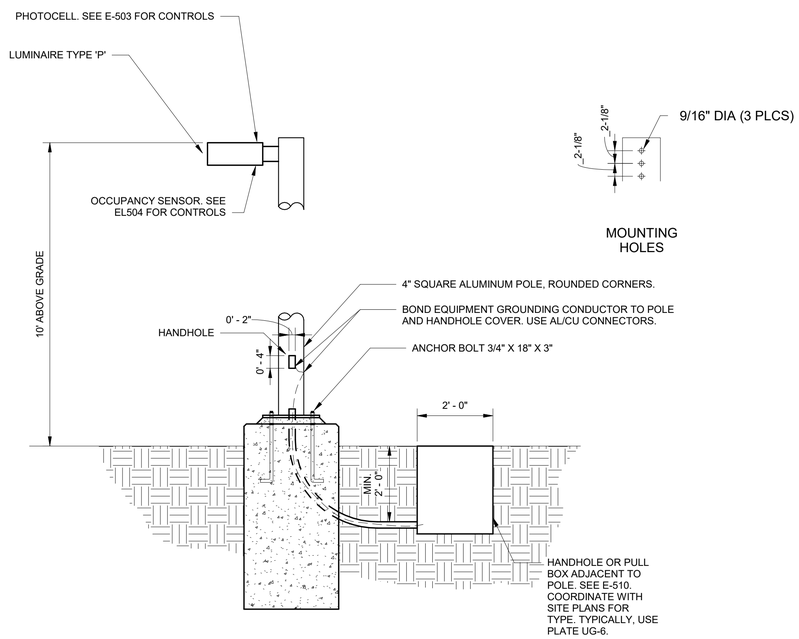

ELEVATION VIEW

2 / EL503 LIGHT POLE DETAIL (LUMINAIRE P)

NOT TO SCALE

US Army Corps of Engineers ®

MARK	DESCRIPTION	DATE

ISSUE DATE: 13 JUL 2020
PROJECT # 225-25-0665
SPEC # 2145
FILE NUMBER:

DESIGNED BY: D. CARULLI
DRAWN BY: D. CARULLI
CHECKED BY: S. JONES
SUBMITTED BY: W. CONNETT PARISH
SIZE: ANSI 'D'
FILE NAME: W05E_GTEB_Central.rvt

US ARMY CORPS OF ENGINEERS
SACRAMENTO DISTRICT
US DEPT OF ARMY

SACRAMENTO DISTRICT
IN-HOUSE DESIGN
1325 J STREET
SACRAMENTO, CA 95814

FT. HUACHUCA
GROUND TRANSPORT EQUIPMENT BUILDING
ARIZONA

LIGHT POLE DETAILS

SHEET ID

EL503

RTA

LIGHTING CONTROL SCHEMES																
	MANUAL CONTROL		OCCUPANCY SENSOR CONTROL				DIMMING CONTROL			TIME CLOCK CONTROL				PHOTOCELL CONTROL		
DESIGNATOR	ON	OFF	OS TECH	OS ON	VACANCY TIME	VACANCY DIM/OFF (1)	MANUAL (1)	DS?	DS BRIGHTNESS STEPS (1) (2)	TIME ON	DIM TO 37%	UP TO 100%	TIME OFF	FC ON	FC OFF	NOTES
LC1	Y	Y	N/A	N/A	N/A	N/A	N	N	N/A	N/A	N/A	N/A	N/A	N/A	N/A	INDUSTRIAL SPACES (MANUAL CONTROL ONLY)
LC1X	Y	Y	PIR	N/A	15 MINS	OFF	N	N	N/A	N/A	N/A	N/A	N/A	N/A	N/A	POL/HAZMAT STORAGE
LC2	Y	Y	N/A	N/A	N/A	N/A	Y	Y	<35%, 50-70%, 100%	N/A	N/A	N/A	N/A	N/A	N/A	BAYS (NO OS OR TIME CLOCK)
LC3	Y	Y	PIR	<50%	15 MINS	OFF	N	N	N/A	0530	N/A	N/A	1630	N/A	N/A	ADMIN, NO DIMMING
LC4	Y	Y	PIR	<50%	15 MINS	OFF	Y	N	N/A	0530	N/A	N/A	1630	N/A	N/A	ADMIN, NO WINDOWS
LC5	Y	Y	PIR	<50%	15 MINS	OFF	Y	Y	<35%, 50-70%, 100%	0530	N/A	N/A	1630	N/A	N/A	ADMIN, WINDOWS
LC6	Y	Y	PIR	N/A	15 MINS	OFF	Y	Y	<35%, 50-70%, 100%	0530	N/A	N/A	1630	N/A	N/A	TRAINING
LC7	Y	Y	U	100%	5 / 15 MINS	DIM TO 45% / 10%	N	N	N/A	N/A	N/A	N/A	N/A	N/A	N/A	CORRIDORS (NO WINDOWS)
LC8	Y	Y	DT + VOICE	100%	15 MINS	OFF	N	N	N/A	0530	N/A	N/A	1630	N/A	N/A	RESTROOMS
LC9	N	N	PIR	100%	15 MINS	DIM TO 37%	N	N	N/A	DUSK	0000	0600	N/A	< 1 fc	> 1 fc	EXTERIOR GENERAL LIGHTING
LC10	Y	Y	N/A	N/A	N/A	N/A	Y	N	N/A	DUSK	N/A	N/A	N/A	< 1 fc	> 1 fc	EXTERIOR PERIMETER LIGHTING (SECURITY)
LC11	Y	Y	N/A	N/A	N/A	N/A	N	N	N/A	DUSK	N/A	N/A	N/A	< 1 fc	> 1 fc	MECH YARD LIGHTS (NO AUTOMATIC ON)

CONTROL SCHEME NOTES:

1. THE DIM OR VACANCY OFF STATE OF LUMINAIRES EQUIPPED WITH EMERGENCY BATTERY BACKUP SHALL NOT INTERFERE WITH THE EMERGENCY MODE OPERATION OF THESE LUMINAIRES. UPON LOSS OF NORMAL POWER, THE LUMINAIRE SHALL SWITCH TO EMERGENCY MODE AND PROVIDE THE FULL EMERGENCY MODE RATED BRIGHTNESS, REGARDLESS OF THE DIM OR VACANCY STATE PRIOR TO LOSS OF NORMAL POWER. THIS REQUIREMENT SHALL APPLY WHETHER THE DIMMING STATE WAS MANUALLY SET, CONTROLLED BY OCCUPANCY/VACANCY SENSORS, OR CONTROLLED BY DAYLIGHT SENSORS.

2. DAYLIGHT SENSOR DIMMING STEPS LISTED ARE THE MINIMUM NUMBER OF STEPS REQUIRED BY UFC 3-530-01. TYPICALLY, ACTUAL DIMMING SHALL BE CONTINOUS FOR THESE LUMINAIRES.

LIGHTING CONTROL SCHEME BY ROOM				
BUILDING	ROOM NO.	ROOM NAME	CONTROL SCHEME	NOTES
GTEB	101	BAYS	LC2	SEE GENERAL NOTE 9, THIS SHEET
	102	ENTRY CORRIDOR	LC7	SEE GENERAL NOTE 6, THIS SHEET
	103	MAINTENANCE CORRIDOR	LC7	SEE GENERAL NOTE 6, THIS SHEET
	104	MEN	LC8	
	105	SHOWER	LC8	SWITCH LOCATED OUTSIDE SHOWER, WATERPROOF OS IN SHOWER.
	106	WOMEN	LC8	
	107	SHOWER	LC8	SWITCH LOCATED OUTSIDE SHOWER, WATERPROOF OS IN SHOWER.
	108	JAN.	LC3	
	109	BREAK	LC5	
	110	NURSING MOTHERS ROOM	LC4	
	111	BREAK STOR. / RECYCLE	LC3	
	112	BREAK	LC6	
	114	TRAINING	LC6	SEE GENERAL NOTE 9, THIS SHEET
	115	WOMEN	LC8	
	116	MEN	LC8	
	117	STO.	LC3	
	119	SIPR / OPEN STORAGE	LC4	
	120	ELEC	LC1	
	121	MAINTAINERS (8)	LC4	
	122	PLL	LC4	
	123	EPG COMM	LC3	
	124	NEC COMM	LC3	
	125	TOOL ROOM	LC4	
	126	VESTIBULE	LC7	
	127	FLUID DISTRIBUTION	LC1	
	128	PRODUCTION CONTROL	LC5	
	129	SHOP FOREMAN	LC4	
	130	MAINT. OFF.	LC5	
	131	MECHANICAL	LC1	
ORG STORAGE	301	MECH BAY	LC2	
	302	BATTERY STORAGE	LC3	
	303	AIR COMP RM	LC1	
	304	ELEC RM	LC1	
POL STORAGE	N/A	POL STORAGE	LC1X	
HAZMAT STORAGE	N/A	HAZMAT STORAGE	LC1X	

GENERAL NOTES:

1. THIS SHEET PROVIDED TO DESCRIBE THE LIGHTING CONTROL SCHEMES FOR EACH SPACE TYPE. CONTROL SCHEMES WERE CREATED FOLLOWING ASHRAE 90.1, UFC 3-530-01, AND NFPA 101 CRITERA.
2. LIGHTING CONTROLS DESCRIBED HERE SHALL ONLY APPLY TO GENERAL LIGHTING FOR EACH SPACE. CONTROLS SHALL NOT APPLY TO EXIT SIGNS.
3. CONTRACTOR SHALL BE RESPONSIBLE FOR THE INTEROPERABILITY AND COORDINATION OF LUMINAIRES AND THEIR CONTROLS.
4. CONTRACTOR SHALL BE RESPONSIBLE FOR SUPPLYING, INSTALLING, PROGRAMMING, AND TESTING ALL DEVICES AND COMPONENTS NECESSARY FOR COMPLETE LIGHTING CONTROL SYSTEMS AS DESCRIBED HEREIN. NOT ALL DEVICES OR COMPONENTS MAY BE CALLED OUT IN DRAWINGS OR SPECIFICATIONS.
5. TYPICALLY, SPACES WITH OCCUPANCY SENSOR CONTROLS SHALL HAVE OCCUPANCY SENSORS INTEGRAL WITH SOME OF THE LUMINAIRES IN THAT SPACE. CONTRACTOR SHALL BE RESPONSIBLE FOR ORDERING AND INSTALLING OCCUPANCY SENSORS TO EFFECTIVELY COVER THE SPACE AS NEEDED. OCCUPANCY SENSOR SHALL BE SPACED AT LEAST 5 FT FROM MECHANICAL VENTS OR AIR TERMINALS.
6. AUTOMATIC OFF CONTROLS IN THE FORM OF EITHER OCCUPANCY SENSORS OR TIMECLOCK CONTROLS SHALL NOT BE USED FOR LUMINAIRES ALONG THE MEANS OF EGRESS, AS THIS WOULD TRIGGER ADDITIONAL REQUIREMENTS OF NFPA 101, SECTION 7.8.1.2.2, WHICH WOULD INCLUDE INTERCONNECTION WITH FIRE ALARM SYSTEM. INSTEAD, THESE SPACES SHALL UTILIZE DIMMING METHODS FOR SUSTAINABLE DESIGN, PER UFC 3-530-01 DESCRIPTION OF CORRIDOR LIGHTING CONTROLS.
7. SMALL SPACES SUCH AS JANITORS' CLOSETS WILL HAVE OCCUPANCY SENSORS INTEGRAL WITH THE LIGHT SWITCH. IN ROOMS WHERE THIS APPLIES, THE PLAN VIEW SHOWS THE SWITCH MARKED AS AN OCCUPANCY SENSOR TYPE SWITCH.
8. TYPICALLY, SPACES WITH DAYLIGHT SENSOR CONTROLS SHALL HAVE DAYLIGHT/AMBIENT LIGHT SENSORS INTEGRAL WITH SOME OF THE LUMINAIRES IN THAT SPACE. CONTRACTOR SHALL BE RESPONSIBLE FOR ORDERING AND INSTALLING DAYLIGHT SENSORS AND PROGRAMMING DIMMING CONTROLS TO MEET THESE CONTROL CRITERIA.
9. MANUAL CONTROL FOR LUMINIARES IN THE BAY AREA AND THE TRAINING ROOM SHALL BE IN THE FORM OF AN ELECTRONIC TOUCHSCREEN CONTROLLER, CAPABLE OF CONTROLLING SEPARATE LIGHTING ZONES WITHIN THE SPACE. SEE LIGHTING PLANS FOR OUTLINES OF THESE LIGHTING ZONES. THE TOUCHSCREEN CONTROLLER IN THE BAY AREA SHALL BE A ROUGH USE TYPE WITH A PROTECTIVE SCREEN COVER.

EXTERIOR LIGHTING CONTROL SCHEMES BY CIRCUIT					
PANEL	CIRCUIT	DESCRIPTION	CONTROL SCHEME	CONTROL PANEL	TIMECLOCK CONTROLLER LOCATION
LP-1	1	PEDESTRIAN ACCESS, OVERFLOW LOT	LC9	LCP-1	GTEB ELEC ROOM
LP-1	2, 4	SITE PERIMETER (SECURITY)	LC10	LCP-2	GTEB ELEC ROOM
LP-1	3, 5	SITE GENERAL LIGHTING	LC9	LCP-2	GTEB ELEC ROOM
LP-1	6, 8	SITE ACCESS AND POV PARKING	LC9	LCP-2	GTEB ELEC ROOM
LP-1	7	BAR AREA, ROLLUP AND EXITS	LC9	LCP-1	GTEB ELEC ROOM
LP-1	9	BAY AREA/FLUID DIST., ROLLUP AND EXITS	LC9	LCP-1	GTEB ELEC ROOM
LP-1	10	EXTERIOR EXITS - ADMIN	LC9	LCP-1	GTEB ELEC ROOM
LP-1	12	MECH YARD	LC11	LCP-1	GTEB ELEC ROOM
LP-1	14	EXTERIOR EXITS - TRAINING	LC9	LCP-1	GTEB ELEC ROOM
PPH-3	1	ORG STORAGE BLDG EXTERIOR LIGHTS	LC9	LCP-3	ORG STORAGE BUILDING ELEC ROOM
XP-6	24	POL AND HAZMAT STORAGE EXTERIOR LIGHTS	LC9	LCP-4	EXTERIOR OF STORAGE BUILDING ADJACENT TO XP-6

US Army Corps of Engineers ®

MARK	DESCRIPTION	DATE

DESIGNED BY: D. CARULLI
DRAWN BY: D. CARULLI
CHECKED BY: S. JONES
SUBMITTED BY: W. JOHN PARRISH
SIZE: ANSI D'
FILE NAME: WISE_GTEB_Central.rvt
ISSUE DATE: 13 JUL 2020
PROJECT # 225-25-0665
SPEC # 2145
FILE NUMBER:

US ARMY CORPS OF ENGINEERS
SACRAMENTO DISTRICT
US DEPT OF ARMY

SACRAMENTO DISTRICT
IN-HOUSE DESIGN
1325 J STREET
SACRAMENTO, CA 95814

FT. HUACHUCA ARIZONA
GROUND TRANSPORT EQUIPMENT BUILDING

LIGHTING CONTROLS TABLES

SHEET ID

EL504

RTA

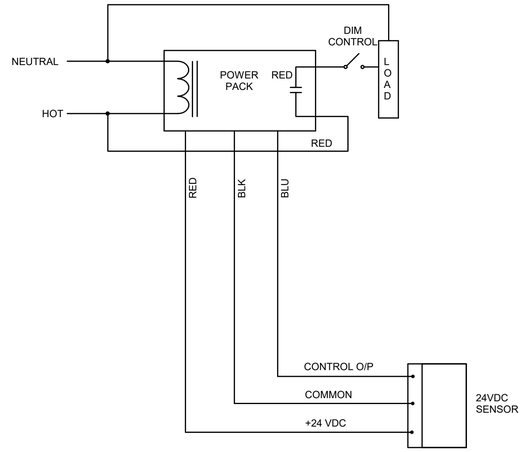

TYPICAL WIRING DIAGRAM FOR OCCUPANCY SENSORS

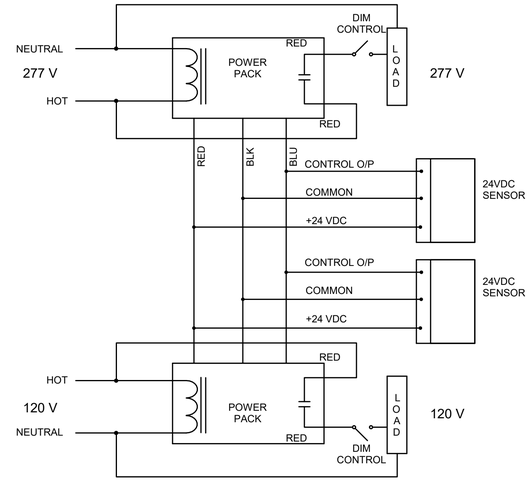

TYPICAL WIRING DIAGRAM FOR MULTIPLE OCCUPANCY SENSORS AND/OR MULTIPLE SOURCE VOLTAGES

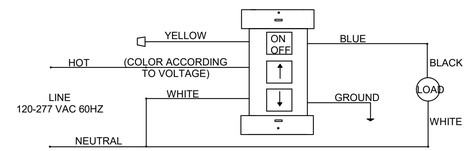

SINGLE POLE DIMMER SWITCH WIRING DIAGRAM

GENERAL NOTES:

1. THIS SHEET PROVIDED TO SHOW VARIOUS LIGHTING CONTROLS CIRCUITING. LIGHTING CONTROLS SYSTEMS THAT CONTRACTOR CHOOSES MAY DIFFER FROM THE CIRCUITING SHOWN HERE. CONTRACTOR SHALL BE RESPONSIBLE FOR FURNISHING AND INSTALLING LIGHTING CONTROLS PER LIGHTING CONTROLS SCHEMES SPECIFIED ON SHEET E-503.
2. ALL CIRCUITS, INCLUDING LIGHTING CIRCUITS, SHALL HAVE AN EQUIPMENT GROUNDING CONDUCTOR, WHICH MAY NOT BE SHOWN IN THESE DETAILS.
3. TIME CLOCK CONTROLLED AUTOMATIC LIGHTING AND RECEPTACLE SHUTOFF IS DESIGNED PER ASHRAE 90.1 REQUIREMENTS.
4. TIME CLOCKS SHALL BE PROGRAMMED WITH BUILDING HOURS OF OPERATION, WHICH SHALL INCLUDE WEEKENDS AND HOLIDAYS.

3 EL505 OCCUPANCY SENSOR DIAGRAMS

NOT TO SCALE

4 EL505 DIMMER SWITCH DIAGRAM

NOT TO SCALE

NOTES:

1. LCP-1 CONTROLS INTERIOR AND EXTERIOR GTEB LIGHTS
2. LCP-2 CONTROLS 480 V EXTERIOR LIGHTS, AND SHALL SWITCH BOTH POLES OF THE CIRCUITS (THERE IS NO NEUTRAL).
3. LCP-3 CONTROLS INTERIOR AND EXTERIOR ORG STORAGE BUILDING LIGHTS
4. LCP-4 CONROLS EXTERIOR LIGHTS ON THE POL AND HAZMAT STORAGE BUILDINGS

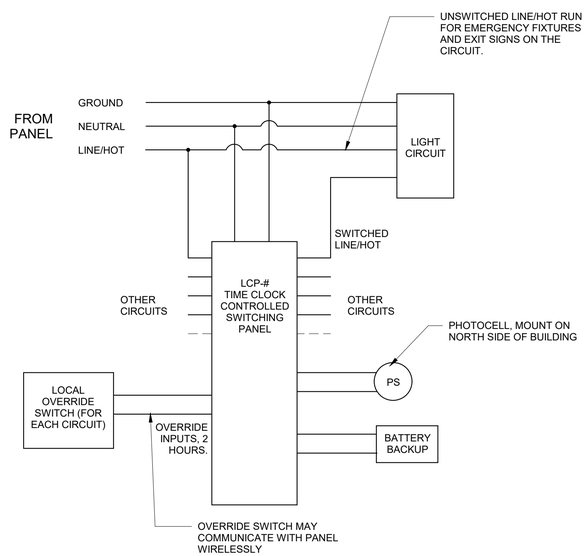

1 EL505 LIGHTING CONTROL PANEL CIRCUITING

NOT TO SCALE

NOTES:

1. THE AUTOMATIC RECEPTACLE CONTROL MAY BE ACCOMPLISHED WITH A COMBINED LIGHTING AND RECEPTACLE CONTROL PANEL.

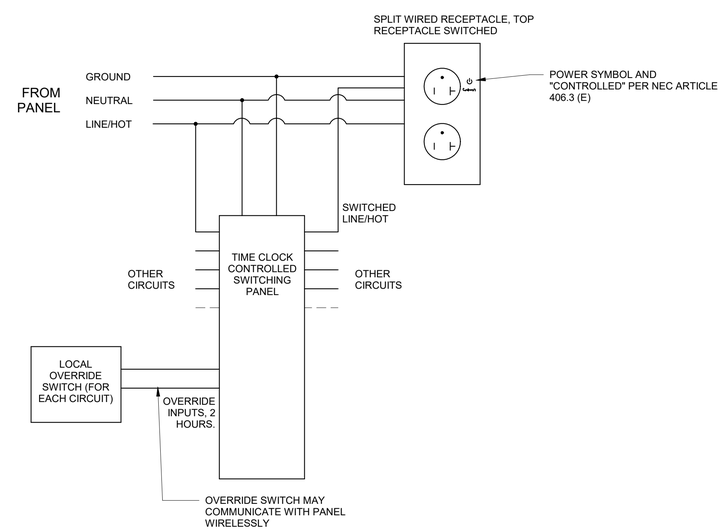

2 EL505 AUTOMATIC RECEPTACLE CONTROL CIRCUIT

NOT TO SCALE

US Army Corps of Engineers ®

MARK	DESCRIPTION	DATE

DESIGNED BY: D. CARULLI
DRAWN BY: D. CARULLI
CHECKED BY: S. JONES
SUBMITTED BY: W. JOHN PARRISH
SIZE: ANSI D'
FILE NAME: WISE_GTEB_Central.rvt
ISSUE DATE: 13 JUL 2020
PROJECT # 225-25-0665
SPEC # 2145
FILE NUMBER:

US ARMY CORPS OF ENGINEERS
SACRAMENTO DISTRICT
US DEPT OF ARMY

SACRAMENTO DISTRICT
IN-HOUSE DESIGN
1325 J STREET
SACRAMENTO, CA 95814

FT. HUACHUCA
GROUND TRANSPORT EQUIPMENT BUILDING
ARIZONA

LIGHTING AND RECEPTACLE CONTROL DETAILS

SHEET ID

EL505

RTA

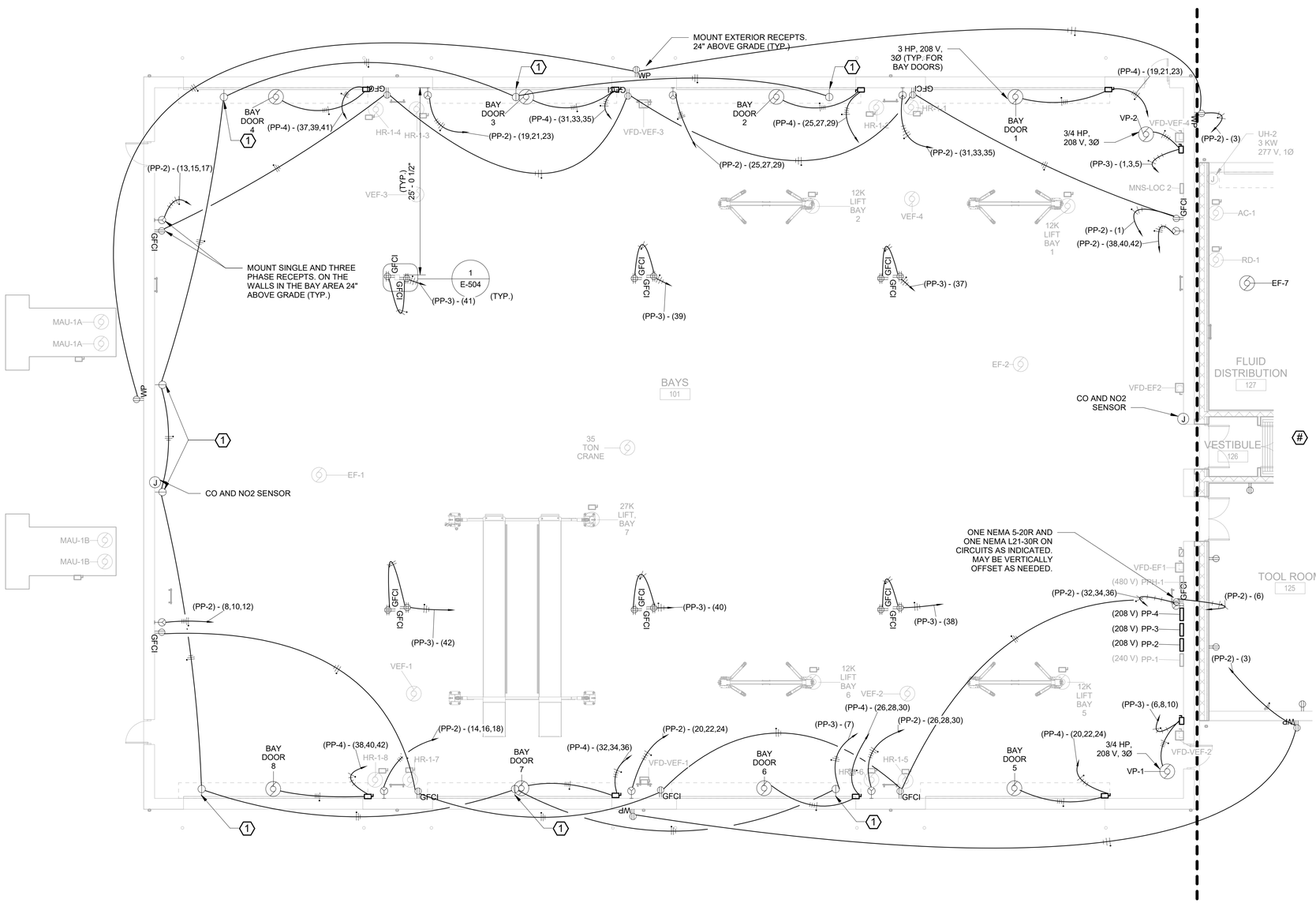

GENERAL NOTES:

1. THIS SHEET PROVIDED TO SHOW CIRCUITING FOR BAY AREA EQUIPMENT POWERED ON 208/120 V SYSTEMS. FOR CIRCUITING OF EQUIPMENT POWERED ON 240/120 V AND 480/277 V SYSTEMS, SEE SHEETS EP101B AND EP101C.
2. SEE MOTOR SCHEDULE ON SHEET E-505
3. SEE PANEL SCHEDULES BEGINNING ON SHEET E-611
4. HAZARDOUS CLASSIFICATION NOTE: SINCE THE BAY AREA HAS A DEDICATED VENTILLATION SYSTEM THAT EXHAUSTS AT A RATE OF MORE THAN 1 CFM/SF OF FLOOR SPACE, LOCATED WITHIN 12" OF THE FLOOR, WITH INLETS AND OUTLETS LOCATED TO PROVIDE AIR EXCHANGE ACROSS THE ENTIRE FLOOR, THE BAY AREA ITSELF IS NOT CLASSIFIED AS A HAZARDOUS LOCATION (UNCLASSIFIED), PER NEC TABLE 511.3 (C) AND (D). SINCE THERE ARE NO PITS OR TROUGHS IN THE BAY AREA, THERE ARE NO SPACES UNDER THE FLOOR THAT ARE CLASSIFIED AS HAZARDOUS LOCATIONS.
5. DESPITE THE BAY BEING UNCLASSIFIED AS A HAZARDOUS LOCATION, ELECTRICAL DEVICES, WIRING, AND RACEWAYS SHALL AVOID BEING LOCATED WITHIN THE BOTTOM 18" OF THE BAY FLOOR, TO THE MAXIMUM EXTENT POSSIBLE. POWER FOR DEVICES IN THE MIDDLE OF THE BAY AREA (POWER PEDESTALS AND LIFT RACKS) SHALL BE ROUTED UNDERGROUND IN THREADED RGS CONDUIT (PVC COATED WHEN UNDERGROUND), WITH CONDUIT SEALS ON BOTH ENDS LOCATED A MAXIMUM OF 18" WITHIN THE EQUIPMENT THEY FEED. CONDUIT SEALS SHALL BE ACCESSIBLE.
6. SEE SHEET EP102 FOR HAZARD CLASSIFICATION NOTES CONCERNING THE FLUID DISTRIBUTION ROOM.
7. ALL 120 V SINGLE PHASE RECEPTACLES IN THE BAY AREA SHALL HAVE GFCI PROTECTION, IN ACCORDANCE WITH NEC ARTICLE 511.12. THIS SHALL BE ACCOMPLISHED WITH GFCI RECEPTACLES, NOT GFCI BREAKERS PROTECTING THE CIRCUITS. DO NOT FEED RECEPTACLES FROM THE LOAD SIDE OF THE GFCI PROTECTION OF OTHER RECEPTACLES; WHEN THE GFCI FOR ANY RECEPTACLE TRIPS, IT SHALL ONLY DE-ENERGIZE THAT RECEPTACLE, AND NOT RECEPTACLES DOWNSTREAM OF IT ON THE SAME CIRCUIT.
8. MOTOR DISCONNECT SWITCHES SHALL BE HEAVY DUTY TYPE, HORSEPOWER RATED.
9. ALL EXTERIOR RECEPTACLES SHALL HAVE GFCI PROTECTION, BE LISTED AS WEATHER RESISTANT TYPE, AND SHALL HAVE "IN-USE" TYPE WEATHERPROOF COVERS, AND THE COVER SHALL BE IDENTIFIED AS "EXTRA DUTY" PER NEC ARTICLE 406.9 (B)(1)

(#) KEYED NOTES:

1. PROVIDE A SIMPLEX RECEPTACLE MOUNTED AT 24' ABOVE GRADE FOR THE RADIANT HEATERS IN THESE LOCATIONS (8 TOTAL, COORDINATE WITH MECHANICAL PLANS).

8 6 4 2 0 8 16

SCALE: 1/8"=1'-0"

PLAN NORTH

AREA

'A'

1 / EP101A

GTEB POWER PLAN - BAYS (208/120 V)

1/8" = 1'-0"

US Army Corps of Engineers ®

MARK	DESCRIPTION	DATE

US ARMY CORPS OF ENGINEERS
SACRAMENTO DISTRICT
US DEPT OF ARMY

SACRAMENTO DISTRICT
IN-HOUSE DESIGN
1325 J STREET
SACRAMENTO, CA 95814

DESIGNED BY: D. CARULLI
DRAWN BY: D. CARULLI
CHECKED BY: S. JONES
SUBMITTED BY: M. JOHN D. PARRISH
SIZE: ANSI D'
FILE NAME: WESE_GTEB_Central.rvt
ISSUE DATE: 13 JUL 2020
PROJECT # 225-25-0665
SPEC # 2145
FILE NUMBER:

FT. HUACHUCA
GROUND TRANSPORT EQUIPMENT BUILDING
ARIZONA

GTEB POWER PLAN

SHEET ID

EP101A

RTA

GENERAL NOTES:

1. THIS SHEET PROVIDED TO SHOW CIRCUITING FOR BAY AREA EQUIPMENT POWERED ON 240/120 V SYSTEMS. FOR CIRCUITING OF EQUIPMENT POWERED ON 208/120 V AND 480/277 V SYSTEMS, SEE SHEETS EP101A AND EP101C.
2. SEE MOTOR SCHEDULE ON SHEET E-505
3. SEE PANEL SCHEDULES BEGINNING ON SHEET E-611
4. HAZARDOUS CLASSIFICATION NOTE: SINCE THE BAY AREA HAS A DEDICATED VENTILLATION SYSTEM THAT EXHAUSTS AT A RATE OF MORE THAN 1 CFM/SF OF FLOOR SPACE, LOCATED WITHIN 12" OF THE FLOOR, WITH INLETS AND OUTLETS LOCATED TO PROVIDE AIR EXCHANGE ACROSS THE ENTIRE FLOOR, THE BAY AREA ITSELF IS NOT CLASSIFIED AS A HAZARDOUS LOCATION (UNCLASSIFIED), PER NEC TABLE 511.3 (C) AND (D). SINCE THERE ARE NO PITS OR TROUGHS IN THE BAY AREA, THERE ARE NO SPACES UNDER THE FLOOR THAT ARE CLASSIFIED AS HAZARDOUS LOCATIONS.
5. DESPITE THE BAY BEING UNCLASSIFIED AS A HAZARDOUS LOCATION, ELECTRICAL DEVICES, WIRING, AND RACEWAYS SHALL AVOID BEING LOCATED WITHIN THE BOTTOM 18" OF THE BAY FLOOR, TO THE MAXIMUM EXTENT POSSIBLE. POWER FOR DEVICES IN THE MIDDLE OF THE BAY AREA (POWER PEDESTALS AND LIFT RACKS) SHALL BE ROUTED UNDERGROUND IN THREADED RGS CONDUIT (PVC COATED WHEN UNDERGROUND), WITH CONDUIT SEALS ON BOTH ENDS LOCATED A MAXIMUM OF 18" WITHIN THE EQUIPMENT THEY FEED. CONDUIT SEALS SHALL BE ACCESSIBLE.
6. SEE SHEET EP102 FOR HAZARD CLASSIFICATION NOTES CONCERNING THE FLUID DISTRIBUTION ROOM.
7. (NOT USED)
8. MOTOR DISCONNECT SWITCHES SHALL BE HEAVY DUTY TYPE, HORSEPOWER RATED.
9. (NOT USED)

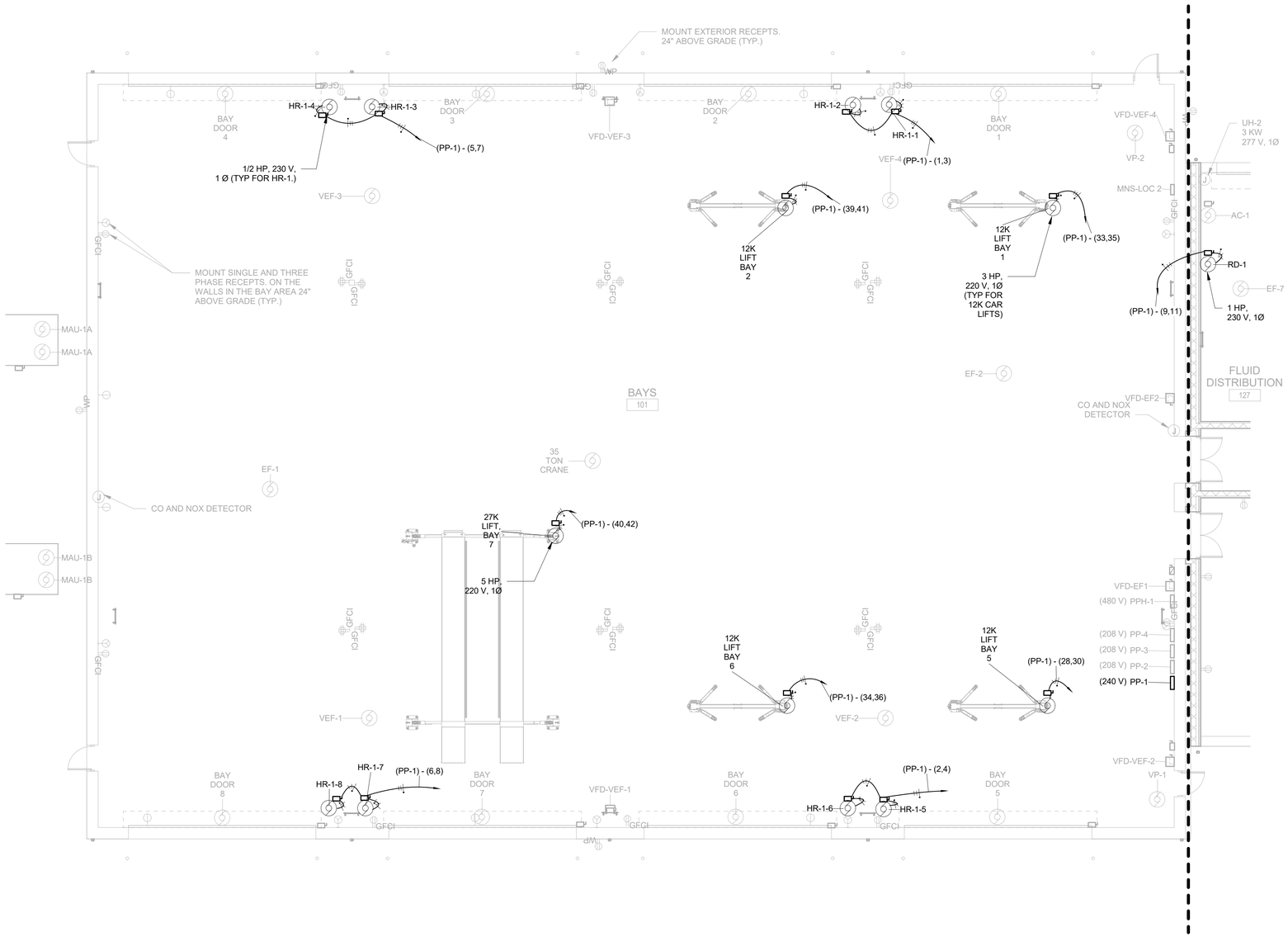

1 EP101B

GTEB POWER PLAN - BAYS (240/120 V)

1/8" = 1'-0"

8 6 4 2 0 8 16

SCALE: 1/8"=1'-0"

PLAN NORTH

AREA

'A'

US Army Corps of Engineers ®

MARK	DESCRIPTION	DATE

US ARMY CORPS OF ENGINEERS
SACRAMENTO DISTRICT
US DEPT OF ARMY

SACRAMENTO DISTRICT
IN-HOUSE DESIGN
1325 J STREET
SACRAMENTO, CA 95814

DESIGNED BY: D. CARULLI
DRAWN BY: D. CARULLI
CHECKED BY: S. JONES
SUBMITTED BY: W. JOHN PARRISH
SIZE: ANSI D'
FILE NAME: WESE_GTEB_Central.rvt
ISSUE DATE: 13 JUL 2020
PROJECT # 225-25-0665
SPEC # 2145
FILE NUMBER:

FT. HUACHUCA ARIZONA
GROUND TRANSPORT EQUIPMENT BUILDING

GTEB POWER PLAN

SHEET ID

EP101B

RTA

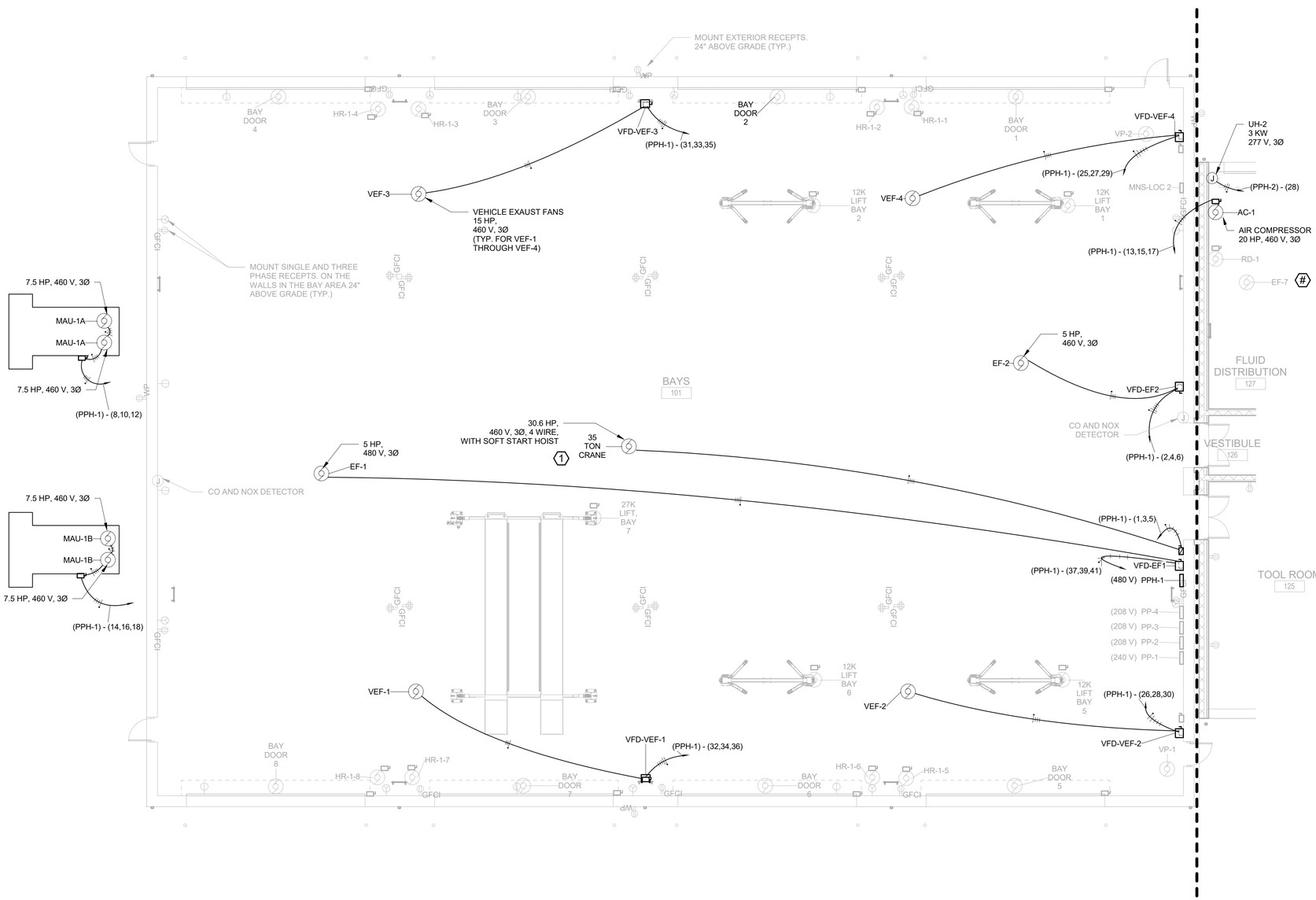

1 EP101C

GTEB POWER PLAN - BAYS (480/277 V)

1/8" = 1'-0"

GENERAL NOTES:

1. THIS SHEET PROVIDED TO SHOW CIRCUITING FOR BAY AREA EQUIPMENT POWERED ON 480/277 V SYSTEMS. FOR CIRCUITING OF EQUIPMENT POWERED ON 208/120 V AND 240/120 V SYSTEMS, SEE SHEETS EP101A AND EP101B.
2. SEE MOTOR SCHEDULE ON SHEET E-505
3. SEE PANEL SCHEDULES BEGINNING ON SHEET E-611
4. HAZARDOUS CLASSIFICATION NOTE: SINCE THE BAY AREA HAS A DEDICATED VENTILLATION SYSTEM THAT EXHAUSTS AT A RATE OF MORE THAN 1 CFM/SF OF FLOOR SPACE, LOCATED WITHIN 12" OF THE FLOOR, WITH INLETS AND OUTLETS LOCATED TO PROVIDE AIR EXCHANGE ACROSS THE ENTIRE FLOOR, THE BAY AREA ITSELF IS NOT CLASSIFIED AS A HAZARDOUS LOCATION (UNCLASSIFIED), PER NEC TABLE 511.3 (C) AND (D). SINCE THERE ARE NO PITS OR TROUGHS IN THE BAY AREA, THERE ARE NO SPACES UNDER THE FLOOR THAT ARE CLASSIFIED AS HAZARDOUS LOCATIONS.
5. DESPITE THE BAY BEING UNCLASSIFIED AS A HAZARDOUS LOCATION, ELECTRICAL DEVICES, WIRING, AND RACEWAYS SHALL AVOID BEING LOCATED WITHIN THE BOTTOM 18" OF THE BAY FLOOR, TO THE MAXIMUM EXTENT POSSIBLE. POWER FOR DEVICES IN THE MIDDLE OF THE BAY AREA (POWER PEDESTALS AND LIFT RACKS) SHALL BE ROUTED UNDERGROUND IN THREADED RGS CONDUIT (PVC COATED WHEN UNDERGROUND), WITH CONDUIT SEALS ON BOTH ENDS LOCATED A MAXIMUM OF 18" WITHIN THE EQUIPMENT THEY FEED. CONDUIT SEALS SHALL BE ACCESSIBLE.
6. SEE SHEET EP102 FOR HAZARD CLASSIFICATION NOTES CONCERNING THE FLUID DISTRIBUTION ROOM.
7. (NOT USED)
8. MOTOR DISCONNECT SWITCHES SHALL BE HEAVY DUTY TYPE, HORSEPOWER RATED.
9. (NOT USED)

KEYED NOTES:

1. SEE STRUCTURAL PLANS AND SPECIFICATIONS FOR DETAILS ABOUT CRANE LAYOUT AND FEATURES.

8 6 4 2 0 8 16

SCALE: 1/8"=1'-0"

PLAN NORTH

AREA

'A'

US Army Corps of Engineers ®

MARK	DESCRIPTION	DATE

DESIGNED BY: D. CARULLI
DRAWN BY: D. CARULLI
CHECKED BY: S. JONES
SUBMITTED BY: W. JOHN PARRISH
SIZE: ANSI D'
FILE NAME: WEISE_GTEB_Central.rvt

ISSUE DATE: 13 JUL 2020
PROJECT # 225-25-0665
SPEC # 2145
FILE NUMBER:

US ARMY CORPS OF ENGINEERS
SACRAMENTO DISTRICT
US DEPT OF ARMY

SACRAMENTO DISTRICT
IN-HOUSE DESIGN
1325 J STREET
SACRAMENTO, CA 95814

FT. HUACHUCA
GROUND TRANSPORT EQUIPMENT BUILDING
ARIZONA

GTEB POWER PLAN

SHEET ID

EP101C

RTA

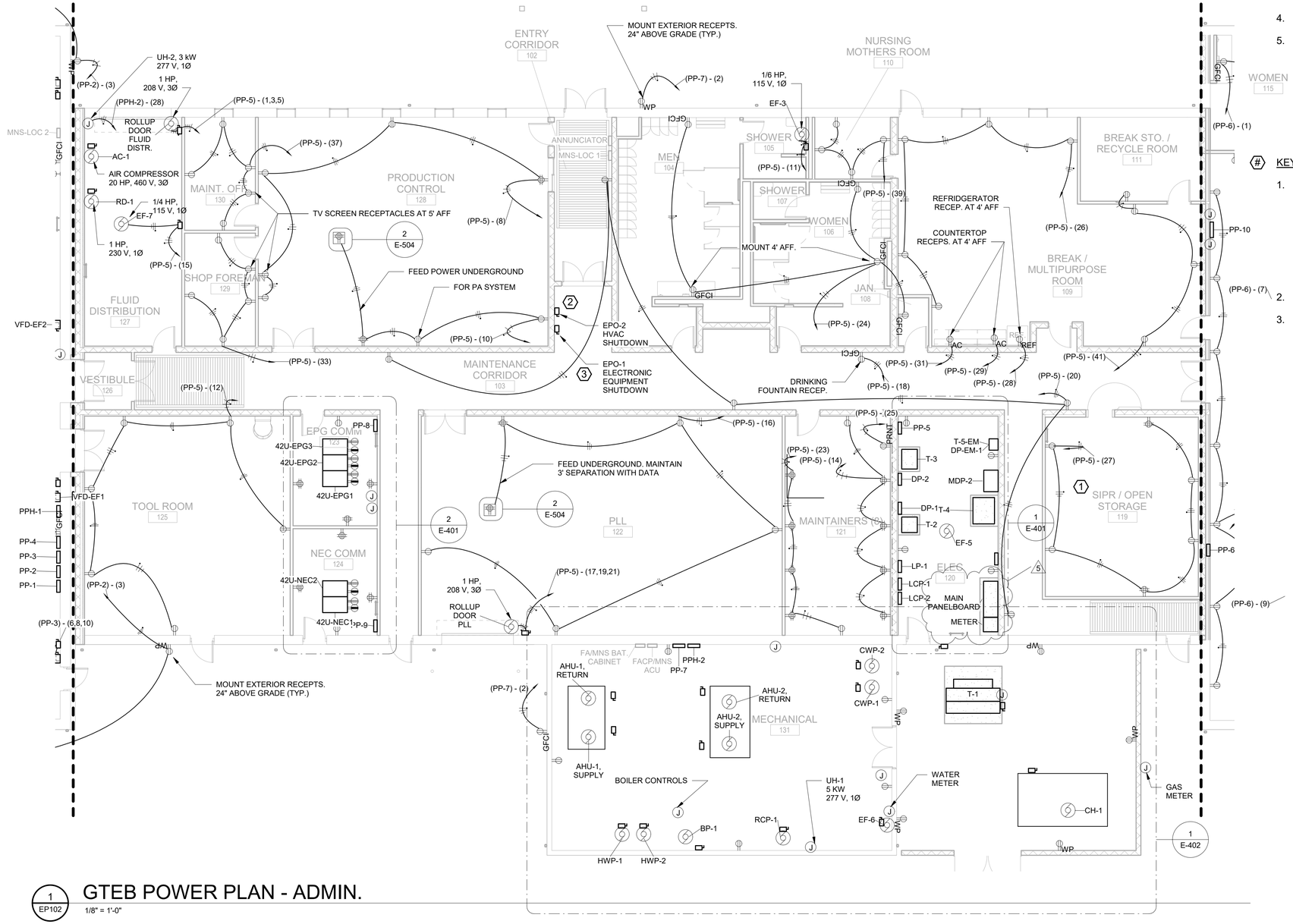

1 EP102 GTEB POWER PLAN - ADMIN.

1/8" = 1'-0"

GENERAL NOTES:

1. SEE MOTOR SCHEDULE ON SHEET E-505
2. SEE PANEL SCHEDULES BEGINNING ON SHEET E-611
3. HAZARDOUS LOCATION NOTE: THE FLUID DISTRIBUTION ROOM SHALL BE CONSIDERED A CLASS I DIVISION 2 HAZARDOUS LOCATION. MOTORS, LIGHT FIXTURES, SWITCHES, AND ALL ELECTRICAL EQUIPMENT IN THIS ROOM SHALL USE EXPLOSIONPROOF ENCLOSURES, AND ALL CONDUITS SHALL BE THREADED RGS WITH MINIMUM 5 THREADS ENGAGED. PROVIDE CONDUIT SEALS IN CONDUIT SYSTEMS WITHIN 18" OF THE PERIMETER OF THE ROOM, AND WITHIN 18" OF MOTORS, SWITCHES, JUNCTION BOXES, AND LIGHT FIXTURES.
4. MOTOR DISCONNECT SWITCHES SHALL BE HEAVY DUTY TYPE, HORSEPOWER RATED.
5. ALL EXTERIOR RECEPTACLES SHALL HAVE GFCI PROTECTION, BE LISTED AS WEATHER RESISTANT TYPE, AND SHALL HAVE "IN-USE" TYPE WEATHERPROOF COVERS, AND THE COVER SHALL BE IDENTIFIED AS "EXTRA DUTY" PER NEC ARTICLE 406.9 (B)(1).

(#) KEYED NOTES:

1. THE SIPR / OPEN STORAGE ROOM HAS ADDED SECURITY REQUIREMENTS. FOLLOW NSTSSI 7000, TEMPEST COUNTERMEASURES. CONTRACTOR SHALL MINIMIZE CONDUIT PENETRATIONS INTO THIS ROOM. CONDUITS THAT PENETRATE THE ROOM PERIMETER SHALL HAVE ELECTRONIC ISOLATION: SPACE THE METALLIC CONDUIT WITH A SECTION OF PVC CONDUIT THAT EXTENDS A MINIMUM OF 3" ON EITHER SIDE OF THE SCIF WALL. COORDINATE WITH BASE AND USER SECURITY OFFICER PRIOR TO COMMENCEMENT OF WORK.
2. HVAC SHUTDOWN PER MECHANICAL REQUIREMENTS. COORDINATE WITH MECHANICAL PLANS AND CONTROLS.
3. ELECTRONIC EQUIPMENT SHUTDOWN PER NFPA 75, SECTION 11.4.6.4.1.3. SEE SINGLE LINE DIAGRAM FOR CONNECTIONS.

8 6 4 2 0 8 16

SCALE: 1/8"=1'-0"

PLAN NORTH

AREA

'B'

AMENDMENT 3

US Army Corps of Engineers ®

MARK	DESCRIPTION	DATE
5	RELOCATE MAIN PANELBOARD, NEC 110.26(C)(2)	07 OCT 2020

DESIGNED BY: D. CARULLI
DRAWN BY: D. CARULLI
CHECKED BY: S. JONES
SUBMITTED BY: JOHN R. PARRISH
SIZE: ANSI 'D'
FILE NAME: W05E_GTEB_Central.rvt
ISSUE DATE: 07 OCT 2020
PROJECT # 225-25-0665
SPEC # 2145
FILE NUMBER:

US ARMY CORPS OF ENGINEERS
SACRAMENTO DISTRICT
US DEPT OF ARMY

SACRAMENTO DISTRICT
IN-HOUSE DESIGN
1325 J STREET
SACRAMENTO, CA 95814

FT. HUACHUCA
GROUND TRANSPORT EQUIPMENT BUILDING
ARIZONA

GTEB POWER PLAN

SHEET ID

EP102

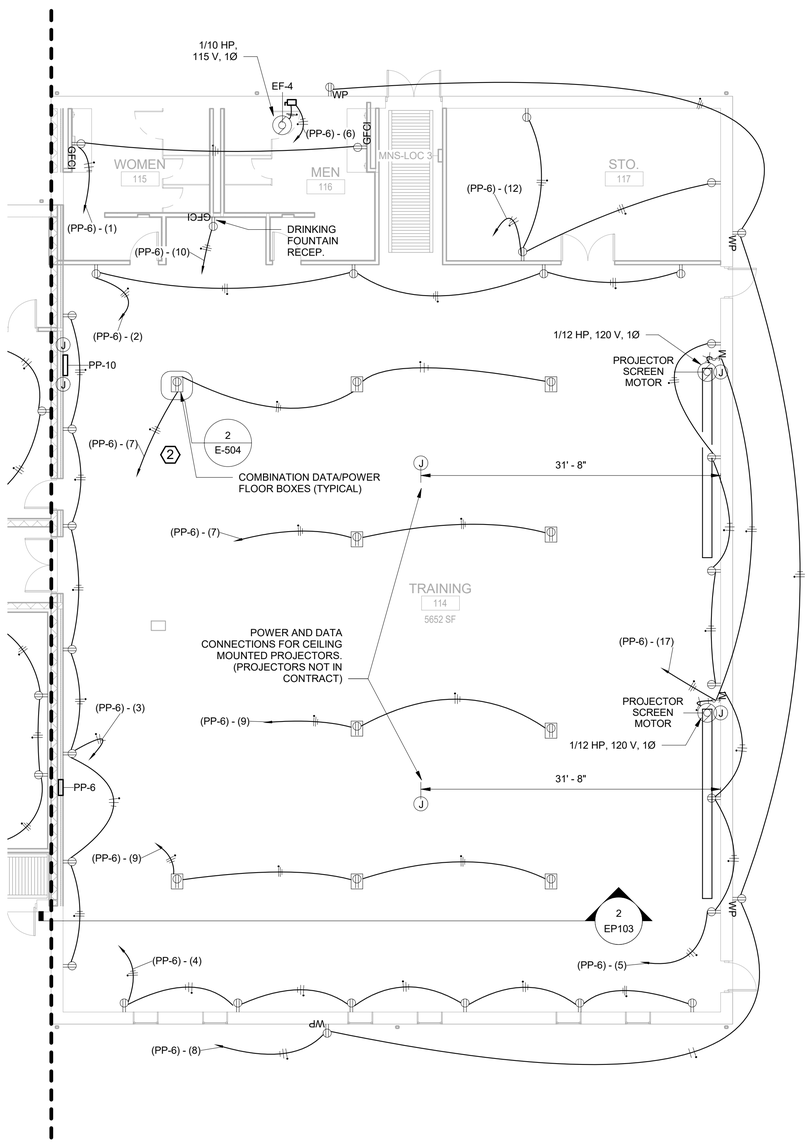

1 EP103 GTEB POWER PLAN - TRAINING (OPTION 3)

1/8" = 1'-0"

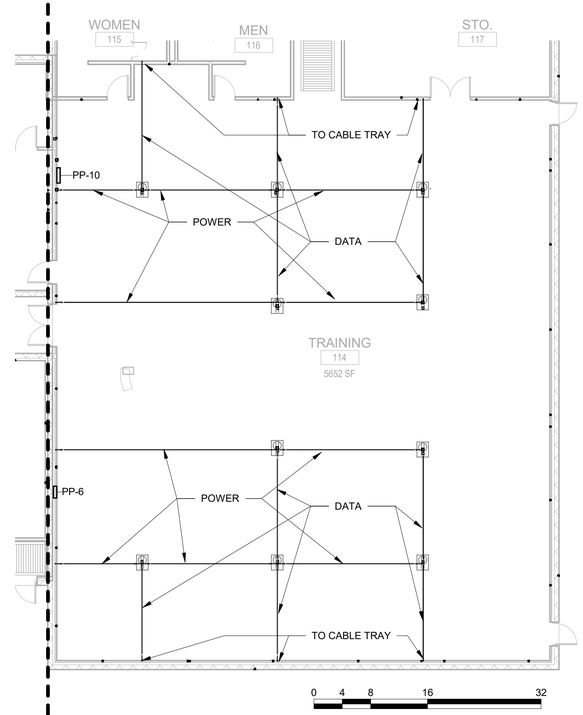

3 EP103 TRAINING ROOM - UNDERGROUND ROUTES

3/32" = 1'-0"

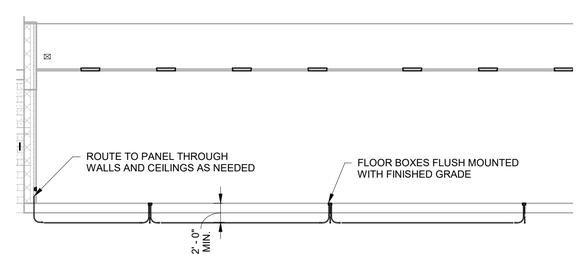

2 EP103 ROUTING TO UNDERGROUND OUTLETS (TYPICAL)

1/8" = 1'-0"

GENERAL NOTES:

1. SEE MOTOR SCHEDULE ON SHEET E-505
2. SEE PANEL SCHEDULES BEGINNING ON SHEET E-611
3. MOTOR DISCONNECT SWITCHES SHALL BE HEAVY DUTY TYPE, HORSEPOWER RATED.
4. ALL EXTERIOR RECEPTACLES SHALL HAVE GFCI PROTECTION, BE LISTED AS WEATHER RESISTANT TYPE, AND SHALL HAVE "IN-USE" TYPE WEATHERPROOF COVERS, AND THE COVER SHALL BE IDENTIFIED AS "EXTRA DUTY" PER NEC ARTICLE 406.9 (B)(1)
5. THIS AREA SHOWS OPTION 3. IF OPTION 3 IS NOT AWARDED, PROVIDE 2 WEATHERPROOF RECEPTACLES ON THE EXTERIOR OF THE EAST EXTERIOR WALL, WIRED TO PANEL PP7.

(#) KEYED NOTES:

1. PROVIDE POWER FOR PROJECTOR SCREEN MOTOR IN ACCORDANCE WITH MANUFACTURER INSTRUCTIONS. CONTRACTOR SHALL BE RESPONSIBLE FOR ENSURING THAT PROPER POWER AND CONTROL CONNECTIONS ARE PROVIDED FOR THE CHOSEN SCREEN/MOTOR SYSTEM.
2. POWER AND DATA RECEPTACLES SHALL SHARE AN ENCLOSURE. SEE DETAIL 2/E-504. FEED THE RECEPTACLES VIA UNDERGROUND CONDUIT TO THE WALLS NEARBY. FEED POWER IN THE EAST-WEST DIRECTION, AND FEED THE DATA IN THE NORTH-SOUTH DIRECTION, AS SHOWN.

8 6 4 2 0 8 16

SCALE: 1/8"=1'-0"

PLAN NORTH

AREA

'C'

US Army Corps of Engineers ®

MARK	DESCRIPTION	DATE

US ARMY CORPS OF ENGINEERS
SACRAMENTO DISTRICT
US DEPT OF ARMY

SACRAMENTO DISTRICT
IN-HOUSE DESIGN
1325 J STREET
SACRAMENTO, CA 95814

DESIGNED BY: D. CARULLI
DRAWN BY: D. CARULLI
CHECKED BY: S. JONES
SUBMITTED BY: W. JOHN PARRISH
SIZE: ANSI D'
FILE NAME: WESE_GTEB_Central.rvt

ISSUE DATE: 13 JUL 2020
PROJECT # 225-25-0665
SPEC # 2145
FILE NUMBER:

FT. HUACHUCA, ARIZONA
GROUND TRANSPORT EQUIPMENT BUILDING

GTEB POWER PLAN (OPTION 3)

SHEET ID

EP103

RTA

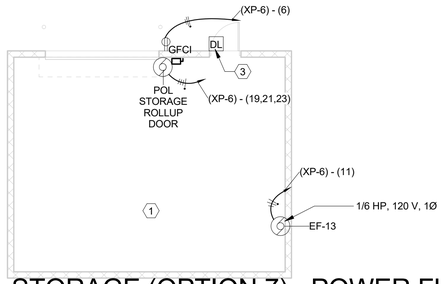

POL STORAGE (OPTION 7) - POWER FLOOR PLAN

3 / EP111

1/8" = 1'-0"

LOCATIONS OF TIRE SHOP EQUIPMENT

1	MULTI-POST LIFT RACK	HARD WIRED UNDERGROUND
2	BENCH LATHE	NEMA 5-20R OUTLET
3	TIRE CHANGER	NEMA L6-20R OUTLET
4	(NOT USED)	
5	WHEEL BALANCER	NEMA L6-20R OUTLET
6	2 SPARE OUTLETS	NEMA L6-20R OUTLET

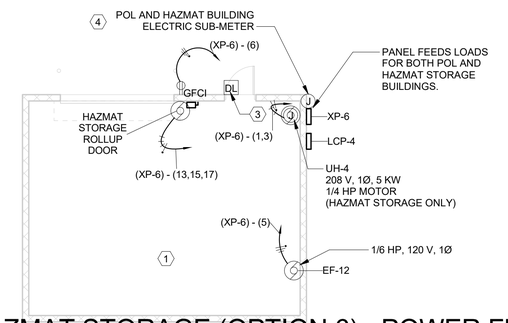

HAZMAT STORAGE (OPTION 6) - POWER FLOOR PLAN

2 / EP111

1/8" = 1'-0"

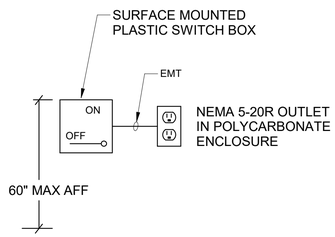

CHARGER STATION SWITCH AND RECEPTACLE COMBO

3 LOCATIONS

GENERAL NOTES FOR BASIS OF HAZARD CLASSIFICATION

1. POL AND HAZMAT STORAGE BUILDINGS ARE FOR STORAGE OF FLAMMABLE MATERIALS. THEY SHALL BE TREATED AS CLASS I, DIVISION 2 HAZARDOUS LOCATIONS.

2. ORG STORAGE BLDG.

A) MECH BAY

THIS AREA IS CONSIDERED A MINOR REPAIR GARAGE (WHERE CLASS I LIQUIDS OR GASEOUS FUELS ARE NOT TRANSFERRED OR DISPENSED), AND THERE ARE NO BELOWGRADE WORK AREAS, SO THIS AREA IS UNCLASSIFIED. REFERENCE NEC TABLE 511.3(C). ALL MAJOR REPAIR WORK (DISPENSING OF FUELS) WOULD OCCUR IN THE MAIN GTEB BUILDING. THIS BUILDING WILL PRIMARILY BE USED FOR TIRE WORK.

B) BATTERY ROOM

BATTERY ROOM IS MEANT TO STORE UP TO 48 INDUSTRIAL GRADE (LEAD ACID) BATTERIES FOR MILITARY VEHICLES. UP TO 8 BATTERIES MAY BE CHARGED AT A TIME. THERE IS A POSSIBILITY OF PRESENCE OF SOME HYDROGEN GAS. THIS ROOM IS UNCLASSIFIED BUT WILL BE VENTILATED. CHARGING STATION SHALL BE LOCATED ON THE SHELF.

KEYED NOTES

1. POL AND HAZMAT STORAGE BUILDINGS ARE CLASS 1, DIV. 2 HAZARDOUS LOCATIONS. MOTORS, LIGHT FIXTURES, SWITCHES, AND ALL ELECTRICAL EQUIPMENT IN THIS ROOM SHALL USE EXPLOSIONPROOF ENCLOSURES, AND ALL CONDUITS SHALL BE THREADED RGS WITH MINIMUM 5 THREADS ENGAGED. PROVIDE CONDUIT SEALS IN CONDUIT SYSTEMS WITHIN 18" OF THE PERIMETER OF THE ROOM, AND WITHIN 18" OF MOTORS, SWITCHES, AND LIGHT FIXTURES.

2. BATTERY ROOM IS MEANT TO CHARGE, STORE AND PERFORM MAINTENANCE ON VEHICLE BATTERIES. THIS WOULD NOT BE CONSIDERED A "STATIONARY BATTERY" APPLICATION, AND THEREFORE DOES NOT NEED TO MEET THE REQUIREMENTS OF NFPA 70, ARTICLE 480. THIS ROOM SHALL BE PROVIDED WITH VENTILLATION AND A SWITCH SHALL ALSO BE PROVIDED IN THE VENTILLATOR TO AUTOMATICALLY SHUT DOWN POWER TO THE ROOM, UPON DETECTING FAILURE OF VENTILLATOR OPERATION. SEE DIAGRAM ON SHEET E-617. BOND ALL CONDUCTIVE BATTERY RACKS TOGETHER AND CONNECT THESE TO EARTH GROUND.

2A. PROVIDE THREE BATTERY CHARGING STATIONS FOR EACH DEDICATED CHARGING STATION RECEPTACLE, EACH WITH A LOCAL EASILY ACCESSIBLE DISCONNECT SWITCH FOR THE RECEPTACLE LOCATED ADJACENT TO THE RECEPTACLE. SEE DETAIL THIS SHEET. MOUNT THE RECEPTACLES AND SWITCHES AT 4 FT AFF.

3. CONNECT ELECTRONIC LOCKS BACK TO EPG COMMUNICATIONS ROOM IN MAIN BUILDING. SEE SHEET T-101 THROUGH T-103 FOR MORE INFORMATION (TELECOMMUNICATIONS REQUIREMENTS ARE MINIMAL FOR THESE BUILDINGS, SO THEY HAVE BEEN COMBINED WITH POWER PLANS ON THIS SHEET).

4. PROVIDE DATA CONNECTIONS FOR EMCS FOR THESE METERS. CONNECT THROUGH NEC COMM ROOM IN MAIN BUILDING TO EXISTING BASE-WIDE EMCS. PROVIDE DATA CONNECTIONS TO METERS IN ACCORDANCE WITH MANUFACTURER'S INSTRUCTIONS.

GENERAL NOTES:

1. SEE MOTOR SCHEDULE FOR ORG STORAGE AND POL/HAZMAT STORAGE BUILDINGS ON SHEET E-502.
2. IF OPTION 7 IS AWARDED, BUT OPTION 6 IS NOT, PLACE THE METER, PANEL XP-6, AND LCP-4 ON THE POL STORAGE BUILDING.

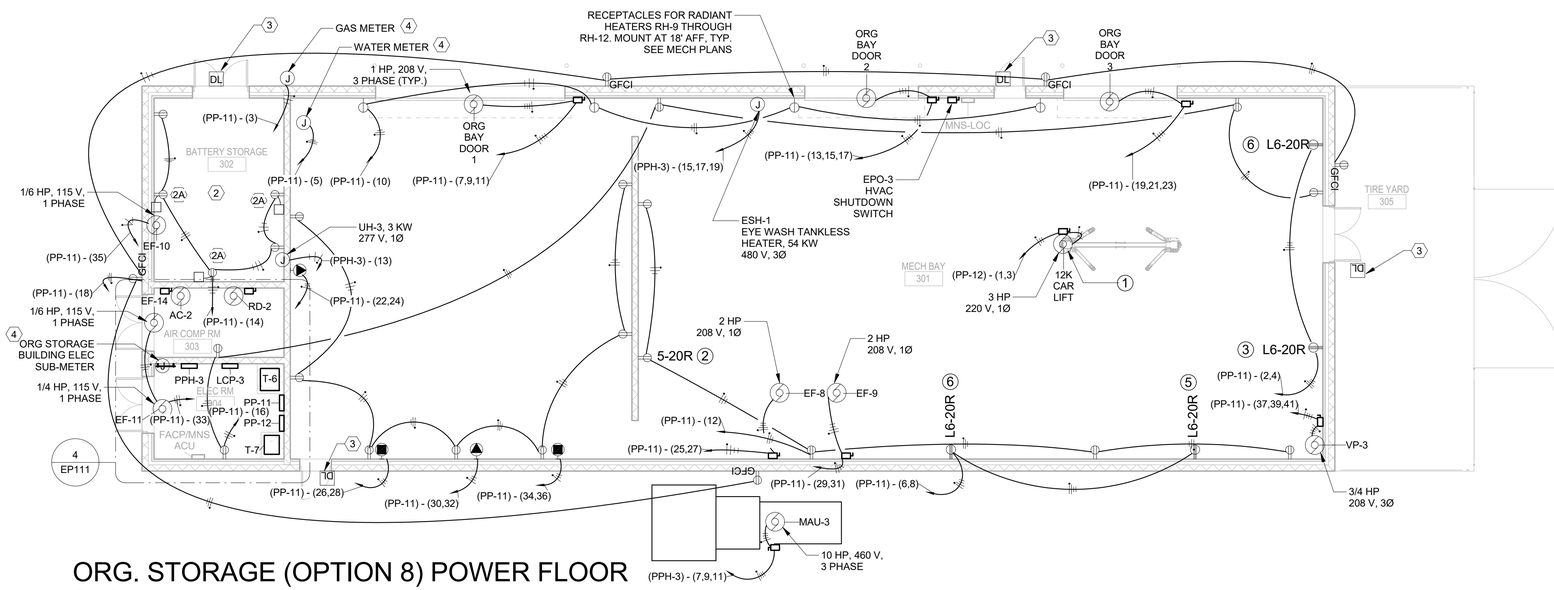

ORG. STORAGE (OPTION 8) POWER FLOOR PLAN

1 / EP111

1/8" = 1'-0"

SCALE: 1/8"=1'-0"

SCALE: 1/4"=1'-0"

PLAN NORTH

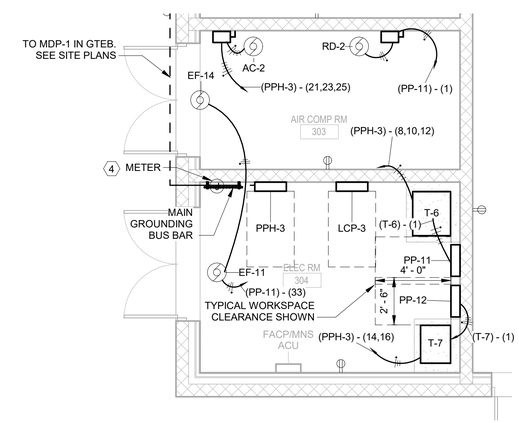

ORG. STORAGE - ELEC/AIR COMP. ROOMS

4 / EP111

1/4" = 1'-0"

US Army Corps of Engineers ®

MARK	DESCRIPTION	DATE

DESIGNED BY: D. CARULLI
DRAWN BY: D. CARULLI
CHECKED BY: A. DEMNATI
SUBMITTED BY: ALYSON D. PARISH
SIZE: ANSI D'
FILE NAME: WISE_STOR_central.rvt
ISSUE DATE: 13 JUL 2020
PROJECT #: 225-25-0665
SPEC #: 2145
FILE NUMBER:

US ARMY CORPS OF ENGINEERS
SACRAMENTO DISTRICT
US DEPT OF ARMY

SACRAMENTO DISTRICT
IN-HOUSE DESIGN
1325 J STREET
SACRAMENTO, CA 95814

FT. HUACHUCA, ARIZONA
GROUND TRANSPORT EQUIPMENT BUILDING

STORAGE BUILDINGS POWER PLANS (OPTIONS 6, 7, & 8)

SHEET ID

EP111

RTA

GENERAL NOTES:

1. INSTALL GROUNDING POINTS IN FLOOR IN APPROXIMATE LOCATIONS AS SHOWN. MAINTAIN A MINIMUM 12" SEPARATION FROM ALL PAVEMENT JOINTS.
2. IN THE BAY AREA, CONNECT GROUND RODS AND GROUND BARS TO EACH OTHER WITH DIRECT BURIED UNDERGROUND COPPER CABLE. CABLE SHALL BE BURRIED A MINIMUM OF 30" BELOW FINISHED GRADE. COORDINATE INSTALLATION AND STUB UPS FOR CONNECTIONS TO GROUND BARS WITH FLOORING INSTALLATION.
3. GROUND BARS IN THE BAY AREA SHALL BE APPROXIMATE 10" LENGTH, AND MOUNTED MINIMUM 18" ABOVE FINISHED FLOOR TO BOTTOM OF GROUND BAR.
4. WHEN MOUNTED TO STRUCTURAL BEAMS, BOLT GROUND BARS SECURELY TO THE BEAMS. BOND GROUND BARS TO STRUCTURAL BEAMS USING APPROPRIATE TERMINALS SO AS TO AVOID CORROSION BETWEEN DISSIMILAR METALS.

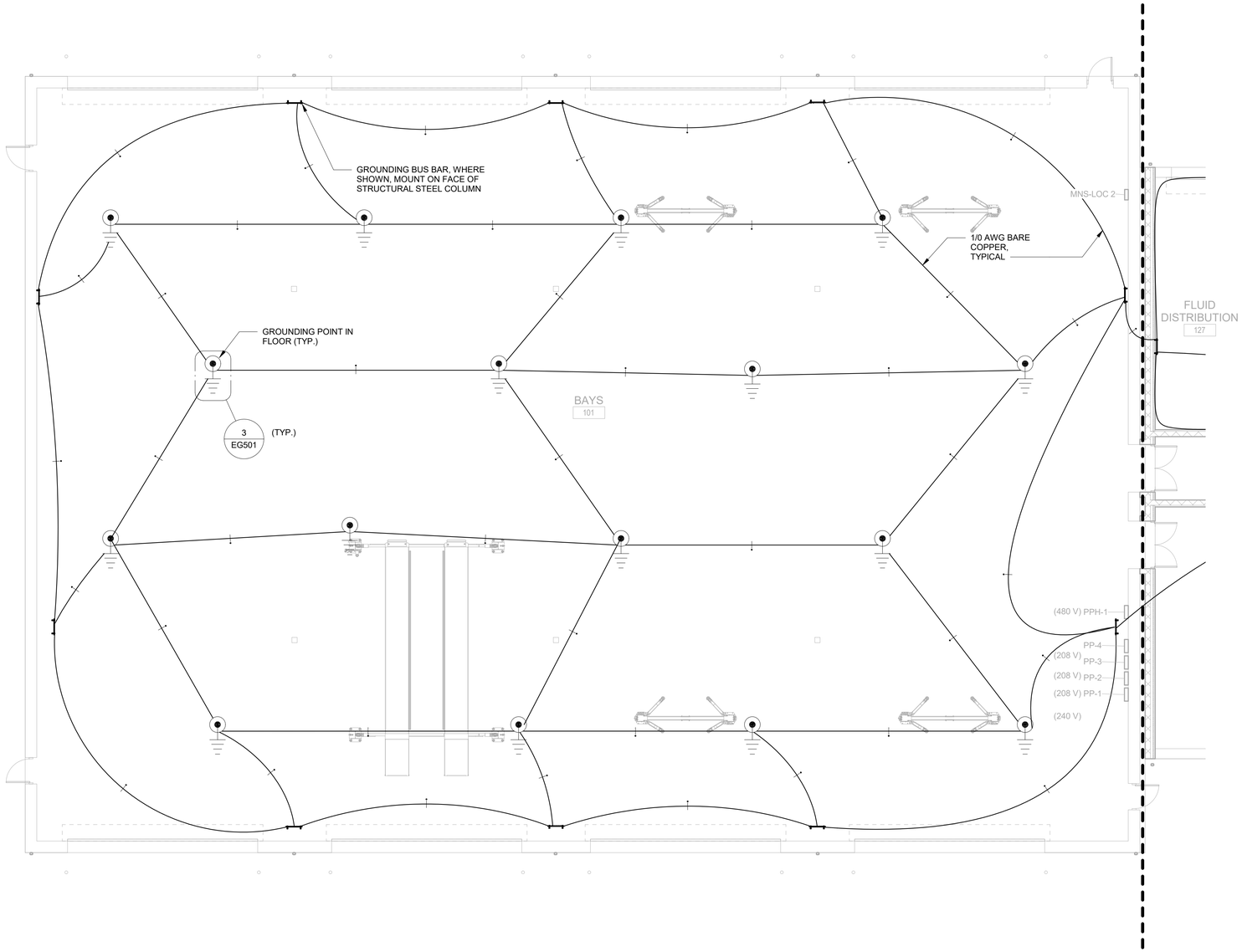

8 6 4 2 0 8 16

SCALE: 1/8"=1'-0"

PLAN NORTH

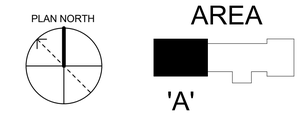

1
EG101

GTEB GROUNDING PLAN - BAYS

1/8" = 1'-0"

US Army Corps of Engineers ®

MARK	DESCRIPTION	DATE

US ARMY CORPS OF ENGINEERS
SACRAMENTO DISTRICT
US DEPT OF ARMY

SACRAMENTO DISTRICT
IN-HOUSE DESIGN
1325 J STREET
SACRAMENTO, CA 95814

DESIGNED BY: D. CARULLI
DRAWN BY: D. CARULLI
CHECKED BY: S. JONES
SUBMITTED BY: W. JOHN PARRISH
SIZE: ANSI D'
FILE NAME: WESE_GTEB_Central.rvt
ISSUE DATE: 13 JUL 2020
PROJECT # 225-25-0665
SPEC # 2145
FILE NUMBER:

FT. HUACHUCA
GROUND TRANSPORT EQUIPMENT BUILDING
ARIZONA

GTEB GROUNDING PLAN

SHEET ID

EG101

RTA

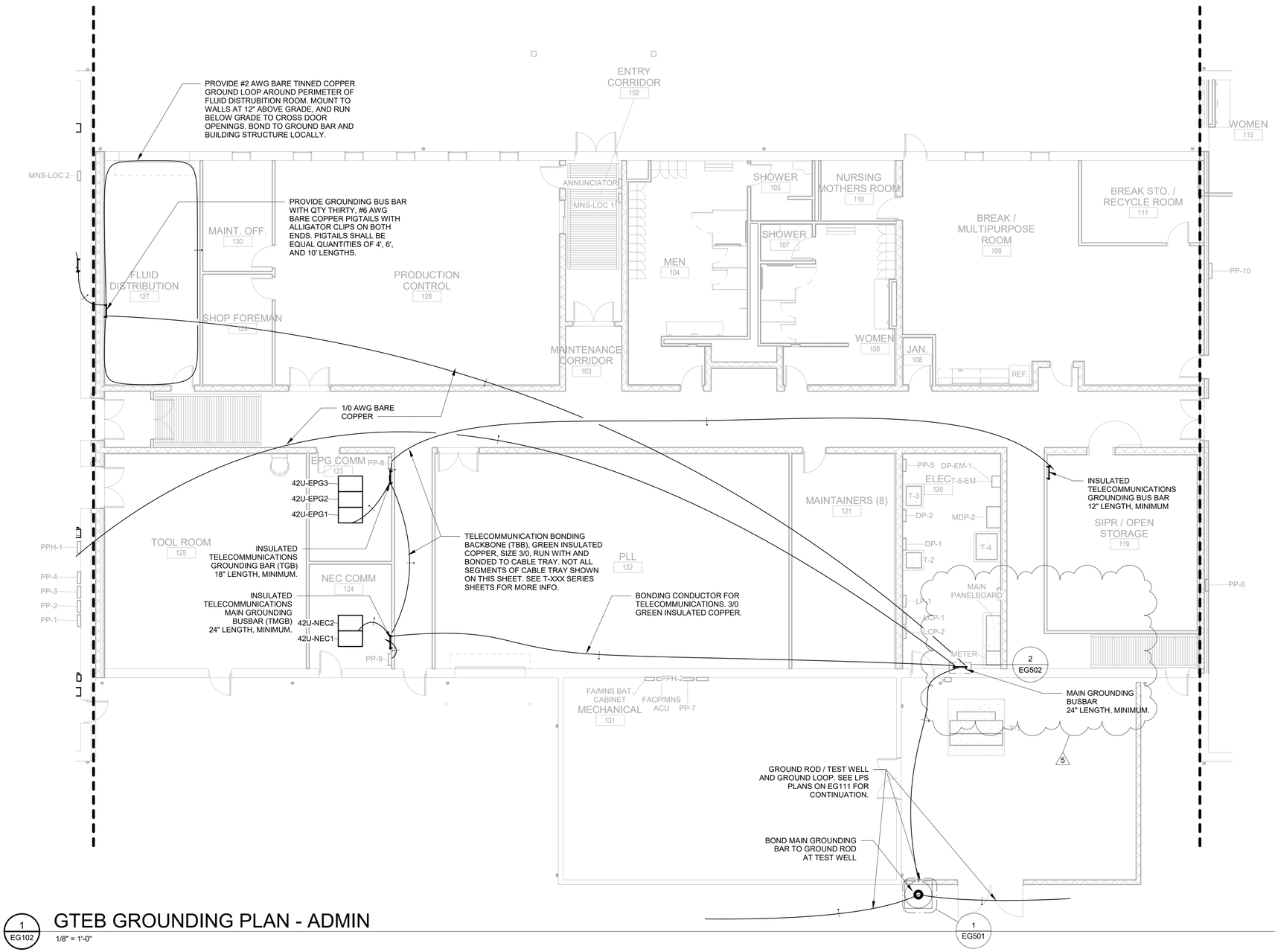

1 EG102

GTEB GROUNDING PLAN - ADMIN

1/8" = 1'-0"

8 6 4 2 0 8 16

SCALE: 1/8"=1'-0"

PLAN NORTH

AREA

'B'

AMENDMENT 3

US Army Corps of Engineers ®

MARK	DESCRIPTION	DATE
5	RELOCATE MAIN PANELBOARD, NEC 110.26(C)(2)	07 OCT 2020

US ARMY CORPS OF ENGINEERS
SACRAMENTO DISTRICT
US DEPT OF ARMY

SACRAMENTO DISTRICT
IN-HOUSE DESIGN
1325 J STREET
SACRAMENTO, CA 95814

DESIGNED BY: D. CARULLI
DRAWN BY: D. CARULLI
CHECKED BY: S. JONES
SUBMITTED BY: ALJOHN R. PARRISH
SIZE: ANSI D'
FILE NAME: WISE_GTEB_Central.rvt
ISSUE DATE: 07 OCT 2020
PROJECT # 225-25-0665
SPEC # 2145
FILE NUMBER:

FT. HUACHUCA
GROUND TRANSPORT EQUIPMENT BUILDING
ARIZONA

GTEB GROUNDING PLAN

SHEET ID

EG102

GENERAL NOTES:

1. THIS SHEET IS PROVIDED FOR DRAWING CONSISTENCY. THERE ARE NO SPECIAL GROUNDING REQUIREMENTS (OTHER THAN EQUIPMENT GROUNDING CONDUCTORS) FOR THE TRAINING AREA OF THE GTEB.
2. THIS AREA SHOWS OPTION 3. IF OPTION 3 IS NOT AWARDED, ADJUST THE BUILDING PERIMETER GROUNDING RING TO BE WITHIN 8 FT OF THE BUILDING FOUNDATION, AND BOND TO ANY METAL, SUCH AS DOOR FRAMES, WITHIN THE 6 FT SIDE-FLASH BONDING DISTANCE. THESE FEATURES ARE NOT SHOWN ON THIS INTERIOR SHEET, BUT RATHER THE LPS PLANS ON SHEET EG111.

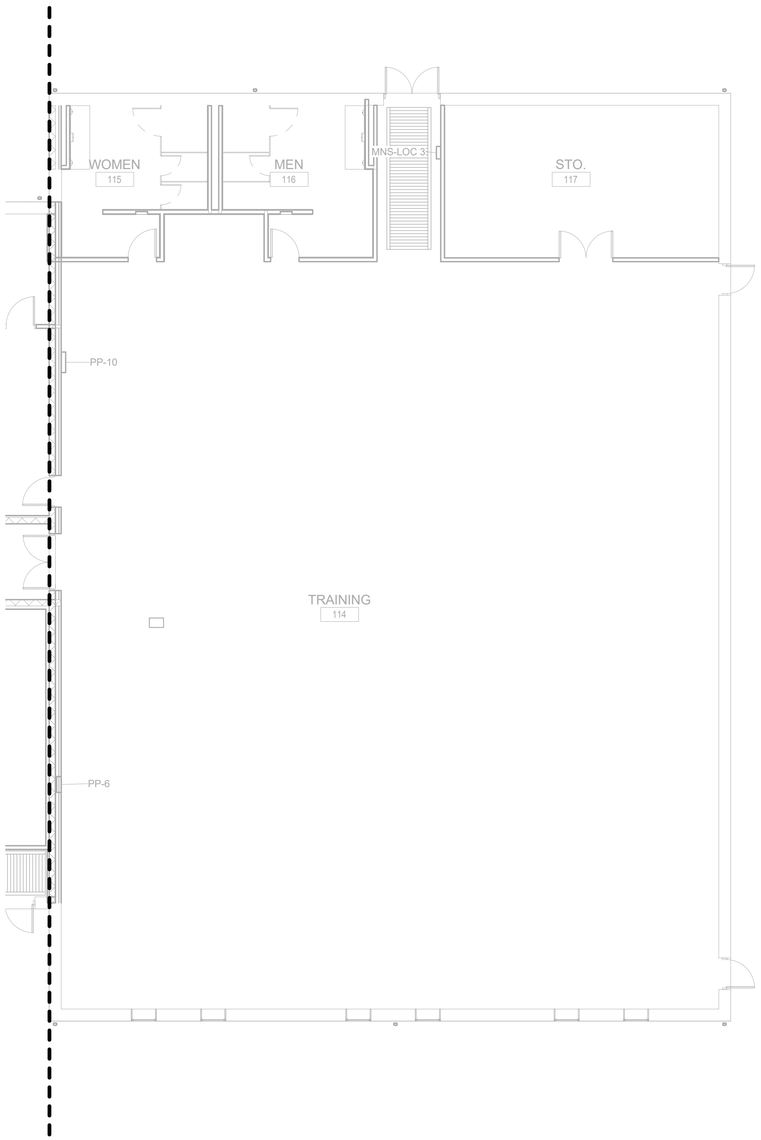

1 / EG103 GTEB GROUNDING PLAN - TRAINING (OPTION 3)

1/8" = 1'-0"

8 6 4 2 0 8 16

SCALE: 1/8"=1'-0"

PLAN NORTH

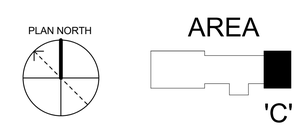

US Army Corps of Engineers ®

MARK	DESCRIPTION	DATE

US ARMY CORPS OF ENGINEERS
SACRAMENTO DISTRICT
US DEPT OF ARMY

SACRAMENTO DISTRICT
IN-HOUSE DESIGN
1325 J STREET
SACRAMENTO, CA 95814

DESIGNED BY: D. CARULLI
DRAWN BY: D. CARULLI
CHECKED BY: S. JONES
SUBMITTED BY: W. JOHN PARRISH
SIZE: ANSI D'
FILE NAME: WESE_GTEB_Central.rvt
ISSUE DATE: 13 JUL 2020
PROJECT # 225-25-0665
SPEC # 2145
FILE NUMBER:

FT. HUACHUCA
GROUND TRANSPORT EQUIPMENT BUILDING
ARIZONA

GTEB GROUNDING PLAN (OPTION 3)

SHEET ID

EG103

RTA

GENERAL NOTES:

1. LIGHTNING PROTECTION SYSTEM MATERIALS SHALL BE CLASS I MATERIALS, AND SHALL BE LISTED FOR USE IN LIGHTNING PROTECTION SYSTEMS, PER NFPA 780.
2. LPS ROOF CONDUCTORS AND MATERIALS SHALL BE ALUMINUM, SINCE THE ROOF IS ALUMINUM. DOWN CONDUCTORS SHALL TRANSITION TO COPPER A MINIMUM OF 24" ABOVE GRADE, USING BIMETALLIC CONNECTORS.
3. CONDUCTORS SHALL BE SUPPORTED OR FASTENED ON INTERVALS NOT TO EXCEED 3'.
4. ROOF SLOPE IS 1/4, SO ROOF IS DEFINED AS A PITCHED ROOF PER NFPA 780 SECTION 4.7.1.1, AND STRIKE TERMINATION DEVICES ARE ONLY REQUIRED ALONG THE RIDGES, PER SECTION 4.7.2.2.
5. GROUND RING SHALL BE BURIED A MINIMUM OF 30 INCHES BELOW GRADE, PER UFC 3-575-01, SECTION 3-3.
6. GROUND RING SHALL BE LOCATED A MINIMUM OF 3 FT AND A MAXIMUM OF 8 FT FROM THE BUILDING FOUNDATION.
7. DO NOT RUN DOWN CONDUCTORS IN DOWN SPOUTS.
8. METALLIC OBJECTS THAT COME WITHIN 6 FT OF A LIGHTNING PROTECTION CONDUCTOR SHALL BE BONDED TO THE LPS CONDUCTOR, PER UFC 3-575-01, SECTION 3-3.
9. METAL LADDERS SHALL BE BONDED TO THE LPS AT THE UPPER AND LOWER ENDS OF EACH LADDER, PER UFC 3-575-01, SECTION 3-3.
10. IF OPTION 3, THE TRAINING WING, IS NOT AWARDED, ADJUST THE BUILDING PERIMETER GROUNDING RING TO BE WITHIN 8 FT OF THE BUILDING FOUNDATION, AND BOND TO ANY METAL, SUCH AS DOOR FRAMES, WITHIN THE 6 FT SIDE-FLASH BONDING DISTANCE. ADDITIONALLY, ADD AIR TERMINALS TO THE RIDGE OF THE MIDDLE ADMINISTRATIVE WING AT MAXIMUM 20 FT INTERVALS UNTIL WITHIN 1 FT OF THE EASTERN ROOF EDGE, AND PROVIDE 2 MAIN CONDUCTORS TO DOWN CONDUCTORS IN THE CORNERS.

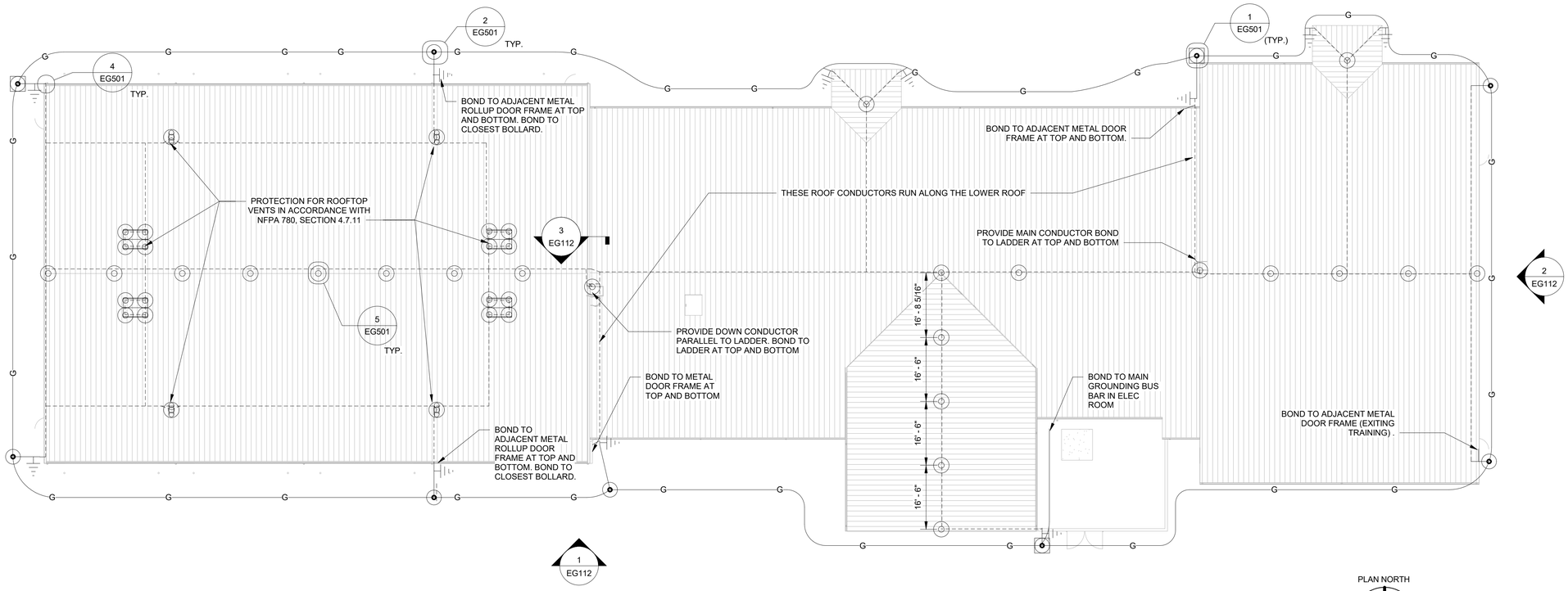

1 EG111 GTEB LIGHTNING PROTECTION PLAN

1/16" = 1'-0"

US Army Corps of Engineers ®

MARK	DESCRIPTION	DATE

ISSUE DATE: 13 JUL 2020
PROJECT # 225-25-0665
SPEC # 2145
FILE NUMBER:

DESIGNED BY: D. CARULLI
DRAWN BY: D. CARULLI
CHECKED BY: S. JONES
SUBMITTED BY: W. CONNER PARISH
SIZE: ANSI 'D'
FILE NAME: W05E_GTEB_Central.rvt

US ARMY CORPS OF ENGINEERS
SACRAMENTO DISTRICT
US DEPT OF ARMY

SACRAMENTO DISTRICT
IN-HOUSE DESIGN
1325 J STREET
SACRAMENTO, CA 95814

ARIZONA
FT. HUACHUCA
GROUND TRANSPORT EQUIPMENT BUILDING

LIGHTNING PROTECTION PLAN

SHEET ID

EG111

RTA

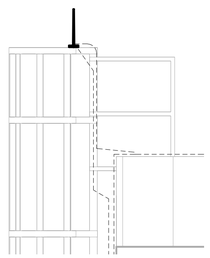

SCALE: 1/2"=1'-0"

3 EG112 LADDER BOND SECTION

1/2" = 1'-0"

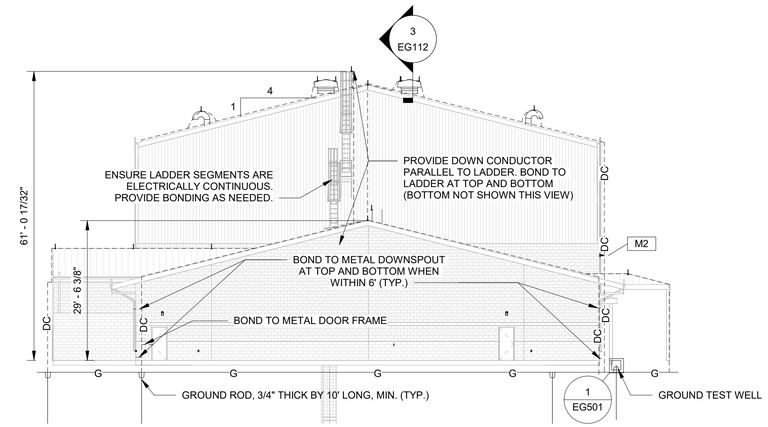

2 EG112 GTEB LIGHTNING PROTECTION ELEVATION - EAST

1/16" = 1'-0"

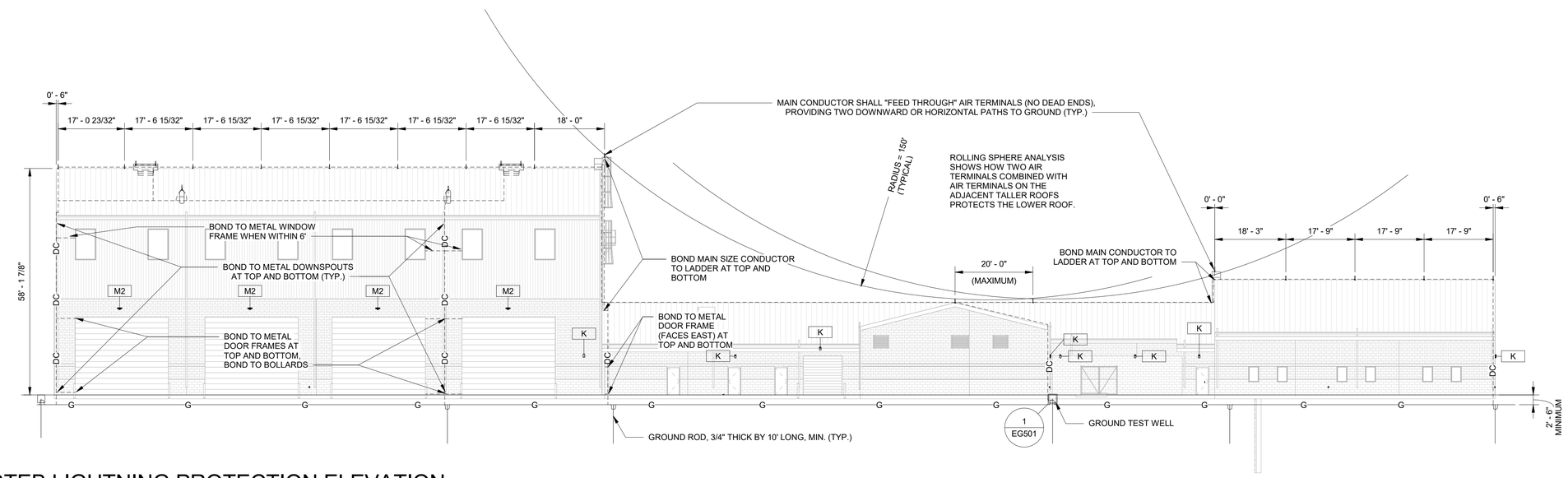

1 EG112 GTEB LIGHTNING PROTECTION ELEVATION - SOUTH

1/16" = 1'-0"

SCALE: 1/16"=1'-0"

GENERAL NOTES:

1. LIGHTNING PROTECTION SYSTEM MATERIALS SHALL BE CLASS I MATERIALS, AND SHALL BE LISTED FOR USE IN LIGHTNING PROTECTION SYSTEMS, PER NFPA 780.
2. LPS ROOF CONDUCTORS AND MATERIALS SHALL BE ALUMINUM, SINCE THE ROOF IS ALUMINUM. DOWN CONDUCTORS SHALL TRANSITION TO COPPER A MINIMUM OF 24" ABOVE GRADE, USING BIMETALLIC CONNECTORS.
3. CONDUCTORS SHALL BE SUPPORTED OR FASTENED ON INTERVALS NOT TO EXCEED 3'.
4. ROOF SLOPE IS 1/4, SO ROOF IS DEFINED AS A PITCHED ROOF PER NFPA 780 SECTION 4.7.1.1, AND STRIKE TERMINATION DEVICES ARE ONLY REQUIRED ALONG THE RIDGES, PER SECTION 4.7.2.2.
5. GROUND RING SHALL BE BURIED A MINIMUM OF 30 INCHES BELOW GRADE, PER UFC 3-575-01, SECTION 3-3.
6. GROUND RING SHALL BE LOCATED A MINIMUM OF 3 FT AND A MAXIMUM OF 8 FT FROM THE BUILDING FOUNDATION.
7. DO NOT RUN DOWN CONDUCTORS IN DOWN SPOUTS.
8. METALLIC OBJECTS THAT COME WITHIN 6 FT OF A LIGHTNING PROTECTION CONDUCTOR SHALL BE BONDED TO THE LPS CONDUCTOR, PER UFC 3-575-01, SECTION 3-3.
9. METAL LADDERS SHALL BE BONDED TO THE LPS AT THE UPPER AND LOWER ENDS OF EACH LADDER, PER UFC 3-575-01, SECTION 3-3.
10. IF OPTION 3, THE TRAINING WING, IS NOT AWARDED, ADJUST THE BUILDING PERIMETER GROUNDING RING TO BE WITHIN 8 FT OF THE BUILDING FOUNDATION, AND BOND TO ANY METAL, SUCH AS DOOR FRAMES, WITHIN THE 6 FT SIDE-FLASH BONDING DISTANCE. ADDITIONALLY, ADD AIR TERMINALS TO THE RIDGE OF THE MIDDLE ADMINISTRATIVE WING AT MAXIMUM 20 FT INTERVALS UNTIL WITHIN 1 FT OF THE EASTERN ROOF EDGE, AND PROVIDE 2 DOWN CONDUCTORS TO THE CORNERS.

US Army Corps of Engineers ®

MARK	DESCRIPTION	DATE

US ARMY CORPS OF ENGINEERS
SACRAMENTO DISTRICT
US DEPT OF ARMY

SACRAMENTO DISTRICT
IN-HOUSE DESIGN
1325 J STREET
SACRAMENTO, CA 95814

DESIGNED BY: D. CARULLI
DRAWN BY: D. CARULLI
CHECKED BY: S. JONES
SUBMITTED BY:
SIZE: ANSI D
FILE NAME:

ISSUE DATE: 13 JUL 2020
PROJECT # 225-25-0665
SPEC # 2145
FILE NUMBER:

FT. HUACHUCA
GROUND TRANSPORT EQUIPMENT BUILDING
ARIZONA

LIGHTNING PROTECTION ELEVATIONS AND SECTIONS

SHEET ID

EG112

RTA

GENERAL NOTES:

1. LIGHTNING PROTECTION SYSTEM MATERIALS SHALL BE CLASS I MATERIALS, AND SHALL BE LISTED FOR USE IN LIGHTNING PROTECTION SYSTEMS, PER NFPA 780.
2. LPS ROOF CONDUCTORS AND MATERIALS SHALL BE ALUMINUM, SINCE THE ROOF IS ALUMINUM. DOWN CONDUCTORS SHALL TRANSITION TO COPPER A MINIMUM OF 24" ABOVE GRADE, USING BIMETALLIC CONNECTORS.
3. CONDUCTORS SHALL BE SUPPORTED OR FASTENED ON INTERVALS NOT TO EXCEED 3'.
4. DOWN CONDUCTORS SHALL BE PROTECTED FOR THE BOTTOM 6' ABOVE GRADE, MINIMUM.
5. ROOF SLOPE IS 1/4, SO ROOF IS DEFINED AS A PITCHED ROOF PER NFPA 780 SECTION 4.7.1.1, AND STRIKE TERMINATION DEVICES ARE ONLY REQUIRED ALONG THE RIDGES, PER SECTION 4.7.2.2.
6. GROUND RING SHALL BE BURIED A MINIMUM OF 30 INCHES BELOW GRADE, PER UFC 3-575-01, SECTION 3-3.
7. GROUND RING SHALL BE LOCATED A MINIMUM OF 3 FT AND A MAXIMUM OF 8 FT FROM THE BUILDING FOUNDATION.
8. DO NOT RUN DOWN CONDUCTORS IN DOWN SPOUTS.
9. METALLIC OBJECTS THAT COME WITHIN 6 FT OF A LIGHTNING PROTECTION CONDUCTOR SHALL BE BONDED TO THE LPS CONDUCTOR, PER UFC 3-575-01, SECTION 3-3.

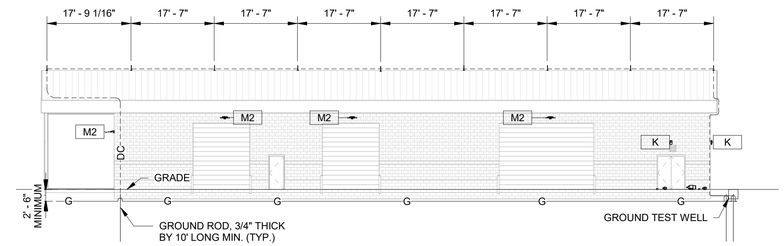

2 EG121

ORG. STORAGE LIGHTNING PROTECTION ELEVATION - NORTH

1/16" = 1'-0"

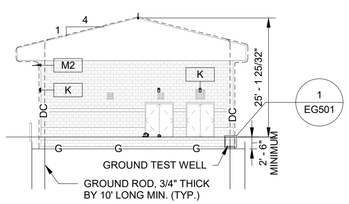

3 EG121

ORG. STORAGE LIGHTNING PROTECTION ELEVATION - WEST

1/16" = 1'-0"

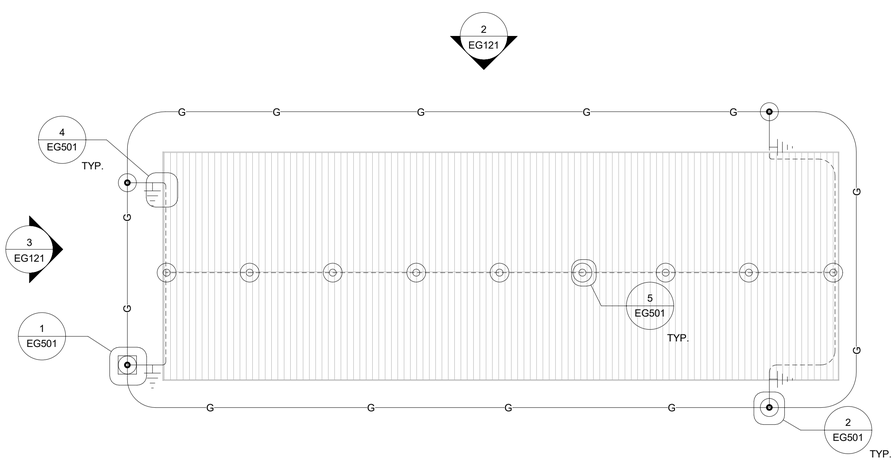

1 EG121

ORG STORAGE BUILDING (OPTION 8) - ROOF PLAN

1/16" = 1'-0"

16 12 8 4 0 16 32

SCALE: 1/16"=1'-0"

US Army Corps of Engineers ®

MARK	DESCRIPTION	DATE

DESIGNED BY: D. CARULLI
DRAWN BY: D. CARULLI
CHECKED BY: S. JONES
SUBMITTED BY: W. JOHN PARRISH
SIZE: ANSI D'
FILE NAME: WESE_STOR_central.rvt
ISSUE DATE: 13 JUL 2020
PROJECT # 225-25-0665
SPEC # 2145
FILE NUMBER:

US ARMY CORPS OF ENGINEERS
SACRAMENTO DISTRICT
US DEPT OF ARMY

SACRAMENTO DISTRICT
IN-HOUSE DESIGN
1325 J STREET
SACRAMENTO, CA 95814

FT. HUACHUCA ARIZONA
GROUND TRANSPORT EQUIPMENT BUILDING

ORG STORAGE LIGHTNING PROTECTION PLAN (OPTION 8)

SHEET ID

EG121

RTA

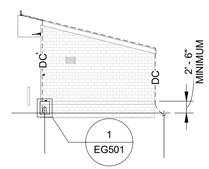

3
EG122

POL/HAZMAT LIGHTNING PROTECTION ELEVATION - WEST

1/16" = 1'-0"

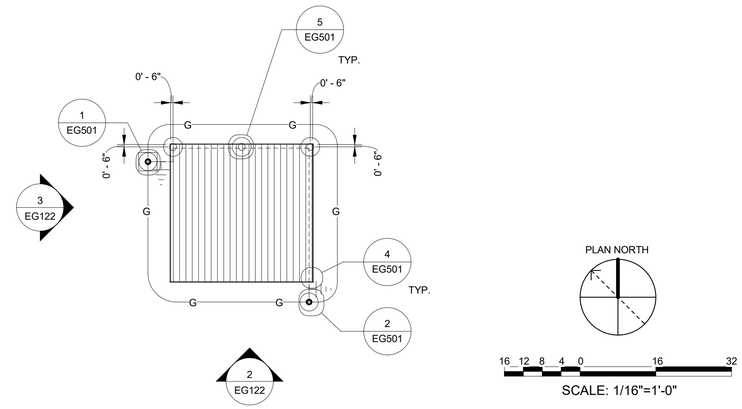

1
EG122

POL (OPTION 7) / HAZMAT (OPTION 6) ROOF PLAN

1/16" = 1'-0"

GENERAL NOTES:

1. LIGHTNING PROTECTION SYSTEM MATERIALS SHALL BE CLASS I MATERIALS, AND SHALL BE LISTED FOR USE IN LIGHTNING PROTECTION SYSTEMS, PER NFPA 780.
2. LPS ROOF CONDUCTORS AND MATERIALS SHALL BE ALUMINUM, SINCE THE ROOF IS ALUMINUM. DOWN CONDUCTORS SHALL TRANSITION TO COPPER A MINIMUM OF 24" ABOVE GRADE, USING BIMETALLIC CONNECTORS.
3. CONDUCTORS SHALL BE SUPPORTED OR FASTENED ON INTERVALS NOT TO EXCEED 3'.
4. DOWN CONDUCTORS SHALL BE PROTECTED FOR THE BOTTOM 6' ABOVE GRADE, MINIMUM.
5. ROOF SLOPE IS 1/4, SO ROOF IS DEFINED AS A PITCHED ROOF PER NFPA 780 SECTION 4.7.1.1, AND STRIKE TERMINATION DEVICES ARE ONLY REQUIRED ALONG THE RIDGES, PER SECTION 4.7.2.2.
6. GROUND RING SHALL BE BURIED A MINIMUM OF 30 INCHES BELOW GRADE, PER UFC 3-575-01, SECTION 3-3.
7. GROUND RING SHALL BE LOCATED A MINIMUM OF 3 FT AND A MAXIMUM OF 8 FT FROM THE BUILDING FOUNDATION.
8. DO NOT RUN DOWN CONDUCTORS IN DOWN SPOUTS.
9. METALLIC OBJECTS THAT COME WITHIN 6 FT OF A LIGHTNING PROTECTION CONDUCTOR SHALL BE BONDED TO THE LPS CONDUCTOR, PER UFC 3-575-01, SECTION 3-3.
10. THESE LIGHTNING PROTECTION PLANS APPLY TO BOTH THE HAZMAT STORAGE BUILDING (OPTION 6) AND THE POL STORAGE BUILDING (OPTION 7)

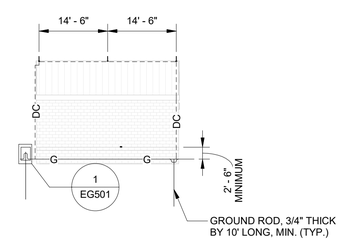

2
EG122

POL/HAZMAT LIGHTNING PROTECTION ELEVATION - SOUTH

1/16" = 1'-0"

US Army Corps of Engineers ®

MARK	DESCRIPTION	DATE

DESIGNED BY: D. CARULLI
DRAWN BY: D. CARULLI
CHECKED BY: S. JONES
SUBMITTED BY: M. VOHN PARRISH
SIZE: ANSI D
FILE NAME: WESE_STOR_central.rvt
ISSUE DATE: 13 JUL 2020
PROJECT # 225-25-0665
SPEC # 2145
FILE NUMBER:

US ARMY CORPS OF ENGINEERS
SACRAMENTO DISTRICT
US DEPT OF ARMY

SACRAMENTO DISTRICT
IN-HOUSE DESIGN
1325 J STREET
SACRAMENTO, CA 95814

FT. HUACHUCA
GROUND TRANSPORT EQUIPMENT BUILDING
ARIZONA

POL/HAZMAT LIGHTNING PROTECTION PLAN (OPTIONS 6 & 7)

SHEET ID

EG122

RTA

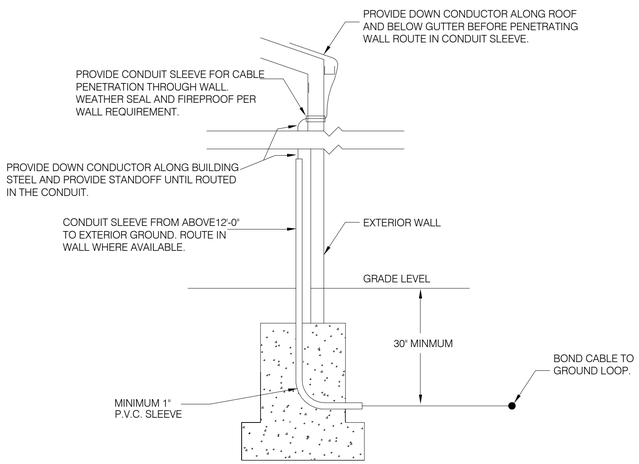

4 EG501 DOWN CONDUCTOR

NOT TO SCALE

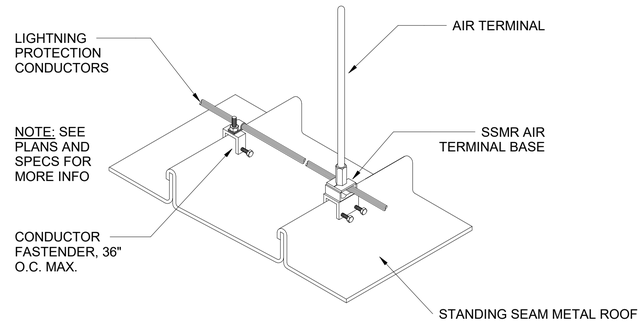

DETAIL NOTES:

1. AIR TERMINAL SHALL BE OFFSET FROM THE RIDGELINE OF THE ROOF SUCH THAT IT DOES NOT INTERFERE WITH THE RIDGE CAP.
2. COORDINATE INSTALLATION WITH ROOFING CONTRACTOR TO ENSURE THAT THE LIGHTNING PROTECTION SYSTEM DOES NOT VIOLATE ROOF WARRANTY.
3. ANGLE THE AIR TERMINAL SUCH THAT IT IS ORIENTED UPWARD. PROVIDE UL LISTED ANGLED JOINTS BETWEEN THE AIR TERMINAL AND AIR TERMINAL BASE AS NEEDED.
4. AIR TERMINAL SHALL BE LENGTH SUCH THAT THE TERMINAL EXTENDS A MINIMUM OF 12 1/2 INCHES ABOVE THE ROOF. IF AIR TERMINAL EXCEEDS 24" LENGTH, PROVIDE ADDITIONAL SUPPORTS IN ACCORDANCE WITH NFPA 780, SECTION 4.6.2.2.2.

5 EG501 AIR TERMINAL MOUNTING

NOT TO SCALE

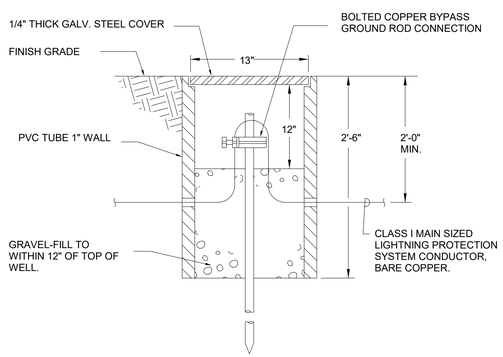

1 EG501 GROUNDING TEST WELL

NOT TO SCALE

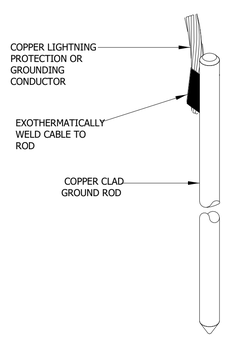

2 EG501 GROUND ROD

NOT TO SCALE

USE THIS DETAIL FOR BOTH STATIC GROUNDING POINTS IN THE BAY AREA, AND GROUNDING POINTS THROUGHOUT THE PARKING LOT.

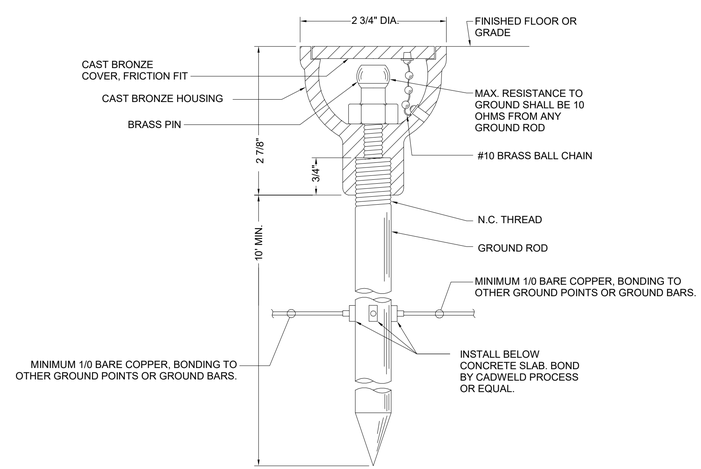

3 EG501 GROUNDING RECEPTACLE

NOT TO SCALE

US Army Corps of Engineers ®

MARK	DESCRIPTION	DATE

DESIGNED BY: D. CARULLI
DRAWN BY: D. CARULLI
CHECKED BY: S. JONES
SUBMITTED BY: KAYLYNN PARRISH
SIZE: ANSI D'
FILE NAME: WESE_GTER_Central.rvt
ISSUE DATE: 13 JUL 2020
PROJECT # 225-25-0665
SPEC # 2145
FILE NUMBER:

US ARMY CORPS OF ENGINEERS
SACRAMENTO DISTRICT
US DEPT OF ARMY

SACRAMENTO DISTRICT
IN-HOUSE DESIGN
1325 J STREET
SACRAMENTO, CA 95814

FT. HUACHUCA ARIZONA
GROUND TRANSPORT EQUIPMENT BUILDING

GROUNDING DETAILS

SHEET ID

EG501

RTA

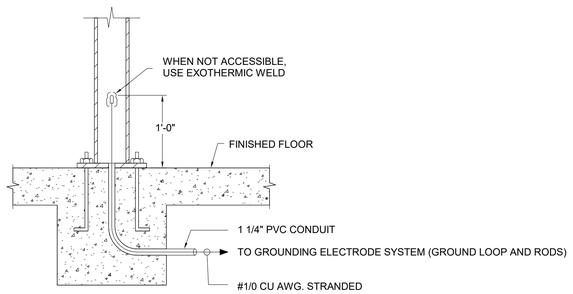

3 / EG502 STEEL COLUMN GROUND CONNECTION

NOT TO SCALE

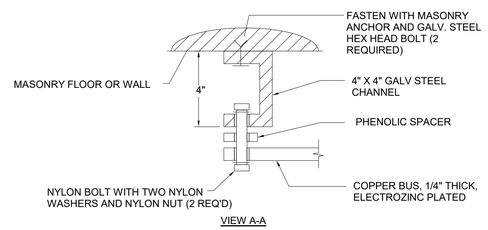

VIEW A-A

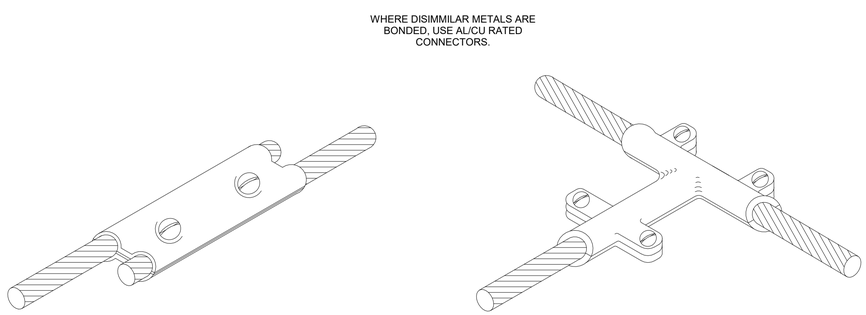

GROUND TWO CABLE SPLICE

GROUND T-SPLICE CABLE

1 / EG502 GROUND SPLICES

NOT TO SCALE

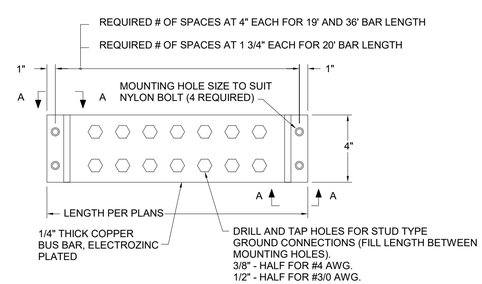

PLAN

2 / EG502 MASTER GROUND BAR

NOT TO SCALE

US Army Corps of Engineers ®

MARK	DESCRIPTION	DATE

US ARMY CORPS OF ENGINEERS
SACRAMENTO DISTRICT
US DEPT OF ARMY

SACRAMENTO DISTRICT
IN-HOUSE DESIGN
1325 J STREET
SACRAMENTO, CA 95814

DESIGNED BY: D. CARULLI
DRAWN BY: D. CARULLI
CHECKED BY: S. JONES
SUBMITTED BY: W. JOHN PARRISH
SIZE: ANSI D'
FILE NAME: WESE_GTEB_Central.rvt
ISSUE DATE: 13 JUL 2020
PROJECT # 225-25-0665
SPEC # 2145
FILE NUMBER:

FT. HUACHUCA
GROUND TRANSPORT EQUIPMENT BUILDING
ARIZONA

GROUNDING DETAILS

SHEET ID

EG502

RTA

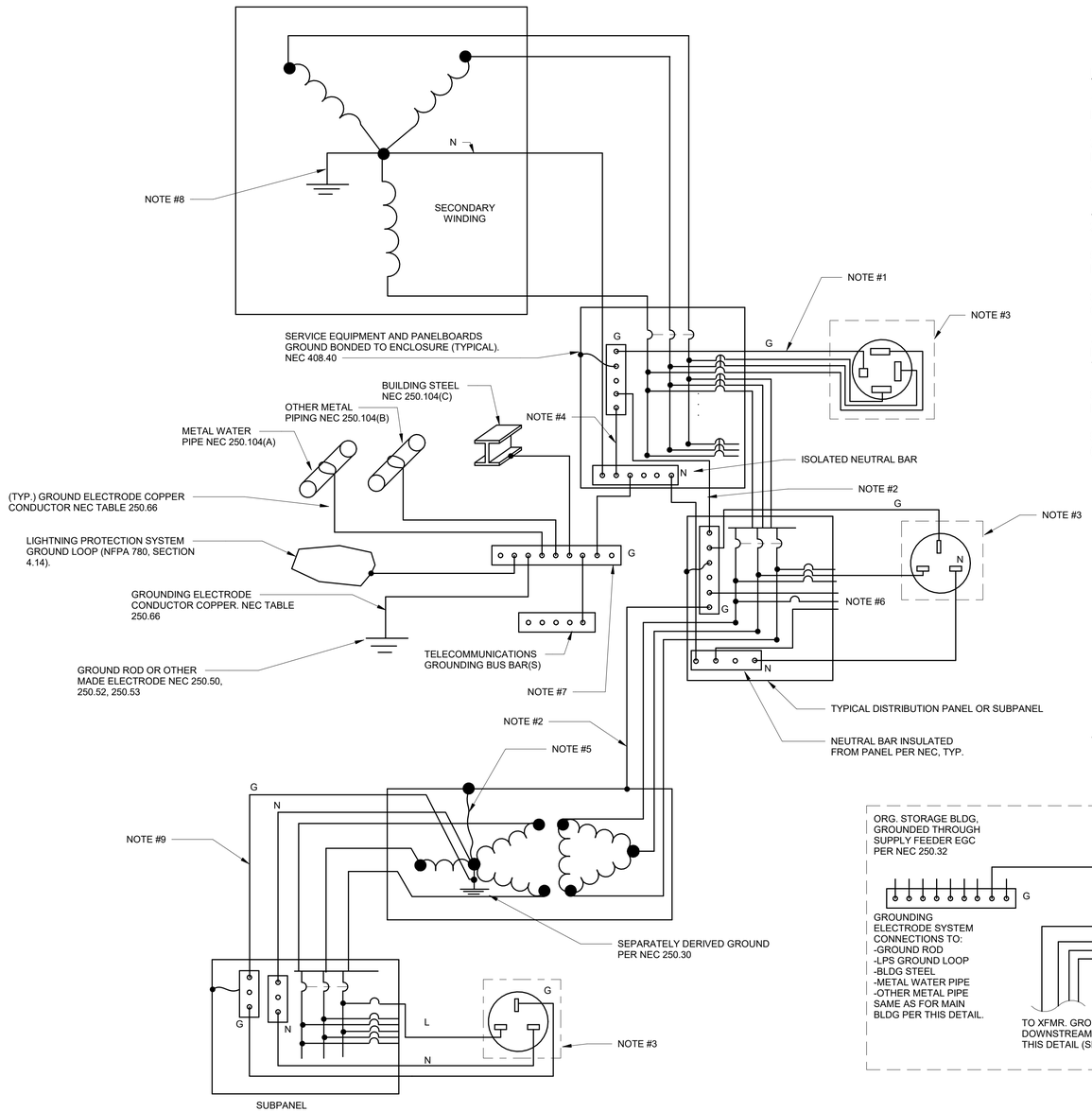

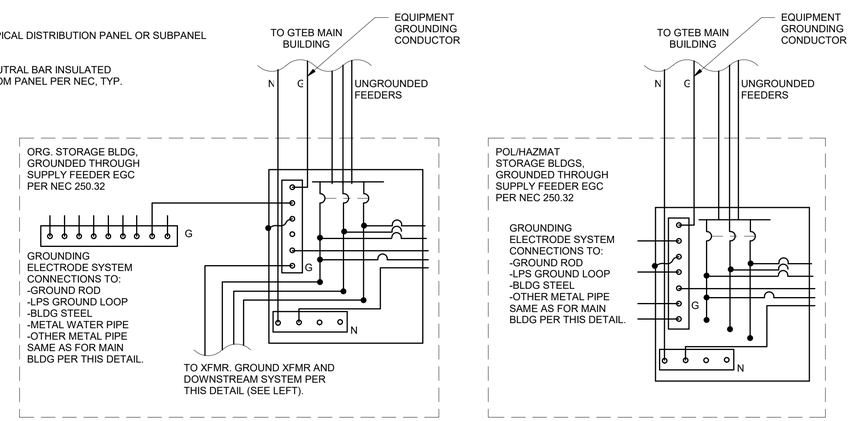

DETAIL NOTES

1.ALL EQUIPMENT GROUNDING CONDUCTORS FOR RECEPTACLE BRANCH CIRCUITS SHALL BE SIZED PER NEC TABLE 250.122

2.SIZE EQUIPMENT GROUNDING CONDUCTOR FOR FEEDER CIRCUIT PER NEC TABLE 250.122

3.TYPICAL RECEPTACLE WITH EQUIPMENT GROUNDING CONDUCTOR.

4. MAIN BONDING JUMPER. NEC 250.28, SIZED PER NEC TABLE 250.102(C)(1)

5. SYSTEM BONDING JUMPER FOR SEPARATELY DERIVED SYSTEM. NEC 250.30. SIZED PER NEC TABLE 250.102(C)(1)

6.TYPICAL LIGHTING CIRCUIT. PROVIDE EQUIPMENT GROUNDING CONDUCTOR. NEC 410.44

7. GROUNDING BUS BAR (INTERSYSTEM BONDING TERMINATION DEVICE). NEC 250.94. ALL CONNECTIONS TO THIS BUS BAR AND THE TELECOMMUNICATIONS GROUNDING BUS BARS SHALL BE LABELED.

8. GROUNDING ELECTRODE CONDUCTOR, NEC 250.24 (D). SIZED PER NEC TABLE 250.66.

9. SUPPLY SIDE BONDING JUMPER, SIZED PER NEC TABLE 250.102 (C)(1).

GENERAL NOTES:

1. THIS DETAIL PROVIDED TO SHOW THE GENERAL ARRANGEMENT OF THE GROUNDING SYSTEM FOR THIS PROJECT. THIS DETAIL IS GENERIC. NOT ALL DEVICES, DISTRIBUTION PANELS, AND CONNECTIONS ARE SHOWN. CONTRACTOR SHALL PROVIDE THE MINIMUM NUMBER OF CONNECTIONS SHOWN. CONSULT RELEVANT TABLES, DRAWINGS, AND NOTES FOR GROUND CONDUCTOR SIZES FOR EACH CONNECTION.
2. BONDING AND GROUNDING ELECTRODE CONDUCTOR CONNECTIONS SHALL BE ACCESSIBLE. LABEL ALL CONNECTIONS ON GROUNDING BUS BARS THAT ARE NOT INSTALLED WITHIN EQUIPMENT ENCLOSURES.
3. UNLESS NOTED OTHERWISE, EVERY BRANCH CIRCUIT SHALL HAVE AN EQUIPMENT GROUNDING CONDUCTOR. FEEDER SCHEDULE IDENTIFIES EQUIPMENT GROUNDING CONDUCTOR SIZES FOR FEEDERS.
4. TRANSFORMER SCHEDULE IS PROVIDED ON THIS SHEET TO SHOW THE REQUIRED MAIN BONDING JUMPER, SYSTEM BONDING JUMPER, SUPPLY-SIDE BONDING JUMPER, AND GROUNDING ELECTRODE CONDUCTOR SIZES FOR THE SECONDARY SIDE (SEPARATELY DERIVED SOURCE) OF EACH TRANSFORMER.
5. UNLESS NOTED OTHERWISE, THE GROUNDING ELECTRODE CONDUCTOR FOR TRANSFORMER SECONDARY SEPARATELY DERIVED SOURCES SHALL CONNECT TO A NEARBY GROUNDING BUS BAR OR TO BUILDING STEEL LOCALLY.
6. FOR THE SECONDARY BUILDINGS AND SITES IN THIS PROJECT, PROVIDE THE MAIN FEEDER CIRCUIT SERVING THAT BUILDING OR SITE WITH AN EQUIPMENT GROUNDING CONDUCTOR. DO NOT PROVIDE SYSTEM BONDING JUMPERS BETWEN NEUTRAL AND GROUND CONNECTIONS AT THE SECONDARY BUILDINGS OR SITES, EXCEPT AS REQUIRED FOR A SEPARATELY DERIVED SOURCE. PROVIDE A GROUNDING ELECTRODE SYSTEM FOR EACH BUILDING OR SITE THAT HAS ALL THE CONNECTIONS LISTED IN THIS DETAIL, WHERE APPLICABLE (EG. THE POL AND HAZMAT STORAGE BUILDINGS WILL NOT HAVE METALLIC WATER PIPING TO BOND TO). MINIMUM SIZE OF THE GROUNDING ELECTRODE CONDUCTORS FOR THE GROUNDING ELECTRODE SYSTEM FOR EACH BUILDING (OR GROUP OF BUILDINGS) SHALL BE AS FOLLOWS (AWG SIZES, BASED ON NEC TABLE 250.66):
   A. MAIN GTEB: #4/0
   B. ORG. STORAGE: #2
   C. POL AND HAZMAT STORAGE: #8
   D. SOLAR PV SYSTEM AT OVERFLOW LOT: #4/0

1 EG601

GROUNDING SYSTEM DIAGRAM

NOT TO SCALE

TRANSFORMER SCHEDULE

NAME	KVA	PHASE	TYPE	PRI. VOLT	PRI. TYPE	SEC. VOLT	SEC. TYPE	BONDING JUMPER	GND. ELECTRODE	FEED FROM	FEED TO	LOCATION	MIN. ENCL.	MOUNTING	MIN. %Z	K FACTOR	NOTES
T-1	750	3Ø	PADMOUNT	13.8 KV	DELTA	480/277 V	WYE	N/A	#4/0	UTILITY	MDP-1	MECH YARD	NEMA 3R	PADMOUNT	5.32%	N/A	PROVIDED BY SSVEC
T-2	50	1Ø	DRY	480 V	PHASE-PHASE	240/120 V	3 WIRE	#2	#2	MDP-1	DP-1	ELEC RM 120	NEMA 1	FLOOR/PAD	3.68%	N/A	
T-3	45	3Ø	DRY	480 V	DELTA	208/120 V	WYE	#2	#2	MDP-1	DP-2	ELEC RM 120	NEMA 1	FLOOR/PAD	1.64%	K-13	
T-4	225	3Ø	DRY	480 V	DELTA	208/120 V	WYE	#2/0	#2/0	MDP-1	MDP-2	ELEC RM 120	NEMA 1	FLOOR/PAD	4.87%	N/A	
T-5-EM	15	1Ø	MINI LOAD CENTER	480 V	PHASE-PHASE	240/120 V	3 WIRE	#8	#8	MDP-1	DP-EM-1	ELEC RM 120	NEMA 1	WALL	1%	N/A	
T-6	45	3Ø	DRY	480 V	DELTA	208/120 V	WYE	#6	#6	PPH-3	PP-11	ELEC RM 303	NEMA 1	FLOOR/PAD	3.11%	N/A	
T-7	15	1Ø	DRY	480 V	PHASE-PHASE	240/120 V	3 WIRE	#8	#8	PPH-3	PP-12	ELEC RM 303	NEMA 1	FLOOR/PAD	2.91%	N/A	
T-8	15	1Ø	MINI LOAD CENTER	480 V	PHASE-PHASE	240/120 V	3 WIRE	#8	#8	XP-6	XP-7	OVERFLOW LOT	NEMA 3	PADMOUNT	1.00%	N/A	

US Army Corps of Engineers ®

MARK	DESCRIPTION	DATE

DESIGNED BY: D. CARULLI
DRAWN BY: D. CARULLI
CHECKED BY: S. JONES
SUBMITTED BY: ALVORN PARISH
SIZE: ANSI D' FILE NAME: WIESE_GTEB_Central.rvt
ISSUE DATE: 13 JUL 2020
PROJECT # 225-25-0665
SPEC # 2145
FILE NUMBER:

US ARMY CORPS OF ENGINEERS
SACRAMENTO DISTRICT
US DEPT OF ARMY

SACRAMENTO DISTRICT
IN-HOUSE DESIGN
1325 J STREET
SACRAMENTO, CA 95814

FT. HUACHUCA, ARIZONA
GROUND TRANSPORT EQUIPMENT BUILDING

GROUNDING SYSTEM DIAGRAM

SHEET ID

EG601

RTA

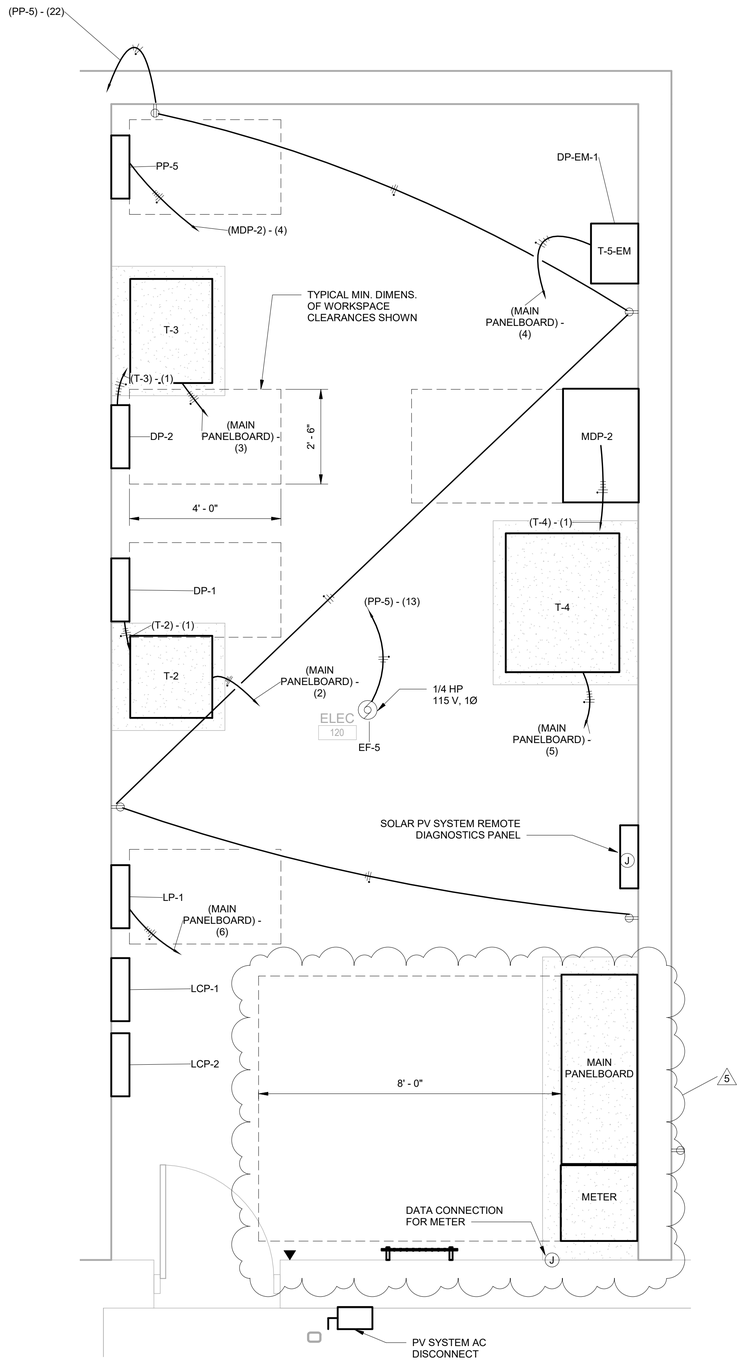

1 E-401 GTEB ENLARGED POWER FLOOR PLAN - ELEC

1/2" = 1'-0"

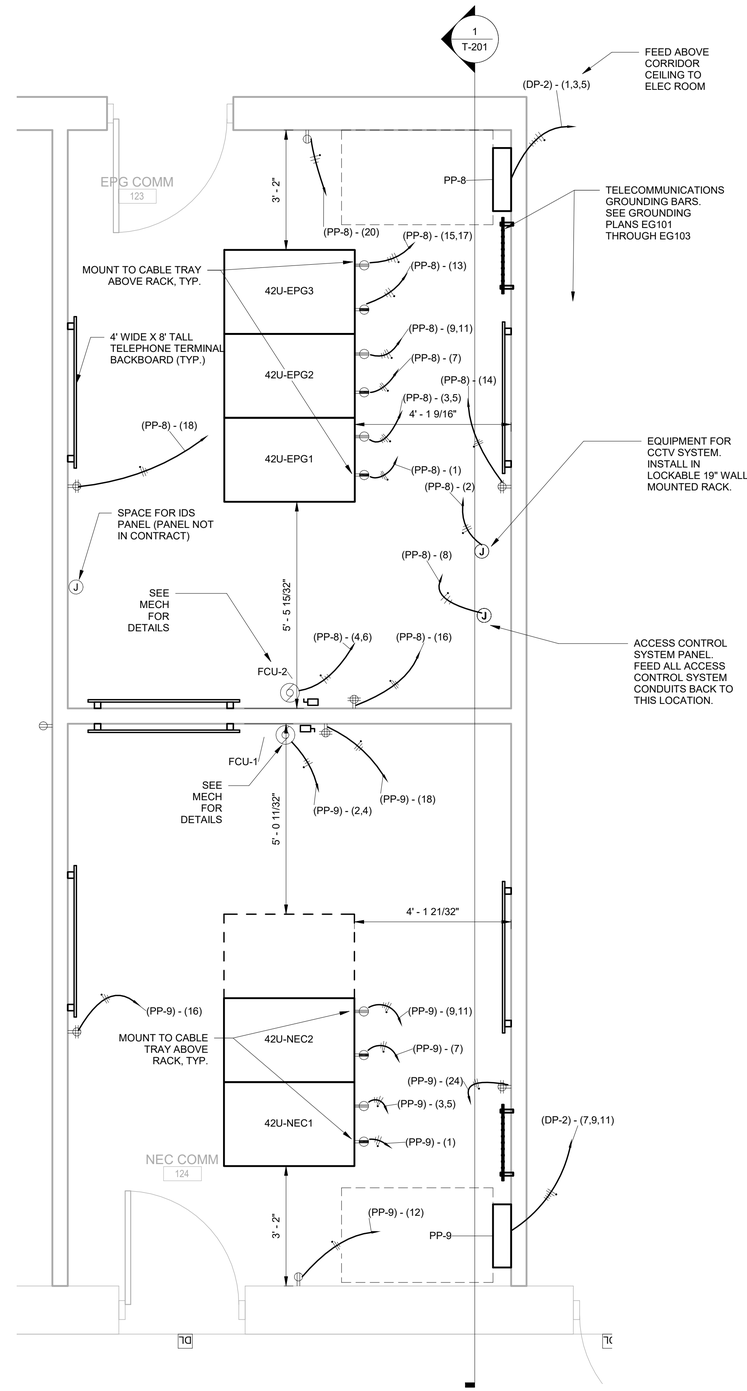

2 E-401 GTEB ENLARGED POWER FLOOR PLAN - COMM

1/2" = 1'-0"

GENERAL NOTES:

1. WORKSPACE CLEARANCES IN FRONT OF ELECTRICAL EQUIPMENT IS SHOWN.
2. CLEARANCE AROUND COMMUNICATIONS RACKS IS SHOWN. MINIMUM SHALL BE 3' ON SIDES, AND 4' IN FRONT AND BACK OF RACKS.
3. SEE SINGLE LINE DIAGRAM ON SHEET E-601 FOR CONNECTIONS BETWEEN DISTRIBUTION EQUIPMENT IN THE ELECTRICAL ROOM.
4. SEE TELECOMMUNICATIONS PLANS FOR ROUTING OF CABLE TRAY BETWEEN TELECOMMUNICATIONS ROOMS.

0 1 2 4 6

SCALE: 1/2"=1'-0"

PLAN NORTH

AMENDMENT 3

US Army Corps of Engineers ®

MARK	DESCRIPTION	DATE
5	RELOCATE MAIN PANELBOARD, NEC 110.26(C)(2)	07 OCT 2020

DESIGNED BY: D. CARULLI
DRAWN BY: D. CARULLI
CHECKED BY: S. JONES
SUBMITTED BY: W. JOHN TARRISH
SIZE: ANSI D'
FILE NAME: WISE_GTEB_Central.rvt
ISSUE DATE: 07 OCT 2020
PROJECT # 225-25-0665
SPEC # 2145
FILE NUMBER:

US ARMY CORPS OF ENGINEERS
SACRAMENTO DISTRICT
US DEPT OF ARMY

SACRAMENTO DISTRICT
IN-HOUSE DESIGN
1325 J STREET
SACRAMENTO, CA 95814

FT. HUACHUCA
GROUND TRANSPORT EQUIPMENT BUILDING
ARIZONA

ENLARGED ELECTRICAL PLANS

SHEET ID

E-401

PLAN NOTES:

1. MINIMUM WORKSPACE CLEARANCES AROUND THE TRANSFORMER PAD ARE SHOWN ON MECHANICAL YARD PLAN.
2. APPROXIMATE BOUNDARIES OF MECHANICAL EQUIPMENT ARE SHOWN. ACTUAL LOCATION OF ELECTRICAL COMPONENTS WITHIN MECHANICAL EQUIPMENT ARE ESTIMATED. CONTRACTOR SHALL COORDINATE INSTALLATION WITH MECHANICAL PLANS.
3. CONTRACTOR SHALL COORDINATE ALL PATHWAYS WITH OTHER UTILITIES.
4. EQUIPMENT DISCONNECTS ARE NOT REQUIRED TO BE IN THE EXACT LOCATIONS SHOWN. MOUNT EQUIPMENT DISCONNECTS IN AN ACCESSIBLE LOCATION NEAR THE EQUIPMENT IT SERVES. THIS MAY BE ON AN ADJACENT WALL, THE EQUIPMENT ENCLOSURE IF SUITABLE FOR MOUNTING, OR ON A DEDICATED ANGLE IRON STRUCTURE (PROVIDED BY CONTRACTOR).

(#) KEYED NOTES:

1. PV SYSTEM AC DISCONNECT SHALL MEET ALL REQUIREMENTS AS SPECIFIED IN THE SSVEC INTERCONNECT CUSTOMER HANDBOOK, AS WELL AS THE NEC. IT SHALL HAVE A NEMA 3R ENCLOSURE, VISIBLE OPEN, BE CAPABLE OF BEING PADLOCKED IN THE OPEN POSITION, AND BE LABELLED "PHOTOVOLTAIC SYSTEM AC DISCONNECT"
2. COORDINATE INSTALLATION OF ELECTRICAL AND FIRE ALARM PANELS WITH MECHANICAL WORK. MAINTAIN MINIMUM 6 FT CLEARANCE FOR DEDICATED ELECTRICAL SPACE ABOVE ELECTRICAL AND FIRE ALARM PANELS, REFERENCE NEC 110.26 (E) (1) (a). IF PIPING RUNS ABOVE ELECTRICAL OR FIRE ALARM PANELS, INSTALL DRIP PAN BELOW THE PIPING, BUT ABOVE THE DEDICATED ELECTRICAL SPACE, REFERENCE NEC 110.26 (E) (1) (b).

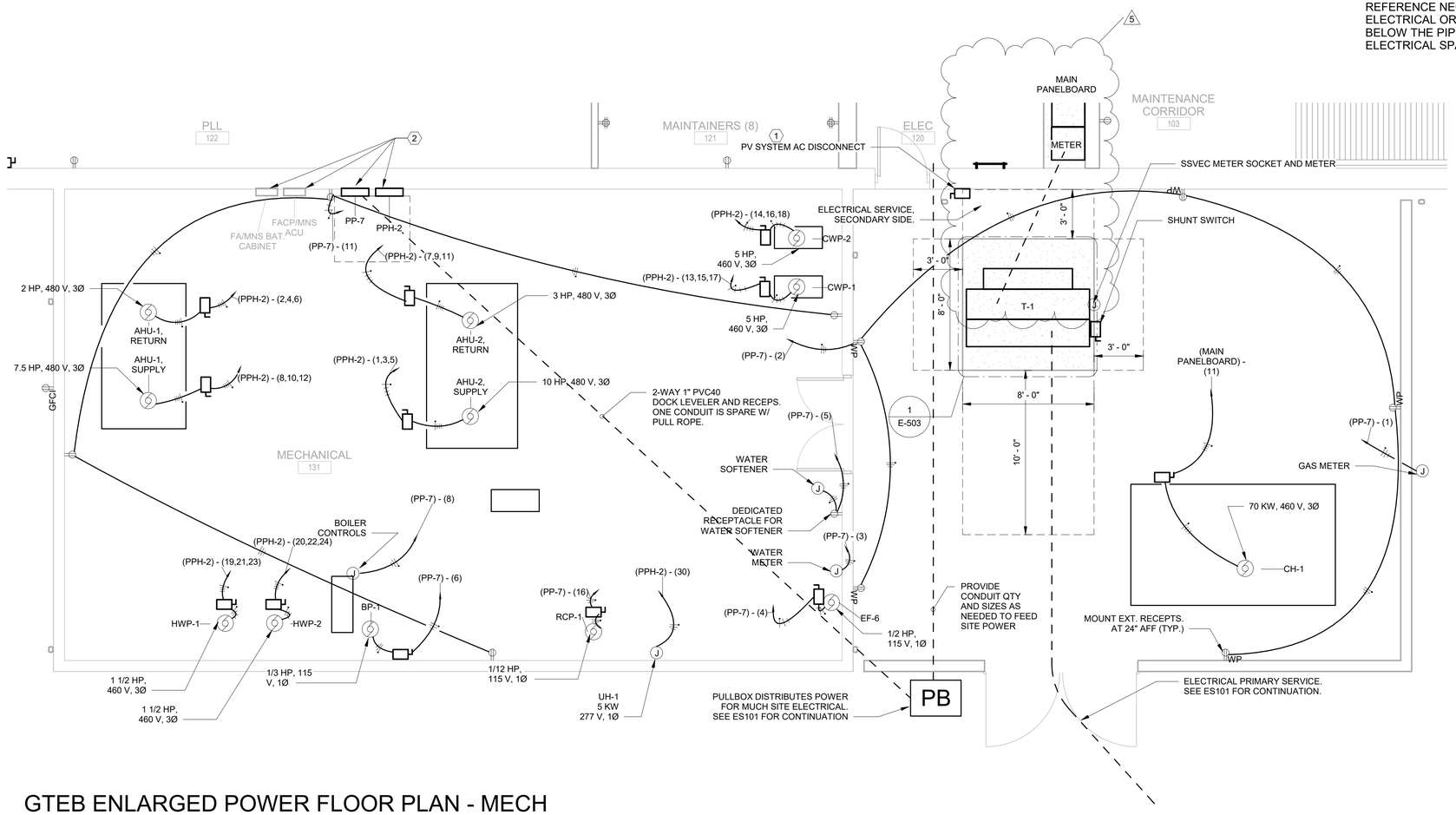

SCALE: 1/4"=1'-0"

PLAN NORTH

GTEB ENLARGED POWER FLOOR PLAN - MECH ROOM AND YARD

1 / E-402

1/4" = 1'-0"

AMENDMENT 3

US Army Corps of Engineers ®

MARK	DESCRIPTION	DATE
5	RELOCATE MAIN PANELBOARD, NEC 110.26(C)(2)	07 OCT 2020

ISSUE DATE: 07 OCT 2020
PROJECT # 225-25-0665
SPEC # 2145
FILE NUMBER:

DESIGNED BY: D. CARULLI
DRAWN BY: D. CARULLI
CHECKED BY: S. JONES
SUBMITTED BY: KAJOHN PARRISH
SIZE: ANSI 'D'
FILE NAME: WGSE_GTEB_Central.rvt

US ARMY CORPS OF ENGINEERS
SACRAMENTO DISTRICT
US DEPT OF ARMY

SACRAMENTO DISTRICT
IN-HOUSE DESIGN
1325 J STREET
SACRAMENTO, CA 95814

FT. HUACHUCA
GROUND TRANSPORT EQUIPMENT BUILDING
ARIZONA

ENLARGED ELECTRICAL PLANS

SHEET ID

E-402

MOTOR SCHEDULE												
MOTOR NAME	Motor Voltage	Number of Poles	Horsepower	Minimum Circuit Ampacity	Current Carrying Conductor Size	Equipment Grounding Conductor Size	Branch Circuit Conduit Size and Type	Max Short Circuit Protection Rating	Breaker Short Circuit Protection	Disconnect Rating	(#) Notes
35 TON CRANE	460 V	3	30.6 HP	50.0 A	(3) #4	#8	1" RMC	100.0 A	100.0 A	50.0 A	6, 9
AC-1	460 V	3	20 HP	33.8 A	(3) #8	#8	3/4" RMC	67.5 A	70.0 A	35.0 A	
VEF-1	460 V	3	15 HP	26.3 A	(3) #10	#10	3/4" RMC	52.5 A	60.0 A	25.0 A	9
VEF-2	460 V	3	15 HP	26.3 A	(3) #10	#10	3/4" RMC	52.5 A	60.0 A	25.0 A	9
VEF-3	460 V	3	15 HP	26.3 A	(3) #8	#10	3/4" RMC	52.5 A	60.0 A	25.0 A	6, 9
VEF-4	460 V	3	15 HP	26.3 A	(3) #10	#10	3/4" RMC	52.5 A	60.0 A	25.0 A	9
AHU-2, SUPPLY	460 V	3	10 HP	17.5 A	(3) #10	#10	3/4" RMC	35.0 A	35.0 A	20.0 A	2
AHU-1, SUPPLY	460 V	3	7.5 HP	13.8 A	(3) #12	#12	3/4" RMC	27.5 A	30.0 A	15.0 A	
MAU-1A	460 V	3	7.5 HP	29.3 A	(3) #6	#10	1" PVC 40 / 1" RMC	35.0 A	35.0 A	30.0 A	2, 7
MAU-1A	460 V	3	7.5 HP	0.0 A				0.0 A	0.0 A		2, 7
MAU-1B	460 V	3	7.5 HP	29.3 A	(3) #6	#10	1" PVC 40 / 1" RMC	35.0 A	35.0 A	30.0 A	2, 7
MAU-1B	460 V	3	7.5 HP	0.0 A				0.0 A	0.0 A		2, 7
CWP-1	460 V	3	5 HP	9.5 A	(3) #12	#12	3/4" RMC	19.0 A	20.0 A	15.0 A	
CWP-2	460 V	3	5 HP	9.5 A	(3) #12	#12	3/4" RMC	19.0 A	20.0 A	15.0 A	
EF-1	460 V	3	5 HP	9.5 A	(3) #12	#12	3/4" RMC	19.0 A	20.0 A	15.0 A	
EF-2	460 V	3	5 HP	9.5 A	(3) #12	#12	3/4" RMC	19.0 A	20.0 A	15.0 A	
AHU-2, RETURN	460 V	3	3 HP	6.0 A	(3) #12	#12	3/4" RMC	12.0 A	15.0 A	15.0 A	2
AHU-1, RETURN	460 V	3	2 HP	4.3 A	(3) #12	#12	3/4" RMC	8.5 A	15.0 A	15.0 A	
HWP-1	460 V	3	1.5 HP	3.8 A	(3) #12	#12	3/4" RMC	7.5 A	15.0 A	15.0 A	
HWP-2	460 V	3	1.5 HP	3.8 A	(3) #12	#12	3/4" RMC	7.5 A	15.0 A	15.0 A	
CH-1	460 V	3	(SEE NOTE)	125.0 A	(3) #2/0	#6	1-1/2" RMC	125.0 A	125.0 A	125.0 A	2, 4
PRESSURE WASHER	230 V	2	5 HP	35.0 A	(2) #6	#8	1" PVC-40		30.0 A		2, 3
PRESSURE WASHER	230 V	2	5 HP	35.0 A	(2) #6	#8	1" PVC 40		30.0 A		2, 3
STEAM WASHER	230 V	2	5 HP	35.0 A	(2) #6	#8	1" PVC 40		30.0 A		2, 3
STEAM WASHER	230 V	2	5 HP	35.0 A	(2) #6	#8	1" PVC 40		30.0 A		2, 3
HR-1-1	230 V	2	1/2 HP	6.1 A	(2) #10	#10	3/4" RMC	12.2 A	15.0 A	15.0 A	5, 6
HR-1-2	230 V	2	1/2 HP	6.1 A	(2) #10	#10	3/4" RMC	12.2 A	15.0 A	15.0 A	5, 6
HR-1-3	230 V	2	1/2 HP	6.1 A	(2) #8	#10	3/4" RMC	12.2 A	15.0 A	15.0 A	5, 6
HR-1-4	230 V	2	1/2 HP	6.1 A	(2) #8	#10	3/4" RMC	12.2 A	15.0 A	15.0 A	5, 6
HR-1-5	230 V	2	1/2 HP	6.1 A	(2) #12	#12	3/4" RMC	12.2 A	15.0 A	15.0 A	5
HR-1-6	230 V	2	1/2 HP	6.1 A	(2) #12	#12	3/4" RMC	12.2 A	15.0 A	15.0 A	5
HR-1-7	230 V	2	1/2 HP	6.1 A	(2) #10	#10	3/4" RMC	12.2 A	15.0 A	15.0 A	5, 6
HR-1-8	230 V	2	1/2 HP	6.1 A	(2) #10	#10	3/4" RMC	12.2 A	15.0 A	15.0 A	5, 6
27K LIFT, BAY 7	220 V	2	5 HP	36.6 A	(2) #8	#10	1" PVC 40 / 1" RMC	73.2 A	80.0 A	35.0 A	
12K LIFT BAY 1	220 V	2	3 HP	22.2 A	(2) #10	#10	1" PVC 40 / 1" RMC	44.4 A	45.0 A	25.0 A	
12K LIFT BAY 2	220 V	2	3 HP	22.2 A	(2) #10	#10	1" PVC 40 / 1" RMC	44.4 A	45.0 A	25.0 A	
12K LIFT BAY 5	220 V	2	3 HP	22.2 A	(2) #10	#10	1" PVC 40 / 1" RMC	44.4 A	45.0 A	25.0 A	
12K LIFT BAY 6	220 V	2	3 HP	22.2 A	(2) #10	#10	1" PVC 40 / 1" RMC	44.4 A	45.0 A	25.0 A	
RD-1	220 V	2	1 HP	10.0 A	(2) #12	#12	3/4" RMC	20.0 A	20.0 A	15.0 A	
FCU-1	208 V	2	~3 HP	24.0 A	(2) #10	#10	3/4" EMT	40.0 A	40.0 A	25.0 A	
FCU-2	208 V	2	~3 HP	24.0 A	(2) #10	#10	3/4" EMT	40.0 A	40.0 A	25.0 A	
VP-1	208 V	3	3/4 HP	4.4 A	(3) #12	#12	3/4" RMC	8.8 A	15.0 A	15.0 A	
VP-2	208 V	3	3/4 HP	4.4 A	(3) #12	#12	3/4" RMC	8.8 A	15.0 A	15.0 A	
BAY DOOR 1	208 V	3	3 HP	13.3 A	(3) #10	#10	3/4" RMC	26.5 A	30.0 A	15.0 A	6, 8
BAY DOOR 2	208 V	3	3 HP	13.3 A	(3) #10	#10	3/4" RMC	26.5 A	30.0 A	15.0 A	6, 8
BAY DOOR 3	208 V	3	3 HP	13.3 A	(3) #8	#10	3/4" RMC	26.5 A	30.0 A	15.0 A	6, 8
BAY DOOR 4	208 V	3	3 HP	13.3 A	(3) #8	#10	3/4" RMC	26.5 A	30.0 A	15.0 A	6, 8
BAY DOOR 5	208 V	3	3 HP	13.3 A	(3) #12	#12	3/4" RMC	26.5 A	30.0 A	15.0 A	8
BAY DOOR 6	208 V	3	3 HP	13.3 A	(3) #10	#10	3/4" RMC	26.5 A	30.0 A	15.0 A	6, 8
BAY DOOR 7	208 V	3	3 HP	13.3 A	(3) #10	#10	3/4" RMC	26.5 A	30.0 A	15.0 A	6, 8
BAY DOOR 8	208 V	3	3 HP	13.3 A	(3) #8	#10	3/4" RMC	26.5 A	30.0 A	15.0 A	6, 8
DOCK LEVELER MOTOR	208 V	3	1 HP	5.8 A	(3) #12	#12	1" PVC 40	11.5 A	15.0 A	15.0 A	2
GATE MOTOR EAST	208 V	3	1 HP	5.8 A	(3) #12	#12	1" PVC 40	11.5 A	15.0 A	15.0 A	2
GATE MOTOR WEST	208 V	3	1 HP	5.8 A	(3) #12	#12	1" PVC 40	11.5 A	15.0 A	15.0 A	2
ROLLUP DOOR FLUID DISTR.	208 V	3	1 HP	5.8 A	(3) #12	#12	3/4" RMC	11.5 A	15.0 A	15.0 A	8
ROLLUP DOOR PLL	208 V	3	1 HP	5.8 A	(3) #12	#12	3/4" RMC	11.5 A	15.0 A	15.0 A	8
PROJECTOR SCREEN MOTOR	115 V	1	1/12 HP	3.1 A	(2) #12	#12	3/4" EMT	6.3 A	15.0 A	15.0 A	1, 5
PROJECTOR SCREEN MOTOR	115 V	1	1/12 HP	3.1 A	(2) #12	#12	3/4" EMT	6.3 A	15.0 A	15.0 A	1, 5
RCP-1	115 V	1	1/12 HP	3.1 A	(2) #12	#12	3/4" RMC	6.3 A	15.0 A	15.0 A	
EF-4	115 V	1	1/10 HP	3.8 A	(2) #12	#12	3/4" EMT	7.5 A	15.0 A	15.0 A	1
EF-3	115 V	1	1/6 HP	5.5 A	(2) #12	#12	3/4" EMT	11.0 A	15.0 A	15.0 A	10
EF-5	115 V	1	1/4 HP	7.3 A	(2) #12	#12	3/4" EMT	14.5 A	15.0 A	15.0 A	
EF-7	115 V	1	1/4 HP	7.3 A	(2) #10	#10	3/4" EMT	14.5 A	15.0 A	15.0 A	6
BP-1	115 V	1	1/3 HP	9.0 A	(2) #12	#12	3/4" RMC	18.0 A	15.0 A	15.0 A	
FUEL PUMP 1	115 V	1	1/3 HP	9.0 A	(2) #8	#10	1" PVC 40 / 3/4" RMC	18.0 A	20.0 A	15.0 A	2, 6
FUEL PUMP 2	115 V	1	1/3 HP	9.0 A	(2) #8	#10	1" PVC 40 / 3/4" RMC	18.0 A	20.0 A	15.0 A	2, 6
EF-6	115 V	1	1/2 HP	12.3 A	(2) #12	#12	3/4" RMC	24.5 A	25.0 A	15.0 A	

GENERAL NOTES:

1. MINIMUM CIRCUIT AMPACITY IS CALCULATED AS 125% OF MOTOR FULL LOAD AMPS, PER NEC ARTICLE 430.22.
2. BRANCH CIRCUIT CONDUCTOR SIZE IS BASED ON NEC TABLE 310.15(B)(16), ASSUMING 75°C RATED COPPER CONDUCTORS (THWN OR XHHW, OR XHHW-2 WITH 75°C RATED TERMINATIONS). FOR INDOOR APPLICATIONS, AMBIENT TEMPERATURE IS ASSUMED TO BE IN THE 25-30°C RANGE, SO DERATING OF CONDUCTORS IS NOT REQUIRED. KEYNOTES ON THIS SHEET IDENTIFY CASES WHERE DERATING OF CONDUCTORS IS REQUIRED.
3. EQUIPMENT GROUNDING CONDUCTORS ARE SIZED PER NEC TABLE 250.122. ALL EQUIPMENT GROUNDING CONDUCTORS SHALL BE GREEN JACKETED COPPER.
4. UNLESS NOTED OTHERWISE, ALL MOTORS ARE ASSUMED TO BE ON THEIR OWN BRANCH CIRCUIT, WITH THE BRANCH CIRCUIT CONDUCTORS RUN IN A DEDICATED CONDUIT (NO MORE THAN 3 CURRENT CARRYING CONDUCTORS PER RACEWAY). IF CONTRACTOR CHOOSES TO COMBINE MULTIPLE CIRCUITS INTO A RACEWAY, CONTRACTOR SHALL BE RESPONSIBLE FOR APPLYING AMPACITY DERATINGS PER NEC TABLE 310.15(B)(3)(a), RESIZING CONDUCTORS AND CONDUITS WHERE REQUIRED, AND PROVIDING SUBMITTAL FOR REVIEW PRIOR TO IMPLEMENTATION.
5. UNLESS NOTED OTHERWISE, MAX SHORT CIRCUIT PROTECTION RATING IS A CALCULATED VALUE FROM NEC TABLE 430.52, BASED ON THE FULL LOAD AMPS OF THE MOTOR, USING AN INVERSE TIME BREAKER FOR THE SHORT CIRCUIT PROTECTION.
6. UNLESS NOTED OTHERWISE, BREAKER SHORT CIRCUIT PROTECTION IS THE RATING OF THE BRANCH CIRCUIT PROTECTION. IT MAY BE THE NEXT HIGHER STANDARD AMPERE RATING THAN THE CALCULATED MAX SHORT CIRCUIT PROTECTION RATING, PER NEC ARTICLE 430.52(C)(1) EXCEPTION NO. 1.
7. PROVIDE MOTOR CONTROLLERS FOR ALL PERMANENTLY INSTALLED MOTORS GREATER THAN 1/8 HP IN ACCORDANCE WITH SPEC SECTION 26 20 00. MOTOR CONTROLLERS SHALL HAVE PROTECTION IN EACH PHASE FROM: OVERLOAD, PHASE-LOSS, UNDERVOLTAGE, AND OVERVOLTAGE, AND PROTECT MOTORS FROM IMMEDIATE RESTART BY A TIME ADJUSTABLE RESTART DELAY.
8. TYPICALLY, MOTOR DISCONNECT SWITCHES SHALL BE HEAVY DUTY TYPE, HP RATED. MOTOR DISCONNECTS SHALL BE NON-FUSED TYPE, UNLESS OTHERWISE NOTED, OR UNLESS MOTOR MANUFACTURER SPECIFICALLY RECOMMENDS FUSE PROTECTION.
9. PROVIDE MOTORS WITH MOTOR CONTROLLERS AND DISCONNECTS. IF THE MOTOR AND ITS INTEGRAL DISCONNECT ARE INSTALLED IN AN ACCESSABLE LOCATION THAT MEETS NEC REQUIREMENTS, AN ADDITIONAL MOTOR DISCONNECT IS NOT REQUIRED. OTHERWISE, PROVIDE A MOTOR DISCONNECT SWITCH ON THE WALL OR STRUCTURAL MEMBER ADJACENT TO THE MOTOR IN AN ACCESSIBLE LOCATION, WITHIN SIGHT OF THE MOTOR. ALL MOTOR DISCONNECTS SHALL BE LABELLED IDENTIFYING THE MOTOR THEY SERVE.
10. ALL MOTORS SHALL HAVE A MINIMUM EFFICIENCY AS SPECIFIED IN ASHRAE 90.1, TABLES 10.8-1 THROUGH 10.8-4.

(#) KEYED NOTES (SEE LAST COLUMN):

1. PART OF OPTION ITEM. SEE PLANS FOR OPTION ITEMS.
2. THESE CIRCUITS ARE EXTERIOR CIRCUITS. CONDUCTORS FOR THESE CIRCUITS ARE DERATED DUE TO AMBIENT TEMPERATURE CORRECTION FACTORS. MAXIMUM AMBIENT TEMPURATURE FOR FT. HUACHUCA IS ESTIMATED TO BE IN THE 41-45°C RANGE, SO DERATING FACTOR IS APPLIED TO THESE CONDUCTORS, PER NEC TABLE 310.15(B)(2)(a). DERATING FACTOR IS 82% FOR CONDUCTORS WITH 75°C AMPACITY (SIZE 1/0 AND LARGER), AND 71% FOR CONDUCTORS WITH 60°C AMPACITY (SIZE #1 AWG AND SMALLER).
3. THE PRESSURE WASHER AND STEAM CLEANERS ARE PORTABLE EQUIPMENT WITH INTERNAL MOTOR CIRCUITRY, DESIGNED TO BE PLUGGED INTO A NEMA 6-30R, 240 V RECEPTACLE. AS SUCH, THE SHORT CIRCUIT PROTECTION FOR THESE CIRCUITS IS BASED ON THE NEMA 6-30R RECEPTACLE CIRCUIT RATHER THAN THE MOTOR HORSEPOWER RATING AND FULL LOAD AMPS, PER NEC ARTICLE 430.42(C). CONDUCTORS FOR THE CIRCUIT ARE SIZED BASED ON THE MINIMUM CIRCUIT AMPACITY OF THE MOTOR.
4. THE CHILLER IS A COMBINATION-LOAD PIECE OF MECHANICAL EQUIPMENT THAT INCLUDES A FAN AND MULTIPLE COMPRESSORS. THE LISTED MINIMUM CIRCUIT AMPACITY IS THE MANUFACTURER LISTED SINGLE POINT MCA, AND THE MAXIMUM SHORT CIRCUIT PROTECTION RATING IS THE MANUFACTURER LISTED MAXIMUM OVERCURRENT PROTECTION RATING. IF CONTRACTOR PROVIDES A CHILLER THAT DIFFERS FROM THESE ELECTRICAL CHARACTERISTICS, CONTRACTOR SHALL BE RESPONSIBLE FOR SIZING WIRING, BREAKERS, AND DISCONNECTS IN ACCORDANCE WITH THE NEC.
5. THESE MOTORS ARE COMBINED WITH 2 MOTORS PER BRANCH CIRCUIT, EACH RATED 15 A, PER NEC 430.53 (A). SEE PLANS AND PANEL SCHEDULES FOR CIRCUITING. PROVIDE INDIVIDUAL MOTOR OVERLOAD PROTECTION PER NEC ARTICLE 430.32.
6. THESE CIRCUIT WIRE SIZES INCREASED TO ACCOUNT FOR VOLTAGE DROP.
7. MAU-1A AND MAU-1B (MAKEUP AIR UNITS) ARE COMBINATION-LOAD MECHANICAL EQUIPMENT THAT EACH CONTAIN TWO 7.5 HP MOTORS. THIS EQUIPMENT HAS MANUFACTURER SUPPLIED AND INSTALLED CIRCUITING, INCLUDING VFD AND DISCONNECT, THAT POWER AND CONTROL THE MOTORS. EACH MAKE-UP AIR UNIT SHALL BE POWERED WITH A SINGLE BRANCH CIRCUIT, SIZED FOR BOTH OF THE MOTORS. THE MINIMUM CIRCUIT AMPACITY AND MAXIMUM SHORT CIRCUIT PROTECTION LISTED HERE ARE THE MANUFACTURER LISTED MCA AND MOP RATINGS. FOLLOW MANUFACTURER INSTRUCTIONS. A 0.0 A RATING INDICATES NULL DATA FOR THE SECOND MOTOR IN THE EQUIPMENT.
8. ROLLUP DOOR MOTORS ARE ESTIMATED MAXIMUM SIZE BASED ON DOOR SIZE AND PROPERTIES. CONTRACTOR SHALL BE RESPONSIBLE FOR MATCHING ROLLUP DOOR MOTOR TO THE ROLLUP DOORS INSTALLED. FOLLOW MANUFACTURER RECOMMENDATIONS. IF ROLLUP DOOR MOTOR DIFFERS FROM WHAT IS LISTED IN SCHEDULE, CONTRACTOR SHALL BE RESPONSIBLE FOR SIZING WIRING, BREAKERS, AND DISCONNECTS IN ACCORDANCE WITH THE NEC.
9. THESE MOTORS ARE CONTROLLED BY VARIABLE FREQUENCY DRIVES. CONTRACTOR SHALL PROVIDE AND INSTALL VFD WITH AMPACITY SIZED MINIMUM 125% OF THE MOTOR RATING.
   A. FOR THE 35 TON CRANE: PROVIDE SINE WAVE FILTER ON THE LINE SIDE OF THE VFD. PROVIDE THERMAL RESISTOR BETWEEN THE DC CONTACTS OF THE VFD TO DISSIPATE ENERGY DURING SWITCHING.
10. THE PORTION OF THIS CONDUIT IN THE SHOWER AREA SHALL BE LIQUID TIGHT.
11. THIS IS A COMBINATION EQUIPMENT WITH AN INDOOR AND OUTDOOR UNIT. IT SHALL SHARE A BRANCH CIRCUIT, RATED 15 A PER MANUFACTURER RATINGS. SEE MECH FOR DETAILS.

US Army Corps of Engineers ®

MARK	DESCRIPTION	DATE

US ARMY CORPS OF ENGINEERS
SACRAMENTO DISTRICT
US DEPT OF ARMY

SACRAMENTO DISTRICT
IN-HOUSE DESIGN
1325 J STREET
SACRAMENTO, CA 95814

DESIGNED BY: D. CARULLI
DRAWN BY: D. CARULLI
CHECKED BY: S. JONES
SUBMITTED BY: /s/ JOHN R. PARRISH
SIZE: ANSI 'D'
FILE NAME: W65E_GTEB_Central.rvt
ISSUE DATE: 13 JUL 2020
PROJECT # 225-25-0665
SPEC # 2145
FILE NUMBER:

FT. HUACHUCA ARIZONA
GROUND TRANSPORT EQUIPMENT BUILDING

MOTOR SCHEDULE

SHEET ID

E-501

RTA

MOTOR SCHEDULE											
MOTOR NAME	Motor Voltage	Number of Poles	Horsepower	Minimum Circuit Ampacity	Current Carrying Conductor Size	Equipment Grounding Conductor Size	Branch Circuit Conduit Size and Type	Max Short Circuit Protection Rating	Breaker Short Circuit Protection	Disconnect Rating	# Notes
MAU-3	460 V	3	10 HP	18.6 A	(3) #10	#10	3/4" PVC 40	35.0 A	35.0 A	20.0 A	1, 2, 7
AC-2	460 V	3	7 1/2 HP	13.8 A	(3) #12	#12	3/4" RMC	27.5 A	30.0 A	15.0 A	1
12K CAR LIFT	220 V	2	3 HP	22.2 A	(2) #10	#10	3/4" PVC 40 / 3/4" RMC	44.4 A	45.0 A	25.0 A	1
VP-3	208 V	3	3/4 HP	4.4 A	(3) #12	#12	3/4" RMC	8.8 A	15.0 A	15.0 A	1
EF-8	208 V	2	2 HP	17.3 A	(2) #12	#12	3/4" RMC	34.5 A	35.0 A	20.0 A	1
EF-9	208 V	2	2 HP	17.3 A	(2) #10	#10	3/4" RMC	34.5 A	35.0 A	20.0 A	1, 6
UH-4	208 V	2	1/4 HP	35.8 A	(3) #8	#10	3/4" RMC		35.0 A	25.0 A	1, 9
HAZMAT STORAGE ROLLUP DOOR	208 V	3	1 HP	5.8 A	(3) #12	#12	3/4" RMC	11.5 A	15.0 A	15.0 A	1, 8
ORG BAY DOOR 1	208 V	3	1 HP	5.8 A	(3) #12	#12	3/4" RMC	11.5 A	15.0 A	15.0 A	1, 8
ORG BAY DOOR 2	208 V	3	1 HP	5.8 A	(3) #12	#12	3/4" RMC	11.5 A	15.0 A	15.0 A	1, 8
ORG BAY DOOR 3	208 V	3	1 HP	5.8 A	(3) #12	#12	3/4" RMC	11.5 A	15.0 A	15.0 A	1, 8
POL STORAGE ROLLUP DOOR	208 V	3	1 HP	5.8 A	(3) #12	#12	3/4" PVC 40 / 3/4" RMC	11.5 A	15.0 A	15.0 A	1, 8
EF-10	115 V	1	1/6 HP	5.5 A	(2) #12	#12	3/4" EMT	11.0 A	15.0 A	15.0 A	1
EF-12	115 V	1	1/6 HP	5.5 A	(2) #12	#12	3/4" RMC	11.0 A	15.0 A	15.0 A	1
EF-13	115 V	1	1/6 HP	5.5 A	(2) #12	#12	3/4" RMC	11.0 A	15.0 A	15.0 A	1
EF-14	115 V	1	1/6 HP	5.5 A	(2) #12	#12	3/4" RMC	11.0 A	20.0 A	15.0 A	1
RD-2	115 V	1	1/6 HP	5.5 A	(2) #12	#12	3/4" RMC	11.0 A	15.0 A	15.0 A	1
EF-11	115 V	1	1/4 HP	7.3 A	(2) #12	#12	3/4" RMC	14.5 A	20.0 A	15.0 A	1

GENERAL NOTES:

1. MINIMUM CIRCUIT AMPACITY IS CALCULATED AS 125% OF MOTOR FULL LOAD AMPS, PER NEC ARTICLE 430.22.
2. BRANCH CIRCUIT CONDUCTOR SIZE IS BASED ON NEC TABLE 310.15(B)(16), ASSUMING 75°C RATED COPPER CONDUCTORS (THWN OR XHHW, OR XHHW-2 WITH 75°C RATED TERMINATIONS). FOR INDOOR APPLICATIONS, AMBIENT TEMPERATURE IS ASSUMED TO BE IN THE 25-30°C RANGE, SO DERATING OF CONDUCTORS IS NOT REQUIRED. KEYNOTES ON THIS SHEET IDENTIFY CASES WHERE DERATING OF CONDUCTORS IS REQUIRED.
3. EQUIPMENT GROUNDING CONDUCTORS ARE SIZED PER NEC TABLE 250.122. ALL EQUIPMENT GROUNDING CONDUCTORS SHALL BE GREEN JACKETED COPPER.
4. UNLESS NOTED OTHERWISE, ALL MOTORS ARE ASSUMED TO BE ON THEIR OWN BRANCH CIRCUIT, WITH THE BRANCH CIRCUIT CONDUCTORS RUN IN A DEDICATED CONDUIT (NO MORE THAN 3 CURRENT CARRYING CONDUCTORS PER RACEWAY). IF CONTRACTOR CHOOSES TO COMBINE MULTIPLE CIRCUITS INTO A RACEWAY, CONTRACTOR SHALL BE RESPONSIBLE FOR APPLYING AMPACITY DERATINGS PER NEC TABLE 310.15(B)(3)(a), AND RESIZING CONDUCTORS AND CONDUITS WHERE REQUIRED.
5. UNLESS NOTED OTHERWISE, MAX SHORT CIRCUIT PROTECTION RATING IS A CALCULATED VALUE FROM NEC TABLE 430.52, BASED ON THE FULL LOAD AMPS OF THE MOTOR, USING AN INVERSE TIME BREAKER FOR THE SHORT CIRCUIT PROTECTION.
6. UNLESS NOTED OTHERWISE, BREAKER SHORT CIRCUIT PROTECTION IS THE RATING OF THE BRANCH CIRCUIT PROTECTION. IT MAY BE THE NEXT HIGHER STANDARD AMPERE RATING THAN THE CALCULATED MAX SHORT CIRCUIT PROTECTION RATING, PER NEC ARTICLE 430.52(C)(1) EXCEPTION NO. 1.
7. PROVIDE MOTOR CONTROLLORS FOR ALL PERMANENTLY INSTALLED MOTORS GREATER THAN 1/8 HP IN ACCORDANCE WITH SPEC SECTION 26 20 00. MOTOR CONTROLLERS SHALL HAVE PROTECTION IN EACH PHASE FROM: OVERLOAD, PHASE-LOSS, UNDERVOLTAGE, AND OVERVOLTAGE, AND PROTECT MOTORS FROM IMMEDIATE RESTART BY A TIME ADJUSTABLE RESTART DELAY.
8. TYPICALLY, MOTOR DISCONNECT SWITCHES SHALL BE HEAVY DUTY TYPE, HP RATED. MOTOR DISCONNECTS SHALL BE NON-FUSED TYPE, UNLESS OTHERWISE NOTED, OR UNLESS MOTOR MANUFACTURER SPECIFICALLY RECOMMENDS FUSE PROTECTION.
9. PROVIDE MOTORS WITH MOTOR CONTROLLERS AND DISCONNECTS. IF THE MOTOR AND ITS INTEGRAL DISCONNECT ARE INSTALLED IN AN ACCESSABLE LOCATION THAT MEETS NEC REQUIREMENTS, AN ADDITIONAL MOTOR DISCONNECT IS NOT REQUIRED. OTHERWISE, PROVIDE A MOTOR DISCONNECT SWITCH ON THE WALL OR STRUCTURAL MEMBER ADJACENT TO THE MOTOR IN AN ACCESSIBLE LOCATION, WITHIN SIGHT OF THE MOTOR. ALL MOTOR DISCONNECTS SHALL BE LABELLED IDENTIFYING THE MOTOR THEY SERVE.
10. ALL MOTORS SHALL HAVE A MINIMUM EFFICIENCY AS SPECIFIED IN ASHRAE 90.1, TABLES 10.8-1 THROUGH 10.8-4.

KEYED NOTES (SEE LAST COLUMN):

1. PART OF OPTION ITEM. SEE PLANS FOR OPTION ITEMS.
2. THESE CIRCUITS ARE EXTERIOR CIRCUITS, OR IN AREAS SUBJECT TO AMBIENT TEMPERATURES EQUIVALENT TO THE EXTERIOR TEMPERATURE. CONDUCTORS FOR THESE CIRCUITS WERE INCREASED IN SIZE DUE TO AMBIENT TEMPERATURE CORRECTION FACTORS. MAXIMUM AMBIENT TEMPURATURE FOR FT. HUACHUCA IS ESTIMATED TO BE IN THE 41-45°C RANGE, SO 71% DERATING FACTOR IS APPLIED TO THESE CONDUCTORS, PER NEC TABLE 310.15(B)(2)(a).
3. NOT USED
4. NOT USED
5. NOT USED
6. THESE CIRCUIT WIRE SIZES INCREASED TO ACCOUNT FOR VOLTAGE DROP.
7. MAU-2 IS A MAKE-UP AIR UNIT WITH A 10 HP FAN MOTOR. THIS EQUIPMENT HAS MANUFACTURER SUPPLIED AND INSTALLED CIRCUITING, INCLUDING VFD AND DISCONNECT, THAT POWERS AND CONTROLS THE MOTOR. THE MINIMUM CIRCUIT AMPACITY AND MAXIMUM SHORT CIRCUIT PROTECTION LISTED HERE ARE THE MANUFACTURER LISTED MCA AND MOP RATINGS. FOLLOW MANUFACTURER INSTRUCTIONS.
8. ROLLUP DOOR MOTORS ARE ESTIMATED MAXIMUM SIZE BASED ON DOOR SIZE AND PROPERTIES. CONTRACTOR SHALL BE RESPONSIBLE FOR MATCHING ROLLUP DOOR MOTOR TO THE ROLLUP DOORS INSTALLED. FOLLOW MANUFACTURER RECOMMENDATIONS. IF ROLLUP DOOR MOTOR DIFFERS FROM WHAT IS LISTED IN SCHEDULE, CONTRACTOR SHALL BE RESPONSIBLE FOR SIZING WIRING, BREAKERS, AND DISCONNECTS IN ACCORDANCE WITH THE NEC.
9. THIS EQUIPMENT IS AN ELECTRIC UNIT HEATER WITH WITH A FAN MOTOR HP RATING AS INDICATED. IT SHALL HAVE A FACTORY INSTALLED DISCONNECT SWITCH. WIRE SIZES AND OVERCURRENT PROTECTION ARE SIZED BASED ON THE CIRCUIT, NOT JUST THE MOTOR. NEUTRAL CONDUCTOR IS PROVIDED FOR 120 V CONTROLS.

US Army Corps of Engineers ®

MARK	DESCRIPTION	DATE

DESIGNED BY: D. CARULLI
DRAWN BY: D. CARULLI
CHECKED BY: S. JONES
SUBMITTED BY: W. JOHN PARRISH
SIZE: E FILE NAME: ANSI D WISE_STOR_central.rvt
ISSUE DATE: 13 JUL 2020
PROJECT # 225-25-0665
SPEC # 2145
FILE NUMBER:

US ARMY CORPS OF ENGINEERS
SACRAMENTO DISTRICT
US DEPT OF ARMY

SACRAMENTO DISTRICT
IN-HOUSE DESIGN
1325 J STREET
SACRAMENTO, CA 95814

FT. HUACHUCA
GROUND TRANSPORT EQUIPMENT BUILDING
ARIZONA

MOTOR SCHEDULE - STORAGE BUILDINGS (OPTIONS 6, 7, & 8)

SHEET ID

E-502

RTA

ELECTRICAL POWER SERVICE NOTES:

1. CONTRACTOR SHALL COORDINATE ELECTRICAL POWER SERVICE WITH SERVICE PROVIDER, SULPHUR SPRINGS VALLEY ELECTRIC COOPERATIVE (SSVEC). POINT OF CONTACT FOR THIS PROJECT IS:
   NAME: ZACHARY PARADIS
   PHONE: 520-452-2427
   EMAIL: zparadis@ssvec.com
2. CONTRACTOR SHALL PAY SSVEC FOR ALL PERMITS AND FEES ASSOCIATED WITH THE WORK ON THIS PROJECT. THIS SHALL INCLUDE APPLICATION FEES AND FEES FOR MATERIAL SUPPLIED BY SSVEC.
3. CONTRACTOR SHALL FOLLOW THE SSVEC SERVICE ENTRANCE REQUIREMENTS BOOK.
4. SEPARATION OF WORK BETWEEN CONTRACTOR RESPONSIBILITY AND SSVEC RESPONSIBILITY IS AS FOLLOWS:
   A. CONTRACTOR FURNISHED, CONTRACTOR INSTALLED:
      a. PRIMARY AND SECONDARY CONDUIT SYSTEM, INCLUDING EXCAVATION. PRIMARY SHALL CONNECT FROM SERVICE TRANSFORMER TO UTILITY POLE, INCLUDING CONNECTIONS TO STRUCTURES IN BETWEEN, AND THE SWEEP TO THE POLE RISER.
      b. UNDERGROUND WARNING TAPE FOR CONDUIT SYSTEM
      c. TRANSFORMER PAD, INCLUDING GROUNDING
      d. SECONDARY CONDUCTORS. SSVEC INSPECTS INSTALLATION AND MAKES FINAL CONDUCTOR TERMINATIONS AT TRANSFORMER AND SERVICE ENTRANCE.
      e. SHUNT TRIP SWITCH INSTALLED ON TRANSFORMER
   B. SSVEC FURNISHED, CONTRACTOR INSTALLED:
      a. SLEEVE FOR TRANSFORMER PAD
      b. SECTIONALIZER CABINETS (CONTRACTOR RESPONSIBLE FOR EXCAVATION AND GROUNDING)
      c. UNDERGROUND CABLE MARKERS/DEPTH INDICATORS
   C. SSVEC FURNISHED, SSVEC INSTALLED:
      a. SERVICE TRANSFORMER
      b. PRIMARY CONDUCTORS
      c. UTILITY POLE RISER
      d. METER AND METER SOCKET (INSTALLED ON TRANSFORMER)
      e. SECTIONALIZER CABINET ELECTRICAL COMPONENTS (IE. LOAD BREAKS, SWITCHES).

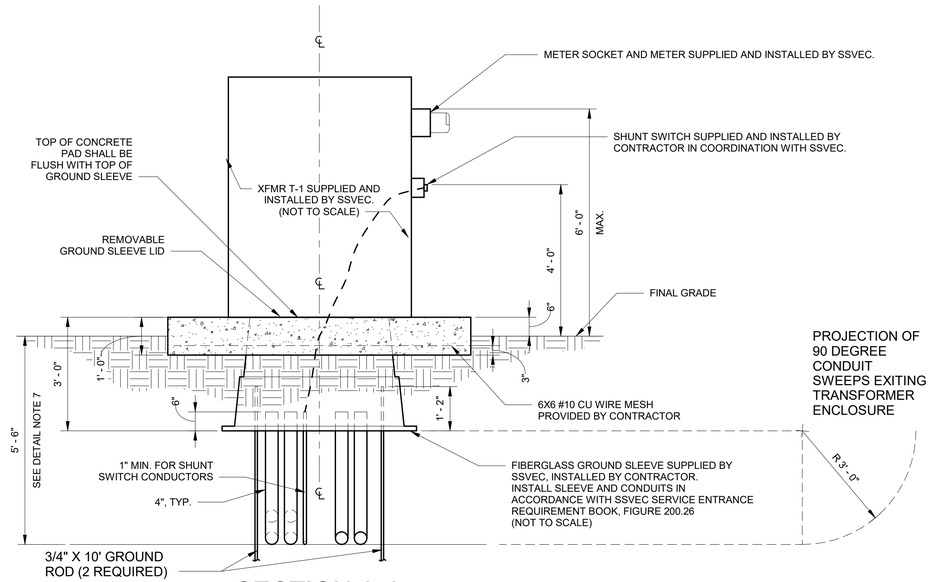

SECTION A-A

0 1 2 4 6
SCALE: 1/2"=1'-0"

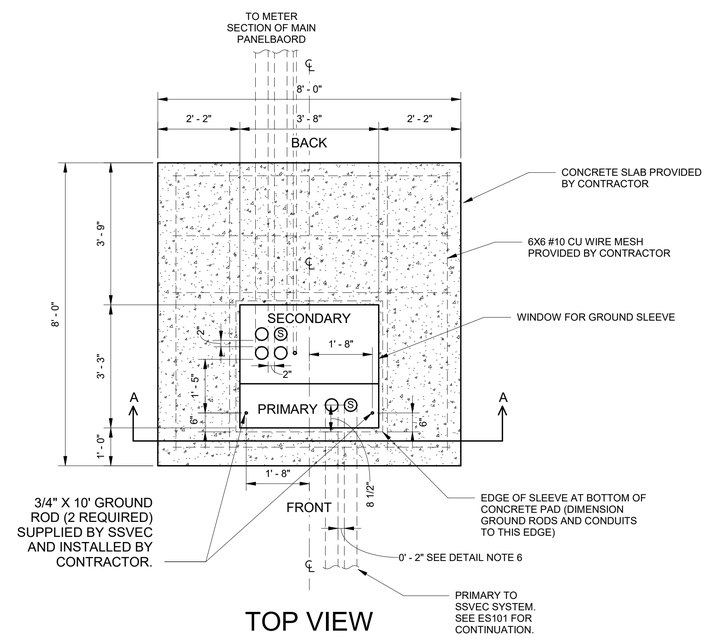

TOP VIEW

DETAIL NOTES:

1. CONTRACTOR SHALL COORDINATE WITH ELECTRIC UTILITY OWNER, SULPHUR SPRINGS VALLEY ELECTRIC COOPERATIVE (SSVEC) FOR ALL WORK RELATED TO THE ELECTRICAL SERVICE, AND SHALL COMPLY WITH SSVEC REQUIREMENTS, INCLUDING ALL APPLICABLE CRITERIA IDENTIFIED IN THE SSVEC SERVICE ENTRANCE REQUIREMENT BOOK (SEE ATTACHMENTS).
2. THIS DETAIL IS ADAPTED FROM THE SSVEC SERVICE ENTRANCE REQUIREMENT BOOK, FIGURES 200.2, 200.21, 200.26, AND 400.30. THE REQUIREMENTS FROM THESE FIGURES AND THEIR ASSOCIATED SECTIONS SHALL APPLY TO THIS PROJECT.
3. TYPICALLY, CONDUIT SPACING IS MINIMUM OF 3". THIS MAY BE REDUCED TO 2" FOR THE FINAL SECTION OF CONDUIT WITHIN 3' OF THE TRANSFORMER PAD.
4. MINIMUM DEPTH OF PRIMARY EXCAVATION IS 58", AND MINIMUM DEPTH OF SECONDARY EXCAVATION IS 36". HOWEVER, RADIUS OF 90 DEGREE SWEEP INTO TRANSFORMER ENCLOSURE SHALL BE 36", WITH STRAIGHT PORTIONS OF CONDUIT ONLY EXTENDING INTO FIBERGLASS SLEEVE, SO THIS WILL REQUIRE THE DUCTBANK TO BE BURIED DEEPER AT THE TRANSFORMER. PRIMARY AND SECONDARY DUCTBANKS MAY RISE TO THEIR MINIMUM DEPTHS AS THEY EXTEND FURTHER FROM THE TRANSFORMER, FOLLOWING SSVEC SLOPING REQUIREMENTS.
5. ALL CONDUITS SHOWN IN THIS DETAIL SHALL BE PVC SCHEDULE 40.
6. CONDUITS MARKED "S" ARE DESIGNATED SPARES. PROVIDE PULL ROPE FOR SPARE CONDUITS AND CAP AND SEAL ENDS.

1 / E-503 TRANSFORMER PAD DETAIL
1/2" = 1'-0"

US Army Corps of Engineers ®

MARK	DESCRIPTION	DATE

DESIGNED BY: D. CARULLI
DRAWN BY: D. CARULLI
CHECKED BY: S. JONES
SUBMITTED BY: ALYDNA D. PARRISH
SIZE: ANSI D
FILE NAME: WRSE_GTER_Central.rvt
ISSUE DATE: 13 JUL 2020
PROJECT # 225-25-0665
SPEC # 2145
FILE NUMBER:

US ARMY CORPS OF ENGINEERS
SACRAMENTO DISTRICT
US DEPT OF ARMY

SACRAMENTO DISTRICT
IN-HOUSE DESIGN
1325 J STREET
SACRAMENTO, CA 95814

FT. HUACHUCA, ARIZONA
GROUND TRANSPORT EQUIPMENT BUILDING

TRANSFORMER DETAILS

SHEET ID
E-503

RTA

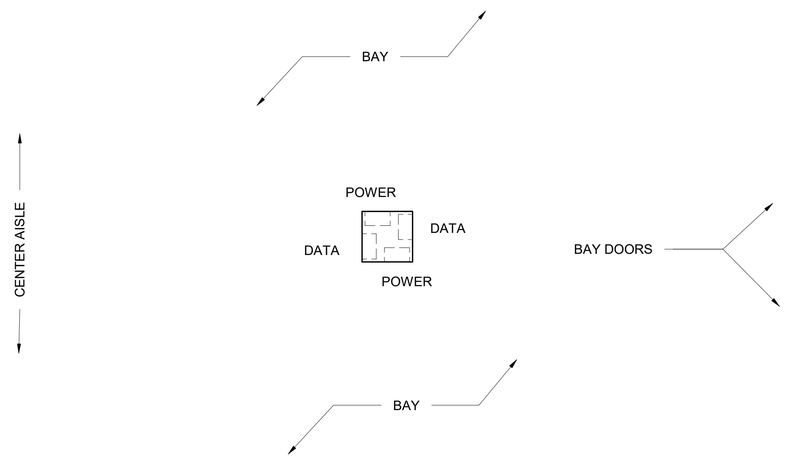

TOP VIEW

DETAIL NOTES:

1. CONDUITS FEEDING THE PEDESTALS IN THE BAY AREA SHALL BE THREADED RIGID METAL CONDUIT. WHERE BELOW GRADE, CONDUITS SHALL BE PVC COATED RIGID METAL CONDUIT. CONNECTIONS SHALL HAVE A MINIMUM OF 5 THREADS ENGAGED.
2. DIMENSIONS SHOWN ARE APPROXIMATE. CONTRACTOR SHALL ENSURE THE PEDESTAL HAS ENOUGH SPACE FOR OUTLET BOXES, CONDUITS, SEALS, AND J-BOXES, WITHOUT EXCEEDING MINIMUM BENDING RADIUS OF CONDUCTORS. OUTLET BOXES MAY BE FURTHER OFFSET EITHER VERTICALLY OR HORIZONTALLY TO ALLOW SPACE FOR CONDUITS. SEE TOP VIEW FOR SUGGESTED OUTLET BOX HORIZONTAL OFFSET.
3. IF CONTRACTOR CANNOT SOURCE A PEDESTAL THAT CAN ACCOMODATE 2 QUADRUPLEX RECEPTACLES AND 2 QUAD DATA OUTLETS, PROVIDE TWO SEPARATE PEDESTALS BETWEEN EACH BAY; ONE FOR POWER, AND ONE FOR DATA, WITH ALL OUTLETS FACING THE BAYS. SPACE THE PEDESTALS APPROXIMATELY 6' APART.
4. FOR COMMUNICATIONS CABLING, CONSULT MANUFACTURER OF CAT-6 CABLING TO DETERMINE MINIMUM CONDUIT SIZE TO FIT EIGHT CAT-6 CABLES (RATED FOR UNDERGROUND INSTALLATION). MINIMUM CONDUIT SIZE FOR COMMUNICATIONS CABLING IS 1", BUT THIS MAY NOT BE LARGE ENOUGH TO ACCOMODATE EIGHT CAT-6 CABLES.
5. THE CAT-6 CABLE ITSELF SHALL BE SEALED IN ACCORDANCE WITH NEC ARTICLE 501.15 (E), BY STRIPPING THE JACKET OF THE CABLE AT THE CONDUIT SEAL. DO NOT UNTWIST TWISTED PAIRS.

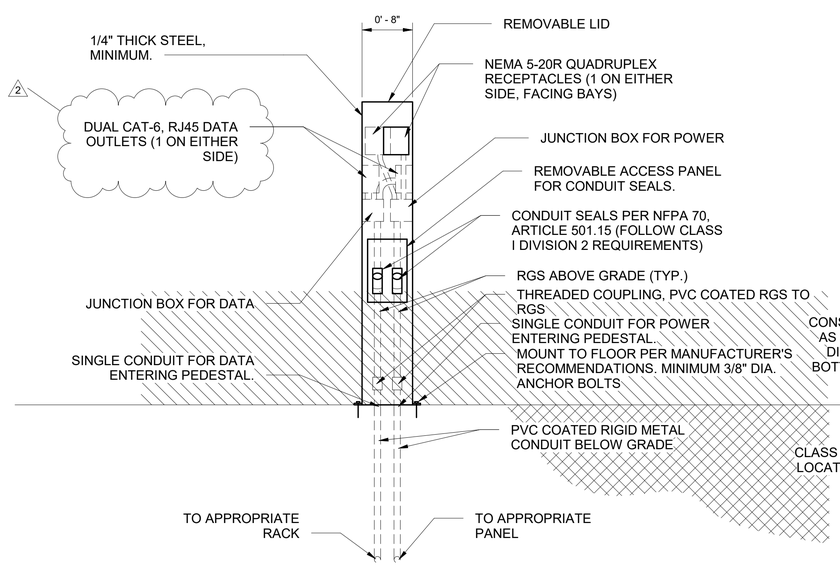

FRONT VIEW

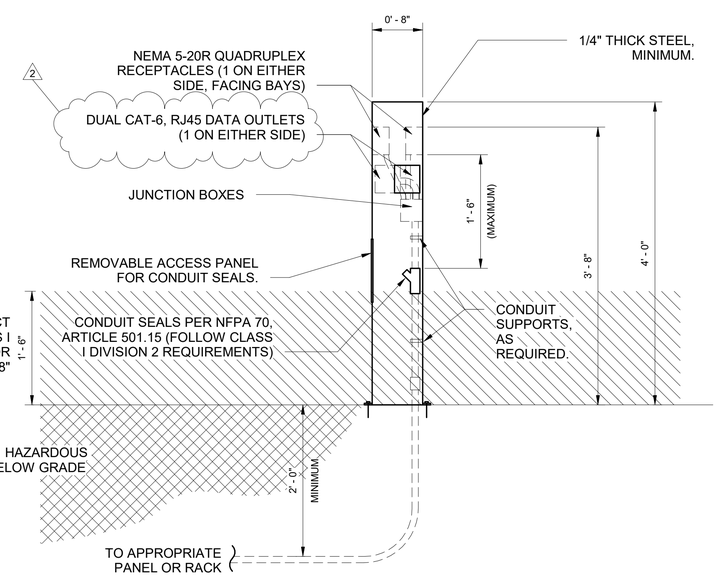

SIDE VIEW

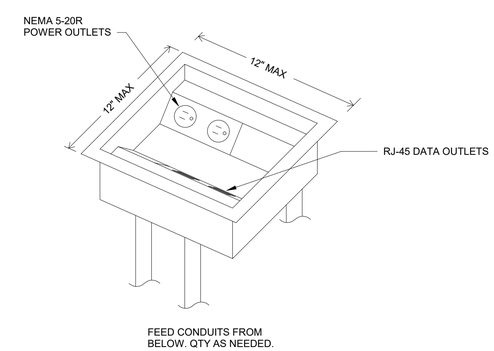

1 / E-504 POWER AND DATA PEDESTAL FOR BAYS
NOT TO SCALE

2 / E-504 FLOOR BOX DETAIL
NOT TO SCALE

AMENDMENT 3

US Army Corps of Engineers ®

MARK	DESCRIPTION	DATE
2	DATA OUTLET QTY CLARIFY	07 OCT 2020

US ARMY CORPS OF ENGINEERS
SACRAMENTO DISTRICT
US DEPT OF ARMY

SACRAMENTO DISTRICT
IN-HOUSE DESIGN
1325 J STREET
SACRAMENTO, CA 95814

DESIGNED BY: D. CARULLI
DRAWN BY: D. CARULLI
CHECKED BY: S. JONES
SUBMITTED BY: W JOHN P. PARISH
SIZE: ANSI D
FILE NAME: W05E_GTEB_Central.rvt
ISSUE DATE: 07 OCT 2020
PROJECT # 225-25-0665
SPEC # 2145
FILE NUMBER:

ARIZONA
FT. HUACHUCA
GROUND TRANSPORT EQUIPMENT BUILDING

DETAIL - POWER/COMM OUTLETS

SHEET ID
E-504

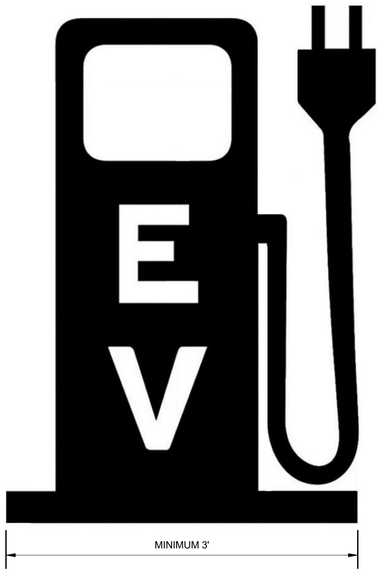

PAVEMENT MARKING

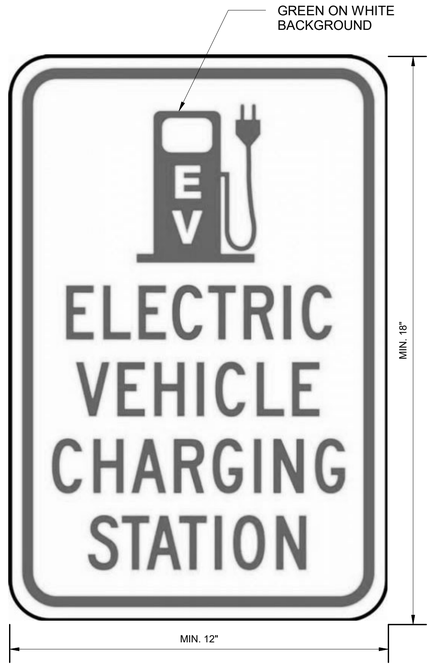

SIGNAGE

ELECTRIC VEHICLE CHARGING STATION NOTES:

1. PROVIDE ELECTRIC VEHICLE SUPPLY EQUIPMENT (EVSE) AS INDICATED ON SHEET ES101.
2. ELECTRIC VEHICLE CHARGING STATIONS SHALL MEET NEC ARTICLE 625, SAE J1772, UL 2594, UL2231-1, UL 2231-2, AND UL 2251.
3. EVSE SHALL BE CAPABLE OF AC LEVEL 2, WITH 208 V INPUT.
4. ELECTRIC VEHICLE CHARGING STATIONS SHALL BE CAPABLE OF DEMAND RESPONSE. CONNECT THE CHARGING STATIONS TO THE NETWORK THROUGH THE NEC COMMUNICATIONS ROOM. COORDINATE WITH NEC FOR NETWORK CONNECTION REQUIREMENTS.
5. INSTALL IN ACCORDANCE WITH MANUFACTURER INSTRUCTIONS.
6. PROVIDE SIGNS AND PAVEMENT MARKINGS FOR EACH ELECTRIC VEHICLE PARKING SPACE THAT ARE SIMILAR TO THE ABOVE IMAGES.

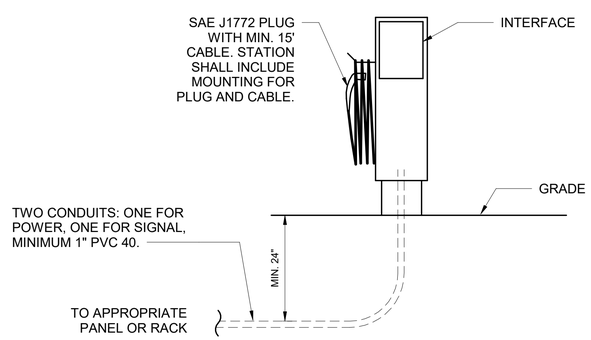

ELECTRIC VEHICLE CHARGING STATIONS AND MARKINGS

3 / E-505

NOT TO SCALE

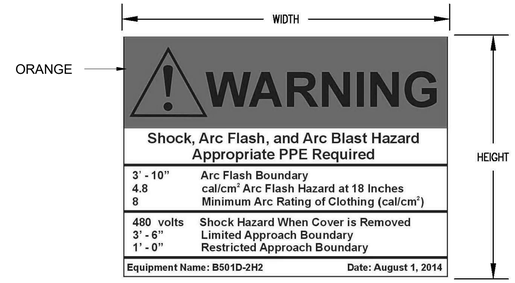

NOTES:

1. PROVIDE SELF–ADHESIVE VINYL LABEL TO AFFIX TO ELECTRICAL EQUIPMENT TO WARN OF ARC FLASH HAZARDS.
2. THE LABEL FORMAT AND TEXT CAN BE MODIFIED PROVIDED THAT THE INFORMATION REQUIRED BY UFC 3–501–01 IS INCLUDED.
3. THE LABEL SHALL BE LOCATED ON THE EQUIPMENT TO BE CLEARLY VISIBLE TO QUALIFIED PERSONS BEFORE EXAMINATION, ADJUSTMENT, SERVICING, OR MAINTENANCE OF THE EQUIPMENT.
4. THE SIZE OF THE LABEL SHALL BE MINIMUM:

EQUIPMENT TYPE	HEIGHT	WIDTH
INDOOR	2"	3"
OUTDOOR	3"	4.5"

5. A DOWNLOADABLE WINDOWS METAFILE IS AVAILABLE ON THE WHOLE BUILDING DESIGN GUIDE WEBSITE (WWW.WBDG.ORG) FOR USE IN A LABEL MAKING MACHINE.
   A. THE FILE IS LOCATED ON THE "NAVFAC CADD DETAILS" PAGE. TO NAVIGATE TO THIS LOCATION, FOLLOW: HOME > DOCUMENTS & REFERENCES > CCB > CADD LIBRARY > NAVFAC CADD RESOURCES > NAVFAC CADD DETAILS.
   B. ALTERNATIVELY, TYPE IN THE FOLLOWING ADDRESS IN INTERNET EXPLORER: HTTP://WWW.WBDG.ORG/CCB/BROWSE_CAT.PHP?C=232

DETAILED ARC FLASH WARNING LABEL

SKETCH DATE	APRIL 2015	STYLE	AF–3

ARC-FAULT LABEL

2 / E-505

NOT TO SCALE

ARC-FLASH WARNING LABEL NOTES:

1. PROVIDE THIS DETAILED ARC-FLASH WARNING LABEL FOR ALL SWITCHBOARDS, PANELBOARDS, AND METER SOCKET ENCLOSURES FOR THE PROJECT. FILL OUT THE INFORMATION AS APPROPRIATE FOR EACH PIECE OF EQUIPMENT. CONTRACTOR SHALL PERFORM ARC-FLASH HAZARD ANALYSIS IN ACCORDANCE WITH NFPA 70E AND/OR IEEE 1584 TO DETERMINE THE AVAILABLE INCIDENT ENERGY. CONTRACTOR SHALL PERFORM THIS CALCULATION USING THE TIME-CURRENT CHARACTERISTICS OF THE ACTUAL BREAKERS PROVIDED IN THE PROJECT, AT THE TRIP SETTINGS THE BREAKERS ARE INSTALLED AT. COORDINATE THE ARC-FLASH HAZARD CALCULATIONS WITH THE SELECTIVE COORDINATION STUDY.
2. THE LISTED MINIMUM ARC RATING OF CLOTHING SHALL BE THE NEXT STANDARD PPE CATEGORY RATING ABOVE THE INCIDENT ENERGY AT THE WORKING DISTANCE, EXCEPT THAT THE MINIMUM ARC RATING SHALL BE 8 cal/cm^2, PER UFC 3-560-01, PARAGRAPH 4-1.3. STANDARD PPE RATINGS SHALL BE 8, 25, AND 40 cal/cm^2. IF ANY INCIDENT ENERGY AT THE WORKING DISTANCE EXCEEDS 40 cal/cm^2, PROVIDE THE "DANGER ENERGIZED WORK IS NOT ALLOWED" LABEL IN ACCORDANCE WITH UFC 3-560-01, PARAGRAPH 1-12.6.
3. FOR ALL ARC-FLASH WARNING LABELS UNDER THIS PROJECT, THE LISTED LIMITED APPROACH BOUNDARY SHALL BE 3'-6" AND RESTRICTED APPROACH BOUNDARY SHALL BE 1'-0" AS SPECIFIED IN UFC 3-560-01 TABLE 3-1 (ALL VOLTAGE SYSTEMS UNDER THIS PROJECT ARE IN THE 151 V - 750 V RANGE FOR PHASE-TO-PHASE VOLTAGES).

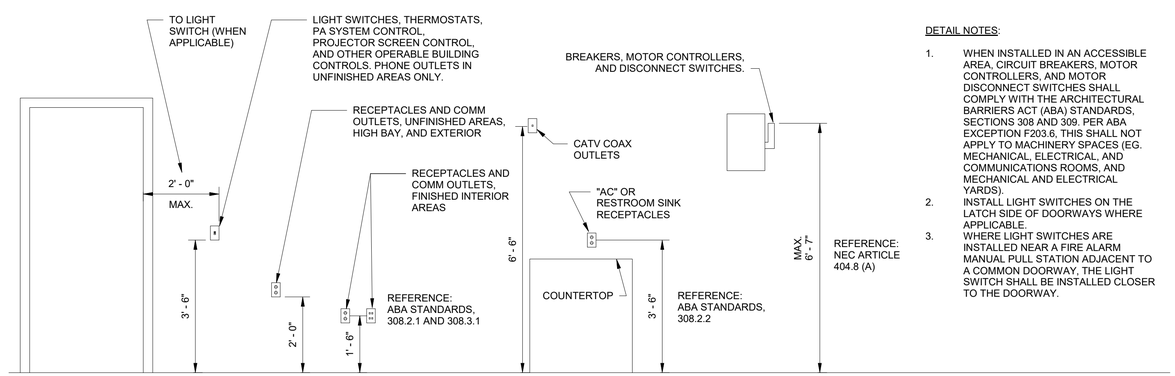

DETAIL NOTES:

1. WHEN INSTALLED IN AN ACCESSIBLE AREA, CIRCUIT BREAKERS, MOTOR CONTROLLERS, AND MOTOR DISCONNECT SWITCHES SHALL COMPLY WITH THE ARCHITECTURAL BARRIERS ACT (ABA) STANDARDS, SECTIONS 308 AND 309. PER ABA EXCEPTION F203.6, THIS SHALL NOT APPLY TO MACHINERY SPACES (EG. MECHANICAL, ELECTRICAL, AND COMMUNICATIONS ROOMS, AND MECHANICAL AND ELECTRICAL YARDS).
2. INSTALL LIGHT SWITCHES ON THE LATCH SIDE OF DOORWAYS WHERE APPLICABLE.
3. WHERE LIGHT SWITCHES ARE INSTALLED NEAR A FIRE ALARM MANUAL PULL STATION ADJACENT TO A COMMON DOORWAY, THE LIGHT SWITCH SHALL BE INSTALLED CLOSER TO THE DOORWAY.

MOUNTING HEIGHT DIAGRAM

1 / E-505

1/2" = 1'-0"

US Army Corps of Engineers ®

MARK	DESCRIPTION	DATE

DESIGNED BY: D. CARULLI
DRAWN BY: D. CARULLI
CHECKED BY: S. JONES
SUBMITTED BY: K. JOHNPARRISH
SIZE: ANSI D
FILE NAME: WESE_GTER_Central.rvt
ISSUE DATE: 13 JUL 2020
PROJECT # 225-25-0665
SPEC # 2145
FILE NUMBER:

US ARMY CORPS OF ENGINEERS
SACRAMENTO DISTRICT
US DEPT OF ARMY

SACRAMENTO DISTRICT
IN-HOUSE DESIGN
1325 J STREET
SACRAMENTO, CA 95814

FT. HUACHUCA
GROUND TRANSPORT EQUIPMENT BUILDING
ARIZONA

DETAILS

SHEET ID

E-505

RTA

"PULL BOX"

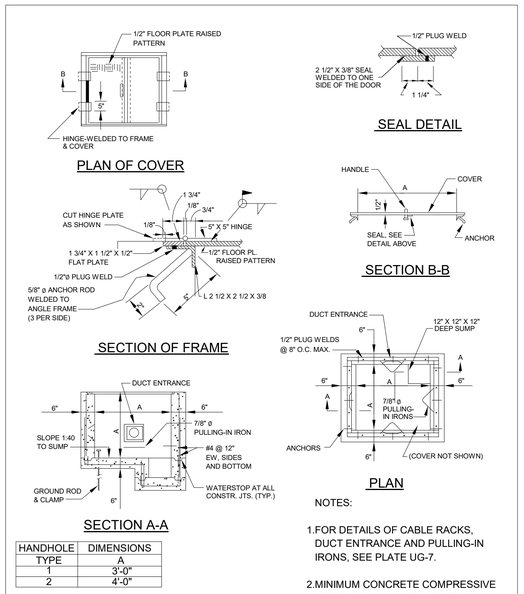

HANDHOLE TYPE	DIMENSIONS A
1	3'-0"
2	4'-0"

NOTES:

1. FOR DETAILS OF CABLE RACKS, DUCT ENTRANCE AND PULLING-IN IRONS, SEE PLATE UG-7.
2. MINIMUM CONCRETE COMPRESSIVE STRENGTH SHALL BE 3000 PSI.

STANDARD ELECTRICAL HANDHOLE (NONTRAFFIC)
TYPES 1 & 2

SKETCH DATE JUNE 2002 | STYLE UG-4

GENERAL NOTES:

1. FOLLOW PLATE UG-4, HANDHOLE TYPE 2 FOR MAJOR HANDHOLES IN UNPAVED AREAS. THESE ARE LABELED AS PULL BOXES IN THE SITE PLANS.
2. FOLLOW PLATE UG-5, HANDHOLE TYPE 4 FOR MAJOR HANDHOLES IN PAVED AREAS. THESE ARE LABELLED AS PULL BOXES IN THE SITE PLANS.
3. FOLLOW PLATE UG-6, HANDHOLE TYPE 7 FOR MINOR HANDHOLES. THESE ARE LABELLED AS HANDHOLES IN THE SITE PLANS.
4. FOR NEW COMMUNICATIONS MANHOLES, SEE SHEET E-511.

*DESIGNER'S NOTE: THIS SERVICE LOAD RATING SHOULD BE ADEQUATE FOR THE LIGHT VEHICLE TRAFFIC TO BE EXPECTED IN THE PARKING AREA, WHERE SOME OF THESE HANDHOLES WILL BE INSTALLED.

"PULL BOX"

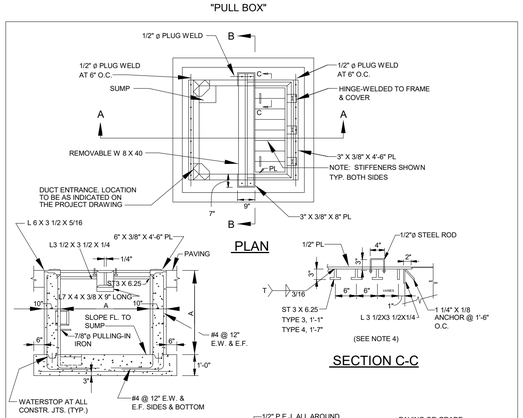

NOTES:

1. ENTRANCE OF DUCTS INTO HANDHOLE MAY BE MADE ON SIDE FACES OR CORNERS AS REQUIRED.
2. FOR DETAILS OF CABLE RACKS, DUCT ENTRANCE AND PULLING-IN IRONS, SEE PLATE UG-7.
3. HANDHOLE AND COVER IS DESIGNED FOR MAXIMUM SINGLE WHEEL LOAD OF 50,000 LB. OR DUAL WHEEL LOAD OF 90,000 LB.
4. COVER SHALL BE MADE OF STRUCTURAL STEEL CONFORMING TO ASTM A 36/A 36M.
5. MINIMUM COMPRESSIVE STRENGTH OF CONCRETE SHALL BE 3000 PSI.

HANDHOLE TYPE	DIMENSIONS A
3	3'-0"
4	4'-0"

STANDARD ELECTRICAL HANDHOLE (TRAFFIC/AIRFIELD)
TYPES 3 & 4

SKETCH DATE JUNE 2003 | STYLE UG-5

"HANDHOLE"

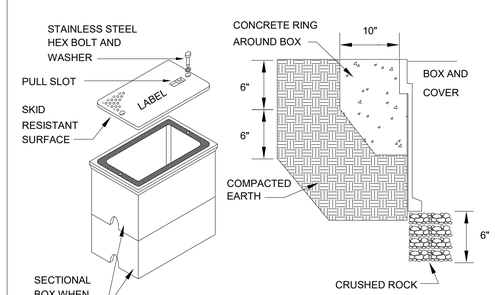

TYPE	HANDHOLE SIZING
5	12" X 12" X 24" DEEP
6	12" X 18" X 24" DEEP
7	12" X 24" X 24" DEEP
8	24" X 36" X 24" DEEP
9	30" X 48" X 24" DEEP

HANDHOLE REQUIREMENTS

1. HOUSING SHALL BE A POLYMER CONCRETE REINFORCED WITH A HEAVY WEAVE FIBERGLASS REINFORCING WITH COMPRESSIVE STRENGTH OF NO LESS THAN 10,000 PSI.
2. * COVER AND BOX SHALL WITHSTAND A SERVICE LOAD OF NO LESS THAN 15,000 LBS OVER A 10" x 10" AREA. HANDHOLE SHALL BE RATED MINIMUM AASHTO H10 OR ASTM A-16
3. PROVIDE STAINLESS STEEL BOLTS AND INSERTS.
4. PROVIDE WITH (2) 2 1/2" MOUSEHOLES.
5. PROVIDE LABEL "ELECTRICAL" FOR POWER HANDHOLES, "LIGHTING" FOR LIGHTING HANDHOLES OR "COMM" FOR COMMUNICATIONS HANDHOLES, OR AS INDICATED. DUAL USE POWER/LIGHTING HANDHOLES SHALL BE LABELLED "ELECTRICAL".

STANDARD ELECTRICAL HANDHOLE (NONTRAFFIC)
(COMPOSITE/FIBERGLASS) TYPES 5, 6, 7, 8 & 9

SKETCH DATE JUNE 2002 | STYLE UG-6

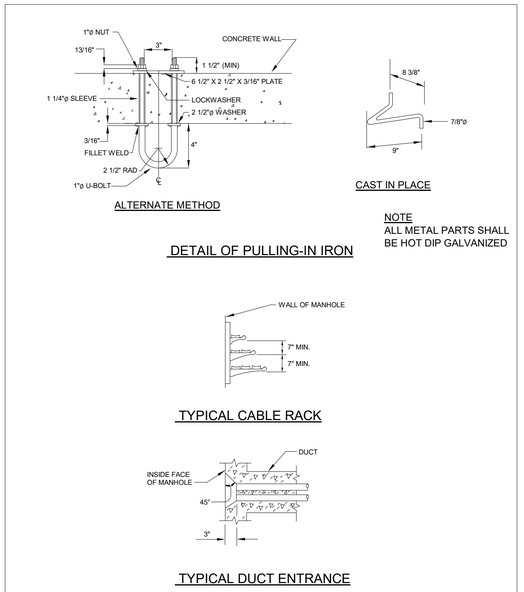

NOTE
ALL METAL PARTS SHALL BE HOT DIP GALVANIZED

DETAILS
(PULLING-IN IRONS, CABLE RACK AND DUCT ENTRANCE)

SKETCH DATE JUNE 2002 | STYLE UG-7

1 / E-510 UNDERGROUND STRUCTURES DETAILS

NOT TO SCALE

US Army Corps of Engineers ®

MARK	DESCRIPTION	DATE

DESIGNED BY: D. CARULLI
DRAWN BY: D. CARULLI
CHECKED BY: S. JONES
SUBMITTED BY: SUZANNE PARISH
SIZE: ANSI 'D'
FILE NAME: W05E_GTER_Central.rvt
ISSUE DATE: 13 JUL 2020
PROJECT # 225-25-0665
SPEC # 2145
FILE NUMBER:

US ARMY CORPS OF ENGINEERS
SACRAMENTO DISTRICT
US DEPT OF ARMY

SACRAMENTO DISTRICT
IN-HOUSE DESIGN
1325 J STREET
SACRAMENTO, CA 95814

FT. HUACHUCA
GROUND TRANSPORT EQUIPMENT BUILDING
ARIZONA

HANDHOLE AND PULL BOX DETAILS

SHEET ID
E-510

RTA

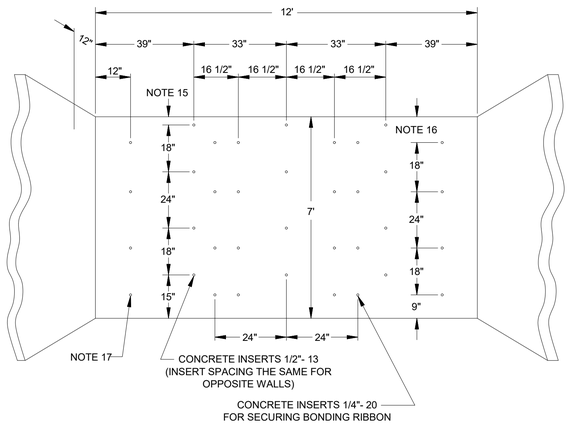

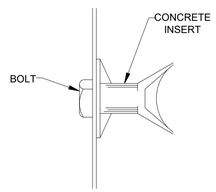

NOTE 1

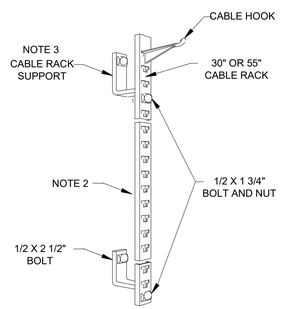

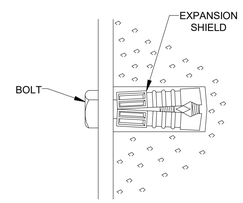

NOTE 12

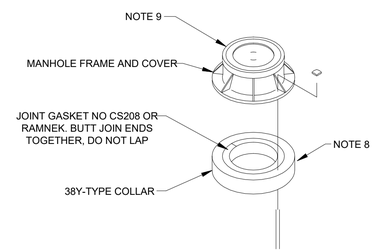

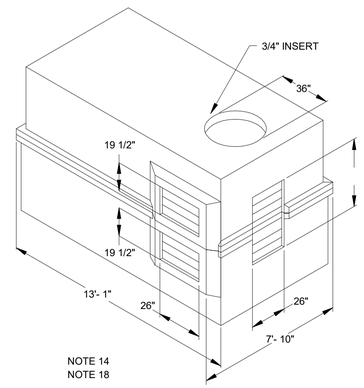

EQUIPMENT/ MATERIAL SUPPLIED WITH A STANDARD MANHOLE OR HANDHOLE	INLINE		MULTIDIRECTIONAL	
	HANDHOLE	MANHOLE	HANDHOLE	MANHOLE
	4'X4'X4'	12'X6'X7'H	4'X4'X4'	12'X6'X7'H
BONDING RIBBON #6 AWG	20	65	20	65
BONDING RIBBON CLAMPS	12	20	12	20
CABLE RACK 30"	4		4	
CABLE RACK 47 HOLE		14		14
B CORNER CABLE RACK SUPPORT		8		4
CABLE RACK HOOK 7 1/2"	8	14 MINIMUM	8	14 MINIMUM
CABLE RACK STAND OFF BRACKET	8	12	8	12
CONCRETE COLLAR 6"	1	1	1	1
COVER (LID) 30" DIAMETER	1	1	1	1
FRAME (SUPPORT STRUCTURE FOR LID)	1	1	1	1
GROUND ROD 5/8" X 8' GALV	1	1	1	1
GROUND ROD CLAMP 5/8"	1	1	1	1
METAL HIT ANCHOR	10	20	10	20
PULL-IN IRONS	4	4	4	4
SUMP	1	1	1	1

NOTES:

1. 1/2" X 2 1/2" GALVANIZED MACHINE BOLT AND CONCRETE INSERT. (TYP)
2. CABLE RACK (TYP) ATTACHED TO S OR L CABLE RACK SUPPORT
3. CABLE RACK SUPPORT (TYP)
4. 14" CABLE HOOK (TYP)
5. 4" CONCRETE ENCASED PVC CONDUIT AND DUCT PLUG (TYP)
6. PULLING-IN IRON (TYP)
7. SUMP (TYP)
8. COLLAR (TYP)
9. TYPE B MANHOLE FRAME (TYP)
10. 3/4" X 10' COPPER CLAD IRON GROUND ROD WITH 4" STUB. (TYP)
11. ADD GRADING RINGS TO MAKE COVER FLUSH WITH GROUND MINIMUM TOP COVER IS 2'.
12. 1/2" X 2 1/2" GALVANIZED MACHINE BOLT AND EXPANSION SHIELD. (TYP)
13. BONDING RIBBON. CONNECT INSULATED 6 AWG WIRE WITH GROUNDING CLAMP.
14. PLASTIC DUCT TERMINATORS ARE OPTIONAL FOR MAIN CONDUIT ENTRANCE.
15. 9" DIMENSION FOR 7' HEADROOM.
16. 15" DIMENSION FOR 7' HEADROOM
17. INSERTS ARE OMITTED IN AREA OF SIDEWALL CABLE ENTRANCES OF PRECAST T-TYPE MANHOLES.
18. THE DUCTS SHOULD ENTER THE MANHOLE IN THE LOWER PORTION OF THE KNOCKOUT WINDOW TO SIMPLIFY FUTURE CONDUIT ADDITIONS.
19. THE LARGEST DIAMETER COPPER CABLE SHALL BE PLACED IN THE LOWEST VACANT DUCT.
20. SUB-DUCT, INNER DUCT AND FIBER OPTIC CABLES SHOULD BE PLACE IN THE UPPER EMPTY DUCT.
30. CABLE RACK (TYP) ATTACHED DIRECTLY TO WALL

38Y-4046-3 PRECAST MANHOLE					
CONCRETE THICKNESS (INCHES)			INSIDE DIMENSIONS (FEET)		
WALLS	ROOF	FLOOR	LG	WIDE	HIGH
5	6	5	12	6	7

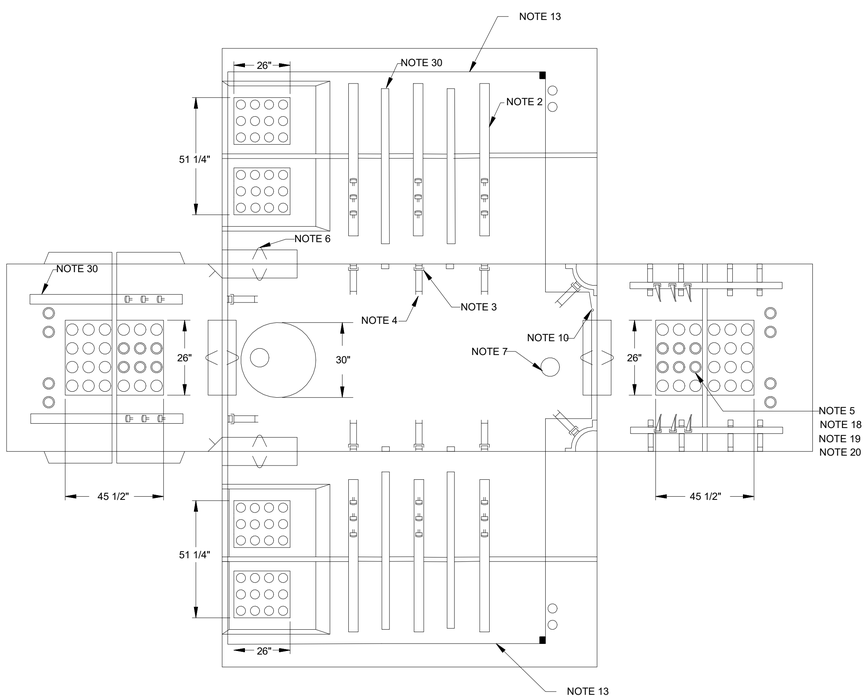

38Y MANHOLE FITTINGS (TYP).

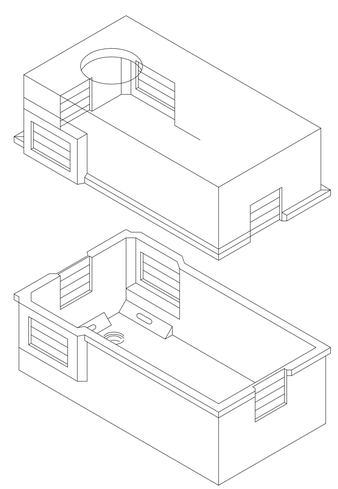

CABLE ENTRANCES WITH CONCRETE KNOCKOUTS

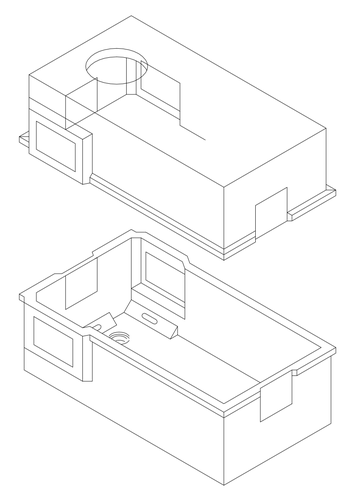

CABLE ENTRANCES WITH DUCT TERMINATOR OPTION

1
E-511

COMMUNICATIONS MANHOLE DETAIL

NOT TO SCALE

US Army Corps of Engineers ®

MARK	DESCRIPTION	DATE

ISSUE DATE: 13 JUL 2020
PROJECT # 225-25-0665
SPEC # 2145
FILE NUMBER:

DESIGNED BY: D. CARULLI
DRAWN BY: D. CARULLI
CHECKED BY: S. JONES
SUBMITTED BY: W. JOHN PARISH
SIZE: ANSI 'D'
F.E. NAME: W65E_GTEB_Central.rvt

US ARMY CORPS OF ENGINEERS
SACRAMENTO DISTRICT
US DEPT OF ARMY

SACRAMENTO DISTRICT
IN-HOUSE DESIGN
1325 J STREET
SACRAMENTO, CA 95814

FT. HUACHUCA
GROUND TRANSPORT EQUIPMENT BUILDING
ARIZONA

COMMUNICATIONS MANHOLE DETAIL

SHEET ID

E-511

RTA

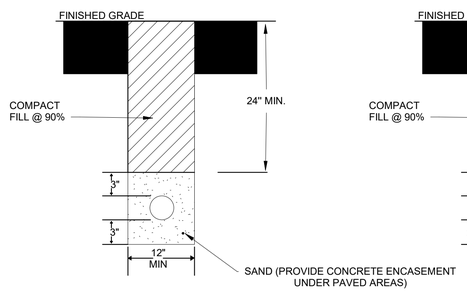

SCALE: NONE

DIRECT BURIED 600V C0NDUIT
OR COMMUNICATION CONDUIT

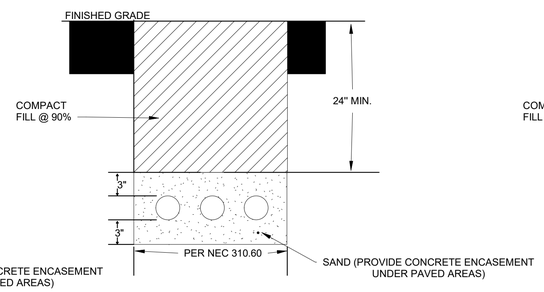

SCALE: NONE

DIRECT BURIED 600V C0NDUIT
OR COMMUNICATION CONDUIT

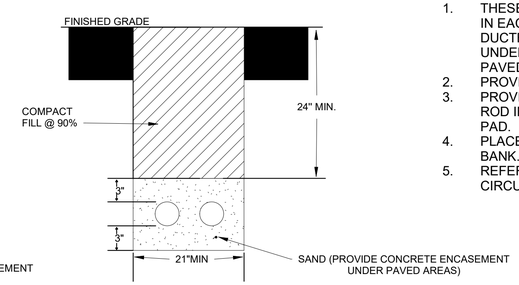

SCALE: NONE

DIRECT BURIED 600V C0NDUIT
OR COMMUNICATION CONDUIT

GENERAL NOTES:

1. THESE DETAILS ARE TYPICAL FOR UNDERGROUND DUCTBANKS. NUMBER OF CONDUITS WILL VARY IN EACH DUCTBANK. USE THE APPROPRIATE DETAIL FOR THE NUMBER OF CONDUITS IN THE DUCTBANK AND LOCATION OF THE DUCTBANK. DUCTBANKS SHALL BE CONCRETE ENCASED WHEN UNDER PAVED AREAS, AND FOR 5 FT BEYOND THE PAVEMENT WHEN EMERGING FROM UNDER PAVED AREAS.
2. PROVIDE PULLWIRE IN ALL SPARE AND EMPTY CONDUITS. CAP AND LABEL AT BOTH ENDS.
3. PROVIDE 2/0 BARE COPPER AS A GROUND/COUNTERPOISE. BOND THIS CONDUCTOR TO GROUND ROD IN EACH MANHOLE, AT SUBSTATION AND SWITCHES, BOND TO THE GROUND SYSTEM UNDER PAD.
4. PLACE A PERMANENT TRACER TAPE 12" BELOW SURFACE GRADE, CENTERED OVER THE DUCT BANK.
5. REFER TO SITE PLANS FOR CONDUITS RUNS. SEE FEEDER SCHEDULES, MOTOR SCHEDULES, AND CIRCUIT DIAGRAMS FOR ADDITIONAL CONDUIT SIZE CALLOUTS.

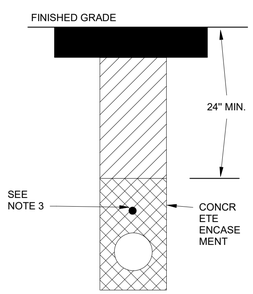

ENCASEMENT DETAIL
SCALE: NONE

PROVIDE CHAIRS.

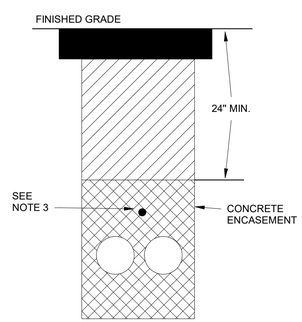

ENCASEMENT DETAIL
SCALE: NONE

PROVIDE CHAIRS AND MAINTAIN 3" SPACING
BETWEEN CONDUITS.

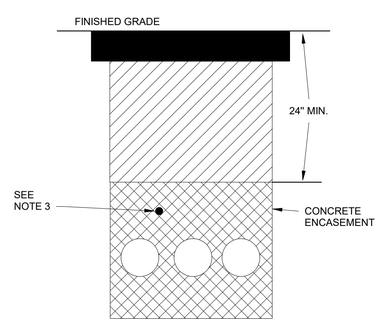

ENCASEMENT DETAIL
SCALE: NONE

PROVIDE CHAIRS AND MAINTAIN 3" SPACING
BETWEEN CONDUITS.

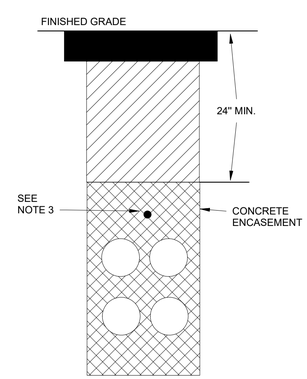

ENCASEMENT DETAIL
SCALE: NONE

PROVIDE CHAIRS AND MAINTAIN 3" SPACING
BETWEEN CONDUITS.

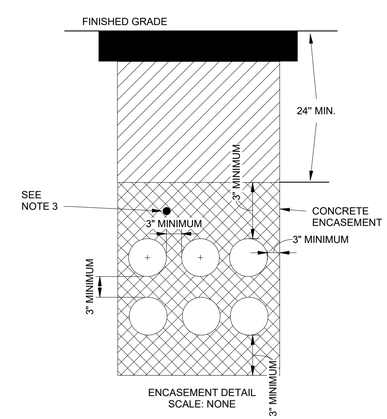

ENCASEMENT DETAIL
SCALE: NONE

PROVIDE CHAIRS AND MAINTAIN 3" SPACING
BETWEEN CONDUITS.
DIMENSIONS SHOWN ON THIS DETAIL SHALL
APPLY TO ALL DUCTBANKS.

1
E-512

DUCTBANK DETAILS

1" = 10'-0"

US Army Corps of Engineers ®

MARK	DESCRIPTION	DATE

DESIGNED BY: D. CARULLI
DRAWN BY: D. CARULLI
CHECKED BY: S. JONES
SUBMITTED BY: W. JOHN PARRISH
SIZE: ANSI D'
FILE NAME: WESE_GTEB_Central.rvt
ISSUE DATE: 13 JUL 2020
PROJECT # 225-25-0665
SPEC # 2145
FILE NUMBER:

US ARMY CORPS OF ENGINEERS
SACRAMENTO DISTRICT
US DEPT OF ARMY

SACRAMENTO DISTRICT
IN-HOUSE DESIGN
1325 J STREET
SACRAMENTO, CA 95814

FT. HUACHUCA
GROUND TRANSPORT EQUIPMENT BUILDING
ARIZONA

DUCTBANK DETAILS

SHEET ID

E-512

RTA

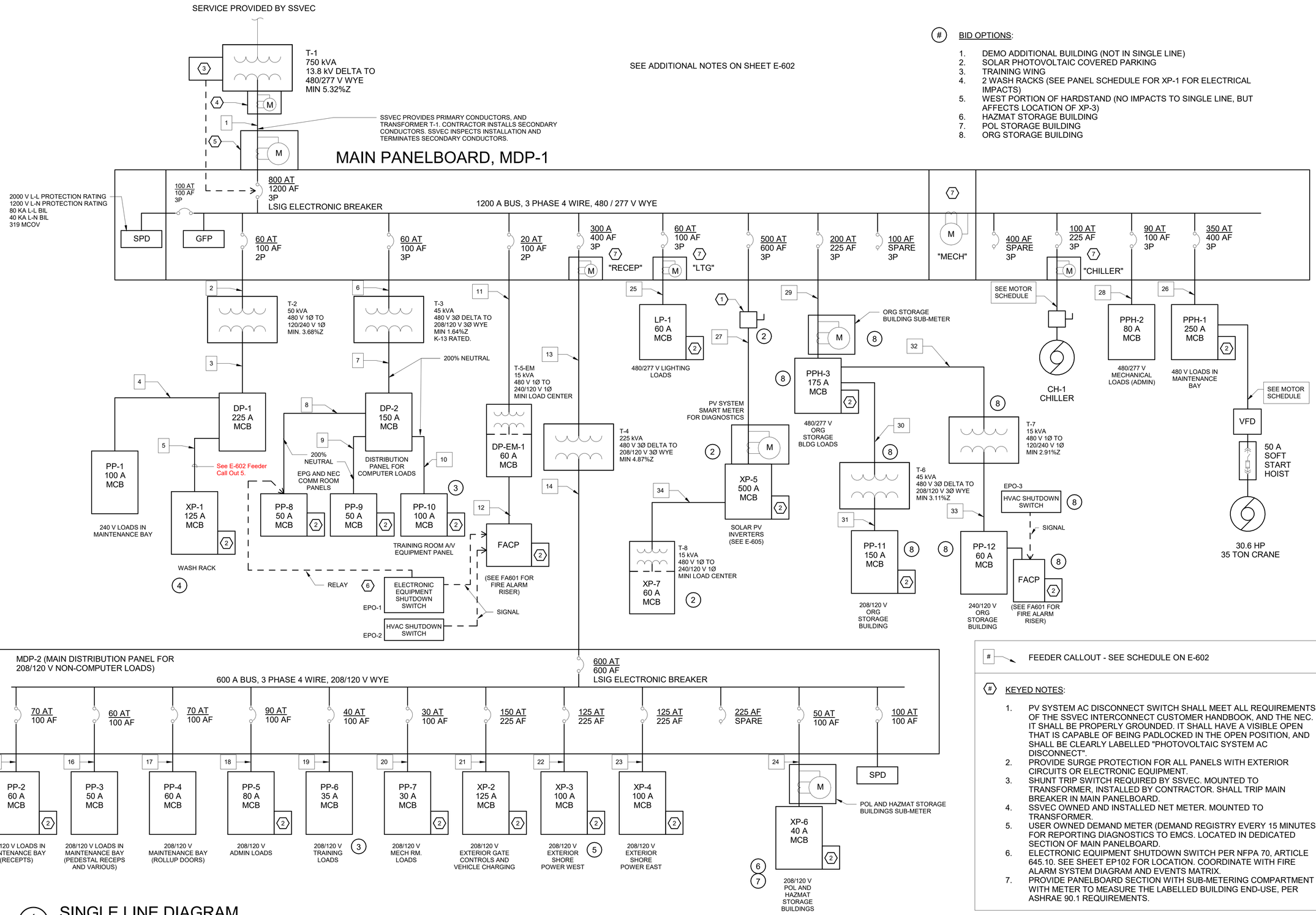

SEE ADDITIONAL NOTES ON SHEET E-602

(#) BID OPTIONS:

1. DEMO ADDITIONAL BUILDING (NOT IN SINGLE LINE)
2. SOLAR PHOTOVOLTAIC COVERED PARKING
3. TRAINING WING
4. 2 WASH RACKS (SEE PANEL SCHEDULE FOR XP-1 FOR ELECTRICAL IMPACTS)
5. WEST PORTION OF HARDSTAND (NO IMPACTS TO SINGLE LINE, BUT AFFECTS LOCATION OF XP-3)
6. HAZMAT STORAGE BUILDING
7. POL STORAGE BUILDING
8. ORG STORAGE BUILDING

(#) FEEDER CALLOUT - SEE SCHEDULE ON E-602

(#) KEYED NOTES:

1. PV SYSTEM AC DISCONNECT SWITCH SHALL MEET ALL REQUIREMENTS OF THE SSVEC INTERCONNECT CUSTOMER HANDBOOK, AND THE NEC. IT SHALL BE PROPERLY GROUNDED. IT SHALL HAVE A VISIBLE OPEN THAT IS CAPABLE OF BEING PADLOCKED IN THE OPEN POSITION, AND SHALL BE CLEARLY LABELLED "PHOTOVOLTAIC SYSTEM AC DISCONNECT".
2. PROVIDE SURGE PROTECTION FOR ALL PANELS WITH EXTERIOR CIRCUITS OR ELECTRONIC EQUIPMENT.
3. SHUNT TRIP SWITCH REQUIRED BY SSVEC. MOUNTED TO TRANSFORMER, INSTALLED BY CONTRACTOR. SHALL TRIP MAIN BREAKER IN MAIN PANELBOARD.
4. SSVEC OWNED AND INSTALLED NET METER. MOUNTED TO TRANSFORMER.
5. USER OWNED DEMAND METER (DEMAND REGISTRY EVERY 15 MINUTES) FOR REPORTING DIAGNOSTICS TO EMCS. LOCATED IN DEDICATED SECTION OF MAIN PANELBOARD.
6. ELECTRONIC EQUIPMENT SHUTDOWN SWITCH PER NFPA 70, ARTICLE 645.10. SEE SHEET EP102 FOR LOCATION. COORDINATE WITH FIRE ALARM SYSTEM DIAGRAM AND EVENTS MATRIX.
7. PROVIDE PANELBOARD SECTION WITH SUB-METERING COMPARTMENT WITH METER TO MEASURE THE LABELLED BUILDING END-USE, PER ASHRAE 90.1 REQUIREMENTS.

1 / E-601 SINGLE LINE DIAGRAM

NOT TO SCALE

AMENDMENT 3

US Army Corps of Engineers ®

MARK	DESCRIPTION	DATE

DESIGNED BY: D. CARULLI
DRAWN BY: D. CARULLI
CHECKED BY: S. JONES
SUBMITTED BY: SUJOHN PARRISH
SIZE: ANSI: D'
FILE NAME: WESE_GTEB_Central.rvt
ISSUE DATE: 13 JUL 2020
PROJECT # 225-25-0665
SPEC # 2145
FILE NUMBER:

US ARMY CORPS OF ENGINEERS
SACRAMENTO DISTRICT
US DEPT OF ARMY

SACRAMENTO DISTRICT
IN-HOUSE DESIGN
1325 J STREET
SACRAMENTO, CA 95814

FT. HUACHUCA
GROUND TRANSPORT EQUIPMENT BUILDING
ARIZONA

SINGLE LINE DIAGRAM

SHEET ID

E-601

RTA

FEEDER SCHEDULE WITH WITH AMPACITY AND VOLTAGE DROP CALCULATIONS

EQUATION / NOTES	LOAD DATA: CALLOUT	FEED FROM	FEED TO	DEMAND LOAD (VA) 'S'	VOLTAGE (V) 'V'	PHASE 'Ø'	DELTA OR WYE	WIRES	PF	DEMAND CURRENT +25% SPARE (A)	CONDUCTOR PROPERTIES: Cu OR Al	CONDUCT. SIZE (AWG OR KCMIL)	PARALLEL SETS OF CONDUCT.	200% NEUTRAL?	GND CONDUCT. SIZE	INSUL. TYPE	CONDUCT. INS. RATING TEMP (°C)	CONDUCT. AMPAC. RATING TEMP (°C)	CONDUCT. INDIVID. AMPAC. (A)	CONDUIT PROPERTIES: QTY	SIZE	TYPE	AMPACITY CORRECTION AND ADJUSTMENT: AMBIENT TEMP (°C)	NO. CUR. CAR. CNDCT. / CNDUIT	AMBIENT TEMP DERATING	>3 CURRENT CARRYING CONDUCT. DERATING	ADJUSTED / CORRCTD CONDUCT. AMPACITY (A TOTAL)	VOLTAGE DROP CALCULATION: DEMAND CURRENT 'I' (A)	APPROX. LENGTH IN FT (1-WAY) 'L'	MAX VOLTAGE DROP (V)	MAX VOLTAGE DROP PERCENT	CONDUCT. INCRSD DUE TO VD?
										=I*1.25							USED FOR CORRCTN / AJSTMNT FACTORS	USED FOR BASE AMPACITY ONLY	(LOOKUP)						(LOOKUP)	(LOOKUP)	=COND. AMP. *CORRCTN *ADJMNT *PAR. SETS	=P/(V*PF*SQRT(Ø))		(CALCS IN DA)	(CALCS IN DA)	
	1	T-1	MDP-1	515323	480	3	WYE	4	0.95	815.6	Cu	500/	3		4/0	USE	90	75	380	3	4"	PVC 40	44	3	0.87	1	991.8	652.5	25	0.36	0.07%	
	2	MDP-1	T-2	37643	480	1	N/A	2	0.9	108.9	Cu	1/0	1		6/	THWN	75	75	150	1	1-1/2"	EMT	35	3	0.94	1	141	87.1	45	1.03	0.22%	
	3	T-2	DP-1	37643	240	1	N/A	3	0.9	217.8	Cu	250/	1		2/	THWN	75	75	255	1	2"	EMT	35	3	0.94	1	239.7	174.3	6	0.15	0.06%	
	4	DP-1	PP-1	16487	240	1	N/A	3	0.9	95.4	Cu	1/0	1		6/	THWN	75	75	150	1	2"	RMC	30	3	1	1	150	76.3	190	3.83	1.59%	Y
	5	DP-1	XP-1	21156	240	1	N/A	3	0.9	122.4	Cu	350/	1		4/	XHHW-2	90	75	310	1	3"	PVC 40	44	3	0.87	1	269.7	97.9	390	3.94	1.64%	Y
	6	MDP-1	T-3	40000	480	3	DELTA	3	1	60.1	Cu	4/	1		8/	THWN	75	60	70	1	1"	EMT	35	3	0.94	1	65.8	48.1	60	1.55	0.32%	
	7	T-3	DP-2	40000	208	3	WYE	4	1	138.8	Cu	3/0	1	Y	2/	THWN	75	75	200	1	2-1/2"	EMT	35	4	0.94	0.8	150.4	111.0	6	0.09	0.04%	
	8	DP-2	PP-8	6870	208	3	WYE	4	1	23.8	Cu	1/0	1	Y	6/	THWN	75	75	150	1	2"	EMT	30	4	1	0.8	120	19.1	125	0.50	0.24%	
	9	DP-2	PP-9	5870	208	3	WYE	4	1	20.4	Cu	1/0	1	Y	6/	THWN	75	75	150	1	2"	EMT	30	4	1	0.8	120	16.3	130	0.45	0.22%	
(3)	10	DP-2	PP-10	28821	208	3	WYE	4	1	100.0	Cu	1/0	1	Y	6/	THWN	75	75	150	1	2"	EMT	30	4	1	0.8	120	80.0	100	1.69	0.81%	
	11	MDP-1	T-5-EM	1000	480	1	N/A	2	1	2.6	Cu	12/	1		12/	THWN	75	60	20	1	3/4"	EMT	35	3	0.94	1	18.8	2.1	40	0.33	0.07%	
	12	DP-EM-1	FACP	1000	120	1	N/A	2	1	10.4	Cu	10/	1		10/	THWN	75	60	30	1	1"	RMC	35	3	0.94	1	28.2	8.3	85	1.76	1.47%	Y
	13	MDP-1	T-4	165337	480	3	DELTA	3	1	248.6	Cu	350/	1		4/	THWN	75	75	310	1	2-1/2"	EMT	35	3	0.94	1	291.4	198.9	35	0.47	0.10%	
	14	T-4	MDP-2	165337	208	3	WYE	4	1	573.7	Cu	350/	2		2/0	THWN	75	75	310	2	3"	EMT	35	3	0.94	1	582.8	458.9	10	0.16	0.07%	
	15	MDP-2	PP-2	13850	208	3	WYE	4	1	48.1	Cu	3/	1		8/	THWN	75	60	85	1	1-1/4"	RMC	30	3	1	1	85	38.4	210	3.50	1.68%	Y
	16	MDP-2	PP-3	7150	208	3	WYE	4	1	24.8	Cu	6/	1		10/	THWN	75	60	55	1	1"	RMC	30	3	1	1	55	19.8	205	3.46	1.67%	Y
	17	MDP-2	PP-4	15276	208	3	WYE	4	0.88	60.2	Cu	3/	1		6/	THWN	75	60	85	1	1-1/4"	RMC	30	3	1	1	85	48.2	200	4.14	1.99%	Y
	18	MDP-2	PP-5	21937	208	3	WYE	4	1	76.1	Cu	3/	1		8/	THWN	75	60	85	1	1-1/4"	EMT	35	3	0.94	1	79.9	60.9	45	1.19	0.57%	
(3)	19	MDP-2	PP-6	9011	208	3	WYE	4	1	31.3	Cu	8/	1		10/	THWN	75	60	40	1	3/4"	EMT	30	3	1	1	40	25.0	90	3.05	1.46%	
	20	MDP-2	PP-7	5339	208	3	WYE	4	1	18.5	Cu	2/	1		6/	THWN	75	60	95	1	3/4"	RMC	35	3	0.94	1	89.3	14.8	80	0.41	0.20%	
	21	MDP-2	XP-2	30000	208	3	WYE	4	1	104.1	Cu	500/	1		3/	XHHW-2	90	75	380	1	4"	PVC 40	44	3	0.87	1	330.6	83.3	1000	3.89	1.87%	Y
(5)	22	MDP-2	XP-3	28821	208	3	WYE	4	1	100.0	Cu	350/	2		1/	XHHW-2	90	75	310	2	4"	PVC 40	44	3	0.87	1	539.4	80.0	1410	3.73	1.79%	Y
	23	MDP-2	XP-4	28821	208	3	WYE	4	1	100.0	Cu	4/0	2		3/	XHHW-2	90	75	230	2	4"	PVC 40	44	3	0.87	1	400.2	80.0	800	3.45	1.66%	Y
(7) (6)	24	MDP-2	XP-6	9281	208	3	WYE	4	1	32.2	Cu	3/	1		8/	XHHW-2	90	60	85	1	2"	PVC 40	44	3	0.87	1	73.95	25.8	320	3.57	1.72%	Y
	25	MDP-1	LP-1	31774	480	3	WYE	4	0.95	50.3	Cu	6/	1		10/	THWN	75	60	55	1	1"	EMT	35	3	0.94	1	51.7	40.2	30	1.03	0.21%	
	26	MDP-1	PPH-1	183152	480	3	DELTA	3	0.9	306.0	Cu	350/	1		3/	THWN	75	75	310	1	3"	RMC	30	3	1	1	310	244.8	210	5.07	1.06%	
(2)	27	MDP-1	XP-5	275000	480	3	WYE	4	1	413.5	Cu	500/	3		3/0	XHHW-2	90	75	380	3	4"	PVC 40	44	3	0.87	1	991.8	330.8	1400	7.22	1.50%	Y
	28	MDP-1	PPH-2	46881	480	3	WYE	4	0.9	78.3	Cu	3/	1		8/	THWN	75	60	85	1	1-1/4"	RMC	35	3	0.94	1	79.9	62.7	50	1.36	0.28%	
(8)	29	MDP-1	PPH-3	117059	480	3	WYE	4	1	176.0	Cu	3/0	1		6/	USE	90	75	200	1	4"	PVC 40	39	3	0.91	1	182	140.8	350	6.60	1.37%	
(8)	30	PPH-3	T-6	37146	480	3	DELTA	3	1	55.8	Cu	4/	1		8/	THWN	75	60	70	1	3/4"	EMT	39	3	0.88	1	61.6	44.7	8	0.19	0.04%	
(8)	31	T-6	PP-11	37146	208	3	WYE	4	1	128.9	Cu	1/0	1		6/	THWN	75	75	150	1	1-1/2"	EMT	39	3	0.88	1	132	103.1	6	0.13	0.06%	
(8)	32	PPH-3	T-7	4416	480	1	N/A	2	1	11.5	Cu	10/	1		12/	THWN	75	60	30	1	3/4"	EMT	39	3	0.88	1	26.4	9.2	40	0.91	0.19%	
(8)	33	T-7	PP-12	4416	240	1	N/A	3	1	23.0	Cu	6/	1		8/	THWN	75	60	55	1	3/4"	EMT	39	3	0.88	1	48.4	18.4	6	0.11	0.05%	
(2)	34	XP-5	T-8	1260	480	1	N/A	2	1	3.3	Cu	8/	1		10/	XHHW-2	90	60	40	1	3/4"	PVC 40	44	3	0.87	1	34.8	2.6	10	0.04	0.01%	

SEE FEEDER CALLOUTS ON SINGLE LINE DIAGRAM.

GENERAL NOTES (APPLICABLE TO SINGLE LINE DIAGRAM, CALCULATIONS, AND PANEL SCHEDULES):

1. SEE PANEL SCHEDULES FOR NEMA ENCLOSURE RATINGS OF EQUIPMENT. THE LISTED ENCLOSURE TYPES ARE MINIMUM REQUIREMENTS. HIGHER NEMA ENCLOSURE RATING SHALL BE ACCEPTABLE.
2. SEE PANEL SCHEDULES FOR KAIC RATING OF BREAKERS IN EQUIPMENT. THE KAIC RATING LISTED IN THE PANEL SHEDULE IS THE MINIMUM RATING FOR ALL BREAKERS IN THAT PANEL. LARGER KAIC RATINGS ARE ACCEPTALBE, AND SHOULD BE USED WHERE ONLY THE LARGER KAIC RATINGS ARE COMMERCIALLY AVAILABLE FOR THAT BREAKER TYPE.
3. DEMAND FACTORS SHOWN IN PANEL SCHEDULES ARE NOT ACCURATE, AND WERE NOT USED IN FEEDER CALCULATIONS. TOTAL LOAD CALCULATION SHOWN ON THIS SHEET SHOWS ACCURATE TOTAL DEMAND FACTORS. INDIVIDUAL DEMAND FACTORS FOR EACH PANEL ARE NOT SHOWN, BUT WERE USED TO CALCULATE THE DEMAND LOAD SHOWN IN FEEDER SCHEDULE ON THIS SHEET. SEE DEMAND FACTOR DISCUSSION WITH TOTAL LOAD CALCULATION TO RIGHT TO SEE HOW DEMAND FACTORS WERE APPLIED TO LOADS IN THIS PROJECT.
4. SEE MOTOR SCHEDULES ON SHEETS E-501 AND E-502 FOR MOTOR BRANCH CIRCUIT PROPERTIES, INCLUDING CONDUIT SIZES. THESE CIRCUITS HAVE BEEN SIZED TO ACCOUNT FOR VOLTAGE DROP AND AMPACITY DERATINGS.
5. VOLTAGE DROP CALCULATIONS HAVE BEEN COMPLETED FOR FEEDERS, MOTORS, LIGHTING CIRCUITS, EXTERIOR CIRCUITS, AND CIRCUITS IN THE BAY AREAS. CONDUCTOR SIZES ARE NOTED ON THE PANEL SCHEDULES, IF THEY DIFFER FROM A TYPICAL 20 AMP BRANCH CIRCUIT (#12 CURRENT CARRYING CONDUCTORS, AND #12 GND).
   A. CONTRACTOR SHALL BE RESPONSIBLE FOR SIZING CONDUCTORS FOR 20 A BRANCH CIRCUITS IN THE ADMINISTRATIVE AREAS AND THE TRAINING AREA (AREAS "B" AND "C") OF THE MAIN BUILDING, TO ACCOUNT FOR VOLTAGE DROP ALONG THE CIRCUIT.
6. CONDUIT CALLOUTS APPLY TO THE MAIN CONDUIT RUN FOR THE EQUIPMENT. IN GENERAL, VIBRATING EQUIPMENT SUCH AS TRANSFORMERS AND MOTORS SHALL HAVE FLEXIBLE CONDUITS FOR THE FINAL SECTION OF CONDUIT CONNECTED TO THEM. USE A SECTION OF FLEXIBLE CONDUIT WHEN CONDUIT RUNS CROSS BUILDING EXPANSION JOINTS. USE RMC WHEN CONDUITS ARE EXPOSED IN AREAS SUBJECT TO DAMAGE, OR IN HAZARDOUS LOCATIONS, INCLUDING THE BAY AREA, FLUID DISTRIBUTION, TOOL ROOM, MECH ROOM, ORG STORAGE BUILDING BAY AREA, AND POL AND HAZMAT STORAGE BUILDINGS. USE EMT IN FINISHED AREAS. USE PVC FOR UNDERGROUND DISTRIBUTION.
7. PARALLEL SETS OF FEEDERS (INCLUDING TRANSFORMER SECONDARY CIRCUITS) SHALL BE RUN IN SEPARATE CONDUITS. PROVIDE THE LISTED MINIMUM SIZED EQUIPMENT GROUNDING CONDUCTOR WITH EACH PARALLEL SET OF CONDUCTORS, RUN IN EACH CONDUIT, PER NEC ARTICLE 250.122 (F) (1) (b). FOR TRANSFORMER SECONDARY CIRCUIT SUPPLY SIDE BONDING JUMPERS, PROVIDE THE LISTED MINIMUM SIZED GROUND CONDUCTOR WITH EACH PARALLEL SET OF CONDUCTORS, WHERE APPLICABLE (THESE WERE SIZED PER NEC TABLE 250.102 (C) (1)).
8. WHERE 200% NEUTRALS ARE SPECIFIED, THEY SHALL BE SIZED BASED ON A MINIMUM OF 200% OF THE AREA OF THE PHASE CONDUCTORS, USING NEC CHAPTER 9 TABLE 8.
9. THE FIELD "GND CONDUCT. SIZE" APPLIES TO THE EQUIPMENT GROUNDING CONDUCTOR FOR TYPICAL FEEDER CIRCUITS, AND TO THE MAIN BONDING JUMPER, SYSTEM BONDING JUMPER, SUPPLY SIDE BONDING JUMPER, AND GROUNDING ELECTRODE CONDUCTOR FOR TRANSFORMER SECONDARY CIRCUITS. SEE SHEET EG601 FOR MORE INFORMATION ON THE GROUNDING SYSTEM.
10. CIRCUIT LENGTHS ARE FOR CALCULATIONS ONLY AND SHALL NOT BE USED FOR COST ESTIMATING OR PRODUCT ORDERING PURPOSES. CONTRACTOR SHALL BE RESPONSIBLE FOR DETERMINING CIRCUIT LENGTHS BASED ON CONTRACTOR'S CONSTRUCTION PLAN AND SUPPLYING ADEQUATE CONDUCTOR QUANTITIES.
11. RELAYS SHALL OPERATE AT 24 VDC. PROVIDE POWER ADAPTORS AS NEEDED TO ACHIEVE 24 VDC (NOT SHOWN ON PLANS). POWER FOR THE RELAYS SHALL COME FROM PANEL DP-EM-1 FOR THE GTEB, AND PANEL PP-12 FOR THE ORG. STORAGE BUILDING.

(#) BID OPTIONS:

1. DEMO ADDITIONAL BUILDING (NOT IN SINGLE LINE)
2. SOLAR PHOTOVOLTAIC COVERED PARKING
3. TRAINING WING
4. 2 WASH RACKS (SEE PANEL SCHEDULE FOR XP-1 FOR ELECTRICAL IMPACTS)
5. WEST PORTION OF HARDSTAND (NO IMPACTS TO SINGLE LINE, BUT AFFECTS LOCATION OF XP-3)
6. HAZMAT STORAGE BUILDING
7. POL STORAGE BUILDING
8. ORG. STORAGE BUILDING

TOTAL LOAD CALCULATION

PANEL	VOLT P-P	VOLT P-N	PHASE	VA: LTG	REC	MOTOR	OTHER	TOTAL LOAD	Notes
MDP-1	480	277	3	0	0	66340	0	66340	
PP-1	240	120	1	0	0	32974	0	32974	
XP-1	240	120	1	0	180	27416	0	27596	
PP-2	208	120	3	0	17700	0	0	17700	
PP-3	208	120	3	0	4320	2522	308	7150	
PP-4	208	120	3	0	0	30551	0	30551	
PP-5	208	120	3	106	19750	6957	0	26813	
PP-6	208	120	3	0	7930	1081	0	9011	
PP-7	208	120	3	0	1980	3279	80	5339	
XP-2	208	120	3	0	180	3314	31300	34794	
XP-3	208	120	3	0	180	0	28821	29001	TRAILER HOOKUP - 80% OF 100A PANEL
XP-4	208	120	3	0	180	0	28821	29001	TRAILER HOOKUP - 80% OF 100A PANEL
XP-6	208	120	3	593	360	4992	4334	10279	
PP-8	208	120	3	0	1260	3890	1720	6870	
PP-9	208	120	3	0	1260	3890	720	5870	
PP-10	208	120	3	0	0	0	2000	2000	WILL HAVE AV EQUIPMENT
DP-EM-1	208	120	3	0	0	0	1000	1000	FA PANEL
LP-1	480	277	3	31774	0	0	0	31774	
PPH-1	480	277	3	0	0	178152	3000	181152	
XP-5	480	277	3	0	1260	0	0	1260	SOLAR PV, APPROX -250 kVA
PPH-2	480	277	3	0	0	41590	5000	46590	
PPH-3	480	277	3	3329	0	19917	57000	80246	
PP-11	208	120	3	0	41004	14530	20	55554	INCLUDES WELDERS (REC LOAD)
PP-12	240	120	1	0	0	3916	500	4416	
XP-7	240	120	1	0	1260	0	0	1260	

	LTG	REC	MOTOR	OTHER	TOTAL	AMPS
TOTAL CONNECTED	35802	98804	445311	164624	744541	895.5
DEMAND FACTOR	100%	55%	67%	77%	69.21%	
DEMAND LOAD	35802	54402	298358	126760	515323	619.8
15% SPARE					77298	93.0
TOTAL DEMAND PLUS SPARE:					592621	712.8

TOTAL BUILDING SQUARE FOOTAGE	
BUILDING	SF
MAIN GTEB BUILDING	31494
ORG. STORAGE	4950
POL STORAGE	720
HAZMAT STORAGE	720
TOTAL	37884
DEMAND LOAD (VA)	515323
DEMAND VA/SF	13.6

NOTE: LOADS LISTED ONLY INCLUDE BRANCH CIRCUITS ON THAT PANEL. THIS IS SO THAT LOADS ON DOWNSTREAM PANELS ARE NOT DUPLICATED ONTO LOADS FOR UPSTREAM PANELS.

THIS LOAD CALCULATION ASSUMES UNITY POWER FACTOR. POWER FACTORS USED FOR FEEDER CALCULATIONS ARE SHOWN IN THE FEEDER SCHEDULE.

DEMAND FACTOR DISCUSSION:

LIGHTING: 100%, PER NEC TABLE 220.42. ADDITIONALLY, BOTH INTERIOR AND EXTERIOR LIGHTS COULD REALISTICALLY BE ON DURING EARLY WORKING HOURS IN FALL AND WINTER.

RECEPTACLE: 100% OF THE FIRST 10 KVA, PLUS 50% OF THE REMAINING KVA, PER NEC TABLE 220.44.

MOTOR: EACH INDIVIDUAL MOTOR WAS APPLIED A DEMAND FACTOR BASED ON THE TYPE OF DUTY, FOLLOWING THE RANGES SPECIFIED IN UFC 3-501-01 TABLE E-2, WITH GUIDANCE FROM TABLE E-5. THE DEMAND FACTOR LISTED IS THE TOTAL CALCULATED MOTOR DEMAND LOAD/MOTOR CONNECTED LOAD.

OTHER: MOST OF THESE ARE CONTINOUS LOADS, LIKE COMM RACKS, CONTROLS EQUIPMENT, ELECTRIC VEHICLE CHARGING, AND TRAILER HOOKUPS. OTHER TYPES INCLUDE EMERGENCY EQUIPMENT, SUCH AS THE FA/MNS, AND EYE WASH WATER HEATER. A 77% DEMAND FACTOR IS APPLIED TO THE TOTAL AS A COMBINATION OF: 75% DEMAND FACTOR APPLIED TO ELECTRIC VEHICLE CHARGING, AND 50% DEMAND FACTOR APPLIED TO THE TRAILER HOOKUP LOADS (SINCE THE TRAILER LOADS WILL LIKELY BE MUCH LESS THAN THE FULL PANEL CAPACITY).

US Army Corps of Engineers ®

MARK	DESCRIPTION	DATE

DESIGNED BY: D. CARULLI
DRAWN BY: D. CARULLI
CHECKED BY: S. JONES
SUBMITTED BY: /s/ JOHN R. PARRISH
SIZE: ANSI 'D'
FILE NAME: W65E_GTEB_Central.rvt
ISSUE DATE: 13 JUL 2020
PROJECT # 225-25-0665
SPEC # 2145
FILE NUMBER:

US ARMY CORPS OF ENGINEERS
SACRAMENTO DISTRICT
US DEPT OF ARMY

SACRAMENTO DISTRICT
IN-HOUSE DESIGN
1325 J STREET
SACRAMENTO, CA 95814

FT. HUACHUCA ARIZONA
GROUND TRANSPORT EQUIPMENT BUILDING

FEEDER SCHEDULE

SHEET ID

E-602

RTA

1	2	3	4	5

SEE NOTE 5

SHORT CIRCUIT CALCULATIONS																														
		VOLTAGE SYSTEM			TRANSFORMER PROPERITES				AVAILABLE CURRENT		TRANSFORMER CALCULATIONS				CNDCTR RUN PROPERTIES			PHASE CONDUCTORS			NEUTRAL CONDUCTORS			f FACTOR		MULTIPLIER		SHORT CIRCUIT AMPS		
	FAULT POINT	Volts Line-Line	Volts Line-Neutral	Phase	Avail. Fault Current	XFMR kVA	XFMR min %Z	XFMR FLA	Isca Phase	Isca Neutral	f factor, Phase XFMR	Mult, L-L XFMR	Isc XFMR Secndry	Isc XFMR Secndry Neutral	Al or Cu	Raceway	Length (ft)	# Cndctr / Phs	Phs Cndctr Size	Phs Cndctr Constant	# Cndctr / N	Neutr. Cndctr Size	Neutr. Cndtr Constant	f factor, Phase	f factor, Neutral	Mult, L-L	Mult, L-N	Isc, L-L	Isc, L-N	
Variable		ELL	ELN	Ø	Isca	kVA	Z	Ifla	Isca	Iscan	fpt	Mpt	Iscpt	Iscnt			L	Np		Cp	Nn		Cn	fp	fn	Mp	Mn	Iscp	Iscn	
Equation									=Ifla x 100 / Z, or prev. feed		=Isca x Vpr x SQRT(Ø) x Z / (100,000 x kVA)	=1/(1+fpt)	=Vpri / Vsec x M x Isca	3Ø: = Iscpt, 1Ø: =Iscpt x 1.5						(Lookup)			(Lookup)	=SQRT(Ø) x L x I / (N x C x ELL)	=2 x L x I / (N x C x ELN)	=1 / (1 + fp)	=1 / (1 + fn)	=Mp*Isca	=Mn*Isca	
Service	T-1 SECONDARY	480	277	3	Inf	750	5.319	902.1	16960																					
Service	MDP-1	480	277	3					16960						Cu	Nonmetal	25	3	500	26706	3	500	26706	0.0191	0.0382	0.9813	0.9632	16642	16336	NOTE 2
480 V Panels	LP-1	480	277	3					16642	16336					Cu	Metal	15	1	6	2425	1	6	2425	0.3715	0.7296	0.7291	0.5782	12135	9445	NOTE 2
480 V Panels	PPH-1	480		3					16642						Cu	Metal	180	1	350	19704				0.5486		0.6457		10747		NOTE 2
480 V Panels	XP-5	480	277	3					16642	16336					Cu	Nonmetal	1200	3	500	26706	3	500	26706	0.8995	1.7666	0.5265	0.3615	8762	5905	SEE NOTE 3
480 V Panels	T-8 PRI.	480		1					8762						Cu	Nonmetal	10	1	8	1559				0.2342		0.8103		7099		
480 V Panels	T-8 SEC./XP-7	240	120	1		15	1		7099		2.2717	0.305648	4340	6510																SEE NOTE 4
480 V Panels	PPH-2	480	277	3					16642	16336					Cu	Metal	15	1	3	4633	1	3	4633	0.1944	0.3819	0.8372	0.7237	13933	11822	NOTE 2
480 V Panels	PPH-3	480	277	3					16642	16336					Cu	Nonmetal	350	1	3/0	13923	1	3/0	13923	1.5096	2.9650	0.3985	0.2522	6631	4120	
Org Storage	T-6 PRI.	480		3					6631						Cu	Metal	5	1	4	3806				0.0314		0.9695		6429		
Org Storage	T-6 SEC.	208	120	3		45	3.114		6429		3.6989	0.2128	3158	3158																
Org Storage	PP-11	208	120	3					3158	3158					Cu	Metal	5	1	1/0	8925	1	1/0	8925	0.0147	0.0295	0.9855	0.9714	3112	3067	
Org Storage	T-7 PRI.	480		1					6631						Cu	Metal	10	1	10	982				0.2814		0.7804		5175		
Org Storage	T-7 SEC.	240	120	1		15	2.907		5175		4.8142	0.1720	1780	2670																
Org Storage	PP-12	240	120	1					1780	2670					Cu	Metal	5	1	1	2425	1	1	2425	0.0306	0.0918	0.9703	0.9159	1727	2446	
240 V Panels	T-2 PRI.	480		1					16642						Cu	Metal	30	1	1/0	8925				0.2331		0.8110		13496		
240 V Panels	T-2 SEC.	240	120	1		50	3.681		13496		4.7693	0.1733	4679	7018																
240 V Panels	DP-1	240	120	1					4679	7018					Cu	Metal	6	1	250	16483	1	250	16483	0.0142	0.0426	0.9860	0.9592	4613	6731	
240 V Panels	PP-1	240	120	1					4613	6731					Cu	Metal	150	1	3/0	12844	1	3/0	12844	0.4490	1.3102	0.6901	0.4329	3184	2914	
240 V Panels	XP-1	240	120	1					4613	6731					Cu	Nonmetal	350	1	500	22185	1	500	22185	0.6065	1.7700	0.6225	0.3610	2872	2430	
208 V Harmon. Panels	T-3 PRI.	480		3					16642						Cu	Metal	30	1	4	3806				0.4734		0.6787		11296		
208 V Harmon. Panels	T-3 SEC.	208	120	3		45	1.638		11296		3.4183	0.2263	5900	5900																
208 V Harmon. Panels	DP-2	208	120	3					5900	5900					Cu	Metal	45	1	3/0	12844	1	350	16274	0.1721	0.2719	0.8532	0.7862	5033	4639	
208 V Harmon. Panels	PP-8	208	120	3					5033	4639					Cu	Metal	100	1	1/0	8925	1	4/0	12004	0.4696	0.6440	0.6804	0.6083	3425	2821	
208 V Harmon. Panels	PP-9	208	120	3					5033	4639					Cu	Metal	100	1	1/0	8925	1	4/0	12004	0.4696	0.6440	0.6804	0.6083	3425	2821	
208 V Harmon. Panels	PP-10	208	120	3					5033	4639					Cu	Metal	80	1	1/0	8925	1	4/0	12004	0.3757	0.5152	0.7269	0.6600	3659	3061	
FACP/Em	T-5-EM PRI.	480		1					16642						Cu	Metal	20	1	12	617				2.2477		0.3079		5124		
FACP/Em	T-5-EM SEC.	240	120	1		15	1		5124		1.6398	0.3788	3882	5824																SEE NOTE 4
FACP/Em	DP-EM-1	240	120	1					3882	5824					Cu	Metal	0.01	1	500	26706	1	500	26706	0.0000	0.0000	1.0000	1.0000	3882	5823	
FACP/Em	FACP		120	1					3882	5823					Cu	Metal	65	1	8	1559	1	8	1559		4.0466		0.1982		1154	
208 V Distrib.	T-4 PRI.	480		3					16642						Cu	Metal	20	1	350	19704				0.0610		0.9425		15686		
208 V Distrib.	T-4 SEC.	208	120	3		225	4.869		15686		2.8221	0.2616	9471	9471																
208 V Distrib.	MDP-2	208	120	3					9471	9471					Cu	Metal	5	2	350	19704	2	350	19704	0.0100	0.0200	0.9901	0.9804	9377	9285	NOTE 2
208 V Distrib.	PP-2	208	120	3					9377	9285					Cu	Metal	190	1	3	4633	1	3	4633	3.2022	6.3463	0.2380	0.1361	2231	1264	
208 V Distrib.	PP-3	208	120	3					9377	9285					Cu	Metal	180	1	6	2425	1	6	2425	5.7959	11.4865	0.1471	0.0801	1380	744	
208 V Distrib.	PP-4	208	120	3					9377	9285					Cu	Metal	180	1	2	5907	1	2	5907	2.3794	4.7156	0.2959	0.1750	2775	1625	
208 V Distrib.	PP-5	208	120	3					9377	9285					Cu	Metal	20	1	3	4633	1	3	4633	0.3371	0.6680	0.7479	0.5995	7013	5566	
208 V Distrib.	PP-6	208	120	3					9377	9285					Cu	Metal	70	1	8	1559	1	8	1559	3.5060	6.9483	0.2219	0.1258	2081	1168	
208 V Distrib.	PP-7	208	120	3					9377	9285					Cu	Metal	40	1	2	5907	1	2	5907	0.5288	1.0479	0.6541	0.4883	6134	4534	
208 V Distrib.	XP-2	208	120	3					9377	9285					Cu	Nonmetal	900	1	500	26706	1	500	26706	2.6315	5.2151	0.2754	0.1609	2582	1494	
208 V Distrib.	XP-3	208	120	3					9377	9285					Cu	Nonmetal	1250	2	350	22737	2	350	22737	2.1464	4.2538	0.3178	0.1903	2980	1767	
208 V Distrib.	XP-4	208	120	3					9377	9285					Cu	Nonmetal	700	2	250	18594	2	250	18594	1.4698	2.9129	0.4049	0.2556	3797	2373	
208 V Distrib.	XP-6	208	120	3					9377	9285					Cu	Nonmetal	250	1	3	4635	1	3	4635	4.2117	8.3467	0.1919	0.1070	1799	993	

TRANSFORMER SCHEDULE																	
NAME	KVA	PHASE	TYPE	PRI. VOLT	PRI. TYPE	SEC. VOLT	SEC. TYPE	BONDING JUMPER	GND. ELECTRODE	FEED FROM	FEED TO	LOCATION	MIN. ENCL.	MOUNTING	MIN. %Z	K FACTOR	NOTES
T-1	750	3Ø	PADMOUNT	13.8 KV	DELTA	480/277 V	WYE	N/A	#4/0	UTILITY	MDP-1	MECH YARD	NEMA 3R	PADMOUNT	5.32%	N/A	PROVIDED BY SSVEC
T-2	50	1Ø	DRY	480 V	PHASE-PHASE	240/120 V	3 WIRE	#2	#2	MDP-1	DP-1	ELEC RM 120	NEMA 1	FLOOR/PAD	3.68%	N/A	
T-3	45	3Ø	DRY	480 V	DELTA	208/120 V	WYE	#2	#2	MDP-1	DP-2	ELEC RM 120	NEMA 1	FLOOR/PAD	1.64%	K-13	
T-4	225	3Ø	DRY	480 V	DELTA	208/120 V	WYE	#2/0	#2/0	MDP-1	MDP-2	ELEC RM 120	NEMA 1	FLOOR/PAD	4.87%	N/A	
T-5-EM	15	1Ø	MINI LOAD CENTER	480 V	PHASE-PHASE	240/120 V	3 WIRE	#8	#8	MDP-1	DP-EM-1	ELEC RM 120	NEMA 1	WALL	1%	N/A	SEE NOTE 4
T-6	45	3Ø	DRY	480 V	DELTA	208/120 V	WYE	#6	#6	PPH-3	PP-11	ELEC RM 303	NEMA 1	FLOOR/PAD	3.11%	N/A	
T-7	15	1Ø	DRY	480 V	PHASE-PHASE	240/120 V	3 WIRE	#8	#8	PPH-3	PP-12	ELEC RM 303	NEMA 1	FLOOR/PAD	2.91%	N/A	
T-8	15	1Ø	MINI LOAD CENTER	480 V	PHASE-PHASE	240/120 V	3 WIRE	#8	#8	XP-6	XP-7	OVERFLOW LOT	NEMA 3	PADMOUNT	1.00%	N/A	SEE NOTE 4

NOTES:

1. UNLESS NOTED OTHERWISE, LISTED TRANSFORMER IMPEDANCE IS BASED ON A SAMPLING OF ACTUAL TRANSFORMERS THAT WOULD BE SUITABLE FOR THIS PROJECT. FOR THESE CALCULATIONS, THE LOWEST IMPEDANCE FOUND WAS TAKEN, AND THEN A TOLERANCE FACTOR WAS APPLIED. THE TOLERANCE FOR LOW VOLGATE TRANSFORMERS WAS -10%. THE TOLERANCE FOR THE UTILITY TRANSFORMER WAS -7.5%, PER IEEE C57.12.00. CONTRACTOR SHALL BE RESPONSIBLE FOR VERIFYING THAT THE ACTUAL IMPEDANCE OF THE TRANSORMERS IS NOT BELOW THE VALUES LISTED IN THIS TABLE. IF CONTRACTOR SOURCES A TRANSFORMER WITH A LOWER IMPEDANCE, CONTRACTOR SHALL REDO SHORT CIRCUIT CALCULATIONS AND RESIZE BREAKER AIC RATINGS AS NEEDED.
2. THESE PANEL AVAILABLE SHORT CIRCUIT CURRENT VALUES EXCEED 9000 A, WHICH IS THE 90% INTERRUPTING THRESHOLD OF A 10000 AIC RATED BREAKER. ALL BREAKERS IN THESE PANELS SHALL AT A MINIMUM USE THE NEXT HIGHER STANDARD AIC RATING. THIS PROJECT ASSUMES THAT 22000 A IS IS THE NEXT HIGHER STANDARD AIC RATING, HOWEVER CONTRACTOR MAY USE A LOWER AIC RATING IF COMMERCIALLY AVAILABLE, EXCEPT THAT IN NO CASE SHALL THE CALCULATED AVAILABLE SHORT CIRCUIT CURRENT IN THE PANEL EXCEED 90% OF THE AIC RATING OF ANY BREAKERS IN THE PANEL.
3. THIS CALCULATION ONLY INCLUDES FAULT CURRENT FROM THE UTILITY TRANSFORMER. SINCE THIS PANEL FEEDS THE PV SYSTEM, AND THE COMBINED PV SYSTEM IS CAPABLE OF CONTRIBUTING APPROXIMATELY 350 A, THE TOTAL AVIALABLE FAULT CURRENT EXCEEDS THE 90% 10000 AIC THRESHOLD, SO BREAKERS ON THIS PANEL SHALL AT A MINIMUM USE THE NEXT HIGHER STANDARD AIC RATING.
4. THESE TRANSFORMERS AND THEIR PANELS SHALL EACH BE A COMBINED MINI LOAD CENTER. DESIGNER WAS NOT ABLE TO FIND IMPEDANCE DATA ON TRANSFORMERS FOR MINI LOAD CENTERS, SO 1%Z WAS TAKEN AS A CONSERVATIVE ESTIMATE.
5. PER UFC 3-520-01, PART 3-2, THE MINIMUM INTERRUPTION RATING FOR 480 V APPLICATIONS IS 14 kA.

US Army Corps of Engineers ®

MARK	DESCRIPTION	DATE

US ARMY CORPS OF ENGINEERS
SACRAMENTO DISTRICT
US DEPT OF ARMY

SACRAMENTO DISTRICT
IN-HOUSE DESIGN
1325 J STREET
SACRAMENTO, CA 95814

DESIGNED BY: D. CARULLI	ISSUE DATE: 13 JUL 2020
DRAWN BY: D. CARULLI	PROJECT # 225-25-0665
CHECKED BY: S. JONES	SPEC # 2145
SUBMITTED BY: /s/ JOHN R. PARRISH	FILE NUMBER:
SIZE: ANSI 'D'	FILE NAME: W65E_GTEB_Central.rvt

FT. HUACHUCA ARIZONA
GROUND TRANSPORT EQUIPMENT BUILDING

CALCULATIONS AND TABLES

SHEET ID

E-603

RTA

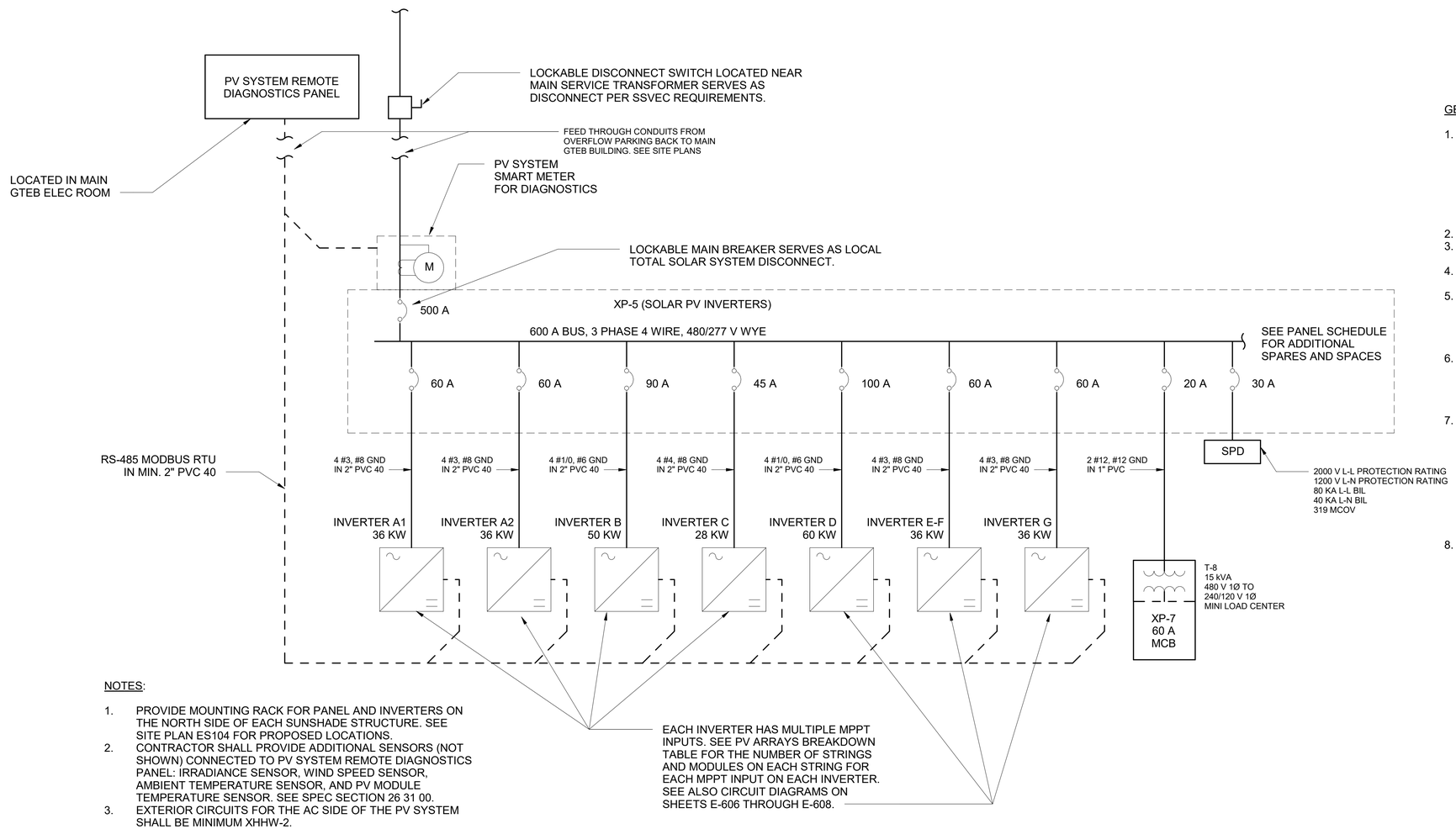

GENERAL NOTES:

1. THE SOLAR PV SYSTEM AND COVERED PARKING IS BID OPTION 2. THIS INCLUDES THE PARKING STRUCTURES, SOLAR PANELS, INVERTERS, DIAGNOSTICS PANELS, DISCONNECT SWITCHES, METERS, PANELS XP-5 AND XP-7, T-8, THE PV SYSTEM MAINTENANCE RECEPTACLE, LIGHTING MOUNTED TO THE PV COVERED PARKING STRUCTURES, AND ALL WIRING, GROUNDING, AND ASSOCIATED CONDUIT SYSTEMS FOR THIS EQUIPMENT.
2. SEE SHEET ES104 FOR SOLAR PV SYSTEM LAYOUT.
3. SEE SHEETS E-606 THROUGH E-607 FOR INTERNAL CIRCUITRY FOR EACH PV INVERTER.
4. THIS SHEET PROVIDED TO GIVE OVERALL DESCRIPTION AND NOTES OF THE SOLAR PV SYSTEM.
5. THE SOLAR PV SYSTEM SHALL BE LOCATED IN THE COVERED PARKING AREA OF THE OVERFLOW PARKING LOT, LOCATED EAST OF THE MAIN GTEB BUILDING. CONTRACTOR SHALL DESIGN AND INSTALL THE COVERED CARPORT PARKING STRUCTURE FOR THE PV SYSTEM TO BE MOUNTED ON TOP OF.
6. PV PANELS SHALL BE OPEN TO THE UNDERSIDE OF THE COVERED CARPORTS, TO FACILITATE AIR FLOW AND COOLING, WHICH INCREASES THE EFFICIENCY OF THE PANELS. DO NOT PROVIDE METAL PANELLING UNDERNEATH THE PV PANELS WHICH WOULD TRAP WARM AIR UNDERNEATH THE PANELS.
7. PV PANEL STRUCTURES SHALL BE TILTED 5 DEGRESS FROM HORIZONTAL TOWARDS THEIR LONGER EDGE THAT IS CLOSEST TO THE SOUTH. SINCE THE CARPORT STRUCTURES ARE ORIENTED IN DIFFERENT DIRECTIONS, EACH ARRAY MUST HAVE IT'S OWN INVERTER OR ITS OWN MPPT INPUT ON AN INVERTER, TO AVOID IMBALANCES OF INSOLATION UPON THE ARRAYS, DECREASING THE TOTAL EFFICIENCY. CONTRACTOR SHALL ARRANGE THE ARRAY STRUCTURES SUCH THAT NO ARRAY OR ARRAY STRUCTURE WILL CAST A SHADOW ON ANY PORTION OF ANOTHER ARRAY DURING THE MAIN SOLAR DAY.
8. SOLAR PV SYSTEM SHALL COMPLY WITH NFPA 70, SECTION 690.

NOTES:

1. PROVIDE MOUNTING RACK FOR PANEL AND INVERTERS ON THE NORTH SIDE OF EACH SUNSHADE STRUCTURE. SEE SITE PLAN ES104 FOR PROPOSED LOCATIONS.
2. CONTRACTOR SHALL PROVIDE ADDITIONAL SENSORS (NOT SHOWN) CONNECTED TO PV SYSTEM REMOTE DIAGNOSTICS PANEL: IRRADIANCE SENSOR, WIND SPEED SENSOR, AMBIENT TEMPERATURE SENSOR, AND PV MODULE TEMPERATURE SENSOR. SEE SPEC SECTION 26 31 00.
3. EXTERIOR CIRCUITS FOR THE AC SIDE OF THE PV SYSTEM SHALL BE MINIMUM XHHW-2.

SOLAR PV SYSTEM (OPTION 2) DIAGRAM - OVERALL

1 / E-605

NOT TO SCALE

SOLAR PV ARRAYS BREAKDOWN

ARRAY	PANELS WIDE	PANELS LONG	NON-RECT. ADJ.	TOTAL PANELS	TOTAL KW (STC)	TOTAL KW (NOCT)	INVERTER DESIGNATOR	NOMINAL WATTAGE	PANELS / INVERTER	Vmax	Vmin	Vstart	MPPT INPUTS	FUSES / MPPT	MPPT INPUT DESIGNATOR	PANELS / STRING	STRINGS	PANELS / MPPT INPUT	MPPT INPUT KW	TOTAL PANELS	CHECKSUM
A	6	41	0	246	83.64	63.7878	A1	36	118	1000	240	330	2	5	A1-1	18	3	54	14.0022	246	GOOD
															A1-2	16	4	64	16.5952		
							A2	36	128	1000	240	330	2	5	A2-1	16	4	64	16.5952		
															A2-2	16	4	64	16.5952		
B	6	28	0	168	57.12	43.5624	B	50	168	1000	200	330	3	5	B-1	15	4	60	15.558	168	GOOD
															B-2	15	4	60	15.558		
															B-3	16	3	48	12.4464		
C	6	15	0	90	30.6	23.337	C	28	90	1000	240	330	2	4	C-1	15	3	45	11.6685	90	GOOD
															C-2	15	3	45	11.6685		
D	6	33	0	198	67.32	51.3414	D	60	198	1000	200	330	3	5	D-1	15	5	75	19.4475	198	GOOD
															D-2	15	5	75	19.4475		
															D-3	16	3	48	12.4464		
E	6	10	0	60	20.4	15.558	E-F	36	114	1000	240	330	2	5	E-1	15	4	60	15.558	60	GOOD
F	6	9	0	54	18.36	14.0022									F-1	18	3	54	14.0022	54	GOOD
G	6	21	0	126	42.84	32.6718	G	36	126	1000	240	330	2	5	G-1	18	4	72	18.6696	126	GOOD
															G-2	18	3	54	14.0022		
GRAND TOTALS:				942	320.28	244.2606			942									942	244.2606	942	GOOD

US Army Corps of Engineers ®

MARK	DESCRIPTION	DATE

US ARMY CORPS OF ENGINEERS
SACRAMENTO DISTRICT
US DEPT OF ARMY

SACRAMENTO DISTRICT
IN-HOUSE DESIGN
1325 J STREET
SACRAMENTO, CA 95814

DESIGNED BY: D. CARULLI
DRAWN BY: D. CARULLI
CHECKED BY: S. JONES
SUBMITTED BY: ALJOHN PARRISH
SIZE: ANSI D'
FILE NAME: WESE_GTEB_Central.rvt

ISSUE DATE: 13 JUL 2020
PROJECT # 225-25-0665
SPEC # 2145
FILE NUMBER:

FT. HUACHUCA ARIZONA
GROUND TRANSPORT EQUIPMENT BUILDING

SOLAR PV SYSTEM (OPTION 2)

SHEET ID

E-605

RTA

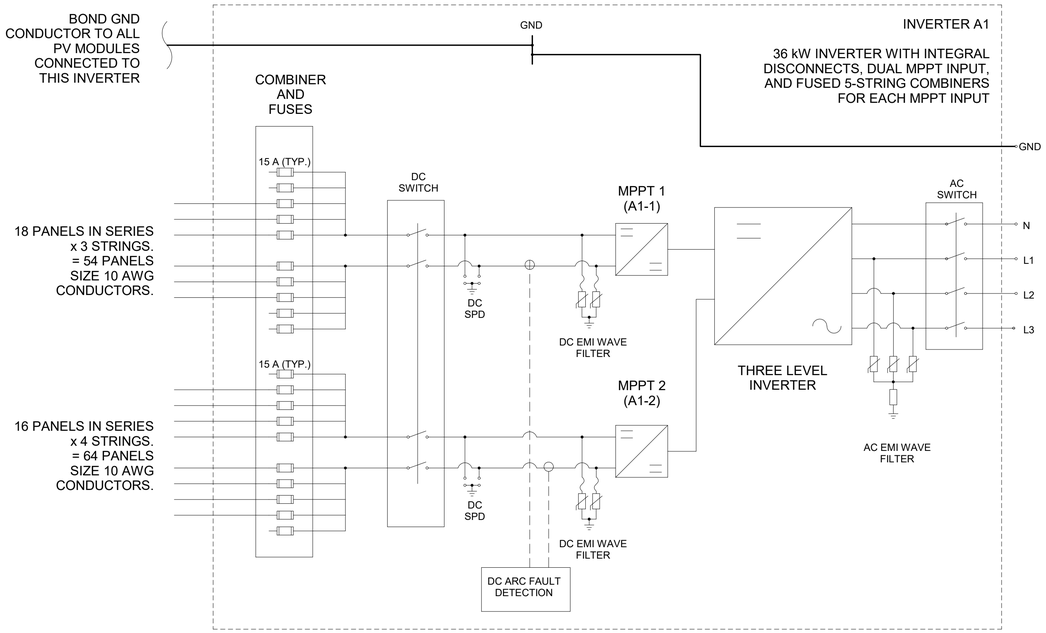

1 E-606 SOLAR PV SYSTEM DIAGRAM - INVERTER A1

NOT TO SCALE

GENERAL NOTES:

1. THE SOLAR PV SYSTEM IS BID OPTION 2. SEE MORE INFORMATION ON SHEET E-605.
2. THIS SHEET PROVIDED TO SHOW CIRCUITING AND INTERNAL REQUIREMENTS FOR SOLAR PV INVERTERS.
3. SINCE THE PV ARRAYS OF THE DIFFERENT CARPORTS HAVE DIFFERENT ORIENTATIONS, MULTIPLE INVERTERS (WITH MULTIPLE MPPT INPUTS) ARE REQUIRED SO THAT THE DEVIATED ORIENTATIONS DO NOT DEGRADE MAXIMUM OUTPUT BY THE MPPTS. REGARDLESS OF WHAT COMBINATION OF INVERTERS AND MPPT INPUTS ARE PROVIDED, ALL PV MODULES ON A SINGLE MPPT INPUT SHALL HAVE THEIR NORMAL VECTOR IN THE SAME DIRECTION.
4. SOLAR PV DRAWINGS SHOWN PRESENT ONE POSSIBLE SOLUTION. SINCE THIS IS A GOVERNMENT PROJECT, MANUFACTERER SPECIFIC COMPONENTS CANNOT BE SPECIFIED. IF CONTRACTOR SUPPLIED COMPONENTS FOR THE PV SYSTEM DEVIATE FROM WHAT IS SHOWN, CONTRACTOR SHALL BE RESPONSIBLE FOR MATCHING PV MODULE PROPERTIES AND STRING SIZES TO INVERTERS SELECTED, AND SUBMITTING SHOP DRAWINGS AND CALCULATIONS FOR APPROVAL PRIOR TO ORDERING COMPONENTS. ADHERE TO THE RULES DESCRIBED IN NOTE 2.
5. PV MODULES USED FOR BASIS OF DESIGN ARE MONOCRYSTALLINE, NOMINAL 340 W, 1000 V, 72 CELL, COMMERCIAL SIZE (78" X 39" NOMINAL). CONTRACTOR SUPPLIED PV MODULES MUST HAVE THESE SAME SPECIFICATIONS, EXCEPT THE NOMINAL WATTAGE MAY VARY SUCH THAT THE MINIMUM STC POWER RATING IS 335 W, AND MINIMUM NOCT POWER RATING IS 250 W.
6. AC OUTPUT OF ALL SOLAR PV INVERTERS SHALL BE 480 V, 3 PHASE, WYE CONNECTED.
7. DC INPUT OF ALL SOLAR PV INVERTERS SHALL BE 1000 V.
8. DC CONDUCTORS SHALL BE PV WIRE RATED 2 KV.
9. EQUIPMENT GROUNDING CONDUCTORS ON THE DC SIDE OF THE INVERTER SHALL BE 12 AWG, MINIMUM, AND SHALL BE PROTECTED IN ACCORDANCE WITH NEC ARTICLE 250.120 (C). EQUIPMENT GROUNDING CONDUCTORS SHALL BOND TO ALL PV MODULES AS WELL AS THE CONDUCTIVE PARTS OF SUPPORT STRUCTURES THE PV MODULES ARE MOUNTED TO.
10. SEE SHEET E-605 FOR AC CONNECTIONS AND CONDUCTOR SIZES.
11. PROVIDE DC GROUND FAULT PROTECTION IN ACCORDANCE WITH NEC ARTICLE 690.41(B)
12. ALL FUSES SHOWN SHALL BE PV FUSES RATED 1000 V MINIMUM.

SOLAR PV ARRAYS BREAKDOWN

			ARRAY					INVERTER								MPPT INPUT SUBARRAYS						
ARRAY	PANELS WIDE	PANELS LONG	NON-RECT. ADJ.	TOTAL PANELS	TOTAL KW (STC)	TOTAL KW (NOCT)	INVERTER DESIGNATOR	NOMINAL WATTAGE	PANELS / INVERTER	Vmax	Vmin	Vstart	MPPT INPUTS	FUSES / MPPT	MPPT INPUT DESIGNATOR	PANELS / STRING	STRINGS	PANELS / MPPT INPUT	MPPT INPUT KW	TOTAL PANELS	CHECKSUM
A	6	41	0	246	83.64	63.7878	A1	36	118	1000	240	330	2	5	A1-1	18	3	54	14.0022	246	GOOD
															A1-2	16	4	64	16.5952		
							A2	36	128	1000	240	330	2	5	A2-1	16	4	64	16.5952		
															A2-2	16	4	64	16.5952		
B	6	28	0	168	57.12	43.5624	B	50	168	1000	200	330	3	5	B-1	15	4	60	15.558	168	GOOD
															B-2	15	4	60	15.558		
															B-3	16	3	48	12.4464		
C	6	15	0	90	30.6	23.337	C	28	90	1000	240	330	2	4	C-1	15	3	45	11.6685	90	GOOD
															C-2	15	3	45	11.6685		
D	6	33	0	198	67.32	51.3414	D	60	198	1000	200	330	3	5	D-1	15	5	75	19.4475	198	GOOD
															D-2	15	5	75	19.4475		
															D-3	16	3	48	12.4464		
E	6	10	0	60	20.4	15.558	E-F	36	114	1000	240	330	2	5	E-1	15	4	60	15.558	60	GOOD
F	6	9	0	54	18.36	14.0022									F-1	18	3	54	14.0022	54	GOOD
G	6	21	0	126	42.84	32.6718	G	36	126	1000	240	330	2	5	G-1	18	4	72	18.6696	126	GOOD
															G-2	18	3	54	14.0022		
GRAND TOTALS:				942	320.28	244.2606			942									942	244.2606	942	GOOD

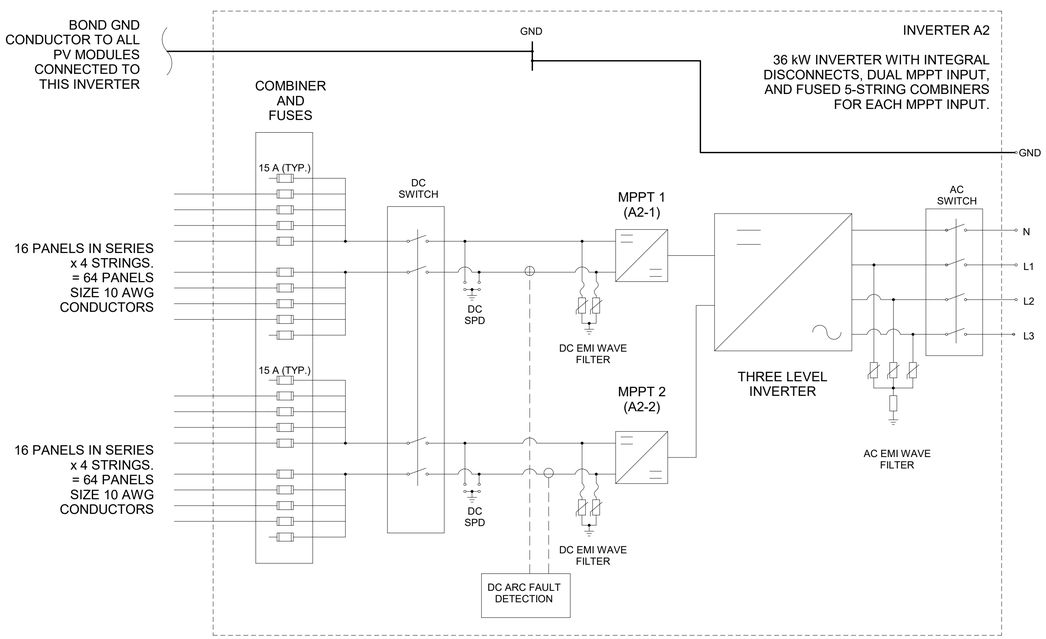

2 E-606 SOLAR PV SYSTEM DIAGRAM - INVERTER A2

NOT TO SCALE

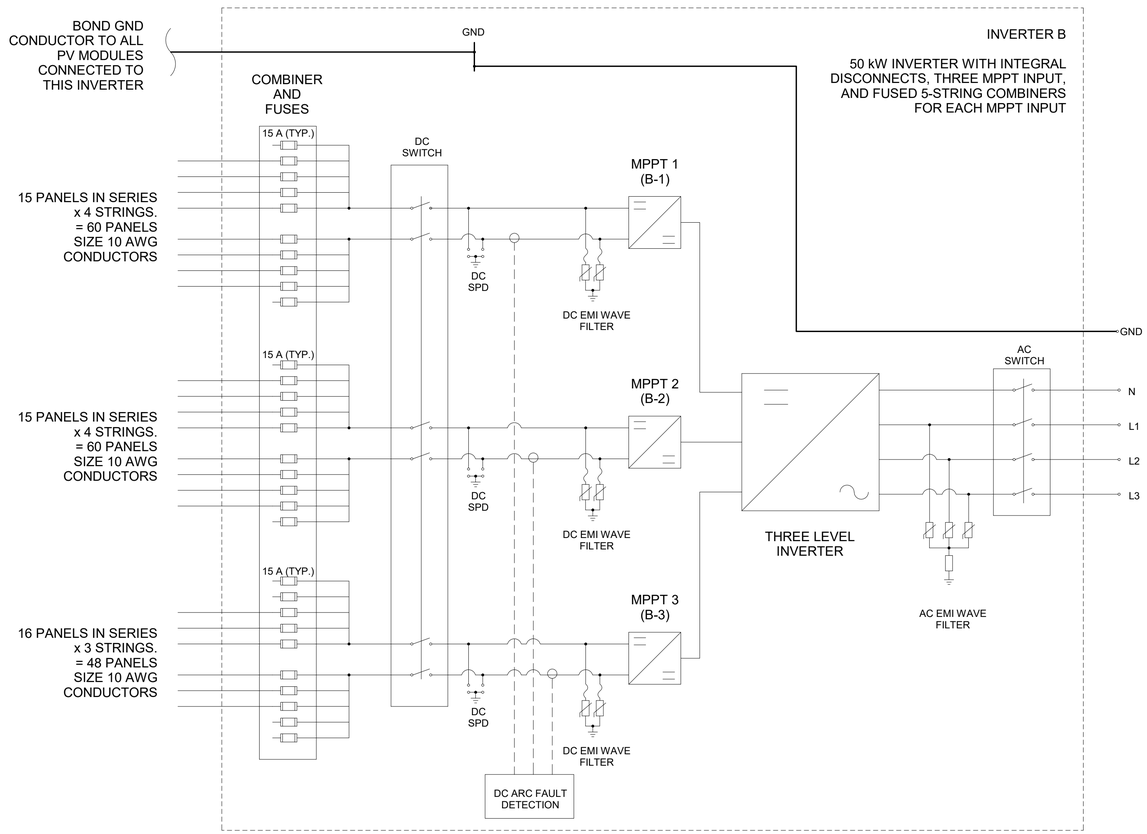

3 E-606 SOLAR PV SYSTEM DIAGRAM - INVERTER B

NOT TO SCALE

US Army Corps of Engineers ®

MARK	DESCRIPTION	DATE

DESIGNED BY: D. CARULLI
DRAWN BY: D. CARULLI
CHECKED BY: S. JONES
SUBMITTED BY: M. CHART PARRISH
SIZE: ANSI 'D'
FILE NAME: W65E_GTER_Central.rvt

ISSUE DATE: 13 JUL 2020
PROJECT # 225-25-0665
SPEC # 2145
FILE NUMBER:

US ARMY CORPS OF ENGINEERS
SACRAMENTO DISTRICT
US DEPT OF ARMY

SACRAMENTO DISTRICT
IN-HOUSE DESIGN
1325 J STREET
SACRAMENTO, CA 95814

FT. HUACHUCA
GROUND TRANSPORT EQUIPMENT BUILDING
ARIZONA

SOLAR PV CIRCUIT DIAGRAMS (OPTION 2)

SHEET ID

E-606

RTA

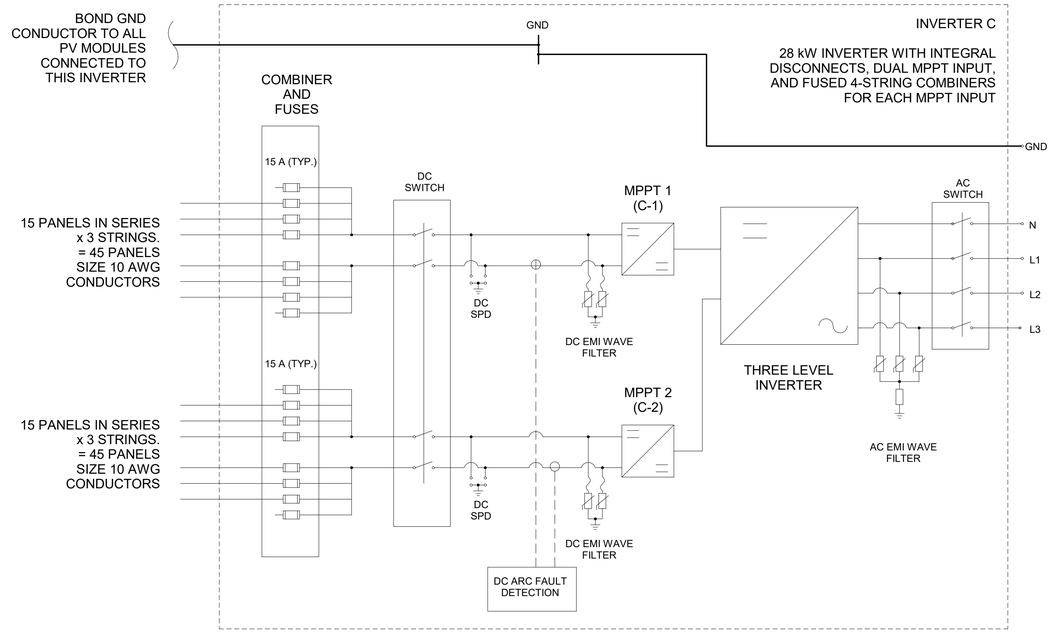

1 E-607

SOLAR PV SYSTEM DIAGRAM - INVERTER C

NOT TO SCALE

GENERAL NOTES:

1. THE SOLAR PV SYSTEM IS BID OPTION 2. SEE MORE INFORMATION ON SHEET E-605.
2. THIS SHEET PROVIDED TO SHOW CIRCUITING AND INTERNAL REQUIREMENTS FOR SOLAR PV INVERTERS.
3. SINCE THE PV ARRAYS OF THE DIFFERENT CARPORTS HAVE DIFFERENT ORIENTATIONS, MULTIPLE INVERTERS (WITH MULTIPLE MPPT INPUTS) ARE REQUIRED SO THAT THE DEVIATED ORIENTATIONS DO NOT DEGRADE MAXIMUM OUTPUT BY THE MPPTS. REGARDLESS OF WHAT COMBINATION OF INVERTERS AND MPPT INPUTS ARE PROVIDED, ALL PV MODULES ON A SINGLE MPPT INPUT SHALL HAVE THEIR NORMAL VECTOR IN THE SAME DIRECTION.
4. SOLAR PV DRAWINGS SHOWN PRESENT ONE POSSIBLE SOLUTION. SINCE THIS IS A GOVERNMENT PROJECT, MANUFACTERER SPECIFIC COMPONENTS CANNOT BE SPECIFIED. IF CONTRACTOR SUPPLIED COMPONENTS FOR THE PV SYSTEM DEVIATE FROM WHAT IS SHOWN, CONTRACTOR SHALL BE RESPONSIBLE FOR MATCHING PV MODULE PROPERTIES AND STRING SIZES TO INVERTERS SELECTED, AND SUBMITTING SHOP DRAWINGS AND CALCULATIONS FOR APPROVAL PRIOR TO ORDERING COMPONENTS. ADHERE TO THE RULES DESCRIBED IN NOTE 2.
5. PV MODULES USED FOR BASIS OF DESIGN ARE MONOCRYSTALLINE, NOMINAL 340 W, 1000 V, 72 CELL, COMMERCIAL SIZE (78" X 39" NOMINAL). CONTRACTOR SUPPLIED PV MODULES MUST HAVE THESE SAME SPECIFICATIONS, EXCEPT THE NOMINAL WATTAGE MAY VARY SUCH THAT THE MINIMUM STC POWER RATING IS 335 W, AND MINIMUM NOCT POWER RATING IS 250 W.
6. AC OUTPUT OF ALL SOLAR PV INVERTERS SHALL BE 480 V, 3 PHASE, WYE CONNECTED.
7. DC INPUT OF ALL SOLAR PV INVERTERS SHALL BE 1000 V.
8. DC CONDUCTORS SHALL BE PV WIRE RATED 2 KV.
9. EQUIPMENT GROUNDING CONDUCTORS ON THE DC SIDE OF THE INVERTER SHALL BE 12 AWG, MINIMUM, AND SHALL BE PROTECTED IN ACCORDANCE WITH NEC ARTICLE 250.120 (C). EQUIPMENT GROUNDING CONDUCTORS SHALL BOND TO ALL PV MODULES AS WELL AS THE CONDUCTIVE PARTS OF SUPPORT STRUCTURES THE PV MODULES ARE MOUNTED TO.
10. SEE SHEET E-605 FOR AC CONNECTIONS AND CONDUCTOR SIZES.
11. PROVIDE DC GROUND FAULT PROTECTION IN ACCORDANCE WITH NEC ARTICLE 690.41(B)
12. ALL FUSES SHOWN SHALL BE PV FUSES RATED 1000 V MINIMUM.

SOLAR PV ARRAYS BREAKDOWN

ARRAY	PANELS WIDE	PANELS LONG	NON-RECT. ADJ.	TOTAL PANELS	TOTAL KW (STC)	TOTAL KW (NOCT)	INVERTER DESIGNATOR	NOMINAL WATTAGE	PANELS / INVERTER	Vmax	Vmin	Vstart	MPPT INPUTS	FUSES / MPPT	MPPT INPUT DESIGNATOR	PANELS / STRING	STRINGS	PANELS / MPPT INPUT	MPPT INPUT KW	TOTAL PANELS	CHECKSUM
A	6	41	0	246	83.64	63.7878	A1	36	118	1000	240	330	2	5	A1-1	18	3	54	14.0022	246	GOOD
															A1-2	16	4	64	16.5952		
							A2	36	128	1000	240	330	2	5	A2-1	16	4	64	16.5952		
															A2-2	16	4	64	16.5952		
B	6	28	0	168	57.12	43.5624	B	50	168	1000	200	330	3	5	B-1	15	4	60	15.558	168	GOOD
															B-2	15	4	60	15.558		
															B-3	16	3	48	12.4464		
C	6	15	0	90	30.6	23.337	C	28	90	1000	240	330	2	4	C-1	15	3	45	11.6685	90	GOOD
															C-2	15	3	45	11.6685		
D	6	33	0	198	67.32	51.3414	D	60	198	1000	200	330	3	5	D-1	15	5	75	19.4475	198	GOOD
															D-2	15	5	75	19.4475		
															D-3	16	3	48	12.4464		
E	6	10	0	60	20.4	15.558	E-F	36	114	1000	240	330	2	5	E-1	15	4	60	15.558	60	GOOD
F	6	9	0	54	18.36	14.0022									F-1	18	3	54	14.0022	54	GOOD
G	6	21	0	126	42.84	32.6718	G	36	126	1000	240	330	2	5	G-1	18	4	72	18.6696	126	GOOD
															G-2	18	3	54	14.0022		
GRAND TOTALS:				942	320.28	244.2606			942									942	244.2606	942	GOOD

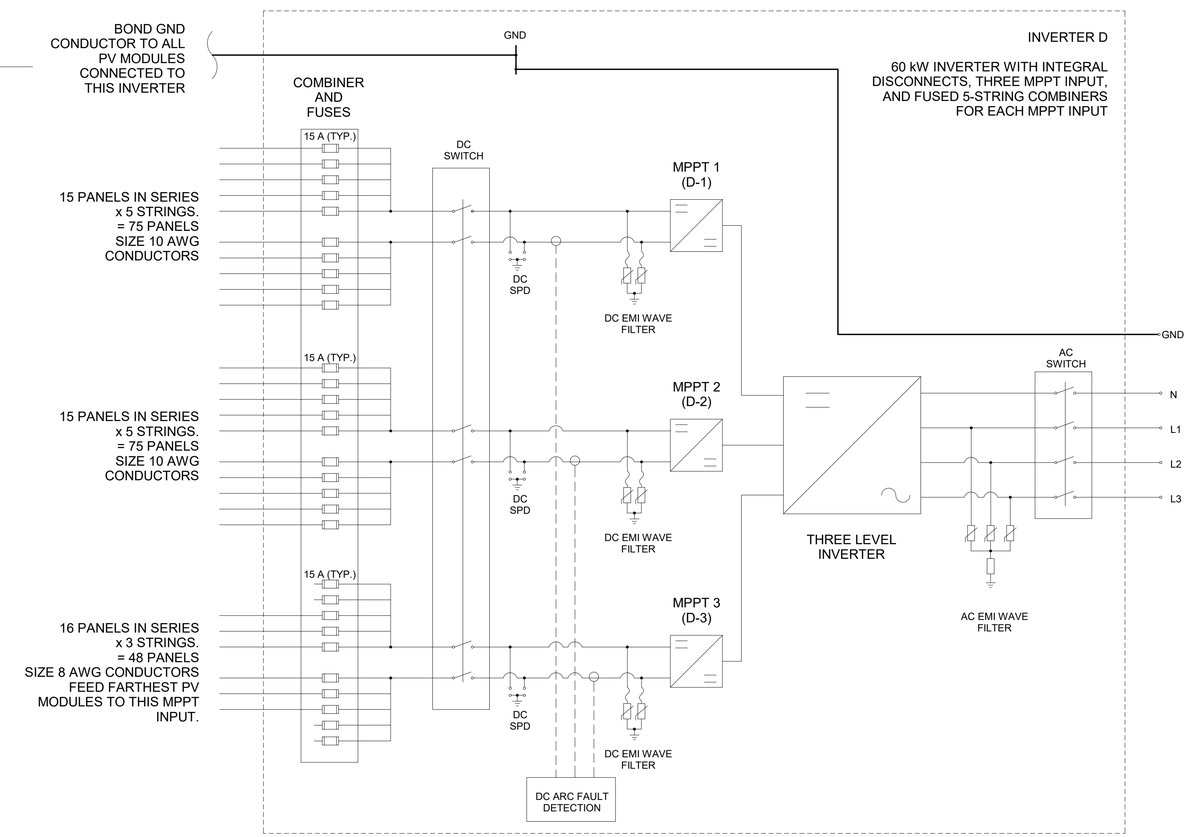

2 E-607

SOLAR PV SYSTEM DIAGRAM - INVERTER D

NOT TO SCALE

US Army Corps of Engineers ®

MARK	DESCRIPTION	DATE

DESIGNED BY: D. CARULLI
DRAWN BY: D. CARULLI
CHECKED BY: S. JONES
SUBMITTED BY: M. JOHN PARRISH
SIZE: ANSI: D'
FILE NAME: WESE_GTEB_Central.rvt
ISSUE DATE: 13 JUL 2020
PROJECT # 225-25-0665
SPEC # 2145
FILE NUMBER:

US ARMY CORPS OF ENGINEERS
SACRAMENTO DISTRICT
US DEPT OF ARMY

SACRAMENTO DISTRICT
IN-HOUSE DESIGN
1325 J STREET
SACRAMENTO, CA 95814

FT. HUACHUCA, ARIZONA
GROUND TRANSPORT EQUIPMENT BUILDING

SOLAR PV CIRCUIT DIAGRAMS (OPTION 2)

SHEET ID

E-607

RTA

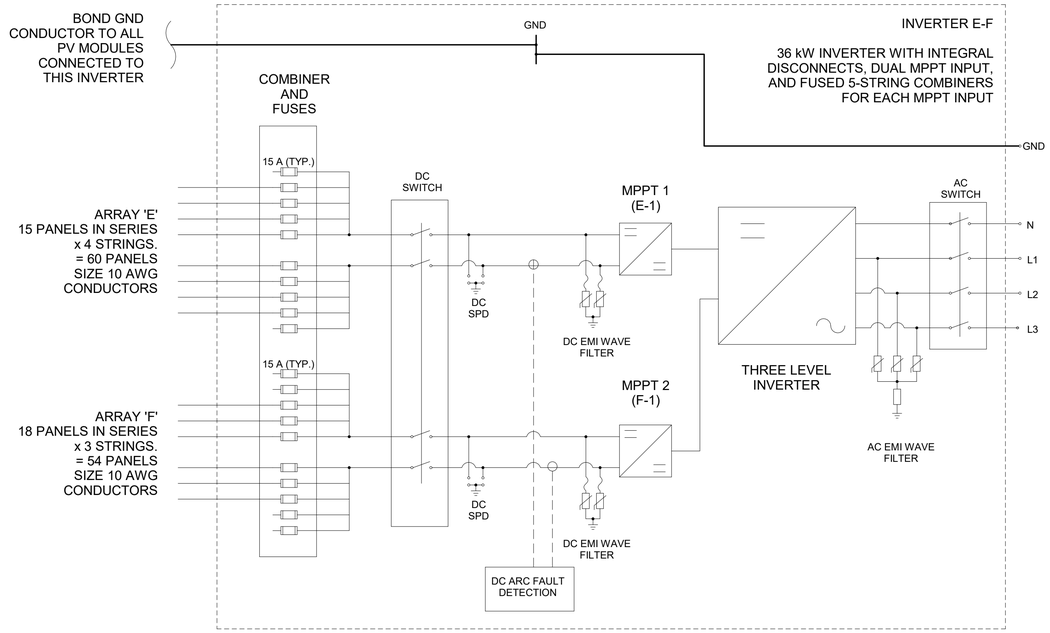

1 / E-608

SOLAR PV SYSTEM DIAGRAM - INVERTER E-F

NOT TO SCALE

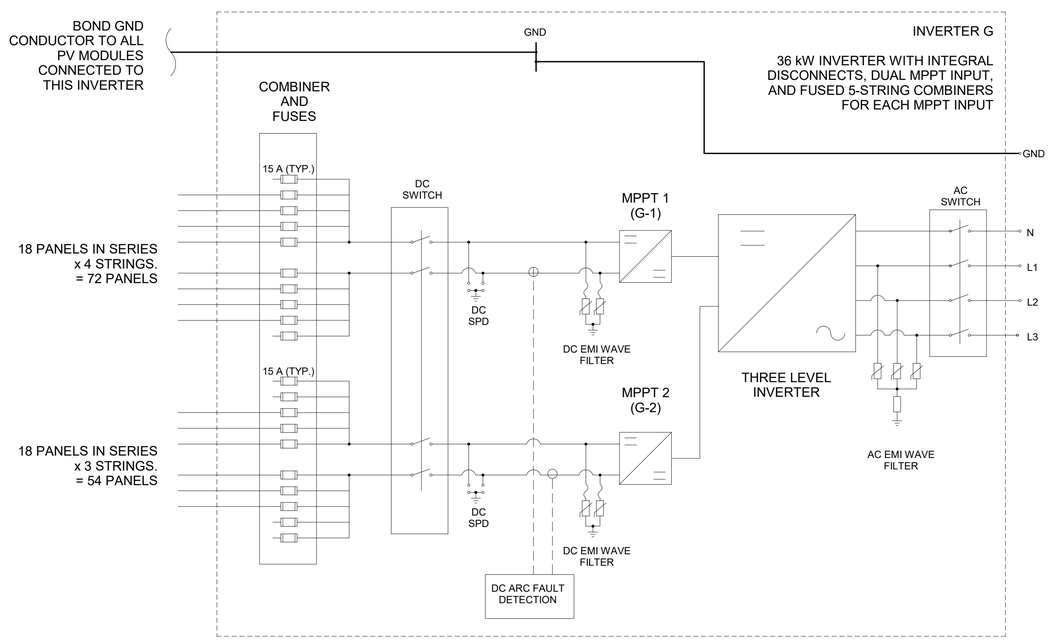

2 / E-608

SOLAR PV SYSTEM DIAGRAM - INVERTER G

NOT TO SCALE

GENERAL NOTES:

1. THE SOLAR PV SYSTEM IS BID OPTION 2. SEE MORE INFORMATION ON SHEET E-605.
2. THIS SHEET PROVIDED TO SHOW CIRCUITING AND INTERNAL REQUIREMENTS FOR SOLAR PV INVERTERS.
3. SINCE THE PV ARRAYS OF THE DIFFERENT CARPORTS HAVE DIFFERENT ORIENTATIONS, MULTIPLE INVERTERS (WITH MULTIPLE MPPT INPUTS) ARE REQUIRED SO THAT THE DEVIATED ORIENTATIONS DO NOT DEGRADE MAXIMUM OUTPUT BY THE MPPTS. REGARDLESS OF WHAT COMBINATION OF INVERTERS AND MPPT INPUTS ARE PROVIDED, ALL PV MODULES ON A SINGLE MPPT INPUT SHALL HAVE THEIR NORMAL VECTOR IN THE SAME DIRECTION.
4. SOLAR PV DRAWINGS SHOWN PRESENT ONE POSSIBLE SOLUTION. SINCE THIS IS A GOVERNMENT PROJECT, MANUFACTERER SPECIFIC COMPONENTS CANNOT BE SPECIFIED. IF CONTRACTOR SUPPLIED COMPONENTS FOR THE PV SYSTEM DEVIATE FROM WHAT IS SHOWN, CONTRACTOR SHALL BE RESPONSIBLE FOR MATCHING PV MODULE PROPERTIES AND STRING SIZES TO INVERTERS SELECTED, AND SUBMITTING SHOP DRAWINGS AND CALCULATIONS FOR APPROVAL PRIOR TO ORDERING COMPONENTS. ADHERE TO THE RULES DESCRIBED IN NOTE 2.
5. PV MODULES USED FOR BASIS OF DESIGN ARE MONOCRYSTALLINE, NOMINAL 340 W, 1000 V, 72 CELL, COMMERCIAL SIZE (78" X 39" NOMINAL). CONTRACTOR SUPPLIED PV MODULES MUST HAVE THESE SAME SPECIFICATIONS, EXCEPT THE NOMINAL WATTAGE MAY VARY SUCH THAT THE MINIMUM STC POWER RATING IS 335 W, AND MINIMUM NOCT POWER RATING IS 250 W.
6. AC OUTPUT OF ALL SOLAR PV INVERTERS SHALL BE 480 V, 3 PHASE, WYE CONNECTED.
7. DC INPUT OF ALL SOLAR PV INVERTERS SHALL BE 1000 V.
8. DC CONDUCTORS SHALL BE PV WIRE RATED 2 KV.
9. EQUIPMENT GROUNDING CONDUCTORS ON THE DC SIDE OF THE INVERTER SHALL BE 12 AWG, MINIMUM, AND SHALL BE PROTECTED IN ACCORDANCE WITH NEC ARTICLE 250.120 (C). EQUIPMENT GROUNDING CONDUCTORS SHALL BOND TO ALL PV MODULES AS WELL AS THE CONDUCTIVE PARTS OF SUPPORT STRUCTURES THE PV MODULES ARE MOUNTED TO.
10. SEE SHEET E-605 FOR AC CONNECTIONS AND CONDUCTOR SIZES.
11. PROVIDE DC GROUND FAULT PROTECTION IN ACCORDANCE WITH NEC ARTICLE 690.41(B)
12. ALL FUSES SHOWN SHALL BE PV FUSES RATED 1000 V MINIMUM.

SOLAR PV ARRAYS BREAKDOWN

ARRAY							INVERTER								MPPT INPUT SUBARRAYS							
ARRAY	PANELS WIDE	PANELS LONG	NON-RECT. ADJ.	TOTAL PANELS	TOTAL KW (STC)	TOTAL KW (NOCT)	INVERTER DESIGNATOR	NOMINAL WATTAGE	PANELS / INVERTER	Vmax	Vmin	Vstart	MPPT INPUTS	FUSES / MPPT	MPPT INPUT DESIGNATOR	PANELS / STRING	STRINGS	PANELS / MPPT INPUT	MPPT INPUT KW	TOTAL PANELS	CHECKSUM
A	6	41	0	**246**	**83.64**	**63.7878**	A1	36	**118**	1000	240	330	2	5	A1-1	18	3	**54**	**14.0022**	**246**	**GOOD**
															A1-2	16	4	**64**	**16.5952**		
							A2	36	**128**	1000	240	330	2	5	A2-1	16	4	**64**	**16.5952**		
															A2-2	16	4	**64**	**16.5952**		
B	6	28	0	**168**	**57.12**	**43.5624**	B	50	**168**	1000	200	330	3	5	B-1	15	4	**60**	**15.558**	**168**	**GOOD**
															B-2	15	4	**60**	**15.558**		
															B-3	16	3	**48**	**12.4464**		
C	6	15	0	**90**	**30.6**	**23.337**	C	28	**90**	1000	240	330	2	4	C-1	15	3	**45**	**11.6685**	**90**	**GOOD**
															C-2	15	3	**45**	**11.6685**		
D	6	33	0	**198**	**67.32**	**51.3414**	D	60	**198**	1000	200	330	3	5	D-1	15	5	**75**	**19.4475**	**198**	**GOOD**
															D-2	15	5	**75**	**19.4475**		
															D-3	16	3	**48**	**12.4464**		
E	6	10	0	**60**	**20.4**	**15.558**	E-F	36	**114**	1000	240	330	2	5	E-1	15	4	**60**	**15.558**	**60**	**GOOD**
F	6	9	0	**54**	**18.36**	**14.0022**									F-1	18	3	**54**	**14.0022**	**54**	**GOOD**
G	6	21	0	**126**	**42.84**	**32.6718**	G	36	**126**	1000	240	330	2	5	G-1	18	4	**72**	**18.6696**	**126**	**GOOD**
															G-2	18	3	**54**	**14.0022**		
GRAND TOTALS:				**942**	**320.28**	**244.2606**			**942**									**942**	**244.2606**	**942**	**GOOD**

US Army Corps of Engineers ®

MARK	DESCRIPTION	DATE

US ARMY CORPS OF ENGINEERS
SACRAMENTO DISTRICT
US DEPT OF ARMY

SACRAMENTO DISTRICT
IN-HOUSE DESIGN
1325 J STREET
SACRAMENTO, CA 95814

DESIGNED BY: D. CARULLI
DRAWN BY: D. CARULLI
CHECKED BY: S. JONES
SUBMITTED BY: M. JOHN P. PARRISH
SIZE: ANSI D'
FILE NAME: WESE_GTEB_Central.rvt
ISSUE DATE: 13 JUL 2020
PROJECT # 225-25-0665
SPEC # 2145
FILE NUMBER:

FT. HUACHUCA
GROUND TRANSPORT EQUIPMENT BUILDING
ARIZONA

SOLAR PV CIRCUIT DIAGRAMS (OPTION 2)

SHEET ID

E-608

RTA

Switchboard: MAIN PANELBOARD

Location: ELEC 120
Supply From: METER
Mounting: FLOOR - PROVIDE MIN 4" PAD
Enclosure: NEMA 1

Volts: 480/277 Wye
Phases: 3
Wires: 4

A.I.C. Rating: 22000
Mains Type: CU
Mains Rating: 1200.0 A
MCB Rating: 800.0 A

Notes:

CKT	Circuit Description	# of Poles	Frame Size	Trip Rating	Load	Remarks
1	SURGE PROTECTIVE DEVICE	3	--	30.0 A	0 VA	
2	T-2	2	100.0 A	60.0 A	60570 VA	
3	T-3	3	100.0 A	60.0 A	18799 VA	
4	T-5-EM	2	100.0 A	20.0 A	1050 VA	SEE NOTE 1 BELOW
5	T-4	3	400.0 A	300.0 A	142314 VA	
6	LP-1	3	100.0 A	60.0 A	30718 VA	
7	XP-5	3	600.0 A	500.0 A	1260 VA	SOLAR PV SYSTEM
8	PPH-3	3	225.0 A	200.0 A	140233 VA	
9	SPARE	3	--	100.0 A	0 VA	
10	SPARE	3	--	400.0 A	0 VA	
11	CHILLER CH-1	3	225.0 A	125.0 A	70000 VA	
12	PPH-2	3	100.0 A	90.0 A	51343 VA	
13	PPH-1	3	400.0 A	350.0 A	167475 VA	
14						
15						
16						
17						
18						
19						
20						
				Total Conn. Load:	683762 VA	
				Total Amps:	822.4 A	

Load Classification	Connected Load	Demand Factor	Estimated Demand	Panel Totals	
Lighting	20180 VA	100.00%	20180 VA		
Motor	438705 VA	100.00%	438705 VA	**Total Conn. Load:**	683762 VA
Other	0 VA	0.00%	0 VA	**Total Est. Demand:**	588639 VA
Power	103522 VA	54.83%	56761 VA	**Total Conn. Current:**	822.4 A
Lighting - Exterior	14436 VA	100.00%	14436 VA	**Total Est. Demand Current:**	708.0 A
Receptacle	106724 VA	54.68%	58362 VA		
Lighting - Exit Sign	145 VA	100.00%	145 VA		

Notes:

1. THIS CIRCUIT FEEDS THE DEDICATED EMERGENCY TRANSFORMER/PANEL COMBINATION POWERING THE FIRE ALARM/MNS. THIS SHALL BE A LOCK ON BREAKER PAINTED RED. PROVIDE A RED LAMINATED PLASTIC LABEL WITH WHITE CENTER CORE, READING "FIRE PROTECTION/LIFE SAFETY EQUIPMENT" PER UFC 3-520-01, SECTION 3-2.7.

Branch Panel: PPH-2

Location: MECHANICAL 131
Supply From: MAIN PANELBOARD
Mounting: Surface
Enclosure: NEMA 1

Volts: 480/277 Wye
Phases: 3
Wires: 4

A.I.C. Rating: 22000
Mains Type: CU
Mains Rating: 100.0 A
MCB Rating: 80.0 A

Notes:

CKT	Circuit Description	Trip	Poles	A		B		C		Poles	Trip	Circuit Description	CKT	
1				3718...	903 VA								2	
3	AHU-2 SUPPLY	20.0 A	3			3718...	903 VA			3	15.0 A	AHU-1 RETURN	4	
5								3718...	903 VA				6	
7				1275...	2921...								8	
9	AHU-2 RETURN	15.0 A	3			1275...	2921...			3	30.0 A	AHU-1 SUPPLY	10	
11								1275...	2921...				12	
13				2018...	2018...								14	
15	CWP-1	20.0 A	3			2018...	2018...			3	20.0 A	CWP-2	16	
17								2018...	2018...				18	
19				797 VA	797 VA								20	
21	HWP-1	15.0 A	3			797 VA	797 VA			3	15.0 A	HWP-2	22	
23								797 VA	797 VA				24	
25				0 VA									26	
27	SPARE	20.0 A	3			0 VA	3000...			1	20.0 A	UH-2	28	#10 P, #10 N, #10 GND
29								0 VA	5000...	1	25.0 A	UH-1	30	#10 P, #10 N, #10 GND
31				0 VA									32	
33	SPARE	20.0 A	3			0 VA							34	
35								0 VA					36	
37				0 VA									38	
39	SPARE	20.0 A	3			0 VA							40	
41								0 VA					42	
				Total Load:	14448 VA		17448 VA		19448 VA					
				Total Amps:	52.2 A		64.7 A		71.9 A					

Legend:

Load Classification	Connected Load	Demand Factor	Estimated Demand	Panel Totals	
Motor	43343 VA	100.00%	43343 VA		
Power	8000 VA	100.00%	8000 VA	**Total Conn. Load:**	51343 VA
				Total Est. Demand:	51343 VA
				Total Conn. Current:	61.8 A
				Total Est. Demand Current:	61.8 A

Notes:

Switchboard: MDP-2

Location: ELEC 120
Supply From: T-4
Mounting: FLOOR/PAD
Enclosure: NEMA 1

Volts: 120/208 Wye
Phases: 3
Wires: 4

A.I.C. Rating: 22000
Mains Type: CU
Mains Rating: 600.0 A
MCB Rating: 600.0 A

Notes:

CKT	Circuit Description	# of Poles	Frame Size	Trip Rating	Load	Remarks
1	PP-2	3	100.0 A	70.0 A	17700 VA	
2	PP-3	3	100.0 A	60.0 A	7130 VA	
3	PP-4	3	100.0 A	70.0 A	30551 VA	
4	PP-5	3	100.0 A	90.0 A	25010 VA	
5	PP-6	3	100.0 A	40.0 A	8850 VA	
6	PP-7	3	100.0 A	30.0 A	7640 VA	
7	XP-2	3	225.0 A	150.0 A	34794 VA	
8	XP-3	3	225.0 A	125.0 A	180 VA	SHORE POWER
9	XP-4	3	225.0 A	125.0 A	180 VA	SHORE POWER
10	SPARE	3	--	225.0 A	0 VA	
11	XP-6	3	100.0 A	50.0 A	10279 VA	
12	SPD	3	--	100.0 A	0 VA	
13						
14						
15						
16						
17						
18						
19						
20						
				Total Conn. Load:	142314 VA	
				Total Amps:	395.0 A	

Load Classification	Connected Load	Demand Factor	Estimated Demand	Panel Totals	
Lighting	699 VA	100.00%	699 VA		
Motor	51353 VA	100.00%	51353 VA	**Total Conn. Load:**	142314 VA
Other	0 VA	0.00%	0 VA	**Total Est. Demand:**	107183 VA
Power	36002 VA	63.89%	23001 VA	**Total Conn. Current:**	395.0 A
Receptacle	54260 VA	59.21%	32130 VA	**Total Est. Demand Current:**	297.5 A

Notes:

Branch Panel: LP-1

Location: ELEC 120
Supply From: MAIN PANELBOARD
Mounting: Surface
Enclosure: NEMA 1

Volts: 480/277 Wye
Phases: 3
Wires: 4

A.I.C. Rating: 22000
Mains Type: CU
Mains Rating: 100.0 A
MCB Rating: 60.0 A

Notes:

CKT	Circuit Description	Trip	Poles	A		B		C		Poles	Trip	Circuit Description	CKT	
1	EXTR LIGHTS - PED ACCESS/OVRFLO LOT	20.0 A	1	1428...	2278...					2	20.0 A	EXTERIOR FENCE PERIMETER LIGHTS	2	2 #4 P, #8 GND
3	EXTERIOR LIGHTS - SITE AREA INTERIOR	20.0 A	2			2479...	2278...						4	
5								2479...	1474...	2	20.0 A	EXTERIOR LIGHTING - SITE ACCESS AND POV PARKING	6	2 #4 P, #8 GND
7	EXTERIOR LIGHTS - BAYS	20.0 A	1	484 VA	1474...								8	
9	EXTERIOR LIGHTS - BAYS/FLUID DIST.	20.0 A	1			532 VA	155 VA			1	20.0 A	EXTERIOR LIGHTS - EXITS, ADMIN	10	
11	LTG - BAYS 1-4	20.0 A	1					3823...	168 VA	1	20.0 A	LTG - MECH YARD	12	
13	LTG - BAYS 5-8	20.0 A	1	3823...	83 VA					1	20.0 A	EXT. LTG - TRAINING	14	
15	LTG - ENTRY AND MAINTENANCE CORR.	20.0 A	1			361 VA	1914...			1	20.0 A	LTG - BAYS CENTER AISLE	16	#10 P, #10 N, #10 GND
17	LTG - RESTROOMS 104, 106, JAN.	20.0 A	1					208 VA	375 VA	1	20.0 A	LTG - TOOL RM. VESTIBULE, FLUID DIST.	18	
19	LTG - SIPR / OPEN STORAGE	20.0 A	1	312 VA	259 VA					1	20.0 A	LTG - BREAK, NURS. MOTHER, BREAK STO.	20	
21	LTG - COMM ROOMS	20.0 A	1			629 VA	842 VA			1	20.0 A	LTG - PROD. CONTROL/PRIVATE OFFICES	22	
23	LTG - TRAINING, SOUTH	20.0 A	1					933 VA	705 VA	1	20.0 A	LTG - ELEC, MAINTAINERS (8), PLL	24	
25	LTG - TRAINING RESTROOMS	20.0 A	1	128 VA	877 VA					1	20.0 A	LTG - TRAINING NORTH, STO.	26	
27	LTG - MECH ROOM	20.0 A	1			221 VA							28	
29													30	
31													32	
33													34	
35													36	
37					0 VA								38	
39							0 VA			3	30.0 A	SURGE PROTECTIVE DEVICE	40	
41									0 VA				42	
				Total Load:	11142 VA		9411 VA		10165 VA					
				Total Amps:	40.6 A		34.0 A		37.1 A					

#4 P, #4 N, #8 GND
2 #6 P, #8 GND
#6 P, #6 N, #8 GND

Legend:

Load Classification	Connected Load	Demand Factor	Estimated Demand	Panel Totals	
Lighting	16136 VA	100.00%	16136 VA		
Other	0 VA	0.00%	0 VA	**Total Conn. Load:**	30718 VA
Lighting - Exterior	14436 VA	100.00%	14436 VA	**Total Est. Demand:**	30718 VA
Lighting - Exit Sign	145 VA	100.00%	145 VA	**Total Conn. Current:**	36.9 A
				Total Est. Demand Current:	36.9 A

Notes:

SEE SHEET E-602 FOR NOTES

US Army Corps of Engineers ®

MARK	DESCRIPTION	DATE

ISSUE DATE: 13 JUL 2020
PROJECT # 225-25-0665
SPEC # 2145
FILE NUMBER:

DESIGNED BY: D. CARULLI
DRAWN BY: D. CARULLI
CHECKED BY: S. JONES

US ARMY CORPS OF ENGINEERS
SACRAMENTO DISTRICT
US DEPT OF ARMY

SUBMITTED BY: SUZANNE PARRISH
SIZE: FILE NAME: ANSI 'D' W65E_GTEB_Central.rvt

SACRAMENTO DISTRICT
IN-HOUSE DESIGN
1325 J STREET
SACRAMENTO, CA 95814

ARIZONA
FT. HUACHUCA
GROUND TRANSPORT EQUIPMENT BUILDING

PANEL SCHEDULES

SHEET ID

E-611

RTA

Branch Panel: DP-1

Location: ELEC 120
Supply From: T-2
Mounting: Surface
Enclosure: NEMA 1

Volts: 120/240 Single
Phases: 1
Wires: 3

A.I.C. Rating: 10000
Mains Type: CU
Mains Rating: 225.0 A
MCB Rating: 225.0 A

Notes:

CKT	Circuit Description	Trip	Poles	A		B		Poles	Trip	Circuit Description	CKT
1	PP-1	100.0 A	2	16487...	13888...			2	80.0 A	XP-1	2
3						16487...	13708...				4
5											6
7											8
9											10
11											12
			Total Load:	30375 VA		30195 VA					
			Total Amps:	253.1 A		251.6 A					

Legend:

Load Classification	Connected Load	Demand Factor	Estimated Demand	Panel Totals	
Motor	60390 VA	100.00%	60390 VA		
Power	0 VA	0.00%	0 VA	**Total Conn. Load:**	60570 VA
Receptacle	180 VA	100.00%	180 VA	**Total Est. Demand:**	60570 VA
				Total Conn. Current:	252.4 A
				Total Est. Demand Current:	252.4 A

Notes:

Branch Panel: PP-1

Location: BAYS 101
Supply From: DP-1
Mounting: Surface
Enclosure: NEMA 1

Volts: 120/240 Single
Phases: 1
Wires: 3

A.I.C. Rating: 10000
Mains Type: CU
Mains Rating: 100.0 A
MCB Rating: 100.0 A

Notes:

CKT	Circuit Description	Trip	Poles	A		B		Poles	Trip	Circuit Description	CKT
1	HR-1 - BAYS 1 AND 2	15.0 A	2	1127 VA	1127 VA			2	15.0 A	HR-1 - BAYS 5 AND 6	2
3						1127 VA	1127 VA				4
5	HR-1 - BAYS 3 AND 4	15.0 A	2	1127 VA	1127 VA			2	15.0 A	HR-1 - BAYS 7 AND 8	6
7						1127 VA	1127 VA				8
9	RD-1	20.0 A	2	924 VA	0 VA			2	15.0 A	SPARE	10
11						924 VA	0 VA				12
13	SPARE	20.0 A	2	0 VA							14
15						0 VA					16
17	SPARE	20.0 A	2	0 VA							18
19						0 VA					20
21	SPARE	20.0 A	2	0 VA							22
23						0 VA					24
25											26
27							1958 VA	2	45.0 A	12K LIFT BAY 5	28
29					1958 VA						30
31											32
33	12K LIFT BAY 1	45.0 A	2	1958 VA	1958 VA			2	45.0 A	12K LIFT BAY 6	34
35						1958 VA	1958 VA				36
37											38
39	12K LIFT BAY 2	45.0 A	2			1958 VA	3223 VA	2	80.0 A	27K LIFT BAY 7	40
41				1958 VA	3223 VA						42
			Total Load:	16487 VA		16487 VA					
			Total Amps:	137.4 A		137.4 A					

Legend:

Load Classification	Connected Load	Demand Factor	Estimated Demand	Panel Totals	
Motor	32974 VA	100.00%	32974 VA		
Power	0 VA	0.00%	0 VA	**Total Conn. Load:**	32974 VA
				Total Est. Demand:	32974 VA
				Total Conn. Current:	137.4 A
				Total Est. Demand Current:	137.4 A

Notes:

Branch Panel: XP-1

Location:
Supply From: DP-1
Mounting: Surface
Enclosure: NEMA 3

Volts: 120/240 Single
Phases: 1
Wires: 3

A.I.C. Rating: 10000
Mains Type: CU
Mains Rating: 225.0 A
MCB Rating: 125.0 A

Notes:
PROVIDE SURGE PROTECTOR. AS PART OF BID OPTION 4, PROVIDE THE 2 ADDITIONAL PRESSURE/STEAM WASHER RECEPTACLES.

CKT	Circuit Description	Trip	Poles	A		B		Poles	Trip	Circuit Description	CKT
1	PRESSURE WASHER RECEP. 1	30.0 A	2	3220 VA	3220 VA			2	30.0 A	PRESSURE WASHER RECEP. 2 (OPTION 4)	2
3						3220 VA	3220 VA				4
5	STEAM WASHER RECEP.	30.0 A	2	3220 VA	3220 VA			2	30.0 A	SPARE PRESSURE/STEAM WASHER (OPTION 4)	6
7						3220 VA	3220 VA				8
9	RECEP - WASH RACK	20.0 A	1	180 VA	828 VA			1	20.0 A	FUEL PUMP 1	10
11							828 VA	1	20.0 A	FUEL PUMP 2	12
13											14
15											16
17											18
19											20
21					0 VA			2	30.0 A	SURGE PROTECTIVE DEVICE	22
23							0 VA				24
			Total Load:	13888 VA		13708 VA					
			Total Amps:	115.7 A		114.2 A					

Legend:

Load Classification	Connected Load	Demand Factor	Estimated Demand	Panel Totals	
Motor	27416 VA	100.00%	27416 VA		
Receptacle	180 VA	100.00%	180 VA	**Total Conn. Load:**	27596 VA
				Total Est. Demand:	27596 VA
				Total Conn. Current:	115.0 A
				Total Est. Demand Current:	115.0 A

Notes:

Branch Panel: DP-EM-1

Location: ELEC 120
Supply From: T-5-EM
Mounting: Surface
Enclosure: NEMA 1

Volts: 120/240 Single
Phases: 1
Wires: 3

A.I.C. Rating: 10000
Mains Type: CU
Mains Rating: 100.0 A
MCB Rating: 60.0 A

Notes:
THIS DEDICATED EMERGENCY PANEL IS REQUIRED TO POWER FIRE PROTECTION SYSTEMS AT 120 V, PER UFC 3-520-01, SECTION 3-2.7, b. COMBINE PANEL WITH XFMR T-5-EM INTO A PACKAGED POWER SUPPLY. ENCLOSURE SHALL BE RED. PROVIDE RED LAMINATED PLASTIC LABEL WITH WHITE CENTER CORE, READING "FIRE PROTECTION/LIFE SAFETY EQUIPMENT."

	CKT	Circuit Description	Trip	Poles	A		B		Poles	Trip	Circuit Description	CKT
	1	24 VDC POWER SUPPLY FOR RELAY...	20.0 A	1	50 VA							2
#8 P, #8 N, #10 GND →	3	FACP/MNS	20.0 A	1			1000 VA					4
	5											6
	7											8
	9											10
	11											12
	13											14
	15											16
	17											18
	19											20
	21											22
	23											24
			Total Load:		50 VA		1000 VA					
			Total Amps:		0.4 A		8.3 A					

Legend:

Load Classification	Connected Load	Demand Factor	Estimated Demand	Panel Totals	
Power	1000 VA	100.00%	1000 VA		
				Total Conn. Load:	1050 VA
				Total Est. Demand:	1050 VA
				Total Conn. Current:	4.4 A
				Total Est. Demand Current:	4.4 A

Notes:
CONTRACTOR SHALL MATCH THE BREAKER FOR THE FIRE ALARM/MNS TO THE ACTUAL FIRE ALARM/MNS ELECTRICAL LOAD.

SEE SHEET E-602 FOR NOTES

US Army Corps of Engineers ®

MARK	DESCRIPTION	DATE

DESIGNED BY: D. CARULLI
DRAWN BY: D. CARULLI
CHECKED BY: S. JONES
SUBMITTED BY: M. JOHN PARRISH
SIZE: ANSI D'
FILE NAME: WISE_GTER_Central.rvt
ISSUE DATE: 13 JUL 2020
PROJECT # 225-25-0665
SPEC # 2145
FILE NUMBER:

US ARMY CORPS OF ENGINEERS
SACRAMENTO DISTRICT
US DEPT OF ARMY

SACRAMENTO DISTRICT
IN-HOUSE DESIGN
1325 J STREET
SACRAMENTO, CA 95814

FT. HUACHUCA, ARIZONA
GROUND TRANSPORT EQUIPMENT BUILDING

PANEL SCHEDULES

SHEET ID
E-612

RTA

Branch Panel: PP-2

Location: BAYS 101
Supply From: MDP-2
Mounting: Surface
Enclosure: NEMA 1

Volts: 120/208 Wye
Phases: 3
Wires: 4

A.I.C. Rating: 10000
Mains Type: CU
Mains Rating: 100.0 A
MCB Rating: 60.0 A

Notes:

CKT	Circuit Description	Trip	Poles	A		B		C		Poles	Trip	Circuit Description	CKT
1	RECPS. - NEMA 5-20R, NORTH BAY	20.0 A	1	900 VA	0 VA					--	--	SPACE	2
3	GFCI RECEPTACLES - BAY EXTERIOR	20.0 A	1			900 VA	0 VA			--	--	SPACE	4
5	SPARE	20.0 A	1					0 VA	900 VA	1	20.0 A	RECPS. - NEMA 5-20R, SOUTH BAY	6
7				0 VA	500 VA								8
9	SPARE	30.0 A	3			0 VA	500 VA			3	30.0 A	REC. - NEMA L15-30R, BAY 8 WALL	10
11								0 VA	500 VA				12
13				500 VA	500 VA								14
15	REC. - NEMA L15-30R, BAY 4 WALL	30.0 A	3			500 VA	500 VA			3	30.0 A	REC. - NEMA L15-30R, BAY 8	16
17								500 VA	500 VA				18
19				500 VA	500 VA								20
21	REC. - NEMA L15-30R, BAY 3	30.0 A	3			500 VA	500 VA			3	30.0 A	REC. - NEMA L15-30R, BAY 7	22
23								500 VA	500 VA				24
25				500 VA	500 VA								26
27	REC. - NEMA L15-30R, BAY 2	30.0 A	3			500 VA	500 VA			3	30.0 A	REC. - NEMA L15-30R, BAY 6	28
29								500 VA	500 VA				30
31				500 VA	500 VA								32
33	REC. - NEMA L15-30R, BAY 1	30.0 A	3			500 VA	500 VA			3	30.0 A	REC. - NEMA L15-30R, BAY 5	34
35								500 VA	500 VA				36
37				0 VA	500 VA								38
39	SURGE PROTECTIVE DEVICE	30.0 A	3			0 VA	500 VA			3	30.0 A	REC. - NEMA L15-30R, BAY 1 WALL	40
41								0 VA	500 VA				42
			Total Load:	5900 VA		5900 VA		5900 VA					
			Total Amps:	49.2 A		49.2 A		49.2 A					

Legend:

Load Classification	Connected Load	Demand Factor	Estimated Demand	Panel Totals	
Receptacle	17700 VA	78.25%	13850 VA		
				Total Conn. Load:	17700 VA
				Total Est. Demand:	13850 VA
				Total Conn. Current:	49.1 A
				Total Est. Demand Current:	38.4 A

Notes:

Branch Panel: PP-3

Location: BAYS 101
Supply From: MDP-2
Mounting: Surface
Enclosure: NEMA 1

Volts: 120/208 Wye
Phases: 3
Wires: 4

A.I.C. Rating: 10000
Mains Type: CU
Mains Rating: 100.0 A
MCB Rating: 50.0 A

Notes:

CKT	Circuit Description	Trip	Poles	A		B		C		Poles	Trip	Circuit Description	CKT
1				420 VA	0 VA					1	20.0 A	SPARE	2
3	VP-2	15.0 A	3			420 VA	0 VA			1	20.0 A	SPARE	4
5								420 VA	420 VA				6
7	RADIANT HEATER RECEPTACLES	20.0 A	1	288 VA	420 VA					3	15.0 A	VP-1	8
9							420 VA						10
11									0 VA	--	--	SPACE	12
13	SPARE	20.0 A	1	0 VA	0 VA					1	20.0 A	SPARE	14
15	SPARE	20.0 A	1			0 VA	0 VA			1	20.0 A	SPARE	16
17	SPARE	20.0 A	1					0 VA	0 VA	1	20.0 A	SPARE	18
19	SPARE	20.0 A	1	0 VA									20
21	SPARE	20.0 A	1			0 VA							22
23	SPACE	--	--					0 VA					24
25	SPACE	--	--	0 VA									26
27	SPACE	--	--			0 VA							28
29													30
31													32
33													34
35													36
37	POWER PEDESTAL - BAYS 1-2	20.0 A	1	720 VA	720 VA					1	20.0 A	POWER PEDESTAL - BAYS 5-6	38
39	POWER PEDESTAL - BAYS 2-3	20.0 A	1			720 VA	720 VA			1	20.0 A	POWER PEDESTAL - BAYS 6-7	40
41	POWER PEDESTAL - BAYS 3-4	20.0 A	1					720 VA	720 VA	1	20.0 A	POWER PEDESTAL - BAYS 7-8	42
			Total Load:	2569 VA		2281 VA		2281 VA					
			Total Amps:	21.4 A		19.0 A		19.0 A					

Legend:

Load Classification	Connected Load	Demand Factor	Estimated Demand	Panel Totals	
Motor	2522 VA	100.00%	2522 VA		
Power	288 VA	100.00%	288 VA	**Total Conn. Load:**	7130 VA
Receptacle	4320 VA	100.00%	4320 VA	**Total Est. Demand:**	7130 VA
				Total Conn. Current:	19.8 A
				Total Est. Demand Current:	19.8 A

Notes:

(#) CONDUCTOR SIZE NOTES:

THE FOLLOWING ARE MINIMUM CONDUCTOR SIZE DESIGNATIONS. THE CONDUCTORS MAY BE OVERSIZED TO ACCOUNT FOR VOLTAGE DROP.

1. 3 #4 P, #4 N, #8 GND (NOT USED)
2. 3 #6 P, #6 N, #8 GND
3. 3 #8 P, #8 N, #10 GND
4. 3 #10 P, #10 N, #10 GND
5. #4 P, #4 N, #8 GND (NOT USED)
6. #6 P, #6 N, #8 GND (NOT USED)
7. #8 P, #8 N, #10 GND
8. #10 P, #10 N, #10 GND

SEE SHEET E-602 FOR NOTES

Branch Panel: PP-4

Location: BAYS 101
Supply From: MDP-2
Mounting: Surface
Enclosure: NEMA 1

Volts: 120/208 Wye
Phases: 3
Wires: 4

A.I.C. Rating: 10000
Mains Type: CU
Mains Rating: 100.0 A
MCB Rating: 60.0 A

Notes:

CKT	Circuit Description	Trip	Poles	A		B		C		Poles	Trip	Circuit Description	CKT
1													2
3													4
5													6
7				0 VA									8
9	SPARE	0.0 A	3			0 VA							10
11								0 VA					12
13													14
15													16
17													18
19				1273...	1273...								20
21	BAY DOOR 1	15.0 A	3			1273...	1273...			3	15.0 A	BAY DOOR 5	22
23								1273...	1273...				24
25				1273...	1273...								26
27	BAY DOOR 2	15.0 A	3			1273...	1273...			3	15.0 A	BAY DOOR 6	28
29								1273...	1273...				30
31				1273...	1273...								32
33	BAY DOOR 3	15.0 A	3			1273...	1273...			3	15.0 A	BAY DOOR 7	34
35								1273...	1273...				36
37				1273...	1273...								38
39	BAY DOOR 4	15.0 A	3			1273...	1273...			3	15.0 A	BAY DOOR 8	40
41								1273...	1273...				42
			Total Load:	10184 VA		10184 VA		10184 VA					
			Total Amps:	84.9 A		84.9 A		84.9 A					

Legend:

Load Classification	Connected Load	Demand Factor	Estimated Demand	Panel Totals	
Motor	30551 VA	100.00%	30551 VA		
Power	0 VA	0.00%	0 VA	**Total Conn. Load:**	30551 VA
				Total Est. Demand:	30551 VA
				Total Conn. Current:	84.8 A
				Total Est. Demand Current:	84.8 A

Notes:

Branch Panel: PPH-1

Location: BAYS 101
Supply From: MAIN PANELBOARD
Mounting: Surface
Enclosure: NEMA 1

Volts: 480 Delta
Phases: 3
Wires: 3

A.I.C. Rating: 22000
Mains Type: CU
Mains Rating: 400.0 A
MCB Rating: 250.0 A

Notes:

CKT	Circuit Description	Trip	Poles	A		B		C		Poles	Trip	Circuit Description	CKT
1				1062...	2018...								2
3	35 TON CRANE	100.0 A	3			1062...	2018...			3	20.0 A	EF-2	4
5								1062...	2018...				6
7					5843...								8
9							5843...			3	35.0 A	MAU-1A	10
11									5843...				12
13				7171...	5843...								14
15	AC-2	70.0 A	3			7171...	5843...			3	35.0 A	MAU-1B	16
17								7171...	5843...				18
19	SPACE	--	--	0 VA	0 VA								20
21	SPACE	--	--			0 VA	0 VA			3	20.0 A	SPARE	22
23	SPACE	--	--					0 VA	0 VA				24
25				5577...	5577...								26
27	VEF-4	60.0 A	3			5577...	5577...			3	60.0 A	VEF-2	28
29								5577...	5577...				30
31				5577...	5577...								32
33	VEF-3	60.0 A	3			5577...	5577...			3	60.0 A	VEF-1	34
35								5577...	5577...				36
37				2018...	0 VA								38
39	EF-1	20.0 A	3			2018...	0 VA			3	30.0 A	SURGE PROTECTIVE DEVICE	40
41								2018...	0 VA				42
			Total Load:	55825 VA		55825 VA		55825 VA					
			Total Amps:	201.4 A		201.4 A		201.4 A					

Legend:

Load Classification	Connected Load	Demand Factor	Estimated Demand	Panel Totals	
Motor	167475 VA	100.00%	167475 VA		
Power	0 VA	0.00%	0 VA	**Total Conn. Load:**	167475 VA
				Total Est. Demand:	167475 VA
				Total Conn. Current:	201.4 A
				Total Est. Demand Current:	201.4 A

Notes:

US Army Corps of Engineers ®

MARK	DESCRIPTION	DATE

ISSUE DATE: 13 JUL 2020
PROJECT # 225-25-0665
SPEC # 2145
FILE NUMBER:

DESIGNED BY: D. CARULLI
DRAWN BY: D. CARULLI
CHECKED BY: S. JONES
SUBMITTED BY: SUZANNE T. PARISH
SIZE: ANSI 'D'
FILE NAME: W05E_GTEB_Central.rvt

US ARMY CORPS OF ENGINEERS
SACRAMENTO DISTRICT
US DEPT OF ARMY

SACRAMENTO DISTRICT
IN-HOUSE DESIGN
1325 J STREET
SACRAMENTO, CA 95814

ARIZONA
FT. HUACHUCA
GROUND TRANSPORT EQUIPMENT BUILDING

PANEL SCHEDULES

SHEET ID

E-613

RTA

Branch Panel: PP-5

Location: ELEC 120
Supply From: MDP-2
Mounting: Surface
Enclosure: NEMA 1

Volts: 120/208 Wye
Phases: 3
Wires: 4

A.I.C. Rating: 10000
Mains Type: CU
Mains Rating: 100.0 A
MCB Rating: 80.0 A

Notes:

CKT	Circuit Description	Trip	Poles	A		B		C		Poles	Trip	Circuit Description	CKT
1		15.0 A	3	552 VA	0 VA					1	20.0 A	SPARE	2
3	ROLLUP DOOR FLUID DIST.					552 VA	65 VA			1	20.0 A	LTG - SHOWERS	4
5								552 VA	41 VA	1	20.0 A	LTG - ACCENT, ENTRY/BREAK RM	6
7					1080...					1	20.0 A	RECPS - PRODUCTION CONTROL 128	8
9							1080...			1	20.0 A	RECPS - PRODUCTION CONTROL 128	10
11		20.0 A	1					506 VA	1080...	1	20.0 A	RECPS - TOOL ROOM 125	12
13	EF-5	15.0 A	1	667 VA	1620...					1	20.0 A	RECPS - MAINTAINERS 121	14
15	EF-7	15.0 A	1			667 VA	1440...			1	20.0 A	RECPS - PLL 122	16
17								552 VA	370 VA	1	20.0 A	REC - DRINKING FOUNT. CORR 103	18
19	ROLLUP DOOR PLL	15.0 A	3	552 VA	900 VA					1	20.0 A	REC - CORRIDOR 103	20
21						552 VA	720 VA			1	20.0 A	RECPS - ELEC 120	22
23	RECPS - MAINTAINERS 121	20.0 A	1					1620...	900 VA	1	20.0 A	RECPS - RR/JAN - 104, 106, 108	24
25	RECP - COPIER/PRINTER 121	20.0 A	1	180 VA	900 VA					1	20.0 A	RECPS - BREAK 109	26
27	RECPS - SIPR/OPEN STOR. 119	20.0 A	1			1440...	180 VA			1	20.0 A	REC - FRIDGE BREAK 109	28
29	COUNTERTOP RECP - BREAK 109	20.0 A	1					1500...					30
31	COUNTERTOP RECP - BREAK 109	20.0 A	1	1500...									32
33	RECPS - OFFICE 129	20.0 A	1			900 VA							34
35													36
37	RECPS - OFFICE 130	20.0 A	1	900 VA	0 VA								38
39	RECPS - NURSING MOTHER 110	20.0 A	1			720 VA	0 VA			3	30.0 A	SURGE PROTECTIVE DEVICE	40
41	RECPS - BREAK STOR./BREAK 111, 112	20.0 A	1					720 VA	0 VA				42
			Total Load:	8852 VA		8317 VA		7841 VA					
			Total Amps:	74.4 A		69.9 A		65.3 A					

Legend:

Load Classification	Connected Load	Demand Factor	Estimated Demand	Panel Totals	
Lighting	106 VA	100.00%	106 VA		
Motor	5154 VA	100.00%	5154 VA	**Total Conn. Load:**	25010 VA
Other	0 VA	0.00%	0 VA	**Total Est. Demand:**	20135 VA
Power	0 VA	0.00%	0 VA	**Total Conn. Current:**	69.4 A
Receptacle	19750 VA	75.32%	14875 VA	**Total Est. Demand Current:**	55.9 A

Notes:

Branch Panel: PP-6

Location: TRAINING 114
Supply From: MDP-2
Mounting: Recessed
Enclosure: NEMA 1

Volts: 120/208 Wye
Phases: 3
Wires: 4

A.I.C. Rating: 10000
Mains Type: CU
Mains Rating: 100.0 A
MCB Rating: 35.0 A

Notes:
THIS PANEL AND ALL LOADS IT SERVES ARE PART OF BID OPTION 3.

CKT	Circuit Description	Trip	Poles	A		B		C		Poles	Trip	Circuit Description	CKT
1	RECPS - TRAIN RESTROOMS	20.0 A	1	360 VA	720 VA					1	20.0 A	RECPS - TRAIN 114, NORTH WALL	2
3	RECPS - TRAIN 114, WEST WALL	20.0 A	1			1260...	1080...			1	20.0 A	RECPS - TRAIN 114, SOUTH WALL	4
5	RECPS - TRAIN 114, EAST WALL	20.0 A	1					1080...	345 VA	1	20.0 A	EF-4	6
7	RECPS - TRAIN 114, FLOOR BOXES	20.0 A	1	900 VA	720 VA					1	20.0 A	REC - EXTR. BLDG. - TRAINING	8
9	RECPS - TRAIN 114, FLOOR BOXES	20.0 A	1			900 VA	370 VA			1	20.0 A	REC - DRINKING FOUNT. TRAIN 114	10
11									540 VA	1	20.0 A	RECPS - STO. 117	12
13													14
15													16
17	PROJECTOR SCREEN MOTORS - TRAIN....	20.0 A	1					575 VA					18
19													20
21													22
23													24
25													26
27													28
29													30
			Total Load:	2700 VA		3610 VA		2540 VA					
			Total Amps:	22.7 A		30.3 A		21.2 A					

Legend:

Load Classification	Connected Load	Demand Factor	Estimated Demand	Panel Totals	
Motor	920 VA	100.00%	920 VA		
Other	0 VA	0.00%	0 VA	**Total Conn. Load:**	8850 VA
Power	0 VA	0.00%	0 VA	**Total Est. Demand:**	8850 VA
Receptacle	7930 VA	100.00%	7930 VA	**Total Conn. Current:**	24.6 A
				Total Est. Demand Current:	24.6 A

Notes:

Branch Panel: PP-7

Location: MECHANICAL 131
Supply From: MDP-2
Mounting: Surface
Enclosure: NEMA 1

Volts: 120/208 Wye
Phases: 3
Wires: 4

A.I.C. Rating: 10000
Mains Type: CU
Mains Rating: 100.0 A
MCB Rating: 30.0 A

Notes:

CKT	Circuit Description	Trip	Poles	A		B		C		Poles	Trip	Circuit Description	CKT	
1	GAS METER	20.0 A	1	20 VA	1260...					1	20.0 A	RECPS - EXTR. BLDG. - ADMIN SIDE	2	
3	WATER METER	20.0 A	1			20 VA	1127...			1	25.0 A	EF-6	4	
5	REC - WATER SOFTENER, MECH 115	20.0 A	1					20 VA	828 VA	1	15.0 A	BOILER (B-1)	6	
7					20 VA					1	20.0 A	BOILER CONTROLS	8	
9													10	
11	RECPS - MECH RM. 131	20.0 A	1					720 VA					12	
13													14	
15							288 VA			1	20.0 A	RCP-1	16	
17													18	
19													20	
21													22	
23									180 VA	1	20.0 A	REC - EXT. DOCK LEVELER, NEMA 5-20R	24	
25					500 VA								26	
27							500 VA			3	30.0 A	REC - EXT. DOCK LEVELER, NEMA L21-30R	28	← 3 #10 P, #10 N #10 GND
29									500 VA				30	
31					552 VA								32	
33							552 VA			3	20.0 A	DOCK LEVELER MOTOR	34	
35									552 VA				36	
37					0 VA								38	
39							0 VA			3	30.0 A	SURGE PROTECTIVE DEVICE	40	
41									0 VA				42	
			Total Load:	2352 VA		2487 VA		2800 VA						
			Total Amps:	19.6 A		20.9 A		23.5 A						

Legend:

Load Classification	Connected Load	Demand Factor	Estimated Demand	Panel Totals	
Motor	3900 VA	100.00%	3900 VA		
Power	80 VA	100.00%	80 VA	**Total Conn. Load:**	7640 VA
Receptacle	3660 VA	100.00%	3660 VA	**Total Est. Demand:**	7640 VA
				Total Conn. Current:	21.2 A
				Total Est. Demand Current:	21.2 A

Notes:

SEE SHEET E-602 FOR NOTES

US Army Corps of Engineers ®

MARK	DESCRIPTION	DATE

DESIGNED BY: D. CARULLI
DRAWN BY: D. CARULLI
CHECKED BY: S. JONES
SUBMITTED BY: W. JOHN PARISH
SIZE: ANSI D
FILE NAME: WISE_GTER_Central.rvt
ISSUE DATE: 13 JUL 2020
PROJECT # 225-25-0665
SPEC # 2145
FILE NUMBER:

US ARMY CORPS OF ENGINEERS
SACRAMENTO DISTRICT
US DEPT OF ARMY

SACRAMENTO DISTRICT
IN-HOUSE DESIGN
1325 J STREET
SACRAMENTO, CA 95814

FT. HUACHUCA
GROUND TRANSPORT EQUIPMENT BUILDING
ARIZONA

PANEL SCHEDULES

SHEET ID
E-614

RTA

Branch Panel: DP-2

Location: ELEC 120
Supply From: T-3
Mounting: Surface
Enclosure: NEMA 1

Volts: 120/208 Wye
Phases: 3
Wires: 4

A.I.C. Rating: 10000
Mains Type: CU
Mains Rating: 225.0 A
MCB Rating: 150.0 A

Notes:
THIS DISTRIBUTION PANEL FEEDS PANELS THAT PRIMARILY HAVE NON-LINEAR LOADS. THIS PANEL SHALL BE RATED AND LISTED AS SUITABLE FOR NON-LINEAR LOADS. PROVIDE 200% NEUTRAL. SEE SPEC SECTION 26 20 00.

CKT	Circuit Description	Trip	Poles	A		B		C		Poles	Trip	Circuit Description	CKT
1				3040...	0 VA								2
3	PP-8	60.0 A	3			3805...	0 VA			3	100.0 A	PP-10	4
5								3805...	0 VA				6
7				2945...									8
9	PP-9	60.0 A	3			3305...							10
11								1900...					12
13													14
15													16
17													18
19													20
21													22
23													24
25													26
27													28
29													30
			Total Load:	5985 VA		7110 VA		5705 VA					
			Total Amps:	50.2 A		59.6 A		47.5 A					

Legend:

Load Classification	Connected Load	Demand Factor	Estimated Demand	Panel Totals	
Motor	7779 VA	100.00%	7779 VA		
Power	1000 VA	100.00%	1000 VA	**Total Conn. Load:**	18799 VA
Receptacle	10020 VA	99.90%	10010 VA	**Total Est. Demand:**	18789 VA
				Total Conn. Current:	52.2 A
				Total Est. Demand Current:	52.2 A

Notes:

Branch Panel: PP-9

Location: NEC COMM 124
Supply From: DP-2
Mounting: Surface
Enclosure: NEMA 1

Volts: 120/208 Wye
Phases: 3
Wires: 4

A.I.C. Rating: 10000
Mains Type: CU
Mains Rating: 100.0 A
MCB Rating: 50.0 A

Notes:
THIS PANEL SERVES ALL LOADS FOR THE NEC COMMUNICATIONS ROOM, 129, EXCLUDING LIGHTING. THIS PANEL SHALL BE RATED AND LISTED AS SUITABLE FOR NON-LINEAR LOADS. PROVIDE 200% NEUTRAL. SEE SPEC SECTION 26 20 00. PROVIDE SURGE PROTECTOR.

CKT	Circuit Description	Trip	Poles	A		B		C		Poles	Trip	Circuit Description	CKT
1	COMM RACK REC. 42U-NEC1, L5-20R	20.0 A	1	500 VA	1945...					2	40.0 A	FCU-1	2
3	COMM RACK REC. 42U-NEC1, L14-30R	20.0 A	2			500 VA	1945...						4
5								500 VA	0 VA	--	--	SPACE	6
7	COMM RACK REC. 42U-NEC2, L5-20R	20.0 A	1	500 VA	0 VA					--	--	SPACE	8
9	COMM RACK REC. 42U-NEC2, L14-30R	20.0 A	2			500 VA	0 VA			1	20.0 A	SPARE	10
11								500 VA	180 VA	1	20.0 A	RECEPTACLE - DUPLEX	12
13													14
15							360 VA			1	20.0 A	RECEPTACLE - QUADRUPLEX	16
17									360 VA	1	20.0 A	RECEPTACLE - QUADRUPLEX	18
19	SPARE	20.0 A	1	0 VA	0 VA					1	20.0 A	SPARE	20
21	SPARE	20.0 A	2			0 VA	0 VA			1	20.0 A	SPARE	22
23								0 VA	360 VA	1	20.0 A	RECEPTACLE - QUADRUPLEX	24
25					0 VA					3	30.0 A	SURGE PROTECTIVE DEVICE	26
27							0 VA						28
29									0 VA				30
			Total Load:	2945 VA		3305 VA		1900 VA					
			Total Amps:	25.9 A		28.9 A		15.8 A					

Legend:

Load Classification	Connected Load	Demand Factor	Estimated Demand	Panel Totals	
Motor	3890 VA	100.00%	3890 VA		
Receptacle	4260 VA	100.00%	4260 VA	**Total Conn. Load:**	8150 VA
				Total Est. Demand:	8150 VA
				Total Conn. Current:	22.6 A
				Total Est. Demand Current:	22.6 A

Notes:

Branch Panel: PP-8

Location: EPG COMM 123
Supply From: DP-2
Mounting: Surface
Enclosure: NEMA 1

Volts: 120/208 Wye
Phases: 3
Wires: 4

A.I.C. Rating: 10000
Mains Type: CU
Mains Rating: 100.0 A
MCB Rating: 50.0 A

Notes:
THIS PANEL SERVES ALL LOADS FOR THE EPG COMMUNICATIONS ROOM, 118, EXCLUDING LIGHTING. THIS PANEL SHALL BE RATED AND LISTED AS SUITABLE FOR NON-LINEAR LOADS. PROVIDE 200% NEUTRAL. SEE SPEC SECTION 26 20 00. PROVIDE SURGE PROTECTOR.

CKT	Circuit Description	Trip	Poles	A		B		C		Poles	Trip	Circuit Description	CKT
1	COMM RACK REC. 42U-EPG1, L5-20R	20.0 A	1	500 VA	500 VA					1	20.0 A	UPS FOR DVR	2
3	COMM RACK REC. 42U-EPG1, L14-30R	20.0 A	2			500 VA	1945...			2	40.0 A	FCU-2	4
5								500 VA	1945...				6
7	COMM RACK REC. 42U-EPG2, L5-20R	20.0 A	1	500 VA	500 VA					1	20.0 A	ACCESS CONTROL SYSTEM PANEL	8
9	COMM RACK REC. 42U-EPG2, L14-30R	20.0 A	2			500 VA							10
11								500 VA					12
13	COMM RACK REC. 42U-EPG3, L5-20R	20.0 A	1	500 VA	360 VA					1	20.0 A	RECEPTACLE - QUADRUPLEX	14
15	COMM RACK REC. 42U-EPG3, L14-30R	20.0 A	2			500 VA	360 VA			1	20.0 A	RECEPTACLE - QUADRUPLEX	16
17								500 VA	360 VA	1	20.0 A	RECEPTACLE - QUADRUPLEX	18
19					180 VA					1	20.0 A	RECEPTACLE - DUPLEX	20
21													22
23													24
25	SPARE	0.0 A	1	0 VA	0 VA					3	30.0 A	SURGE PROTECTIVE DEVICE	26
27	SPARE	20.0 A	2			0 VA	0 VA						28
29								0 VA	0 VA				30
			Total Load:	3040 VA		3805 VA		3805 VA					
			Total Amps:	25.3 A		32.7 A		32.7 A					

Legend:

Load Classification	Connected Load	Demand Factor	Estimated Demand	Panel Totals	
Motor	3890 VA	100.00%	3890 VA		
Power	1000 VA	100.00%	1000 VA	**Total Conn. Load:**	10650 VA
Receptacle	5760 VA	100.00%	5760 VA	**Total Est. Demand:**	10650 VA
				Total Conn. Current:	29.6 A
				Total Est. Demand Current:	29.6 A

Notes:
PROVIDE SHUNT TRIP MAIN BREAKER, ACTIVATED BY THE ELECTRONIC EQUIPMENT SHUTDOWN SWITCH RELAY. SEE SINGLE LINE DIAGRAM.

Branch Panel: PP-10

Location: TRAINING 114
Supply From: DP-2
Mounting: Surface
Enclosure: NEMA 1

Volts: 120/208 Wye
Phases: 3
Wires: 4

A.I.C. Rating: 10000
Mains Type: CU
Mains Rating: 100.0 A
MCB Rating: 100.0 A

Notes:
THIS PANEL IS PART OF BID OPTION 3. IT IS PROVIDED TO SERVE AUDIO/VISUAL EQUIPMENT IN THE TRAINING ROOM. THIS PANEL SHALL BE RATED AND LISTED AS SUITABLE FOR NON-LINEAR LOADS. PROVIDE 200% NEUTRAL. SEE SPEC SECTION 26 20 00. PROVIDE SURGE PROTECTOR.

CKT	Circuit Description	Trip	Poles	A		B		C		Poles	Trip	Circuit Description	CKT
1													2
3													4
5													6
7													8
9													10
11													12
13													14
15													16
17													18
19				0 VA									20
21	SURGE PROTECTIVE DEVICE	30.0 A	3			0 VA							22
23								0 VA					24
			Total Load:	0 VA		0 VA		0 VA					
			Total Amps:	0.0 A		0.0 A		0.0 A					

Legend:

Load Classification	Connected Load	Demand Factor	Estimated Demand	Panel Totals	
				Total Conn. Load:	0 VA
				Total Est. Demand:	0 VA
				Total Conn. Current:	0.0 A
				Total Est. Demand Current:	0.0 A

Notes:

SEE SHEET E-602 FOR NOTES

US Army Corps of Engineers ®

MARK	DESCRIPTION	DATE

ISSUE DATE: 13 JUL 2020
PROJECT # 225-25-0665
SPEC # 2145
FILE NUMBER:

DESIGNED BY: D. CARULLI
DRAWN BY: D. CARULLI
CHECKED BY: S. JONES
SUBMITTED BY: SUZANNE PARRISH
SIZE: ANSI 'D' FILE NAME: W05E_GTEB_Central.rvt

US ARMY CORPS OF ENGINEERS
SACRAMENTO DISTRICT
US DEPT OF ARMY

SACRAMENTO DISTRICT
IN-HOUSE DESIGN
1325 J STREET
SACRAMENTO, CA 95814

ARIZONA
FT. HUACHUCA
GROUND TRANSPORT EQUIPMENT BUILDING

PANEL SCHEDULES

SHEET ID
E-615

RTA

Branch Panel: XP-2

Location:
Supply From: MDP-2
Mounting: Surface
Enclosure: NEMA 3

Volts: 120/208 Wye
Phases: 3
Wires: 4

A.I.C. Rating: 10000
Mains Type: CU
Mains Rating: 225.0 A
MCB Rating: 125.0 A

Notes:
PROVIDE SURGE PROTECTOR

CKT	Circuit Description	Trip	Poles	A		B		C		Poles	Trip	Circuit Description	CKT
1	GATE MOTOR WEST	15.0 A	3	552 VA	552 VA					3	15.0 A	GATE MOTOR EAST	2
3						552 VA	552 VA						4
5								552 VA	552 VA				6
7	ELECTRIC VEHICLE CHARGING STATION	40.0 A	2	3120...	3120...					2	20.0 A	ELECTRIC VEHICLE CHARGING STATION	8
9						3120...	3120...						10
11	ELECTRIC VEHICLE CHARGING STATION	40.0 A	2					3120...	180 VA	1	20.0 A	GFCI RECEPTACLE	12
13				3120...									14
15	ELECTRIC VEHICLE CHARGING STATION	40.0 A	2			3120...							16
17								3120...	100 VA	1	20.0 A	PEDESTRIAN GATE - ACCESS CONTROLS	18
19	ELECTRIC VEHICLE CHARGING STATION	40.0 A	2		0 VA					3	30.0 A	SURGE PROTECTIVE DEVICE	20
21						3120...	0 VA						22
23								3120...	0 VA				24
			Total Load:	10465 VA		13585 VA		10745 VA					
			Total Amps:	87.2 A		113.6 A		89.9 A					

Legend:

Load Classification	Connected Load	Demand Factor	Estimated Demand	Panel Totals	
Motor	3314 VA	100.00%	3314 VA		
Power	31300 VA	65.97%	20650 VA	**Total Conn. Load:**	34794 VA
Receptacle	180 VA	100.00%	180 VA	**Total Est. Demand:**	24144 VA
				Total Conn. Current:	96.6 A
				Total Est. Demand Current:	67.0 A

Notes:
ELECTRIC VEHICLE CHARGING STATIONS SHALL BE WIRED WITH MINIMUM 2 #6 P, #6 N, AND #10 GND.

Branch Panel: XP-3

Location:
Supply From: MDP-2
Mounting: Surface
Enclosure: NEMA 3

Volts: 120/208 Wye
Phases: 3
Wires: 4

A.I.C. Rating: 10000
Mains Type: CU
Mains Rating: 100.0 A
MCB Rating: 100.0 A

Notes:
PROVIDE SURGE PROTECTOR

CKT	Circuit Description	Trip	Poles	A		B		C		Poles	Trip	Circuit Description	CKT
1	GFCI RECEPTACLE	20.0 A	1	180 VA									2
3													4
5													6
7	SURGE PROTECTIVE DEVICE	30.0 A	3	0 VA									8
9						0 VA							10
11								0 VA					12
			Total Load:	180 VA		0 VA		0 VA					
			Total Amps:	1.5 A		0.0 A		0.0 A					

Legend:

Load Classification	Connected Load	Demand Factor	Estimated Demand	Panel Totals	
Receptacle	180 VA	100.00%	180 VA		
				Total Conn. Load:	180 VA
				Total Est. Demand:	180 VA
				Total Conn. Current:	0.5 A
				Total Est. Demand Current:	0.5 A

Notes:

Branch Panel: XP-4

Location:
Supply From: MDP-2
Mounting: Surface
Enclosure: NEMA 3

Volts: 120/208 Wye
Phases: 3
Wires: 4

A.I.C. Rating: 10000
Mains Type: CU
Mains Rating: 100.0 A
MCB Rating: 100.0 A

Notes:
PROVIDE SURGE PROTECTOR

CKT	Circuit Description	Trip	Poles	A		B		C		Poles	Trip	Circuit Description	CKT
1	GFCI RECEPTACLE	20.0 A	1	180 VA									2
3													4
5													6
7	SURGE PROTECTIVE DEVICE	30.0 A	3	0 VA									8
9						0 VA							10
11								0 VA					12
			Total Load:	180 VA		0 VA		0 VA					
			Total Amps:	1.5 A		0.0 A		0.0 A					

Legend:

Load Classification	Connected Load	Demand Factor	Estimated Demand	Panel Totals	
Receptacle	180 VA	100.00%	180 VA		
				Total Conn. Load:	180 VA
				Total Est. Demand:	180 VA
				Total Conn. Current:	0.5 A
				Total Est. Demand Current:	0.5 A

Notes:

Branch Panel: XP-5

Location:
Supply From: MAIN PANELBOARD
Mounting: GROUND/PAD
Enclosure: NEMA 3

Volts: 480/277 Wye
Phases: 3
Wires: 4

A.I.C. Rating: 22000
Mains Type: CU
Mains Rating: 600.0 A
MCB Rating: 450.0 A

Notes:
PANEL XP-5 IS PART OF BID OPTION 2. IT IS AN EXTERIOR PANEL LOCATED AT THE OVERFLOW PARKING LOT WITH THE SOLAR PV PANELS. IT CONNECTS THE SOLAR PV INVERTERS TO THE GTEB MAIN ELECTRICAL ROOM. PROVIDE SURGE PROTECTOR.

CKT	Circuit Description	Trip	Poles	A		B		C		Poles	Trip	Circuit Description	CKT
1	INVERTER A1, 36 KW	60.0 A	3	0 VA	0 VA					3	100.0 A	INVERTER D, 60 KW	2
3						0 VA	0 VA						4
5								0 VA	0 VA				6
7	INVERTER A2, 36 KW	60.0 A	3	0 VA	0 VA					3	60.0 A	INVERTER E-F, 36 KW	8
9						0 VA	0 VA						10
11								0 VA	0 VA				12
13	INVERTER B, 50 KW	90.0 A	3	0 VA	0 VA					3	60.0 A	INVERTER G, 36 KW	14
15						0 VA	0 VA						16
17								0 VA	0 VA				18
19	INVERTER C, 28 KW	45.0 A	3	0 VA	0 VA					3	60.0 A	SPARE	20
21						0 VA	0 VA						22
23								0 VA	0 VA				24
25	SPACE	--	--	0 VA	0 VA					3	60.0 A	SPARE	26
27	SPACE	--	--			0 VA	0 VA						28
29	SPACE	--	--					0 VA	0 VA				30
31	T-8	20.0 A	2	1260...	0 VA					--	--	SPACE	32
33						0 VA	0 VA			--	--	SPACE	34
35									0 VA	--	--	SPACE	36
37	SURGE PROTECTIVE DEVICE	30.0 A	3	0 VA									38
39						0 VA							40
41								0 VA					42
			Total Load:	1260 VA		0 VA		0 VA					
			Total Amps:	4.5 A		0.0 A		0.0 A					

Legend:

Load Classification	Connected Load	Demand Factor	Estimated Demand	Panel Totals	
Receptacle	1260 VA	100.00%	1260 VA		
				Total Conn. Load:	1260 VA
				Total Est. Demand:	1260 VA
				Total Conn. Current:	1.5 A
				Total Est. Demand Current:	1.5 A

Notes:

Branch Panel: XP-7

Location:
Supply From: T-8
Mounting: Surface
Enclosure: NEMA 3

Volts: 120/240 Single
Phases: 1
Wires: 3

A.I.C. Rating: 10000
Mains Type: CU
Mains Rating: 100.0 A
MCB Rating: 60.0 A

Notes:
XP-7 IS PART OF BID OPTION 2. XP-7 IS A MINI LOAD CENTER, COMBINED WITH T-8. THIS TRANSFORMER IS TO FEED 120 V MAINTENANCE RECEPTACLES FOR THE PV SYSTEM. PROVIDE ONE RECEPTACLE NEAR EACH PV INVERTER.

CKT	Circuit Description	Trip	Poles	A		B		Poles	Trip	Circuit Description	CKT
1	PV MAINT. RECEPTACLES	20.0 A	1	1260 VA							2
3											4
5											6
7											8
9											10
11											12
			Total Load:	1260 VA		0 VA					
			Total Amps:	10.5 A		0.0 A					

Legend:

Load Classification	Connected Load	Demand Factor	Estimated Demand	Panel Totals	
Receptacle	1260 VA	100.00%	1260 VA		
				Total Conn. Load:	1260 VA
				Total Est. Demand:	1260 VA
				Total Conn. Current:	5.3 A
				Total Est. Demand Current:	5.3 A

Notes:

SEE SHEET E-602 FOR NOTES

US Army Corps of Engineers ®

MARK	DESCRIPTION	DATE

DESIGNED BY: D. CARULLI
DRAWN BY: D. CARULLI
CHECKED BY: S. JONES
SUBMITTED BY: ALJOHN T. PARISH
SIZE: ANSI D FILE NAME: WESE_GTEB_Central.rvt
ISSUE DATE: 13 JUL 2020
PROJECT # 225-25-0665
SPEC # 2145
FILE NUMBER:

US ARMY CORPS OF ENGINEERS
SACRAMENTO DISTRICT
US DEPT OF ARMY

SACRAMENTO DISTRICT
IN-HOUSE DESIGN
1325 J STREET
SACRAMENTO, CA 95814

FT. HUACHUCA
GROUND TRANSPORT EQUIPMENT BUILDING
ARIZONA

PANEL SCHEDULES

SHEET ID
E-616

RTA

Branch Panel: PPH-3

Location: ELEC RM 304
Supply From: MAIN PANELBOARD
Mounting: Surface
Enclosure: NEMA 1

Volts: 480/277 Wye
Phases: 3
Wires: 4

A.I.C. Rating: 14000
Mains Type:
Mains Rating: 225.0 A
MCB Rating: 175.0 A

Notes:
PANEL PPH-3 AND ALL DOWNSTREAM LOADS ARE PART OF OPTION 8

CKT	Circuit Description	Trip	Poles	A		B		C		Poles	Trip	Circuit Description	CKT
1	LIGHTS - EXTERIOR	20.0 A	1	499 VA	46 VA					1	20.0 A	LIGHTS - ELEC 303	2
3	LIGHTS - BATT STORE 302, AIR COMP. 303	20.0 A	1			97 VA	1018...			1	20.0 A	LIGHTS - BAY 301 WELDING	4
5	LIGHTS - MECH BAY 301 CENTER	20.0 A	1					1008...	677 VA	1	20.0 A	LIGHTS - BAY 301 EAST	6
7	MAU-3	35.0 A	3	3718...	1811...					3	60.0 A	T-6	8
9						3718...	1867...						10
11								3718...	1876...				12
13	UH-1	20.0 A	1	3000...	2458...					2	20.0 A	T-7	14
15	ESH-1	85.0 A	3			1800...	1958...						16
17								1800...					18
19				1800...									20
21	AC-2	20.0 A	3			2921...							22
23								2921...					24
25				2921...	0 VA								26
27							0 VA			3	30.0 A	SURGE PROTECTIVE DEVICE	28
29									0 VA				30
			Total Load:	48753 VA		46390 VA		45091 VA					
			Total Amps:	176.7 A		168.2 A		162.8 A					

3 #3, #8 GND

Legend:

Load Classification	Connected Load	Demand Factor	Estimated Demand	Panel Totals	
Lighting	2826 VA	100.00%	2826 VA		
Motor	38364 VA	80.00%	30692 VA	**Total Conn. Load:**	140233 VA
Other	0 VA	0.00%	0 VA	**Total Est. Demand:**	117059 VA
Power	57520 VA	100.00%	57520 VA	**Total Conn. Current:**	168.7 A
Lighting - Exterior	499 VA	100.00%	499 VA	**Total Est. Demand Current:**	140.8 A
Receptacle	41004 VA	62.19%	25502 VA		
Lighting - Exit Sign	20 VA	100.00%	20 VA		

Notes:
T-7 FEEDS THE FACP. BREAKER FOR T-7 SHALL BE A LOCKABLE BREAKER, PAINTED RED.

Branch Panel: PP-11

Location: ELEC RM 304
Supply From: T-6
Mounting: Surface
Enclosure: NEMA 1

Volts: 120/208 Wye
Phases: 3
Wires: 4

A.I.C. Rating: 10000
Mains Type:
Mains Rating: 225.0 A
MCB Rating: 150.0 A

Notes:
PANEL PP-11 AND ALL DOWNSTREAM LOADS ARE PART OF OPTION 8

CKT	Circuit Description	Trip	Poles	A		B		C		Poles	Trip	Circuit Description	CKT
1	RD-2	20.0 A	1	1127...	1000...					2	20.0 A	L6-20R RECEPTACLES	2
3	GAS METER	20.0 A	1			10 VA	1000...						4
5	WATER METER	20.0 A	1					10 VA	1000...	2	20.0 A	L6-20R RECEPTACLES	6
7	ORG BAY DOOR 1	15.0 A	3	552 VA	1000...								8
9						552 VA	144 VA			1	20.0 A	RADIANT HEATER RECEPTACLES	10
11								552 VA	900 VA	1	20.0 A	RECEPTACLES - BAY	12
13	ORG BAY DOOR 2	15.0 A	3	552 VA	900 VA					1	20.0 A	BATTERY CHARGER RECEPTS.	14
15						552 VA	900 VA			1	20.0 A	RECEPTS - GENERAL PURPOSE	16
17								552 VA	900 VA	1	20.0 A	ORG STORAGE EXTERIOR RECEPTS.	18
19	ORG BAY DOOR 3	15.0 A	3	552 VA	1260...					1	20.0 A	RECEPTACLES - WELDING AREA	20
21						552 VA	4000...			2	50.0 A	WELDING RECEPTACLE	22
23								552 VA	4000...				24
25	EF-8	35.0 A	2	1373...	4000...					2	50.0 A	PLASMA CUTTER RECEPTACLE	26
27						1373...	4000...						28
29	EF-9	35.0 A	2					1373...	4000...	2	50.0 A	WELDING RECEPTACLE	30
31				1373...	4000...								32
33	EF-11, EF-14	20.0 A	1			1173...	4000...			2	50.0 A	PLASMA CUTTER RECEPTACLE	34
35	EF-10	15.0 A	1					506 VA	4000...				36
37	VP-3	15.0 A	3	420 VA	0 VA					3	30.0 A	SURGE PROTECTIVE DEVICE	38
39						420 VA	0 VA						40
41								420 VA	0 VA				42
			Total Load:	18110 VA		18677 VA		18766 VA					
			Total Amps:	150.9 A		156.4 A		157.1 A					

2 #6 P, #8 GND

Legend:

Load Classification	Connected Load	Demand Factor	Estimated Demand	Panel Totals	
Motor	14530 VA	80.00%	11624 VA		
Power	20 VA	100.00%	20 VA	**Total Conn. Load:**	55554 VA
Receptacle	41004 VA	62.19%	25502 VA	**Total Est. Demand:**	37146 VA
				Total Conn. Current:	154.2 A
				Total Est. Demand Current:	103.1 A

Notes:

Branch Panel: XP-6

Location:
Supply From: MDP-2
Mounting: Surface
Enclosure: NEMA 3

Volts: 120/208 Wye
Phases: 3
Wires: 4

A.I.C. Rating: 10000
Mains Type:
Mains Rating: 100.0 A
MCB Rating: 40.0 A

Notes:
SEE SHEET ES101 FOR LOCATION. PANEL IS PART OF BID OPTION 6 AND BID OPTION 7. IF OPTION ITEM 7 IS AWARDED, BUT OPTION ITEM 6 IS NOT, PLACE THIS PANEL ON THE POL STORAGE BUILDING.

CKT	Circuit Description	Trip	Poles	A		B		C		Poles	Trip	Circuit Description	CKT
1	UH-4 (HAZMAT STORAGE)	35.0 A	2	2500...	0 VA					1	20.0 A	SPARE	2
3						2500...	0 VA			1	20.0 A	SPARE	4
5	EF-12	15.0 A	1					506 VA	360 VA	1	20.0 A	EXTERIOR RECEPTACLES, POL/HAZMAT...	6
7	SPARE	20.0 A	1	0 VA	0 VA					--	--	SPACE	8
9	SPARE	15.0 A	1			0 VA	0 VA			--	--	SPACE	10
11	EF-13	15.0 A	1					506 VA	0 VA	3	30.0 A	SURGE PROTECTIVE DEVICE	12
13	HAZMAT STORAGE ROLLUP DOOR	15.0 A	3	552 VA	0 VA								14
15						552 VA	0 VA						16
17								552 VA	375 VA	1	20.0 A	INTERIOR LIGHTS, POL/HAZMAT STORAGE	18
19	POL STORAGE ROLLUP DOOR	15.0 A	3	552 VA									20
21						552 VA							22
23								552 VA	218 VA	1	20.0 A	EXTERIOR LIGHTS, POL/HAZMAT STORAGE	24
			Total Load:	3605 VA		3605 VA		3070 VA					
			Total Amps:	30.7 A		30.7 A		25.6 A					

Legend:

Load Classification	Connected Load	Demand Factor	Estimated Demand	Panel Totals	
Lighting	375 VA	100.00%	375 VA		
Motor	4992 VA	80.00%	3994 VA	**Total Conn. Load:**	10279 VA
Other	0 VA	0.00%	0 VA	**Total Est. Demand:**	9281 VA
Power	4334 VA	100.00%	4334 VA	**Total Conn. Current:**	28.5 A
Lighting - Exterior	218 VA	100.00%	218 VA	**Total Est. Demand Current:**	25.8 A
Receptacle	360 VA	100.00%	360 VA		

Notes:

Branch Panel: PP-12

Location: ELEC RM 304
Supply From: T-7
Mounting: Surface
Enclosure: NEMA 1

Volts: 120/240 Single
Phases: 1
Wires: 3

A.I.C. Rating: 10000
Mains Type:
Mains Rating: 100.0 A
MCB Rating: 60.0 A

Notes:
PANEL PP-12 AND ALL DOWNSTREAM LOADS ARE PART OF OPTION 8.

CKT	Circuit Description	Trip	Poles	A		B		Poles	Trip	Circuit Description	CKT
1	12K CAR LIFT	45.0 A	2	1958 VA	500 VA			1	20.0 A	FACP	2
3						1958 VA					4
5											6
7											8
9											10
11											12
			Total Load:	2458 VA		1958 VA					
			Total Amps:	20.5 A		16.3 A					

Legend:

Load Classification	Connected Load	Demand Factor	Estimated Demand	Panel Totals	
Motor	3916 VA	80.00%	3133 VA		
Power	500 VA	100.00%	500 VA	**Total Conn. Load:**	4416 VA
				Total Est. Demand:	3633 VA
				Total Conn. Current:	18.4 A
				Total Est. Demand Current:	15.1 A

Notes:
FACP SHALL BE A LOCKABLE BREAKER, PAINTED RED.

SEE SHEET E-602 FOR NOTES

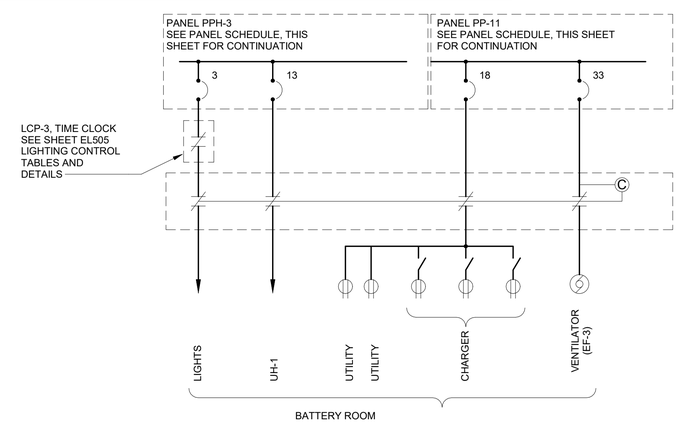

1 E-617 BATTERY ROOM CIRCUIT DIAGRAM
NOT TO SCALE

US Army Corps of Engineers ®

MARK	DESCRIPTION	DATE

US ARMY CORPS OF ENGINEERS
SACRAMENTO DISTRICT
US DEPT OF ARMY

DESIGNED BY: D. CARULLI
DRAWN BY: D. CARULLI
CHECKED BY: S. JONES
SUBMITTED BY: W. JOHN PARRISH
SIZE: ANSI D'
FILE NAME: WIESE_STOR_central.rvt
ISSUE DATE: 13 JUL 2020
PROJECT # 225-25-0665
SPEC # 2145
FILE NUMBER:

SACRAMENTO DISTRICT
IN-HOUSE DESIGN
1325 J STREET
SACRAMENTO, CA 95814

ARIZONA
FT. HUACHUCA
GROUND TRANSPORT EQUIPMENT BUILDING

PANEL SCHEDULES (OPTIONS 6, 7, & 8)

SHEET ID
E-617

RTA

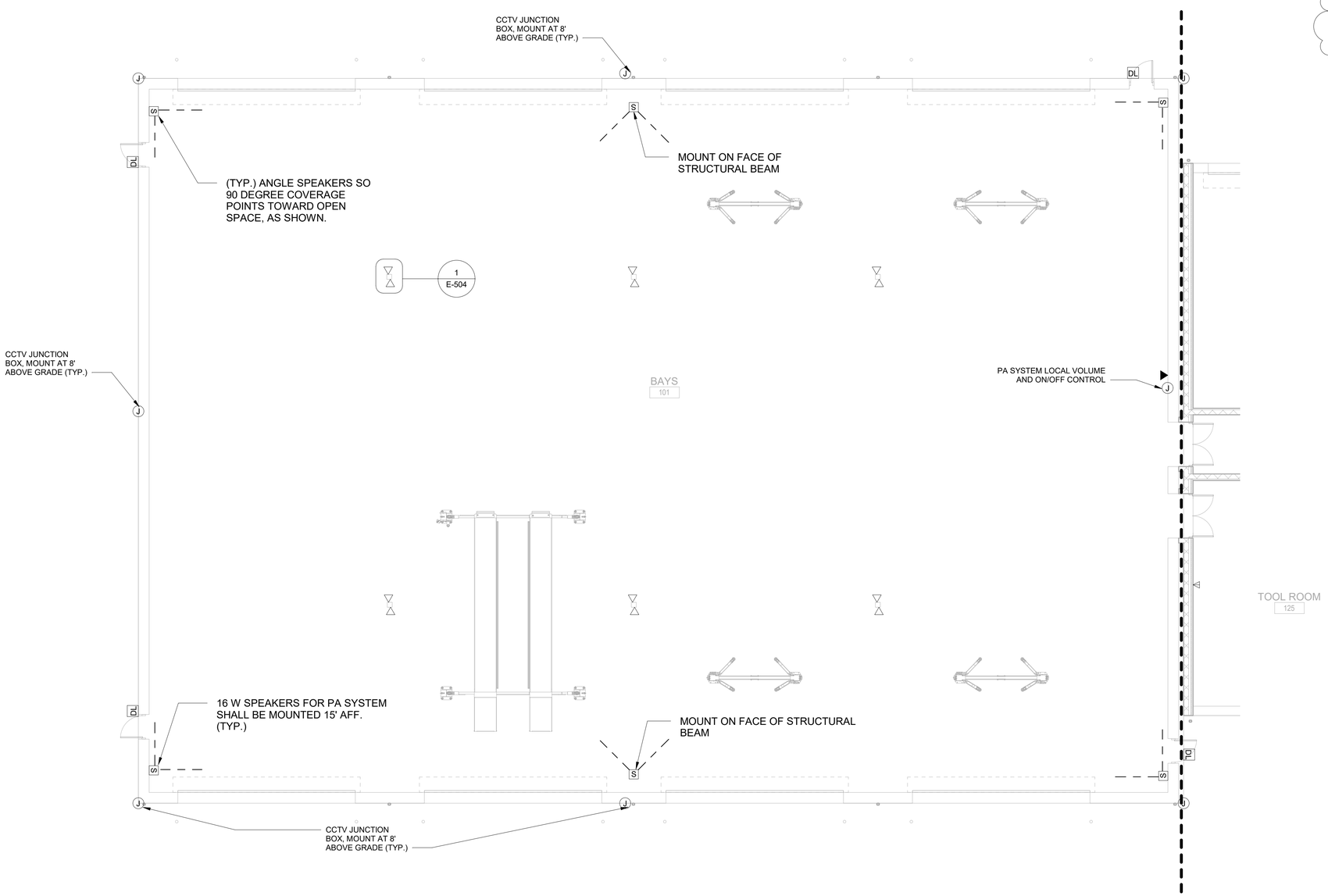

1 / T-101 GTEB COMM PLAN - BAYS

1/8" = 1'-0"

GENERAL NOTES:

1. UNLESS NOTED OTHERWISE, ALL VOICE SHALL BE FED FROM NEC COMMUNICATIONS ROOM.
2. UNLESS NOTED OTHERWISE, ALL DATA SHALL BE FED FROM EPG COMMUNICATIONS ROOM.
3. SPEAKERS IN THE BAY AREA FOR THE PA SYSTEM SHALL BE RATED AT 16 W, WITH MULTIPLE TAP SETTINGS FOR ADJUSTMENT AFTER INSTALLATION TO MEET INTELLIGIBILITY NEEDS.
4. CONTRACTOR SHALL FURNISH AND INSTALL ELECTRONIC ACCESS CONTROL SYSTEM, TO INCLUDE ALL ELECTRONIC DOOR HARDWARE, POWER SUPPLIES, AND CONTROL PANEL. POWER SHALL BE AT 120 V. ALL COMMUNICATIONS CONDUITS SHALL FEED BACK TO THE EPG COMMUNICATIONS ROOM. PROVIDE CARD READER/KEYPAD INTEGRAL WITH LATCH ON EACH DOOR INDICATED WITH THE DOOR LOCK SYMBOL. SEE DETAIL 2/T-501.
5. CONTRACTOR SHALL INSTALL JUNCTION BOXES AND CONDUITS WITH PULL STRINGS ONLY FOR INTERIOR AND BUILDING PERIMETER CCTV SYSTEM. CONNECT ALL CONDUITS BACK TO DVR LOCATION IN EPG COMM ROOM. CONTRACTOR SHALL INSTALL ALL DEVICES FOR EXTERIOR SITE PERIMETER CCTV SYSTEM.

1

8 6 4 2 0 8 16

SCALE: 1/8"=1'-0"

PLAN NORTH

AREA

'A'

AMENDMENT 3

US Army Corps of Engineers ®

MARK	DESCRIPTION	DATE
1	CLARIFY ACS SCOPE	07 OCT 2020

DESIGNED BY: D. CARULLI
DRAWN BY: D. CARULLI
CHECKED BY: S. JONES
SUBMITTED BY: W. LYON R. PARRISH
SIZE: ANSI D'
FILE NAME: WIDE_GTEB_Central.rvt
ISSUE DATE: 07 OCT 2020
PROJECT # 225-25-0665
SPEC # 2145
FILE NUMBER:

US ARMY CORPS OF ENGINEERS
SACRAMENTO DISTRICT
US DEPT OF ARMY

SACRAMENTO DISTRICT
IN-HOUSE DESIGN
1325 J STREET
SACRAMENTO, CA 95814

FT. HUACHUCA
GROUND TRANSPORT EQUIPMENT BUILDING
ARIZONA

GTEB TELECOMMUNICATIONS PLAN

SHEET ID

T-101

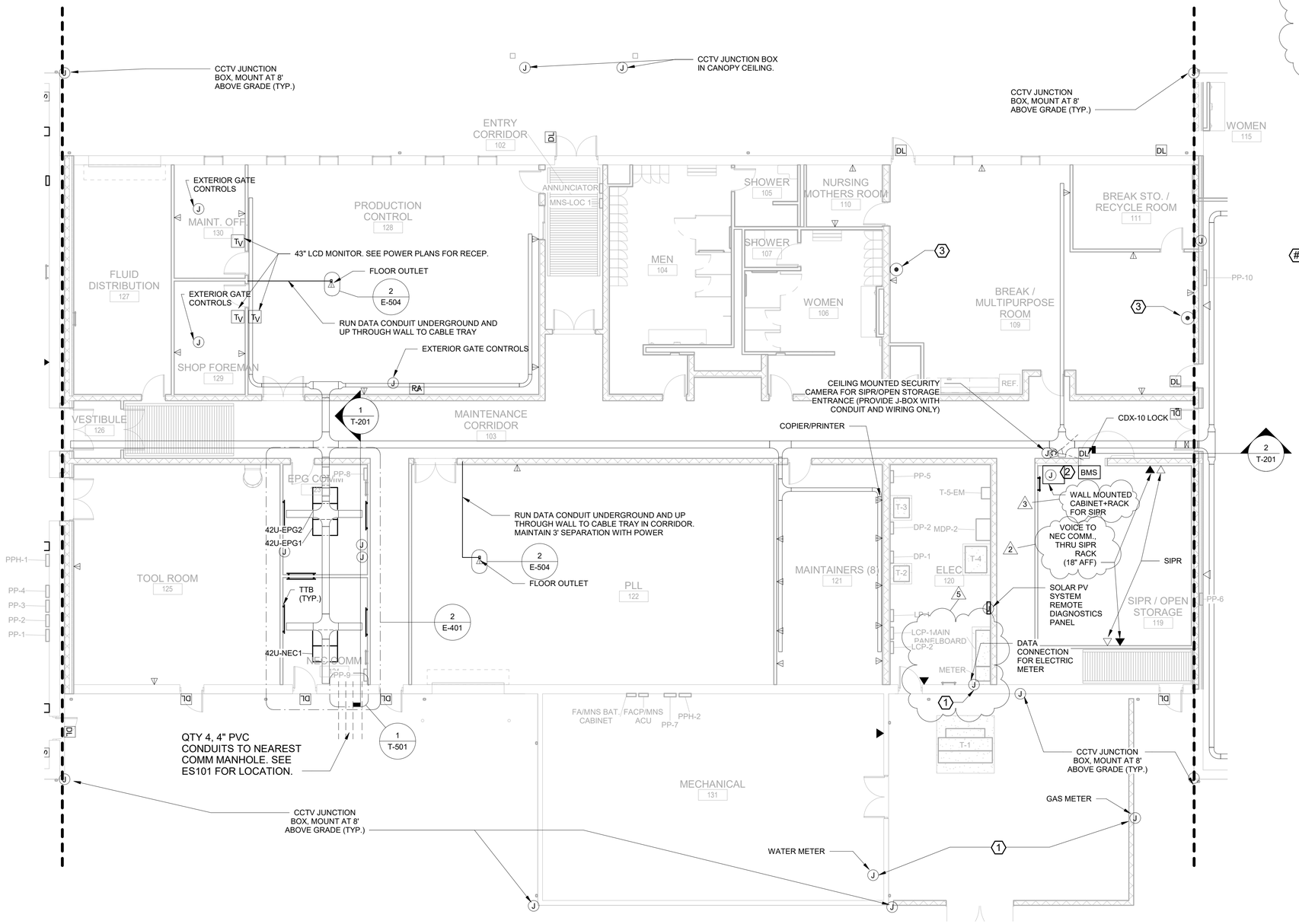

1 / T-102 GTEB COMM PLAN - ADMIN.

1/8" = 1'-0"

GENERAL NOTES:

1. UNLESS NOTED OTHERWISE, ALL VOICE SHALL BE FED FROM NEC COMMUNICATIONS ROOM.
2. UNLESS NOTED OTHERWISE, ALL DATA SHALL BE FED FROM EPG COMMUNICATIONS ROOM.
3. DVR SHALL BE CAPABLE OF STORING CCTV VIDEO FOR 30 DAYS.
4. CONTRACTOR SHALL FURNISH AND INSTALL ELECTRONIC ACCESS CONTROL SYSTEM, TO INCLUDE ALL ELECTRONIC DOOR HARDWARE, POWER SUPPLIES, AND CONTROL PANEL. POWER SHALL BE AT 120 V. ALL COMMUNICATIONS CONDUITS SHALL FEED BACK TO THE EPG COMMUNICATIONS ROOM. PROVIDE CARD READER/KEYPAD INTEGRAL WITH LATCH ON EACH DOOR INDICATED WITH THE DOOR LOCK SYMBOL. SEE DETAIL 2/T-501.
5. CONTRACTOR SHALL INSTALL JUNCTION BOXES AND CONDUITS WITH PULL STRINGS ONLY FOR INTERIOR AND BUILDING PERIMETER CCTV SYSTEM. CONNECT ALL CONDUITS BACK TO DVR LOCATION IN EPG COMM ROOM. CONTRACTOR SHALL INSTALL ALL DEVICES FOR EXTERIOR SITE PERIMETER CCTV SYSTEM.
6. CABLE TRAY IS FOR DATA AND VOICE ONLY. WIRING FOR CCTV SYSTEMS, ACCESS CONTROL SYSTEMS, INTRUSION DETECTION SYSTEMS, PA SYSTEM, GATE CONTROLS, AND OTHER BUILDING CONTROLS WIRING SHALL NOT BE PERMITTED TO BE PLACED IN THE CABLE TRAY. CONTRACTOR SHALL RUN THIS WIRING IN CONDUITS AS APPROPRIATE TO THEIR RESPECTIVE SYSTEMS.

(#) KEYED NOTES:

1. CONNECT UTILITY METERS THROUGH NEC COMM ROOM TO EXISTING BASE-WIDE ENERGY MANAGEMENT AND CONTROL SYSTEM (EMCS). PROVIDE DATA CONNECTIONS TO METERS IN ACCORDANCE WITH MANUFACTURER'S INSTRUCTIONS.
2. THE SIPR / OPEN STORAGE ROOM HAS ADDED SECURITY REQUIREMENTS. FOLLOW NSTSSI 7000, TEMPEST COUNTERMEASURES. CONTRACTOR SHALL MINIMIZE CONDUIT PENETRATIONS INTO THIS ROOM. CONDUITS THAT PENETRATE THE ROOM PERIMETER SHALL HAVE ELECTRONIC ISOLATION: SPACE THE METALLIC CONDUIT WITH A SECTION OF PVC CONDUIT THAT EXTENDS A MINIMUM OF 3" ON EITHER SIDE OF THE SCIF WALL. COORDINATE WITH BASE AND USER SECURITY OFFICER PRIOR TO COMMENCEMENT OF WORK.
3. FEED CATV COAX OUTLETS WITH COAX CABLE TO THE EPG COMM ROOM. COAX CABLING CAN BE LAYED IN CABLE TRAY WITH DATA/VOICE CABLING.
4. INTRUSION DETECTION SYSTEM (IDS) COMPONENTS FOR THE SIPR/OPEN STORAGE ENTRANCE DOOR, TO INCLUDE BMS, CDX-10 LOCK, CCTV CAMERA, AND IDS PANEL SHALL BE GOVERNMENT FURNISHED, GOVERNMENT INSTALLED (GFGI). CONTRACTOR SHALL PROVIDE J-BOXES AND CONDUIT WITH PULL STRINGS CONNECTING THESE COMPONENETS SO THAT USER MAY INSTALL IDS DEVICES AND WIRING. CONDUIT SHALL BE MINIMUM 1" EMT, AND SHALL CONNECT FROM BOTH THE BMS AND CCTV CAMERA LOCATIONS TO THE IDS PANEL LOCATION IN THE EPG COMM ROOM.

8 6 4 2 0 8 16

SCALE: 1/8"=1'-0"

PLAN NORTH

AREA

'B'

AMENDMENT 3

US Army Corps of Engineers ®

MARK	DESCRIPTION	DATE
1	CLARIFY ACS SCOPE	07 OCT 2020
5	RELOCATE MAIN PANELBOARD, NEC 110.26(C)(2)	07 OCT 2020
3	CLARIFY EQUIPMENT CABINET AND RACK	07 OCT 2020
2	DATA OUTLET QTY CLARIFY	07 OCT 2020

ISSUE DATE: 07 OCT 2020
PROJECT # 225-25-0665
SPEC # 2145
FILE NUMBER:

DESIGNED BY: D. CARULLI
DRAWN BY: D. CARULLI
CHECKED BY: S. JONES
SUBMITTED BY: W. JOHN PARRISH
SIZE: ANSI 'D'
FILE NAME: W65E_GTEB_Central.rvt

US ARMY CORPS OF ENGINEERS
SACRAMENTO DISTRICT
US DEPT OF ARMY

SACRAMENTO DISTRICT
IN-HOUSE DESIGN
1325 J STREET
SACRAMENTO, CA 95814

FT. HUACHUCA
GROUND TRANSPORT EQUIPMENT BUILDING
ARIZONA

GTEB TELECOMMUNICATIONS PLAN

SHEET ID

T-102

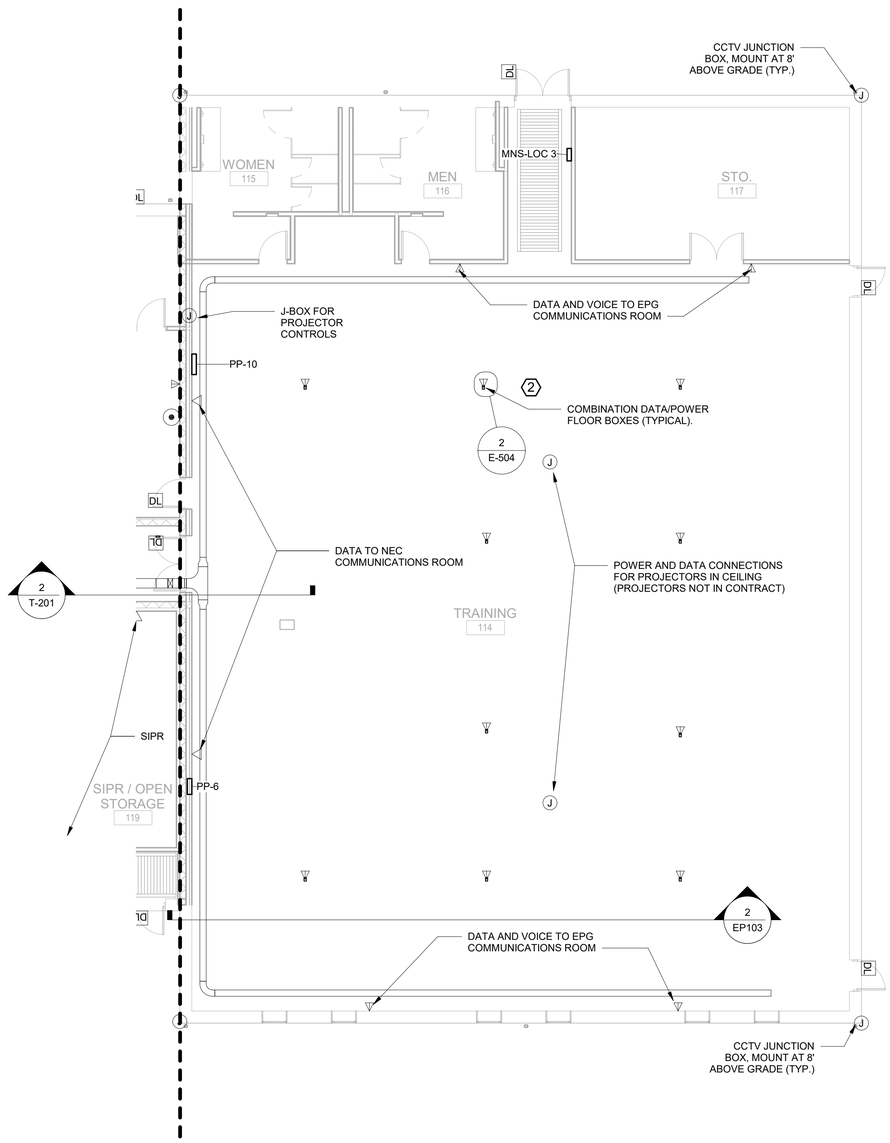

1 T-103 GTEB COMM PLAN - TRAINING (OPTION 3)

1/8" = 1'-0"

GENERAL NOTES:

1. UNLESS NOTED OTHERWISE, ALL VOICE SHALL BE FED FROM NEC COMMUNICATIONS ROOM.
2. UNLESS NOTED OTHERWISE, ALL DATA SHALL BE FED FROM EPG COMMUNICATIONS ROOM.
3. PROJECTOR SCREENS SHALL BE WIRED FOR VIDEO-TELECONFERENCE CAPABILITY.
4. CONTRACTOR SHALL FURNISH AND INSTALL ELECTRONIC ACCESS CONTROL SYSTEM, TO INCLUDE ALL ELECTRONIC DOOR HARDWARE, POWER SUPPLIES, AND CONTROL PANEL. POWER SHALL BE AT 120 V. ALL COMMUNICATIONS CONDUITS SHALL FEED BACK TO THE EPG COMMUNICATIONS ROOM. PROVIDE CARD READER/KEYPAD INTEGRAL WITH LATCH ON EACH DOOR INDICATED WITH THE DOOR LOCK SYMBOL. SEE DETAIL 2/T-501.
5. CONTRACTOR SHALL INSTALL JUNCTION BOXES AND CONDUITS WITH PULL STRINGS ONLY FOR INTERIOR AND BUILDING PERIMETER CCTV SYSTEM. CONNECT ALL CONDUITS BACK TO DVR LOCATION IN EPG COMM ROOM. CONTRACTOR SHALL INSTALL ALL DEVICES FOR EXTERIOR SITE PERIMETER CCTV SYSTEM.
6. CABLE TRAY IS FOR DATA AND VOICE ONLY. WIRING FOR CCTV SYSTEMS, ACCESS CONTROL SYSTEMS, INTRUSION DETECTION SYSTEMS, PA SYSTEM, GATE CONTROLS, AND OTHER BUILDING CONTROLS WIRING SHALL NOT BE PERMITTED TO BE PLACED IN THE CABLE TRAY. CONTRACTOR SHALL RUN THIS WIRING IN CONDUITS AS APPROPRIATE TO THEIR RESPECTIVE SYSTEMS.

KEYED NOTES:

1. FOR FLOOR BOXES, PROVIDE COMBINATION POWER/DATA FLOOR BOXES, BUT DO NOT INSTALL DATA CONDUCTORS OR DATA OUTLETS. PROVIDE CONDUIT PATHWAY TO CABLE TRAY WITH PULL ROPE ONLY. (POWER RECEPTACLE SHALL BE FULLY INSTALLED AND CONNECTED). CONDUIT RUNS FOR DATA AND POWER SHALL BE RUN PERPENDICULAR TO EACH OTHER IN THE FLOOR.
2. SEE SHEET EP103 FOR ROUTING OF POWER AND DATA CONDUITS TO FLOOR OUTLETS.

8 6 4 2 0 8 16

SCALE: 1/8"=1'-0"

PLAN NORTH

AREA

'C'

AMENDMENT 3

US Army Corps of Engineers ®

MARK	DESCRIPTION	DATE
1	CLARIFY ACS SCOPE	07 OCT 2020

US ARMY CORPS OF ENGINEERS
SACRAMENTO DISTRICT
US DEPT OF ARMY

SACRAMENTO DISTRICT
IN-HOUSE DESIGN
1325 J STREET
SACRAMENTO, CA 95814

DESIGNED BY: D. CARULLI
DRAWN BY: D. CARULLI
CHECKED BY: S. JONES
SUBMITTED BY: W. CONNER PARRISH
SIZE: ANSI 'D'
FILE NAME: W65E_GTEB_Central.rvt
ISSUE DATE: 07 OCT 2020
PROJECT # 225-25-0665
SPEC # 2145
FILE NUMBER:

FT. HUACHUCA
GROUND TRANSPORT EQUIPMENT BUILDING
ARIZONA

GTEB TELECOMMUNICATIONS PLAN
(OPTION 3)

SHEET ID

T-103

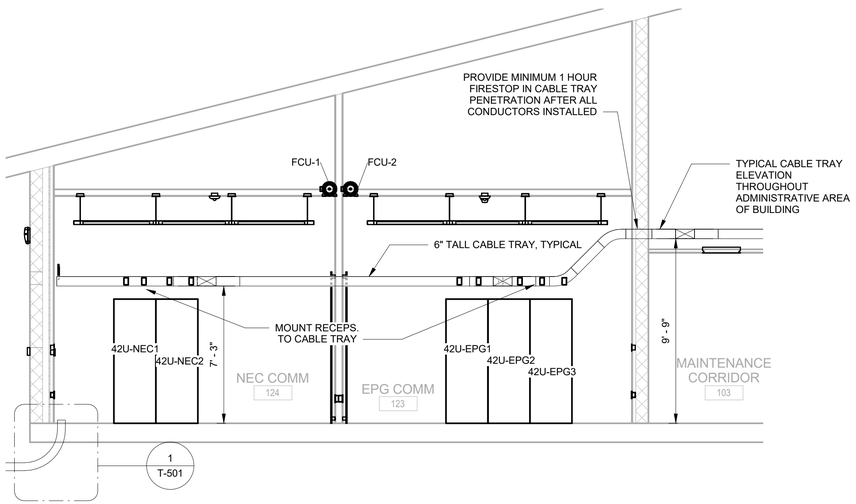

1 / T-201

GTEB TELECOMMUNICATIONS ROOMS SECTION

1/4" = 1'-0"

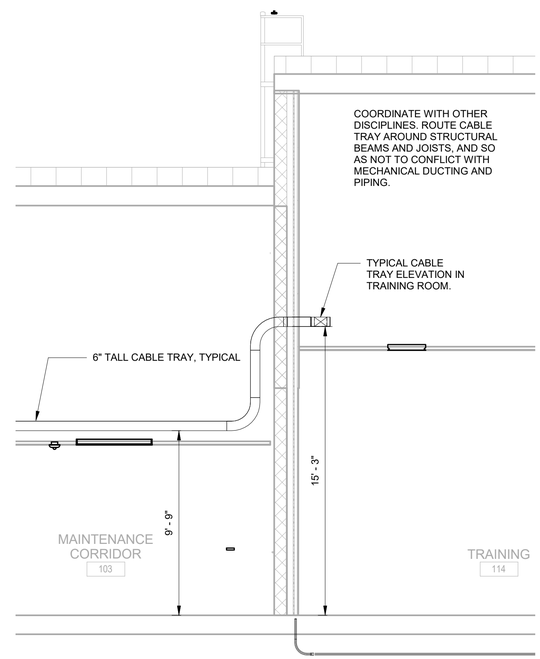

2 / T-201

GTEB TELECOMM TRAINING ROOM ENTRANCE SECTION (OPTION 3)

1/4" = 1'-0"

4 2 0 4 8

SCALE: 1/4"=1'-0"

US Army Corps of Engineers ®

MARK	DESCRIPTION	DATE

ISSUE DATE: 13 JUL 2020
PROJECT # 225-25-0665
SPEC # 2145
FILE NUMBER:

DESIGNED BY: D. CARULLI
DRAWN BY: D. CARULLI
CHECKED BY: S. JONES
SUBMITTED BY: K. JOHN PARRISH
SIZE: ANSI D
FILE NAME: W6SE_GTEB_Central.rvt

US ARMY CORPS OF ENGINEERS
SACRAMENTO DISTRICT
US DEPT OF ARMY

SACRAMENTO DISTRICT
IN-HOUSE DESIGN
1325 J STREET
SACRAMENTO, CA 95814

FT. HUACHUCA
GROUND TRANSPORT EQUIPMENT BUILDING
ARIZONA

GTEB TELECOMMUNICATIONS SECTIONS

SHEET ID

T-201

RTA

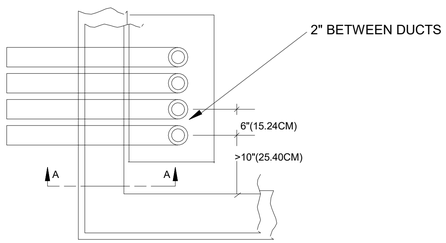

TOP VIEW

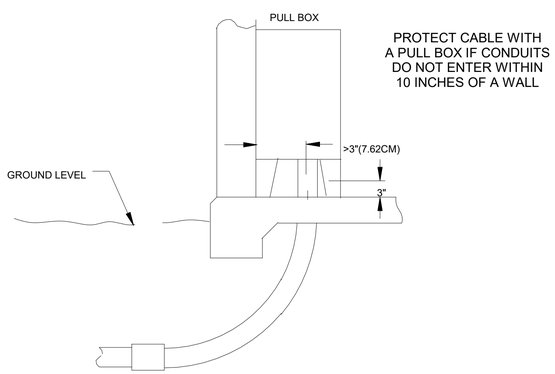

SECTION A-A
SLAB ON GRADE FOUNDATION

COMMUNICATIONS SERVICE ENTRANCE DETAIL

1 / T-501

NOT TO SCALE

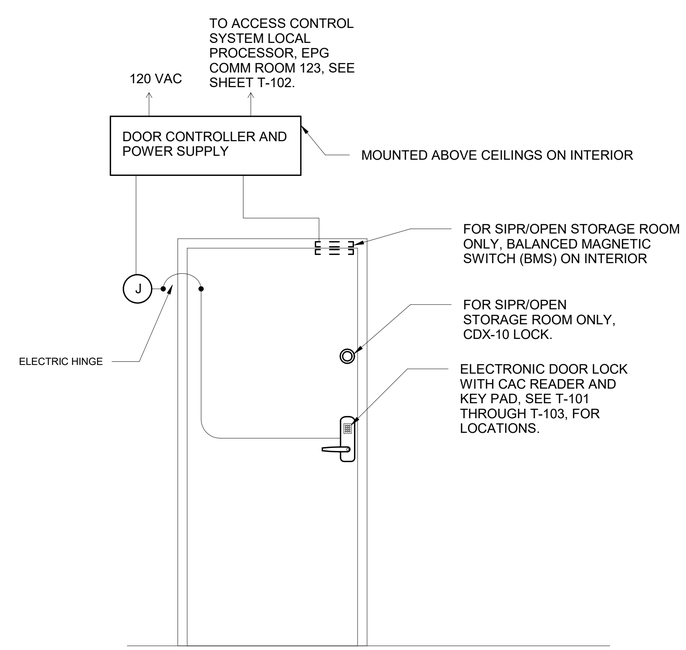

DOOR LOCK DETAIL

2 / T-501

NOT TO SCALE

1

DETAIL NOTES:

1. EXTERIOR COMPONENTS SHALL BE WEATHERPROOF.
2. PROVIDE THIS DOOR LOCK CONFIGURATION AT EACH LOCATION WHERE A DOOR LOCK IS INDICATED ON SHEETS T-101 THROUGH T-103, AND EP111 (FOR STORAGE BUILDINGS).
3. PROVIDE THIS DOOR LOCK CONFIGURATION AT THE PEDESTRIAN DOORS TO THE HAZMAT AND POL STORAGE BUILDINGS. MOUNT DOOR CONTROLLER AND POWER SUPPLY ON THE WALL SPACE ON THE INTERIOR OF THE STORAGE ROOMS. ENCLOSURES SHALL BE EXPLOSION PROOF IN THESE BUILDINGS.
4. FOLLOW SPEC SECTION 28 10 05.

AMENDMENT 3

US Army Corps of Engineers ®

MARK	DESCRIPTION	DATE
1	CLARIFY ACS SCOPE	07 OCT 2020

DESIGNED BY: D. CARULLI
DRAWN BY: D. CARULLI
CHECKED BY: S. JONES
SUBMITTED BY: W. JOHN PARRISH
SIZE: ANSI D'
FILE NAME: WISE_GTEB_Central.rvt
ISSUE DATE: 07 OCT 2020
PROJECT # 225-25-0665
SPEC # 2145
FILE NUMBER:

US ARMY CORPS OF ENGINEERS
SACRAMENTO DISTRICT
US DEPT OF ARMY

SACRAMENTO DISTRICT
IN-HOUSE DESIGN
1325 J STREET
SACRAMENTO, CA 95814

FT. HUACHUCA
GROUND TRANSPORT EQUIPMENT BUILDING
ARIZONA

SYSTEMS DETAILS

SHEET ID

T-501

AM-01

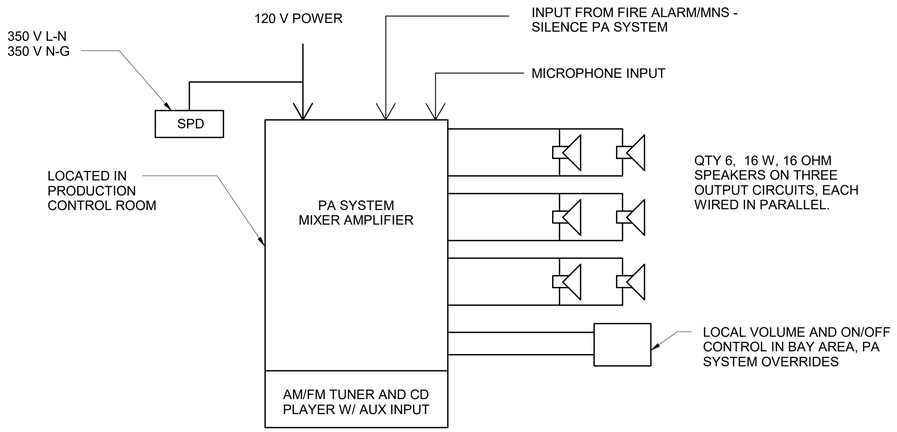

DETAIL NOTES:

1. SEE SPEC SECTION 27 51 16 FOR ADDITIONAL INFORMATION.
2. PROVIDE 19" WALL MOUNTED RACK FOR PA SYSTEM EQUIPMENT, LOCATION AS INDICATED IN PLANS. SEE SHEET T-102
3. SPEAKERS MAY BE RATED AT HIGHER WATTAGE, WITH LOWER 16 W TAP SETTING USED FOR INSTALLATION.

2 / T-502 PUBLIC ADDRESS SYSTEM DIAGRAM

NOT TO SCALE

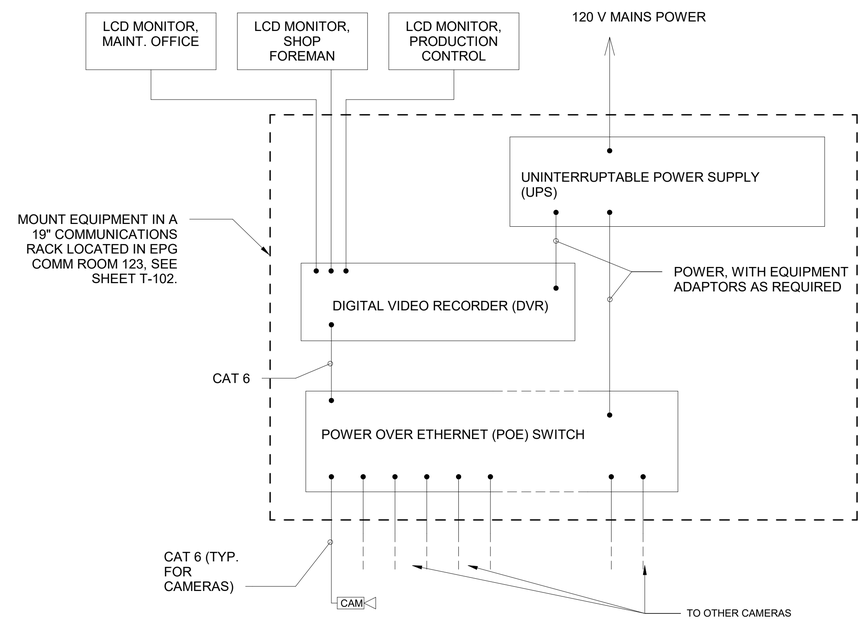

GENERAL NOTES:

1. SEE SPEC SECTIONS FOR ADDITIONAL DETAILS
2. TYPICALLY, CCTV EQUIPMENT IS GFGI. CONTRACTOR SHALL INSTALL J-BOXES AND CONDUIT SYSTEMS WITH PULL STRINGS CONNECTING EQUIPMENT LOCATIONS FOR CCTV EQUIPMENT, FOR USER TO INSTALL CAMERAS, CABLING AND EQUIPMENT (CAMERAS, DVR, POE SWITCH, UPS, AND MONITORS). CONTRACTOR SHALL FURNISH AND INSTALL RACK FOR CCTV EQUIPMENT. COORDINATE WITH PLANS FOR LOCATIONS OF EQUIPMENT AND CCTV CAMERA LOCATIONS.

4

1 / T-502 SECURITY CAMERA SYSTEM DIAGRAM

NOT TO SCALE

AMENDMENT 3

US Army Corps of Engineers ®

MARK	DESCRIPTION	DATE
4	CLARIFY CCTV SCOPE	07 OCT 2020

DESIGNED BY: D. CARULLI
DRAWN BY: D. CARULLI
CHECKED BY: S. JONES
SUBMITTED BY: K. JOHN BORRISH
SIZE: ANSI D'
FILE NAME: WIDE_GTEB_Central.rvt
ISSUE DATE: 07 OCT 2020
PROJECT # 225-25-0665
SPEC # 2145
FILE NUMBER:

US ARMY CORPS OF ENGINEERS
SACRAMENTO DISTRICT
US DEPT OF ARMY

SACRAMENTO DISTRICT
IN-HOUSE DESIGN
1325 J STREET
SACRAMENTO, CA 95814

FT. HUACHUCA ARIZONA
GROUND TRANSPORT EQUIPMENT BUILDING

COMMUNICATIONS CIRCUIT DIAGRAMS

SHEET ID

T-502

KEYED NOTES:

1. ALL DUCT SHALL HAVE A MINIMUM 4" SEPARATION BETWEEN THEM, AND SHALL BE 3" MAX FROM WALL.
2. PUNCH DOWN ALL INSIDE WIRING AND OUTSIDE WIRING CABLES TO THE TERMINAL BLOCKS AND PATCH PANELS. DISTINCTIVELY IDENTIFY EACH CABLE FOR FUNCTION
3. (1) CABLE TV CABLE FEEDING CATV DIRECTIONAL TAPS VIA CABLE TRAY
4. #6 COPPER GREEN GROUND WIRE (INSULATED). PROVIDE COIL SO ANY POINT IN ROOM IS REACHABLE.
5. NOT USED.
6. PROVIDE 2 PDUS PER RACK, ONE AT 120 V (10X NEMA 5-20R) AND ONE AT 208 V (10X NEMA 6-20R), EACH 1U IN SIZE, CONNECTED TO MATCHING TWIST LOCK RECEPTACLE ABOVE. PROVIDE PDUS FOR SPARE RACKS AS WELL (NOT SHOWN)
7. PROVIDE (2) 3-CELL FABRIC MESH INNERDUCTS IN DUCTS CARRYING FIBER OPTIC CABLE.
8. SEE T-101, THROUGH T-103, FOR CABLE TRAY ROUTING AND DEVICE LOCATIONS AND QUANTITIES

GENERAL NOTES:

1. INSTALL ALL BLOCKS ON THE TTB A MINIMUM OF 36" A.F.F., A MINIMUM OF 6" FROM THE TTB SIDE EDGE, AND NO HIGHER THAN 66" AFF.
2. PROVIDE OFFSET BRACKETS AS REQUIRED ON TTB FOR SUPPORT AND ORGANIZATION OF ALL LOOSE CABLING.
3. PROVIDE PULL CORD IN ALL EMPTY DUCTS AND INNERDUCTS. AND IN ALL DUCTS FEEDING ADMIN/ CLASSROOM AREA DUPLEX MODULAR OUTLETS.
4. SEE COMMUNICATION PLANS FOR QUANTITY AND LOCATION OF COMMUNICATIONS OUTLETS.
5. PROVIDE FIRE STOPPING MATERIAL AT ALL FIRE-RATED BOUNDARIES.
6. COORDINATE COMMUNICATIONS FLOOR AND SLAB 4" DUCT PENETRATIONS WITH STRUCTURAL BUILDING SYSTEM.
7. NOT SHOWN: SPARE RACKS 42U-NEC2 AND 42U-EPG3, AND ASSOCIATED TWIST LOCK RECEPTACLES AND PDUS.
8. CONTRACTOR IS RESPONSIBLE FOR ALL "CONSTRUCTION" TO INCLUDE CABINETS/RACKS, POWER SOURCES, PDUS, SERVICE ENTRANCE CABLING, PET, 110 BLOCKS, BACKBONE CABLING, HORIZONTAL CABLE, CABLE TRAY/CONDUITS, J-BOXES, TELECOMM OUTLETS, PULL STRINGS, INNDERDUCT, CABLE MANAGEMENT, AND ALL GROUNDING. EQUIPMENT INSIDE THE RACKS, INCLUDING PATCH PANELS, NETWORK SWITCHES, MEDIA CONVERTERS, AND ENCRYPTION DEVICES SHALL BE GFGI. NOT ALL DISTRIBUTION EQUIPMENT MAY BE SHOWN.

DATA OUTLET QUANTITIES (FIO):
THESE QUANTITIES PROVIDED FIO TO ASSIST WITH SIZING COMM EQUIPMENT. QUANTITIES HERE ARE INTENDED TO SUM THE QUANTITY OF PORTS AS INDICATED BY COMM OUTLET SYMBOLS ON THE PLANS. CONTRACTOR SHALL PROVIDE MINIMUM QUANTITY OF PORTS/OUTLETS AS INDICATED BY PLANS. THIS LISTING DOES NOT INCLUDE REQUIRED CONNECTIONS FOR METERING SYSTEMS.

1. FROM NEC COMM:
   A. 4 DATA PORTS
   B. 42 VOICE PORTS
2. FROM EPG COMM:
   A. 110 DATA PORTS
   B. 4 VOICE PORTS
3. SIPER/OPEN STORAGE ROOM
   A. 4 DATA PORTS
   B. 2 VOICE PORTS

CABLE MANAGEMENT RING (TYPICAL) D
NOT TO SCALE T-601,T-602 | T-602

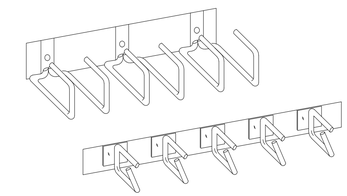

CABLE MANAGEMENT WIREWAYS (TYPICAL) E
NOT TO SCALE T-601 | T-601

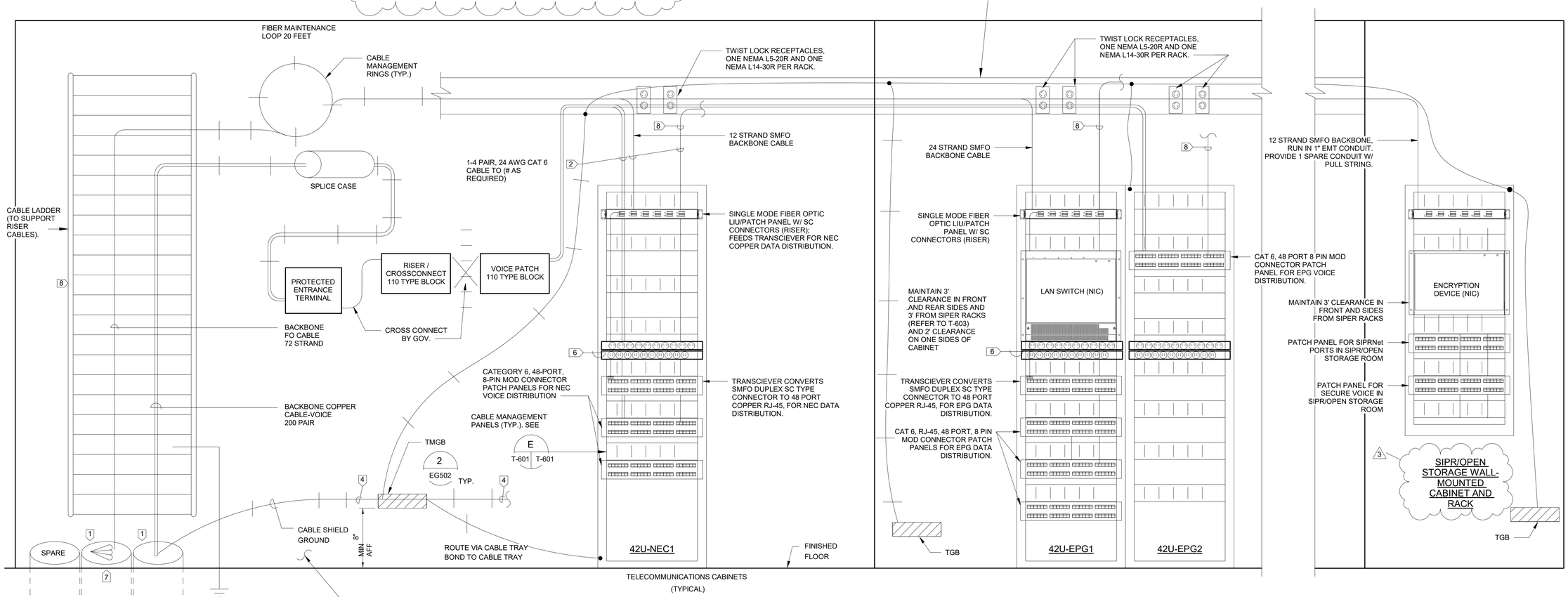

TELECOMMUNICATIONS RISER

NOT TO SCALE

AMENDMENT 3

US Army Corps of Engineers ®

MARK	DESCRIPTION	DATE
7	CLARIFY TELECOMM SCOPE	23 OCT 2020
3	CLARIFY EQUIPMENT CABINET AND RACK	07 OCT 2020
2	DATA OUTLET QTY CLARIFY	07 OCT 2020

ISSUE DATE: 23 OCT 2020
PROJECT # 225-25-0665
SPEC # 2145
FILE NUMBER:
DESIGNED BY: D. CARULLI
DRAWN BY: D. CARULLI
CHECKED BY: S. JONES
SUBMITTED BY: S. JOHN PARRISH
SIZE: ANSI 'D'
FILE NAME: W05E_GTER_Central.rvt

US ARMY CORPS OF ENGINEERS
SACRAMENTO DISTRICT
US DEPT OF ARMY

SACRAMENTO DISTRICT
IN-HOUSE DESIGN
1325 J STREET
SACRAMENTO, CA 95814

FT. HUACHUCA ARIZONA
GROUND TRANSPORT EQUIPMENT BUILDING

SYSTEMS RISERS

SHEET ID

T-601

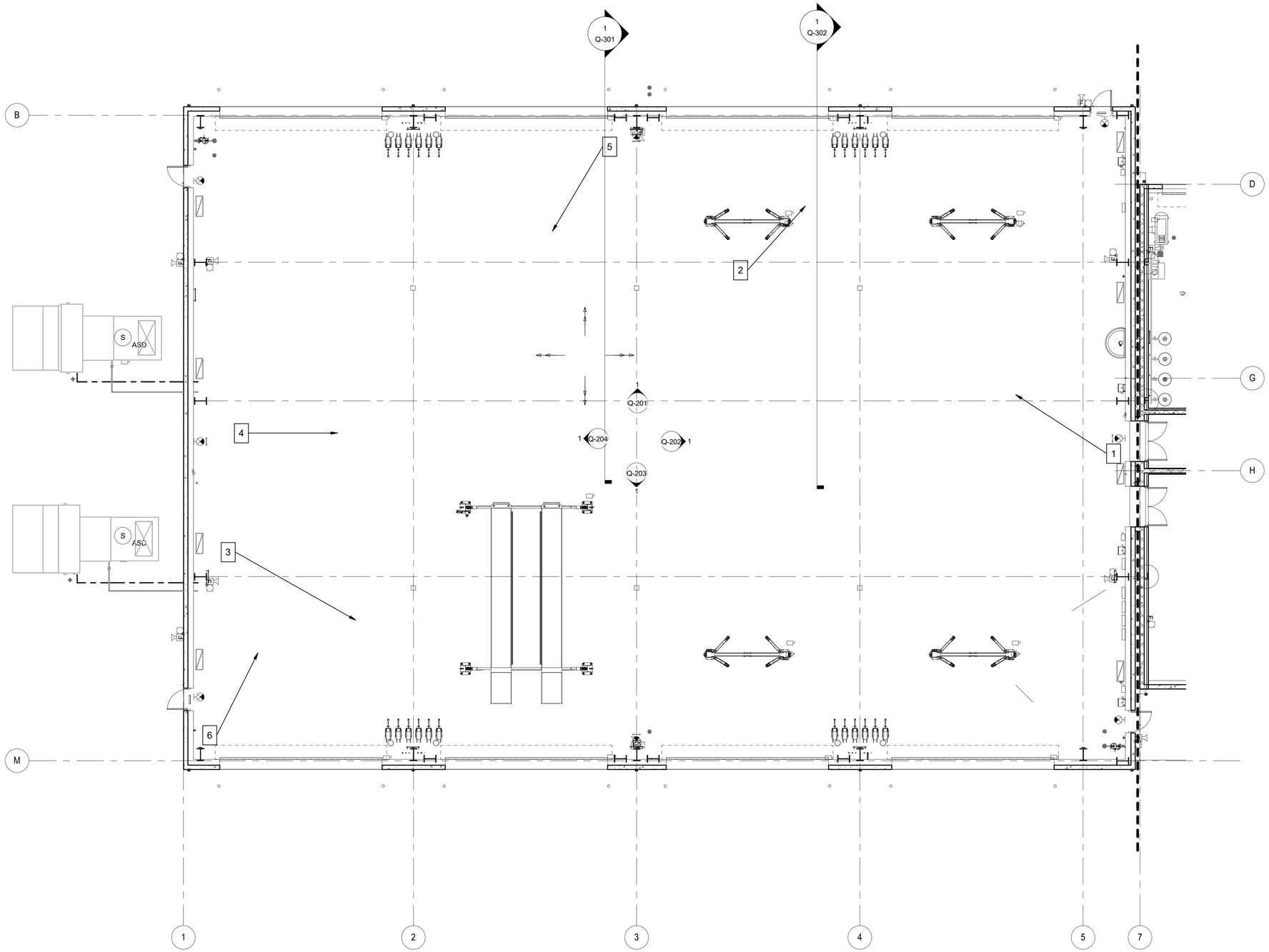

SEE PERSPECTIVE VIEWS FROM THESE CALLOUT LOCATIONS LOCATIONS ON SHEET Q-901. NUMBER CORRESPONDS TO DETAIL VIEW ON THAT SHEET.

PLAN NORTH

0 4' 8' 16'

SCALE: 1/8"=1'-0"

AREA

'A'

1 Q-101 COORDINATION VIEW AREA A

1/8" = 1'-0"

US Army Corps of Engineers ®

MARK	DESCRIPTION	DATE

ISSUE DATE: 13 JUL 2020
SOLICITATION NO.: W91328-XX-X-XXXX
CONTRACT NO.: W91328-XX-X-XXXX
SPECIFICATION NO: 2145
DESIGN FILE NO: 223-25-0665

DESIGNED BY: MULTIPLE
DRAWN BY: D. CARULLI
CHECKED BY: MULTIPLE
SUBMITTED BY: MULTIPLE
SIZE: ANSI D

US ARMY CORPS OF ENGINEERS
SACRAMENTO DISTRICT
US DEPT OF ARMY

SACRAMENTO DISTRICT IN-HOUSE DESIGN
1325 J STREET
SACRAMENTO, CA 95814
ID #

FT. HUACHUCA
GROUND TRANSPORT EQUIPMENT BUILDING

AZ

COORDINATION PLAN VIEWS

SHEET ID

Q-101

RTA

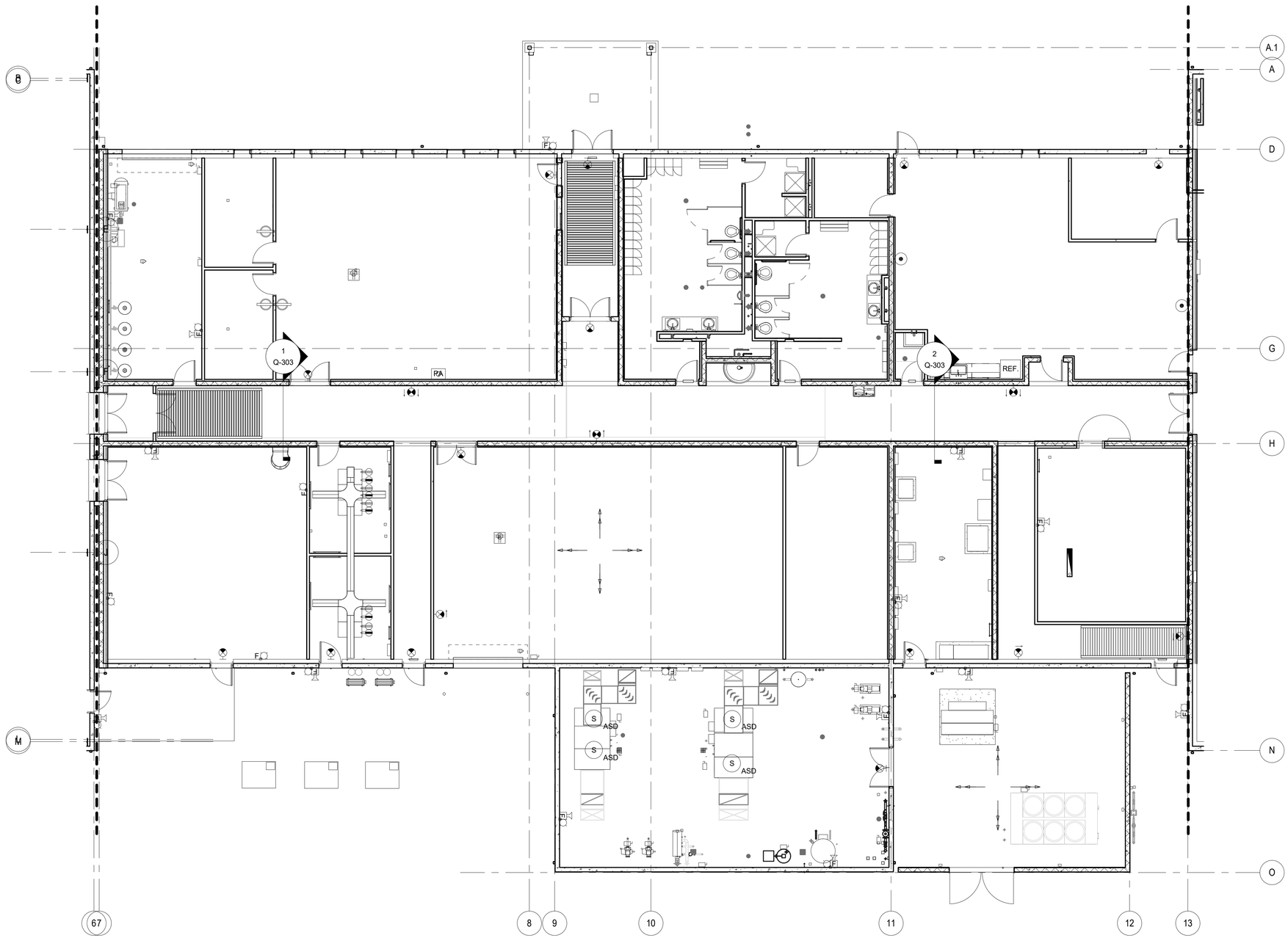

1 Q-102 COORDINATION VIEW AREA B
1/8" = 1'-0"

US Army Corps of Engineers ®

MARK	DESCRIPTION	DATE

DESIGNED BY: MULTIPLE
DRAWN BY: D. CARULLI
CHECKED BY: MULTIPLE
SUBMITTED BY:
SIZE ANSI D
ISSUE DATE: 13 JUL 2020
SOLICITATION NO.: W91328-XX-X-XXXX
CONTRACT NO.: W91328-XX-X-XXXX
SPECIFICATION NO: 12145
DESIGN FILE NO: 223-25-0665

US ARMY CORPS OF ENGINEERS
SACRAMENTO DISTRICT
US DEPT OF ARMY

SACRAMENTO DISTRICT IN-HOUSE DESIGN
1325 J STREET
SACRAMENTO, CA 95814
ID #

FT. HUACHUCA AZ
GROUND TRANSPORT EQUIPMENT BUILDING

COORDINATION PLAN VIEWS

SHEET ID
Q-102

RTA

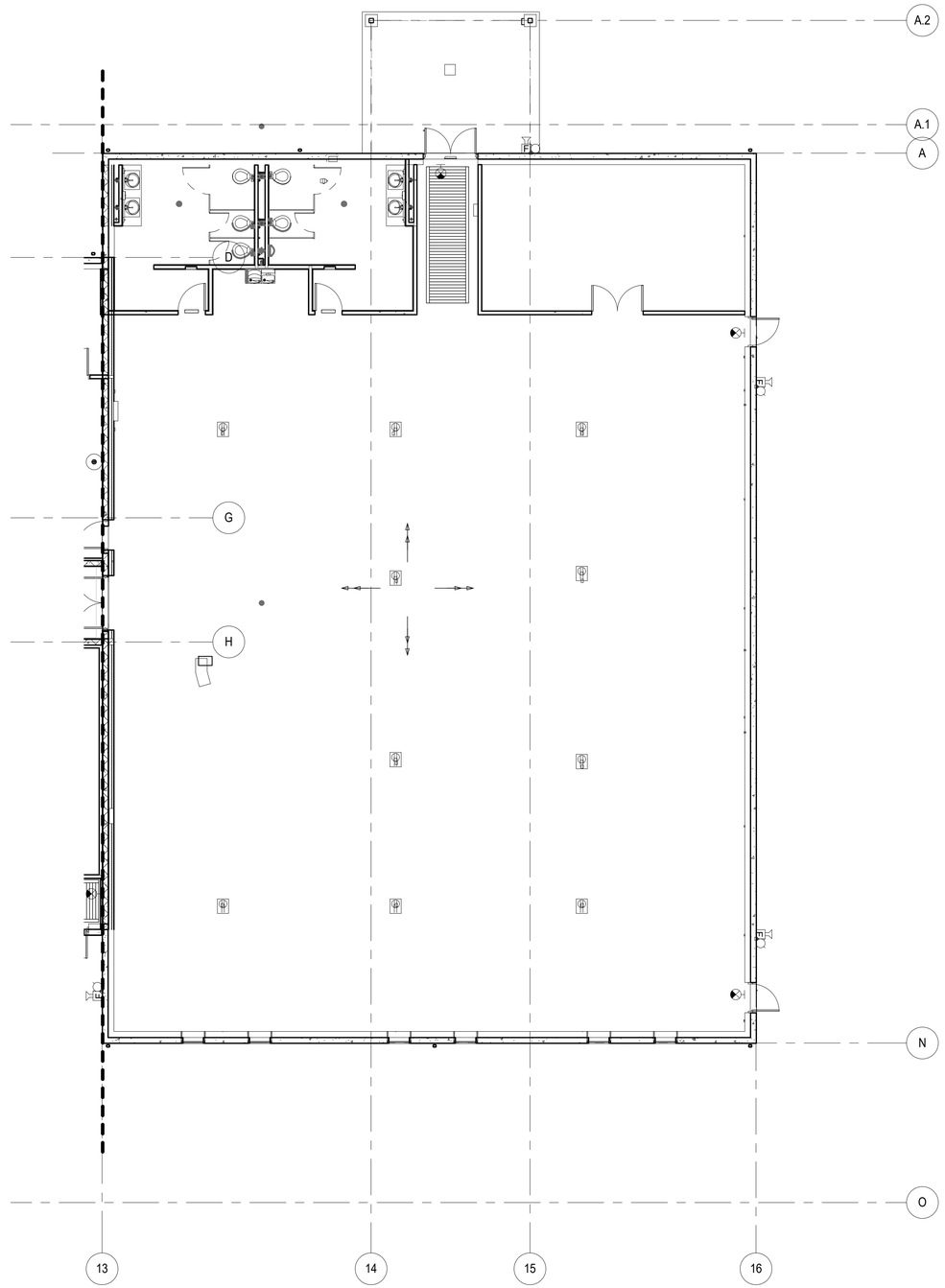

1
Q-103
COORDINATION VIEW AREA C (OPTION 3)
1/8" = 1'-0"

PLAN NORTH

0 4' 8' 16'
SCALE: 1/8"=1'-0"

AREA

'C'

US Army Corps of Engineers ®

MARK	DESCRIPTION	DATE

US ARMY CORPS OF ENGINEERS
SACRAMENTO DISTRICT
US DEPT OF ARMY

SACRAMENTO DISTRICT IN-HOUSE DESIGN
1325 J STREET
SACRAMENTO, CA 95814
ID #

DESIGNED BY: MULTIPLE
DRAWN BY: D. CARULLI
CHECKED BY: MULTIPLE
SUBMITTED BY:
SIZE: ANSI D
ISSUE DATE: 13 JUL 2020
SOLICITATION NO.: W91328-XX-X-XXXX
CONTRACT NO.: W91328-XX-X-XXXX
SPECIFICATION NO: 12145
DESIGN FILE NO: 223-25-U665

FT. HUACHUCA AZ
GROUND TRANSPORT EQUIPMENT BUILDING

COORDINATION PLAN VIEWS (OPTION 3)

SHEET ID
Q-103

RTA

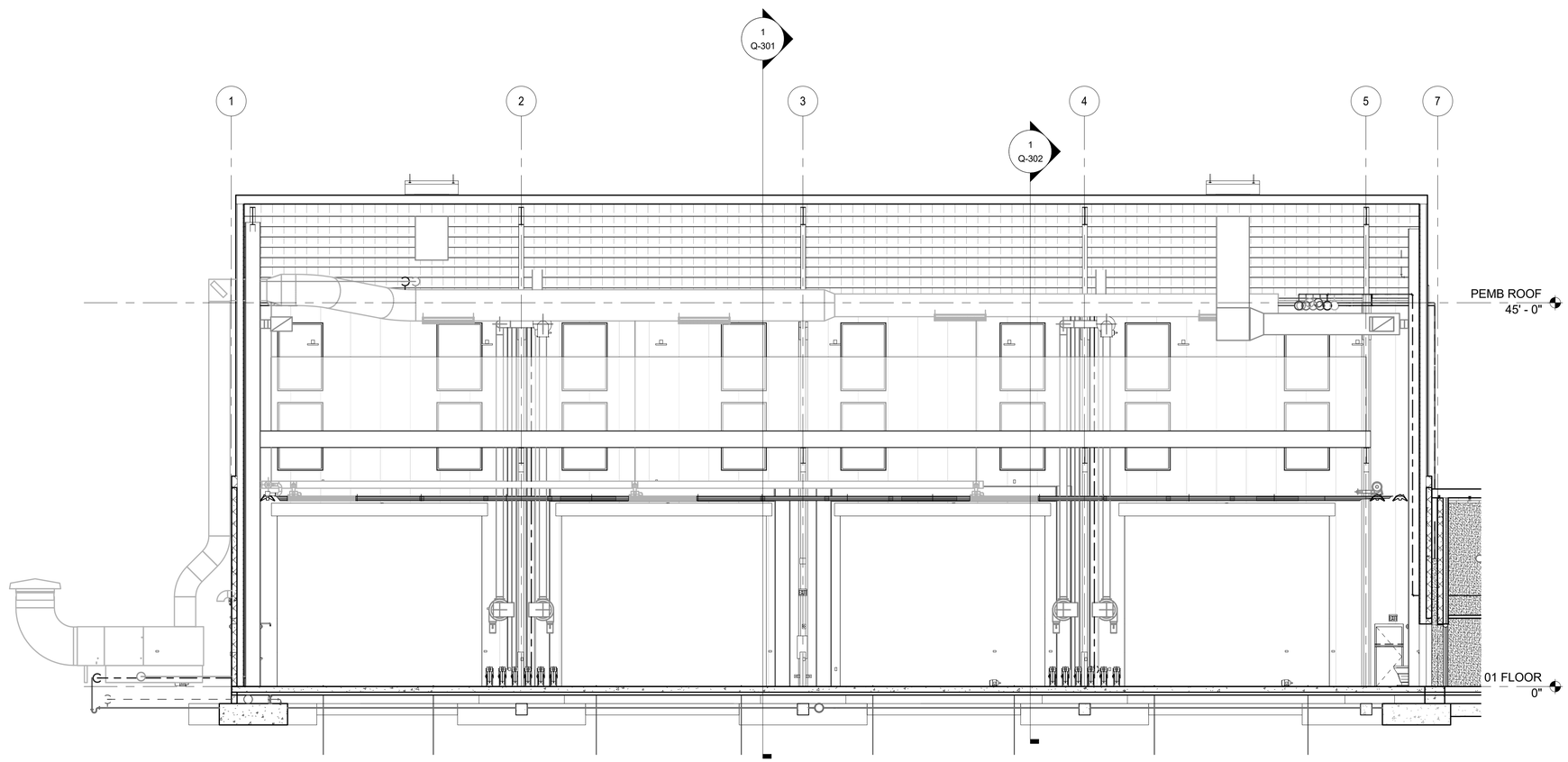

0 4' 8' 16'

SCALE: 1/8"=1'-0"

1 Q-201 BAY INTERIOR ELEVATION NORTH

1/8" = 1'-0"

US Army Corps of Engineers ®

MARK	DESCRIPTION	DATE

DESIGNED BY: MULTIPLE	ISSUE DATE: 13 JUL 2020
DRAWN BY: D. CARULLI	SOLICITATION NO.: W91328-XX-X-XXXX
CHECKED BY: MULTIPLE	CONTRACT NO.: W91328-XX-X-XXXX
SUBMITTED BY:	SPECIFICATION NO: 12145
SIZE: ANSI D	DESIGN FILE NO: 223-25-0665

US ARMY CORPS OF ENGINEERS
SACRAMENTO DISTRICT
US DEPT OF ARMY

SACRAMENTO DISTRICT IN-HOUSE DESIGN
1325 J STREET
SACRAMENTO, CA 95814
ID #

FT. HUACHUCA AZ
GROUND TRANSPORT EQUIPMENT BUILDING

COORDINATION ELEVATIONS

SHEET ID

Q-201

RTA

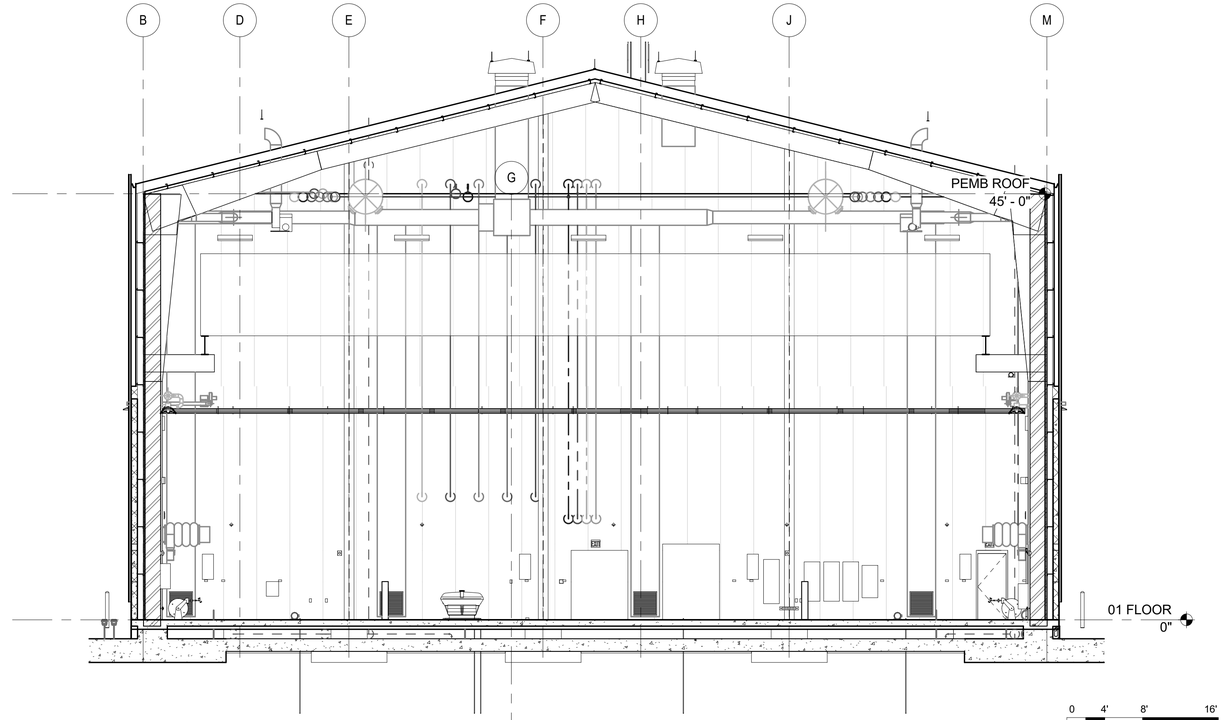

1
Q-202

BAY INTERIOR ELEVATION EAST

1/8" = 1'-0"

US Army Corps of Engineers ®

MARK	DESCRIPTION	DATE

ISSUE DATE: 13 JUL 2020
SOLICITATION NO.: W91328-XX-X-XXXX
CONTRACT NO.: W91328-XX-X-XXXX
SPECIFICATION NO: 12145
DESIGN FILE NO: 226665

DESIGNED BY: MULTIPLE
DRAWN BY: D. CARULLI
CHECKED BY: MULTIPLE
SUBMITTED BY:
SIZE: ANSI D

US ARMY CORPS OF ENGINEERS
SACRAMENTO DISTRICT
US DEPT OF ARMY

SACRAMENTO DISTRICT IN-HOUSE DESIGN
1325 J STREET
SACRAMENTO, CA 95814
ID #

FT. HUACHUCA
GROUND TRANSPORT EQUIPMENT BUILDING

AZ

COORDINATION ELEVATIONS

SHEET ID

Q-202

RTA

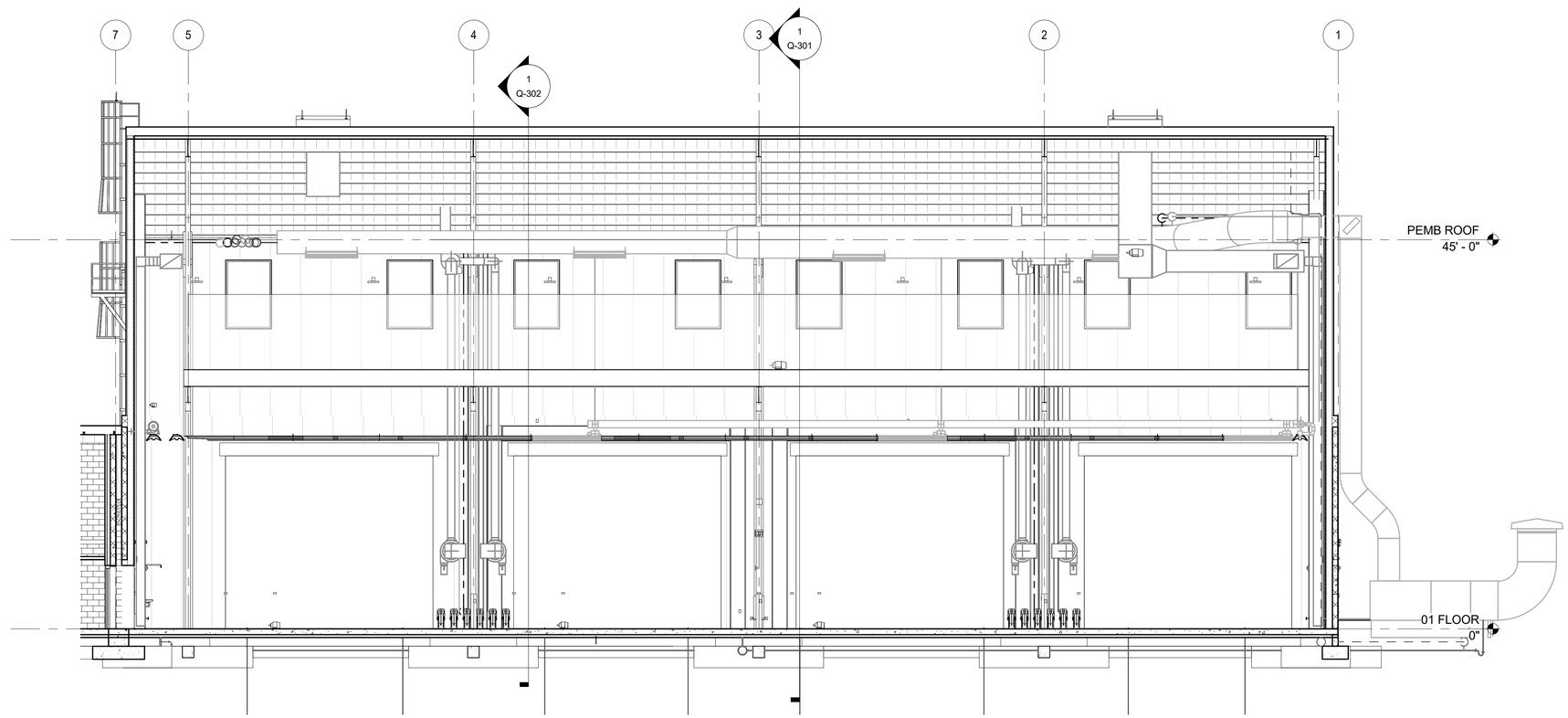

1 / Q-203 BAY INTERIOR ELEVATION SOUTH

1/8" = 1'-0"

US Army Corps of Engineers ®

MARK	DESCRIPTION	DATE

ISSUE DATE: 13 JUL 2020
SOLICITATION NO.: W91328-XX-X-XXXX
CONTRACT NO.: W91328-XX-X-XXXX
SPECIFICATION NO: Z1745
DESIGN FILE NO: 296665

DESIGNED BY: MULTIPLE
DRAWN BY: D. CARULLI
CHECKED BY: MULTIPLE
SUBMITTED BY:
SIZE: ANSI D
223-25-0665

US ARMY CORPS OF ENGINEERS
SACRAMENTO DISTRICT
US DEPT OF ARMY

SACRAMENTO DISTRICT INHOUSE DESIGN
1325 J STREET
SACRAMENTO, CA 95814
ID #

FT. HUACHUCA AZ
GROUND TRANSPORT EQUIPMENT BUILDING

COORDINATION ELEVATIONS

SHEET ID

Q-203

RTA

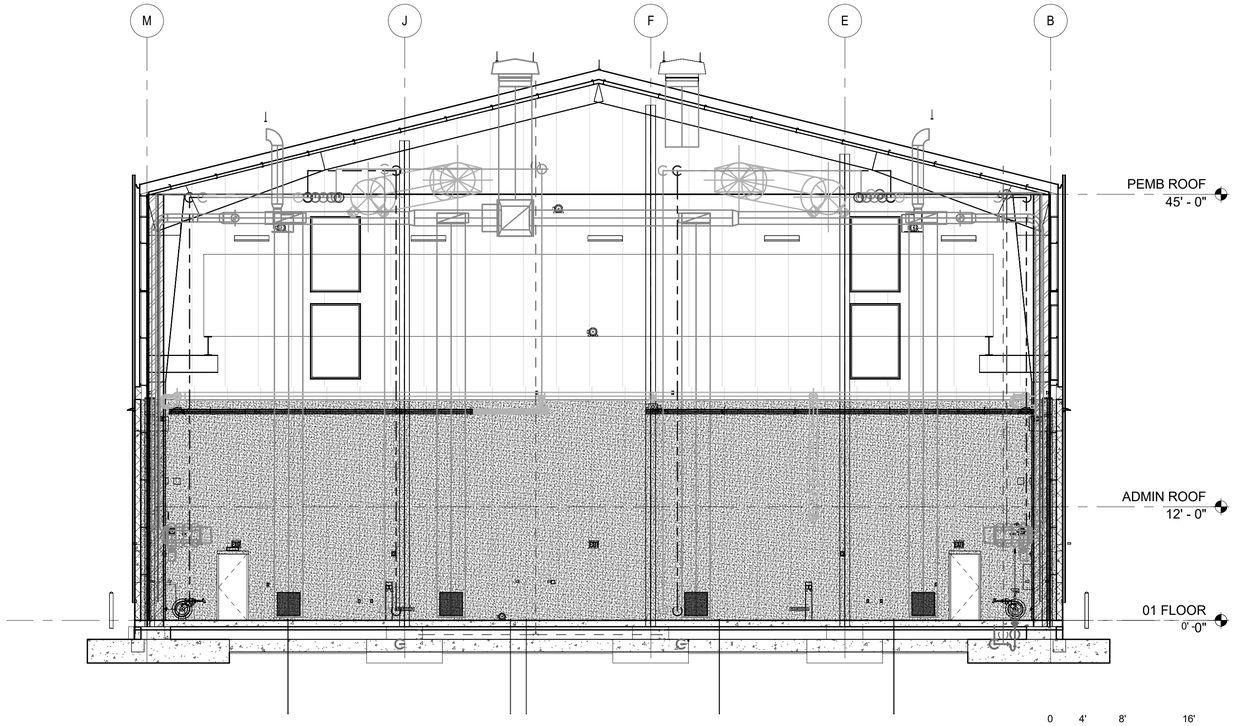

1
Q-204

BAY INTERIOR ELEVATION WEST

1/8" = 1'-0"

0 4' 8' 16'

SCALE: 1/8"=1'-0"

US Army Corps of Engineers ®

MARK	DESCRIPTION	DATE

ISSUE DATE: 13 JUL 2020
SOLICITATION NO.: W91328-XX-X-XXXX
CONTRACT NO.: W91328-XX-X-XXXX
SPECIFICATION NO: 12145
DESIGN FILE NO: 223-25-0665

DESIGNED BY: MULTIPLE
DRAWN BY: D. CARULLI
CHECKED BY: MULTIPLE
SUBMITTED BY:
SIZE: ANSI D

US ARMY CORPS OF ENGINEERS
SACRAMENTO DISTRICT
US DEPT OF ARMY

SACRAMENTO DISTRICT IN-HOUSE DESIGN
1325 J STREET
SACRAMENTO, CA 95814
ID #

FT. HUACHUCA AZ
GROUND TRANSPORT EQUIPMENT BUILDING

COORDINATION ELEVATIONS

SHEET ID

Q-204

RTA

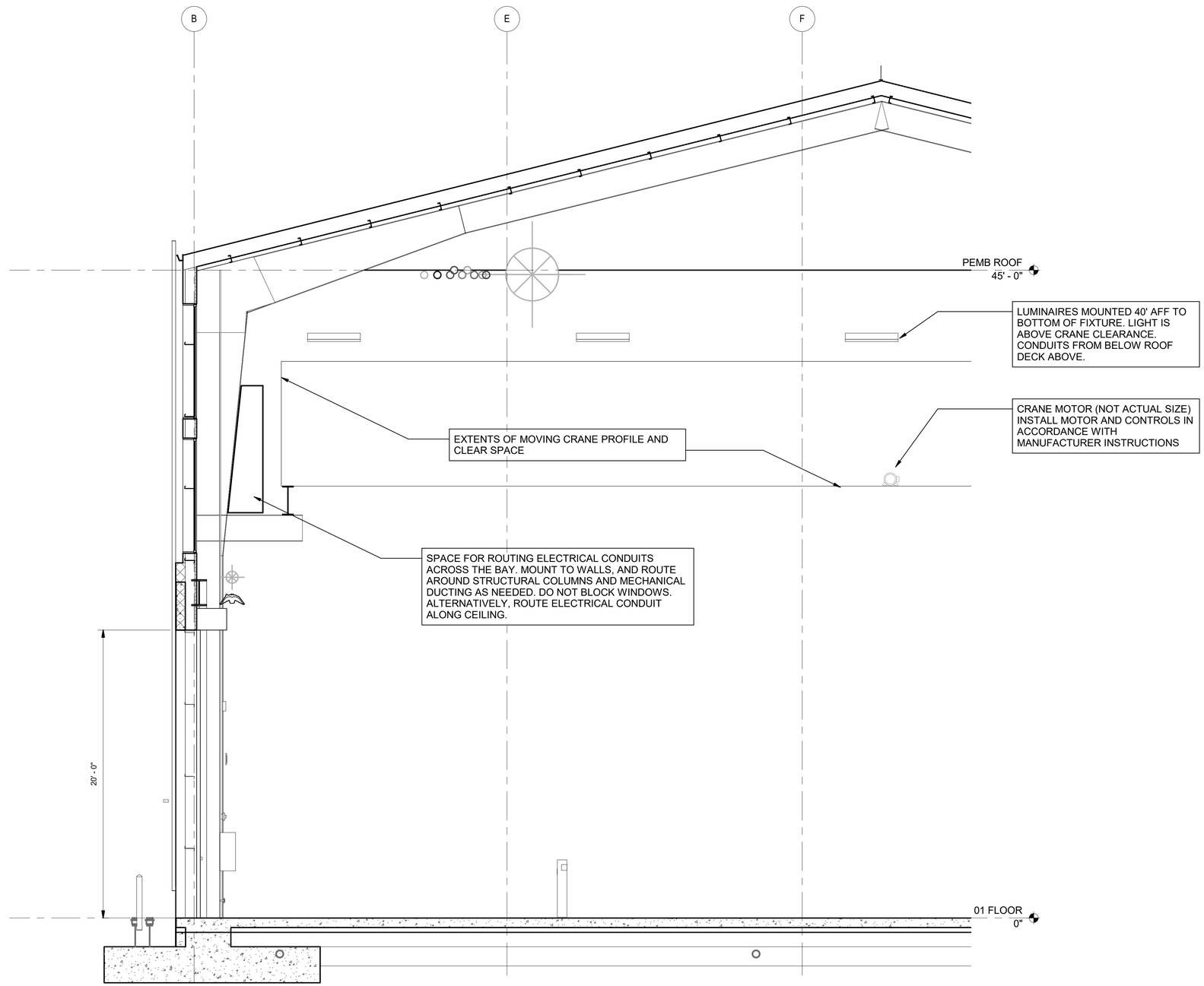

1 Q-301 BAY SECTION 1

1/4" = 1'-0"

US Army Corps of Engineers ®

MARK	DESCRIPTION	DATE

DESIGNED BY: MULTIPLE
DRAWN BY: D. CARULLI
CHECKED BY: MULTIPLE
SUBMITTED BY:
SIZE: ANSI D
ISSUE DATE: 13 JUL 2020
SOLICITATION NO.: W91328-XX-X-XXXX
CONTRACT NO.: W91328-XX-X-XXXX
SPECIFICATION NO: 12145
DESIGN FILE NO: 223-25-U665

US ARMY CORPS OF ENGINEERS
SACRAMENTO DISTRICT
US DEPT OF ARMY

SACRAMENTO DISTRICT INHOUSE DESIGN
1325 J STREET
SACRAMENTO, CA 95814
ID #

FT. HUACHUCA AZ
GROUND TRANSPORT EQUIPMENT BUILDING

COORDINATION SECTIONS

SHEET ID

Q-301

RTA

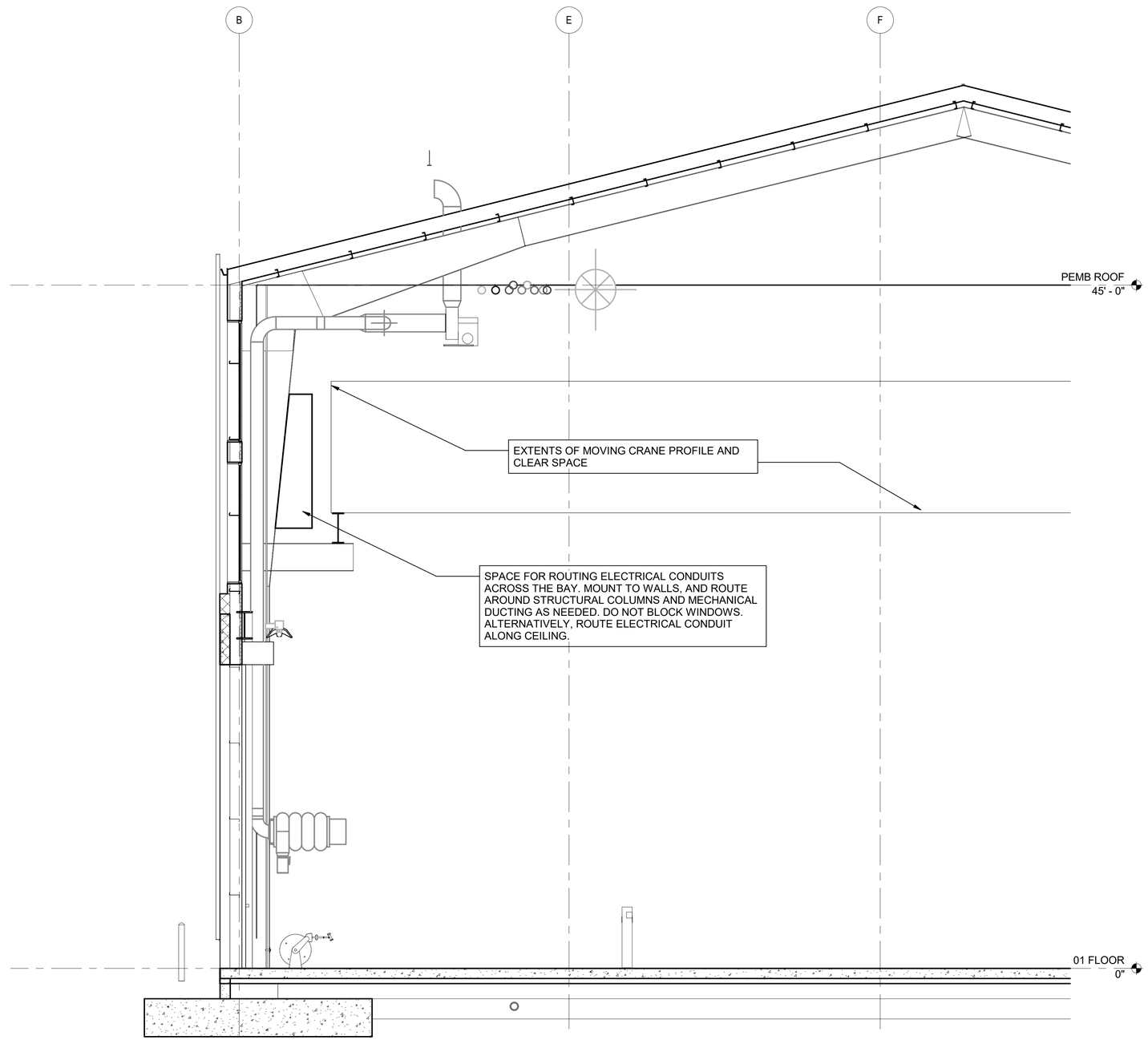

0 2' 4' 8'

SCALE: 1/4" = 1'-0"

1 BAY SECTION 2

1/4" = 1'-0"

US Army Corps of Engineers ®

MARK	DESCRIPTION	DATE

DESIGNED BY: MULTIPLE
DRAWN BY: D. CARULLI
CHECKED BY: MULTIPLE
SUBMITTED BY: SUBMITTED BY:
SIZE: ANSI D
ISSUE DATE: 13 JUL 2020
SOLICITATION NO.: W91328-XX-X-XXXX
CONTRACT NO.: W91328-XX-X-XXXX
SPECIFICATION NO: 12145
DESIGN FILE NO: 223-25-U665

US ARMY CORPS OF ENGINEERS
SACRAMENTO DISTRICT
US DEPT OF ARMY

SACRAMENTO DISTRICT IN-HOUSE DESIGN
1325 J STREET
SACRAMENTO, CA 95814
ID #

FT. HUACHUCA AZ
GROUND TRANSPORT EQUIPMENT BUILDING

COORDINATION SECTIONS

SHEET ID

Q-302

RTA

GENERAL NOTES:

1. THIS SHEET IS PROVIDED FOR INFORMATION ONLY (FIO) TO SHOW HOW THE SPACE ABOVE THE MAIN CORRIDOR IS DIVIDED FOR DISTRIBUTION OF UTILITIES. CONTRACTOR SHALL BE RESPONSIBLE FOR COORDINATING ALL DISCIPLINES, AND ENSURING THAT ADEQUATE SPACE IS ALLOCATED FOR ROUTING OF THE UTILITIES FOR EACH DISCIPLINE.
2. CONTRACTOR IS NOT REQUIRED TO RUN UTILTITIES PER THESE PRECISE DIMENSIONS; RUN UTILITIES IN A MANNER THAT IS NEAT, ALLOWS SPACE FOR THE OTHER UTILITIES, AND ALLOWS ACCESS FOR MAINTENANCE WHERE MAINTENANCE ACCESS IS NEEDED. IN PARTICULAR, MAINTAIN ACCESS AND HEAD SPACE AROUND THE CABLE TRAY TO THE MAXIMUM EXTENT POSSIBLE.
3. IN GENERAL, RUN THE COMMUNICATIONS CABLE TRAY AND POWER DISTRIBUTION ELECTRICAL CONDUIT ON THE SOUTH SIDE OF THE CORRIDOR, AND RUN THE MECHANICAL AND PLUMBING PIPING AND DUCTWORK ON THE NORTH SIDE OF THE CORRIDOR. AVOID RUNNING PIPING THAT COULD DRIP CONDENSATION OVER THE CABLE TRAY.

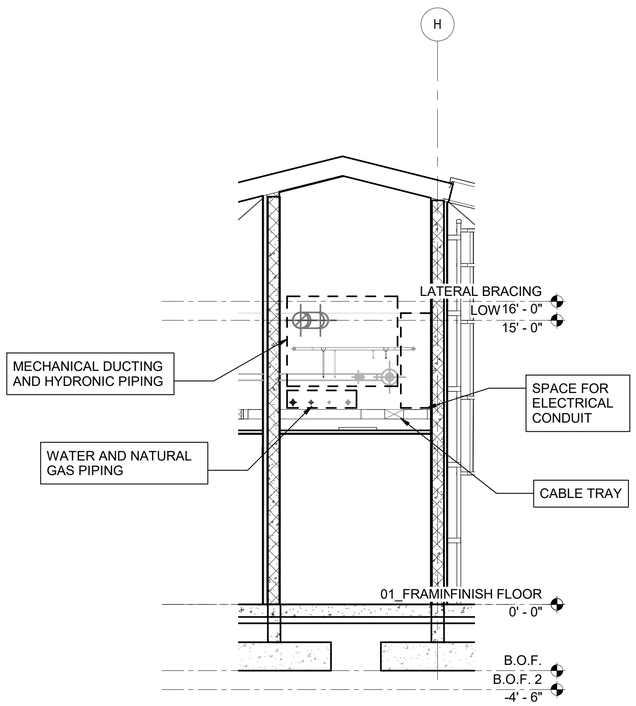

1 Q-303 CORRIDOR SECTION 1
1/4" = 1'-0"

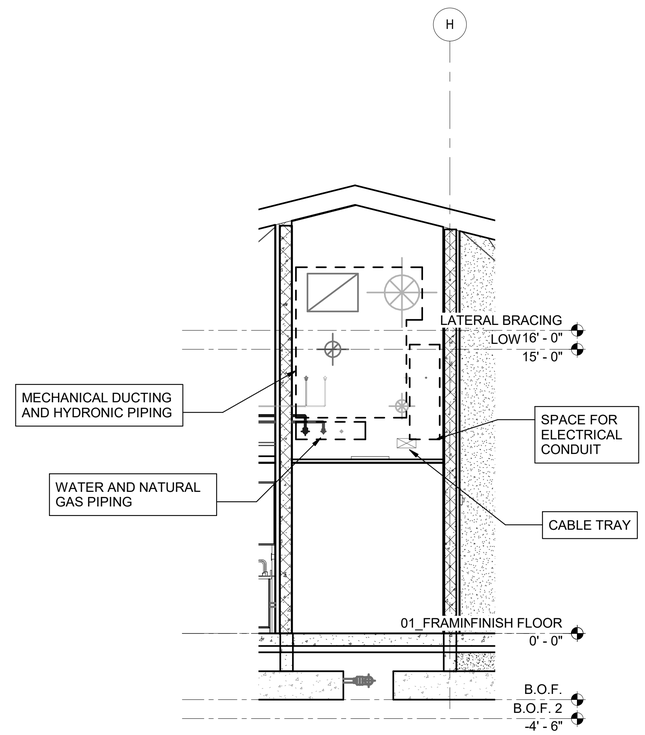

2 Q-303 CORRIDOR SECTION 2
1/4" = 1'-0"

0 2' 4' 8'
SCALE: 1/4" = 1'-0"

US Army Corps of Engineers ®

MARK	DESCRIPTION	DATE

DESIGNED BY: MULTIPLE
DRAWN BY: D. CARULLI
CHECKED BY: MULTIPLE
SUBMITTED BY:
SIZE: ANSI D
ISSUE DATE: 13 JUL 2020
SOLICITATION NO.: W91328-XX-X-XXXX
CONTRACT NO.: W91328-XX-X-XXXX
SPECIFICATION NO: 12145
DESIGN FILE NO: 223-25-0665

US ARMY CORPS OF ENGINEERS
SACRAMENTO DISTRICT
US DEPT OF ARMY

SACRAMENTO DISTRICT IN-HOUSE DESIGN
1325 J STREET
SACRAMENTO, CA 95814
ID #

FT. HUACHUCA AZ
GROUND TRANSPORT EQUIPMENT BUILDING

COORDINATION SECTIONS

SHEET ID
Q-303

RTA

EQUIPMENT SCHEDULE - VEHICLE LIFTS										
NAME	QTY	LIFTING CAPACITY	POSTS	APPROX WIDTH	APPROX LENGTH	APPROX HEIGHT	MAX LIFTING HEIGHT	LIFTING TIME	ELEC	MOTOR HP
12K LIFT	5	12,000 lbs	2	12 FT	N/A	14 FT 2 IN	6 FT 8 IN	45 SEC	220 V/60 Hz/1 Ph	3 HP
27K LIFT	1	27,000 lbs	4	12 FT 10 IN	29 FT 9 IN	7 FT 9 IN	5 FT 8 1/2 IN	75 SEC	220 V/60 Hz/1 Ph	5 HP

VEHICLE LIFT NOTES:

1. (NOT USED)
2. (NOT USED)
3. CONTRACTOR SHALL FURNISH AND INSTALL VEHICLE LIFTS, INCLUDING ALL ELECTRICAL AND MECHANICAL CONNECTIONS, ALL IN ACCORDANCE WITH MANUFACTURER INSTRUCTIONS.
4. COORDINATE LOCATIONS OF THE VEHICLE LIFTS WITH ARCHITECTURAL PLANS. THE MAIN BUILDING BAY AREA CONTAINS FOUR OF THE 12K LIFTS AND THE 27K LIFT. THE ORG STORAGE BUILDING CONTAINS THE REMAINING 12K LIFT.
5. THE APPROXIMATE DIMENSIONS ARE THE OVERALL LIFT DIMENSIONS. THE 12K LIFT DOES NOT HAVE "LENGTH" LISTED, BECAUSE IT IS A 2 POST LIFT, AND THE VEHICLE TO BE LIFTED WILL EXTEND BEYOND THE LIFT ITSELF.

US Army Corps of Engineers ®

MARK	DESCRIPTION	DATE

DESIGNED BY: MULTIPLE
DRAWN BY: D. CARULLI
CHECKED BY: MULTIPLE
SUBMITTED BY:
SIZE: ANSI D
ISSUE DATE: 13 JUL 2020
SOLICITATION NO.: W91328-XX-X-XXXX
CONTRACT NO.: W91328-XX-X-XXXX
SPECIFICATION NO: 12145
DESIGN FILE NO: 223-25-U6665

US ARMY CORPS OF ENGINEERS
SACRAMENTO DISTRICT
US DEPT OF ARMY

SACRAMENTO DISTRICT IN-HOUSE DESIGN
1325 J STREET
SACRAMENTO, CA 95814
ID #

FT. HUACHUCA AZ
GROUND TRANSPORT EQUIPMENT BUILDING

EQUIPMENT SCHEDULES

SHEET ID

Q-601

RTA

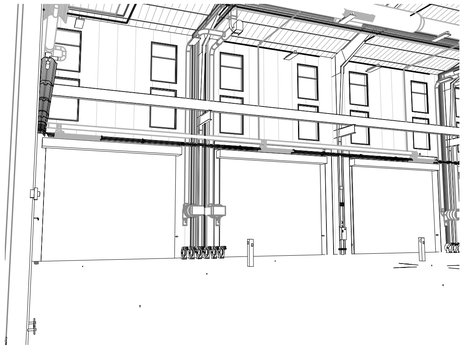

6 Q-901 BAY AREA PERSPECTIVE VIEW 6

3 Q-901 BAY AREA PERSPECTIVE VIEW 3

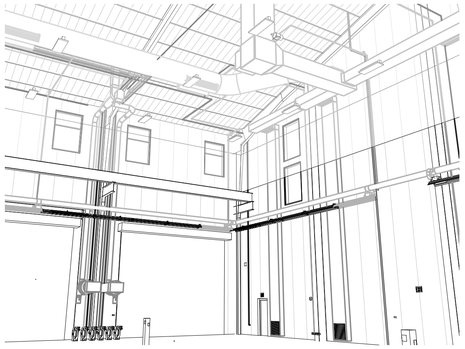

5 Q-901 BAY AREA PERSPECTIVE VIEW 5

2 Q-901 BAY AREA PERSPECTIVE VIEW 2

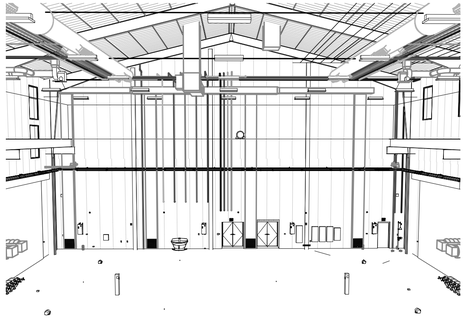

4 Q-901 BAY AREA PERSPECTIVE VIEW 4

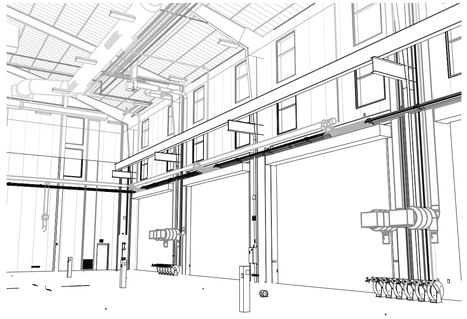

1 Q-901 BAY AREA PERSPECTIVE VIEW 1

NUMBERED NOTES ON SHEET Q-101 SHOW PERSPECTIVE VIEW EYE LOCATION AND DIRECTION, WHICH CORRESPOND TO THESE DETAIL NUMBERS.

US Army Corps of Engineers ®

MARK	DESCRIPTION	DATE

US ARMY CORPS OF ENGINEERS
SACRAMENTO DISTRICT
US DEPT OF ARMY

SACRAMENTO DISTRICT IN-HOUSE DESIGN
1325 J STREET
SACRAMENTO, CA 95814
ID #

DESIGNED BY: MULTIPLE
DRAWN BY: D. CARULLI
CHECKED BY: MULTIPLE
SUBMITTED BY:
SIZE: ANSI D
ISSUE DATE: 13 JUL 2020
SOLICITATION NO.: W91328-XX-X-XXXX
CONTRACT NO.: W91328-XX-X-XXXX
SPECIFICATION NO: 12145
DESIGN FILE NO: 223-25-U665

FT. HUACHUCA AZ
GROUND TRANSPORT EQUIPMENT BUILDING

COORDINATION PERSPECTIVE VIEWS

SHEET ID

Q-901

RTA